RHODE ISLAND PUBLIC TRANSIT AUTHORITY

705 Elmwood Avenue
Providence, RI 02907

GENERAL GUIDELINES FOR COMPLETING REQUEST FOR BID PACKAGE

This document is intended as a guideline to assist prospective Bidders in successfully completing the necessary Bid paperwork. You are strongly encouraged to read the Instructions for Bidders Sections very carefully. This document is NOT intended to replace the more-detailed instructions that are included in the attached Bid Package.

- It is **EXTREMELY IMPORTANT** that all required forms be filled out completely. Federal and State Regulations mandate that these forms be filled out properly. Failure to fill out these forms may result in your Bid being ruled non-responsive. Non Responsive Bids **will not** be awarded the contract.
- **REMEMBER to completely fill out** all REQUIRED FORMS (see REQUIRED FORMS Checklist). The **forms that are checked off are the only ones that apply to this Bid.**
- If a form does not apply to your business or Bid please mark the form Not Applicable or some other similar wording at your discretion.
- DBE (Disadvantaged Business Enterprise) Obligation. RIPTA agrees to ensure that DBES as outlined in 49 CFR Part 26, as amended, have the maximum opportunity to participate in the performance of contracts. Therefore it is imperative that you read the DBE Section and complete the necessary Paperwork. All DBEs submitted must be certified by the State of Rhode Island at the time of Bid submittal.
- Make Sure the Bid Response is received by the RIPTA Purchasing Department by the designated date and time. Late Bids will not be accepted
- It shall be the responsibility of prospective Bidders to check the State of Rhode Island, Department of Administration Division of Purchases Website for any addenda.
- Make Sure that the Bid is returned in an Envelope or Box **CLEARLY LABELED** with the following Information: **Bid Number and what the Bid is for. This information should be in the lower left hand corner**. The envelope should also be labeled **Bid DOCUMENTS ENCLOSED**
- When in doubt, contact RIPTA Contracts Manager (401) 784-9500 extension 214 for assistance.
- **Bid must be submitted pre-punched for standard three ring binders. Spiral bound Bid submittals will not be allowed**.

Please refer to Page 76 for Scope of Work

The following label shall be affixed to the envelope or package containing the Bid response documents. It is imperative that his label be affixed to insure the Bid documents are received and routed in the proper manner:

Return Address

_____

_____

_____

BID DOCUMENTS ENCLOSED

CONTRACTS MANAGER
Rhode Island Public Transit Authority
Purchasing Department
Room 217
705 Elmwood Avenue
Providence, RI 02907

BID NUMBER: **12-29**

BID FOR: **Security Fencing**

DUE: **June 26, 2012**

RHODE ISLAND PUBLIC TRANSIT AUTHORITY

705 Elmwood Avenue
Providence, RI 02907

REQUIRED COMPANY INFORMATION FORM

The following information is mandatory; Failure to complete this section may jeopardize your eligibility to be awarded the contract. ALL SECTIONS OF THIS FORM MUST BE FILLED OUT COMPLETELY

THIS INFORMATION IS REQUIRED IN ACCORDANCE WITH 49CFR 26.11

THIS FORM IS REQUIRED FOR ALL BIDDERS, PRIME CONTRACTORS, POTENTIAL SUBCONTRACTORS AND SUBCONTRACTORS

PLEASE PRINT OR TYPE YOUR INFORMATION

COMPANY NAME _____

COMPANY STREET: ADDRESS: _____

_____

COMPANY MAILING: ADDRESS: _____

_____

COMPANY CONTACT PERSON:_____

COMPANY TELEPHONE NUMBER:_____

COMPANY TELEFAX NUMBER: _____

COMPANY CONTACT EMAIL: _____

AGE OF THE FIRM (YEARS): _____

ANNUAL GROSS RECEIPTS (DOLLARS):_____

IS YOUR FIRM CERTIFIED BY THE STATE OF RHODE ISLAND AS A DISADVANTAGED BUSINESS ENTERPRISE ? _____

DUNN AND BRADSTREET NUMBER: _____

NAICS CODE: _____**INDUSTRY**_____
NAICS Code can be found at the following website:. www.naics.com

COMPANY STATUS: ____PRIME CONTRACTOR _____SUBCONTRACTOR

RHODE ISLAND PUBLIC TRANSIT AUTHORITY
Invitation for Bids Number 12-29

REQUEST FOR BIDS

BID NO:	**12-29**
DATE OF INVITATION:	**May 22, 2012**
PRE-BID MEETING:	**June 6, 2012**
BID RECEIPT DATE:	**June 26, 2012**
FURNISHING OF:	**Security Fencing**

FEDERAL TRANSIT ADMINISTRATION PROJECT NO. RI 90x061

The participant shall specify the official name of his/her company in the upper left-hand corner of the Bid Response Envelope and show **BID NO: and Bid Description in the lower left-hand corner and send or deliver to**:

Purchasing Department
Room 217
705 Elmwood Avenue
Providence, RI 02907

The participant shall execute the offer form enclosed herewith.

Bids will be reviewed and evaluated; all participants will be notified as soon as approval of award is made.

The Bidder shall execute the offer form enclosed herewith. The Bidder shall return **Two copy(ies)** with the **original** Bid.

RIPTA RESERVES THE RIGHT TO REJECT BIDS FROM PARTICIPANTS WHO HAVE NOT USED THE FORM AND PROPER BID RESPONSE ENVELOPE FORMAT.

RIPTA RESERVES THE RIGHT TO CANCEL ANY PARTICULAR SOLICITATION, AND/OR REJECT ANY OR ALL BIDS.

RHODE ISLAND PUBLIC TRANSIT AUTHORITY
Invitation for Bids Number 12-29
TABLE OF CONTENTS

I.	CALENDAR			1
	A.	Date of Invitation: May 22, 2012		1
	B.	Pre-Bid Conference:		1
	C.	Request for Approved equals and Questions		1
	D.	Bid Receipt:		1
II.	NOTICE TO OFFERORS			2
	A.	DATE: May 22, 2012		2
III.	CONTACT LIST			3
	A.	Specifications/Scope of Work		3
	B.	Contracts Manager		3
	C.	DBE Liaison Officer		3
IV.	INSTRUCTIONS FOR BIDDERS			4
	A.	Definition of Terms.		4
		1.	Procuring agency	4
		2.	RIPTA	4
		3.	Contractor	4
		4.	Request for Bid (RFP)	4
		5.	Authorized Signature.	4
		6.	Request for Bid.	4
		7.	Bid Evaluation Factors/Criteria	4
		8.	Basis of Award	4
		9.	Notice of Award.	4
		10.	Specifications.	4
		11.	Tender	4
	B.	Form of Bid and Signature.		5
		1.	Sole Owner.	5
		2.	General Partnership.	5
		3.	Limited Partnership	5
		4.	Corporation.	5
	C.	Bid.		5
	D.	Unauthorized Conditions.		5
	E.	Submission of Bid.		5
	F.	Modification or Withdrawal of Bid.		6
	G.	Samples		6
	H.	Canvass of Bids.		6
	I.	Rejection of Bids.		6
	J.	Sales Tax Exemption.		6
	K.	Delivery Charges.		6
	L.	Alternative Bid		6
	M.	Non-Collusive Affidavit.		7
	N.	Interest of RIPTA Personnel.		7
	O.	Penalty for Collusion.		7
	P.	Bid Acceptance Period		7
	Q.	Postponement.		7
	R.	Amendment and/or Postponement.		7
	S.	Single Bid.		8

RHODE ISLAND PUBLIC TRANSIT AUTHORITY
Invitation for Bids Number 12-29
TABLE OF CONTENTS

	T.	Qualifications for Award.	8
	U.	Ineligible Bidders.	8
	V.	Disadvantaged Business Enterprise	9
	W.	Addenda.	9
	X.	Bidder's Requests and Appeals.	9
		1. Appointments.	9
		2. Amending Materials.	9
		3. Appeal.	9
		4. Withdrawal.	9
		5. Notification.	9
	Y.	Equal Employment Opportunity.	10
	Z.	Prohibited Interest.	10
	AA.	Interest of Members of Congress.	10
	BB.	Contract Commencement Date.	10
	CC.	Notice, Waiver and Applicable Law.	10
	DD.	Protest.	10
		1. General.	10
	EE.	Protests Before Award	11
		1. Solicitation Phase.	11
		2. Pre-Award Phase.	11
	FF.	Protests After Award.	12
	GG.	Source Selection and Contract Award	12
	HH.	Title VI Assurances	12
	II.	Energy Conservation Requirements:	12
	JJ.	Program Fraud	12
	KK.	No Government Obligation to Third Parties:	13
V.	GENERAL PROVISIONS		13
	A.	Definitions:	13
		1. Authority	14
		2. Contracting Manager	14
		3. Directed, Ordered, designated or prescribed	14
	B.	Changes:	14
	C.	Extras:	14
	D.	Inspection:	14
	E.	Responsible:	15
	F.	Title and Risk of Loss	15
	G.	Payments	15
	H.	Stop Work Order	16
	I.	Disputes	16
	J.	Default	16
	K.	Termination for Convenience of the Authority	17
	L.	Federal, State and Local Taxes	18
	M.	Walsh-Healey Public Contracts Act	18
	N.	Officials Not to Benefit	18
	O.	Covenant against Contingent Fees	18
	P.	Notice to the Authority of Labor Disputes	19

Q.	Patent Indemnity		19
R.	Use of Trade Names		19
S.	Rights in Technical Data		19
T.	Audit and Inspection of Records		21
U.	Gratuities		21
V.	Limitation on Withholding Payments		21
W.	New Material		22
X.	Order of Precedence		22
Y.	Correction of Deficiencies		22
	1.	Definitions:	22
	2.	General:	22
	3.	Deficiencies in accepted supplies or services:	23
	4.	Correction of Deficiencies by Contractor:	23
	5.	Deficiencies in supplies or services not yet accepted:	23
	6.	Extensions or Delays	23
	7.	Contract Price	23
	8.	Failure to correct:	23
Z.	Assignment		24
AA.	Certificates of Current Cost or Pricing Data		25
BB.	Cargo Preference		25
CC.	Buy America Act		25
DD.	Equal Opportunity		25
EE.	Nondiscrimination under Federal Grants		26
FF.	Rights in Data and Copyrights-FTA (June 1996)		26
GG.	Davis-Bacon Act		27
	1.	Minimum wages	27
	2.	Withholding	30
	3.	Payrolls and basic records	31
	4.	Apprentices and trainees	33
	5.	Compliance with Copeland Act requirements	34
	6.	Subcontracts	35
	7.	Contract termination: debarment	35
	8.	Compliance with Davis-Bacon	35
	9.	Disputes concerning labor standards	35
	10.	Certification of eligibility.	35
HH.	Contract Work Hours and Safety Standards Act		35
	1.	Overtime requirements	35
	2.	Violation; liability unpaid wages; liquidated damages	36
	3.	Withholding for unpaid wages; liquidated damages	36
	4.	Subcontracts	36
	5.	Payrolls and basic records	36
	6.	Contract Work Hours and Safety Standards Act	37
	7.	Subcontracts	37
II.	Seismic Safety Requirements		37
JJ.	Energy Conservation Requirements		38
KK.	Clean Air		38

	LL.	Clean Water		38
	MM.	Recovered Materials		38
	NN.	Fly America Requirements		38
	OO.	National Intelligent Transportation Systems Architecture		39
	PP.	Federal Changes		39
	QQ.	Incorporation of Federal Transit Administration (FTA) Terms		39
	RR.	Force Majeure		39
	SS.	Governing Law		40
	TT.	Indemnification		40
	UU.	Policy Concerning Federal and Stated False Claim Laws		40
		1.	Prohibitions Against False Claims	40
		2.	Prohibitions of the Federal False Claims Act	40
		3.	Enforcement	41
	VV.	American with Disabilities Act		41
VI.	REQUEST FOR APPROVED EQUAL FORM			42
VII.	REQUIRED BID SUBMISSIONS			43
VIII.	SOLICITATION FORM			44
IX.	OFFER FORM			45
X.	STATEMENT OF ELIGIBILITY FORM			46
XI.	AFFIDAVIT OF NON-COLLUSION FORM			47
XII.	CERTIFICATION OF RESTRICTIONS ON LOBBYING FORM			48
XIII.	BUY AMERICA CERTIFICATION REQUIREMENTS I			49
XIV.	BUY AMERICA CERTIFICATION REQUIREMENTS II			50
XV.	BUY AMERICA PRE-AWARD AND POST-DELIVERY AUDITS:			51
	A.	Prior to Contract award,		51
	B.	After delivery and acceptance of the vehicles,		51
	C.	Authority Review		51
XVI.	DISADVANTAGED BUSINESS ENTERPRISES PROGRAM			52
	A.	Policy		52
	B.	DBE Utilization		52
		1.	DBE Utilization	52
	C.	Definitions.		53
		1.	Joint Venture	53
		2.	Disadvantaged Business	53
		3.	Small Business Concern	53
		4.	Socially and Economically Disadvantaged Individuals	53
		5.	Recognition of DBE Commitment	54
		6.	Submissions	54
		7.	Procedure Prior to Contact Award	55
		8.	Bid, Execution & Compliance with Subcontracts	56
		9.	Substitution of Subcontractors	56
		10.	Program Compliance	56
		11.	Maintenance of Records	57
		12.	Contract Assurance	57
		13.	Prompt Payment	57
		14.	Monitoring Payments to DBEs	57

RHODE ISLAND PUBLIC TRANSIT AUTHORITY
Invitation for Bids Number 12-29
TABLE OF CONTENTS

XVII. DISADVANTAGED BUSINESS ENTERPRISE REQUIRED FORMS 58
- A. Attachment A 59
- B. Attachment B 60
- C. Attachment C 61
- D. Attachment D. 62
- E. Attachment E 63
- F. Attachment F 64

XVIII. PERFORMANCE BOND INFORMATION 65
XIX. BID GUARANTEE (SURETY) 65
XX. REQUIRED INSURANCE 65
XXI. GENERAL CONTRACT COMPLIANCE CERTIFICATE 66
- A. Equal Opportunity Clause 66
- B. Age Discrimination 67
- C. Employment of the Handicapped 67

XXII. CERTIFICATE OF NON-SEGREGATED FACILITIES 69
XXIII. NOTICE OF PROSPECTIVE SUBCONTRACTORS 70
- A. Affirmative Action Compliance Program 70
- B. Employer's Information Report (EE)-1) Form 100 70
- C. Notice to All Vendors 70
- D. Post Award Conference 70

XXIV. GENERAL CONTRACT COMPLIANCE CERTIFICATE 71
XXV. CERTIFICATION OF PRIMARY PARTICIPANT FORM 72
XXVI. DEBARMENT CERTIFICATION 73
XXVII. CERTIFICATION OF A SUBCONTRACTOR FORM 73
XXVIII. NON-RESIDENT CONTRACTOR INFORMATION 74
XXIX. DRUG & ALCOHOL TESTING PROGRAM 75
XXX. DRUG AND ALCOHOL POLICY ACKNOWLEDGEMENT 75
XXXI. TECHNICAL SPECIFICATION 76
- A. Mobilization/Demobilization 76
- B. Traffic Control 76
- C. Remove and Dispose Chain link Fence-All types and Sizes, Slide Gates and Controllers 77
- D. Test Pits 77
- E. Eight Foot Black Vinyl Coated Galvanized Chainlink Fence 78
- F. Full Depth Sawcut of Bituminous and/or Cement Concrete Pavements/Sidewalk 79
- G. New Sliding Gates and Controllers 80
  - 1. Horizontal Cantilever Sliding Gate System & Controller 81
  - 2. Structural Sliding Gate Panel: 82
  - 3. Sliding gate Peripherals 83
  - 4. System Acceptance Test 83
  - 5. Pre-Molded Splices 2, 3, and 4-Way Splices 83
  - 6. Card Reader Access System: 83
  - 7. Stanchions (GOOSNECKS): 84
- H. Refurbish Existing Sliding Gates and New Controller 84
  - 1. Horizontal Cantilever Sliding Gate System & Controller 84

2. Sliding Gate improvements 85
3. Sliding gate Peripherals 85
4. System Acceptance Test 86
5. Pre-Molded Splices 2, 3, and 4-Way Splices 86
6. Card Reader Access System: 86
I. Furnish and Install Passage Gates 86
J. Concrete Filled Steel Bollards 87
K. Furnish and Install Conduit-All Types and Sizes 88
L. Construction Layout-Survey 89
M. Stranded Copper Conductor, Ground Wire, Ground Rods 89
N. Remove and Dispose of Concrete Parking Lot Surfacr 90
O. Precast Type A and H Handholes RI STD 18.2.0 and 18.2.1 90
P. Removal and Replacement of Concrete Sidewalk 91
Q. Modify wall to accept New Passage Gate 91
R. Prosecution and Progress 92
S. Price Adjustments 92
T. Field Office 92
U. Trainee Man Hours 93
XXXII. BRIEF SCOPE OF WORK: 93
XXXIII. LIST OF CONTRACT DRAWINGS: 93
XXXIV. NOTICE TO CONTRACTORS: 94
XXXV. UTILITY AND MUNICIPAL NOTIFICATION AND COORDINATION: 94
XXXVI. SEQUENCE OF CONSTRUCTION: 95
XXXVII. MAINTENANCE & MOVEMENT OF TRAFFIC: 95
XXXVIII. SPECIAL NOTICE TO THE CONTRACTOR: 95
XXXIX. COORDINATION WITH OTHER PROJECTS: 95
XL. UTILITY NOTE: 95
XLI. COMPLETION DATES: 96
XLII. EMPLOYEE PARKING: 96
XLIII. STORAGE OF MATERIAL: 96
XLIV. LUMP SUM BREAKDOWN / PROGRESS PAYMENTS: 96
XLV. FENCING IMPROVEMENTS 97

RHODE ISLAND PUBLIC TRANSIT AUTHORITY
Invitation for Bids Number 12-29

I. CALENDAR

A. Date of Invitation: **May 22, 2012**

B. Pre-Bid Conference:

1. **Date:** **June 6, 2012**

2. **Time:** **1:00 p.m. Eastern Time**

3. **Place:** **RIPTA Board Conference Room**
269 Melrose Street, Providence, RI
Any and all appeals must be submitted in writing prior to the time and date set for the Pre-Bid Meeting.

C. Request for Approved equals and Questions
must be submitted **ELECTRONICALLY IN MICROSOFT WORD FORMAT** to RIPTA Contracts Manager by:

1. **Date:** **June 6, 2012**

2. **Time:** **1:00 p.m. Eastern Time**

3. **Response to approved equals: 10 - 14 days prior to Bid opening.**

D. Bid Receipt:

1. **Date:** **June 26, 2012**

2. **Time:** **1:00 p.m. Eastern Time**

II. NOTICE TO OFFERORS

A. DATE: May 22, 2012

The Rhode Island Public Transit Authority (RIPTA) is requesting Bids for the following:

Security Fencing

All Bids shall be submitted in the required format and quantity as set forth in the RFP. This Bid must be received by June 26, 2012 at 1:00 p.m. Eastern Time by the Purchasing Department, Room 217, 705 Elmwood Avenue Providence, Rhode Island 02907.

Award of contract is subject to financial assistance of 80% from the U.S. Department of Transportation (FTA Project RI 90x061) and 20% from RIPTA. The successful Bidder shall comply with the conditions and terms applicable thereunder.

A Pre-Bid Meeting will be held at the RIPTA Transportation Building Conference Room, 269 Melrose Street Providence, RI at 1:00 pm Eastern Time on June 6, 2012. **Bidders are expected to download and review the Bid Scope of Work prior to the pre-Bid meeting.**

The successful Bidder shall be required to comply with all applicable Equal Opportunity and Disadvantaged Business Enterprise regulations. Bidders are encouraged to view the Rhode Island Minority Business Enterprise (RIMBE) website for a list of Disadvantaged Business Enterprise vendors that may be interested in working with your company on this Bid. All DBEs submitted must be certified by the State of Rhode Island at the time of Bid submittal.
The RIMBE Website address is: http://www.mbe.ri.gov/search.php.

The Disadvantaged Business Enterprise goal for this project is: 15 percent

The successful Bidder shall be required to certify that he is not on the Comptroller General's List of Ineligible Contractors.

An electronic copy of the RFP is available on the State of Rhode Island, Department of Administration, Division of Purchases Website.
The website address is: *www.purchasing.ri.gov/RIVIP/ExternalBidSearch.asp.*
RIPTA Requests for Bids can be Public Bid Opportunities, Quasi Public Sector, listed under the Rhode Island Public Transit Authority. ***Bidders must download the Bid documents and complete the required forms.***

If you are unable to access the Internet; a printed copy of the Bid may be obtained from RIPTA's Purchasing Department by calling Michael J. McGrane at (401) 784-9500, ext. 214.

III. CONTACT LIST

PLEASE CONTACT THE FOLLOWING PERSONS FOR ANY QUESTIONS YOU MAY HAVE:

A. Specifications/Scope of Work
Mr. Edward Scott
Phone (401) 784-9500 extension 140

B. Contracts Manager
Mr. Michael J. M^c^Grane
Phone: (401) 784-9500 extension 214
mmcgrane@ripta.com

C. DBE Liaison Officer
Mrs. Lisa Hanson
Phone: (401) 784-9500 extension 125.
lhanson@ripta.com

IV. INSTRUCTIONS FOR BIDDERS

A. Definition of Terms.

Whenever herein or in the Bid contract documents the following terms, pronouns or abbreviations are used, the intent and meaning shall be interpreted as follows:

1. **Procuring agency**
   Procuring Agency is defined as the Rhode Island Public Transit Authority.
2. **RIPTA**
   RIPTA shall refer to the Rhode Island Public Transit Authority.
3. **Contractor**
   Contractor shall mean the successful Bidder to whom a contract is awarded.
4. **Request for Bid (RFP)**
   Request for Bid shall mean the complete assembly of related documents, whether attached or incorporated by reference, furnished by RIPTA for the purpose of proposing, including the Request for Bid, the Instructions for Bidders, Supplemental Conditions, Specifications, Bid Form, Bid Attachments, and Addenda, if any. Bids shall be in strict accordance with the Terms of the RFP.
5. **Authorized Signature.**
   The person who is executing this contract on behalf of the Bidder and who is authorized to bind the Bidder.
6. **Request for Bid.**
   The advertisement of the issuance by RIPTA of a Request for Bid, which is published, posted and sent to prospective Bidders informing interested persons of the proposed procurement.
7. **Bid Evaluation Factors/Criteria**
   Evaluation Factors/Criteria given in the scope of work are not listed in order of priority. The order of the listing has no relationship to the relative importance of the factors.
8. **Basis of Award**
   The Contract will be awarded to the vendor that submits the Bid that is rated the overall best value to the Authority.
9. **Notice of Award.**
   The receipt of a Purchase Order or Letter of Contract issued by RIPTA shall serve as notice of the award of contract.
10. **Specifications.**
    The written description and statement of necessary requirements of the equipment/construction, supplies and/or service to be provided.
11. **Tender**
    The Bidder's documents and all attachments tendered in response to the Bid requests.

B. Form of Bid and Signature.

The Bid shall be presented with an original and Two copies on the forms provided herewith by RIPTA and shall be enclosed in a sealed envelope marked and addressed as required on the Bid form.

Depending upon whom the Bid is made by, the following signature and instructions must be followed:

1. **Sole Owner.**
   Bid shall be signed with his full name, and his address shall be given.
2. **General Partnership.**
   Bid shall be signed with the partnership name by a partner who shall also sign his/her own name, and the name and address of each partner shall be given.
3. **Limited Partnership**
   Bid shall be signed with the partnership name by a general partner who has authorization to do so who shall also sign his/her own name.
4. **Corporation.**
   Bid shall be signed by an officer or other individual who has the full and proper authorization to do so, and the corporate seal shall be affixed to the contract, or if the corporate seal is not affixed to the contract and it is signed by a person other than an officer, there must be attached to the contract a certified copy of a resolution of the corporation authorizing such officer or person to sign written contracts for and on behalf of the corporation.

C. Bid.

The terms of the Bid must not be changed. All blank spaces in said form shall be properly filled. Alterations by erasure or interlineation must be explained or noted in the Bid over the signature of the Bidder. If the unit price and the total amount named by a Bidder for any item, do not agree, **the unit price** alone will be considered as representing the Bidder's intention.

D. Unauthorized Conditions.

Unauthorized conditions, limitations or provisions attached to a Bid will render it informal and may cause its rejection.

E. Submission of Bid.

Prior to the hour specified in the Request for Bid inviting sealed Bids, all Bids shall be delivered to the Contracts Manager at the address shown in the Request for Bid.

Each Bid shall be in a sealed envelope properly labeled on the outside with the Bid number and description. No Bids received after said time or at any place other than the time and place as stated in the Request for Bid will be considered. No Bid electronically transmitted , e.g. email and fax will be considered.

F. Modification or Withdrawal of Bid.

A Bid may be modified or withdrawn by written or telegraphic notice received in the office designated in the Request for Bid not later than the exact time set for receiving of Bids. A telegraphic notice of modification or withdrawal of a Bid telephoned by the receiving telegraphic office no later than the set for opening of Bids will be considered if the message is confirmed by the telegraph company by sending a copy of a written telegram which formed the basis of the telephone call. A Bid may be withdrawn in person by a Bidder or his/her authorized representative provided his/her identity is made known and he signs a receipt for the Bid if the withdrawal is prior to the exact time set for receiving the Bids. Modifications of Bids and requests for withdrawal of Bids which are received in the office designated in the Request for Bids after the exact time set for opening are "late modifications" and "late withdrawals" respectively. A late modification or late withdrawal will be subject to the rules and procedures applicable to late Bids. A late modification of an otherwise successful Bid will be opened at any time it is received. If, in the judgment of the Director of Procurement, it makes the terms of the Bid more favorable to RIPTA, it will be presented to the Contract Manager and Director of Procurement for consideration.

G. Samples

Samples, when required, must be submitted within the time specified, at no expense to RIPTA. If not, destroyed or used up during testing, samples will be returned upon request at the Bidder's expense.

H. Canvass of Bids.

At the hour specified in the Request for Bid, a designee will receive the Bids. An award will be made or Bids rejected by RIPTA within the time specified in the specifications or Bid forms, or if not specified, within a reasonable time after Bids have been opened.

I. Rejection of Bids.

RIPTA reserves the right to reject any and all Bids. The right is reserved to reject any or all Bids, and to waive technical defects as the interest of RIPTA may require. Each Bidder shall be notified if all Bids are rejected.

J. Sales Tax Exemption.

RIPTA confirms there are no state, local or federal taxes applicable to this purchase.

K. Delivery Charges.

Unless otherwise stated in the RFP, Bidders shall include freight and/or delivery charges in the total price of their Bids.

L. Alternative Bid

Submissions of an alternative Bid or Bids, except as specifically called for in the Specifications or RFP, will render the Bid informal and may cause its rejection.

M. Non-Collusive Affidavit.

The Bidder represents and warrants that its Bid is genuine and not sham or collusive or made in the interest or in behalf of any person not therein named, and that the Bidder has not, directly or indirectly, induced or solicited any other Bidder to submit a sham Bid or any other person, firm or corporation to refrain from proposing, and that the Bidder has not in any manner sought by collusion to secure itself an advantage over any other Bidder.

N. Interest of RIPTA Personnel.

The Bidder represents and warrants that neither the General Manager, nor any Board Member, nor any employee of RIPTA, is in any manner interested directly or indirectly in the Bid or in the contract, which may be made under it, or in any expected profits to arise therefrom.

O. Penalty for Collusion.

If at any time it shall be found that the person, firm or corporation to whom a contract has been awarded has, in presenting any Bid or Bids, colluded with any other party or parties, then the contract so awarded shall be **voidable** by RIPTA and the Contractor and his bondsmen shall be liable to RIPTA for all loss or damage which RIPTA may suffer thereby and the RIPTA Board may advertise for a new contract for said labor, supplies, materials, equipment or service.

P. Bid Acceptance Period

All Bids shall remain in effect one hundred twenty (120) calendar days from the date of Bid opening. Bids offering less than one hundred twenty (120) calendar days for acceptance by RIPTA from the date set for opening will be considered non-responsive and will be rejected.

Q. Postponement.

RIPTA reserves the right to postpone, for its own convenience, the date the Bid is to be received, but any Bidder whose Bid has already been submitted to RIPTA when the decision to postpone is made shall be afforded the opportunity to revise or withdraw its Bid.

R. Amendment and/or Postponement.

RIPTA reserves the right to revise or amend the specifications up to the time set for the receiving of Bids. Such revisions and addenda, if any, shall be announced by addenda to this solicitation. It shall be the responsibility of prospective Bidders to check the State of Rhode Island, Department of Administration Division of Purchases Website for any addenda. If the revisions and addenda require changes in quantities or price Bid, or both, the date set for receiving Bids may be postponed by such number of days as in the opinion of RIPTA shall enable Bidders to revise their Bids. In any case, Bid openings shall be at least seven (7) working days after the last addendum, and the addenda shall include an announcement of the new date, if applicable.

S. Single Bid.

1. In the event a single Bid is received, RIPTA will, at its option, either conduct a price and/or cost analysis of the Bid and make the award by negotiation or reject the Bid and re-advertise. A price analysis is the process of examining the Bid and evaluating a prospective price without evaluating the separate cost elements. Price analysis shall be performed by comparison of the price quotations submitted on other current quotations, with published price lists, or other established or competitive prices. The comparison shall be made to a purchase of similar quantity and involving similar specifications. Where a difference exists, a detailed analysis must be made of this difference and costs attached thereto.

2. Where it is impossible to obtain a valid price analysis, it may be necessary for RIPTA to conduct a cost analysis of the Bid price. Cost analysis is the review and evaluation of a contractor's cost or pricing data and of the factors applied in projecting from such data the estimated costs of performing the contract, assuming reasonable economy and efficiency.

3. The price and/or cost analysis shall be made by RIPTA's Procurement Department.

T. Qualifications for Award.

The Bidder must be a person, firm or corporation that:

1. Has in operation, or has the capability to have in operation, a manufacturing plant adequate to assure delivery of all equipment within the time specified under this contract.

2. Has adequate service personnel, or has the capability to have such personnel, to satisfy any service problems that may arise during the warranty period.

3. Has the necessary facilities and financial resources or has the capability to obtain such facilities and resources to complete the contract in a satisfactory manner within the required time.

4. The Procuring agency shall have the right to conduct a pre-award survey on each Bidder. Doubt as to the capability or technical ability, productive capacity or financial strength, which cannot be resolved affirmatively, shall require a determination of non-responsibility by RIPTA.

U. Ineligible Bidders.

The Bidder shall be required to certify, upon request, that it is not on he U.S. Comptroller General's Consolidated List of Persons or Firms currently Debarred for Violations of Various Public Contracts Incorporating Labor Standards Provisions.

V. Disadvantaged Business Enterprise

The Rhode Island Public Transit Authority will not discriminate on the basis of race, color, national origin, or sex in the award and performance of any DOT assisted contract or in the administration of its DBE Program or the requirements of 49 CFR part 26. RIPTA will take all necessary and reasonable steps under 49 CFR part 26 to ensure nondiscrimination in the award and administration of DOT assisted contracts. The recipient's DBE Program, as required by 49 CFR part 26 and as approved by DOT, is incorporated by reference in this agreement. Implementation of this program is a legal obligation and failure to carry out its terms shall be treated as a violation of this agreement. Upon notification to the Rhode Island Public Transit Authority of its failure to carry out its approved program the Department may impose sanctions as provided for under part 26 and may, in appropriate cases, refer the matter for enforcement under 18 U.S.C. 1001 and/or the Program Fraud Civil Remedies Action of 1986 (31 U.S.C. 3801 et. Seq).

W. Addenda.

RIPTA may issue addenda containing amendments to its Bid solicitation documents. Any addendum issued less than seven (7) days prior to the receipt of Bid shall, if necessary, contain a provision postponing the date of the receipt of Bid to a date that will provide Bidders adequate time to respond to the addenda. Addenda shall be numbered sequentially.

X. Bidder's Requests and Appeals.

1. **Appointments.**
   Bidders and suppliers may make appointments with the contact person listed in the specifications to discuss the specifications.
2. **Amending Materials.**
   Any amending material issued by RIPTA pertaining to the Bid solicitation documents (including, without limitation: clarifications, approved equals, and corrections) shall be set forth in an addendum and sent to all parties who are on record as having obtained a copy of the Bid solicitation documents.
3. **Appeal.**
   Should any Bidder or supplier choose to appeal RIPTA's decision, such appeal must be in writing and received by RIPTA not less than seven (7) calendar days before the date of receipt of Bid. RIPTA has no obligation to consider appeals received less than seven (7) calendar days before the date of the receipt of Bid.
4. **Withdrawal.**
   The Bidder or supplier may withdraw its appeal at any time before RIPTA issues a final decision. There shall be no further review of the appeal after the final decision is issued.
5. **Notification.**
   Should RIPTA postpone the date of the receipt of Bid owing to the appeal, RIPTA shall notify all parties who are on record as having obtained a copy of the Bid solicitation documents that an appeal has been filed and that the date of the receipt of Bid shall be postponed until RIPTA has issued its final decision. RIPTA shall

issue appropriate amendments postponing the re-scheduling date of the receipt of Bid.

Y. Equal Employment Opportunity.

In connection with the execution of this contract, the Contractor shall not discriminate against any employee or applicant for employment because of race, religion, color, sex, age, handicap or national origin. The contractor shall take affirmative action to insure that applicants are employed and that employees are treated during their employment, without regard to their race, religion, color, sex, age, handicap or national origin. Such actions shall include, but not limited to, the following: employment, upgrading, demotion, transfer, recruitment or recruitment advertising, layoff, or termination, rates of pay, or other forms of compensation, and selection for training, including apprenticeship.

Z. Prohibited Interest.

No member, officer, or employee of RIPTA or of a local public body during his tenure or for one year thereafter shall have any interest, directly or indirectly, in this contract or the proceeds thereof.

AA. Interest of Members of Congress.

No member or delegate to the Congress of the United States shall be admitted to any share or part of this contract or to any benefit arising therefrom.

BB. Contract Commencement Date.

The contract commencement date shall be the date of the signing of the Purchase Order or by Letter of Contract signed by an authorized RIPTA employee.

CC. Notice, Waiver and Applicable Law.

Notice given to Contractor and RIPTA shall be given to the parties in writing by certified mail at the respective addresses set forth herein. Waiver by RIPTA of a breach by Contractor of any provision of this contract shall not be deemed a waiver of future compliance therewith, and such provision as well of future provisions hereunder, shall remain in full force and effect. The rights and duties of the parties hereto shall be determined by the laws of the State of Rhode Island, and to that end this agreement shall be considered and construed as a contract made an to be performed in the State of Rhode Island.

DD. Protest.

1. General.

Protests will be accepted from prospective Bidders or Offerors whose direct economic interest would be affected by the award of a Contract or by failure to award a contract. The RIPTA Director of Purchasing will consider all protests or objections filed in a timely manner regarding the award of a contract, whether submitted before or after award. If the protest is oral and the matter cannot be otherwise resolved, written confirmation of the protest will be requested. Protest submissions should be concise,

logically arranged, and clearly state the grounds for the protest. Protests must include at least the following information:

a. Name, address and telephone number of protester.

b. Identification of the solicitation or Contract number.

c. A detailed statement of the legal and factual grounds of protest, including copies of relevant documents

d. A statement as to what relief is requested.

e. Protest should be sent to:

Director of Procurement
RI Public Transit Authority
Room 217
705 Elmwood Avenue
Providence, RI 02907

f. Protests must be filed with the RIPTA in accordance with our procedures and time requirements. The protest to RIPTA must be complete and contain all the issues that the protester believes relevant. RIPTA will respond to each substantive issue raised in the protest. Failure to include an issue in the protest eliminates that issue from further consideration. All protest decisions entered by RIPTA are final in accordance with FTA "Third Party Contract" Regulation.

g. On occasion, when considered appropriate, an informal conference on the merits of the protest with all interested parties may be held.

EE. Protests Before Award

1. Solicitation Phase.

Protests concerning the solicitation must be submitted in writing five (5) working days prior to Bid opening or closing date for receipt of Bids. If the written protest is not received by the time specified, award may be made in the normal manner unless the Director of Purchasing, upon investigation, finds that remedial action is required. Oral protests not followed up by a written protest will be disregarded.
Notice of a protest and the basis therefore will be given to all potential Bidders or Offerors.

2. Pre-Award Phase.

When a protest against the making of an award is received after receipt of Bids but prior to award, the Director of Purchasing may determine to withhold the award pending disposition of the protest. The Bidders or Bidders whose Bids might become eligible for award should be requested, before expiration of the time for acceptance of their Bids, to extend the time for acceptance (with consent of sureties, if any) to avoid the need for readvertising.

RIPTA will provide a written response to each material issue raised in the written protest.

Where a written protest against the making of an award is received in the time specified, award will not be made prior to five (5) working days after resolution of the protest or, if a protest has been filed with FTA during the pendency of that protest, unless RIPTA determines that:

a. The items to be procured are urgently required;

b. Delivery or performance will be unduly delayed by failure to make award promptly; or,

c. Failure to make award will otherwise cause undue harm to RIPTA or the Federal Government.

If award is made, the Director of Procurement will document the file to explain the need for an award, and will give written notice of the decision to proceed with the award to the protester and, as appropriate, to others concerned.

FF. Protests After Award.

A protest received not later than 10 (ten) working days after award shall be reviewed by the Director of Purchasing. The Contractor will, in any event, be furnished with the notice of protest and the basis therefore. When it appears likely that an award may be invalidated and a delay in receiving the supplies or services is not prejudicial to the Authority's interest, the Director of Purchasing should consider a mutual agreement with the Contractor to suspend performance on a no-cost basis.

GG. Source Selection and Contract Award

The contract shall be awarded with reasonable promptness by written notice to the responsive and responsible Bidder whose Bid will be evaluated using a best value approach. The ultimate selection of an offeror will be on the basis of overall best value to the Authority.

HH. Title VI Assurances

Contractors and subcontractors will be required to comply with all requirements imposed by Title VI of the Civil Rights Act of 1964 (49 U>S>C 2000d), and the Assurances by RIPTA pursuant thereto.

II. Energy Conservation Requirements:

The Contractor agrees to comply with mandatory standards and policies relating to energy efficiency, which are contained in the State of Rhode Island Energy Conservation Plan issued in compliance with the Energy Policy and Conservation Act.

JJ. Program Fraud

1. The Contractor acknowledges that the provisions of the Program Fraud Civil Remedies Act of 1986, as amended, 31 U.S. C. §

§3801 et. seq. and U. S. Department of Transportation regulations. "Program Fraud Civil Remedies" 49 C.F. R. Part 31, apply to its actions pertaining to this Project. Upon execution of the underlying contract, the Contractor certifies or affirms the truthfulness and accuracy of any statement it has made , it makes, it may make, or causes to be made, pertaining to the underlying contract or the Federal Transit Administration assisted project for which this contract work is being performed. In addition to other penalties that may be applicable, the Contractor further acknowledges that if it make, or causes to be made, a false , fictitious or fraudulent claim, statement, submission, or certification, the Federal Government reserves the right to impose the penalties of the Program Fraud Civil Remedies Act of 1986 on the Contractor to the extent the Federal Government deems appropriate.

2. The Contractor also acknowledges that if it makes, or causes to be made, a false, fictitious, or fraudulent claim, statement, submission or certification to the Federal Government under a contract connected with a project that is financed in whole or in part with Federal assistance originally awarded by the FTA under the authority of 49 U.S.C. § 5307, the Government reserves the right to impose the penalties of 18 U.S.C. § 5307 (n) (1) on the Contractor, to the extend the Federal Government deems appropriate.
3. The Contractor agrees to include the above two clauses in each subcontract financed in whole or in part with Federal assistance provided by FTA. It is further agreed that the clauses shall not be modified, except to identify the subcontractor who will be subject to the provisions.

KK. No Government Obligation to Third Parties:

1. The Purchaser and the Contractor acknowledge and agree that, notwithstanding any concurrence by the Federal Government in or approval of the solicitation or award of the underlying contract, absent the express written consent by the Federal Government, the Federal Government is not a party to this contract and shall not be subject to any obligations or liabilities to the Purchaser, Contractor, or any other party (whether or not a party to that contract) pertaining to any matter resulting from the underlying contract.
2. The Contractor agrees to include the above clause in each subcontract financed in whole or in part with Federal assistance provided by FTA. It is further agreed that the clause shall not be modified, except to identify the subcontractor who will be subject to its provisions.

V. GENERAL PROVISIONS

A. Definitions:

As used throughout this Contract, the following terms shall have the meanings set forth below:

1. **Authority**
   Authority means Rhode Island Public Transit Authority (RIPTA).
2. **Contracting Manager**
   the person executing this Contract on behalf of the Authority, and his or her successor, and the term includes, except as otherwise provided in this Contract, the authorized representative of a Contracting Officer acting within the limits of his authority.
3. **Directed, Ordered, designated or prescribed**
   Wherever in the scope of the work the words directed, ordered, designated, prescribed, or words of like importance are used, it shall be understood that the direction, requirement, order, designation, or prescription of the Contracting Manager is intended and similarly the words approved, acceptable, satisfactory, or words of like importance shall mean approved by, or acceptable to, satisfactory to the Contracting Officer, unless expressly stated.

B. Changes:

The Contracting Officer may at any time, by a written order, and without notice to the sureties, make changes within the general scope of this Contract. If any such changes causes an increase or decrease in the cost of, or the time required for, the performance of any part of the work under this Contract, whether changed or not changed by the order, the Contracting officer shall make an equitable adjustment in the Contract price, the delivery schedule, or both, and shall modify the Contract.

The Contractor must assert its right to an adjustment under this article within 30 days from the date of receipt of the written order. Failure to agree to any adjustment shall be a dispute under the Disputes article. However, nothing in this article shall excuse the Contractor from proceeding with the contract as changed.

C. Extras:

Except as otherwise provided in this Contract, no payment for extras shall be made unless such extras and the price therefore have been authorized in writing in advance by the Contracting Officer.

D. Inspection:

All supplies, which term throughout this article includes without limitation raw materials, components, intermediate assemblies, and end products, shall be subject to inspection and test by the Authority, to the extent practicable at all times and places including the period of manufacture, and in any event prior to acceptance.

In case any supplies or lots of supplies are defective in material or workmanship or otherwise not in conformity within the requirements of this Contract, the Authority shall have the right either to reject them or require their correction. If any inspection or test is made by the Authority on the premises of the Contractor or a subcontractor, the Contractor without additional charge shall provide all reasonable facilities and assistance for the safety and convenience of the Authority inspectors in the performance of their duties.

All inspections and test by the Authority shall be performed in such a manner as not to unduly delay this work. The Authority reserves the right to charge to the Contractor any additional cost of Authority inspection and test when supplies are not ready at the time such inspection and test is requested by the Contractor or when re-inspection or retest is necessitated by prior rejection. Acceptance or rejection of the supplies shall be made as promptly as practicable after delivery, except as otherwise provided in this Contract; but failure to inspect and accept or reject supplies shall neither relieve the Contractor from responsibility for such supplies as are not in accordance with the contract requirements nor impose liability on the Authority therefore. The inspection and test by the Authority of any supplies or lots thereof does not relieve the Contractor from any responsibility regarding defects or other failures to meet the Contract requirements, which may be discovered prior to acceptance. Except as otherwise provided in this Contract, acceptance shall be conclusive except as regard latent defects, fraud, or such gross mistakes as amount to fraud. The Contractor shall provide and maintain an inspection system acceptable to the Authority covering the supplies hereunder. Records of all inspection work by the Contractor shall be kept complete and available to the Authority during the performance of this Contract and for such longer period as may be specified elsewhere in this Contract.

E. Responsible:

Notwithstanding the requirements for any Authority inspection and test contained in Specifications applicable to this Contract, except where specialized inspections or tests are specified for performance solely by the Authority, the Contractor shall perform or have performed the inspections and tests required to substantiate that the supplies and services provided under the contract conform to the Drawing, Specifications and Contract requirements.

F. Title and Risk of Loss

Unless this Contract specifically provides for earlier passage of title, title to supplies covered by this Contract shall pass to the Authority upon formal acceptance. Unless this Contract specifically provides otherwise, risk of loss of or damage to supplies covered by this Contract shall remain with the Contractor, until acceptance by the Authority.

Notwithstanding the above, the risk of loss of or damage to supplies which so fail to conform to the Contract as to give a right of rejection shall remain with the Contractor until cure or acceptance, at which time the above shall apply.

G. Payments

The Contractor shall be paid, upon the submission of proper invoices or vouchers, the prices stipulated herein for supplies delivered and accepted or services rendered and accepted, less deductions, if any, as specified. The failure to perform may result in partial or full suspension of payment and/or process payment. The Authority's payment terms are 60 days after approval of an invoice unless otherwise negotiated.

H. Stop Work Order

The Contracting Manager may, at any time, by written order to the Contractor, require the Contractor to stop all, or part of the work called for by this Contract. Any such order shall be specifically identified as a STOP WORK ORDER issued pursuant to this article. Upon receipt of such an order, the Contractor shall forthwith comply with its terms and take all reasonable steps to minimize the incurrence of costs allocable to the work covered by the order during the period of work stoppage.

I. Disputes

1. Except as otherwise provided in this Contract, any dispute concerning a question of fact arising under this Contract which is not disposed of by agreement shall be decided by the Contracting Officer, who shall reduce his decision to writing and mail or otherwise furnish a copy thereof to the Contractor. The decision of the Contracting Officer shall be final and conclusive unless, within 30 days from the date of receipt of such copy, the Contractor mails or otherwise furnishes to the Contracting Officer a written appeal addressed to the General Manager. The decision of the General Manager or his/her duly authorized representative for the determination of such appeals shall be final and conclusive unless determined by a court of competent jurisdiction to have been fraudulent, or capricious, or arbitrary, or so grossly erroneous as necessarily to imply bad faith, or is not supported by substantial evidence. In connection with any appeal proceeding under this article, the Contractor shall be awarded an opportunity to be heard and to offer evidence in support of his appeal. Pending final decision of a dispute hereunder, the Contractor shall proceed diligently with the performance of the contract and in accordance with the Contracting Officer's decision.
2. This **DISPUTES** article does not preclude consideration of questions of law in connection with decisions provided for in paragraph a. above. Nothing in this Contract, however, shall be construed as making the final decisions of the General Manger of his/her representative on a question of law.

J. Default

1. The Authority may, subject to the provisions of paragraph b. below, by written notice of default to the Contractor, terminate the whole or any part of this Contract in any one of the following circumstances:
   a. If the Contractor fails to make delivery of the supplies or to satisfactorily perform the services within the time specified herein or any extension thereof; or
   b. If the Contractor fails to perform any of the other provisions of this Contractor, or so fails to make its terms, and in either of these two circumstances does not cure such failure within a period of 10 days (or such longer period of as the Contracting Officer may authorize in writing) after receipt of notice from the Contracting Officer specifying such failure

2. Default without the fault or negligence of the Contractor. Such causes may include, but are restricted to, acts of God or of the public enemy, acts of the Government in its sovereign capacity or the Authority in its contractual capacity, fires, floods, epidemics, quarantine restrictions, strikes, freight embargoes, and unusually severe weather; but in every case the failure to perform must be beyond the control and without the fault or negligence of the Contractor.

3. If the Contractor fails to deliver the supplies or satisfactorily perform the services within the time specified in this Contract, or any extension thereof, the actual damage to the Authority for the delay will be difficult or impossible to determine. Therefore in lieu of actual damages, the Contractor shall pay to the Authority as fixed, agreed and liquidated damages for each calendar day of delay, the amount set forth elsewhere in this Contract. The Contractor shall not be charged with liquidated damages when the delay arises out of causes beyond the control and without the fault or negligence of the Contractor, and in such event, subject to this DISPUTES article, the Contracting Officer shall ascertain the facts and extent of the delay and shall extend the time for performance of the contract when in his judgment the findings of fact justify an extension.

4. The rights and remedies of the Authority provided in this article shall not be exclusive and are in addition to any other rights and remedies provided by law or under this Contract.

K. Termination for Convenience of the Authority

The performance of work under this Contract may be terminated by the Authority in accordance with this article in whole, or from time to time in part, whenever the Contracting Officer shall determine that such termination is in the best interest of the Authority. Any such termination shall be effected by delivery to the Contractor of a Notice of Termination specifying the extent to which performance of work under the contract is terminated, and the date upon which such termination becomes effective.

After receipt of a Notice of Termination, the Contractor shall submit to the Contracting Officer his termination claim, in the form and with certification prescribed by the Contracting Officer. Such claims shall be submitted promptly by in no event later than one year from the effective date of termination. Upon failure of the Contractor to submit his termination claim within the time allowed, the Contracting Officer may, subject to any review required by the contracting agency's procedures in effect as of the date of execution of this Contract, determine, on the basis of information available to him, the amount, if any, due the Contractor by reason of the termination and shall thereupon pay to the Contractor the amount so determined.

In the event of the failure of the Contractor and the Contracting Officer to agree upon the whole amount to be paid the Contractor by reason of the termination of work pursuant to this article, the Contracting Officer shall,

subject to any review by the contracting agency's procedures in effect as of the date of execution of this Contract, determine, on the basis of information available to him, the amount if any, due the Contractor by reason of the termination.

Costs claimed, agreed to , or determined pursuant to this paragraph shall be in accordance with the applicable with the applicable contract cost principles and procedures of the Federal Acquisition Regulations (48 CFR 31.1) in effect on the date of this Contract. The Contractor shall have the right to appeal, under the DISPUTES article of this Contract from any determination made by the Contracting Officer, except that, if the Contractor has failed to submit his claim within the time provided above and has failed t request extension of such time, he shall have no such right of appeal. Unless otherwise provided for in this Contract, or by applicable statue, the Contractor, from the effective date of termination and for a period of three years after final settlement under this Contract, shall preserve and make available to the Authority at all reasonable times at the office of the Contractor but without direct charge to the Authority, all his books, records, documents, and other evidence bearing on the costs and expenses of the Contractor under this Contract and relating to the work terminated hereunder, or, to the extent approved by the Contracting Officer, photographs, micro photographs, or other authentic reproductions thereof.

L. Federal, State and Local Taxes

Except as may be otherwise provided in this Contract, the Contract price includes all applicable Federal, State, and Local taxed and duties. The Authority upon the request of the Contractor shall, without further liability, furnish evidence appropriate to establish exemption from any Federal, State, or Local tax.

M. Walsh-Healey Public Contracts Act

If this contract is for the manufacture or furnishing of materials, supplies articles, or equipment in an amount which exceeds or may exceeds or exceed $10,000 and is otherwise subject to the Walsh-Healey Public Contract Act, as amended (41 U.S.C. 34-35), there are hereby incorporated by reference all representations and stipulations required by said Act and regulations issued thereunder by the Secretary of Labor, such representations of the Secretary of Labor which are now or may hereafter be in effect.

N. Officials Not to Benefit

No member, officer, or employee of the Authority during his tenure or one year thereafter shall have any interest, direct or indirect, in this Contract or the proceeds thereof.

O. Covenant against Contingent Fees

The Contractor warrants that no person or selling agency has been employed or retained to solicit or secure this Contract upon an agreement or understanding for a commission, percentage, brokerage, or contingent fee, excepting bona fide employees or bona fide established commercial or selling agencies maintained by the Contractor for the purpose of

securing business. For breach or violation of this warranty, the Authority shall have the right to annul this Contract without liability or in its discretion, to full amount of such commission, percentage, brokerage, or contingent fee.

P. Notice to the Authority of Labor Disputes

Whenever the Contractor has knowledge that any or potential labor disputes is delaying or threatens to delay the timely performance of this Contract, the Contractor shall immediately give notice thereof, including all relevant information with respect thereto, to the Contracting Officer. The Contractor agrees to insert the substance of this clause, in any subcontract hereunder as to which a labor dispute may delay the timely performance of this Contract; except that each such subcontract shall provide that in the event its timely performance is delayed or threatened by delay by any actual or potential labor dispute, the subcontractor shall immediately notify his next higher tier subcontractor, or the Contractor, as the case may be, of all relevant information with respect to such dispute.

Q. Patent Indemnity

1. If the amount of this Contract is in excess of $10,000, the Contractor shall indemnify the Authority and its officers, agents, and employees against liability, including costs, for infringement of any United States letters patent arising out of the manufacture or delivery of supplies under this Contract.
2. In addition, if specifically requested by the Contracting Officer prior to execution of the Contract, a copy of the current license agreement and identification of applicable claims of specific patents shall be furnished.

R. Use of Trade Names

Any trade names used in this document are merely used for a point of reference. The Authority will consider submission of approved equals on any or all products specified. Use of trade names by the Authority bears no actual or implicit approval for the violation of any current or pending patents or copyrights.

S. Rights in Technical Data

1. The Authority shall have the right to use, duplicate or disclose technical data, which includes computer software, in whole or in part, in any manner and for any purpose whatsoever, and to have or permit others to do so:
   a. Any manuals, instructional materials prepared for installation, operation, maintenance or training purposes;
   b. Technical data pertaining to end items, components or processes which were prepared for the purpose of identifying sources, size, configuration, mating and attachment characteristics, functional characteristics and performance requirements ("for, fit and function: data; e/g/ specification control drawing, catalog sheets, outline drawing; except that for computer software it means data identifying source, functional characteristics, and performance requirements but specifically excludes the

source code, algorithm, process, formulae, and flow charts of the software);

c. Other technical data which has been, or is normally furnished without restriction by the Contractor or subcontractor;

d. Other specifically described technical data, which the parties have agreed will be furnished without restriction.

2. The Authority shall have the right to use, duplicate, or disclose technical data other than that defined in paragraph a. in whole or in part, with the express limitation that such technical data shall not, without the written permission of the party furnishing such technical data, be

   a. released or disclosed in part by the Authority for manufacture, or

   b. used in whole or in part by the Authority for manufacture, or

   c. used by a party other than the Authority except for emergency repair or overhaul work only, by or for the Authority where the item or process concerned is not otherwise reasonably available to enable timely performance of the work; provided, that the release or disclosure thereof outside the Authority shall be made subject to a prohibition against further use, release or disclosure.

3. Technical data provided in accordance with the provisions of paragraph b. shall be identified by a legend, which suitably recites the aforesaid limitation. Nothing herein shall impair the right of the Authority to use similar or identical data acquired from other sources.

4. The term technical data as used in this article means technical writing, computer software, sound recording, pictorial reproductions, drawings, or other representations and works of a technical nature, whether or not copyrighted, which are specified to be delivered pursuant to this Contract. The term does not include financial reports, cost analysis, and other information incidental to Contract administration. Computer software as used in this article means computer programs, computer databases, and documentation.

5. Material covered by copyright:

   a. The Contractor agrees to and does hereby grant to the Authority, and to its officers, agents and employees acting within the scope of their official duties, a royalty-free, nonexclusive and irrevocable license throughout the world for Authority purposes to publish, translate, reproduce, deliver, perform, dispose of, and to authorize others to do so, all technical data now or hereafter covered by copyright.

   b. No such copyright matter shall be included in technical data furnished hereunder without the written permission of the copyright owner for the Authority (or higher-tier contractor) promptly and in reasonable written detail each notice or claim of copyright infringement received by the

Contractor with respect to any technical data delivered hereunder.

6. Relation to patents: Nothing contained in this article shall imply a license to the Authority under any patent, or be construed as affecting the scope of any license or other right otherwise granted to the Authority under any patent.
7. Any dispute under this article shall be subject to the Disputes article of this contract

T. Audit and Inspection of Records

The Contractor shall maintain records, and the Contracting Officer, the State of Rhode Island, the U.S. Department of Transportation, and the Comptroller General of the United States or any of their duly authorized representatives shall, until the expiration of three years after final payment under this Contract, have access to and the right to examine any directly pertinent books, documents, papers and records of such contractor, involving transactions related to the Contract, for the purpose of making audit, examination, excerpts and transactions.

The Contractor further agrees to include in all his subcontracts hereunder a provision to the effect that the subcontractor agrees that the Contracting Officer, the State of Rhode Island, the U.S. Department of Transportation and the Comptroller General of the United States or any of their Duly authorized representatives shall, until the expiration of three years after final payment under the Contract, have access to and the right to examine any directly pertinent books, documents, papers and records of such subcontractor, involving transactions related to the subcontract, for the purpose of making audit, examination, excerpts and transcription.

U. Gratuities

In connection with performance of work required under this Contract, or any changes or modifications relative thereto, the giving of or offering to give gratuities (in the form of entertainment, gifts or otherwise) by the Contractor, or any agent, representative or other person deemed to be acting on behalf of the Contractor, or any supplier or subcontractor furnishing material to or performing work under this Contract, or agent, representative or other person deemed to be acting on behalf of such supplier or subcontractor, to any Director, Officer or employee of the Authority; or to any Director, employee or agent of any of the Authority's agents, consultants, representatives or other persons deemed to be acting for or on behalf of the Authority with a view toward securing a contract or securing favorable treatment with respect to the awarding to the awarding or amending, or the making of any determinations with respect to the performing of such contract is expressly forbidden. The terms of this GRATUITIES article shall be strictly construed and enforced in the event of violations hereto.

V. Limitation on Withholding Payments

If more than one article or schedule provision of this Contract authorized the temporary withholding of amounts otherwise payable to the Contractor for supplies delivered or services performed, the total of the amounts so withheld at any one time shall not exceed the greatest

amount which may be withheld under any one such article or schedule provision at that time; provided, that this limitation shall not apply to:

1. Withholdings pursuant to any clause relating to wages or hours of employees;
2. Withholdings not specifically provided for by this Contract; and
3. The recovery of overpayment.

W. New Material

The Contractor represents that the supplies and components to be provided under this Contract are new (not used or reconditioned, and not of such age or so deteriorated as to impair their usefulness or safety).

X. Order of Precedence

In the event of an inconsistency in the Contract, unless otherwise provided herein, the inconsistency shall be resolved by giving precedence in the following order:

1. The Bid Schedule;
2. Special Conditions;
3. General Provisions;
4. The other provisions of the Contract, whether incorporated by reference or otherwise;
5. The Specifications; and
6. Drawings.

Y. Correction of Deficiencies

1. Definitions:

As used in this article:

a. Deficiency means any condition or characteristics in any supplies (which term shall include related technical data) or services furnished hereunder, which is not in compliance with the requirements of this Contract.
b. Correction means any and all actions necessary to eliminate any and all deficiencies.
c. Supplies mean the end item(s) furnished by the Contractor and related services required under this Contract.

2. General:

a. The rights and remedies of the Authority shall not be affected in any way by any other provisions under this Contract concerning the conclusiveness of inspection and acceptance.
b. The Contractor shall not be responsible under this article for the correction of deficiencies caused by the Authority. These shall be no extension in time for performance; no increase in contract price for the correction of deficiencies that are the responsibility of the Contractor, his suppliers, and/or subcontractors.

3. Deficiencies in accepted supplies or services:

If the Contracting Officer determines that a deficiency exists in any of the supplies or services accepted by the Authority under this Contract, he shall promptly notify the Contractor of the deficiency, in writing, within 30 days. Upon timely notification of the existence of such a deficiency, or if the Contractor independently discovers a deficiency in accepted supplies or services, the Contractor shall promptly submit to the Contracting Officer his recommendation for corrective actions, together with supporting information in sufficient detail for the Contracting Officer to determine what corrective action, if any, shall be undertaken.

4. Correction of Deficiencies by Contractor:

The Contractor shall promptly comply with any timely written direction by the Contracting Officer to correct or partially correct a deficiency, at no increase in the Contract price. The Contractor shall also prepare and furnish to the Authority data and reports applicable to any correction required under this article (including revision and updating of all other affected data called for under this Contract) at no increase in the Contract price.

5. Deficiencies in supplies or services not yet accepted:

If the Contractor becomes aware at any time before acceptance by the Authority (whether before or after tender to the Authority) that a deficiency exists in any supplies or services, he shall promptly correct the deficiency or, if he elects to invoke the procedures in paragraph c. above he shall promptly communicate information concerning the deficiency to the Contracting Officer, in writing, together with his detailed recommendation for corrective action.

6. Extensions or Delays

In no event shall the Authority be responsible for extension or delays in the scheduled deliveries or periods of performance under this Contract as a result of the Contractor's obligations to correct deficiencies, nor shall there be any adjustment of delivery schedule or period of performance as a result of corrections of deficiencies, except as may be agreed to by the Authority in a supplemental agreement with adequate consideration.

7. Contract Price

It is hereby specifically recognized and agreed by the parties hereto that this article shall not be construed as obligating the Authority to increase the Contract price of this Contract.

8. Failure to correct:

If the Contractor fails or refuses to promptly rectify the deficiency the Contracting Officer shall give the Contractor written notice specifying the failure or refusal and setting a period after receipt of the notice within which it must be cured. If the failure or refusal is not cured within the specified period, the Contracting Officer may, by contract or otherwise, as required:

a. Obtain detailed recommendations for corrective action;
b. Correct the supplies or services, or
c. Replace the supplies or services; and if the Contractor fails to furnish timely disposition instructions, the Contracting Officer may dispose of nonconforming supplies for the

Contractor's account in a reasonable manner, in which case the Authority is entitled to reimbursement from the Contractor or from the proceeds for the reasonable expenses of case and disposition, as well as for excess costs incurred or to be incurred; and

d. Obtain applicable data and reports; and charge to the Contractor the cost occasioned the Authority thereby.

e. Impose Liquidated Damages in accordance the terms of this document

f. Terminate the contract. Termination of contract by RIPTA does not relieve the contractor of any liquidated damages imposed by the Authority.

Z. Assignment

1. The Contractor shall not transfer the rights and obligations of the Contract to third parties without the prior written approval of the Authority's Contracting Officer. After review of facts and circumstances without exception the assignment shall not be approved unless the surety, in writing, agrees to that assignment and accepts the assignee as the Contractor and principal on the payment and/or performance bonds.
2. If this Contract provides for payments aggregating $1,000 or more, claims for monies due or to become due the Contractor from the Authority under this Contract may be assigned to a bank, trust company, or other financing institution, including any Federal lending agency, any may thereafter by further assigned and reassigned to any institution. (Notice of such assignment shall be made to the Authority.) Any such assignment or reassignment shall cover all amounts payable under this Contract and not already paid, and shall not be made to more than one party, except that any such assignment or reassignment or reassignment may be made to one party as agent or trustee for two or more parties participating in such financing. It is the Authority's intent to recognize only bona fide lending institutions, therefore, assignment to any private corporation, business or individual, which does not qualify as such, is specifically prohibited.
3. Any attempt to transfer by assignment not authorized by this article shall constitute a breach of the Contract and the Authority may for such cause terminate the right of the Contractor to proceed as provided in the DEFAULT article of these General Provisions, and the Contractor and his sureties shall be liable to the Authority for any excess costs incurred by the Authority.
4. The Rhode Island Public Transit Authority may assign some or all of its rights to purchase the items specified in this contract to one or more third parties, provided, however, that nay such assignment shall not relieve RIPTA of its obligations under this contract unless otherwise agreed to by Contractor in writing.

AA. Certificates of Current Cost or Pricing Data

The Contractor shall provide a Certificate of Current Cost or Pricing Data as required in Subpart 15.804 of the Federal Acquisition Regulations (48 CFR 15.804) in support of any negotiated contract expected to exceed $100,000 any modification to a formally advertised or negotiated contract on which the aggregate of the increase and decrease in cost are expected to exceed $100,000; the Contracting Officer at his discretion may request cost or pricing data for modifications on which cost are $100,000 or less and an attendant certificate of current cost or pricing data.

BB. Cargo Preference

Use of United States Flag Vessels

Pursuant to Pub. L 664 (56 U.S.C. 1241 (b)):

"Cargo Preference-Use of United States-Flag Vessels

The Contractor agrees

1. To utilize privately owned United States-flag commercial vessels to ship at least 50 percent of the gross tonnage (computed separately for dry bulk cargo liners, and tankers) involved, whenever shipping any equipment, materials, or commodities pursuant to this Contract, to the extent such vessels are available at fair and reasonable rates for United States-flag commercial vessels.
2. To furnish within 20 days following the date of loading for shipments originating within the United States, or within 30 working days following the date of loading for shipments originating outside the United States, a legible copy of a rated, "on-board" commercial ocean bill-of-lading in English for each shipment of cargo described in paragraph (1) above to the Grantee (through the prime Contractor in the care of subcontractor bills-of lading) and to the Division of National Cargo, Officer of Market Development, Maritime Administration, Washington, D.C. 20230, marked with appropriate identification of the Project.
3. To insert the substance of the provisions of this clause in all subcontracts issued pursuant to this Contract.

CC. Buy America Act

The Contractor agrees to comply with 49 U.S.C. §533(j), and its implementing regulations at 49 C.F.R. Part 661, any amendments thereto, and any implementing guidelines issued by FTA.

DD. Equal Opportunity

1. Race, Color, Creed, National Origin, Sex.

In accordance with Title VII of the Civil Rights Act, as amended, 42 U.S.C. § 2000e, and Federal transit laws at 49 U.S.C. § 5332, the Contractor agrees to comply with all applicable equal employment opportunity requirements of U.S. Department of Labor (U.S. DOL) regulations, " Office of Federal Contract Compliance Programs, Equal Employment Opportunity, Department of Labor," 41 CFR Parts 60 et seq., (which implements Executive Order No. 11246, "Equal Employment Opportunity," as amended by Executive Order No. 11375,

"Amending Executive Order 11246 Relating to Equal Employment Opportunity," 42 U.S.C. § 2000e note), and with any applicable Federal statutes, executive orders regulations, and Federal polices that may in the future affect construction activities undertaken in the course of the Project. The contract agrees to take affirmative action to ensure that applicants are employed, and that employees are treated during employment, without regard to their race, color, creed, national origin, sex, or age. Such action shall include, but not be limited to, the following: employment, upgrading, demotion or transfer, recruitment or recruitment advertising, layoff or termination; rates of pay or other forms of compensation; and selection for training, including apprenticeship. In addition, the Contractor agrees to comply with any implementing requirements FTA may issue.

2. **Age**
In accordance with section 4 of the Age Discrimination in Employment Act of 1967, as amended, 29, U.S.C. § 623 and Federal Transit Law at 49 U.S.C. § 5332, the Contractor agrees to refrain from discrimination against present and prospective employees for reason of age. In addition, the Contractor agrees to comply with any implementing requirements FTA may issue.

3. **Disabilities**
In accordance with section 102 of the Americans with Disabilities Act, as amended, 42 U.S.C. § 12112, the Contractor agrees that it will comply with the requirements of U.S. Equal Employment Opportunity Commission, "Regulations to Implement the Equal Employment Provisions of the Americans with Disabilities Act," 29 CFR Part 1630, pertaining to employment of persons with disabilities. In addition, the Contractor agrees to comply with any implementing requirements FTA may issue.

The contractor also agrees to include these requirements in each subcontract financed in whole or in part with Federal assistance provided by FTA, modified only if necessary to identify the affected parties.

EE. Nondiscrimination under Federal Grants

In accordance with Title VI of the Civil Rights Act, as amended, 42 U.S.C. §2000d, section 303 of the Age Discrimination Act of 1975, as amended, 42 U.S.C. §6102, section 202 of the Americans with Disabilities Act of 1990, 42 U.S.C. § 12132, and Federal transit law at 49 U.S.C. § 5332, the Contractor agrees that it will not discriminate against any employee or applicant for employment because of race, color, creed, national origin, sex, age, or disability. In addition, the Contractor agrees to comply with applicable Federal implementing regulations and other implementing requirements FTA may issue.

FF. Rights in Data and Copyrights-FTA (June 1996)

The term "subject data" used in this section means recorded information, whether or not copyrighted, that is delivered or specified to be delivered under this contract. The term includes graphic or pictorial delineation in media such as drawings or photographs; text in specifications or related performance or design-type documents; machine forms such as punched

cards, magnetic tape, or computer memory printouts; and information retained in computer memory. Example include, but are not limited to: computer software, engineering drawings and associated lists, specifications, standards, process sheets, manuals, technical reports, catalog item identifications, and related information. The term "subject data" does not include financial reports, cost analyses, and similar information incidental to Project administration.

When the Federal Transit Administration (FTA) provides financial assistance for a planning, research, development, or a demonstration project, it is FTA's general intention to increase mass transportation knowledge, rather than limit the benefits of the Project to participants in the Project. Therefore, unless FTA determines otherwise, the Contractor agrees that FTA may make available to any FTA recipient, subrecipient, third party contractor, or third party subcontractor, either FTA's license in the copyright to the subject data derived under this contract or a copy of the subject data as defined in subsection a. of this clause and shall be delivered as the Government may direct. Unless prohibited by state law, the Contractor agrees to indemnify, save, and hold harmless RIPTA and the Government, their officers, agents, and employees acting within the scope of their official duties against any liability, including costs and expenses, resulting from any willful or intentional violation by the contractor of proprietary rights, copyrights, or right of privacy, arising out of the publication, translation, reproduction, delivery, use, or disposition of any data furnished under this Contract. The Contractor shall not be required to indemnify RIPTA and the Government for any such liability arising out of the wrongful acts of employees or agents of RIPTA and the Government.

GG. Davis-Bacon Act

40 USC &167; 276a -276a-5 (1998) 29 CFR § 5 (1999)

1. Minimum wages

a. All laborers and mechanics employed or working upon the site of the work (or under the United States Housing Act of 1937 or under the Housing Act of 1949 in the construction or development of the project), will be paid unconditionally and not less often than once a week, and without subsequent deduction or rebate on any account (except such payroll deductions as are permitted by regulations issued by the Secretary of Labor under the Copeland Act (29 CFR part 3)), the full amount of wages and bona fide fringe benefits (or cash equivalents thereof) due at time of payment computed at rates not less than those contained in the wage determination of the Secretary of Labor which is attached hereto and made a part hereof, regardless of any contractual relationship which may be alleged to exist between the contractor and such laborers and mechanics.

Contributions made or costs reasonably anticipated for bona fide fringe benefits under section 1(b)(2) of the Davis-Bacon Act on behalf of laborers or mechanics are considered wages paid to such laborers or mechanics, subject to the provisions of paragraph (1)(iv) of this

section; also, regular contributions made or costs incurred for more than a weekly period (but not less often than quarterly) under plans, funds, or programs which cover the particular weekly period, are deemed to be constructively made or incurred during such weekly period. Such laborers and mechanics shall be paid the appropriate wage rate and fringe benefits on the wage determination for the classification of work actually performed, without regard to skill, except as provided in 29 CFR Part 5.5(a)(4). Laborers or mechanics performing work in more than one classification may be compensated at the rate specified for each classification for the time actually worked therein: Provided, That the employer's payroll records accurately set forth the time spent in each classification in which work is performed. The wage determination and the Davis-Bacon poster (WH-1321) shall be posted at all times by the contractor and its subcontractors at the site of the work in a prominent and accessible place where it can be easily seen by the workers.

b. The contracting officer shall require that any class of laborers or mechanics, including helpers, which is not listed in the wage determination and which is to be employed under the contract shall be classified in conformance with the wage determination. The contracting officer shall approve an additional classification and wage rate and fringe benefits therefore only when the following criteria have been met:
   i. Except with respect to helpers as defined as 29 CFR 5.2(n)(4), the work to be performed by the classification requested is not performed by a classification in the wage determination; and
   ii. The classification is utilized in the area by the construction industry; and
   iii. The proposed wage rate, including any bona fide fringe benefits, bears a reasonable relationship to the wage rates contained in the wage determination; and
   iv. With respect to helpers as defined in 29 CFR 5.2(n)(4), such a classification prevails in the area in which the work is performed.

c. If the contractor and the laborers and mechanics to be employed in the classification (if known), or their representatives, and the contracting officer agree on the classification and wage rate (including the amount designated for fringe benefits where appropriate), a report of the action taken shall be sent by the contracting officer to the Administrator of the Wage and Hour Division, Employment Standards Administration, U.S. Department of Labor, Washington, DC 20210. The Administrator, or an authorized representative, will approve, modify, or disapprove every additional classification action within 30 days of receipt and so advise the contracting officer or will

notify the contracting officer within the 30-day period that additional time is necessary.

d. In the event the contractor, the laborers or mechanics to be employed in the classification or their representatives, and the contracting officer do not agree on the proposed classification and wage rate (including the amount designated for fringe benefits, where appropriate), the contracting officer shall refer the questions, including the views of all interested parties and the recommendation of the contracting officer, to the Administrator for determination. The Administrator, or an authorized representative, will issue a determination within 30 days of receipt and so advise the contracting officer or will notify the contracting officer within the 30-day period that additional time is necessary.

e. The wage rate (including fringe benefits where appropriate) determined pursuant to paragraphs (a)(1)(ii) (B) or (C) of this section, shall be paid to all workers performing work in the classification under this contract from the first day on which work is performed in the classification.

f. Whenever the minimum wage rate prescribed in the contract for a class of laborers or mechanics includes a fringe benefit which is not expressed as an hourly rate, the contractor shall either pay the benefit as stated in the wage determination or shall pay another bona fide fringe benefit or an hourly cash equivalent thereof.

g. If the contractor does not make payments to a trustee or other third person, the contractor may consider as part of the wages of any laborer or mechanic the amount of any costs reasonably anticipated in providing bona fide fringe benefits under a plan or program, Provided, That the Secretary of Labor has found, upon the written request of the contractor, that the applicable standards of the Davis-Bacon Act have been met. The Secretary of Labor may require the contractor to set aside in a separate account assets for the meeting of obligations under the plan or program.

h. The contracting officer shall require that any class of laborers or mechanics which is not listed in the wage determination and which is to be employed under the contract shall be classified in conformance with the wage determination. The contracting officer shall approve an additional classification and wage rate and fringe benefits therefore only when the following criteria have been met:

   i. The work to be performed by the classification requested is not performed by a classification in the wage determination; and

   ii. The classification is utilized in the area by the construction industry; and

   iii. The proposed wage rate, including any bona fide fringe benefits, bears a reasonable relationship to

the wage rates contained in the wage determination.

i. If the contractor and the laborers and mechanics to be employed in the classification (if known), or their representatives, and the contracting officer agree on the classification and wage rate (including the amount designated for fringe benefits where appropriate), a report of the action taken shall be sent by the contracting officer to the Administrator of the Wage and Hour Division, Employment Standards Administration, Washington, DC 20210. The Administrator, or an authorized representative, will approve, modify, or disapprove every additional classification action within 30 days of receipt and so advise the contracting officer or will notify the contracting officer within the 30-day period that additional time is necessary.

j. In the event the contractor, the laborers or mechanics to be employed in the classification or their representatives, and the contracting officer do not agree on the proposed classification and wage rate (including the amount designated for fringe benefits, where appropriate), the contracting officer shall refer the questions, including the views of all interested parties and the recommendation of the contracting officer, to the Administrator for determination. The Administrator, or an authorized representative, will issue a determination with 30 days of receipt and so advise the contracting officer or will notify the contracting officer within the 30-day period that additional time is necessary.

k. The wage rate (including fringe benefits where appropriate) determined pursuant to paragraphs (a)(1)(v) (B) or (C) of this section, shall be paid to all workers performing work in the classification under this contract from the first day on which work is performed in the classification.

2. Withholding

The Rhode Island Public Transit Authority shall upon its own action or upon written request of an authorized representative of the Department of Labor withhold or cause to be withheld from the contractor under this contract or any other Federal contract with the same prime contractor, or any other federally-assisted contract subject to Davis-Bacon prevailing wage requirements, which is held by the same prime contractor, so much of the accrued payments or advances as may be considered necessary to pay laborers and mechanics, including apprentices, trainees, and helpers, employed by the contractor or any subcontractor the full amount of wages required by the contract. In the event of failure to pay any laborer or mechanic, including any apprentice, trainee, or helper, employed or working on the site of the work (or under the United States Housing Act of 1937 or under the Housing Act of

1949 in the Rhode Island Public Transit Authority may, after written notice to the contractor, sponsor, applicant, or owner, take such action as may be necessary to cause the suspension of any further payment, advance, or guarantee of funds until such violations have ceased.

3. Payrolls and basic records

a. Payrolls and basic records relating thereto shall be maintained by the contractor during the course of the work and preserved for a period of three years thereafter for all laborers and mechanics working at the site of the work (or under the United States Housing Act of 1937, or under the Housing Act of 1949, in the construction or development of the project). Such records shall contain the name, address, and social security number of each such worker, his or her correct classification, hourly rates of wages paid (including rates of contributions or costs anticipated for bona fide fringe benefits or cash equivalents thereof of the types described in section 1(b)(2)(B) of the Davis-Bacon Act), daily and weekly number of hours worked, deductions made and actual wages paid. Whenever the Secretary of Labor has found under 29 CFR 5.5(a)(1)(iv) that the wages of any laborer or mechanic include the amount of any costs reasonably anticipated in providing benefits under a plan or program described in section 1(b)(2)(B) of the Davis-Bacon Act, the contractor shall maintain records which show that the commitment to provide such benefits is enforceable, that the plan or program is financially responsible, and that the plan or program has been communicated in writing to the laborers or mechanics affected, and records which show the costs anticipated or the actual cost incurred in providing such benefits. Contractors employing apprentices or trainees under approved programs shall maintain written evidence of the registration of apprenticeship programs and certification of trainee programs, the registration of the apprentices and trainees, and the ratios and wage rates prescribed in the applicable programs.

b. i. The contractor shall submit weekly for each week in which any contract work is performed a copy of all payrolls to the Rhode Island Public Transit Authority for transmission to the Federal Transit Administration. The payrolls submitted shall set out accurately and completely all of the information required to be maintained under 29 CFR part 5. This information may be submitted in any form desired. Optional Form WH-347 is available for this purpose and may be purchased from the Superintendent of Documents (Federal Stock Number 029-005-00014-1), U.S. Government Printing Office, Washington, DC 20402. The prime

contractor is responsible for the submission of copies of payrolls by all subcontractors.

ii. Each payroll submitted shall be accompanied by a "Statement of Compliance," signed by the contractor or subcontractor or his or her agent who pays or supervises the payment of the persons employed under the contract and shall certify the following:
(1) That the payroll for the payroll period contains the information required to be maintained under 29 CFR part 5 and that such information is correct and complete;
(2) That each laborer or mechanic (including each helper, apprentice, and trainee) employed on the contract during the payroll period has been paid the full weekly wages earned, without rebate, either directly or indirectly, and that no deductions have been made either directly or indirectly from the full wages earned, other than permissible deductions as set forth in Regulations, 29 CFR part 3;
(3) That each laborer or mechanic has been paid not less than the applicable wage rates and fringe benefits or cash equivalents for the classification of work performed, as specified in the applicable wage determination incorporated into the contract.

c. The weekly submission of a properly executed certification set forth on the reverse side of Optional Form WH-347 shall satisfy the requirement for submission of the "Statement of Compliance" required by paragraph (a)(3)(ii)(B) of this section.

d. The falsification of any of the above certifications may subject the contractor or subcontractor to civil or criminal prosecution under section 1001 of title 18 and section 231 of title 31 of the United States Code.

The contractor or subcontractor shall make the records required under paragraph (a)(3)(i) of this section available for inspection, copying, or transcription by authorized representatives of the Federal Transit Administration or the Department of Labor, and shall permit such representatives to interview employees during working hours on the job. If the contractor or subcontractor fails to submit the required records or to make them available, the Federal agency may, after written notice to the contractor, sponsor, applicant, or owner, take such action as may be necessary to cause the suspension of any further payment, advance, or guarantee of funds. Furthermore, failure to submit the required records upon request or to make such

records available may be grounds for debarment action pursuant to 29 CFR 5.12.

4. Apprentices and trainees

a. Apprentices - Apprentices will be permitted to work at less than the predetermined rate for the work they performed when they are employed pursuant to and individually registered in a bona fide apprenticeship program registered with the U.S. Department of Labor, Employment and Training Administration, Bureau of Apprenticeship and Training, or with a State Apprenticeship Agency recognized by the Bureau, or if a person is employed in his or her first 90 days of probationary employment as an apprentice in such an apprenticeship program, who is not individually registered in the program, but who has been certified by the Bureau of Apprenticeship and Training or a State Apprenticeship Agency (where appropriate) to be eligible for probationary employment as an apprentice. The allowable ratio of apprentices to journeymen on the job site in any craft classification shall not be greater than the ratio permitted to the contractor as to the entire work force under the registered program. Any worker listed on a payroll at an apprentice wage rate, who is not registered or otherwise employed as stated above, shall be paid not less than the applicable wage rate on the wage determination for the classification of work actually performed. In addition, any apprentice performing work on the job site in excess of the ratio permitted under the registered program shall be paid not less than the applicable wage rate on the wage determination for the work actually performed. Where a contractor is performing construction on a project in a locality other than that in which its program is registered, the ratios and wage rates (expressed in percentages of the journeyman's hourly rate) specified in the contractor's or subcontractor's registered program shall be observed. Every apprentice must be paid at not less than the rate specified in the registered program for the apprentice's level of progress, expressed as a percentage of the journeymen hourly rate specified in the applicable wage determination. Apprentices shall be paid fringe benefits in accordance with the provisions of the apprenticeship program. If the apprenticeship program does not specify fringe benefits, apprentices must be paid the full amount of fringe benefits listed on the wage determination for the applicable classification. If the Administrator of the Wage and Hour Division of the U.S. Department of Labor determines that a different practice prevails for the applicable apprentice classification, fringes shall be paid in accordance with that determination. In the event the Bureau of Apprenticeship and Training, or a State Apprenticeship Agency recognized by the Bureau, withdraws approval of an apprenticeship program, the

contractor will no longer be permitted to utilize apprentices at less than the applicable predetermined rate for the work performed until an acceptable program is approved.

b. Trainees - Except as provided in 29 CFR 5.16, trainees will not be permitted to work at less than the predetermined rate for the work performed unless they are employed pursuant to and individually registered in a program which has received prior approval, evidenced by formal certification by the U.S. Department of Labor, Employment and Training Administration. The ratio of trainees to journeymen on the job site shall not be greater than permitted under the plan approved by the Employment and Training Administration. Every trainee must be paid at not less than the rate specified in the approved program for the trainee's level of progress, expressed as a percentage of the journeyman hourly rate specified in the applicable wage determination. Trainees shall be paid fringe benefits in accordance with the provisions of the trainee program. If the trainee program does not mention fringe benefits, trainees shall be paid the full amount of fringe benefits listed on the wage determination unless the Administrator of the Wage and Hour Division determines that there is an apprenticeship program associated with the corresponding journeyman wage rate on the wage determination which provides for less than full fringe benefits for apprentices. Any employee listed on the payroll at a trainee rate who is not registered and participating in a training plan approved by the Employment and Training Administration shall be paid not less than the applicable wage rate on the wage determination for the classification of work actually performed. In addition, any trainee performing work on the job site in excess of the ratio permitted under the registered program shall be paid not less than the applicable wage rate on the wage determination for the work actually performed. In the event the Employment and Training Administration withdraws approval of a training program, the contractor will no longer be permitted to utilize trainees at less than the applicable predetermined rate for the work performed until an acceptable program is approved.

c. Equal employment opportunity - The utilization of apprentices, trainees and journeymen under this part shall be in conformity with the equal employment opportunity requirements of Executive Order 11246, as amended, and 29 CFR part 30.

5. Compliance with Copeland Act requirements

The contractor shall comply with the requirements of 29 CFR part 3, which are incorporated by reference in this contract.

6. Subcontracts

The contractor or subcontractor shall insert in any subcontracts the clauses contained in 29 CFR 5.5(a)(1) through (10) and such other clauses as the Federal Transit Administration may by appropriate instructions require, and also a clause requiring the subcontractors to include these clauses in any lower tier subcontracts. The prime contractor shall be responsible for the compliance by any subcontractor or lower tier subcontractor with all the contract clauses in 29 CFR 5.5.

7. Contract termination: debarment

A breach of the contract clauses in 29 CFR 5.5 may be grounds for termination of the contract, and for debarment as a contractor and a subcontractor as provided in 29 CFR 5.12.

8. Compliance with Davis-Bacon and Related Act requirements

All rulings and interpretations of the Davis-Bacon and Related Acts contained in 29 CFR parts 1, 3, and 5 are herein incorporated by reference in this contract.

9. Disputes concerning labor standards

Disputes arising out of the labor standards provisions of this contract shall not be subject to the general disputes clause of this contract. Such disputes shall be resolved in accordance with the procedures of the Department of Labor set forth in 29 CFR parts 5, 6, and 7. Disputes within the meaning of this clause include disputes between the contractor (or any of its subcontractors) and the contracting agency, the U.S. Department of Labor, or the employees or their representatives.

10. Certification of eligibility.

a. By entering into this contract, the contractor certifies that neither it (nor he or she) nor any person or firm who has an interest in the contractor's firm is a person or firm ineligible to be awarded Government contracts by virtue of section 3(a) of the Davis-Bacon Act or 29 CFR 5.12(a)(1).

b. No part of this contract shall be subcontracted to any person or firm ineligible for award of a Government contract by virtue of section 3(a) of the Davis-Bacon Act or 29 CFR 5.12(a)(1).

c. The penalty for making false statements is prescribed in the U.S. Criminal Code, 18 U.S.C. 1001

HH. Contract Work Hours and Safety Standards Act

40 U.S.C. 327-333 (1995) 29C.F.R. 5 (1995) 29 C.F.R. 1926 (1995)

1. Overtime requirements

No contractor or subcontractor contracting for any part of the contract work which may require or involve the employment of laborers or mechanics shall require or permit any such laborer or mechanic in any workweek in which he or she is employed on such to work in excess of forty hours in such workweek unless such laborers or mechanics receive compensation at a rate not

less than one and one-half times the basic rate of pay for all hours worked in excess of forty hours in such workweek.

2. Violation; liability unpaid wages; liquidated damages

In the event of any violation of the clauses set forth in paragraph (1) of this section the contractor and any subcontractor responsible therefore shall be liable for the unpaid wages. In addition, such contractor and subcontractor shall be liable to the United States for liquidated damages. Such liquidated damages shall be computed with respect to each individual laborer or mechanic, including watchmen and guards, employed in violation of the clauses set forth in paragraph (1) of this section, in the sum of $10 for each calendar day on which such individual was required or permitted to work in excess of the standard workweek of forty hours without payment of the overtime wages required by the clauses set forth in paragraph (1) of this section.

3. Withholding for unpaid wages; liquidated damages

The Rhode Island Public Transit Authority shall upon its own action or upon written request of an authorized representative of the Department of Labor withhold or cause to be withheld, from any moneys payable on account of work performed by the contractor or subcontractor under any such contract or any other Federal contract with the same prime contractor, or any other federally-assisted contract subject to the Contract Work Hours and Safety Standards Act, which is held by the same prime contractor, such sums as may be determined to be necessary to satisfy any liabilities of such contractor or subcontractor for unpaid wages and liquidated damages as provided in the clauses set forth in paragraph (2) of this section.

4. Subcontracts

The contractor or subcontractor shall insert in any subcontracts the clauses set forth in this section and also a clause requiring the subcontractors to include these clauses in any lower tier subcontracts. The prime contractor shall be responsible for compliance by any subcontractor or lower tier subcontractor with the clauses set forth in this section. (Section 102 nonconstruction contracts should also have the following provision:)

5. Payrolls and basic records

Payrolls and basic records relating theretoshall be maintained by the contractor during the course of the work and preserved for a period of three years thereafter for all laborers and mechanics working at the site of the work (or under the United States Housing Act of 1937, or under the Housing Act of 1949, in the construction or development of the project). Such records shall contain the nams, address, and social security number of each worker, his or her correct classification, hourly rates of wages paid (including rates of contributions or costs anticipated for bona fide fringe benefits or cash equivalents thereof of the types described in section 1(b)(2)(B) of the Davis-Beacon Act), daily and weekly number of hours worked, deductions. Whenever the made and actual wages paid Secreary iof labor has found under 29 CFR 5.5 (a)(1)(iv) that the wages of any laborer or mechanic included the

amount of any costs reasonably anticipated in providing benefits under a plan or program described in section 1(b)(2)(B) of the Davis-Beacon Act, the contractor shall maintain records which show that the commitment to provide such benefits is enforceable, that the plan or program is financially responsible, and that the plan or program has been communicated in writing to the laborers or mechanics affected, and records which show the costs anticipated or the actual cost incurred in providing such benefits. Contractors employing apprentices or trainees under approved programs shall maintain written evidence of the regisration of apprenticeship programs and certification of trainee programs, the registration of the apprentices and trainees, and the ratios and wage rates prescribed in the applicable programs.

6. Contract Work Hours and Safety Standards Act

The contractor agrees to comply with section 107 of the Contract Work Hours and Safety Standards Act, 40 U.S.C. section 333, and applicable DOL regulations, "Safety and Health Regulations for Construction" 29 C.F.R. Part 1926. Among other things, the Contractor agrees that it will not require any laborer of mechanic to work in unsanitary, hazardous, or dangerous surroundings or working conditions.

7. Subcontracts

The Contractor also agrees to include the requirements of the section in each. The term "subcontract" under this section is considered to refer to a person who agrees to perform any part of the labor or material requirements of a contract for construction, alteration or repair. A person who undertakes to perform a portion of a contract involving the furnishing of supplies or materials will be considered a "subcontractor" under this section if the work in question involves the performance of construction work and is to be performed: (1) directly on or near the construction site, or (2) by the employer for the specific project on a customized basis. Thus, a supplier of materials, which will become an integral part of the construction is a "subcontractor" if the supplier fabricates or assembles the goods or materials in question specifically for the construction project and the work involved may said to be construction activity. If goods or materials in question are ordinarily sold to other customers from regular inventory, the supplier is not a "subcontractor." The requirements of this section do not apply to contracts or subcontracts for the purchase of supplies or materials or articles normally available on the open market.

II. Seismic Safety Requirements

42 U.S.C. 7701 et seq. 49 CFR Part 41

The contractor agrees that any new building or addition to an existing building will be designed and constructed in accordance with the standards for Seismic Safety required in Department of Transportation Seismic Safety Regulations 49 CFR Part 41 and will certify to compliance to the extent required by the regulation. The contractor also agrees to ensure that all work performed under this contract including work

performed by a subcontractor is in compliance with the standards required by the Seismic Safety Regulations and the certification of compliance issued on the project.

JJ. Energy Conservation Requirements

42 U.S.C. 6321 et seq. 49 CFR Part 18

The contractor agrees to comply with mandatory standards and policies relating to energy efficiency, which are contained in the state energy conservation plan issued in compliance with the Energy Policy and Conservation Act.

KK. Clean Air

42 U.S.C. 7401 et Seq 40 CFR 15.61 49 CFR Part 18

1 The Contractor agrees to comply with all applicable standards, orders or regulations issued pursuant to the Clean Air Act, as amended, 42 U.S.C. §§ 7401 et Seq . The Contractor agrees to report each violation to the Purchaser and understands and agrees that the Purchaser will, in turn, report each violation as required to assure notification to FTA and the appropriate EPA Regional Office.

2. The Contractor also agrees to include these requirements in each subcontract exceeding $100,000 financed in whole or in part with Federal assistance provided by FTA.

LL. Clean Water

1 The Contractor agrees to comply with all applicable standards, orders or regulations issued pursuant to the Federal Water Pollution Control Act, as amended, 33 U.S.C. 1251 et Seq . The Contractor agrees to report each violation to the Purchaser and understands and agrees that the Purchaser will, in turn, report each violation as required to assure notification to FTA and the appropriate EPA Regional Office.

2 The Contractor also agrees to include these requirements in each subcontract exceeding $100,000 financed in whole or in part with Federal assistance provided by FTA.

MM. Recovered Materials

The contractor agrees to comply with all the requirements of Section 6002 of the Resource Conservation and Recovery Act (RCRA), as amended (42 U.S.C. 6962), including but not limited to the regulatory provisions of 40 CFR Part 247, and Executive Order 12873, as they apply to the procurement of the items designated in Subpart B of 40 CFR Part 247.

NN. Fly America Requirements

The Contractor agrees to comply with 49 U.S.C. 40118 (the “Fly America” Act) in accordance with the General Services Administration’s regulations at 41 CFR Part 301-10, which provide that recipients and subrecipients of Federal funds and their contractors are required to use U.S. Flag air carriers for U.S Government-financed international air travel and transportation of their personal effects or property, to the extent such service is available, unless travel by foreign air carrier is a matter of

necessity, as defined by the Fly America Act. The Contractor shall submit, if a foreign air carrier was used, an appropriate certification or memorandum adequately explaining why service by a U.S. flag air carrier was not available or why it was necessary to use a foreign air carrier and shall, in any event, provide a certificate of compliance with the Fly America requirements. The Contractor agrees to include the requirements of this section in all subcontracts that may involve international air transportation.

OO. National Intelligent Transportation Systems Architecture and Standards

The Contractor agrees to conform, to the extent applicable, to the National Intelligent Transportation Systems (ITS) Architecture and Standards as required by section 5206(e) of TEA-21, 23 U.S.C. § 502 note, and comply with FTA Notice, "FTA National ITS Architecture Policy on Transit Projects" 66 Fed. Reg. 1455 *et seq*., January 8, 2001, and other Federal requirements that may be issued

PP. Federal Changes

Contractor shall at all times comply with all applicable FTA regulations, policies, procedures and directives, including without limitation those listed directly or by reference in the Agreement (Form FTA MA (9) dated October, 2002) between Purchaser and FTA , as they may be amended or promulgated from time to time during the term of this contract. Contractor's failure to so comply shall constitute a material breach of this contract.

QQ. Incorporation of Federal Transit Administration (FTA) Terms

The preceding provisions include, in part, certain Standard Terms and Conditions required by DOT, whether or not expressly set forth in the preceding contract provisions. All contractual provisions required by DOT, as set forth in FTA Circular 4220.1D, dated April 15, 1996, are hereby incorporated by reference. Anything to the contrary herein notwithstanding, all FTA mandated terms shall be deemed to control in the event of a conflict with other provisions contained in this Agreement. The Contractor shall not perform any act, fail to perform any act, or refuse to comply with any (name of grantee) requests, which would cause (name of grantee) to be in violation of the FTA terms and conditions.

RR. Force Majeure

Neither Party shall be liable to the other Party for failure of or delay in performance of any obligation under this Agreement, directly or indirectly, owing to war, acts of terrorism, acts of God, embargoes, riots, strike and other events beyond its reasonable control, the effect of which, by the exercise of reasonable diligence, the non-performing party could not avoid. In the event that such failure or delay occurs, the affected Party shall notify the other Party of the occurrence thereof as soon as possible and the Parties shall discuss the best way to resolve the event of force majeure.

Neither party shall, however, be excused from performance if nonperformance is due to forces which are preventable, removable, or remediable and which the non-performing party could have, with the exercise of reasonable diligence, prevented, removed, or remedied with reasonable dispatch. The non-performing party shall within a reasonable time of being prevented or delayed from performance by an uncontrollable force, give written notice to the other party describing the circumstances and uncontrollable forces preventing continued performance of the obligations of this Agreement. "

SS. Governing Law

The Contract shall be interpreted under and its performance governed by the laws of the State of Rhode Island."

TT. Indemnification

Bidders shall indemnify and hold harmless, the State of Rhode Island, all departments and division thereof and the Rhode Island Public Transit Authority from all liability, and said indemnification shall cover and include any and all aspects of liability arising from any lawsuit pertaining to the execution of this contract.

UU. Policy Concerning Federal and Stated False Claim Laws

As required by 42 U.S.C. §1396a(a)(68), the Rhode Island Public Transit Authority ("RIPTA") publishes the following information to all employees, contractors and agents about federal and state False Claims laws and RIPTA's policies to detect and prevent fraud, waste and abuse.

1. **Prohibitions Against False Claims**
   Federal False Claims Act
   The federal False Claims Act, among other things, applies to the submission of claims for payment by Medicare, Medicaid and other federal and state programs. The False Claims Act is the federal government's primary civil remedy for improper or fraudulent claims. It applies to all federal programs, including welfare and health care benefits.
2. **Prohibitions of the Federal False Claims Act**
   The False Claims Act prohibits, among other things:
   - a knowingly presenting or causing to be presented to the federal government a false or fraudulent claim for payment or approval;
   - b knowingly making or using, or causing to be made or used, a false record or statement in order to have a false or fraudulent claim paid or approved by the government;
   - c conspiring to defraud the government by getting a false or fraudulent claim allowed or paid; and
   - d knowingly making or using, or causing to be made or used, a false record or statement to conceal, avoid, or

decrease an obligation to pay or transmit money or property to the government.

"Knowingly" means that a person, with respect to information: (1) has actual knowledge of the information; (2) acts in deliberate ignorance of the truth or falsity of the information; or (3) acts in reckless disregard of the truth or falsity of the information, and no proof of specific intent to defraud is required.

3. Enforcement

The United States Attorney General may bring civil actions for violations of the False Claims Act. As with most other civil actions, the government must establish its case by presenting only a preponderance of the evidence rather than by meeting the higher burden of proof that applies in criminal cases.

The False Claims Act allows private individuals to bring "qui tam" actions for violations of the Act.

VV. American with Disabilities Act

All products, equipment or construction provided in accordance with this contract shall comply with the current version of the Americans with Disabilities Act of 1990 - 42 U.S.C. 12101, et seq. at the time of the solicitation.

VI. REQUEST FOR APPROVED EQUAL FORM

This form must be submitted electronically IN MICROSOFT WORD FORMAT TO RIPTA CONTRACTS MANAGER

REQUEST FOR APPROVAL EQUAL QUALIFICATION OR CLARIFICATION

Page:_____ **Ref: RFP NO. 12-29**
Project No._____

To: Rhode Island Public Transit Authority

From: _____

Page & Reference:_____

Request Description

Use Additional Sheet If More Space Is Required

Accepted:_____ Rejected:_____ See Addendum #_____

Explanation:_____

VII. REQUIRED BID SUBMISSIONS

The following items marked with an "X" must be submitted with Response
Failure to submit forms may result in Bid being deemed non-responsive

Required Company Information Form **Must be completed by Prime and All Subcontractors**	X
Solicitation	X
Offer	X
Statement of Eligibility	X
Affidavit of Non-Collusion	X
Certification of Restrictions on Lobbying	X
Buy America Certificate **FORM MUST BE SUBMITTED WITH BID, IF CHECKED, OR BID WILL BE CONSIDERED NON RESPONSIVE**	X
Disadvantaged Business Enterprise	X
General Contract Compliance Certificate Agreement (EEO)	X
Certification of Primary Participant Debarment	X
Certification of a Subcontractor (Debarment) **Each Subcontractor and potential subcontractor** must fill in and sign.	X
Non-Resident Contractor (if applicable)	X
Davis Bacon Act Compliance	X
Drug & Alcohol Testing	
Bid Guarantee (Surety)	X

The following items marked with an "X" must be submitted AFTER AWARD of the Contract

Performance Bond	X
Certificate of Insurance- (as required in Section XX and the Scope of Work)	X

NOTE:
ITEMS WITHOUT AN "X" AND THEIR RESPECTIVE TERMS AND CONDITIONS ARE NOT REQUIRED IN THIS BID

VIII. SOLICITATION FORM

COMPANY NAME _____

BID NO. OR PROJECT NO. ____12-29

DESCRIPTION Security Fencing

A. BID REQUIREMENTS

Sealed Bids in original and Two copy(ies) will be received at the offices of the Rhode Island Public Transit Authority, 705 Elmwood Avenue Providence, Rhode Island 02907, at the Bid date and hour set forth on the Request for Bid or anytime prior to the date and hour. Late Bids will not be accepted.

B. CONTRACT DOCUMENTS

By executing the offer form enclosed herewith, the Bidder agrees to provide all services set forth on the specifications attached hereto upon the terms and conditions set forth in paragraphs A, B, C and D.

C. PAYMENT SCHEDULE

Payment will not be made until receipt and installation of merchandise is accepted by the Transit Authority.

D. COST FOR SERVICE

Please complete necessary cost information as outlined in the Bid Scope of Work.

IX. OFFER FORM

Bidder understands that any condition other than stated in the specifications, clarification made to the above, or information submitted on or with this form, other than that requested, may render the Bid non-responsive.

By execution below, Bidder hereby offers to furnish services in accordance with the contract documents that are a part of the specifications, and agrees to fully comply with the contract documents.

BID NO 12-29

BIDDER _____

EMPLOYER IDENTIFICATION NO. _____

NAME_____

ADDRESS_____

CITY/STATE/ZIP_____

TYPE OF BUSINESS ENTITY: (Please check one)

Sole Proprietor _____
Partnership _____
Corporation _____

BIDDER'S CONTRACTING OFFICER

_____
Name *(Please Print)*

_____
Authorized Signature

_____
Title

X. STATEMENT OF ELIGIBILITY FORM

The _____hereby certifies that he/she
(Name of Bidder)
is/is not (underscore one) included on the Comptroller General's Lists of Persons or Firms Currently Barred for Violations of Various Public Contracts Incorporating Labor Standards Provisions.

_____
Name of Firm

_____
Address

_____
City, State, Zip

_____
Signature of Authorized Person

_____
Date Authorized

XI. AFFIDAVIT OF NON-COLLUSION FORM

I hereby swear (or affirm) under penalty for perjury:

1. that I am the Bidder (if the Bidder is an individual), a partner of the Bidder (if the Bidder is partnership), or an officer or employee of the proposing corporation having authority to sign on its behalf (if the Bidder is a corporation).

2. that the attached Bid has been arrived at by the Bidder independently, and has been submitted without collusion with, and without agreement, understanding, or planned common course of action with, any other vendor of materials, supplies, equipment, services described in Invitation for Bids, designed to limit independent bidding or competition.

3. that the contents of the Bid has not been communicated by the Bidder or its employees or agents, to any person not an employee or agent of the Bidder or its surety on any bond furnished with the Bid, and will not be communicated to any such person prior to the official opening of the Bid; and

4. that I have fully informed myself regarding the accuracy of the statement made on this affidavit.

_____
Name

_____
Address

_____
City, State, Zip

_____
Signature of Authorized Official

_____
Date Authorized

Subscribed and sworn before me this _____ day of _____,20____

Notary Public

My commission expires _____

XII. CERTIFICATION OF RESTRICTIONS ON LOBBYING FORM

I,_____, hereby certify on
(Name/title of Bidder Authorized Official)

behalf of: _____that:
(Name of Bidder)

1) No Federal appropriated funds have been paid or will be paid, by or on behalf of the undersigned, to any person for influencing or attempting to influence an officer or employee of any agency, a Member of Congress, an officer or employee of Congress, or an employee of a member of Congress in connection with the awarding of any Federal contract, the making of any Federal grant, the making of any Federal loan, the entering into of any cooperative agreement, and the extension, continuation, grant, loan, or cooperative agreement.

2) If any funds other than Federal appropriated funds have been paid to any person for influencing or attempting to influence an officer or employee of any agency, a Member of Congress, or an employee of a member of Congress in connection with this Federal contract, loan, or cooperative agreement, the undersigned shall complete and submit Standard Form-LLL, “Disclosure Form to Report Lobbying”, in accordance with its instructions.

3) The undersigned shall require that the language of this certification be included in the award documents for all sub-awards at all tiers (including subcontracts, sub-grants, and contracts under grants, loans, and cooperative agreements) and that all sub-recipients shall certify and disclosure accordingly.

This certification is a material representation of fact upon which reliance is placed when this transaction was made or entered into. Submission of the certification is a prerequisite for making or entering into this transaction imposed by Section 1352, Title 31, U.S. Code. Any person who fails to file the required certification shall be subject to a civil penalty of not less than $10,000 and not more than $100,000 for each such failure.

Executed this _____ day of _____, 20_____.

By _____
(Signature of Authorized Official)

XIII. BUY AMERICA CERTIFICATION REQUIREMENTS I FOR PROCUREMENT OF STEEL OR MANUFACTURED PRODUCTS

49 U.S.C. 5323(j) and 49 CFR 661 provide that no Federal funds may not be obligated for mass transportation projects unless steel and manufactured products used in these projects are produced in the United States.

If steel or manufactured products are being procured, the appropriate certificate as set forth below shall be completed and submitted by each Bidder.

Certificate of Compliance-The Bidder hereby certifies that it will comply with the requirements of 49 U.S.C. 5323 (j)(1) and the Applicable regulations on 49 CFR Part 661.

COMPANY NAME _____

SIGNATURE _____

TITLE _____

DATE _____

Certification of Non-Compliance-The Bidder hereby certifies that it cannot comply with the requirements of 49 U.S.C. 5323 (j)(1).

COMPANY NAME _____

SIGNATURE _____

TITLE _____

DATE _____

FORM MUST BE SIGNED AND SUBMITTED WITH BID OR BID WILL BE CONSIDERED TO BE NON-RESPONSIVE.

XIV. BUY AMERICA CERTIFICATION REQUIREMENTS II OF PROCUREMENT OF BUSES, OTHER ROLLING STOCK AND ASSOCIATED EQUIPMENT

49 U.S.C. 5323 (j) and 49 CFR 661 provide that no Federal funds be obligated for procurement of buses, other rolling stock and associated equipment unless the following conditions are met:

1. The cost of components which are produced in the United States is more that 60 per centum (60%) of the cost of all components of the vehicle or equipment described in this paragraph; and
2. Final assembly of the vehicle or equipment described in this paragraph has taken place in the United States.

If buses or other rolling stock (including train control, communication and traction power equipment) are being procured, the appropriate certificate as set forth below shall be completed and submitted by each Bidder in accordance with the requirements.

Certificate of Compliance-The Bidder hereby certifies that it **will comply** with the requirements of the 49 U.S.C. 5323 (j)(2)(c) and CFR Part 661.

COMPANY NAME _____

SIGNATURE _____

TITLE _____

DATE _____

Certificate of non-Compliance-The Bidder hereby certifies that it **cannot comply** with the requirements of the Surface Transportation Assistance Act of 1982, as amended, but may qualify for an exception to the requirements.

COMPANY NAME _____

SIGNATURE _____

TITLE _____

DATE _____

FORM MUST BE SIGNED AND SUBMITTED WITH BID OR BID WILL BE CONSIDERED TO BE NON-RESPONSIVE.

XV. BUY AMERICA PRE-AWARD AND POST-DELIVERY AUDITS:

A. Prior to Contract award,

The apparent successful offeror shall provide to the Authority's auditors the cost of the components and subcomponents to be used in the manufacturing of the rolling stock, their country of origin, the location of final assembly, the activities that will take place at the location and pertinent supporting documentation for the purpose of RIPTA performing the cited Pre-Award Audit of Buy-America requirements.

B. After delivery and acceptance of the vehicles,

The Contractor shall provide to the Authority's auditors the cost of the components and subcomponents used in the manufacture of the rolling stock, their country of origin, the location of final assembly, the activities that took place at the location and pertinent supporting documentation to enable RIPTA to perform the cited Post-Delivery Audit of Buy America Requirements.

C. Authority Review

The contractor shall facilitate the reviews by the Authority's auditors by providing the supporting documentation for the above information in a timely fashion.

XVI. DISADVANTAGED BUSINESS ENTERPRISES PROGRAM

Bidders are strongly encouraged to have Disadvantage Business Enterprise Participation/Small Business, regardless of the DBE Goal in this Bid.

Disadvantaged Business Enterprise (DBE) Special Provisions

A firm's DBE Participation and/or demonstration of a "Good Faith Effort" will be considered when reviewing submittals for responsiveness. This will be considered when evaluating Bid Responses

A. Policy

1. It is the policy of Department of Transportation (DOT) that the DBE requirements in 49 CFR Part 26, as amended, shall have the maximum opportunity to participate in the performance of contracts financed in whole or in part with Federal funds under this agreement. Consequently, the DBE requirements of 49 CFR Part 26, as amended apply to this agreement.
2. DBE Obligation – RIPTA or its contractor agrees to ensure that DBE's as designed in 49 CFR Part 26, as amended, have the maximum opportunity to participate in the performance of contracts and subcontracts financed in whole or in part with Federal funds provided under this agreement. In this regard, RIPTA or its contractors shall take all necessary and reasonable steps in accordance with 49 CFR Part 26, as amended, to ensure that DBE's have the maximum opportunity to compete for and perform contracts. RIPTA and its contractors shall not discriminate on the basis of race, color, religion, national origin, age or sex in the award and performance of DOT assisted contracts.
3. Contractor Obligation – Contractors and subcontractors failing to carry out the requirement set forth in 1 and 2 above, shall constitute a breach of contract and, after the notification to the Department (DOT), may result in termination of the agreement or contract by RIPTA or such remedy as RIPTA deems appropriate.

B. DBE Utilization

1. DBE Utilization

The Contractor agrees to provide for full and fair utilization of Disadvantaged Business Enterprises (DBEs) by complying with the requirements of this clause. Included in these requirements is the achievement of the stated goal for the utilization of DBEs in the performance of work under this contract. Nothing in this clause shall be construed to require the utilization of any DBEs, which is either not qualified or unavailable. . ***All DBEs submitted must be certified by the State of Rhode Island at the time of Bid submittal. A copy of the DBE Certification Letter from the State of Rhode Island Office of Civil Rights must accompany the Bid submittal***

2. **Utilization Goal**
For the purpose of this contract, the goal for utilization of DBEs shall be as follows: Not Applicable DBE percent of the Contract Dollar Amount.

C. Definitions.

The terms used in these special provisions shall be defined as follows:

1. **Joint Venture**
an association of two or more persons to carry out a single business enterprise for profit, for which purpose they combine their property, money, efforts, skills and knowledge.

2. **Disadvantaged Business**
means a small business concern in which is, at least, 51 percent owned by one or more socially and economically disadvantaged individuals, or, in the case of any publicly owned business, at least 51 percent of the stock of which is owned by one or more socially and economically, disadvantaged individuals who own it.

3. **Small Business Concern**
a small business as defined pursuant to Section 3 of the Small Business Act and relevant regulations promulgated pursuant thereto.

4. **Socially and Economically Disadvantaged Individuals**
means those individuals who are citizens of the United Stated (or lawfully admitted permanent residents) and who are women, Black Americans, Hispanic Americans, Native Americans, Asian-Pacific Americans, or Asian-Indian Americans and any other minorities of individuals found to be disadvantaged by the Small Business Administration pursuant to Section 8 (a) of the Small Business Act, RIPTA shall make a rebuttal presumption the individuals in the following groups are socially and economically disadvantaged. RIPTA may also determine, on a case-by-case basis, that individuals who are not a member of one of the following groups are socially and economically disadvantaged:
   a. **Black Americans**, which includes persons having origins in any of the Black racial groups of Africa;
   b. **Hispanic Americans**, which includes persons of Mexican, Puerto Rican, Cuban, Central or South America, or other Spanish culture or Portuguese culture, regardless of race;
   c. **Native Americans**, which includes persons who are American Indian, Eskimo, Aleuts,or Native Hawaiians;
   d. **Asian-Pacific Americans**, which includes persons whose origins are Japan, China, Taiwan, Korea, Vietnam, Laos, Cambodia, the Philippines, Samoa, Guam, the U.S. Trust Territories of the Pacific, and the Northern Marianas; and
   e. **Asian-Indian Americ**ans, which includes persons whose origins are from India, Pakistan, and Bangladesh.
   f. **Disadvantaged Business Enterprise (DBE) Liaison Officer** – the individual designated by the Authority to monitor compliance with these Special Provisions and to assist in their implementation.
   g. **Bidder** – any individual, partnership, joint venture, corporation or firm submitting a Bid for the contract.

5. Recognition of DBE Commitment

Each Bidder shall recognize RIPTA's commitment to insure that DBE's be afforded full opportunity to participate in contracts awarded by RIPTA and will not be discriminated against on the grounds of race, religion, color, national origin, handicap, age or sex.

6. Submissions

all Bidders shall submit the following information with the Bid by using the Schedule of DBE Participation (Attachment A);

1. The Name and address of each DBE firm that will participate in the contract;
2. A description of the work each named DBE firm will perform; and
3. The dollar amount of participation by each named DBE firm.

The Authority encourages firms located in the United States that are currently certified as DBEs and SBAs by Federal, State and Local agencies to apply for certification in the State of Rhode Island.

If a minority business would like to be certified by the State of Rhode Island contact: Mr. Charles Newton, Department of Administration, 1 Capital Hill, Providence, Rhode Island, 02908, Telephone (401) 222-6253.

If the apparent successful competitor's submission does not satisfy the goal, RIPTA shall determine whether the apparent successful competitor has made good faith efforts to obtain DBE participation in accordance with the guidelines stated in Paragraph F, Sub-paragraph 1, below.

Unsuccessful efforts in gaining DBE participation must be documented on the "DBE Unavailability Certification" attached hereto as Attachment D. Meeting the DBE contract goals or making good faith efforts to meet the goals is a condition of receiving a Federal Transit Administration assisted contract for which contract goals have been established by RIPTA.

The legitimacy of each DBE or disadvantaged-majority joint venture shall be determined by RIPTA, based on the information submitted in the affidavits attached hereto as Attachments C and D. RIPTA will require all prime contractors to make good faith efforts to replace a DBE subcontractor that is unable to perform successfully with another DBE. RIPTA shall approve all substitutions of subcontractors **before** award of contract and **during** contract performance, in order that substitute firms are eligible DBE's.

7. Procedure Prior to Contact Award

a. Guidance Concerning Good Faith Efforts to Meet DBE Contract Goals.

RIPTA may decide that a competitor that has failed to meet DBE contract goals may receive the contract upon determining that the efforts the competitor made to obtain DBE participation were "good faith efforts" to meet the goal. RIPTA shall not consider efforts that are merely pro forma to be good faith efforts to meet the goals, even if they are sincerely motivated, if, given all relevant circumstances, they could not reasonably be expected to produce a level of DBE participation sufficient to meet the goals. In order to award a contract to a competitor that has failed to meet DBE contract goals, RIPTA must determine that the competitor's efforts were those that, given all relevant circumstances, a competitor, actively and aggressively seeking to meet the goals would make.

Following is a list of the kinds of efforts RIPTA may consider. The list is not exclusive or exhaustive and in appropriate cases RIPTA shall consider other relevant factors or types of efforts. RIPTA shall consider not only the different kinds of efforts the contractor has made, but also the quantity and intensity of those efforts. All information must be in writing and copies of all ads, written notices, follow-up letters and/or all other correspondence must be presented whenever a waiver is asked for.

RIPTA will consider the following efforts:

i. whether the contractor attended any pre-solicitation or pre-Bid meetings that were scheduled by RIPTA to inform DBEs of contracting opportunities;
ii. whether the contractor advertised in general circulation, trade association, and disadvantaged focus media concerning the sub-contracting opportunities;
iii. whether the contractor provided written notice to a reasonable number of specific DBEs that their interest in the contract was being solicited in sufficient time to allow the DBEs to participate effectively;
iv. whether the contractor followed up initial solicitation of interest by contracting DBEs to determine with certainty whether the DBEs were interested;
v. whether the contractor selected portions of the work to be performed by DBEs in order to increase the likelihood of meeting the DBE goals including, where appropriate, breaking down contracts into economically feasible units to facilitate DBE participation;
vi. whether the contractor provided interested DBEs with adequate information about the plans, specifications and requirements of the contract;

vii. whether the contractor negotiated in good faith with interested DBEs, not rejecting DBEs as unqualified without sound reasons based on a thorough investigation of their capabilities;

viii. whether the contractor made efforts to assist interested DBEs in obtaining bonding lines of credit, or insurance required by RIPTA or contractor; and

ix. whether the contractor effectively used the services of available disadvantaged community organizations, disadvantaged contractor's groups, Local, State and Federal disadvantaged business assistance offices, and other organizations that provide assistance in the recruitment and place of DBEs.

8. Bid, Execution & Compliance with Subcontracts

Prior to the execution of a contract between RIPTA and the successful Bidder, the Bidder shall present, for RIPTA's approval, DBE subcontracts corresponding in all respects to the proposed agreements. Upon approval by RIPTA, the successful Bidder shall enter into each such approved DBE sub-contract and shall thereafter neither terminate such DBE nor reduce the scope of the work to be performed by, or decrease the price to be paid to, the DBE and the disadvantaged non-disadvantaged joint venture thereunder without in each instance the prior written approval of RIPTA.

9. Substitution of Subcontractors

RIPTA shall review for its approval all substitutions of subcontractors in order to determine if the percentage goal will be decreased by substitution of a disadvantaged contract/supplier with a non-disadvantaged contractor/supplier.

Where RIPTA has approved termination of a sub-contract held by an DBE or disadvantaged non-disadvantaged joint venture, the successful Bidder shall make every reasonable effort to propose and enter into an alternative sub-contract or subcontracts for the same work to be performed by another qualified DBE for a contract price or prices totaling not less than the contract price of the terminated sub-contract. Satisfactory evidence of reasonable efforts shall be timely furnished by RIPTA.

10. Program Compliance

At all times, discrimination on the basis of race, color, religion, national origin, handicap, age or sex will not be tolerated. RIPTA will monitor the schedule for participation by disadvantaged contractors in an effort to isolate those prime contractors who do not adhere to the non-discriminatory policies of RIPTA. If such contractor fails to respond to counseling with respect to the disposition of subcontracts pertaining to RIPTA funds, RIPTA reserves the right to terminate the contract and to consider future Bids of such contractor to be non-responsive in the absence of written assurance from it of the full opportunity for DBEs to participate in its awards of subcontracts, together with the follow-up to verify such participation.

11. Maintenance of Records

All records relating to the contract shall be maintained by the contractor for a period of three (3) years after project completion.

12. Contract Assurance

The contractor or subcontractor shall not discriminate on the basis of race, color, national origin, or sex in the performance of the contract. The contractor shall carry out applicable requirements of 49 CFR part 26 in the award and administration of DOT assisted contracts. Failure by the contractor to carry out these requirements is a material breach of contract, which may result in the termination of this contract or such other remedy, as the recipient deems appropriate.

13. Prompt Payment

The prime contractor agrees to pay each subcontractor under this prime contract for satisfactory performance of its contract no later than 30 days from the receipt of each payment the prime contractor receives from the Rhode Island Public Transit Authority. The prime contractor agrees further to return retainage payments to each subcontractor within 30 days after the subcontractor's work is satisfactorily completed. Any delay or postponement of payment from the above reference time frame may occur only for good cause following written approval of the Rhode Island Public Transit Authority. This clause applies to both DBE and non-DBE subcontractors. RIPTA reserves the right to hold payments to the Contractor if payments verification logs are not submitted within 30 days of payments. Failure to submit payments to DBE subcontractors within 30 days will result in action by RIPTA up to and including disqualification from any future RIPTA Procurements.

14. Monitoring Payments to DBEs

RIPTA requires that prime contractors to maintain records and documents of payments to DBEs following the completion of the contract. These records will be made available for inspection upon request by any authorized representative of RIPTA or United States Department of Transportation. This requirement also extends to any DBE Subcontractor. Reports of payments to DBE Subcontractors shall be provided to the RIPTA DBE Liaison Officer on a monthly basis. Failure to submit these reports on a timely basis may result in delay of payments.

XVII. DISADVANTAGED BUSINESS ENTERPRISE REQUIRED FORMS

Attachment A: Schedule of DBE Participation
Submitted if DBE firm or firms will be participating in the Bid.
Attachment B: DBE Application Agreement
Submitted if DBE firm or firms will be participating in the Bid.
Attachment C: Letter of Intent to Perform as a Subcontractor
Submitted if DBE firm or firms will be participating in the Bid
Attachment D: DBE Unavailability Summary Sheet
Submitted if DBE firm or firms you have contacted cannot participate. This form is used to document good faith effort. This form only needs to be completed when there is a DBE Participation Goal.
Attachment E: Narrative Explanation for Lack of DBE Participation
Submitted by the Prime Contractor to explain lack of DBE/SBA participation.
Attachment F: Documentation of DBE Utilization
To be filled in by the DBE firm and the prime contractor once the DBE Subcontractor has been paid.
Please Note: Final payment to the Prime Contractor will be held until this form or forms are received for each DBE Subcontractor.
DBE FIRMS PROPOSING AS A PRIME CONTRACTOR: the following forms must be filled in, signed and submitted with the Bid
Attachment A, Attachment B
Please state, on these forms, that you are proposing as a prime contractor.

CERTIFICATION LETTER OR NOTIFICATION MUST BE INCLUDED FOR EACH DBE FROM THE STATE OF RHODE ISLAND.

Please record by letter (using the list below) under the DBE Category Column found on Attachment A: Schedule of DBE Participation Form on the following page

a. "Black Americans", which includes persons having origins in any of the Black racial groups of Africa;
b. "Hispanic Americans", which includes persons of Mexicans, Puerto Rican, Cuban, Central or South America, or other Spanish culture or Portuguese or origin, regardless of race;
c. "Native Americans", which include persons who are American Indian, Eskimos, Aleuts, or Native Hawaiians:
d. "Asia-Pacific Americans", which includes persons whose origins are from Japan, China, Taiwan, Korea, Vietnam, Laos, Cambodia, the Philippines, Samoa, Guam, the U.S. Trust Territories of the Pacific, and the Northern Marianas;
e. "Asian-Indian Americans", which includes persons whose origins are from India, Pakistan, and Bangladesh; and
f. any other minorities or individuals found to be disadvantaged by the Small Business Administration pursuant to Section 8 (a) of the Small Business Act.

SCHEDULE OF DBE PARTICIPATION

A. Attachment A

Company Name: _____
Project Number: **12-29** **Project:** **Security Fencing**

*Please provide copy of DBE Certification Letter for each DBE firm listed from the Rhode Island Office of Civil Rights. **DBE Vendors must be certified in the State of Rhode Island at the time of Bid Submittal to be considered. A full, up to date list of Rhode Island DBEs can be obtained at the following website: www.mbe.ri.gov/**

DBE Firm Name	DBE Firm Address	DBE Category	Phone Number	Contact Name	Work to be Performed	Estimated Value Dollars	Estimated Value Percent of Bid

The undersigned will enter into a formal agreement with Disadvantaged Business Enterprise firms for work listed in this schedule conditioned upon execution of a contract with the Rhode Island Public Transit Authority.

_____
Authorized Signature of Bidder Official

***Use additional forms as needed.**

Each DBE Firm listed in the Section must also complete the Required Company Information Form and the Certification of Subcontractor Form (Page 74)

DBE APPLICATION AGREEMENT

B. Attachment B

Project Number: **12-29**

Project Name: **Security Fencing**

With respect to the above numbered project, I hereby certify that I am the
_____ and duly authorized representative of _____
(Title) (Firm)
Address is _____, _____, _____
(Street) (State) (Zip Code)

I do hereby certify that it is the intention of the above organization to affirmatively seek out and consider Disadvantaged Business Enterprises to participate in this contract as contractors, Subcontractors and/or suppliers of requirements of the U.S. Department of Transportation's regulation 49 CFR Part 26.

I understand and agree that any and all contracting in connection with this contract, whether undertaken prior to or subsequently to award of contract, will be in accordance with this provision.

The utilization of Disadvantaged Business Enterprise is in addition to all other equal opportunity requirements of this contract.

_____
Authorized Signature

_____
Title

LETTER OF INTENT TO PERFORM AS A SUBCONTRACTOR

C. Attachment C

To: _____
(Name of Prime or General Bidder)

The undersigned intends to perform work in connection with the above project as (check one):

___ an individual ___ a corporation

___ a partnership ___ a joint venture

The undersigned is prepared to perform the following described work in connection with the above project (specify in detail particular work items or parts thereof to be performed).

_____
_____
_____
_____
_____
_____
_____
_____
_____
_____

for the following compensation: _____

_____
(Name of DBE Contractor)

DBE GOOD FAITH EFFORT SUMMARY SHEET

D. Attachment D.

RIPTA requires a listing of DBE firms contacted; but not able to perform work. Use additional pages as needed. The DBE Goal for this project is fifteen percent. **. A full, up to date list of Rhode Island DBEs can be obtained at the following website: www.mbe.ri.gov/**

DBE Firm Name	DBE Firm Address	DBE Category	Phone Number Email Address	Contact Name	Reason Unable to Perform Work

Project Name: Security Fencing **Project Number: 12-29**

Form completed by: _____ Date: _____

NARRATIVE EXPLANATION FOR LACK OF DBE PARTICIPATION
E. Attachment E

Company Name: _____

Project Number: **12-29**

Project Name: **Security Fencing**

_____
_____
_____
_____
_____
_____
_____
_____
_____
_____
_____
_____
_____
_____
_____
_____
_____
_____
_____
_____
_____
_____

_____
(Authorized Signature of Prime Contractor)

TO BE FILLED IN BY THE PRIME CONTRACTOR TO EXPLAIN LACK OF DBE PARTICIPATION.

DOCUMENTATION OF DBE UTILIZATION

F. Attachment F

RIPTA Contract Number: 12-29

Prime Contractor: _____

DBE Name: _____

Starting Date: _____ **Completion Date:** _____

This is to verify the following:

- I was the approved DBE on the above contract.
- I performed the items of work Subcontracted.
- I actually received $_____ for my work.
- I received payment of retainage on _____
  (date)

_____ _____
(Signature & Title of DBE) (Date)

_____ _____
(Signature & Title of Prime Contractor) (Date)

This form is to be filled in by the DBE firm and the prime contractor once the DBE Subcontractor has been paid.

Retainage payments will be made to each subcontractor within 30 days after the subcontractor's work is satisfactorily completed

Please Note: Final payment to the Prime Contractor will be held until this form or forms are received for each DBE Subcontractor.

XVIII. PERFORMANCE BOND INFORMATION

The selected Bidder shall furnish, within twenty (20) calendar days (if required) after the date of notice of award of contract by RIPTA, a Performance and Payment Bond in the amount of 100% of the Bid amount covering the faithful performance of the contract.

The Performance Bond is to be secured through an insurance company or companies which is licensed in the State of Rhode Island or which is approved by the Authority.

The Bond will remain in effect throughout the warranty period.

XIX. BID GUARANTEE (SURETY)

A Bid Guarantee (if required) shall be submitted with the Bid response. This guarantee shall be equivalent to five (5) percent of the Bid price. The "Bid guaranty shall consist of a firm commitment such a bid bond, certified check, or other negotiable instrument accompanying a Bid as assurance that the Bidder will, upon will, upon acceptance of its Bidder, execute such contractual documents as may be required within twenty (20) calendar days after the date of notice of award of contract by RIPTA.

XX. REQUIRED INSURANCE

The Bidder will be required to secure and maintain the following insurance coverages:

1. Commercial comprehensive general liability insurance, with limits of $3,000,000.00 per accident and $5,000,000.00 aggregate.
2. Workers' Compensation Coverage in accordance with RI Statutory requirements.
3. The Rhode Island Public Transit Authority shall be named as additional insured under said policies.
4. Automotive Liability Insurance
   - $1,000,000.00 per accident and $3,000,000.00 aggregate: bodily injury.
   - $1,000,000.00 property damage

Bidder shall provide to RIPTA Contracts Manager a Certificate of Insurance upon award of contract. This Certificate shall be kept in effect at all times. Current copies shall be provided to the Contracts Manager

XXI. GENERAL CONTRACT COMPLIANCE CERTIFICATE AND AGREEMENT

RHODE ISLAND STATE EQUAL OPPORTUNITY OFFICE

The undersigned Contractor agrees and certifies, unless otherwise exempt, that it is in compliance with the applicable requirements of Federal Executive order No. 11246, as amended, Rhode Island General Law 28-5.1-10, and other regulations as issued by the Rhode Island Public Transit Authority, as set forth below, or will take steps to comply with such requirements prior to acceptance of any order from us. This agreement and certificate shall form a part of, and be deemed incorporated in, each order submitted to you for supplies or services exceeding $10,000. Failure to comply will be considered a substantial breach of the contract.

A. Equal Opportunity Clause

During the performance of this contract, the Contractor agrees as follows:

1. The Contractor will not discriminate against any employee or applicant for employment because of race, color, religion, sex, or natural origin. The Contractor will take affirmative action to ensure that applicants are employed, and that employees are treated during employment, without regard to their race, color, religion, sex, or national origin. Such action shall include, but not be limited to, the following: employment, upgrading, or transfer, recruitment or recruitment advertising, layoff or termination, rates of pay or other forms of compensation, and selection for training, including apprenticeship. The Contractor agrees to post in conspicuous places, available to employees and applicants for employment, notices to be provided by the contracting officer setting forth the provisions of the non-discrimination clause.
2. The Contractor will, in all solicitations or advertisements for placed by or on behalf of the contractor, state that all qualified applicants will receive consideration for employment without regard to race, color, religion, sex, or national origin.
3. The Contractor will send to each labor union or representative of workers with which he/she has collective bargaining agreement or other contract or understanding a notice, advising the labor union or worker's representative of the Contractor's commitments under Section 202 of Federal Executive order No. 11246, as amended, Rhode Island Law 28-5.1-10, and other regulations and relevant orders of the Secretary of Labor.
4. The Contractor will comply with all provisions of Federal Executive Order No. 11246, as amended, Rhode Island General Law 28-5.1-10, and other regulations and relevant orders of the Secretary of Labor.
5. The Contractor will furnish all information and reports required by Executive Order No. 11246, as amended, Rhode Island General Law 28-5.1-10 and other regulations as issued by the State of Rhode Island, and by the rules, regulations, and orders of the Secretary of Labor, or pursuant thereto, and will permit access to his/her books, records and accounts by the State Equal

Opportunity Office and the Secretary of Labor for purposes of investigation to ascertain compliance with such rules, regulations and orders.

6. In the event of the Contractor's non-compliance with the non-compliance with the non-discrimination clauses of this contract or with any of such rules, regulations, or orders, this contract may be cancelled, terminated or suspended in whole or part, and the Contractor may be declared ineligible for further State contracts in accordance with procedures authorized in Federal Executive Order No. 11246, as amended, Rhode Island General Law 28-5.1-10 , and other regulations as issued by the State of Rhode Island, and such other sanctions may be imposed and remedies invoked as provided in Federal Executive Order No. 11246, as amended; Rhode Island Public Transit Authority, or by rule, regulation, or order of the Secretary of Labor, or as otherwise provided by law, or the State of Rhode Island and Providence Plantations.
7. The Contractor will include the provisions of paragraphs (1) through (7) in every sub-contract or purchase order unless exempted by rules, regulations, or orders of the Secretary of Labor issued pursuant to Section 204 of Federal Executive Order No. 11246, as amended, Rhode Island General Law 28-5.1-10, and other regulations as issued by the Rhode Island Public Transit Authority, so that such provisions will be binding upon each subcontractor or vendor. The Contractor will take such action with respect to any sub-contract of purchase order as the contracting agency may direct as a means of enforcing such provisions including sanctions for non-compliance; provided, however, that in the event the Contractor becomes involved in, or is threatened with litigation with a subcontractor or vendor as a result of such direction by the contracting agency, the Contractor may request the United States and the State of Rhode Island to enter into such litigation to protect the interest of the United States and the State of Rhode Island.

B. Age Discrimination

Pursuant to Federal Executive Order No. 11246, as amended, the Contractor will not, in connection with the employment, advancement or discharge of employees, or in connection with the terms, conditions, or privileges of their employment, discriminate against persons because of their age except upon the basis of a bona fide occupational qualification, retirement plan or statutory requirement, nor will the Contractor specify, in solicitations or advertisements for employees, a maximum age limit for employment unless the specified maximum age limit is based upon a bona fide occupational qualification, retirement plan or statutory requirement.

C. Employment of the Handicapped

1. Contractor will not discriminate against any employee or applicant for employment because of physical or mental handicap in regard to any position for which the employee or applicant for employment is qualified. Contractor agrees to take affirmative action to employ, advance in employment, and otherwise treat

qualified handicapped individuals without discrimination based upon their physical or mental handicap in all employment practices such at the following employment, upgrading, demotion or transfer, recruitment or recruitment advertising; layoff or termination, rates of selection for training, including apprenticeship.

2. Contractor agrees that if a handicapped individual files a complaint with him/her that he/she is not complying with the requirements of the Rehabilitation Act of 1973, he/she will (1) investigate the complaint and take appropriate action consistent with requirements of 41 CFR Part 60-741.29 and (2) maintain on file for three years, the record regarding the complaint and the actions taken.
3. Contractor agrees that if a handicapped individual files a complaint with the Department of Labor that he/she has not complied with the requirements of the act, (1) he/she will cooperate with the Department in its investigation of the complaint, and (2) he/she will provide all pertinent information regarding his/her employment practices with respect to the handicapped.
4. Contractor agrees to comply with the rules and regulations of Section 503 of the Rehabilitation Act of 1973 as interpreted in 41 CFR Part 60-741.29.
5. in the event of Contractor's noncompliance with the requirements of this clause contract may be terminated or suspended in whole or in part.
6. This clause shall be included in all subcontracts. In the event that this contract exceeds $10,000 but is less than $500,000 and provides for performance in 90 days or more, Contractor further agrees as follows:
7. Contractor agrees (1) to establish an affirmative action program, appropriate procedures consistent with the guidelines and the rules of the Secretary of Labor, will provide the affirmative action regarding employment and advancement of the handicapped required by P.L. 93-516, (2) to publish the program in the employees or personnel handbook or otherwise distribute a copy to all personnel, (3) to review the program each year and to make such changes as may be appropriate, and (4) to designate one of the principal officials to be responsible for the establishment and operation of the program.
8. Contractor agrees to permit the examination by appropriate contracting agency officials or the Assistant Secretary for Employment Standards or the designee, of pertinent books, documents, papers and records concerning employment and advancement of the handicapped.
9. Contractor agrees to post in conspicuous places, available to employees and applicants for employment, notices in a form to be prescribed by the Assistant Secretary for Employment Standards, provided by the contracting officer, stating Contractor's obligation under the law to take affirmative action to employ and advance in employment qualified handicapped employees and applicants for employment and the rights and remedies available.

10. Contractor will notify each labor union or representative of workers with which he/she has a collective bargaining agreement or other contract understanding, that he/she is bound by the terms of Section 503 of the Rehabilitation Act, and is committed to take affirmative action to employ and advance in employment, physically and mentally handicapped individuals.
    In the event this contract exceeds $100,000 and provides for performance in 90 days or more, Contractor further agrees as follows:
11. Contractor agrees to submit a copy of his/her affirmative action program to the State Equal Opportunity Office within 30 days after the award of a contract or sub-contract.
12. Contractor agrees to submit a summary report to the State of Rhode Island and Providence Plantations Equal Opportunity Office by March 31 of each year during performance of the contract and by March 31 of the year following completion of the contract, in the form prescribed by State Equal Opportunity Office covering employment and complaint experience accommodations made and all steps taken to effectuate and carry out the commitments set forth in the affirmative action program.

XXII. CERTIFICATE OF NON-SEGREGATED FACILITIES

Contractor certifies that he/she does not maintain or provide for his/her Employees any segregated facilities at any of his/her establishments, and that he/she does not permit his/her employees to perform their services at any such location, under his/her control, where segregated facilities are maintained. He/she certifies further that he/she will not permit his/her employees to perform their services at any location, under his/her control, where segregated facilities are maintained. Contractor agrees that a breach of this certification is a violation of the Equal Opportunity Clause in this contract. As used in this certification, the term “Segregated Facilities” means any waiting room, work areas, rest rooms, and wash rooms, restaurants and other eating areas, parking lots, drinking fountains, recreation or entertainment areas, transportation, and housing facilities provided for employees which are segregated by explicit directive or are, in fact, segregated on the basis of race, creed, color, or national origin, because of habit, local custom, or otherwise. He/she further agrees that (except where he/she has obtained identical certifications from proposed subcontractors for specific time periods), he/she will obtain identical certifications from proposed subcontractors prior to the award of subcontracts exceeding $10,000, which are not exempt from the provisions of the Equal Opportunity Clause; that he/she will forward the following notice to proposed subcontractors (except where the proposed subcontractors have submitted identical certifications for specific time periods).

XXIII. NOTICE OF PROSPECTIVE SUBCONTRACTORS OF REQUIREMENT FOR CERTIFICATION OF NONSEGREGATED FACILITIES

A Certificate of Nonsegregated Facilities must be submitted prior to the award of a sub-contract exceeding $10,000 which is not exempt from the provisions of the Equal Opportunity Clause. The certification may be submitted either for each sub-contract or for all subcontracts during a period (i.e. quarterly, semi-annually, or annually).

NOTE: The penalty for making false statements in offers is prescribed in 18 USA 1001.

A. Affirmative Action Compliance Program

Contractor agrees to develop a written Affirmative Action Compliance Program for each of its establishments as required by Section 60-1.40 of Title 41 of the Code of Federal Regulations.

B. Employer's Information Report (EE)-1) Form 100

Contractor agrees to file in duplicate, Standard Form 100, entitled, **"Equal Employment Opportunity Employer Information Report EEO-1"** as required by Section 60-1.7 of Title 41 of the Code of Federal Regulations.

Send original copy to Federal authorities, duplicate copy to the State Equal Opportunity Office, 1 Capitol Hill, Providence, Rhode Island 02908-5865.

C. Notice to All Vendors

If it should be determined by the State Equal Opportunity Office that any company doing business with the State is guilty of non-compliance with the provisions of this document, said company will be given two (2) written warnings. If the said company does not comply immediately after the second written notice, then the State Equal Opportunity Office will notify the Rhode Island Public Transit Authority, who shall have the authority to have the contract **revoked** and all contractual obligations of the State dealing with the contract in question will be **null** and **void.**

D. Post Award Conference

Post Award Conference for the Implementation of Affirmative Action prior to Signing of Contract.

C. Signature Required

Failure to provide a signature prior to Award to successful Bidder shall be cause for Rejection of Bid.

XXIV. GENERAL CONTRACT COMPLIANCE CERTIFICATE & AGREEMENT FORM

(Equal Employment Opportunity)

Authorized Signature: _____

Print Name: _____

Title: _____

Company Name: _____

Date: _____

Indicate Job Location Address: _____

BID NO. 12-29

XXV. CERTIFICATION OF PRIMARY PARTICIPANT FORM

Request for Bid Number: 12-29
Project Security Fencing

The primary participant _____, certifies to the best of its knowledge and belief, that it and its principals:

1) Are not presently debarred, suspended, proposed for debarment, declared eligible, or voluntarily excluded from covered transactions by any Federal Department or Agency;
2) Have not within a three-year period preceding this Bid been convicted of or had a civil judgment rendered against them for commission of fraud or a criminal offense in connection with obtaining, attempting to obtain, or performing a public (Federal, State, or Local) transaction or contract under a public transaction; violation of Federal or State antitrust statutes or commission of embezzlement, theft, forgery, bribery, falsification or destruction or records, making false statements, or receiving stolen property;
3) Are not presently indicted for or otherwise criminally or civilly charged by a government entity (Federal, State, or Local) with commission of any of the offenses enumerated in paragraph (2) of this certification; and
4) Have not within a three-year period preceding this application/Bid had one or more public transactions (Federal, State, or Local) terminated for cause or default.
5) The Primary Participant also certifies that, if it later becomes aware of any information contradicting the statements of Paragraphs 1-4 above, it will promptly notify RIPTA.

The primary participant _____, certifies or affirms the truthfulness and accuracy of the contents of the statements submitted on or with this certification and understands that the provisions of 31 U.S.C Sections 3801 **ET SEQ**. are applicable thereto.

_____ _____
Signature/Title of Authorized Official Date

XXVI. DEBARMENT CERTIFICATION

CERTIFICATION REQUIREMENTS FOR RECIPIENTS OF GRANTS AND COOPERATIVE AGREEMENTS REGARDING DEBARMENT AND SUSPENSIONS

The purpose of the attached certifications is to exclude entities and individuals that the Federal Government has either debarred or suspended from obtaining Federal assistance funds through grants, cooperative agreements or third party contracts.

To assure that such entities and individuals are not involved in projects financed with Federal Transit Administration (FTA) assistance, FTA requires its applicants to complete the certificates.

The primary participant must sign the "**Certification of Primary Participant**" and, if there is a subcontractor, they must sign **the "Certification of a Subcontractor"** (If there is more than one subcontractor, they must all sign one of these forms.).

XXVII. CERTIFICATION OF A SUBCONTRACTOR FORM

Request for Bid Number: **12-29**

Project **Security Fencing**

The potential Subcontractor, _____
Certifies, by submission of this certification, that neither it nor its principals are presently debarred, suspended, proposed for debarment, declared ineligible, or voluntarily excluded from participation in this transaction by any Federal Department or agency.

The Subcontractor, _____ certifies or affirms the truthfulness and accuracy of the contents of the statements submitted on or with this certification and understands that the provisions of 31 U.S.C. Sections 3801 **ET SEQ**. are applicable thereto.

_____
Signature/Title of Authorized Official

_____ _____
Print Signature Date

XXVIII. NON-RESIDENT CONTRACTOR INFORMATION

From: Department of Administration
Division of Taxation
289 Promenade Street
Providence, RI 02908

Notice: "To All Persons Engaging Non-Resident Contractors"
Regulation Re: Contractors and Subcontractors - "Regulation C"
Article III, Non-Resident Contractors
Any individual, partnership, joint venture, corporation, state, municipal government or exempt organization awarding a construction contract in Rhode Island to a non-resident contractor (as hereinafter defined) is required, pursuant to Section 44-1-6 of the General Laws, as last amended, to withhold 3% of the contract price to secure payment of any sales and use tax or income tax withheld, or both, that may be due to the State of Rhode Island in carrying out the contract.

Upon completion of the contract, the non-resident contractor is required to notify the Tax Administration shall, within 30 days after receipt of the request, audit the records and provide by certified mail to the person holding the funds and to the non-resident contractor, either a certificate of no tax due or a notice of taxes due.

The person holding the funds is required to pay to the Tax Administrator the amount set forth in the notice of taxed due, including interest and penalties, but not in excess of 3% of the contract price. Monies withheld in excess of taxes due the Tax Administrator may be paid to the non-resident contractor.
If the Tax Administrator does not furnish a certificate of no tax due or a notice of taxes due within 30 days after receipt of the request for the making of the audit, the person holding the funds may remit the full amount due to the non-resident contractor. The Tax Administrator shall not have any claim against such funds in the hand of the person holding the funds.

DEFINITION OF NON-RESIDENT CONTRACTOR

"A non-resident contractor is one who does not maintain a regular place of business in this state. A regular place of business shall be deemed to mean and include any bona fide office (other than a statutory office), factory, warehouse or other space in this state at which the taxpayer is doing business in its own name in a regular and systematic manner and which is continuously maintained, occupied and used by the taxpayer in carrying on its business through its regular employees regularly in attendance. A temporary office at the site of construction shall not constitute a regular place of business".
In order to effectively implement this legislative change which became effective on passage, non-resident contractors shall forward such notice of completion by certified or registered mail (in duplicate) to the Division of Taxation.
R. Gary Clark
Tax Administrator

XXIX. DRUG & ALCOHOL TESTING PROGRAM

In accordance with the Federal Transit Administration Rules 49 CFR 40, 653, and 654, pertaining to prohibited drug use and Contract Service Providers who perform safety-sensitive functions as follows:

- Operation of Revenue Service Vehicles In and Out of Service.
- Dispatch or Control Movement of Revenue Service Vehicles.
- Maintain, Repair and Inspect Revenue Service Vehicle.

The standards they must meet are:

1. Provide each employee performing a RIPTA safety-sensitive function a copy of RIPTA's Prohibited Drug Use and Alcohol Misuse Policy and Procedures. Each Employee must sign and return to RIPTA "Confirmation of Receipt" form.
2. Provide RIPTA with documentation that all employees, both full and part-time, participate in a prohibited drug use testing program in compliance with 49 CFR 653 and an alcohol misuse testing program in compliance with 49 CFR 654. Documentation must be provided which insures that all testing is performed in compliance with 49 CFR 40.
3. Provide to RIPTA's, by February 1st, following each calendar year, annual Management Information Systems (MIS) reports for submission to the FTA. The MIS form used must be that which is contained in 49 CFR 653 and 654.
4. Identify a contact person responsible for handling all 49 CFR 40, 653 and 654 regulation compliance.

XXX. DRUG AND ALCOHOL POLICY ACKNOWLEDGEMENT

CONTRACT SERVICE PROVIDER
ACKNOWLEDGEMENT AND CONFIRMATION OF RECEIPT

Employee Name:_____

Company Name: _____

I have received a copy of Rhode Island Public Transit Authority's Prohibited Drug Use and Alcohol Misuse Policy and Procedures.

Employee
Signature: _____ Date: _____

Return To: Drug and Alcohol Test Coordinator
Department of Human Resources
Rhode Island Public Transit Authority
Room 217
705 Elmwood Avenue
Providence, Rhode Island 02907

XXXI. TECHNICAL SPECIFICATION

A. Mobilization/Demobilization

Description: This item of work shall conform to the applicable sections of the "Rhode Island Department of Transportation Specifications for Road and Bridge Construction 2004 Edition" with all revisions. This item of work shall consist of those efforts necessary for the movement of the Contractor's personnel and equipment to the project site and for the establishment of all the Contractor's field offices if required, buildings and other facilities required for the performance of the Contract.

Materials: Not applicable.

Construction Method: Not applicable.

Method of Payment/Basis of Payment: There will be no separate Method of Measurement and Basis of Payment for "Mobilization/Demobilization" but will be included in the total lump sum bid price submitted for this project. The costs associated with this work as proportioned in the lump sum amount shall constitute full and complete compensation for all labor, materials, equipment, and other incidentals as included in the total contract lump sum price required to move the Contractor's personnel and equipment and if required establish the Contractor's facilities at the site and at the conclusion of the contract, for the complete removal thereof. No lump sum breakdown will be required for this item of work.

B. Traffic Control

Description: This item of work will include but not be limited to supplying and maintaining all necessary traffic control devices, police officers, and flag persons required to safely maneuver pedestrians and vehicular traffic in and around the project site. Devices will include Steel plates, traffic signs, cones, barrels, and all necessary mounting devices. All equipment shall be maintained for the life of the contract. It should be noted that work on this project will be performed in and around a RIPTA facility that operates 24 hours a day, 7 days a week. It may be necessary that for certain operations, ie; conduit installation, concrete roadway installation steel plates may be required and or the phasing of operations. There will be no additional costs associated for this work but shall be included in the overall lump sum cost. Breakdowns for this work can be incorporated into the individual sub items as described in the lump sum break down sheet contained in the general provisions.

Materials: Materials will conform to the applicable sections of the RI Department of Transportation Specification for Road & Bridge Construction, 2004 Edition as well as the latest version of the "MUTCD."

Method of Measurement/Basis of Payment: There will be no separate method of measurement/basis of payment for this item of work, but will be included in the total contract lump sum price. The costs associated with this work as proportioned in the lump sum amount shall constitute full and complete compensation for all labor, tools, materials and equipment necessary to successfully complete this work.

C. Remove and Dispose Chain link Fence-All types and Sizes, Slide Gates and Controllers

Description: This item of work shall conform to the applicable sections of the "Rhode Island Department of Transportation Specifications for Road and Bridge Construction 2004 Edition" with all revisions. This item of work shall consist of removing and legally disposing of chain-link fence, gates and controllers of all types and sizes at the locations indicated on the Plans or as directed by the Engineer, all in accordance with these Specifications.

Materials: Not Applicable.

Construction Method: All designated chain-link fence of all types and sizes, slide gates and controllers along with any foundations to be removed and disposed shall be so-removed and legally disposed of. This work including the temporary and permanent patching of the sidewalk and or roadway area will be considered incidental to this work.

Method of Measurement/Basis of Payment: There will be no separate Method of Measurement and Basis of Payment for "REMOVE AND DISPOSE CHAINLINK FENCE - ALL TYPES AND SIZES, SLIDE GATES AND CONTROLLERS" but will be included in the total lump sum bid price submitted for this project. The costs associated with this work as proportioned in the lump sum amount shall constitute full and complete compensation for all labor, materials, equipment, and all other incidentals required to finish the work, complete and accepted by the Engineer.

D. Test Pits

Description This item of work shall conform to the applicable sections of the "Rhode Island Department of Transportation Specifications for Road and Bridge Construction 2004 Edition" with

all revisions. This item of work shall consist of excavating exploratory test pits for the purpose of locating existing utilities of every type, including, but not limited to, water, sewer, storm drains, gas, power distribution and communications and soil conditions. These excavations shall be performed at locations indicated on the Plans or as directed by the Engineer, all in accordance with these Specifications.

Materials: Materials associated with test pit excavations such as backfill, subbase and base courses, bituminous pavements, loam and seeding are specified in the applicable sections of the "Rhode Island Department of Transportation Specifications for Road and Bridge Construction 2004 Edition" with all revisions

Construction Method: Test pit excavations may include any or all of the following items, the construction methods for which are specified in the applicable sections of the "Rhode Island Department of Transportation Specifications for Road and Bridge Construction 2004 Edition" with all revisions:

a. Cutting pavement.
b. Breaking up and disposal of existing pavements.
c. Test pit excavation.
d. Backfill and compaction, where required.
e. Loam and seeding.
f. Replacement paving, which shall match as nearly as possible the existing pavement in thickness.

Any damage to the facility that is being located will be repaired at no cost to the owner.

Method Of Measurement/Basis of Payment: There will be a separate bid item contained in the proposal to cover this work. The costs associated with this item as detailed in the proposal page shall constitute full and complete compensation for all labor, materials, equipment, including cutting and matching pavement, removal and legal disposal of existing pavements, excavation, the replacement of sub-base and base courses, and replacement paving and resurfacing, pumping and bailing, backfilling, loaming and seeding, where required, and for all other incidentals as included in the total contract lump sum price required to finish the work, complete and accepted by the Engineer.

E. Eight Foot Black Vinyl Coated Galvanized Chainlink Fence

Description: This item of work shall conform to the applicable sections of the "Rhode Island Department of Transportation

Specifications for Road and Bridge Construction 2004 Edition" with all revisions. This item shall consist of furnishing and installing black vinyl coated chain-link fence with Black posts and top rails of the types and at the locations shown on the plans or as indicated by the Engineer, in accordance with these specifications.

Materials: The materials for this item shall conform to the applicable sections of Section 903 Fences in the Rhode Island Department of Transportation Specifications for Road and Bridge Construction 2004 Edition except for the black vinyl coating which shall be thermally fused by the manufacturer prior to construction. All components of the fencing structure, posts, brackets. Cross bars, & fabric will be black vinyl coated.

Construction Method: The construction methods for this item shall conform to the applicable sections of Subsection 903.03 Fences in the Rhode Island Department of Transportation Specifications for Road and Bridge Construction 2004 Edition. A brace rail and truss rod also known as a "Pull Post" shall be installed on all fence ends and a minimum of every 250 feet for all fencing. Closure sections will be considered incidental to the fence items.

Method of Measurement/Basis of Payment: There will be no separate Method of Measurement and Basis of Payment for "8' BLACK VINYL COATED GALVANIZED CHAINLINK FENCE" but will be included in the total lump sum bid price submitted for this project. The costs associated with this work as proportioned in the lump sum amount shall constitute full and complete compensation for all labor, tools, materials, and equipment, including but not limited to furnishing and installing fence fabric, posts, rails, rods, fittings, hardware and fasteners, drilling and grouting (if required), debris removal and all other incidentals as included in the total contract lump sum price required to complete the work shown on the plans in place and accepted by the Engineer.

F. Full Depth Sawcut of Bituminous and/or Cement Concrete Pavements/Sidewalk

Description: This item of work shall conform to the applicable sections of the "Rhode Island Department of Transportation Specifications for Road and Bridge Construction 2004 Edition" with all revisions. This item of work shall consist of sawcutting both Portland cement and bituminous concrete pavements and sidewalks to the required depths as indicated on the Plans or as directed by the Engineer, for the installation of conduit only. all in accordance with these Specifications.

Materials: Not applicable.

Construction Method: The method of cutting shall be approved by the Engineer prior to the commencement of construction operations. The sections of existing pavement to be removed, surface course, base course, or combination thereof, shall be cut along the neat lines indicated in the Contract Documents or as directed by the Engineer. A vertical cut of at least 2 1/2-inches deep or to the depth of the concrete shall be made along the designated lines. The pavement to be removed shall then be chipped and removed. The edge of the cut joint shall be thoroughly cleaned by sweeping and blowing with compressed air. The clean edge shall then be protected by adequate measures until the new pavement or sidewalk is placed and matched thereto.

Any existing pavement or sidewalk, surface course, base course, or combination thereof, beyond the neat lines called for on the Plans that is damaged or destroyed by the Contractor's operations shall be either repaired or replaced at no additional cost to the Owner.

It shall be noted that full depth saw cutting required for concrete parking lot repairs shall be bid under its own separate bid item of work – see proposal page.

Method of Measurement/Basis of Payment: There will be no separate Method of Measurement and Basis of Payment for “FULL DEPTH SAWCUT OF BITUMINOUS AND/OR CEMENT CONCRETE PAVEMENTS / SIDEWALKS” required for conduit installation but will be included in the total lump sum bid price submitted for this project. The costs associated with this work as proportioned in the lump sum amount shall constitute full and complete compensation for all labor, materials, equipment including excavation, joints, gravel borrow, backfilling, and all other incidentals as included in the total contract lump sum price required to finish the work, complete and accepted by the Engineer.

It shall be noted that full depth saw cutting required for concrete parking lot repairs shall be bid under its own separate bid item of work – see proposal page.

G. New Sliding Gates and Controllers

DESCRIPTION: As detailed on the Contractual Drawings, General Details and other specific specifications contained in this contract, this Specification will cover all equipment, labor, and materials, associated with the furnish and installation of a complete mechanical sliding gate system – (future card access controlled installed by others) complete with

new gate controllers, stanchions with foundation, loop detection, "Knox Box" with emergency preempt switch and all safety related hardware.

MATERIALS/CONSTRUCTION METHOD: All materials and construction methods unless detailed in this specification will conform to manufacturer's recommendations the applicable sections of the "Rhode Island Department of Transportation Specifications for Road & Bridge Construction 2004 Edition" as well as the latest edition of the National Electrical Code: Shop Drawings will be submitted for approval for associated hardware associated with the mechanical gate with controller. Drawings should include detailed information, sizes, and dimensions for all materials, accessories and finishes. No fabrication shall commence until such drawings are returned approved. Thirty (30) days should be allowed for the approval process.

METHOD OF MEASUREMENT/BASIS OF PAYMENT: There will be no separate method of measurement/basis of payment for all work and sub-work contained in this specification, but will be included in the total contract lump sum price. The cost associated with this work as proportioned in the contract lump sum amount shall constitute full and complete compensation for all labor, tools, materials, and equipment necessary to fully complete this work.

1. Horizontal Cantilever Sliding Gate System & Controller

a Location

These devices shall be installed and designed to fit the locations and conditions shown on the contractual plans.

b Manufacturer

Fortress structural slide gate with Model 225 VS Operator Manufactured by Tymetal Corporation, 2549 State Route 40, Greenwich, NY 12834 – 1-800-328-4283 or approved equal.

c Operation Requirements:

All gates shall have the ability to achieve a maximum gate speed of 2.2 feet per second and shall be equipped with soft start and soft start function to prevent shock load to the gate and panel. All gates shall be able to operate by means of a remote transmitter, card reader, or activated controls (loop detection). The gate shall close upon a predetermined adjustable time limit. The system shall be designed so the gate movement from the closed position is impossible except by electrical and mechanical means or by emergency operations. Emergency operations shall be performed by a crank handle located in the locked motor box to perform both opening and closing movements. Time for closing will be adjustable from 2 to 60 seconds.

d Motor

The electrical motor shall be 1 HP and have overload protection. It shall contain a variable frequency AC drive unit to allow for programmable speeds. The gearbox

reducer shall be a single unit self enclosed with hardened steel, machine cut, worm and mating bronze gears. It shall have an adjustable clutching device with manual disconnect. It shall be lubricated with a #634 specialty oil bath with a fluid pour point of -44 degrees F. It shall be heated with a 110 VAC electrical internal heater.

e Drive Chain

#50 roller chain shall be utilized. All chain brackets and required attachment hardware shall be supplied.

f Control

Installation will conform to Class III Regulations. A primary external protection system must be installed with two Albano FR-55 photo beams. The controller shall be manufactured by Tymetal Corporation Model 225 VS or approved equal. An audio alarm will act as a secondary entrapment protection system. All controls must be coordinated with the card reader. The radio receiver will be Model R3028 and the transmitter will be Model R3022.

2. Structural Sliding Gate Panel:

The gate frame shall be fabricated from 6063-T6 aluminum. The top member is a 3”x5” minimum aluminum structural channel/tube weighing no less than 3.0 lbs/ft. This member shall be keyed to interlock with the “keyed” track member. The bottom member shall be a one piece 2”x5” minimum aluminum structural tube weighing not less than 2.0 lbs/ft. The two vertical end members shall be “P” shaped with a normal base dimension of not less than 2”x2” and weighing no less than 1.0 lbs/ft. The intermediate vertical members shall alternate between a minimum of 2”x2” and 1”x2” and weigh no less than 1.1 lbs/ft. and 0.82 lbs/ft. respectively. Spacing of the intermediate members shall be less than 50% of the frame height. The gates shall have two separate semi enclosed “keyed” tracks, extruded from 6105-T5 aluminum weighing not less than 2.9 lbs/ft. Track members located on each side of the top member will be connected by interlocking and welding the “keyed” members. Welds to be placed alternately along the top and side of the track at 9” centers with welds being a minimum of 2”. The gate frame is to be supported from the tracks by four, swivel type, self-aligning, 4-wheeled, sealed lubricant ball-bearing truck assemblies. These are to be attached to double 4” OD support posts, the bottom of which shall be equipped with two pairs of 3” rubber guide wheels. Diagonal bracing of 3/16” minimum diameter stainless steel air craft cable shall be installed to brace the gate panels and to provide means of vertical adjustments. The support posts will be a double set of 4” OD galvanized steel posts with concrete footings. The gate frame will be filled over its entire length with chain link, black epoxy coated fabric, and shall be secured with fence industry standard tension bars and ties. The height of the gate shall be 8 feet for the mechanically controlled gate and 6 feet for the manual gate. The gate shall be mill finished aluminum, black powder coated. The gate system shall be furnished with an electro-mechanical 5

tumbler lock, supplied by Tymetal Corporation all gates shall be keyed alike.

3. Sliding gate Peripherals

The following are standards that all gates must adhere to.

a. All gates shall conform to ASTM 2200 & UL3 25

b. All mechanically controlled gates shall be equipped with emergency preempt capabilities. The contractor is to coordinate these controls with the local fire and emergency response departments. As well provisions will be made to furnish and install an emergency lock box (KNOX BOX), red, with remote gate opening switch. The switch will be key operated utilizing the same access key as the lock on the box. The box will be affixed to one of the posts at every gate for emergency access.

c. All gates shall be equipped with attached stop and warning signs.

d. All mechanically controlled gates shall be equipped with edge guards as well as photo eyes for safety.

e. All gate controllers shall have the capability to program opening and closing times that override the access control system.

4. System Acceptance Test

A performance test witnessed by the owner will be performed with the contractor, gate representative, and control representative present. A written set of instructions for the operation and maintenance of the gate and all the components will be drafted and turned over to the owner at the day of the performance test.

5. Pre-Molded Splices 2, 3, and 4-Way Splices

a Location:

These devices shall be furnished and installed at each electrical hand hole number and types of splice kits to be installed in conjunction with the attached electrical drawings and details.

b Materials:

The devices shall be suitable for direct burial, hand hole, and pedestal applications. The device shall be manufactured by Homac Manufacturing Company "RAB 350 Series." They shall be dual rated for both copper and aluminum connections. The splice will be fabricated from 6061-T aluminum and insulated with EPDM rubber compound rated at 600 VOLTS.

6. Card Reader Access System:

This work is not included as part of this contract but will be installed under a separate supplemental contract. Only the goose necks, standard and dual along with their respective foundations, as well as the access boxes to hold the future proximity readers on the passage gates and any required conduit shall be included in this contract.

7. Stanchions (GOOSNECKS):

Two new stanchions with foundations will be required in accordance with the details, and at locations shown on the contract drawings. One will be of standard type while the other shall be of dual type.

H. Refurbish Existing Sliding Gates and New Controller

DESCRIPTION: As detailed on the Contractual Drawings and General Details this Specification will cover all equipment, labor, and materials, associated with the rebuilding of the existing sliding gate located at the exit to Elmwood Ave with new hardware and safety devices to make the system ASTM 2200 & UL3 25 compliant, the installation of required loop system, "Knox Box" with emergency preempt switch, new electromagnetic locking device and the installation of a new controller.

MATERIALS/CONSTRUCTION METHOD: All materials and construction methods unless detailed in this specification will conform to manufacturer's recommendations the applicable sections of the "Rhode Island Department of Transportation Specifications for Road & Bridge Construction 2004 Edition" as well as the latest edition of the National Electrical Code: Shop Drawings will be submitted for approval for associated hardware and gate controller. Drawings should include detailed information, sizes, and dimensions for all materials, accessories and finishes. No work shall commence until such drawings are returned approved. Thirty (30) days should be allowed for the approval process.

METHOD OF MEASUREMENT/BASIS OF PAYMENT: There will be no separate method of measurement/basis of payment for all work and sub-work contained in this specification, but will be included in the total contract lump sum price. The cost associated with this work as proportioned in the contract lump sum amount shall constitute full and complete compensation for all labor, tools, materials, and equipment necessary to fully complete this work.

1. Horizontal Cantilever Sliding Gate System & Controller

c Location

These devices shall be installed and designed to fit the locations and conditions shown on the contractual plans.

d Control Manufacturer

Model 225 VS Operator Manufactured by Tymetal Corporation, 2549 State Route 40, Greenwich, NY 12834 – 1-800-328-4283.

e Operation Requirements

All gates shall have the ability to achieve a maximum gate speed of 2.2 feet per second and shall be equipped with soft start and soft start function to prevent shock load to the gate and panel. All gates shall be able to operate by means of a remote transmitter, card reader, or activated controls (loop detection). The gate shall close upon a

predetermined adjustable time limit. The system shall be designed so the gate movement from the closed position is impossible except by electrical and mechanical means or by emergency operations. Emergency operations shall be performed by a crank handle located in the locked motor box to perform both opening and closing movements. Time for closing will be adjustable from 2 to 60 seconds.

f Motor

The electrical motor shall be 1 HP and have overload protection. It shall contain a variable frequency AC drive unit to allow for programmable speeds. The gearbox reducer shall be a single unit self enclosed with hardened steel, machine cut, worm and mating bronze gears. It shall have an adjustable clutching device with manual disconnect. It shall be lubricated with a #634 specialty oil bath with a fluid pour point of -44 degrees F. It shall be heated with a 110 VAC electrical internal heater.

g Drive Chain

A new #50 roller chain shall be utilized. All chain brackets and required attachment hardware shall be supplied.

h Control

Installation will conform to Class III Regulations. A primary external protection system must be installed with two Albano FR-55 photo beams. The controller shall be manufactured by Tymetal Corporation Model 225 VS. An audio alarm will act as a secondary entrapment protection system. All controls must be coordinated with the card reader. The radio receiver will be Model R3028 and the transmitter will be Model R3022.

2. Sliding Gate improvements

The gate frame is to be supported from the tracks by four new, swivel type, self-aligning, 4-wheeled, sealed lubricant ball-bearing truck assemblies. These are to be attached to double 4” OD support posts, the bottom of which shall be equipped with two pairs of 3” rubber guide wheels. Diagonal bracing of 3/16” minimum diameter stainless steel air craft cable shall be installed to brace the gate panels and to provide means of vertical adjustments. The support posts will be a double set of 4” OD galvanized steel posts with concrete footings. The gate frame will be filled over its entire length with chain link, black epoxy coated fabric, and shall be secured with fence industry standard tension bars and ties. The gate system shall be furnished with a new electro-mechanical 5 tumbler lock, supplied by Tymetal

3. Sliding gate Peripherals

The following are standards that all gates must adhere to.

a. All gates shall conform to ASTM 2200 & UL3 25

b. All mechanically controlled gates shall be equipped with emergency preempt capabilities. The contractor is to coordinate these controls with the local fire and emergency response departments. As well provisions will be made to

furnish and install an emergency lock box (KNOX BOX), red, with remote gate opening switch. The switch will be key operated utilizing the same access key as the lock on the box. The box will be affixed to one of the posts at every gate for emergency access.

c. All gates shall be equipped with attached stop and warning signs.

d. All mechanically controlled gates shall be equipped with edge guards as well as photo eyes for safety.

e. All gate controllers shall have the capability to program opening and closing times that override the access control system.

4. System Acceptance Test

A performance test witnessed by the owner will be performed with the contractor, gate representative, and control representative present. A written set of instructions for the operation and maintenance of the gate and all the components will be drafted and turned over to the owner at the day of the performance test.

5. Pre-Molded Splices 2, 3, and 4-Way Splices

i Location

These devices shall be furnished and installed at each electrical hand hole number and types of splice kits to be installed in conjunction with the attached electrical drawings and details.

j Materials

The devices shall be suitable for direct burial, hand hole, and pedestal applications. The device shall be manufactured by Homac Manufacturing Company "RAB 350 Series." They shall be dual rated for both copper and aluminum connections. The splice will be fabricated from 6061-T aluminum and insulated with EPDM rubber compound rated at 600 VOLTS.

6. Card Reader Access System:

This work is not included as part of this contract but will be installed under a separate supplemental contract. Only the goose necks, standard and dual along with their respective foundations, as well as the access boxes to hold the proximity readers on the passage gates and any required conduit shall be included in this contract**.**

I. Furnish and Install Passage Gates

Description: As detailed on the Contractual Drawings and General Details this Specification will cover all equipment, labor, and materials, associated with the furnishing and installation of new passage gates. The Passage gate will be manufactured by Tymetal Corporation, Model #2150, or approved equal. It will have a gate opening of 3'-6" and a gate height of 7'-0". The gates shall be fabricated with an electric-strike lock system compatible with the

Honeywell Control system which will be activated under future contract by a 56 bit proximity reader. Exiting will be accomplished by the use of a "Detex Panic Bar" at locations shown on the contract electrical drawings. The swing gate shall be equipped with a steel door closer with constant viscosity liquid 120˚F to 30˚F. The entire frame and door assembly shall be hot dipped galvanized. The frame will contain two needle bearing hinges and have a thrust capacity (door weight) of 600 lbs. per pair. It shall have a door position indicator switch Tymetal Model 98G. The frames, stiles, and rails shall be tubular in cross-section, powder coated black, with a minimum wall thickness of 3/16'. Members shall be mitered and welded at all corners. All welds shall be ground smooth prior to galvanization. The "Detex Panic bar" will be mounted on a 2' wide – ¼ "galvanized steel plate for tamper resistant operation. The infill material to fill the frame will be black PVC or black powder coated narrow welded wire mesh (refer to detail on contract drawings).

The only requirement for access control will be the installation of conduit, both in-ground and above ground as well as the gang box on the gate for the future placement of the access card reader.

Materials/Construction Method: All materials and construction methods unless detailed in this specification will conform to manufacturer's recommendations the applicable sections of the "Rhode Island Department of Transportation Specifications for Road & Bridge Construction 2004 Edition" as well as the latest edition of the National Electrical Code: Shop Drawings will be submitted for approval for associated hardware and gate controller. Drawings should include detailed information, sizes, and dimensions for all materials, accessories and finishes. No work shall commence until such drawings are returned approved. Thirty (30) days should be allowed for the approval process.

Method of Measurement/Basis of Payment There will be no separate method of measurement/basis of payment for all work and sub-work contained in this specification, but will be included in the total contract lump sum price. The cost associated with this work as proportioned in the contract lump sum amount shall constitute full and complete compensation for all labor, tools, materials, and equipment necessary to fully complete this work.

J. Concrete Filled Steel Bollards

Description: This item of work shall conform to the applicable sections of the "Rhode Island Department of Transportation Specifications for Road and Bridge Construction 2004 Edition" with all revisions. This item of work shall consist of providing steel

bollards-concrete filled in cement concrete with plastic yellow sleeve at the locations indicated on the Plans or as directed by the Engineer, all in accordance with these Specifications.

Materials: The proposed steel bollards–concrete filled shall be 6" diameter hot dipped galvanized steel pipe bollards, covered with a yellow vinyl covered jacket, filled with concrete and in accordance with the "Rhode Island Department of Transportation Specifications for Road and Bridge Construction 2004 Edition" with all revisions.

Construction Method: The proposed steel bollards–concrete filled shall be 6" diameter hot dipped galvanized steel pipe bollards filled with concrete. The proposed bollard shall be installed in Class "A" cement concrete as shown on the details on the plans and in accordance with the "Rhode Island Department of Transportation Specifications for Road and Bridge Construction 2004 Edition" with all revisions. The proposed bollards are to be painted yellow before installation.

Method of Measurement/Basis of Payment: There will be a separate bid item contained in the proposal to cover this work, relative to the Measurement and Basis of Payment for "Steel Bollards – Concrete Filled". The costs associated with this work as listed in the proposal page shall constitute full and complete compensation for all labor, materials, equipment for furnishing and placing units in cement concrete, and for all other incidentals as included in the total contract lump sum price required to finish the work, complete and accepted by the Engineer.

K. Furnish and Install Conduit-All Types and Sizes

Description: As detailed on the Contractual Drawings and General Details this Specification will cover all equipment, labor, and materials, associated with the installation of various size conduits, PVC, Rigid steel, all alternate types either in ground (flow fill back filled) or above ground as depicted on the contract drawings.

Materials/Construction Method: All materials and construction methods unless detailed in this specification will conform to manufacturer's recommendations the applicable sections of the "Rhode Island Department of Transportation Specifications for Road & Bridge Construction 2004 Edition" as well as the latest edition of the National Electrical Code. It shall be noted that all buried conduit will be backfilled with flowable fill with caution tape installed as detailed in the contract drawings. All saw cutting required for installation shall be considered as part of this work. Refer to specification for saw cutting for more information

Method of Measurement/Basis of Payment: There will be no separate method of measurement/basis of payment for all work and sub-work contained in this specification, but will be included in the total contract lump sum price. The cost associated with this work as proportioned in the contract lump sum amount shall constitute full and complete compensation for all labor, tools, materials, and equipment necessary to fully complete this work, including flow fill and saw cutting through asphalt and or concrete parking lot and the supplemental returning the area to its original condition (placement of concrete or asphalt) with the exception of the concrete areas called out for repair which is covered under its own pay item. It also should be noted that saw cutting through concrete surfaces for concrete repair will be covered under its own separate bid item since the exact areas of concrete repair can be increased or decreased as required – see proposal page.

L. Construction Layout-Survey

Description: All field control and construction layout for this project including but not limited to layout, the establishment and staking of line and grade, the establishment of vertical and horizontal alignment, and all other surveying operations required to successfully complete the project in accordance with the plans and specifications will be the sole responsibility of the contractor. Care shall be taken during grading operations as to account for large paved areas with relatively low drops in grade.

Method of Measurement: There will be no separate method of measurement and basis of payment for his item of work but will be included in the total contract lump sum price. The cost associated with this work as proportioned in the contract lump sum amount shall constitute full and complete compensation for all labor, tools, materials, and equipment necessary to provide surveying information and layout to successfully construct this work.

M. Stranded Copper Conductor, Ground Wire, Ground Rods

Description: This work consists of furnishing and installing wire, cable and ground rods of the type and at the locations indicated on the plans, or as directed. This work also includes the use of material and equipment for furnishing and installing semi-permanent splice kits and completing two-way splices in hand-holes.

Materials/Construction Method: All materials and construction methods unless detailed in this specification will conform to manufacturer's recommendations the applicable sections of the

"Rhode Island Department of Transportation Specifications for Road & Bridge Construction 2004 Edition" as well as the latest edition of the National Electrical Code:

Method of Measurement/Basis of Payment There will be no separate method of measurement/basis of payment for all work and sub-work contained in this specification, but will be included in the total contract lump sum price. The cost associated with this work as proportioned in the contract lump sum amount shall constitute full and complete compensation for all labor, tools, materials, and equipment necessary to fully complete this work.

N. Remove and Dispose of Concrete Parking Lot Surfacr

Description As detailed on the Contractual Drawings and General Details this Specification will cover all equipment, labor, and materials, associated with the removal and replacement of areas of concrete parking surfaces depicted for replacement as specified in the contract drawings. Also included with this work is the placement of flowable fill as the sub-base material in any areas of new concrete that are disrupted with the installation of new conduit and or hand-holes.

Materials and Construction Method: All materials and construction methods unless detailed in this specification will conform to the applicable sections of the "Rhode Island Department of Transportation Specifications for Road & Bridge Construction 2004 Edition". All concrete shall be 4000 psi XX (ae). Reinforcing shall be 6"x6" – 6/6 WWM. Where the new concrete surfaces meet existing concrete surfaces - ½"x12" dowels will be installed; – 16" on-center on all new surfaces. All areas shall be wet cured for a period of 5 days.

Method of Measurement/Basis of Payment: There will be a separate bid item called out for in the contract to cover this work. The cost associated with this work as proportioned in the contract bid proposal shall constitute full and complete compensation for all labor, tools, materials, and equipment necessary to fully complete this work, including concrete, sub base – (gravel and flow fill), doweling, curing, reinforcement and any traffic control required to keep bus movements free.

O. Precast Type A and H Handholes RI STD 18.2.0 and 18.2.1

Description: This work consists of providing Precast Type A hand-holes and Precast Type H hand-holes at the locations indicated on the contract drawings and or as directed.

Materials/Construction Method All materials and construction methods unless detailed in this specification will conform to the applicable sections of the "Rhode Island Department of Transportation Specifications for Road & Bridge Construction 2004 Edition" as well as the latest edition of the National Electrical Code: In addition all hand- holes which are exposed to vehicular traffic shall be backfilled with flowable fill to avoid settlement.

Method of Measurement/Basis of Payment: There will be no separate method of measurement/basis of payment for all work and sub-work contained in this specification, but will be included in the total contract lump sum price. The cost associated with this work as proportioned in the contract lump sum amount shall constitute full and complete compensation for all labor, tools, materials, and equipment necessary to fully complete this work.

P. Removal and Replacement of Concrete Sidewalk

Description: This Specification will cover all equipment, labor, and materials, associated with the removal and replacement of concrete sidewalks including sub-base, as required for areas disrupted during hand hole installation as detailed on the contract drawings.

Materials/Construction Method All materials and construction methods unless detailed in this specification shall conform to the applicable sections of the "Rhode Island Department of Transportation Specifications for Road & Bridge Construction 2004 Edition".

Method of Measurement/Basis of Payment: There will be no separate method of measurement/basis of payment for all work and sub-work contained in this specification, but will be included in the total contract lump sum price. The cost associated with this work as proportioned in the contract lump sum amount shall constitute full and complete compensation for all labor, tools, materials, and equipment necessary to fully complete this work.

Q. Modify wall to accept New Passage Gate

Description: As detailed on the Contractual Drawings and General Details this Specification will cover all equipment, labor, and materials, associated with the rebuilding of the brick masonry wall and fence located to the north of the Elmwood Ave exit to accept the new passage gate that is being furnished and installed at this location.

Materials/Construction Methods: All materials and construction methods unless detailed in this specification will conform to the applicable sections of the "Rhode Island Department of Transportation Specifications for Road & Bridge Construction 2004 Edition". All concrete shall be Class XX (ae). All fencing and post shall be black vinyl coated.

Method of Measurement/Basis of Payment: There will be no separate method of measurement/basis of payment for all work and sub-work contained in this specification, but will be included in the total contract lump sum price. The cost associated with this work as proportioned in the contract lump sum amount shall constitute full and complete compensation for all labor, tools, materials, and equipment necessary to fully complete this work.

R. Prosecution and Progress

Description: The contractor shall furnish a complete and practicable Critical Path Method (CPM) Project Schedule. The sequence of construction will be made available at the time of the preconstruction meeting.

Scheduling Requirements: The schedule shall be the contractor's working schedule and shall be used to plan, organize, and execute the work. It shall include all activities of both the prime contractor and their sub-consultants, as well as equipment vendors and suppliers. It shall report actual performance and progress and show how the general contractor plans to complete all remaining work. The initial schedule will be submitted for review and comment and once approved will be considered the baseline schedule. Recovery schedules will be submitted as directed and/or required. The contractor shall utilize software compatible with "Primavera Project Planner."

Method of Measurement/Basis of Payment: All costs associated with the requirements set forth in the special provision for "Prosecution and Progress" shall be considered part of the contractor's overhead and should be reflected in the proportioned percentage of the total contract lump sum amount under mobilization.

S. Price Adjustments

Given the short duration of this contract there will no Price Adjustments for fluctuation in price relative to diesel fuel or liquid asphalt all steel escalation costs for this project

T. Field Office

There will be no field office required for this project.

U. Trainee Man Hours

There will be no trainees required for this project.

XXXII. BRIEF SCOPE OF WORK:

The work in this contract consists of a Modified lump sum proposal required to perform Fencing enhancements to RIPTA's Elmwood Avenue property located between Elmwood Ave and Melrose Street in the City of Providence. There shall be Five items to bid on in the contract: The first will shall include, but not be limited to removal and disposal of existing chain link fence, sliding gates and controllers, stanchions and hand holes, the furnishing and installation of 8' black PVC coated chain link fence, the furnishing and installation of two new sliding gates and three new gate controllers, two new passage gates, the refurbishing of one existing sliding passage gate; all with electrical accomplices – conduit, encased in flow fill both power and communication complete with hand holes, installation of power cable 3 primaries, neutral and ground tied into new 3 phase 208 volt distribution panel powered by a new dry type transformer. The second will involve the use of test pits for existing underground determination, the third item included in this contract is some minor reinforced concrete Parking lot repair – two areas are defined in the contract and there will some available for miscellaneous repair, and the fourth is saw cutting of concrete pavement required for concrete repair. The fourth will involve saw cutting of the concrete parking lot for the purpose of performing concrete repairs. The Final bid item will be for the furnishing and installation of bollards at areas directed by the owner. The installation of the access controls system; wiring and proximity readers will be performed by others under separate contract. This contract may be occurring concurrently with this contract.

Contractors who are requesting copies of the corresponding contract drawings in electronic form can contact Cataldo Associates @ (401) 453-3300. Arrangements can be made for printed copies of contract drawings for a minimal fee.

XXXIII. LIST OF CONTRACT DRAWINGS:

Sheet No.		Description
1		Title Sheet
2	C-1	Existing Conditions
3	C-2	General Plan
4	C-3	Details
5	E-1	Electric Plan
6	E-2	Electric Details

XXXIV. NOTICE TO CONTRACTORS:

A. All work shall be done in accordance with the State of Rhode Island Standard Specifications for Road and Bridge Construction, 2004 Edition, with all corrections and addenda to date, the Rhode Island Standard Details, the Manual on Uniform Traffic Control Devices (MUTCD), 2003 edition with latest addenda, the AASHTO Standard Specifications for Structural Supports for Highway Signs, Luminaries and Traffic Signals, 4th Edition, 2003, including latest interim specifications, and the Americans with Disabilities Act (ADA) latest revision unless otherwise detailed and/or noted in these contract documents.

B. The Contractor shall check and verify locations and depths of all existing underground utilities and services with "DIG SAFE" (1-888-344-7233). Any damage, caused by the Contractor, to existing utilities shall be the Contractor's responsibility. Costs of such damage shall be borne by the Contractor. No excavation shall be done until all involved utility companies are notified at least 48 hours in advance. As for existing utilities in and around Russell Street, little information is offered. The contractor is expected to dig test pits as required for the installation of underground work.

C. Any damages caused by the Contractor, to any existing structures, stone walls, equipment, signs, landscaping, private walkways/steps, or any other existing items along or adjacent to the roadway shall be the Contractor's responsibility.

D. Sidewalk passing clearance shall be maintained to a minimum of 3 feet in accordance with the ADA requirements. Under no circumstances shall any sign assemblies obstruct this 3 feet clearance requirement.

XXXV. UTILITY AND MUNICIPAL NOTIFICATION AND COORDINATION:

The contractor shall notify DIG SAFE (1-888-344-7233) a minimum of 48 hours in advance to locate all existing utilities and involve all utility companies. No construction excavation can be started without adjacent utilities located by paint marks in the field. The Contractor must verify that all utility companies have been contacted. The contractor will start construction after location of utilities is completed and as directed by the Engineer.

Utility/Municipality Representatives:

National Grid – Gas	Albert Marsocci	401-525-5697
National Grid – Electric	Thomas Capobianco	401-784-7248
Providence Water	Ron Campbell	401-521-6300
Providence Fire Department	n/a	401-243-6050

Providence Public Works Dept.	William Bombard	401-467-7950
Verizon Communications	Gil Pemberton II	401-727-9504
Cox Communications	David Velilla	401-615-1284
Providence Sewer	William Bombard	401-467-7950

XXXVI. SEQUENCE OF CONSTRUCTION:

Approval of the work sequence and time schedule is required before the start of any construction or other work associated with this contract. The proposed construction and time schedule must consider and address safe vehicle passage through this project. Refer to Contract Specifications – Job Specific for more information.

XXXVII. MAINTENANCE & MOVEMENT OF TRAFFIC:

Any operation that requires the movement or displacement of vehicles occupying the parking area will require 48 hour notification before any work is to commence. Christine Johnston of (RIPTA), telephone number 401-784-9500 x212, will be the point of contact. Refer to Contract Specifications – Job Specific for more information. It should be noted that this area is a fully functioning bus depot that is in use 24 hrs a day and 7 days a week. The contractor is required to phase work and or utilize steel plates as not to impact traffic. The contractor will be allowed to close down the entrance at gate # 2 for 7 days so that concrete repairs can take place and the concrete will be allowed to cure.

XXXVIII. SPECIAL NOTICE TO THE CONTRACTOR:

The Contractor is responsible for damage to any existing structures, equipment, or signs in the roadway and any private property.

The Contractor shall make every effort to avoid debris from falling into catch basins. Should any debris fall inside a structure, it shall be removed immediately.

XXXIX. COORDINATION WITH OTHER PROJECTS:

The contractor shall be aware of other construction projects ongoing or commencing during the construction period of this project, specifically security improvements to both the Chafee Building as well as the Administrative offices located at 269 Melrose Street, which includes the install of the access system for the gates installed in this contract.

XL. UTILITY NOTE:

The contractor shall be responsible for determining the exact location and depths of all existing utilities including those which may not be shown on the plans prior to any work. Hand holes, underground conduit and sign post locations shall be field adjusted as required to avoid damage to existing utilities or other property. Test pits shall be utilized as required.

XLI. COMPLETION DATES:

The following completion dates will enforceable and subject to liquidated damages:

Overall Contract Completion Date: 175 days after the notice to proceed.

Failure to meet this date will result in the assessment of liquidated damages in the amount of $ 550.00 per calendar day.

XLII. EMPLOYEE PARKING:

With the existing vehicle congestion present in the work area, employees performing work on the contract shall park their vehicles in the paved lot at the corner of Melrose Street and Thackery Street.

XLIII. STORAGE OF MATERIAL:

RIPTA will provide an area to store a limited amount of material for use on the project. This area will be confined to the corner of the garage located at 265 Melrose Street. Under no circumstances will materials be allowed to be stored at the work site with out the permission of RIPTA.

XLIV. LUMP SUM BREAKDOWN / PROGRESS PAYMENTS:

Although this contract is considered a Modified lump Sum Contract, RIPTA reserves the right to add or subtract work as they feel necessary. Deleted work will be based on the costs submitted in the alternates listed on the proposal page.

Progress payments will be based on the lump sum breakdown work sheet contained at the end of the contract documents (ATTACHMENT # 1). Bidders shall be required to fill out the lump sum breakdown worksheet and submit it with the bid proposal. The total value of work on the worksheet shall match the lump sum total in the proposal. All items of work not specifically called out in the breakdown will be considered incidental to the contract and covered under the mobilization item.

ATTACHMENT 1 – Lump Sum Breakdown Worksheet

NOTE: The denoted items of work and estimated quantities as listed below are to aid in the preparation and processing of progress payments only. The contractor is responsible for their own take off of quantities and items of work. The contractor will only be paid the lump sum price as contained on the "Bid Price Submittal Worksheet," for all work associated to complete the entire project in its entirety in accordance with the attached contract drawings and specifications, unless the scope is specifically altered by the owner. Quantities listed are approximated there will be no adjustments allowed for changes in quantities or items of work not shown in ITEM A.

(SEE BREAKDOWN SHEET NEXT PAGE)

XLV. FENCING IMPROVEMENTS

Description	Quantity	Unit Cost $	Sub-Total $
Mobilization/Demobilization	1 LS		
Traffic Control	1 LS		
R&D Chain Link Fence, controllers & Gates	1 LS		
8' Black Vinyl Coated Chain Link Fence	125 L.F.		
New Mechanical Sliding Gate with new controller	2 EA		
Rebuild existing Mechanical gate with new Controller	1 EA		
F&I Passage Gates	2 EA		
Steel Bollards-Concrete Filled	14 EA		
F&I PVC Conduit – 4" sch 80	2000 LF		
F&I Rigid Steel Conduit – 4"	1 LS		
Miscellaneous conduit	1 LS		
Project layout	1 LS		
#8 Stranded copper conductor	12,500 LF		
Heavy Duty Hand Holes	11 EA		
Standard Hand Holes	2 EA		
Repair Sidewalk	1 LS		
Modify Wall / Fence to Accept New passage Gate	1 LS		
ITEM A - TOTAL			

B **– TEST PITS**

TEST PITS	20 EA		
ITEM B - TOTAL			

C – CONCRETE PARKING LOT REPAIR

CONCRETE REPAIR	200 CY		
ITEM C - TOTAL			

D – FULL DEPTH SAW CUTTING FOR PARKING LOT REPAIR

SAW CUTTING	1000 LF		
ITEM D - TOTAL			

RHODE ISLAND PUBLIC TRANSIT AUTHORITY
Invitation for Bids Number 12-29
ATTACHMENT ONE

E – FURNISH & INSTALL CONCRETE BOLLARDS

CONCRETE BOLLARDS	14 EA		
ITEM E - TOTAL			

CONTRACT TOTAL $

Lump Sum (Modified) – Security Fencing Improvements to Elmwood Avenue Facility

_____

Written in words

Note: See language under paragraph 14 of the General Provisions

A) Lump Sum- Fencing Improvements to Elmwood Ave ***$_____***

B) Test Pits 20 EA ***$_____***

C) Concrete Parking Lot Repair 200 cy ***$_____***

D) Full Depth Saw Cutting of Concrete Parking Lot Surface – for concrete repair 1000 lf

$_____

E) Furnish & Install Bollards, concrete filled with plastic yellow liner - 14 EA

$_____

CONTRACT TOTAL $ _____

_____

RHODE ISLAND PUBLIC TRANSIT AUTHORITY
Invitation for Bids Number «Bid_Number»
PROPOSAL PAGE

Being Either a (Individual Partnership Or Corporation Incorporated) (Under the Laws of any State In the United States of America)

_____
Contractor

Composed of Officers, Partners or Owner as follows

_____
President

_____
Vice-President

_____
Secretary

_____
Treasurer

Address

_____

_____

_____

CERTIFICATION SUMMARY: I herby certify that I have read all of the contractual requirements and understood that it affects the acceptability of my bid(s).

Signed Title Date

_____

SECURITY FENCING IMPROVEMENTS
TO
ELMWOOD AVENUE FACILITY
PROVIDENCE, RHODE ISLAND

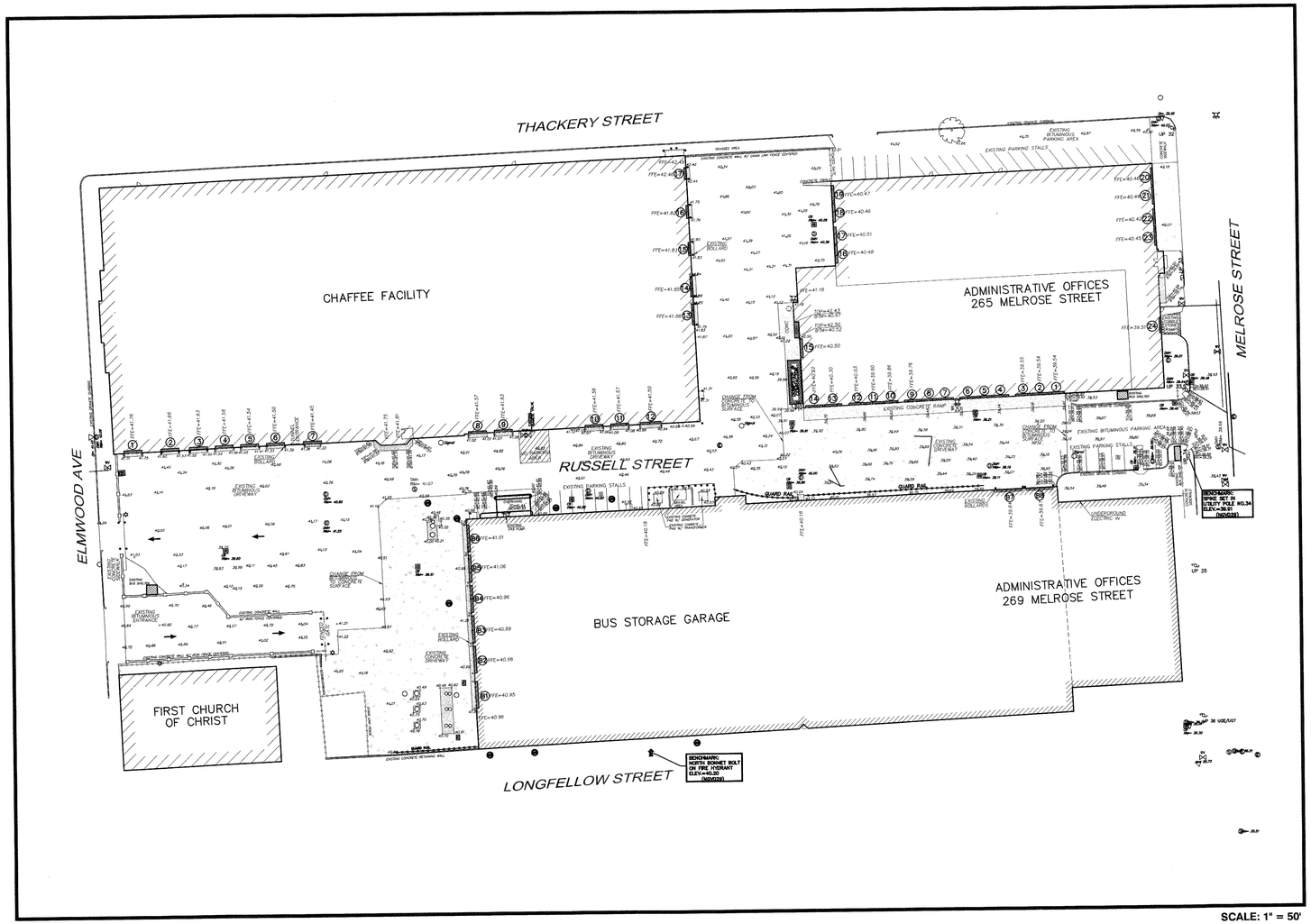

SCALE: 1" = 50'

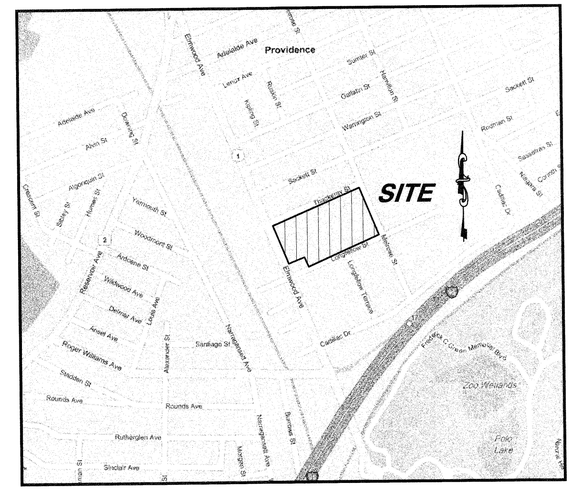

LOCATION MAP
NOT TO SCALE

LIST OF DRAWINGS

TITLE SHEET
C1 EXISTING CONDITIONS PLAN
C2 SECURITY IMPROVEMENTS PLAN
C3 SITE DETAILS
E1 ELECTRICAL PLAN
E2 ELECTRICAL DETAILS

PREPARED FOR:

RHODE ISLAND PUBLIC TRANSIT AUTHORITY
265 MELROSE STREET
PROVIDENCE RHODE ISLAND 02907

PREPARED BY:

CATALDO ASSOCIATES INC.
CIVIL ENGINEERS ~ LAND SURVEYORS

TEL: (401) 453-3300
FAX: (401) 453-4117
E-MAIL: ca@cataldoeng.com

1408 ATWOOD AVENUE
JOHNSTON, RI 02919

RALPH A. CATALDO
No. 3330
REGISTERED
PROFESSIONAL ENGINEER
5/18/12

MAY 18, 2012

INT. ( )
SCANNED DATE:
P:\3038(RIPTA)\3038-60 Russel st security\3038-60_SITEPLANS_SET.dwg 1/26/2012 12:46:43 PM EST

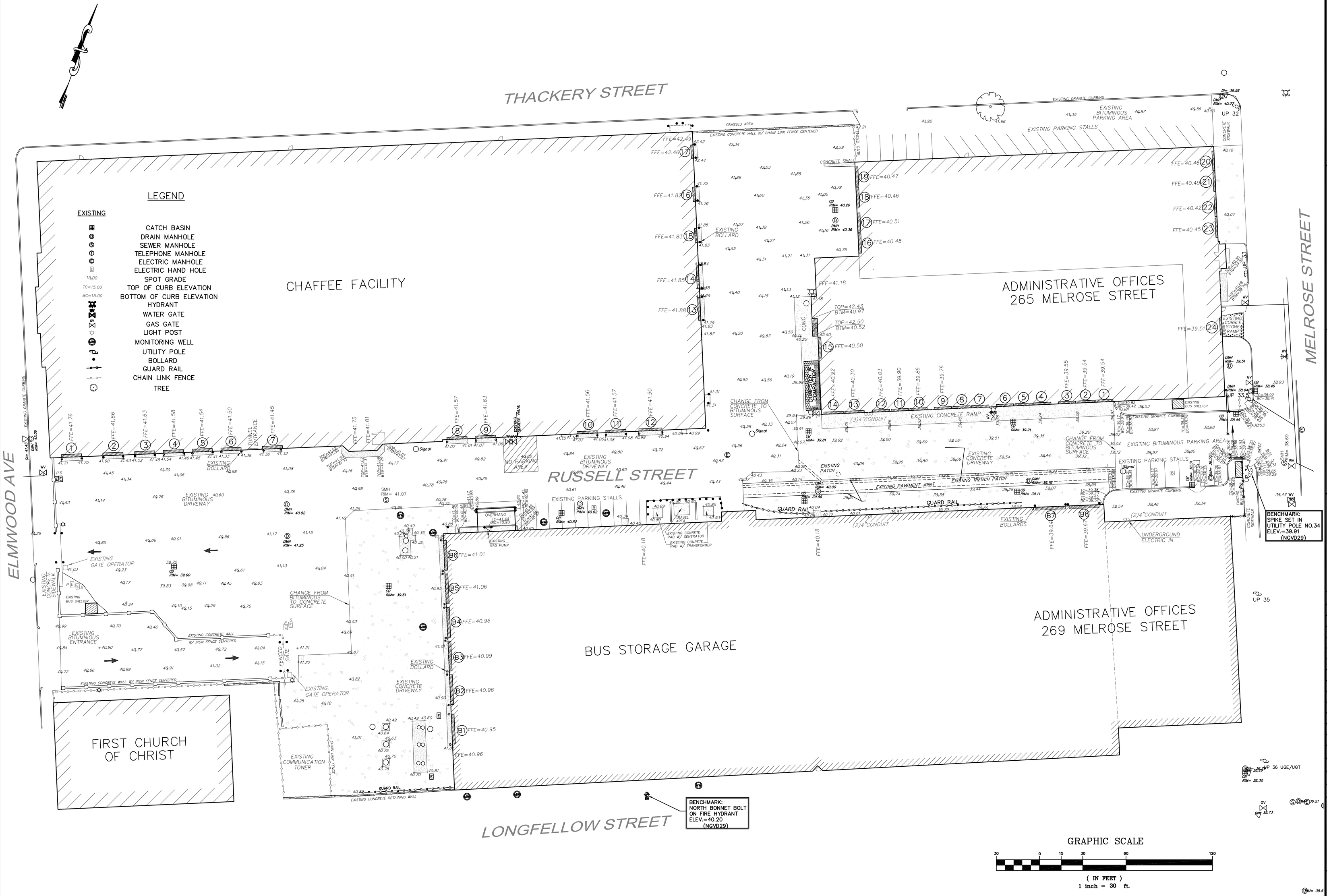

CATALDO ASSOCIATES INC.
CIVIL ENGINEERS
LAND SURVEYORS

1408 ATWOOD AVENUE
JOHNSTON, RI 02919

(401) 453-3300
FAX: (401) 453-4117
ca@cataldoeng.com

Project:

SECURITY IMPROVEMENTS TO ELMWOOD AVE. FACILITY

PROVIDENCE RHODE ISLAND

Prepared For:

RHODE ISLAND PUBLIC TRANSIT AUTHORITY

265 MELROSE STREET
PROVIDENCE
RHODE ISLAND
02907

Issue Date: MAY 18, 2012

Revisions

No.	Date	Description

Project Number: 3038-60

Scale: 1" = 30'

Designed By: J.R.C.

Drawn By: S.P.H. Checked By: R.A.C.

Sheet Title:

EXISTING CONDITIONS PLAN

C1

Sheet Number: 2 of 6

INT. ( )
SCANNED DATE:
P:\3038(RIPTA)\3038-60 Russel st security\3038-60_SITEPLANS_SET.dwg 1/26/2012 12:46:43 PM EST

INT. ( )
SCANNED DATE:
P:\3038(RIPTA)\3038-60 Russel st security\3038-60_SITEPLANS_SET.dwg 1/26/2012 12:46:43 PM EST

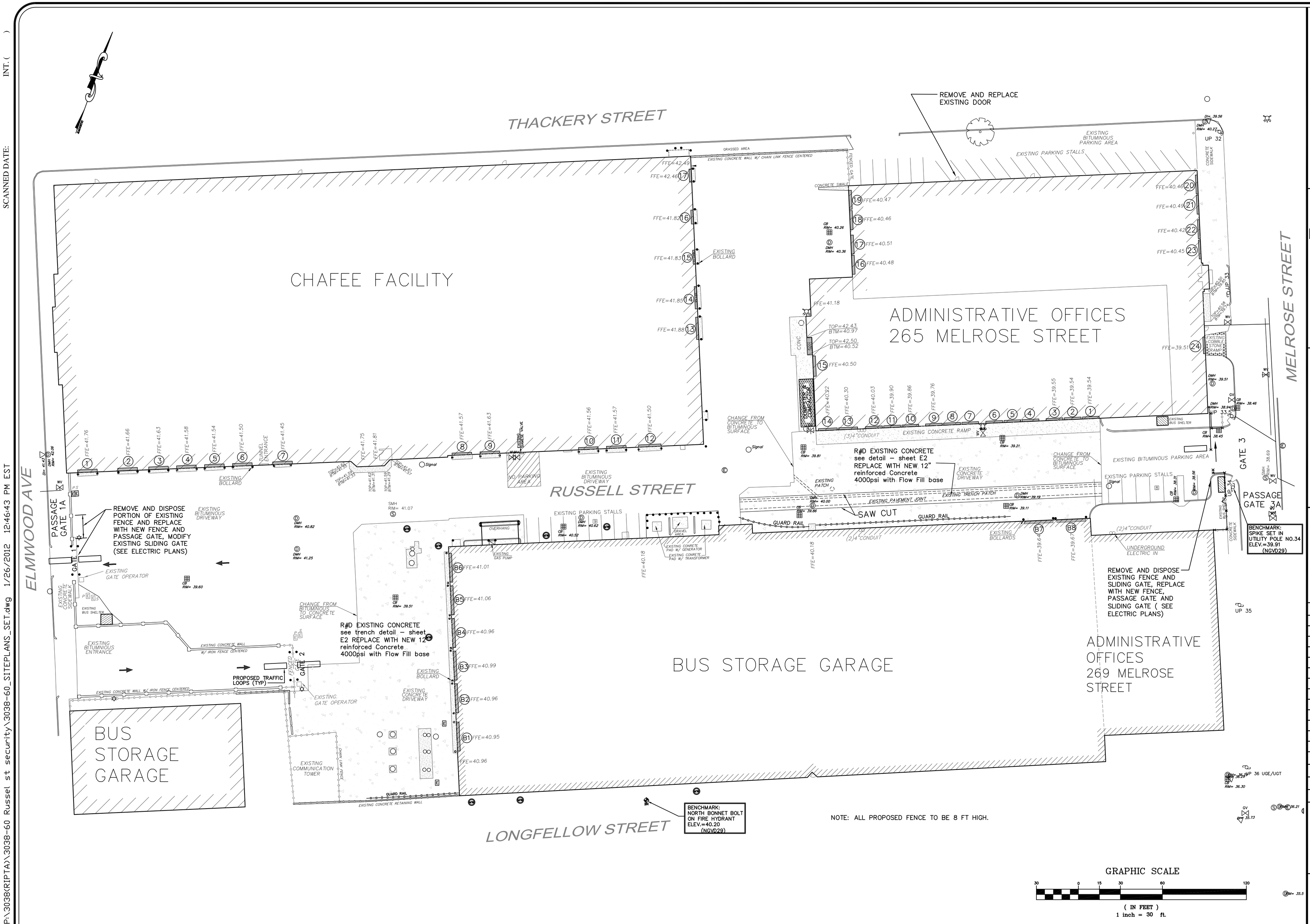

CATALDO ASSOCIATES INC.
CIVIL ENGINEERS
LAND SURVEYORS

1408 ATWOOD AVENUE
JOHNSTON, RI 02919

(401) 453-3300
FAX: (401) 453-4117
ca@cataldoeng.com

Project:

SECURITY IMPROVEMENTS TO ELMWOOD AVE. FACILITY

PROVIDENCE RHODE ISLAND

Prepared For:

RHODE ISLAND PUBLIC TRANSIT AUTHORITY

265 MELROSE STREET PROVIDENCE RHODE ISLAND 02907

Issue Date: MAY 18, 2012

Revisions

No.	Date	Description

Project Number: 3038-60

Scale: 1" = 30'

Designed By: J.R.C.

Drawn By: S.P.H. Checked By: R.A.C.

Sheet Title:

SECURITY IMPROVEMENTS PLAN

C2

Sheet Number: 3 of 6

SCANNED DATE: 1/26/2012 12:46:43 PM EST
P:\3038(RIPTA)\3038-60 Russel st security\3038-60_SITEPLANS_SET.dwg
INT. ( )

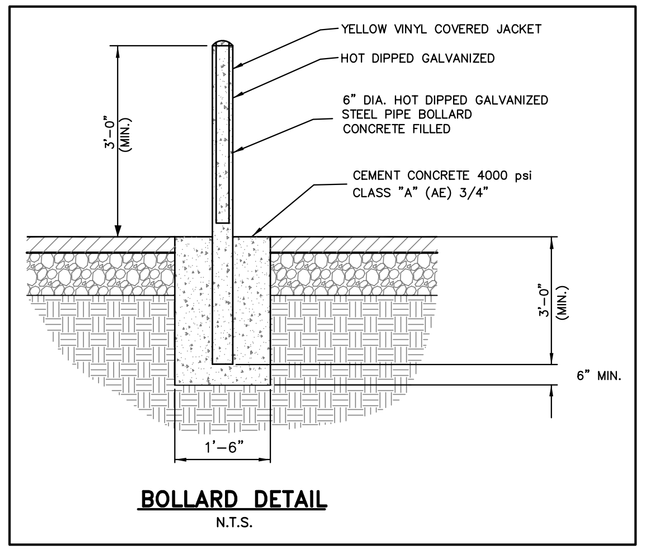

BOLLARD DETAIL
N.T.S.

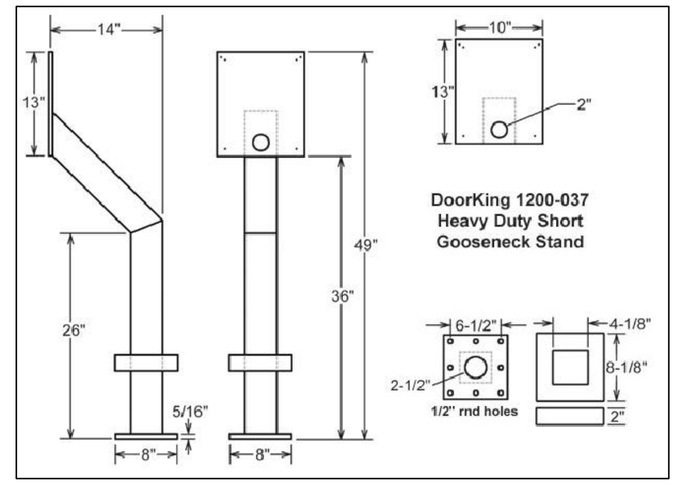

STANDARD GOOSENECK POST DETAIL
NOT TO SCALE

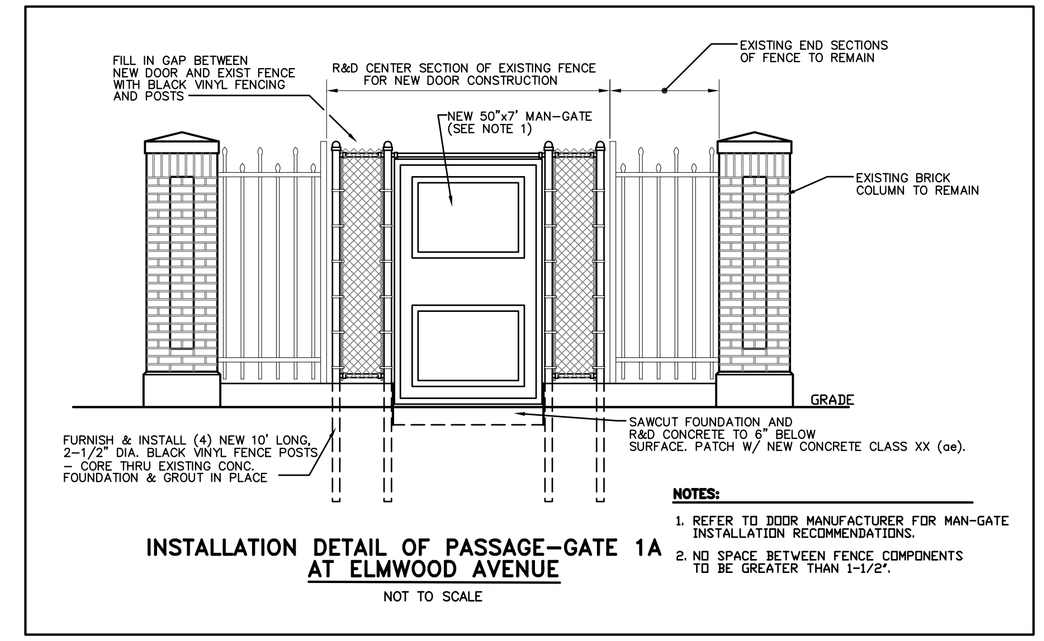

INSTALLATION DETAIL OF PASSAGE-GATE 1A AT ELMWOOD AVENUE
NOT TO SCALE

NOTES:
1. REFER TO DOOR MANUFACTURER FOR MAN-GATE INSTALLATION RECOMMENDATIONS.
2. NO SPACE BETWEEN FENCE COMPONENTS TO BE GREATER THAN 1-1/2".

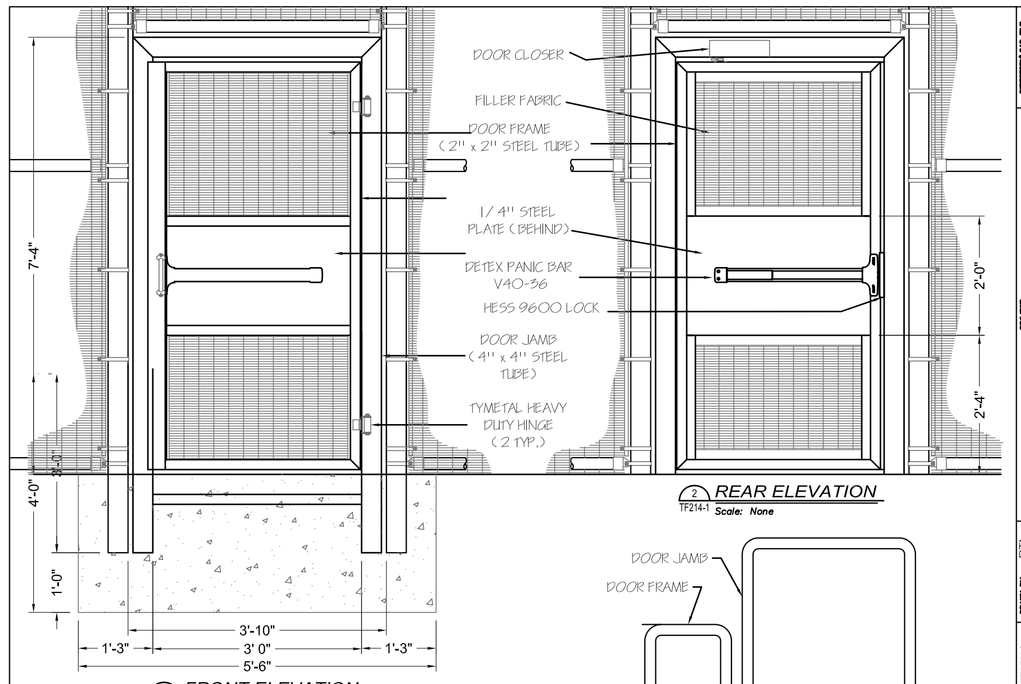

NOTE:
1. THE OPENING IN THE FENCE LINE SHALL BE BUILT TO ACCOMODATE THE DOOR JAMB PER THE OWNERS SPECIFICATIONS.
2. GATE FRAME WILL BE FILLED WITH 1/2" x 3" x 8 GA. WELDED WIRE MESH.
3. PANIC BAR TO BE DETEX #V40-36.
4. ELECTRIC STRIKE TO BE HES #9600 GENESIS 2.0.

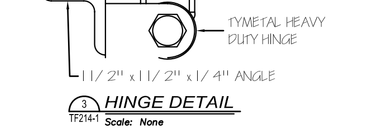

HINGE DETAIL
Scale: None

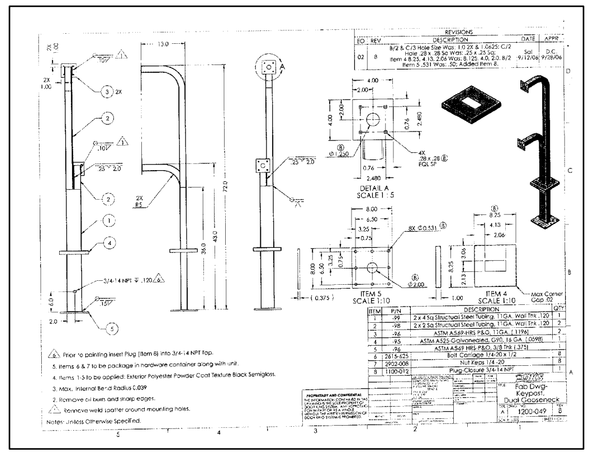

DUAL GOOSENECK POST DETAIL
NOT TO SCALE

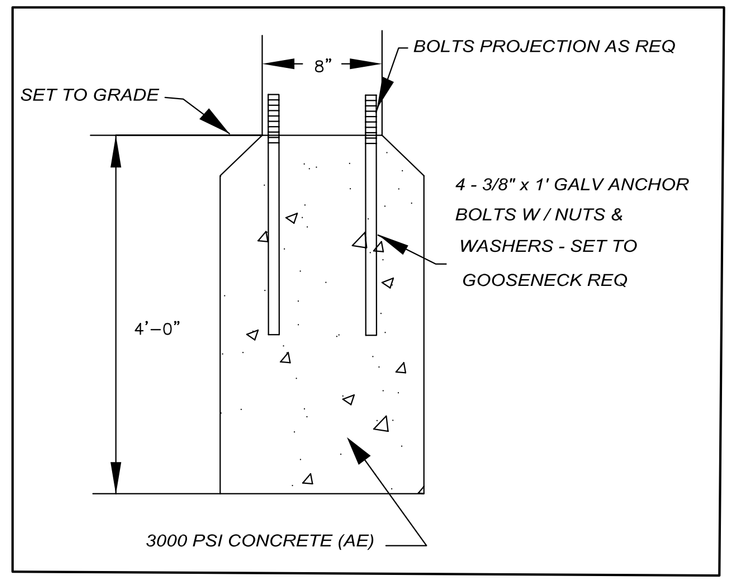

GOOSENECK FOUNDATION DETAIL
NOT TO SCALE

MODIFY FENCE DETAILTO 8 FEET AS REQUIRED

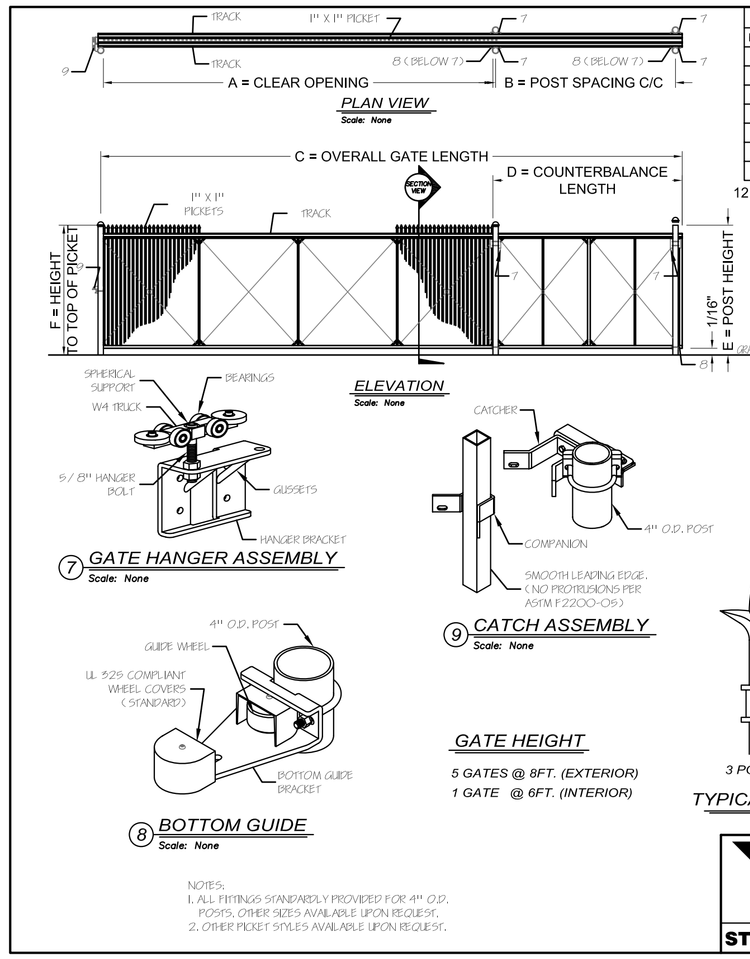

CRITICAL DIMENSION CHART			
MARK	DESCRIPTION	FORMULA	DIM.
A	CLEAR OPENING	A	"
B	COUNTERBALANCE POST SPACING C/C	(A/2)-11"	"
C	OVERALL GATE LENGTH	A x 1.5	"
D	COUNTERBALANCE LENGTH	A x 0.5	"
E	POST HEIGHT	E = F	"
F	HEIGHT TO TOP OF PICKET	F	"
G	PICKET HEIGHT	G	"

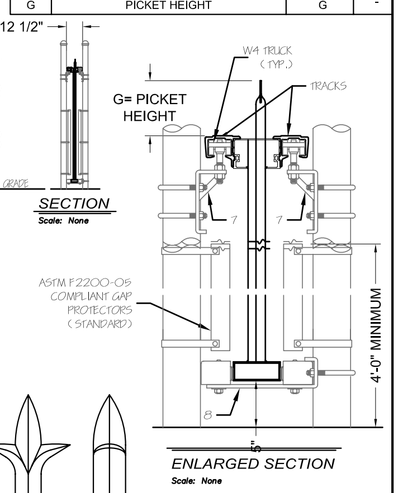

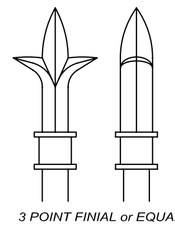

3 POINT FINIAL or EQUAL

TYPICAL PICKET STYLE

GATE HEIGHT
5 GATES @ 8FT. (EXTERIOR)
1 GATE @ 6FT. (INTERIOR)

TYMETAL CORP. www.tymetal.com
2549 STATE ROUTE 40 GREENWICH, N.Y. 12834 PH:(800) 328-4283 - FX:(518) 692-9404

STRUCTURAL CANTILEVER SLIDE GATE

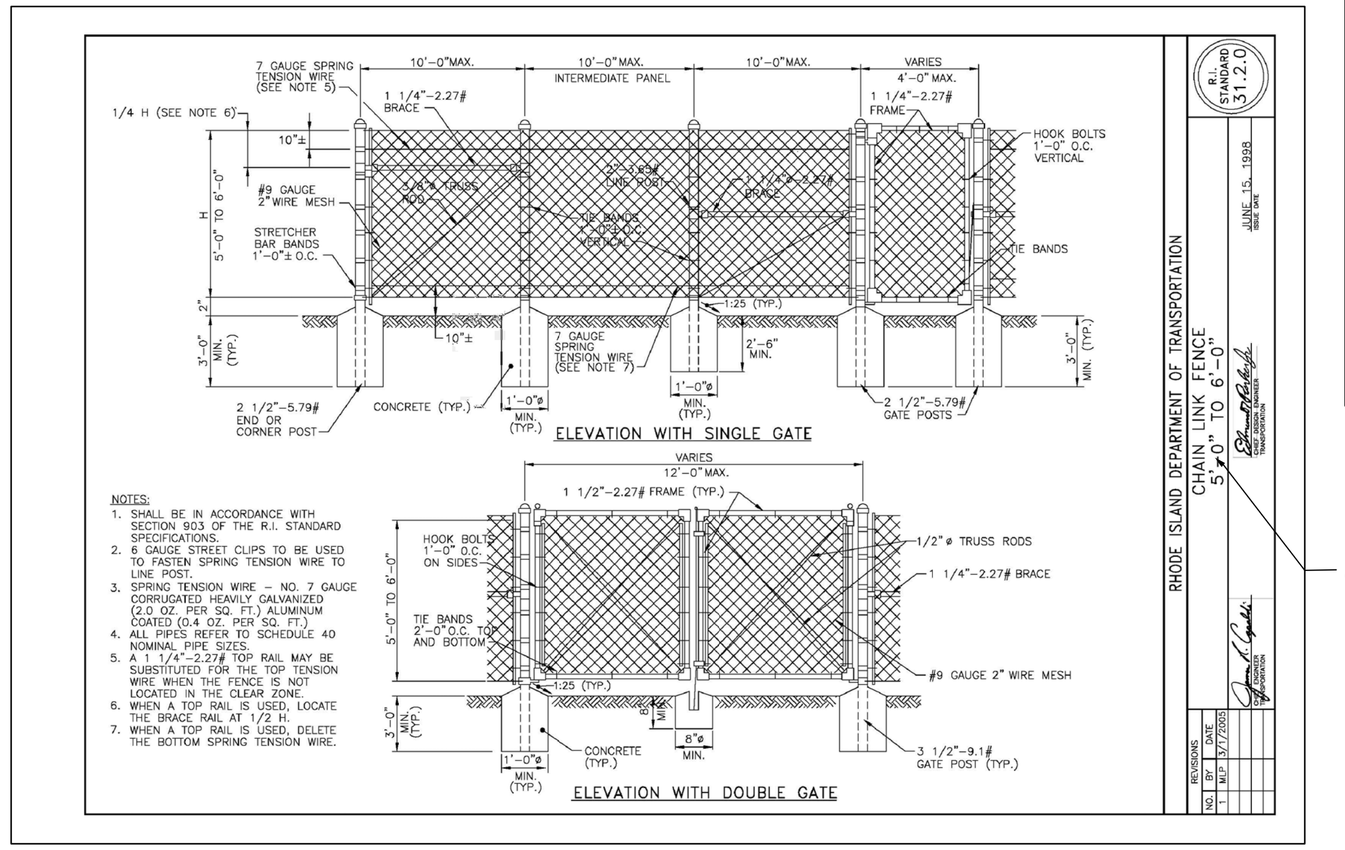

NOTES:
1. SHALL BE IN ACCORDANCE WITH SECTION 903 OF THE R.I. STANDARD SPECIFICATIONS.
2. 6 GAUGE STREET CLIPS TO BE USED TO FASTEN SPRING TENSION WIRE TO LINE POST.
3. SPRING TENSION WIRE – NO. 7 GAUGE CORRUGATED HEAVILY GALVANIZED (2.0 OZ. PER SQ. FT.) ALUMINUM COATED (0.4 OZ. PER SQ. FT.)
4. ALL PIPES REFER TO SCHEDULE 40 NOMINAL PIPE SIZES.
5. A 1 1/4"-2.27# TOP RAIL MAY BE SUBSTITUTED FOR THE TOP TENSION WIRE WHEN THE FENCE IS NOT LOCATED IN THE CLEAR ZONE.
6. WHEN A TOP RAIL IS USED, LOCATE THE BRACE RAIL AT 1/2 H.
7. WHEN A TOP RAIL IS USED, DELETE THE BOTTOM SPRING TENSION WIRE.

RHODE ISLAND DEPARTMENT OF TRANSPORTATION
CHAIN LINK FENCE
5'-0" TO 6'-0"
R.I. STANDARD M.31.2.0
JUNE 15, 1998
Effective Date

REVISIONS		
NO.	BY	DATE
1	BCP	10/17/2008

PROJECT: RIPTA RIDE SITE - RI
SUBJECT: 2150-WES3 Pedestrian Swing Gate (3'-0" x 7'-0" Opening)
CONTRACTOR: CATALDO ASSOCIATES
DRAWING NUMBER: TF215-1
DRAWN BY: KYU
DATE: 05/30/09
DESIGNED BY: CAD
SCALE: As Noted
SHEET NO. 5

PROPRIETARY & CONFIDENTIAL
This drawing is the sole property of TYMETAL CORP. Any reproduction or use of this drawing without the written permission of TYMETAL CORP. is prohibited.

TYMETAL CORP. www.tymetal.com
2549 STATE ROUTE 40 GREENWICH, N.Y. 12834 PH:(800) 328-4283 - FX:(518) 692-9404

CATALDO ASSOCIATES INC.
CIVIL ENGINEERS
LAND SURVEYORS
1408 ATWOOD AVENUE
JOHNSTON, RI 02919
(401) 453-3300
FAX: (401) 453-4117
ca@cataldoeng.com

Project:

SECURITY IMPROVEMENTS TO ELMWOOD AVE. FACILITY

PROVIDENCE RHODE ISLAND

Prepared For:

RHODE ISLAND PUBLIC TRANSIT AUTHORITY

265 MELROSE STREET
PROVIDENCE
RHODE ISLAND
02907

Issue Date: MAY 18, 2012

Revisions

No.	Date	Description

Project Number: 3038-60
Scale: AS NOTED
Designed By: J.R.C.
Drawn By: S.P.H. Checked By: R.A.C.

Sheet Title:
SECURITY IMPROVEMENTS DETAILS

C3

Sheet Number: 4 of 6

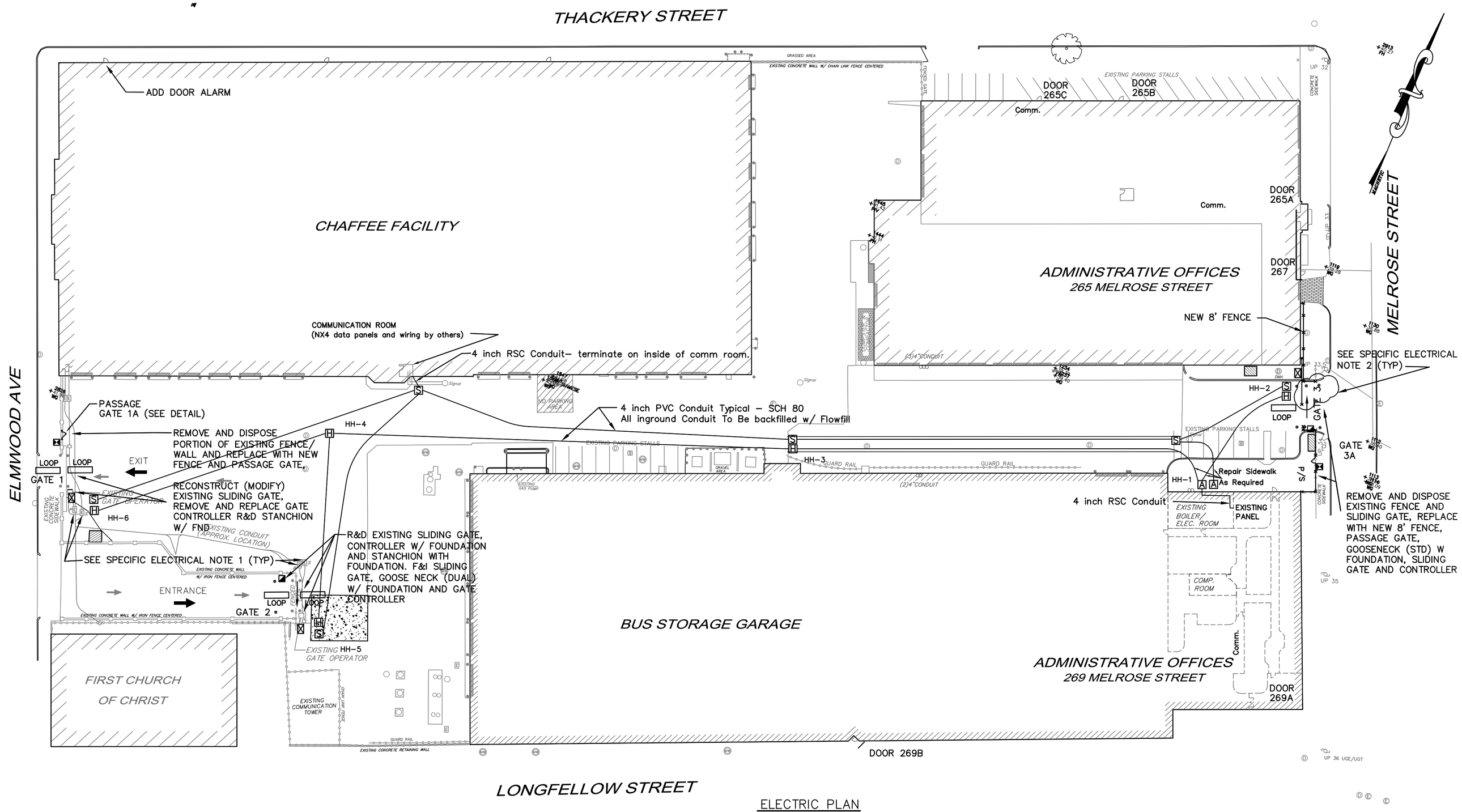

ELECTRIC PLAN

SCALE: 1" = 40'

ELECTRICAL GENERAL NOTES

1. ALL WORK SHALL CONFORM TO THE LATEST REVISION OF THE NATIONAL ELECTRICAL CODE AND THE STATE OF RHODE ISLAND, RHODE ISLAND PUBLIC TRANSIT AUTHORITY (RIPTA) AND THE CITY OF PROVIDENCE STANDARDS AND REQUIREMENTS.
2. ALL WORK SHALL BE COORDINATED WITH LOCAL PUBLIC UTILITIES. NO CONSTRUCTION SHALL COMMENCE UNTIL THE CONTRACTOR HAS NOTIFIED "DIG–SAFE" AND ALL UTILITIES HAVE BEEN PROPERLY NOTIFIED.
3. LOCATION AND DEPTH OF EXISTING UTILITIES ARE APPROXIMATE AND HAVE BEEN PLOTTED FROM THE BEST AVAILABLE INFORMATION. CONTRACTOR SHALL CHECK AND VERIFY LOCATIONS AF ALL EXISTING UTILITIES BOTH UNDERGROUND AND OVERHEAD. ANY DAMAGE TO THESE UTILITIES SHALL BE THE RESPONSIBILITY OF THE CONTRACTOR.
4. CONTRACTOR MUST COORDINATE ALL WORK AND ACCESS TO ELECTRICAL ROOMS AND EQUIPMENT WITH CUSTOMER THROUGH CHRISTINE JOHNSTON (RIPTA), TEL. 401–784–9500 EXT. 212.
5. ALL UNDERGROUND CONDUITS TO BE PVC SCH 80 AND INSTALLED AT A DEPTH OF 24" BELOW GRADE. ALL EXPOSED EXTERIOR CONDUIT TO BE RIGID STEEL. INTERIOR CONDUIT CAN BE EMT. JUNCTION BOXES TO BE GALVANIZED STEEL WITH GASKETED COVERS.
6. A NYLON PULL WIRE IS TO BE INSTALLED IN ALL SPARE CONDUITS. THE CONTRACTOR IS TO INSTALL AS MANY CIRCUITS IN ONE CONDUIT AS ALLOWED BY CODE.
7. PROVIDE ENOUGH CABLE SLACK AT ALL HANDHOLES, JUNCTION BOXES AND LUMINAIRES TO ALLOW FOR SPLICING AND REPAIRS TO BE MADE.
8. IDENTIFY AND TAG ALL CIRCUITS AT EACH PANEL, JUNCTION BOXES AND HANDHOLE. PROVIDE NUMBERING TAGS AND INSTALL AT THE HANDHOLES AT BASE OF POLE TO IDENTIFY POLE ACCORDING TO ONE–LINE WIRING DIAGRAM. TAGS TO BE MADE OF INDESTRUCTIBLE PLASTIC AND SECURED WITH PLASTIC ZIPS.
9. CONTRACTOR TO REFER TO GATE MANUFACTURING INSTRUCTIONS FOR INSTALLATION OF POWER AND CONTROL CIRCUITS.
10. CONTRACTOR TO TEST ALL GATES CIRCUITRY/CONTROLS FOR PROPER OPERATION.
11. CONTRACTOR TO INSTALL NEW GATE CONTROLLER AND ELECTRIC EQUIPMENT AS SHOWN IN ONE LINE DIAGRAM.

ELECTRICAL NOTES SPECIFIC

1. CONTRACTOR TO REMOVE AND DISPOSE ALL EXISTING GATE CONTROLLERS AND POWER CIRCUITS. REMOVE ALL CONDUCTORS UP TO DISTRIBUTION PANEL. BREAKERS TO REMAIN IN PLACE AND IDENTIFIED AS SPARES. CAP ALL EXISTING CONDUIT AND FLOW FILL ALL EXISTING HANDHOLES & R&D HH COVERS.
2. CONDUIT RUNS FROM HANDHOLES AT CONTROLLERS – (POWER AND SIGNAL) – TO GATES AND ALL APUURTANCES NOT SHOWN FOR CLARITY. REFER TO MANUFACTURER AND GATE INSTALLER FOR ALL NECESSARY RUNS. 14 BOLLARDS REQUIRED, LAYOUT TO BE ESTABLISHED IN FIELD
3. ALL PREMOLDED SPLICES SHALL BE SUBMERSABLE TYPE CAPABLE FOR USE WITH 2, 3 , AND 4 WAY SPLICE APPLICATIONS – HOMAC MFG. CO. CAT # RAB–4–OR
4. PROXIMITY READERS AND COMMUNICATION WIRING TO BE DONE BY OTHERS – ALL CONDUIT TO BE INSTALLED UNDER THIS CONTRACT

REFERENCE:

ELECTRICAL SITE PLAN, TRANSIT MAINTENANCE FACILITY PROVIDENCE, RHODE ISLAND, PREPARED FOR RHODE ISLAND PUBLIC TRANSIT AUTHORITY, PREPARED BY THE ROBINSON GREEN BERETTA CORPORATION, DRAWING NO. E207, DATED JANUARY 11, 1999, LAST REVISED FEBRUARY 4, 2000.

GATE INFORMATION

GATE 1 – SLIDING GATE – REHAB / WITH NEW CONTROLLER, "NOX BOX" W/ REMOTE SWITCH, AND 2 LOOP DETECTIONS TO EXIT –PROXIMITY READER AND COMMUNICATION WIRING BY OTHERS

GATE 1A – NEW PASSAGE GATE – PROXIMITY READER AND COMMUNICATION WIRING BY OTHERS

GATE 2 – SLIDING GATE (20 FEET) – NEW / WITH NEW CONTROLLER, "NOX BOX" W/ REMOTE SWITCH, AND 2 LOOP DETECTIONS, DOUBLE GOOSENECK W/ FOUNDATION –PROXIMITY READER AND COMMUNICATION WIRING BY OTHERS

GATE 3 – SLIDING GATE (30 FEET) –NEW / WITH NEW CONTROLLER, "NOX BOX" W/ REMOTE SWITCH AND 1 LOOP DETECTION TO EXIT, OFFSET GOOSENECK (STD) W/ FOUNDATION – PROXIMITY READER AND COMMUNICATION WIRING BY OTHERS

GATE 3A – NEW PASSAGE GATE – PROXIMITY READER AND COMMUNICATION WIRING BY OTHERS

ELECTRICAL PLAN SYMBOLS

- BREAKERS – SIZE AS SHOWN – MATCH EXISTING DIST. PANEL
- TYPE "H" PRECAST HEAVY DUTY HANDHOLE – R.I.D.O.T. STD. 18.2.1 (POWER)
- TYPE "H" PRECAST HEVEY DUTY HANDHOLE – R.I.D.O.T. STD. 18.2.1 (COMMUNICATIONS)
- POWER CONDUIT – SIZE AND TYPE AS SHOWN IN DRAWING
- POWER/CONTROLS – SIZE AND TYPE AS SHOWN IN DRAWING
- COMMUNICATIONS CONDUIT – SIZE AND TYPE AS SHOWN IN DRAWING
- GATE CONTROLLER
- PROXIMITY READER(S) LONG RANG (BY OTHERS) ON NEW GOOSE NECK W/ FOUNDATION – INCLUDED IN THIS CONTRACT
- PROXIMITY READER(S) STANDARD (BY OTHERS)
- PASSAGE GATE WITH ELECTRIC LOCK
- REMOTE GATE OPERATOR – PUSH BUTTON
- TYPE "A" PRECAST HANDHOLE – R.I.D.O.T. STD. 18.2.0 (POWER)

DIG SAFE NOTE:

UTILITIES ARE PLOTTED FROM FIELD LOCATION AND ANY RECORD INFORMATION AVAILABLE, AND SHOULD BE CONSIDERED APPROXIMATE. OTHER UTILITIES MAY EXIST WHICH ARE NOT EVIDENT OR FOR WHICH RECORD INFORMATION WAS NOT AVAILABLE. CONTRACTORS MUST CONTACT ALL UTILITY COMPANIES BEFORE EXCAVATING AND DRILLING. ALSO, CALL "DIG–SAFE" AT 1(888)344–7233 [1(888)DIG–SAFE].

GRAPHIC SCALE

40 0 20 40 80 160

(IN FEET)
1 inch = 40 ft.

CATALDO ASSOCIATES INC.
CIVIL ENGINEERS
LAND SURVEYORS
1408 ATWOOD AVENUE
JOHNSTON, RI 02919
(401) 453-3300
FAX: (401) 453-4117
ca@cataldoeng.com

ANTONIO P. FRANCO & ASSOC.
ELECTRICAL ENGINEERS
17 SUSAN DRIVE
CUMBERLAND, RI 02864

Project: **SECURITY IMPROVEMENTS TO ELMWOOD AVE. FACILITY**
PROVIDENCE RHODE ISLAND

Prepared For:
RHODE ISLAND PUBLIC TRANSIT AUTHORITY
265 MELROSE STREET PROVIDENCE RHODE ISLAND 02907

Issue Date: MAY 18, 2012

Revisions

No.	Date	Description

Project Number: 3038-60
Scale: 1" = 40'
Designed By: A.P.F. , J.R.C.
Drawn By: M.A.D. Checked By: A.P.F.
Sheet Title:
ELECTRIC PLAN

E1

Sheet Number: 5 of 6

P:\3038(RIPTA)\3038-60 Russel st security\3038-60_ELECPLANS_SET.dwg 1/27/2012 12:29:37 PM EST
SCANNED DATE:
INT. ( )

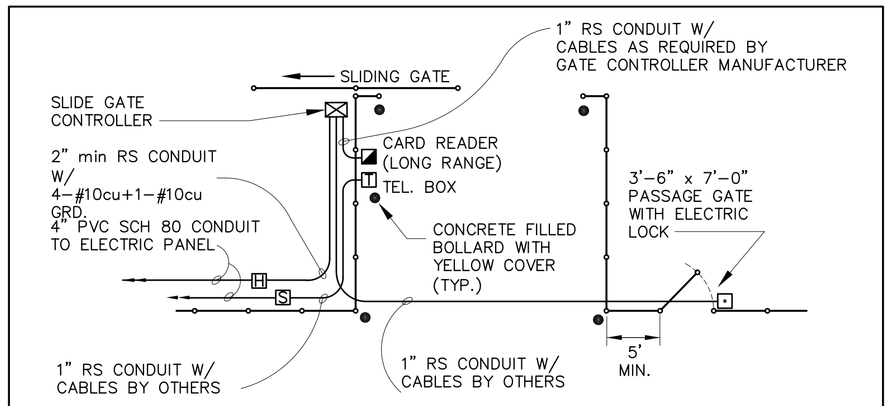

TYPICAL SLIDE GATE CONDUIT LAYOUT
(PROXIMITY READERS AND COMMUNICATION WIRING BY OTHERS)

NOT TO SCALE

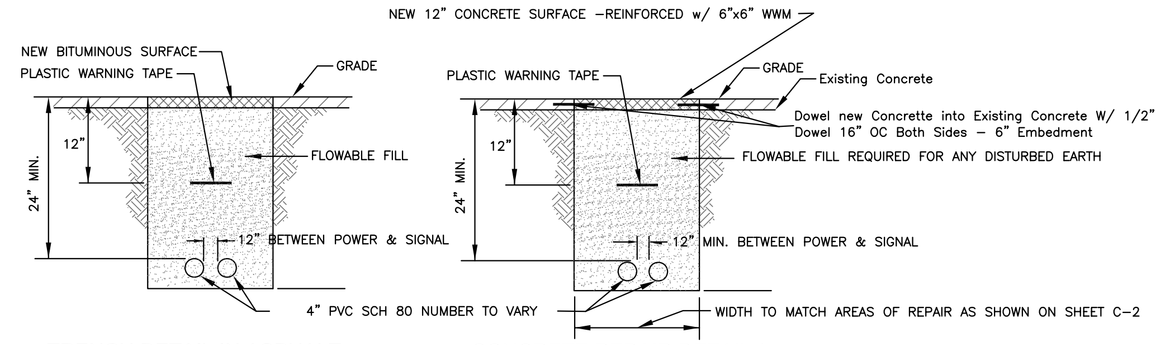

TRENCH DETAIL IN ASPHALT
SECTION A-A

NOT TO SCALE

CONCRETE REPAIR DETAIL /
TRENCH DETAIL IN CONCRETE
SECTION B-B

NOT TO SCALE

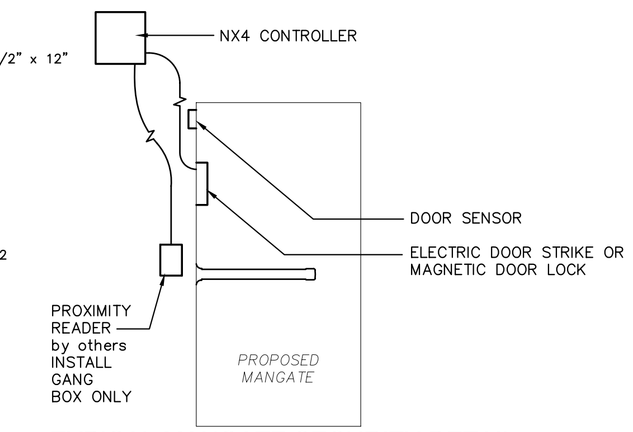

TYPICAL MANGATE SECURITY DETAIL
(PROXIMTY READER AND WIRING BY OTHERS)

NOT TO SCALE

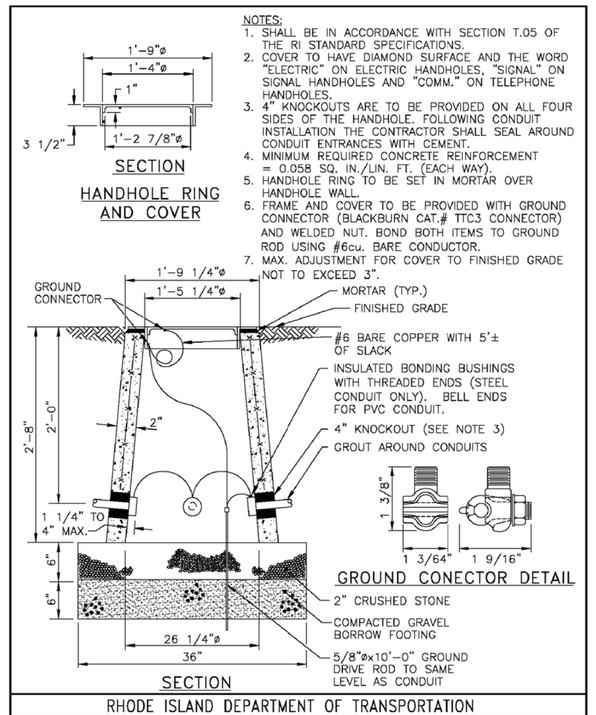

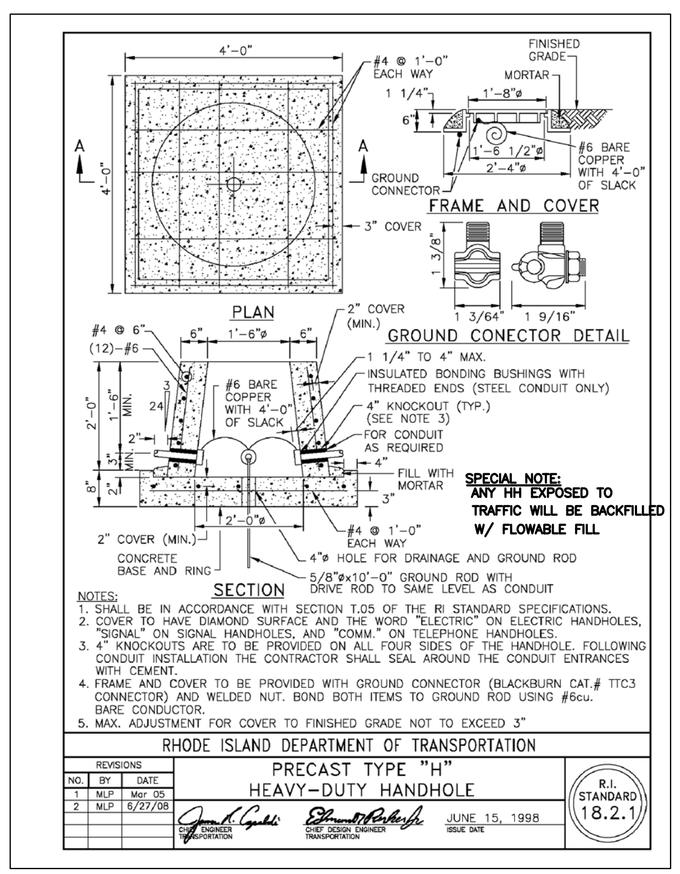

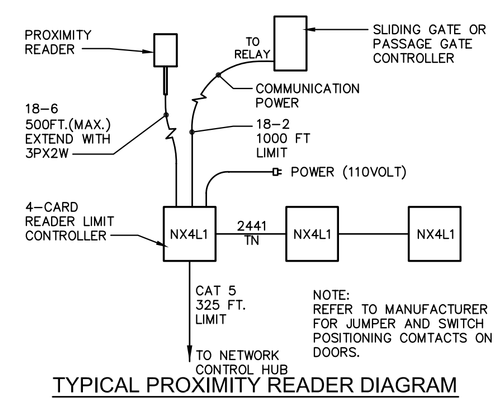

TYPICAL PROXIMITY READER DIAGRAM
(WORK BY OTHERS)

NOT TO SCALE

ELMWOOD FACILITY
GATE OPERATORS

NOTES:

1. CONTRACTOR TO DISCONNECT AND REMOVE EXISTING CIRCUIT CONDUCTORS FOR EXISTING GATES.
2. INSTALL NEW 3ø - 120/208V-4W EMERGENCY DIST. PANEL AND STEP-DOWN TRANSFORMER FOR NEW SUPPLY TO NEW GATE CONTROLLERS.
3. INSTALL NEW POWER CONDUCTORS TO NEW GATE CONTROLLER. RECONNECT EXISTING CONTROL CABLES TO NEW GATES.
4. IDENTIFY EACH POWER CIRCUIT AT ALL JUNCTION BOXES, HAND HOLES AND GATE CONTROLLER WITH INDESTRUCTIBLE PLASTIC TAGS.
5. COORDINATE REMOTE GATE OPERATIONS WITH OTHERS.
6. CONDUIT FROM HAND HOLE AT BUILDING TO INSIDE RUN OF BUILDING TO BE RIGID STEEL
7. COMMUNICATION WIRING BY OTHERS

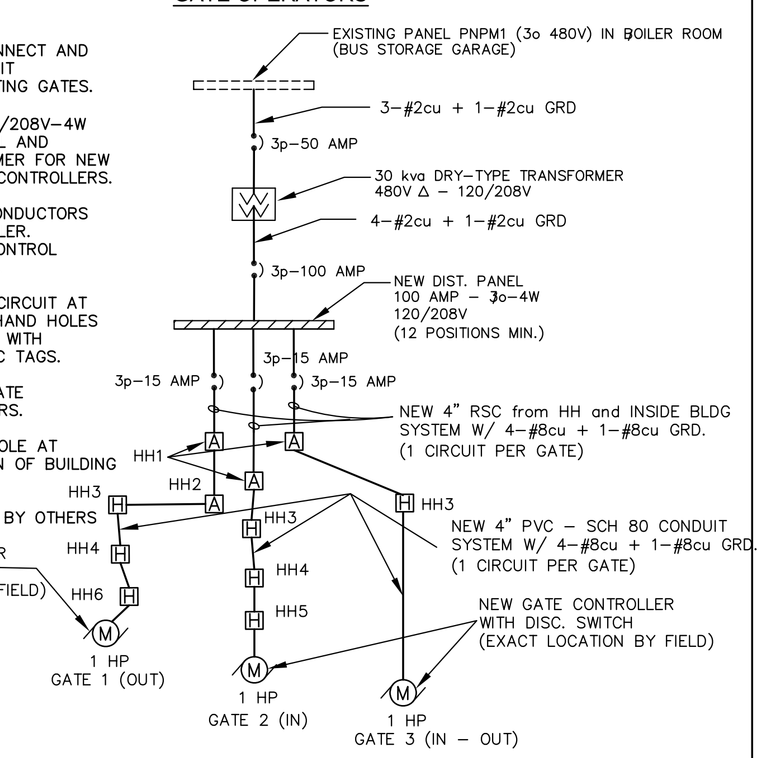

ELMWOOD FACILITY SLIDING GATES
ONE LINE WIRING DIAGRAM

NOT TO SCALE

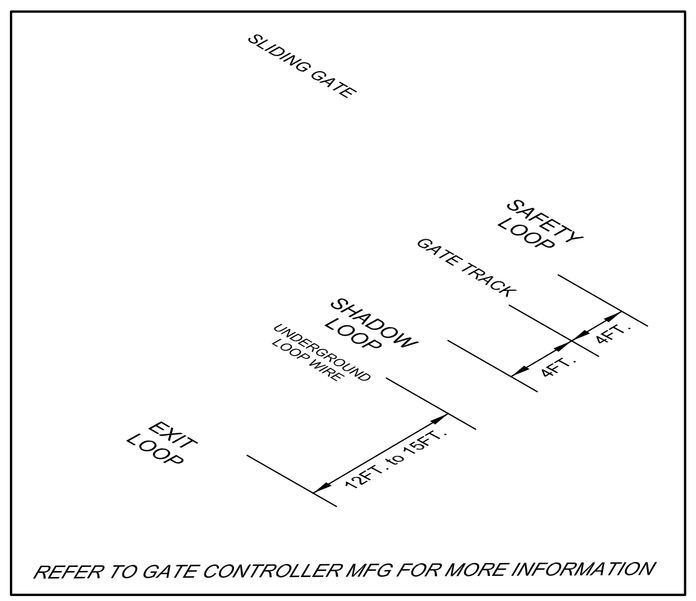

TYPICAL UNDERGROUND LOOP DETECTOR DETAIL

CATALDO ASSOCIATES INC.
CIVIL ENGINEERS
LAND SURVEYORS
1408 ATWOOD AVENUE
JOHNSTON, RI 02919
(401) 453-3300
FAX: (401) 453-4117
ca@cataldoeng.com

ANTONIO P. FRANCO & ASSOC.
ELECTRICAL ENGINEERS
17 SUSAN DRIVE
CUMBERLAND, RI 02864

Project:

IMPROVEMENTS TO ELMWOOD AVE. FACILITY

PROVIDENCE RHODE ISLAND

Prepared For:

RHODE ISLAND PUBLIC TRANSIT AUTHORITY

265 MELROSE STREET
PROVIDENCE
RHODE ISLAND
02907

Issue Date: MAY 18, 2012

Revisions 5-21-12

No.	Date	Description

Project Number: 3038-51

Scale: AS NOTED

Designed By: A.P.F. , J.R.C.

Drawn By: M.A.D. Checked By: A.P.F.

Sheet Title:

ELECTRIC DETAILS

E2

Sheet Number: 6 of 6

SCANNED DATE: INT. ( )
P:\3038(RIPTA)\3038-60 Russel st security\3038-60_ELECPLANS_SET.dwg 1/27/2012 12:29:37 PM EST