Solicitation Information

30 MARCH 11

Request for Proposals # 7448455

Title ARRA Instructional Management System – Dept of Education

Submission Deadline: 28 April 11 @ 10:30 AM (Eastern Time)

Pre-Bid Conference: No

Questions concerning this solicitation must be received by the Division of Purchases at questions@purchasing.ri.gov no later than **13 April 11 at 12:00 Noon (ET)** .Questions should be submitted in a *Microsoft Word attachment*. Please reference the RFP / LOI # on all correspondence. Questions received, if any, will be posted on the Internet as an addendum to this solicitation. It is the responsibility of all interested parties to download this information.

SURETY REQUIRED: No

BOND REQUIRED: No

Jerome D. Moynihan, C.P.M., CPPO
Assistant Director for Special Projects

Vendors must register on-line at the State Purchasing Website at www.purchasing.ri.gov

Note to Vendors:

Offers received without the entire completed three-page RIVP Generated Bidder Certification Form attached may result in disqualification.

THIS PAGE IS NOT A BIDDER CERTIFICATION FORM

CONTENTS

Request for Proposal 2
Instructions and Notifications to Bidders 2
Equal Employment Opportunity (RIGL 28-5.1) 3
ARRA Supplemental Terms and Conditions 4
Project Overview 5
Vision 5
Context 7
Instructionally Supportive Data Systems 7
Race to the Top 7
Technology Environment 9
Educational Environment 11
Scope of Work 11
Scope Determination Process 11
Functional Requirements 12
Overview 12
Alignment of Curriculum, Instruction and Assessment 13
Management of Curricular, instructional and Professional Development Materials 14
Selection, Design and Management of Assessments 15
Visual Reporting ('Dashboards") 17
Data Querying 19
System Requirements 20
Design Requirements 22
Project Approach 22
Project Timeline 23
Required Vendor Response Format 24
Additional Contractor Requirements/Qualifications 26
Terms of the Contract 26
Cost Proposal/Terms of Payment 26
Pre-Proposal Meeting 27
Proposal Submission 27
Technical Proposal/Required Elements 28
Appendix A: Budget Multi-Year Projects 29
Appendix B: Functional Requirements Context Diagram 311

REQUEST FOR PROPOSAL (RFP)

The Rhode Island Department of Administration, Office of Purchases, on behalf of the Rhode Island Department of Education (RIDE) is requesting Proposals from qualified vendors to provide an **Instructional Management System**, in accordance with the terms of this solicitation., and the State's General Conditions of Purchase (Available at www.purchasing.ri.gov)

INSTRUCTIONS AND NOTIFICATIONS TO BIDDERS

Potential offerors are advised to review all sections of this solicitation carefully and to follow instructions completely, as failure to make a complete submission as described elsewhere herein may result in rejection of the proposal.

Alternative approaches and/or methodologies to accomplish the desired or intended results of this procurement are solicited. However, proposals which depart from or materially alter the terms, requirements, or scope of work defined by this Request will be rejected as being non responsive.

All costs associated with developing or submitting a proposal in response to this Request, or to provide oral or written clarification of its content, shall be borne by the offeror. The State assumes no responsibility for these costs.

Proposals are considered to be irrevocable for a period of not less than sixty (60) days following the opening date, and may not be withdrawn, except with the express written permission of the State Purchasing Agent.

All pricing submitted will be considered to be firm and fixed unless otherwise indicated herein.

Proposals misdirected to other State locations or which are otherwise not present in the Division of Purchases at the time of opening for any cause will be determined to be late and will not be considered. The "Official" time clock is in the reception area of the Division of Purchases.

In accordance with Title 7, Chapter 1.1 of the General Laws of Rhode Island, no foreign corporation shall have the right to transact business in the state until it shall have procured a Certificate of Authority to do so from the Rhode Island Secretary of State (401-222-3040). *This will be a requirement only of the successful bidder (s).*

Offerors are advised that all materials submitted to the State of Rhode Island for consideration in response to this Request for Proposals will be considered to be public records, as defined in Title 38 Chapter 2 of the Rhode Island General Laws.

Also, Submitters should be aware of the State's MBE requirements, which addresses the State's goal of ten per cent (10%) participation by MBE's in all State procurements. For further information, contact the State MBE Administrator at (401) 574-8253 or cnewton@gw.doa.state.ri.us. Visit the website: http://www.mbe.ri.gov

Interested parties are instructed to peruse the Division of Purchases web site on a regular basis, as additional information relating to this solicitation may be released in the form of an addendum to this RFP.

EQUAL EMPLOYMENT OPPORTUNITY (RIGL 28-5.1)

§ 28-5.1-1 Declaration of policy. – (a) Equal opportunity and affirmative action toward its achievement is the policy of all units of Rhode Island state government, including all public and quasi-public agencies, commissions, boards and authorities, and in the classified, unclassified, and non-classified services of state employment. This policy applies in all areas where the state dollar is spent, in employment, public service, grants and financial assistance, and in state licensing and regulation. For further information, contact the Rhode Island Equal Employment Opportunity Office, at 222-3090 or via email raymondl@gw.doa.state.ri.us

Subcontracts are permitted, provided that their use is clearly indicated in the offeror's proposal, and the subcontractor(s) proposed to be used are identified in the proposal.

RIGL 37-13-3.1 State public works contract apprenticeship requirements. * (a) Notwithstanding any laws to the contrary, all general contractors and subcontractors who perform work on any public works contract awarded by the state after passage of this act and valued at one million dollars ($1,000,000) or more shall employ apprentices required for the performance of the awarded contract. The number of apprentices shall comply with the apprentice to journeyman ratio for each trade approved by the apprenticeship council of the department of labor and training.

ARRA SUPPLEMENTAL TERMS AND CONDITIONS

For contracts and sub-awards funded in whole or in part by the American Recovery and Reinvestment Act of 2009. Pub.L.No. 111-5 and any amendments thereto, such contracts and sub-awards shall be subject to the Supplemental Terms and Conditions for Contracts and Sub-awards Funded in Whole or in Part by the American Recovery and Reinvestment Act of 2009. Pub.L.No. 111-5 and any amendments thereto located on the Division of Purchases website at www.purchasing.ri.gov.

PROJECT OVERVIEW

This section provides information about the vision, functionality, and technical and educational environments of the Instructional Management System (IMS).

VISION

The Rhode Island Department of Education (RIDE) is seeking a partner ("the Vendor") to design, develop, build and implement a student-centered IMS. As part of its theory of action, RIDE believes that such systems must be designed to support effective teachers and effective leaders in their efforts to improve student success, close achievement gaps, and ensure that all students are on the path towards success in college, careers, and life.

As shown in Figure 1 below, the RIDE IMS is envisioned as a system that will provide a systematic, coherent, and ongoing combination of curriculum (including standards), instruction, and assessment to support improvements in student achievement. In a single, web-based platform, the IMS will provide a single holistic, 360° view of each student ensuring fully-informed, evidence-based decision making that drives personalized learning and offer teachers an easy to use, automated way to drive day-to-day activities, interventions, and progress monitoring and incorporates interventions/instructional strategies, goal banks, and curriculum-based/progress monitoring measures.

Specifically, RIDE defines an IMS as a system that allows users to perform the following:

1. Align curriculum, instruction and assessments to support student achievement
2. Manage and access curricular, instructional, professional development, and student support materials
3. Select, design, administer, and score student assessments
4. Access relevant and timely visual reporting of assessment and other data ("dashboards") for immediate student, class, school, and LEA needs

5. Query data to determine areas of student strengths and needs while being able to track student progress so that learning gaps do not form or widen
6. Allow teachers to communicate through a virtual learning community

The intended outcome of the system is that users will be able to answer these critical questions clearly:

- How are my students doing?
- What are their areas of strength and needs?
- What effective tools, supports, and resources should I use to improve their learning based on their unique strengths and needs?
- Which students are at risk for falling behind, academic failure and/or dropout?

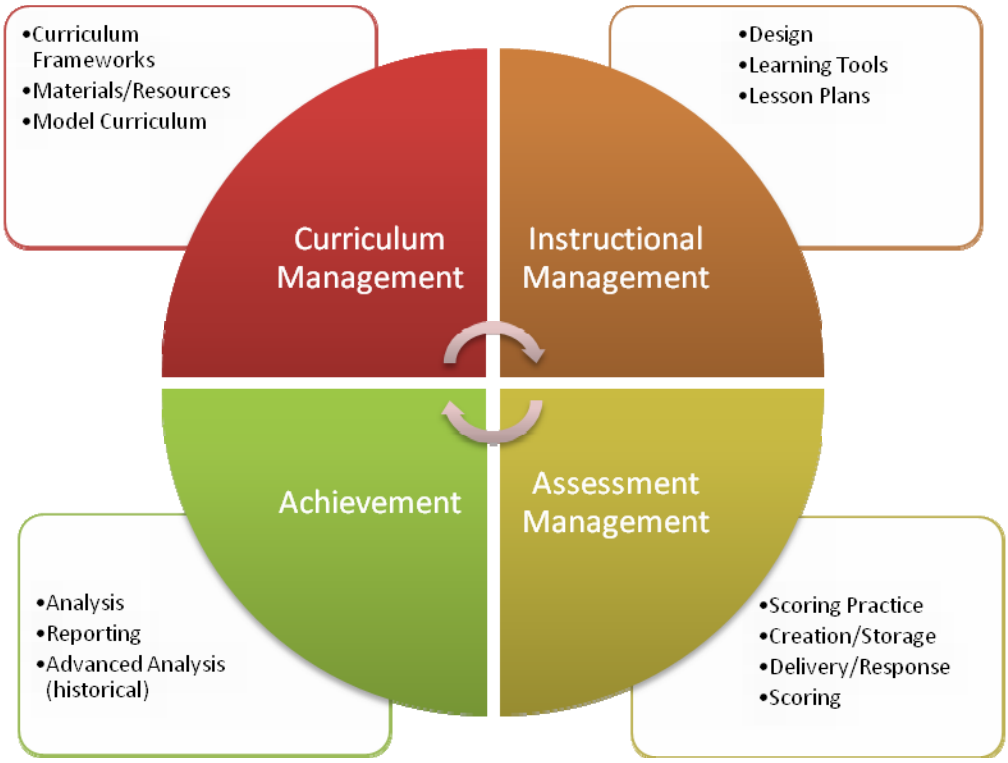

FIGURE 1

INSTRUCTIONALLY SUPPORTIVE DATA SYSTEMS

The IMS is a key part of an overall set of systems designed to provide a variety of stakeholders with data and information that would help drive student achievement, policy decisions and program analysis. These systems are shown in Figure #2 below.

FIGURE 2

Each system is aimed at ensuring that key stakeholders have access to data and the right combination of technology tools and skills to use the data to both improve student-learning outcomes and inform critical policy decisions.

RACE TO THE TOP

On August 24, 2010, Rhode Island was one of only 11 states and the District of Columbia to win a Race to the Top (RTTT) grant from the U.S. Department of Education. The Rhode Island RTTT application was developed based on Rhode Island's education strategic plan, *Transforming Education in Rhode Island*, which describes how Rhode Island will improve education through the year 2015. Superintendents, school committees, teachers' unions, elected officials, business

leaders, student groups, parent advocates, higher education leaders, and others worked with Commissioner Gist and her team to create Rhode Island's RTTT proposal. RIDE received more than 100 letters of support for our RTTT application from leaders across the state.

With funding from Race to the Top, RIDE is building the following support systems to drive student success:

Standards and Curriculum

- Fully adopt the internationally benchmarked Common Core State Standards and develop new state assessments based on those standards.
- Align curriculum with the Common Core standards and develop supports for students using information from the results of excellent formative and interim assessments.

Instructional Improvement

- Improve instructional systems so that all students have the necessary ramp-ups and personal support plans to prepare them for success in high school and beyond.
- Provide accessible information for teachers and families on student progress and achievement.

Educator Effectiveness

- Evaluate educators, providing them with feedback and support to help them improve.
- Use sound evaluation data to make decisions about educator placements, promotions, and retention.

Human-Capital Development

- Implement stronger induction programs for new teachers and school leaders, and develop a deeper applicant pool for subjects that are hard to staff.
- Use evaluation data to determine what professional development opportunities educators need most.

School Transformation and Innovation

- Provide increased supports for principals and teacher leaders, especially in persistently lowest-achieving schools.
- Provide students with innovative programs, including virtual course offerings, multiple pathways toward graduation, rigorous course work in grades 11 and 12, and early college-enrollment opportunities.

This Request for Proposals is part of the Instructional Improvement support system.

TECHNOLOGY ENVIRONMENT

ENTERPRISE ARCHITECTURE

The IMS will be supported by RIDE's enterprise-wide architecture and will be populated by data and materials from the Local Education Agencies (LEAs), other contracted vendors, other RIDE systems and from the users themselves. This architecture is shown graphically below in Figure 3 and described in the later paragraphs. This RFP is solely focused on the development of the IMS and not the development of any supporting systems. However, the IMS should be understood within the context of the overall data flow.

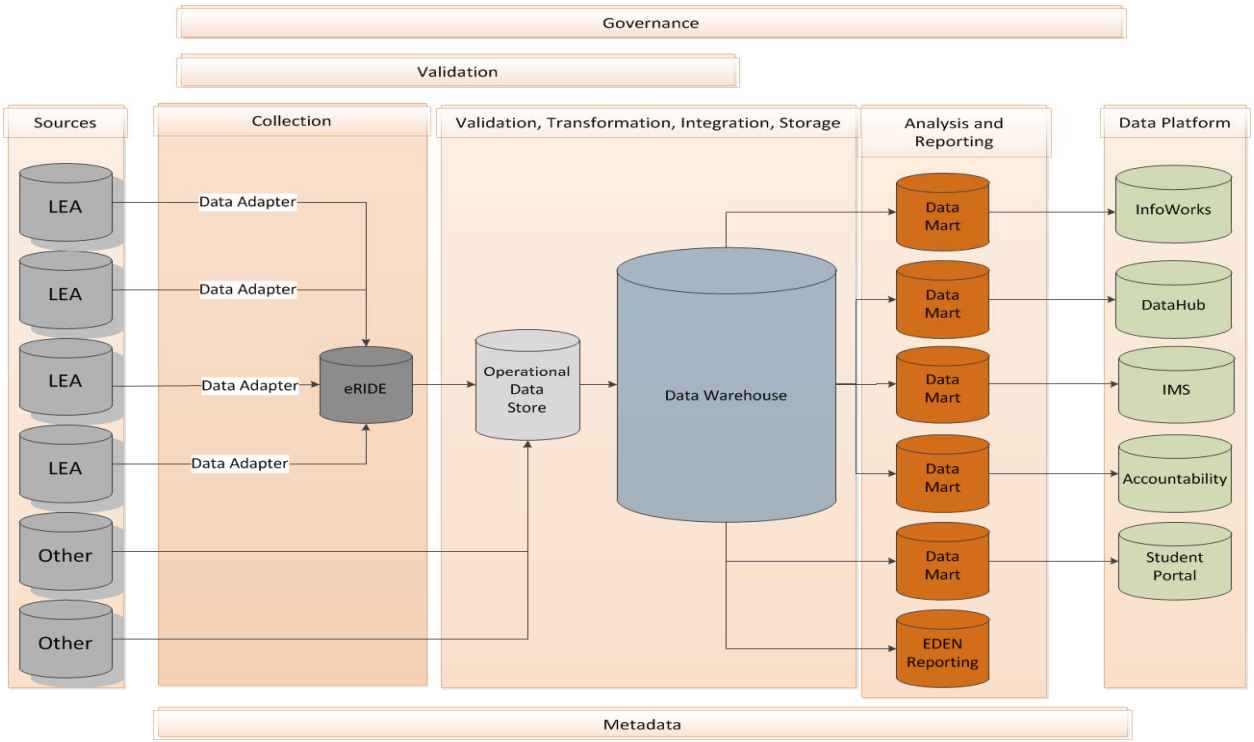

FIGURE 3

As shown in Figure 3, RIDE's architecture is a traditional "hub and spoke" architecture with the following components:

- **Data Adapters:** These XML-based transfer agents are designed to perform the first layer of data extraction, translation and loading of source data; provide an "up front" level of

validation that guarantees instant feedback about data quality issues to the owners of source data; and allow for an extensible solution that requires little to no effort to change data tables/formats as requirements change over time.

- **eRIDE:** This system is comprised of five modules:
    - **Record identifier:** Assigns and ensures a statewide identifier to each student, school and teacher;
    - **Data collection module:** Enables the LEA and schools to submit or upload data though a single Web-based system;
    - **Data Warehousing Module:** Processes and warehouses the data for reporting and analysis;
    - **Data Reporting Module:** Allows for developing such reports as the School and LEA Profiles, Statistical Summary Reports and Information Works!.
    - **Data Dictionary Module:** Provides a fully searchable data dictionary that provides the definition and values for each data element and its entity, and by federal, state or program mandates.
- **Operational Data Store:** This system will perform an additional layer of data validation; transform source data in the required data model for the data warehouse; and integrate source data with data from other systems;
- **Data warehouse:** This system will serve to store the data for long-term use and will be the source data for the user-focused systems;
- **Data marts:** These systems will serve as analytical data stores, designed to provide each of the user-focused systems with required data and structured to support report generation and queries.

RIDE is also developing a data dictionary to cover all data elements throughout the enterprise architecture, which will in turn determine the exact file specifications of the input and output data files.

RIDE intends to adopt a data standard and is currently investigating which model to follow (CEDS, NEDM, etc.). RIDE expects to have reached a decision by the time the Vendor begins

developing the IMS. The Vendor will be expected to integrate the IMS using the chosen RIDE data model.

HARDWARE/SOFTWARE/SECURITY

- Web Server: Windows Server 2008
- Database: SQL Server 2005/2008
- Development Environment: Visual Studio 2010, .NET Framework 4.0
- Programming Language: C# or VB.NET (C# preferred)
- Security: Encryption, user input sanitation, parameterized SQL, authentication, page-level authorization and other techniques to prevent security breaches such as SQL injection, cross site scripting, and other malicious hacking attempts.

EDUCATIONAL ENVIRONMENT

The Rhode Island public K-12 education system consists of 50 LEA's of which 36 LEA's are traditional LEAs or regional LEAs, and 10 LEAs are public charter schools and 4 are state-operated schools. As of 2009-10, Rhode Island served 145,118 public school students. 43% of public-school students in the state were eligible for subsidized lunch, 5% received ESL/bilingual services, and 16% received special education services. Additional details can be found at the Rhode Island web site: http://ride.ri.gov/.

Rhode Island is a part of the Partnership for the Assessment of Readiness for College and Careers (PARCC) consortium and has adopted the common core state standards. RIDE is also working with other states to try and collaborate as much as possible on the development of curriculum and assessments to support the common core standards.

SCOPE OF WORK

SCOPE DETERMINATION PROCESS

Following the formal grant award, a project team was established within RIDE to begin formal planning for the instructional management system. Requirements were developed through

multiple interviews with RIDE staff, interviews with school and LEA staff, and research on existing best practices and systems.

Although the Vendor will not be expected to revisit this process, it will be expected to receive, manage and communicate school LEA feedback as part of the design phase.

FUNCTIONAL REQUIREMENTS

OVERVIEW

RIDE's vision of the IMS' functionality is shown in the context diagram below (Figure 4 and Appendix B) and illustrates the functional requirements listed in the subsequent sections.

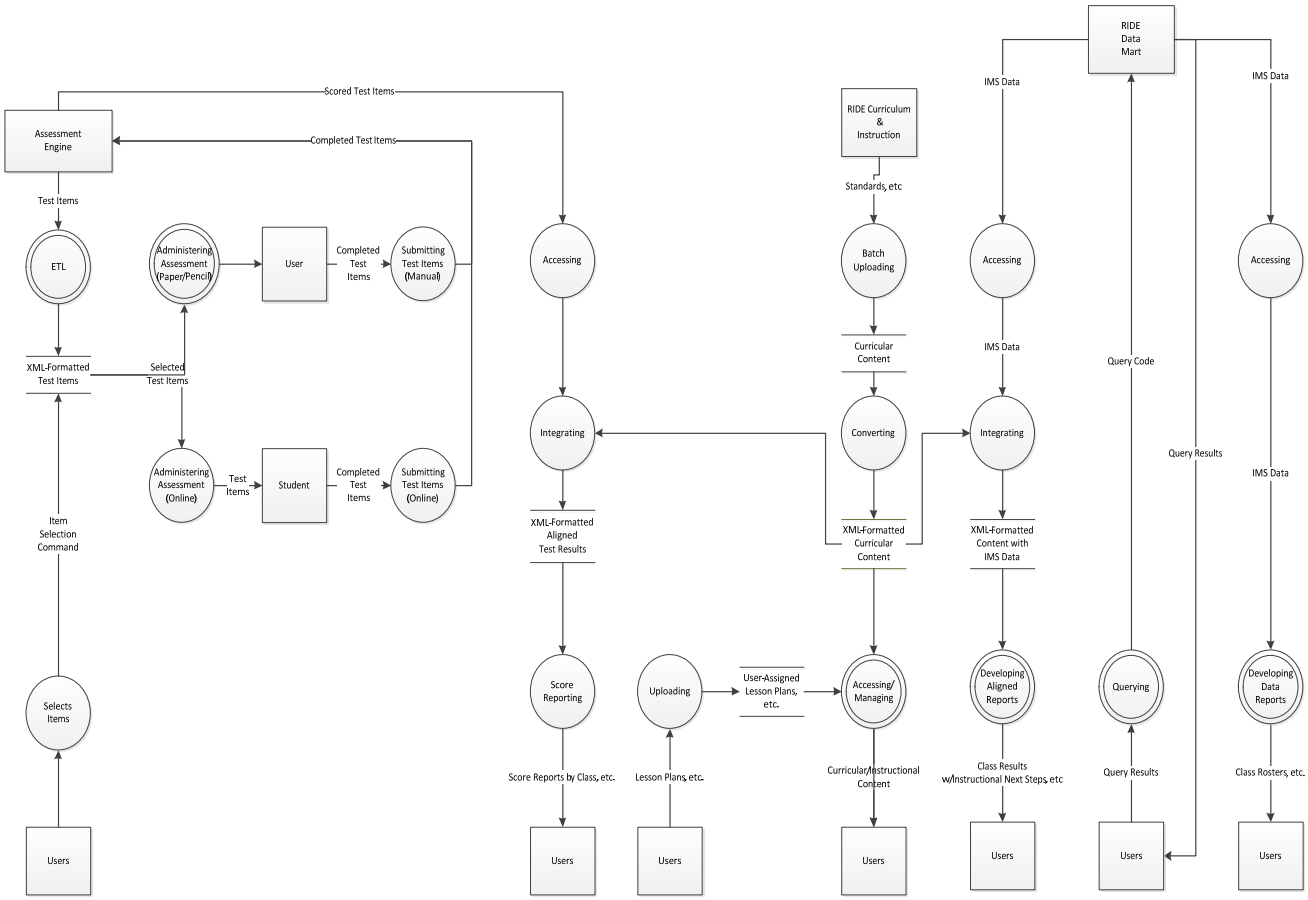

FIGURE 4

ALIGNMENT OF CURRICULUM, INSTRUCTION AND ASSESSMENT

One of the greatest challenges in supporting effective instruction is providing educators with the ability to align curriculum, instruction and assessment. The IMS must empower educators to develop a common and integrated framework that ensures that the written and taught curricula, learning experiences and embedded assessments reflect the concepts, skills, language and intent of the Common Core State Standards and other relevant standards.

The IMS must be designed to allow educators to:

A) Access all RIDE-adopted standards (including Art, Civics, Common Core, Science, Engineering and Technology, Early Learning Standards)
B) Access all LEA- and user-developed curriculum and aligned assessments in mathematics, literacy, science, social studies, etc.
C) Develop standard-aligned scopes and sequence and units of study
D) Import, manage and access aligned lesson plans and other instructional materials
E) Monitor alignment through classroom walkthrough forms and curriculum alignment charts (worksheet for grade level alignment specific to one standard)

CURRICULUM CONTENT OVERVIEW

LEA educators are expected to review the Common Core State Standards and their implications for teaching and learning in the LEA's classrooms and then develop, refine, and come to agreement on a standards-aligned curriculum, scope and sequence and units of study for their school-based instructional staff. This scope and sequence is assigned to resources and materials, specific school quarter calendars and each quarter is divided into one to four units of study. School-based staff then develops lesson plans and assessments based on the units of study.

COMMON CORE STATE STANDARDS

On July 1, 2010, The Rhode Island Board of Regents adopted the Common Core State Standards. In collaboration with educators and education experts, these standards define the knowledge and skills students should have within their K-12 education careers so that they will graduate from high school able to succeed in entry-level, credit-bearing academic college courses and in workforce training programs. These standards and supporting materials should be accessible via the IMS. Additional information can be found here: http://www.ride.ri.gov/instruction/commoncore.aspx.

MANAGEMENT OF CURRICULAR, INSTRUCTIONAL AND PROFESSIONAL DEVELOPMENT MATERIALS

In order support effective instruction, educators will need to utilize a variety of other curricular materials. The IMS should be designed to allow educators to input, access, and store these other materials, including:

1. Video clips
2. Grade book information
3. Annotated student work aligned with standards that provide models of proficient work across grade levels;
4. Web-based toolkits (recorded webinars, online training guides/manuals, as well as toolkits designed to fit the needs of each user group: teachers, administrators, students, state department of education representatives, parents, researchers, and the broader public)
5. Student plans (Individualized Education Plans, Personal Learning Plans, Individual Learning Plans, Response to Intervention information, etc.)

More information can be found here: www.ride.ri.gov/Instruction/curriculum/

SELECTION, DESIGN AND MANAGEMENT OF ASSESSMENTS

RIDE is developing a rich set of native English-speaking and English Language Learners (ELL) assessments to measure student progress and inform instruction (including assessments that meet national accessibility standards for testing of students with disabilities and ELL.

The IMS should allow users to:

a) Utilize these assessments to measure and monitor student achievement, by allowing users to select pre-designed assessments or access test-building capabilities being developed through a separate interim assessments RFP that will create a platform for building custom assessments from a large bank of test items mapped to state standards
b) Administer these assessments (online and paper/pencil, as needed), collect student performance results with ease, and view results within 24 hours
c) Score assessments, through scoring tools (student exemplars, rubrics, etc.)
d) Access and search New England Common Assessment Program (NECAP) and Access (for ELL students) assessments and eventually PARCC assessment data to be searchable on the IMS
e) Access samples of all reports at the student, schools, and LEA levels, searchable by standard, student subgroup, grade, etc.

ASSESSMENTS

While the assessment design is outside the scope of this RFP, it is necessary to understand the assessment design, scope and timeline to successfully respond to this RFP.

ASSESSMENT PHILOSOPHY AND DESIGN

RIDE has developed a comprehensive assessment system, aligned with the Common Core State Standards, that includes measures of student performance for the purposes of performing formative, interim, and summative evaluations of all students and providing data to inform

curriculum and instructional decisions at the class, school, LEA and state levels. This system includes:

- **Formative assessments modules:** These modules are being developed to improve assessment knowledge and practices among educators. In particular, the modules will provide tools for teachers so that they are able to embed formative assessment strategies during instruction throughout the year. These assessments will be used to inform instruction.
- **Interim assessments:** These assessments have two applications:
    - Diagnostic tests that augment the PARCC through-course information so that teachers can gather richer and more specific information to inform their instruction for students who don't appear to be "on track" for end of year proficiency
    - Progress tests that provide a pre and post-test that can show growth for students (e.g., for students well above or below grade level, or for all students in social studies or science).
- **Summative assessments:** These include the state assessment (currently NECAP) which is scheduled once during the school year. These assessments provide information on student performance as compared to the state and for accountability. There are curriculum-embedded summative assessments to measure student achievement at the completion of a unit of study.
- **Local assessments:** Administered by the LEA's, these assessments provide additional information about student progress.

ASSESSMENT IMPLEMENTATION TIMELINE

The NECAP assessment will occur at the beginning of the 2013-2014 school year for the last time. It will be decommissioned in 2014 and replaced by the PARCC assessment during the 2014-2015 school year, which includes three through-course assessments to be given throughout the year and an end of the year assessment.

ASSESSMENT GRADE AND SUBJECT COVERAGE

Currently, RIDE plans to offer interim assessments for grades 3-11 for ELA and math. In addition, RIDE would like to add assessments for grades 1 and 2 in future, and if possible implement assessments for kindergarten. RIDE would also like to implement social studies and science assessments at multiple grade levels.

LOCAL ASSESSMENTS

LEAs employ a number of local assessments (NWEA, Scholastic: READ 180, etc.) that educators may use to develop a very rich picture of student progress. Together with the state-developed assessments, these local assessments allow users to have a rich set of data by which to monitor student progress and improve instructional practice at a certain point in time and longitudinally throughout the K-12 continuum, wherever possible.

The IMS should ideally allow these local assessments to be accessible to users. Although RIDE is working to ensure that these assessments have a standard format and transfer protocol to allow for ease of loading into the IMS, the Vendor should provide in its response how these assessments could be handled within its proposed system.

VISUAL REPORTING ("DASHBOARDS")

Educators at different levels of the system (i.e. classroom teachers, principals, support professionals, administrators and state-level users) should be able to log on to the IMS through a single sign-on and access all of the content and sub-systems embedded in the IMS. Login home pages should be tailored to each user group (including to their clearance regarding access to student information), displaying content and reports in a streamlined, efficient, visually-appealing and user-friendly way.

The IMS should provide "at a glance" views of student progress at the class, grade, school and LEA levels and views of how students compare to state expectations. At a minimum, the IMS should provide easy-to-read reports at the following data levels, with the ability to drill down to other data and access related curriculum/instructional content:

User	Report Content	Report Level
Classroom	• Current/historical assessment results (overall/subcategory) • Longitudinal assessment results (overall) • Disaggregation by ESEA subgroups • Accommodations • Class roster • Summaries of students mastery of standards or emerging areas of concern • Instructional intervention groups • Early warning system (to be developed)	• Student • Class (current/re-rostered)
School	• Current/historical assessment results (overall/subcategory) • Longitudinal assessment results (overall) • Disaggregation by ESEA subgroups • Disaggregation by grade/class • Comparison to LEA • Early warning system (to be developed)	• Individual • Class (current/re-rostered) • Grade (current/re-rostered) • School
LEA	• Current/historical assessment results (overall/subcategory) • Longitudinal assessment results (overall) • Disaggregation by ESEA subgroups • Disaggregation by grade/class/school • Comparison to state • Early warning system (to be developed)	• Individual • Class (current/re-rostered) • Grade (current/re-rostered) • School (current/re-rostered) • LEA (current/re-rostered)
State	• Current/historical assessment results (overall/subcategory) • Longitudinal assessment results (overall) • Disaggregation by ESEA subgroups • Disaggregation by grade/class/school/LEA • Early warning system (to be developed)	• Individual • Class (current/re-rostered) • Grade (current/re-rostered) • School (current/re-rostered) • LEA (current/re-rostered) • State

TABLE 1

As mentioned in the previous section, the IMS should contain local assessments. While the exact details of these assessments are not yet known, the Vendor should provide in its

response methods of displaying a set of mixed assessments in a way that doesn't violate psychometric validity and prevent users of obtaining an accurate view of student progress.

In addition to gaining an "at a glance" view of data, the reporting features should be designed to allow users to:

1) Determine next steps, perhaps by dynamically suggesting ways to combine data or drill deeper into discrete data sets in order to more fully inform instructional decisions
2) Combine different sources of data in a manner that presents a coherent and clear picture of student achievement and learning needs

EARLY WARNING SYSTEM

RIDE is developing an Early Warning System to identify students at risk for academic failure and dropout. The reporting features will include identification of students beginning before eighth grade (possibly as early as elementary school) and will provide users with information about the supports being provided to and progress being made by the student. This system will be accessed through the IMS but will be developed by a vendor selected through a separate RFP to be released later this year.

DATA QUERYING

In addition to providing users with "at a glance" reports, the IMS should allow users to query instructionally useful data for the purpose of uncovering student areas of need and evaluating curricular and instructional progress. The data users should be able to query include:

- Student demographic data
- Student assessment data (statewide, interim, summative and local)
- Student instructional/testing accommodations and basic IEP information
- Student attendance
- Student behavior
- Student grades
- Interventions
- Interim assessment data

SYSTEM REQUIREMENTS

In its response, the Vendor should provide its approach to the following:

- Integrating different types of data and information from multiple sources/systems
- Format of instructional and curricular content (XML, etc.)
- Methods and speed of updating data (student rosters, etc.)
- Method of importing, storing and "tagging" new content and managing all content (CMS)
- Ease of system modification, as users needs change over time
- Meeting federal compliance regulations for FERPA (Federal Educational Rights and Privacy Act)
- Providing ongoing support (call center, technical support, etc.)
- Method of assigning and passwords and logins so that users have automatic access to their particular class, school or LEA
- Method of tracking website usage
- Providing downloadable data files for users to import into local student information systems

IMS DATA AND INFORMATION SOURCES

Name	Type	Source
Student ID	Data	RIDE Data Mart
Student IEP	Data	RIDE Data Mart
Student ELL Classification	Data	RIDE Data Mart
Student Enrollment (historical, re-rostered)	Data	RIDE Data Mart
Student Discipline	Data	RIDE Data Mart
Student Grades	Data	RIDE Data Mart
Student Attendance	Data	RIDE Data Mart
Student Accommodations	Data	RIDE Data Mart
Summative Assessment Results	Data	RIDE Data Mart

Local Assessment Results	Data	RIDE Data Mart
Interim Assessment Items/Tests	Data	Assessment Engine
Early Warning System (EWS)	Data	EWS Engine
Formative (aligned) Assessment Items	Data	RIDE Item Bank
Educator Information (ID, name, etc.)	Data	RIDE Data Mart
Student Course Information	Data	RIDE Data Mart
Annotated student work aligned with standards that provide models of proficient work across grade levels	Document	IMS
Lesson Plans	Document	IMS
Grade Level Worksheets	Document	IMS
Video clips	Video File	IMS
Grade book information that allows teachers to identify students' security/mastery of each standard	Document	IMS
Web-based toolkits (recorded webinars, online training guides/manuals, as well as toolkits designed to fit the needs of each user group: teachers, administrators, students, state department of education representatives, parents, researchers, and the broader public).	Various	IMS
Standards and associated information	XML Document	IMS
Learning Plans (IEP, ILP, etc)	Content	IMS

TABLE 2

DESIGN REQUIREMENTS

The IMS should:

- Have the same "look and feel" as the other instructionally supportive data systems above
- Clearly demonstrate that it is a system owned by the Rhode Island Department of Education, i.e. have no logo or branding identifying the IMS as belonging to the Vendor
- Be "browser agnostic"
- Be built to provide rich web analytics (usage, hits, etc.)
- Adhere to the Web Content Accessibility Guidelines (WCAG) 2.0 [http://www.w3.org/TR/WCAG20/]

PROJECT APPROACH

While the final work plan will be based on the submission from the successful Vendor, the assumption is that the project will have five major phases, with the closing of each phase marked by signoff by RIDE's IMS team:

1) **Initiation phase:** This phase will involve the review of all RIDE assessment, instructional and curricular materials and will result in a consensus about the exact project scope and approach. The output of this plan will be a detailed list of tasks (Work Breakdown Structure, etc.) and the development and approval of a final project plan.
2) **Design phase:** This phase will involve the development of detailed functional and system requirements and design documents (wireframes, screenshots, use case scenarios, etc.). In addition, this phase will involve a thorough risk assessment of the requirements, with risk mitigation and quality assurance strategies. Design of the system must incorporate input from local stakeholders in Rhode Island. The system should be built to allow for ongoing changes based on local needs and feedback.

3) **Production phase:** This phase will involve both the test phase (user testing of the system to ensure adequate and effective functionality) and the development of the IMS itself, according to the approved functional and system requirements and the quality assurance approach.
4) **Launch phase:** This phase will involve the launch of the IMS. In its approach, the vendor should specify how any launch issues (failed user login, etc.) will be addressed.
5) **Transition phase:** This phase will involve the transition of ownership from the Vendor to RIDE, which should entail the transfer of all documentation and code. In addition, this phase will involve training RIDE staff and select LEA representatives (for a total of 75 people) to train other users. The Vendor should indicate in its proposal a timeframe for RIDE staff training and the estimated amount of resources required to maintain the system.

PROJECT TIMELINE

Below is a summary of key timeframes, activities and deliverables for use in designing proposals but should not be considered an exhaustive list.

Date	***Activities***	***Deliverables***
Approx. June 2011	Evaluation and Negotiation	Contract Awarded
June 2011 – July 2011	Verify IMS Scope	Scope Document
July 2011 - September 2011	Develop Design, Functional and System Requirements	Design, Functional and System Requirements
September 2011	Develop Risk Assessment, Quality Assurance, Testing and Requirements Management Plans	Risk Assessment, Quality Assurance, Testing and Requirements Management Plans
October 2011- December 2011	Develop Beta IMS Platform	Beta IMS System
December 2011	Perform Testing (load testing, etc.)	Quality Control Document, Revised Beta IMS
January 2012-March 2012	Develop Final IMS	IMS Launch
March 2012 - June 2014	Perform IMS Maintenance (if needed) and Collect LEA Feedback	Quality Control Issue Document and LEA Feedback Document
September 2013 – June 2014	Train RIDE on System Maintenance and Transfer	Training Sessions, Final Requirements Documents

	Knowledge of System	and System Code

REQUIRED VENDOR RESPONSE FORMAT

All vendor proposals must follow the format and include all relevant content described in the table below.

Section	Content
1	Vendor should state their understanding of the challenges facing RIDE in this particular project.
2	Vendor response should include a description of the project management approach, including descriptions of: project planning components to a develop acceptance criteria for project deliverables; development of project charter, project plan, and communications plan; risk mitigation; and weekly and monthly project reporting to the client.
3	Vendor must agree to work with the RIDE Data Governance Board around ensuring data systems connectivity, data definitions alignment, compliance with data standards and other data management issues, as needed.
4	Vendors must agree to be part of the EdStat performance management process being used by RIDE to manage the implementation of Race to the Top, as appropriate.
5	Proposals should include detailed responses for each deliverable indicated in the RFP scope of work, including: a) Statement describing proposed design/features for each proposed deliverable in detail b) Timeline for the work and date by which the deliverable will be completed c) Description of the method of implementation d) Internal and external staff to be involved and their number of hours or % of time period (including RIDE staff necessary for project success) e) Statement of what is in scope and out of scope of the proposed project
6	Vendor should describe how they will capture requirements that are not sufficiently specified at the start of the project.
7	Vendor proposals should include detailed technical information in their responses, including: a) Descriptions/diagrams of the tools and processes vendors propose to use to integrate the required source systems into their system. b) Describe the technical architecture of the proposed system, including

	the architectural model used (e.g., Web-Based, Client Server, etc.). Also specify the required client software, network protocol(s), and network bandwidth recommendations for the system. c) Describe how acceptance testing for functionality and performance will be conducted (does what it says it will do and at a sufficient level of performance to meet the user's need). d) Describe how system integration testing will be conducted (timely and accurate data migrations from source to operational system). e) Describe how regression testing will be conducted. The successful vendor must be willing to have their solution undergo routine testing to assure that as functionalities are added to the system, they meet RIDE's business requirements and do not degrade previously accepted capabilities. f) Vendors are required to provide systems with the ability to inter-operate with the state's operational data store and data warehouse. Vendor should describe how these connections can be made. g) Describe your policy on software releases including frequency, requirements for system software upgrades, and process for determining what enhancements are included in which release. Clearly outline "bug" reporting and resolution processes. h) High scoring vendors must provide a demo via a sandbox testing environment if they are invited for subsequent conversations with RIDE.
8	Proposal should include a section that describes the skills and processes that will need to be in place internal to RIDE for the project to be sustained once the project is complete. Vendor should describe how they intend to help ensure those processes and skills are developed and a training plan (including the number of users who will need to be trained) for ensuring the system realizes its intended goals among users.
9	Vendors must provide a Cost Proposal that breaks out cost for each deliverable, including: a) Number of hours and hourly rates for staff completing the work b) All hardware and software costs including licenses, maintenance agreements, and support agreements c) Travel and expenses budgets for that specific deliverable
10	Vendor should provide a detailed project plan as an appendix to their proposal.
11	Vendor should include detailed information about organizational and project staff, including: a) Organizational Chart b) Resumes of staff that will be working on the project. Show % of time the staff will be working on-site. Staff cannot be changed from those in the proposal without agreement by RIDE.

ADDITIONAL CONTRACTOR REQUIREMENTS/QUALIFICATIONS

- Bidders must submit a letter of transmittal signed by an owner, officer, or other authorized agent.
- Bidders must submit relevant organizational information, a list of similar projects undertaken and/or clients served, agency expertise relative to the services requested, and a statement of existing workload as it impacts the performance of the project.
- Bidders must provide an overview of key personnel assigned to the project including education and prior experience.
- Bidders must disclose any work to be sub-contracted including the specific work to be performed and staffing, organizational structure, and business background of the sub-contractor.

TERMS OF THE CONTRACT

The contract will begin upon issuance of a state purchase order (on or about **June 1, 2011)** and end **June 30, 2014**. The scope of the work may be modified by RIDE prior to beginning work on a given task. RIDE retains the option of granting a time extension of up to **one year** with additional funding if available and if the level of work is expanded by mutual written consent. If necessary, deficiencies in performance of services and/or failure to supply deliverables in a complete and timely manner will be documented in writing by RIDE. Should a pattern of substantial dissatisfaction become apparent, RIDE reserves the right to terminate the contract.

COST PROPOSAL/TERMS OF PAYMENT

The contractor must prepare a cost proposal reflecting the hourly rate or other fee structure proposed for this scope of services using the Cost Proposal Forms contained in Appendix A. The total cost of the contract is not to exceed $2,750,000**.** Please ensure the budget is presented by state fiscal year, which runs from July 1st through June 30th.

FY 2011	Costs to be incurred through June 30, 2011
FY 2012	July 1, 2011 through June 30, 2012
FY 2013	July 1, 2012 through June 30, 2013
FY 2014	July 1, 2013 through June 30, 2014

PRE-PROPOSAL QUESTIONS

Questions concerning this solicitation may be e-mailed to the Division of Purchases at questions@purchasing.ri.gov no later than the date & time listed on the cover sheet of this solicitation. **Send your questions in Microsoft Word format.** Please reference the RFP # on all correspondence. Questions received, if any, will be posted and answered on the Internet as an addendum to this solicitation. It is the responsibility of all interested parties to download this information. For computer technical assistance, call the helpdesk at 401-574-8100.

PROPOSAL SUBMISSION

All document pages are to be **numbered in consecutive order**.

Combined **TECHNICAL/COST PROPOSAL ("original" plus FOUR (4) copies)** submissions are to be either mailed or hand-delivered in a sealed envelope marked: ***"RFP7448455: Instructional Management System"*** by the date and time on the cover page of this solicitation.

RI DEPT OF ADMINISTRATION
Division of Purchases, 2nd Floor
One Capitol Hill
Providence, RI 02908

NOTE: Proposals misdirected to other State locations or which are otherwise not presented in the Division of Purchases by the scheduled due date and time will be determined to be late and will not be considered. The "official" time clock is located in the Division of Purchases Reception area.

Proposals (an original plus 4 copies) should include the following:

1. A completed and signed three-page RIVIP Bidder Certification Cover Form, available at www.purchasing.ri.gov.

2. A Cost Proposal as described above.

3. A *separate* Technical Proposal (see below) describing the qualifications and background of the applicant and experience with similar programs, as well as the work plan or approach proposed for this requirement.

4. A completed and signed W-9 (taxpayer identification number and certification). Form is downloadable at www.purchasing.ri.gov.

5. In addition to the multiple hard copies of proposals required, Respondents are requested to provide their proposal in electronic format (CDRom , diskette, or flash drive). Microsoft Word / Excel OR PDF format is preferable. Only 1 electronic copy is requested and it should be placed in the proposal marked "original".

TECHNICAL PROPOSAL/REQUIRED ELEMENTS

1.	Contractor Understanding of the Issues	(10 points)
2.	Work Plan	(30 points)
3.	Capacity of the Agency Effectively to Administer the Project	(25 points)
4.	Quality of Key Personnel (including Curriculum vitae)	(10 points)
5.	Cost Proposal	(20 points)
6.	Evidence of formal partnerships to enable an integrated solution for interim assessments and IMS	(5 points)

Note: RIDE has posted two separate but related RFPs (Instructional Management System—this one—and one requesting proposals for Interim Assessments). Due to the fundamental interdependencies of the two sets of work, the selected vendors will be required to work together closely during design and implementation, the details of which will be worked out in the contract negotiation phase. Broadly, the IMS vendor will be responsible for technological integration and the assessments vendor will be responsible for providing their content and systems to a pre-specified format that will integrate with the IMS. Both vendors will be required to participate in design, development, beta testing and implementation in partnership and on an aligned timetable. To encourage vendors to proactively partner on this work, five bonus points will be given to RFP responses that include formal partnerships with an integrated vendor solution.

The technical proposal should respond to each area of the required elements listed above, and contain a cost proposal using the forms in Appendix A. Supplemental information may be appended to the technical proposal.

A Selection Committee will evaluate submitted proposals on the basis of the above criteria items. Consultant Teams may be invited to appear before the Committee for in-person presentations. The Committee will then make a qualifications based recommendation for final selection to the Rhode Island State Purchasing Agent, or her designee, who will make the final award decision.

Notwithstanding the above, the State reserves the right not to award this contract or to award on the basis of cost alone, to accept or reject any or all responses, and to award in its best interest.

Responses found to be technically or substantially non-responsive at any point in the evaluation process will be rejected and not considered further. The State reserves the right to reject any or all responses submitted and to waive any informalities in any vendor's submission

APPENDIX A: BUDGET MULTI-YEAR PROJECTS

The Contractor estimates that its budget for work to be performed under this Agreement is as follows:

Expense Category	Estimated Expenditures			
	Year 1	Year 2	Year 3	Year 4
1. Salary and Fringe Benefits	0	0	0	0
2. Consultant	0	0	0	0
3. In-State Travel	0	0	0	0
4. Out-of-State Travel	0	0	0	0
5. Printing	0	0	0	0
6. Office Expense	0	0	0	0
7. Telephone	0	0	0	0
8. Educational Materials	0	0	0	0
9. Equipment	0	0	0	0
10. Data Processing	0	0	0	0
11. Rental	0	0	0	0
12 Other	0	0	0	0
13.	0	0	0	0
14.	0	0	0	0
15.	0	0	0	0
16.	0	0	0	0
Subtotal	0	0	0	0
Indirect Cost	0	0	0	0
TOTAL	0	0	0	0

It is understood and agreed that the amounts indicated above for the several line items are estimates of expenditures to be incurred by the Contractor on behalf of this Agreement and to be claimed by the Contractor for reimbursement under this Agreement. It is further understood and agreed that actual expenditures may vary from the estimates set forth above and that such variations shall not in themselves be cause for disallowance of reimbursement by RIDE; provided, however, that the Contractor shall notify and obtain the approval of the contract officer, in writing, if expenditures to be claimed for reimbursement in any line item above shall begin to vary significantly from the estimate given above; and provided further that unless permission of the contract officer shall have been obtained in advance, no expenditure shall be claimed by the Contractor for reimbursement by RIDE under this Agreement if such expenditure shall have been incurred in a line item category not listed above. Transfer of funds is permitted between Expense Categories (1) (2) and (3) up to 10% or $25,000, whichever is less; all other transfers require prior written approval by the Department of Education.

Note: The Rhode Island State Fiscal Year is July 1 – June 30.

BUDGET DETAIL SHEET
FISCAL YEAR _____

SALARY AND FRINGE BENEFIT DETAIL

NAME	POSITION TITLE	HOURLY RATE $	NUMBER OF HOURS	TOTAL SALARY $	FRINGE BENEFITS $	HOURLY RATE WITH FRINGE BENEFITS $	SALARY & FRINGE TOTAL $
TOTAL REQUEST							

DETAIL OF CONSULTANT

NAME	POSITION TITLE	HOURLY RATE $	NUMBER OF HOURS	TOTAL COST $
TOTAL REQUEST				$

EXPLANATION OF OTHER EXPENSES (i.e. travel, printing, office supplies, educational materials, and equipment)

EXPENSE CATEGORY	DESCRIPTION	COST
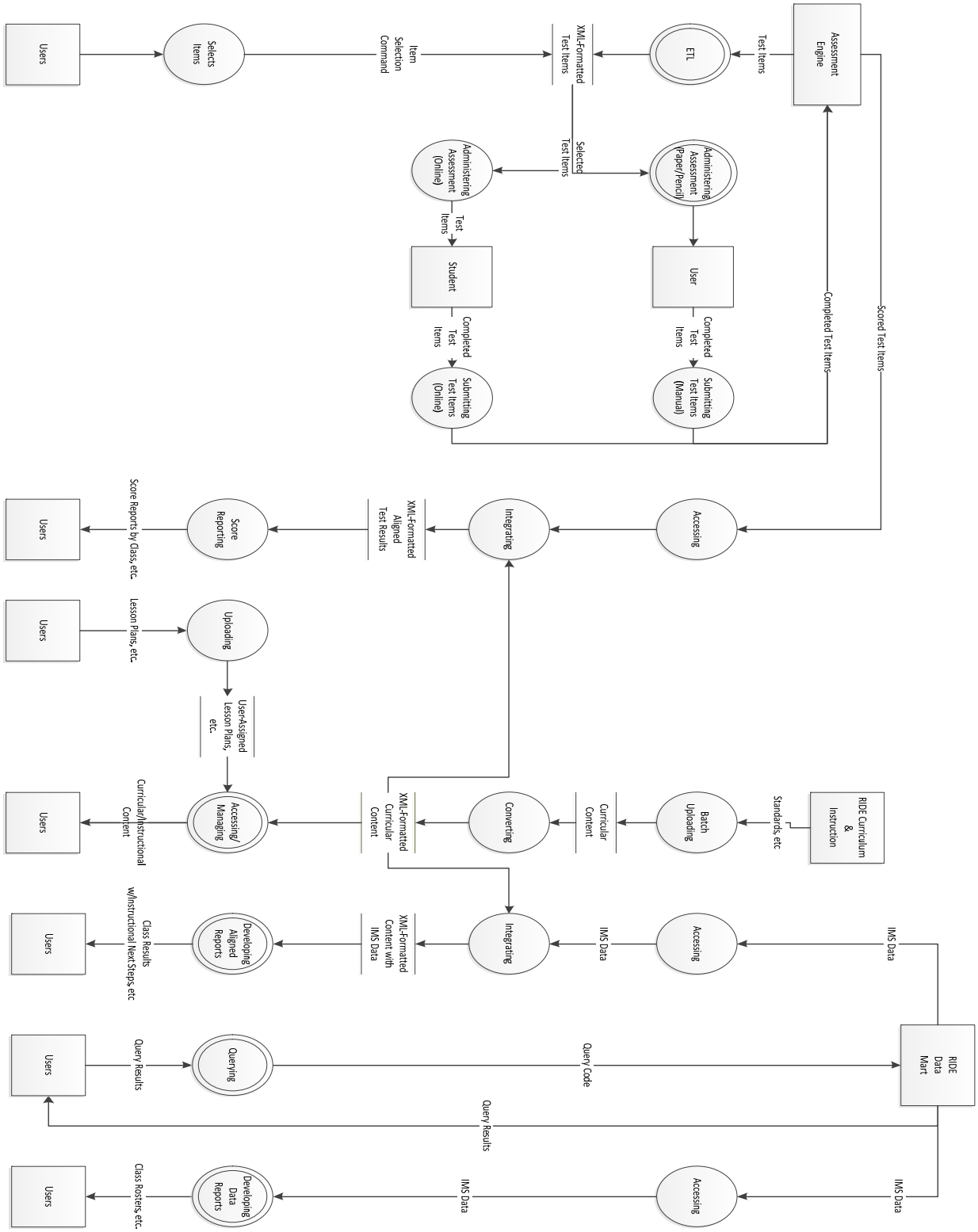
APPENDIX B: FUNCTIONAL REQUIREMENTS CONTEXT DIAGRAM