SOLICITATION INFORMATION

February 2, 2011

RFQ # 7448211

TITLE: ARRA-GAIGE HALL & CRAIG LEE HALL FIRE CODE UPGRADES - RIC

CLOSING DATE AND TIME: 2/24/11 AT 2:15 PM

PRE-BID/ PROPOSAL CONFERENCE: YES DATE: 2/11/11 TIME: 10:00 AM

MANDATORY: YES

LOCATION: RI COLLEGE
GAIGE HALL AUDITORIUM
600 MT. PLEASANT AVENUE
PROVIDENCE, RI 02908

SURETY REQUIRED: YES

BOND REQUIRED: YES

JOHN O'HARA II
CHIEF BUYER

JOH/da

Vendors must register on-line at the State Purchasing Website at www.purchasing.ri.gov to be able to download a Bidder Certification Cover Form which must accompany each offer.

NOTE TO VENDORS:

Offers received without the entire completed three-page RIVIP Generated Bidder Certification Cover Form attached may result in offer disqualification.

THIS PAGE IS NOT A BIDDER CERTIFICATION FORM

DOCUMENT 00100
INVITATION TO BID – 2/1/11
RFQ #7448211

Purchaser:	Department of Administration Division of Purchases One Capitol Hill, Providence, RI 02908
Owner:	State of Rhode Island Board of Governors for Higher Education 301 Promenade Street, Providence, RI 02908
Prime:	Hughes Associates, Inc. 117 Metro Center Boulevard, Suite 1002, Warwick, Rhode Island 02886
Project:	Craig Lee Hall & Gaige Hall Fire Code Upgrades Rhode Island College – Providence, RI
Completion Time:	September 30, 2011

General Contractors are invited to submit an offer under seal to the Purchaser at the above address, for construction of the above Project, on or before: Time: 2:15 PM Date: 2/24/11

NOTE: Complete details of the scope of work are available in a download on the Rhode Island, Division of Purchases website at www.purchasing.ri.gov (labeled with the issue date of this Solicitation Information document), which includes the Project Drawings and the Project Manual.

Bidders will be required to provide Bid security in the form of a Bid Bond, or a certified check, payable to the STATE OF RHODE ISLAND in the amount of a sum no less than 5 percent of the Bid Price.

The Owner will hold a **mandatory** prebid conference at: RI College – Gaige Hall Auditorium
600 Mt. Pleasant Avenue
Providence, RI 02908 at:

Time: 10:00 AM Date: 2/11/11

Refer to Document 00200 - Instructions to Bidders, for other Bidding requirements

Bidder's attention is referred to State requirements pertaining to conditions of employment to be observed, including the Equal Employment Opportunity Act, and requirements that 10 percent of the dollar value of the work must be performed by Minority Business Enterprises, and wage rates to be paid under the Contract for this Project must be in accordance with those prevailing wages on file at the Rhode Island Department of Labor, Office of the Director. Bidders are subject to the terms, conditions,

and provisions of Chapters 2, 12, 13, and 14.1 of Title 37, general laws of the State of Rhode Island, 1956 as amended.

Bidders should also understand that this project contains funding through the American Recovery and Reinvestments Act of 2009 and is subject to all applicable terms and conditions as outlined in Document 00710 – Supplemental General Conditions – ARRA.

The Division of Purchases reserves the right to accept or reject any or all offers.

END OF DOCUMENT

PROJECT MANUAL

William C. Gaige Hall and Craig Lee Hall
Fire Code Upgrades

Rhode Island College
Providence, RI

September 30, 2010

Owner: State of Rhode Island Board of Governors for Higher Education
301 Promenade Street, Providence, RI 02908

For:
Rhode Island College
Department of Facilities & Operations
600 Mt. Pleasant Avenue
Providence, RI 02908
Attn: Mr. Kevin Fitta, P.E.
401-456-8262 phone

Prime: Fire Safety Engineer
Hughes Associates, Inc.
117 Metro Center Boulevard, Suite 1002
Warwick, Rhode Island 02886
Attn: Mr. Timothy Wensus, P.E.
401-736-8992 x320 phone
401-736-8929 fax

Consultant: Architect
Cube 3 Studio, LLC
360 Merrimack Street
Building 5, Floor 3
Lawrence, MA 01843
Attn: Mr. Gerald Herring
978-989-9900 phone
978-379-8765 fax

PROJECT MANUAL

William C. Gaige Hall and Craig Lee Hall
Fire Code Upgrades

Rhode Island College
Providence, RI

September 30, 2010

DOCUMENT 00010

TABLE OF CONTENTS

INTRODUCTORY INFORMATION

00005 - Title Page
00010 - Table of Contents
00015 - List of Drawings

BIDDING AND CONTRACT REQUIREMENTS

00100 - Invitation to Bid
00200 - Instructions to Bidders
00410 - Bid Form
00430 - Bid Security Form
00450 - Bidder's Qualification Form
00520 - Agreement Form
00610 - Performance Bond; Payment Bond
00614 - Waiver of Lien Form
00700 - General Conditions
00710 - Supplemental General Conditions - ARRA
00850 - Prevailing Wage Rates
00900 - Addenda and Modifications

SPECIFICATIONS

DIVISION 1 - GENERAL REQUIREMENTS

01100 - Summary
01200 - Price and Payment Procedures
01300 - Administrative Requirements
01330 - Submittal Procedures
01400 - Quality Requirements
01500 - Temporary Facilities and Controls
01600 - Product Requirements
01700 - Execution Requirements
01780 - Closeout Submittals

DIVISION 2 – SITE CONSTRUCTION

02225 - Selective Structure Demolition

DIVISION 3 – CONCRETE (not used)

DIVISION 4 – MASONRY (not used)

DIVISION 5 – METALS

05521 - Pipe And Tube Railings

DIVISION 6 - WOOD AND PLASTICS

06100 - Rough Carpentry

DIVISION 7 - THERMAL AND MOISTURE PROTECTION

07841 - Penetration Firestopping
07842 - Fire-Resistive Joint Systems
07920 - Joint Sealants

DIVISION 8 - DOORS AND WINDOWS

08110 - Hollow Metal Doors And Frames
08211 - Flush Wood Doors
08710 - Door Hardware
08800 - Glazing

DIVISION 9 – FINISHES

09111 - Non-Structural Metal Framing
09250 - Gypsum Board
09265 - Gypsum Board Shaft Wall Assemblies
09653 - Resilient Base And Accessories
09900 - Painting

DIVISION 10 – SPECIALTIES

10400 - Signage

DIVISION 11 – EQUIPMENT (not used)

DIVISION 12 – FURNISHINGS (not used)

DIVISION 13 - SPECIAL CONSTRUCTION (not used)

DIVISION 14 - CONVEYING SYSTEMS (not used)

DIVISION 15 – MECHANICAL (not used)

DIVISION 16 – ELECTRICAL

16720 - Fire Alarm Systems

END OF DOCUMENT

DOCUMENT 00015 - LIST OF DRAWINGS

Dwg. No.	Drawing Title	Date
Architectural		
A-000	Cover	9/30/2010
A-051	Door Schedules, Hardware Sets, Elevations, & Typical Wall Types	9/30/2010
A-052	Typical Stair & Door Details	9/30/2010
A1-100	Basement Floor Plan Gaige Hall	9/30/2010
A1-101	First Floor Plan Gaige Hall	9/30/2010
A1-102	Second Floor Plan Gaige Hall	9/30/2010
A1-103	Third Floor Plan Gaige Hall	9/30/2010
A2-100	Basement Floor Plan Craig Lee Hall	9/30/2010
A2-101A	Ground Floor Partial Plan (East Wing) Craig Lee Hall	9/30/2010
A2-101B	Ground Floor Partial Plan (Humanities Wing) Craig Lee Hall	9/30/2010
A2-102A	First Floor Partial Plan (East Wing) Craig Lee Hall	9/30/2010
A2-102B	First Floor Partial Plan (Humanities Wing) Craig Lee Hall	9/30/2010
A2-103A	Second Floor Partial Plan (East Wing) Craig Lee Hall	9/30/2010
A2-103B	Second Floor Partial Plan (Humanities Wing) Craig Lee Hall	9/30/2010
A2-104	Third Floor Plan Craig Lee Hall	9/30/2010
A2-105	Fourth Floor Plan Craig Lee Hall	9/30/2010

END OF DOCUMENT

DOCUMENT 00100 - INVITATION TO BID

Purchaser: Department of Administration
Division of Purchases
One Capitol Hill, Providence, RI 02908

Owner: State of Rhode Island Board of Governors for Higher Education
301 Promenade Street, Providence, RI 02908

Prime: Hughes Associates, Inc.
117 Metro Center Boulevard, Suite 1002, Warwick, Rhode Island 02886

Project: Craig Lee Hall & Gaige Hall
Fire Code Upgrades
Rhode Island College – Providence, RI

Completion Time: September 30, 2011

General Contractors are invited to submit an offer under seal to the Purchaser at the above address, for construction of the above Project, on or before:

Time: _____ ( ), Date: _____ .

Bid Documents may be examined at the office of the Prime, and at the Rhode Island State Building Code Commission, One Capitol Hill, Providence, RI 02908. Bid Documents may be obtained from the the Office of the Building Code Commission. No deposit is required.

Bid Documents will be available for pick up in person only, between the hours of 8:30 a.m. to 4:00 p.m., from:

Dates: _____ to _____ .

Bidders will be required to provide Bid security in the form of a Bid Bond, or a certified check, payable to the STATE OF RHODE ISLAND in the amount of a sum no less than 5 percent of the Bid Price.

The Owner will hold a **mandatory** prebid conference at location _____

_____ at:

Time: _____ ( ) Date: _____ .

Refer to Document 00200 - Instructions to Bidders, for other Bidding requirements.

Bidder's attention is referred to State requirements pertaining to conditions of employment to be observed, including the Equal Employment Opportunity Act, and requirements that 10 percent of the dollar value of the work must be performed by Minority Business Enterprises, and wage rates to be paid under the Contract for this Project must be in accordance with those prevailing wages on file at the Rhode Island Department of Labor, Office of the Director. Bidders are subject to the terms, conditions, and provisions of Chapters 2, 12, 13, and 14.1 of Title 37, general laws of the State of Rhode Island, 1956 as amended.

Bidders should also understand that this project contains funding through the American Recovery and Reinvestments Act of 2009 and is subject to all applicable terms and conditions as outlined in Document 00710 – Supplemental General Conditions – ARRA.

The Division of Purchases reserves the right to accept or reject any or all offers.

END OF DOCUMENT

DOCUMENT 00200 – INSTRUCTIONS TO BIDDERS

TABLE OF ARTICLES

1. DEFINITIONS
2. BIDDER'S REPRESENTATIONS
3. BIDDING DOCUMENTS
4. BIDDING PROCEDURES
5. CONSIDERATION OF BIDS
6. POST-BID INFORMATION
7. PERFORMANCE BOND AND PAYMENT BOND
8. FORM OF AGREEMENT BETWEEN OWNER AND CONTRACTOR

ARTICLE 1 – DEFINITIONS

1.1 Bidding Documents include the Bidding and Contract Requirements and the proposed Contract Documents. The Bidding and Contract Requirements consist of the Invitation to Bid, Instructions to Bidders, the Bid Form, and other sample bidding and contract forms. The proposed Contract Documents consist of the Agreement Form between the Owner and the Contractor, the General Conditions, Supplementary General Conditions, Drawings, Specifications, and Addenda issued prior to execution of the Contract.

1.2 Definitions set forth in Document 00700 – General Conditions, or in other Contract Documents are applicable to the Bidding Documents.

1.3 Addenda are written or graphic instruments issued by the Architect prior to the execution of the Contract which modify or interpret the Bidding Documents by additions, deletions, clarifications, or corrections.

1.4 A bid is a complete and properly executed proposal to do the Work for the sums stipulated therein, submitted in accordance with the Bidding Documents.

1.5 The Base Bid is the sum stated in the Bid for which the Bidder offers to perform Work described in the Bidding Documents as the base, to which Work may be added, or from which Work may be deleted for sums stated in Alternate Bids.

1.6 An Alternate Bid (or Alternate) is an amount stated in the Bid to be added or deducted from the amount of the Base Bid if the corresponding change in the Work, as described in the Bidding Documents, is accepted.

1.7 A Unit Price is an amount stated in the Bid as a price per unit of measurement for materials, equipment or services, or a portion of the Work as described in the Bidding Documents.

1.8 A Bidder is a person or entity who submits a Bid and who meets the requirements set forth in the Bidding Documents.

1.9 A Sub-bidder is a person or entity who submits a bid to a Bidder for materials, equipment, or labor for a portion of the Work.

ARTICLE 2 – BIDDER'S REPRESENTATION

2.1 The Bidder by making a Bid represents that:

2.1.1 The Bidder has read and understands the Bidding Documents, or Contract Documents, to the extent that such documentation relates to the Work for which the Bid is submitted, and for other portions of the Project, if any, being bid concurrently or presently under construction.

2.1.2 The Bid is made in compliance with the Bidding Documents.

2.1.3 The Bidder has visited the site, become familiar with local conditions under which the Work is to be performed,

and has correlated the Bidder's personal observations with the requirements of the proposed Contract Documents. Claims for additional costs will not be accepted due to the Bidder's lack of knowledge of verifiable existing conditions.

2.1.4 The Bid is based upon the materials, equipment, and systems required by the Bidding Documents without exception.

ARTICLE 3 – BIDDING DOCUMENTS

3.1 COPIES

3.1.1 Bidders may obtain the bidding Documents in the form of an electronic CD in person from the office of the Rhode Island Building Code Commission, One Capitol Hill, Providence, RI. No deposit is required.

3.1.2 Bidding Documents will not be issued directly to Sub-bidders unless specifically offered in the Invitation to Bid.

3.1.3 Bidders shall use complete sets of Bidding Documents in preparing Bids; neither the Owner nor the Architect assumes responsibility for errors or misinterpretations resulting from the use of incomplete sets of the Bidding Documents.

3.1.4 Copies of the Bidding Documents are made available on the above terms, only through the office of the State Building Code Commission, for the purpose of obtaining Bids on the Work. No license or grant of use is conferred by issuance of copies of the Bidding Documents.

3.2 INTERPRETATION OR CORRECTION OF BIDDING DOCUMENTS

3.2.1 The Bidder shall carefully study and compare parts of the Bidding Documents with each other, and with other work being bid concurrently, or presently under construction, to the extent that it relates to the Work for which the Bid is submitted, shall examine the site and local conditions, and shall at once report to the assigned Buyer at the RI Div. of Purchases all errors, inconsistencies or ambiguities discovered. Buyer contact information is available through the RI Purchasing website (www.purchasing.ri.gov).

3.2.2 Bidders and Sub-bidders requiring clarification or interpretation of the Bidding Documents shall make a written request which shall reach the assigned Buyer at the RI Div. of Purchases at least ten days prior to the date for receipt of Bids.

3.2.3 Interpretations, corrections, and changes of the Bidding Documents will be made by Addendum. Interpretations, corrections, and changes of the Bidding Documents made in any other manner will not be binding, and Bidders shall not rely upon them.

3.3 SUBSTITUTIONS

3.3.1 The materials, products, and equipment described in the Bidding Documents establish a standard of required function, dimension, appearance, and quality to be met by any proposed substitution.

3.3.2 No substitutions will be considered prior to receipt of Bids unless a written request for approval has been received by the Prime at least ten (10) workdays prior to the date for receipt of Bids. Such requests shall include the name of the material or equipment for which it is to be substituted and a complete description of the proposed substitution including drawings, performance and test data, and other information necessary for an evaluation. A statement setting forth such changes in other materials, equipment, or other portions of the Work including changes in the Work of other contracts that incorporation of the proposed substitution would require, shall be included. The burden of proof of the merit of the proposed substitution is upon the proposer. The Prime's decision of approval or disapproval of a proposed substitution shall be final.

3.3.3 If the Prime approves a proposed substitution prior to receipt of Bids, such approval will be set forth in an Addendum. Bidders shall not rely upon approvals made in any other manner.

3.3.4 No substitutions will be considered after the Contract Award unless specifically provided for in the Contract Documents.

3.4 ADDENDA

3.4.1 Addenda instructions will be posted on the RI Purchasing website. Addenda which include new documents on CD will be available at the office of the Rhode Island Building Code Commission. Smaller addenda will be available for download directly from the RI Purchasing website. Bidders are responsible for checking for addenda.

3.4.2 Copies of Addenda will be made available for inspection wherever Bidding Documents are on file for that Purpose.

3.4.3 Addenda will be issued no later than five (5) workdays prior to the date for receipt of Bids except an Addendum withdrawing the request for Bids, or one which includes postponement of the date of receipt of Bids.

3.4.4 Each Bidder shall ascertain prior to submitting a Bid that the Bidder has received all Addenda issued, and the Bidder shall acknowledge their receipt in the Bid.

ARTICLE 4 – BIDDING PROCEDURES

4.1 PREPARATION OF BIDS

4.1.1 Bids shall be submitted on the forms included with the Bidding Documents, covered by a properly completed Div. of Purchases RIVIP Bidder Certification Cover Form. This 3-page form is generated by the registered vendor section of the RI Purchasing website. All bidders must pre-register online to generate this form. There is no fee for registration.

4.1.2 All blanks on the Bid Form shall be legibly executed in a non-erasable medium.

4.1.3 Sums shall be expressed in both words and figures. In case of discrepancy, the amount written in words shall govern.

4.1.4 The signer of the Bid must initial interlineations, alterations, and erasures.

4.1.5 All requested Alternates shall be bid. If no change in the Base Bid is required, enter “No Change”.

4.1.6 Where two or more Bids for designated portions of the Work have been requested, the Bidder may, without forfeiture of the bid security, state the Bidder’s refusal to accept award of less than the combination of Bids stipulated by the Bidder. The Bidder shall make no additional stipulations on the Bid Form, nor qualify the Bid in any other manner.

4.1.7 Each copy of the Bid shall state the legal name of the Bidder and the nature of legal form of the Bidder. The Bidder shall provide evidence of legal authority to perform within the jurisdiction of the Work. The person, or persons legally authorized to bind the Bidder to a Contract, shall sign each copy. A Bid by a corporation shall further indicate the state of incorporation and have the corporate seal affixed. A Bid submitted by an agent shall have a current power of attorney attached certifying the agent’s authority to bind the Bidder.

4.1.8 Bid Proposal must be accompanied by Material Safety Data Sheets (MSDS) pertaining to potentially hazardous materials specified to be furnished as part of the Work of the Project. MSDS sheets shall be forwarded after the Bid is awarded to the State Agency involved and they shall be required to retain copies on file. Failure to submit MSDS sheets may result in disqualification of the Bid.

4.2 BID SECURITY

4.2.1 Each Bid shall be accompanied by a Bid Security in the form and amount required if so stipulated in the Instructions to Bidders. The Bidder pledges to enter into a Contract with the Owner on the terms stated in the Bid and will, if required, furnish bonds covering the faithful performance of the Contract and payment of all obligations arising thereunder. Should the Bidder refuse to enter into such a Contract or fail to furnish such bonds, if required, the amount of the Bid Security shall be forfeited to the Owner as liquidated damages, not as a penalty. The amount of the bid security shall not be forfeited to the Owner in the event the Owner fails to comply with Paragraph 6.2.

4.2.2 If a surety bond is required, it shall be written on AIA Document A310, Bid Bond, bound herein as part of Document 00430 – Bid Security Form, unless otherwise provided in the Bidding Documents, and the attorney-in-fact who executes the bond on behalf of the surety shall affix to the bond a certified and current copy of the power of attorney.

4.2.3 The Owner will have the right to retain the bid surety of Bidders to whom an award is being considered until (a) the Contract has been executed and bonds, if required, have been furnished, or (b) the specified time has elapsed so that Bids may be withdrawn, or (c) all Bids have been rejected.

4.3 SUBMISSION OF BIDS

4.3.1 All copies of the Bid, the bid security, if any, and any other documents required to be submitted with the Bid shall be enclosed in a sealed opaque envelope. The envelope shall be addressed to the party receiving the Bids and shall be identified with the Project name, the Bidder's name and address and, if applicable, the designated portion of the Work for which the Bid is submitted. If the Bid is sent by mail, the sealed envelope shall be enclosed in a separate envelope with the notation "SEALED BID ENCLOSED" on the face thereof.

4.3.2 Bids shall be deposited at the designated location prior to the time and date for receipt of Bids. Bids received after the time and date for receipt of Bids will be returned unopened.

4.3.3 The Bidder shall assume full responsibility for timely delivery at the location designated for receipt of Bids.

4.3.4 Oral, telephonic, facsimile, or other electronically transmitted Bids will not be considered.

4.4 MODIFICATION OR WITHDRAWAL OF BID

4.4.1 A Bid may not be modified, withdrawn, or canceled by the Bidder during the stipulated time period following the time and date designated for the receipt of Bids, and each Bidder so agrees in submitting a Bid.

4.4.2 Prior to the time and date designated for the receipt of Bids, a submitted Bid may be modified or withdrawn by notice to the party receiving the Bids at the place designated for the receipt of Bids. Such notice shall be in writing over the signature of the Bidder. Written confirmation over the signature of the Bidder shall be received, and date- and time-stamped by the receiving party on or before the time and date set for receipt of Bids. A change shall be so worded as to not reveal the amount of the original Bid.

4.4.3 Withdrawn Bids may be resubmitted up to the time and date designated for the receipt of Bids provided that they are then fully in conformance with these Instructions to Bidders.

4.4.4 Bid Security, if required, shall be in an amount sufficient for the Bid as resubmitted.

ARTICLE 5 – CONSIDERATION OF BIDS

5.1 OPENING OF BIDS

5.1.1 At the discretion of the Owner, if stipulated in the Advertisement, or the Invitation to Bid, the properly identified Bids received on time will be publicly opened and will be read aloud. An abstract of the Bids may be made available to Bidders.

5.2 REJECTION OF BIDS

5.2.1 The Owner shall have the right to reject any or all Bids. A Bid not accompanied by a required Bid Security, or other data required by the Bid Documents, or a Bid which is in any way incomplete or irregular is subject to rejection.

5.3 ACCEPTANCE OF BID (AWARD)

5.3.1 It is the intent of the Owner to award a Contract to the lowest Bidder provided the Bid has been submitted in accordance with the requirements of the Bidding Documents and does not exceed the funds available. The Owner shall have the right to waive informalities and irregularities in a Bid received and to accept the Bid which, in the Owner's judgement, is in the Owner's own best interests.

5.3.1.1 Minority Business Enterprises: Pursuant to the provisions of Title 37 Chapter 14.1 of the General Laws, the State reserves the right to apply additional consideration to offers, and to direct awards to Bidders other than the responsive Bid representing the lowest price, where:

.1 the offer is fully responsive to the terms and conditions of the request;

.2 the offer is determined to be within a competitive range (not to exceed 5 percent higher than the lowest responsive price offer) for the product or service;

.3 the firm making the offer has been certified by the State of Rhode Island Department of Economic Development to be a small business concern meeting criteria established to be a Minority Business Enterprise.

5.3.2 The Owner shall have the right to accept Alternates in any order or combination, unless otherwise specifically provided in the Bidding Documents, and to determine the low Bidder on the basis of the sum of the Base Bid and Alternates accepted.

ARTICLE 6 – POST BID INFORMATION

6.1 CONTRACTOR'S QUALIFICATION STATEMENT

6.1.1 Bidders to whom award of Contract is under consideration shall submit to the Architect, upon request, a properly executed AIA Document A305, Contractor's Qualification Statement, a copy of which is bound herein in Document 00450 - Bidder's Qualification Form, unless such a statement has been previously required and submitted as a prerequisite to the issuance of Bidding Documents.

6.2 SUBMITTALS

6.2.1 The Bidder shall, as soon as practicable or as stipulated in the Bidding Documents, after notification of selection for the award of a Contract, furnish to the Owner through the Architect in writing:

.1 a designation of the Work to be performed with the Bidder's own forces;

.2 names of manufacturers, products, and the suppliers of principal items or systems of materials and equipment proposed for the Work

.3 names of persons or entities (including those who are to furnish materials or equipment fabricated to a special design) proposed for the principal portions of the Work; and

.4 names of persons and dollar value of sub-contract Work to be performed by Minority Business Enterprises in accordance with the State's requirement that 10 percent of the dollar value of the Work performed against

contracts for construction exceeding $5,000.00 shall be performed by Minority Business Enterprises where it has been determined that sub-contract opportunities exist and where certified Minority Business Enterprises are available. A Bidder may count towards its MBE, DBE, or WBE goals 60 percent of its expenditures for materials and supplies required and obtained from MBE, DBE, or WBE regular manufacturers. Awards of this type shall be subject to approval by the Director of Administration of a Sub-Contracting Plan submitted by the Bidder receiving the Award.

6.2.2 The Bidder will be required to establish to the satisfaction of the Owner and the Prime the reliability and responsibility of the persons or entities proposed to furnish and perform the Work described in the Bidding Documents.

6.2.3 Prior to the execution of the Contract, the Prime will notify the Bidder in writing if either the Owner or the Prime, after due investigation, has reasonable objection to a person or entity proposed by the Bidder. If the Owner or the Architect has reasonable objection to a proposed person or entity, the Bidder may, at the Bidder's option, (1) withdraw the Bid, or (2) submit an acceptable substitute person or entity with an adjustment in the Base Bid, or Alternate Bid, to cover the difference in cost occasioned by such substitution. The Owner may accept the adjusted Bid price, or disqualify the Bidder. In the event of either withdrawal or disqualification, Bid Security will not be forfeited.

6.2.4 Persons and entities proposed by the Bidder and to whom the Owner and Prime have made no reasonable objection must be used on the Work for which they were proposed and shall not be changed except with the written consent of the Owner and the Prime.

ARTICLE 7 – PERFORMANCE BOND AND PAYMENT BOND

7.1 BOND REQUIREMENTS

7.1.1 The Bidder shall furnish bonds covering the faithful performance of the Contract and Payment of all obligations arising thereunder. Bonds may be secured through a federally listed surety company licensed to do business in the State of Rhode Island. Their costs shall be included in the Bid.

7.1.2 If the furnishing of such bonds is stipulated in the Bidding Documents, the cost shall be included in the Bid. If the furnishing of such bonds is required after receipt of Bids and before execution of the Contract, the cost of such bonds shall be added to the Bid in determining the Contract Sum.

7.1.3 If the Owner requires that bonds be secured from other than the Bidder's usual sources, changes in cost will be adjusted as provided in the Contract Documents.

7.2 TIME OF DELIVERY AND FORM OF BONDS

7.2.1 The Bidder shall deliver the required bonds to the Owner prior to the date of execution of the Contract.

7.2.2 Unless otherwise provided, the bonds shall be written on AIA Document A312, Performance Bond and Payment Bond, a copy of which is bound herein in Document 00610 – Performance Bond; Payment Bond. Both bonds shall be written in the amount of the Contract Sum.

7.2.3 The bonds shall be dated before the date of the Contract.

7.2.4 The Bidder shall require the attorney-in-fact who executes the required bonds on behalf of the surety to affix thereto a certified and current copy of the power of attorney.

ARTICLE 8 – FORM OF AGREEMENT BETWEEN OWNER AND CONTRACTOR

8.1 Unless otherwise required in the Bidding Documents, the Agreement for the Work will be written on AIA Document A101, Standard Form of Agreement Between Owner and Contractor Where the Basis of Payment is a Stipulated Sum, a copy of which is either bound herein, or referred to, in Document 00520 – Agreement Form.

END OF DOCUMENT

DOCUMENT 00410 - BID FORM

Date: _____

To: Department of Administration
Division of Purchases
One Capitol Hill, Providence, RI 02908

Project: Craig Lee Hall and Gaige Hall Fire Code Upgrades
Rhode Island College – Providence, RI

Submitted by: _____
(include address, tel. & FAX nos., _____
and license no. if applicable) _____

1. BID

Having examined the Place of The Work and all matters referred to in the Instructions to Bidders, and in the Contract Documents prepared by Cube3 Studio, LLC, Architect for the above mentioned project, we, the undersigned, hereby offer to enter into a Contract to perform the Work for the Sum of:

_____($ _____.)
(written, and numerically)

We have included the specified cash and contingency allowances from Section 01200 in Division 1 of the Specifications in the above Bid sum.

We have included the required Bid security as required by the Invitation to Bid in the above Bid Sum. We have included 100% Payment and Performance Bonds in the above Bid Sum.

We understand that this project contains funding through the American Recovery and Reinvestments Act of 2009 and agree to comply with all applicable terms and conditions as outlined in Document 00710 – Supplemental General Conditions – ARRA. We agree to provide the documentation in accordance with RIC's requests.

2. ALTERNATES

Our proposals to modify the above Bid as identified by numbered Alternatives specified in Section 01200 in Division 1 of the Specifications are as follows:

Alternate #1 –
Add _____($_____)

Alternate #2 –
Add _____($_____)

Alternate #3 –
Add _____($_____)

3. BREAK OUT PRICES

For the purposes of proper capitalization of building costs, please provide a break-out of the bid cost per building as follows (total shall equal the Bid Price minus Cash Allowances and Contingency Allowances from Section 01200 in Division 1):

#1 - _____($_____)

#2 - _____($_____)

4. ACCEPTANCE

This offer shall be open to acceptance and is irrevocable for sixty days from the bid closing date. If this bid is accepted by the Owner within the time period stated above, we will:

- Execute the Agreement subject to compliance with required State regulatory agency approvals as described in the Invitation to Bid.
- Furnish the required bonds in compliance with amended provisions of the Instructions to Bidders.
- Commence work within seven days after receipt of a Purchase Order from RIC Purchasing.

5. CONTRACT TIME

If this Bid is accepted, we will achieve Substantial Completion of the Work by September 2, 2011 with all work completed by September 30, 2011.

6. ADDENDA

The following Addenda have been received. The modifications to the Bid Documents noted below have been considered and all costs are included in the Bid Sum.

Addendum No. 1, dated _____.

Addendum No. 2, dated _____.

Addendum No. 3, dated _____. , etc.

7. BID FORM SIGNATURE(S)

_____
(Bidder's name)

By: _____

Title: _____

Corporate Seal:

END OF DOCUMENT

DOCUMENT 00430 - BID SECURITY FORM

Know all men by these presents, that we _____
(insert name and address or legal title of Contractor)
as Principal, hereinafter called the Principal, and _____
(insert name and address or legal title of surety)
a corporation duly organized under the laws of the State of _____
as Surety, herinafter called the Surety, are held and firmly bound unto the State of Rhode Island, Department of Administration, Division of Purchases, One Capitol Hill, Providence, RI 02908 as Obligee, hereinafter called the Obligee, in the sum of
_____ ($_____)
for the payment of which sum well and truly to be made, the said Principal and the said Surety, bind ourselves, our heirs, executors, administrators, successors and assigns, jointly and severally, firmly by these presents.

Whereas, the Principal has submitted a bid for _____
(insert full name, address and description of project)
Now, therefore, if the Obligee shall accept the bid of the Principal and the Principal shall enter into a Contract with the Obligee in accordance with the terms of such bid, and give such bond or bonds as may be specified in the bidding or Contract Documents with good and sufficient surety for the faithful performance of such Contract and for the prompt payment of labor and material furnished in the prosecution thereof, or in the event of the failure of the Principal to enter such Contract and give such bond or bonds, if the Principal shall pay to the Obligee the difference not to exceed the penalty hereof between the amount specified in said bid and such larger amount for which the Obligee may in good faith contract with another party to perform the Work covered by said bid, then this obligation shall be null and void, otherwise to remain in full force and effect.

Signed and sealed this day of ,

_____ Principal

_____
_____
Witness Title

_____
_____
Witness Surety

_____
Title

END OF DOCUMENT

DOCUMENT 00450 - BIDDER'S QUALIFICATION FORM

This Bidder's Qualification Form is included as an integral part of the Bid documents, for use in evaluating the qualifications of Contractors.

Failure of the announced low numerical bidder to respond with relevant information to the stated requirements of this Document 00450 may disqualify that bidder from further consideration as a bidder on this Project.

The Undersigned certifies under oath that the information provided herein is true and sufficiently complete so as not to be misleading.

SUBMITTED TO: State of Rhode Island, Department of Administration, Division of Purchases

ADDRESS: One Capitol Hill, Providence, RI 02908

SUBMITTED BY:

NAME:

ADDRESS:

PRINCIPAL OFFICE:

___ Corporation

___ Partnership

___ Individual

___ Joint Venture

___ Other

NAME OF PROJECT:

TYPE OF WORK (file separate form for each classification of work)

___General Construction

___ HVAC

___ Plumbing

___ Electrical

___ Other(please specify)

1. ORGANIZATION

How many years has your organization been in business as a Contractor?
How many years has your organization been in business under its present name?

Under what other or former names has your organization operated?

If your organization is a corporation, answer the following:

Date of incorporation:
State of incorporation:
President's name:
Vice-president's name(s):

Secretary's name:
Treasurer's name:

If your organization is a partnership, answer the following:

Date of organization:
Type of partnership(if applicable):
Name(s) of general partners:

If your organization is individually owned, answer the following:

Date of organization:
Name of owner:

If the form of your organization is other than those listed above, describe it and name the principals:

2. LICENSING

List jurisdictions and trade categories in which your organization is legally qualified to do business, and indicate registration or license numbers, if applicable:

List jurisdictions in which your organization's partnership or trade name is filed.

3. EXPERIENCE

List the categories of work that your organization normally performs with its own forces.

Claims and suits. (If the answer to any of the questions below is YES, please attach details)

Has your organization ever failed to complete any work awarded to it?

Are there any judgments, claims, arbitration proceedings or suits pending or outstanding against your organization or its officers?

Has your organization filed any law suits or requested arbitration with regard to construction contracts within the last 5 years?

Within the last 5 years, has any officer or principal or your organization ever been an officer or principal of another organization when it failed to complete a construction contract? (If the answer is YES, please attach details).

On a separate sheet, list major construction projects your organization has in progress, giving the name of project, owner, architect, contract amount, percent complete and scheduled completion date.

State total worth of work in progress and under contract.

On a separate sheet, list the major projects your organization has completed in the past 5 years, giving the name of project, owner, architect, contract amount, date of completion and percentage of the cost of the work performed with your own forces.

State average annual amount of construction work performed during the past 5 years.

On a separate sheet, list the construction experience and present commitments of the key individuals of your organization.

4. REFERENCES

Trade References:

Bank References:

Surety:

Name of bonding company:

Name and address of agent:

5. FINANCING

Financial Statement

Attach a financial statement, preferably audited, including your organization's latest balance sheet and income statement showing the following items:

Current assets (e.g., cash, joint venture accounts, accounts receivable, notes receivable, accrued income, deposits, materials inventory, and prepaid expenses);

Net fixed assets;

Other assets;

Current liabilities (e.g., accounts payable, notes payable, accrued expenses, provision for income taxes, advances, accrued salaries, and accrued payroll taxes);

Other liabilities (e.g., capital, capital stock, authorized and outstanding shares par values, earned surplus and retained earnings).

Name and address of firm preparing attached financial statement, and date thereof:

Is the attached financial statement for the indentical organization named on Page 1?

If not, explain the relationship and financial responsibility of the organization whose financial statement is provided (e.g., parent-subsidiary).

Will the organization whose financial statement is attached act as guarantor of the contract for construction?

6. SIGNATURE

6.1 Dated at this day of

Name of Organization:

By:

Title:

6.2

M being duly sworn deposes and says that the information provided herein is true and sufficiently complete so as not to be misleading.

Subscribed and sworn before me this day of

Notary Public:

My Commission Expires:

END OF DOCUMENT

DOCUMENT 00520 - AGREEMENT FORM

Agreement made as of the day of in the year of
(In words, indicate day, month and year)

Between the Owner:
(Name, address and other information)

And the Contractor:
(Name, address and other information)

The Project is:
(Name and location)

The Architect is:
(Name, address and other information)

The Owner and Contractor agree as follows.

ARTICLE 1 THE CONTRACT DOCMENTS

1.1 The Contract Documents consist of this Agreement, the General Conditions, Drawings, Specifications, Addenda issued prior to execution of this Agreement, other documents listed in this Agreement and Modifications issued after execution of this Agreement; these form the Contract, and are as fully a part of the Contract as if attached to this Agreement or repeated herein. The Contract, together with the Performance Bond, and Payment Bond, represents the entire and integrated agreement between the parties hereto and supersedes prior negotiations, representations or agreements, either written or oral. An enumeration of the Contract Documents, other than Modifications, appears in Article 8.

ARTICLE 2 THE WORK OF THIS CONTRACT

2.1 The Contractor shall fully execute the Work described in the Contract Documents, except to the extent specifically indicated in the Contract Documents to be the responsibility of others.

ARTICLE 3 DATE OF COMMENCEMENT AND SUBSTANTIAL COMPLETION

3.1 The date of commencement of the Work shall be the date of this Agreement unless a different date is stated below or provision is made for the date to be fixed in a notice to proceed issued by the Owner.

Date will be fixed by a Notice to Proceed.

If, prior to the commencement of the Work, the Owner requires time to file mortgages, mechanic's liens and other security interests, the Owner's time requirement shall be as follows:

3.2 The Contract Time shall be measured from the date of commencement.

3.3 The Contractor shall achieve Substantial Completion of the entire Work as follows:

By May 27, 2011,

subject to adjustments of this Contract Time as provided in the Contract Documents.

Liquidated Damages: $ 250.00 per calendar day.

ARTICLE 4 CONTRACT SUM

4.1 The Owner shall pay the Contractor the Contract Sum in current funds for the Contractor's performance of the Contract. The Contract Sum shall be ($), subject to additions and deductions as provided in the Contract Documents.

4.2 The Contract Sum is based upon the following alternates, if any, which are described in the Contract Documents and are hereby accepted by the Owner:

(State the numbers or other identification of accepted alternates. If decisions on other alternates are to be made by the Owner subsequent to the execution of this Agreement, attach a schedule of such other alternates showing the amount for each and the date when that amount expires.)

4.3 Unit prices, if any, are as follows:

ARTICLE 5 PAYMENTS

5.1 PROGRESS PAYMENTS

5.1.1 Based upon Applications for Payment submitted to the Prime by the Contractor and Certificates for Payment issued by the Prime, the Owner shall make progress payments on account of the Contract Sum to the Contractor as provided below and elsewhere in the Contract Documents.

5.1.2 The period covered by each Application for Payment shall be one calendar month ending on the last day of the month, or as follows:

5.1.3 Following receipt, and final signed approval by the Owner through the Prime, of an Application for Payment that has been previously reviewed by both parties for accuracy, the Owner shall make payment within the next 30 day working period.

5.1.4 Each Application for Payment shall be based on the most recent schedule of values submitted by the Contractor, and approved in writing by the Prime and Owner, in accordance with the Contract Documents. The schedule of values shall allocate the entire Contract Sum among the various portions of the Work. The schedule of values shall be prepared in such form and supported by such data to substantiate its accuracy as the Architect and the Owner may require. This schedule, unless objected to by the Prime, or the Owner, shall be used as a basis for reviewing the Contractor's Applications for Payment.

5.1.5 Applications for Payment shall set forth the percentage of completion of each portion of the Work as of the end of the period covered by the Application for Payment.

5.1.6 Subject to other provisions of the Contract Documents, the amount of each progress payment shall be computed as follows:

5.1.6.1 Take that portion of the Contract Sum properly allocable to completed Work as determined by multiplying the percentage completion of each portion of the Work by the share of the Contract Sum allocated to that portion of the Work in the approved schedule of values, less retainage of 10%. Pending final determination of cost to the Owner of changes in the Work, amounts not in dispute shall be included as provided in Paragraph 7.3.8 of SECTION 00700-GENERAL CONDITIONS;

5.1.6.2 Add that portion of the Contract Sum properly allocable to materials and equipment delivered and suitably stored at the site for subsequent incorporation in the completed construction (or, if approved in advance in writing by the Owner, suitably stored off site at a location agreed upon in writing), less retainage of 10%;

5.1.6.3 Subtract the aggregate of previous payments made by the Owner;

5.1.6.4 Subtract amounts, if any, for which the Prime has withheld or nullified a Certificate for Payment as provided in Paragraph 9.5 of SECTION 00700-GENERAL CONDITIONS; and

5.1.6.5 Subtract amounts, if any, being held by the Owner as provided for in the Contract Documents.

5.1.7 The progress payment amount determined in accordance with Section 5.1.6 shall be further modified under the following circumstances:

5.1.7.1 Add, upon Substantial Completion of the Work, a sum sufficient to increase the total payments to the full amount of the Contract Sum, less such amounts as the Prime shall determine for incomplete or defective work, or both, for unsettled claims; and for Warranty Inspection Retainage, as provided for in the Contract Documents.

5.1.7.2 Add, if final completion of the Work is thereafter materially delayed through no fault of the Contractor, any additional amounts payable in accordance with Paragraph 9.10.3 of SECTION 00700-GENERAL CONDITIONS.

5.1.8 Reduction or limitation of retainage, if any, shall be as follows:

See SECTION 00700-GENERAL CONDITIONS, Subparagraph 9.3.1.3 and SECTION 01200-PRICE AND PAYMENT PROCEDURES.

5.1.9 Except with the Owner's prior approval, the Contractor shall not make advance payments to suppliers for materials or equipment which have not been delivered and stored at the site.

5.2 FINAL PAYMENT

5.2.1 Final payment, constituting the entire unpaid balance of the Contract Sum, shall be made by the Owner to the Contractor when:

5.2.1.1 the Contractor has fully performed the Contract except for the Contractor's responsibility to correct Work as provided in Section 12.2.2 of SECTION 00700-GENERAL CONDITIONS, and to satisfy other requirements, if any, which extend beyond final payment; and

5.2.1.2 a final Certificate of Payment has been issued by the Prime.

5.2.2 The Owner's final payment to the Contractor shall be made no later than (1) when the Contractor has fully performed the Work of the Contract as provided in Subparagraph 5.2.1 above, and (2) 30 days after the issuance of the Prime's final Certificate of Payment.

ARTICLE 6 TERMINATION OR SUSPENSION

6.1 The Contract may be terminated by the Owner of the Contractor as provided in Article 14 of SECTION 00700-GENERAL CONDITIONS.

6.2 The Work may be suspended by the Owner as provided in Article 14 of SECTION 00700-GENERAL CONDITIONS.

ARTICLE 7 MISCELLANEOUS PROVISIONS

7.1 Where reference is made in this Agreement to a provision of SECTION 00700-GENERAL CONDITIONS another Contract Document, the reference refers to that provision as amended or supplemented by other provisions of the Contract Documents.

7.2 Payments due and unpaid under the Contract shall bear interest from the date payment is due as proscribed by the State of Rhode Island Prompt Payment Act.

7.3 The Owner's representative is:

7.4 The Contractor's representative is:

7.5 In the absence of an emergency, neither the Owner's nor the Contractor's representative shall be changed without 10 days written notice to the other party.

7.6 If the Contractor fails to achieve Final Completion of the Project by the date established in SECTION 00410-BID FORM, in the Article entitled 'CONTRACT TIME', due to inaction or negligence on the part of the Contractor or their agents, then the Owner reserves the right to complete the Work in accordance with SECTION 00700-GENERAL CONDITIONS, Paragraph 4.2-Owner's Right to Carry Out the Work.

ARTICLE 8 ENUMERATION OF CONTRACT DOCUMENTS

8.1 The Contract Documents, except for Modifications issued after execution of this Agreement, are enumerated as follows:

8.1.1 The Agreement is this executed SECTION 00520-AGREEMENT FORM.

8.1.2 The General Conditions are SECTION 00700-GENERAL CONDITIONS.

8.1.3 The other Conditions of the Contract are those contained in the Project Manual, and are as listed in SECTION 00010-TABLE OF CONTENTS.

8.1.4 The Specifications are those contained in the Project Manual, and are as listed in SECTION 00010-TABLE OF CONTENTS.

8.1.5 The Drawings are as listed in SECTION 00015-LIST OF DRAWINGS.

8.1.6 The Addenda, if any, are as follows:

See SECTION 00900-ADDENDA AND MODIFICATIONS

Portions of Addenda relating to Bidding Requirements are not part of the Contract Documents unless the bidding requirements are also enumerated in this ARTICLE 8.

8.1.7 Other documents, if any, forming part of the Contract Documents are as follows:

This Agreement is entered into as of the day and year first written above and is executed in at least three original copies, of which one is to be delivered to the Contractor, one to the Prime for use in the administration of the Contract, and the remainder to the Owner.

_____	_____
OWNER (signature)	CONTRACTOR (signature)
_____	_____
(Printed name and title)	(Printed name and title)

END OF DOCUMENT

DOCUMENT 00610 - PERFORMANCE BOND; PAYMENT BOND

PERFORMANCE BOND

CONTRACTOR (Name and Address):

SURETY(Name and Address):

OWNER: State of Rhode Island Board of Governors for Higher Education, 310 Promenade Street, Providence, RI 02908

CONSTRUCTION CONTRACT:
Date:
Amount:
Description(Name and Location):

BOND
Date(Not earlier than Construction Contract Date):
Amount:
Modifications to this Bond('None' or 'See Last Page'):

CONTRACTOR AS PRINCIPAL		SURETY	
Company:	(corporate seal)	Company:	(corporate seal)
Signature_____		Signature_____	
Name and title:		Name and title:	

(Any additional signatures appear on last page)

(FOR INFORMATION ONLY – Name, address and telephone)

AGENT OR BROKER:

OWNER'S REPRESENTATIVE:

1. The Contractor and the Surety, jointly and severally, bind themselves, their heirs, executors, administrators, successors and assigns to the Owner for the performance of the Construction Contract, which is incorporated herein by reference.

2. If the Contractor performs the Construction Contract, the Surety and the Contractor shall have no obligation under this Bond, except to participate in conferences as provided in Subparagraph 3.1.

3. If there is no Owner Default, the Surety's obligation under this Bond shall arise after:

The Owner has notified the Contractor and the Surety at its address described in Paragraph 10 that the Owner is considering declaring a Contractor Default and has requested and attempted to arrange a conference with the Contractor and the Surety to be held not later than fifteen days after receipt of such notice to discuss methods of performing the Construction Contract. If the Owner, the Contractor and the Surety agree, the Contractor shall be allowed a reasonable time to perform the Construction Contract, but such an agreement shall not waive the Owner's right, if any, subsequently to declare a Contractor Default; and

The Owner has declared a Contractor Default and formally terminated the Contractor's right to complete the contract. Such Contractor Default shall not be declared earlier than twenty days after the Contractor and the Surety have received notice as provided in Subparagraph 3.1; and

The Owner has agreed to pay the balance of the Contract Price to the Surety in accordance with the terms of the Construction Contract or to a contractor selected to perform the Construction Contract in accordance with the terms of the contract with the Owner.

4. When the Owner has satisfied the conditions of Paragraph 3, the Surety shall promptly and at the Surety's expense take one of the following actions:

Arrange for the Contractor, with consent of the Owner, to perform and complete the Construction Contract; or

Undertake to perform and complete the Construction Contract itself, through its agents or through independent contractors; or

Obtain bids or negotiated proposals from qualified contractors acceptable to the Owner for a contract for performance and completion of the Construction Contract, arrange for a contract to be prepared for execution by the Owner and the contractor selected with the Owner's concurrence, to be secured with performance and payment bonds executed by a qualified surety equivalent to the bonds issued on the Construction Contract, and pay to the Owner the amount of damages as described in Paragraph 6 in excess of the balance of the Contract Price incurred by the Owner resulting from the Contractor's default; or

Waive its right to perform and complete, arrange for completion, or obtain a new contractor and with reasonable promptness under the circumstances:

After investigation, determine the amount for which it may be liable to the Owner and, as soon as practicable after the amount is determined, tender payment therefore to the Owner; or

Deny liability in whole or in part and notify the Owner citing reasons therefore.

5. If the Surety does not proceed as provided in Paragraph 4 with reasonable promptness, the Surety shall be deemed to be in default on this Bond fifteen days after receipt of an additional written notice from the Owner to the Surety demanding that the Surety perform its obligations under this Bond, and the Owner shall be entitled to enforce any remedy available to the Owner. If the Surety proceeds as provided in Subparagraph 4.4, and the Owner refuses the payment tendered or the Surety has denied liability, in whole or in part, without further notice the Owner shall be entitled to enforce any remedy available to the Owner.

6. After the Owner has terminated the Contractor's right to complete the Construction Contract, and if the Surety elects to act under Subparagraph 4.1, 4.2, or 4.3, then the responsibilities of the Surety to the Owner shall not be greater than those of the Contractor under the Construction Contract, and the responsibilities of the Owner to the Surety shall not be greater than those of the Owner under the Construction Contract. To the limit of the amount of this Bond, but subject to commitment by the Owner of the balance of the Contract Price to mitigation of costs and damages on the Construction Contract, the Surety is obligated without duplication for:

The responsibilities of the Contractor for correction of defective work and completion of the Construction Contract;

Additional legal, design professional and delay costs resulting from the Contractor's Default, and resulting from the actions or failure to act of the Surety under Paragraph 4;

Liquidated damages, or if no liquidated damages are specified in the Construction Contract, actual damages caused by delayed performance or non-performance of the Contractor.

7. The Surety shall not be liable to the Owner or others for obligations of the Contractor that are unrelated to the Construction Contract, and the balance of the Contract Price shall not be reduced or set off on account of any such unrelated obligations. Not right of action shall accrue on this Bond to any person or entity other than the Owner its heirs, executors, administrators or successors.

8. The Surety hereby waives notice of any change, including changes of time, to the Construction Contract or to related subcontracts, purchase orders and other obligations.

9. Any proceeding, legal or equitable, under this Bond may be instituted in any court of competent jurisdiction in the location in which the work or part of the work is located and shall be instituted within two years after Contractor Default or within two years after the Contractor eased working or within two years after the Surety refuses or fails to perform its obligations under this Bond, whichever occurs first. If the provisions of this Paragraph are void or prohibited by law, the minimum period of limitation available to sureties as a defense in the jurisdiction of the suit shall be applicable.

10. Notice to the Surety, the Owner or the Contractor shall be mailed or delivered to the address shown on the signature page.

11. When this Bond has been furnished to comply with a statutory or other legal requirement in the location where the construction was to be performed, any provision in this Bond conflicting with

said statutory or legal requirement shall be deemed deleted here form and provisions conforming to such statutory or other legal requirement shall be deemed incorporated herein. The intent is that this Bond shall be construed as a statutory bond and not as a common law bond.

12. DEFINITIONS

Balance of the Contract Price: The total amount payable by the Owner to the Contractor under the Construction Contract after all proper adjustments have been made, including allowance to the Contractor of any amounts received or to be received by the Owner in settlement of insurance or other claims for damages to which the contractor is entitled, reduced by all valid and proper payments made to or on behalf of the Contractor under the Construction Contract.

Construction Contract: The agreement between the Owner and the Contractor identified on the signature page, including all Contract Documents and changes thereto.

Contractor Default: Failure of the Contractor, which has neither been remedied nor waived, to perform or otherwise to comply with the terms of the Construction Contract.

Owner Default: Failure of the Owner, which has neither been remedied nor waived, to pay the Contractor as required by the Construction Contract or to perform and complete or comply with the other terms thereof.

MODIFICATIONS TO THIS BOND ARE AS FOLLOWS:

(Space is provided below for additional signatures of added parties, other than those appearing on the cover page.)

CONTRACTOR AS PRINCIPAL		SURETY	
Company:	(corporate seal)	Company:	(corporate seal)
Signature_____		Signature_____	
Name and title:		Name and title:	

PAYMENT BOND

CONTRACTOR (Name and Address):

SURETY(Name and Address):

OWNER: State of Rhode Island Board of Governors for Higher Education, 310 Promenade Street, Providence, RI 02908

CONSTRUCTION CONTRACT:
Date:
Amount:
Description(Name and Location):

BOND
Date(Not earlier than Construction Contract Date):
Amount:
Modifications to this Bond('None' or 'See Last Page'):

CONTRACTOR AS PRINCIPAL		SURETY	
Company:	(corporate seal)	Company:	(corporate seal)
Signature_____		Signature_____	
Name and title:		Name and title:	

(Any additional signatures appear on last page)

(FOR INFORMATION ONLY – Name, address and telephone)

AGENT OR BROKER:

OWNER'S REPRESENTATIVE:

1. The Contractor and the Surety, jointly and severally bind themselves, their heirs, executors, administrators, successors and assigns to the Owner to pay for labor, materials and equipment furnished for use in the performance of the Construction Contract, which is incorporated herein by reference.

2. With respect to the Owner, this obligation shall be null and void if the Contractor:

Promptly makes payment, directly or indirectly, for all sums due Claimants, and

Defends, indemnifies and holds harmless the Owner from claims, demands, liens or suites by any person or entity whose claim, demand, lien or suit is for the payment for labor, materials or equipment furnished for use in the performance of the Construction Contract, provided the Owner has promptly notified the Contractor and the Surety (at the address described in Paragraph 12) of any claims, demands, liens or suits and tendered defense of such claims, demands, liens or suits to the Contractor and the Surety, and provided there is no Owner Default.

3. With respect to Claimants, this obligation shall be null and void if the Contractor promptly makes payment, directly or indirectly, for all sums due.

4. The Surety shall have no obligation to Claimants under this Bond until:

Claimants who are employed by or have a direct contract with the Contractor have given notice to the Surety (at the address described in Paragraph 12) and sent a copy, or notice thereof, to the Owner, stating that a claim is being made under this Bond and, with substantial accuracy, the amount of the claim.

Claimants who do not have a direct contract with the Contractor:

Have furnished written notice to the Contractor and sent a copy, or notice thereof, to the Owner, within 90 days after having last performed labor or last furnished materials or equipment included in the claim stating, with substantial accuracy, the amount of the claim and the name of the party to whom the materials were furnished or supplied or for whom the labor was done or performed; and

Have either received a rejection in whole or in part from the Contractor, or not received within 30 days of furnishing the above notice any communication from the Contractor by which the Contractor has indicated the claim will be paid directly or indirectly; and

Not having been paid within the above 30 days, have sent a written notice to the Surety (at the address described in Paragraph 12) and sent a copy, or notice thereof, to the Owner, stating that a claim is being made under this Bond and enclosing a copy of the previous written notice furnished to the Contractor.

5. If a notice required by Paragraph 4 is given by the Owner to the Contractor or to the Surety, that is sufficient compliance.

6. When the Claimant has satisfied the conditions of Paragraph 4, the Surety shall promptly and at the Surety's expense take the following actions:

Send an answer to the Claimant, with a copy to the Owner, within 45 days after receipt of the claim, stating the amounts that are undisputed and the basis for challenging any amounts that are disputed.

Pay or arrange for payment of any undisputed amounts.

7. The Surety's total obligation shall not exceed the amount of this Bond, and the amount of this Bond shall be credited for any payments made in good faith by the Surety.

8. Amounts owed by the Owner to the Contractor under the Construction Contract shall be used for the performance of the Construction Contract and to satisfy claims, if any, under any Construction Performance Bond. By the contractor furnishing and the Owner accepting this bond, they agree that all funds earned by the contractor in the performance of the Construction Contract are dedicated to satisfy obligations of the Contractor and the Surety under this Bond, subject to the Owner's priority to use the funds for the completion of the work.

9. The Surety shall not be liable to the Owner, Claimants or others for obligations of the Contractor that are unrelated to the Construction contract. The Owner shall not be liable for payment of any costs or expenses of any Claimant under this bond, and shall have under this Bond no obligations to make payments to, give notices on behalf of, or otherwise have obligations to Claimants under this Bond.

10. The Surety hereby waives notice of any change, including changes of time, to the construction Contract or to related subcontracts, purchase orders and other obligations.

11. No suit or action shall be commenced by a Claimant under this Bond other than in a court of competent jurisdiction in the location in which the work or part of the work is located or after the expiration of one year from the date (1) on which the Claimant gave the notice required by Subparagraph 4.1 or Clause 4.2.3, or (2) on which the last labor or service was performed by anyone or the last materials or equipment were furnished by anyone under the Construction Contract, whichever of (1) or (2) first occurs. If the provisions of this Paragraph are void or prohibited by law, the minimum period of limitation available to sureties as a defense in the jurisdiction of the suit shall be applicable.

12. Notice to the Surety, the Owner or the Contractor shall be mailed or delivered to the address shown on the signature page. Actual receipt of notice by Surety, the Owner or the Contractor, however accomplished, shall be sufficient compliance as of the date received at the address shown on the signature page.

13. When this Bond has been furnished to comply with a statutory or other legal requirement in the location where the construction was to be performed, any provision in this Bond conflicting with said statutory or legal requirement shall be deemed deleted herefrom and provisions conforming to such statutory or other legal requirement shall be deemed incorporated herein. The intent is that this Bond shall be construed as a statutory bond and not as a common law bond.

14. Upon request by any person or entity appearing to be a potential beneficiary of this Bond, the Contractor shall promptly furnish a copy of this Bond or shall permit a copy to be made.

15. DEFINITIONS

Claimant: An individual or entity having a direct contract with the Contractor or with a subcontractor of the Contractor to furnish labor, materials or equipment for use in the performance of the Contract. The intent of this Bond shall be to include without limitation in the terms "labor, materials or equipment" that part of water, gas, power, light, heat, oil, gasoline, telephone service or rental equipment used in the Contraction Contract, architectural and engineering services required for performance of the work of the Contractor and the Contractor's subcontractors, and all other items for which a mechanic's lien may be asserted in the jurisdiction where the labor, materials or equipment were furnished.

Construction Contract: The agreement between the Owner and the Contractor identified on the signature page, including all Contract Documents and changes thereto.

Owner Default: Failure of the Owner, which has neither been remedied nor waived, to pay the Contractor as required by the Construction Contract or to perform and complete or comply with the other terms thereof.

MODIFICATIONS TO THIS BOND ARE AS FOLLOWS:

(Space is provided below for additional signatures of added parties, other than those appearing on the cover page.)

CONTRACTOR AS PRINCIPAL		SURETY	
Company:	(corporate seal)	Company:	(corporate seal)
Signature_____		Signature_____	
Name and title:		Name and title:	

END OF DOCUMENT

DOCUMENT 00614 - WAIVER OF LIEN FORM

Rhode Island College's Document Waiver of Lien Form is included, following this page, as an integral part of the Contract documents. A copy with completed information must be submitted with the second, and each succeeding Application for Payment.

WAIVER OF LIEN FORM - Material or Labor

RHODE ISLAND COLLEGE

Construction Project Title: **Craig Lee Hall and Gaige Hall Fire Code Upgrades**

General Contractor: _____

Subcontractor/Supplier: _____

DUNS No.: _____

Application and Certificate for Payment No: _____
(prior to Application accompanying this form)

Schedule of Values Line Item No.: _____

DESCRIPTION OF WORK Heading: _____

Total payment Received, Including Current Payment: $ _____

The undersigned Representative of the above Subcontractor/Supplier has been contracted by the above General Contractor to furnish materials, or labor, or both, as included in the approved Schedule of Values under the Line Item No.___, and DESCRIPTION OF WORK heading indicated above, for the Construction Project listed above.

The undersigned acknowledges receipt of payment, under this Line Item No., and DESCRIPTION OF WORK heading, and hereby waives and releases any and all lien, or claim or right to lien, on the Construction Project listed above, and premises, under the statutes of the State of Rhode Island, relating to Mechanics Liens, on account of materials, or labor, or both, furnished, or which may be furnished, by the undersigned to, or on account of, the above numbered Application and Certificate for Payment.

Signed on this _____ th day of _____, 20__.

_____ _____
(signature) (firm name)

END OF DOCUMENT

DOCUMENT 00700 - GENERAL CONDITIONS

TABLE OF ARTICLES

I. GENERAL PROVISIONS
2. OWNER
3. CONTRACTOR
4. ADMINISTRATION OF THE CONTRACT
5. SUBCONTRACTORS
6. CONSTRUCTION BY OWNER OR BY SEPARATE CONTRACTORS
7. CHANGES IN THE WORK
8. TIME
9. PAYMENTS AND COMPLETION
10. PROTECTION OF PERSONS AND PROPERTY
11. INSURANCE AND BONDS
12. UNCOVERING AND CORRECTION OF WORK
13. MISCELLANEOUS PROVISIONS
14. TERMINATION OR SUSPENSION OF THE CONTRACT

ARTICLE 1 - GENERAL PROVISIONS

1.1 BASIC DEFINITIONS

1.1.1 THE CONTRACT DOCUMENTS

The Contract Documents consist of the Agreement between Owner and Contractor (hereinafter Agreement), Conditions of the Contract (General, Supplementary and other Conditions), Drawings, Specifications, Addenda issued prior to execution of the Contract, other documents listed in the Agreement and Modifications issued after execution of the Contract. A Modification is (1) a written amendment to the Contract signed by both parties, (2) a Change Order, (3) a Construction Change Directive or (4) a written order for a minor change in the Work issued by the Prime. Unless specifically enumerated in the Agreement, the Contract Documents do not include other documents such as bidding requirements (advertisement or invitation to bid, Instructions to Bidders, sample forms, the Contractor's bid or portions of Addenda relating to bidding requirements) .

1.1.2 THE CONTRACT

The Contract Documents form the Contract for Construction. The Contract represents the entire and integrated agreement between the parties hereto and supersedes prior negotiations, representations or agreements, either written or oral. The Contract may be amended or modified only by a Modification. Nothing in the Contract Documents shall be construed to create a contractual relationship of any kind (1) between the Prime and Contractor, (2) between the Owner and a Subcontractor or Sub-subcontractor, (3) between the Owner and Prime or (4) between any persons or entities other than the Owner and Contractor. The Prime shall, however, be entitled to performance and enforcement of obligations under the Contract intended to facilitate performance of the Prime's duties.

1.1.3 THE WORK

The term "Work" means the construction services required by the Contract Documents, including all labor necessary to produce such construction, and all materials and equipment incorporated, or to be incorporated, therein. The Work may constitute the whole or a part of the Project.

1.1.4 THE PROJECT

The Project is the total construction described in the Agreement of which the Work performed under the Contract Documents may be the whole or a part and which may include construction by the Owner or by separate contractors.

1.1.5 THE DRAWINGS

The Drawings are the graphic and pictorial portions of the Contract Documents showing the design, location and dimensions of the Work, generally including plans, elevations, sections, details, schedules and diagrams.

1.1.6 THE SPECIFICATIONS

The Specifications are that portion of the Contract Documents consisting of the written requirements for materials, equipment, systems, standards and workmanship for the Work, and performance of related services.

1.1.7 THE PROJECT MANUAL
The Project Manual is a volume assembled for the Work which may include the bidding requirements, sample forms, Conditions of the Contract and Specifications.

1.2 CORRELATION AND INTENT OF THE CONTRACT DOCUMENTS

1.2.1 The intent of the Contract Documents is to include all items necessary for the proper execution and completion of the Work by the Contractor. The Contract Documents are complementary, and what is required by one shall be as binding as if required by all; performance by the Contractor shall be required only to the extent consistent with the Contract Documents and reasonably inferable from them as being necessary to produce the indicated results.

1.2.1.1 In the event of conflicts or discrepancies among the Contract Documents, interpretations will be based on the following priorities:

1. The Agreement

2. Addenda, with those of a later date having precedence over those of an earlier date.

3. The General Conditions of the Contract for Construction

.4 Drawings and Specifications.

1.2.1.2 All Work mentioned in contract Documents shall be performed by the Contractor as part of this Contract unless it is specifically indicated in the Contract Documents that such Work is to be done by others.

1.2.1.3 In the event of a conflict or inconsistency in or among the Contract documents, or between the Contract Documents and applicable codes in effect at the time the Contract Sum is bid or negotiated, the Contractor shall unless directed otherwise in writing by the Owner provide the greatest quantity, highest quality, highest degree of safety, and most stringent material, equipment or Work.

1.2.1.4 The Contractor shall refer, and shall direct all Subcontractors to refer, to all of the Drawings, including those showing primarily the Work of the Mechanical, Electrical, and other specialized trades, and to all Sections of the Specifications. with particular attention to the Sections of Division 1 - General Requirements, and shall perform all Work reasonably inferable therefrom as being necessary to produce the indicated results.

1.2.1.5 Sections of Division 1 - General Requirements govern the execution of all Sections of the Specifications..

1.2.2 Organization of the Specifications into divisions, sections and articles, and arrangement of Drawings shall not control the Contractor in dividing the Work among Subcontractors or in establishing the extent of Work to be performed by any trade.

1.2.3 Unless otherwise stated in the Contract Documents, words which have well-known technical or construction industry meanings are used in the Contract Documents in accordance with such recognized meanings.

1.3 CAPITALIZATION

1.3.1 Terms capitalized in these General Conditions include those which are (1) specifically defined, (2) the titles of numbered articles and identified references to Paragraphs, Subparagraphs and Clauses in the document or (3) the titles of other documents published by the American Institute of Architects.

1.4 INTERPRETATION

1.4.1 In the interest of brevity the Contract Documents frequently omit modifying words such as "all" and "any" and articles such as "the" and "an," but the fact that a modifier or an article is absent from one statement and appears in another is not intended to affect the interpretation of either statement.

1.5 EXECUTION OF CONTRACT DOCUMENTS

1.5.1 The Contract Documents shall be signed by the Owner and Contractor.

1.5.2 Execution of the Contract by the Contractor is a representation that the Contractor has visited the site, become generally familiar with local conditions under which the Work is to be performed and correlated personal observations with requirements of the Contract Documents.

1.6 OWNERSHIP AND USE OF DRAWINGS, SPECIFICATIONS AND OTHER INSTRUMENTS OF SERVICE

1.6.1 The Drawings, Specifications and other documents, including those in electronic form, prepared by the Prime and the Prime's consultants, describe the Work to be executed by the Contractor. Unless the Owner fails to pay the Prime, the Owner shall be deemed the owner of the Drawings, Specifications and other documents and shall have and retain all rights therein. In the event the Owner is adjudged to have failed to pay the Prime, ownership of such Drawings, Specifications and other documents, and all rights therein, shall revert to the Prime and its consultants. The Contractor may retain one record set. Neither the Contractor nor any Subcontractor, Sub-subcontractor or material or equipment supplier shall own or claim a copyright in the Drawings, Specifications and other documents prepared by the Prime or the Prime's consultants. All copies of such Drawings, Specifications and other documents, except the Contractor's record set, shall be returned or suitably accounted for to the Prime, on request, upon completion of the Work. The Drawings, Specifications and other documents prepared by the Prime and the Prime's consultants, and copies thereof furnished to the Contractor, are for use solely with respect to this Project. They are not to be used by the Contractor or any Subcontractor, Sub-subcontractor or material or equipment supplier on other projects or for additions to this Project outside the scope of the Work without the specific written consent of the Owner. The Contractor, Subcontractors, Sub-subcontractors and material or equipment suppliers are authorized to use and reproduce applicable portions of the Drawings, Specifications and other documents prepared by the Prime and the Prime's consultants appropriate to and for use in the execution of their Work under the Contract Documents. All copies made under this authorization shall bear the statutory copyright notice, if any, shown on the Drawings, Specifications and other documents prepared by the Prime and the Prime's consultants. Submittal or distribution to meet official regulatory requirements or for other purposes in connection with this Project is not to be construed as publication in derogation of the Prime's or Prime's consultants' copyrights or other reserved rights.

ARTICLE 2 - OWNER

2.1 GENERAL

2.1.1 The Owner is the person or entity identified as such in the Agreement and is referred to throughout the Contract Documents as if singular in number. The Owner shall designate in writing a representative who shall have authority to represent the Owner with respect to all matters requiring the Owner's representation. Except as otherwise provided in Subparagraph 4.2.1, the Prime does not have such authority. The term "Owner" means the Owner or the Owner's authorized representative.

2.2 INFORMATION AND SERVICES REQUIRED OF THE OWNER

2.2.1 The Owner shall furnish surveys describing physical characteristics, and utility locations for the site of the Project. The Contractor shall be entitled to rely on the accuracy of information furnished by the Owner but shall exercise proper precautions relating to the safe performance of the Work.

2.2.2 Information or services required of the Owner by the Contract Documents shall be furnished by the Owner with reasonable promptness.

2.2.3 Unless otherwise provided in the Contract Documents, the Contractor will be furnished, free of charge, an electronic copy of Drawings and Project Manuals necessary for execution of the Work.

2.3 OWNER'S RIGHT TO STOP THE WORK

2.3.1 If the Contractor fails to correct Work which is not in accordance with the requirements of the Contract Documents or fails to carry out Work in accordance with the Contract Documents, the Owner may issue a written order to the Contractor to stop the Work, or any portion thereof, until the cause for such order has been eliminated; however, the right of the Owner to stop the Work shall not give rise to a duty on the part of the Owner to exercise this right for the benefit of the Contractor or any other person or entity, except to the extent required by Subparagraph 6.1.3.

2.4 OWNER'S RIGHT TO CARRY OUT THE WORK

2.4.1 If the Contractor defaults or neglects to carry out the Work in accordance with the Contract Documents and fails within a seven-day period after receipt of written notice from the Owner to commence and continue correction of such default or neglect with diligence and promptness, the Owner may, without prejudice to other remedies the Owner may have, correct such deficiencies. In such case an appropriate Constructive Change Directive shall be issued deducting from payments then or thereafter due the Contractor the reasonable cost of correcting such deficiencies, including Owner's expenses and compensation for the Prime's additional services and expenses made necessary by such default, neglect or failure. Such action by the Owner and amounts charged to the Contractor are both subject to prior approval of the Prime.

ARTICLE 3 - CONTRACTOR

3.1 GENERAL

3.1.1 The Contractor is the person or entity identified as such in the Agreement and is referred to throughout the Contract Documents as if singular in number. The term "Contractor" means the Contractor or the Contractor's authorized representative.

3.1.2 The Contractor shall perform the Work in accordance with the Contract Documents.

3.1.3 The Contractor shall not be relieved of obligations to perform the Work in accordance with the Contract Documents either by activities or duties of the Prime in the Prime's administration of the Contract, or by tests, inspections or approvals required or performed by persons other than the Contractor.

3.2 REVIEW OF CONTRACT DOCUMENTS AND FIELD CONDITIONS BY CONTRACTOR

3.2.1 Since the Contract Documents are complementary, before starting each portion of the Work, the Contractor shall carefully study and compare the various Drawings and other Contract Documents relative to that portion of the Work, as well as the information furnished by the Owner pursuant to Subparagraph 2.2.3, shall take field measurements of any existing conditions related to that portion of the Work and shall observe any conditions at the site affecting it. Any errors, inconsistencies or omissions in the Contract Documents discovered by the Contractor shall be reported promptly to the Prime and the Owner as a request for information in such form as the Prime or Owner may require.

3.2.2 Any design errors or omissions noted by the Contractor during this review shall be reported promptly to the Architect and the Owner in writing. While the Contractor is not required to ascertain that the Contract Documents are in accordance with applicable laws, statutes, ordinances, building codes, and rules and regulations, but any nonconformity discovered by or made known to the Contractor shall be reported promptly to the Prime and the Owner in writing.

3.2.3 If the Contractor believes that additional cost or time is involved because of clarifications or instructions issued by the Prime in response to the Contractor's notices or requests for information pursuant to Subparagraphs 3.2.1 and 3.2.2, the Contractor shall make Claims as provided in Subparagraphs 4.3.6 and 4.3.7. If the Contractor fails to perform the obligations of Subparagraphs 3.2.1 and 3.2.2, the Contractor shall pay such costs and damages to the Owner as would have been avoided if the Contractor had performed such obligations. The Contractor shall not be liable to the Owner or Prime for damages resulting from errors, inconsistencies or omissions in the Contract Documents or for differences between field measurements or conditions and the Contract Documents unless the Contractor recognized, or in the exercise of ordinary care, reasonably should have recognized, such error, inconsistency, omission or difference and failed to report it in writing to the Prime and the Owner.

3.2.4 The Contractor shall give the Prime timely notice of any additional Drawings, Specifications, or instructions required to define the Work in Greater detail, or to permit the proper progress of the Work.

3.2.5 The Contractor shall not proceed with any Work not clearly and consistently defined in detail in the Contract Documents, but shall request additional Drawings, Specifications. or instructions from the Architect as provided in Subparagraph 3.2.4. if the Contractor proceeds with such Work without obtaining further Drawings. Specifications, or instructions, the Contractor shall correct the Work incorrectly performed at the Contractor's own expense.

3.2.6 Lack of indication on the Drawings, and in the Specifications, of items obviously needed to properly perform the Work of the Project, such as attachments, bolts, hangers, and other fastening devices, shall not relieve the Contractor from furnishing and installing these items.

3.3 SUPERVISION AND CONSTRUCTION PROCEDURES

3.3.1 The Contractor shall supervise and direct the Work, using the Contractor's best skill and attention. The Contractor shall be solely responsible for and have control over construction means, methods, techniques, sequences and procedures and for coordinating all portions of the Work under the Contract

3.3.2 The Contractor shall be responsible to the Owner for acts and omissions of the Contractor, the Contractor's employees, Subcontractors and their agents and employees, and other persons or entities performing or supplying the Work, or portions thereof, for or on behalf of the Contractor or any of its Subcontractors.

3.3.3 The Contractor shall be responsible for inspection of portions of Work already performed to determine that such portions are in proper condition to receive subsequent Work.

3.4 LABOR AND MATERIALS

3.4.1 Unless otherwise provided in the Contract Documents, the Contractor shall provide and pay for labor, materials, equipment, tools, construction equipment and machinery, water, heat, utilities, transportation, and other facilities and services necessary for proper execution and completion of the Work, whether temporary or permanent and whether or not incorporated or to be incorporated in the Work. The word "provide" shall mean furnish and install complete, including connection, unless otherwise specified.

3.4.2 The Contractor may make substitutions only with the consent of the Owner, after evaluation by the Prime and in accordance with a Change Order.

3.4.3 The Contractor shall enforce strict discipline and good order among the Contractor's employees and other persons carrying out the Contract.

3.4.4 The Contractor shall not permit unlicensed persons to perform Work for which licensing is required, or to operate equipment for which licensing to operate is required by the State of Rhode Island. The Contractor shall not permit employment of unfit persons or persons not skilled in tasks assigned to them.

3.5 WARRANTY

3.5.1 The Contractor warrants to the Owner and Prime that materials and equipment furnished under the Contract will be new and of recent manufacture, unless otherwise specified. and that all Work will be of good quality, non-hazardous to physical health and to the environment, asbestos free. free from faults and defects, and in conformance with the Contract Documents. Work not conforming to these requirements, including substitutions not properly approved and authorized, may be considered defective. The Contractor's warranty excludes remedy for damage or defect caused by abuse, modifications not executed by the Contractor, improper or insufficient maintenance, improper operation, or normal wear and tear and normal usage. If required by the Prime, or the Owner, the Contractor shall furnish satisfactory evidence as to the kind and quality of materials and equipment.

3.6 TAXES

3.6.1 The Owner is exempt from payment of sales taxes for materials directly incorporated into the Work of this Project. Refer to requirements set forth in the General Requirements (Division 1 of the Specifications).

3.7 PERMITS, FEES AND NOTICES

3.7.1 The Contractor shall secure and pay for the building permit and other permits and governmental fees, licenses and inspections necessary for proper execution and completion of the Work which are customarily secured after execution of the Contract and which are legally required when bids are received or, negotiations concluded, and for necessary approvals, easements. assessments, and charges required for construction, use, or occupancy of permanent structures or of permanent changes in existing facilities.

3.7.2 The Contractor shall comply with and give notices required by laws, ordinances, rules, regulations and lawful orders of public authorities applicable to performance of the Work.

3.7.3 While it is not the Contractor's responsibility to ascertain that the Contract Documents are in accordance with applicable laws, statutes, ordinances, building codes, and rules and regulations, if the Contractor observes that portions of the Contract Documents are at variance therewith, the Contractor shall promptly notify the Prime and Owner in writing, and necessary changes shall be accomplished by appropriate Modification.

3.7.4 If the Contractor performs Work knowing it to be contrary to laws, statutes, ordinances, building codes, and rules and regulations without such notice to the Prime and Owner, the Contractor shall assume responsibility for correction of such Work and shall bear the costs attributable to correction.

3.8 ALLOWANCES

3.8.1 The Contractor shall include in the Contract Sum all allowances stated in the Contract Documents. Items covered by allowances shall be supplied for such amounts and by such persons or entities as the Owner may direct, but the Contractor shall not be required to employ persons or entities to whom the Contractor has reasonable objection.

3.8.2 Unless otherwise provided in the Contract Documents:

.1 allowances shall cover the cost to the Contractor of materials and equipment delivered at the site and all required taxes, less applicable trade discounts;

.2 Contractor's costs for unloading and handling at the site, labor, installation costs, overhead, profit and other expenses contemplated for stated allowance amounts shall be included in the Contract Sum but not in the allowances;

.3 the Contractor shall carry in the Contract Sum, but not in the Allowances, all Bond costs, permit and other fees, etc. contemplated for the amount of the Allowances;

.4 whenever costs are more than or less than allowances, the Contract Sum shall be adjusted

accordingly by Change Order. The amount of the Change Order shall reflect (1) the difference between actual costs and the allowances under Clause 3.8.2.1 and (2) changes in Contractor's costs and other expenses under Clause 3.8.2.2.

3.8.3 Materials and equipment under an allowance shall be selected by the Owner in sufficient time to avoid delay in the Work.

3.9 SUPERINTENDENT (see 00700-41, for alternate: 3.9 PROJECT MANAGER AND SUPERINTENDENT)

3.9.1 The Contractor shall employ a competent superintendent and necessary assistants who shall be in attendance at the Project site during performance of the Work. The superintendent shall be satisfactory to the Owner. So long as the superintendent remains employed by the Contractor or any related entity, the superintendent shall not be replaced without the Owner's prior written consent. The superintendent shall represent the Contractor, and communications given to the superintendent shall be as binding as if given to the Contractor. Important communications shall be confirmed in writing. Other communications shall be similarly confirmed on written request in each case.

3.9.2 The superintendent shall not work with tools, or perform actual trades Work, but shall be dedicated to the on site management of the Project. The Contractor shall provide additional staff as required for Project Management, or as may be specified in the Specifications.

3.10 CONTRACTOR'S CONSTRUCTION SCHEDULES

3.10.1 The Contractor, within 20 working days of being awarded the Contract, shall prepare and submit for the Owner's and Architect's information a Contractor's construction schedule for the Work. The schedule shall not exceed time limits current under the Contract Documents, shall be revised at least monthly as required by the conditions of the Work and Project, shall be related to the entire Project to the extent required by the Contract Documents, and shall provide for expeditious and practicable execution of the Work.

3.10.2 The Contractor shall prepare and keep current, for the Prime's approval, a schedule of submittals which is coordinated with the Contractor's construction schedule and allows the Architect reasonable time to review submittals.

3.10.3 The Contractor shall perform the Work in general accordance with the most recent schedules submitted to the Owner and Prime.

3.11 DOCUMENTS AND SAMPLES AT THE SITE

3.11.1 The Contractor shall maintain at the site for the Owner one record copy of the Drawings, Specifications, Addenda, Change Orders and other Modifications, in good order and marked currently to record field changes and selections made during construction, and one record copy of approved Shop Drawings, Product Data, Samples and similar required submittals. These shall be available to the Prime and shall be delivered to the Prime for submittal to the Owner upon completion of the Work.

3.12 SHOP DRAWINGS, PRODUCT DATA AND SAMPLES

3.12.1 Shop Drawings are drawings, diagrams, schedules and other data specially prepared for the Work by the Contractor or a Subcontractor, Sub-subcontractor, manufacturer, supplier or distributor to illustrate some portion of the Work.

3.12.2 Product Data are illustrations, standard schedules, performance charts, instructions, brochures, diagrams and other information furnished by the Contractor to illustrate materials or equipment for some portion of the Work.

3.12.3 Samples are physical examples which illustrate materials, equipment or workmanship and establish standards by which the Work will be judged.

3.12.4 Shop Drawings, Product Data, Samples and similar submittals are not Contract Documents. The purpose of their submittal is to demonstrate for those portions of the Work for which submittals are required by the Contract Documents the way by which the Contractor proposes to conform to the information given and the design concept expressed in the Contract Documents. Review by the Prime is subject to the limitations of Subparagraph 4.2.6. Informational submittals upon which the Prime is not expected to take responsive action may be so identified in the Contract Documents. Submittals which are not required by the Contract Documents may be returned by the Prime without action.

3.12.5 The Contractor shall review for compliance with the Contract Documents, approve and submit to the Prime Shop Drawings, Product Data, Samples and similar submittals required by the Contract Documents with reasonable promptness and in such sequence as to cause no delay in the Work or in the activities of the Owner or of separate contractors. Submittals which are not marked as reviewed for compliance with the Contract Documents and approved by the Contractor may be returned by the Prime without action.

3.12.6 By approving and submitting Shop Drawings, Product Data, Samples and similar submittals, the Contractor represents that the Contractor has determined and verified materials, field measurements and field construction criteria related thereto, or will do so, and has checked and coordinated the information contained within such submittals with the requirements of the Work and of the Contract Documents.

3.12.7 The Contractor shall perform no portion of the Work for which the Contract Documents require submittal and review of Shop Drawings, Product Data, Samples or similar submittals until the respective submittal has been approved by the Prime.

3.12.8 The Work shall be in accordance with approved submittals except that the Contractor shall not be relieved of responsibility for deviations from requirements of the Contract Documents by the Prime's approval of Shop Drawings, Product Data, Samples or similar submittals unless the Contractor has specifically informed the Prime in writing of such deviation at the time of submittal and (l) the Prime has, with prior approval of the Owner, given written approval to the specific deviation as a minor change in the Work, or (2) a Change Order or Construction Change Directive has been issued authorizing the deviation. The Contractor shall not be relieved of responsibility for errors or omissions in Shop Drawings, Product Data, Samples or similar submittals by the Prime's approval thereof.

3.12.9 The Contractor shall direct specific attention, in writing or on resubmitted Shop Drawings, Product Data, Samples or similar submittals, to revisions other than those requested by the Prime on previous submittals. In the absence of such written notice the Prime's approval of a resubmission shall not apply to such revisions.

3.12.10 The Contractor shall not be required to provide professional services which constitute the practice of architecture or engineering unless such services are specifically required by the Contract Documents for a portion of the Work or unless the Contractor needs to provide such services in order to carry out the Contractor's responsibilities for construction means, methods, techniques, sequences and procedures. The Contractor shall not be required to provide professional services in violation of applicable law. If professional design services or certifications by a design professional related to systems, materials or equipment are specifically required of the Contractor by the Contract Documents, the Owner and the Prime will specify all performance and design criteria that such services must satisfy. The Contractor shall cause such services or certifications to be provided by a properly licensed design professional, whose signature and seal shall appear on all drawings, calculations, specifications, certifications, Shop Drawings and other submittals prepared by such professional. Shop Drawings and other submittals related to the Work designed or certified by such professional, if prepared by others; shall bear such professional's written approval when submitted to the Prime. The Owner and the Prime shall be entitled to rely upon the adequacy, accuracy and completeness of the services, certifications or approvals performed by such design professionals, provided the Owner and Prime have specified to the Contractor all performance and design criteria that such services must satisfy. Pursuant to this Subparagraph 3.12.10, the Prime will review, approve or take other appropriate action on submittals only for the limited purpose of checking for conformance with information given and the design concept expressed in the Contract Documents. The Contractor shall not be responsible for the adequacy of the performance or design criteria required by the Contract Documents.

3.13 USE OF SITE

3.13.1 The Contractor shall confine operations at the site to areas permitted by law, ordinances, permits and the Contract Documents and shall not unreasonably encumber the site with materials or equipment.

3.14 CUTTING AND PATCHING

3.14.1 The Contractor shall be responsible for cutting, fitting or patching required to complete the Work or to make its parts fit together properly.
3.14.2 The Contractor shall not damage or endanger a portion of the Work or fully or partially completed construction of the Owner or separate contractors by cutting, patching or otherwise altering such construction, or by excavation. The Contractor shall not cut or otherwise alter such construction by the Owner or a separate contractor except with written consent of the Owner and of such separate contractor; such consent shall not be unreasonably withheld. The Contractor shall not unreasonably withhold from the Owner or a separate contractor the Contractor's consent to cutting or otherwise altering the Work.

3.15 CLEANING UP

3.15.1 The Contractor shall keep the premises and surrounding area free from accumulation of waste materials or rubbish caused by operations under the Contract. At completion of the Work, the Contractor shall remove from and about the Project waste materials, rubbish, the Contractor's tools, construction equipment, machinery and surplus materials.

3.15.2 If the Contractor fails to clean up as provided in the Contract Documents, the Owner may do so and the cost thereof shall be charged to the Contractor.

3.16 ACCESS TO WORK

3.16.1 The Contractor shall provide the Owner and Prime and Prime’s consultants access to the Work in preparation and progress wherever located.

3.17 ROYALTIES, PATENTS AND COPYRIGHTS

3.17.1 The Contractor shall pay all royalties and license fees. The Contractor shall defend suits or claims for infringement of patent rights and shall hold the Owner and Prime harmless from loss on account thereof, but shall not be responsible for such defense or loss when a particular design, process or product of a particular manufacturer or manufacturers is required by the Contract Documents or where the copyright violations are contained in Drawings, Specifications or other documents prepared by the Owner or Prime. However, if the Contractor has reason to believe that the required design, process or product is an infringement of a copyright or a patent, the Contractor shall be responsible for such loss unless such belief is promptly furnished in writing to the Prime and the Owner.

3.18 INDEMNIFICATION

3.18.1 To the fullest extent permitted by law, the Contractor shall indemnify and hold harmless the Owner, Prime, Prime's consultants, and agents and employees of any of them from and against claims, damages, losses and expenses, including but not limited to attorneys' fees, arising out of or resulting from performance of the Work, provided that such claim, damage, loss or expense is attributable to bodily injury, sickness, disease or death, or to injury to or destruction of tangible property (other than the Work itself), but only to the extent caused by the negligent acts or omissions of the Contractor, a Subcontractor, anyone directly or indirectly employed by them or anyone for whose acts they may be liable, regardless of whether or not such claim, damage, loss or expense is caused in part by a party indemnified hereunder. Such obligation shall not be construed to negate, abridge, or reduce other rights or obligations of indemnity which would otherwise exist as to a party or person described in this Paragraph 3. 18.

3.18.2 In claims against any person or entity indemnified under this Paragraph 3.18 by an employee of the Contractor, a

Subcontractor, anyone directly or indirectly employed by them or anyone for whose acts they may be liable, the indemnification obligation under Subparagraph 3.18.1 shall not be limited by a limitation on amount or type of damages, compensation or benefits payable by or for the Contractor or a Subcontractor under workers' compensation acts, disability benefit acts or other employee benefit acts.

ARTICLE 4 - ADMINISTRATION OF THE CONTRACT

4.1 PRIME

4.1.1 The Prime is the person lawfully licensed to practice architecture or engineering or an entity lawfully practicing architecture or engineering identified as such in the Agreement and is referred to throughout the Contract Documents as if singular in number. The term "Prime" means the Prime or the Prime's authorized representative.

4.1.2 Duties, responsibilities and limitations of authority of the Prime as set forth in the Contract Documents shall not be restricted, modified or extended without written consent of the Owner, Contractor and Prime. Consent shall not be unreasonably withheld.

4.1.3 If the employment of the Prime is terminated, the Owner shall employ a new Prime against whom the Contractor has no reasonable objection and whose status under the Contract Documents shall be that of the former Prime.

4.2 PRIME'S ADMINISTRATION OF THE CONTRACT

4.2.1 The Prime will provide administration of the Contract as described in the Contract Documents, and will be an Owner's representative (1) during construction, (2) until final payment is due and (3) with the Owner's concurrence, from time to time during the one-year period for correction of Work described in Paragraph 12.2. The Prime will advise and consult with the Owner. The Prime will have authority to act on behalf of the Owner only to the extent provided in the Contract Documents, unless otherwise modified in writing in accordance with other provisions of the Contract.

4.2.2 The Prime, as a representative of the Owner, will visit the site at intervals appropriate to the stage of the Contractor's operations or as otherwise agreed by the Owner and the Prime (1) to become familiar with and to keep the Owner informed about the progress and quality of the portion of the Work completed, (2) to endeavor to guard the Owner against defects and deficiencies in the Work, and (3) to determine if the Work is being performed in accordance with the Contract Documents.

4.2.3 Communications Facilitating Contract Administration: Except as otherwise provided in the Contract Documents, the Owner and Contractor shall initially endeavor to communicate with each other through the Prime about matters arising out of or relating to the Contract. Communications by and with the Prime's consultants shall be through the Prime. Communications by and with Subcontractors and material suppliers shall be through the Contractor. Communications by and with separate contractors shall be through the Owner.

4.2.4 Based on the Prime's evaluations of the Work as provided in Subparagraph 4.2.2 and the data comprising the Contractor's Applications for Payment, the Prime will review and certify the amounts due the Contractor and will issue Certificates for Payment in such amounts.

4.2.5 The Prime will reject Work that does not conform to the Contract Documents. Whenever the Prime considers it necessary or advisable, the Prime will have authority to require inspection or testing of the Work in accordance with Subparagraphs 13.5.2 and 13.5.3, whether or not such Work is fabricated, installed or completed. However, neither this authority of the Prime nor a decision made in good faith either to exercise or not to exercise such authority shall give rise

to a duty or responsibility of the Prime or the Owner to the Contractor, Subcontractors, material and equipment suppliers, their agents or employees, or other persons or entities performing portions of the Work.

4.2.6 The Prime will review and approve or take other appropriate action upon the Contractor's submittals such as Shop Drawings, Product Data and Samples, but only for the limited purpose of checking for conformance with information given and the design concept expressed in the Contract Documents. The Prime's action will be taken with such reasonable promptness as to cause no delay in the Work or in the activities of the Owner, Contractor or separate contractors, while allowing sufficient time in the Prime's professional judgment to permit adequate review. Review of such submittals is not conducted for the purpose of determining the accuracy and completeness of other details such as dimensions and quantities, or for substantiating instructions for installation or performance of equipment or systems, all of which remain the responsibility of the Contractor as required by the Contract Documents. The Prime's review of the Contractor's submittals shall not relieve the Contractor of the obligations under Paragraphs 3.3, 3.5 and 3.12. The Prime's review shall not constitute approval of safety precautions or, unless otherwise specifically stated by the Prime, of any construction means, methods, techniques, sequences or procedures. The Prime's approval of a specific item shall not indicate approval of an assembly of which the item is a component.

4.2.7 The Prime will prepare Change Orders and Construction Change Directives, and may, with prior approval of the Owner, authorize minor changes in the Work as provided in Paragraph 7.4.

4.2.8 The Prime will conduct inspections to determine the date or dates of Substantial Completion and the date of final completion, will receive and forward to the Owner, for the Owner's review and records, written warranties and related documents required by the Contract and assembled by the Contractor, and will issue a Final Certificate for Payment upon compliance with the requirements of the Contract Documents.

4.2.9 If the Owner and Prime agree, the Prime will provide one or more project representatives to assist in carrying out the Prime's responsibilities at the site. The duties, responsibilities and limitations of authority of such project representatives shall be as set forth in an exhibit to be incorporated in the Contract Documents.

4.2.10 The Prime will initially interpret and decide matters concerning performance under, and requirements of, the Contract Documents on written request of either the Owner or Contractor. The Prime's response to such requests will be made in writing within any time limits agreed upon or otherwise with reasonable promptness. If no agreement is made concerning the time within which interpretations required of the Prime shall be furnished in compliance with this Paragraph 4.2, then delay shall not be recognized on account of failure by the Prime to furnish such interpretations until 15 days after written request is made for them.

4.2.11 Initial interpretations and decisions of the Prime will be consistent with the intent of and reasonably inferable from the Contract Documents and will be in writing or in the form of drawings. When making such initial interpretations and decisions, the Prime will endeavor to secure faithful performance by both Owner and Contractor, will not show partiality to either, and will not be liable for results of initial interpretations or decisions so rendered in good faith.

4.2.12 The Prime's decisions on matters relating to aesthetic effect will be final if consistent with the intent expressed in the Contract Documents.

4.3 CLAIMS AND DISPUTES

4.3.1 Definition: A Claim is a demand or assertion by one of the parties seeking, as a matter of right, adjustment of Contract terms, payment of money, extension of time or other relief with respect to the terms of the Contract. The term "Claim" also includes other disputes and matters in question between the Owner and Contractor arising out of or relating to the Contract. Claims shall be initiated by written notice and shall be expressly stated to be a claim under this Paragraph 4.3. The responsibility to substantiate Claims shall rest with the party making the Claim.

4.3.2 Time Limits on Claims: Claims by either party shall be initiated within 21 days after occurrence of the event giving rise to such Claim or within 21 days after the claimant first recognizes the condition giving rise to the Claim, whichever is later. Claims shall be initiated by written notice to the Prime and the other party.

4.3.3 Continuing Contract Performance: Pending final resolution of a Claim except as otherwise agreed in writing or as provided in Subparagraph 9.7.1 and Article 14, the Contractor shall proceed diligently with performance of the Contract and the Owner shall continue to make payments in accordance with the Contract Documents.

4.3.4 Claims for Concealed or Unknown Conditions. If conditions are encountered at the site which are (1) subsurface or otherwise concealed physical conditions which differ materially from those indicated in the Contract Documents or (2) unknown physical conditions of an unusual nature, which differ materially from those ordinarily found to exist and generally recognized as inherent in construction activities of the character provided for in the Contract Documents, then notice by the observing party shall be given to the other party promptly before conditions are disturbed and in no event later than 21 days after first observance of the conditions. The Prime will promptly investigate such conditions and, if they differ materially and cause an increase or decrease in the Contractor's cost of, or time required for, performance of any part of the Work, will recommend an equitable adjustment in the Contract Sum or Contract Time, or both. If the conditions at the site are not materially different from those indicated in the Contract Documents and do not justify changes in the terms of the Contract, the Prime shall so notify the Owner and Contractor in writing, stating the reasons. Claims by either party in opposition to such findings must be made within 21 days after the Prime has given notice of the finding. If the conditions encountered are materially different, the Contract Sum and Contract Time shall be equitably adjusted, but if the Owner and Contractor cannot agree that the conditions are materially different or cannot agree on an adjustment in the Contract Sum or Contract Time, the matter shall subject to further proceedings pursuant to Paragraph 4.4.

4.3.5 Claims for Additional Cost: If the Contractor wishes to make Claim for an increase in the Contract Sum, written notice as provided herein shall be given before proceeding to execute the Work. Such notice shall include, to the extent then known by Contractor, full details and substantiating data to permit evaluation by the Owner and Prime. If further, or other, information subsequently becomes known to the Contractor, it shall be promptly furnished to the Owner and the Prime in writing. Prior notice is not required for Claims relating to an emergency endangering life or property arising under Paragraph 10.6.

4.3.6 If the Contractor believes additional cost is involved for reasons including but not limited to (1) a written interpretation from the Prime, (2) an order by the Owner to stop the Work where the Contractor was not at fault, (3) a written order for a minor change in the Work issued by the Prime, (4) failure of payment by the Owner, (5) termination of the Contract by the Owner, (6) Owner's suspension or (7) other reasonable grounds, Claim shall be filed in accordance with this Paragraph 4.3. Failure to file any such Claim in accordance with this Paragraph 4.3 shall constitute a waiver thereof.

4.3.7 Claims for Additional Time. If the Contractor wishes to make Claim for an increase in the Contract Time, written notice as provided herein shall be given. The Contractor's Claim shall include an estimate of cost and of probable effect of delay on progress of the Work. In the case of a continuing delay only one Claim is necessary.

4.3.7.1 If adverse weather conditions are the basis for a Claim for additional time, such Claim shall be documented by data substantiating that weather conditions at the Project site were abnormal for the period of time, could not have been reasonably anticipated and had an adverse effect on the scheduled construction.

4.3.8 Injury or Damage to Person or Property: If either party to the Contract suffers injury or damage to person or property because of an act or omission of the other party, or of others for whose acts such party is legally responsible, written notice of such injury or damage, whether or not insured, shall be given to the other party within a reasonable time not exceeding 2 l days after discovery. The notice shall provide sufficient time to enable the other party to investigate the matter.

4.3.9 If unit prices are stated in the Contract Documents or subsequently agreed upon, and if quantities originally contemplated are materially changed in a proposed Change Order or Construction Change Directive so that application of such unit prices to quantities of Work proposed will cause substantial inequity to the Owner or Contractor, the applicable unit prices shall be equitably adjusted.

4.3.10 Waiver of Claims: The Contractor waives Claims against the Owner for principal office expenses including the compensation of personnel stationed there, except those directly assigned to the Project to the extent of such assignment.

4.3.11 In no event shall a Contractor have a claim for damages against the Owner, the Prime, or the Owner's Project Manager, on account of a delay in the commencement of the Work, and/or a hindrance, delay, or suspension of a portion thereof, whether such delay is caused by the Owner, the Prime, or the Owner's Project Manager, or otherwise, except as provided for under State of Rhode Island General Laws. The Contractor's sole remedy shall be extension of time to complete the project.

4.4 RESOLUTION OF CLAIMS AND DISPUTES

4.4.1 Decision of the Prime: Claims, including those alleging an error or omission by the Prime but excluding those arising under Paragraphs 10.3 through 10.5, may, upon request of both the Owner and the Contractor, be referred initially to the Prime for a recommendation.

4.4.2 The Prime will review all Claims referred and within ten days of the receipt of the Claim take one or more of the following actions: (l) request additional supporting data from the claimant or a response with supporting data from the other party, (2) recommend rejecting the Claim in whole or in part, (3) recommend approval of the Claim, (4) recommend a compromise, or (5) advise the parties that the Prime is unable to make a recommendation if the Prime lacks sufficient information to evaluate the merits of the Claim or if the Prime concludes that, in the Prime's sole discretion, it would be inappropriate for the Prime to make a recommendation.

4.4.3 In evaluating Claims, the Prime may, but shall not be obligated to, consult with or seek information from either party.

4.4.4 If the Prime requests a party to provide a response to a Claim or to furnish additional supporting data, such party shall respond, within ten days after receipt of such request, and shall either provide a response on the requested supporting data, advise the Prime when the response or supporting data will be furnished or advise the Prime that no supporting data will be furnished. Upon receipt of the response or supporting data, if any, the Prime will take one of the last four (4) numbered actions contemplated in Subparagraph 4.4.2, in writing, stating the reasons therefor.

4.4.5 If a Claim relates to or is the subject of a mechanic's lien, the party asserting such Claim may proceed in accordance with applicable law to comply with the lien notice or filing deadlines prior to final resolution of the Claim.

4.5 MEDIATION

4.5.1 Any Claim arising out of or related to the Contract, except Claims relating to aesthetic effect and except those waived as provided for in Subparagraphs 4.3.10, 9.10.3 and 9.10.4 shall be subject to mediation as a condition precedent to arbitration or the institution of legal or equitable proceedings by either party.

4.5.2 The parties shall endeavor to resolve their Claims by mediation which, unless the parties mutually agree otherwise, shall be in accordance with the Construction Industry Mediation Rules of the American Arbitration Association currently in effect. Request for mediation shall be filed in writing with the other party to the Contract and with the American Arbitration Association. The request may be made concurrently with the filing of a demand for arbitration but, in such event, mediation shall proceed in advance of arbitration or legal or equitable proceedings, which shall be stayed pending mediation for a period of 60 days from the date of filing, unless stayed for a longer period by agreement of the parties or court order.

4.5.3 The parties shall share the mediator's fee and any filing fees equally. The mediation shall be held in the place where the Project is located, unless another location is mutually agreed upon. Agreements reached in mediation shall be enforceable as settlement agreements in any court having jurisdiction thereof.

4.6 ARBITRATION

4.6.1 Any Claim arising out of or related to the Contract, except Claims relating to aesthetic effect and except those waived as provided for in Subparagraphs 4.3.10, 9.10.3 and 9.10.4, shall, after decision by the Prime or 30 days after submission of the Claim to the Prime, be subject to arbitration. Prior to arbitration, the parties shall endeavor to resolve disputes by mediation in accordance with the provisions of Paragraph 4.5.

4.6.2 Claims not resolved by mediation shall be decided by arbitration which, unless the parties mutually agree otherwise, shall be in accordance with the Construction Industry Arbitration Rules of the American Arbitration Association currently in effect. The demand for arbitration shall be filed in writing with the other party to the Contract and with the American Arbitration Association, and a copy shall be filed with the Prime.

4.6.3 A demand for arbitration shall be made within the time limits specified in Subparagraphs 4.5.2 and 4.6.1 as applicable, and in other cases within a reasonable time after the Claim has arisen, and in no event shall it be made after the date when institution of legal or equitable proceedings based on such Claim would be barred by the applicable statute of limitations as determined pursuant to Paragraph 13.7.

4.6.4 Limitation on Consolidation or Joinder: No arbitration arising out of or relating to the Contract shall include, by consolidation or joinder or in any other manner, the Prime, the Prime's employees or consultants, except by written consent containing specific reference to the Agreement and signed by the Prime, Owner, Contractor and any other person or entity sought to be joined. No arbitration shall include, by consolidation or joinder or in any other manner, parties other than the Owner, Contractor, a separate contractor as described in Article 6 and other persons substantially involved in a common question of fact or law whose presence is required if complete relief is to be accorded in arbitration. No person or entity other than the Owner, Contractor or a separate contractor as described in Article 6 shall be included as an original third party or additional third party to an arbitration whose interest or responsibility is insubstantial. Consent to arbitration involving an additional person or entity shall not constitute consent to arbitration of a Claim not described therein or with a person or entity not named or described therein. The foregoing agreement to arbitrate and other agreements to arbitrate with an additional person or entity duly consented to by parties to the Agreement shall be specifically enforceable under applicable law in any court having jurisdiction thereof.

4.6.5 Claims and Timely Assertion of Claims: The party filing a notice of demand for arbitration must assert in the demand all Claims then known to that party on which arbitration is permitted to be demanded.

4.6.6 Judgment on Final Award: The award rendered by the arbitrator or arbitrators shall be final, and judgment may be entered upon it in accordance with applicable law in any court having jurisdiction thereof.

ARTICLE 5 - SUBCONTRACTORS

5.1 DEFINITIONS

5.1.1 A Subcontractor is a person or entity who has a direct contract with the Contractor to perform a portion of the Work at the site. The term "Subcontractor" is referred to throughout the Contract Documents as if singular in number and means a Subcontractor or an authorized representative of the Subcontractor. The term "Subcontractor" does not include a separate contractor or subcontractors of a separate contractor.

5.1.2 A Sub-subcontractor is a person or entity who has a direct or indirect contract with a Subcontractor to perform a portion of the Work at the site. The term "Sub-subcontractor" is referred to throughout the Contract Documents as if singular in number and means a Sub-subcontractor or an authorized representative of the Sub-subcontractor.

5.2 AWARD OF SUBCONTRACTS AND OTHER CONTRACTS FOR PORTIONS OF THE WORK

5.2.1 Unless otherwise stated in the Contract Documents or the bidding requirements, the Contractor, as soon as practicable, but not less than 60 calendar days, after award of the Contract, or 30 calendar days prior to the start of that section of Work, which ever is sooner, shall furnish in writing to the Owner through the Prime the names of persons or entities (including those who are to furnish materials or equipment fabricated to a special design) proposed for each principal portion of the Work. The Prime will promptly reply to the Contractor in writing stating whether or not the

Owner or the Prime, after due investigation, has reasonable objection to any such proposed person or entity. Failure of the Owner or Prime to reply promptly shall constitute notice of no reasonable objection.

5.2.2 The Contractor shall not contract with a proposed person or entity to whom the Owner or Prime has made reasonable and timely objection. The Contractor shall not be required to contract with anyone to whom the Contractor has made reasonable objection.

5.2.3 If the Owner or Prime has reasonable objection to a person or entity proposed by the Contractor, the Contractor shall propose another to whom the Owner or Prime has no reasonable objection. If the proposed but rejected Subcontractor was reasonably capable of performing the Work, the Contract Sum and Contract Time shall be increased or decreased by the difference, if any, occasioned by such change, and an appropriate Change Order shall be issued before commencement of the substitute Subcontractor's Work. However, no increase in the Contract Sum or Contract Time shall be allowed for such change unless the Contractor has acted promptly and responsively in submitting names as required.

5.2.4 The Contractor shall not change a Subcontractor, person or entity previously selected if the Owner or Prime makes reasonable objection to such substitute.

5.3 SUBCONTRACTUAL RELATIONS

5.3.1 By appropriate written agreement, the Contractor shall require each Subcontractor, to the extent of the Work to be performed by the Subcontractor, to be bound to the Contractor by terms of the Contract Documents, and to assume toward the Contractor all the obligations and responsibilities, including the responsibility for safety of the Subcontractor's Work, which the Contractor, by these Documents, assumes toward the Owner and Prime. Each subcontract agreement shall preserve and protect the rights of the Owner and Prime under the Contract Documents with respect to the Work to be performed by the Subcontractor so that subcontracting thereof will not prejudice such rights, and shall allow to the Subcontractor, unless specifically provided otherwise in the subcontract agreement, the benefit of all rights, remedies and redress against the Contractor that the Contractor, by the Contract Documents, has against the Owner. Where appropriate, the Contractor shall require each Subcontractor to enter into similar agreements with Sub-subcontractors. The Contractor shall make available to each proposed Subcontractor, prior to the execution of the subcontract agreement, copies of the Contract Documents to which the Subcontractor will be bound, and, upon written request of the Subcontractor, identify to the Subcontractor terms and conditions of the proposed subcontract agreement which may be at variance with the Contract Documents. Subcontractors will similarly make copies of applicable portions of such documents available to their respective proposed Sub-subcontractors.

5.3.2 In the event that the General Contractor or a sub-contractor to the General Contractor, employees independent contractors. as well as payroll labor, to discharge its responsibilities and obligations, the General Contractor acknowledges and understands that is does so, or allows it's subcontractors to do so, at it's own risk and that federal, state, and / or local agencies may dispute the independent contractor status and assess penalties, fines and costs should there be a determination to reclassify such workers. In that event, the General Contractor agrees that it will defend, indemnify, and hold harmless the Owner from any fines, costs, damages, claims, penalties, attorney's fees, and causes of action, including without limitation, personal injury or property damage, arising out of or relating in any way to such a determination.

5.4 CONTINGENT ASSIGNMENT OF SUBCONTRACTS

5.4.1 Each subcontract agreement for a portion of the Work is assigned by the Contractor to the Owner provided that:

.1 assignment is effective only after termination of the Contract by the Owner for cause pursuant to Paragraph 14.2 and only for those subcontract agreements which the Owner accepts by notifying the Subcontractor and Contractor in writing; and

.2 assignment is subject to the prior rights of the surety, if any, obligated under bond relating to the Contract.

5.4.2 Upon such assignment, if the Work has been suspended for more than 30 days, the Subcontractor's compensation shall be equitably adjusted for increases in cost, if any, resulting from the suspension.

ARTICLE 6 - CONSTRUCTION BY OWNER OR BY SEPARATE CONTRACTORS

6.1 OWNER'S RIGHT TO PERFORM CONSTRUCTION AND TO AWARD SEPARATE CONTRACTS

6.1.1 The Owner reserves the right to perform construction or operations related to the Project with the Owner's own forces, and to award separate contracts in connection with other portions of the Project or other construction or operations on the site under Conditions of the Contract identical or substantially similar to these including those portions related to insurance and waiver of subrogation.

6.1.2 When separate contracts are awarded for different portions of the Project or other construction or operations on the site, the term "Contractor" in the Contract Documents in each case shall mean the Contractor who executes each separate Owner-Contractor Agreement.

6.1.3 The Owner shall provide for coordination of the activities of the Owner's own forces and of each separate contractor with the Work of the Contractor, who shall cooperate with them. The Contractor shall participate with other separate contractors and the Owner in reviewing their construction schedules and performance requirements when directed to do so. The Contractor shall make any revisions to the construction schedule deemed necessary after a joint review and mutual agreement. The construction schedules shall then constitute the schedules to be used by the Contractor, separate contractors and the Owner until subsequently revised.

6.1.4 Unless otherwise provided in the Contract Documents, when the Owner performs construction or operations related to the Project with the Owner's own forces, the Owner shall be deemed to be subject to the same obligations and to have the same rights which apply to the Contractor under the Conditions of the Contract, including, without excluding others, those stated in Article 3, this Article 6 and Articles 10, l l and 12.

6.2 MUTUAL RESPONSIBILITY

6.2.1 The Contractor shall afford the Owner and separate contractors reasonable opportunity for introduction and storage of their materials and equipment and performance of their activities, and shall connect and coordinate the Contractor's construction and operations with theirs as required by the Contract Documents.

6.2.2 If part of the Contractor's Work depends for proper execution or results upon construction or operations by the Owner or a separate contractor, the Contractor shall, prior to proceeding with that portion of the Work, promptly report to the Architect apparent discrepancies or defects in such other construction that would render it unsuitable for such proper execution and results. Failure of the Contractor so to report shall constitute an acknowledgment that the Owner's or separate contractor's completed or partially completed construction is fit and proper to receive the Contractor's Work, except as to defects not then reasonably discoverable.

6.2.3 The Owner shall be reimbursed by the Contractor for costs incurred by the Owner which are payable to a separate contractor because of delays, improperly timed activities or defective construction of the Contractor. The Owner shall be responsible to the Contractor for costs incurred by the Contractor because of delays, improperly timed activities, damage to the Work or defective construction of a separate contractor.

6.2.4 The Contractor shall promptly remedy damage wrongfully caused by the Contractor to completed or partially completed construction or to property of the Owner or separate contractors as provided in Subparagraph 10.2.5.

6.2.5 The Owner and each separate contractor shall have the same responsibilities for cutting and patching as are described for the Contractor in Subparagraph 3.14.

6.3 OWNER'S RIGHT TO CLEAN UP

6.3.1 If a dispute arises among the Contractor, separate contractors and the Owner as to the responsibility under their respective contracts for maintaining the premises and surrounding area free from waste materials and rubbish, the Owner may clean up and the Prime will allocate the cost among those responsible.

ARTICLE 7 - CHANGES IN THE WORK

7.1 GENERAL

7.1.1 Changes in the Work may be accomplished after execution of the Contract, and without invalidating the Contract, by Change Order, Construction Change Directive or order for a minor change in the Work, subject to the limitations stated in this Article 7 and elsewhere in the Contract Documents.

7.1.2 A Change Order shall be based upon agreement among the Owner, Contractor and Prime; a Construction Change Directive requires agreement by the Owner and Prime and may or may not be agreed to by the Contractor; an order for a minor change in the Work may be issued by the Prime alone.

7.1.3 Changes in the Work shall be performed under applicable provisions of the Contract Documents, and the Contractor shall proceed promptly, unless otherwise provided in the Change Order, Construction Change Directive or order for a minor change in the Work.

7.2 CHANGE ORDERS

7.2.1 A Change Order is a written instrument prepared by the Prime and signed by the Owner, Contractor and Prime, stating their agreement upon all of the following:

.1 change in the Work;

.2 the amount of the adjustment, if any, in the Contract Sum; and

.3 the extent of the adjustment, if any, in the Contract Time.

7.2.2 Methods used in determining adjustments to the Contract Sum may include those listed in Subparagraph 7.3.3.

7.3 CONSTRUCTION CHANGE DIRECTIVES

7.3.1 A Construction Change Directive is a written order prepared by the Prime and signed by the Owner and Prime, directing a change in the Work prior to agreement on adjustment, if any, in the Contract Sum or Contract Time, or both. The Owner may by Construction Change Directive, without invalidating the Contract, order changes in the Work within the general scope of the Contract consisting of additions, deletions or other revisions, the Contract Sum and Contract Time being adjusted accordingly.

7.3.2 A Construction Change Directive shall be used in the absence of total agreement on the terms of a Change Order.

7.3.3 If the Construction Change Directive provides for an adjustment to the Contract Sum, the adjustment shall be based on one of the following methods:

.l mutual acceptance of a lump sum properly itemized and supported by sufficient substantiating data to permit evaluation;

.2 unit prices stated in the Contract Documents or subsequently agreed upon;

.3 cost to be determined in a manner agreed upon by the parties and a mutually acceptable fixed or percentage fee; or

.4 as provided in Subparagraph 7.3.6.

7.3.4 Upon receipt of a Construction Change Directive, the Contractor shall promptly proceed with the change in the Work involved and advise the Prime in writing of the Contractor's agreement or disagreement with the method, if any, provided in the Construction Change Directive for determining the proposed adjustment in the Contract Sum or Contract Time.

7.3.5 A Construction Change Directive signed by the Contractor indicates the agreement of the Contractor therewith, including any adjustment in Contract Sum and Contract Time or the method for determining them. Such agreement shall be effective immediately and shall be recorded as a Change Order.

7.3.6 If the Contractor does not respond promptly or disagrees with the method for adjustment in the Contract Sum, the method and the adjustment shall be determined by the Prime on the basis of reasonable expenditures and savings of those performing the Work attributable to the change, in accordance with Clauses 7.3.9.1 through 7.3.9.6 below. In such case, and also under Clause 7.3.3.3, the Contractor shall keep and present, in such form as the Prime or the Owner may prescribe, an itemized accounting together with appropriate supporting data. Unless otherwise provided in the Contract Documents, costs for the purposes of this Subparagraph 7.3.6 shall be limited to the following:

.1 costs of labor, including social security, old age and unemployment insurance, and fringe benefits required by agreement or custom;

.2 costs of materials, supplies and equipment, including cost of transportation, whether incorporated or consumed;

.3 rental value of machinery and equipment, exclusive of hand tools, whether rented from the Contractor or others; and

.4 costs of permit fees, and sales, use or similar taxes related to the Work.

7.3.7 Pending final determination of the total cost of a Construction Change Directive to the Owner, amounts not in dispute for such changes in the Work shall be included in Applications for Payment accompanied by a Change Order indicating the parties' agreement with part or all of such costs. For any portion of such cost that remains in dispute, the Prime will make an interim determination for purposes of monthly certification for payment for those costs. That determination of cost shall adjust the Contract Sum on the same basis as a Change Order, subject to the right of either party to disagree and assert a claim in accordance with Article 4.

7.3.8 When the Owner and Contractor agree concerning the adjustments in the Contract Sum and Contract Time, such agreement shall be effective immediately and shall be recorded by preparation and execution of an appropriate Change Order.

7.3.9 In Subparagraph 7.3.6, the allowance for the combined overhead and profit included in the total cost to the Owner shall be based on the following schedule:

.1 For the Contractor, for Work performed by the Contractor's own forces, 10 percent of the cost.

.2 For the Contractor, for Work performed by the Contractor's Subcontractor, 6 percent of the amount due the Subcontractor.

.3 For each Subcontractor or Sub-subcontractor involved, for Work performed by that Subcontractor's, or Sub-subcontractor's, own forces, 10 percent of the cost.

.4 For each Subcontractor. for Work performed by the Subcontractor's Sub-subcontractors. 6 percent of the amount due the Sub-subcontractor.

.5 Cost to which overhead and profit is to be applied shall be determined in accordance with Subparagraph 7.3.6.

.6 In order to facilitate checking of quotations for extras and credits, all proposals, except those so minor their propriety can be seen by inspection, shall be accompanied by a complete itemization of costs including labor, materials, and Subcontracts. Labor and materials shall be itemized in the manner prescribed above. Where major cost items are Subcontracts, they shall be itemized also. In no case will a change involving over $50.00 be approved without such itemization.

7.3.10 Cost as referred to throughout this Article 7, shall be limited to the following: Cost of materials, including cost of delivery; cost of labor, including Social Security, old age and unemployment insurance; fringe benefits required by agreement or custom; and rental value of tools, equipment, and machinery.

7.3.11 Overhead, as referred to in this Article 7. shall include the following: Bond premiums for cost amounts over and above the Contract Sum; non-OCIP insurance premiums; supervision; superintendence; wages of time keepers, watch people, and clerks; small tools; incidentals; general office expense; and other expenses not included in "Costs".

7.3.12 The amount of credit to be allowed by the Contractor to the Owner for any deletion or change that results in a net decrease in the Contract sum will be in the amount of the net cost as confirmed by the Prime. When both additions and credits covering related Work, or substitutions, are involved in any one change, the allowance for overhead and profit shall be figured on the basis of the net increase, if any, with respect to that change.

7.3.13 Subsequent to the approval of a Change Order, whether involving a change in Contract sum, Contract time, or both, no additional claim related to that matter will be considered by the Owner. A change incorporated into a Change Order is, therefore, all inclusive, and includes such factors as Project impact, schedule "ripple" effect, or other items which may pertain to such change.

7.4 MINOR CHANGES IN THE WORK

7.4.1 The Prime will have authority, upon prior approval of the Owner, to order minor changes in the Work not involving adjustment in the Contract Sum or extension of the Contract Time and not inconsistent with the intent of the Contract Documents. Such changes shall be effected by written order and shall be binding on the Owner and Contractor. The Contractor shall carry out such written orders promptly

ARTICLE 8 - TIME

8.1 DEFINITIONS

8.1.1 Unless otherwise provided, Contract Time is the period of time, including authorized adjustments, allotted in the Contract Documents for Substantial Completion of the Work.

8.1.2 The date of commencement of the Work is the date established in the Agreement.

8.1.3 The date of Substantial Completion is the date certified by the Architect in accordance with Paragraph 9.8.

8.1.4 The term "day" as used in the Contract Documents shall mean calendar day unless otherwise specifically defined.

8.2 PROGRESS AND COMPLETION

8.2.1 Time limits stated in the Contract Documents are of the essence of the Contract. By executing the Agreement the Contractor confirms that the Contract Time is a reasonable period for performing the Work.

8.2.2 The Contractor shall not, except by agreement or instruction of the Owner in writing, prematurely commence operations on the site or elsewhere prior to the effective date of insurance required by Article 11 to be furnished by the

Contractor and Owner. The date of commencement of the Work shall not be changed by the effective date of such insurance. Unless the date of commencement is established by the Contract Documents or a notice to proceed given by the Owner, the Contractor shall notify the Owner in writing not less than five days or other agreed period before commencing the Work to permit the timely filing of mortgages, mechanic's liens and other security interests.

8.2.3 The Contractor shall proceed expeditiously with adequate forces and shall achieve Substantial Completion within the Contract Time.

8.3 DELAYS AND EXTENSIONS OF TIME

8.3.1 If the Contractor is materially delayed at any time in the commencement or progress of the Work by an act or neglect of the Owner or Architect, or of an employee of either, or of a separate contractor employed by the Owner, or by changes ordered in the Work, or by fire, unavoidable casualties or other causes beyond the Contractor's control, then the Contract Time shall be extended by Change Order for a reasonable time.
8.3.2 Claims relating to time shall be made in accordance with applicable provisions of Paragraph 4.3.

ARTICLE 9 - PAYMENTS AND COMPLETION

9.1 CONTRACT SUM

9.1.1 The Contract Sum is stated in the Agreement and, including authorized adjustments, is the total amount payable by the Owner to the Contractor for performance of the Work under the Contract Documents.

9.2 SCHEDULE OF VALUES

9.2.1 Before the first Application for Payment, and if necessitated by Change Orders, from time to time thereafter, the Contractor shall submit to the Prime and the Owner a schedule of values allocated to various portions of the Work, prepared in such form and supported by such data to substantiate its accuracy as the Prime and the Owner may require. This schedule, when, and only when approved in writing by the Architect and the Owner, shall be used as a basis for reviewing the Contractor's Applications for Payment.

9.3 APPLICATIONS FOR PAYMENT

9.3.1 At ten days, or less, before the end of the current pay period the Contractor shall, with the Prime, review for accuracy an itemized draft copy of the current Application for Payment, accompanied by a current schedule of values. A formal Application for Payment cannot be approved without an accompanying schedule of values that has been approved by both the Owner and the Prime. The Contractor shall promptly proceed to prepare a formal Application for Payment, incorporating modifications made to the draft copy as needed. The Contractor shall then submit to the Prime an Application for Payment for operations completed in accordance with the most recently approved schedule of values. Such application shall be notarized, and supported by such data substantiating the Contractor's right to payment as the Owner or Prime may require, such as copies of requisitions from Subcontractors and material suppliers, and reflecting retainage if provided for in the Contract Documents. The form of Application for Payment shall be AIA Document G702 - Application and Certification for Payment, supported by AIA Document G703 – Continuation Sheet, the Schedule of Values.

9.3.1.1 As provided in Subparagraph 7.3.8, such applications may include requests for payment on account of changes in the Work which have been properly authorized by Construction Change Directives, or by interim determinations of the Prime, but not yet included in Change Orders.

9.3.1.2 Such applications shall not include requests for payment for portions of the Work for which the Contractor does not promptly intend to pay to a Subcontractor or material supplier, unless such Work has been performed by the Contractor or by others whom the Contractor intends to pay promptly.

9.3.1.3 Until the Work is 50 percent complete, the Owner will pay 90 percent of the amount due the Contractor on account of progress payments. At the time the Work is 50 percent complete and thereafter, the Prime may authorize an increase to 95 percent of the amount due the Contractor.

9.3.2 Unless otherwise provided in the Contract Documents, payments shall be made on account of materials and equipment delivered and suitably stored at the site for subsequent incorporation in the Work. If approved in writing in advance by the Owner, payment may similarly be made for materials and equipment suitably stored off the site at a location agreed upon in writing. Payment for materials and equipment stored on or off the site shall be conditioned upon compliance by the Contractor with procedures satisfactory to the Owner to establish the Owner's title to such materials and equipment or otherwise protect the Owner's interest, and shall include the costs of applicable insurance, storage and transportation to the site for such materials and equipment stored off the site.

9.3.3 The Contractor warrants that title to all Work covered by an Application for Payment will pass to the Owner no later than the time of payment. The Contractor further warrants that upon submittal of an Application for Payment all Work for which Certificates for Payment have been previously issued and payments received from the Owner shall, to the best of the Contractor's knowledge, information and belief, be free and clear of liens, claims, security interests or encumbrances in favor of the Contractor, Subcontractors, material suppliers, or other persons or entities making a claim by reason of having provided labor, materials and equipment relating to the Work.

9.3.4 Immediately satisfy any lien or encumbrance which because of any act or default of the Contractor is filed against the premises, and indemnify and save the Owner harmless against all resulting loss and expenses, including attorney's fees, in addition, monies due under this Contract, as may be considered necessary by the Owner, may be retained by the Owner until all such suits, claims for damages, or expenses as aforesaid shall have been settled and paid.

9.4 CERTIFICATES FOR PAYMENT

9.4.1 The Prime will, within seven days after receipt of the Contractor's Application for Payment, either review, approve, sign, and date the original Application for Payment, and copies, and deliver them to the Owner, for such amount as the Prime determines is properly due, or notify the Contractor and Owner in writing of the Prime's reasons for withholding certification in whole or in part as provided in Subparagraph 9.5.1.

9.4.2 The Owner will within 7 days, after receipt of the approved Certificate for Payment from the Prime, either review, approve, sign, and date the document, with copies sent to the Prime and the Contractor, or notify Contractor and Prime in writing of the Owner's reasons for withholding certification in whole or in part as provided in Subparagraph 9.5.1.

9.4.3 The issuance of a Certificate for Payment will constitute a representation by the Prime to the Owner, based on the Prime's evaluation of the Work and the data comprising the Application for Payment, that the Work has progressed to the point indicated and that, to the best of the Prime's knowledge, information and belief, the quality of the Work is in accordance with the Contract Documents. The foregoing representations are subject to correction of minor deviations from the Contract Documents prior to completion and to specific qualifications expressed by the Prime. The issuance of a Certificate for Payment will further constitute a representation that the Contractor is entitled to payment in the amount certified. However, the issuance of a Certificate for Payment will not be a representation that the Prime has 1) made exhaustive or continuous on-site inspections to check the quality or quantity of the Work, (2) reviewed construction means, methods, techniques, sequences or procedures, (3) reviewed copies of requisitions received from Subcontractors and material suppliers and other data requested by the Owner to substantiate the Contractor's right to payment, or (4) made examination to ascertain how or for what purpose the Contractor has used money previously paid on account of the Contract Sum

9.5 DECISIONS TO WITHHOLD CERTIFICATION

9.5.1 The Prime will withhold a Certificate for Payment in whole or in part, to the extent reasonably necessary to protect the Owner, if in the Prime's opinion the representations to the Owner required by Subparagraph 9.4.2 cannot be made. If the Prime is unable to certify payment in the amount of the Application, the Prime will notify the Contractor and

Owner as provided in Subparagraph 9.4.1. If the Contractor and Prime cannot agree on a revised amount, the Prime will promptly issue a Certificate for Payment for the amount, if any, for which the Prime is able to make such representations to the Owner. The Prime may also withhold a Certificate for Payment or, because of subsequently discovered evidence, may nullify the whole or a part of a Certificate for Payment previously issued, to such extent as may be necessary in the Prime's opinion to protect the Owner from loss for which the Contractor is responsible, including loss resulting from acts and omissions described in Subparagraph 3.3.2, because of:

.1 defective Work not remedied;

.2 third party claims filed or reasonable evidence indicating probable filing of such claims unless security acceptable to the Owner is provided by the Contractor;

.3 failure of the Contractor to make payments properly to Subcontractors or for labor, materials or equipment;

.4 reasonable evidence that the Work cannot be completed for the unpaid balance of the Contract Sum;

.5 damage to the Owner or another contractor;

.6 reasonable evidence that the Work will not be completed within the Contract Time, and that the unpaid balance would not be adequate to cover actual or liquidated damages for the anticipated delay;

.7 failure to carry out the Work in accordance with the Contract Documents;

.8 failure to maintain as current, "Record Drawings";

.9 failure to provide filings required by Document 00200 in timely fashion; or

.10 failure to provide submittals in a timely fashion as may be specified in the Specifications.

9.5.2 The Owner can decide to withhold a Certificate of Payment in whole or in part, to the extent necessary for self-protection, for the same reasons described in 9.5.1 above

9.5.3 When the above reasons for withholding certification are removed, certification will be made for amounts previously withheld.

9.6 PROGRESS PAYMENTS

9.6.1 After the Prime and the Owner have signed and dated a Certificate for Payment, the Owner shall make payment in the manner and within the thirty working days time period provided in the Contract Documents, and shall so notify the Prime. The specified time period provided shall start with the date of the Owner’s signing of the Certificate of Payment.

9.6.1.1 The Owner reserves the right to withhold payment to the Contractor, in whole or in part, for any and all of the reasons cited in Clauses 9.5.1.1 through 9.5.1.10.

9.6.2 The Contractor shall promptly pay each Subcontractor, upon receipt of payment from the Owner, out of the amount paid to the Contractor on account of such Subcontractor's portion of the Work, the amount to which said Subcontractor is entitled, reflecting percentages actually retained from payments to the Contractor on account of such Subcontractor's portion of the Work. The Contractor shall, by appropriate agreement with each Subcontractor, require each Subcontractor to make payments to Sub-subcontractors in a similar manner.

9.6.3 The Prime will, on request, furnish to a Subcontractor, if practicable, information regarding percentages of completion or amounts applied for by the Contractor and action taken thereon by the Prime and Owner on account of portions of the Work done by such Subcontractor.

9.6.4 Neither the Owner nor Prime shall have an obligation to pay or to see to the payment of money to a Subcontractor except as may otherwise be required by law.

9.6.5 Payment to material suppliers shall be treated in a manner similar to that provided in Subparagraphs 9.6.2, 9.6.3 and 9.6.4.

9.6.6 A Certificate for Payment, a progress payment, or partial or entire use or occupancy of the Project by the Owner shall not constitute acceptance of Work not in accordance with the Contract Documents.

9.6.7 Unless the Contractor provides the Owner with a payment bond in the full penal sum of the Contract Sum, payments received by the Contractor for Work properly performed by Subcontractors and suppliers shall be held by the Contractor for those Subcontractors or suppliers who performed Work or furnished materials, or both, under contract with the Contractor for which payment was made by the Owner.

9.7 FAILURE OF PAYMENT

9.7.1 If, through no fault of the Contractor, the Prime does not issue a Certificate for Payment, within seven days after receipt of the Contractor's Application for Payment, or if the Owner does not pay the Contractor within the specified time period after approving the Certification for Payment, the amount certified by the Prime or awarded by arbitration, then the Contractor may make claim for additional payment as provided under terms of the State of Rhode Island Prompt Payment Act.

9.8 SUBSTANTIAL COMPLETION

9.8.1 Substantial Completion is the stage in the progress of the Work when the Work or designated portion thereof is sufficiently complete in accordance with the Contract Documents so that the Owner can occupy or utilize the Work for its intended use.

9.8.2 When the Contractor considers that the Work, or a portion thereof which the Owner agrees to accept separately, is substantially complete, the Contractor shall prepare and submit to the Prime a comprehensive list of items to be completed or corrected prior to final payment. Failure to include an item on such list does not alter the responsibility of the Contractor to complete all Work in accordance with the Contract Documents.

9.8.3 Upon receipt of the Contractor's list, the Prime will make an inspection to determine whether the Work or designated portion thereof is substantially complete. If the Prime's inspection discloses any item, whether or not included on the Contractor's list, which is not sufficiently complete in accordance with the Contract Documents so that the Owner can occupy or utilize the Work or designated portion thereof for its intended use, the Contractor shall, before issuance of the Certificate of Substantial Completion, complete or correct such item upon notification by the Prime. In such case, the Contractor shall then submit a request for another inspection by the Prime to determine Substantial Completion.

9.8.4 When the Work or designated portion thereof is substantially complete, the Prime will prepare a Certificate of Substantial Completion which shall establish the date of Substantial Completion, shall establish responsibilities of the Owner and Contractor for security, maintenance, heat, utilities, damage to the Work and insurance, and shall fix the time within which the Contractor shall finish all items on the list accompanying the Certificate. Warranties required by the Contract Documents shall commence on the date of Substantial Completion of the Work or designated portion thereof unless otherwise provided in the Certificate of Substantial Completion.

9.8.5 The Certificate of Substantial Completion shall be submitted to the Owner and Contractor for their written acceptance of responsibilities assigned to them in such Certificate. Upon such acceptance and consent of surety, if any, the Owner shall reduce the retainage withheld, if and as provided elsewhere in the Contract Documents.

9.8.5.1 The payment shall be sufficient to maintain, or increase, the total payments to 95 percent of the Contract sum, less such amounts as the Prime shall determine for incomplete Work and unsettled claims.

9.9 PARTIAL OCCUPANCY OR USE

9.9.1 The Owner may occupy or use any completed or partially completed portion of the Work at any stage when such portion is designated by separate agreement with the Contractor, provided such occupancy or use is consented to by the insurer as required under Clause l 1.3.1.3 and authorized by public authorities having jurisdiction over the Work. Such partial occupancy or use may commence whether or not the portion is substantially complete, provided the Owner and Contractor have accepted in writing the responsibilities assigned to each of them for payments, retainage, if any, security, maintenance, heat, utilities, damage to the Work and insurance, and have agreed in writing concerning the period for correction of the Work and commencement of warranties required by the Contract Documents. When the Contractor considers a portion substantially complete, the Contractor shall prepare and submit a list to the Prime as provided under Subparagraph 9.8.2. Consent of the Contractor to partial occupancy or use shall not be unreasonably withheld. The stage of the progress of the Work shall be determined by written agreement between the Owner and Contractor or, if no agreement is reached, by decision of the Prime.

9.9.2 Immediately prior to such partial occupancy or use, the Owner, Contractor and Prime shall jointly inspect the area to be occupied or portion of the Work to be used in order to determine and record the condition of the Work.

9.9.3 Unless otherwise agreed upon, partial occupancy or use of a portion or portions of the Work shall not constitute acceptance of Work not complying with the requirements of the Contract Documents.

9.10 FINAL COMPLETION AND FINAL PAYMENT

9.10.1 Upon receipt of written notice that the Work is ready for final inspection and acceptance and upon receipt of a final Application for Payment, the Prime will promptly make such inspection and, when the Prime finds the Work acceptable under the Contract Documents and the Contract fully performed, the Prime will promptly issue a final Certificate for Payment stating that to the best of the Prime's knowledge, information and belief, and on the basis of the Prime's on-site visits and inspections, the Work has been completed in accordance with terms and conditions of the Contract Documents and that the entire balance, less the amount of Warranty Inspection Retainage, found to be due the Contractor and noted in the final Certificate is due and payable. The Prime's final Certificate for Payment will constitute a further representation that conditions listed in Subparagraph 9.10.2 as precedent to the Contractor's being entitled to final payment have been fulfilled.

9.10.2 Neither final payment nor any remaining retained percentage shall become due until the Contractor submits to the Prime in a form and substance satisfactory to the Owner (l) an affidavit that payrolls, bills for materials and equipment, and other indebtedness connected with the Work for which the Owner or the Owner's property might be responsible or encumbered (less amounts withheld by Owner) have been paid or otherwise satisfied, (2) a certificate evidencing that insurance required by the Contract Documents to remain in force after final payment is currently in effect and will not be canceled or allowed to expire until at least 30 days' prior written notice has been given to the Owner, (3) a written statement that the Contractor knows of no substantial reason that the insurance will not be renewable to cover the period required by the Contract Documents, (4) consent of surety, if any, to final payment and (5), if required by the Owner, other data establishing payment or satisfaction of obligations, such as receipts, releases and waivers of liens, claims, security interests or encumbrances arising out of the Contract, to the extent and in such form as may be designated by the Owner. If a Subcontractor refuses to furnish a release or waiver required by the Owner, the Contractor may furnish a bond satisfactory to the Owner to indemnify the Owner against such lien. If such lien remains unsatisfied after payments are made, the Contractor shall promptly pay to the Owner all money that the Owner may be compelled to pay in discharging such lien, including all costs and reasonable attorneys' fees.

9.10.3 The making of final payment shall constitute a waiver of Claims by the Owner except those arising from:

.1 liens, Claims, security interests or encumbrances arising out of the Contract and unsettled;

.2 failure of the Work to comply with the requirements of the Contract Documents; or

.3 terms of special warranties required by the Contract Documents.

9.10.4 Acceptance of final payment by the Contractor, a Subcontractor, a Sub-subcontractor, and equipment or material supplier shall constitute a waiver of claims by that payee except those previously made in writing and identified by that payee as unsettled at the time of final Application for Payment.

ARTICLE 10 - PROTECTION OF PERSONS AND PROPERTY

10.1 SAFETY PRECAUTIONS AND PROGRAMS

10.1.1 The Contractor shall be responsible for initiating, maintaining and supervising all safety precautions and programs in connection with the performance of the Contract.

10.2 SAFETY OF PERSONS AND PROPERTY

10.2.1 The Contractor shall take reasonable precautions for safety of, and shall provide reasonable protection to prevent damage, injury or loss to:

.1 employees on the Work and other persons who may be affected thereby;
.2 the materials and equipment to be incorporated therein, whether in storage on or off the site, under care, custody or control of the Contractor or the Contractor's Subcontractors or Sub-subcontractors; and

.3 other property at the site or adjacent thereto, such as trees, shrubs, lawns, walks, pavements, roadways, structures and utilities not designated for removal, relocation or replacement in the course of construction.

10.2.2 The Contractor shall give notices and comply with applicable laws, ordinances, rules, regulations and lawful orders of public authorities bearing on safety of persons or property or their protection from damage, injury or loss.

10.2.3 The Contractor shall erect and maintain, as required by existing conditions and performance of the Contract, reasonable safeguards for safety and protection, including posting danger signs and other warnings against hazards, promulgating safety regulations and notifying owners and users of adjacent sites and utilities.

10.2.4 When use or storage of explosives or other hazardous materials or equipment or unusual methods are necessary for execution of the Work, the Contractor shall exercise utmost care and carry on such activities under supervision of properly qualified personnel.

10.2.5 The Contractor shall promptly remedy damage and loss (other than damage or loss insured under property insurance required by the Contract Documents) to property referred to in Clauses 10.2.1.2 and 10.2.1.3 caused in whole or in part by the Contractor, a Subcontractor, a Sub-subcontractor, or anyone directly or indirectly employed by any of them, or by anyone for whose acts they may be liable and for which the Contractor is responsible under Clauses 10.2.1.2 and 10.2.1.3, except damage or loss attributable to acts or omissions of the Owner or Prime or anyone directly or indirectly employed by either of them, or by anyone for whose acts either of them may be liable, and not attributable to the fault or negligence of the Contractor. The foregoing obligations of the Contractor are in addition to the Contractor's obligations under Paragraph 3.18.

10.2.6 The Contractor shall designate a responsible member of the Contractor's organization at the site whose duty shall be the prevention of accidents. This person shall be the Contractor's superintendent unless otherwise designated by the Contractor in writing to the Owner and Prime.

10.2.7 The Contractor shall not load or permit any part of the construction or site to be loaded so as to endanger its safety.

10.3 HAZARDOUS MATERIALS

10.3.1 If reasonable precautions will be inadequate to prevent foreseeable bodily injury or death to persons resulting from a material or substance, including but not limited to asbestos or polychlorinated biphenyl (PCB),or other state or federally regulated hazardous substance encountered on the site by the Contractor, the Contractor shall, upon recognizing the condition, immediately stop any ongoing Work in the affected area and report the condition to the Owner and Prime in writing.

10.3.2 The Owner shall obtain the services of a licensed laboratory to verify the presence or absence of the material or substance reported by the Contractor and, in the event such material or substance is found to be present, to verify that it has been rendered harmless. Unless otherwise required by the Contract Documents, the Owner shall furnish in writing to the Contractor and Prime the names and qualifications of persons or entities who are to perform tests verifying the presence or absence of such material or substance or who are to perform the task of removal or safe containment of such material or substance. The Contractor and the Prime will promptly reply to the Owner in writing stating whether or not either has reasonable objection to the persons or entities proposed by the Owner, and, in the event of an objection, the specific reasons therefor. If either the Contractor or Prime has a reasonable objection to a person or entity proposed by the Owner and fully complies with the next preceding sentence, the Owner shall propose another to whom the Contractor and the Prime have no reasonable objection. If the absence of the material or substance is verified, Work shall immediately resume without adjustment to the Contract Time or Contract Sum. If the presence of material or substance is verified, when the material or substance has been rendered harmless, Work in the affected area shall resume upon written agreement of the Owner and Contractor. The Contract Time shall be extended if and as appropriate and the Contract Sum shall be increased in the amount of the Contractor's reasonable additional and incurred costs of shut-down, delay and start-up, which adjustments shall be accomplished as provided in Article 7.

10.3.3 To the fullest extent permitted by law, the Owner shall indemnify and hold harmless the Contractor, Subcontractors, Prime, Prime's consultants and agents and employees of any of them from and against claims, damages, losses and expenses, including but not limited to attorneys' fees, arising out of or resulting from performance of the Work in the affected area if in fact the material or substance presents the risk of bodily injury or death as described in Subparagraph 10.3.1 and has not been rendered harmless, provided that such claim, damage, loss or expense is attributable to bodily injury, sickness, disease or death, or to injury to or destruction of tangible property (other than the Work itself) and provided that such damage, loss or expense is not due to the sole negligence of a party seeking indemnity.

10.3.4 Provisions of Subparagraph 10.3.1 and 10.3.2 cannot be employed to govern the Contractor's operations that involve the documenting and removal of indicated asbestos, polychlorinated biphenyl (PCB), or other state or federally regulated hazardous substance, as may be clearly and specifically specified under terms of this Contract.

10.4 The Owner shall not be responsible under Paragraph 10.3 for materials and substances brought to the site by the Contractor unless such materials or substances were expressly required by the Contract Documents.

10.5 If, without negligence on the part of the Contractor or a breach of relevant provisions of the Contract Documents, the Contractor is held liable for the cost of remediation of a hazardous material or substance solely by reason of performing Work as required by the Contract Documents, the Owner shall indemnify the Contractor for all cost and expense thereby incurred.

10.6 EMERGENCIES

10.6.1 In an emergency affecting safety of persons or property, the Contractor shall act, at the Contractor's discretion, to prevent threatened damage, injury or loss. Additional compensation or extension of time claimed by the Contractor on account of an emergency shall be determined as provided in Paragraph 4.3 and Article 7.

ARTICLE 11 - INSURANCE AND BONDS

11.1 CONTRACTOR'S LIABILITY INSURANCE

11.1.1 The Contractor shall purchase from and maintain in a company or companies lawfully authorized to do business in the jurisdiction in which the Project is located such insurance as will protect the Contractor from claims set forth below which may arise out of or result from the Contractor's operations under the Contract and for which the Contractor may be legally liable, whether such operations be by the Contractor or by a Subcontractor or by anyone directly or indirectly employed by any of them, or by anyone for whose acts any of them may be liable:

.1 claims under workers' compensation, disability benefit and other similar employee benefit acts which are applicable to the Work to be performed;

.2 claims for damages because of bodily injury, occupational sickness or disease, or death of the Contractor's employees;

.3 claims for damages because of bodily injury, sickness or disease, or death of any person other than the Contractor's employees;

.4 claims for damages insured by usual personal injury liability coverage;

.5 claims for damages, other than to the Work itself, because of injury to or destruction of tangible property, including loss of use resulting therefrom;

.6 claims for damages because of bodily injury, death of a person or property damage arising out of ownership, maintenance or use of a motor vehicle;

.7 claims for bodily injury or property damage arising out of completed operations; and

.8 claims involving contractual liability insurance applicable to the Contractor's obligations under Paragraph 3.18

.9 liability Insurance shall include all major divisions of coverage and be on a comprehensive basis including:

1. Premises Operation (including X, C. and U coverages as applicable).
2. Independent Contractor's Protective.

3. Products and completed Operations.

4. Personal Injury Liability with Employment Exclusion deleted.

5. Contractual, including specified provision for Contractor's obligation under Paragraph 3.18.

6. Owner, non-owned and hired motor vehicles.

7. Broad Form Property Damage, including Completed Operations.

.10 If the general liability coverages are provided by a General Liability Policy on a claims-made basis, the policy date or retroactive date shall predate the Contract; the termination date of the policy, or applicable extended reporting period shall be no earlier than the termination date of coverages required to be maintained after final payment in accordance with Subparagraph 9.10.2.

11.1.2 The insurance required by Subparagraph 11.1.1 shall be written for not less than limits of liability specified in the Contract Documents or required by law, whichever coverage is greater. Coverages, whether written on an occurrence

or claims-made basis, shall be maintained without interruption from date of commencement of the Work until date of final payment and termination of any coverage required to be maintained after final payment.

11.1.2.1 The insurance required by Subparagraph 11.1.1 shall be written for not less than the following limits, or greater, if required by law:

1. Workers' Compensation:
- **a.** State - Statutory;
- **b.** Employer's Liability - $500.000.

2. Comprehensive General Liability (including Premises/Operations; Independent Contractor's Protective; Products and Completed Operations; Broad Form Property Damage):
- **a.** Bodily Injury: $1,000,000 - Each Occurrence; $1,000,000 - Annual Aggregate.
- **b.** Property Damage: $1,000.000 - Each Occurrence; $1,000,000 - Annual Aggregate.
- **c.** Products and Completed Operations to be Maintained for 2 Years After Final Payment.
- **d.** Property Damage Liability Insurance to Provide X, C. or U Coverage as Applicable.

3. Contractual Liability:
- **a.** Bodily in jury: $1,000.000 - Each Occurrence; $1,000,000 - Annual Aggregate.

4. Personal Injury. with Employment Exclusion Deleted:
- **a.** $1,000,000 - Annual Aggregate.

5. Comprehensive Automobile Liability:
- **a.** Bodily Injury: $500,000 - Each person; $1000 000 - Each Occurrence.
- **b.** Property Damage: $500,000 - Each Occurrence.

11.1.3 Certificates of insurance acceptable to the Owner shall be filed with the Owner prior to commencement of the Work. These certificates and the insurance policies required by this Paragraph l 1.1 shall contain a provision that coverage's afforded under the policies will not be canceled or allowed to expire until at least 30 days' prior written notice has been given to the Owner. If any of the foregoing insurance coverages are required to remain in force after final payment and are reasonably available, an additional certificate evidencing continuation of such coverage shall be submitted with the final Application for Payment as required by Subparagraph 9.10.2. Information concerning reduction of coverage on account of revised limits or claims paid under the General Aggregate, or both, shall be furnished by the Contractor with reasonable promptness in accordance with the Contractor's information and belief.

11.1.3.1 The Contractor shall furnish one copy of each Certificate of Insurance herein required for each copy of the Agreement which shall specifically set forth evidence of coverage required by Subparagraphs 11.1.1, 11.1.2, and 11.1.3. If this insurance is written on a Comprehensive General Liability policy form, ACCORD Form 25S will be acceptable. The Contractor shall furnish copies of endorsement to the Owner that are subsequently issued amending coverage or limits.

11.2 OWNER'S LIABILITY INSURANCE

11.2.1 The Contractor shall furnish the Owner, through the Prime, an insurance certificate providing Owner's Protective Liability extended to include the interests of the Prime, and to protect the Owner and Prime from any liability which might be incurred against them as a result of any operation of the Contractor or Contractor's Subcontractors or their employees. Such insurance shall be written for the same limits as the Contractor's liability insurance and shall include the same coverage

11.3 PROPERTY INSURANCE

11.3.1 The Contractor shall purchase and maintain, in a company or companies lawfully authorized to do business in the jurisdiction in which the Project is located, property insurance written on a builder's risk "all-risk" or equivalent policy form in the amount of the initial Contract Sum, plus value of subsequent Contract modifications and cost of materials supplied or installed by others, comprising total value for the entire Project at the site on a replacement cost basis without optional deductibles. Such property insurance shall be maintained, unless otherwise provided in the Contract Documents or otherwise agreed in writing by all persons and entities who are beneficiaries of such insurance, until final payment has been made as provided in Paragraph 9.l0 or until no person or entity other than the Owner has an insurable interest in the property required by this Paragraph 11.3 to be covered, whichever is later. This insurance shall include interests of the Owner, the Contractor, Subcontractors and Sub-subcontractors in the Project. The form of policy for this coverage shall be Completed Value. If the Owner is damaged by failure of the Contractor to maintain such insurance. then the Contractor shall bear all reasonable costs properly attributed thereto.

11.3.1.1 Property insurance shall be on an "all-risk" or equivalent policy form and shall include, without limitation, insurance against the perils of fire (with extended coverage) and physical loss or damage including, without duplication of coverage, theft, vandalism, malicious mischief, collapse, earthquake, flood, windstorm, falsework, testing and startup, temporary buildings and debris removal including demolition occasioned by enforcement of any applicable legal requirements, and shall cover reasonable compensation for Prime's and Contractor's services and expenses required as a result of such insured loss.

11.3.1.2 This property insurance shall cover portions of the Work stored off the site, and also portions of the Work in transit.

11.3.1.3 Partial occupancy or use in accordance with Paragraph 9.9 shall not commence until the insurance company or companies providing property insurance have consented to such partial occupancy or use by endorsement or otherwise. The Contractor shall take reasonable steps to obtain consent of the insurance company or companies and shall, without mutual written consent, take no action with respect to partial occupancy or use that would cause cancellation, lapse or reduction of insurance.

11.3.2 If during the Project construction period the Owner insures properties, real or personal or both, at or adjacent to the site by property insurance under policies separate from those insuring the Project, or if after final payment property insurance is to be provided on the completed Project through a policy or policies other than those insuring the Project during the construction period, the Owner shall waive all rights in accordance with the terms of Subparagraph 11.3.4 for damages caused by fire or other causes of loss covered by this separate property insurance. All separate policies shall provide this waiver of subrogation by endorsement or otherwise.

11.3.3 Before an exposure to loss may occur, the Contractor shall file with the Owner two certified copies of the policy or policies providing this Property Insurance coverage, each containing these endorsements specifically related to the Project. Each policy shall contain a provision that the policy will not be canceled or allowed to expire until at least 30 days prior written notice has been given to the contractor.

11.3.4 Waivers of Subrogation: The Owner and Contractor waive all rights against (l) each other and any of their subcontractors, sub-subcontractors, agents and employees, each of the other, and (2) the Prime, Prime's consultants, separate contractors described in Article 6, if any, and any of their subcontractors, sub-subcontractors, agents and employees, for damages caused by fire or other causes of loss to the extent covered by property insurance obtained pursuant to this Paragraph 11.3 or other property insurance applicable to the Work, except such rights as they have to proceeds of such insurance held by the Contractor as fiduciary. The Owner or Contractor, as appropriate, shall require of the Architect, Architect's consultants, separate contractors described in Article 6, if any, and the subcontractors, sub-subcontractors, agents and employees of any of them, by appropriate agreements, written where legally required for validity, similar waivers each in favor of other parties enumerated herein. The policies shall provide such waivers of subrogation by endorsement or otherwise. A waiver of subrogation shall be effective as to a person or entity even though

that person or entity would otherwise have a duty of indemnification, contractual or otherwise, did not pay the insurance premium directly or indirectly, and whether or not the person or entity had an insurable interest in the property damaged.

11.3.5 A loss insured under this property insurance shall be adjusted by the Contractor as fiduciary and made payable to the Owner as fiduciary for the insureds, as their interests may appear, subject to requirements of any applicable mortgagee clause and of Subparagraph l 1.3.7. The Contractor shall pay Subcontractors their just shares of insurance proceeds received by the Contractor, and by appropriate agreements, written where legally required for validity, shall require Subcontractors to make payments to their Sub-subcontractors in similar manner.

11.3.6 If required in writing by a party in interest, the Contractor as fiduciary shall, upon occurrence of an insured loss, give bond for proper performance of the Contractor's duties. The cost of required bonds shall be charged against proceeds received as fiduciary. The Contractor shall deposit in a separate account proceeds so received, which the Contractor shall distribute in accordance with such agreement as the parties in interest may reach, or in accordance with an arbitration award in which case the procedure shall be as provided in Paragraph 4.6. If after such loss no other special agreement is made and unless the Owner terminates the Contract for convenience, replacement of damaged property shall be performed by the Contractor after notification of a Change in the Work in accordance with Article 7.

11.3.7 The Contractor as fiduciary shall have power to adjust and settle a loss with insurers unless one of the parties in interest shall object in writing within five days after occurrence of loss to the Contractor's exercise of this power; if such objection is made, the dispute shall be resolved as provided in Paragraphs 4.5 and 4.6. The Contractor as fiduciary shall, in the case of arbitration, make settlement with insurers in accordance with directions of the arbitrators. If distribution of insurance proceeds by arbitration is required, the arbitrators will direct such distribution.

11.4 PERFORMANCE BOND AND PAYMENT BOND

11.4.1 The Contractor shall furnish bonds covering faithful performance of the Contract and payment of obligations arising thereunder. Bonds may be obtained through the Contractor's usual source and the cost thereof shall be included in the Contract sum. The amount of each bond shall be equal to 100 percent of the Contract sum.

11.4.1.1 The Contractor shall deliver the required bonds to the Owner on or before the date the Agreement is entered into.

11.4.1.2 The Contractor shall require the attorney-in-fact who executes the required bonds on behalf of the surety to affix thereto a certified and current copy of the power of attorney.

11.4.2 Upon the request of any person or entity appearing to be a potential beneficiary of bonds covering payment of obligations arising under the Contract, the Contractor shall promptly furnish a copy of the bonds or shall permit a copy to be made.

ARTICLE 12 - UNCOVERING AND CORRECTION OF WORK

12.1 UNCOVERING OF WORK

12.1.1 If a portion of the Work is covered contrary to the Prime's request or to requirements specifically expressed in the Contract Documents, it shall, if required in writing by the Prime, be uncovered for the Prime's examination and be replaced at the Contractor's expense without change in the Contract Time or Contract Sum.

12.1.2 If a portion of the Work has been covered which is not contrary to requirements specifically expressed in the Contract Documents and which the Prime has not specifically requested to examine prior to its being covered, the Prime and the Owner may in writing request to see such Work and it shall be uncovered by the Contractor. If such Work is in accordance with the Contract Documents, costs of uncovering and replacement shall, by appropriate Change Order, be at the Owner's expense. If such Work is not in accordance with the Contract Documents, correction shall be at the

Contractor's expense unless the condition was caused by the Owner or a separate contractor in which event the Owner shall be responsible for payment of such costs.

12.2 CORRECTION OF WORK

12.2.1 BEFORE OR AFTER SUBSTANTIAL COMPLETION

12.2.1.1 The Contractor shall promptly correct Work rejected by the Architect or failing to conform to the requirements of the Contract Documents, whether discovered before or after Substantial Completion and whether or not fabricated, installed or completed. Costs of correcting such Work, including additional testing and inspections and compensation for the Prime's services and expenses made necessary thereby, shall be at the Contractor's expense.

12.2.2 AFTER SUBSTANTIAL COMPLETION

12.2.2.1 In addition to the Contractor's obligations under Paragraph 3.5, if, within one year after the date of Substantial Completion of the Work or designated portion thereof or after the date for commencement of warranties established under Subparagraph 9.9.1, or by terms of an applicable special warranty required by the Contract Documents, any of the Work is found to be not in accordance with the requirements of the Contract Documents, the Contractor at Contractor's expense shall correct it promptly after receipt of written notice from the Owner to do so unless the Owner has previously given the Contractor a written express acceptance of such condition. The Owner shall give such notice promptly after discovery of the condition. If any of the Work is found to be not in accordance with the requirements of the Contract Documents during the one-year period for correction of Work, and the Owner fails to promptly thereafter notify the Contractor and give the Contractor an opportunity to make correction, the Owner waives the right to require correction by the Contractor. If the Contractor fails to correct nonconforming Work within a reasonable time during that period after receipt of notice from the Owner or Prime, the Owner may correct it in accordance with Paragraph 2.4.

12.2.2.2 The one-year period for correction of Work shall be extended with respect to portions of Work first performed after Substantial Completion by the period of time between Substantial Completion and the actual completion of performance of the Work.

12.2.2.3 The one-year period for correction of Work shall not be extended by corrective Work performed by the Contractor pursuant to this Paragraph 12.2.

12.2.2.4 The Contractor and the major Sub-Contractors shall meet with the Owner, if so notified by the Owner, and re-inspect the Work ten months after Substantial Completion as a follow-up procedure. Upon correction of warranty Work within a reasonable time, the Contractor shall be paid the full amount of the Warranty Inspection Retainer, withheld by the Owner.

12.2.3 The Contractor shall remove from the site portions of the Work which are not in accordance with the requirements of the Contract Documents and are neither corrected by the Contractor nor accepted by the Owner.

12.2.4 The Contractor shall bear the cost of correcting destroyed or damaged construction, whether completed or partially completed, of the Owner or separate contractors caused by the Contractor's correction or removal of Work which is not in accordance with the requirements of the Contract Documents.

12.2.5 Nothing contained in this Paragraph 12.2 shall be construed to establish a period of limitation with respect to other obligations which the Contractor might have under the Contract Documents. Establishment of the one-year period for correction of Work as described in Subparagraph 12.2.2 relates only to the specific obligation of the Contractor to correct the Work, and has no relationship to the time within which the obligation to comply with the Contract Documents may be sought to be enforced, nor to the time within which proceedings may be commenced to establish the Contractor's liability with respect to the Contractor's obligations other than specifically to correct the Work.

12.3 ACCEPTANCE OF NONCONFORMING WORK

12.3.1 If the Owner prefers to accept Work which is not in accordance with the requirements of the Contract Documents, the Owner may do so instead of requiring its removal and correction, in which case the Contract Sum will be reduced as appropriate and equitable. Such adjustment shall be effected whether or not final payment has been made.

ARTICLE 13 - MISCELLANEOUS PROVISIONS

13.1 GOVERNING LAW

13.1.1 The Contract shall be governed by the law of the place where the Project is located.

13.2 SUCCESSORS AND ASSIGNS

13.2.1 The Owner and Contractor respectively bind themselves, their partners, successors, assigns and legal representatives to the other party hereto and to partners, successors, assigns and legal representatives of such other party in respect to covenants, agreements and obligations contained in the Contract Documents. Except as provided in Subparagraph 13.2.2, neither party to the Contract shall assign the Contract as a whole without written consent of the other. If either party attempts to make such an assignment without such consent, that party shall nevertheless remain legally responsible for all obligations under the Contract.

13.2.2 The Owner may, without consent of the Contractor, assign the Contract to an institutional lender providing construction financing for the Project. In such event, the lender shall assume the Owner's rights and obligations under the Contract Documents. The Contractor shall execute all consents reasonably required to facilitate such assignment.

13.3 WRITTEN NOTICE

13.3.1 Written notice shall be deemed to have been duly served if delivered in person to the individual or a member of the firm or entity or to an officer of the corporation for which it was intended, or if delivered at or sent by registered or certified mail to the last business address known to the party giving notice.

13.4 RIGHTS AND REMEDIES

13.4.1 Duties and obligations imposed by the Contract Documents and rights and remedies available thereunder shall be in addition to and not a limitation of duties, obligations, rights and remedies otherwise imposed or available by law.

13.4.2 No action or failure to act by the Owner, Prime or Contractor shall constitute a waiver of a right or duty afforded them under the Contract, nor shall such action or failure to act constitute approval of or acquiescence in a breach thereunder, except as may be specifically agreed in writing.

13.5 TESTS AND INSPECTIONS

13.5.1 Tests, inspections and approvals of portions of the Work required by the Contract Documents or by laws, ordinances, rules, regulations or orders of public authorities having jurisdiction shall be made at an appropriate time. Unless otherwise provided, the Contractor shall make arrangements for such tests, inspections and approvals with an independent testing laboratory or entity acceptable to the Owner, or with the appropriate public authority, and shall bear all related costs of tests, inspections and approvals. The Contractor shall give the Prime timely notice of when and where tests and inspections are to be made so that the Prime may be present for such procedures. The Owner shall bear costs of tests, inspections or approvals which do not become requirements until after bids are received or negotiations concluded unless such test, inspections or approvals replace or modify pre-existing requirements in which event the Owner shall bear any additional costs thereof.

13.5.2 If the Prime, Owner or public authorities having jurisdiction determine that portions of the Work require additional testing, inspection or approval not included under Subparagraph 13.5.1, the Architect will, upon written authorization from the Owner, instruct the Contractor to make arrangements for such additional testing, inspection or approval by an entity acceptable to the Owner, and the Contractor shall give timely notice to the Prime of when and

where tests and inspections are to be made so that the Prime may be present for such procedures. Such costs, except as provided in Subparagraph 13.5.3, shall be at the Owner's expense.

13.5.3 If such procedures for testing, inspection or approval under Subparagraphs 13.5.1 and 13.5.2 reveal failure of the portions of the Work to comply with requirements established by the Contract Documents, all costs made necessary by such failure including those of repeated procedures and compensation for the Prime's services and expenses shall be at the Contractor's expense.

13.5.4 Required certificates of testing, inspection or approval shall, unless otherwise required by the Contract Documents' be secured by the Contractor and promptly delivered to the Prime.

13.5.5 If the Prime is to observe tests, inspections or approvals required by the Contract Documents, the Prime will do so promptly and, where practicable, at the normal place of testing.

13.5.6 Tests or inspections conducted pursuant to the Contract Documents shall be made promptly to avoid unreasonable delay in the Work.

13.6 INTEREST

13.6.1 Payments due and unpaid under the Contract Documents shall bear interest from the date payment is due at such rate as prescribed by provisions of the State of Rhode Island Prompt Payment Act..

13.7 COMMENCEMENT OF STATUTORY LIMITATION PERIOD

13.7.1 As between the Owner and Contractor:

.1 Before Substantial Completion. As to acts or failures to act occurring prior to the relevant date of Substantial Completion, any applicable statute of limitations shall commence to run and any alleged cause of action shall be deemed to have accrued in any and all events not later than such date of Substantial Completion;

.2 Between Substantial Completion and Final Certificate for Payment. As to acts or failures to act occurring subsequent to the relevant date of Substantial Completion and prior to issuance of the Final Certificate for Payment, any applicable statute of limitations shall commence to run and any alleged cause of action shall be deemed to have accrued in any and all events not later than the date of issuance of the final Certificate for Payment; and

.3 After Final Certificate for Payment. As to acts or failures to act occurring after the relevant date of issuance of the final Certificate for Payment, any applicable statute of limitations shall commence to run and any alleged cause of action shall be deemed to have accrued in any and all events not later than the date of any act or failure to act by the Contractor pursuant to any Warranty provided under Paragraph 3.5, the date of any correction of the Work or failure to correct the Work by the Contractor under Paragraph 12.2, or the date of actual commission of any other act or failure to perform any duty or obligation by the Contractor or Owner, whichever occurs last.

13.8 EQUAL OPPORTUNITY

13.8.1. The Contractor shall maintain policies of employment as follows:

13.8.1.1 The Contractor and the Contractor's Subcontractors shall not discriminate against any employee or applicant for employment because of race, religion, color, sex, sexual persuasion, or national origin. The Contractor shall take affirmative action to insure that applicants are employed, and that employees are treated during employment without regard to their race, religion, color, sex, sexual persuasion, or national ordain. Such action shall include, but not be limited to the following: employment upgrading, demotion, or transfer; recruitment or recruitment advertising; layoff or

termination; rates of pay or other forms of compensation; and selection for training, including apprenticeship. The Contractor agrees to post in conspicuous places, available to employees and applicants for employment, notices setting forth the policies of non-discrimination.

13.8.1.2 The Contractor and the Contractor's Subcontractors shall, in all solicitations or advertisements for employees placed by them or on their behalf, state that all qualified applicants will receive consideration for employment without regard to race, religion, color, sex, sexual persuasion, or national origin.

13.8.1.3 The Contractor shall be a signatory to the requirements of the State of Rhode Island Equal Employment office.

13.9 PREVAILING WAGE SCALES ON PUBLIC WORKS PROJECTS

13.9.1 In accordance with Chapter 290 of the General Laws of the State of Rhode Island, 1938 as amended. the Department of Labor determined the customary and prevailing rate of wages paid to craftspersons, teamsters, and laborers in the constructing of public works by the State. and by cities and towns, and by persons contracting therewith for such construction. Violators are subject to a fine of not more than One Hundred Dollars ($100.00) for each offense

13.9.2 The wage rates as ascertained by the Department of Labor are uniform for the State of Rhode Island and, as of the date of advertisement of Contract. apply to the life of this Contract. Current wage rates prevailing in the construction industry in the State of Rhode Island are included in this Project Manual. Additional information concerning prevailing wage rates may be obtained from the Division of Professional Regulation, Department of Labor, 1511 Pontiac Avenue, Cranston, RI 02910. Under no conditions shall the wages paid be less than those designated in the general classification. This Clause does not relieve the Contractor or his or her Subcontractors from respecting any other union regulations to which the Contractor ordinarily subscribes.

13.9.3 Bulletin No. 3. State Labor Laws, issued by the State of Rhode Island Department of Labor, pertaining to Public Works Projects (General laws of Rhode Island, Revision of 1956, Chapter 37-12 as amended. and Chapter 77, Public Laws of 1965) are hereby made a part of this Project. These Laws include, but are not limited to:

.1 weekly payment of employees;

.2 provisions applicable to public works contracts:

.3 payment of prevailing wages;

.4 posting of prevailing wage rates: and

.5 overtime compensation.

ARTICLE 14 - TERMINATION OR SUSPENSION OF THE CONTRACT

14.1 TERMINATION BY THE CONTRACTOR

14.1.1 The Contractor may terminate the Contract if the Work is stopped for a period of 30 consecutive days through no act or fault of the Contractor or a Subcontractor, Sub-subcontractor or their agents or employees or any other persons or entities performing portions of the Work under direct or indirect contract with the Contractor, for any of the following reasons:

.1 issuance of an order of a court or other public authority having jurisdiction which requires all Work to be stopped;

.2 an act of government, such as a declaration of national emergency which requires all Work to be stopped;

14.1.2 The Contractor may terminate the Contract if, through no act or fault of the Contractor or a Subcontractor, Sub-subcontractor or their agents or employees or any other persons or entities performing portions of the Work under direct

or indirect contract with the Contractor, repeated suspensions, delays or interruptions of the entire Work by the Owner as described in Paragraph 14.3 constitute in the aggregate more than 100 percent of the total number of days scheduled for completion, or 120 days in any 365-day period, whichever is less.

14.1.3 If one of the reasons described in Subparagraph 14.1.1 or 14.1.2 exists, the Contractor may, upon seven days' written notice to the Owner and Prime, terminate the Contract and recover from the Owner payment for Work properly executed and for payment of costs directly related to Work thereafter performed by the Contractor in terminating the Contract, including reasonable demobilization and cancellation charges, proven loss with respect to materials, equipment, tools, and construction equipment and machinery, including reasonable overhead and profit therefrom.

14.1.4 If all of the Work is stopped for a period of 60 consecutive days through no act or fault of the Contractor or a Subcontractor or their agents or employees or any other persons performing portions of the Work under contract with the Contractor because the Owner has persistently failed to fulfill the Owner's obligations under the Contract Documents with respect to matters important to the progress of the Work, the Contractor may, upon seven additional days' written notice to the Owner and the Prime, terminate the Contract and recover from the Owner as provided in Subparagraph 14.1.3.

14.2 TERMINATION BY THE OWNER FOR CAUSE

14.2.1 The Owner may terminate the Contract if the Contractor:

.1 persistently or repeatedly refuses or fails to supply enough properly skilled workers or proper materials;

.2 fails to make payment to Subcontractors for materials or labor in accordance with the respective agreements between the Contractor and the Subcontractors;

.3 persistently disregards laws, ordinances, or rules, regulations or orders of a public authority having jurisdiction; or

.4 otherwise is guilty of substantial breach of a provision of the Contract Documents.

14.2.2 When any of the above reasons exist, the Owner, upon certification by the Prime that sufficient cause exists to justify such action, may without prejudice to any other rights or remedies of the Owner and after giving the Contractor and the Contractor's surety, if any, seven days' written notice, terminate employment of the Contractor and may, subject to any prior rights of the surety:

.1 take possession of the site and of all materials, equipment, tools, and construction equipment and machinery thereon owned by the Contractor;

.2 accept assignment of subcontracts pursuant to Paragraph 5.4; and

.3 finish the Work by whatever reasonable method the Owner may deem expedient. Upon request of the Contractor, the Owner shall furnish to the Contractor an accounting of the costs incurred by the Owner in finishing the Work.

14.2.3 When the Owner terminates the Contract for one of the reasons stated in Subparagraph 14.2.1, the Contractor shall not be entitled to receive further payment until the Work is finished.

14.2.4 If the unpaid balance of the Contract Sum exceeds costs of finishing the Work, including compensation for the Architect's services and expenses made necessary thereby, and other damages incurred by the Owner and not expressly waived, such excess shall be paid to the Contractor. If such costs and damages exceed the unpaid balance, the Contractor shall pay the difference to the Owner. The amount to be paid to the Contractor or Owner, as the case may be, shall be certified by the Prime, upon application, and this obligation for payment shall survive termination of the Contract.

14.3 SUSPENSION BY THE OWNER FOR CONVENIENCE

14.3.1 The Owner may, without cause, order the Contractor in writing to suspend, delay or interrupt the Work in whole or in part for such period of time as the Owner may determine.

14.3.2 The Contract Sum and Contract Time shall be adjusted for any increases in the cost and time caused by suspension, delay or interruption as described in Subparagraph 14.3.1. Adjustment of the Contract Sum shall include profit. No adjustment shall be made to the extent:

.1 that performance is, was or would have been so suspended, delayed or interrupted by another cause for which the Contractor is responsible; or

.2 that an equitable adjustment is made or denied under another provision of the Contract.

14.4 TERMINATION BY THE OWNER FOR CONVENIENCE

14.4.1 The Owner may, at any time, terminate the Contract for the Owner's convenience and without cause.

14.4.2 Upon receipt of written notice from the Owner of such termination for the Owner's convenience, the Contractor shall:

.1 cease operations as directed by the Owner in the notice;

.2 take actions necessary, or that the Owner may direct, for the protection and preservation of the Work; and

.3 except for Work directed to be performed prior to the effective date of termination stated in the notice, terminate all existing subcontracts and purchase orders and enter into no further subcontracts and purchase orders.

14.4.3 In case of such termination for the Owner's convenience, the Contractor shall be entitled to receive payment for Work executed in accordance with the Contract Documents, and costs incurred by reason of such termination, along with reasonable overhead and profit thereon.

14.4.4 Upon a determination by a court of competent jurisdiction that termination of the Contractor pursuant to Paragraph 14.2 was wrongful or otherwise improper, such termination shall be deemed a termination for convenience pursuant to Paragraph 14.4, and the provisions of Subparagraph 14.4.3 shall apply.

END OF DOCUMENT

[Alternate Provision:

3.9 PROJECT MANAGER AND SUPERINTENDENT

3.9.1 The Contractor shall employ a competent Project Manager, superintendent, and necessary assistants, all of whom shall be in full-time attendance at the Project site during performance of the Work. The Project Manager shall be assigned full-time by the Contractor to Project management responsibilities, and shall not be assigned by the Contractor to assume managerial, or other responsibilities for any other project of the Contractor. The Project Manager and the superintendent shall be satisfactory to the Owner, and shall remain on-site full time, and shall be present on-site whenever the Work is in progress. So long as the Project Manager and the superintendent remain employed by the Contractor or any related entity, the Project Manager and the superintendent shall not be replaced without the Owner's prior written consent. The Project Manager and the superintendent shall represent the Contractor, and such communications as may be given to either of them shall be as binding as if given to the Contractor. Important communications shall be subsequently confirmed in writing. Other communications shall be similarly confirmed on written request in each case.

3.9.3 The Project Manager and the superintendent shall not work with tools, or perform actual trades Work, but shall be dedicated to the on site management of the Project. The Contractor shall provide additional staff as required for Project Management, or as may be specified in the Specifications.**]**

STATE OF RHODE ISLAND AND PROVIDENCE PLANTATIONS

SUPPLEMENTAL TERMS AND CONDITIONS FOR CONTRACTS AND SUBAWARDS FUNDED IN WHOLE OR IN PART BY THE AMERICAN RECOVERY AND REINVESTMENT ACT OF 2009, PUB. L. NO. 111-5

1. **Definitions**

   a. "ARRA" or "Recovery Act" means the American Recovery and Reinvestment Act of 2009, Pub. L. No. 111-5, 123 Stat.115.

   b. "ARRA Funds" means any funds that are expended or obligated from appropriations made under ARRA.

   c. "ARRA Requirements" means these Supplemental Terms and Conditions, as well as any terms and conditions required by: ARRA; federal law, regulation, policy or guidance; the federal Office of Management and Budget (OMB); the awarding federal agency; or, the Rhode Island Office of Economic Recovery and Reinvestment (OERR).

   d. "Contract" means the contract to which these Supplemental Terms and Conditions are attached, and includes an agreement made pursuant to a grant or loan subaward to a Sub-Recipient.

   e. "Contractor" means the party or parties to the Contract other than the Prime Recipient and includes a subgrantee or a borrower. For the purposes of ARRA reporting, Contractor is either a Sub-Recipient or a Recipient Vendor under this Contract.

   f. "Prime Recipient" means a non-Federal entity that expends Federal awards received directly from a Federal awarding agency to carry out a Federal program.

   g. "Recipient Vendor" means a Vendor that receives ARRA Funds from a Prime Recipient.

   h. "Subcontractor" means any entity engaged by Contractor to provide goods or perform services in connection with this contract.

   i. "Sub-Recipient Vendor" means a Vendor that receives ARRA Funds from a Sub-Recipient.

   j. "Sub-Recipient" means a non-Federal entity receiving ARRA Funds through a Prime Recipient to carry out an ARRA funded program or project, but does not include an individual that is a beneficiary of such a program. The term " Sub-Recipient" is intended to be consistent with the definition in OMB Circular A-133

and section 2.2 of the June 22, 2009 OMB Reporting Guidance.[1] A Sub-Recipient is sometimes referred to as a subgrantee.

k. "Supplemental Terms and Conditions" means these Supplemental Terms And Conditions For Contracts And Subawards Funded In Whole Or In Part By The American Reinvestment Recovery Act Of 2009, Pub. L. No. 111-5, as may be subsequently revised pursuant to ongoing guidance from the relevant federal or State authorities.

l. "Vendor" means a dealer, distributor, merchant, or other seller providing goods or services that are required for the project or program funded by ARRA. The term "Vendor" is intended to be consistent with the definition in OMB Circular A-133 and section 2.2 of the June 22, 2009 OMB Reporting Guidance.

2. General

a. To the extent this Contract involves the use of ARRA Funds, Contractor shall comply with both the ARRA Requirements and these Supplemental Terms and Conditions, except where such compliance is exempted or prohibited by law.

b. The Contractor acknowledges these Supplemental Terms and Conditions may require changes due to future revisions of or additions to the ARRA Requirements, and agrees that any revisions of or additions to the ARRA Requirements shall automatically become a part of the Supplemental Terms and Conditions without the necessity of either party executing or issuing any further instrument and shall become a part of Contractor's obligations under the Contract.. The State of Rhode Island may provide written notification to Contractor of such revisions, but such notice shall not be a condition precedent to the effectiveness of such revisions.

3. Conflicting Terms

Contractor agrees that, to the extent that any term or condition herein conflicts with one or more ARRA Requirements, the ARRA Requirements shall control.

4. Enforceability

Contractor agrees that if it or one of its subcontractors or sub-recipients fails to comply with all applicable federal and State requirements governing the use of ARRA funds, including any one of the terms and conditions specified herein, the State may withhold or suspend, in whole or in part, funds awarded under the program, recover misspent funds, or both. This provision is in addition to all other civil and criminal remedies available to the State under applicable state and federal laws and regulations.

---

[1] Implementing Guidance for the Reports on Use of Funds Pursuant to the American Recovery and Reinvestment Act of 2009, M-09-21 (June 22, 2009), available at http://www.whitehouse.gov/omb/assets/memoranda_fy2009/m09-21.pdf.

5. **Applicability to Subcontracts and Subawards**

Contractor agrees that it shall include the Supplemental Terms and Conditions set forth herein, including this provision, in all subcontracts or subawards made in connection with projects funded in whole or in part by ARRA, and also agrees that it will not include provisions in any such subcontracts or subawards that conflict with either ARRA or the terms and conditions herein.

6. **Availability of Funding**

Contractor understands that federal funds made available by ARRA are temporary in nature and agrees that the State is under no obligation to provide additional State-financed appropriations once the temporary federal funds are expended.

7. **Inspection and Audit of Records**

Contractor agrees that it shall permit the State and its representatives, the United States Comptroller General or his representative or the appropriate inspector general appointed under section 3 or 8G of the Inspector General Act of 1978 or his representative to:

i. Examine, inspect, copy, review or audit any records relevant to, and/or involve transactions relating to, this agreement, including documents and electronically stored information in its or any of its subcontractors' or sub-recipients' possession, custody or control unless subject to a valid claim of privilege or otherwise legally protected from disclosure; and

ii. Interview any officer or employee of the Contractor regarding the activities and programs funded by ARRA.

8. **Registration Requirements**

a. **DUNS Number Registration**. Contractor agrees: (i) if it does not have a Dun and Bradstreet Data Universal Numbering System (DUNS) Number, to register for a DUNS Number within 10 business days of receiving this Contract; (ii) to provide the State with its DUNS number prior to accepting funds under this agreement; and (iii) to inform the State of any material changes concerning its DUNS number.

b. **Central Contractor Registration**. To the extent that Contractor is a Sub-Recipient, it agrees: (i) to maintain a current registration in the Central Contractor Registration (CCR) at all times this agreement is in force, (ii) to provide the State with documentation sufficient to demonstrate that it has a current CCR registration, and (iii) to inform the State of any material changes concerning this registration.

c. **FederalReporting.gov Registration**. To the extent that Contractor is a Sub-Recipient, it agrees: (i) to register on FederalReporting.gov within 10 business days of receiving this subaward; (ii) to maintain a current registration on

FederalReporting.gov at all times this agreement is in force; (iii) to provide the State with documentation sufficient to demonstrate that it has a current registration on FederalReporting.gov, and (iv) to inform the State of any material changes concerning this registration.

9. **Reporting Requirements under § 1512 of ARRA**

a. Contractor agrees to provide the State with data sufficient to fulfill the State's ARRA reporting requirements within the timeframes established by State or federal law, regulation or policy, including but not limited to section 1512 reporting requirements.

b. To the extent that Contractor is a Sub-Recipient with a Subaward having a total value of greater than $25,000, it agrees to report directly to the Federal government the information described in section 1512(c) of ARRA using the reporting instructions and data elements available online at FederalReporting.gov, and ensure that any information that is prefilled is corrected or updated as needed. Information from these reports will be made available to the public.

c. To the extent that Contractor is a Sub-Recipient with a Subaward having a total value of greater than $25,000, it accepts delegation of reporting responsibility of FFATA data elements required under section 1512 of ARRA for payments from the State. Sub-Recipient shall utilize the federal government's online reporting solution at www.FederalReporting.gov. Reports are due no later than ten calendar days after each calendar quarter in which the recipient receives the assistance award funded in whole or in part by ARRA.

d. To the extent that Contractor is a Sub-Recipient with a Subaward having an initial total value of less than $25,000, but is subsequently modified to exceed $25,000, Contractor agrees that subsections (b) and (c) above apply after the modification.

10. **Buy American Requirements under § 1605 of ARRA**

a. Contractor agrees that, in accordance with section 1605 of ARRA, it will not use ARRA funds for a project for the construction, alteration, maintenance, or repair of a public building or public work unless all of the iron, steel and manufactured goods used in the project are produced in the United States in a manner consistent with United States obligations under international agreements. In addition to the foregoing Contractor agrees to abide by all regulations issued pursuant to section 1605 of ARRA.

b. Contractor understands that this requirement may only be waived by the applicable federal agency in limited situations as set out in section 1605 of ARRA and federal regulations issued pursuant thereto.

11. Wage Rate Requirements under § 1606 of ARRA

a. Contractor agrees that it will comply with the wage rate requirements contained in section 1606 of ARRA, which requires that, notwithstanding any other provision of law, all laborers and mechanics employed by contractors and subcontractors on projects funded directly by or assisted in whole or in part by and through the Federal Government pursuant to ARRA shall be paid wages at rates not less than those prevailing on projects of a character similar in the locality as determined by the Secretary of Labor in accordance with subchapter IV of chapter 31 of title 40, United States Code. The Secretary of Labor's determination regarding the prevailing wages applicable in Rhode Island is available at http://www.gpo.gov/davisbacon/ri.html.

b. Contractor agrees that it will comply with all federal regulations issued pursuant to section 1606 of ARRA, and that it will require any subcontractors or sub-recipients to comply with the above provision.

12. Required Jobs Data Reporting under § 1512(c)(3)(D) of ARRA

a. Contractor agrees, in accordance with section 1512(c)(3)(D) of ARRA and section 5 of the June 22, 2009 OMB Reporting Guidance (entitled "Reporting on Jobs Creation Estimates and by Recipients"), to provide an estimate of the number of jobs created and the number of jobs retained by ARRA-funded projects and activities. In order to perform the calculation, the Contractor will provide the data elements listed in sub-section (b) below.

b. Contractor agrees that, no later than two business days after the end of each calendar quarter, it will provide to the State the following data elements using a form specified by the State:

   i. The total number of ARRA-funded hours worked on this award.

   ii. The number of hours in a full-time schedule for a quarter.

   iii. A narrative description of the employment impact of the ARRA funded work. This narrative is cumulative for each calendar quarter and at a minimum, shall address the impact on the Contractor's workforce and the impact on the workforces of its subcontractors or sub-recipients.

c. Contractor agrees that, in the event that the federal government permits direct reporting of section 1512(c)(3)(D) jobs data by sub-recipients or vendors, it will directly report jobs data to the federal government, consistent with any applicable federal law, regulations and guidance.

13. **Segregation of Funds**

a. Contractor agrees that it shall segregate obligations and expenditures of ARRA funds from other funding it receives from the State and other sources, including other Federal awards or grants.

b. Contractor agrees that no part of funds made available under ARRA may be commingled with any other funds or used for a purpose other than that of making payments in support of projects and activities expressly authorized by ARRA.

14. **Disclosure pursuant to the False Claims Act**

Contractor agrees that it shall promptly refer to an appropriate Federal Inspector General any credible evidence that a principal, employee, agent, subcontractor or other person has committed a false claim under the False Claims Act or has committed a criminal or civil violation of laws pertaining to fraud, conflict of interest, bribery, gratuity, or similar misconduct involving ARRA funds.

15. **Disclosure of Fraud, Waste and Mismanagement to State Authorities**

Contractor shall also refer promptly to the Rhode Island Department of Administration, Department of Purchases, any credible evidence that a principal, employee, agent, contractor, subgrantee, subcontractor, or other person has committed a criminal or civil violation of State or Federal laws and regulations in connection with funds appropriated under ARRA.

16. **Prohibited Uses of ARRA Funds**

a. Contractor agrees that neither it nor any subcontractors or sub-recipients will use the funds made available under this agreement for any casinos or other gambling establishments, aquariums, zoos, golf courses, swimming pools, or similar projects.

b. Contractor agrees that neither it nor any subcontractors or sub-recipients will use the funds made available under this agreement in a manner inconsistent with any certification made by the Governor or any other State official pursuant to the certification requirements of ARRA, which are published online at http://www.recovery.ri.gov/certification/.

17. **Whistleblower Protection under §1553 of ARRA**

a. Contractor agrees that it shall not discharge, demote, or otherwise discriminate against an employee as a reprisal for disclosures by the employee of information that he or she reasonably believes is evidence of (1) gross mismanagement of an agency contract or grant relating to covered funds; (2) a gross waste of covered funds; (3) a substantial and specific danger to public health or safety related to the implementation or use of covered funds; (4) an abuse of authority related to the implementation or use of covered funds; or (5) a violation of law, rule, or

regulation related to an agency contract (including the competition for or negotiation of a contract) or grant, awarded or issued relating to covered funds.

b. Contractor agrees to post notice of the rights and remedies available to employees under section 1553 of ARRA.

Please note that the State will strictly enforce compliance with all ARRA Requirements and these Supplemental Terms and Conditions. Accordingly, all Contractors should familiarize themselves with these Supplemental Terms and Conditions as well as all ARRA Requirements as they relate to this Contract.

DOCUMENT 00850 - PREVAILING WAGE RATES

The State of Rhode Island Department of Labor, Division of Professional Regulation General Decision Modification document current as of the bid posting date for this Project, is an integral part of the Bid Documents for use in fulfilling prevailing wage rate requirements. A copy is available on the web site of the State of Rhode Island Department of Administration, Division of Purchases.

The Division of Purchases Web Site Address:

http://www.purchasing.ri.gov/RIVIP/Info.asp

Click on "Prevailing Wage Table".

END OF DOCUMENT

DOCUMENT 00900 - ADDENDA AND MODIFICATIONS

PART 1 – GENERAL

1.1 As of the time of publication of this Project Manual, no Addenda had been issued.

1.2 Should Addenda be issued during the Bid Period, they will augment this Document and become a part of the Project Manual.

END OF DOCUMENT 00900

SECTION 01100 - SUMMARY

PART 1 - GENERAL

1.01 PROJECT

A. Project Name: Gaige Hall and Craig Lee Hall Fire Code Upgrades.

B. Owner's Name: State of Rhode Island. Rhode Island College – Providence, RI

C. The Project consists of the construction of three types of work within Craig Lee Hall:
   1. Fire door replacement, stair guard and rail replacement, and the architectural finish repairs attendant upon installation of the fire code upgrade work.
   2. Replacement of selected door hardware throughout the building.
   3. Reconfiguration of the enclosures around the exit stairways in the East Wing of the building.

D. The project consists of the construction of four types of work within Gaige Hall:
   1. Fire door replacement, stair guard and rail replacement, and the architectural finish repairs attendant upon installation of the fire code upgrade work.
   2. Installation of magnetic door hold open devices and their connection to the existing fire alarm system.
   3. Replacement of selected door hardware throughout the building.
   4. Separation of the basement mechanical spaces from the exit stairway.

1.02 CONTRACT DESCRIPTION

A. Contract Type: A single prime contract based on a Stipulated Price as described in Document 00500 - Agreement.

1.03 DESCRIPTION OF WORK

A. Scope of demolition and removal work is shown on drawings plus as specified in Section 02225.

B. Scope of alterations work is shown on drawings plus as specified herein.

C. Fire Alarm: Install magnetic door hold open devices as shown on the drawings and interface those devices with the existing fire alarm system.

1.04 OWNER OCCUPANCY/SCHEDULE

A. Owner intends to continuously occupy the facility. Work areas will be made available as mutually agreed to during project scheduling.

B. Work to begin within seven (7) days of receipt of Purchase Order.

C. Cooperate with Owner to minimize conflict and to facilitate Owner's operations.

1.05 CONTRACTOR USE OF SITE AND PREMISES

A. Construction Operations: Limited to areas noted on Drawings.

B. Arrange use of site and premises to allow:

1. Adjacent projects to progress as planned for the Owner.
2. Use of street and adjacent properties by the Public

C. Provide access to and from site as required by law and by Owner:
1. Maintain appropriate egress for workforce.
2. Do not obstruct roadways, sidewalks, or other public ways without permit. Provide necessary signage when sidewalk fencing is installed to direct pedestrians across street.

D. Time Restrictions:
1. Limit conduct of especially noisy exterior work during the hours of 7AM to 10PM.

E. Utility Outages and Shutdown:
1. Do not disrupt or shut down life safety systems, including but not limited to fire sprinklers and fire alarm system, without 7 days notice to Owner and authorities having jurisdiction.
2. Prevent accidental disruption of utility services to other facilities.

1.06 WORK SEQUENCE

A. Coordinate construction schedule and operations with Owner.

END OF SECTION

SECTION 01200 - PRICE AND PAYMENT PROCEDURES

PART 1 - GENERAL

1.1 SECTION INCLUDES

A. Cash allowances.

B. Contingency allowances.

C. Testing and inspection allowances.

D. Schedule of values.

E. Applications for payment.

F. Warranty inspection retainage.

G. Sales tax exemption.

H. Change procedures.

I. Defect assessment.

J. Unit prices.

K. Alternates.

1.2 CASH ALLOWANCES

A. Costs Included in Cash Allowances: Cost of Product to Contractor or Subcontractor, less applicable trade discounts, but including freight/delivery to site. RIC will not pay sales taxes.

B. Costs Not Included in Cash Allowances But Included in the Contract Sum: Product receipt and handling at the site, including unloading, uncrating, and storage; protection of products from elements and from damage; labor for installation and finishing.

C. Prime Responsibility:
   1. Consult with Contractor for consideration and selection of products, suppliers, and Installers.
   2. Select products in consultation with Owner and transmit decision to Contractor.
   3. Prepare Change Order to adjust final cost.

D. Contractor Responsibility:
   1. Assist Prime or its Consultants in selection of products, suppliers and installers.

2. Obtain proposals from suppliers and installers, and offer recommendations.
3. On notification on selection by Prime, execute purchase agreement with designated supplier and installer.
4. Arrange for and process shop drawings, product data, and samples. Arrange for delivery.
5. Promptly inspect products upon delivery for completeness, damage, and defects. Submit claims for transportation damage.

E. Differences in costs will be adjusted by Change order.

F. Schedule of Cash Allowances:
1. Signage – Include an allowance of $5,000 in the Base Bid for purchase of custom signage as described in Section 10400.

1.3 CONTINGENCY ALLOWANCES

A. Include in the Contract, a stipulated sum of $50,000 for use upon Owner's instruction.

B. Contractor's costs for products, delivery, installation, labor, insurance, payroll, taxes, bonding, equipment rental, overhead and profit will be included in Change Orders authorizing expenditure of funds from this Contingency Allowance.

C. Funds will be drawn from the Contingency Allowance only by Change Order.

D. At closeout of Contract, funds remaining in Contingency Allowance will be credited to Owner by Change Order.

1.4 TESTING AND INSPECTION ALLOWANCE

A. All costs of testing are included in the Base Bid. There is no testing allowance.

1.5 SCHEDULE OF VALUES

A. Submit a printed schedule on AIA Form G703 - Application and Certificate for Payment Continuation Sheet

B. Submit Schedule of Values in duplicate, one copyrighted original and one copy, within 15days after date of receipt of a Purchase Order from RIC Department of Purchasing.

C. Format: Utilize the Table of Contents of this Project Manual. Identify each line item with number and title of the major specification Section. Identify site mobilization, bonds and insurance.

D. Include in each line item, the amount of Allowances specified in this Section. For unit cost Allowances, identify quantities taken from Contract Documents multiplied by the unit cost to achieve the total for the item.

E. Include separately for each line item, a direct proportional amount of Contractor's overhead and profit.

F. Revise schedule to list approved Change Orders, with each Application for Payment.

1.6 APPLICATIONS FOR PAYMENT

A. Submit each application on an AIA Form G702 - Application and Certificate for Payment and AIA G703 - Continuation Sheet, accompanied by three copies.
   1. Individually sign and notarize, and emboss with notary's official seal, the original and each of the three copies.
   2. Applications not including original copyrighted AIA G702, and G703 Forms, will be rejected, and returned for resubmittal.
   3. Applications not properly signed and notarized will be rejected, and returned for resubmittal.

B. Content and Format: Utilize Schedule of Values for listing items in Application for Payment.

C. Provide one hard copy and one copy in disc form of the updated construction schedule with each Application for Payment submission.
   1. Provide a statement signed by the Contractor's firm principal certifying that there are no unidentified outstanding claims for delay.

D. Include with each monthly Application for Payment, following the first application, one copy of the Certified Monthly Payroll Record for the previous month's pay period.

E. Payment Period: Submit at intervals stipulated in the Agreement.

F. Submit with transmittal letter as specified for Submittals in Section 01330.

G. Beginning with the second Application for Payment, Contractor's right to payment must be substantiated by documenting, on a copy of the RIC Waiver of Lien Form included in Document 00614 - Waiver of Lien Form in this Project Manual, that payment monies due, less retainage not exceeding ten percent, have been paid in full to subcontractor and suppliers for work, materials, or rental of equipment billed for under specific line item numbers in the immediately preceding application.

H. Substantiating Data: When the Architect requires substantiating information, submit data justifying dollar amounts in question. Include the following with the Application for Payment :
   1. Record Documents as specified in Section 01780, for review by the Owner which will be returned to the Contractor.
   2. Affidavits attesting to off-site stored products.
   3. Construction progress schedules, revised and current as specified in Section 01330.

1.7 WARRANTY INSPECTION RETAINAGE

A. An amount of 1% of job cost will be retained from final payment, made at the time of Substantial Completion, for a duration of ten months. If, after ten months, all systems, including mechanical and electrical, are determined by the Owner to be properly functioning, the Warranty Inspection Retainage will be released.

B. If, after ten months, there are found to be modifications, adjustments, or corrections necessary to be made to address any system or product malfunction, in order to fulfill specified performance or requirements of such systems or products, release of the warranty inspection retainage will be delayed until such malfunctions are rectified.

1.8 SALES TAX EXEMPTION

A. Owner is exempt from sales tax on products permanently incorporated in Work of the Project.
   1. Obtain sales tax exemption certificate number from Owner.
   2. Place exemption certificate number on invoice for materials incorporated in the Work of the Project.
   3. Furnish copies of invoices to Owner.
   4. Upon completion of Work, file a notarized statement with Owner that all purchases made under exemption certificate were entitled to be exempt.
   5. Pay legally assessed penalties for improper use of exemption certificate number.

1.9 CHANGE PROCEDURES

A. Submittals: Submit name of the individual authorized to receive change documents, and be responsible for informing others in Contractor's employ or Subcontractors of changes to the Work.

B. The Prime will advise of minor changes in the Work not involving an adjustment to Contract Sum or Contract Time by issuing supplemental instructions on AIA Form G710

C. The Prime may issue a Proposal Request which includes a detailed description of a proposed change with supplementary or revised Drawings and specifications, a change in Contract Time for executing the change with a stipulation of any overtime work required, and the period of time during which the requested price will be considered valid. Contractor will prepare and submit an estimate within 15 days.

D. The Contractor may propose changes by submitting a request for change to the Architect, describing the proposed change and its full effect on the Work. Include a statement describing the reason for the change, and the effect on the Contract Sum and Contract Time with full documentation, and a statement describing the effect on Work by separate or other Contractors. Document any requested substitutions in accordance with Section 01600.

E. Stipulated Sum Change Order: Based on Proposal Request, and Contractor's fixed price quotation, or Contractor's request for a Change Order as approved by Prime.

F. Unit Price Change Order: For contract unit prices and quantities, the Change Order will be executed on a fixed unit price basis. For unit costs or quantities of units of work which are not pre-determined, execute the Work under a Construction Change Directive. Changes in the Contract Sum or Contract Time will be computed as specified for a Time and Material Change Order.

G. Construction Change Directive: Prime may issue a directive, on AIA Form G713 Construction Change Directive signed by the Owner, instructing the Contractor to proceed with a change in the Work, for subsequent inclusion in a Change Order. Document will describe changes in the Work, and designate method of determining any change in the Contract Sum or Contract Time. Promptly execute the change.

H. Time and Material Change Order: Submit an itemized account and supporting data after completion of the change, within the time limits indicated in the Conditions of the Contract. The Prime will determine the change allowable in the Contract Sum and Contract Time as provided in the Contract Documents.

I. Maintain detailed records of work done on a Time and Material basis. Provide full information required for an evaluation of the proposed changes, and to substantiate costs for the changes in the Work.

J. Document each quotation for a change in cost or time with sufficient data to allow an evaluation of the quotation. Provide detailed breakdown of costs and estimates for labor and materials including a detailed breakdown for subcontractor's or vendor's Work. Include copies of written quotations from subcontractors or vendors.

K. Change Order Forms: AIA G701 Change Order.

L. Execution of Change Orders: The Prime will issue Change Orders for signatures of the parties as provided in the Conditions of the Contract.

M. Correlation Of Contractor Submittals:
   1. Promptly revise the Schedule of Values and the Application for Payment forms to record each authorized Change Order as a separate line item and adjust the Contract Sum. Promptly revise progress schedules to reflect any change in the Contract Time, revise sub-schedules to adjust times for any other items of work affected by the change, and resubmit.
   2. Promptly enter changes in the Project Record Documents.

1.10 DEFECT ASSESSMENT

A. Replace the Work, or portions of the Work, not conforming to specified requirements.

B. If, in the opinion of the Prime, it is not practical to remove and replace the Work, the Prime will direct an appropriate remedy or adjust payment.

C. The defective Work may remain, but the unit sum will be adjusted to a new sum at the discretion of the Prime.

D. The defective Work will be partially repaired to the instructions of the Prime, and the unit sum will be adjusted to a new sum at the discretion of the Prime.

E. The individual Specification Sections may modify these options or may identify a specific formula or percentage sum reduction.

F. The authority of the Prime to assess the defect and identify a payment adjustment, is final.

G. Non-Payment For Rejected Products: Payment will not be made for rejected products for any of the following:
1. Products wasted or disposed of in a manner that is not acceptable.
2. Products determined as unacceptable before or after placement.
3. Products not completely unloaded from the transporting vehicle.
4. Products placed beyond the lines and levels of the required Work.
5. Products remaining on hand after completion of the Work.
6. Loading, hauling, and disposing of rejected products.

1.11 UNIT PRICES

A. There are no unit prices with this project.

1.12 ALTERNATES

A. Alternates quoted on Bid Forms will be reviewed and accepted or rejected at the Owner's option. Accepted Alternates will be identified in Owner-Contractor Agreement.

B. Coordinate related work and modify surrounding work as required.

C. Schedule of Alternates:
1. Stainless steel handrails with painted stanchions and pickets as identified in Section 05521.
2. Stainless steel handrails and stanchions with painted pickets as identified in Section 05521.
3. Stainless steel handrails and stanchions with perforated metal panel infill as identified in Section 05521.

PART 2 - PRODUCTS

Not Used.

PART 3 - EXECUTION

Not Used.

END OF SECTION

SECTION 01300 - ADMINISTRATIVE REQUIREMENTS

PART 1 - GENERAL

1.1 SECTION INCLUDES

A. Site administration

B. Construction progress schedules.

C. Coordination and project conditions.

D. Preconstruction meeting.

E. Site mobilization meeting.

F. Progress meetings.

F. Pre-installation meetings.

1.2 SITE ADMINISTRATION

A. Maintain a guest log in format acceptable to Owner. Provide copies when requested.

1.3 COORDINATION AND PROJECT CONDITIONS

A. Coordinate the scheduling, submittals, and the Work of the various Sections of the Project Manual to ensure an efficient and orderly sequence of the demolition elements.

B. Coordinate the completion and clean up of the Work of the separate Sections in preparation for Substantial Completion.

C. Coordinate access to the site for correction of defective Work and the Work not in accordance with the Contract Documents.

1.4 CONSTRUCTION PROGRESS CHEDULES

A. Submit initial progress schedule in duplicate within 15 days after date of established notice to proceed for Architect to review.

B. Revise and resubmit as required.

C. Submit revised schedules with each Application for Payment, identifying changes since previous version.

D. Submit a computerized chart with separate line for each major section of Work or operation, identifying first work day of each week.

E. Show complete sequence of construction activity, identifying Work of separate stages and other logically grouped activities. Indicate the early and late start, early and late finish, float dates, and duration.

F. Indicate estimated percentage of completion for each item of Work at each submission.

G. Indicate submittal dates required for shop drawings, product data, samples, and product delivery dates.

1.5 PRECONSTRUCTION MEETING

A. The Prime will schedule a meeting after the RI State Department of Administration, Division of Purchases, issues a Purchase Order to the Contractor.

D. Attendance Required: Owner, Prime, Architectural Consultant, and Contractor.

E. Agenda:
1. Distribution of the Contract Documents.
2. Submission of a list of Subcontractors, a list of products, schedule of values, and a progress schedule.
3. Designation of the personnel representing the parties in the Contract.
4. The procedures and processing of the field decisions, submittals, substitutions, applications for payments, proposal requests, Change Orders, and Contract closeout procedures.
5. Scheduling.

F. Contractor shall record the minutes and distribute copies within two days after the meeting to the participants, with copies to the Prime, Consultants, Owner, other participants, and those consultants affected by the decisions made.

1.6 SITE MOBILIZATION MEETING

A. The Prime will schedule a meeting at the Project site prior to the Contractor's occupancy and may occur at the same time as the Preconstruction meeting noted above.

B. Attendance Required: The Owner, Prime, Contractor, the Contractor's Superintendent, and major Subcontractors.

C. Agenda:
1. Use of the premises by the Contractor.
2. Security and housekeeping procedures.
3. Schedules.

4. Application for payment procedures.
5. Procedures for testing.
6. Procedures for maintaining the record documents.

D. Contractor shall record the minutes and distribute the copies within two days after the meeting to the participants, with copies to the Prime, Consultants, Owner, other participants, and those consultants affected by the decisions made.

1.7 PROGRESS MEETINGS

A. Schedule and administer the meetings throughout the progress of the Work at weekly intervals while work is in process.

G. Make arrangements for the meetings, prepare the agenda with copies for the participants, and preside at the meetings.

H. Attendance Required: The job superintendent, major subcontractors and suppliers, the Owner, Prime, and Consultants as appropriate to agenda topics for each meeting.

I. Agenda:
1. Review the minutes of previous meetings.
2. Review of the Work progress.
3. Field observations, problems, and decisions.
4. Identification of the problems which impede the planned progress.
5. Review of the submittals schedule and status of the submittals.
6. Review of delivery schedules.
7. Maintenance of the progress schedule.
8. Corrective measures to regain the projected schedules.
9. Planned progress during the succeeding work period.
10. Coordination of the projected progress.
11. Maintenance of the quality and work standards.
12. Effect of the proposed changes on the progress schedule and coordination.
13. Other business relating to the Work.

J. Contractor shall record the minutes and distribute the copies within two days after the meeting to the participants, with copies to the Prime, Consultants, Owner, participants, and others affected by the decisions made.

1.8 PREINSTALLATION MEETINGS

A. When required in the individual specification Sections, convene a pre-installation meeting at the site prior to commencing the Work of the Section.

K. Require attendance of the parties directly affecting, or affected by, the Work of the specific Section.

L. Notify the Prime four days in advance of the meeting date.

M. Prepare an agenda and preside at the meeting:
   1. Review the conditions of installation, preparation and installation procedures.
   2. Review coordination with the related work.

N. Record the minutes and distribute the copies within two days after the meeting to the participants, with copies to the Prime, Owner, participants, and those affected by the decisions made.

PART 2 - PRODUCTS

Not used.

PART 3 - EXECUTION

Not used.

END OF SECTION

SECTION 01330 - SUBMITTAL PROCEDURES

PART 1 - GENERAL

1.1 SECTION INCLUDES

A. Submittal procedures.

B. Construction progress schedules.

C. Proposed products list.

D. Product data.

E. Shop drawings.

F. Samples.

G. Test reports.

H. Certificates.

I. Manufacturer's instructions.

J. Manufacturer's field reports.

K. ARRA Job Reports.

1.2 SUBMITTAL PROCEDURES

A. Master List Submittal:
   1. Submit a master list of the required submittals with a proposed date for each item to be submitted.
   2. Show the date submittal was sent, days since submittal was sent, status of submittal, date submittal was received in return, and any date associated with resubmittals.
   3. Up date master list with each submission and response.
   4. Issue copy of master list at least monthly to the Prime.

B. Transmit each submittal with a dated Prime-accepted transmittal form.

C. Sequentially number the transmittal form. Mark the revised submittals with an original number and a sequential alphabetic suffix.

D. Identify the Project, Contractor, subcontractor and supplier; the pertinent drawing and detail number, and the specification Section number, appropriate to the submittal.

E. Apply a Contractor's stamp, signed or initialed, certifying that the review, approval, verification of products required, field dimensions, adjacent construction Work, and coordination of the information is in accordance with the requirements of the Work and the Contract Documents.

F. Schedule submittals to expedite the Project, and deliver to the Prime at their business address. Coordinate the submission of related items.

G. For each submittal for review, allow 15 days excluding the delivery time to and from the Contractor.

H. Identify the variations from the Contract Documents and the Product or system limitations which may be detrimental to a successful performance of the completed Work.

I. Allow space on the submittals for the Contractor's, Prime’s, and Consultant's review stamps.

J. When revised for resubmission, identify the changes made since the previous submission.

K. Distribute copies of the reviewed submittals as appropriate. Instruct the parties to promptly report an inability to comply with the Contract requirements.

1.3 CONSTRUCTION PROGRESS SCHEDULES

A. Submit preliminary outline Schedules within 15 days after the date of receipt of a Purchase Order from RIC for coordination with the Owner's requirements. After a review, submit detailed schedules within 15 days modified to accommodate the revisions recommended by the Prime and Owner.

B. Submit revised Progress Schedules with each Application for Payment.

C. Distribute copies of the reviewed schedules to the Project site file, subcontractors, suppliers, and other concerned parties.

D. Instruct the recipients to promptly report, in writing, the problems anticipated by the projections indicated in the schedules.

E. Provide a separate schedule of submittal dates for shop drawings, product data, and samples, including Owner furnished Products and Products identified under Allowances, if any, and the dates reviewed submittals will be required from the Prime. Indicate the decision dates for selection of the finishes.

F. Revisions to Schedules:
   1. Indicate the progress of each activity to the date of submittal, and the projected completion date of each activity.
   2. Identify the activities modified since the previous submittal, major changes in the scope, and other identifiable changes.
   3. Provide a narrative report to define the problem areas, the anticipated delays, and impact on the Schedule. Report the corrective action taken, or proposed, and its effect including the effect of changes on the schedules of separate contractors.

1.4 PROPOSED PRODUCTS LIST

A. Within 15 days after the date of receipt of a Purchase Order from RIC, submit a list of major products proposed for use, with the name of the manufacturer, the trade name, and the model number of each product.

B. For the products specified only by reference standards, give the manufacturer, trade name, model or catalog designation, and reference standards.

C. With each product listed, indicate the submittal requirements specified to be adhered to, and an indication of relevant "long-lead-time" information , when appropriate.

1.5 PRODUCT DATA

A. Product Data: Submit to the Prime for review for the limited purpose of checking for conformance with the information given and the design concept expressed in the Contract Documents. Provide copies and distribute in accordance with the SUBMITTAL PROCEDURES article and for the record documents purposes described in Section 01780.

B. Submit the number of copies which the Contractor requires, one for the Owner, plus two copies the Prime will retain.

C. Mark each copy to identify the applicable products, models, options, and other data. Supplement the manufacturers' standard data to provide the information specific to this Project.

D. Indicate the product utility and electrical characteristics, the utility connection requirements, and the location of utility outlets for service for functional equipment and appliances.

E. After a review distribute in accordance with the Submittal Procedures article above and provide copies for record documents described in Section 01780.

1.6 SHOP DRAWINGS

A. Shop Drawings: Submit to the Prime for review for the limited purpose of checking for conformance with the information given and the design concept expressed in the Contract Documents. Produce copies and distribute in accordance with the SUBMITTAL PROCEDURES article and for the record documents purposes described in Section 01780.

1.7 SAMPLES

A. Samples: Submit to the Prime for review for the limited purpose of checking for conformance with the information given and the design concept expressed in the Contract Documents. Produce duplicates and distribute in accordance with the SUBMITTAL PROCEDURES article and for the record documents purposes described in Section 01780.

B. Samples For Selection as Specified in Product Sections:
   1. Submit to the Prime for aesthetic, color, or finish selection.
   2. Submit samples of the finishes in the colors selected for the Prime's records.
   3. After review, produce duplicates and distribute in accordance with the SUBMITTAL PROCEDURES article and for the record documents purposes described in Section 01780.

C. Submit samples to illustrate the functional and aesthetic characteristics of the product, with integral parts and attachment devices. Coordinate the sample submittals for interfacing Work.

F. Include an identification on each sample, with the full Project information.

G. Submit at least the number of samples specified in the individual specification Sections; the Prime will retain two samples.

H. Reviewed samples, which may be used in the Work, are indicated in the individual specification Sections.

I. Samples will not be used for testing purposes unless they are specifically stated to be in the specification Section.

1.8 TEST REPORTS

A. Submit lab reports for the Prime's knowledge as Contract administrator for the Owner. See Section 01400.

B. Submit manufacturer’s test reports for information for the limited purpose of assessing conformance with the information given and the design concept expressed in the Contract Documents.

1.9 CERTIFICATES

A. When specified in the individual specification Sections, submit certification by the manufacturer, installation/application subcontractor, or the Contractor to the Prime in the quantities specified for the Product Data.

B. Indicate that the material or product conforms to or exceeds the specified requirements. Submit supporting reference data, affidavits, and certifications as appropriate.

C. Certificates may be recent or previous test results on the material or product, but must be acceptable to the Prime and its Consultants.

1.10 MANUFACTURER'S INSTRUCTIONS

A. When specified in the individual specification Sections, submit printed instructions for delivery, storage, assembly, installation, adjusting, and finishing, to the Prime for delivery to the Owner in the quantities specified for Product Data.

B. Indicate the special procedures, and the perimeter conditions requiring special attention, and the special environmental criteria required for application or installation.

1.11 MANUFACTURER'S FIELD REPORTS

A. Submit reports for the Prime's benefit as contract administrator or for the Owner.

B. Submit the report in duplicate within 30 days of observation to the Prime for information.

C. Submit for information for the limited purpose of assessing conformance with the information given and the design concept expressed in the Contract Documents.

1.12 ARRA JOB REPORTS

A. At the end of each work week, Contractor shall submit hours worked by trade category to the Owner's designated project manager for ARRA compliance. If desired by the Contractor, forms will be provided by the College. These forms may be filled in by hand by each subcontractor and provided to the Contractor's foreman for its input into electronic submittal to the College according to an agreed timeline.
B. Submittal by the Contractor shall be on the Jobs Report template Excel spreadsheet which will be provided by the College. One form with quarterly worksheets will be used throughout the job and updated weekly. Submittal will be via email.
C. ARRA funding requirements from time to time will require additional information. Contractor agrees to provide the College with data as necessary to meet ARRA funding requests.

PART 2 - PRODUCTS

Not Used.

PART 3 - EXECUTION

Not Used.

END OF SECTION

SECTION 01400 – QUALITY REQUIREMENTS

PART 1 - GENERAL

1.1 SECTION INCLUDES

A. Quality control and control of installation.

B. Verification of Credentials and Licenses.

C. Tolerances

D. References.

E. Testing and inspection services.

F. Manufacturers' field services.

1.2 QUALITY CONTROL AND CONTROL OF INSTALLATION

A. Monitor a quality control over suppliers, manufacturers, products, services, site conditions, and workmanship, to produce Work of the specified quality.

B. Comply with all manufacturers' instructions and recommendations, including each step in sequence.

C. When the manufacturers' instructions conflict with the Contract Documents, request a clarification from the Prime before proceeding.

D. Comply with the specified standards as a minimum quality for the Work except where more stringent tolerances, codes, or specified requirements indicate higher standards or more precise workmanship.

E. Perform the Work by persons qualified to produce the required and specified quality.

F. Verify that field measurements are as indicated on the Shop Drawings or as instructed by the manufacturer.

G. Secure products in place with positive anchorage devices designed and sized to withstand stresses, vibration, physical distortion, or disfigurement.

1.3 VERIFICATION OF CREDENTIALS AND LICENSES

A. The Owner has implemented a project management oversight process and is applying it to current construction projects at URI.

B. An element of this oversight process is the verification that persons employed on the project site have appropriate and current credentials and licenses in their possession, at the project site, for the work they are performing.

C. Be forewarned that state resident inspectors will be checking for verification of credentials and licenses of both union and non-union persons, in their onsite inspections.

D. State resident inspectors will also be reviewing Contractor's Certified Monthly Payroll Records for conformance with RI State Prevailing Wage Rate requirements..

E. Those persons without the appropriate credentials and licenses will be subject to dismissal from the project site.

F. Contractor is also responsible for verifying that all subcontractors and vendors have registered with the ARRA authorities and have obtained a DUNS number as required. DUNS numbers for each firm shall be added to their Waiver of Lien forms. Failure to properly register with ARRA authorities will be justification for withholding payment.

1.4 TOLERANCES

A. Monitor the fabrication and installation tolerance control of products to produce acceptable Work. Do not permit tolerances to accumulate.

B. Comply with the manufacturers' tolerances. When the manufacturers' tolerances conflict with the Contract Documents, request a clarification from the Prime before proceeding.

C. Adjust products to appropriate dimensions; position before securing products in place.

1.5 REFERENCES

A. For products or workmanship specified by association, trade, or other consensus standards, comply with requirements of the standard, except when more rigid requirements are specified or are required by applicable codes.

B. Conform to reference standard by the date of issue current on the date of the Contract Documents, except where a specific date is established by code.

C. Obtain copies of the standards where required by the product specification Sections.

D. When the specified reference standards conflict with the Contract Documents, request a clarification from the Prime before proceeding.

E. Neither the contractual relationships, duties, or responsibilities of the parties in the Contract, nor those of the Prime, shall be altered from the Contract Documents by mention or inference otherwise in reference documents.

1.6 TESTING AND INSPECTION SERVICES

A. The Contractor will submit the name of an independent firm to the Prime for approval by the Owner, to perform the testing and inspection services. The Contractor shall pay for all the services.

B. The independent firm will perform the tests, inspections and other services specified in the individual specification Sections and as required by the Prime or its Consultants.
   1. Laboratory: Authorized to operate in the location in which the Project is located.
   2. Laboratory Staff: Maintain a full time registered Engineer on staff to review the services.
   3. Testing Equipment: Calibrated at reasonable intervals with devices of an accuracy traceable to either the National Bureau of Standards or to the accepted values of natural physical constants.

C. Testing, inspections and source quality control may occur on or off the project site. Perform off-site testing as required by the Prime or the Owner.

D. Reports will be submitted by the independent firm to the Prime, the Consultant for that trade, and the Contractor, in duplicate, indicating the observations and results of tests and indicating the compliance or non-compliance with Contract Documents.

E. Cooperate with the independent firm; furnish samples of the materials, design mix, equipment, tools, storage, safe access, and the assistance by incidental labor as requested.
   1. Notify the Prime and Engineer and the independent firm 24 hours prior to the expected time for operations requiring services.
   2. Make arrangements with the independent firm and pay for additional samples and tests required for the Contractor's use.

F. Testing and employment of the testing agency or laboratory shall not relieve the Contractor of an obligation to perform the Work in accordance with the requirements of the Contract Documents.

G. Re-testing or re-inspection required because of a non-conformance to the specified requirements shall be performed by the same independent firm on instructions by the Prime or its Consultant. Payment for the re-testing or re-inspection will be charged to the Contractor by deducting the testing charges from the Contract Sum.

H. Agency Responsibilities:
   1. Test samples of mixes submitted by the Contractor.

2. Provide qualified personnel at the site. Cooperate with the Prime or its Consultant and the Contractor in performance of services.
3. Perform specified sampling and testing of the products in accordance with the specified standards.
4. Ascertain compliance of the materials and mixes with the requirements of the Contract Documents.
5. Promptly notify the Architect, Consultant and the Contractor of observed irregularities or non-conformance of the Work or products.
6. Perform additional tests required by the Prime or its Consultants.
7. Attend the preconstruction meetings and the progress meetings.

I. Agency Reports: After each test, promptly submit two copies of the report to the Prime, appropriate Consultant, and to the Contractor. When requested by the Prime, provide an interpretation of the test results. Include the following:
1. Date issued.
2. Project title and number.
3. Name of inspector.
4. Date and time of sampling or inspection.
5. Identification of product and specifications section.
6. Location in the Project.
7. Type of inspection or test.
8. Date of test.
9. Results of tests.
10. Conformance with Contract Documents.

J. Limits On Testing Authority:
1. Agency or laboratory may not release, revoke, alter, or enlarge on the requirements of the Contract Documents.
2. Agency or laboratory may not approve or accept any portion of the Work.
4. Agency or laboratory may not assume any duties of the Contractor.
5. Agency or laboratory has no authority to stop the Work.

1.8 MANUFACTURERS' FIELD SERVICES

A. When specified in the individual specification Sections, require the material or Product suppliers, or manufacturers, to provide qualified staff personnel to observe the site conditions, the conditions of the surfaces and installation, the quality of workmanship, the start-up of equipment, or test, adjust and balance of equipment as applicable, and to initiate instructions when necessary.

B. Submit the qualifications of the observer to the Prime 30 days in advance of the required observations. Observer is subject to approval of the Prime.

C. Report the observations and the site decisions or instructions given to the applicators or

installers that are supplemental or contrary to the manufacturers' written instructions.

D. Refer to Section 01330 - SUBMITTAL PROCEDURES, MANUFACTURERS' FIELD REPORTS article.

PART 2 - PRODUCTS

Not Used.

PART 3 - EXECUTION

Not used.

END OF SECTION

SECTION 01500 - TEMPORARY FACILITIES AND CONTROLS

PART 1 - GENERAL

1.1 SECTION INCLUDES

A. Temporary Utilities:
1. Temporary electricity.
2. Temporary lighting for construction purposes.
3. Temporary heating.
4. Temporary cooling.
5. Temporary ventilation.
6. Telephone service.
7. Facsimile service.
8. Temporary water service.
9. Temporary sanitary facilities.

B. Construction Facilities:
1. Field offices and sheds.
2. Vehicular access.
3. Parking.
4. Progress cleaning and waste removal.
5. Project identification.
6. Traffic regulation.

C. Temporary Controls:
1. Barriers.
2. Enclosures and fencing.
3. Protection of the Work.
4. Security.
5. Fire detection.
6. Water control.
7. Dust control.
8. Erosion and sediment control.
9. Noise control.
10. Pest control.
11. Pollution control.
12. Rodent control.

D. Removal of utilities, facilities, and controls.

1.2 TEMPORARY ELECTRICITY

A. The Owner will pay the cost of energy used. Exercise measures to conserve energy. Utilize the Owner's existing power service.

B. Complement the existing power service capacity and characteristics as required for construction operations.

C. Provide power outlets, with branch wiring and distribution boxes located at each floor or as required for construction operations. Provide flexible power cords as required for portable construction tools and equipment.

D. Provide main service disconnect and over-current protection at a convenient location, or a feeder switch at the source distribution equipment or meter.

E. Permanent convenience receptacles may not be utilized during construction.

F. Provide distribution equipment, wiring, and outlets to provide single-phase branch circuits for power. Provide 20-ampere duplex outlets, single-phase circuits for power tools.

1.3 TEMPORARY LIGHTING FOR CONSTRUCTION PURPOSES

A. Maintain lighting and provide routine repairs.

B. Permanent building lighting may be utilized during construction.

1.4 TEMPORARY HEATING

A. Existing facilities will be occupied and heated by the College when temperatures require. Take care to avoid leaving doors open in exterior walls that could compromise heating operations.

B. Supplement with temporary heat devices if needed to maintain the specified conditions for construction operations.

C. Maintain a minimum ambient temperature of 50 degrees F in the areas where construction is in progress, unless indicated otherwise in the product Sections.

D. In areas of work with mechanical hot-air heating, clean units and replace filters after Substantial Completion.

1.5 TEMPORARY COOLING

A. Existing facilities are not available.

B. Provide and pay for cooling devices and cooling as needed to maintain the specified conditions for construction operations.

C. Maintain a maximum ambient temperature of 80 degrees F in the areas where construction is in progress, unless indicated otherwise in the specifications.

1.6 TEMPORARY VENTILATION

A. Ventilate the enclosed areas to achieve a curing of materials, to dissipate humidity, and to prevent the accumulation of dust, fumes, vapors, or gases.

B. If existing ventilation fans are used during construction, clean fans in areas of work after Substantial Completion.

1.7 TELEPHONE SERVICE

A. Provide, maintain, and pay for cell phone service to the field supervisor at the time of project mobilization.

1.8 TEMPORARY WATER SERVICE

A. The Owner will pay the cost of temporary water. Exercise measures to conserve energy. Utilize the Owner's existing water system, extend and supplement with temporary devices as needed to maintain the specified conditions for construction operations.

B. Extend branch piping with outlets located so that water is available by hoses with threaded connections. Provide temporary pipe insulation if needed to prevent freezing.

1.9 TEMPORARY SANITARY FACILITIES

A. Existing designated facilities may be used. Keep clean and sanitary during the Work. Provide own supplies for work force use.

1.10 FIELD OFFICES AND SHEDS

A. Do not use existing facilities for storage. Job meetings will be held on campus at a location to be chosen by the College.

D. Storage Areas and Sheds: Size to the storage requirements for the products of the individual Sections, allowing for access and orderly provision for the maintenance and for the inspection of Products to the requirements of Section 01600. Containers will be permitted within the project limit line.

E. Preparation: Fill and grade the sites for the temporary structures to provide drainage away from the buildings.

F. Removal: At the completion of the Work remove the buildings, foundations, utility services, and debris. Restore the areas.

1.11 PARKING/TRAFFIC

A. Workers must park in lots assigned by the College with daily permits. See Site Utilization Plan.
B. Use of designated existing on-site streets and driveways for construction traffic is permitted. Tracked vehicles are not allowed on paved areas.

C. Do not allow heavy vehicles or construction equipment in parking areas.

D. Do not allow vehicle parking on existing sidewalks.

E. Provide and maintain access to fire hydrants and control valves free of obstructions.

F. Remove mud from construction vehicle wheels before entering streets. Cleanup dirt, rocks, and debris left on street from construction vehicles.

G. Use designated existing on-site roads for construction traffic.

H. Maintenance:
   1. Maintain the traffic and parking areas in a sound condition free of excavated material, construction equipment, products, mud, snow, and ice.
   2. Maintain existing and permanent paved areas used for construction; promptly repair breaks, potholes, low areas, standing water, and other deficiencies, to maintain the paving and drainage in original, or specified, condition.

I. Removal, Repair:
   1. Remove temporary materials and at Substantial Completion.
   2. Remove underground work and compacted materials to a depth of 2 feet; fill and grade the site as specified.
   3. Repair existing and permanent facilities damaged by use, to the original or specified condition.

1.12 PROGRESS CLEANING AND WASTE REMOVAL

A. Maintain areas free of waste materials, debris, and rubbish. Maintain the site in a clean and orderly condition.

B. Remove debris and rubbish from pipe chases, plenums, attics, crawl spaces, and other or remote spaces, prior to enclosing the space.

C. Broom and vacuum clean the interior areas prior to the start of surface finishing, and continue cleaning to eliminate dust.

D. Collect and remove waste materials, debris, and rubbish from the site periodically, weekly, or daily, as necessary to prevent an on-site accumulation of waste material, debris, and rubbish, and dispose off-site.

E. Open free-fall chutes are not permitted. Terminate closed chutes into appropriate containers with lids.

1.13 PROJECT IDENTIFICATION

A. Project Identification Sign: One painted sign, 32 sq ft area, bottom 6 feet above the ground.
   1. Content:
      a. Project title, and name of the Owner as indicated on the Contract Documents.
      b. Names and titles of the authorities.
      c. Names and titles of the Architect and Consultants.
      d. Name of the Prime Contractor.
   2. Graphic Design, Colors, and Style of Lettering: 3 colors, as designated by the Architect.

B. ARRA Project Sign:
   1. See five page sign design guide following this section for ARRA sign requirements.
   2. Provide sign where directed by the College.
   3. 84 inch version will be required for this Project.
   4. Mount sign 6 feet above ground similar to Identification Sign.

C. Project Informational Signs:
   1. Painted informational signs of same colors and lettering as the Project Identification sign, or standard products; size lettering to provide legibility at 100-foot distance.
   2. Provide sign at each field office, storage shed, [and directional signs to direct traffic into and within site]. Relocate as the Work progress requires.
   3. Provide ARRA signage to government standards, size and colors as required by law.
   4. No other signs are allowed without the Owner's permission except those required by law.

D. Design all signs and their structures to withstand a 60-miles/hr-wind velocity.

E. Sign Painter: Experienced as a professional sign painter for a minimum of three years.

F. Finishes, Painting: Adequate to withstand weathering, fading, and chipping for the duration of construction.

G. Show content, layout, lettering, color, foundation, structure, sizes, and grades of members.

H. Installation:
   1. Install the project identification sign within 15 days after the date of receipt of the Purchase Order from State of Rhode Island Department of Administration, Division of Purchases.
   2. Erect at the designated location.
   3. Erect the supports and framing on a secure foundation, rigidly braced and framed to resist wind loadings.
   4. Install the sign surface plumb and level, with butt joints. Anchor securely.
   5. Paint exposed surfaces of the sign, supports, and framing.

I. Maintenance: Maintain the signs and supports clean, repair deterioration and damage.

J. Removal: Remove the signs, framing, supports, and foundations at the completion of the Project and restore the area.

1.14 TRAFFIC REGULATION

A. Signs, Signals, And Devices:
   1. Post Mounted and Wall Mounted Traffic Control and Informational Signs: As approved by local jurisdictions.
   2. Traffic Cones and Drums, Flares and Lights: As approved by local jurisdictions.
   3. Flag person Equipment: As required by local jurisdictions.

B. Flag Persons: Provide trained and equipped flag persons to regulate the traffic when construction operations or traffic encroach on the public traffic lanes.

C. Flares and Lights: Use flares and lights during the hours of low visibility to delineate the traffic lanes and to guide traffic.

D. Haul Routes:
   1. Consult with the authority having jurisdiction, establish the public thoroughfares to be used for haul routes and site access.

E. Traffic Signs and Signals:
   1. At approaches to the site and on site, install at crossroads, detours, parking areas, and elsewhere as needed to direct the construction and affected public traffic.
   1. Install and operate [automatic] traffic control signals to direct and maintain the orderly flow of traffic in areas under the Contractor's control, and areas affected by the Contractor's operations.
   2. Relocate as the Work progresses, to maintain effective traffic control.

F. Removal:
   1. Remove equipment and devices when no longer required.
   2. Repair damage caused by installation.
   3. Remove post settings to a depth of 2 feet .

1.15 BARRIERS

A. Provide barriers to allow for the Owner's use of the site and to protect existing facilities and adjacent properties from damage from the construction operations, or demolition.

B. Provide barricades and covered walkways required by governing authorities for public rights-of-way, or for public access to the building.

C. Provide protection for plants designated to remain. Replace damaged plants.

D. Protect non-owned vehicular traffic, stored materials, site, and structures from damage.

1.16 ENCLOSURES AND FENCING

A. Construction: Commercial grade chain link fence.

B. Provide a fixed, or flexible 6-foot high fence around the construction site; equip with vehicular and pedestrian gates with locks. Provide one set of keys to all gates [and door locks] to the owner. Locate where shown on Drawing A0.1.

C. Perform adjustment to the proposed layout as may be directed by the Owner.

D. Interior Enclosures:
   1. Provide temporary partitions and ceilings as indicated to separate the work areas from Owner-occcupied areas, to prevent penetration of dust and moisture into Owner-occupied areas, and to prevent damage to the existing materials and equipment.
   2. Construction: Framing and reinforced polyethylene, plywood, or gypsum board sheet materials with closed joints and sealed edges at intersections with existing surfaces, as agreed with the Owner:
      a. Maximum flame spread rating of 75 in accordance with ASTM E84.

1.17 SECURITY

A. Security Program:
   1. Protect the Work, the existing premises, or the Owner's operations from theft, vandalism, and unauthorized entry.
   2. Initiate the program in coordination with the Owner's existing security system at mobilization.
   3. Maintain the program throughout the construction period until Owner occupancy of each designated area.

B. Entry Control: Coordinate the access of the Owner's personnel to the site in coordination with the Owner's security forces.

C. Restrictions: Do no work on Sundays or Rhode Island State holidays.

1.18 FIRE DETECTION

A. Before beginning any construction operation that can potentially trigger the existing fire alarm detection system, notify the Department of Facilities and Operations.

B. Failure to so notify the Department of Facilities and Operations will subject the Contractor to a monetary fine for each occurrence, should the fire detection system be activated inadvertently by a construction activity.

C. Comply with all applicable insurance underwriting standards and insurer recommendations for Hot Work, sprinkler impairment, and site maintenance.

1.19 WATER CONTROL

A. Grade the site to drain. Maintain excavations free of water. Provide, operate, and maintain the pumping equipment.

B. Protect the site from puddling or running water. Provide water barriers as required to protect the site from soil erosion.

1.20 DUST CONTROL

A. Execute the Work by methods to minimize raising dust from construction operations.

B. Provide positive means to prevent air-borne dust from dispersing into the atmosphere.

1.21 EROSION AND SEDIMENT CONTROL

A. Plan and execute construction by methods to control surface drainage from cuts and fills, from borrow and waste disposal areas. Prevent erosion and sedimentation.

B. Minimize the amount of bare soil exposed at one time.

C. Provide temporary measures such as berms, dikes, and drains, to prevent water flow.

D. Construct fill and waste areas by selective placement to avoid erosive surface silts or clays.

E. Periodically inspect the earthwork to detect evidence of erosion and sedimentation; promptly apply corrective measures.

1.22 NOISE CONTROL

A. Provide methods, means, and facilities to minimize noise produced by the construction operations.

1.23 PEST CONTROL

A. Provide methods, means, and facilities to prevent pests and insects from damaging the Work, or entering the facility.

1.24 POLLUTION CONTROL

A. Provide methods, means, and facilities to prevent the contamination of soil, water, and the atmosphere from discharge of noxious, toxic substances, and pollutants produced by the construction operations.

1.25 RODENT CONTROL

A. Provide methods, means, and facilities to prevent rodents from accessing or invading the premises.

1.26 REMOVAL OF UTILITIES, FACILITIES, AND CONTROLS

A. Remove temporary utilities, equipment, facilities, and materials, prior to Substantial Completion.

B. Remove the underground installations to a minimum depth of 2 feet. Grade the site as indicated.

C. Clean and repair the damage caused by installation or use of temporary work.

D. Restore the existing facilities used during construction to the original condition.

PART 2 - PRODUCTS

Not Used.

PART 3 - EXECUTION

Not Used.

END OF SECTION

PROJECT FUNDING SOURCE SIGN ASSEMBLY
AMERICAN RECOVERY AND REINVESTMENT ACT
SIGN LAYOUT DETAILS

PROJECT FUNDING SOURCE
SIGN ASSEMBLY

PROJECT FUNDING SOURCE SIGN ASSEMBLY
AMERICAN RECOVERY AND REINVESTMENT ACT
SIGN LAYOUT DETAILS

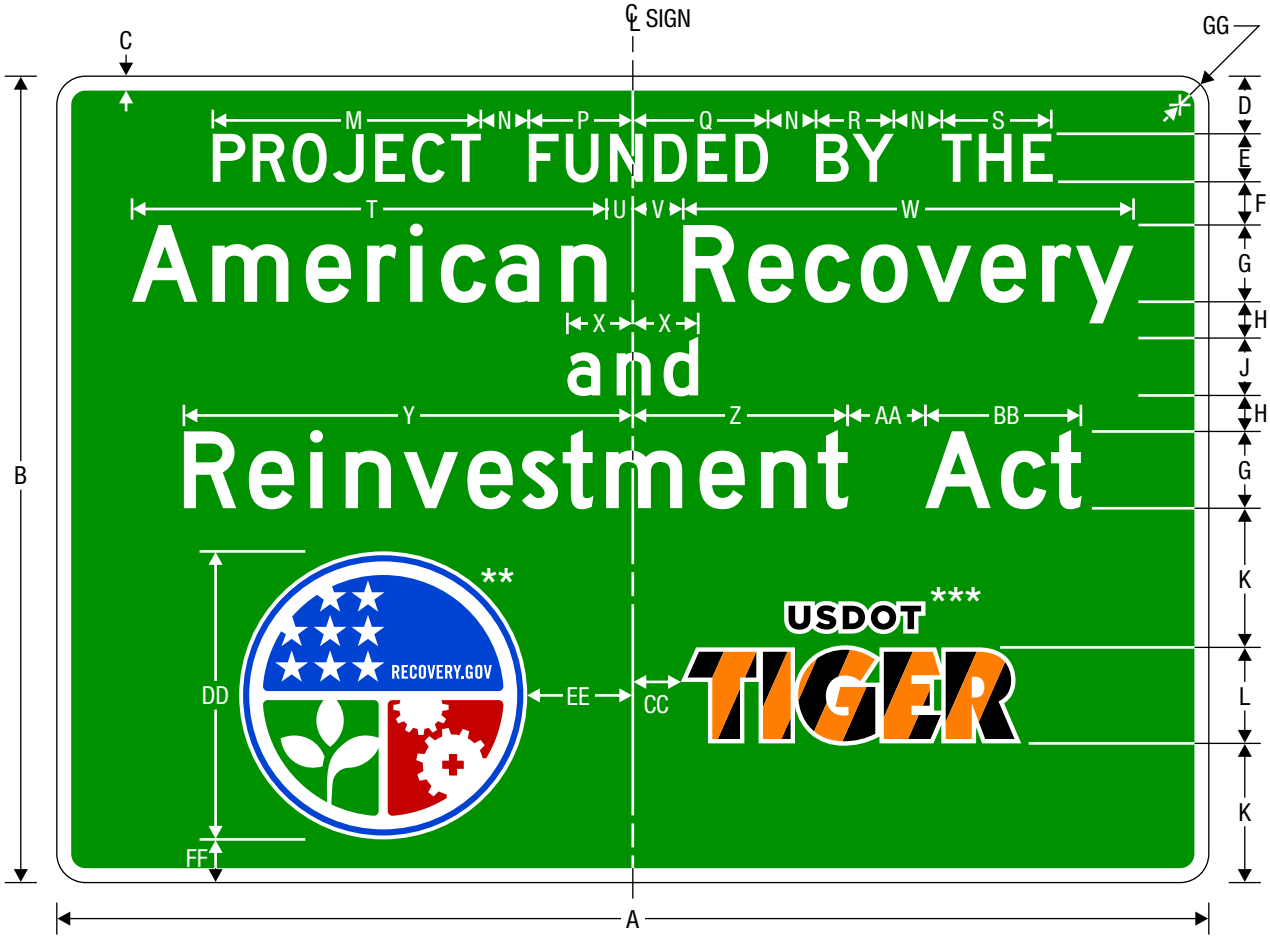

PROJECT FUNDING SOURCE SIGN

NOTE: SIGN SHALL NOT BE INSTALLED WITHOUT PROJECT FUNDING SOURCE PLAQUE (SEE SHEET 3).

Dimensions in inches

A	B	C	D	E	F	G	H	J	K	L	M	N	P
120	84	1.5	6	5 D	4.5	8 D*	3.75	6 D* (4.5 L.C.)	14.5	10	27.917	5	10.831
84	60	1	5	4 C	3.5	6 C*	3	4 D* (3 L.C.)	9.25	7	19.047	4	7.362

Q	R	S	T	U	V	W	X	Y	Z	AA	BB	CC	DD
14.087	8.106	11.556	49.42	2.742	5.258	46.904	6.812	46.76	22.472	8	16.288	5	30
9.484	5.162	7.763	31.722	2.415	3.585	30.552	4.542	30.911	14.737	6	10.175	4	21

EE	FF	GG
11	4.5	3
7.5	2.25	2.25

* Increase character spacing 50%
** See Pictograph page 4
*** See Pictograph page 5

COLORS: LEGEND, BORDER – WHITE (RETROREFLECTIVE)
BACKGROUND – GREEN (RETROREFLECTIVE)

PROJECT FUNDING SOURCE SIGN ASSEMBLY
AMERICAN RECOVERY AND REINVESTMENT ACT
SIGN LAYOUT DETAILS

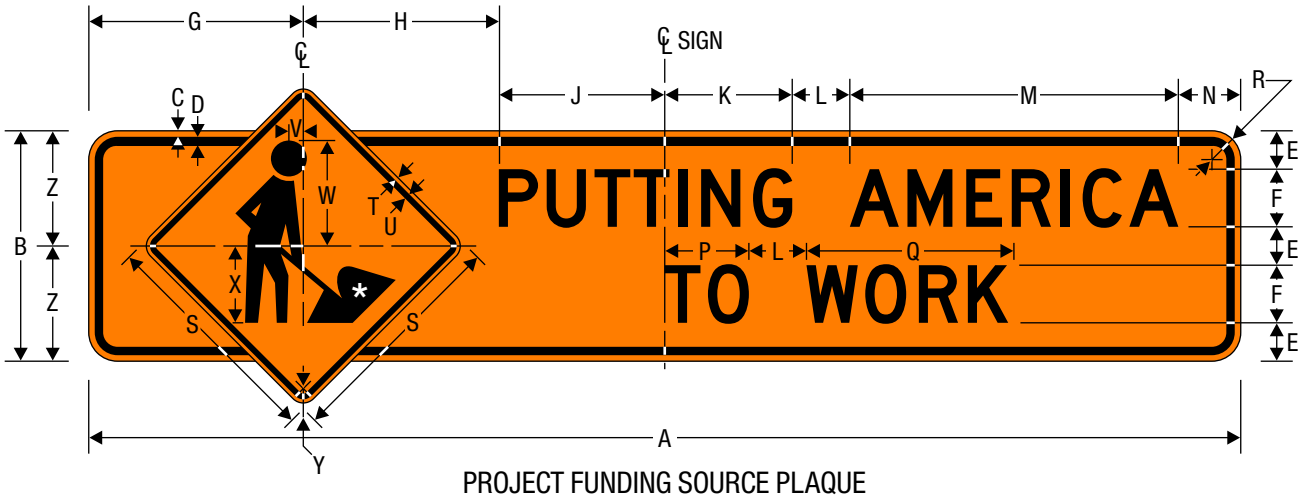

PROJECT FUNDING SOURCE PLAQUE

NOTE: PLAQUE SHALL NOT BE INSTALLED WITHOUT SIGN (SEE SHEET 2).

* See *Standard Highway Signs* Page 6-59 for symbol design.

Dimensions in inches

A	B	C	D	E	F	G	H	J	K	L	M	N	P
120	24	0.625	0.875	4	6 D	22.349	20.370	17.281	13.28	6	34.22	6.5	8.765
84	18	0.375	0.625	3.5	4 D	16.607	15.686	9.707	10.667	4	22.813	5	5.843

Q	R	S	T	U	V	W	X	Y	Z
21.013	3	24	0.375	0.625	1.5	11	8	1.5	12
14.009	2.25	18	0.375	0.625	1	7	6	1.5	9

COLORS: LEGEND, BORDER — BLACK
BACKGROUND — ORANGE (RETROREFLECTIVE)

PROJECT FUNDING SOURCE SIGN ASSEMBLY
AMERICAN RECOVERY AND REINVESTMENT ACT
SIGN LAYOUT DETAILS

RECOVERY
Vector-Based, Vinyl-Ready Pictograph

COLORS:	LEGEND, OUTLINE	— WHITE (RETROREFLECTIVE)
	BORDER	— BLUE (RETROREFLECTIVE)
	BACKGROUND (UPPER)	— BLUE (RETROREFLECTIVE)
	BACKGROUND (LOWER RIGHT)	— RED (RETROREFLECTIVE)
	BACKGROUND (LOWER LEFT)	— GREEN (RETROREFLECTIVE)

PROJECT FUNDING SOURCE SIGN ASSEMBLY
AMERICAN RECOVERY AND REINVESTMENT ACT
SIGN LAYOUT DETAILS

USDOT TIGER
Vector-Based, Vinyl-Ready Pictograph

COLORS:	OUTLINE	—	WHITE (RETROREFLECTIVE)
	USDOT LEGEND	—	BLACK
	TIGER DIAGONALS	—	BLACK, ORANGE (RETROREFLECTIVE)

SECTION 01600 - PRODUCT REQUIREMENTS

PART 1 - GENERAL

1.1 SECTION INCLUDES

A. Products.

B. Product delivery requirements.

C. Product storage and handling requirements.

D. Product options.

E. Product substitution procedures.

1.2 PRODUCTS

A. Products: Means new material, machinery, components, fixtures, or systems forming the Work; but does not include the machinery or equipment used for the preparation, fabrication, conveying, or erection of the Work. Products may include the existing materials or components required or specified for reuse.

B. Furnish products of qualified manufacturers suitable for the intended use. Furnish products of each type by a single manufacturer unless specified otherwise.

C. Do not use materials and equipment removed from the existing premises, except as specifically permitted by the Contract Documents.

D. Furnish interchangeable components of the same manufacturer for the components being replaced.

1.3 PRODUCT DELIVERY REQUIREMENTS

A. Transport and handle products in accordance with the manufacturer's instructions.

B. Promptly inspect shipments to ensure that the products comply with the requirements, the quantities are correct, and the products are undamaged.

C. Provide equipment and personnel to handle the products by methods to prevent soiling, disfigurement, or damage.

1.4 PRODUCT STORAGE AND HANDLING REQUIREMENTS

A. Store and protect the products in accordance with the manufacturers' instructions.
B. Store with seals and labels intact and legible.

C. Store sensitive products in weather tight, climate controlled, enclosures in an environment favorable to the product.

D. For exterior storage of fabricated products, place on sloped supports above the ground.

E. Provide bonded off-site storage and protection when the site does not permit on-site storage or protection.

F. Cover products subject to deterioration with impervious sheet covering. Provide ventilation to prevent the condensation and degradation of products.

G. Store loose granular materials on solid flat surfaces in a well-drained area. Prevent mixing with foreign matter.

H. Provide equipment and personnel to store the products by methods to prevent soiling, disfigurement, or damage.

I. Arrange storage of the products to permit access for inspection. Periodically inspect to verify that the products are undamaged and are maintained in acceptable condition.

1.5 PRODUCT OPTIONS

A. Products Specified by Reference Standards or by Description Only: Any Product meeting those standards or description.

B. Products Specified by Naming One or More Manufacturers: Products of one of the manufacturers named and meeting the specifications, no options or substitutions allowed.

C. Products Specified by Naming One or More Manufacturers with a Provision for Substitutions: Submit a request for substitution for any manufacturer not named in accordance with the following article.

1.6 PRODUCT SUBSTITUTION PROCEDURES

A. Instructions to Bidders specify the time restrictions for submitting requests for Substitutions during the bidding period to requirements specified in this section.

B. Substitutions may be considered only when a product becomes no longer in production following the date of receipt of the Purchase Order for this Contract. Submit certification both that specified product was carried in Bid, and is no longer obtainable.

C. Document each request with complete data substantiating the compliance of a proposed Substitution with the Contract Documents.

D. A request constitutes a representation that the Bidder:
   1. Has investigated the proposed Product and determined that it meets or exceeds the quality level of the specified product.
   2. Will provide the same warranty for the Substitution as for the specified Product.
   3. Will coordinate the installation and make changes to other Work which may be required for the Work to be complete with no additional cost to the Owner.
   4. Waives claims for additional costs or time extension which may subsequently become apparent.
   5. Will reimburse the Owner and the Prime for review or redesign services associated with re-approval by the authorities having jurisdiction.

E. Substitutions will not be considered when they are indicated or implied on the Shop Drawing or Product Data submittals, without a separate written request, or when acceptance will require revision to the Contract Documents.

F. Substitution Submittal Procedure, If Permitted Following Contract Award:
   1. Submit three copies of a request for Substitution for consideration, no later than 20 working days following date of receipt of the Purchase Order for this Contract. Limit each request to one proposed Substitution.
   2. Submit the Shop Drawings, Product Data, and the certified test results attesting to the proposed product equivalence. The burden of proof is on the proposer.
   3. The Prime will notify the Contractor in writing of a decision to accept or reject the request.

PART 2 - PRODUCTS

Not Used.

PART 3 - EXECUTION

Not Used.

END OF SECTION

SECTION 01700 - EXECUTION REQUIREMENTS

PART 1 - GENERAL

1.1 SECTION INCLUDES

A. Examination.

B. Preparation.

C. Field Engineering.

D. Protection of adjacent construction.

E. Cutting and patching.

F. Special procedures.

G. Progress cleaning and waste removal.

H. Final cleaning.

I. Starting and adjusting of systems.

J. Demonstration and Instructions.

K. Testing, adjusting and balancing.

L. Protecting Installed Construction.

1.2 EXAMINATION

A. Acceptance of Conditions:
   1. Verify that existing applicable site conditions, substrates, or substrate surfaces are acceptable or meet specific requirements of individual specifications Sections, for subsequent Work to proceed.
   2. Verify that existing substrate is capable of structural support or attachment of new Work being applied or attached.
   3. Examine and verify specific conditions described in individual specifications Sections.
   4. Verify that utility services are available, of correct characteristics, and in correct locations.
   5. Beginning of new Work, that relies upon the quality and proper execution of Work

of a preceding trade, means acceptance of that preceding Work as appropriate for the proper execution of subsequent Work.

6. Acceptance of preceding Work that can be shown later to have adversely affected proper performance of new Work may result in removal and repeat performance of all Work involved at no cost to the Owner.

1.3 PREPARATION

A. Clean substrate surfaces prior to applying next material or substance.

B. Seal cracks or openings of substrate prior to applying next material or substance.

C. Apply substrate primer, sealer, or conditioner, required or recommended by manufacturer, prior to applying any new material or substance in contact or bond.

D. Prior to the application, installation, or erection of any products and product components, perform any other preparatory operations, or surface or substrate modifications, as may be specified or directed by product manufacturers.

1.4 FIELD ENGINEERING

A. Employ a Land Surveyor registered in the State of Rhode Island and acceptable to Prime and the Owner if required by subgrade work.

B. Locate and protect survey control and reference points. Promptly notify Prime of any discrepancies discovered.

C. Control Datum for survey is to be agreed to with the Prime.

D. Verify setbacks and easements, if any; confirm drawing dimensions and elevations.

E. Provide field-engineering services. Establish elevations, lines, and levels, utilizing recognized engineering survey practices.

F. Submit a copy of site drawings and certificate signed by the Land Surveyor that the elevations and locations of the Work are in conformance with the Contract Documents.

G. Maintain a complete and accurate log of control and survey work as it progresses.

H. If required by the Owner, on completion of foundation walls and major site improvements, prepare a certified survey illustrating dimensions, locations, angles, and elevations of construction and site work.

I. Protect survey control points prior to starting site work; preserve permanent reference point during construction.

J. Promptly report to Prime the loss or destruction of any reference point or relocation required because of changes in grades or other reasons.

K. Replace dislocated survey control point based on original survey control. Make no changes without prior written notice to Prime.

1.5 PROTECTION OF ADJACENT CONSTRUCTION

A. Protect existing adjacent properties and provide special protection where specified in individual Specification Sections.

B. Provide protective coverings at wall, projections, jambs, sills, and soffits of existing openings.

C. Protect existing finished floors, stairs, and other existing surfaces from traffic, dirt, wear, damage, or movement of heavy objects, by protecting with durable sheet materials.

D. Repair adjacent properties damaged by construction operations to original condition to the satisfaction of the Owner

E. Prohibit unnecessary traffic from existing landscaped areas.

F. Restore grassed landscaped areas damaged by construction operations to full healthy growth, by installing loam and sod to the requirements, and under the supervision of, the University's Associate Director of Lands and Grounds.

1.6 CUTTING AND PATCHING

A. Employ original, or skilled and experienced installer to perform cutting and patching.

B. Submit written request in advance of cutting or altering elements which affect:
   1. Structural integrity of element.
   2. Integrity of weather-exposed or moisture-resistant elements.
   3. Efficiency, maintenance, or safety of element.
   4. Visual qualities of sight-exposed elements.
   5. Existing construction, or Work of separate contractor.

C. Execute cutting, fitting, and patching including excavation and fill, to complete Work, and to:

1. Fit the several parts together, to integrate with other Work.
2. Uncover Work to install or correct ill-timed Work.
3. Remove and replace defective and non-conforming Work.
4. Remove samples of installed Work for testing.
5. Provide openings in elements of Work for penetrations of mechanical and electrical Work.

D. Execute Work by methods that will avoid damage to other Work, and provide proper surfaces to receive patching and finishing.

E. Cut masonry, concrete, and other rigid materials using masonry saw or core drill.

F. Restore Work with new Products in accordance with requirements of Contract Documents.

G. Fit Work tight to pipes, sleeves, ducts, conduits, and other penetrations through surfaces.

H. Maintain integrity of wall, ceiling, or floor construction; completely seal voids.

I. At penetration of fire rated partitions, ceiling, or floor construction, completely seal voids with fire rated or fire resistant material in accordance with Specifications, to full thickness of the penetrated element.

J. Refinish surfaces to match adjacent finishes. For continuous surfaces, refinish to nearest intersection; for an assembly, refinish entire unit.

K. Identify any hazardous substance or conditions exposed during the Work to the Owner and Prime for decision or remedy.

1.7 SPECIAL PROCEDURES

A. Materials: As specified in product Sections; match existing with new products, or salvaged products as appropriate, for patching and extending work.

B. Employ skilled and experienced installer to perform alteration work.

C. Cut, move, or remove items as necessary for access to alterations and renovation Work. Replace and restore at completion.

D. Remove unsuitable material not marked for salvage, such as rotted wood, corroded metals, and deteriorated masonry and concrete. Replace materials as specified for finished Work.

E. Remove debris and abandoned items from area and from concealed spaces.

F. Prepare surface and remove surface finishes to provide installation of new Work and finishes.

G. Close openings in exterior surfaces to protect existing Work from weather and extremes of temperature and humidity.

H. Remove, cut, and patch Work in a manner to minimize damage and to provide means of restoring products and finishes to original or specified condition.

I. Refinish existing visible surfaces to remain in renovated rooms and spaces to specified condition for each material, with a neat transition to adjacent finishes.

J. Where new Work abuts or aligns with existing, provide a smooth and even transition. Patch Work to match existing adjacent Work in texture and appearance.

K. When finished surfaces are cut so that a smooth transition with new Work is not possible, terminate existing surface along a straight line at a natural line of division and submit recommendation to Prime for review.

L. Where a change of plane of 1/4 inch or more occurs, submit recommendation for providing a smooth transition to Prime for review.

M. Trim existing doors as necessary to clear new floor finish. Refinish trim as required.

N. Patch or replace portions of existing surfaces which are damaged, or showing other imperfections.

O. Finish surfaces as specified in individual product Sections, or as indicated on the Drawings.

1.8 PROGRESS CLEANING AND WASTE REMOVAL

A. Maintain areas free of waste materials, debris, and rubbish. Maintain site in a clean and orderly condition.

B. Remove debris and rubbish from pipe chases, plenums, attics, crawl spaces, and other closed or remote spaces, prior to enclosing the space.

C. Broom and vacuum clean interior areas prior to start of surface finishing, and continue cleaning to eliminate dust.

D. Collect and remove waste materials, debris, and rubbish from site periodically or weekly and dispose of off-site.

E. Open free-fall chutes are not permitted. Terminate closed chutes into appropriate containers with lids.

1.9 FINAL CLEANING

A. Execute final cleaning of areas affected by the Work prior to final project assessment.

B. Clean interior and exterior glass, surfaces exposed to view; remove temporary labels, stains and foreign substances, polish transparent and glossy surfaces, vacuum carpeted and soft surfaces.

C. Clean equipment and fixtures to a sanitary condition using cleaning materials appropriate to the surface and material being cleaned.

D. Clean or replace filters of operating equipment as directed by Prime.

E. Clean debris from roofs, gutters, downspouts, and drainage systems.

F. Clean site; sweep paved areas, rake clean landscaped surfaces.

G. Remove waste and surplus materials, rubbish, and construction facilities from the site.

1.10 STARTING AND ADJUSTING OF SYSTEMS

A. Coordinate schedule for starting and adjusting of various equipment and systems.

B. Notify Prime and Owner seven days prior to starting and adjusting of each item.

C. Verify that each piece of equipment or system has been checked for proper lubrication, drive rotation, belt tension, control sequence, or other conditions which may cause damage.

D. Verify that tests, meter readings and specified electrical characteristics agree with those required by the equipment or system manufacturer.

E. Verify wiring and support components for equipment are complete and tested.

F. Execute starting and adjusting under supervision of responsible Contractor's personnel or manufacturer's representative, in accordance with manufacturer's instructions.

G. Adjust operating Products and equipment to ensure smooth and unhindered operation.

H. When specified in individual specifications Section, require manufacturer to provide authorized representative to be present at the site to inspect, check, and approve equipment or system installation prior to starting, and to supervise placing of equipment or system in operation.

I. Submit a written report in accordance with Section 01400 that equipment or system has been properly installed and is functioning correctly.

1.11 DEMONSTRATION AND INSTRUCTIONS

A. Demonstrate operation and maintenance of Products to Owner's personnel two weeks prior to date of Substantial Completion.

B. For equipment or systems requiring seasonal operation, perform demonstration for other season within six months.

C. Utilize operation and maintenance manuals as basis for instruction. Review contents of manuals with Owner's personnel in detail to explain all aspects of operation and maintenance.

D. Demonstrate start-up, operation, control, adjustment, trouble shooting, servicing, maintenance, and shutdown of each item of equipment at scheduled or agreed upon times, at equipment or system location.

E. Prepare and insert additional data in operations and maintenance manuals when need for additional data becomes apparent during instruction.

1.12 TESTING, ADJUSTING, AND BALANCING

A. Submit, for the Owner's approval, the name of an independent firm to perform testing of fire systems. The independent firm's services will be paid for by the Contractor.

B. The independent firm will perform services specified in individual specifications Sections.

C. Reports will be submitted by the independent firm to the Prime and the Owner indicating observations and test results, indicating compliance or non-compliance with specified requirements and with the requirements of the Contract Documents.

1.13 PROTECTING INSTALLED CONSTRUCTION

A. Protect installed Work and provide special protection where specified in individual specification sections.

B. Provide temporary and removable protection for installed products. Control activity in immediate work area to prevent damage.

C. Provide protective coverings at walls, projections, jambs, sills, and soffits of openings.

D. Protect finished floors, stairs, and other surfaces from traffic, dirt, wear, damage, or movement of heavy objects, by protecting with durable sheet materials.

E. Repair or replace installed Work damaged by construction operations, as directed by the Prime.

PART 2 - PRODUCTS

Not Used.

PART 3 - EXECUTION

Not Used.

END OF SECTION

SECTION 01780 - CLOSEOUT SUBMITTALS

PART 1 - GENERAL

1.1 SECTION INCLUDES

A. Closeout procedures.

B. Quality assurance.

C. Maintenance service.

D. Operations and maintenance manuals.

E. Materials and finishes manuals.

F. Equipment and systems manuals.

G. Spare parts and maintenance materials.

H. Product warranties and product bonds.

I. Project Record documents.

1.2 CLOSEOUT PROCEDURES

A. Submit a written certification that the Contract Documents have been reviewed, the Work has been inspected, and that the Work is complete in accordance with the Contract Documents and is ready for the Owner's review.

B. Provide submittals to Prime that are required by governing or other authorities, including abatement invoices correctly prepared as proscribed in the abatement plan. Failure to include correctly prepared abatement invoices will delay issuing of final payment.

C. Provide submittals to Prime that are required by the governing or other authorities, including the following closeout documents:
   1. AIA Document G706 - Contractor's Affidavit of Payment of Debts and Claims
   2. AIA Document G706A - Contractor's Affidavit of Release of Liens
   3. AIA Document G707 - Consent of Surety to Final payment

D. Submit final Application for Payment identifying total adjusted Contract Sum, previous payments, and sum remaining due.

E. The Owner will occupy all portions of the building after Substantial Completion as specified in Section 01100.

1.3 QUALITY ASSURANCE

A. Employ personnel assembling submittals experienced in the maintenance and the operation of the described products and systems.

1.4 MAINTENANCE SERVICE

A. Submit a contract for furnishing service and maintenance of the components indicated in the specification Sections for one year from date of Substantial Completion, or during the warranty period, whichever period of time is the longest.

B. Provide for an examination of the system components at a frequency consistent with reliable operation. Clean, adjust, and lubricate as required.

C. Include a systematic cleaning, examination, adjustment, and lubrication of the components. Repair or replace the parts whenever required. Use the parts produced by the manufacturer of the original component.

D. Do not assign or transfer the maintenance service to an agent or Subcontractor without the prior written consent of the Owner.

1.5 OWNER'S MANUALS

A. Submit the data for Operations and Maintenance, Materials and Finishes, and Equipment and Systems Manuals bound in 8-1/2 x 11 inch text pages, in minimum 2 inch size three D side ring commercial quality binders with durable cleanable plastic covers.

B. Prepare binder covers with the printed title of the manual, title of the project, and the subject matter of binder.

C. Internally subdivide the binder contents with permanent page dividers, logically organized as described below; with tab titling clearly printed under reinforced laminated plastic tabs.

D. Drawings: Provide with reinforced punched binder tab. Bind in with the text; fold the larger drawings to the size of the text pages.

E. Submit two copies of a preliminary draft of the proposed formats and outline of the contents before the start of work. The Prime and its consultants will review drafts and return one copy with comments.

F. Submit one copy of the completed volumes 15 days prior to final inspection for final review. This copy will be reviewed and returned after final inspection, with the Prime's comments. Revise the content of the document sets as required prior to final submission.

G. Submit two sets of revised final volumes in final form within ten days after final inspection.

1.6 OPERATIONS AND MAINTENANCE MANUALS

A. Contents: Prepare the Table of Contents for each volume, with each product or system description identified, typed on white paper, in three parts as follows:
   1. **Part 1:** Directory, listing the names, addresses, and telephone numbers of the Prime, its Consultants, Contractor, Subcontractors, and major equipment suppliers.
   2. **Part 2:** Operation and maintenance instructions, arranged by system and subdivided by the specification Section. For each category, identify the names, addresses, and telephone numbers of the Subcontractors and suppliers. Identify the following:
      a. Significant design criteria.
      b. List of equipment.
      c. Parts list for each component.
      d. Operating instructions.
      e. Maintenance instructions for equipment and systems.
      f. Maintenance instructions for [special] finishes, including recommended cleaning methods and materials, and special precautions identifying detrimental agents.
   3. **Part 3:** Project documents and certificates, including the following:
      a. Shop drawings and product data.
      b. Air and water balance reports.
      c. Certificates.
      d. Originals of warranties and bonds.

1.7 MATERIALS AND FINISHES MANUALS

A. Building Products, Applied Materials, and Finishes: Include product data, with the catalog number, size, composition, and the color and texture designations. Include information for re-ordering custom manufactured products.

B. Instruction for Care and Maintenance: include manufacturer's instructions for cleaning agents and methods, precautions against detrimental agents and methods, and a recommended schedule for cleaning and maintenance.

C. Moisture Protection and Weather Exposed Products: Include product data listing applicable reference standards, chemical composition, and details of installation. Include recommendations for inspections, maintenance, and repair.

D. Additional Requirements: As specified in the individual product specification Sections.

E. Include a listing in the Table of Contents for design data, with a tabbed flysheet and a space for the insertion of data.

1.8 EQUIPMENT AND SYSTEMS MANUALS

A. For equipment, or component parts of equipment put into service during construction and operated by the Owner, submit documents within 10 days after acceptance.

B. Each Item of Equipment and Each System: Include a description of the unit or system, and the component parts. Identify the function, normal operating characteristics, and limiting conditions. Include performance curves, with engineering data and tests, and complete nomenclature and model number of replaceable parts.

C. Panelboard Circuit Directories: Provide electrical service characteristics, controls, and communications; typed.

D. Include color-coded wiring diagrams as installed.

E. Operating Procedures: Include start-up, break-in, and routine normal operating instructions and sequences. Include regulation, control, stopping, shutdown, and emergency instructions. Include summer, winter, and special operating instructions.

F. Maintenance Requirements: Include routine procedures and guide for preventative maintenance and troubleshooting; disassembly, repair, and reassembly instructions; and alignment, adjusting, balancing, and checking instructions.

G. Include a servicing and lubricating schedule, and a list of lubricants required.

H. Include the manufacturer's printed operation and maintenance instructions.

I. Include sequence of operation by the controls manufacturer.

J. Include the original manufacturer's parts list, illustrations, assembly drawings, and diagrams required for maintenance.

K. Include control diagrams by the controls manufacturer as installed.

L. Include the Contractor's coordination drawings, with color-coded piping diagrams as installed.

M. Include charts of valve tag numbers, with the location and function of each valve, keyed to the flow and control diagrams.

N. Include a list of the original manufacturer's spare parts, current prices, and recommended quantities to be maintained in storage.

O. Include test and balancing reports as specified in Section 01400.

P. Additional Requirements: As specified in the individual product specification Sections.

1.9 SPARE PARTS AND MAINTENANCE PRODUCTS

A. Furnish spare parts, maintenance, and extra products in the quantities specified in the individual specification Sections.

B. Deliver to the Project site and place in a location as directed by the Owner; obtain a receipt prior to final payment.

1.10 PRODUCT WARRANTIES AND PRODUCT BONDS

A. Obtain warranties and bonds executed in duplicate by the responsible subcontractors, suppliers, and manufacturers, within 10 days after the completion of the applicable item of work.

B. Execute and assemble the transferable warranty documents and bonds from the subcontractors, suppliers, and manufacturers.

C. Verify that the documents are in the proper form, contain full information, and are notarized.

D. Co-execute the submittals when required.

E. Include a Table of Contents and assemble in a three D side ring binder with a durable plastic cover.

F. Submit prior to the final Application for Payment.

G. Time of Submittals:
   1. For equipment or component parts of equipment put into service during construction with the Owner's permission, submit the documents within 10 days after acceptance.
   2. Make other submittals within 10 days after the Date of Substantial Completion, prior to the final Application for Payment.
   3. For items of Work for which acceptance is delayed beyond the Date of Substantial Completion, submit within 10 days after acceptance, listing the date of acceptance as the beginning of the warranty or bond period.

1.11 PROJECT RECORD DOCUMENTS

A. Maintain on the site one set of the following record documents; record actual revisions of the Work for all trades:

1. Drawings.
2. Specifications.
3. Addenda.
4. Change Orders and other modifications to the Contract.
5. Reviewed Shop Drawings, Product Data, and Samples.
6. Manufacturer's instructions for assembly, installation, and adjusting.

B. Ensure the entries are complete and accurate, enabling future reference by the Owner.

C. Store the record documents separate from the documents used for construction.

D. Record information concurrent with the construction progress, not less than weekly.

E. Specifications: Legibly mark and record at each product Section description of the actual products installed, including the following:
1. Manufacturer's name and product model and number.
2. Product substitutions or alternates utilized.
3. Changes made by Addenda and modifications.

F. Record Drawings and Shop Drawings: Legibly mark each item to record the actual construction including:
1. Measured horizontal and vertical locations of the underground utilities and appurtenances, referenced to permanent surface improvements.
2. Measured locations of internal utilities and appurtenances concealed in the construction.
3. Field changes of dimension and detail.
4. Details not on the original Contract drawings.

G. Legibly marked Specifications, and legibly marked Record Drawings and Shop Drawings shall constitute the Project Record Documents in paper form.

H. At completion of the Work of the Contract, the Prime will furnish the Contractor a disc, or discs, containing the construction drawings in AutoCAD format, and the Project Manual content in Microsoft Word form.

I. Transfer the information from the Project Record Documents in paper form to the disc, or discs, and return to the Prime along with the Project Record Documents in paper form. The disc, or discs, will constitute the Project Record Documents in digital form.

J. The Prime and its Consultants will review the Project Record Documents and compare them for accuracy, and if necessary return them to the Contractor for final correction. At the time of final submission, submit a claim for the final Application for Payment.

K. Abatement Invoices: Application for Payment must be accompanied with shipping documents for disposal of the abated material in compliance with the Abatement Plan.

L. No review or receipt of record of Project Record Documents by the Prime or the Owner shall be interpreted as a waiver of any deviation from the Contract Documents or Shop Drawings, or in any way relieve the Contractor from responsibility to perform the Work in accordance with the Contract Documents and the Shop Drawings to the extent they are in accordance with the Contract Documents

M. Update the on-site Project Record Documents on a regular basis. Monthly payments will not be processed if Project Record Documents are not maintained up to date.

PART 2 - PRODUCTS

Not used.

PART 3 - EXECUTION

Not used.

END OF SECTION

SECTION 02225

SELECTIVE STRUCTURE DEMOLITION

PART 1 - GENERAL

1.1 RELATED DOCUMENTS

A. Drawings and general provisions of the Contract, including General and Supplementary Conditions and Division 1 Specification Sections, apply to this Section.

1.2 SUMMARY

A. Section Includes:
1. Demolition and removal of selected portions of building or structure.
2. Demolition and removal of selected site elements.

B. Related Sections:
1. Division 1 Section "Summary" for restrictions on the use of the premises, Owner-occupancy requirements, and phasing requirements.
2. Division 1 Section "Execution" for cutting and patching procedures.

1.3 DEFINITIONS

A. Remove: Detach items from existing construction and legally dispose of them off-site unless indicated to be removed and salvaged or removed and reinstalled.

B. Remove and Salvage: Carefully detach from existing construction, in a manner to prevent damage, and deliver to Owner ready for reuse.

C. Remove and Reinstall: Detach items from existing construction, prepare for reuse, and reinstall where indicated.

D. Existing to Remain: Existing items of construction that are not to be permanently removed and that are not otherwise indicated to be removed, removed and salvaged, or removed and reinstalled.

1.4 MATERIALS OWNERSHIP

A. Unless otherwise indicated, demolition waste becomes property of Contractor.

1.5 PREINSTALLATION MEETINGS

A. Predemolition Conference: Conduct conference at Project site.
1. Inspect and discuss condition of construction to be selectively demolished.
2. Review structural load limitations of existing structure.

3. Review and finalize selective demolition schedule and verify availability of materials, demolition personnel, equipment, and facilities needed to make progress and avoid delays.
4. Review requirements of work performed by other trades that rely on substrates exposed by selective demolition operations.
5. Review areas where existing construction is to remain and requires protection.

1.6 INFORMATIONAL SUBMITTALS

A. Make Submittals in accordance with Division 1 Section “Submittal Procedures.”

B. Proposed Protection Measures: Submit report, including drawings, that indicates the measures proposed for protecting individuals and property for environmental protection, for dust control, and for noise control. Indicate proposed locations and construction of barriers.

C. Schedule of Selective Demolition Activities: Indicate the following:
1. Detailed sequence of selective demolition and removal work, with starting and ending dates for each activity. Ensure Owner's on-site operations are uninterrupted.
2. Interruption of utility services. Indicate how long utility services will be interrupted.
3. Coordination for shutoff, capping, and continuation of utility services.
4. Use of elevator and stairs.
5. Coordination of Owner's continuing occupancy of portions of existing building and of Owner's partial occupancy of completed Work.

D. Inventory: Submit a list of items to be removed and salvaged and deliver to Owner prior to start of demolition.

E. Predemolition Photographs: Submit before Work begins.

1.7 CLOSEOUT SUBMITTALS

A. Landfill Records: Indicate receipt and acceptance of hazardous wastes by a landfill facility licensed to accept hazardous wastes.

1.8 FIELD CONDITIONS

A. Owner will occupy portions of building immediately adjacent to selective demolition area. Conduct selective demolition so Owner's operations will not be disrupted.

B. Conditions existing at time of inspection for bidding purpose will be maintained by Owner as far as practical.

C. Notify Architect of discrepancies between existing conditions and Drawings before proceeding with selective demolition.

D. Hazardous Materials: It is not expected that hazardous materials will be encountered in the Work.

1. If suspected hazardous materials are encountered, do not disturb; immediately notify Architect and Owner. Hazardous materials will be removed by Owner under a separate contract.

E. Storage or sale of removed items or materials on-site is not permitted.

F. Utility Service: Maintain existing utilities indicated to remain in service and protect them against damage during selective demolition operations.
   1. Maintain fire-protection facilities in service during selective demolition operations.

PART 2 - PRODUCTS

2.1 PEFORMANCE REQUIREMENTS

A. Regulatory Requirements: Comply with governing EPA notification regulations before beginning selective demolition. Comply with hauling and disposal regulations of authorities having jurisdiction.

B. Standards: Comply with ANSI/ASSE A10.6 and NFPA 241.

PART 3 - EXECUTION

3.1 EXAMINATION

A. Verify that utilities have been disconnected and capped before starting selective demolition operations.

B. Review record documents of existing construction provided by Owner. Owner does not guarantee that existing conditions are same as those indicated in record documents.

C. Survey existing conditions and correlate with requirements indicated to determine extent of selective demolition required.

D. When unanticipated mechanical, electrical, or structural elements that conflict with intended function or design are encountered, investigate and measure the nature and extent of conflict. Promptly submit a written report to Architect.

E. Perform an engineering survey of condition of building to determine whether removing any element might result in structural deficiency or unplanned collapse of any portion of structure or adjacent structures during selective building demolition operations.
   1. Perform surveys as the Work progresses to detect hazards resulting from selective demolition activities.

F. Survey of Existing Conditions: Record existing conditions by use of measured drawings and preconstruction photographs.
   1. Inventory and record the condition of items to be removed and salvaged. Provide photographs of conditions that might be misconstrued as damage caused by salvage operations.

3.2 UTILITY SERVICES AND MECHANICAL/ELECTRICAL SYSTEMS

A. Existing Services/Systems to Remain: Maintain services/systems indicated to remain and protect them against damage.
   1. Comply with requirements for existing services/systems interruptions specified in Division 1 Section "Summary."

B. Existing Services/Systems to Be Removed, Relocated, or Abandoned: Locate, identify, disconnect, and seal or cap off indicated utility services and mechanical/electrical systems serving areas to be selectively demolished.
   1. Owner will arrange to shut off indicated services/systems when requested by Contractor.
   2. If services/systems are required to be removed, relocated, or abandoned, provide temporary services/systems that bypass area of selective demolition and that maintain continuity of services/systems to other parts of building.

3.3 PREPARATION

A. Site Access and Temporary Controls: Conduct selective demolition and debris-removal operations to ensure minimum interference with roads, streets, walks, walkways, and other adjacent occupied and used facilities.
   1. Comply with requirements for access and protection specified in Division 1 Section "Temporary Facilities and Controls."

B. Temporary Facilities: Provide temporary barricades and other protection required to prevent injury to people and damage to adjacent buildings and facilities to remain.
   1. Provide protection to ensure safe passage of people around selective demolition area and to and from occupied portions of building.
   2. Provide temporary weather protection, during interval between selective demolition of existing construction on exterior surfaces and new construction, to prevent water leakage and damage to structure and interior areas.
   3. Protect walls, ceilings, floors, and other existing finish work that are to remain or that are exposed during selective demolition operations.
   4. Cover and protect furniture, furnishings, and equipment that have not been removed.
   5. Comply with requirements for temporary enclosures, dust control, heating, and cooling specified in Division 1 Section "Temporary Facilities and Controls."

C. Temporary Shoring: Provide and maintain shoring, bracing, and structural supports as required to preserve stability and prevent movement, settlement, or collapse of construction and finishes to remain, and to prevent unexpected or uncontrolled movement or collapse of construction being demolished.
   1. Strengthen or add new supports when required during progress of selective demolition.

3.4 SELECTIVE DEMOLITION, GENERAL

A. Demolish and remove existing construction only to the extent required by new construction and as indicated. Use methods required to complete the Work within limitations of governing regulations and as follows:
   1. Proceed with selective demolition systematically, from higher to lower level. Complete selective demolition operations above each floor or tier before disturbing supporting members on the next lower level.

2. Neatly cut openings and holes plumb, square, and true to dimensions required. Use cutting methods least likely to damage construction to remain or adjoining construction. Use hand tools or small power tools designed for sawing or grinding, not hammering and chopping, to minimize disturbance of adjacent surfaces. Temporarily cover openings to remain.
3. Cut or drill from the exposed or finished side into concealed surfaces to avoid marring existing finished surfaces.
4. Do not use cutting torches until work area is cleared of flammable materials. At concealed spaces, such as duct and pipe interiors, verify condition and contents of hidden space before starting flame-cutting operations. Maintain fire watch and portable fire-suppression devices during flame-cutting operations.
5. Maintain adequate ventilation when using cutting torches.
6. Remove decayed, vermin-infested, or otherwise dangerous or unsuitable materials and promptly dispose of off-site.
7. Remove structural framing members and lower to ground by method suitable to avoid free fall and to prevent ground impact or dust generation.
8. Locate selective demolition equipment and remove debris and materials so as not to impose excessive loads on supporting walls, floors, or framing.
9. Dispose of demolished items and materials promptly. Comply with requirements in Division 1 Section "Temporary Facilities and Controls."

B. Removed and Salvaged Items:
1. Clean salvaged items.
2. Pack or crate items after cleaning. Identify contents of containers.
3. Store items in a secure area until delivery to Owner.
4. Transport items to Owner's storage area on-site as designated by Owner.
5. Protect items from damage during transport and storage.

C. Removed and Reinstalled Items:
1. Clean and repair items to functional condition adequate for intended reuse.
2. Pack or crate items after cleaning and repairing. Identify contents of containers.
3. Protect items from damage during transport and storage.
4. Reinstall items in locations indicated. Comply with installation requirements for new materials and equipment. Provide connections, supports, and miscellaneous materials necessary to make item functional for use indicated.

D. Existing Items to Remain: Protect construction indicated to remain against damage and soiling during selective demolition. When permitted by Architect, items may be removed to a suitable, protected storage location during selective demolition and cleaned and reinstalled in their original locations after selective demolition operations are complete.

3.5 SELECTIVE DEMOLITION PROCEDURES FOR SPECIFIC MATERIALS

A. Concrete: Demolish in sections. Cut concrete full depth at junctures with construction to remain and at regular intervals using power-driven saw, then remove concrete between saw cuts.

B. Masonry: Demolish in small sections. Cut masonry at junctures with construction to remain, using power-driven saw, then remove masonry between saw cuts.

C. Concrete Slabs-on-Grade: Saw-cut perimeter of area to be demolished, then break up and remove.

D. Resilient Floor Coverings: Remove floor coverings and adhesive according to recommendations in RFCI's "Recommended Work Practices for the Removal of Resilient Floor Coverings." Do not use methods requiring solvent-based adhesive strippers.

3.6 DISPOSAL OF DEMOLISHED MATERIALS

A. Except for items or materials indicated to be recycled, reused, salvaged, reinstalled, or otherwise indicated to remain Owner's property, remove demolished materials from Project site and legally dispose of them in an EPA-approved landfill.
   1. Do not allow demolished materials to accumulate on-site.
   2. Remove and transport debris in a manner that will prevent spillage on adjacent surfaces and areas.
   3. Remove debris from elevated portions of building by chute, hoist, or other device that will convey debris to grade level in a controlled descent.
   4. Comply with requirements specified in Division 1 Section "Temporary Facilities And Controls."

B. Burning: Do not burn demolished materials.

C. Disposal: Transport demolished materials off Owner's property and legally dispose of them.

3.7 CLEANING

A. Clean adjacent structures and improvements of dust, dirt, and debris caused by selective demolition operations. Return adjacent areas to condition existing before selective demolition operations began.

END OF SECTION

SECTION 05521

PIPE AND TUBE RAILINGS

PART 1 - GENERAL

1.1 RELATED DOCUMENTS

A. Drawings and general provisions of the Contract, including General and Supplementary Conditions and Division 01 Specification Sections, apply to this Section.

1.2 SUMMARY

A. Section includes:
1. Interior steel pipe railings, shop primed for a field-applied finish.
2. Exterior steel pipe railings, shop galvanized and shop-finished.
3. Stainless-steel pipe railings.

B. Alternates: The Work of this Section is affected by one or more an alternates. Refer to Division 1 Section “Alternates” for a description of alternates and for administrative and procedural requirements governing Alternates.

C. Related Sections:
1. Division 6 Section "Rough Carpentry" for wood blocking for anchoring railings.
2. Division 9 Section "Non-Structural Metal Framing" for metal backing for anchoring railings.
3. Division 9 Section "Painting" for field applied finish coatings.

1.3 PERFORMANCE REQUIREMENTS

A. Delegated Design: Design railings, including comprehensive engineering analysis by a qualified professional engineer, using performance requirements and design criteria indicated.

B. General: In engineering railings to withstand structural loads indicated, determine allowable design working stresses of railing materials based on the following:
1. Steel: 72 percent of minimum yield strength.
2. Stainless Steel: 60 percent of minimum yield strength.

C. Structural Performance: Railings shall withstand the effects of gravity loads and the following loads and stresses within limits and under conditions indicated:
1. Handrails and Top Rails of Guards:
   a. Uniform load of 50 lbf/ ft. (0.73 kN/m) applied in any direction.
   b. Concentrated load of 200 lbf (0.89 kN) applied in any direction.
   c. Uniform and concentrated loads need not be assumed to act concurrently.
2. Infill of Guards:
   a. Concentrated load of 50 lbf (0.22 kN) applied horizontally on an area of 1 sq. ft. (0.093 sq. m).
   b. Infill load and other loads need not be assumed to act concurrently.

D. Thermal Movements: Allow for thermal movements from ambient and surface temperature changes acting on exterior metal fabrications by preventing buckling, opening of joints, overstressing of components, failure of connections, and other detrimental effects.
   1. Temperature Change: 120 deg F (67 deg C), ambient; 180 deg F (100 deg C), material surfaces.

E. Control of Corrosion: Prevent galvanic action and other forms of corrosion by insulating metals and other materials from direct contact with incompatible materials.

1.4 ACTION SUBMITTALS

A. Make Submittals in accordance with Division 1 Section “Submittal Procedures.”

B. Product Data: For the following:
   1. Manufacturer's product lines of mechanically connected railings.
   2. Railing brackets.
   3. Grout and paint products.

C. Shop Drawings: Include plans, elevations, sections, details, and attachments to other work.

D. Samples for Verification: For each type of exposed finish required.
   1. Sections of each distinctly different linear railing member, including handrails, top rails, posts, and balusters.
   2. Fittings and brackets.
   3. Assembled Sample of railing system, made from full-size components, including top rail, post, handrail, and infill. Sample need not be full height.
      a. Show method of connecting members at intersections.

E. Delegated-Design Submittal: For installed products indicated to comply with performance requirements and design criteria, including analysis data signed and sealed by the qualified professional engineer responsible for their preparation.

1.5 INFORMATIONAL SUBMITTALS

A. Qualification Data: For qualified professional engineer.

B. Welding certificates.

C. Galvanizer Certificates: Submit a notarized certificate of compliance from the galvanizer, with an itemized listing and description of items that have been hot-dip galvanized, hot-dip galvanized/shop prime painted, and hot-dip galvanized/shop finished.
   1. Submit a laboratory analysis of the zinc bath with the names and percentages of metals.

D. Paint Compatibility Certificates: From manufacturers of topcoats applied over shop primers certifying that shop primers are compatible with topcoats.

1.6 QUALITY ASSURANCE

A. Source Limitations: Obtain each type of railing from single source from single manufacturer.

B. Welding Qualifications: Qualify procedures and personnel according to the following:
   1. AWS D1.1/D1.1M, "Structural Welding Code - Steel."
   2. AWS D1.6, "Structural Welding Code - Stainless Steel."

1.7 PROJECT CONDITIONS

A. Field Measurements: Verify actual locations of walls and other construction contiguous with metal fabrications by field measurements before fabrication.

1.8 COORDINATION AND SCHEDULING

A. Coordinate selection of shop primers with topcoats to be applied over them. Comply with paint and coating manufacturers' written recommendations to ensure that shop primers and topcoats are compatible with one another.

B. Coordinate installation of anchorages for railings. Furnish setting drawings, templates, and directions for installing anchorages, including sleeves, concrete inserts, anchor bolts, and items with integral anchors, that are to be embedded in concrete or masonry. Deliver such items to Project site in time for installation.

C. Schedule installation so wall attachments are made only to completed walls. Do not support railings temporarily by any means that do not satisfy structural performance requirements.

PART 2 - PRODUCTS

2.1 METALS, GENERAL

A. Metal Surfaces, General: Provide materials with smooth surfaces, without seam marks, roller marks, rolled trade names, stains, discolorations, or blemishes.

B. Brackets, Flanges, and Anchors: Cast or formed metal of same type of material and finish as supported rails unless otherwise indicated.

2.2 STEEL AND IRON

A. Tubing: ASTM A 500 (cold formed) or ASTM A 513.

B. Pipe: ASTM A 53/A 53M, Type F or Type S, Grade A, Standard Weight (Schedule 40), unless another grade and weight are required by structural loads.
   1. Provide galvanized finish for exterior installations and where indicated.

C. Plates, Shapes, and Bars: ASTM A 36/A 36M.

D. Cast Iron: Either gray iron, ASTM A 48/A 48M, or malleable iron, ASTM A 47/A 47M, unless otherwise indicated.

E. Perforated Metal: Cold-rolled steel sheet, ASTM A 1008/A 1008M, or hot-rolled steel sheet, ASTM A 1011/A 1011M, commercial steel Type B, 0.060 inch (1.52 mm) thick, with 1/4-inch (6.4-mm) holes 3/8 inch (9.5 mm) o.c. in staggered rows.

2.3 STAINLESS STEEL

A. Pipe: ASTM A 312/A 312M, Grade TP 304.

B. Castings: ASTM A 743/A 743M, Grade CF 8 or CF 20.

C. Plate and Sheet: ASTM A 240/A 240M or ASTM A 666, Type 304.

D. Perforated Metal: Stainless-steel sheet, ASTM A 240/A 240M or ASTM A 666, Type 304, 0.062 inch (1.59 mm) thick, with 1/4-inch (6.4-mm) holes 3/8 inch (9.5 mm) o.c. in staggered rows.

2.4 FASTENERS

A. General: Provide the following:
1. Ungalvanized-Steel Railings: Plated steel fasteners complying with ASTM B 633 or ASTM F 1941 (ASTM F 1941M), Class Fe/Zn 5 for zinc coating.
2. Hot-Dip Galvanized Railings: Type 304 stainless-steel.
3. Stainless-Steel Railings: Type 304 stainless-steel fasteners.

B. Fasteners for Anchoring Railings to Other Construction: Select fasteners of type, grade, and class required to produce connections suitable for anchoring railings to other types of construction indicated and capable of withstanding design loads.

C. Fasteners for Interconnecting Railing Components:
1. Provide concealed fasteners for interconnecting railing components and for attaching them to other work, unless otherwise indicated.
2. Provide concealed fasteners for interconnecting railing components and for attaching them to other work, unless exposed fasteners are unavoidable or are the standard fastening method for railings indicated.
3. Provide tamper-resistant flat-head machine screws for exposed fasteners unless otherwise indicated.

D. Post-Installed Anchors: Torque-controlled expansion anchors capable of sustaining, without failure, a load equal to six times the load imposed when installed in unit masonry and four times the load imposed when installed in concrete, as determined by testing according to ASTM E 488, conducted by a qualified independent testing agency.
1. Material for Interior Locations: Carbon-steel components zinc-plated to comply with ASTM B 633 or ASTM F 1941 (ASTM F 1941M), Class Fe/Zn 5, unless otherwise indicated.
2. Material for Exterior Locations and Where Stainless Steel is Indicated: Alloy Group 1 (A1) stainless-steel bolts, ASTM F 593 (ASTM F 738M), and nuts, ASTM F 594 (ASTM F 836M).

2.5 MISCELLANEOUS MATERIALS

A. Welding Rods and Bare Electrodes: Select according to AWS specifications for metal alloy welded.
   1. For stainless-steel railings, provide type and alloy as recommended by producer of metal to be welded and as required for color match, strength, and compatibility in fabricated items.

B. Galvanizing Repair Paint: High-zinc-dust-content paint complying with SSPC-Paint 20 and compatible with paints specified to be used over it.

C. Shop Primers for Non-Galvanized Steel: Provide primers that comply with Division 09 painting Sections.

D. Shop Primer for Galvanized Steel: Complying with MPI #20 and compatible with intermediate coat.
   1. Products: Subject to compliance with requirements, available products that may be incorporated into the Work include, but are not limited to, the following:
      a. Akzo Nobel Paints; Devoe High Perfromance Coatings, CATHACOAT 313 Organic Zine Rich Primer, 313.
      b. PPG; PMC, Amercoat 68 HS Zinc Rich Epoxy Primer, AT68HS-x.
      c. Tnemec; Series 27 F. C. Typoxy Polyamide Epoxy.

E. Epoxy Intermediate Coat for Galvanized Steel: Complying with MPI #108 and compatible with primer and topcoat.
   1. Products: Subject to compliance with requirements, available products that may be incorporated into the Work include, but are not limited to, the following:
      a. Akzo Nobel Paints; Devoe High Perfromance Coatings, DEVRAN 224HS Epoxy High Build Coating, 224HS.
      b. PPG; PMC, Amerlock 400, AK-400.
      c. Tnemec; Series N69 Hi-Build Epoxoline II Polyamide Epoxy.

F. Polyurethane Topcoat for Galvanized Steel: Complying with MPI #72 and compatible with undercoat.
   1. Products: Subject to compliance with requirements, available products that may be incorporated into the Work include, but are not limited to, the following:
      a. Akzo Nobel Paints; Devoe High Perfromance Coatings, DEVTHANE 379 Aliphatic Urethane Gloss Enamel, 379UVA.
      b. PPG; Pitthane Ultra, Gloss Urethane Enamels, 95-812/819.
      c. Tnemec Company, Inc.; Series 1075 Endura-Shield.

G. Bituminous Paint: Cold-applied asphalt emulsion complying with ASTM D 1187.

H. Nonshrink, Nonmetallic Grout: Factory-packaged, nonstaining, noncorrosive, nongaseous grout complying with ASTM C 1107. Provide grout specifically recommended by manufacturer for interior and exterior applications.

2.6 FABRICATION

A. Fabricate railings to comply with requirements indicated for design, dimensions, member sizes and spacing, details, finish, and anchorage, but not less than that required to support structural loads.

B. Assemble railings in the shop to greatest extent possible to minimize field splicing and assembly. Disassemble units only as necessary for shipping and handling limitations. Clearly mark units for reassembly and coordinated installation. Use connections that maintain structural value of joined pieces.

C. Cut, drill, and punch metals cleanly and accurately. Remove burrs and ease edges to a radius of approximately 1/32 inch (1 mm) unless otherwise indicated. Remove sharp or rough areas on exposed surfaces.

D. Form work true to line and level with accurate angles and surfaces.

E. Fabricate connections that will be exposed to weather in a manner to exclude water. Provide weep holes where water may accumulate.

F. Cut, reinforce, drill, and tap as indicated to receive finish hardware, screws, and similar items.

G. Connections: Fabricate railings with welded connections unless otherwise indicated.

H. Welded Connections: Cope components at connections to provide close fit, or use fittings designed for this purpose. Weld all around at connections, including at fittings.
   1. Use materials and methods that minimize distortion and develop strength and corrosion resistance of base metals.
   2. Obtain fusion without undercut or overlap.
   3. Remove flux immediately.
   4. At exposed connections, finish exposed surfaces smooth and blended so no roughness shows after finishing and welded surface matches contours of adjoining surfaces.

I. Nonwelded Connections: Limit nonwelded connections to field connections to the greatest extent possible. Fabricate members and fittings to produce flush, smooth, rigid, hairline joints.
   1. Fabricate splice joints for field connection using an epoxy structural adhesive if this is manufacturer's standard splicing method.

J. Form changes in direction as detailed.

K. Bend members in jigs to produce uniform curvature for each configuration required; maintain cross section of member throughout entire bend without buckling, twisting, cracking, or otherwise deforming exposed surfaces of components.

L. Close exposed ends of railing members with prefabricated end fittings.

M. Provide wall returns at ends of wall-mounted handrails unless otherwise indicated. Close ends of returns unless clearance between end of rail and wall is 1/4 inch (6 mm) or less.

N. Brackets, Flanges, Fittings, and Anchors: Provide wall brackets, flanges, miscellaneous fittings, and anchors to interconnect railing members to other work unless otherwise indicated.

1. At brackets and fittings fastened to plaster or gypsum board partitions, provide crush-resistant fillers, or other means to transfer loads through wall finishes to structural supports and prevent bracket or fitting rotation and crushing of substrate.

O. Provide inserts and other anchorage devices for connecting railings to concrete or masonry work. Fabricate anchorage devices capable of withstanding loads imposed by railings. Coordinate anchorage devices with supporting structure.

P. For railing posts set in concrete, provide steel sleeves not less than 6 inches (150 mm) long with inside dimensions not less than 1/2 inch (13 mm) greater than outside dimensions of post, with metal plate forming bottom closure.

2.7 FINISHES, GENERAL

A. Comply with NAAMM's "Metal Finishes Manual for Architectural and Metal Products" for recommendations for applying and designating finishes.

B. Appearance of Finished Work: Variations in appearance of abutting or adjacent pieces are acceptable if they are within one-half of the range of approved Samples. Noticeable variations in the same piece are not acceptable. Variations in appearance of other components are acceptable if they are within the range of approved Samples and are assembled or installed to minimize contrast.

C. Provide exposed fasteners with finish matching appearance, including color and texture, of railings.

2.8 STEEL AND IRON FINISHES

A. For nongalvanized steel railings, provide nongalvanized ferrous-metal fittings, brackets, fasteners, and sleeves, except galvanize anchors to be embedded in exterior concrete or masonry.

B. Preparation for Shop Priming: Prepare uncoated ferrous-metal surfaces to comply with SSPC-SP 6/NACE No. 3, "Commercial Blast Cleaning."

C. Primer Application: Apply shop primer to prepared surfaces of railings unless otherwise indicated. Comply with requirements in SSPC-PA 1, "Paint Application Specification No. 1: Shop, Field, and Maintenance Painting of Steel," for shop painting. Primer need not be applied to surfaces to be embedded in concrete or masonry.
   1. Shop prime uncoated railings with primers specified in Division 9 painting Section.

2.9 HOT-DIP GALVANIZED STEEL AND IRON FINISHES

A. Hot-dip galvanize all ferrous metal items exposed to the weather, or on the exterior of the building, and where indicated, using an enhanced galvanizing process including state of the art Quality Assurance/Quality Control methods. Provide hot-dip galvanized coating consisting of zinc and other metals. Use a "dry-kettle" process to prevent flux inclusions or entrapment. Use of a flux blanket on the surface of the galvanizing bath is not acceptable. Provide hot-dip galvanized coating for those items indicated or specified to be galvanized, as follows:

1. ASTM A153 for Galvanizing Iron And Steel Hardware.
2. ASTM A123 for Galvanizing Both Fabricated And Unfabricated Iron And Steel Products Made Of Uncoated Rolled, Pressed, And Forged Shapes, Plates, Bars, And Strip 0.0299 Inch Thick And Heavier.
3. ASTM A384 for Standard Practice for Safeguarding Against Warpage and Distortion During Hot-Dip Galvanizing of Steel Assemblies.
4. ASTM A385 for Standard Practice for Providing High Quality Zinc Coatings (Hot-dip).
5. ASTM A386 for Galvanizing Assembled Steel Products.

B. For galvanized railings, provide hot-dip galvanized fittings, brackets, fasteners, sleeves, and other ferrous components.

C. Preparing Galvanized Railings for Shop Priming: After galvanizing, thoroughly clean railings of grease, dirt, oil, flux, and other foreign matter, and treat with etching cleaner.

D. Shop Applied Primer And Intermediate Coats for Hot-Dip Galvanized Metals: Apply primer and intermediate coat to surfaces of galvanized metal fabrications indicated to receive a top coat of polyurethane within 12 hours after galvanizing ferrous metals. Apply epoxy primer at 2.5 to 3.0 mils DFT, and apply epoxy intermediate coat at 3.0 to 8.0 mils DFT. Both primer and intermediate coat shall be shop applied by the galvanizer.

E. Shop Applied Finish Coat for Hot-Dip Galvanized Metals: Apply finish coat to surfaces of hot-dip galvanized metal fabrications indicated to receive a shop applied top coat . Apply polyurethane top coat at 2.5 to 3.0 mils DFT over intermediate coat. Primer, intermediate coat, and finish coat shall be shop applied by the galvanizer.

2.10 STAINLESS-STEEL FINISHES

A. Remove tool and die marks and stretch lines, or blend into finish.

B. Grind and polish surfaces to produce uniform, directionally textured, polished finish indicated, free of cross scratches. Run grain with long dimension of each piece.

C. Directional Satin Finish: No. 4.

D. When polishing is completed, passivate and rinse surfaces. Remove embedded foreign matter and leave surfaces chemically clean.

PART 3 - EXECUTION

3.1 EXAMINATION

A. Examine gypsum board assemblies, where reinforced to receive anchors, to verify that locations of concealed reinforcements have been clearly marked for Installer. Locate reinforcements and mark locations if not already done.

3.2 INSTALLATION, GENERAL

A. Fit exposed connections together to form tight, hairline joints.

B. Perform cutting, drilling, and fitting required for installing railings. Set railings accurately in location, alignment, and elevation; measured from established lines and levels and free of rack.
   1. Do not weld, cut, or abrade surfaces of railing components that have been coated or finished after fabrication and that are intended for field connection by mechanical or other means without further cutting or fitting.
   2. Set posts plumb within a tolerance of 1/16 inch in 3 feet (2 mm in 1 m).
   3. Align rails so variations from level for horizontal members and variations from parallel with rake of steps and ramps for sloping members do not exceed 1/4 inch in 12 feet (5 mm in 3 m).

C. Adjust railings before anchoring to ensure matching alignment at abutting joints.

D. Fastening to In-Place Construction: Use anchorage devices and fasteners where necessary for securing railings and for properly transferring loads to in-place construction.

3.3 RAILING CONNECTIONS

A. Nonwelded Connections: Use mechanical or adhesive joints for permanently connecting railing components. Seal recessed holes of exposed locking screws using plastic cement filler colored to match finish of railings.

B. Welded Connections: Use fully welded joints for permanently connecting railing components. Comply with requirements for welded connections in "Fabrication" Article whether welding is performed in the shop or in the field.

C. Expansion Joints: Install expansion joints at locations indicated but not farther apart than required to accommodate thermal movement. Provide slip-joint internal sleeve extending 2 inches (50 mm) beyond joint on either side, fasten internal sleeve securely to one side, and locate joint within 6 inches (150 mm) of post.

3.4 ANCHORING POSTS

A. Use metal sleeves preset and anchored into concrete for installing posts. After posts have been inserted into sleeves, fill annular space between post and sleeve with nonshrink, nonmetallic grout, mixed and placed to comply with anchoring material manufacturer's written instructions.

B. Form or core-drill holes not less than 5 inches (125 mm) deep and 3/4 inch (20 mm) larger than OD of post for installing posts in concrete. Clean holes of loose material, insert posts, and fill annular space between post and concrete with nonshrink, nonmetallic grout, mixed and placed to comply with anchoring material manufacturer's written instructions.

C. Cover anchorage joint with flange of same metal as post, attached to post with set screws.

D. Anchor posts to metal surfaces with oval flanges, angle type, or floor type as required by conditions, connected to posts and to metal supporting members as follows:
   1. For steel pipe railings, weld flanges to post and bolt to metal supporting surfaces.

3.5 ATTACHING RAILINGS

A. Anchor railing ends at walls with round flanges anchored to wall construction and welded to railing ends.

B. Anchor railing ends to metal surfaces with flanges bolted to metal surfaces and welded to railing ends.

C. Attach railings to wall with wall brackets, except where end flanges are used. Provide brackets with 1-1/2-inch (38-mm) clearance from inside face of handrail and finished wall surface. Locate brackets as indicated or, if not indicated, at spacing required to support structural loads.
   1. Use type of bracket with flange tapped for concealed anchorage to threaded hanger bolt, or predrilled hole for exposed bolt anchorage where indicated.
   2. Locate brackets as indicated or, if not indicated, at spacing required to support structural loads.

D. Secure wall brackets and railing end flanges to building construction as follows:
   1. For concrete and solid masonry anchorage, use drilled-in expansion shields and hanger or lag bolts.
   2. For hollow masonry anchorage, use toggle bolts.
   3. For steel-framed partitions, use self-tapping screws fastened to steel framing or to concealed steel reinforcements.

3.6 ADJUSTING AND CLEANING

A. Touchup Painting: Immediately after erection, clean field welds, bolted connections, and abraded areas of shop paint, and paint exposed areas with the same material as used for shop painting to comply with SSPC-PA 1 for touching up shop-painted surfaces.
   1. Apply by brush or spray to provide a minimum 2.0-mil (0.05-mm) dry film thickness.

B. Galvanized Surfaces: Clean field welds, bolted connections, and abraded areas and repair galvanizing to comply with ASTM A 780.

3.7 PROTECTION

A. Protect finishes of railings from damage during construction period with temporary protective coverings approved by railing manufacturer. Remove protective coverings at time of Substantial Completion.

END OF SECTION

SECTION 06100

ROUGH CARPENTRY

PART 1 - GENERAL

1.1 RELATED DOCUMENTS

A. Drawings and general provisions of the Contract, including General and Supplementary Conditions and Division 01 Specification Sections, apply to this Section.

1.2 SUMMARY

A. Section includes wood blocking and nailers.

1.3 DEFINITIONS

A. Dimension Lumber: Lumber of 2 inches nominal (38 mm actual) or greater but less than 5 inches nominal (114 mm actual) in least dimension.

B. Lumber grading agencies, and the abbreviations used to reference them, include the following:
   1. NeLMA: Northeastern Lumber Manufacturers' Association.
   2. NLGA: National Lumber Grades Authority.
   3. SPIB: The Southern Pine Inspection Bureau.

1.4 ACTION SUBMITTALS

A. Make Submittals in accordance with Division 1 Section “Submittal Procedures.”

B. Product Data: For each type of process and factory-fabricated product. Indicate component materials and dimensions and include construction and application details.
   1. Include data for wood-preservative treatment from chemical treatment manufacturer and certification by treating plant that treated materials comply with requirements. Indicate type of preservative used and net amount of preservative retained.
   2. Include data for fire-retardant treatment from chemical treatment manufacturer and certification by treating plant that treated materials comply with requirements. Include physical properties of treated materials based on testing by a qualified independent testing agency.
   3. For fire-retardant treatments, include physical properties of treated lumber both before and after exposure to elevated temperatures, based on testing by a qualified independent testing agency according to ASTM D 5664.
   4. For products receiving a waterborne treatment, include statement that moisture content of treated materials was reduced to levels specified before shipment to Project site.
   5. Include copies of warranties from chemical treatment manufacturers for each type of treatment.

1.5 INFORMATIONAL SUBMITTALS

A. Material Certificates: For dimension lumber specified to comply with minimum allowable unit stresses. Indicate species and grade selected for each use and design values approved by the ALSC Board of Review.

1.6 QUALITY ASSURANCE

A. Testing Agency Qualifications: For testing agency providing classification marking for fire-retardant treated material, an inspection agency acceptable to authorities having jurisdiction that periodically performs inspections to verify that the material bearing the classification marking is representative of the material tested.

1.7 DELIVERY, STORAGE, AND HANDLING

A. Stack lumber flat with spacers beneath and between each bundle to provide air circulation. Protect lumber from weather by covering with waterproof sheeting, securely anchored. Provide for air circulation around stacks and under coverings.

PART 2 - PRODUCTS

2.1 WOOD PRODUCTS, GENERAL

A. Lumber: DOC PS 20 and applicable rules of grading agencies indicated. If no grading agency is indicated, provide lumber that complies with the applicable rules of any rules-writing agency certified by the ALSC Board of Review. Provide lumber graded by an agency certified by the ALSC Board of Review to inspect and grade lumber under the rules indicated.
   1. Factory mark each piece of lumber with grade stamp of grading agency.
   2. Where nominal sizes are indicated, provide actual sizes required by DOC PS 20 for moisture content specified. Where actual sizes are indicated, they are minimum dressed sizes for dry lumber.
   3. Provide dressed lumber, S4S, unless otherwise indicated.

B. Maximum Moisture Content of Lumber: 19 percent unless otherwise indicated.

2.2 WOOD-PRESERVATIVE-TREATED LUMBER

A. Preservative Treatment by Pressure Process: AWPA U1; Use Category UC2.
   1. Preservative Chemicals: Acceptable to authorities having jurisdiction and containing no arsenic or chromium.

B. Kiln-dry lumber after treatment to a maximum moisture content of 19 percent. Do not use material that is warped or that does not comply with requirements for untreated material.

C. Mark lumber with treatment quality mark of an inspection agency approved by the ALSC Board of Review.

D. Application: Treat items indicated on Drawings, and the following:

1. Wood cants, nailers, curbs, equipment support bases, blocking, stripping, and similar members in connection with roofing, flashing, vapor barriers, and waterproofing.
2. Wood blocking and similar concealed members in contact with masonry or concrete.

2.3 FIRE-RETARDANT-TREATED MATERIALS

A. Where fire-retardant-treated materials are indicated, use materials complying with requirements in this article, that are acceptable to authorities having jurisdiction, and with fire-test-response characteristics specified as determined by testing identical products per test method indicated by a qualified testing agency.

B. Fire-Retardant-Treated Lumber and Plywood by Pressure Process: Products with a flame spread index of 25 or less when tested according to ASTM E 84, and with no evidence of significant progressive combustion when the test is extended an additional 20 minutes, and with the flame front not extending more than 10.5 feet (3.2 m) beyond the centerline of the burners at any time during the test.
   1. Use treatment that does not promote corrosion of metal fasteners.
   2. Interior Type A: Treated materials shall have a moisture content of 28 percent or less when tested according to ASTM D 3201 at 92 percent relative humidity. Use where exterior type is not indicated.

C. Kiln-dry lumber after treatment to a maximum moisture content of 19 percent. Kiln-dry plywood after treatment to a maximum moisture content of 15 percent.

D. Identify fire-retardant-treated wood with appropriate classification marking of qualified testing agency.

E. Application: Treat all rough carpentry items with fire-retardant-treatment, except items indicated to be preservative-treated.

2.4 MISCELLANEOUS LUMBER

A. Provide miscellaneous lumber indicated and lumber for support or attachment of other construction, including the following:
   1. Blocking.
   2. Nailers.

B. For items of dimension lumber size, provide Construction or No. 2 grade lumber of any of the following species:
   1. Hem-fir (north); NLGA.
   2. Mixed southern pine; SPIB.
   3. Spruce-pine-fir; NLGA.
   4. Spruce-pine-fir (south); NeLMA.
   5. Northern species; NLGA.

C. For blocking and nailers used for attachment of other construction, select and cut lumber to eliminate knots and other defects that will interfere with attachment of other work.

2.5 FASTENERS

A. Provide fasteners of size and type indicated that comply with requirements specified in this article for material and manufacture.
   1. Where rough carpentry is exposed to weather, in ground contact, pressure-preservative treated, or in area of high relative humidity, provide fasteners of Type 304 stainless steel.

PART 3 - EXECUTION

3.1 INSTALLATION, GENERAL

A. Set rough carpentry to required levels and lines, with members plumb, true to line, cut, and fitted. Fit rough carpentry to other construction; scribe and cope as needed for accurate fit. Locate nailers, blocking, and similar supports to comply with requirements for attaching other construction.

B. Framing Standard: Comply with AF&PA's WCD 1, "Details for Conventional Wood Frame Construction," unless otherwise indicated.

C. Do not splice structural members between supports unless otherwise indicated.

D. Provide blocking and framing as indicated and as required to support facing materials, fixtures, specialty items, and trim.

E. Sort and select lumber so that natural characteristics will not interfere with installation or with fastening other materials to lumber. Do not use materials with defects that interfere with function of member or pieces that are too small to use with minimum number of joints or optimum joint arrangement.

F. Securely attach rough carpentry work to substrate by anchoring and fastening as indicated, complying with the following:
   1. NES NER-272 for power-driven fasteners.
   2. Table 2304.9.1, "Fastening Schedule," in ICC's International Building Code.

G. Select fasteners of size that will not fully penetrate members where opposite side will be exposed to view or will receive finish materials. Make tight connections between members. Install fasteners without splitting wood. Drive nails snug but do not countersink nail heads unless otherwise indicated.

3.2 WOOD BLOCKING AND NAILER INSTALLATION

A. Install where indicated and where required for attaching other work. Form to shapes indicated and cut as required for true line and level of attached work. Coordinate locations with other work involved.
   1. Provide wood blocking and nailers in walls and partitions for attaching equipment, cabinets, and other work, regardless of whether the item to be attached is provided under the Work of this Contract or is provided by Owner.

B. Attach items to substrates to support applied loading. Recess bolts and nuts flush with surfaces unless otherwise indicated.

3.3 PROTECTION

A. Protect rough carpentry from weather. If, despite protection, rough carpentry becomes wet, apply EPA-registered borate treatment. Apply borate solution by spraying to comply with EPA-registered label.

END OF SECTION

SECTION 07841

PENETRATION FIRESTOPPING

PART 1 - GENERAL

1.1 RELATED DOCUMENTS

A. Drawings and general provisions of the Contract, including General and Supplementary Conditions and Division 01 Specification Sections, apply to this Section.

1.2 SUMMARY

A. Section Includes:
   1. Penetrations in fire-resistance-rated walls.
   2. Penetrations in horizontal assemblies.
   3. Penetrations in smoke barriers.

B. Related Sections:
   1. Division 07 Section "Fire-Resistive Joint Systems" for joints in or between fire-resistance-rated construction, at exterior curtain-wall/floor intersections, and in smoke barriers.

1.3 ACTION SUBMITTALS

A. Make Submittals in accordance with Division 01 Section “Submittal Procedures.”

B. Product Data: For each type of product indicated.

C. Product Schedule: For each penetration firestopping system. Include location and design designation of qualified testing and inspecting agency.
   1. Where Project conditions require modification to a qualified testing and inspecting agency's illustration for a particular penetration firestopping condition, submit illustration, with modifications marked, approved by penetration firestopping manufacturer's fire-protection engineer as an engineering judgment or equivalent fire-resistance-rated assembly.

1.4 INFORMATIONAL SUBMITTALS

A. Qualification Data: For qualified Installer.

B. Installer Certificates: From Installer indicating penetration firestopping has been installed in compliance with requirements and manufacturer's written recommendations.

C. Product Test Reports: Based on evaluation of comprehensive tests performed by a qualified testing agency, for penetration firestopping.

1.5 QUALITY ASSURANCE

A. Installer Qualifications: A firm experienced in installing penetration firestopping similar in material, design, and extent to that indicated for this Project, whose work has resulted in construction with a record of successful performance. Qualifications include having the necessary experience, staff, and training to install manufacturer's products per specified requirements. Manufacturer's willingness to sell its penetration firestopping products to Contractor or to Installer engaged by Contractor does not in itself confer qualification on buyer.

B. Fire-Test-Response Characteristics: Penetration firestopping shall comply with the following requirements:
   1. Penetration firestopping tests are performed by a qualified testing agency acceptable to authorities having jurisdiction.
   2. Penetration firestopping is identical to those tested per testing standard referenced in "Penetration Firestopping" Article. Provide rated systems complying with the following requirements:
      a. Penetration firestopping products bear classification marking of qualified testing and inspecting agency.
      b. Classification markings on penetration firestopping correspond to designations listed by the following:
         1) UL in its "Fire Resistance Directory."
         2) FM Global in its "Building Materials Approval Guide."

C. Preinstallation Conference: Conduct conference at Project site.

1.6 PROJECT CONDITIONS

A. Environmental Limitations: Do not install penetration firestopping when ambient or substrate temperatures are outside limits permitted by penetration firestopping manufacturers or when substrates are wet because of rain, frost, condensation, or other causes.

B. Install and cure penetration firestopping per manufacturer's written instructions using natural means of ventilations or, where this is inadequate, forced-air circulation.

1.7 COORDINATION

A. Coordinate construction of openings and penetrating items to ensure that penetration firestopping is installed according to specified requirements.

B. Coordinate sizing of sleeves, openings, core-drilled holes, or cut openings to accommodate penetration firestopping.

C. Notify Owner's testing agency at least seven days in advance of penetration firestopping installations; confirm dates and times on day preceding each series of installations.

PART 2 - PRODUCTS

2.1 PENETRATION FIRESTOPPING

A. Provide penetration firestopping that is produced and installed to resist spread of fire according to requirements indicated, resist passage of smoke and other gases, and maintain original fire-resistance rating of construction penetrated. Penetration firestopping systems shall be compatible with one another, with the substrates forming openings, and with penetrating items if any.

B. Penetrations in Fire-Resistance-Rated Walls: Provide penetration firestopping with ratings determined per ASTM E 814 or UL 1479, based on testing at a positive pressure differential of 0.01-inch wg (2.49 Pa).
   1. Fire-resistance-rated walls include fire walls, fire-barrier walls, smoke-barrier walls, and fire partitions.
   2. F-Rating: Not less than the fire-resistance rating of constructions penetrated.

C. Penetrations in Horizontal Assemblies: Provide penetration firestopping with ratings determined per ASTM E 814 or UL 1479, based on testing at a positive pressure differential of 0.01-inch wg (2.49 Pa).
   1. Horizontal assemblies include floors] [floor/ceiling assemblies and ceiling membranes of roof/ceiling assemblies.
   2. F-Rating: At least 1 hour, but not less than the fire-resistance rating of constructions penetrated.
   3. T-Rating: At least 1 hour, but not less than the fire-resistance rating of constructions penetrated except for floor penetrations within the cavity of a wall.

D. Penetrations in Smoke Barriers: Provide penetration firestopping with ratings determined per UL 1479.
   1. L-Rating: Not exceeding 5.0 cfm/sq. ft. (0.025 cu. m/s per sq. m) of penetration opening at 0.30-inch wg (74.7 Pa) at both ambient and elevated temperatures.

E. Exposed Penetration Firestopping: Provide products with flame-spread and smoke-developed indexes of less than 25 and 450, respectively, as determined per ASTM E 84.

F. VOC Content: Penetration firestopping sealants and sealant primers shall comply with the following limits for VOC content when calculated according to 40 CFR 59, Subpart D (EPA Method 24):
   1. Sealants: 250 g/L.
   2. Sealant Primers for Nonporous Substrates: 250 g/L.
   3. Sealant Primers for Porous Substrates: 775 g/L.

G. Accessories: Provide components for each penetration firestopping system that are needed to install fill materials and to maintain ratings required. Use only those components specified by penetration firestopping manufacturer and approved by qualified testing and inspecting agency for firestopping indicated.
   1. Permanent forming/damming/backing materials, including the following:
      a. Slag-wool-fiber or rock-wool-fiber insulation.
      b. Sealants used in combination with other forming/damming/backing materials to prevent leakage of fill materials in liquid state.
      c. Fire-rated form board.
      d. Fillers for sealants.

2. Temporary forming materials.
3. Substrate primers.
4. Collars.
5. Steel sleeves.

2.2 FILL MATERIALS

A. Cast-in-Place Firestop Devices: Factory-assembled devices for use in cast-in-place concrete floors and consisting of an outer metallic sleeve lined with an intumescent strip, a radial extended flange attached to one end of the sleeve for fastening to concrete formwork, and a neoprene gasket.

B. Latex Sealants: Single-component latex formulations that do not re-emulsify after cure during exposure to moisture.

C. Firestop Devices: Factory-assembled collars formed from galvanized steel and lined with intumescent material sized to fit specific diameter of penetrant.

D. Intumescent Composite Sheets: Rigid panels consisting of aluminum-foil-faced elastomeric sheet bonded to galvanized-steel sheet.

E. Intumescent Putties: Nonhardening dielectric, water-resistant putties containing no solvents, inorganic fibers, or silicone compounds.

F. Intumescent Wrap Strips: Single-component intumescent elastomeric sheets with aluminum foil on one side.

G. Mortars: Prepackaged dry mixes consisting of a blend of inorganic binders, hydraulic cement, fillers, and lightweight aggregate formulated for mixing with water at Project site to form a nonshrinking, homogeneous mortar.

H. Pillows/Bags: Reusable heat-expanding pillows/bags consisting of glass-fiber cloth cases filled with a combination of mineral-fiber, water-insoluble expansion agents, and fire-retardant additives. Where exposed, cover openings with steel-reinforcing wire mesh to protect pillows/bags from being easily removed.

I. Silicone Foams: Multicomponent, silicone-based liquid elastomers that, when mixed, expand and cure in place to produce a flexible, nonshrinking foam.

J. Silicone Sealants: Single-component, silicone-based, neutral-curing elastomeric sealants of grade indicated below:
   1. Grade: Pourable (self-leveling) formulation for openings in floors and other horizontal surfaces, and nonsag formulation for openings in vertical and sloped surfaces, unless indicated firestopping limits use of nonsag grade for both opening conditions.

2.3 MIXING

A. For those products requiring mixing before application, comply with penetration firestopping manufacturer's written instructions for accurate proportioning of materials, water (if required), type of mixing equipment, selection of mixer speeds, mixing containers, mixing time, and other

items or procedures needed to produce products of uniform quality with optimum performance characteristics for application indicated.

PART 3 - EXECUTION

3.1 EXAMINATION

A. Examine substrates and conditions, with Installer present, for compliance with requirements for opening configurations, penetrating items, substrates, and other conditions affecting performance of the Work.

B. Proceed with installation only after unsatisfactory conditions have been corrected.

3.2 PREPARATION

A. Surface Cleaning: Clean out openings immediately before installing penetration firestopping to comply with manufacturer's written instructions and with the following requirements:
   1. Remove from surfaces of opening substrates and from penetrating items foreign materials that could interfere with adhesion of penetration firestopping.
   2. Clean opening substrates and penetrating items to produce clean, sound surfaces capable of developing optimum bond with penetration firestopping. Remove loose particles remaining from cleaning operation.
   3. Remove laitance and form-release agents from concrete.

B. Priming: Prime substrates where recommended in writing by manufacturer using that manufacturer's recommended products and methods. Confine primers to areas of bond; do not allow spillage and migration onto exposed surfaces.

C. Masking Tape: Use masking tape to prevent penetration firestopping from contacting adjoining surfaces that will remain exposed on completion of the Work and that would otherwise be permanently stained or damaged by such contact or by cleaning methods used to remove stains. Remove tape as soon as possible without disturbing firestopping's seal with substrates.

3.3 INSTALLATION

A. Install penetration firestopping to comply with manufacturer's written installation instructions and published drawings for products and applications indicated.

B. Install forming materials and other accessories of types required to support fill materials during their application and in the position needed to produce cross-sectional shapes and depths required to achieve fire ratings indicated.
   1. After installing fill materials and allowing them to fully cure, remove combustible forming materials and other accessories not indicated as permanent components of firestopping.

C. Install fill materials for firestopping by proven techniques to produce the following results:
   1. Fill voids and cavities formed by openings, forming materials, accessories, and penetrating items as required to achieve fire-resistance ratings indicated.
   2. Apply materials so they contact and adhere to substrates formed by openings and penetrating items.

3. For fill materials that will remain exposed after completing the Work, finish to produce smooth, uniform surfaces that are flush with adjoining finishes.

3.4 IDENTIFICATION

A. Identify penetration firestopping with preprinted metal or plastic labels. Attach labels permanently to surfaces adjacent to and within 6 inches (150 mm) of firestopping edge so labels will be visible to anyone seeking to remove penetrating items or firestopping. Use mechanical fasteners or self-adhering-type labels with adhesives capable of permanently bonding labels to surfaces on which labels are placed. Include the following information on labels:
   1. The words "Warning - Penetration Firestopping - Do Not Disturb. Notify Building Management of Any Damage."
   2. Contractor's name, address, and phone number.
   3. Designation of applicable testing and inspecting agency.
   4. Date of installation.
   5. Manufacturer's name.
   6. Installer's name.

3.5 FIELD QUALITY CONTROL

A. Owner will engage a qualified testing agency to perform tests and inspections.

B. Where deficiencies are found or penetration firestopping is damaged or removed because of testing, repair or replace penetration firestopping to comply with requirements.

C. Proceed with enclosing penetration firestopping with other construction only after inspection reports are issued and installations comply with requirements.

3.6 CLEANING AND PROTECTION

A. Clean off excess fill materials adjacent to openings as the Work progresses by methods and with cleaning materials that are approved in writing by penetration firestopping manufacturers and that do not damage materials in which openings occur.

B. Provide final protection and maintain conditions during and after installation that ensure that penetration firestopping is without damage or deterioration at time of Substantial Completion. If, despite such protection, damage or deterioration occurs, immediately cut out and remove damaged or deteriorated penetration firestopping and install new materials to produce systems complying with specified requirements.

END OF SECTION

SECTION 07842

FIRE-RESISTIVE JOINT SYSTEMS

PART 1 - GENERAL

1.1 RELATED DOCUMENTS

A. Drawings and general provisions of the Contract, including General and Supplementary Conditions and Division 1 Specification Sections, apply to this Section.

1.2 SUMMARY

A. Section Includes:
1. Joints in or between fire-resistance-rated constructions.
2. Joints in smoke barriers.

B. Related Sections:
1. Division 7 Section "Penetration Firestopping" for penetrations in fire-resistance-rated walls, horizontal assemblies, and smoke barriers.

1.3 ACTION SUBMITTALS

A. Make Submittals in accordance with Division 1 Section “Submittal Procedures.”

B. Product Data: For each type of product indicated.

1.4 INFORMATIONAL SUBMITTALS

A. Qualification Data: For qualified Installer.

B. Installer Certificates: From Installer indicating fire-resistive joint systems have been installed in compliance with requirements and manufacturer's written recommendations.

C. Product Test Reports: Based on evaluation of comprehensive tests performed by a qualified testing agency, for fire-resistive joint systems.

1.5 QUALITY ASSURANCE

A. Installer Qualifications: A firm experienced in installing fire-resistive joint systems similar in material, design, and extent to that indicated for this Project, whose work has resulted in construction with a record of successful performance. Qualifications include having the necessary experience, staff, and training to install manufacturer's products per specified requirements. Manufacturer's willingness to sell its fire-resistive joint system products to Contractor or to Installer engaged by Contractor does not in itself confer qualification on buyer.

B. Fire-Test-Response Characteristics: Fire-resistive joint systems shall comply with the following requirements:
   1. Fire-resistive joint system tests are performed by a qualified testing agency acceptable to authorities having jurisdiction.
   2. Fire-resistive joint systems are identical to those tested per testing standard referenced in "Fire-Resistive Joint Systems" Article. Provide rated systems complying with the following requirements:
      a. Fire-resistive joint system products bear classification marking of qualified testing agency.
      b. Fire-resistive joint systems correspond to those indicated by reference to designations listed by the following:
         1) UL in its "Fire Resistance Directory."
         2) FM Global in its "Building Materials Approval Guide."

C. Preinstallation Conference: Conduct conference at Project site.

1.6 PROJECT CONDITIONS

A. Environmental Limitations: Do not install fire-resistive joint systems when ambient or substrate temperatures are outside limits permitted by fire-resistive joint system manufacturers or when substrates are wet due to rain, frost, condensation, or other causes.

B. Install and cure fire-resistive joint systems per manufacturer's written instructions using natural means of ventilation or, where this is inadequate, forced-air circulation.

1.7 COORDINATION

A. Coordinate construction of joints to ensure that fire-resistive joint systems are installed according to specified requirements.

B. Coordinate sizing of joints to accommodate fire-resistive joint systems.

C. Notify Owner's testing agency at least seven days in advance of fire-resistive joint system installations; confirm dates and times on day preceding each series of installations.

PART 2 - PRODUCTS

2.1 FIRE-RESISTIVE JOINT SYSTEMS

A. Where required, provide fire-resistive joint systems that are produced and installed to resist spread of fire according to requirements indicated, resist passage of smoke and other gases, and maintain original fire-resistance rating of assemblies in or between which fire-resistive joint systems are installed. Fire-resistive joint systems shall accommodate building movements without impairing their ability to resist the passage of fire and hot gases.

B. Joints in or between Fire-Resistance-Rated Construction: Provide fire-resistive joint systems with ratings determined per ASTM E 1966 or UL 2079:
   1. Joints include those installed in or between fire-resistance-rated walls, floor or floor/ceiling assemblies, and roofs or roof/ceiling assemblies.

2. Fire-Resistance Rating: Equal to or exceeding the fire-resistance rating of construction they will join.

C. Joints in Smoke Barriers: Provide fire-resistive joint systems with ratings determined per UL 2079.
1. L-Rating: Not exceeding 5.0 cfm/ft (0.00775 cu. m/s x m) of joint at 0.30 inch wg (74.7 Pa) at both ambient and elevated temperatures.

D. Exposed Fire-Resistive Joint Systems: Provide products with flame-spread and smoke-developed indexes of less than 25 and 450, respectively, as determined per ASTM E 84.

E. VOC Content: Fire-resistive joint system sealants shall comply with the following limits for VOC content when calculated according to 40 CFR 59, Subpart D (EPA Method 24):
1. Architectural Sealants: 250 g/L.
2. Sealant Primers for Nonporous Substrates: 250 g/L.
3. Sealant Primers for Porous Substrates: 775 g/L.

F. Accessories: Provide components of fire-resistive joint systems, including primers and forming materials, that are needed to install fill materials and to maintain ratings required. Use only components specified by fire-resistive joint system manufacturer and approved by the qualified testing agency for systems indicated.

PART 3 - EXECUTION

3.1 EXAMINATION

A. Examine substrates and conditions, with Installer present, for compliance with requirements for joint configurations, substrates, and other conditions affecting performance of the Work.

B. Proceed with installation only after unsatisfactory conditions have been corrected.

3.2 PREPARATION

A. Surface Cleaning: Clean joints immediately before installing fire-resistive joint systems to comply with fire-resistive joint system manufacturer's written instructions and the following requirements:
1. Remove from surfaces of joint substrates foreign materials that could interfere with adhesion of fill materials.
2. Clean joint substrates to produce clean, sound surfaces capable of developing optimum bond with fill materials. Remove loose particles remaining from cleaning operation.
3. Remove laitance and form-release agents from concrete.

B. Priming: Prime substrates where recommended in writing by fire-resistive joint system manufacturer using that manufacturer's recommended products and methods. Confine primers to areas of bond; do not allow spillage and migration onto exposed surfaces.

C. Masking Tape: Use masking tape to prevent fill materials of fire-resistive joint system from contacting adjoining surfaces that will remain exposed on completion of the Work and that would otherwise be permanently stained or damaged by such contact or by cleaning methods

used to remove stains. Remove tape as soon as possible without disturbing fire-resistive joint system's seal with substrates.

3.3 INSTALLATION

A. Install fire-resistive joint systems to comply with manufacturer's written installation instructions and published drawings for products and applications indicated.

B. Install forming materials and other accessories of types required to support fill materials during their application and in position needed to produce cross-sectional shapes and depths required to achieve fire ratings indicated.
   1. After installing fill materials and allowing them to fully cure, remove combustible forming materials and other accessories not indicated as permanent components of fire-resistive joint system.

C. Install fill materials for fire-resistive joint systems by proven techniques to produce the following results:
   1. Fill voids and cavities formed by joints and forming materials as required to achieve fire-resistance ratings indicated.
   2. Apply fill materials so they contact and adhere to substrates formed by joints.
   3. For fill materials that will remain exposed after completing the Work, finish to produce smooth, uniform surfaces that are flush with adjoining finishes.

3.4 IDENTIFICATION

A. Identify fire-resistive joint systems with preprinted metal or plastic labels. Attach labels permanently to surfaces adjacent to and within 6 inches (150 mm) of joint edge so labels will be visible to anyone seeking to remove or penetrate joint system. Use mechanical fasteners or self-adhering-type labels with adhesives capable of permanently bonding labels to surfaces on which labels are placed. Include the following information on labels:
   1. The words "Warning - Fire-Resistive Joint System - Do Not Disturb. Notify Building Management of Any Damage."
   2. Contractor's name, address, and phone number.
   3. Designation of applicable testing agency.
   4. Date of installation.
   5. Manufacturer's name.
   6. Installer's name.

3.5 FIELD QUALITY CONTROL

A. Inspecting Agency: Owner will engage a qualified testing agency to perform tests and inspections.

B. Where deficiencies are found or fire-resistive joint systems are damaged or removed due to testing, repair or replace fire-resistive joint systems so they comply with requirements.

C. Proceed with enclosing fire-resistive joint systems with other construction only after inspection reports are issued and installations comply with requirements.

3.6 CLEANING AND PROTECTING

A. Clean off excess fill materials adjacent to joints as the Work progresses by methods and with cleaning materials that are approved in writing by fire-resistive joint system manufacturers and that do not damage materials in which joints occur.

B. Provide final protection and maintain conditions during and after installation that ensure fire-resistive joint systems are without damage or deterioration at time of Substantial Completion. If damage or deterioration occurs despite such protection, cut out and remove damaged or deteriorated fire-resistive joint systems immediately and install new materials to produce fire-resistive joint systems complying with specified requirements.

END OF SECTION

SECTION 07920

JOINT SEALANTS

PART 1 - GENERAL

1.1 RELATED DOCUMENTS

A. Drawings and general provisions of the Contract, including General and Supplementary Conditions and Division 1 Specification Sections, apply to this Section.

1.2 SUMMARY

A. Section Includes:
1. Silicone joint sealants.
2. Urethane joint sealants.
3. Latex joint sealants.
4. Acoustical joint sealants.

B. Related Sections:
1. Division 7 Section "Fire-Resistive Joint Systems" for sealing joints in fire-resistance-rated construction.
2. Division 8 Section "Glazing" for glazing sealants.
3. Division 9 Section "Gypsum Board" for sealing perimeter joints.

1.3 ACTION SUBMITTALS

A. Make Submittals in accordance with Division 1 Section “Submittal Procedures.”

B. Product Data: For each joint-sealant product indicated.

C. Samples for Verification: For each kind and color of joint sealant required, provide Samples with joint sealants in 1/2-inch- (13-mm-) wide joints formed between two 6-inch- (150-mm-) long strips of material matching the appearance of exposed surfaces adjacent to joint sealants.

D. Joint-Sealant Schedule: Include the following information:
1. Joint-sealant application, joint location, and designation.
2. Joint-sealant manufacturer and product name.
3. Joint-sealant formulation.
4. Joint-sealant color.

1.4 INFORMATIONAL SUBMITTALS

A. Qualification Data: For qualified Installer.

B. Product Certificates: For each kind of joint sealant and accessory, from manufacturer.

C. Sealant, Waterproofing, and Restoration Institute (SWRI) Validation Certificate: For each sealant specified to be validated by SWRI's Sealant Validation Program.

D. Preconstruction Field-Adhesion Test Reports: Indicate which sealants and joint preparation methods resulted in optimum adhesion to joint substrates based on testing specified in "Preconstruction Testing" Article.

E. Field-Adhesion Test Reports: For each sealant application tested.

F. Warranties: Sample of special warranties.

1.5 QUALITY ASSURANCE

A. Installer Qualifications: Manufacturer's authorized representative who is trained and approved for installation of units required for this Project.

B. Source Limitations: Obtain each kind of joint sealant from single source from single manufacturer.

C. Product Testing: Test joint sealants using a qualified testing agency.
   1. Testing Agency Qualifications: An independent testing agency qualified according to ASTM C 1021 to conduct the testing indicated.
   2. Test according to SWRI's Sealant Validation Program for compliance with requirements specified by reference to ASTM C 920 for adhesion and cohesion under cyclic movement, adhesion-in-peel, and indentation hardness.

D. Mockups: Install sealant in mockups of assemblies specified in other Sections that are indicated to receive joint sealants specified in this Section. Use materials and installation methods specified in this Section.

E. Preinstallation Conference: Conduct conference at Project site.

1.6 PROJECT CONDITIONS

A. Do not proceed with installation of joint sealants under the following conditions:
   1. When ambient and substrate temperature conditions are outside limits permitted by joint-sealant manufacturer or are below 40 deg F (5 deg C).
   2. When joint substrates are wet.
   3. Where joint widths are less than those allowed by joint-sealant manufacturer for applications indicated.
   4. Where contaminants capable of interfering with adhesion have not yet been removed from joint substrates.

1.7 WARRANTY

A. Special Installer's Warranty: Manufacturer's standard form in which Installer agrees to repair or replace joint sealants that do not comply with performance and other requirements specified in this Section within specified warranty period.
   1. Warranty Period: Two years from date of Substantial Completion.

B. Special Manufacturer's Warranty: Manufacturer's standard form in which joint-sealant manufacturer agrees to furnish joint sealants to repair or replace those that do not comply with performance and other requirements specified in this Section within specified warranty period.
   1. Warranty Period: 10 years from date of Substantial Completion.

C. Special warranties specified in this article exclude deterioration or failure of joint sealants from the following:
   1. Movement of the structure caused by structural settlement or errors attributable to design or construction resulting in stresses on the sealant exceeding sealant manufacturer's written specifications for sealant elongation and compression.
   2. Disintegration of joint substrates from natural causes exceeding design specifications.
   3. Mechanical damage caused by individuals, tools, or other outside agents.
   4. Changes in sealant appearance caused by accumulation of dirt or other atmospheric contaminants.

PART 2 - PRODUCTS

2.1 MATERIALS, GENERAL

A. Compatibility: Provide joint sealants, backings, and other related materials that are compatible with one another and with joint substrates under conditions of service and application, as demonstrated by joint-sealant manufacturer, based on testing and field experience.

B. VOC Content of Interior Sealants: Sealants and sealant primers used inside the weatherproofing system shall comply with the following limits for VOC content when calculated according to 40 CFR 59, Subpart D (EPA Method 24):
   1. Architectural Sealants: 250 g/L.
   2. Sealant Primers for Nonporous Substrates: 250 g/L.
   3. Sealant Primers for Porous Substrates: 775 g/L.

C. Liquid-Applied Joint Sealants: Comply with ASTM C 920 and other requirements indicated for each liquid-applied joint sealant specified, including those referencing ASTM C 920 classifications for type, grade, class, and uses related to exposure and joint substrates.

D. Stain-Test-Response Characteristics: Where sealants are specified to be nonstaining to porous substrates, provide products that have undergone testing according to ASTM C 1248 and have not stained porous joint substrates indicated for Project.

E. Colors of Exposed Joint Sealants: As selected by Architect from manufacturer's full range.

2.2 SILICONE JOINT SEALANTS

A. Single-Component, Nonsag, Neutral-Curing Silicone Joint Sealant: ASTM C 920, Type S, Grade NS, Class 50, for Use NT.
   1. Products: Subject to compliance with requirements, available products that may be incorporated into the Work include, but are not limited to, the following:
      a. BASF Building Systems; Omniseal 50.
      b. Dow Corning Corporation; 756 SMS, 791, 795, or 995.
      c. GE Advanced Materials - Silicones; SilPruf NB SCS9000 or SilPruf SCS2000.
      d. Pecora Corporation; 864, 895, or 898.

e. Polymeric Systems, Inc.; PSI-641.
f. Sika Corporation, Construction Products Division; SikaSil-C995.
g. Tremco Incorporated; Spectrem 2 or Spectrem 3.

B. Mildew-Resistant, Single-Component, Acid-Curing Silicone Joint Sealant: ASTM C 920, Type S, Grade NS, Class 25, for Use NT.
1. Products: Subject to compliance with requirements, available products that may be incorporated into the Work include, but are not limited to, the following:
a. BASF Building Systems; Omniplus.
b. Dow Corning Corporation; 786 Mildew Resistant.
c. GE Advanced Materials - Silicones; Sanitary SCS1700.
d. May National Associates, Inc.; Bondaflex Sil 100 WF.
e. Tremco Incorporated; Tremsil 200 Sanitary.

2.3 URETHANE JOINT SEALANTS

A. Multicomponent, Nonsag, Traffic-Grade, Urethane Joint Sealant: ASTM C 920, Type M, Grade NS, Class 25, for Use T.
1. Products: Subject to compliance with requirements, available products that may be incorporated into the Work include, but are not limited to, the following:
a. BASF Building Systems; Sonolastic NP 2.
b. Pecora Corporation; Dynatred.
c. Sika Corporation, Construction Products Division; Sikaflex - 2c NS.
d. Tremco Incorporated; Vulkem 227.

2.4 LATEX JOINT SEALANTS

A. Latex Joint Sealant: Acrylic latex or siliconized acrylic latex, ASTM C 834, Type OP, Grade NF.
1. Products: Subject to compliance with requirements, available products that may be incorporated into the Work include, but are not limited to, the following:
a. BASF Building Systems; Sonolac.
b. Bostik, Inc.; Chem-Calk 600.
c. May National Associates, Inc.; Bondaflex 600.
d. Pecora Corporation; AC-20+.
e. Schnee-Morehead, Inc.; SM 8200.
f. Tremco Incorporated; Tremflex 834.

2.5 ACOUSTICAL JOINT SEALANTS

A. Acoustical Joint Sealant: Manufacturer's standard nonsag, paintable, nonstaining latex sealant complying with ASTM C 834. Product effectively reduces airborne sound transmission through perimeter joints and openings in building construction as demonstrated by testing representative assemblies according to ASTM E 90.
1. Products: Subject to compliance with requirements, available products that may be incorporated into the Work include, but are not limited to, the following:
a. Pecora Corporation; AC-20 FTR.
b. USG Corporation; SHEETROCK Acoustical Sealant.

2.6 JOINT SEALANT BACKING

A. Provide sealant backings of material that are nonstaining; are compatible with joint substrates, sealants, primers, and other joint fillers; and are approved for applications indicated by sealant manufacturer based on field experience and laboratory testing.

B. Cylindrical Sealant Backings: ASTM C 1330, Type C (closed-cell material with a surface skin), and of size and density to control sealant depth and otherwise contribute to producing optimum sealant performance.

C. Bond-Breaker Tape: Polyethylene tape or other plastic tape recommended by sealant manufacturer for preventing sealant from adhering to rigid, inflexible joint-filler materials or joint surfaces at back of joint. Provide self-adhesive tape where applicable.

2.7 MISCELLANEOUS MATERIALS

A. Primer: Material recommended by joint-sealant manufacturer where required for adhesion of sealant to joint substrates indicated, as determined from preconstruction joint-sealant-substrate tests and field tests.

B. Cleaners for Nonporous Surfaces: Chemical cleaners acceptable to manufacturers of sealants and sealant backing materials, free of oily residues or other substances capable of staining or harming joint substrates and adjacent nonporous surfaces in any way, and formulated to promote optimum adhesion of sealants to joint substrates.

C. Masking Tape: Nonstaining, nonabsorbent material compatible with joint sealants and surfaces adjacent to joints.

PART 3 - EXECUTION

3.1 EXAMINATION

A. Examine joints indicated to receive joint sealants, with Installer present, for compliance with requirements for joint configuration, installation tolerances, and other conditions affecting joint-sealant performance.

B. Proceed with installation only after unsatisfactory conditions have been corrected.

3.2 PREPARATION

A. Surface Cleaning of Joints: Clean out joints immediately before installing joint sealants to comply with joint-sealant manufacturer's written instructions and the following requirements:
   1. Remove all foreign material from joint substrates that could interfere with adhesion of joint sealant, including dust, paints (except for permanent, protective coatings tested and approved for sealant adhesion and compatibility by sealant manufacturer), old joint sealants, oil, grease, waterproofing, water repellents, water, surface dirt, and frost.
   2. Clean porous joint substrate surfaces by brushing, grinding, mechanical abrading, or a combination of these methods to produce a clean, sound substrate capable of developing optimum bond with joint sealants. Remove loose particles remaining after cleaning

operations above by vacuuming or blowing out joints with oil-free compressed air. Porous joint substrates include the following:
a. Concrete.
b. Masonry.
c. Unglazed surfaces of ceramic tile.
d. Exterior insulation and finish systems.

3. Remove laitance and form-release agents from concrete.
4. Clean nonporous joint substrate surfaces with chemical cleaners or other means that do not stain, harm substrates, or leave residues capable of interfering with adhesion of joint sealants. Nonporous joint substrates include the following:
a. Metal.
b. Glass.
c. Porcelain enamel.
d. Glazed surfaces of ceramic tile.

B. Joint Priming: Prime joint substrates where recommended by joint-sealant manufacturer or as indicated by preconstruction joint-sealant-substrate tests or prior experience. Apply primer to comply with joint-sealant manufacturer's written instructions. Confine primers to areas of joint-sealant bond; do not allow spillage or migration onto adjoining surfaces.

C. Masking Tape: Use masking tape where required to prevent contact of sealant or primer with adjoining surfaces that otherwise would be permanently stained or damaged by such contact or by cleaning methods required to remove sealant smears. Remove tape immediately after tooling without disturbing joint seal.

3.3 INSTALLATION OF JOINT SEALANTS

A. Comply with joint-sealant manufacturer's written installation instructions for products and applications indicated, unless more stringent requirements apply.

B. Sealant Installation Standard: Comply with recommendations in ASTM C 1193 for use of joint sealants as applicable to materials, applications, and conditions indicated.

C. Install sealant backings of kind indicated to support sealants during application and at position required to produce cross-sectional shapes and depths of installed sealants relative to joint widths that allow optimum sealant movement capability.
1. Do not leave gaps between ends of sealant backings.
2. Do not stretch, twist, puncture, or tear sealant backings.
3. Remove absorbent sealant backings that have become wet before sealant application and replace them with dry materials.

D. Install bond-breaker tape behind sealants where sealant backings are not used between sealants and backs of joints.

E. Install sealants using proven techniques that comply with the following and at the same time backings are installed:
1. Place sealants so they directly contact and fully wet joint substrates.
2. Completely fill recesses in each joint configuration.
3. Produce uniform, cross-sectional shapes and depths relative to joint widths that allow optimum sealant movement capability.

F. Tooling of Nonsag Sealants: Immediately after sealant application and before skinning or curing begins, tool sealants according to requirements specified in subparagraphs below to form smooth, uniform beads of configuration indicated; to eliminate air pockets; and to ensure contact and adhesion of sealant with sides of joint.
   1. Remove excess sealant from surfaces adjacent to joints.
   2. Use tooling agents that are approved in writing by sealant manufacturer and that do not discolor sealants or adjacent surfaces.
   3. Provide concave joint profile per Figure 8A in ASTM C 1193, unless otherwise indicated.

G. Acoustical Sealant Installation: At sound-rated assemblies and elsewhere as indicated, seal construction at perimeters, behind control joints, and at openings and penetrations with a continuous bead of acoustical sealant. Install acoustical sealant at both faces of partitions at perimeters and through penetrations. Comply with ASTM C 919 and with manufacturer's written recommendations.

3.4 FIELD QUALITY CONTROL

A. Field-Adhesion Testing: Field test joint-sealant adhesion to joint substrates as follows:
   1. Extent of Testing: Test completed and cured sealant joints as follows:
      a. Perform 10 tests for the first 1000 feet (300 m) of joint length for each kind of sealant and joint substrate.
      b. Perform 1 test for each 1000 feet (300 m) of joint length thereafter or 1 test per each floor per elevation.
   2. Test Method: Test joint sealants according to Method A, Field-Applied Sealant Joint Hand Pull Tab, in Appendix X1 in ASTM C 1193 or Method A, Tail Procedure, in ASTM C 1521.
      a. For joints with dissimilar substrates, verify adhesion to each substrate separately; extend cut along one side, verifying adhesion to opposite side. Repeat procedure for opposite side.
   3. Inspect tested joints and report on the following:
      a. Whether sealants filled joint cavities and are free of voids.
      b. Whether sealant dimensions and configurations comply with specified requirements.
      c. Whether sealants in joints connected to pulled-out portion failed to adhere to joint substrates or tore cohesively. Include data on pull distance used to test each kind of product and joint substrate. Compare these results to determine if adhesion passes sealant manufacturer's field-adhesion hand-pull test criteria.
   4. Record test results in a field-adhesion-test log. Include dates when sealants were installed, names of persons who installed sealants, test dates, test locations, whether joints were primed, adhesion results and percent elongations, sealant fill, sealant configuration, and sealant dimensions.
   5. Repair sealants pulled from test area by applying new sealants following same procedures used originally to seal joints. Ensure that original sealant surfaces are clean and that new sealant contacts original sealant.

B. Evaluation of Field-Adhesion Test Results: Sealants not evidencing adhesive failure from testing or noncompliance with other indicated requirements will be considered satisfactory. Remove sealants that fail to adhere to joint substrates during testing or to comply with other requirements. Retest failed applications until test results prove sealants comply with indicated requirements.

3.5 CLEANING

A. Clean off excess sealant or sealant smears adjacent to joints as the Work progresses by methods and with cleaning materials approved in writing by manufacturers of joint sealants and of products in which joints occur.

3.6 PROTECTION

A. Protect joint sealants during and after curing period from contact with contaminating substances and from damage resulting from construction operations or other causes so sealants are without deterioration or damage at time of Substantial Completion. If, despite such protection, damage or deterioration occurs, cut out and remove damaged or deteriorated joint sealants immediately so installations with repaired areas are indistinguishable from original work.

3.7 JOINT-SEALANT SCHEDULE

A. Joint-Sealant Application: Exterior joints in horizontal traffic surfaces, JS-1.
   1. Joint Locations:
      a. Control and expansion joints in brick pavers.
      b. Isolation and contraction joints in cast-in-place concrete slabs.
      c. Joints between plant-precast architectural concrete paving units.
      d. Joints in stone paving units, including steps.
      e. Tile control and expansion joints.
      f. Joints between different materials listed above.
      g. Other joints as indicated.
   2. Urethane Joint Sealant: Multicomponent, nonsag, traffic grade, Class 25.
   3. Joint-Sealant Color: As selected by Architect from manufacturer's full range of colors.

B. Joint-Sealant Application: Exterior joints in vertical surfaces and horizontal nontraffic surfaces, JS-2.
   1. Joint Locations:
      a. Construction joints in cast-in-place concrete.
      b. Control and expansion joints in unit masonry.
      c. Joints in glass unit masonry assemblies.
      d. Joints between metal panels.
      e. Joints between different materials listed above.
      f. Perimeter joints between materials listed above and frames of doors, windows, and louvers.
      g. Control and expansion joints in ceilings and other overhead surfaces.
      h. Other joints as indicated.
   2. Silicone Joint Sealant: Single component, nonsag, neutral curing, Class 50.
   3. Joint-Sealant Color: As selected by Architect from manufacturer's full range of colors.
      a. Provide sand-textured sealant for joints in cast stone.

C. Joint-Sealant Application: Interior joints in horizontal traffic surfaces, JS-3.
   1. Joint Locations:
      a. Isolation joints in cast-in-place concrete slabs.
      b. Control and expansion joints in stone flooring.
      c. Control and expansion joints in tile flooring.
      d. Other joints as indicated.

2. Urethane Joint Sealant: Multicomponent, nonsag, traffic grade, Class 25.
3. Joint-Sealant Color: As selected by Architect from manufacturer's full range of colors.

D. Joint-Sealant Application: Interior joints in vertical surfaces and horizontal nontraffic surfaces, JS-4.
1. Joint Locations:
   a. Control and expansion joints on exposed interior surfaces of exterior walls.
   b. Perimeter joints of exterior openings where indicated.
   c. Tile control and expansion joints.
   d. Vertical joints on exposed surfaces of interior unit masonry walls, concrete walls, and partitions.
   e. Perimeter joints between interior wall surfaces and frames of interior doors, windows, and elevator entrances.
   f. Other joints as indicated.
2. Joint Sealant: Latex.
3. Joint-Sealant Color: As selected by Architect from manufacturer's full range of colors.

E. Joint-Sealant Application: Mildew-resistant interior joints in vertical surfaces and horizontal nontraffic surfaces, JS-4.
1. Joint Sealant Location:
   a. Joints between plumbing fixtures and adjoining walls, floors, and counters.
   b. Tile control and expansion joints where indicated.
   c. Other joints as indicated.
2. Joint Sealant: Mildew resistant, single component, nonsag, neutral curing, Silicone.
3. Joint-Sealant Color: As selected by Architect from manufacturer's full range of colors.

F. Joint-Sealant Application: Interior acoustical joints in vertical surfaces and horizontal nontraffic surfaces, JS-5.
1. Joint Location:
   a. Acoustical joints where indicated.
   b. Other joints as indicated.
2. Joint Sealant: Acoustical.
3. Joint-Sealant Color: As selected by Architect from manufacturer's full range of colors.

END OF SECTION

SECTION 08110

HOLLOW METAL DOORS AND FRAMES

PART 1 - GENERAL

1.1 RELATED DOCUMENTS

A. Drawings and general provisions of the Contract, including General and Supplementary Conditions and Division 1 Specification Sections, apply to this Section.

1.2 SUMMARY

A. Section Includes standard hollow metal doors and frames.

B. Related Sections
1. Division 8 Section "Door Hardware" for door hardware for hollow metal doors.
2. Division 9 Section "Painting" for field painting hollow metal doors and frames.
3. Division 16 Sections for electrical connections including conduit and wiring for door controls and operators.

1.3 DEFINITIONS

A. Minimum Thickness: Minimum thickness of base metal without coatings.

B. Standard Hollow Metal Work: Hollow metal work fabricated according to ANSI/SDI A250.8.

1.4 SUBMITTALS

A. Make Submittals in accordance with Division 1 Section “Submittal Procedures.”

B. Product Data: For each type of product indicated. Include construction details, material descriptions, core descriptions, fire-resistance rating, temperature-rise ratings, and finishes.

C. Shop Drawings: Include the following:
1. Elevations of each door design.
2. Details of doors, including vertical and horizontal edge details and metal thicknesses.
3. Frame details for each frame type, including dimensioned profiles and metal thicknesses.
4. Locations of reinforcement and preparations for hardware.
5. Details of each different wall opening condition.
6. Details of anchorages, joints, field splices, and connections.
7. Details of accessories.
8. Details of moldings, removable stops, and glazing.
9. Details of conduit and preparations for power, signal, and control systems.

D. Other Action Submittals:

1. Schedule: Provide a schedule of hollow metal work prepared by or under the supervision of supplier, using same reference numbers for details and openings as those on Drawings. Coordinate with door hardware schedule.

E. Product Test Reports: Based on evaluation of comprehensive tests performed by a qualified testing agency, for each type of hollow metal door and frame assembly.

1.5 QUALITY ASSURANCE

A. Source Limitations: Obtain hollow metal work from single source from single manufacturer.

B. Fire-Rated Door Assemblies: Assemblies complying with NFPA 80 that are listed and labeled by a qualified testing agency, for fire-protection ratings indicated, based on testing at positive pressure according to NFPA 252 or UL 10C.
   1. Temperature-Rise Limit: At vertical exit enclosures and exit passageways, provide doors that have a maximum transmitted temperature end point of not more than 450 deg F (250 deg C) above ambient after 30 minutes of standard fire-test exposure.

C. Fire-Rated, Borrowed-Light Frame Assemblies: Assemblies complying with NFPA 80 that are listed and labeled, by a testing and inspecting agency acceptable to authorities having jurisdiction, for fire-protection ratings indicated, based on testing according to NFPA 257 or UL 9. Label each individual glazed lite.

D. Smoke-Control Door Assemblies: Comply with NFPA 105 or UL 1784.

E. Preinstallation Conference: Conduct conference at Project site.

1.6 DELIVERY, STORAGE, AND HANDLING

A. Deliver hollow metal work palletized, wrapped, or crated to provide protection during transit and Project-site storage. Do not use nonvented plastic.
   1. Provide additional protection to prevent damage to finish of factory-finished units.

B. Deliver welded frames with two removable spreader bars across bottom of frames, tack welded to jambs and mullions.

C. Store hollow metal work under cover at Project site. Place in stacks of five units maximum in a vertical position with heads up, spaced by blocking, on minimum 4-inch- (102-mm-) high wood blocking. Do not store in a manner that traps excess humidity.
   1. Provide minimum 1/4-inch (6-mm) space between each stacked door to permit air circulation.

1.7 PROJECT CONDITIONS

A. Field Measurements: Verify actual dimensions of openings by field measurements before fabrication.

1.8 COORDINATION

A. Coordinate installation of anchorages for hollow metal frames. Furnish setting drawings, templates, and directions for installing anchorages, including sleeves, concrete inserts, anchor bolts, and items with integral anchors. Deliver such items to Project site in time for installation.

PART 2 - PRODUCTS

2.1 MANUFACTURERS

A. Manufacturers: Subject to compliance with requirements, available manufacturers offering products that may be incorporated into the Work include, but are not limited to, the following:
   1. Amweld Building Products, LLC.
   2. Curries Company; an Assa Abloy Group company.
   3. Deansteel Manufacturing Company, Inc.
   4. Pioneer Industries, Inc.
   5. Steelcraft; an Ingersoll-Rand company.

2.2 MATERIALS

A. Cold-Rolled Steel Sheet: ASTM A 1008/A 1008M, Commercial Steel (CS), Type B; suitable for exposed applications.

B. Hot-Rolled Steel Sheet: ASTM A 1011/A 1011M, Commercial Steel (CS), Type B; free of scale, pitting, or surface defects; pickled and oiled.

C. Metallic-Coated Steel Sheet: ASTM A 653/A 653M, Commercial Steel (CS), Type B; with minimum G60 (Z180) or A60 (ZF180) metallic coating.

D. Frame Anchors: ASTM A 591/A 591M, Commercial Steel (CS), 40Z (12G) coating designation; mill phosphatized.
   1. For anchors built into exterior walls, steel sheet complying with ASTM A 1008/A 1008M or ASTM A 1011/A 1011M, hot-dip galvanized according to ASTM A 153/A 153M, Class B.

E. Inserts, Bolts, and Fasteners: Hot-dip galvanized according to ASTM A 153/A 153M.

F. Powder-Actuated Fasteners in Concrete: Fastener system of type suitable for application indicated, fabricated from corrosion-resistant materials, with clips or other accessory devices for attaching hollow metal frames of type indicated.

G. Grout: ASTM C 476, except with a maximum slump of 4 inches (102 mm), as measured according to ASTM C 143/C 143M.

H. Mineral-Fiber Insulation: ASTM C 665, Type I (blankets without membrane facing); consisting of fibers manufactured from slag or rock wool with 6- to 12-lb/cu. ft. (96- to 192-kg/cu. m) density; with maximum flame-spread and smoke-development indexes of 25 and 50, respectively; passing ASTM E 136 for combustion characteristics.

I. Glazing: Comply with requirements in Division 8 Section "Glazing."

J. Bituminous Coating: Cold-applied asphalt mastic, SSPC-Paint 12, compounded for 15-mil (0.4-mm) dry film thickness per coat. Provide inert-type noncorrosive compound free of asbestos fibers, sulfur components, and other deleterious impurities.

2.3 STANDARD HOLLOW METAL DOORS

A. Provide doors of design indicated, not less than thickness indicated; fabricated with smooth surfaces, without visible joints or seams on exposed faces unless otherwise indicated. Comply with ANSI/SDI A250.8.
   1. Design: Flush panel.
   2. Core Construction: Manufacturer's standard kraft-paper honeycomb, polystyrene, polyurethane, polyisocyanurate, mineral-board, or vertical steel-stiffener core.
      a. Fire Door Core: As required to provide fire-protection and temperature-rise ratings indicated.
      b. Thermal-Rated (Insulated) Doors: Where indicated, provide doors fabricated with thermal-resistance value (R-value) of not less than 6.0 deg F x h x sq. ft./Btu (1.057 K x sq. m/W) when tested according to ASTM C 1363.
         1) Locations: Exterior doors.
   3. Vertical Edges for Single-Acting Doors: Manufacturer's standard.
      a. Beveled Edge: 1/8 inch in 2 inches (3 mm in 50 mm).
   4. Top and Bottom Edges: Closed with flush or inverted 0.042-inch- (1.0-mm-) thick, end closures or channels of same material as face sheets.
   5. Tolerances: Comply with SDI 117, "Manufacturing Tolerances for Standard Steel Doors and Frames."

B. Exterior Doors: Face sheets fabricated from metallic-coated steel sheet. Provide doors complying with requirements indicated below by referencing ANSI/SDI A250.8 for level and model and ANSI/SDI A250.4 for physical performance level:
   1. Level 3 and Physical Performance Level A (Extra Heavy Duty), Model 2 (Seamless).

C. Interior Doors: Face sheets fabricated from cold-rolled steel sheet. Provide doors complying with requirements indicated below by referencing ANSI/SDI A250.8 for level and model and ANSI/SDI A250.4 for physical performance level:
   1. Level 2 and Physical Performance Level B (Heavy Duty), Model 2 (Seamless).

D. Hardware Reinforcement: Fabricate according to ANSI/SDI A250.6 with reinforcing plates from same material as door face sheets.

E. Fabricate concealed stiffeners and hardware reinforcement from either cold- or hot-rolled steel sheet.

2.4 STANDARD HOLLOW METAL FRAMES

A. Comply with ANSI/SDI A250.8 and with details indicated for type and profile.

B. Exterior Frames: Fabricated from metallic-coated steel sheet.
   1. Fabricate frames with mitered or coped corners.
   2. Fabricate frames as full profile welded.
   3. Frames for Level 3 Steel Doors: 0.053-inch- (1.3-mm-) thick steel sheet.

C. Interior Frames: Fabricated from cold-rolled steel sheet.
   1. Fabricate frames with mitered or coped corners.
   2. Fabricate frames as full profile welded.
   3. Frames for Level 2 Steel Doors: 0.053-inch- (1.3-mm-) thick steel sheet.
   4. Frames for Wood Doors: 0.053-inch- (1.3-mm-) thick steel sheet.
   5. Frames for Borrowed Lights: 0.053-inch- (1.3-mm-) thick steel sheet.

D. Hardware Reinforcement: Fabricate according to ANSI/SDI A250.6 with reinforcement plates from same material as frames.

2.5 FRAME ANCHORS

A. Jamb Anchors:
   1. Masonry Type: Adjustable strap-and-stirrup or T-shaped anchors to suit frame size, not less than 0.042 inch (1.0 mm) thick, with corrugated or perforated straps not less than 2 inches (50 mm) wide by 10 inches (250 mm) long; or wire anchors not less than 0.177 inch (4.5 mm) thick.
   2. Stud-Wall Type: Designed to engage stud, welded to back of frames; not less than 0.042 inch (1.0 mm) thick.
   3. Postinstalled Expansion Type for In-Place Concrete or Masonry: Minimum 3/8-inch- (9.5-mm-) diameter bolts with expansion shields or inserts. Provide pipe spacer from frame to wall, with throat reinforcement plate, welded to frame at each anchor location.

B. Floor Anchors: Formed from same material as frames, not less than 0.042 inch (1.0 mm) thick, and as follows:
   1. Monolithic Concrete Slabs: Clip-type anchors, with two holes to receive fasteners.

2.6 STOPS AND MOLDINGS

A. Moldings for Glazed Lites in Doors: Minimum 0.032 inch (0.8 mm) thick, fabricated from same material as door face sheet in which they are installed.

B. Fixed Frame Moldings: Formed integral with hollow metal frames, a minimum of 5/8 inch (16 mm) high unless otherwise indicated.

C. Loose Stops for Glazed Lites in Frames: Minimum 0.032 inch (0.8 mm) thick, fabricated from same material as frames in which they are installed.

2.7 ACCESSORIES

A. Louvers: Provide louvers for interior doors, where indicated, which comply with SDI 111C, with blades or baffles formed of 0.020-inch- (0.5-mm-) thick, cold-rolled steel sheet set into 0.032-inch- (0.8-mm-) thick steel frame.
   1. Fire-Rated Automatic Louvers: Louvers constructed with movable blades closed by actuating fusible link, and listed and labeled for use in fire-rated door assemblies of type and fire-resistance rating indicated by same qualified testing and inspecting agency that established fire-resistance rating of door assembly.

B. Mullions and Transom Bars: Join to adjacent members by welding or rigid mechanical anchors.

C. Grout Guards: Formed from same material as frames, not less than 0.016 inch (0.4 mm) thick.

2.8 FABRICATION

A. Fabricate hollow metal work to be rigid and free of defects, warp, or buckle. Accurately form metal to required sizes and profiles, with minimum radius for thickness of metal. Where practical, fit and assemble units in manufacturer's plant. To ensure proper assembly at Project site, clearly identify work that cannot be permanently factory assembled before shipment.

B. Tolerances: Fabricate hollow metal work to tolerances indicated in SDI 117.

C. Hollow Metal Doors:
1. Exterior Doors: Provide weep-hole openings in bottom of exterior doors to permit moisture to escape. Seal joints in top edges of doors against water penetration.
2. Glazed Lites: Factory cut openings in doors.
3. Astragals: Provide overlapping astragal on one leaf of pairs of doors where required by NFPA 80 for fire-performance rating or where indicated. Extend minimum 3/4 inch (19 mm) beyond edge of door on which astragal is mounted.

D. Hollow Metal Frames: Where frames are fabricated in sections due to shipping or handling limitations, provide alignment plates or angles at each joint, fabricated of same thickness metal as frames.
1. Welded Frames: Weld flush face joints continuously; grind, fill, dress, and make smooth, flush, and invisible.
2. Sidelight Frames: Provide closed tubular members with no visible face seams or joints, fabricated from same material as door frame. Fasten members at crossings and to jambs by butt welding.
3. Provide countersunk, flat- or oval-head exposed screws and bolts for exposed fasteners unless otherwise indicated.
4. Grout Guards: Weld guards to frame at back of hardware mortises in frames to be grouted.
5. Floor Anchors: Weld anchors to bottom of jambs and mullions with at least four spot welds per anchor.
6. Jamb Anchors: Provide number and spacing of anchors as follows:
   a. Masonry Type: Locate anchors not more than 18 inches (457 mm) from top and bottom of frame. Space anchors not more than 32 inches (813 mm) o.c. and as follows:
      1) Three anchors per jamb from 60 to 90 inches (1524 to 2286 mm) high.
      2) Four anchors per jamb from 90 to 120 inches (2286 to 3048 mm) high.
      3) Four anchors per jamb plus 1 additional anchor per jamb for each 24 inches (610 mm) or fraction thereof above 120 inches (3048 mm) high.
   b. Stud-Wall Type: Locate anchors not more than 18 inches (457 mm) from top and bottom of frame. Space anchors not more than 32 inches (813 mm) o.c. and as follows:
      1) Four anchors per jamb from 60 to 90 inches (1524 to 2286 mm) high.
      2) Five anchors per jamb from 90 to 96 inches (2286 to 2438 mm) high.
      3) Five anchors per jamb plus 1 additional anchor per jamb for each 24 inches (610 mm) or fraction thereof above 96 inches (2438 mm) high.
      4) Two anchors per head for frames above 42 inches (1066 mm) wide and mounted in metal-stud partitions.

c. Postinstalled Expansion Type: Locate anchors not more than 6 inches (152 mm) from top and bottom of frame. Space anchors not more than 26 inches (660 mm) o.c.

7. Door Silencers: Except on weather-stripped doors, drill stops to receive door silencers as follows. Keep holes clear during construction.
   a. Single-Door Frames: Drill stop in strike jamb to receive three door silencers.
   b. Double-Door Frames: Drill stop in head jamb to receive two door silencers.

E. Fabricate concealed stiffeners, edge channels, and hardware reinforcement from either cold- or hot-rolled steel sheet.

F. Hardware Preparation: Factory prepare hollow metal work to receive templated mortised hardware; include cutouts, reinforcement, mortising, drilling, and tapping according to the Door Hardware Schedule and templates furnished as specified in Division 8 Section "Door Hardware."
   1. Locate hardware as indicated, or if not indicated, according to ANSI/SDI A250.8.
   2. Reinforce doors and frames to receive nontemplated, mortised and surface-mounted door hardware.
   3. Comply with applicable requirements in ANSI/SDI A250.6 and ANSI/DHI A115 Series specifications for preparation of hollow metal work for hardware.
   4. Coordinate locations of conduit and wiring boxes for electrical connections with Division 16 Sections.

G. Stops and Moldings: Provide stops and moldings around glazed lites and louvers where indicated. Form corners of stops and moldings with butted or mitered hairline joints.
   1. Single Glazed Lites: Provide fixed stops and moldings welded on secure side of hollow metal work.
   2. Multiple Glazed Lites: Provide fixed and removable stops and moldings so that each glazed lite is capable of being removed independently.
   3. Provide fixed frame moldings on outside of exterior and on secure side of interior doors and frames.
   4. Provide loose stops and moldings on inside of hollow metal work.
   5. Coordinate rabbet width between fixed and removable stops with type of glazing and type of installation indicated.

2.9 STEEL FINISHES

A. Prime Finish: Apply manufacturer's standard primer immediately after cleaning and pretreating.
   1. Shop Primer: Manufacturer's standard, fast-curing, lead- and chromate-free primer complying with ANSI/SDI A250.10 acceptance criteria; recommended by primer manufacturer for substrate; compatible with substrate and field-applied coatings despite prolonged exposure.

PART 3 - EXECUTION

3.1 EXAMINATION

A. Examine substrates, areas, and conditions, with Installer present, for compliance with requirements for installation tolerances and other conditions affecting performance of the Work.

B. Examine roughing-in for embedded and built-in anchors to verify actual locations before frame installation.

C. For the record, prepare written report, endorsed by Installer, listing conditions detrimental to performance of the Work.

D. Proceed with installation only after unsatisfactory conditions have been corrected.

3.2 PREPARATION

A. Remove welded-in shipping spreaders installed at factory. Restore exposed finish by grinding, filling, and dressing, as required to make repaired area smooth, flush, and invisible on exposed faces.

B. Drill and tap doors and frames to receive nontemplated, mortised, and surface-mounted door hardware.

3.3 INSTALLATION

A. Install hollow metal work plumb, rigid, properly aligned, and securely fastened in place; comply with Drawings and manufacturer's written instructions.

B. Hollow Metal Frames: Install hollow metal frames of size and profile indicated. Comply with ANSI/SDI A250.11.
   1. Set frames accurately in position, plumbed, aligned, and braced securely until permanent anchors are set. After wall construction is complete, remove temporary braces, leaving surfaces smooth and undamaged.
      a. At fire-protection-rated openings, install frames according to NFPA 80.
      b. Where frames are fabricated in sections because of shipping or handling limitations, field splice at approved locations by welding face joint continuously; grind, fill, dress, and make splice smooth, flush, and invisible on exposed faces.
      c. Install frames with removable glazing stops located on secure side of opening.
      d. Install door silencers in frames before grouting.
      e. Remove temporary braces necessary for installation only after frames have been properly set and secured.
      f. Check plumbness, squareness, and twist of frames as walls are constructed. Shim as necessary to comply with installation tolerances.
      g. Field apply bituminous coating to backs of frames that are filled with grout containing antifreezing agents.
   2. Floor Anchors: Provide floor anchors for each jamb and mullion that extends to floor, and secure with postinstalled expansion anchors.
      a. Floor anchors may be set with powder-actuated fasteners instead of postinstalled expansion anchors if so indicated and approved on Shop Drawings.
   3. Metal-Stud Partitions: Solidly pack mineral-fiber insulation behind frames.
   4. Masonry Walls: Coordinate installation of frames to allow for solidly filling space between frames and masonry with grout.
   5. Concrete Walls: Solidly fill space between frames and concrete with grout. Take precautions, including bracing frames, to ensure that frames are not deformed or damaged by grout forces.

6. In-Place Concrete or Masonry Construction: Secure frames in place with postinstalled expansion anchors. Countersink anchors, and fill and make smooth, flush, and invisible on exposed faces.
7. Installation Tolerances: Adjust hollow metal door frames for squareness, alignment, twist, and plumb to the following tolerances:
   a. Squareness: Plus or minus 1/16 inch (1.6 mm), measured at door rabbet on a line 90 degrees from jamb perpendicular to frame head.
   b. Alignment: Plus or minus 1/16 inch (1.6 mm), measured at jambs on a horizontal line parallel to plane of wall.
   c. Twist: Plus or minus 1/16 inch (1.6 mm), measured at opposite face corners of jambs on parallel lines, and perpendicular to plane of wall.
   d. Plumbness: Plus or minus 1/16 inch (1.6 mm), measured at jambs at floor.

C. Hollow Metal Doors: Fit hollow metal doors accurately in frames, within clearances specified below. Shim as necessary.
1. Non-Fire-Rated Standard Steel Doors:
   a. Jambs and Head: 1/8 inch (3 mm) plus or minus 1/16 inch (1.6 mm).
   b. Between Edges of Pairs of Doors: 1/8 inch (3 mm) plus or minus 1/16 inch (1.6 mm).
   c. Between Bottom of Door and Top of Threshold: Maximum 3/8 inch (9.5 mm).
   d. Between Bottom of Door and Top of Finish Floor (No Threshold): Maximum 3/4 inch (19 mm).
2. Fire-Rated Doors: Install doors with clearances according to NFPA 80.
3. Smoke-Control Doors: Install doors according to NFPA 105.

D. Glazing: Comply with installation requirements in Division 8 Section "Glazing" and with hollow metal manufacturer's written instructions.
1. Secure stops with countersunk flat- or oval-head machine screws spaced uniformly not more than 9 inches (230 mm) o.c. and not more than 2 inches (50 mm) o.c. from each corner.

3.4 ADJUSTING AND CLEANING

A. Final Adjustments: Check and readjust operating hardware items immediately before final inspection. Leave work in complete and proper operating condition. Remove and replace defective work, including hollow metal work that is warped, bowed, or otherwise unacceptable.

B. Remove grout and other bonding material from hollow metal work immediately after installation.

C. Prime-Coat Touchup: Immediately after erection, sand smooth rusted or damaged areas of prime coat and apply touchup of compatible air-drying, rust-inhibitive primer.

END OF SECTION

SECTION 08211

FLUSH WOOD DOORS

PART 1 - GENERAL

1.1 RELATED DOCUMENTS

A. Drawings and general provisions of the Contract, including General and Supplementary Conditions and Division 01 Specification Sections, apply to this Section.

1.2 SUMMARY

A. Section Includes:
1. Solid-core doors with wood-veneer faces.
2. Factory finishing flush wood doors.
3. Factory fitting flush wood doors to frames and factory machining for hardware.

B. Related Sections:
1. Division 8 Section "Hollow Metal Doors And Frames" for metal door frames.
2. Division 8 Section "Glazing" for glass view panels in flush wood doors.

1.3 SUBMITTALS

A. Make Submittals in accordance with Division 1 Section “Submittal Procedures.”

B. Product Data: For each type of door indicated. Include details of core and edge construction, and trim for openings. Include factory-finishing specifications.

C. Shop Drawings: Indicate location, size, and hand of each door; elevation of each kind of door; construction details not covered in Product Data; location and extent of hardware blocking; and other pertinent data.
1. Indicate dimensions and locations of mortises and holes for hardware.
2. Indicate dimensions and locations of cutouts.
3. Indicate requirements for veneer matching.
4. Indicate doors to be factory finished and finish requirements.
5. Indicate fire-protection ratings for fire-rated doors.

D. Samples for Verification:
1. Factory finishes applied to actual door face materials, approximately 8 by 10 inches (200 by 250 mm), for each material and finish. For each wood species and transparent finish, provide set of three samples showing typical range of color and grain to be expected in the finished work.
2. Frames for light openings, 6 inches (150 mm) long, for each material, type, and finish required.

E. Warranty: Sample of special warranty.

1.4 QUALITY ASSURANCE

A. Quality Standard: In addition to requirements specified, comply with AWI's "Architectural Woodwork Quality Standards Illustrated."

B. Fire-Rated Wood Doors: Doors complying with NFPA 80 that are listed and labeled by a qualified testing agency, for fire-protection ratings indicated, based on testing at positive pressure according to NFPA 252 or UL 10C.

C. Preinstallation Conference: Conduct conference at Project site.

1.5 DELIVERY, STORAGE, AND HANDLING

A. Comply with requirements of referenced standard and manufacturer's written instructions.

B. Package doors individually in plastic bags or cardboard cartons.

C. Mark each door on bottom rail with opening number used on Shop Drawings.

1.6 WARRANTY

A. Special Warranty: Manufacturer's standard form in which manufacturer agrees to repair or replace doors that fail in materials or workmanship within specified warranty period.
   1. Failures include, but are not limited to, the following:
      a. Warping (bow, cup, or twist) more than 1/4 inch (6.4 mm) in a 42-by-84-inch (1067-by-2134-mm) section.
      b. Telegraphing of core construction in face veneers exceeding 0.01 inch in a 3-inch (0.25 mm in a 76.2-mm) span.
   2. Warranty shall also include installation and finishing that may be required due to repair or replacement of defective doors.
   3. Warranty Period for Solid-Core Interior Doors: Life of installation.

PART 2 - PRODUCTS

2.1 MANUFACTURERS

A. Manufacturers: Subject to compliance with requirements, available manufacturers offering products that may be incorporated into the Work include, but are not limited to, the following:
   1. Algoma Hardwoods, Inc.
   2. Eggers Industries.
   3. Graham; an Assa Abloy Group company.
   4. Marshfield Door Systems, Inc.
   5. Mohawk Flush Doors, Inc.; a Masonite company.
   6. VT Industries Inc.

2.2 DOOR CONSTRUCTION, GENERAL

A. Low-Emitting Materials: Provide doors made with adhesives and composite wood products that do not contain urea formaldehyde.

B. Particleboard-Core Doors:
   1. Particleboard: ANSI A208.1, Grade LD-2 , made with binder containing no urea-formaldehyde resin.
   2. Blocking: Provide wood blocking in particleboard-core doors as needed to eliminate through-bolting hardware.
   3. Provide doors with structural-composite-lumber cores instead of particleboard cores for doors indicated to receive exit devices.

C. Structural-Composite-Lumber-Core Doors:
   1. Structural Composite Lumber: WDMA I.S.10.
      a. Screw Withdrawal, Face: 700 lbf (3100 N).
      b. Screw Withdrawal, Edge: 400 lbf (1780 N).

D. Fire-Protection-Rated Doors: Provide core specified or mineral core as needed to provide fire-protection rating indicated.
   1. Edge Construction: Provide edge construction with intumescent seals concealed by outer stile. Comply with specified requirements for exposed edges.
   2. Pairs: Provide fire-retardant stiles that are listed and labeled for applications indicated without formed-steel edges and astragals. Comply with specified requirements for exposed edges.

E. Mineral-Core Doors:
   1. Core: Noncombustible mineral product complying with requirements of referenced quality standard and testing and inspecting agency for fire-protection rating indicated.
   2. Blocking: Provide composite blocking with improved screw-holding capability approved for use in doors of fire-protection ratings indicated as needed to eliminate through-bolting hardware.
   3. Edge Construction: At hinge stiles, provide laminated-edge construction with improved screw-holding capability and split resistance. Comply with specified requirements for exposed edges.

2.3 VENEERED-FACED DOORS FOR TRANSPARENT FINISH

A. Interior Solid-Core Doors:
   1. Grade: Premium, with Grade A faces.
   2. Species: Select white hard maple.
   3. Cut: Plain sliced (flat sliced).
   4. Match between Veneer Leaves: Slip match.
   5. Assembly of Veneer Leaves on Door Faces: Balance match.
   6. Pair and Set Match: Provide for doors hung in same opening.
   7. Exposed Vertical Edges: Same species as faces.
      a. Door Edge Detail: Comply with AWI QSI Section 1300-T-6 and 1300-T-7. Provide No. 5 Edge, 5-ply door with vertical edge veneered to match the face veneer.
   8. Core: Particleboard or structural composite lumber. Provide mineral core for fire-rated doors.

9. Construction: Five plies. Stiles and rails are bonded to core, then entire unit abrasive planed before veneering. Faces are bonded to core using a hot press.

2.4 LIGHT FRAMES

A. Wood Beads for Light Openings in Wood Doors: Provide manufacturer's standard wood beads as follows unless otherwise indicated.
   1. Wood Species: Same species as door faces.
   2. Profile: Flush rectangular beads.
   3. At wood-core doors with 20-minute fire-protection ratings, provide wood beads and metal glazing clips approved for such use.

B. Wood-Veneered Beads for Light Openings in Fire-Rated Doors: Manufacturer's standard wood-veneered noncombustible beads matching veneer species of door faces and approved for use in doors of fire-protection rating indicated. Include concealed metal glazing clips where required for opening size and fire-protection rating indicated.

2.5 FABRICATION

A. Factory fit doors to suit frame-opening sizes indicated. Comply with clearance requirements of referenced quality standard for fitting unless otherwise indicated.
   1. Comply with requirements in NFPA 80 for fire-rated doors.

B. Factory machine doors for hardware that is not surface applied. Locate hardware to comply with DHI-WDHS-3. Comply with final hardware schedules, door frame Shop Drawings, DHI A115-W series standards, and hardware templates.
   1. Coordinate with hardware mortises in metal frames to verify dimensions and alignment before factory machining.

C. Openings: Cut and trim openings through doors in factory.
   1. Light Openings: Trim openings with moldings of material and profile indicated.
   2. Glazing: Factory install glazing in doors indicated to be factory finished. Comply with applicable requirements in Division 8 Section "Glazing."

2.6 FACTORY FINISHING

A. Comply with referenced quality standard for factory finishing. Complete fabrication, including fitting doors for openings and machining for hardware that is not surface applied, before finishing.
   1. Finish faces, all four edges, edges of cutouts, and mortises. Stains and fillers may be omitted on top and bottom edges, edges of cutouts, and mortises.

B. Finish doors at factory.

C. Transparent Finish:
   1. Grade: Premium.
   2. Finish: AWI conversion varnish or catalyzed polyurethane system.
   3. Staining: Match Architect's sample.

4. Wash Coat for Stained Finish: Apply wash-coat sealer to woodwork made from closed-grain wood before staining and finishing.
5. Sheen: Semigloss, 46-60 gloss units measured on 60-degree gloss meter per ASTM D 523.

PART 3 - EXECUTION

3.1 EXAMINATION

A. Examine doors and installed door frames before hanging doors.
   1. Verify that frames comply with indicated requirements for type, size, location, and swing characteristics and have been installed with level heads and plumb jambs.
   2. Reject doors with defects.

B. Proceed with installation only after unsatisfactory conditions have been corrected.

3.2 INSTALLATION

A. Hardware: For installation, see Division 8 Section "Door Hardware."

B. Installation Instructions: Install doors to comply with manufacturer's written instructions and the referenced quality standard, and as indicated.
   1. Install fire-rated doors in corresponding fire-rated frames according to NFPA 80.

C. Factory-Fitted Doors: Align in frames for uniform clearance at each edge.

D. Factory-Finished Doors: Restore finish before installation if fitting or machining is required at Project site.

3.3 ADJUSTING

A. Operation: Rehang or replace doors that do not swing or operate freely.

B. Finished Doors: Replace doors that are damaged or that do not comply with requirements. Doors may be repaired or refinished if work complies with requirements and shows no evidence of repair or refinishing.

END OF SECTION

SECTION 08710

FINISH HARDWARE

PART 1 - GENERAL

1.1 RELATED DOCUMENTS

A. Drawings and general provisions of the Contract, including General and Supplementary Conditions and Division 1 Specification Sections, apply to this Section.

1.2 SUMMARY

A. Section Includes

1. Furnishing and installation of all mechanical finish hardware necessary for all doors, and hardware as specified herein and as enumerated in hardware sets and as indicated and required by actual conditions at the building. The hardware shall include the furnishing of all necessary screws, bolts, expansion shields, drop plates, and all other devices necessary for the proper application of the hardware. Installation shall include field modification and preparation of existing doors and/or frames for new hardware being installed. Provide necessary fillers, Dutchmen, reinforcements, and fasteners for mounting new hardware and to cover existing door/frame preps.

B. Related Sections

1. Division 6 Section - Finish Carpentry
2. Division 8 Section - Hollow Metal Doors and Frames
3. Division 8 Section - Wood Doors
4. Division 26 Section - Electrical

C. Specific Omissions: Hardware for the following is specified or indicated elsewhere, unless specifically listed in the hardware sets:

1. Windows
2. Cabinets of all kinds, including open wall shelving and locks.
3. Signage, except as noted.
4. Complete toilet accessories including coat hooks, unless note otherwise.
5. Overhead doors, unless noted otherwise.

1.3 REFERENCES

A. Applicable state and local building codes and standards.

B. FIRE/LIFE SAFETY

1. NFPA - National Fire Protection Association

a. NFPA 70 – National Electric Code
b. NFPA 80 - Standard for Fire Doors and Fire Windows
c. NFPA 101 - Life Safety Code
d. NFPA 105 - Smoke and Draft Control Door Assemblies

C. UL - Underwriters Laboratories

1. UL 10B - Fire Test of Door Assemblies
2. UL 10C - Positive Pressure Test of Fire Door Assemblies
3. UL 1784 - Air Leakage Tests of Door Assemblies
4. UL 305 - Panic Hardware

D. Accessibility

1. ADA - Americans with Disabilities Act
2. Rhode Island Accessibility Code – SBC-14, 15, 16

E. DHI - Door and Hardware Institute

1. Sequence and Format for the Hardware Schedule
2. Recommended Locations for Builders Hardware

F. ANSI - American National Standards Institute

1. ANSI/BHMA A156.1 - A156.29, and ANSI A156.31 - Standards for Hardware and Specialties

1.4 SUBMITTALS

A. General: Submit the following in accordance with Conditions of Contract and Division 1 requirements. Prior to submittal field verify existing doors and/or frames receiving new hardware and/or existing conditions receiving new openings. Verify new hardware is compatible with the existing door/frame preparation and/or existing conditions. Advise architect within the submittal package of incompatibility or issues.

B. Catalog Cuts: Product data including manufacturers' technical product data for each item of door hardware, installation instructions, maintenance of operating parts and finish, and other information necessary to show compliance with requirements.

C. Final Hardware Schedule Content: Submit schedule with hardware sets in vertical format as illustrated by the Sequence of Format for the Hardware Schedule as published by the Door and Hardware Institute. Indicate complete designations of each item required for each door or opening, Include the following information:

1. Door Index; include door number, heading number, and Architects hardware set number.
2. Opening Lock Function Spreadsheet; list locking device and function for each opening.
3. Type, style, function, size, and finish of each hardware item.
4. Name and manufacturer of each item.
5. Fastenings and other pertinent information.
6. Location of each hardware set cross-referenced to indications on Drawings.
7. Explanation of all abbreviations, symbols, and codes contained in schedule.
8. Mounting locations for hardware.
9. Door and frame sizes and materials.
10. Name and phone number for the local manufacturer's representative for each product.

D. Key Schedule: After a keying meeting between representatives of the Owner, Architect, hardware supplier, and, if requested, the representative for the lock manufacturer, provide a keying schedule, listing the levels of keying, as well as an explanation of the key system's function, the key symbols used, and the door numbers controlled. Utilize ANSI A156.28 “Recommended Practices for Keying Systems” as a guideline for nomenclature, definitions, and approach for selecting the optimal keying system.

E. Samples: If requested by the Architect, submit production sample or sample installations as requested of each type of exposed hardware unit in the finish indicated, and tagged with a full description for coordination with the schedule.

1. Samples will be returned to the supplier in like-new condition. Units that are acceptable to the Architect may, after final check of operations, be incorporated into the Work, within limitations of key coordination requirements.

F. Templates: After final approval of the hardware schedule, provide templates for doors, frames, and other work specified to be factory prepared for the installation of door hardware.

G. Operations and Maintenance Data: Provide in accordance with Division 1 and include the following:

1. Complete information on care, maintenance, and adjustment; data on repair and replacement parts, and information on preservation of finishes.
2. Catalog pages for each product.
3. Name, address, and phone number of local representative for each manufacturer.
4. Parts list for each product.
5. Copy of final approved hardware schedule, edited to reflect “As installed.”
6. Copy of final keying schedule.
7. One (1) complete set of special tools required for maintenance and adjustment of hardware, including changing of cylinders.
8. Copy of warranties including appropriate reference numbers for manufacturers to identify the project.

H. Certificates of Compliance: Upon request of Architect or Authority Having Jurisdiction certificates of compliance for fire-rated hardware and installation instructions shall be made available.

1.5 QUALITY ASSURANCE

A. Substitutions: Products are to be those specified to ensure a uniform basis of acceptable materials. Requests for substitutions must be made in accordance with Division 1 requirements. If proposing a substitute product, submit product data for the proposed item with product data for the specified item and indicate basis for substitution and savings to be made. Provide sample if requested. Certain products have been selected for their unique characteristics and particular project suitability.

1. Items specified as "no substitute” shall be provided exactly as listed.
2. Items listed with no substitute manufacturers listed have been requested by the Owner or Architect to match existing for continuity and/or future performance and maintenance standards or because there is no known equal product.
3. If no other products are listed in a category, then "no substitute" is implied.
4. This project is funded, in part, by federal stimulus moneys tied to an ARRA grant. Therefore, all products must comply with the guidelines for BAA/ARRA compliance.

B. Supplier Qualifications: A recognized architectural hardware supplier, with warehousing facilities in the Project's vicinity, that has a record of successful in-service performance for supplying door hardware similar in quantity, type, and quality to that indicated for this Project and that provides a certified Architectural Hardware Consultant (AHC) available to the Owner, Architect, and Contractor, at reasonable times during the course of the Work for consultation.

C. Single Source Responsibility: Obtain each type of hardware (latch and locksets, hinges, exit devices, closers, etc.) from a single manufacturer.

D. Fire-Rated Openings: Provide door hardware for fire-rated openings that complies with NFPA Standard No. 80 and requirements of authorities having jurisdiction. Provide only items of door hardware that are listed and are identical to products tested by Underwrites Laboratories, Intertek Testing Services, or other testing and inspecting organizations acceptable to the authorities having jurisdiction for use on types and sizes of doors indicated in compliance with requirements of fire-rated door and door frame labels.

1.6 DELIVERY, STORAGE, AND HANDLING

A. Tag each item or package separately with identification related to the final hardware schedule, and include installation instructions with each item or package.

B. Each article of hardware shall be individually packaged in manufacturer's original packaging.

C. Contractor will provide secure lock-up for door hardware delivered to the Project, but not yet installed. Control handling and installation of hardware items so that completion of Work will not be delayed by hardware losses both before and after installation.

D. Items damaged in shipment shall be replaced promptly and with proper material and paid for by whomever did the damage or caused the damage to occur.

E. Hardware shall be handled in a manner to avoid damage, marring, or scratching. Irregularities that occur to the hardware after it has been delivered to the Project shall be corrected, replaced, or repaired by the Contractor. Hardware shall be protected against malfunction due to paint, solvent, cleanser, or any chemical agent.

F. No direct shipments will be allowed unless approved by the Contractor.

1.7 WARRANTY

A. Provide manufacturer's warrantees as specified in Division 1 and as follows:

1. Closers: 10 years.
2. Exit Devices: 3 years.
3. Locksets: 3 years.
4. Other hardware: 1 year.

B. No liability is to be assumed where damage or faulty operation is due to improper installation, improper use, or abuse.

C. Products judged to be defective during the warranty period shall be replaced or repaired in accordance with the manufacturer's warranty, at no additional cost to the Owner.

1.8 MAINTENANCE

A. Maintenance Tools and Instructions: Furnish a complete set of specialized tools and maintenance instructions as needed for Owner's continued adjustment, maintenance, and removal and replacement of door hardware.

PART 2 - PRODUCTS

2.1 MANUFACTURERS

A. The Awarding Authority has determined that certain products should be selected for their unique characteristics and particular project suitability to insure continuity of existing and future performance and maintenance standards. After investigating available product offerings the Awarding Authority has elected to prepare proprietary specifications. These products are specified with the notation: “No Substitute” (NO OTHER PRODUCTS WILL BE CONSIDERED FOR THOSE LISTED IN PROJECTS DOCUMENTS.)

B. Approval of manufacturers other than those listed shall be in accordance with paragraph 1.05.A.

C. Note that even though an acceptable substitute manufacturer may be listed, the product must provide all the functions and features of the specified product or it will not be approved.

D. This project is funded, in part, by federal stimulus moneys tied to an ARRA grant. Therefore, all products must comply with the guidelines for BAA/ARRA compliance.

Item	Scheduled Manufacturer	Acceptable Substitute
Hinges	Bommer (BOM)	BAA/ARRA approved equal only
Locksets	Schlage (SCH)	Best, Corbin-Russwin, Sargent
Aluminum Door Locks – Narrow Style	Adams Rite (ADA)	As pre-approved
Exit Devices	Von Duprin (VON)	No Substitute
Door Closers	LCN (LCN)	No Substitute
Door Trim	Don-Jo (DON)	Burns, Rockwood
Protection Plates	Ives (IVE)	Burns, Rockwood
Overhead Stops	Glynn-Johnson (GLY)	Rixson, Sargent
Stops & Holders	Ives (IVE)	Burns, Rockwood
Thresholds & Weatherstrip	Reese (REE)	Pemko, Zero
Silencers	Ives (IVE)	Burns, Rockwood
Magnetic Holders	LCN (LCN)	Rixson, Sargent
Latch Protector	Ives (IVE)	Burns, Rockwood
Cylinders & Keying	Schlage (SCH)	Best, Corbin-Russwin, Sargent

E. Hand of Door: Drawings show direction of slide, swing, or hand of each door leaf. Furnish each item of hardware for proper installation and operation of door movement as shown.

F. Where the hardware specified is not adaptable to the finished shape or size of the members requiring hardware, furnish suitable types having the same operation and quality as the type specified, subject to the Architect's approval.

2.2 MATERIALS

A. Fasteners

1. Provide hardware manufactured to conform to published templates, generally prepared for machine screw installation.
2. Furnish screws for installation with each hardware item. Finish exposed (exposed under any condition) screws to match hardware finish, or, if exposed in surfaces of other work, to match finish of this other work as closely as possible including "prepared for paint" surfaces to receive painted finish.
3. Provide concealed fasteners for hardware units that are exposed when door is closed except to the extent that no standard units of type specified are available with concealed

fasteners. Do not use thru-bolts for installation where bolt head or nut on opposite face is exposed in other work unless their use is the only means of reinforcing the work adequately to fasten the hardware securely. Review door specification and advise Architect if thru-bolts are required.

4. Hardware shall be installed with the fasteners provided by the hardware manufacturer.

B. Hinges

1. Provide five-knuckle, ball bearing hinges of type, material, and height as outlined in the following guide for this specification:

   a. 1-3/4 inch thick doors, up to and including 36 inches wide:
      Exterior: standard weight, bronze/stainless steel, 4-1/2 inches high
      Interior: standard weight, steel, 4-1/2 inches high
   b. 1-3/4 inch thick doors over 36 inches wide:
      Exterior: heavy weight, bronze/stainless steel, 5 inches high
      Interior: heavy weight, steel, 5 inches high
   c. 2 inches or thicker doors:
      Exterior: heavy weight, bronze/stainless steel, 5 inches high
      Interior: heavy weight, steel, 5 inches high

2. Provide three hinges per door leaf for doors 90 inches or less in height, and one additional hinge for each 30 inches of additional door height.
3. Where new hinges are specified for existing doors and/or existing frames, the new hinge size must be identical to hinge preparation present in the existing door and/or existing frame.
4. Hinge Pins: Except as otherwise indicated, provide hinge pins as follows:

   a. Steel Hinges: Steel pins
   b. Non-Ferrous Hinges: Stainless steel pins
   c. Out-Swinging Exterior Doors: Non-removable pins
   d. Out-Swinging Interior Lockable Doors: Non-removable pins
   e. Interior Non-lockable Doors: Non-rising pins

5. The width of hinges shall be 4-1/2 inches at 1-3/4 inch thick doors, and 5 inches at 2 inches or thicker doors. Adjust hinge width as required for door, frame, and/or wall conditions to allow proper degree of opening.
6. Acceptable manufacturers and/or products: Bommer BB5000 series, or other BAA/ARRA compliant equivalent.

C. Cylindrical Locks - Grade 1

1. Provide cylindrical locks conforming to ANSI A156.2 Series 4000, Grade 1. Cylinders: Refer to 2.04 KEYING.
2. Provide locks with a standard 2-3/4 inches backset, unless noted otherwise, with a 1/2 inch latch throw. Provide proper latch throw for UL listing at pairs.
3. Provide locksets with a separate anti-rotation throughbolts, and shall have no exposed screws. Levers shall operate independently, and shall have two external return spring cassettes mounted under roses to prevent lever sag.
4. Provide standard ASA strikes unless extended lip strikes are necessary to protect trim.
5. Lever trim shall be solid cast levers without plastic inserts, and wrought roses on both sides. Locksets shall be thru-bolted to assure proper alignment.

   a. Lever design shall be Schlage Rhodes.

b. Lever trim on the secure side of doors serving rooms considered by the authority having jurisdiction to be hazardous shall have a tactile warning.

6. Acceptable manufacturers and/or products: Schlage ND series, Best 93K series, Corbin-Russwin CL3300 series, Sargent 10-Line.

D. Exit Devices

1. Provide exit devices tested to ANSI/BHMA A156.3 Grade 1, and UL listed for Panic Exit and/or Fire Exit Hardware. Cylinders: Refer to 2.04 KEYING.
2. Provide touchpad type exit devices, fabricated of brass, bronze, stainless steel, or aluminum, plated to the standard architectural finishes to match the balance of the door hardware.
3. Exit devices shall incorporate a fluid damper or other device that eliminates noise associated with exit device operation. Touchpad shall extend a minimum of one half of the door width, but not the full length of the exit device rail. End-cap will have two-point attachment to door. Touch-pad shall match exit device finish, and shall be stainless steel for US26, US26D, US28, US32, and US32D finishes; for all other finishes, the touch-pad finish shall be of compatible finish to exit device. Only compression springs will be used in devices, latches, and outside trims or controls.
4. Devices to incorporate a deadlatching feature for security and/or for future addition of alarm kits and/or other electrical requirements.
5. Vertical rod devices shall be capable of being field modified to less bottom rod devices by removal of bottom rod and adding firing pin(s), if required at fire rated openings.
6. Provide manufacturer's standard strikes.
7. Provide exit devices cut to door width and height. Locate exit devices at a height recommended by the exit device manufacturer, allowable by governing building codes, and approved by the Architect.
8. Mechanism case shall sit flush on the face of all flush doors, or spacers shall be furnished to fill gaps behind devices. Where glass trim or molding projects off the face of the door, provide glass bead kits.
9. Non-fire-rated exit devices shall have cylinder dogging.
10. Where lever handles are specified as outside trim for exit devices, provide heavy-duty lever trims with forged or cast escutcheon plates. Provide vandal-resistant levers that will travel to a 90-degree down position when more than 35 pounds of torque are applied, and which can easily be re-set.

    a. Lever style will match the lever style of the locksets.
    b. Lever trim on doors serving rooms considered by the authority having jurisdiction to be hazardous shall have a tactile warning.

11. Exit devices for fire rated openings shall be UL labeled fire exit hardware.
12. Acceptable manufacturers and/or products: Von Duprin 98 series, No Substitute.

E. Door Closers

1. Provide door closers certified to ANSI/BHMA A156.4 Grade 1 requirements by a BHMA certified independent testing laboratory. Surface mounted mechanical closers shall be certified to exceed ten million (10,000,000) full load cycles by a recognized independent testing laboratory. Closers shall be ISO 9000 certified. Units shall be stamped with date of manufacture code.
2. Door closers shall have fully hydraulic, full rack and pinion action with a high strength cast iron cylinder and metal cover, and shall utilize full complement bearings at shaft. Cylinder

body shall be 1-1/2 inch diameter, and double heat-treated pinion journal shall be 11/16 inch diameter.

3. Provide hydraulic fluid requiring no seasonal closer adjustment for temperatures ranging from 120 degrees F to -30 degrees F. Fluid shall be fireproof and shall pass the requirements of the UL10C "positive pressure" fire test.
4. Spring power shall be continuously adjustable over the full range of closer sizes, and allow for reduced opening force as required by accessibility codes and standards. Hydraulic regulation shall be by tamper-proof, non-critical valves. Closers shall have separate adjustment for latch speed, general speed, and backcheck.
5. Provide closers with a solid forged steel main arms and factory assembled heavy-duty forged forearms for parallel arm closers. When closers are parallel arm mounted, provide closers which mount within a 6-inch top rail without the use of a mounting plate so that closer shall not be visible through vision panel from pull side.
6. Closers shall not incorporate Pressure Relief Valve (PRV) technology.
7. Closer cylinders, arms, adapter plates, and metal covers shall have a powder coating finish which has been certified to exceed 100 hours salt spray testing as described in ANSI Standard A156.4 and ASTM B117, or shall have special rust inhibitor (SRI).
8. Provide special templates, drop plates, mounting brackets, or adapters for arms as required for details, overhead stops, and other finish hardware items interfering with closer mounting.
9. Mount closers on room side of corridor doors, inside of exterior doors, and stair side of stairway doors from corridors. Closers shall not be visible in corridors, lobbies and other public spaces unless approved by Architect.
10. Door closers meeting this specification: LCN 4010/4110 series, No Substitute.

F. Door Trim

1. Provide push plates 4 inches wide x 16 inches high x 0.050 inch thick and beveled 4 edges. Where width of door stile prevents use of 4 inches wide plate, adjust width to fit.
2. Provide pulls of solid bar stock, diameter and length as scheduled. Where required, mount back to back with push bar.
3. Acceptable manufacturers and/or products: Don-Jo, Ives, Burns, Rockwood.

G. Protection Plates

1. Provide kick plates, mop plates, and armor plates minimum of 0.050 inch thick as scheduled. Furnish with machine or wood screws, finished to match plates. Sizes of plates shall be as follows:

   a. Kick Plates – 10 inches high x 2 inches less width of door on single doors, 1 inch less width of door on pairs

2. Acceptable manufacturers and/or products: Ives, Burns, Rockwood.

H. Overhead Stops and Overhead Stop/Holders

1. Provide heavy or medium duty and concealed or surface mounted overhead stop or overhead stop/holder for interior doors as specified. Provide medium duty surface mounted overhead stop for interior doors and at any door that swings more than 140 degrees before striking a wall, open against equipment, casework, sidelights, and/or where conditions do not allow a wall stop or a floor stop presents a tripping hazard.
2. Where overhead holders are specified provide friction type at doors without a closer and positive type at doors with a closer.
3. Acceptable manufacturers and/or products: Glynn-Johnson, Rixson, Sargent.

I. Door Stops and Holders

1. Provide door stops for all doors in accordance with the following requirements:

   a. Provide wall stops wherever possible. Provide convex type where mortise type locks are used and concave type where cylindrical type locks are used.
   b. Where wall stops cannot be used, provide dome type floor stops of the proper height.
   c. At any opening where a wall or floor stop cannot be used, a medium duty surface mounted overhead stop shall be used.

2. Acceptable manufacturers and/or products: Ives, Burns, Rockwood.

J. Thresholds, Seals, Door Sweeps, Automatic Door Bottoms, and Gasketing

1. Provide thresholds, weatherstripping (including door sweeps, seals, astragals) and gasketing systems (including smoke, sound, and light) as specified and per architectural details. Match finish of other items as closely as possible. Size of thresholds shall be as follows:

   a. Saddle Thresholds – 1/2 inch high x jamb width x door width

2. Provide door sweeps, seals, astragals, and auto door bottoms only of type where resilient or flexible seal strip is easily replaceable and readily available.
3. Acceptable manufacturers and/or products: Reese, Pemko, Zero.

K. Silencers

1. Provide "Push-in" type silencers for each hollow metal or wood frame. Provide three for each single frame and two for each pair frame. Omit where gasketing is specified or required by code.
2. Acceptable manufacturers and/or products: Ives, Burns, Rockwood.

L. Magnetic Holders

1. Provide wall or floor mounted electromagnetic door release as specified with a minimum of 25 pounds of holding force. Projection of holder and armature must be coordinated with other hardware and wall conditions to ensure that door sits parallel to wall when fully open. Where magnetic holders are used on fire-rated doors, they must be wired into the fire control panel for fail-safe operation.
2. Acceptable manufacturers and/or products: LCN, Rixson, Sargent.

M. Latch Protectors

1. Provide latch protectors of type required to function with the specified lock.
2. Acceptable manufacturers and/or products: Ives, Burns, Rockwood.

2.3 FINISHES

A. Finish of all hardware shall be US26D (BHMA 626/652) with the exceptions as follows:

1. Hinges at Exterior Doors: US32D (BHMA 630).
2. Push Plates, Pulls, and Push Bars: US32D (BHMA 630).
3. Protection Plates: US32D (BHMA 630).
4. Overhead Stops and Holders: US32D (BHMA 630).

5. Door Closers: Powder Coat to Match.
6. Wall Stops: US32D (BHMA 630).
7. Latch Protectors: US32D (BHMA 630).
8. Weatherstipping: Clear Anodized Aluminum.
9. Thresholds: Mill Finish Aluminum.

2.4 KEYING

A. The keying requirements outlined below are intended as a general guide for pricing purposes only. Specific instructions related to keying will be provided by RIC at the time of the pre-bid walkthrough.

B. Provide a new key system from the same manufacturer as the locks conforming to the following requirements:

1. Provide restricted patented removable core cylinders at all keyed devices. Restricted shall control the access to the products by requiring a signed letter of authorization and/or authorization form from the Owner or authorized agent of the Owner. Patent shall protect against the unauthorized manufacturing and duplication of the products. Restricted patented cores shall not be operable by non-patented key blanks. Restricted patented cores shall incorporate a mechanism to check for the patented features on the keys. Provide construction cores with construction master keying for use during construction. The hardware supplier, accompanied by the Owner or Owner's security agent, shall install permanent keyed cores upon completion of the project. The temporary construction cores are to be returned to the hardware supplier.
2. Provide permanent cores, keyed by the manufacturer or authorized distributor as directed by the Owner. Provide owner with a copy of the bitting list, return receipt requested.
3. The hardware supplier, accompanied by a qualified factory representative for the manufacturer of the cores and cylinders, shall meet with Owner and Architect to review keying requirements and lock functions prior to ordering finish hardware. Submit a keying schedule to Architect for approval.
4. Provide cores , unless noted otherwise, operated by a Great Grand Master Key System to be established for this project. Allow for ten Grand Master Keys under the Great Grand. Do not use the letter "I", "O", or "X" for any of the grand masters. Allow for twenty-four Master Keys under each Grand Master, and sixty-four changes under each master key. All cylinders shall be keyed in alike or different sets as noted by their respective key set number. Do not use the letter "I" or "O" in any of the master key sets.
5. Provide patented restricted keys as follows:

   a. Ten grand master keys for each set.
   b. Ten master keys for each set.
   c. Three keys per core and/or cylinder.
   d. Two construction core control keys
   e. Two permanent core control keys
   f. Six construction master keys for each type (Contractor is to provide one set of construction keys to Architect)

6. Visual key control:

   a. Keys shall be stamped with their respective key set number and stamped "DO NOT DUPLICATE".
   b. Grand master and master keys shall be stamped with their respective key set letters.
   c. Do not stamp any keys with the factory key change number.
   d. Do not stamp any cores with key set on face (front) of Core. Stamp on back or side of cores so not to be visible when core is in cylinder.

7. Deliver grand master keys, master keys, change keys, and/or key blanks from the factory or authorized distributor directly to the Owner in sealed containers, return receipt requested. Failure to comply with these requirements may be cause to require replacement of all or any part of the keying system that was compromised at no additional cost to the Owner.
8. Approved products: Schlage Everest D, Best Peaks, Corbin-Russwin Patented and Restricted Keyway, Sargent Signature.

PART 3 - EXECUTION

3.1 EXAMINATION

A. Prior to installation of any hardware, examine all doors, frames, walls and related items for conditions that would prevent proper installation of finish hardware. Correct all defects prior to proceeding with installation.

3.2 INSTALLATION

A. Coordination:

1. Prior to installation of hardware, schedule and hold a meeting for the purpose of instructing installers on proper installation and adjustment of finish hardware. Representatives of locks, exit devices, closers, automatic operators, and electrified hardware shall conduct training; provide at least 10 days notice to representatives. After training a letter of compliance, indicating when the training was held and who was in attendance, shall be sent to the Architect.

B. Hardware will be installed by qualified tradesmen, skilled in the application of commercial grade hardware. For technical assistance if necessary, installers may contact the manufacturer's rep for the item in question, as listed in the hardware schedule.

C. Mount hardware units at heights indicated in "Recommended Locations for Builders Hardware for Standard Steel Doors and Frames" by the Door and Hardware Institute.

D. Install each hardware item in compliance with the manufacturer's instructions and recommendations, using only the fasteners provided by the manufacturer.

E. Do not install surface mounted items until finishes have been completed on the substrate. Protect all installed hardware during painting.

F. Set units level, plumb and true to line and location. Adjust and reinforce the attachment substrate as necessary for proper installation and operation.

G. Operating parts shall move freely and smoothly without binding, sticking, or excessive clearance.

H. Existing Doors and/or Frames: Remove existing hardware being replaced, tag, and store according to contract documents. Field modify and prepare existing door and/or frame for new hardware being installed. Provide necessary fillers, Dutchmen, reinforcements, and fasteners for mounting new hardware and to cover existing door/frame preps.

3.3 ADJUSTING, CLEANING, AND DEMONSTRATING

A. Adjust and check each operating item of hardware and each door, to insure proper operation or function of every unit. Replace units which cannot be adjusted to operate freely and smoothly.

B. Where door hardware is installed more than one month prior to acceptance or occupancy of a space or area, return to the installation during the week prior to acceptance or occupancy and make a final check and adjustment of all hardware items in such space or area. Clean operating items as necessary to restore proper function and finish of hardware and doors. Adjust door control devices to compensate for final operation of heating and ventilating equipment.

C. Clean adjacent surfaces soiled by hardware installation.

D. Instruct Owner's personnel in the proper adjustment, lubrication, and maintenance of door hardware and hardware finishes.

3.4 FIELD QUALITY CONTROL

A. Prior to Substantial Completion, the installer, accompanied by representatives of the manufacturers of locks, exit devices, closer, and any electrified hardware, shall perform the following work:

1. Examine and re-adjust each item of door hardware as necessary to restore function of doors and hardware to comply with specified requirements.
2. Consult with and instruct Owner's personnel in recommended additions to the maintenance procedures.
3. Replace hardware items that have deteriorated or failed due to faulty design, materials, or installation of hardware units.
4. Prepare a written report of current and predictable problems of substantial nature in the performance of the hardware.
5. At completion of project, a qualified factory representative for the manufacturers of locksets, closer, exit devices, and access control products shall arrange and hold a training session to instruct the Owner's personnel on the proper maintenance, adjustment, and/or operation of their respective products. After training a letter of compliance, indicating when the training was held and who was in attendance, shall be sent to the Architect.

3.5 PROTECTION

A. Provide for the proper protection of complete items of hardware until the Owner accepts the project as complete. Damaged or disfigured hardware shall be replaced or repaired by the responsible party.

3.6 HARDWARE SCHEDULE

A. Provide hardware for each door to comply with requirements of Section "Finish Hardware," hardware set numbers indicated in door schedule, and in the following schedule of hardware sets.

B. It is intended that the following schedule includes complete items of finish hardware necessary to complete the work. If a discrepancy is found in the schedule, such as a missing item, improper hardware for a frame, door or fire codes, the preamble will be the deciding document.

C. Locksets, exit devices, and other hardware items are referenced in the Hardware Sets for series, type, and function. Refer to the preamble for special features, options, cylinders/keying, and other requirements.

D. Hardware Sets

HW SET: 01 (BASEMENT CORRIDOR)

3	EA	HINGE	BB5000 SERIES AS SPECIFIED	652	BOM
1	EA	PASSAGE SET	ND10S RHO (BAA COMPLIANT)	626	SCH
1	EA	SURFACE CLOSER	4111 EDA MC	689	LCN
1	EA	WALL STOP	WS407CVX	630	IVE
1	SET	ADHESIVE SEAL	105		DHS

HW SET: 02 (BASEMENT STAIR, BASEMENT CORRIDOR)

3	EA	HINGE	BB5000 SERIES AS SPECIFIED	652	BOM
1	EA	CLASSROOM LOCK	ND70 RHO (BAA COMPLIANT)	626	SCH
1	EA	SURFACE CLOSER	4111 EDA MC	689	LCN
1	EA	WALL STOP	WS407CVX	630	IVE
1	SET	ADHESIVE SEAL	105		DHS

HW SET: 03 - NOT USED

1	EA	CLASSROOM LOCK	ND70 RHO (BAA COMPLIANT)	626	SCH

FURNISH NEW LEVER LOCK FOR EXISTING DOOR. FIELD VERIFY DOOR PREP TO DETERMINE COMPATIBILITY WITH SPECIFIED LOCK. VERIFY REQUIRED LOCK FUNCTION WITH OWNER/ARCHITECT.

HW SET: 04 (EXIT STAIR PAIR)

6	EA	HINGE	BB5000 SERIES AS SPECIFIED	652	BOM
2	EA	FIRE EXIT HARDWARE	9827L-BE-F 996L-BE LBR	626	VON
2	EA	SURFACE CLOSER	4011 MC	689	LCN
2	EA	MAGNETIC HOLD-OPEN	SEM 7840 OR SEM 7850 AS REQUIRED	AL	LCN
1	SET	ADHESIVE SEAL	105		DHS
1	EA	ADHESIVE ASTRAGAL	SA		DHS

MAGNETIC HOLD-OPENS MUST RELEASE ON FIRE ALARM.

FIELD VERIFY HINGE SIZE REQUIRED FOR EXISTING FRAMES.

AT CERTAIN STAIR DOOR LOCATIONS, AN EXISTING RADIATOR PREVENTS ONE OF THE DOORS FROM REACHING THE WALL. IN THESE LOCATIONS, THE HARDWARE SUPPLIER SHALL FURNISH THE NECESSARY EXTENSIONS TO ENSURE THE DOORS HOLD OPEN PROPERLY ON THE MAGNETS. ADVISE ARCHITECT IF A FLOOR MOUNTED HOLD-OPEN MAGNET IS REQUIRED.

HW SET: 05 (EXIT STAIR PAIR)

3	EA	HINGE	BB5000 SERIES AS SPECIFIED	652	BOM
3	EA	HINGE	BB5000 WIDE THROW SERIES AS SPECIFIED	652	BOM
1	EA	DOOR CORD	788-12		SCE

1	EA	FIRE EXIT HARDWARE	9827L-BE-F 996L-BE LBR (CUSTOM FOR 2' LEAF)	626	VON
1	EA	FIRE EXIT HARDWARE	QEL9827L-BE-F 996L-BE LBR	626	VON
1	EA	SURFACE CLOSER	4111 EDA MC	689	LCN
2	EA	KICK PLATE	8400	630	IVE
1	SET	ADHESIVE SEAL	105		DHS
1	EA	ADHESIVE ASTRAGAL	SA		DHS
1	EA	POWER SUPPLY	PS873-2Q	GRY	VON

FIELD VERIFY HINGE SIZE REQUIRED FOR EXISTING FRAME. LHR LEAF WILL REQUIRE WIDE THROW HINGES TO ALLOW 180 DEGREE SWING. EXISTING AUTO OPERATOR TO BE RE-USED AND INSTALLED ON ACTIVE LEAF. COORDINATE WIRING SO THAT LATCH ON ACTIVE LEAF IS RETRACTED BEFORE DOOR TRIES TO OPEN.

HW SET: 06 (EXTERIOR SINGLE WITH PANIC HARDWARE)

3	EA	HINGE	BB5000 SERIES AS SPECIFIED	630	BOM
1	EA	PANIC HARDWARE	CD98NL	626	VON
1	EA	MORTISE CYLINDER	MORTISE CYLINDER AS REQUIRED	626	SCH
1	EA	RIM CYLINDER	RIM CYLINDER AS REQUIRED	626	SCH
1	EA	SURFACE CLOSER	4111 SCUSH MC	689	LCN
1	EA	KICK PLATE	8400	630	IVE
1	SET	SEALS	655C	AL	REE
1	EA	SWEEP	354C	AL	REE
1	EA	THRESHOLD	S425A	AL	REE

FIELD VERIFY HINGE SIZE REQUIRED FOR EXISTING FRAME

655C GASKETING MUST BE INSTALLED PRIOR TO DOOR CLOSER.

HW SET: 07 (BASEMENT STAIR)

3	EA	HINGE	BB5000 SERIES AS SPECIFIED	652	BOM
1	EA	STOREROOM LOCK	ND80 RHO (BAA COMPLIANT)	626	SCH
1	EA	SURFACE CLOSER	4111 EDA MC	689	LCN
1	EA	WALL STOP	WS407CVX	630	IVE
1	SET	ADHESIVE SEAL	105		DHS

HW SET: 08 (EXIT STAIR SINGLE)

3	EA	HINGE	BB5000 SERIES AS SPECIFIED	652	BOM
1	EA	FIRE EXIT HARDWARE	98L-BE-F 996L-BE	626	VON
1	EA	SURFACE CLOSER	4011 MC	689	LCN
1	EA	MAGNETIC HOLD-OPEN	SEM 7840 OR SEM 7850 AS REQUIRED	AL	LCN
1	SET	ADHESIVE SEAL	105		DHS

MAGNETIC HOLD-OPEN MUST RELEASE ON FIRE ALARM.

FIELD VERIFY HINGE SIZE REQUIRED FOR EXISTING FRAMES.

HW SET: 09 (EXIT STAIR PAIR)

6	EA	HINGE	BB5000 SERIES AS SPECIFIED	652	BOM
2	EA	FIRE EXIT HARDWARE	9827L-BE-F 996L-BE LBR	626	VON
2	EA	SURFACE CLOSER	4111 EDA MC	689	LCN
2	EA	MAGNETIC HOLD-OPEN	SEM 7840 OR SEM 7850 AS REQUIRED	AL	LCN
1	SET	ADHESIVE SEAL	105		DHS
1	EA	ADHESIVE ASTRAGAL	SA		DHS

MAGNETIC HOLD-OPENS MUST RELEASE ON FIRE ALARM.

FIELD VERIFY HINGE SIZE REQUIRED FOR EXISTING FRAME. VERIFY WHETHER WIDE-THROW HINGES ARE REQUIRED TO REACH 180 DEGREE SWING.

HW SET: 10 (ELECTRICAL ROOM)

3	EA	HINGE	BB5000 SERIES AS SPECIFIED	652	BOM
1	EA	FIRE EXIT HARDWARE	98L-F 996L (TACTILE WARNING)	626	VON
1	EA	RIM CYLINDER	RIM CYLINDER AS REQUIRED	626	SCH
1	EA	SURFACE CLOSER	4111 EDA MC	689	LCN
1	SET	ADHESIVE SEAL	105		DHS

HW SET: 11 (MECHANICAL)

3	EA	HINGE	BB5000 SERIES AS SPECIFIED	652	BOM
1	EA	STOREROOM LOCK	ND80 RHO X TACTILE WARNING (BAA COMPLIANT)	626	SCH
1	EA	SURFACE CLOSER	4111 EDA MC	689	LCN
1	SET	ADHESIVE SEAL	105		DHS

HW SET: 12 - NOT USED

1	EA	STOREROOM LOCK	ND80 RHO X TACTILE WARNING (BAA COMPLIANT)	626	SCH

FURNISH NEW LEVER LOCK FOR EXISTING DOOR. FIELD VERIFY DOOR PREP TO DETERMINE COMPATIBILITY WITH SPECIFIED LOCK. VERIFY REQUIRED LOCK FUNCTION WITH OWNER/ARCHITECT.

HW SET: 13 (CORRIDOR, LIBRARY)

3	EA	HINGE	BB5000 SERIES AS SPECIFIED	652	BOM
1	EA	CLASSROOM SEC	ND75 RHO (BAA COMPLIANT)	626	SCH

		LOCK			
1	EA	SURFACE CLOSER	4011 MC	689	LCN
1	EA	KICK PLATE	8400	630	IVE
1	EA	WALL STOP	WS407CVX OR FS436/FS438 AS REQUIRED	630	IVE
3	EA	SILENCER	SR64	GRY	IVE

HW SET: 14 (NEW CLASSROOM)

3	EA	HINGE	BB5000 SERIES AS SPECIFIED	652	BOM
1	EA	CLASSROOM SEC LOCK	ND75 RHO (BAA COMPLIANT)	626	SCH
1	EA	WALL STOP	WS407CVX	630	IVE
3	EA	SILENCER	SR64	GRY	IVE

FIELD VERIFY HINGES REQUIRED FOR EXISTING FRAME.

HW SET: 15 (EXISTING EXTERIOR SINGLE)

1	EA	SURFACE CLOSER	4111 SCUSH MC	689	LCN

REMOVE EXISTING CLOSER AND CORNER BRACKET AND FURNISH NEW CLOSER AS SPECIFIED. BALANCE OF EXISTING HARDWARE TO REMAIN.

HW SET: 16 (EXISTING ALUMINUM PAIR)

1	EA	DEADLOCK	MS1851S (SCHOOLHOUSE FUNCTION)	628	ADA

FURNISH NEW DEADLOCK WITH THE "SCHOOLHOUSE" FUNCTION FOR EXISTING DOOR. FIELD VERIFY BACKSET OF EXISTING PREP. INSIDE THUMBTURN SHOULD BE ADA COMPLIANT VERSION.

HW SET: 17 (NEW DOOR IN EXISTING FRAME)

3	EA	HINGE	BB5000 SERIES AS SPECIFIED	652	BOM
1	EA	CLASSROOM SEC LOCK	ND75 RHO (BAA COMPLIANT)	626	SCH
1	EA	WALL STOP	WS407CVX	630	IVE
3	EA	SILENCER	SR64	GRY	IVE

FIELD VERIFY HINGES REQUIRED FOR EXISTING FRAME. FIELD VERIFY STRIKE TYPE REQUIRED AS CERTAIN DOORS HAVE 4 7/8" STRIKES, WHILE OTHERS HAVE OLDER STYLE 3 1/4" STRIKES. FURNISH NEW SILENCERS FOR EXISTING FRAMES.

HW SET: 18 (NEW DOOR IN EXISTING FRAME WITH ELECTRIC STRIKE)

3	EA	HINGE	BB5000 SERIES AS SPECIFIED	652	BOM

1	EA	STOREROOM LOCK	ND80 RHO (BAA COMPLIANT)	626	SCH
1	EA	WALL STOP	WS407CVX	630	IVE
1	EA	LOCK GUARD	LG12	600	IVE
3	EA	SILENCER	SR64	GRY	IVE

FIELD VERIFY HINGE SIZE REQUIRED FOR EXISTING FRAME. VERIFY THAT REPLACEMENT LOCK WILL FUNCTION CORRECTLY WITH EXISTING ELECTRIC STRIKE. FURNISH IVES LG12, OR OTHER SUITABLE LOCK GUARD AT OPENINGS WITH ELECTRIC STRIKES. ADVISE ARCHITECT OF ANY ISSUES WITH LOCK/STRIKE COORDINATION. FURNISH NEW SILENCERS FOR EXISTING FRAMES.

HW SET: 19 (EXISTING ALUMINUM SINGLE)

1	EA	DEADLOCK	MS1851S (SCHOOLHOUSE FUNCTION)	628	ADA

FURNISH NEW DEADLOCK WITH THE "SCHOOLHOUSE" FUNCTION FOR EXISTING DOOR. FIELD VERIFY BACKSET OF EXISTING PREP. INSIDE THUMBTURN SHOULD BE ADA COMPLIANT VERSION.

HW SET: 20 (EXISTING DOOR)

1	EA	CLASSROOM SEC LOCK	ND75 RHO (BAA COMPLIANT)	626	SCH
3	EA	SILENCER	SR64	GRY	IVE

FURNISH NEW LEVER LOCK FOR EXISTING DOOR. FIELD VERIFY DOOR PREP TO DETERMINE COMPATIBILITY WITH SPECIFIED LOCK.

HW SET: 21 (EXISTING DOOR)

1	EA	CLASSROOM LOCK	ND70 RHO (BAA COMPLIANT)	626	SCH
3	EA	SILENCER	SR64	GRY	IVE

FURNISH NEW LEVER LOCK FOR EXISTING DOOR. FIELD VERIFY DOOR PREP TO DETERMINE COMPATIBILITY WITH SPECIFIED LOCK.

HW SET: 22 (NEW DOOR IN EXISTING FRAME)

3	EA	HINGE	BB5000 SERIES AS SPECIFIED	652	BOM
1	EA	PASSAGE SET	ND10S RHO (BAA COMPLIANT)	626	SCH
1	EA	WALL STOP	WS407CVX	630	IVE
3	EA	SILENCER	SR64	GRY	IVE

FIELD VERIFY HINGE SIZE REQUIRED FOR EXISTING FRAME. FIELD VERIFY STRIKE TYPE REQUIRED AS CERTAIN DOORS HAVE 4 7/8" STRIKES, WHILE OTHERS HAVE OLDER STYLE 3 1/4" STRIKES. FURNISH NEW SILENCERS FOR EXISTING FRAMES.

HW SET: 23 (NEW DOOR IN EXISTING FRAME)

3	EA	HINGE	BB5000 SERIES AS SPECIFIED	652	BOM
1	EA	CLASSROOM LOCK	ND70 RHO (BAA COMPLIANT)	626	SCH
1	EA	SURFACE CLOSER	4011 MC	689	LCN
1	EA	WALL STOP	WS407CVX	630	IVE
3	EA	SILENCER	SR64	GRY	IVE

FIELD VERIFY HINGE SIZE REQUIRED FOR EXISTING FRAME. FIELD VERIFY STRIKE TYPE REQUIRED AS CERTAIN DOORS HAVE 4 7/8" STRIKES, WHILE OTHERS HAVE OLDER STYLE 3 1/4" STRIKES. FURNISH NEW SILENCERS FOR EXISTING FRAMES.

HW SET: 24 (EXISTING EXTERIOR PAIR)

1	EA	SURFACE CLOSER	4111 CUSH MC	689	LCN

FURNISH NEW CLOSER FOR RH LEAF OF EXISTING PAIR. VERIFY FINISH TO MATCH EXISTING FRAME.

HW SET: 25 (EXIT STAIR PAIR)

3	EA	HINGE	BB5000 SERIES AS SPECIFIED	652	BOM
3	EA	HINGE	BB5000 WIDE THROW SERIES AS SPECIFIED	652	BOM
2	EA	FIRE EXIT HARDWARE	9827L-BE-F 996L-BE LBR	626	VON
2	EA	SURFACE CLOSER	4111 EDA MC	689	LCN
1	EA	MAGNETIC HOLD-OPEN	SEM 7820	AL	LCN
1	EA	MAGNETIC HOLD-OPEN	SEM 7840 OR SEM 7850 AS REQUIRED	AL	LCN
1	SET	ADHESIVE SEAL	105		DHS
1	EA	ADHESIVE ASTRAGAL	SA		DHS

MAGNETIC HOLD-OPENS MUST RELEASE ON FIRE ALARM.

FIELD VERIFY HINGE SIZE REQUIRED FOR EXISTING FRAME.

DUE TO EXISTING WALL CONDITION, THE LHR LEAF WILL REQUIRE WIDE-THROW HINGES AND A FLOOR MAGNET IN ORDER TO ACHIEVE MAXIMUM DEGREE OF HOLD-OPEN.

HW SET: 26 (NEW PUSH/PULL PAIR)

6	EA	HINGE	BB5000 SERIES AS SPECIFIED	652	BOM
2	EA	DOOR PULL	20 10"	630	DON
2	EA	PUSH PLATE	8200 4" X 16"	630	IVE
2	EA	SURFACE CLOSER	4011 MC	689	LCN
2	EA	KICK PLATE	8400	630	IVE
2	EA	WALL STOP	WS407CVX	630	IVE
1	SET	ADHESIVE SEAL	105		DHS

HW SET: 27 (EXIT STAIR SINGLE)

3	EA	HINGE	BB5000 SERIES AS SPECIFIED	652	BOM
1	EA	FIRE EXIT HARDWARE	98L-BE-F 996L-BE	626	VON
1	EA	SURFACE CLOSER	4111 EDA MC	689	LCN
1	EA	KICK PLATE	8400	630	IVE
1	EA	WALL STOP	WS407CVX	630	IVE
1	SET	ADHESIVE SEAL	105		DHS

HW SET: 28 (OFFICE SERVICES)

3	EA	HINGE	BB5000 SERIES AS SPECIFIED	652	BOM
1	EA	CLASSROOM LOCK	ND70 RHO (BAA COMPLIANT)	626	SCH
1	EA	SURFACE CLOSER	4011 MC	689	LCN
1	EA	KICK PLATE	8400	630	IVE
1	EA	DOME STOP	FS436 OR FS438 AS REQUIRED	626	IVE
3	EA	SILENCER	SR64	GRY	IVE

HW SET: 29 - NOT USED

1	EA	CLASSROOM SEC LOCK	ND75 RHO (BAA COMPLIANT)	626	SCH
3	EA	SILENCER	SR64	GRY	IVE

FURNISH NEW UNIT LOCK FOR EXISTING DOOR. FIELD VERIFY STRIKE TYPE REQUIRED AS CERTAIN DOORS HAVE 4 7/8" STRIKES, WHILE OTHERS HAVE OLDER STYLE 3 1/4" STRIKES. FURNISH NEW SILENCERS FOR EXISTING FRAMES.

THIS DOOR STICKS AND MUST BE PLANED AND RE-HUNG TO ENSURE PROPER OPERATION.

HW SET: 30 (EXISTING DOOR)

1	EA	CLASSROOM LOCK	ND70 RHO (BAA COMPLIANT)	626	SCH

EXISTING DOOR IS 1 3/8" THICK. PROVIDE "CHASSIS SPACERS" (2 EACH PART NUMBER XN12-012) FOR INSTALLING THE "ND" SERIES ON THIS OPENING.

HW SET: 31 (NEW EXTERIOR SINGLE)

3	EA	HINGE	BB5000 HEAVY-WEIGHT SERIES AS SPECIFIED	630	BOM
1	EA	PANIC HARDWARE	CD98NL	626	VON
1	EA	MORTISE CYLINDER	MORTISE CYLINDER AS REQUIRED	626	SCH
1	EA	RIM CYLINDER	RIM CYLINDER AS REQUIRED	626	SCH
1	EA	OVERHEAD STOP	100S	630	GLY
1	EA	KICK PLATE	8400	630	IVE
1	SET	DOOR SEAL	957C	AL	REE

1	EA	SWEEP	354C	AL	REE
1	EA	THRESHOLD	S425A	AL	REE

EXISTING AUTO OPERATOR TO BE RE-USED, AND INSTALLED ON NEW SINGLE DOOR. COORDINATE MOUNTING WITH OVERHEAD STOP.

HW SET: 32 (EXIT STAIR SINGLE)

3	EA	HINGE	BB5000 SERIES AS SPECIFIED	652	BOM
1	EA	FIRE EXIT HARDWARE	98L-NL-F 996L	626	VON
1	EA	RIM CYLINDER	RIM CYLINDER AS REQUIRED	626	SCH
1	EA	SURFACE CLOSER	4011 MC	689	LCN
1	EA	KICK PLATE	8400	630	IVE
1	EA	WALL STOP	WS407CVX	630	IVE
1	SET	ADHESIVE SEAL	105		DHS

FIELD VERIFY HINGE SIZE REQUIRED FOR EXISTING FRAMES.

HW SET: 33 (EXIT STAIR PAIR WITH CARD READER)

5	EA	HINGE	BB5000 SERIES AS SPECIFIED	652	BOM
1	EA	WIRE TRANSFER HINGE	BB5000 SERIES TW4	652	BOM
1	EA	FIRE EXIT HARDWARE	9827EO-F LBR	626	VON
1	EA	FIRE EXIT HARDWARE	9827L-F E996L LBR	626	VON
1	EA	RIM CYLINDER	RIM CYLINDER AS REQUIRED	626	SCH
2	EA	SURFACE CLOSER	4011 MC	689	LCN
2	EA	KICK PLATE	8400	630	IVE
2	EA	WALL STOP	WS407CVX	630	IVE
1	SET	ADHESIVE SEAL	105		DHS
1	EA	ADHESIVE ASTRAGAL	SA		DHS
1	EA	POWER SUPPLY	PS902		SCE
1	EA	CARD READER	EXISTING TO REMAIN		

FIELD VERIFY HINGE SIZE REQUIRED FOR EXISTING FRAMES.

DESCRIPTION OF OPERATION:

FROM STAIR SIDE, DOORS NORMALLY CLOSED AND LOCKED. VALID CARD TO RELEASE ACTIVE LEVER, ALLOWING ENTRY.

END OF SECTION

SECTION 08800

GLAZING

PART 1 - GENERAL

1.1 RELATED DOCUMENTS

A. Drawings and general provisions of the Contract, including General and Supplementary Conditions and Division 1 Specification Sections, apply to this Section.

1.2 SUMMARY

A. Section includes glazing for the following products and applications, including those specified in other Sections where glazing requirements are specified by reference to this Section:
   1. Doors.

B. Related Sections:
   1. Division 8 Section "Hollow Metal Doors And Frames."
   2. Division 8 Section "Flush Wood Doors."

1.3 ACTION SUBMITTALS

A. Make Submittals in accordance with Division 01 Section “Submittal Procedures.”

B. Product Data: For each glass product and glazing material indicated.

C. Glazing Accessory Samples: For gaskets and colored spacers, in 12-inch (300-mm) lengths.

1.4 INFORMATIONAL SUBMITTALS

A. Product Certificates: For glass and glazing products, from manufacturer.

B. Product Test Reports: Based on evaluation of comprehensive tests performed by a qualified testing agency, for tinted glass, coated glass, insulating glass and glazing gaskets.

1.5 QUALITY ASSURANCE

A. Safety Glazing Labeling: Where safety glazing labeling is indicated, permanently mark glazing with certification label of the SGCC or another certification agency acceptable to authorities having jurisdiction. Label shall indicate manufacturer's name, type of glass, thickness, and safety glazing standard with which glass complies.

1.6 DELIVERY, STORAGE, AND HANDLING

A. Protect glazing materials according to manufacturer's written instructions. Prevent damage to glass and glazing materials from condensation, temperature changes, direct exposure to sun, or other causes.

1.7 PROJECT CONDITIONS

A. Environmental Limitations: Do not proceed with glazing when ambient and substrate temperature conditions are outside limits permitted by glazing material manufacturers and when glazing channel substrates are wet from rain, frost, condensation, or other causes.

PART 2 - PRODUCTS

2.1 GLASS PRODUCTS, GENERAL

A. Thickness: Where glass thickness is indicated, it is a minimum. Provide glass lites in thicknesses as needed to comply with requirements indicated.

2.2 GLASS PRODUCTS

A. Float Glass: ASTM C 1036, Type I, Quality-Q3, Class I (clear) unless otherwise indicated.

B. Heat-Treated Float Glass: ASTM C 1048; Type I; Quality-Q3; Class I (clear) unless otherwise indicated; of kind and condition indicated.
   1. Fabrication Process: By horizontal (roller-hearth) process with roll-wave distortion parallel to bottom edge of glass as installed unless otherwise indicated.
   2. For uncoated glass, comply with requirements for Condition A.
   3. For coated vision glass, comply with requirements for Condition C (other coated glass).

C. Polished Wired Glass: ASTM C 1036, Type II, Class 1 (clear), Form 1, Quality-Q6, complying with ANSI Z97.1, Class C.
   1. Mesh: M2 (square).

2.3 GLAZING GASKETS

A. Dense Compression Gaskets: Molded or extruded gaskets of profile and hardness required to maintain watertight seal, made from one of the following:
   1. EPDM complying with ASTM C 864.
   2. Silicone complying with ASTM C 1115.
   3. Thermoplastic polyolefin rubber complying with ASTM C 1115.

B. Soft Compression Gaskets: Extruded or molded, closed-cell, integral-skinned neoprene, EPDM, silicone, or thermoplastic polyolefin rubber gaskets complying with ASTM C 509, Type II, black; of profile and hardness required to maintain watertight seal.
   1. Application: Use where soft compression gaskets will be compressed by inserting dense compression gaskets on opposite side of glazing or pressure applied by means of pressure-glazing stops on opposite side of glazing.

2.4 GLAZING SEALANTS

A. General:
1. Compatibility: Provide glazing sealants that are compatible with one another and with other materials they will contact, including glass products, seals of insulating-glass units, and glazing channel substrates, under conditions of service and application, as demonstrated by sealant manufacturer based on testing and field experience.
2. Suitability: Comply with sealant and glass manufacturers' written instructions for selecting glazing sealants suitable for applications indicated and for conditions existing at time of installation.
3. Sealants used inside the weatherproofing system, shall have a VOC content of not more than 250 g/L when calculated according to 40 CFR 59, Subpart D (EPA Method 24).
4. Colors of Exposed Glazing Sealants: As selected by Architect from manufacturer's full range.

B. Glazing Sealant: Neutral-curing silicone glazing sealant complying with ASTM C 920, Type S, Grade NS, Class 50, Use NT.

2.5 GLAZING TAPES

A. Back-Bedding Mastic Glazing Tapes: Preformed, butyl-based, 100 percent solids elastomeric tape; nonstaining and nonmigrating in contact with nonporous surfaces; with or without spacer rod as recommended in writing by tape and glass manufacturers for application indicated; and complying with ASTM C 1281 and AAMA 800 for products indicated below:
1. AAMA 806.3 tape, for glazing applications in which tape is subject to continuous pressure.
2. AAMA 807.3 tape, for glazing applications in which tape is not subject to continuous pressure.

B. Expanded Cellular Glazing Tapes: Closed-cell, PVC foam tapes; factory coated with adhesive on both surfaces; and complying with AAMA 800 for the following types:
1. AAMA 810.1, Type 1, for glazing applications in which tape acts as the primary sealant.
2. AAMA 810.1, Type 2, for glazing applications in which tape is used in combination with a full bead of liquid sealant.

2.6 MISCELLANEOUS GLAZING MATERIALS

A. Provide products of material, size, and shape complying with referenced glazing standard, requirements of manufacturers of glass and other glazing materials for application indicated, and with a proven record of compatibility with surfaces contacted in installation.

B. Cleaners, Primers, and Sealers: Types recommended by sealant or gasket manufacturer.

C. Setting Blocks: Elastomeric material with a Shore, Type A durometer hardness of 85, plus or minus 5.

D. Spacers: Elastomeric blocks or continuous extrusions of hardness required by glass manufacturer to maintain glass lites in place for installation indicated.

E. Edge Blocks: Elastomeric material of hardness needed to limit glass lateral movement (side walking).

2.7 FABRICATION OF GLAZING UNITS

A. Fabricate glazing units in sizes required to fit openings indicated for Project, with edge and face clearances, edge and surface conditions, and bite complying with written instructions of product manufacturer and referenced glazing publications, to comply with system performance requirements.

PART 3 - EXECUTION

3.1 EXAMINATION

A. Examine framing, glazing channels, and stops, with Installer present, for compliance with the following:
   1. Manufacturing and installation tolerances, including those for size, squareness, and offsets at corners.
   2. Presence and functioning of weep systems.
   3. Minimum required face and edge clearances.
   4. Effective sealing between joints of glass-framing members.

B. Proceed with installation only after unsatisfactory conditions have been corrected.

3.2 PREPARATION

A. Clean glazing channels and other framing members receiving glass immediately before glazing. Remove coatings not firmly bonded to substrates.

B. Examine glazing units to locate exterior and interior surfaces. Label or mark units as needed so that exterior and interior surfaces are readily identifiable. Do not use materials that will leave visible marks in the completed work.

3.3 GLAZING, GENERAL

A. Comply with combined written instructions of manufacturers of glass, sealants, gaskets, and other glazing materials, unless more stringent requirements are indicated, including those in referenced glazing publications.

B. Adjust glazing channel dimensions as required by Project conditions during installation to provide necessary bite on glass, minimum edge and face clearances, and adequate sealant thicknesses, with reasonable tolerances.

C. Protect glass edges from damage during handling and installation. Remove damaged glass from Project site and legally dispose of off Project site. Damaged glass is glass with edge damage or other imperfections that, when installed, could weaken glass and impair performance and appearance.

D. Apply primers to joint surfaces where required for adhesion of sealants, as determined by preconstruction testing.

E. Install setting blocks in sill rabbets, sized and located to comply with referenced glazing publications, unless otherwise required by glass manufacturer. Set blocks in thin course of compatible sealant suitable for heel bead.

F. Do not exceed edge pressures stipulated by glass manufacturers for installing glass lites.

G. Provide spacers for glass lites where length plus width is larger than 50 inches (1270 mm).
   1. Locate spacers directly opposite each other on both inside and outside faces of glass. Install correct size and spacing to preserve required face clearances, unless gaskets and glazing tapes are used that have demonstrated ability to maintain required face clearances and to comply with system performance requirements.
   2. Provide 1/8-inch (3-mm) minimum bite of spacers on glass and use thickness equal to sealant width. With glazing tape, use thickness slightly less than final compressed thickness of tape.

H. Provide edge blocking where indicated or needed to prevent glass lites from moving sideways in glazing channel, as recommended in writing by glass manufacturer and according to requirements in referenced glazing publications.

I. Set glass lites in each series with uniform pattern, draw, bow, and similar characteristics.

J. Set glass lites with proper orientation so that coatings face exterior or interior as specified.

3.4 TAPE GLAZING

A. Position tapes on fixed stops so that, when compressed by glass, their exposed edges are flush with or protrude slightly above sightline of stops.

B. Install tapes continuously, but not necessarily in one continuous length. Do not stretch tapes to make them fit opening.

C. Cover vertical framing joints by applying tapes to heads and sills first and then to jambs. Cover horizontal framing joints by applying tapes to jambs and then to heads and sills.

D. Place joints in tapes at corners of opening with adjoining lengths butted together, not lapped. Seal joints in tapes with compatible sealant approved by tape manufacturer.

E. Do not remove release paper from tape until right before each glazing unit is installed.

F. Center glass lites in openings on setting blocks and press firmly against tape by inserting dense compression gaskets formed and installed to lock in place against faces of removable stops. Start gasket applications at corners and work toward centers of openings.

3.5 SEALANT GLAZING (WET)

A. Install continuous spacers, or spacers combined with cylindrical sealant backing, between glass lites and glazing stops to maintain glass face clearances and to prevent sealant from extruding

into glass channel and blocking weep systems until sealants cure. Secure spacers or spacers and backings in place and in position to control depth of installed sealant relative to edge clearance for optimum sealant performance.

B. Force sealants into glazing channels to eliminate voids and to ensure complete wetting or bond of sealant to glass and channel surfaces.

C. Tool exposed surfaces of sealants to provide a substantial wash away from glass.

3.6 CLEANING AND PROTECTION

A. Protect glass from contact with contaminating substances resulting from construction operations. If, despite such protection, contaminating substances do come into contact with glass, remove substances immediately as recommended in writing by glass manufacturer.

B. Remove and replace glass that is broken, chipped, cracked, or abraded or that is damaged from natural causes, accidents, and vandalism, during construction period.

END OF SECTION

SECTION 09111

NON-STRUCTURAL METAL FRAMING

PART 1 - GENERAL

1.1 RELATED DOCUMENTS

A. Drawings and general provisions of the Contract, including General and Supplementary Conditions and Division 1 Specification Sections, apply to this Section.

1.2 SUMMARY

A. Section Includes:
   1. Non-load-bearing steel framing systems for interior gypsum board assemblies.
   2. Suspension systems for interior gypsum ceilingsand soffits.

B. Related Sections:
   1. Division 9 Section "Gypsum Board Shaft Wall Assemblies" for metal shaft-wall framing, gypsum shaft liners, and other components of shaft-wall assemblies.

1.3 ACTION SUBMITTALS

A. Make Submittals in accordance with Division 1 Section “Submittal Procedures.”

B. Product Data: For each type of product.
   1. Submit manufacturer's limiting heights tables for non-load bearing studs.

1.4 INFORMATION SUBMITTALS

A. Evaluation Reports: For firestop tracks, from ICC-ES.

PART 2 - PRODUCTS

2.1 DESCRIPTION

A. Fire-Test-Response Characteristics: For fire-resistance-rated assemblies that incorporate non-load-bearing steel framing, provide materials and construction identical to those tested in assembly indicated according to ASTM E 119 by an independent testing agency.

B. STC-Rated Assemblies: For STC-rated assemblies, provide materials and construction identical to those tested in assembly indicated according to ASTM E 90 and classified according to ASTM E 413 by an independent testing agency.

2.2 FRAMING SYSTEMS

A. Framing Members, General: Comply with ASTM C 754 for conditions indicated.
   1. Steel Sheet Components: Comply with ASTM C 645 requirements for metal unless otherwise indicated.
   2. Protective Coating: ASTM A 653/A 653M, G60 (Z180), hot-dip galvanized, unless otherwise indicated.

B. Studs and Runners: ASTM C 645.
   1. Steel Studs and Runners:
      a. Minimum Base-Metal Thickness: As required to comply with manufacturer's limiting heights tables, but not less than 0.0312 inch (0.79 mm).
      b. Depth: 3-5/8 inches (92 mm) or as indicated on Drawings.

C. Slip-Type Head Joints: Where indicated, provide one of the following:
   1. Double-Runner System: ASTM C 645 top runners, inside runner with 2-inch- (51-mm-) deep flanges in thickness not less than indicated for studs and fastened to studs, and outer runner sized to friction fit inside runner.

D. Firestop Tracks: Top runner manufactured to allow partition heads to expand and contract with movement of the structure while maintaining continuity of fire-resistance-rated assembly indicated; in thickness not less than indicated for studs and in width to accommodate depth of studs.
   1. Products: Subject to compliance with requirements, available products that may be incorporated into the Work include, but are not limited to, the following:
      a. Fire Trak Corp.; Fire Trak System attached to studs with Fire Trak Posi Klip.
      b. Grace Construction Products; FlameSafe FlowTrak System.
      c. Metal-Lite, Inc.; The System.
      d. Steel Network Inc. (The); VertiClip SLD or VertiTrack VTD Series.

E. Flat Strap and Backing Plate: Steel sheet for blocking and bracing in length and width indicated.
   1. Minimum Base-Metal Thickness: 0.033 inch (0.84 mm).
   2. Minimum Base Metal Thickness at Handrails: 0.042 inch (1.0-mm).

F. Cold-Rolled Channel Bridging: Steel, 0.053-inch (1.34-mm) minimum base-metal thickness, with minimum 1/2-inch- (13-mm-) wide flanges.
   1. Depth: 1-1/2 inches (38 mm).
   2. Clip Angle: Not less than 1-1/2 by 1-1/2 inches (38 by 38 mm), 0.068-inch- (1.72-mm-) thick, galvanized steel.

G. Hat-Shaped, Rigid Furring Channels: ASTM C 645.
   1. Minimum Base-Metal Thickness: 0.018 inch (0.45 mm.
   2. Depth: 7/8 inch (22.2 mm).

2.3 SUSPENSION SYSTEMS

A. Tie Wire: ASTM A 641/A 641M, Class 1 zinc coating, soft temper, 0.062-inch- (1.59-mm-) diameter wire, or double strand of 0.048-inch- (1.21-mm-) diameter wire.

B. Hanger Attachments to Concrete:

1. Anchors: Fabricated from corrosion-resistant materials with holes or loops for attaching wire hangers and capable of sustaining, without failure, a load equal to 5 times that imposed by construction as determined by testing according to ASTM E 488 by an independent testing agency.
   a. Type: Postinstalled, expansion anchor.
2. Powder-Actuated Fasteners: Suitable for application indicated, fabricated from corrosion-resistant materials with clips or other devices for attaching hangers of type indicated, and capable of sustaining, without failure, a load equal to 10 times that imposed by construction as determined by testing according to ASTM E 1190 by an independent testing agency.

C. Wire Hangers: ASTM A 641/A 641M, Class 1 zinc coating, soft temper, 0.16 inch (4.12 mm) in diameter.

D. Carrying Channels: Cold-rolled, commercial-steel sheet with a base-metal thickness of 0.053 inch (1.34 mm) and minimum 1/2-inch- (13-mm-) wide flanges.
   1. Depth: 2 inches (51 mm) or as indicated on Drawings.

E. Furring Channels (Furring Members):
   1. Hat-Shaped, Rigid Furring Channels: ASTM C 645, 7/8 inch (22 mm) deep.
      a. Minimum Base-Metal Thickness: 0.018 inch (0.45 mm).

2.4 AUXILIARY MATERIALS

A. Provide auxiliary materials that comply with referenced installation standards.
   1. Fasteners for Metal Framing: Of type, material, size, corrosion resistance, holding power, and other properties required to fasten steel members to substrates.

B. Isolation Strip at Exterior Walls: Provide one of the following:
   1. Asphalt-Saturated Organic Felt: ASTM D 226, Type I (No. 15 asphalt felt), nonperforated.
   2. Foam Gasket: Adhesive-backed, closed-cell vinyl foam strips that allow fastener penetration without foam displacement, 1/8 inch (3.2 mm) thick, in width to suit steel stud size.

PART 3 - EXECUTION

3.1 EXAMINATION

A. Examine areas and substrates, with Installer present, and including welded hollow-metal frames, cast-in anchors, and structural framing, for compliance with requirements and other conditions affecting performance of the Work.

B. Proceed with installation only after unsatisfactory conditions have been corrected.

3.2 PREPARATION

A. Suspended Assemblies: Coordinate installation of suspension systems with installation of overhead structure to ensure that inserts and other provisions for anchorages to building

structure have been installed to receive hangers at spacing required to support the Work and that hangers will develop their full strength.

3.3 INSTALLATION, GENERAL

A. Installation Standard: ASTM C 754, except comply with framing sizes and spacing indicated.
   1. Gypsum Board Assemblies: Also comply with requirements in ASTM C 840 that apply to framing installation.

B. Install supplementary framing, and blocking to support fixtures, equipment services, heavy trim, grab bars, toilet accessories, furnishings, or similar construction.

C. Install bracing at terminations in assemblies.

D. Do not bridge building control and expansion joints with non-load-bearing steel framing members. Frame both sides of joints independently.

3.4 INSTALLING FRAMED ASSEMBLIES

A. Where studs are installed directly against exterior masonry walls or dissimilar metals at exterior walls, install isolation strip between studs and exterior wall.

B. Install studs so flanges within framing system point in same direction.

C. Install tracks (runners) at floors and overhead supports. Extend framing full height to structural supports or substrates above suspended ceilings, except where partitions are indicated to terminate at suspended ceilings. Continue framing around ducts penetrating partitions above ceiling.
   1. Slip-Type Head Joints: Where framing extends to overhead structural supports, install to produce joints at tops of framing systems that prevent axial loading of finished assemblies.
   2. Door Openings: Screw vertical studs at jambs to jamb anchor clips on door frames; install runner track section (for cripple studs) at head and secure to jamb studs.
      a. Install two studs at each jamb unless otherwise indicated.
      b. Install cripple studs at head adjacent to each jamb stud, with a minimum 1/2-inch (13-mm) clearance from jamb stud to allow for installation of control joint in finished assembly.
   3. Other Framed Openings: Frame openings other than door openings the same as required for door openings unless otherwise indicated. Install framing below sills of openings to match framing required above door heads.
   4. Fire-Resistance-Rated Partitions: Install framing to comply with fire-resistance-rated assembly indicated and support closures and to make partitions continuous from floor to underside of solid structure.
      a. Firestop Track: Where indicated, install to maintain continuity of fire-resistance-rated assembly indicated.
   5. Sound-Rated Partitions: Install framing to comply with sound-rated assembly indicated.

D. Installation Tolerance: Install each framing member so fastening surfaces vary not more than 1/8 inch (3 mm) from the plane formed by faces of adjacent framing.

3.5 INSTALLING SUSPENSION SYSTEMS

A. Install suspension system components in sizes and spacings indicated on Drawings, but not less than those required by referenced installation standards for assembly types and other assembly components indicated.

B. Isolate suspension systems from building structure where they abut or are penetrated by building structure to prevent transfer of loading imposed by structural movement.

C. Suspend hangers from building structure as follows:
   1. Install hangers plumb and free from contact with insulation or other objects within ceiling plenum that are not part of supporting structural or suspension system.
      a. Splay hangers only where required to miss obstructions and offset resulting horizontal forces by bracing, countersplaying, or other equally effective means.
   2. Where width of ducts and other construction within ceiling plenum produces hanger spacings that interfere with locations of hangers required to support standard suspension system members, install supplemental suspension members and hangers in the form of trapezes or equivalent devices.
      a. Size supplemental suspension members and hangers to support ceiling loads within performance limits established by referenced installation standards.
   3. Wire Hangers: Secure by looping and wire tying, either directly to structures or to inserts, eye screws, or other devices and fasteners that are secure and appropriate for substrate, and in a manner that will not cause hangers to deteriorate or otherwise fail.
   4. Do not attach hangers to steel roof deck.
   5. Do not attach hangers to permanent metal forms. Furnish cast-in-place hanger inserts that extend through forms.
   6. Do not attach hangers to rolled-in hanger tabs of composite steel floor deck.
   7. Do not connect or suspend steel framing from ducts, pipes, or conduit.

D. Fire-Resistance-Rated Assemblies: Wire tie furring channels to supports.

E. Seismic Bracing: Sway-brace suspension systems with hangers used for support.

F. Installation Tolerances: Install suspension systems that are level to within 1/8 inch in 12 feet (3 mm in 3.6 m) measured lengthwise on each member that will receive finishes and transversely between parallel members that will receive finishes.

END OF SECTION

SECTION 09250

GYPSUM BOARD

PART 1 - GENERAL

1.1 RELATED DOCUMENTS

A. Drawings and general provisions of the Contract, including General and Supplementary Conditions and Division 1 Specification Sections, apply to this Section.

1.2 SUMMARY

A. Section includes interior gypsum board.

B. Related Sections:
1. Division 9 Section "Non-Structural Metal Framing" for non-structural framing and suspension systems that support gypsum board panels.
2. Division 9 Section "Gypsum Board Shaft Wall Assemblies" for metal shaft-wall framing, gypsum shaft liners, and other components of shaft-wall assemblies.

1.3 ACTION SUBMITTALS

A. Make Submittals in accordance with Division 1 Section “Submittal Procedures.”

B. Product Data: For each type of product.

C. Samples: For the following products:
1. Trim Accessories: Full-size Sample in 12-inch- (300-mm-) long length for each trim accessory indicated.

1.4 DELIVERY, STORAGE AND HANDLING

A. Store materials inside under cover and keep them dry and protected against weather, condensation, direct sunlight, construction traffic, and other potential causes of damage. Stack panels flat and supported on risers on a flat platform to prevent sagging.

1.5 FIELD CONDITIONS

A. Environmental Limitations: Comply with ASTM C 840 requirements or gypsum board manufacturer's written recommendations, whichever are more stringent.

B. Do not install panels that are wet, those that are moisture damaged, and those that are mold damaged.
1. Indications that panels are wet or moisture damaged include, but are not limited to, discoloration, sagging, or irregular shape.

2. Indications that panels are mold damaged include, but are not limited to, fuzzy or splotchy surface contamination and discoloration.

PART 2 - PRODUCTS

2.1 PERFORMANCE REQUIREMENTS

A. Fire-Resistance-Rated Assemblies: For fire-resistance-rated assemblies, provide materials and construction identical to those tested in assembly indicated according to ASTM E 119 by an independent testing agency.

B. STC-Rated Assemblies: For STC-rated assemblies, provide materials and construction identical to those tested in assembly indicated according to ASTM E 90 and classified according to ASTM E 413 by an independent testing agency.

2.2 GYPSUM BOARD, GENERAL

A. Size: Provide maximum lengths and widths available that will minimize joints in each area and that correspond with support system indicated.

2.3 INTERIOR GYPSUM BOARD

A. Manufacturers: Subject to compliance with requirements, available manufacturers offering products that may be incorporated into the Work include, but are not limited to, the following:
1. American Gypsum.
2. CertainTeed Corp.
3. Georgia-Pacific Gypsum LLC.
4. Lafarge North America Inc.
5. National Gypsum Company.
6. USG Corporation.

B. Gypsum Wallboard: ASTM C 1396/C 1396M.
1. Thickness: As indicated on Drawings.
2. Long Edges: Tapered.

C. Gypsum Board, Type X: ASTM C 1396/C 1396M.
1. Thickness: 5/8 inch (15.9 mm).
2. Long Edges: Tapered.

D. Abuse-Resistant Gypsum Board: ASTM C 1629/C 1629M, Level 2.
1. Core: As indicated on Drawings.
2. Long Edges: Tapered.
3. Mold Resistance: ASTM D 3273, score of 10.

2.4 TRIM ACCESSORIES

A. Interior Trim: ASTM C 1047.
1. Material: Galvanized or aluminum-coated steel sheet or rolled zinc.

2. Shapes:
   a. Cornerbead.
   b. LC-Bead: J-shaped; exposed long flange receives joint compound.
   c. L-Bead: L-shaped; exposed long flange receives joint compound.

2.5 JOINT TREATMENT MATERIALS

A. General: Comply with ASTM C 475/C 475M.

B. Joint Tape: Paper.

C. Joint Compound for Interior Gypsum Board: For each coat use formulation that is compatible with other compounds applied on previous or for successive coats.
   1. Prefilling: At open joints and damaged surface areas, use setting-type taping compound.
   2. Embedding and First Coat: For embedding tape and first coat on joints, fasteners, and trim flanges, use setting-type taping compound.
      a. Use setting-type compound for installing paper-faced metal trim accessories.
   3. Fill Coat: For second coat, use setting-type, sandable topping compound.
   4. Finish Coat: For third coat, use setting-type, sandable topping compound.

2.6 AUXILIARY MATERIALS

A. Provide auxiliary materials that comply with referenced installation standards and manufacturer's written recommendations.

B. Steel Drill Screws: ASTM C 1002, unless otherwise indicated.
   1. Use screws complying with ASTM C 954 for fastening panels to steel members from 0.033 to 0.112 inch (0.84 to 2.84 mm) thick.

C. Sound Attenuation Blankets: ASTM C 665, Type I (blankets without membrane facing) produced by combining thermosetting resins with mineral fibers manufactured from glass, slag wool, or rock wool.
   1. Fire-Resistance-Rated Assemblies: Comply with mineral-fiber requirements of assembly.

D. Acoustical Joint Sealant: Manufacturer's standard nonsag, paintable, nonstaining latex sealant complying with ASTM C 834. Product effectively reduces airborne sound transmission through perimeter joints and openings in building construction as demonstrated by testing representative assemblies according to ASTM E 90.

PART 3 - EXECUTION

3.1 EXAMINATION

A. Examine areas and substrates including welded hollow-metal frames and framing, with Installer present, for compliance with requirements and other conditions affecting performance.

B. Examine panels before installation. Reject panels that are wet, moisture damaged, and mold damaged.

C. Proceed with installation only after unsatisfactory conditions have been corrected.

3.2 APPLYING AND FINISHING PANELS, GENERAL

A. Comply with ASTM C 840.

B. Install ceiling panels across framing to minimize the number of abutting end joints and to avoid abutting end joints in central area of each ceiling. Stagger abutting end joints of adjacent panels not less than one framing member.

C. Install panels with face side out. Butt panels together for a light contact at edges and ends with not more than 1/16 inch (1.5 mm) of open space between panels. Do not force into place.

D. Locate edge and end joints over supports, except in ceiling applications where intermediate supports or gypsum board back-blocking is provided behind end joints. Do not place tapered edges against cut edges or ends. Stagger vertical joints on opposite sides of partitions. Do not make joints other than control joints at corners of framed openings.

E. Form control and expansion joints with space between edges of adjoining gypsum panels.

F. Cover both faces of support framing with gypsum panels in concealed spaces (above ceilings, etc.), except in chases braced internally.
   1. Unless concealed application is indicated or required for sound, fire, air, or smoke ratings, coverage may be accomplished with scraps of not less than 8 sq. ft. (0.7 sq. m) in area.
   2. Fit gypsum panels around ducts, pipes, and conduits.
   3. Where partitions intersect structural members projecting below underside of floor/roof slabs and decks, cut gypsum panels to fit profile formed by structural members; allow 1/4- to 3/8-inch- (6.4- to 9.5-mm-) wide joints to install sealant.

G. Isolate perimeter of gypsum board applied to non-load-bearing partitions at structural abutments, except floors. Provide 1/4- to 1/2-inch- (6.4- to 12.7-mm-) wide spaces at these locations and trim edges with edge trim where edges of panels are exposed. Seal joints between edges and abutting structural surfaces with acoustical sealant.

H. Attachment to Steel Framing: Attach panels so leading edge or end of each panel is attached to open (unsupported) edges of stud flanges first.

I. STC-Rated Assemblies: Seal construction at perimeters, behind control joints, and at openings and penetrations with a continuous bead of acoustical sealant. Install acoustical sealant at both faces of partitions at perimeters and through penetrations. Comply with ASTM C 919 and with manufacturer's written recommendations for locating edge trim and closing off sound-flanking paths around or through assemblies, including sealing partitions above acoustical ceilings.

J. Install sound attenuation blankets before installing gypsum panels unless blankets are readily installed after panels have been installed on one side.

3.3 APPLYING INTERIOR GYPSUM BOARD

A. Install interior gypsum board in the following locations:

1. Wallboard Type: As indicated on Drawings.
2. Type X: As indicated on Drawings.
3. Abuse-Resistant Type: As indicated on Drawings.

B. Single-Layer Application:
1. On ceilings, apply gypsum panels before wall/partition board application to greatest extent possible and at right angles to framing unless otherwise indicated.
2. On partitions/walls, apply gypsum panels vertically (parallel to framing) unless otherwise indicated or required by fire-resistance-rated assembly, and minimize end joints.
   a. Stagger abutting end joints not less than one framing member in alternate courses of panels.
   b. At stairwells and other high walls, install panels horizontally unless otherwise indicated or required by fire-resistance-rated assembly.
3. Fastening Methods: Apply gypsum panels to supports with steel drill screws.

C. Multilayer Application:
1. On ceilings, apply gypsum board indicated for base layers before applying base layers on walls/partitions; apply face layers in same sequence. Apply base layers at right angles to framing members and offset face-layer joints one framing member, 16 inches (400 mm) minimum, from parallel base-layer joints, unless otherwise indicated or required by fire-resistance-rated assembly.
2. On partitions/walls, apply gypsum board indicated for base layers and face layers vertically (parallel to framing) with joints of base layers located over stud or furring member and face-layer joints offset at least one stud or furring member with base-layer joints, unless otherwise indicated or required by fire-resistance-rated assembly. Stagger joints on opposite sides of partitions.
3. Fastening Methods: Fasten base layers and face layers separately to supports with screws.

3.4 INSTALLING TRIM ACCESSORIES

A. For trim with back flanges intended for fasteners, attach to framing with same fasteners used for panels. Otherwise, attach trim according to manufacturer's written instructions.

B. Interior Trim: Install in the following locations:
1. Cornerbead: Use at outside corners unless otherwise indicated.
2. LC-Bead: Use at exposed panel edges.
3. L-Bead: Use where indicated.

3.5 FINISHING GYPSUM BOARD

A. Treat gypsum board joints, interior angles, edge trim, control joints, penetrations, fastener heads, surface defects, and elsewhere as required to prepare gypsum board surfaces for decoration. Promptly remove residual joint compound from adjacent surfaces.

B. Prefill open joints and damaged surface areas.

C. Apply joint tape over gypsum board joints, except for trim products specifically indicated as not intended to receive tape.

D. Gypsum Board Finish Levels: Finish panels to levels indicated below and according to ASTM C 840:
   1. Level 1: Ceiling plenum areas, concealed areas, and where indicated.
   2. Level 2: Panels that are substrate for tile.
   3. Level 4: At panel surfaces that will be exposed to view unless otherwise indicated.
      a. Primer and its application to surfaces are specified in other Division 9 Sections.

3.6 PROTECTION

A. Protect adjacent surfaces from drywall compound and promptly remove from floors and other non-drywall surfaces. Repair surfaces stained, marred, or otherwise damaged during drywall application.

B. Protect installed products from damage from weather, condensation, direct sunlight, construction, and other causes during remainder of the construction period.

C. Remove and replace panels that are wet, moisture damaged, and mold damaged.
   1. Indications that panels are wet or moisture damaged include, but are not limited to, discoloration, sagging, or irregular shape.
   2. Indications that panels are mold damaged include, but are not limited to, fuzzy or splotchy surface contamination and discoloration.

END OF SECTION

SECTION 09265

GYPSUM BOARD SHAFT WALL ASSEMBLIES

PART 1 - GENERAL

1.1 RELATED DOCUMENTS

A. Drawings and general provisions of the Contract, including General and Supplementary Conditions and Division 1 Specification Sections, apply to this Section.

1.2 SUMMARY

A. Section includes gypsum board shaft wall assemblies.

B. Related Sections:
1. Division 9 Section "Non-Structural Metal Framing" for non-structural framing and suspension systems that support gypsum board panels.
2. Division 9 Section "Gypsum Board" for gypsum board room side finish.

1.3 ACTION SUBMITTALS

A. Make Submittals in accordance with Division 1 Section “Submittal Procedures.”

B. Product Data: For each component of gypsum board shaft wall assembly.

1.4 INFORMATIONAL SUBMITTALS

A. Evaluation Reports: For shaft wall assemblies, from ICC-ES.

1.5 DELIVERY, STORAGE, AND HANDLING

A. Store materials inside under cover and keep them dry and protected against weather, condensation, direct sunlight, construction traffic, and other potential causes of damage. Stack panels flat and supported on risers on a flat platform to prevent sagging.

1.6 FIELD CONDITIONS

A. Environmental Limitations: Comply with ASTM C 840 requirements or with gypsum board manufacturer's written recommendations, whichever are more stringent.

B. Do not install interior products until installation areas are enclosed and conditioned.

C. Do not install panels that are wet, moisture damaged, or mold damaged.

1. Indications that panels are wet or moisture damaged include, but are not limited to, discoloration, sagging, and irregular shape.
2. Indications that panels are mold damaged include, but are not limited to, fuzzy or splotchy surface contamination and discoloration.

PART 2 - PRODUCTS

2.1 PERFORMANCE REQUIREMENTS

A. Fire-Resistance-Rated Assemblies: For fire-resistance-rated assemblies, provide materials and construction identical to those tested in assembly indicated according to ASTM E 119 by an independent testing agency.

B. STC-Rated Assemblies: Provide materials and construction identical to those of assemblies tested according to ASTM E 90 and classified according to ASTM E 413 by a testing and inspecting agency.

2.2 GYPSUM BOARD SHAFT WALL ASSEMBLIES

A. Fire-Resistance Rating: As indicated.

B. STC Rating: As indicated, or if not indicated, 51 minimum.

C. Studs: Manufacturer's standard profile for repetitive members, corner and end members, and fire-resistance-rated assembly indicated.
1. Depth: As indicated.
2. Minimum Base-Metal Thickness: 0.033 inch (0.84 mm).

D. Runner Tracks: Manufacturer's standard J-profile track with manufacturer's standard long-leg length, but at least 2 inches (51 mm) long and matching studs in depth.
1. Minimum Base-Metal Thickness: Matching steel studs.

E. Firestop Tracks: Provide firestop track at head of shaft wall on each floor level.

F. Room-Side Finish: As indicated.

G. Shaft-Side Finish: Gypsum shaftliner board, moisture- and mold-resistant Type X.

H. Insulation: Sound attenuation blankets.

2.3 PANEL PRODUCTS

A. Panel Size: Provide in maximum lengths and widths available that will minimize joints in each area and that correspond with support system indicated.

B. Gypsum Shaftliner Board, Moisture- and Mold-Resistant Type X: ASTM C 1396/C 1396M; manufacturer's proprietary fire-resistive liner panels with moisture- and mold-resistant core and surfaces.

1. Products: Subject to compliance with requirements, available products that may be incorporated into the Work include, but are not limited to, the following:
   a. CertainTeed Corp.; ProRoc Moisture and Mold Resistant Shaftliner.
   b. Georgia-Pacific Gypsum LLC, Subsidiary of Georgia Pacific; Dens-Glass Ultra Shaftliner.
   c. Lafarge North America, Inc.; Firecheck Moldcheck Type X Shaftliner.
   d. National Gypsum Company; Gold Bond Brand Fire-Shield Shaftliner XP.
   e. PABCO Gypsum; Pabcore Mold Curb Shaftliner Type X.
   f. Temple-Inland Inc.; Fire-Rated SilentGuard TS Mold-Resistant Gypsum Shaftliner System.
   g. USG Corporation; Sheetrock Brand Mold Tough Gypsum Liner Panel.
2. Thickness: 1 inch (25.4 mm).
3. Long Edges: Double bevel.
4. Mold Resistance: ASTM D 3273, score of 10 as rated according to ASTM D 3274.

C. Gypsum Board: As specified in Division 9 Section "Gypsum Board."

2.4 NON-LOAD-BEARING STEEL FRAMING

A. Steel Framing Members: Comply with ASTM C 645 requirements for metal unless otherwise indicated.
   1. Protective Coating: ASTM A 653/A 653M, G60 (Z180), hot-dip galvanized unless otherwise indicated.

B. Firestop Tracks: Top runner manufactured to allow partition heads to expand and contract with movement of the structure while maintaining continuity of fire-resistance-rated assembly indicated; in thickness not less than indicated for studs and in width to accommodate depth of studs.
   1. Products: Subject to compliance with requirements, available products that may be incorporated into the Work include, but are not limited to, the following:
      a. Fire Trak Corp.; Fire Trak System attached to studs with Fire Trak Posi Klip.
      b. Grace Construction Products; FlameSafe FlowTrak System.
      c. Metal-Lite, Inc.; The System.
      d. Steel Network Inc. (The); VertiClip SLD or VertiTrack VTD Series.

2.5 AUXILIARY MATERIALS

A. Provide auxiliary materials that comply with manufacturer's written recommendations.

B. Trim Accessories: Cornerbead, edge trim, and control joints of material and shapes as specified in Division 9 Section "Gypsum Board" that comply with gypsum board shaft wall assembly manufacturer's written recommendations for application indicated.

C. Steel Drill Screws: ASTM C 1002 unless otherwise indicated.

D. Track Fasteners: Power-driven fasteners of size and material required to withstand loading conditions imposed on shaft wall assemblies without exceeding allowable design stress of track, fasteners, or structural substrates in which anchors are embedded.

1. Expansion Anchors: Fabricated from corrosion-resistant materials, with capability to sustain, without failure, a load equal to 5 times design load, as determined by testing according to ASTM E 488 conducted by a qualified testing agency.
2. Power-Actuated Anchors: Fastener system of type suitable for application indicated, fabricated from corrosion-resistant materials, with capability to sustain, without failure, a load equal to 10 times design load, as determined by testing according to ASTM E 1190 conducted by a qualified testing agency.

E. Sound Attenuation Blankets: As specified in Division 9 Section "Gypsum Board."

F. Acoustical Sealant: As specified in Division 9 Section "Gypsum Board."

PART 3 - EXECUTION

3.1 EXAMINATION

A. Examine substrates to which gypsum board shaft wall assemblies attach or abut, with Installer present, including hollow-metal frames, cast-in anchors, and structural framing. Examine for compliance with requirements for installation tolerances and other conditions affecting performance.

B. Examine panels before installation. Reject panels that are wet, moisture damaged, or mold damaged.

C. Proceed with installation only after unsatisfactory conditions have been corrected.

3.2 INSTALLATION

A. Install gypsum board shaft wall assemblies to comply with requirements of fire-resistance-rated assemblies indicated, manufacturer's written installation instructions, and ASTM C 754 other than stud-spacing requirements.

B. Do not bridge building expansion joints with shaft wall assemblies; frame both sides of expansion joints with furring and other support.

C. Install supplementary framing in gypsum board shaft wall assemblies around openings and as required for blocking, bracing, and support of gravity and pullout loads of fixtures, equipment, services, heavy trim, furnishings, wall-mounted door stops, and similar items that cannot be supported directly by shaft wall assembly framing.
1. Reinforcing: Where handrails directly attach to gypsum board shaft wall assemblies, provide galvanized steel reinforcing strip with 0.033-inch (0.84-mm) minimum thickness of base metal (uncoated), accurately positioned and secured behind at least one layer of face panel.

D. Penetrations: At penetrations in shaft wall, maintain fire-resistance rating of shaft wall assembly by installing supplementary steel framing around perimeter of penetration and fire protection behind boxes containing wiring devices and similar items.

E. Isolate perimeter of gypsum panels from building structure to prevent cracking of panels, while maintaining continuity of fire-rated construction.

F. Firestop Tracks: Where indicated, install to maintain continuity of fire-resistance-rated assembly indicated.

G. Sound-Rated Shaft Wall Assemblies: Seal gypsum board shaft walls with acoustical sealant at perimeter of each assembly where it abuts other work and at joints and penetrations within each assembly.

H. Installation Tolerance: Install each framing member so fastening surfaces vary not more than 1/8 inch (3 mm) from the plane formed by faces of adjacent framing.

3.3 PROTECTION

A. Protect installed products from damage from weather, condensation, direct sunlight, construction, and other causes during remainder of the construction period.

B. Remove and replace panels that are wet, moisture damaged, or mold damaged.
   1. Indications that panels are wet or moisture damaged include, but are not limited to, discoloration, sagging, and irregular shape.
   2. Indications that panels are mold damaged include, but are not limited to, fuzzy or splotchy surface contamination and discoloration.

END OF SECTION

SECTION 09653

RESILIENT BASE AND ACCESSORIES

PART 1 - GENERAL

1.1 RELATED DOCUMENTS

A. Drawings and general provisions of the Contract, including General and Supplementary Conditions and Division 1 Specification Sections, apply to this Section.

1.2 SUMMARY

A. Section Includes:
   1. Resilient base.
   2. Resilient stair accessories.
   3. Resilient molding accessories.

1.3 ACTION SUBMITTALS

A. Make Submittals in accordance with Division 1 Section “Submittal Procedures.”

B. Product Data: For each type of product indicated.

C. Samples for Verification: For each type of product indicated, in manufacturer's standard-size Samples but not less than 12 inches (300 mm) long, of each resilient product color, texture, and pattern required.

D. Product Schedule: For resilient products. Use same designations indicated on Drawings.

1.4 QUALITY ASSURANCE

A. Fire-Test-Response Characteristics: As determined by testing identical products according to ASTM E 648 or NFPA 253 by a qualified testing agency.
   1. Critical Radiant Flux Classification: Class I, not less than 0.45 W/sq. cm.

1.5 DELIVERY, STORAGE, AND HANDLING

A. Store resilient products and installation materials in dry spaces protected from the weather, with ambient temperatures maintained within range recommended by manufacturer, but not less than 50 deg F (10 deg C) or more than 90 deg F (32 deg C).

1.6 PROJECT CONDITIONS

A. Maintain ambient temperatures within range recommended by manufacturer, but not less than 70 deg F (21 deg C) or more than 95 deg F (35 deg C), in spaces to receive resilient products during the following time periods:
   1. 48 hours before installation.
   2. During installation.
   3. 48 hours after installation.

B. Install resilient products after other finishing operations, including painting, have been completed.

PART 2 - PRODUCTS

2.1 RESILIENT BASE

A. Resilient Base:
   1. Manufacturers: Subject to compliance with requirements, available manufacturers offering products that may be incorporated into the Work include, but are not limited to, the following:
      a. Armstrong World Industries, Inc.
      b. Flexco, Inc.
      c. Johnsonite.
      d. Roppe Corporation, USA.

B. Resilient Base Standard: ASTM F 1861.
   1. Material Requirement: Type TV (vinyl, thermoplastic).
   2. Manufacturing Method: Group II (layered).
   3. Style:
      a. At Resilient Flooring or Sealed Concrete: Cove (base with toe).
      b. At Carpet Flooring: Straight (flat or toeless).

C. Minimum Thickness: 0.125 inch (3.2 mm).

D. Height: 4 inches (102 mm).

E. Lengths: Cut lengths 48 inches (1219 mm) long or coils in manufacturer's standard length.

F. Outside Corners: Preformed.

G. Inside Corners: Preformed.

H. Colors and Patterns: As selected by Architect from full range of industry colors.

2.2 RESILIENT STAIR ACCESSORIES

A. Integral Stair Tread and Riser Units:
   1. Basis-of-Design Product: Item No. VIRTR-SQ by Johnsonite, or a comparable product of one of the following mor equal:
      a. Armstrong World Industries, Inc.

b. Endura Rubber Flooring; Division of Burke Industries, Inc.
c. Flexco, Inc.
d. Roppe Corporation, USA.

B. Resilient Stair Treads Standard: ASTM F 2169.
1. Material Requirement: Type TP (rubber, thermoplastic).
2. Surface Design:
a. Class 2, Pattern: Raised-square design.

C. Nosing Style: Square, adjustable to cover angles between 60 and 90 degrees.

D. Nosing Height: 2 inches (51 mm).

E. Thickness: 1/4 inch (5.3 mm) and tapered to back edge.

F. Size: Lengths and depths to fit each stair tread in one piece.

G. Risers: Smooth, flat, toeless, height and length to cover risers; produced by same manufacturer as treads and recommended by manufacturer for installation with treads.
1. Thickness: 0.125 inch (3.2 mm).

H. Colors and Patterns: As selected by Architect from full range of industry colors.

2.3 RESILIENT MOLDING ACCESSORY

A. Resilient Molding Accessories:
1. Reducer strip for resilient floor covering.
2. Transition strips.

B. Material: Vinyl.

C. Profile and Dimensions: As indicated.

D. Colors and Patterns: As selected by Architect from full range of industry colors.

2.4 INSTALLATION MATERIALS

A. Trowelable Leveling and Patching Compounds: Latex-modified, portland cement based or blended hydraulic-cement-based formulation provided or approved by manufacturer for applications indicated.

B. Adhesives: Water-resistant type recommended by manufacturer to suit resilient products and substrate conditions indicated.
1. Adhesives shall have a VOC content of 50 g/L or less when calculated according to 40 CFR 59, Subpart D (EPA Method 24), except that adhesive for rubber stair treads shall have a VOC content of 60 g/L or less.

C. Stair-Tread-Nose Filler: Two-part epoxy compound recommended by resilient tread manufacturer to fill nosing substrates that do not conform to tread contours.

PART 3 - EXECUTION

3.1 EXAMINATION

A. Examine substrates, with Installer present, for compliance with requirements for maximum moisture content and other conditions affecting performance of the Work.

B. Verify that finishes of substrates comply with tolerances and other requirements specified in other Sections and that substrates are free of cracks, ridges, depressions, scale, and foreign deposits that might interfere with adhesion of resilient products.

C. Proceed with installation only after unsatisfactory conditions have been corrected.

3.2 PREPARATION

A. Prepare substrates according to manufacturer's written instructions to ensure adhesion of resilient products.

B. Concrete Substrates for Resilient Stair Treads and Accessories: Prepare according to ASTM F 710.
   1. Verify that substrates are dry and free of curing compounds, sealers, and hardeners.
   2. Remove substrate coatings and other substances that are incompatible with adhesives and that contain soap, wax, oil, or silicone, using mechanical methods recommended by manufacturer. Do not use solvents.
   3. Alkalinity and Adhesion Testing: Perform tests recommended by manufacturer.
   4. Moisture Testing: Perform tests recommended by manufacturer and as follows. Proceed with installation only after substrates pass testing.
      a. Perform anhydrous calcium chloride test, ASTM F 1869. Proceed with installation only after substrates have maximum moisture-vapor-emission rate of 3 lb of water/1000 sq. ft. (1.36 kg of water/92.9 sq. m) in 24 hours.
      b. Perform relative humidity test using in situ probes, ASTM F 2170. Proceed with installation only after substrates have maximum 75 percent relative humidity level measurement.

C. Fill cracks, holes, and depressions in substrates with trowelable leveling and patching compound and remove bumps and ridges to produce a uniform and smooth substrate.

D. Do not install resilient products until they are same temperature as the space where they are to be installed.
   1. Move resilient products and installation materials into spaces where they will be installed at least 48 hours in advance of installation.

E. Sweep and vacuum clean substrates to be covered by resilient products immediately before installation.

3.3 RESILIENT BASE INSTALLATION

A. Comply with manufacturer's written instructions for installing resilient base.

B. Apply resilient base to walls, columns, pilasters, casework and cabinets in toe spaces, and other permanent fixtures in rooms and areas where base is required.

C. Install resilient base in lengths as long as practicable without gaps at seams and with tops of adjacent pieces aligned.

D. Tightly adhere resilient base to substrate throughout length of each piece, with base in continuous contact with horizontal and vertical substrates.

E. Do not stretch resilient base during installation.

F. Preformed Corners: Install preformed corners before installing straight pieces.

3.4 RESILIENT ACCESSORY INSTALLATION

A. Comply with manufacturer's written instructions for installing resilient accessories.

B. Resilient Stair Accessories:
1. Use stair-tread-nose filler to fill nosing substrates that do not conform to tread contours.
2. Tightly adhere to substrates throughout length of each piece.
3. For treads installed as separate, equal-length units, install to produce a flush joint between units.

C. Resilient Molding Accessories: Butt to adjacent materials and tightly adhere to substrates throughout length of each piece. Install reducer strips at edges of carpet and resilient floor covering that would otherwise be exposed.

3.5 CLEANING AND PROTECTION

A. Comply with manufacturer's written instructions for cleaning and protection of resilient products.

B. Perform the following operations immediately after completing resilient product installation:
1. Remove adhesive and other blemishes from exposed surfaces.
2. Sweep and vacuum surfaces thoroughly.
3. Damp-mop surfaces to remove marks and soil.

C. Protect resilient products from mars, marks, indentations, and other damage from construction operations and placement of equipment and fixtures during remainder of construction period.

D. Cover resilient products until Substantial Completion.

END OF SECTION

SECTION 09900

PAINTING

PART 1 - GENERAL

1.1 RELATED DOCUMENTS

A. Drawings and general provisions of the Contract, including General and Supplementary Conditions and Division 01 Specification Sections, apply to this Section.

1.2 SUMMARY

A. Section includes surface preparation and the application of paint systems on interior and exterior substrates.

B. Related Sections:
1. Division 5 Sections for shop priming of metal substrates with primers specified in this Section.

1.3 ACTION SUBMITTALS

A. Make Submittals in accordance with Division 1 Section “Submittal Procedures.”

B. Product Data: For each type of product. Include preparation requirements and application instructions.

C. Samples for Verification: For each type of paint system and in each color and gloss of topcoat.
1. Submit Samples on rigid backing, 8 inches (200 mm) square.
2. Step coats on Samples to show each coat required for system.
3. Label each coat of each Sample.
4. Label each Sample for location and application area.

D. Product List: For each product indicated, include the following:
1. Cross-reference to paint system and locations of application areas. Use same designations indicated on Drawings and in schedules.
2. VOC content.

1.4 DELIVERY, STORAGE, AND HANDLING

A. Store materials not in use in tightly covered containers in well-ventilated areas with ambient temperatures continuously maintained at not less than 45 deg F (7 deg C).
1. Maintain containers in clean condition, free of foreign materials and residue.
2. Remove rags and waste from storage areas daily.

1.5 FIELD CONDITIONS

A. Apply paints only when temperature of surfaces to be painted and ambient air temperatures are between 50 and 95 deg F (10 and 35 deg C).

B. Do not apply interior paints when relative humidity exceeds 85 percent; at temperatures less than 5 deg F (3 deg C) above the dew point; or to damp or wet surfaces.

C. Do not apply exterior paints in snow, rain, fog, or mist; when relative humidity exceeds 85 percent; at temperatures less than 5 deg F (3 deg C) above the dew point; or to damp or wet surfaces.

PART 2 - PRODUCTS

2.1 MANUFACTURERS

A. Manufacturers: Subject to compliance with requirements, provide products by one of the following or equal:
1. AkzoNobel Paints (ANP).
2. Benjamin Moore & Co. (Moore).
3. PPG Architectural Coatings, Inc. (PPG).
4. The Sherwin-Williams Company (S-W).

2.2 PAINT, GENERAL

A. Products: Subject to compliance with requirements, provide products listed in other Part 3 articles for the paint category indicated.

B. Material Compatibility:
1. Provide materials for use within each paint system that are compatible with one another and substrates indicated, under conditions of service and application as demonstrated by manufacturer, based on testing and field experience.
2. For each coat in a paint system, provide products recommended in writing by manufacturers of topcoat for use in paint system and on substrate indicated.

C. VOC Content: Products shall comply with VOC limits of authorities having jurisdiction and, for interior paints and coatings applied at Project site, the following VOC limits, exclusive of colorants added to a tint base, when calculated according to 40 CFR 59, Subpart D (EPA Method 24).
1. Flat Paints and Coatings: 50 g/L.
2. Nonflat Paints and Coatings: 150 g/L.
3. Primers, Sealers, and Undercoaters: 200 g/L.
4. Anticorrosive and Antirust Paints Applied to Ferrous Metals: 250 g/L.
5. Zinc-Rich Industrial Maintenance Primers: 340 g/L.
6. Pretreatment Wash Primers: 420 g/L.

D. Colors: As selected by Architect from manufacturer's full range.

2.3 SOURCE QUALITY CONTROL

A. Testing of Paint Materials: Owner reserves the right to invoke the following procedure:
   1. Owner will engage the services of a qualified testing agency to sample paint materials. Contractor will be notified in advance and may be present when samples are taken. If paint materials have already been delivered to Project site, samples may be taken at Project site. Samples will be identified, sealed, and certified by testing agency.
   2. Testing agency will perform tests for compliance with product requirements.
   3. Owner may direct Contractor to stop applying coatings if test results show materials being used do not comply with product requirements. Contractor shall remove noncomplying paint materials from Project site, pay for testing, and repaint surfaces painted with rejected materials. Contractor will be required to remove rejected materials from previously painted surfaces if, on repainting with complying materials, the two paints are incompatible.

PART 3 - EXECUTION

3.1 EXAMINATION

A. Examine substrates and conditions, with Applicator present, for compliance with requirements for maximum moisture content and other conditions affecting performance of the Work.

B. Maximum Moisture Content of Substrates: When measured with an electronic moisture meter as follows:
   1. Gypsum Board: 12 percent.

C. Gypsum Board Substrates: Verify that finishing compound is sanded smooth.

D. Verify suitability of substrates, including surface conditions and compatibility with existing finishes and primers.

E. Proceed with coating application only after unsatisfactory conditions have been corrected.
   1. Application of coating indicates acceptance of surfaces and conditions.

3.2 PREPARATION

A. Comply with manufacturer's written instructions and recommendations in "MPI Manual" applicable to substrates indicated.

B. Remove hardware, covers, plates, and similar items already in place that are removable and are not to be painted. If removal is impractical or impossible because of size or weight of item, provide surface-applied protection before surface preparation and painting.
   1. After completing painting operations, use workers skilled in the trades involved to reinstall items that were removed. Remove surface-applied protection if any.

C. Clean substrates of substances that could impair bond of paints, including dust, dirt, oil, grease, and incompatible paints and encapsulants.
   1. Remove incompatible primers and reprime substrate with compatible primers or apply tie coat as required to produce paint systems indicated.

D. Steel Substrates: Remove rust, loose mill scale, and shop primer, if any. Clean using methods recommended in writing by paint manufacturer.

E. Shop-Primed Steel Substrates: Clean field welds, bolted connections, and abraded areas of shop paint, and paint exposed areas with the same material as used for shop priming to comply with SSPC-PA 1 for touching up shop-primed surfaces.

F. Galvanized-Metal Substrates: Remove grease and oil residue from galvanized sheet metal fabricated from coil stock by mechanical methods to produce clean, lightly etched surfaces that promote adhesion of subsequently applied paints.

3.3 APPLICATION

A. Apply paints according to manufacturer's written instructions and to recommendations in "MPI Manual."
   1. Use applicators and techniques suited for paint and substrate indicated.
   2. Paint surfaces behind movable equipment and furniture same as similar exposed surfaces. Before final installation, paint surfaces behind permanently fixed equipment or furniture with prime coat only.
   3. Paint front and backsides of access panels, removable or hinged covers, and similar hinged items to match exposed surfaces.
   4. Paint both sides and edges of exterior doors and entire exposed surface of exterior door frames.
   5. Do not paint over labels of independent testing agencies or equipment name, identification, performance rating, or nomenclature plates.
   6. Primers specified in painting schedules may be omitted on items that are factory primed or factory finished if acceptable to topcoat manufacturers.

B. If undercoats or other conditions show through topcoat, apply additional coats until cured film has a uniform paint finish, color, and appearance.

C. Apply paints to produce surface films without cloudiness, spotting, holidays, laps, brush marks, roller tracking, runs, sags, ropiness, or other surface imperfections. Cut in sharp lines and color breaks.

3.4 FIELD QUALITY CONTROL

A. Dry Film Thickness Testing: Owner may engage the services of a qualified testing and inspecting agency to inspect and test paint for dry film thickness.
   1. Contractor shall touch up and restore painted surfaces damaged by testing.
   2. If test results show that dry film thickness of applied paint does not comply with paint manufacturer's written recommendations, Contractor shall pay for testing and apply additional coats as needed to provide dry film thickness that complies with paint manufacturer's written recommendations.

3.5 CLEANING AND PROTECTION

A. At end of each workday, remove rubbish, empty cans, rags, and other discarded materials from Project site.

B. After completing paint application, clean spattered surfaces. Remove spattered paints by washing, scraping, or other methods. Do not scratch or damage adjacent finished surfaces.

C. Protect work of other trades against damage from paint application. Correct damage to work of other trades by cleaning, repairing, replacing, and refinishing, as approved by Architect, and leave in an undamaged condition.

D. At completion of construction activities of other trades, touch up and restore damaged or defaced painted surfaces.

3.6 INTERIOR PAINTING SCHEDULE

A. Steel Substrates:
1. Institutional Low-Odor/VOC Latex System:
a. Prime Coat: Primer, rust-inhibitive, water based, MPI #107.
1) ANP Devoe High Performance Coating; DEVFLEX 4020 Direct to Metal Primer & Flat Finish, 4020PF.
2) Moore; Super Spec High Performance, Acrylic Metal Primer, P04/KP04.
3) PPG; Pitt-Tech Plus, Int/Ext Industrial DTM Primer White, 90-912.
4) S-W; Pro Industrial, Procryl Universal Primer, B66W310.
b. Intermediate Coat: Latex, interior, institutional low odor/VOC, matching topcoat.
c. Topcoat: Latex, interior, institutional low odor/VOC, semi-gloss (Gloss Level 5), MPI #147.
1) ANP; Glidden Professional; Lifemaster No VOC Interior Acrylic Latex Semi-Gloss, 9200.
2) Moore; Eco Spec, Interior Latex Semi-Gloss Enamel, W224.
3) PPG; Pure Performance, Interior Latex Semi-Gloss, 9-500.
4) S-W; Harmony, Interior Latex Semi-Gloss, B10W00951.

B. Galvanized-Metal Substrates:
1. Institutional Low-Odor/VOC Latex System:
a. Prime Coat: Primer, galvanized, water based, MPI #134.
1) ANP Devoe High Performance Coating; DEVFLEX 4020 Direct to Metal Primer & Flat Finish, 4020PF.
2) Moore; Super Spec High Performance, Acrylic Metal Primer, P04KP04.
3) PPG; Interior/Exterior WB Industrial Primer, 90-912.
4) S-W; Industrial & Marine, D.T.M. Acrylic Primer/Finish, B66W1.
b. Intermediate Coat: Latex, interior, institutional low odor/VOC, matching topcoat.
c. Topcoat: Latex, interior, institutional low odor/VOC, semi-gloss (Gloss Level 5), MPI #147.
1) ANP; Glidden Professional; Lifemaster No VOC Interior Acrylic Latex Semi-Gloss, 9200
2) Moore; Eco Spec, Interior Latex Semi-Gloss Enamel, W224.
3) PPG; Pure Performance, Interior Latex Semi-Gloss, 9-500.
4) S-W; Harmony, Interior Latex Semi-Gloss, B10W00951.

C. Gypsum Board Wall Substrates:
1. Institutional Low-Odor/VOC Latex System:
a. Prime Coat: Primer sealer, interior, institutional low odor/VOC, MPI #149.
1) ANP Glidden Professional; Lifemaster No VOC Interior Acrylic Primer, 9116.
2) Moore; Eco Spec, Interior Latex Primer Sealer, W231.

3) PPG; Speedhide, Interior Latex Primer Sealer, 6-2.
4) S-W; ProGreen 200, Low VOC Interior Latex Primer, B28W00600.

b. Intermediate Coat: Latex, interior, institutional low odor/VOC, matching topcoat.

c. Topcoat: Latex, interior, institutional low odor/VOC, (Gloss Level 2), MPI #144.
1) ANP Glidden Professional; Lifemaster No VOC Interior Acrylic Latex Eggshell, 9300.
2) Moore; Eco Spec, Interior Latex Eggshell Enamel, W223.
3) PPG; PPG, Interior Eggshell White/Pastel Base, CP-5184.
4) S-W; Harmony, Interior Latex Eg-Shel, B09W00951.

D. Gypsum Board Ceiling Substrates:

1. Institutional Low-Odor/VOC Latex System:

a. Prime Coat: Primer sealer, interior, institutional low odor/VOC, MPI #149.
1) ANP Glidden Professional; Lifemaster No VOC Interior Acrylic Primer, 9116.
2) Moore; Eco Spec, Interior Latex Primer Sealer, W231.
3) PPG; Speedhide, Interior Latex Primer Sealer, 6-2.
4) S-W; ProGreen 200, Low VOC Interior Latex Primer, B28W00600.

b. Intermediate Coat: Latex, interior, institutional low odor/VOC, matching topcoat.

c. Topcoat: Latex, interior, institutional low odor/VOC, flat (Gloss Level 1), MPI #143.
1) ANP; Glidden Professional; Lifemaster No VOC Interior Acrylic Latex Flat, 9100
2) Moore; Eco Spec, Interior Latex Flat, W219.
3) PPG; Pure Performance, Interior Latex Flat, 9-100.
4) S-W; Harmony, Interior Latex Flat, B5W951.

3.7 EXTERIOR PAINTING SCHEDULE

A. Steel Substrates:

1. Alkyd System:

a. Prime Coat: Primer, alkyd, anticorrosive for metal, MPI #79.
1) ANP; Devoe High Performance Coatings; Devguard Low VOC Universal Primer, 4360
2) Moore; Super Spec, D.T.M. Alkyd Low Lustre Enamel, Z163.
3) PPG; Pitt-Tech Int/Ext Industrial DTM Primer/Finish Enamel, 90-712.
4) S-W; Kem Kronik Universal Metal Primer, B50WZ1.

b. Intermediate Coat: Exterior alkyd enamel matching topcoat.

c. Topcoat: Alkyd, exterior, gloss (Gloss Level 6), MPI #9.
1) ANP; Devoe High Performance Coatings; Devguard Alkyd Gloss Enamel, 4348
2) Moore; Moorcraft Super Spec Urethane Alkyd Gloss Enamel, Z22-08.
3) PPG; Pitt-Tech Int/Ext Industrial DTM Primer/Finish Enamel, 90-712.
4) S-W; Industrial & Marine Seaguard 1000 Marine Enamel, N41W00620.

END OF SECTION

SECTION 10400

SIGNAGE

PART 1 - GENERAL

1.1 RELATED DOCUMENTS

A. Drawings and general provisions of the Contract, including General and Supplementary Conditions and Division 1 Specification Sections, apply to this Section.

1.2 SUMMARY

A. Section includes panel signs.

B. Related Sections:
1. Division 1 Section "Temporary Facilities and Controls" for temporary Project identification signs and for temporary information and directional signs.
2. Division 16 Section "Electrical" for labels, tags, and nameplates for electrical equipment, and for illuminated, self-luminous, and photoluminescent exit sign units.

1.3 ACTION SUBMITTALS

A. Make Submittals in accordance with Division 1 Section “Submittal Procedures.”

B. Product Data: For each type of product.

C. Shop Drawings: For panel signs.
1. Include fabrication and installation details and attachments to other work.
2. Show sign mounting heights, locations of supplementary supports to be provided by others, and accessories.
3. Show message list, typestyles, graphic elements, including raised characters and Braille, and layout for each sign at least half size.

1.4 INFORMATIONAL SUBMITTALS

A. Qualification Data: For Installer and manufacturer.

1.5 CLOSEOUT SUBMITTALS

A. Maintenance Data: For signs to include in maintenance manuals.

1.6 QUALITY ASSURANCE

A. Installer Qualifications: Manufacturer of products.

1.7 FIELD CONDITIONS

A. Field Measurements: Verify locations of anchorage devices and electrical service embedded in permanent construction by other installers by field measurements before fabrication, and indicate measurements on Shop Drawings.

PART 2 - PRODUCTS

2.1 PERFORMANCE REQUIREMENTS

A. Accessibility Standard: Comply with applicable provisions in the U.S. Architectural & Transportation Barriers Compliance Board's ADA-ABA Accessibility Guidelines for Buildings and Facilities and ICC A117.1 for signs.

2.2 SIGNS

A. Manufacturers: Subject to compliance with requirements, available manufacturers offering products that may be incorporated into the Work include, but are not limited to, the following:
   1. ASI Sign Systems, Inc.
   2. Best Sign Systems Inc.
   3. Mohawk Sign Systems.
   4. Supersine Company (The); Division of Stamp-Rite, Inc.
   5. Vomar Products, Inc.

B. Panel Signs: Sign with smooth, uniform surfaces; with message and characters having uniform faces, sharp corners, and precisely formed lines and profiles; and as follows:
   1. Laminated-Sheet Sign: Photopolymer face sheet with raised graphics laminated to acrylic backing sheet to produce composite sheet.
      a. Composite-Sheet Thickness: Manufacturer's standard for size of sign, but not less than 0.125 inch (3.18 mm).
      b. Surface-Applied Graphics: Applied vinyl film, paint, or photo image.
   2. Sign-Panel Perimeter: Finish edges smooth.
      a. Edge Condition: As indicated.
      b. Corner Condition in Elevation: As indicated.
   3. Mounting: Surface mounted to wall with countersunk flathead through fasteners.
   4. Surface Finish and Applied Graphics:
      a. Integral Acrylic Sheet Color: As selected by Architect from full range of industry colors.
      b. Painted Finish and Graphics: Manufacturer's standard, factory-applied acrylic polyurethane, in color as selected by Architect from manufacturer's full range.
      c. Photo-Image Graphics: Manufacturer's standard multicolor, 600-dpi halftone or dot-screen image.
      d. Overcoat: Manufacturer's standard baked-on clear coating.
   5. Text and Typeface: Typeface as selected by Architect from manufacturer's full range and variable content as scheduled.

2.3 PANEL-SIGN MATERIALS

A. Acrylic Sheet: ASTM D 4802, category as standard with manufacturer for each sign, Type UVF (UV filtering).

B. Plastic-Laminate Sheet: NEMA LD 3, general-purpose HGS grade, 0.048-inch (1.2-mm) nominal thickness.

C. Vinyl Film: UV-resistant vinyl film of nominal thickness indicated, with pressure-sensitive, permanent adhesive on back; die cut to form characters or images as indicated and suitable for exterior applications.

D. Paints and Coatings for Sheet Materials: Inks, dyes, and paints that are recommended by manufacturer for optimum adherence to surface and are UV and water resistant for colors and exposure indicated.

2.4 ACCESSORIES

A. Fasteners and Anchors: Manufacturer's standard as required for secure anchorage of signage, noncorrosive and compatible with each material joined, and complying with the following:
   1. Exposed Metal-Fastener Components, General:
      a. Fastener Heads: For nonstructural connections, use flathead screws and bolts with tamper-resistant spanner-head or one-way-head slots.
   2. Sign Mounting Fasteners:
      a. Through Fasteners: Exposed metal fasteners matching sign finish, with type of head indicated, installed in predrilled holes.

2.5 FABRICATION

A. Provide manufacturer's standard sign assemblies according to requirements indicated.
   1. Preassemble signs and assemblies in the shop to greatest extent possible. Disassemble signs and assemblies only as necessary for shipping and handling limitations. Clearly mark units for reassembly and installation; apply markings in locations concealed from view after final assembly.

PART 3 - EXECUTION

3.1 EXAMINATION

A. Examine substrates, areas, and conditions, with Installer present, for compliance with requirements for installation tolerances and other conditions affecting performance of signage work.

B. Verify that sign-support surfaces are within tolerances to accommodate signs without gaps or irregularities between backs of signs and support surfaces unless otherwise indicated.

C. Proceed with installation only after unsatisfactory conditions have been corrected.

3.2 INSTALLATION

A. Install signs using mounting methods indicated and according to manufacturer's written instructions.
   1. Install signs level, plumb, true to line, and at locations and heights indicated, with sign surfaces free of distortion and other defects in appearance.
   2. Install signs so they do not protrude or obstruct according to the accessibility standard.
   3. Before installation, verify that sign surfaces are clean and free of materials or debris that would impair installation.

B. Room-Identification Signs and Other Accessible Signage: Install in locations on walls as indicated and according to accessibility standard.

C. Mounting Methods:
   1. Through Fasteners: Drill holes in substrate using predrilled holes in sign as template. Countersink holes in sign if required. Place sign in position and flush to surface. Install through fasteners and tighten.

3.3 ADJUSTING AND CLEANING

A. Remove and replace damaged or deformed signs and signs that do not comply with specified requirements. Replace signs with damaged or deteriorated finishes or components that cannot be successfully repaired by finish touchup or similar minor repair procedures.

B. Remove temporary protective coverings and strippable films as signs are installed.

C. On completion of installation, clean exposed surfaces of signs according to manufacturer's written instructions, and touch up minor nicks and abrasions in finish. Maintain signs in a clean condition during construction and protect from damage until acceptance by Owner.

END OF SECTION

SECTION 16720 – FIRE ALARM SYSTEMS

TABLE OF CONTENTS

PART 1 GENERAL 2
- 1.01 Related Documents 2
- 1.02 Summary 2
- 1.03 Performance Requirements 2
- 1.04 Order of Precedence 2
- 1.05 Submittals 3
- 1.06 Coordination 4
- 1.07 Quality Assurance 4
- 1.08 Scheduling 5
- 1.09 Warranty 6

PART 2 PRODUCTS 7
- 2.01 Functional Description of the Systems 7
- 2.02 Minimum Components 7
- 2.03 Wiring 7
- 2.04 System Field Devices - General 7
- 2.05 Automatic Detectors – General 8
- 2.06 Addressable Photoelectric Smoke Detectors 8
- 2.07 Detector Bases 8
- 2.08 Addressable Monitor Modules 8
- 2.09 Addressable Control Relay Output Modules 9
- 2.10 Fault Isolator Modules 9
- 2.11 Magnetic door hold-open devices 9

PART 3 EXECUTION 10
- 3.01 Examination 10
- 3.02 Preparation 10
- 3.03 General Equipment Installation 10
- 3.04 Wiring Installation 10
- 3.05 Field Quality Control 12
- 3.06 Cleaning and Protection 12
- 3.07 Engineer Pre-Acceptance 13
- 3.08 Authority Having Jurisdiction Final Acceptance 13
- 3.09 Project Closeout Procedures 13

PART 1 GENERAL

1.01 Related Documents

A. Drawings and general provisions of the Contract and Agreement apply to this section.

B. Project Manual

1.02 Summary

A. Drawings supplied with this specification shall be used as a reference for the requirement and location of system components. Work includes visiting the sites to observe the existing conditions, and confirmation of the required quantities of devices and specific options for locations of the same.

B. At the time of bid, all exceptions taken to these Specifications, variances from these Specifications and all substitutions of equipment specified shall be listed in writing and forwarded to Hughes Associates, Inc. (Engineer) and Rhode Island College (Owner). Any such exceptions, variances, or substitutions, which were not listed at the time of bid shall not be approved or considered.

C. The Work includes all labor, materials, services, software, programming, tools, transportation, and temporary construction necessary to provide magnetic door hold open devices as identified in the contract documents.

D. The Work includes patching and painting of all holes created by the removal of existing equipment to match the existing wall, ceiling, etc. Cover plates on existing backboxes are not acceptable.

E. The Work includes all fees and activities required to secure approvals for necessary State and Local permits.

F. The Work includes submitting detailed Shop Drawing Plans, Wiring Diagrams, Calculations and Product Data to the Engineer and RIC for review prior to submitting same to local officials (as required) for approval and permit as outlined in Section 1.05.

G. The Work includes performing field quality control activities.

H. The Work includes documenting and submitting the results of integrity and functional testing.

I. The Work includes submitting As-built Plans and closeout documentation to the Engineer for review prior to scheduling Owner demonstration training as outlined in Section 1.05.

J. The Work includes training Owner's personnel on the operation of the system, required maintenance tasks and frequencies, and the locations of all equipment necessary to maintain and operate the fire alarm system as outlined in Section 1.05.

1.03 Performance Requirements

A. Modifications to the existing fire alarm system to include the following:

1. Magnetic door hold open devices, as shown in the contract documents.

1.04 Order of Precedence

A. Should conflicts arise out of discrepancies between documents referenced in this specification, the most stringent requirement shall apply; however, should a level of stringency be indeterminable, the discrepancies shall be resolved as follows:

1. State and local codes shall take precedence over this specification.

2. The National Fire Protection Association Standards shall take precedence over this specification.

3. Rhode Island College Standards shall take precedence over this specification.

4. This specification shall take precedence over the drawings.

1.05 Submittals

A. In the event that the any of the following submittal packages is required to be revised and re-submitted due to nonconformance with this specification, illegibility of the submittal, incomplete submittals, noncompliance with the referenced local, state and national Codes, Standards and Regulations or nonconformance with pertinent documentation relative to the project, the Contractor, in advance, shall pay a $1,500.00 fee associated with the additional submittal review. Payment of the fee shall be solely the Contractor's responsibility.

B. Pre-Installation Documentation: Absolutely no work or material fabrication shall be conducted prior to submittal and approval by the Engineer.

1. Product Data: For each product specified in Part 2. Submittal shall indicate listing and approvals, selected options and electrical characteristics.

2. Equipment List: Identify type, quantity, make and model number of each piece of equipment (including spare components) included in submittal. Types and quantities of equipment indicated shall coincide with the types and quantities of equipment used in the battery calculations and those shown on the shop drawings.

3. Shop Drawing Plans: Minimum 1/8"=1'-0" scale floor plans and corresponding riser diagram inclusive of information required by NFPA 72-2002 requirements.

4. Wiring Diagrams: Point-to-point fire alarm control equipment installation diagrams inclusive of information required by NFPA 72-2002 requirements; typical wiring diagrams are not acceptable.

5. Sequence of Operation: A sequence of operation that describes how the existing fire alarm system interfaces with the new magnetic door holders during an alarm, supervisory and trouble condition.

C. Pre-Acceptance Documentation:

1. As-Built Drawings: Showing all field changes from original Shop Drawing Plan submittal. Drawings shall include:

   a. The exact locations and installation details of all equipment installed including power supplies and magnetic door holders.

   b. The installed wiring and color-coding and wire tag notifications for the exact locations of all installed junction boxes and terminal cabinets.

   c. Specific point-to-point interconnections between all equipment and internal wiring of the equipment. Typical point-to-point wiring diagrams are not acceptable.

2. Testing Plan: Include a step-by-step description of all tests and indicate type and location of test apparatus to be employed.

3. Preliminary Record of Completion: Prepared in accordance with NFPA 72-2002 §4.5.2.1(a).

4. Statement of Completion; to indicate that system installation, field quality control and commissioning is complete, a signed written statement, substantially in the form as follows:

D. "The undersigned, having been engaged as the Fire Alarm Contractor for the installation of magnetic door holders at Rhode Island College - Gaige Hall confirms that the fire alarm system equipment has been installed in accordance with the system manufacturer's wiring diagrams, installation instructions and technical specifications provided to us by the manufactur-

er and Rhode Island College. Field quality control procedures are complete, system indicators are normal, and the system is suitable for demonstration testing."

E. Final Acceptance Documentation:

1. As-Built Drawings: With final revisions per Engineer's comments.
2. Final Record of Completion: Prepared in accordance with NFPA 72-2002.
3. Test Reports: From Pre-Acceptance testing; substantially in the format and inclusive of information required by NFPA 72-2002 Figure 10.6.2.3.

F. Closeout Documentation:

1. Maintenance Data: Operating and Maintenance Manual to include the following:
   a. Final Equipment List identifying the quantities and types of equipment listed by manufacturer's part number.
   b. Detailed narrative description of the operation of the newly installed equipment and its interface with the existing equipment.
   c. Product datasheet (or specification sheet) for each piece of fire alarm system equipment installed.
   d. Testing results of all wiring free from faults, as specified in this specification.
   e. Detailed description of routine maintenance and testing as required and recommended and as would be provided under a maintenance contract, including testing and maintenance instructions for each type of device installed.
      1. This information shall include manuals that outline inspection, testing and cleaning procedures for all detectors and control equipment, as well as any other special maintenance procedures for any other pieces of fire alarm system equipment installed in the buildings.
   f. A service directory, including a list of names and telephone numbers of those who provide service for the system.
2. Documentation of programming with the disks containing the programming information. Include necessary non-disclosure agreement or licensing agreement.
3. Electronic As-Built Drawings: Submit electronic AutoCAD files on compact disk. Coordinate AutoCAD version with Owner at time of submittal.
4. Statement of Warranty.

1.06 Coordination

A. Coordinate the installation of the fire alarm system magnetic door hold-open devices and testing of associated equipment and circuits with all related trades, contractors, equipment maintenance and testing representatives, the Engineer, the Owner and the authorities having jurisdiction.

B. Magnetic door hold-open circuits. Magnetic door hold-open circuits shall be provided such that upon alarm or loss of power selected magnetic door hold-open devices (as shown in the contract documents) shall release, allowing the held open door to automatically close. The Contractor shall be responsible to field verify the number and location of all magnetic door hold-open circuits and for wiring up to and including connection to these circuits. The Contractor shall ensure correct operation of these interconnections during an alarm condition.

1.07 Quality Assurance

A. Each component of the fire alarm system shall be listed as a product of a single fire alarm system manufacturer under the appropriate category for the intended use in Underwriters Laboratories, Inc. (UL), UL FPED *Fire Protection Equipment Directory*. All control equipment shall be listed under UL category UOJZ Control Units System as a single unit. Partial listings, or multiple listings for various major sections of the control equipment, shall not be acceptable.

B. Electrical components, devices, and accessories shall be Listed and labeled as defined in NFPA 70, Article 100, by a testing agency acceptable to authorities having jurisdiction.

C. All control equipment shall have transient protection devices that comply with the requirements outlined in UL 864 9th Edition, *Standard for Control Units for Fire-Protective Signaling Systems*.

D. All materials and equipment (initiating devices, notification appliances, etc.) shall be new and unused.

E. All equipment supplied shall be first quality and the manufacturer's best type and latest model capable of complying with all requirements of this specification and shall have been in continuous production and in continuous service in commercial applications for at least one year. Obsolete equipment shall not be used.

F. Installer Qualifications:

1. Licensed in the State of Rhode Island and be experienced in the installation of fire alarm systems in buildings similar to the Work described herein and has obtained design and inspection approvals for similar projects from authorities having jurisdiction.

2. Foreman: Provide proof of competence of both their company and the individual foreman that will be assigned to this project, in the area of installing fire detection, alarm, and control systems for at least five (5) years and acceptable to the Owner. Once assigned, the Contractor's foreman shall not be changed without the approval of the Owner.

G. The fire alarm system shall comply with all applicable state and local codes including the Rhode Island Fire Safety Code.

H. Buildings accessible to the disabled or impaired shall comply with the provisions of the *Americans with Disabilities Act Accessibility Guidelines (ADAAG)*.

I. Products, installation and testing shall be in accordance with the applicable provisions of the following as referenced by the Rhode Island Fire Safety Code:

1. NFPA 1, *Uniform Fire Code,* 2002 Edition, as amended by the State of Rhode Island.

2. NFPA 13, *Standard for the Installation of Sprinkler Systems*, 2002 Edition.

3. NFPA 70, *National Electrical Code*, 2005 Edition.

4. NFPA 72, *National Fire Alarm Code*, 2002 Edition.

J. The requirements and recommendations of the latest published edition of the equipment manufacturers' product datasheets, technical specifications, installation instructions and wiring guidelines shall be followed.

1.08 Scheduling

A. The Contractor's Foreman shall act as primary point of contact and responsible-in-charge for coordinating the Pre-Acceptance Test with the other portions of the Work, Owner and the Engineer.

B. The Contractor's Foreman shall act as primary point of contact and responsible-in-charge for coordinating the Final-Acceptance Test with the other portions of the Work, Owner, Engineer and Authorities.

1.09 Warranty

A. The Contractor shall guarantee all new equipment installed and new raceways, new wiring and connections to existing wiring from defects in workmanship and inherent mechanical and electrical defects for a period of one (1) year from the date of substantial completion of the project. See Part 1 “Submittals”.

B. The Manufacturer or the authorized representative shall guarantee all new system equipment for a period of two (2) years from the date of substantial completion of the project. See Part 1 “Submittals”.

PART 2 PRODUCTS

2.01 Functional Description of the Systems

A. The systems shall include new electromagnetic door hold open devices controlled by the existing fire alarm system.

B. Alarm Condition

1. Auxiliary Functions

a. Where applicable, all auxiliary functions shall be connected to and operated by the control unit.

b. Magnetically Held-Open Doors

1. Upon receipt of an alarm from any initiating device or loss of power, selected magnetic door hold-open devices (as shown in the contract documents) shall release, allowing the held open door to automatically close from the building in alarm.

2.02 Minimum Components

A. The modifications to the automatic fire detection and alarm system shall consist of, but not be limited to:

1. Addressable, analog photoelectric smoke detectors, with standard bases (if remote power supplied are provided).

2. Addressable monitor modules and control relay output modules.

3. Magnetic door holders

2.03 Wiring

A. All system wiring size shall be as determined suitable by the manufacturer and in compliance with the *National Electrical Code*, yet they shall not be any smaller than as specified herein.

B. Conductors shall be minimum #16 gauge solid copper, type thhn, thwn or tfn. All wiring shall be run continuously from device to device. .

C. Shielded wire shall be used as directed by the FACU manufacturer.

D. All wiring shall be installed in metal raceway. Raceways shall include rigid steel threaded conduit, electrical metal conduit (EMT) and surface metal raceway (e.g., wiremold).

2.04 System Field Devices - General

A. Addressable devices shall operate under the following ranges of environmental conditions:

1. Ambient Temperature: 32-100 degrees Fahrenheit.

2. Relative humidity: 0-93 percent, non-condensing.

3. Air velocity: 300 feet per minute.

B. Each addressable device shall include a means to assign a unique address code to the device in the field. This address code shall serve as the means by which the system program recognizes the device.

C. Failure of any single device shall not hinder the operation of any other devices connected to the signaling line circuit.

D. Failure of the control unit to properly communicate with any addressable device shall initiate the proper trouble sequence. While in this trouble condition, the control unit shall cause actual alarm input from devices to override trouble alarm.

2.05 Automatic Detectors – General

A. All automatic smoke detectors shall be of the addressable, analog photoelectric type and shall be interchangeably mounted into a common twist-lock base.

2.06 Addressable Photoelectric Smoke Detectors

A. Addressable analog photoelectric smoke detectors with standard detector bases shall be installed in all common corridors, in stairwells at each floor level, and in the vicinity of all fire alarm system control equipment, in accordance with this specification and as shown on the drawings. Unless otherwise shown on the drawings, these common area detectors shall be spaced at thirty (30) foot centers, and spaced in accordance with NFPA 72 and the manufacturer's installation instructions. Smoke detectors shall only be installed in those environments suitable for proper smoke detector operation.

B. UL 268, photoelectric smoke detector with general alarm setting in all common spaces of 3.0% - 4.0% per foot obscuration.

C. The detectors shall provide a combination alarm/power LED. The LED shall flash under normal conditions, indicating that the detector is operational and in regular communication with the control unit. The LED shall be placed into steady illumination under an alarm condition. An output connection shall also be provided in the base to connect an external remote alarm LED. The mounting location of every device shall be approved by the Owner.

2.07 Detector Bases

A. Automatic detectors shall utilize a common, plug-in, twist-lock, tamper-resistant type base that accommodates photoelectric and thermal detectors. Detectors shall be interchangeable to simplify field conversion.

B. Provide bases constructed of white, high impact polycarbonate designed for mounting on a standard 3-1/2 inch or 4 inch octagonal or 4-inch square outlet box. Provide screw terminal connections for No. 14 AWG wire.

C. Removal of the detector from the base shall cause a trouble indication at the FACU. Removal of the detector shall not disrupt the alarm circuit wiring or prevent the receipt of alarms from other devices operating in the circuit.

D. Insertion of an incorrect detector type into the base shall cause a "Wrong Device" trouble condition at the FACU until the proper type of detector is installed, or the system is reprogrammed. The system program shall recognize the insertion of a wrong device and shall automatically default to the set point values corresponding to the inserted device, and shall monitor alarm and trouble conditions according to the default parameters.

2.08 Addressable Monitor Modules

A. Each addressable monitor module shall be able to support any number of normally open (N/O) devices. Wiring to the devices(s) being monitored shall be Class A supervised (Style D). Module status (normal, alarm, supervisory, trouble) shall be transmitted to the FACU.

B. Addressable monitor modules shall include a mounting plate for installation in a junction box or shall be mounted in a locked cabinet or approved box, as shown on the manufacturers recommended specifications.

C. The addressable monitor modules shall provide address-setting means.

D. An LED shall be provided which shall flash under normal conditions, indicating that the monitor module is operational and in regular communication with the control unit.

2.09 Addressable Control Relay Output Modules

A. Provide addressable control relay output modules to permit hardwired control capability from the signaling line circuit. Relay contacts shall be DPDT, rated 2 amperes at 24 VDC.

B. Each relay shall operate according to the control program resident in the FACU. Relays shall be supervised for trouble conditions (open, short, device missing/failed) at the FACU.

C. Relay output modules shall include a mounting plate for installation in a junction box.

D. The relay output module shall provide address-setting means and shall also store an internal identifying code which the control unit shall use to identify the type of device.

E. An LED shall be provided which shall flash under normal conditions, indicating that the Relay Output Module is operational and is in regular communication with the control unit.

F. Provide transient suppressors for inductive loads.

G. All wiring and power shall be provided to properly operate all relays connected to the SLC.

H. Contractor is responsible to provide wiring and power in order to power field relays.

2.10 Fault Isolator Modules

A. Fault isolator modules shall provide short circuit isolation for signaling line circuit wiring. Fault isolator modules shall be listed to UL 864, *Standard for Control Units for Fire-Protective Signaling Systems*.

B. The isolator module shall mount directly to a minimum 2 1/8 inch deep, standard 4-inch square electrical box, without the use of special adapters or trim rings.

C. Power and communications shall be supplied by the signaling line circuit.

D. Fault isolator modules shall report faults to the satellite and master FACU.

E. After the wiring fault is repaired, the fault isolator modules shall test the lines and automatically restore the connection.

2.11 Magnetic door hold-open devices

A. Magnetic door hold-open devices shall be UL Listed to UL 228, Standard for Door Closers-Holders, With or Without Integral Smoke Detectors

B. Units shall be equipped for wall or floor mounting as designated by the existing location and shall be complete with matching door plate. The material and finish shall match the door hardware.

C. The unit shall operate from a 24VDC source, and shall have a minimum of 25 lbs. holding force.

D. If the Contractor provides separated remote power supplies for powering door hold open devices, the power supplies shall be monitored by the fire alarm system for abnormal (i.e., “Trouble”) conditions and shall be protected with an analog-addressable photoelectric smoke detector.

E. Contractor is responsible to provide wiring and power in order to power field relays.

PART 3 EXECUTION

3.01 Examination

A. Coordinate examinations with the Owner.

B. Examine and verify actual location of equipment, initiating devices, notification appliances, monitor modules, output modules, fault isolation modules, remote power supplies and other components.

C. Examine and verify actual locations of vertical and horizontal raceway including existing raceway that may be reused.

D. Examine walls and partitions for suitable thickness, fire- and smoke-rated construction, framing and other conditions where equipment is to be installed prior to preparing pre-installation submittal.

E. Promptly report conflicts with proposed solutions.

3.02 Preparation

A. Prepare and submit a minimum of six (6) complete “Pre-Installation Documentation” submittal packages to the Engineer for review prior to submitting same to local officials (as required) for approval and permit. Resubmit portions or entirety of submittal to address Engineer comments prior to submitting package to local officials (as required) for approval and permit. See Part 1 “Submittals” for submittal content.

B. Obtain Owner approval to deliver materials and begin installation once “Pre-Installation Documentation” review process is complete and necessary local approvals and permits have been secured.

3.03 General Equipment Installation

A. Installation, workmanship, fabrication, assembly, erection, examination, inspection and testing shall be in accordance with NFPA 72.

3.04 Wiring Installation

A. The wiring and raceway system for the fire alarm system shall be in accordance with NFPA 70, *National Electrical Code*. Device and appliance boxes shall be new and low-profile.

B. Furnish metal raceway, wiring, outlet boxes, junction boxes, cabinets, labels and similar devices necessary for the complete installation of the fire alarm system. Wiring shall be of the type as specified herein and recommended by the manufacturer and shall be installed in metal raceway throughout.

C. Fire alarm system wiring within the building shall be installed in metal raceway with steel couplings and box connectors. Cast "LB" or "T" type connectors shall be permitted. An equipment-bonding conductor shall be provided in all flexible metallic raceways.

D. All fire alarm system riser conduits shall be minimum 1-inch in diameter.

E. All wiring shall be installed continuous from device to device.

F. Terminal cabinets with hinged, lockable red covers, by Space Age Electronics, Marlboro, MA, or approved equal shall be provided at all junction points. All conductor splices shall be made on screw-type terminal blocks – wire nuts, butt, crimp or screw type connectors shall not be used. All terminals within a terminal cabinet shall be properly and permanently labeled. All junction box covers shall be painted red.

G. Raceways containing conductors identified as "Fire Alarm System" conductors shall not contain other conductors, and no AC carrying conductors shall be allowed in the same raceway with the DC fire alarm detection and signaling conductors.

H. The conductors for the notification appliance circuits shall not be installed in the same raceway as the conductors for signaling line circuits unless written certification from the manufacturer is supplied to the Engineer indicating that the inclusion of these circuits in the same raceway is acceptable and that no additional consideration is needed for these circuits.

I. Notification appliance circuits and control equipment shall be arranged and installed so that loss of any one (1) notification appliance circuit shall not cause the loss of any other notification appliance circuit in the system.

J. Color coding of conductors shall be approved by the Owner. Unless otherwise indicated, the color code for all fire alarm system conductors shall be as follows:

1. Signaling line circuits and initiating device circuits shall be red and black. Red shall be positive and black shall be negative. (SLC/IDC)
2. Audible notification appliance circuits shall be blue and white. Blue shall be positive and white shall be negative (NAC).
3. Sprinkler/standpipe circuits shall be red and black. Red shall be positive and black shall be negative.
4. Smoke detector power circuits shall be brown and violet. Violet shall be positive and brown shall be negative.
5. Auxiliary remote power supply circuits shall be brown and violet. Violet shall be positive and brown shall be negative.
6. Electro-magnetic door hold-open circuits shall be gray and gray.
7. HVAC shut-down circuits shall be orange and yellow.
8. Remote annunciator circuits shall be violet and numbered at each end.
9. Bond wires from the control unit to the master box ground rod, and all required bonding conductors shall be green.
10. AC supply circuit to the main FACU shall be white, black and red. The black shall be one phase, and the red shall be the opposite phase, if required. The white shall be the neutral. If a separate feed is required for the battery charger, it shall be black and white unless the main FACU requires only one AC feed. In that case, the conductors to the battery charger shall be red and white.
11. Municipal master box tripping circuits shall be orange and orange. Conductors for this circuit shall be installed in a separate raceway.

K. Exposed raceways shall be run parallel and perpendicular to the walls and ceilings. Wherever practical, exposed raceways shall be run on the ceiling as close as possible to a wall or as high as possible on a wall. Where exposed raceways shall cross under a structural beam or rib, they shall be run down on one side of the beam or rib, across its bottom, and up to the ceiling on the other side of the beam or rib. No spanning from beam to beam or rib to rib shall be permitted. The use of a raceway body on one side of a beam or rib shall be permitted provided it shall be readily accessible.

L. Exposed conduit must be painted in accordance with Section 09900.

M. Fault isolator modules shall be furnished as required and shall be mounted as directed by the manufacturer. The field location of the fault circuit isolators shall be labeled so that the de-

vices may be easily located, and that location shall be noted on the point-to-point and as-built drawings.

N. The power employed to operate the fire alarm system shall have a high degree of reliability and capacity for the intended service. Connections to this power service shall be made on a dedicated branch circuit(s). The circuit shall be mechanically protected.

O. All wiring within the control unit shall be neatly served in the panel gutters and be secured by means of Thomas & Betts "Ty-Raps" or by other approved means.

P. Where penetrations of floor slabs, fire-resistance rated walls and/or smoke barrier walls are made, the wiring shall be sleeved in metal raceway and the penetrations shall be fire-stopped with UL Listed through-penetration firestop assembly.

3.05 Field Quality Control

A. Work shall be performed in accordance with the best and the most modern practices of the trade. The entire system shall be installed in a neat and workmanlike manner, in accordance with the standard instructions and recommendations of the manufacturer and in accordance with the approved manufacturer's wiring diagrams unless otherwise specifically permitted by the Owner and the Engineer.

B. The system shall be installed under the supervision of a qualified, trained, NICET (minimum Level III) Certified manufacturer's representative. The technical representative is expected to be on site with the Contractor during the installation of wiring and during the entire time of final connections and testing of the fire alarm system. The system shall be demonstrated to perform all of the functions as specified.

C. The supervisory work of the qualified manufacturer's technical representative shall include, but not necessarily be limited to, checking all the system wiring connections; advising the Contractor regarding technical details of the installation; and the adjustment and testing of all components of the system in order to ensure a complete and satisfactorily operable system. The manufacturer's technical representative shall be on site, as required by the Owner and the Engineer, during the entire installation and connection of the new control equipment. The technical representative shall monitor all wiring changes and assist the Contractor to ensure a smooth transition to the new control equipment. The cost of the technical representative shall be paid by the Contractor and shall be included in the bid price. The Contractor shall identify the amount of manufacturer’s technical representative’s man-hours that shall be provided and the per-hour cost (including the cost for possible overtime [premium] hours) for the technical representative’s time.

D. Perform Test wiring to be free from grounds and short circuit faults. Document and endorse results, and forward to the supplier, the Owner and the Engineer. No connections to the FACU shall be made until the system wiring has been accepted by the equipment supplier.

E. Perform inspections and tests required by NFPA 72-2002, "Inspection Testing and Maintenance" for control equipment, batteries, conductors, remote transmission, remote annunciators, initiating devices, notification appliances and auxiliary functions.

1. Replace system components that do not pass test procedures and retest to demonstrate compliance. Repeat procedure until satisfactory results are obtained. Replace detectors that our outside their marked sensitivity range.

2. Use the NFPA 72-2002 "Record of Completion" to document the inspection and test results.

3.06 Cleaning and Protection

A. Do not install smoke detectors prior to substantial completion by other portions of the Work.

B. Remove paint splatters and other spots, dirt, and debris. Touch up scratches and marred finish to match original finish. Clean unit(s) internally using methods and materials recommended by manufacturer.

3.07 Engineer Pre-Acceptance

A. Prepare and submit one (1) complete "Pre-Acceptance Documentation" submittal package to the Engineer a minimum of five (5) business days prior to proposed pre-acceptance test date. See Part 1 "Submittals" for submittal content. Resubmit portions or entirety of submittal to address Engineer comments prior to scheduling test date.

B. Schedule Pre-Acceptance Test with Owner, Engineer and related trades once submittal package was been reviewed to the satisfaction of the Engineer. Tests shall not be scheduled or conducted prior to satisfactory review of "Pre-Acceptance Documentation" submittal package. A programmer with a computer must be present at the test.

C. Demonstrate system functional performance. Document testing results in the format specified by NFPA 72-2002 Figure 10.6.2.3; at a minimum, perform acceptance testing in accordance with NFPA 72-2002 Section 10.4.1.

D. Reschedule testing where unsatisfactory results cannot be resolved such that testing can be completed during business hours on the scheduled day. See Owner "General Agreement" for possible additional costs and penalties.

E. Upon satisfactory completion of the Pre-Acceptance Test, leave the system operating for a minimum of one week prior to the Final Acceptance Test.

3.08 Authority Having Jurisdiction Final Acceptance

A. Prepare and submit a minimum of six (6) complete "Final Acceptance Documentation" submittal packages to the Engineer for review prior to submitting same to local officials for final system approval. Resubmit portions or entirety of submittal to address Engineer comments prior to submitting package to local officials. See Part 1 "Submittals" for submittal content.

B. Submit reviewed "Final Acceptance Documentation" submittal package to authority and coordinate scheduling (minimum ten (10) business days notice) of common fire sprinkler and fire alarm system acceptance testing. If acceptable to the authority, the reviewed "Approval Documentation" submittal may be submitted to the authority at the time of the final acceptance tests. A programmer with a computer must be present at the test.

C. Demonstrate system components to authority having jurisdiction as necessary.

D. A 60-hour battery test shall be performed if requested by the Authority Having Jurisdiction.

E. Reschedule testing where unsatisfactory results cannot be resolved such that testing can be completed to the satisfaction of the authorities. See Owner "General Agreement" for possible additional costs and penalties.

F. Upon satisfactory completion of the tests, leave the fire alarm system in proper working order.

3.09 Project Closeout Procedures

A. Prepare and submit a minimum of six (6) closeout documentation packages to the Engineer for review prior to scheduling Owner demonstration and training. Resubmit portions or entirety of submittal to address Engineer comments prior to scheduling demonstration and training. See Part 1 "Submittals" for submittal content.

B. Schedule Owner demonstration and training with the Owner for each building. Provide at least five (5) working days notice.

C. Demonstrate equipment, specialties, and accessories with the Owner. Review operating and maintenance information with the Owner.

1. Fire Alarm Response Teams – University Security Personnel: Prior to final acceptance of the fire alarm system, provide operation training to each shift of the Owner's designated Building Manager. Each training session shall be a minimum of 1 hour and shall be conducted on shift or at a time acceptable to the Owner. Each session shall include an overview of the system and the devices connected to it, emergency procedures (including alarm, trouble and supervisory condition procedures), control panel operation, and safety requirements. Each session shall include a complete demonstration of the system.

2. The manufacturer's technical representative shall also be required to instruct designated building and management personnel in the general operation of the system and to give the designated personnel an overview of the system functions when the system is in normal, supervisory mode, alarm mode, and trouble mode, as specified in this specification.

END OF SECTION

Rhode Island College - Fire Code Upgrade

January 06, 2011

Providence, RI

WILLIAM C. GAIGE HALL
CRAIG-LEE HALL

LOCUS PLAN

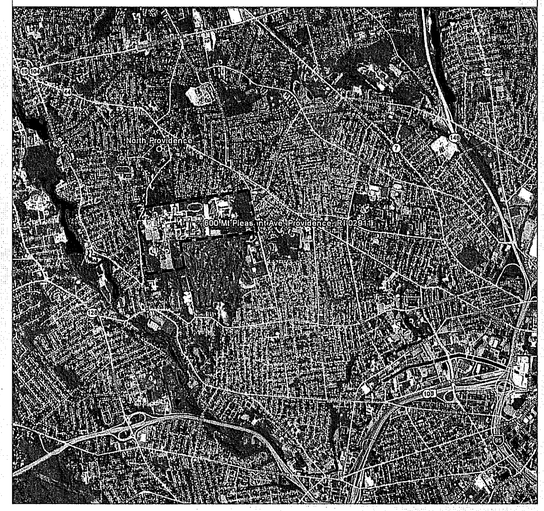

CAMPUS MAP

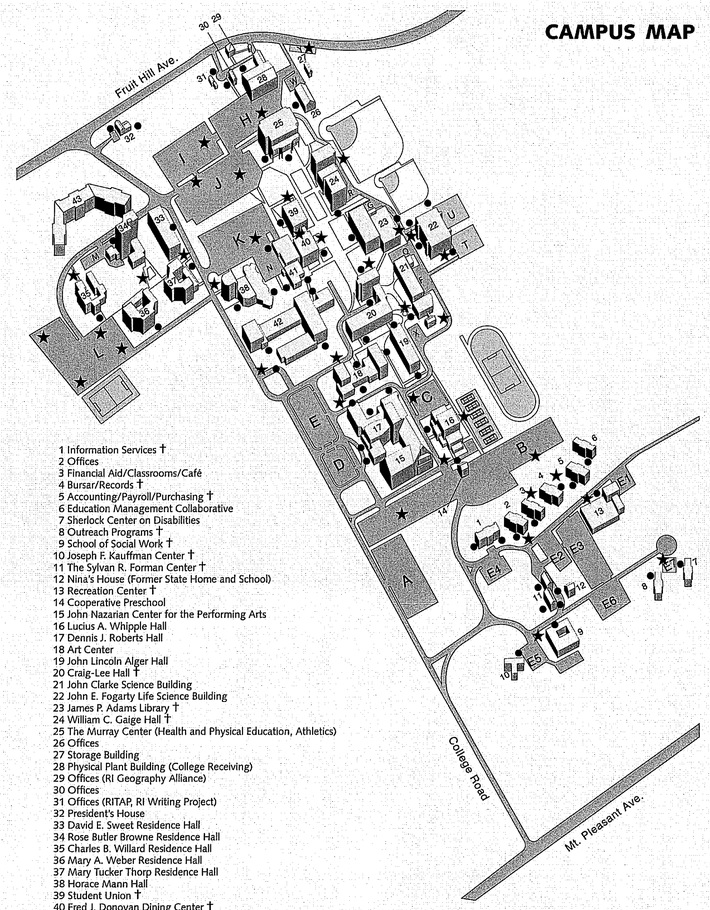

1 Information Services †
2 Offices
3 Financial Aid/Classrooms/Café
4 Bursar/Records †
5 Accounting/Payroll/Purchasing †
6 Education Management Collaborative
7 Sherlock Center on Disabilities
8 Outreach Programs †
9 School of Social Work †
10 Joseph F. Kauffman Center †
11 The Sylvan R. Forman Center †
12 Nina's House (Former State Home and School)
13 Recreation Center †
14 Cooperative Preschool
15 John Nazarian Center for the Performing Arts
16 Lucius A. Whipple Hall
17 Dennis J. Roberts Hall
18 Art Center
19 John Lincoln Alger Hall
20 Craig-Lee Hall †
21 John Clarke Science Building
22 John E. Fogarty Life Science Building
23 James P. Adams Library †
24 William C. Gaige Hall †
25 The Murray Center (Health and Physical Education, Athletics)
26 Offices
27 Storage Building
28 Physical Plant Building (College Receiving)
29 Offices (RI Geography Alliance)
30 Offices
31 Offices (RITAP, RI Writing Project)
32 President's House
33 David E. Sweet Residence Hall
34 Rose Butler Browne Residence Hall
35 Charles B. Willard Residence Hall
36 Mary A. Weber Residence Hall
37 Mary Tucker Thorp Residence Hall
38 Horace Mann Hall
39 Student Union †
40 Fred J. Donovan Dining Center †
41 Faculty Center
42 Henry Barnard Laboratory School
43 New Residence Hall

DRAWING / ISSUE SCHEDULE

ARCHITECTURAL

SHEET NUMBER	SHEET TITLE	PROGRESS PRINT 9/15/2010	CODE REVIEW 9/30/2010	REVISION 1 11/3/2010	SFMO COMMENT 1/6/2011
A-000	COVER	X	X	X	X
A-051	DOOR SCHEDULES, ELEVATIONS, & TYP. WALL TYPES	X	X	X	X
A-052	TYPICAL STAIR & DOOR DETAILS	X	X	X	X
A1-100	BASEMENT FLOOR PLAN GAIGE HALL	X	X	X	X
A1-101	FIRST FLOOR PLAN GAIGE HALL	X	X	X	X
A1-102	SECOND FLOOR PLAN GAIGE HALL	X	X	X	X
A1-103	THIRD FLOOR PLAN GAIGE HALL	X	X	X	X
A2-100	BASEMENT FLOOR PLAN CRAIG-LEE HALL	X	X	X	X
A2-101a	GROUND FLOOR PARTIAL PLAN (EAST WING) CRAIG-LEE HALL	X	X	X	X
A2-101b	GROUND FLOOR PARTIAL PLAN (HUMANITIES WING) CRAIG-LEE HALL	X	X	X	X
A2-102a	FIRST FLOOR PARTIAL PLAN (EAST WING) CRAIG-LEE HALL	X	X	X	X
A2-102b	FIRST FLOOR PARTIAL PLAN (HUMANITIES WING) CRAIG-LEE HALL	X	X	X	X
A2-103a	SECOND FLOOR PARTIAL PLAN (EAST WING) CRAIG-LEE HALL	X	X	X	X
A2-103b	SECOND FLOOR PARTIAL PLAN (HUMANITIES WING) CRAIG-LEE HALL	X	X	X	X
A2-104	THIRD FLOOR PARTIAL PLAN (HUMANITIES WING)CRAIG-LEE HALL	X	X	X	X
A2-105	FOURTH FLOOR PARTIAL PLAN (HUMANITIES WING) CRAIG-LEE HALL	X	X	X	X

HAI PROJECT NO. 1TWW00003-000

Hughes Associates Inc.
Fire Protection Engineers
& Code Consultants
New England Offices
Rhode Island
117 Metro Center Blvd
Suite 1002
Warwick, RI 02886
Phone: (401) 736-8992
Fax: (401) 736-8929
Massachusetts
2 Mount Royal Ave.
Suite 420
Marlborough, MA 01460
Phone: (508) 624-7766
Fax: (508) 624-7718

The copying or re-use of this document, or portions thereof, for any reason other than the original project or the purpose originally intended, without the consent of Hughes Associates, Inc., is prohibited.

Submission History

No.	Description	Date
1	CODE REVIEW SET	09/30/10
2	REVISION #1	11/3/10
3	SFMO COMMENTS	01/06/11

CUBE 3 STUDIO
architecture interiors planning
360 Merrimack Street Lawrence, MA 01843
phone: 978.989.9900 www.cube3studio.com

Gaige Hall &
Craig-Lee Hall
Rhode Island College
Providence, Rhode Island

Seal

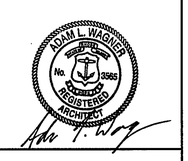

Project Description: Fire Code Upgrade Project

Design
Scale: As Noted
Drawn: GH
Design:
Review: TW

Drawing Title: COVER

Drawing No.: A-000

GAIGE HALL DOOR SCHEDULE

DOOR NO.	ROOM NAME	DOOR SIZE	DOOR MATERIAL	DOOR ELEV.	GLAZING	NEW FRAME MATERIAL	NEW FRAME ELEV.	NEW FRAME HEAD	NEW FRAME JAMB	NEW FRAME SILL	HWS	FIRE RATING	DOOR NO.	REMARKS
0050A	STAIR	3'-0" x 6'-10"	HM	A	NONE	HM	A	11/A-052	10/A-052		2	60	0050A	
0050B	STAIR	2'-6" x 7'-0"	HM	A	NONE	HM	A	11/A-052	10/A-052		2	60	0050B	
0050C	STAIR	2'-6" x 7'-0"	HM	A	NONE	HM	A	11/A-052	10/A-052		1		0050C	
0060A	STAIR	3'-0" x 7'-0"	WD	B	GL						32	60	0060A	
0069A	CONFERENCE ROOM	VIF	WD	C	GL						17		0069A	VIF FRAMING CONDITION
0069B	CONFERENCE ROOM	VIF	WD	C	GL						17		0069B	VIF FRAMING CONDITION
0070A	STAIR	5'-0" x 7'-0" PAIR (2'-0" & 3'-0" LEAF)	WD	B	GL						33	60	0070A	EX CARD READER
0140A	STAIR	5'-0" x 6'-10" (3'-0" W/ SIDELIGHT)	HM	B	GL	HM	C	11/A-052	10/A-052		31		0140A	INSTALL NEW FRAME
0140B	STAIR	5'-0" x 7'-0" PAIR (2'-0" & 3'-0" LEAF)	WD	B	GL						5	60	0140B	INSTALL MAGNETIC HOLD OPENS
0145A	LOUNGE	3'-0" x 7'-0"	WD	C	GL						17		0145A	
0146A	ROOM	EXISTING									19		0146A	
0150A	STAIR	3'-4" X 6'-10"	HM	A	NONE						6		0150A	
0150B	STAIR	5'-0" x 7'-0" PAIR (2'-0" & 3'-0" LEAF)	WD	B	GL	HM	B	11/A-052	10/A-052		4	60	0150B	INSTALL NEW FRAME
0150C	STAIR	3'-0" x 7'-0"	HM	A	NONE	HM	A	11/A-052	10/A-052		7	60	0150C	
0160A	STAIR	3'-4" X 6'-10"	HM	A	NONE						15		0160A	
0160B	STAIR	5'-0" x 7'-0" PAIR (2'-0" & 3'-0" LEAF)	WD	B	GL						4	60	0160B	
0161A	LOBBY	EXISTING									16		0161A	REPLACE INTERIOR LOCK W/ BOLT
0163A	CLASSROOM	3'-0" x 7'-0"	WD	C	GL						17		0163A	
0163B	CLASSROOM	3'-0" x 7'-0"	WD	C	GL						18		0163B	
0164A	CLASSROOM	3'-0" x 7'-0"	WD	C	GL						17		0164A	EX CARD READER
0164B	CLASSROOM	3'-0" x 7'-0"	WD	C	GL						18		0164B	EX CARD READER
0165A	CLASSROOM	3'-0" x 7'-0"	WD	C	GL						18		0165A	EX CARD READER
0168A	CLASSROOM	3'-0" x 7'-0"	WD	C	GL						18		0168A	EX CARD READER
0170A	STAIR	5'-0" x 7'-0" PAIR (2'-0" & 3'-0" LEAF)	WD	B	GL						4	60	0170A	
0203A	CLASSROOM	3'-0" x 7'-0"	WD	C	GL						17		0203A	
0203B	CLASSROOM	3'-0" x 7'-0"	WD	A	NONE						17		0203B	
0207A	HISTORY CLUB	3'-0" x 7'-0"	WD	C	GL						17		0207A	
0207B	HISTORY CLUB	3'-0" x 7'-0"	WD	A	NONE						17		0207B	
0209A	CLASSROOM	3'-0" x 7'-0"	WD	C	GL						17		0209A	
0211A	CLASSROOM	3'-0" x 7'-0"	WD	C	GL						18		0211A	
0211B	CLASSROOM	3'-0" x 7'-0"	WD	C	GL						17		0211B	
0219A	LOUNGE	3'-0" x 6'-8"	WD	C	GL						20		0219A	VIF FRAMING CONDITION
0225A	CLASSROOM	3'-0" x 7'-0"	WD	C	GL						18		0225A	
0240A	STAIR	5'-0" x 7'-0" PAIR (2'-0" & 3'-0" LEAF)	WD	B	GL						4	60	0240A	
0250A	STAIR	5'-0" x 7'-0" PAIR (2'-0" & 3'-0" LEAF)	WD	B	GL						4	60	0250A	
0251A	CLASSROOM	3'-0" x 7'-0"	WD	C	GL						17		0251A	
0251B	CLASSROOM	3'-0" x 7'-0"	WD	C	GL						17		0251B	
0252A	ROOM	3'-0" x 7'-0"	WD	A	NONE						17		0252A	
0252B	ROOM	2'-6" x 6'-6"	WD	A	NONE						21		0252B	VIF FRAMING CONDITION
0254A	CLASSROOM	3'-0" x 7'-0"	WD	C	GL						17		0254A	
0254B	CLASSROOM	3'-0" x 7'-0"	WD	C	GL						17		0254B	
0255A	CLASSROOM	3'-0" x 7'-0"	WD	C	GL						17		0255A	
0255B	CLASSROOM	3'-0" x 7'-0"	WD	C	GL						17		0255B	EX CARD READER
0256A	CLASSROOM	3'-0" x 7'-0"	WD	C	GL						17		0256A	
0256B	CLASSROOM	3'-0" x 7'-0"	WD	C	GL						18		0256B	EX CARD READER
0258A	CLASSROOM	3'-0" x 7'-0"	WD	C	GL						17		0258A	
0260A	STAIR	5'-0" x 7'-0" PAIR (2'-0" & 3'-0" LEAF)	WD	B	GL						4	60	0260A	
0261A	CONFERENCE ROOM	3'-0" x 7'-0"	WD	C	GL						17		0261A	
0270A	STAIR	5'-0" x 7'-0" PAIR (2'-0" & 3'-0" LEAF)	WD	B	GL						4	60	0270A	
0301A	CLASSROOM	3'-0" x 7'-0"	WD	C	GL						17		0301A	
0301B	CLASSROOM	3'-0" x 7'-0"	WD	C	GL						17		0301B	
0303A	CLASSROOM	3'-0" x 7'-0"	WD	C	GL						17		0303A	
0307A	CLASSROOM	3'-0" x 7'-0"	WD	C	GL						17		0307A	
0309A	CLASSROOM	3'-0" x 7'-0"	WD	C	GL						18		0309A	
0311A	CLASSROOM	3'-0" x 7'-0"	WD	C	GL						17		0311A	
0311B	CLASSROOM	3'-0" x 7'-0"	WD	C	GL						17		0311B	
0315A	CLASSROOM	3'-0" x 7'-0"	WD	C	GL						18		0315A	
0373A	CLASSROOM	3'-0" x 7'-0"	WD	C	GL						17		0373A	
0373B	CLASSROOM	3'-0" x 7'-0"	WD	C	GL						18		0373B	EX CARD READER
0374A	CLASSROOM	3'-0" x 7'-0"	WD	C	GL						17		0374A	
0374B	CLASSROOM	3'-0" x 7'-0"	WD	C	GL						17		0374B	
0374C	CLASSROOM	3'-0" x 7'-0"	WD	A	NONE						17		0374C	
0375A	CLASSROOM	3'-0" x 7'-0"	WD	C	GL						17		0375A	
0375B	CLASSROOM	3'-0" x 7'-0"	WD	C	GL						17		0375B	
0376A	CLASSROOM	3'-0" x 7'-0"	WD	C	GL						17		0376A	
0376B	CLASSROOM	3'-0" x 7'-0"	WD	C	GL						17		0376B	
0380A	STAIR	3'-0" X 7'-0"	WD	B	GL						8	60	0380A	
0380B	STAIR	3'-0" X 7'-0"	WD	B	GL						8	60	0380B	
0381A	STAIR	5'-0" x 7'-0" PAIR (2'-0" & 3'-0" LEAF)	WD	B	GL						4	60	0381A	
0382A	STAIR	5'-0" x 7'-0" PAIR (2'-0" & 3'-0" LEAF)	WD	B	GL						4	60	0382A	
0383A	STAIR	5'-0" x 7'-0" PAIR (2'-0" & 3'-0" LEAF)	WD	B	GL						4	60	0383A	

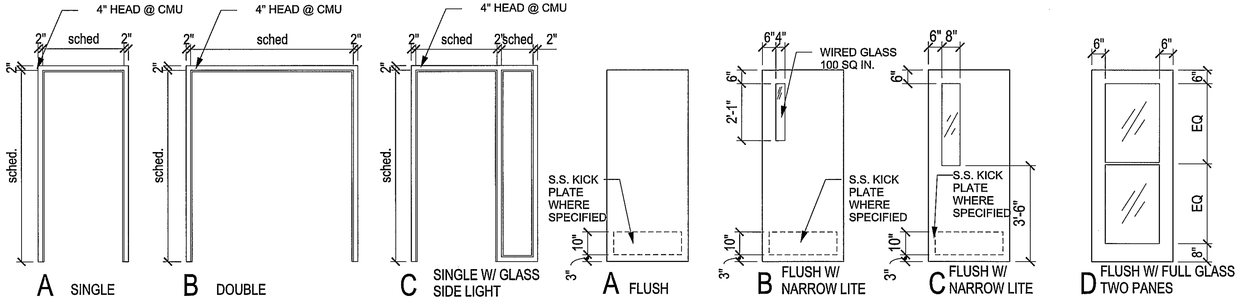

CRAIG LEE HALL DOOR SCHEDULE

DOOR NO.	ROOM NAME	DOOR SIZE	DOOR MATERIAL	DOOR ELEV.	GLAZING	NEW FRAME MATERIAL	NEW FRAME ELEV.	NEW FRAME HEAD	NEW FRAME JAMB	NEW FRAME SILL	HWS	FIRE RATING	DOOR NO.	REMARKS
0001A	STAIR	3'-0" x 6'-8"	HM	B	GL						8	60	0001A	
0003A	STAIR	5'-0" x 7'-0" PAIR (2'-0" & 3'-0" LEAF)	HM	B	GL						25	60	0003A	
0011A	VESTIBULE	5'-0" x 7'-0" PAIR (2'-0" & 3'-0" LEAF)	HM	B	GL	HM	B	11/A-052	10/A-052		26		0011A	INSTALL NEW FRAME
0023A	OFFICE SERVICES	3'-0" x 7'-0"	WD	C	GL	HM	A	11/A-052	10/A-052		28		0023A	INSTALL NEW FRAME
0025A	CLASSROOM	3'-0" x 7'-0"	WD	C	GL						17		0025A	
0026A	CLASSROOM	3'-0" x 7'-0"	WD	C	GL						17		0026A	
0027A	CLASSROOM	3'-0" x 7'-0"	WD	C	GL						17		0027A	
0028A	CLASSROOM	2'-8" x 7'-0"	WD	C	GL						17		0028A	
0032A	LOUNGE	3'-0" x 7'-0"		D	GL						17		0032A	MATCH EXISTING MATERIAL
0034A	CORRIDOR	3'-0" x 7'-0"	WD	C	GL						22		0034A	
0035A	ELECTRICAL	3'-0" x 7'-0"	HM	A	NONE						10	90	0035A	
0036A	MECHANICAL	3'-0" x 7'-0"	HM	A	NONE						11	90	0036A	
0056A	STAIR	5'-0" x 7'-0" PAIR (2'-0" & 3'-0" LEAF)	HM	B	GL						4	60	0056A	
0057A	STAIR	3'-0" x 7'-0"	HM	B	GL						22	60	0057A	
0057B	STAIR	EXISTING									24		0057B	INSTL. 1 NEW CLOSER
1001A	STAIR	3'-0" x 7'-0"	HM	B	GL	HM	A	11/A-052	10/A-052		8	60	1001A	
1002A	STAIR	3'-0" x 7'-0"	HM	B	GL	HM	A	11/A-052	10/A-052		8	60	1002A	
1002B	STAIR	3'-0" x 7'-0"	HM	B	GL						27	60	1002B	
1003A	STAIR	5'-0" x 7'-0" PAIR (2'-0" & 3'-0" LEAF)	HM	B	GL						9	60	1003A	
1010A	CORRIDOR	5'-0" x 7'-0" PAIR (2'-0" & 3'-0" LEAF)	HM	B	GL						4	90	1010A	
1032A	CLASSROOM	3'-0" x 6'-10"	WD	C	GL						17		1032A	
1033A	CLASSROOM	3'-0" x 6'-10"	WD	C	GL						17		1033A	
1034A	CLASSROOM	3'-0" x 6'-10"	WD	C	GL						17		1034A	
1035A	CLASSROOM	3'-0" x 6'-10"	WD	C	GL						18		1035A	
1036A	COUNCILING CENTER	3'-0" x 6'-10"	WD	C	GL						17		1036A	
1037A	CLASSROOM	3'-0" x 6'-10"	WD	C	GL						18		1037A	
1056A	STAIR	5'-0" x 7'-0" PAIR (2'-0" & 3'-0" LEAF)	HM	B	GL						4	60	1056A	
1057A	STAIR	3'-0" x 7'-0"	HM	B	GL						22	60	1057A	
2001A	STAIR	3'-0" x 7'-0"	HM	B	GL	HM	A	11/A-052	10/A-052		8	60	2001A	
2002A	STAIR	3'-0" x 7'-0"	HM	B	GL	HM	A	11/A-052	10/A-052		8	60	2002A	
2003A	STAIR	5'-0" x 7'-0" PAIR (2'-0" & 3'-0" LEAF)	HM	B	GL						25	60	2003A	
2010A	CORRIDOR	5'-0" x 7'-0" PAIR (2'-0" & 3'-0" LEAF)	HM	B	GL						4	90	2010A	
2201A	CLASSROOM	3'-0" x 6'-10"	WD	C	GL						17		2201A	
2202A	CLASSROOM	3'-0" x 6'-10"	WD	C	GL						17		2202A	
2203A	CLASSROOM	3'-0" x 6'-10"	WD	C	GL						17		2203A	
2204A	CLASSROOM	3'-0" x 6'-10"	WD	C	GL						17		2204A	
2205A	CLASSROOM	3'-0" x 6'-10"	WD	C	GL						17		2205A	
2206A	CLASSROOM	3'-0" x 6'-10"	WD	C	GL						17		2206A	
2220A	CORRIDOR	EXISTING									19		2220A	
2224A	CLASSROOM	3'-0" x 6'-10"	WD	C	GL						17		2224A	
2225A	WRITING CENTER	3'-0" x 6'-10"	WD	C	GL						14		2225A	
2228A	CLASSROOM	3'-0" x 6'-10"	WD	C	GL						17		2228A	
2231A	CLASSROOM	3'-0" x 6'-10"	WD	C	GL						17		2231A	
2251A	CLASSROOM	3'-0" x 7'-0"	WD	C	GL						17		2251A	
2252A	CLASSROOM	3'-0" x 7'-0"	WD	C	GL						17		2252A	
2253A	CLASSROOM	3'-0" x 7'-0"	WD	C	GL						18		2253A	EX CARD READER
2254A	CONFERENCE ROOM	3'-0" x 7'-1"	WD	C	GL						30		2254A	VIF FRAMING CONDITION
2255A	LIBRARY	3'-0" x 7'-0"	WD	C	GL						13		2255A	
2256A	STAIR	5'-0" x 7'-0" PAIR (2'-0" & 3'-0" LEAF)	HM	B	GL	HM	B	11/A-052	10/A-052		4	60	2256A	
2257A	STAIR	3'-0" x 7'-0"	HM	B	GL						22	60	2257A	
3056A	STAIR	5'-0" x 7'-0" PAIR (2'-0" & 3'-0" LEAF)	HM	B	GL						4	60	3056A	
3057A	STAIR	3'-0" x 7'-0"	HM	B	GL						22	60	3057A	
4056A	STAIR	5'-0" x 7'-0" PAIR (2'-0" & 3'-0" LEAF)	HM	B	GL						4	60	4056A	
4057A	STAIR	3'-0" x 7'-0"	HM	B	GL						22	60	4057A	

NOTES:

1. HARDWARE SCHEDULE ENCLOSED IN SPECIFICATION.
2. ALL STAIR DOORS TO HAVE 100 SQUARE INCH WIRED GLASS VISION PANELS U.O.N.
3. VERIFY ALL FRAME AND DOOR DIMENSIONS IN FIELD.

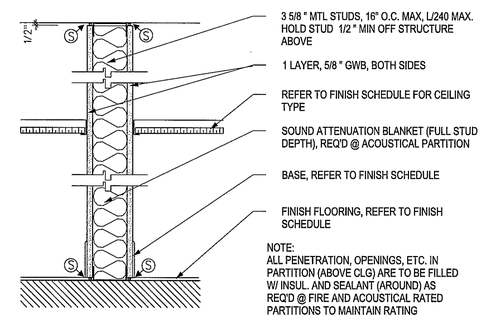

3	NON-RATED PARTITION	40 STC
3A	W/ ACOUSTICAL INSULATION	49 STC
4	1 HOUR RATED (U.L. DESIGN # U465)	40 STC
4A	W/ ACOUSTICAL INSULATION & 1 HOUR RATED (U.L. DESIGN # U465)	49 STC

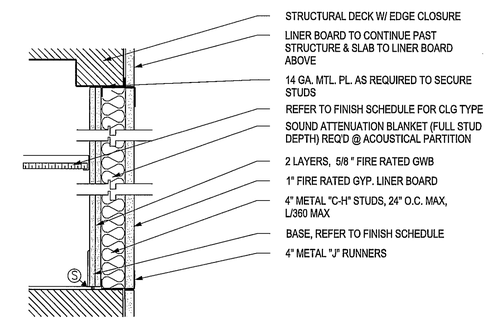

22	TWO HOUR RATED SHAFTWALL (U.L. DESIGN # U438)	39 STC
22A	W/ ACOUSTICAL INSULATION & 2 HOUR RATED (U.L. DESIGN # U438)	47 STC

HAI PROJECT NO. 1TWW00003-000

Hughes Associates Inc.
Fire Protection Engineers
& Code Consultants
New England Offices
Rhode Island
117 Metro Center Blvd
Suite 1002
Warwick, RI 02886
Phone: (401) 736-8992
Fax: (401) 736-8929
Massachusetts
2 Mount Royal Ave.
Suite 420
Marlborough, MA 01460
Phone: (508) 624-7766
Fax: (508) 624-7718

The copying or re-use of this document, or portions thereof, for any reason other than the original project or the purpose originally intended, without the consent of Hughes Associates, Inc., is prohibited.

Submission History

No.	Description	Date
1	CODE REVIEW SET	09/30/10
2	REVISION #1	11/3/10
3	SFMO COMMENTS	01/06/11

CUBE 3 STUDIO
architecture interiors planning
360 Merrimack Street Lawrence, MA 01843
phone: 978.989.9900 www.cube3studio.com

Project Description

Gaige Hall &
Craig-Lee Hall
Rhode Island College
Providence, Rhode Island

Seal

ADAM L. WAGNER
No. 3560
REGISTERED ARCHITECT

Fire Code
Upgrade Project

Design

Scale: As Noted
Drawn: GH
Design:
Review: TW

Drawing Title

DOOR SCHEDULE, ELEVATIONS, & TYP. WALL TYPES

Drawing No.

A-051

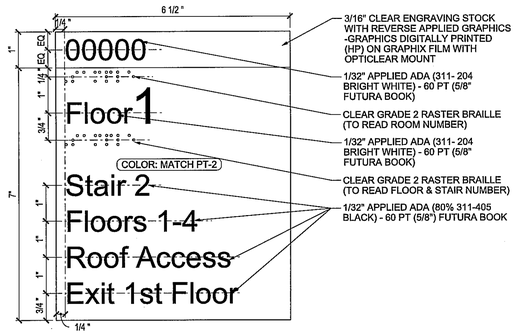

Stair Signage 12

SCALE: 6" = 1'-0"

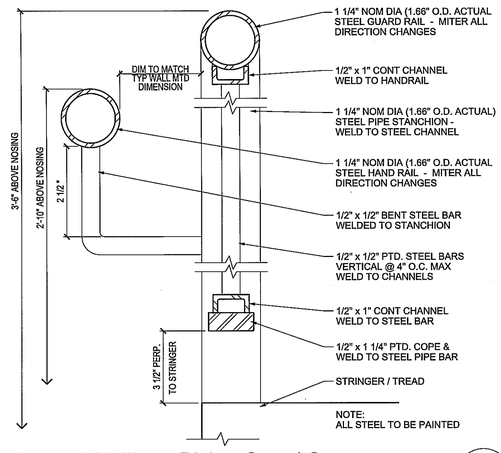

Detail At Railing - Picket Guard System 9

SCALE: 6" = 1'-0"

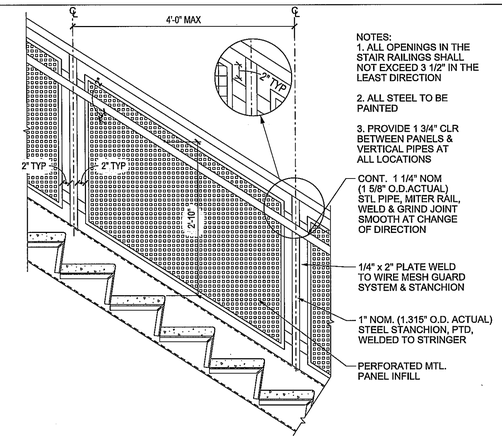

Typical Wire Mesh Guard System & Stair (ALT) 6

SCALE: 3/4" = 1'-0"

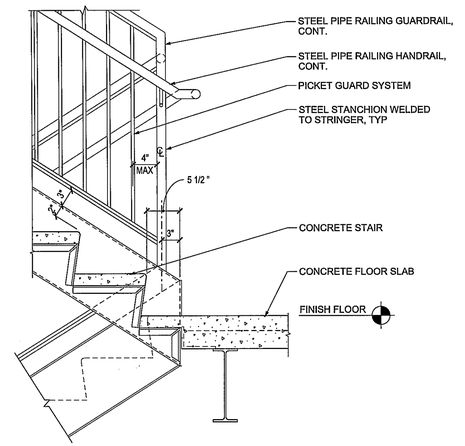

Detail At Intermediate Floor Landing 3

SCALE: 1" = 1'-0"

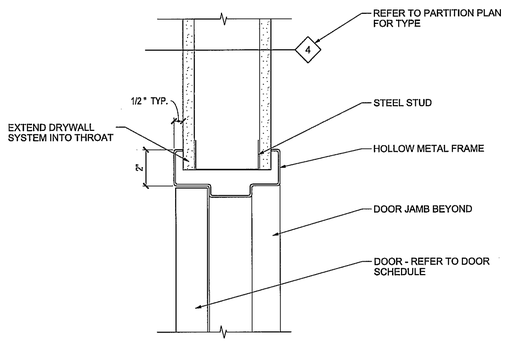

Hollow Metal Door Frame - Head 11

SCALE: 3" = 1'-0"

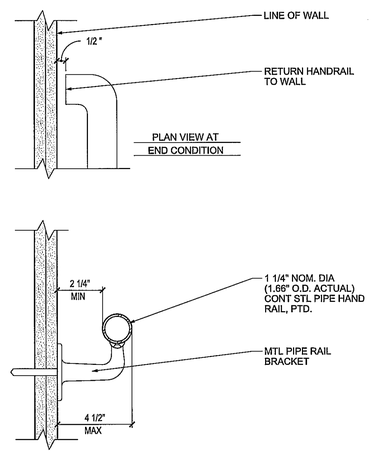

Typical Wall Mounted Handrail 8

SCALE: 3" = 1'-0"

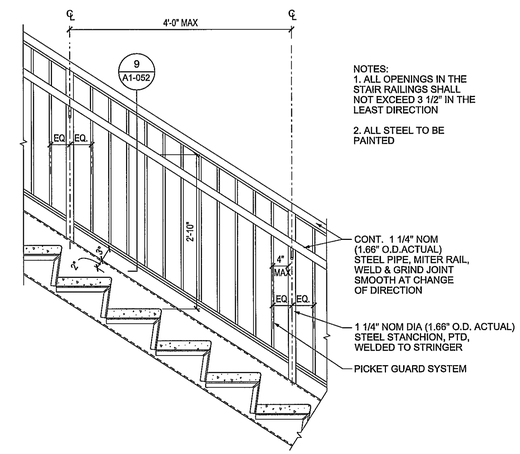

Typical Picket Guard System & Stair 5

SCALE: 3/4" = 1'-0"

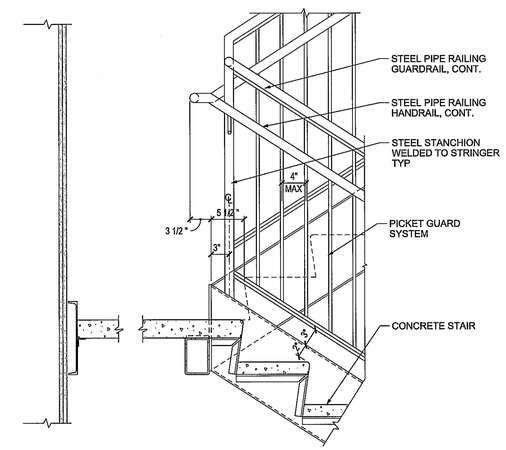

Detail At Half Landing 2

SCALE: 1" = 1'-0"

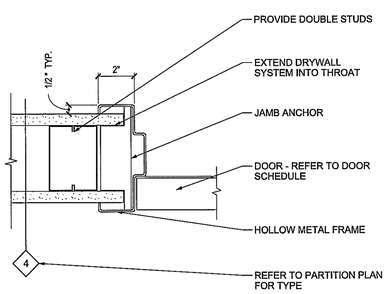

Hollow Metal Door Frame - Jamb 10

SCALE: 3" = 1'-0"

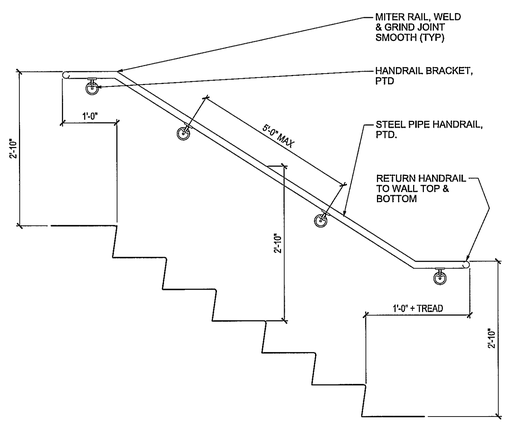

Typical Wall Rail Diagram 7

SCALE: 3/4" = 1'-0"

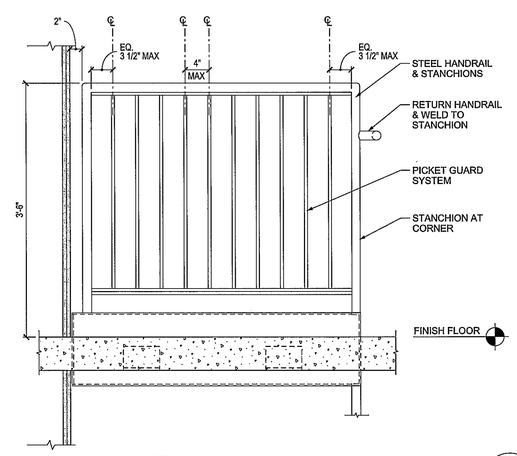

Guardrail At Top Landing 4

SCALE: 1" = 1'-0"

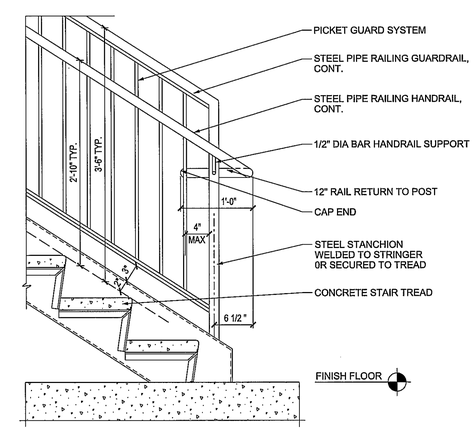

Detail At Bottom Of Landing 1

SCALE: 1" = 1'-0"

HAI PROJECT NO. ITWW00003-000

Hughes Associates Inc.
Fire Protection Engineers
& Code Consultants
New England Offices
Rhode Island
117 Metro Center Blvd
Suite 1002
Warwick, RI 02886
Phone: (401) 736-8992
Fax: (401) 736-8929
Massachusetts
2 Mount Royal Ave.
Suite 420
Marlborough, MA 01460
Phone: (508) 624-7766
Fax: (508) 624-7718

The copying or re-use of this document, or portions thereof, for any reason other than the original project or the purpose originally intended, without the consent of Hughes Associates, Inc., is prohibited.

Submission History

No.	Description	Date
1	CODE REVIEW SET	09/30/10
2	REVISION #1	11/3/10
3	SFMO COMMENTS	01/06/11

CUBE 3 STUDIO
architecture interiors planning
360 Merrimack Street Lawrence, MA 01843
phone: 978.989.9800 www.cube3studio.com

Gaige Hall &
Craig-Lee Hall
Rhode Island College
Providence, Rhode Island

Seal

ADAM L. WAGNER No. 3565 REGISTERED ARCHITECT

Project Description: Fire Code Upgrade Project

Design:
Scale: As Noted
Drawn: GH
Design:
Review: TW

Drawing Title: **TYPICAL STAIR & DOOR DETAILS**

Drawing No. A-052

GENERAL NOTES

1. REPLACE ALL DOORS, HARDWARE, AND CLOSERS TO ALL STAIRS.
2. REPLACE ALL HANDRAILS AND GUARDRAILS TO ALL STAIRS.
3. PROVIDE ELECTROMACNETIC HOLD OPENS TIED INTO FIRE ALARM AS SPECIFIED.
4. REPLACE ALL DOORS AND HARDWARE AS SHOWN
5. REPLACE ALL RUBBER TREADS TO ALL STAIRS

LEGEND

- EXISTING DOOR TO REMAIN
- NEW DOOR, DOOR NUMBER
- DEMO EXISTING DOOR
- NEW EXIT SIGN
- ROOM NAME (0000) — ROOM NAME AND NUMBER
- DEMO EXISTING PARTITION
- NEW PARTITION

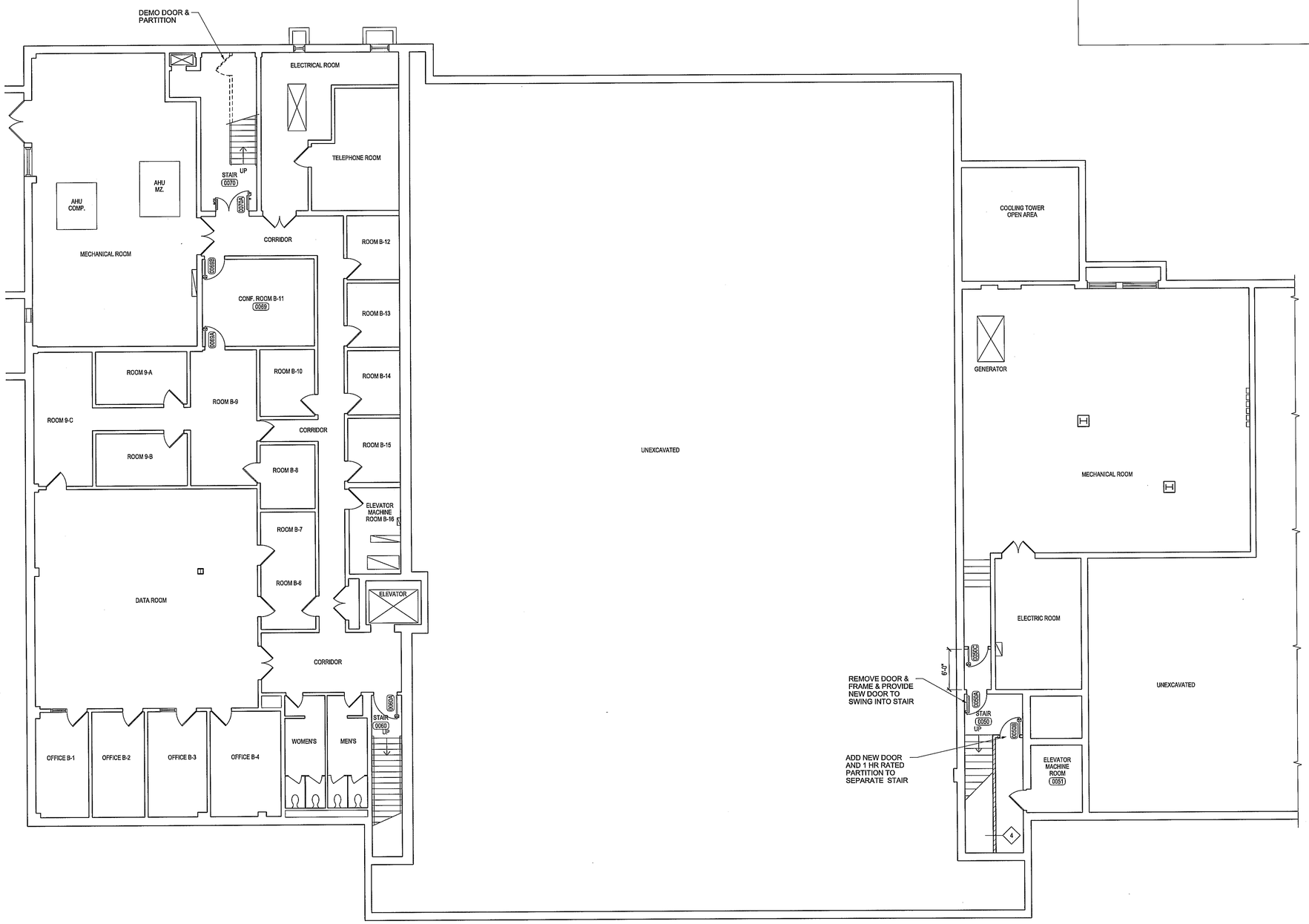

PROJECT NORTH

Basement Floor Plan

SCALE: 1/8" = 1'-0"

1

HAI PROJECT NO. ITWW00003-000

Hughes Associates Inc.
Fire Protection Engineers
& Code Consultants
New England Offices

Rhode Island
117 Metro Center Blvd
Suite 1002
Warwick, RI 02886
Phone: (401) 736-8992
Fax: (401) 736-8929

Massachusetts
2 Mount Royal Ave.
Suite 420
Marlborough, MA 01460
Phone: (508) 624-7765
Fax: (508) 624-7718

The copying or re-use of this document, or portions thereof, for any reason other than the original project or the purpose originally intended, without the consent of Hughes Associates, Inc., is prohibited.

Submission History

No.	Description	Date
1	CODE REVIEW SET	09/30/10
2	REVISION #1	11/3/10
3	SFMO COMMENTS	01/06/11

CUBE 3 STUDIO
architecture interiors planning
360 Merrimack Street Lawrence, MA 01843
phone: 978.989.0900 www.cube3studio.com

Gaige Hall &
Craig-Lee Hall
Rhode Island College
Providence, Rhode Island

Seal

ADAM L. WAGNER — No. 3565 — REGISTERED ARCHITECT

Project Description: Fire Code Upgrade Project

Design
Scale: As Noted
Drawn: GH
Design:
Review: TW

Drawing Title: BASEMENT FLOOR PLAN GAIGE HALL

Drawing No. A1-100

GENERAL NOTES

1. REPLACE ALL DOORS, HARDWARE, AND CLOSERS TO ALL STAIRS.
2. REPLACE ALL HANDRAILS AND GUARDRAILS TO ALL STAIRS.
3. PROVIDE ELECTROMACNETIC HOLD OPENS TIED INTO FIRE ALARM AS SPECIFIED.
4. REPLACE ALL DOORS AND HARDWARE AS SHOWN
5. REPLACE ALL RUBBER TREADS TO ALL STAIRS

LEGEND

	EXISTING DOOR TO REMAIN
0000A	NEW DOOR, DOOR NUMBER
	DEMO EXISTING DOOR
	NEW EXIT SIGN
ROOM NAME 0000	ROOM NAME AND NUMBER
	DEMO EXISTING PARTITION
	NEW PARTITION

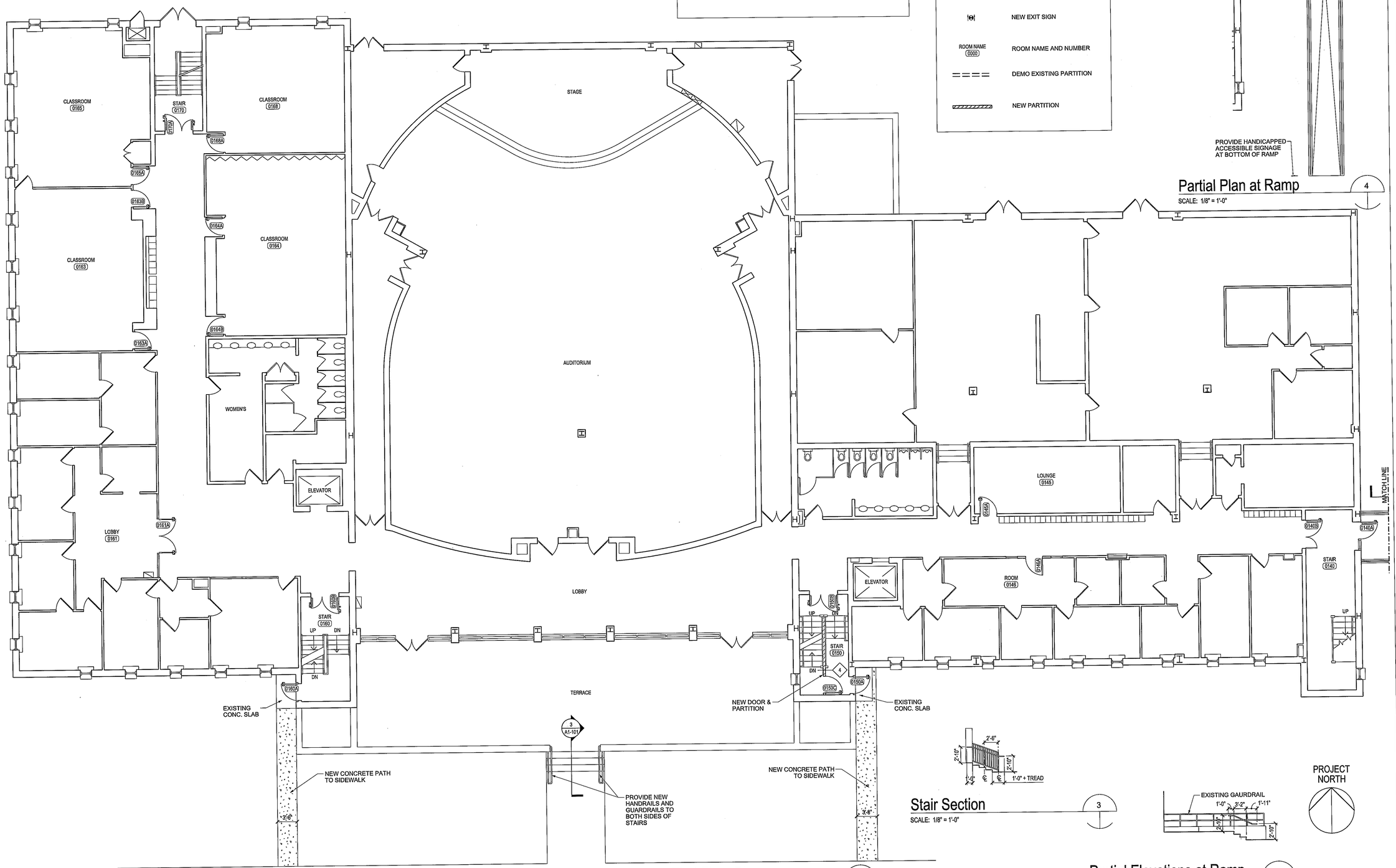

First Floor Plan

SCALE: 1/8" = 1'-0"

2

Stair Section

SCALE: 1/8" = 1'-0"

3

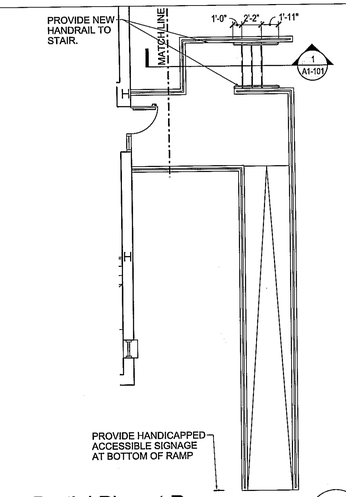

Partial Plan at Ramp

SCALE: 1/8" = 1'-0"

4

Partial Elevations at Ramp

SCALE: 1/8" = 1'-0"

1

PROJECT NORTH

HAI PROJECT NO. 1TWW00003-000

Hughes Associates Inc.
Fire Protection Engineers
& Code Consultants
New England Offices

Rhode Island
117 Metro Center Blvd
Suite 1002
Warwick, RI 02886
Phone: (401) 736-8992
Fax: (401) 736-8929

Massachusetts
2 Mount Royal Ave.
Suite 420
Marlborough, MA 01460
Phone: (508) 624-7766
Fax: (508) 624-7718

The copying or re-use of this document, or portions thereof, for any reason other than the original project or the purpose originally intended, without the consent of Hughes Associates, Inc., is prohibited.

Submission History

No.	Description	Date
1	CODE REVIEW SET	09/30/10
2	REVISION #1	11/3/10
3	SFMO COMMENTS	01/06/11

CUBE 3 STUDIO
architecture interiors planning
369 Merrimack Street Lawrence, MA 01843
phone: 978.988.9900 www.cube3studio.com

Gaige Hall &
Craig-Lee Hall
Rhode Island College
Providence, Rhode Island

Seal

ADAM L. WAGNER
No. 3565
REGISTERED ARCHITECT

Project Description: Fire Code Upgrade Project

Design:
Scale: As Noted
Drawn: GH
Design:
Review: TW

Drawing Title: FIRST FLOOR PLAN GAIGE HALL

Drawing No. A1-101

GENERAL NOTES

1. REPLACE ALL DOORS, HARDWARE, AND CLOSERS TO ALL STAIRS.
2. REPLACE ALL HANDRAILS AND GUARDRAILS TO ALL STAIRS.
3. PROVIDE ELECTROMACNETIC HOLD OPENS TIED INTO FIRE ALARM AS SPECIFIED.
4. REPLACE ALL DOORS AND HARDWARE AS SHOWN
5. REPLACE ALL RUBBER TREADS TO ALL STAIRS

LEGEND

	EXISTING DOOR TO REMAIN
0000	NEW DOOR, DOOR NUMBER
	DEMO EXISTING DOOR
	NEW EXIT SIGN
ROOM NAME 0000	ROOM NAME AND NUMBER
	DEMO EXISTING PARTITION
	NEW PARTITION

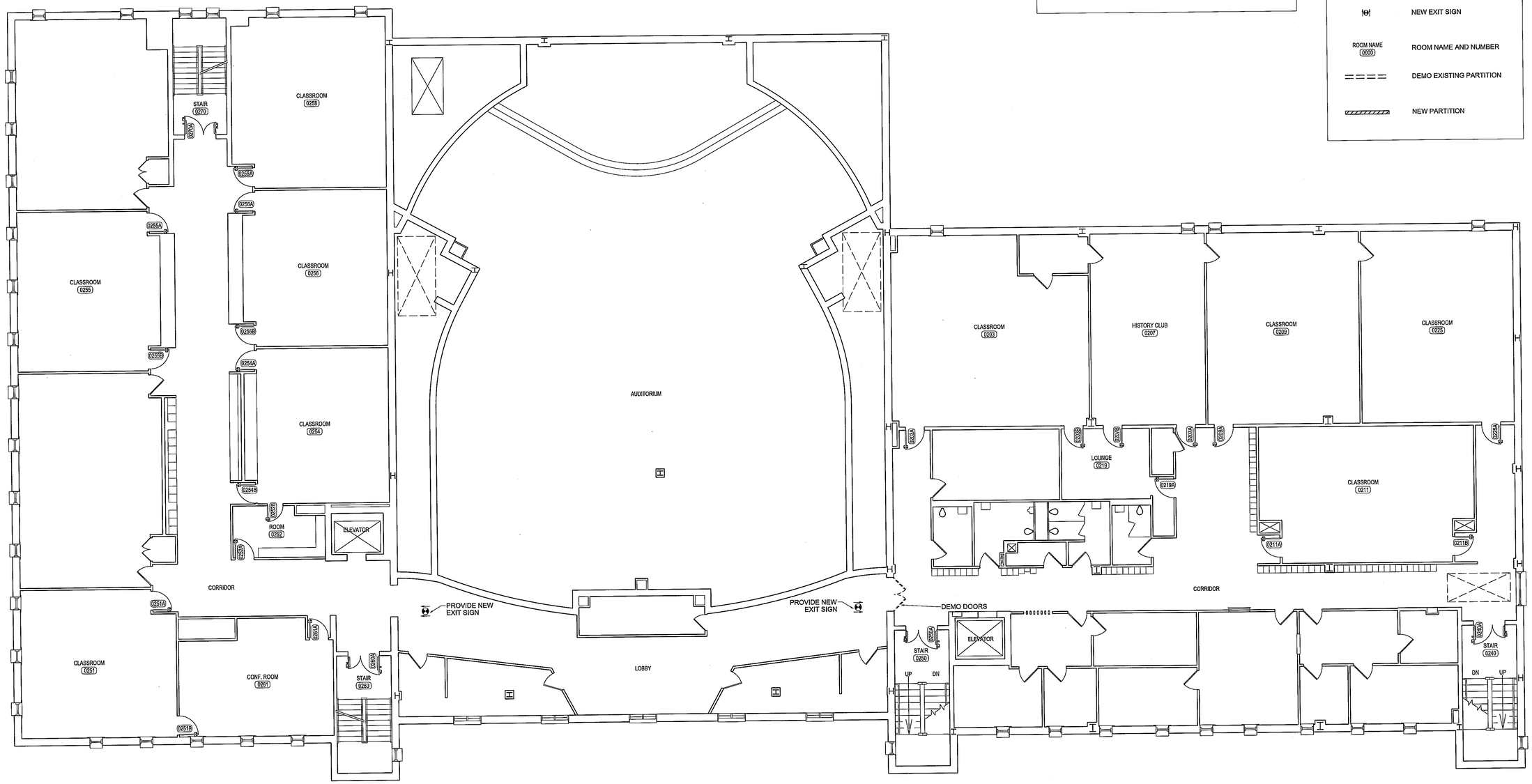

PROJECT NORTH

Second Floor Plan

SCALE: 1/8" = 1'-0"

1

HAI PROJECT NO. ITWW00003-000

Hughes Associates Inc.
Fire Protection Engineers
& Code Consultants

New England Offices

Rhode Island
117 Metro Center Blvd
Suite 1002
Warwick, RI 02886
Phone: (401) 736-8992
Fax: (401) 736-8929

Massachusetts
2 Mount Royal Ave.
Suite 420
Marlborough, MA 01460
Phone: (508) 624-7766
Fax: (508) 624-7718

The copying or re-use of this document, or portions thereof, for any reason other than the original project or the purpose originally intended, without the consent of Hughes Associates, Inc., is prohibited.

Submission History

No.	Description	Date
1	CODE REVIEW SET	09/30/10
2	REVISION #1	11/3/10
3	SFMO COMMENTS	01/06/11

CUBE 3 STUDIO
architecture interiors planning
360 Merrimack Street Lawrence, MA 01843
phone: 978.989.9900 www.cube3studio.com

Gaige Hall &
Craig-Lee Hall
Rhode Island College
Providence, Rhode Island

Seal

ADAM L. WAGNER
No. 3565
REGISTERED ARCHITECT

Project Description

Fire Code
Upgrade Project

Design

Scale: As Noted
Drawn: GH
Design:
Review: TW

Drawing Title

SECOND
FLOOR PLAN
GAIGE HALL

Drawing No.

A1-102

GENERAL NOTES

1. REPLACE ALL DOORS, HARDWARE, AND CLOSERS TO ALL STAIRS.
2. REPLACE ALL HANDRAILS AND GUARDRAILS TO ALL STAIRS.
3. PROVIDE ELECTROMACNETIC HOLD OPENS TIED INTO FIRE ALARM AS SPECIFIED.
4. REPLACE ALL DOORS AND HARDWARE AS SHOWN
5. REPLACE ALL RUBBER TREADS TO ALL STAIRS

LEGEND

- EXISTING DOOR TO REMAIN
- 0000A — NEW DOOR, DOOR NUMBER
- DEMO EXISTING DOOR
- NEW EXIT SIGN
- ROOM NAME 0000 — ROOM NAME AND NUMBER
- DEMO EXISTING PARTITION
- NEW PARTITION

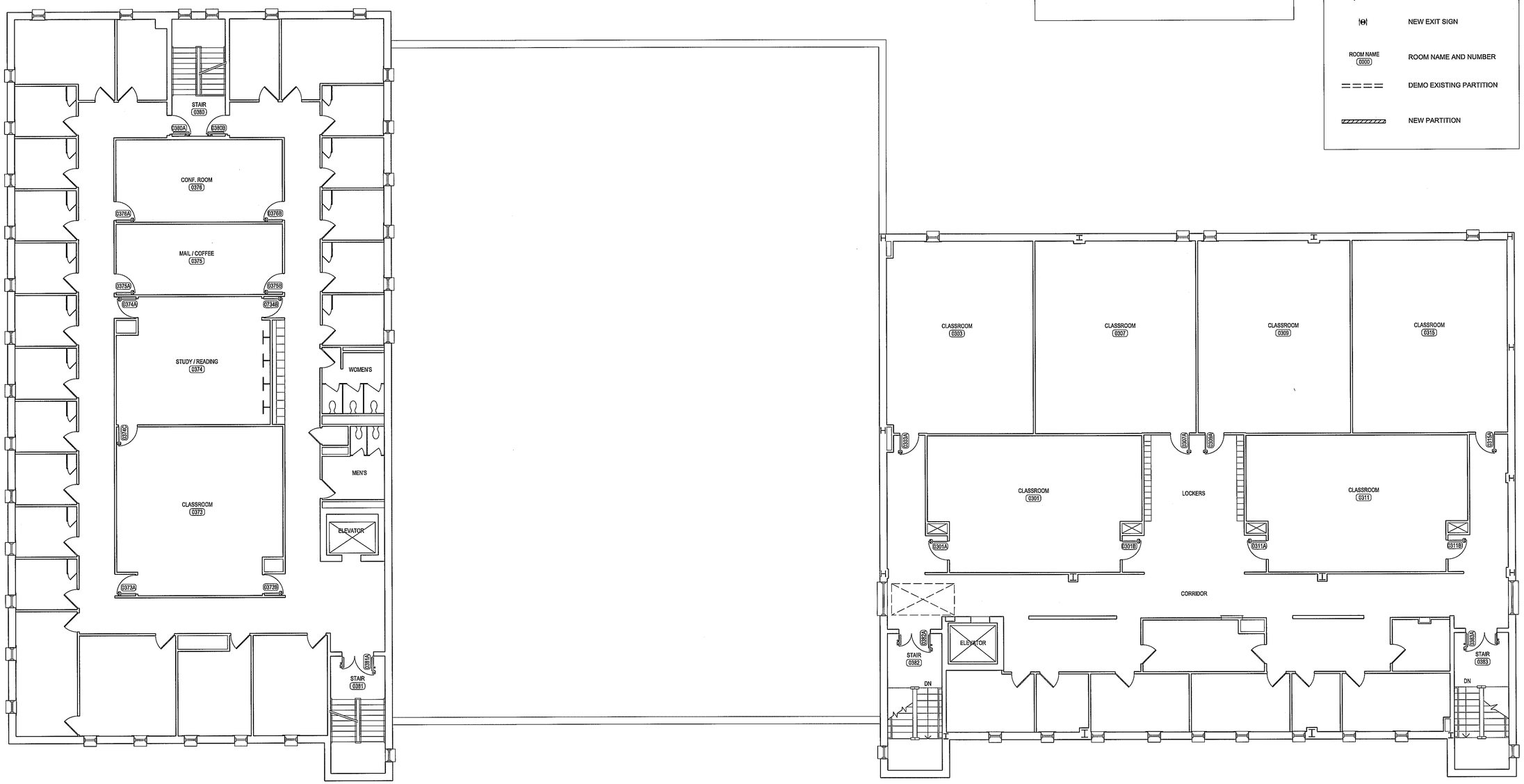

PROJECT NORTH

Third Floor Plan

SCALE: 1/8" = 1'-0"

1

HAI PROJECT NO. ITWW00003-000

Hughes Associates Inc.
Fire Protection Engineers
& Code Consultants

New England Offices

Rhode Island
117 Metro Center Blvd
Suite 1002
Warwick, RI 02886
Phone: (401) 736-8992
Fax: (401) 736-8929

Massachusetts
2 Mount Royal Ave.
Suite 420
Marlborough, MA 01460
Phone: (508) 624-7766
Fax: (508) 624-7718

The copying or re-use of this document, or portions thereof, for any reason other than the original project or the purpose originally intended, without the consent of Hughes Associates, Inc., is prohibited.

Submission History

No.	Description	Date
1	CODE REVIEW SET	09/30/10
2	REVISION #1	11/3/10
3	SFMO COMMENTS	01/06/11

CUBE 3 STUDIO
architecture interiors planning
360 Merrimack Street Lawrence, MA 01843
phone: 978.989.9900 www.cube3studio.com

Gaige Hall &
Craig-Lee Hall
Rhode Island College
Providence, Rhode Island

Seal

ADAM L. WAGNER
No. 3565
REGISTERED ARCHITECT

Project Description

Fire Code
Upgrade Project

Design

Scale: As Noted
Drawn: GH
Design:
Review: TW

Drawing Title

THIRD
FLOOR PLAN
GAIGE HALL

Drawing No.

A1-103

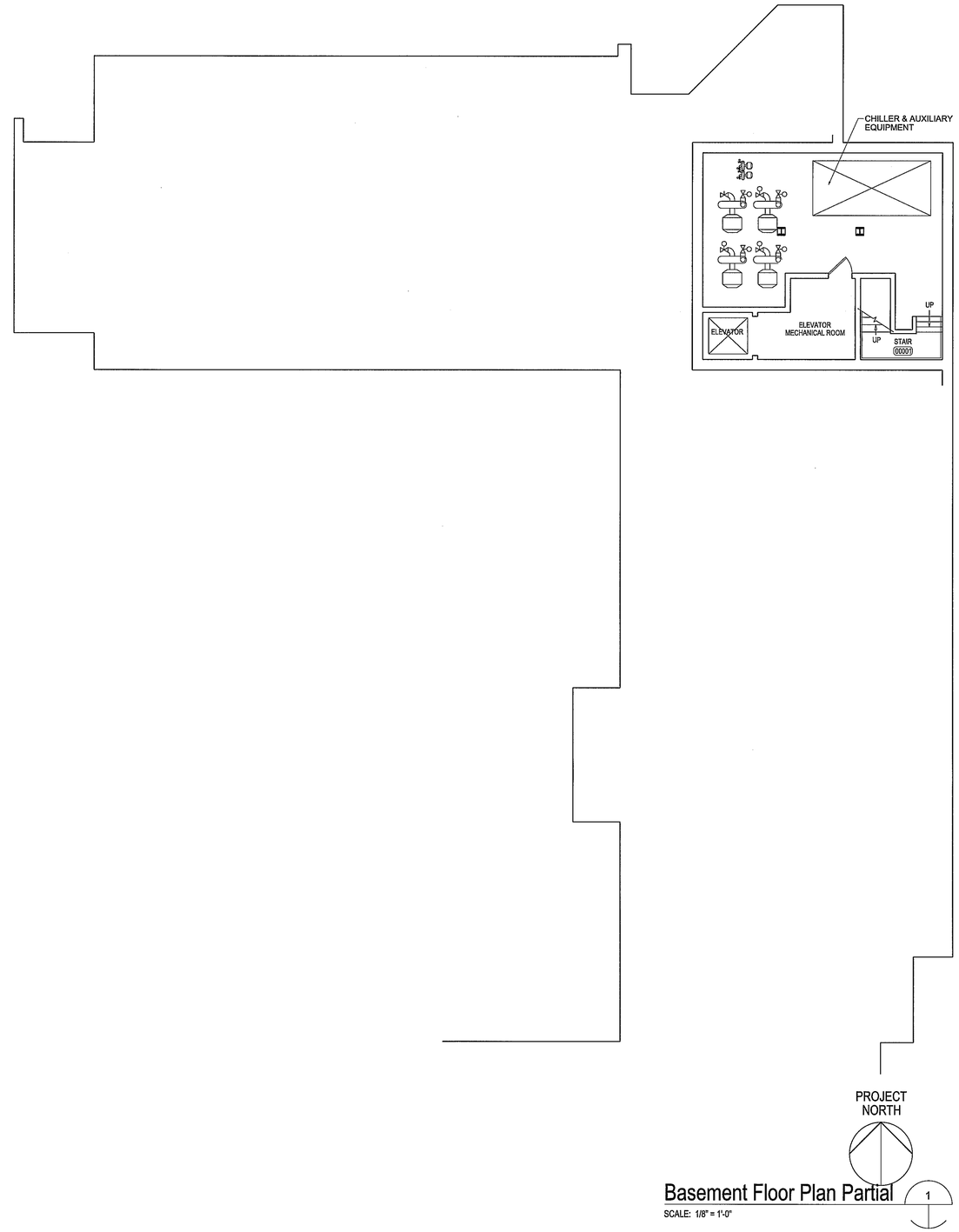

Basement Floor Plan Partial

1

SCALE: 1/8" = 1'-0"

GENERAL NOTES

1. REPLACE ALL DOOR HARDWARE AND CLOSERS TO ALL STAIRS.
2. REPLACE ALL DOORS AND HARDWARE AS SHOWN.
3. HUMANITIES WING - ALL STAIR RAILINGS ARE NON - COMPLIENT AND ARE TO BE REPLACED.
4. DEMO ENTIRE PARTITION, DOOR AND REBUILD IN NEW 1 HR RATED CONSTRUCTION WITH NEW DOOR, FRAME AND HARDWARE.
5. DEMO AND REMOVE EXISTING DOOR AND PARTITION AND PATCH FLOOR AND CEILING.
6. CONSTRUCT NEW DOOR AND PARTITION TO MAINTAIN 1HR FIRE RATING.
7. REPLACE ALL RUBBER TREADS TO ALL STAIRS.
8. RE-ATTACH ALL DOOR CLOSERS.
9. RELOCATE LIGHT FIXTURE.
10. ADD STAIR SIGNAGE PER DETAIL 12/A-052.
11. VERIFY CONDITION OF EXISTING MAGNETIC HOLDS ON ALL DOORS BEFORE REPLACEMENT.

LEGEND

	EXISTING DOOR TO REMAIN
00000	NEW DOOR, DOOR NUMBER
	DEMO EXISTING DOOR
	NEW EXIT SIGN
ROOM NAME 0000	ROOM NAME AND NUMBER
	DEMO EXISTING PARTITION
	NEW PARTITION

HAI PROJECT NO. ITWW00003-000

Hughes Associates Inc.
Fire Protection Engineers
& Code Consultants
New England Offices

Rhode Island
117 Metro Center Blvd
Suite 1002
Warwick, RI 02886
Phone: (401) 736-8992
Fax: (401) 736-8929

Massachusetts
2 Mount Royal Ave.
Suite 420
Marlborough, MA 01460
Phone: (508) 624-7766
Fax: (508) 624-7718

The copying or re-use of this document, or portions thereof, for any reason other than the original project or the purpose originally intended, without the consent of Hughes Associates, Inc., is prohibited.

Submission History

No.	Description	Date
1	CODE REVIEW SET	09/30/10
2	REVISION #1	11/3/10
3	SFMO COMMENTS	01/06/11

CUBE 3 STUDIO
architecture interiors planning
360 Merrimack Street Lawrence, MA 01843
phone: 978.989.9900 www.cube3studio.com

Gaige Hall &
Craig-Lee Hall
Rhode Island College
Providence, Rhode Island

Seal

ADAM L. WAGNER
No. 3555
REGISTERED ARCHITECT

Project Description

Fire Code
Upgrade Project

Design

Scale: As Noted
Drawn: GH
Design:
Review: TW

Drawing Title

BASEMENT FLOOR PLAN CRAIG-LEE HALL

Drawing No.

A2-100

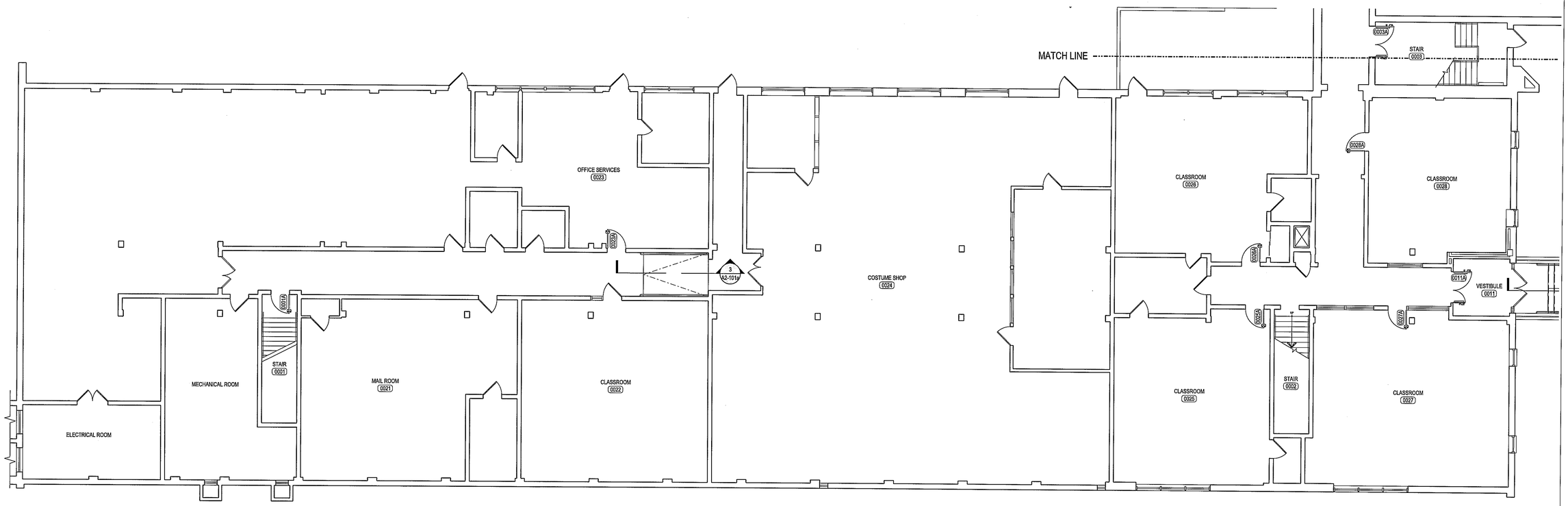

GENERAL NOTES

1. REPLACE ALL DOOR HARDWARE AND CLOSERS TO ALL STAIRS.
2. REPLACE ALL DOORS AND HARDWARE AS SHOWN.
3. HUMANITIES WING - ALL STAIR RAILINGS ARE NON - COMPLIENT AND ARE TO BE REPLACED.
4. DEMO ENTIRE PARTITION, DOOR AND REBUILD IN NEW 1 HR RATED CONSTRUCTION WITH NEW DOOR, FRAME AND HARDWARE.
5. DEMO AND REMOVE EXISTING DOOR AND PARTITION AND PATCH FLOOR AND CEILING.
6. CONSTRUCT NEW DOOR AND PARTITION TO MAINTAIN 1HR FIRE RATING.
7. REPLACE ALL RUBBER TREADS TO ALL STAIRS.
8. RE-ATTACH ALL DOOR CLOSERS.
9. RELOCATE LIGHT FIXTURE.
10. ADD STAIR SIGNAGE PER DETAIL 12/A-052.
11. VERIFY CONDITION OF EXISTING MAGNETIC HOLDS ON ALL DOORS BEFORE REPLACEMENT.

LEGEND

	EXISTING DOOR TO REMAIN
0000	NEW DOOR, DOOR NUMBER
	DEMO EXISTING DOOR
e	NEW EXIT SIGN
ROOM NAME 0000	ROOM NAME AND NUMBER
	DEMO EXISTING PARTITION
	NEW PARTITION

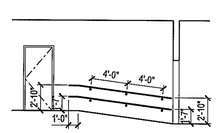

Ramp Section 3
SCALE: 1/8" = 1'-0"

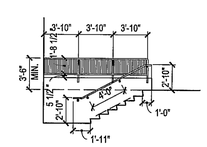

Stair Section 2
SCALE: 1/8" = 1'-0"

Ground Floor Partial Plan 4
SCALE: 1/8" = 1'-0"

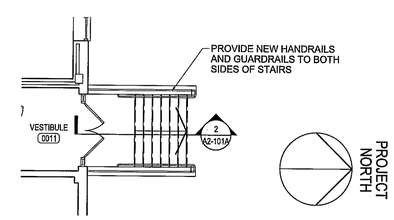

Stair Part Plan 1
SCALE: 1/8" = 1'-0"

HAI PROJECT NO. 1TWW00003-000

Hughes Associates Inc.
Fire Protection Engineers
& Code Consultants
New England Offices

Rhode Island
117 Metro Center Blvd
Suite 1002
Warwick, RI 02886
Phone: (401) 736-8992
Fax: (401) 736-8929

Massachusetts
2 Mount Royal Ave.
Suite 420
Marlborough, MA 01460
Phone: (508) 624-7766
Fax: (508) 624-7718

The copying or re-use of this document, or portions thereof, for any reason other than the original project or the purpose originally intended, without the consent of Hughes Associates, Inc., is prohibited.

Submission History

No.	Description	Date
1	CODE REVIEW SET	09/30/10
2	REVISION #1	11/3/10
3	SFMO COMMENTS	01/06/11

CUBE 3 STUDIO
architecture interiors planning
360 Merrimack Street Lawrence, MA 01843
phone: 978.989.9900 www.cube3studio.com

Gaige Hall & Craig-Lee Hall
Rhode Island College
Providence, Rhode Island

Seal

ADAM L. WAGNER
No. 3565
REGISTERED ARCHITECT

Project Description: Fire Code Upgrade Project

Design
Scale: As Noted
Drawn: GH
Design:
Review: TW

Drawing Title: GROUND FLOOR PARTIAL PLAN (EAST WING) CRAIG-LEE HALL

Drawing No. A2-101a

COPYRIGHT (C) 2010 CUBE 3 STUDIO, ALL RIGHTS RESERVED

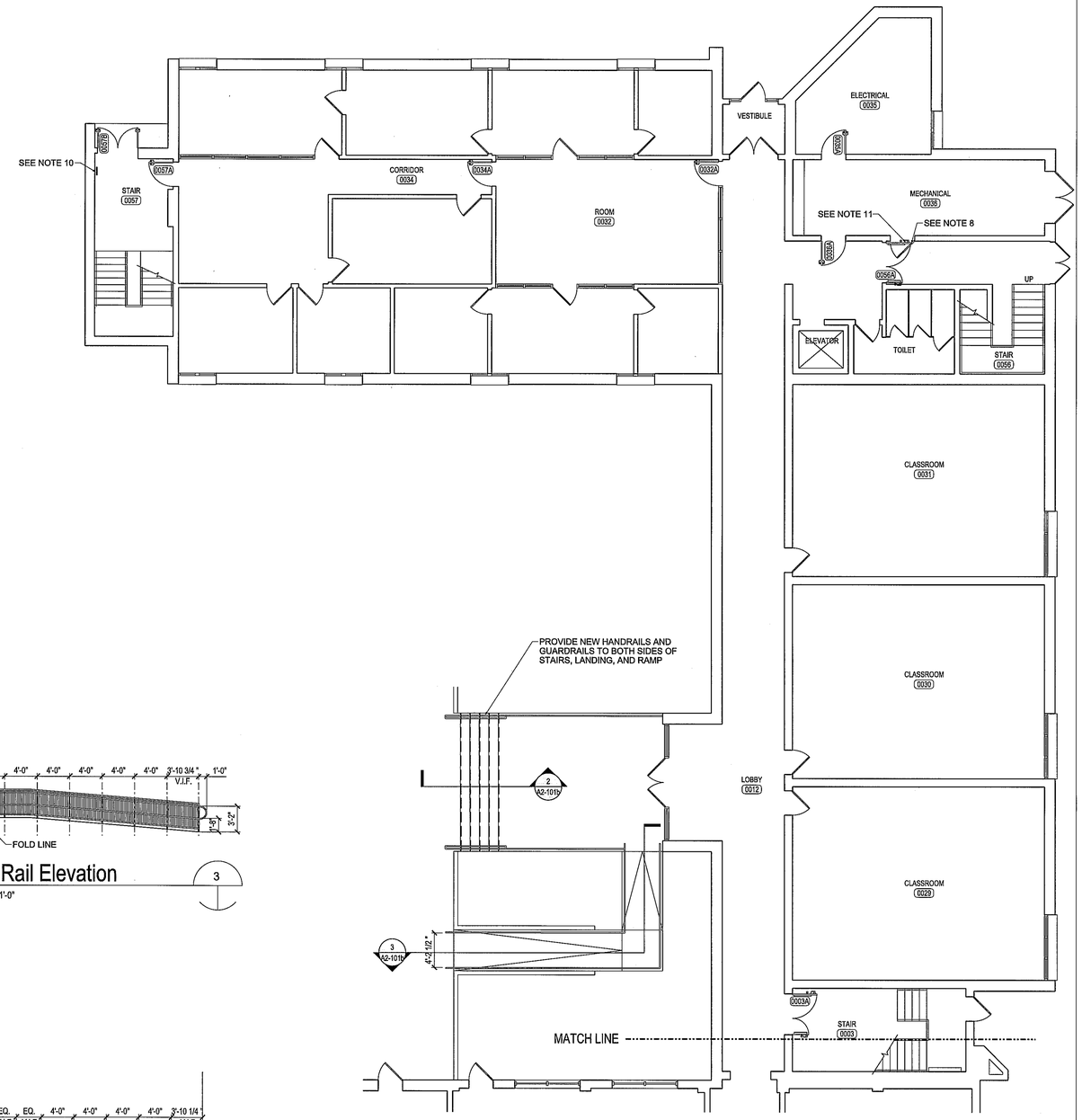

Ground Floor Partial Plan 1

SCALE: 1/8" = 1'-0"

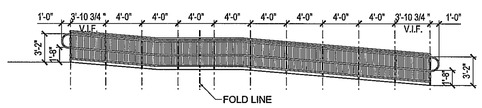

Ramp Rail Elevation 3

SCALE: 1/8" = 1'-0"

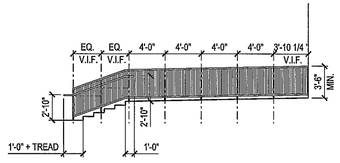

Stair Rail Elevation 2

SCALE: 1/8" = 1'-0"

GENERAL NOTES

1. REPLACE ALL DOOR HARDWARE AND CLOSERS TO ALL STAIRS.
2. REPLACE ALL DOORS AND HARDWARE AS SHOWN.
3. HUMANITIES WING - ALL STAIR RAILINGS ARE NON - COMPLIENT AND ARE TO BE REPLACED.
4. DEMO ENTIRE PARTITION, DOOR AND REBUILD IN NEW 1 HR RATED CONSTRUCTION WITH NEW DOOR, FRAME AND HARDWARE.
5. DEMO AND REMOVE EXISTING DOOR AND PARTITION AND PATCH FLOOR AND CEILING.
6. CONSTRUCT NEW DOOR AND PARTITION TO MAINTAIN 1HR FIRE RATING.
7. REPLACE ALL RUBBER TREADS TO ALL STAIRS.
8. RE-ATTACH ALL DOOR CLOSERS.
9. RELOCATE LIGHT FIXTURE.
10. ADD STAIR SIGNAGE PER DETAIL 12/A-052.
11. VERIFY CONDITION OF EXISTING MAGNETIC HOLDS ON ALL DOORS BEFORE REPLACEMENT.

LEGEND

	EXISTING DOOR TO REMAIN
0003A	NEW DOOR, DOOR NUMBER
	DEMO EXISTING DOOR
	NEW EXIT SIGN
ROOM NAME 0009	ROOM NAME AND NUMBER
	DEMO EXISTING PARTITION
	NEW PARTITION

HAI PROJECT NO. 1TWW00003-000

Hughes Associates Inc.
Fire Protection Engineers
& Code Consultants
New England Offices

Rhode Island
117 Metro Center Blvd
Suite 1002
Warwick, RI 02886
Phone: (401) 736-8992
Fax: (401) 736-8929

Massachusetts
2 Mount Royal Ave.
Suite 420
Marlborough, MA 01460
Phone: (508) 624-7766
Fax: (508) 624-7718

The copying or re-use of this document, or portions thereof, for any reason other than the original project or the purpose originally intended, without the consent of Hughes Associates, Inc., is prohibited.

Submission History

No.	Description	Date
1	CODE REVIEW SET	09/30/10
2	REVISION #1	11/3/10
3	SFMO COMMENTS	01/06/11

CUBE 3 STUDIO
architecture interiors planning
360 Merrimack Street Lawrence, MA 01843
phone: 978.989.9900 www.cube3studio.com

Gaige Hall &
Craig-Lee Hall
Rhode Island College
Providence, Rhode Island

Seal

ADAM L. WAGNER
No. 3565
REGISTERED ARCHITECT

Project Description: Fire Code Upgrade Project

Design
Scale: As Noted
Drawn: GH
Design:
Review: TW

Drawing Title: GROUND FLOOR PARTIAL PLAN (HUMANITIES WING) CRAIG-LEE HALL

Drawing No. A2-101b

COPYRIGHT (C) 2010 CUBE 3 STUDIO LLC, ALL RIGHTS RECEIVED

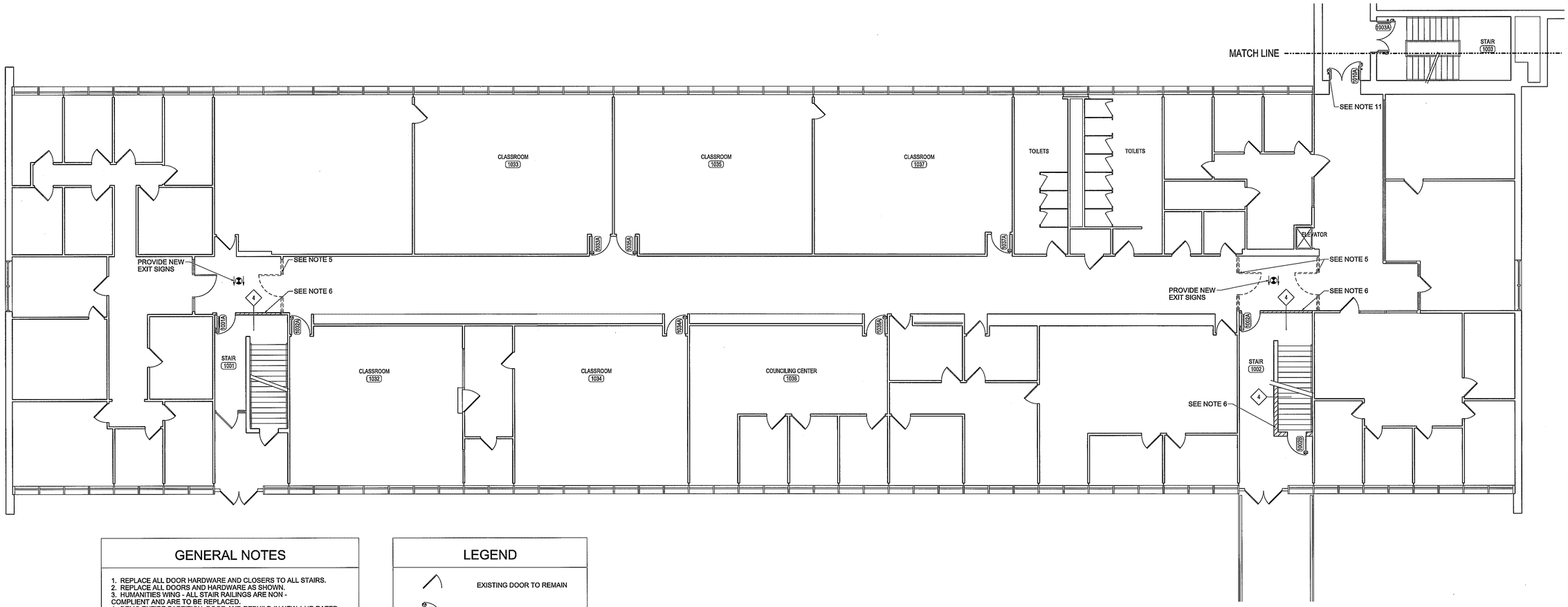

GENERAL NOTES

1. REPLACE ALL DOOR HARDWARE AND CLOSERS TO ALL STAIRS.
2. REPLACE ALL DOORS AND HARDWARE AS SHOWN.
3. HUMANITIES WING - ALL STAIR RAILINGS ARE NON - COMPLIENT AND ARE TO BE REPLACED.
4. DEMO ENTIRE PARTITION, DOOR AND REBUILD IN NEW 1 HR RATED CONSTRUCTION WITH NEW DOOR, FRAME AND HARDWARE.
5. DEMO AND REMOVE EXISTING DOOR AND PARTITION AND PATCH FLOOR AND CEILING.
6. CONSTRUCT NEW DOOR AND PARTITION TO MAINTAIN 1HR FIRE RATING.
7. REPLACE ALL RUBBER TREADS TO ALL STAIRS.
8. RE-ATTACH ALL DOOR CLOSERS.
9. RELOCATE LIGHT FIXTURE.
10. ADD STAIR SIGNAGE PER DETAIL 12/A-052.
11. VERIFY CONDITION OF EXISTING MAGNETIC HOLDS ON ALL DOORS BEFORE REPLACEMENT.

LEGEND

	EXISTING DOOR TO REMAIN
0000	NEW DOOR, DOOR NUMBER
	DEMO EXISTING DOOR
	NEW EXIT SIGN
ROOM NAME 0000	ROOM NAME AND NUMBER
	DEMO EXISTING PARTITION
	NEW PARTITION

PROJECT NORTH

First Floor Partial Plan

1

SCALE: 1/8" = 1'-0"

HAI PROJECT NO. ITWW00003-000

Hughes Associates Inc.
Fire Protection Engineers
& Code Consultants

New England Offices

Rhode Island
117 Metro Center Blvd
Suite 1002
Warwick, RI 02886
Phone: (401) 736-8992
Fax: (401) 736-8929

Massachusetts
2 Mount Royal Ave.
Suite 420
Marlborough, MA 01460
Phone: (508) 624-7766
Fax: (508) 624-7718

The copying or re-use of this document, or portions thereof, for any reason other than the original project or the purpose originally intended, without the consent of Hughes Associates, Inc., is prohibited.

Submission History

No.	Description	Date
1	CODE REVIEW SET	09/30/10
2	REVISION #1	11/3/10
3	SFMO COMMENTS	01/06/11

CUBE 3 STUDIO
architecture interiors planning
300 Merrimack Street Lawrence, MA 01843
phone: 978.989.9900 www.cube3studio.com

Gaige Hall &
Craig-Lee Hall
Rhode Island College
Providence, Rhode Island

Seal

ADAM L. WAGNER
No. 3565
REGISTERED ARCHITECT

Project Description

Fire Code
Upgrade Project

Design

Scale: As Noted
Drawn: GH
Design:
Review: TW

Drawing Title

FIRST FLOOR
PARTIAL PLAN
(EAST WING)
CRAIG-LEE HALL

Drawing No.

A2-102a

COPYRIGHT (C) 2010 CUBE 3 STUDIO LLC, ALL RIGHTS RESERVED

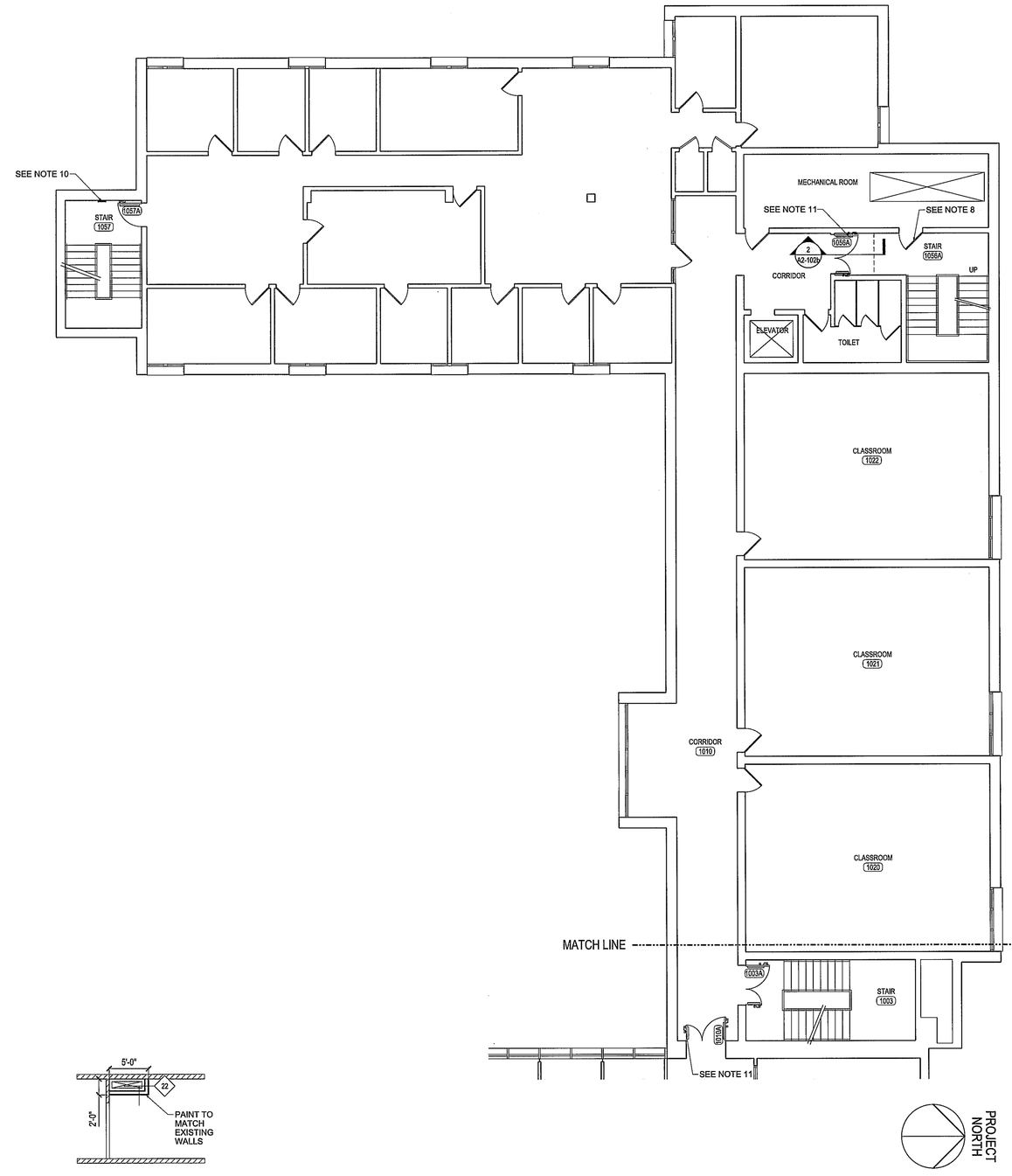

First Floor Partial Plan 1

SCALE: 1/8" = 1'-0"

Section @ Soffit 2

SCALE: 1/8" = 1'-0"

GENERAL NOTES

1. REPLACE ALL DOOR HARDWARE AND CLOSERS TO ALL STAIRS.
2. REPLACE ALL DOORS AND HARDWARE AS SHOWN.
3. HUMANITIES WING - ALL STAIR RAILINGS ARE NON - COMPLIENT AND ARE TO BE REPLACED.
4. DEMO ENTIRE PARTITION, DOOR AND REBUILD IN NEW 1 HR RATED CONSTRUCTION WITH NEW DOOR, FRAME AND HARDWARE.
5. DEMO AND REMOVE EXISTING DOOR AND PARTITION AND PATCH FLOOR AND CEILING.
6. CONSTRUCT NEW DOOR AND PARTITION TO MAINTAIN 1HR FIRE RATING.
7. REPLACE ALL RUBBER TREADS TO ALL STAIRS.
8. RE-ATTACH ALL DOOR CLOSERS.
9. RELOCATE LIGHT FIXTURE.
10. ADD STAIR SIGNAGE PER DETAIL 12/A-052.
11. VERIFY CONDITION OF EXISTING MAGNETIC HOLDS ON ALL DOORS BEFORE REPLACEMENT.

LEGEND

	EXISTING DOOR TO REMAIN
0000A	NEW DOOR, DOOR NUMBER
	DEMO EXISTING DOOR
	NEW EXIT SIGN
ROOM NAME 0000	ROOM NAME AND NUMBER
	DEMO EXISTING PARTITION
	NEW PARTITION

HAI PROJECT NO. 1TWW00003-000

Hughes Associates Inc.
Fire Protection Engineers
& Code Consultants
New England Offices

Rhode Island
117 Metro Center Blvd
Suite 1002
Warwick, RI 02886
Phone: (401) 736-8992
Fax: (401) 736-8929

Massachusetts
2 Mount Royal Ave.
Suite 420
Marlborough, MA 01460
Phone: (508) 624-7766
Fax: (508) 624-7718

The copying or re-use of this document, or portions thereof, for any reason other than the original project or the purpose originally intended, without the consent of Hughes Associates, Inc., is prohibited.

Submission History

No.	Description	Date
1	CODE REVIEW SET	09/30/10
2	REVISION #1	11/3/10
3	SFMO COMMENTS	01/06/11

CUBE 3 STUDIO
architecture interiors planning
360 Merrimack Street Lawrence, MA 01843
phone: 978.989.0900 www.cube3studio.com

Gaige Hall &
Craig-Lee Hall
Rhode Island College
Providence, Rhode Island

Seal

ADAM L. WAGNER
No. 3565
COMMONWEALTH OF MASSACHUSETTS
REGISTERED ARCHITECT

Project Description: Fire Code Upgrade Project

Design:
Scale: As Noted
Drawn: GH
Design:
Review: TW

Drawing Title: FIRST FLOOR PARTIAL PLAN (HUMANITIES WING) CRAIG-LEE HALL

Drawing No. A2-102b

COPYRIGHT (C) 2010 CUBE 3 STUDIO LLC, ALL RIGHTS RESERVED

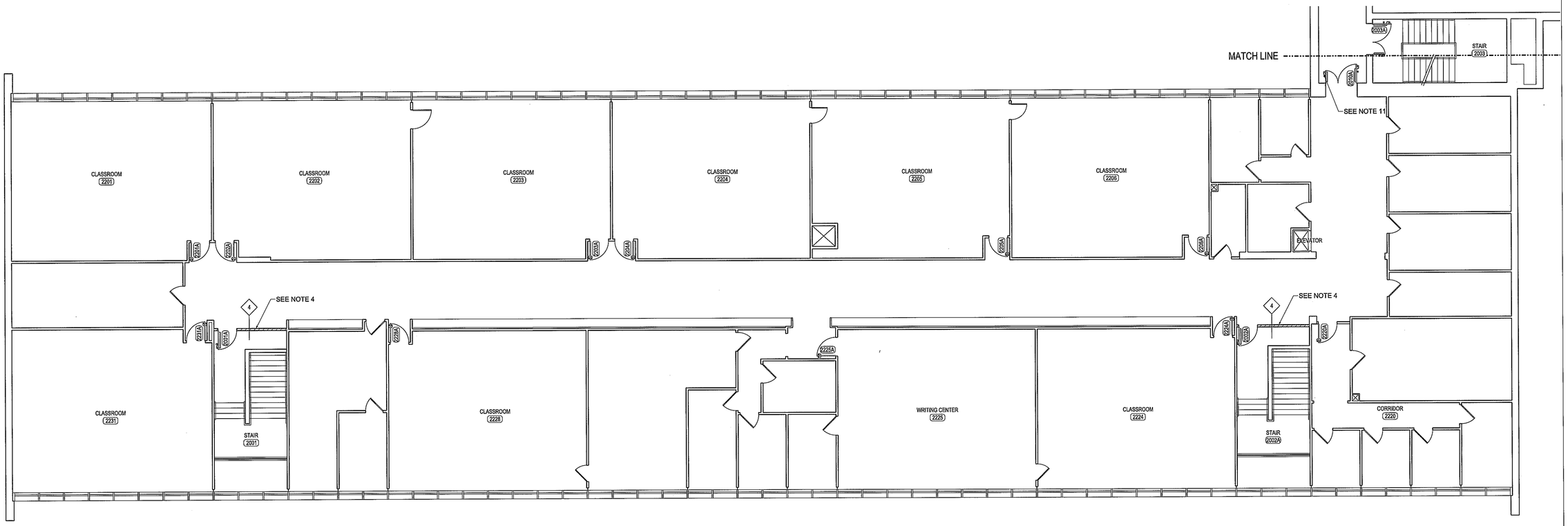

GENERAL NOTES

1. REPLACE ALL DOOR HARDWARE AND CLOSERS TO ALL STAIRS.
2. REPLACE ALL DOORS AND HARDWARE AS SHOWN.
3. HUMANITIES WING - ALL STAIR RAILINGS ARE NON - COMPLIANT AND ARE TO BE REPLACED.
4. DEMO ENTIRE PARTITION, DOOR AND REBUILD IN NEW 1 HR RATED CONSTRUCTION WITH NEW DOOR, FRAME AND HARDWARE.
5. DEMO AND REMOVE EXISTING DOOR AND PARTITION AND PATCH FLOOR AND CEILING.
6. CONSTRUCT NEW DOOR AND PARTITION TO MAINTAIN 1HR FIRE RATING.
7. REPLACE ALL RUBBER TREADS TO ALL STAIRS.
8. RE-ATTACH ALL DOOR CLOSERS.
9. RELOCATE LIGHT FIXTURE.
10. ADD STAIR SIGNAGE PER DETAIL 12/A-052.
11. VERIFY CONDITION OF EXISTING MAGNETIC HOLDS ON ALL DOORS BEFORE REPLACEMENT.

LEGEND

	EXISTING DOOR TO REMAIN
0000A	NEW DOOR, DOOR NUMBER
	DEMO EXISTING DOOR
|e|	NEW EXIT SIGN
ROOM NAME 0000	ROOM NAME AND NUMBER
	DEMO EXISTING PARTITION
	NEW PARTITION

PROJECT NORTH

Second Floor Partial Plan

1

SCALE: 1/8" = 1'-0"

HAI PROJECT NO. 1TWW00003-000

Hughes Associates Inc.
Fire Protection Engineers
& Code Consultants
New England Offices

Rhode Island
117 Metro Center Blvd
Suite 1002
Warwick, RI 02886
Phone: (401) 736-8992
Fax: (401) 736-8929

Massachusetts
2 Mount Royal Ave.
Suite 420
Marlborough, MA 01460
Phone: (508) 624-7766
Fax: (508) 624-7718

The copying or re-use of this document, or portions thereof, for any reasons other than the original project or the purpose originally intended, without the consent of Hughes Associates, Inc., is prohibited.

Submission History

No.	Description	Date
1	CODE REVIEW SET	09/30/10
2	REVISION #1	11/3/10
3	SFMO COMMENTS	01/06/11

CUBE 3 STUDIO
architecture interiors planning
360 Merrimack Street Lawrence, MA 01843
phone: 978.989.0900 www.cube3studio.com

Gaige Hall &
Craig-Lee Hall
Rhode Island College
Providence, Rhode Island

Seal

ADAM L. WAGNER
No. 3565
COMMONWEALTH OF MASSACHUSETTS
REGISTERED ARCHITECT

Project Description

Fire Code
Upgrade Project

Design

Scale: As Noted
Drawn: GH
Design:
Review: TW

Drawing Title

SECOND FLOOR PARTIAL PLAN (EAST WING) CRAIG-LEE HALL

Drawing No.

A2-103a

COPYRIGHT © 2010 CUBE 3 STUDIO LLC, ALL RIGHTS RESERVED

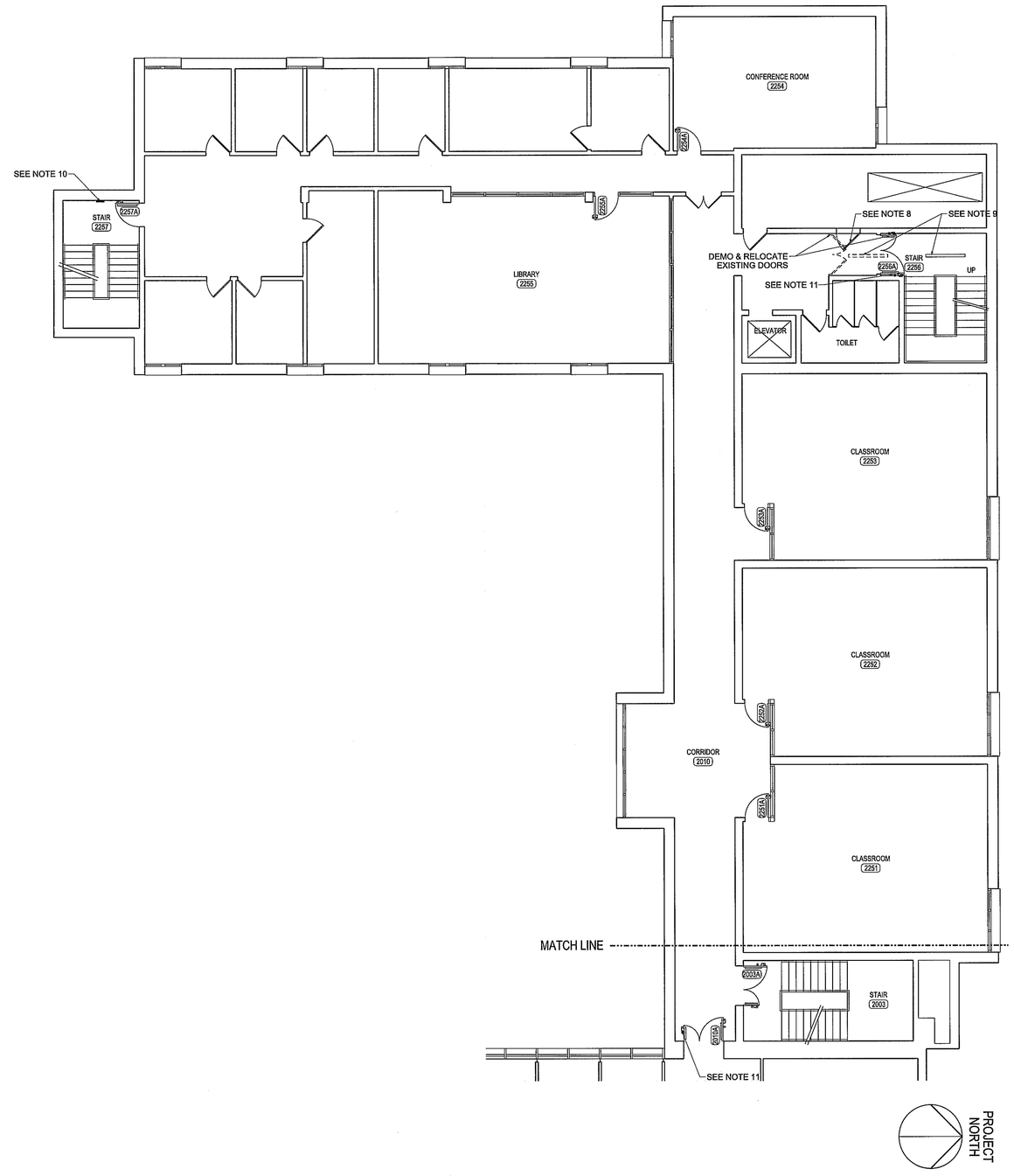

Second Floor Partial Plan

SCALE: 1/8" = 1'-0"

1

GENERAL NOTES

1. REPLACE ALL DOOR HARDWARE AND CLOSERS TO ALL STAIRS.
2. REPLACE ALL DOORS AND HARDWARE AS SHOWN.
3. HUMANITIES WING - ALL STAIR RAILINGS ARE NON - COMPLIENT AND ARE TO BE REPLACED.
4. DEMO ENTIRE PARTITION, DOOR AND REBUILD IN NEW 1 HR RATED CONSTRUCTION WITH NEW DOOR, FRAME AND HARDWARE.
5. DEMO AND REMOVE EXISTING DOOR AND PARTITION AND PATCH FLOOR AND CEILING.
6. CONSTRUCT NEW DOOR AND PARTITION TO MAINTAIN 1HR FIRE RATING.
7. REPLACE ALL RUBBER TREADS TO ALL STAIRS.
8. RE-ATTACH ALL DOOR CLOSERS.
9. RELOCATE LIGHT FIXTURE.
10. ADD STAIR SIGNAGE PER DETAIL 12/A-052.
11. VERIFY CONDITION OF EXISTING MAGNETIC HOLDS ON ALL DOORS BEFORE REPLACEMENT.

LEGEND

	EXISTING DOOR TO REMAIN
0000	NEW DOOR, DOOR NUMBER
	DEMO EXISTING DOOR
	NEW EXIT SIGN
ROOM NAME 0000	ROOM NAME AND NUMBER
	DEMO EXISTING PARTITION
	NEW PARTITION

HAI PROJECT NO. 1TWW00003-000

Hughes Associates Inc.
Fire Protection Engineers
& Code Consultants
New England Offices

Rhode Island
117 Metro Center Blvd
Suite 1002
Warwick, RI 02886
Phone: (401) 736-8992
Fax: (401) 736-8929

Massachusetts
2 Mount Royal Ave.
Suite 420
Marlborough, MA 01460
Phone: (508) 624-7766
Fax: (508) 624-7718

The copying or re-use of this document, or portions thereof, for any reason other than the original project or the purpose originally intended, without the consent of Hughes Associates, Inc., is prohibited.

Submission History

No.	Description	Date
1	CODE REVIEW SET	09/30/10
2	REVISION #1	11/3/10
3	SFMO COMMENTS	01/06/11

CUBE 3 STUDIO
architecture interiors planning
360 Merrimack Street Lawrence, MA 01843
phone: 978.989.9006 www.cube3studio.com

Gaige Hall &
Craig-Lee Hall
Rhode Island College
Providence, Rhode Island

Seal

ADAM L. WAGNER
No. 3565
REGISTERED ARCHITECT

Project Description

Fire Code
Upgrade Project

Design

Scale: As Noted
Drawn: GH
Design:
Review: TW

Drawing Title

SECOND FLOOR PARTIAL PLAN (HUMANITIES WING) CRAIG-LEE HALL

Drawing No.

A2-103b

COPYRIGHT (C) 2010 CUBE 3 STUDIO LLC ALL RIGHTS RESERVED

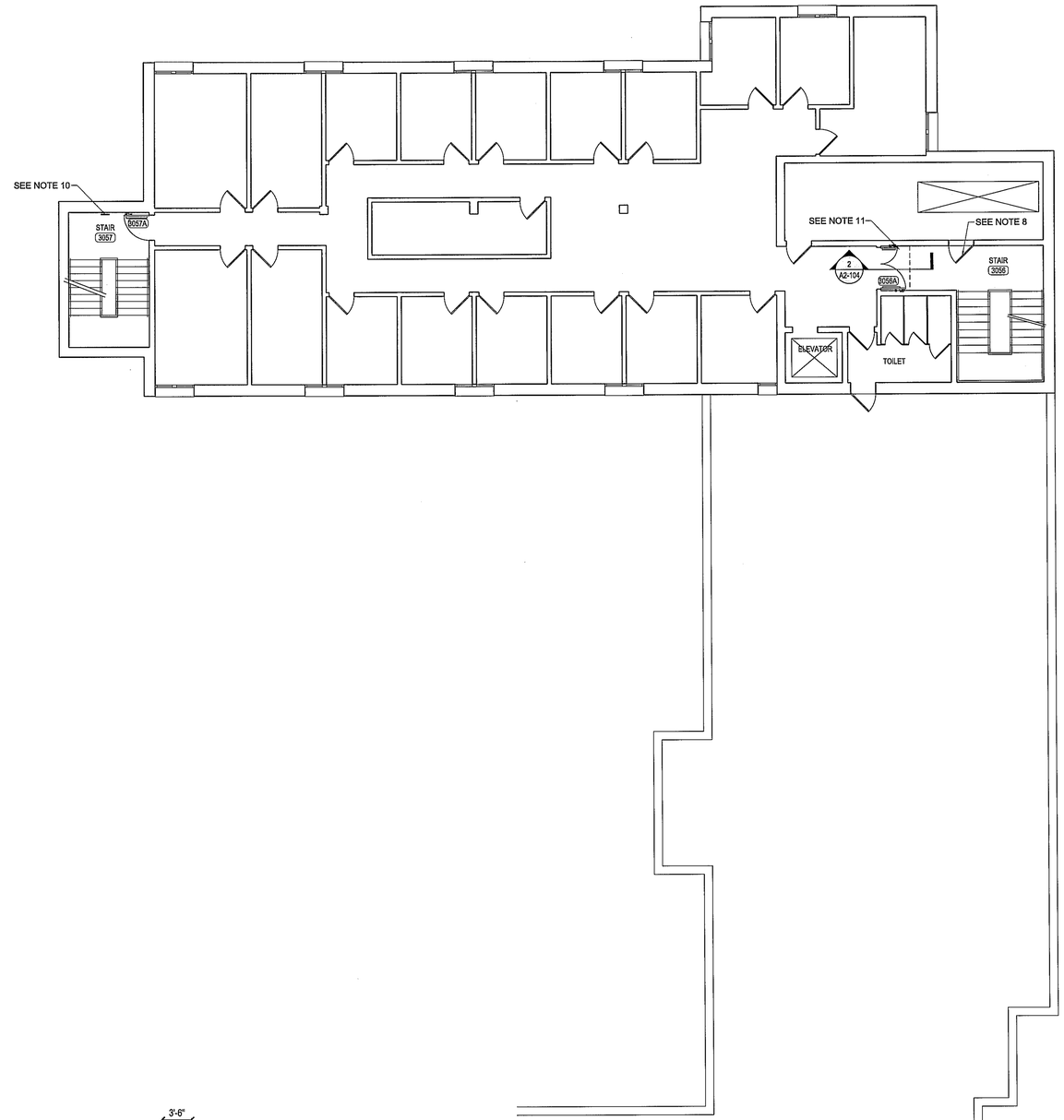

GENERAL NOTES

1. REPLACE ALL DOOR HARDWARE AND CLOSERS TO ALL STAIRS.
2. REPLACE ALL DOORS AND HARDWARE AS SHOWN.
3. HUMANITIES WING - ALL STAIR RAILINGS ARE NON - COMPLIENT AND ARE TO BE REPLACED.
4. DEMO ENTIRE PARTITION, DOOR AND REBUILD IN NEW 1 HR RATED CONSTRUCTION WITH NEW DOOR, FRAME AND HARDWARE.
5. DEMO AND REMOVE EXISTING DOOR AND PARTITION AND PATCH FLOOR AND CEILING.
6. CONSTRUCT NEW DOOR AND PARTITION TO MAINTAIN 1HR FIRE RATING.
7. REPLACE ALL RUBBER TREADS TO ALL STAIRS.
8. RE-ATTACH ALL DOOR CLOSERS.
9. RELOCATE LIGHT FIXTURE.
10. ADD STAIR SIGNAGE PER DETAIL 12/A-052.
11. VERIFY CONDITION OF EXISTING MAGNETIC HOLDS ON ALL DOORS BEFORE REPLACEMENT.

LEGEND

	EXISTING DOOR TO REMAIN
6000	NEW DOOR, DOOR NUMBER
	DEMO EXISTING DOOR
	NEW EXIT SIGN
ROOM NAME 6000	ROOM NAME AND NUMBER
	DEMO EXISTING PARTITION
	NEW PARTITION

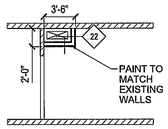

Section @ Soffit 2

SCALE: 1/8" = 1'-0"

PROJECT NORTH

Third Floor Plan Partial 1

SCALE: 1/8" = 1'-0"

HAI PROJECT NO. 1TWW00003-000

Hughes Associates Inc.
Fire Protection Engineers
& Code Consultants

New England Offices

Rhode Island
117 Metro Center Blvd
Suite 1002
Warwick, RI 02886
Phone: (401) 736-8992
Fax: (401) 736-8929

Massachusetts
2 Mount Royal Ave.
Suite 420
Marlborough, MA 01460
Phone: (508) 624-7766
Fax: (508) 624-7718

The copying or re-use of this document, or portions thereof, for any reason other than the original project or the purpose originally intended, without the consent of Hughes Associates, Inc., is prohibited.

Submission History

No.	Description	Date
1	CODE REVIEW SET	09/30/10
2	REVISION #1	11/3/10
3	SFMO COMMENTS	01/06/11

CUBE 3 STUDIO
architecture interiors planning
360 Merrimack Street Lawrence, MA 01843
phone: 978.989.9900 www.cube3studio.com

Gaige Hall &
Craig-Lee Hall
Rhode Island College
Providence, Rhode Island

Seal

ADAM L. WAGNER
No. 3565
REGISTERED ARCHITECT

Project Description

Fire Code
Upgrade Project

Design

Scale: As Noted
Drawn: GH
Design:
Review: TW

Drawing Title

THIRD FLOOR
PARTIAL PLAN
(HUMANITIES WING)
CRAIG-LEE HALL

Drawing No.

A2-104

COPYRIGHT (C) 2010 CUBE 3 STUDIO, ALL RIGHTS RESERVED

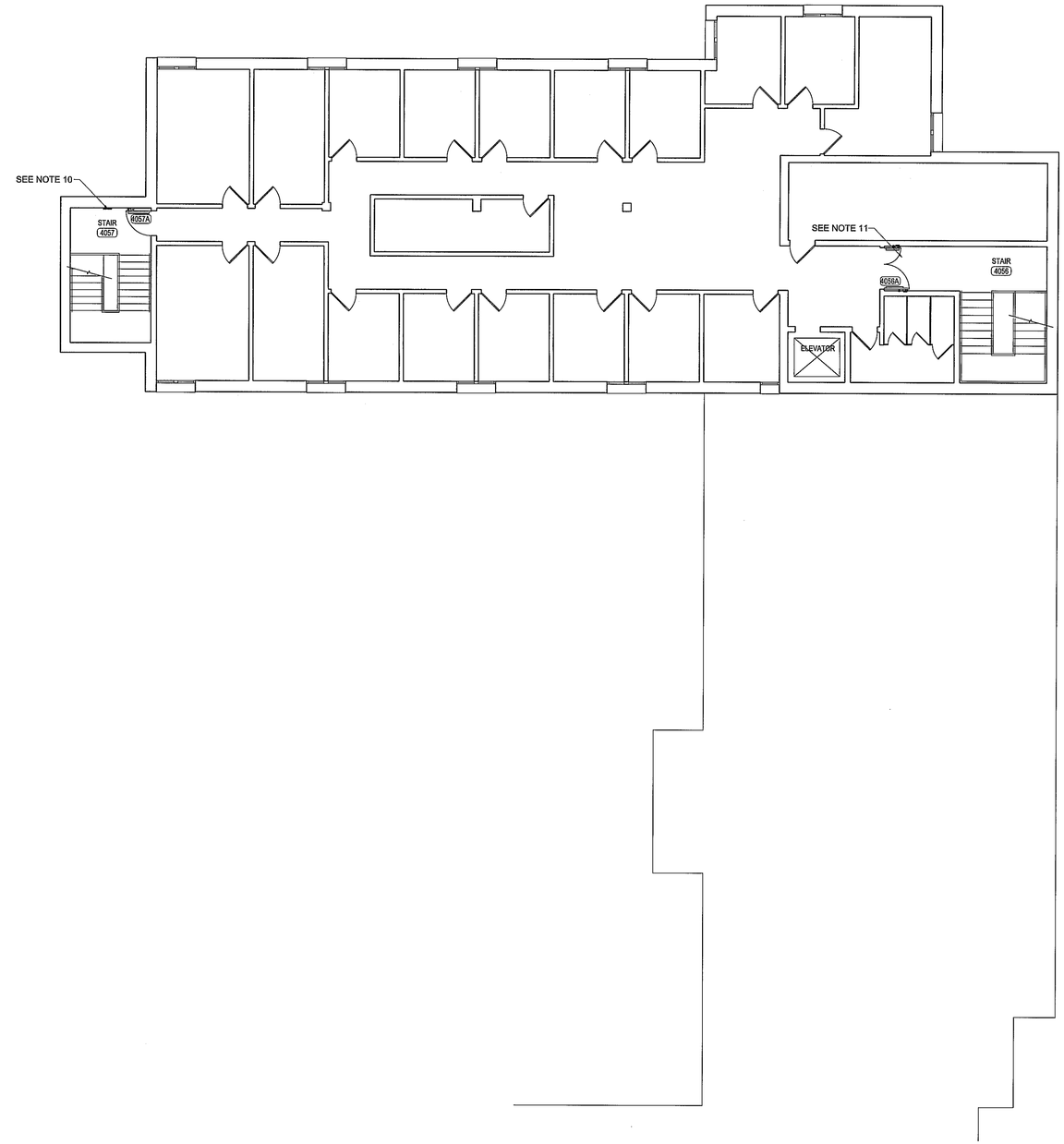

GENERAL NOTES

1. REPLACE ALL DOOR HARDWARE AND CLOSERS TO ALL STAIRS.
2. REPLACE ALL DOORS AND HARDWARE AS SHOWN.
3. HUMANITIES WING - ALL STAIR RAILINGS ARE NON - COMPLIENT AND ARE TO BE REPLACED.
4. DEMO ENTIRE PARTITION, DOOR AND REBUILD IN NEW 1 HR RATED CONSTRUCTION WITH NEW DOOR, FRAME AND HARDWARE.
5. DEMO AND REMOVE EXISTING DOOR AND PARTITION AND PATCH FLOOR AND CEILING.
6. CONSTRUCT NEW DOOR AND PARTITION TO MAINTAIN 1HR FIRE RATING.
7. REPLACE ALL RUBBER TREADS TO ALL STAIRS.
8. RE-ATTACH ALL DOOR CLOSERS.
9. RELOCATE LIGHT FIXTURE.
10. ADD STAIR SIGNAGE PER DETAIL 12/A-052.
11. VERIFY CONDITION OF EXISTING MAGNETIC HOLDS ON ALL DOORS BEFORE REPLACEMENT.

LEGEND

	EXISTING DOOR TO REMAIN
0000	NEW DOOR, DOOR NUMBER
	DEMO EXISTING DOOR
	NEW EXIT SIGN
ROOM NAME 0000	ROOM NAME AND NUMBER
	DEMO EXISTING PARTITION
	NEW PARTITION

PROJECT NORTH

Fourth Floor Plan Partial

1

SCALE: 1/8" = 1'-0"

HAI PROJECT NO. ITWW00003-000

Hughes Associates Inc.
Fire Protection Engineers
& Code Consultants

New England Offices

Rhode Island
117 Metro Center Blvd
Suite 1002
Warwick, RI 02886
Phone: (401) 736-8992
Fax: (401) 736-8929

Massachusetts
2 Mount Royal Ave.
Suite 420
Marlborough, MA 01460
Phone: (508) 624-7766
Fax: (508) 624-7718

The copying or re-use of this document, or portions thereof, for any reason other than the original project or the purpose originally intended, without the consent of Hughes Associates, Inc., is prohibited.

Submission History

No.	Description	Date
1	CODE REVIEW SET	09/30/10
2	REVISION #1	11/3/10
3	SFMO COMMENTS	01/06/11

CUBE 3 STUDIO
architecture interiors planning
360 Merrimack Street Lawrence, MA 01843
phone: 978.989.9900 www.cube3studio.com

Gaige Hall &
Craig-Lee Hall
Rhode Island College
Providence, Rhode Island

Seal

ADAM L. WAGNER
No. 3565
REGISTERED ARCHITECT

Project Description

Fire Code
Upgrade Project

Design

Scale: As Noted
Drawn: GH
Design:
Review: TW

Drawing Title

FOURTH FLOOR
PARTIAL PLAN
(HUMANITIES WING)
CRAIG-LEE HALL

Drawing No.

A2-105

COPYRIGHT (C) 2010 CUBE 3 STUDIO LLC, ALL RIGHTS RESERVED