Request for Quote

STATE OF RHODE ISLAND AND PROVIDENCE PLANTATIONS
ONE CAPITOL HILL
PROVIDENCE RI 02908

CREATION DATE : 03-DEC-10
BID NUMBER: 7448088
TITLE: CEMENT WATER MAIN REPLACEMENTS AND WATER BOOSTER PUMP STATIONS AT RIC

BID CLOSING DATE AND TIME:29-DEC-2010 11:00:00

BUYER: Moynihan, Jerome D
PHONE #: 401-574-8119

BILL TO
RIC-PURCHASING
600 MOUNT PLEASANT AVENUE
PROVIDENCE, RI 02908
US

SHIP TO
RIC SPECIAL INSTRUCTIONS
SEE BELOW
SEE BELOW, RI N/A
US

Requistion Number: 1201642

Line	Description	Quantity	Unit	Unit Price	Total
	THERE WILL BE A PRE-BID CONFERENCE ON 12/14/10 AT 10:00 AM AT RI COLLEGE, PHYSICAL PLANT (2ND FLOOR), 600 MOUNT PLEASANT AVENUE PROVIDENCE, RI BIDDER IS REQUIRED TO PROVIDE A BID SURETY IN THE FORM OF A BID BOND, OR A CERTIFIED CHECK PAYABLE TO THE STATE OF RHODE ISLAND, IN THE AMOUNT OF A SUM NOT LESS THAN FIVE PERCENT (5%) OF THE BID PRICE. BID SURETY MUST BE ATTACHED TO THE BID FORM. THE SUCCESSFUL BIDDER WILL ALSO BE REQUIRED TO FURNISH PERFORMANCE AND LABOR AND PAYMENT BONDS AT TIME OF TENTATIVE CONTRACT AWARD ***				
1	TOTAL PRICE TO DESIGN / BUILD ASBESTOS CEMENT WATER MAIN REPLACEMENTS AND WATER BOOSTER PUMP STATIONS - ARRA FUNDED - RIC	1.00	Each		

Delivery: _____

Terms of Payment: _____

It is the Vendor's responsibility to check and download any and all addenda from the RIVIP. This offer may not be considered unless a signed RIVIP generated Bidder Certification Cover Form is attached and the Unit Price column is completed The signed Certification Cover Form must be attached to the front of the offer

Contract Terms and Conditions

Table of Contents

Terms and Conditions VI
BID STANDARD TERMS AND CONDITIONS VI
TERMS AND CONDITIONS FOR THIS BID VI
START DATE VI
INSURANCE REQUIREMENTS VI
WAGE REQUIREMENTS VI
RIVIP INFO - BID SUBMISSION REQUIREMENTS VII
SURETY REQUIREMENTS VII

Terms and Conditions

BID STANDARD TERMS AND CONDITIONS

TERMS AND CONDITIONS FOR THIS BID

START DATE

STARTING DATE _____ NO OF WORKING DAYS REQUIRED FOR COMPLETION _____

INSURANCE REQUIREMENTS

AN INSURANCE CERTIFICATE IN COMPLIANCE WITH PROVISIONS OF ITEM 31 (INSURANCE) OF THE GENERAL CONDITIONS OF PURCHASE IS REQUIRED FOR COMPREHENSIVE GENERAL LIABILITY, AUTOMOBILE LIABILITY, AND WORKERS' COMPENSATION AND MUST BE SUBMITTED BY THE SUCCESSFUL BIDDER(S) TO THE DIVISION OF PURCHASES PRIOR TO AWARD THE INSURANCE CERTIFICATE MUST NAME THE STATE OF RHODE ISLAND AS CERTIFICATE HOLDER AND AS AN ADDITIONAL INSURED. FAILURE TO COMPLY WITH THESE PROVISIONS MAY RESULT IN REJECTION OF THE OFFEROR'S BID. ANNUAL RENEWAL CERTIFICATES MUST BE SUBMITTED TO THE AGENCY IDENTIFIED ON THE PURCHASE ORDER FAILURE TO DO SO MAY BE GROUNDS FOR CANCELLATION OF CONTRACT.

NOTE: IF THIS BID COVERS CONSTRUCTION, SCHOOL BUSING, HAZARDOUS WASTE, OR VESSEL OPERATION, APPLICABLE COVERAGES FROM THE FOLLOWING LIST MUST ALSO BE SUBMITTED TO THE DIVISION OF PURCHASES PRIOR TO AWARD: * PROFESSIONAL LIABILITY INSURANCE (AKA ERRORS & OMISSIONS) - $1 MILLION OR 5% OF ESTIMATED PROJECT COST, WHICHEVER IS GREATER. * BUILDER'S RISK INSURANCE - COVERAGE EQUAL TO FACE AMOUNT OF CONTRACT FOR CONSTRUCTION. * SCHOOL BUSING - AUTO LIABILITY COVERAGE IN THE AMOUNT OF $5 MILLION * ENVIRONMENTAL IMPAIRMENT (AKA POLLUTION CONTROL) - $1 MILLION OR 5% OF FACE AMOUNT OF CONTRACT, WHICHEVER IS GREATER * VESSEL OPERATION - (MARINE OR AIRCRAFT) - PROTECTION & INDEMNITY COVERAGE REQUIRED IN THE AMOUNT OF $1 MILLION

WAGE REQUIREMENTS

BIDDERS ARE ADVISED THAT ALL PROVISIONS OF TITLE 37 CHAPTER 13 OF THE GENERAL LAWS OF RHODE ISLAND APPLY TO THE WORK COVERED BY THIS REQUEST, AND THAT PAYMENT OF THE GENERAL PREVAILING RATE OF PER DIEM WAGES AND THE GENERAL PREVAILING RATE FOR REGULAR, OVERTIME, AND OTHER WORKING CONDITIONS EXISTING IN THE LOCALITY FOR EACH CRAFT, MECHANIC, TEAMSTER, OR TYPE OF WORKMAN NEEDED TO EXECUTE THIS WORK IS A REQUIREMENT FOR BOTH CONTRACTORS AND SUBCONTRACTORS. THE PREVAILING WAGE TABLE MAY BE OBTAINED AT THE RI DIVISION OF PURCHASES HOME PAGE BY INTERNET at www.purchasing.state.ri.us SELECT "INFORMATION" AND THEN SELECT "PREVAILING WAGE TABLE". THE STATE OF RHODE ISLAND USES THE GENERAL DECISION NUMBER RI20100001 PRINTING THE ENTIRE DOCUMENT AVERAGES APPROXIMATELY ONE MINUTE PER PAGE - YOU MAY WANT TO PRINT ONLY THE PAGES APPLICABLE TO YOUR BID BIDDERS NOTE: IN THE EVENT THIS BID SPECIFIES PRICE OFFERS ON A TIME-AND-MATERIALS BASIS, i.e., AN HOURLY RATE, ANY OR ALL BIDS SUBMITTED IN AN AMOUNT LESS THAN THE PREVAILING RATE IN EFFECT FOR THE WORK COVERED BY THIS REQUEST AS OF THE DATE OF BID ISSUANCE SHALL BE REJECTED BY THE DIVISION OF PURCHASES

RIVIP INFO - BID SUBMISSION REQUIREMENTS

It is the Vendor's responsibility to check and download any and all addenda from the RIVIP This offer may not be considered unless a signed RIVIP generated Bidder Certification Cover Form is attached and the Unit Price column is completed. The signed Certification Cover Form must be attached to the front of the offer When delivering offers in person to One Capitol Hill, vendors are advised to allow at least one hour additional time for clearance through security checkpoints.

SURETY REQUIREMENTS

BIDDER IS REQUIRED TO PROVIDE A BID SURETY IN THE FORM OF A BID BOND, OR A CERTIFIED CHECK PAYABLE TO THE STATE OF RHODE ISLAND, IN THE AMOUNT OF A SUM NOT LESS THAN FIVE PERCENT (5%) OF THE BID PRICE. BID SURETY MUST BE ATTACHED TO THE BID FORM THE SUCCESSFUL BIDDER WILL ALSO BE REQUIRED TO FURNISH PERFORMANCE AND LABOR AND PAYMENT BONDS AT TIME OF TENTATIVE CONTRACT AWARD.

Providence Water

Requirements for Water Mains, Services and Appurtenances

June 2004

TABLE OF CONTENTS

1.0 ADMINISTRATIVE PROCEDURES

100.1 Applicable Standards 1-1
100.2 Approved Materials 1-1
100.3 Restrictions 1-1
100.4 Applications 1-1
100.5 Fees 1-1
100.6 Time of Review 1-1
100.7 Duration of Approval 1-1
100.8 As-Built Drawings 1-1

2.0 ENGINEERING REQUIREMENTS

200.1 Professional Certification 2-1
200.2 Base of Levels 2-1
200.3 Calculations 2-1
200.4 Construction Plans 2-1
200.5 Fire Flow Testing 2-1
200.6 Water System Modeling 2-1

3.0 MATERIALS

300.1 Pipe 3-1
300.2 Fittings 3-1
300.3 Valves 3-1
300.3.1 Gate 3-1
300.3.2 Butterfly 3-1
300.3.3 Swing-Check 3-2
300.3.4 Tapping 3-2
300.3.4.1 Tapping Sleeve 3-2
300.4 Valve Boxes 3-2
300.4.1 Gate Valve Box 3-2
300.4.2 Gate Valve Roadway Box 3-2
300.4.3 Gate Valve Box Aligners 3-2
300.5 Blow Off Assembly 3-2
300.6 Fire Hydrants 3-2
300.7 Service Connections 3-3

4.0 CONSTRUCTION PROCEDURES

400.1 General Requirements 4-1
400.1.1 Notification 4-1
400.1.2 Inspection 4-1
400.1.3 Disposal of Removed Materials 4-1
400.1.4 Trench Excavation and Backfill 4-1
400.2 Specific Components 4-1
400.2.1 Pipe and Fittings 4-1
400.2.2 Valves 4-3
400.2.2.1 Gate 4-3
400.2.2.2 Butterfly 4-3
400.2.2.3 Swing-Check 4-3
400.2.2.4 Tapping 4-3
400.2.3 Valve Boxes 4-3
400.2.3.1 Gate Valve Box 4-3
400.2.3.2 Gate Valve Roadway Box 4-3
400.2.4 Blow Off Assembly 4-3
400.2.5 Fire Hydrants 4-3
400.2.6 Service Connections 4-4
400.3 Thrust Restraint 4-4
400.4 Leakage and Pressure Testing 4-5
400.5 Disinfection 4-6

APPENDIX A - INSTALLATION DETAILS A-1

2-Inch Blowoff Assembly A-2
Check Valve Manhole A-3
Fire Hydrant (Post Type) A-4
Gate Valve A-5
Gate Valve Box A-6
Gate Valve Roadway Box A-7
Tapping Sleeve & Valve A-8
Residential Service Connection Diagram A-9

APPENDIX B - LIST OF APPROVED MATERIALS / MANUFACTURERS FOR USE IN THE PROVIDENCE WATER DISTRIBUTION SYSTEM B-1

INDEX I-1

SECTION 100

ADMINISTRATIVE PROCEDURES

100.1 Applicable Standards. American Water Works Association (AWWA) standards shall be considered to be part of the *Requirements for Water Mains, Services and Appurtenances.* The Chief Engineer of Providence Water (PW) reserves the right to make exceptions to the *Requirements.* If required, a manufacturer's *Certificate of Compliance* shall be submitted to PW for components incorporated into the water system.

100.2 Approved Materials. Materials used in the construction, repair or maintenance of the water system shall meet the approval of PW. A published *List of Approved Materials/Manufacturers for use in the Providence Water Distribution System,* which appears as "Appendix B" in the *Requirements,* defines specifically approved materials and manufacturers of the same. It is important to note that the "list" is subject to change— without notice—and it is the responsibility of the customer and/or contractor to acquire the latest revision of such list from Providence Water prior to commencing construction.

General material specifications may be found in Chapter 3, Materials, of the *Requirements.*

100.3 Restrictions. Valves, hydrants, meters, blowoffs, curbstops and other appurtenances in the PW system are the property of PW and operation of the same shall be limited to PW personnel who hold, at a minimum, a valid Class I Water System Operator's License, as issued by the R.I. Department of Health, unless otherwise authorized.

100.4 Applications. Water service connection and/or repair, water meters, backflow prevention device installation, and water main extension involve an application process. Application forms are available at the Engineering Office, which is located at 430 Scituate Avenue, Cranston, RI.

Applications involving commercial properties, subdivisions or other major projects shall require the submission of detailed construction plans, details and specifications.

100.5 Fees. Fees for applications and other pertinent items are published in PW's *Terms and Conditions,* as approved by the Rhode Island Public Utilities Commission. A current copy of the *Terms and Conditions* is available at PW offices located at 552 Academy Avenue, Providence, RI or 430 Scituate Avenue, Cranston, RI.

100.6 Time of Review. Time for processing applications will vary depending on project complexity and work load. Applicant shall allow up to 8 weeks for PW to respond to an application submitted for review and approval.

100.7 Duration of Approval. Approvals shall remain valid for one (1) year. PW will not guarantee the access to, or availability of, the water service or main extension beyond this approval period. Installations not begun within one (1) year of approval will require resubmission of the request. An extension to the original approval may be granted, pending review of circumstances provided in writing by the requestor.

100.8 As-Built Drawings. Upon completion of all construction, and prior to connection to the PW system, accurate record ("as-built") drawings of the work shall be provided to PW by the requestor. This applies to commercial properties, subdivisions or other major projects. It shall include locations of all new mains/services showing ties and measurements from street property lines and permanent objects as well as the exact locations of the completed water line. Water service will not be activated without the approval of PW and receipt of "as-built" drawings.

"As-built" drawings shall be prepared on 4-mil, double matte, mylar sepia or other approved reproducible media, marked "AS BUILT," and "wet-stamped" and signed by a professional civil engineer who is registered and certified in the State of Rhode Island. Preferably, or as mandated by Providence Water, "as-builts" shall be submitted in electronic AutoCAD compatible format. "As-built" drawings shall remain the property of PW upon approval and acceptance of the same.

SECTION 200

ENGINEERING REQUIREMENTS

200.1 Professional Certification. Designs and calculations shall be prepared by an engineer who is professionally licensed and authorized to provide engineering services in the State of Rhode Island.

Field grades and measurements, as may be needed for determination of the location of existing and proposed water facilities, shall be provided by a land surveyor who is a licensed professional and authorized to provide surveying services in the State of Rhode Island.

200.2 Base of Levels. Base of levels for determining topographic elevations in the PW system are based upon City of Providence Mean High Water (MHW) Datum. The MHW Datum is 2.35 feet above Mean Sea Level (MSL) elevation. Plans, calculations, reports, etc. shall specify which datum is used.

200.3 Calculations. PW calculates the size of domestic water services and meters based upon a detailed list of water using fixtures (actual and/or proposed) that is supplied by the Applicant for water service. For instances where non-standard fixtures are used, a gallon-per-minute (gpm) value shall be supplied including average day usage, instantaneous peak usage and fire flow requirements. This information will be used to compute the minimum size of water service and meter size.

If the existing system pressure in the water main located in the street where a connection is proposed is such that PW determines that the pressure in the main may not deliver adequate pressure to the interior domestic supply plumbing, an individual pressure booster pump may be required. Regional pump stations will only be allowed in the system when approved by the Chief Engineer and in conformance with PW standards and practices. Installation of this type of facility shall be the sole responsibility of the Owner and dedicated to PW upon satisfactory completion.

200.4 Construction Plans. Project drawings should be prepared on sheets no larger than 24" x 36". Two (2) sets of plans shall be submitted for review and comment. If a project is to be implemented in stages (phases), a master plan showing the entire development shall be submitted for review.

Site plans must display a "north arrow" and be drawn at a scale of not less than 1"=100' and no more than 1"=20'. Contour lines, when included, should be drawn at intervals of no more than two (2) feet. A locus map shall be included on the drawing at a scale of not less than 1"=2000'.

Layout of existing and proposed water mains, valves, fittings, hydrants, services and any other appurtenances to the water system shall be shown, as well as details, notes, sewer lines, septic systems, drainage lines and rights-of-way.

200.5 Fire Flow Testing. Public hydrant fire flow testing shall only be performed by PW personnel. PW charges a fee for each test performed (see Sec. 100.4, *Fees*). Results of the test(s) will be furnished usually within ten (10) working days of completing the test(s).

200.6 Water System Modeling. Some projects may require the Applicant to provide PW with a computerized hydraulic simulation model of the proposed modifications to the existing system. Analysis shall include domestic demands as well as fire flows. Modeling shall be performed using standards acceptable to PW, incorporating aspects of the existing system as needed and required. When proposed system modifications are of such magnitude that a full simulation of the entire system is deemed necessary, PW engineering staff can be made available to assist the Applicant in accomplishing this, at a cost to be borne by the Applicant (see Sec. 100.4, *Fees*).

SECTION 300

MATERIALS

300.1 Pipe. Water pipe, of the push-on or mechanical joint type, shall be manufactured of ductile iron and shall be Class 52. In high pressure applications, or other special conditions, PW may require the use of Class 56 pipe. Pipe is to be furnished with at least one (1) coat of cement mortar on the interior surface and the exterior is to be coated with a 1 mil± thick coating of asphaltic paint.

300.2 Fittings. Fittings shall be ductile iron, mechanical joint (MJ), Class 350 (4" - 24") and Class 250 (30" - 48"), cement-mortar lined and provided with an asphaltic coating 1 mil± thick on the exterior. Ductile iron compact fittings, Class 350, may be used in the 4 to 16-inch size. Components shall conform with the weights, excluding accessories, and dimensions shown in current AWWA standards.

Sleeve couplings and accessories shall be pressure rated to at least equal to that of the pipe. Couplings shall be ductile iron. After assembly, all exterior surfaces, including bolts and nuts, shall be thoroughly coated with two (2) coats of heavy-duty protective asphaltic coating. The interior of the coupling shall be fusion-bonded epoxy coated in accordance with AWWA standards, composed of thermosetting epoxy with a minimum dry film thickness of 10 mils and a maximum of 20 mils.

Bolts and nuts shall be rustproofed steel.

300.3 Valves.

300.3.1 Gate. Valves up to 12-inches in diameter shall be resilient-seated style. Those that are buried shall be non-rising stem (NRS) style, open "RIGHT" (clockwise) and capable of producing a bubble-tight seal at 200 psi (either direction).

Operating nuts shall be 2-inches square at the base, tapering to 1-15/16 inches square at the top and shall be manufactured of cast or ductile iron and attached to the stem with a nut or pin at the factory. Nuts shall be painted red and marked with an "arrow" to indicate direction of opening.

Valves shall have mechanical joint (MJ) ends, complete with all accessories. MJ bolts and nuts shall be rustproofed steel. Valve exteriors shall be coated with fusion-bonded epoxy at the place of manufacture. If required, operating stem extension rods shall be furnished and installed with the valve.

Bronze stem material shall have a minimum tensile strength of 70,000 psi, yield strength of 35,000 psi and maximum elongation of 15 percent. Stem seals shall consist of at least two (2) O-ring seals. One shall function as a dirt seal and the other as a pressure seal and both shall be capable of being replaced with the valve under pressure in the full open position.

A thrust washer of an approved material shall be used between bearing surfaces of the stem collar and valve body. The torque required to open a fully closed valve under 100 psi pressure on one side shall not exceed 100 ft-lbs and the torque required to fully close a valve under the flow conditions of 10 fps shall not exceed 100 ft-lbs. Valves must be able to withstand an input torque of 300 ft-lbs with no distortion of the stem or other damage to the valve.

Gate cross-section shall be symmetrical about its vertical axis.

Rubber seats shall be new and of a compound—natural or synthetic—designated for water service application. Reclaimed rubber is not acceptable. Seats shall be either bonded or mechanically attached to the gate. When mechanically attached, all exposed hardware shall be 18-8 Type 304 stainless steel.

The waterway inside the body of the valve shall be free of pockets, channels, cavities, depressions or obstructions in the seat area.

Interior surfaces of valve bodies shall be fusion-bonded epoxy coated at the place of manufacture in accordance with current AWWA standards. Field coating with epoxy is prohibited. Bonnet bolts, seal plate bolts, stuffing box bolts and other bolts in contact with soil shall be manufactured of stainless steel or low-zinc bronze.

300.3.2 Butterfly. Valves 16-inches and larger shall be butterfly-type and suitable for direct burial. They shall open "RIGHT" (clockwise) and be designed for satisfactory performance involving frequent operation after long periods of inactivity. They shall be capable of maintaining a bubble-tight seal at 150 psi (either direction).

Rubber seats shall be new and of a compound—natural or synthetic—designated for water service application. Reclaimed rubber is not acceptable. Mating seat surfaces shall be Type 304 or 316 stainless steel.

Actuators shall be either the traveling nut or gear type and. furnished with the valve. Valves up to 24-inches in diameter shall be able to sustain an input torque of 300 ft-lbs measured at the actuator stem. For those with diameters of 30-inches to 48-inches, actuators shall be capable of withstanding a sustained input torque of 450 ft-lbs. If required, extension rods shall be furnished and installed on actuator stems.

Actuator stems shall have at least one (1) O-ring. It shall function as a dirt seal and prevent groundwater from entering the actuator housing. A thrust washer of an approved material shall be used directly above and below the actuator stem collar.

Valves shall have mechanical joint (MJ) ends, complete with all accessories. Bolts and nuts shall be rustproofed steel. Valve interiors and exteriors shall be coated with fusion-bonded epoxy.

300.3.3 Swing-Check. Swing-check valves shall utilize iron-body bronze-mounted (IBBM) design. They may employ metal-to-metal or composition-to-metal seat construction. Working pressure shall be 175 psi for valves up to 12-inches and 150 psi for those 16-inches and larger.

300.3.4 Tapping. Tapping valves shall be full-body, full-port style, with a flanged end on the upstream side and a raised male centering lip to register with the counterbore in the tapping sleeve outlet connecting flange. They shall conform to Sec. 300.3.1, *Gate*, in all other respects.

300.3.4.1 Tapping Sleeve. Tapping sleeves shall be ductile iron or stainless steel rated for at least 150 psi working pressure. Sleeves shall have side flanges with gaskets extending the full length of the sleeve (NOTE: for stainless steel sleeves, gaskets shall cover the entire surface area of each sleeve). Gaskets shall be supplied for flanges, where applicable. Bolts used to assemble the halves of the sleeve shall pass directly through the flanges. Ductile iron mechanical joint tapping sleeves are to be extra heavy pattern to withstand the severe strains of making the wet tap or machine connections. Connection flanges shall be machined, faced, counterbored and drilled to register with the flanged end on the upstream side of the tapping valve to be installed. **NOTE:** Fabricated sleeves, which are used for larger pipe sizes, shall be epoxy coated and employ a gasket at the throat.

300.4 Valve Boxes.

300.4.1 Gate Valve Box. A gate valve box shall consist of three (3) pieces—cover, upper section, and lower section—all of which are manufactured of cast iron. The lower section shall have an inside diameter of not less than 5¼-inches and a length of at least 36-inches—it shall be designed to telescope (slide) into the upper section. Upper section length shall be 26-inches. Covers shall have the word "WATER" (in caps) cast upon them.

300.4.2 Gate Valve Roadway Box. A gate valve roadway box shall consist of three (3) pieces—cover, upper section, and lower section—all of which are manufactured of cast iron. The lower section incorporates two (2) diametrically opposed horseshoe-shaped openings, which are designed to straddle service pipes up to 2-inches in diameter. Additionally, the lower section shall have an inside diameter of not less than 4¼-inches and a length of at least 36-inches—it shall be designed to telescope (slide) into the upper section. Upper section length shall be 26-inches. Covers shall have the word "WATER" (in caps) cast upon them.

300.4.3 Gate Valve Box Aligners. Gate valve box aligners shall be used in every gate valve box installation.

300.5 Blow Off Assembly. A 2" blow off assembly shall be used at the terminus of a "dead end" main. It consists of the following 2" diameter components: tapping saddle, brass nipples, brass elbow, curbstop valve (open "RIGHT") with drain, galvanized pipe, ductile iron end cap (MJ) for main, poured concrete thrust block, cast iron 4 1/4" gate valve roadway box, and cast iron 5 1/4" gate valve box. Components shall be joined together with iron pipe threads.

300.6 Fire Hydrants. Hydrants shall be dry-barrel, post-type. The main hydrant valve shall be a compression-type that opens against pressure in the main with a 5¼-inch opening and be constructed of solid rubber that may be reinforced with steel. The bottom cap nut is to be bronze or fusion-bonded epoxy

coated ductile or cast iron. An O-ring seal shall be provided in the main valve assembly to insure that water cannot leak from the hydrant shoe, or elbow, into the hydrant barrel or drainway. O-ring seals in the main valve area shall seat against bronze or fusion-bonded epoxy coated cast iron. Hydrants shall have a bronze seat ring threaded to a bronze sub-set (NOTE: threads of the main valve seat ring shall not be designed as a sealing thread).

Drainways are to be manufactured of nautical brass, bronze, fusion-bonded epoxy coated cast iron, or an approved equal. At least two (2) drain ports are to be provided with a minimum net diameter of ¼-inch. Drain valves shall momentarily force flush each time the hydrant is operated.

Hydrants shall open "RIGHT" and utilize a breakaway design. Each hydrant shall have two 2½-inch hose nozzles, 180-degrees apart, and one 4½-inch steamer port nozzle. (NOTE: Special High Service hydrants shall have three (3) 2½-inch hose nozzles and no steamer port.) All nozzle threads are to be National Standard Thread (NST). Lead shall not be used to secure nozzles to the hydrant barrel. Nozzle caps shall be cast iron and shall be secured to the hydrant barrel with rustproof steel chains.

Hydrants shall be designed so that no part of the threads of the operating rod will be in contact with water. Two (2) O-rings shall be used to accomplish this. One (1) O-ring shall be used to seal the upper end of the operating mechanism from atmospheric moisture. The operating rod stem shall be sheathed with nautical brass or bronze where it contacts the lower O-rings. All temperature grease shall be used as a lubricant for the operating rod threads - oil is not acceptable. Grease shall be certified by the U.S. Food & Drug Administration (FDA) as "non-toxic" and safe for use in contact with potable water supplies. Changing the main valve and seat shall only require removal of the bonnet and lubrication chamber or bonnet and seal plate.

Hydrant inlet shall be mechanical joint (MJ) with all accessories, and shall accommodate 6-inch ductile iron pipe and cast iron pipe, when requested. All MJ bolts and nuts shall be rustproofed steel. Interior surfaces of the shoe, or elbow, shall be fusion-bonded epoxy coated.

Hydrant exteriors, above the ground line, shall be painted with one (1) coat of primer and two (2) finish coats of "Ivy Green" paint that will produce a surface to which subsequent coats of paint, having a linseed oil base, will readily adhere. Bonnets shall be painted, in the same manner, to match existing colors ("Safety Yellow").

Hydrant extension kits and traffic repair kits must be available from the manufacturer as an off-the-shelf item. Kit components shall only be those manufactured by the original hydrant manufacturer and considered "original equipment." Substitutes are not allowed.

300.7 Service Connections. Service lines up to 2-inches on the customer's side shall be type "K" copper (see *Residential Service Connection Diagram*, Page 5-9). Service size will be determined by PW based upon information supplied by the customer. Use of intermediate couplings is not permitted (NOTE: where service lines are excessively long and would require intermediate couplings, PW may allow or direct the use of an approved polyethylene [200 psi] tubing).

Curb boxes shall be installed directly over the curb stop and brought to finished grade. They shall be a "Buffalo" type (sliding), cast iron, 3-3/8-inch inside diameter and of sufficient length for full coverage for stops no more than 1 inch in diameter. Box covers shall be a locking type and have the word "WATER" (in caps) cast upon it. Gate valve roadway boxes shall be used for 1-1/2 and 2-inch curb stops.

SECTION 400

CONSTRUCTION PROCEDURES

400.1 General Requirements

400.1.1 Notification. PW shall be notified at least forty-eight (48) hours prior to any item being installed within the system. Pressure testing and/or chlorination shall require a two (2) business day notification. It is a requirement that a representative of the PW witness ***all*** testing.

400.1.2 Inspection. Inspection shall be done in accordance with PW standards and practices. PW employees shall be given full access to the project at all times for inspection on an ***as needed*** basis.

Design drawings and record drawings of the progress of the work shall be maintained at the job site and shall be available for PW inspectors to view at any time. Failure to have these documents available for review or failure to have the documents prepared, may cause cessation of all construction work and disconnection from the PW system until such time that remedial measures to those requirements have been made.

400.1.3 Disposal of Removed Materials. Water pipe and/or appurtenances that are removed shall remain the property of the party whose responsibility it shall be to properly dispose of the same.

Water mains, water services, and hydrant runouts that are disconnected from the system and abandoned in place shall be capped at ***ALL*** openings. When pipes are severed at tees, the remaining tee shall be removed and replaced with a section of straight pipe, if possible.

400.1.4 Trench Excavation and Backfill. Water mains and services shall be installed with a minimum cover of 4'-6" to the crown of the pipe in an AWWA "Type 5 Trench" (See Fig. 4-1). Where unsuitable material is found at or below the grade of the placement of the pipe or fitting, said material shall be removed to the required width and depth and replaced with thoroughly compacted bank run or processed gravel. Material shall be deposited across the full width and length of the trench in layers of not more than twelve (12) inches in depth, *before* compaction. Each layer shall be compacted to 95% Standard Proctor to within 12-inches of subgrade of the permanent patch. The final 12-inches shall be processed gravel, compacted in the same manner.

A temporary patch shall be installed over the freshly backfilled trench in an existing street or sidewalk using hot bituminous concrete. It shall be at least 3-inches thick consisting of equal thickness layers of Modified Binder and Type I-1 Wearing Course. After 30-60 days, the temporary patch shall be removed and replaced with a permanent patch.

Permanent patching shall match the thickness of the surrounding existing pavement, or as directed by the local public works department. Whichever the case, the patch shall be underlain by a 12-inch layer of processed gravel compacted to 95% Standard Proctor.

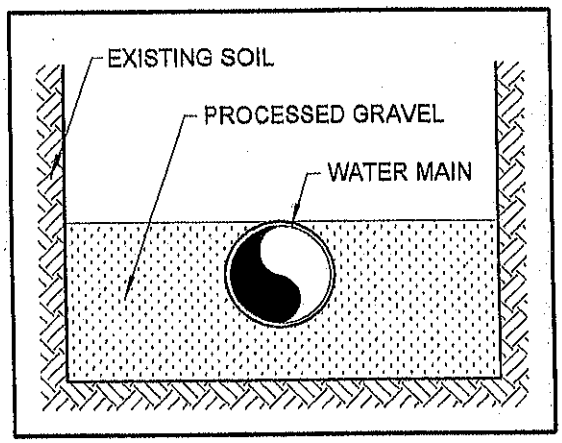

Fig. 4-1 – AWWA TYPE 5 TRENCH

400.2 Specific Components

400.2.1 Pipe and Fittings. Pipes and appurtenances should be installed with a minimum earth cover of 4'-6" over the crown of the pipe in an AWWA *Type 5 Trench* (see Sec. 400.1.4, *Trench Excavation and Backfill*), or as directed by PW.

Metallized, detectable identification tape, 2-inches wide, blue in color and imprinted with the words "CAUTION – WATER LINE BURIED BELOW," shall be utilized over all mains. The tape shall be buried 12-inches below finished grade.

Maximum changes in alignment (offset or deflection) of each 18-foot length of pipe shall not exceed the values in the following table:

TABLE 4-1

MAXIMUM DEFLECTION 18-FT PIPE SECTION

PIPE SIZE (in.)	PUSH-ON JOINT (in.)	MECH. JOINT (in.)
4	14	23
6	14	20
8-12	14	15
14-16	8	10
18-20	8	8
24-30	8	7
36	8	6
42-48	6	6
54	4	-

Maximum changes in alignment (offset or deflection) of each 20-foot length of pipe shall not exceed the values in the following table:

TABLE 4-2

MAXIMUM DEFLECTION 20-FT PIPE SECTION

PIPE SIZE (in.)	PUSH-ON JOINT (in.)	MECH. JOINT (in.)
4	16	26
6	16	23
8-12	16	17
14-16	9	11
18-20	9	9
24-30	9	8
36	9	7
42-48	6	6
54	5	-

Compacted gravel bedding (12" min) shall be installed under the entire length of the pipe and across the full width of the trench. Firm bearing shall be achieved by tamping selected material at the sides of the pipe/fitting, up to the "spring line" (mid-point height).

Whenever pipe laying operations cease for an extended period of time (over 30 minutes), all openings are to be closed with a watertight plug or other means approved by PW. Water shall be kept out of the trench while the pipe is being installed. If required, fittings, in addition to those shown on the plans, shall be provided when crossing utilities or other immovable obstructions that may be encountered when installing water facilities. At least a 12-inch layer of compacted gravel shall be left between all pipes or other subsurface structures, whether they are installed or relocated.

Adequate temporary provisions shall be made to provide for the flow from sewers or drains interfered with by the work. All necessary measures shall be taken to prevent sewage or other contaminating matter from entering the water main.

At all temporary cul-de-sacs and future streets, the main shall end with a full size line valve followed by a full length of pipe and a 3-foot section of pipe. The 3-foot section of pipe shall be outfitted with a cap (MJ) and a blowoff assembly (see Sec. 300.5, *Blowoff Assembly*). An adequate number of pipe sections shall be restrained before the end cap. A formed constructed-in-place concrete thrust block shall be placed against the cap.

Pipe cuts shall be made so as to leave a smooth end at right angles to the main axis of the pipe and also chamfered to conform to the manufactured spigot end. Particular care shall be exercised to minimize damage to the cement mortar lining when making cuts. Machine field cuts shall be made on pipes that are 16-inches and larger.

Dig-Safe® is to be notified prior to commencement of work. Any broken or damaged utility connection or services (water, sewer, gas, telephone, electric, etc.) shall be fully repaired at the expense of the party responsible for the damage. Underground structures shall be thoroughly supported or otherwise protected to maintain uninterrupted service.

New pipes and fittings shall be subjected to a careful visual inspection just before installation.

Any fitting showing a crack or any fitting or pipe that has received a severe blow, which may have caused an incipient fracture even though no such fracture can be seen, or any fitting or pipe discovered to be defective, shall be marked as "REJECTED" and removed at once from the work site. Pipe showing a crack may be cut off at a point at least 12-inches from the visible limit of the crack before the pipe is installed, provided the remaining portion is perfectly sound as determined by testing. Cut ends, used with push-on joints, shall be chamfered to prevent damage to the gasket when the pipe is assembled. Any defective pipe or fitting discovered after installation shall be removed and replaced at the installer's expense.

Pipes shall be cleaned of all excess asphaltic coating, debris, dirt, or other deleterious material, before installation. Care shall be taken in loading, transporting and unloading, to prevent injury to the coatings on the pipes and/or fittings. Any damage to the coatings shall be repaired as directed by a representative of PW. Pipes or fittings shall not be dropped.

400.2.2 Valves. Each valve that can be operated with a wrench or "key" shall be equipped with a sliding-type cast iron gate valve box (see Sec. 300.4.1, *Gate Valve Box*).

400.2.2.1 Gate. Valves shall be installed at all intersections and in each direction and line valves placed no further apart than 800 feet apart, and/or as directed by PW.

Each valve shall be equipped with a sliding-type cast iron gate valve box (see Sec. 300.4.1, *Gate Valve Box*), unless otherwise directed by PW.

400.2.2.2 Butterfly. Each valve shall be equipped with a sliding-type cast iron gate valve box (see Sec. 300.4.1, *Gate Valve Box*) unless otherwise directed by PW.

400.2.2.3 Swing-Check. Valves are to be mounted in an upright horizontal position. Direct access to the valve shall be accomplished by using a precast concrete manhole (5' I.D. min) with heavy duty cast iron manhole frame and solid 30" dia. (min.) cover. Concrete structure and cover shall be capable of withstanding an AASHTO H-20 load. Covers shall have a diamond check pattern with the word "WATER" (in caps) cast upon it. Corrosion resistant, non-slip steps or ladder shall be permanently affixed to the interior vertical wall of the manhole.

Depending on the pipe diameter, a resilient seated gate or butterfly valve shall be placed on each side of the swing-check valve, exterior of the manhole.

400.2.2.4 Tapping. Each valve shall be equipped with a sliding-type cast iron gate valve box (see Sec. 300.4.1, *Gate Valve Box*), unless otherwise directed by PW.

400.2.3 Valve Boxes.

400.2.3.1 Gate Valve Box. Each valve that can be operated with a wrench or "key" shall be equipped with a sliding-type, cast iron, gate valve box (see Sec. 300.4.1, *Gate Valve Box*). Boxes shall be positioned so that no load is transmitted to the valve body. A gate box aligner, manufactured of high strength plastic, shall be used with each installation to center the valve operating nut within the box.

400.2.3.2 Gate Valve Roadway Box. Gate valve roadway boxes shall be used for 1-1/2 and 2-inch curb stops (see Sec. 300.4.2, *Gate Valve Roadway Box*). Boxes shall be positioned so that no load is transmitted to the stop body or service pipe.

400.2.4 Blowoff Assembly. A 2-inch blowoff assembly shall be used at the terminus of a dead end main. Installation should be on the main at the "spring line" of the pipe within 2-feet of the end cap, or on the end cap itself.

400.2.5 Fire Hydrants. Hydrants shall be located so that they are, at a minimum, no more than 1,000 feet apart, or as required by the local fire department.

They shall be designed and installed so that when properly installed a standard 15-inch hydrant wrench will not contact the ground when making a full 360-degree turn on any nozzle cap.

Hydrants shall be set plumb with the steamer port (or central hose nozzle) facing the roadway. Hydrants shall be positioned with the center of the operating nut 24-inches back from the face of curb, or as required by the local fire chief.

Manufacturer's "bury mark" or ground line shall be set at finished grade. If there is no mark on the hydrant, the bottom of the breaking ring (flange) shall be set at a minimum of 2-inches to a maximum of 4-inches above finished grade. Depth of bury shall be at least 4'-6". The base of the hydrant shall be set on either a flat stone or concrete slab that is at least 14-inches square and 6-inches thick.

Hydrants shall be restrained using poured concrete thrust blocks in conjunction with a mechanical joint restraining device or strapped back to the hydrant gate valve.

A drainage pit shall be excavated below and around each hydrant and backfilled to a height of at least 6-inches above all drain ports with at least 1 cubic yard of ½ to 1-inch washed crushed stone. Stone shall be compacted prior to backfilling and compaction of the hydrant. Aggregates shall be covered with a layer of non-woven filter fabric to lessen the intrusion of fine soil particles into the stone.

Hydrants shall be fed from the main with a 6 or 8-inch ductile iron lateral (8-inch is used when hydrant laterals exceed a length of 10-feet). A resilient seated gate valve (MJ) shall be installed in the lateral between the tee and the hydrant. Special anchor or swivel tees (MJ) shall be used to connect the hydrant branch to the main.

For the purpose of standardization and the maintenance of reasonable parts inventories and repair capabilities, PW only allows a certain model of fire hydrant in its system.

400.2.6 Service Connections. Each tap to the main shall be made under pressure by PW personnel or, under some circumstances, an approved contractor. Taps shall be made using an approved method and equipped with a bronze corporation stop—compression type— with copper tube size (CTS) on the service side.

Taps should be made so that the service line will extend to the point where the meter will be located at the nearest point in the building at a 90-degree angle to the street.

Direct taps up to 1-inch may be made in the main. Larger taps shall require a service saddle. Ordinarily, taps will be made at the ten o'clock or two-o'clock position on the circumference of the pipe. When more than one tap is to be made in the main in close proximity to one another, they should be staggered around the circumference at least 12-inches apart.

Services up to 2-inches shall be equipped with a curb stop located 1-foot behind the face of curb or edge of pavement. Curb stops shall be bronze, compression fitted, without drip. Direction of opening shall be to the "RIGHT."

Generally speaking, service lines from the main to curb stop are installed by PW. Owners shall provide a marker (painted and/or staked) to indicate where they prefer the service to be located (must be approved by PW). Service from building to curb stop shall be installed by the Owner and inspected by PW (for sizes 2-inches and smaller—use of intermediate couplings is strongly discouraged.).

Depth to the crown of the service pipe shall be a minimum of 4'-6" below finished grade, throughout the installation. Information on this and other aspects of service installation is available on the PW *Service Installation Procedures* sheet.

Metallized detectable identification tape, 2-inches wide, blue in color and imprinted with the words "CAUTION – WATER LINE BURIED BELOW," shall be utilized over all service lines from the main to the curb stop. The tape shall be buried a depth of 12-inches below finished grade.

A full-ported ball valve (2-inch or less) rated for the service pressure, but not less than 150 psi, shall be installed just prior to the location of the meter coupling and one at the effluent side of the second meter coupling.

400.3 Thrust Restraint. The preferred method of counteracting thrust is through the use of a mechanical joint restraint device. Poured concrete thrust blocks are also allowed and may be used as an option or in conjunction with a mechanical joint restraint device.

Thrust blocks shall be designed using a soil bearing strength of 1,500 pounds per square foot (psf). They shall be constructed in place using Portland cement concrete (R.I. Dept. of Transportation Class "B") having a 28-day compressive strength of at least 3,000 psi, and be located in such a way so as to bear against undisturbed earth. They shall be utilized on all water mains for the following conditions (See Fig. 4-2):

- Pipeline direction changes (tees, bends, etc.)
- Dead end lines (caps, plugs or hydrants)
- Transition pieces (reducers, offsets, etc.)

The sides of thrust blocks shall be formed. Forms shall be removed before backfilling commences. Curing time should be at least fourty-eight (48) hours. Minimum bearing shall be that which is depicted on the plans or as directed by PW. Felt roofing paper shall be used to protect pipe joints. Concrete shall not be placed over bolts or nuts, or placed in such a way that will prevent the removal of joints (NOTE: concrete reaction blocks may be used when bearing against undisturbed soil cannot be achieved).

Vertical fittings shall be anchored to thrust blocks using at least two (2) #5 (5/8-inch minimum), deformed steel rebars. Blocks shall be designed by a professional engineer for pipe sizes greater than 12-inches. Anchors shall be bent to match to outside radius of the fitting to be restrained.

Thrust restraint, where concrete blocks cannot be poured against undisturbed earth, shall be via restrained joint as approved by PW. This may be accomplished by using a mechanical joint restraining device. Restrained joint pipe lengths (restrained length) shall be sufficient to counter the thrust imparted by 1½ times the anticipated working pressure but not less than 150 psi (See Fig. 4-3). Steel tie rods will be allowed with permission from PW. If allowed, they shall be of sufficient strength to withstand forces imparted to them. A *factor of safety* of 2.0 shall be used for all rod thickness calculations. Rods shall be protected from corrosion with at least two (2) coats of asphaltic paint or fusion-bonded epoxy coating.

400.4 Leakage and Pressure Testing. Completed pipe lines shall be tested (in sections) for strength and for leakage at a pressure of 150 psi in areas where "normal static pressure" is no more than 100 psi. In areas that exceed 100 psi, pressure testing shall be at 1.5x the static pressure. No pipe installation will be accepted if the leakage is greater than that determined by the following formula:

$$L = SD\sqrt{P} \div 133{,}200$$

where ....

L = allowable leakage, in gallons per hour

S = length of pipe tested, in feet

D = nominal diameter of pipe, in inches

P = average test pressure during the leakage test, in psi (gauge)

The rate of leakage shall not exceed the values in the following table:

TABLE 4-3

ALLOWABLE PIPELINE LEAKAGE

PIPE DIAMETER (in)	ALLOWABLE LEAKAGE PER 1,000 LF OF PIPELINE (gallons / hour)
4	0.37
6	0.55
8	0.74
10	0.92
12	1.10
14	1.29
16	1.47
18	1.66
20	1.84
24	2.21
30	2.76
36	3.31
42	3.86
48	4.41
54	4.97

Tests for leakage shall be done by the Applicant's contractor and shall be witnessed by a PW representative. Testing shall last for at least 1 hour and pressure shall not vary by more than ±5 psi for the duration of the test. Any additional water needed to maintain the required pressure shall be accurately measured in a manner approved by PW. During this test all hydrant laterals shall be in the "OPEN" position. Methods of testing and plans showing sections to be tested shall be submitted to PW for approval.

All apparatus, material, and labor necessary for making the tests, including caps temporarily set to accommodate pressure testing, shall be furnished by

the installer. Leaks discovered during testing shall be repaired by the installer.

Arrangements for securing water for test purposes and the expense of the same shall be borne by the installer. Water utilized for this purpose, which is obtained directly from the PW system, must flow through an approved backflow prevention device that has been tested and certified to be in working condition at the time it is used for this purpose.

400.5 Disinfection. Upon completion of the pipeline installation and all the pressure testing thereof, the interior of the pipe shall be flushed and then thoroughly disinfected in all parts. This disinfection must result in eliminating, from the various parts of the new pipeline, all evidence of the existence, therein, of bacteria indicative of any contamination, as determined by tests of the bacterial content of samples of water taken from the new water main. The disinfection shall be accomplished in the following manner:

A. Pipes shall be completely filled with water, all air released, and then thoroughly flushed out in the amount of twice the capacity of the section to be treated. Chlorine liquid/gas, or other approved disinfection agents, shall be introduced into the main near the point of water supply with PW approved Chlorine injection equipment, in the concentration required (not less than 100 parts of available Chlorine per million parts of water [ppm]) to maintain residual concentrations at the end of the disinfection period, as specified. The main shall be wasted or bled from the extreme end opposite the point of application of the disinfection agent until the solution has fully reached the end opposite to the point of application.

B. The disinfecting solution shall be left in the mains under full pressure for a period of not less than 24 hours. Prior to flushing the main, a sample shall be obtained from the main to verify that a minimum Chlorine residual concentration of 50 ppm is present. The entire section shall then be flushed through a neutralizing agent until all traces of Chlorine are removed. NOTE: under special circumstances approved by PW, a 3 hour disinfection period may be allowed with the requirement that a minimum Chlorine residual concentration of 100 ppm is present in the main at the end of the disinfection period.

C. Samples of water shall then be taken by PW and delivered to its laboratory for analysis of the effectiveness of the disinfection treatment.

D. Any main or section of pipe failing to meet laboratory standards for disinfection shall be retreated until the desired results are obtained.

E. Particular attention is directed to the requirement that a double check valve backflow prevention device installation shall be made in the water supply to main under treatment, to prevent possible backflow or back-siphonage of treated solution into the distribution system that is in service.

F. PW approval must be obtained before any main is placed into service.

Connections at cuttings shall be swabbed with 50 ppm solution of Chlorine at locations when other methods are not applicable.

The contractor shall make all necessary arrangements for securing the water for test purposes and shall bear the expense of these arrangements.

The installer shall furnish and install suitable temporary testing plugs, cap, pumps, pipe connections and other appurtenances, as necessary. Water samples shall be collected by a PW representative at points no further apart than 1,000 feet. Sample testing shall be done at the PW laboratory.

TABLE 4-4

THRUST* (IN POUNDS) AT FITTINGS WITH 150 PSI WATER PRESSURE

PIPE SIZE (in)	TEES & DEAD ENDS	90° BEND	45° BEND	22½° BEND	11¼° BEND
4	2,356	3,332	1,803	919	462
6	5,301	7,497	4,058	2,069	1,039
8	9,425	13,329	7,213	3,677	1,848
10	14,726	20,826	11,271	5,746	2,887
12	21,206	29,989	16,230	8,274	4,157
14	28,863	40,819	22,091	11,262	5,658
16	37,699	53,315	28,854	14,709	7,390
18	47,713	67,476	36,518	18,617	9,353
20	58,905	83,304	45,084	22,984	11,547
24	84,823	119,958	64,921	33,096	16,628
30	132,536	187,434	101,439	51,713	25,982
36	190,852	269,905	146,072	74,467	37,413
42	259,770	367,371	198,820	101,357	50,924
48	339,292	479,831	259,683	132,385	66,513
54	429,416	607,287	328,661	167,550	84,180
60	530,144	749,736	405,754	206,852	103,926
66	641,474	907,181	490,963	250,291	125,751
72	763,407	1,079,621	584,286	297,867	149,654

*Calculated by the Formula $T = (2PA\ SIN(\Theta \div 2)) \times 1.25$ (except for Tees & Dead Ends where $T = PA \times 1.25$)

where....

T = Thrust, in pounds
P = Water Pressure, in pounds per square inch
A = Area of Pipe, in square inches
Θ = Bend Deflection Angle, in degrees
1.25 = Factor of Safety

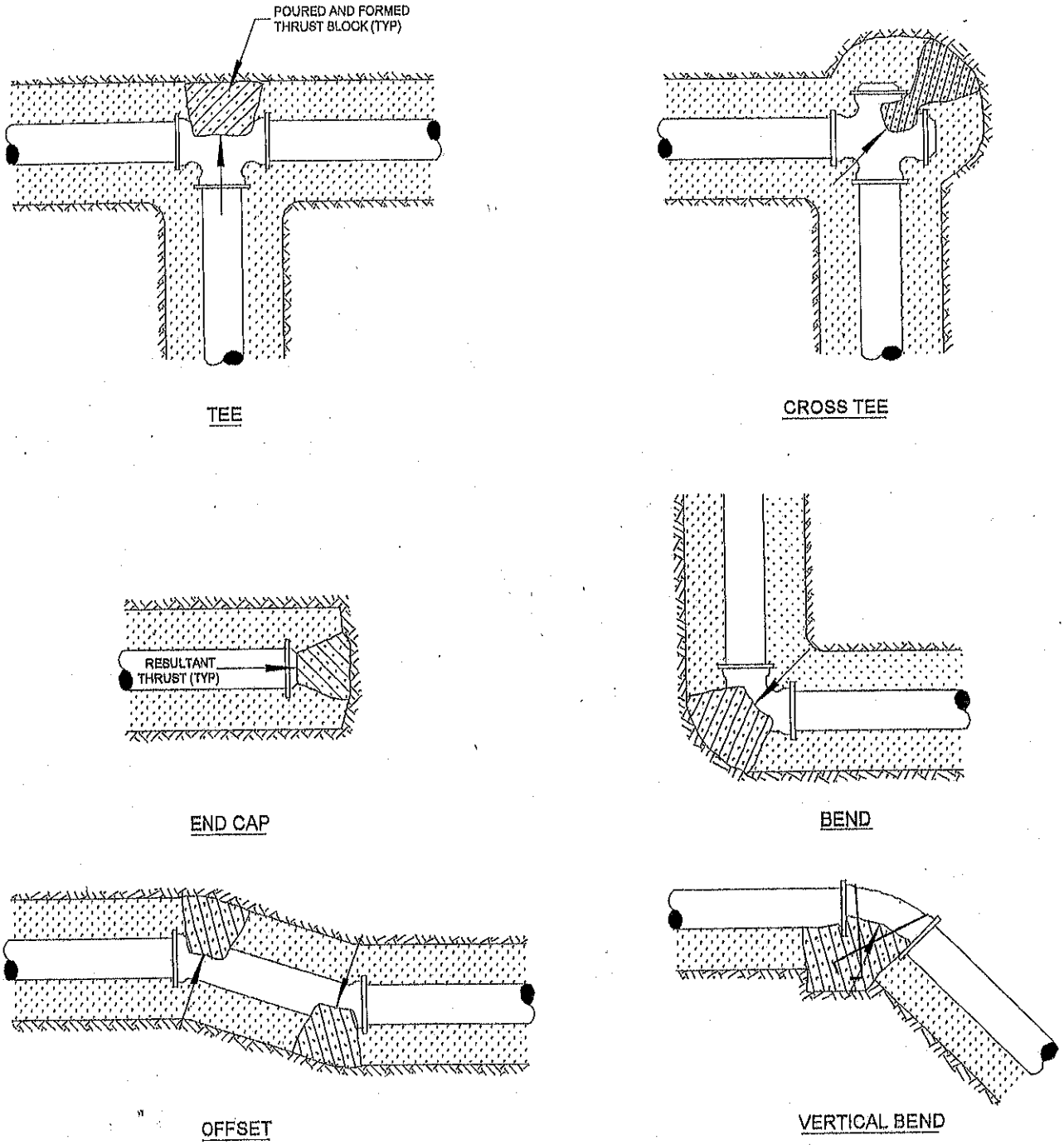

Fig. 4-2 – COMMON TYPES OF THRUST BLOCKING

APPENDIX A

INSTALLATION DETAILS

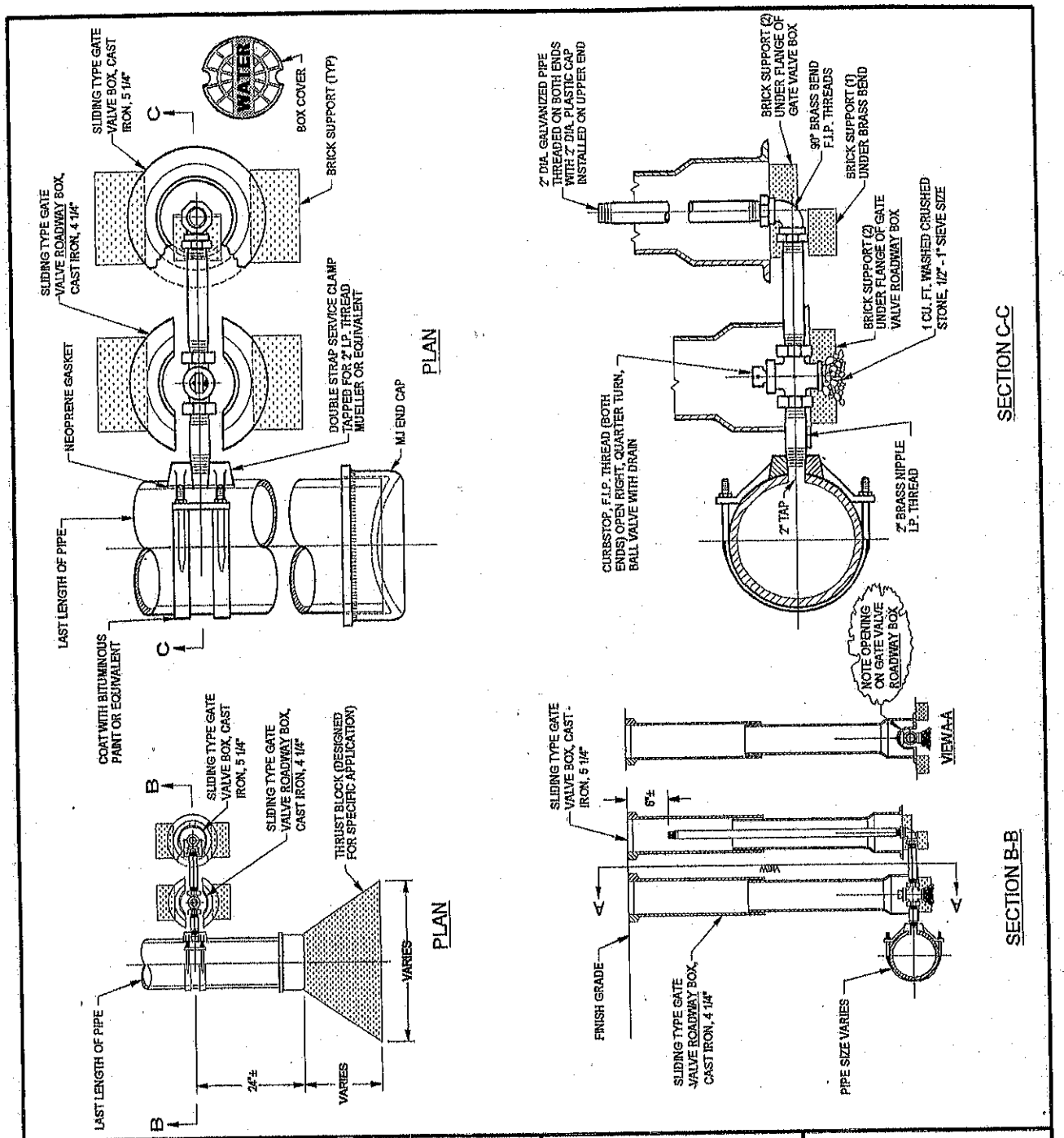

PROVIDENCE WATER	APPROVED:	DATE: 04/05/2002
		DRAWN BY: SP
TYPICAL DETAIL		CHECKED BY: SP & DH
		SCALE: NONE
2-INCH BLOWOFF ASSEMBLY	PAUL J. GADOURY, P.E. DIRECTOR OF ENGINEERING	SHEET NO. 1 OF 1
	DATE	STANDARD NO.

BLOWOFF4A3.DC

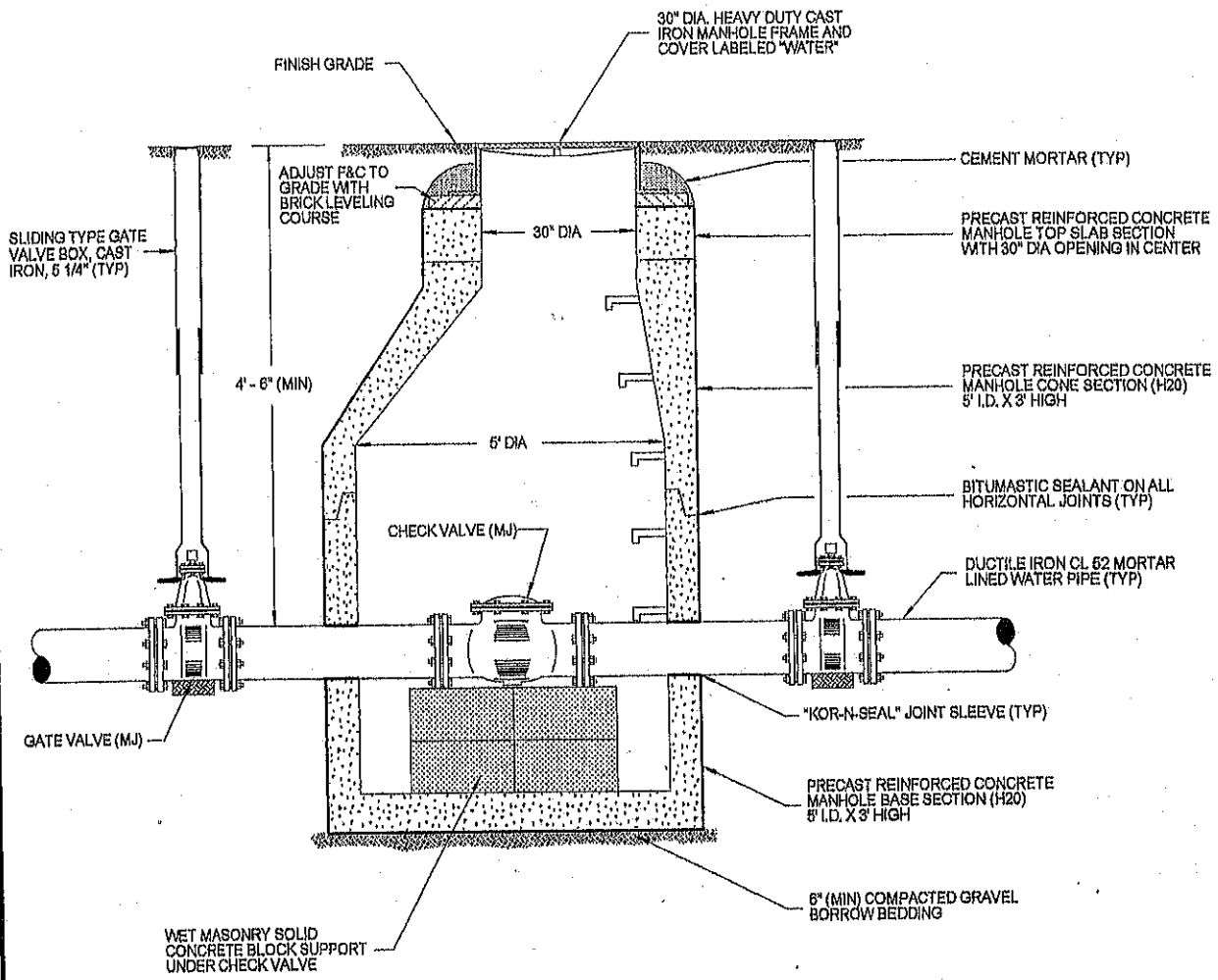

NOTE: ALL HORIZONTAL JOINTS TO BE SEALED WITH HYDRAULIC CEMENT ON EXTERIOR AND INTERIOR IN ADDITION TO BITUMASTIC SEALANT

PROVIDENCE WATER	APPROVED:	DATE: 08/31/1998
		DRAWN BY: SP
TYPICAL DETAIL		CHECKED BY: SP & DH
		SCALE: NONE
CHECK VALVE MANHOLE	PAUL J. GADOURY, P.E. DIRECTOR OF ENGINEERING	SHEET NO. 1 OF 1
	DATE	STANDARD NO.

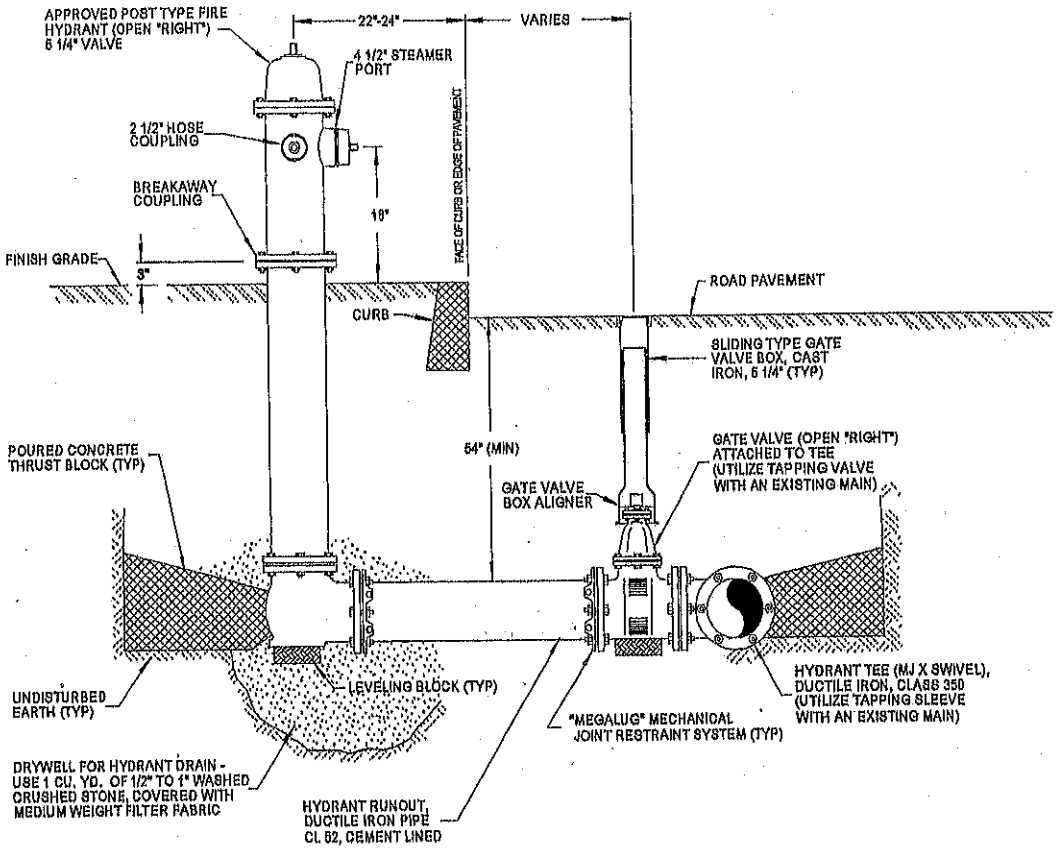

NOTE: THRUST BLOCK IS CAST-IN-PLACE (FORMED) 3,000 PSI (MIN) PORTLAND CEMENT CONCRETE BEARING AGAINST UNDISTURBED EARTH. DESIGN PARAMETERS: 160 PSI WATER PRESSURE (MIN), SOIL BEARING STRENGTH 1,500 PSF. TO BE USED IN CONJUNCTION WITH MECHANICAL JOINT RESTRAINT SYSTEM.

PROVIDENCE WATER	APPROVED:	DATE: 03/08/04
		DRAWN BY: SP
TYPICAL DETAIL		CHECKED BY: SP & DH
		SCALE: NONE
FIRE HYDRANT (POST TYPE)	PAUL J. GADOURY, P.E. DIRECTOR OF ENGINEERING	SHEET NO. 1 OF 1
	DATE	STANDARD NO.

FHYD1B.DC

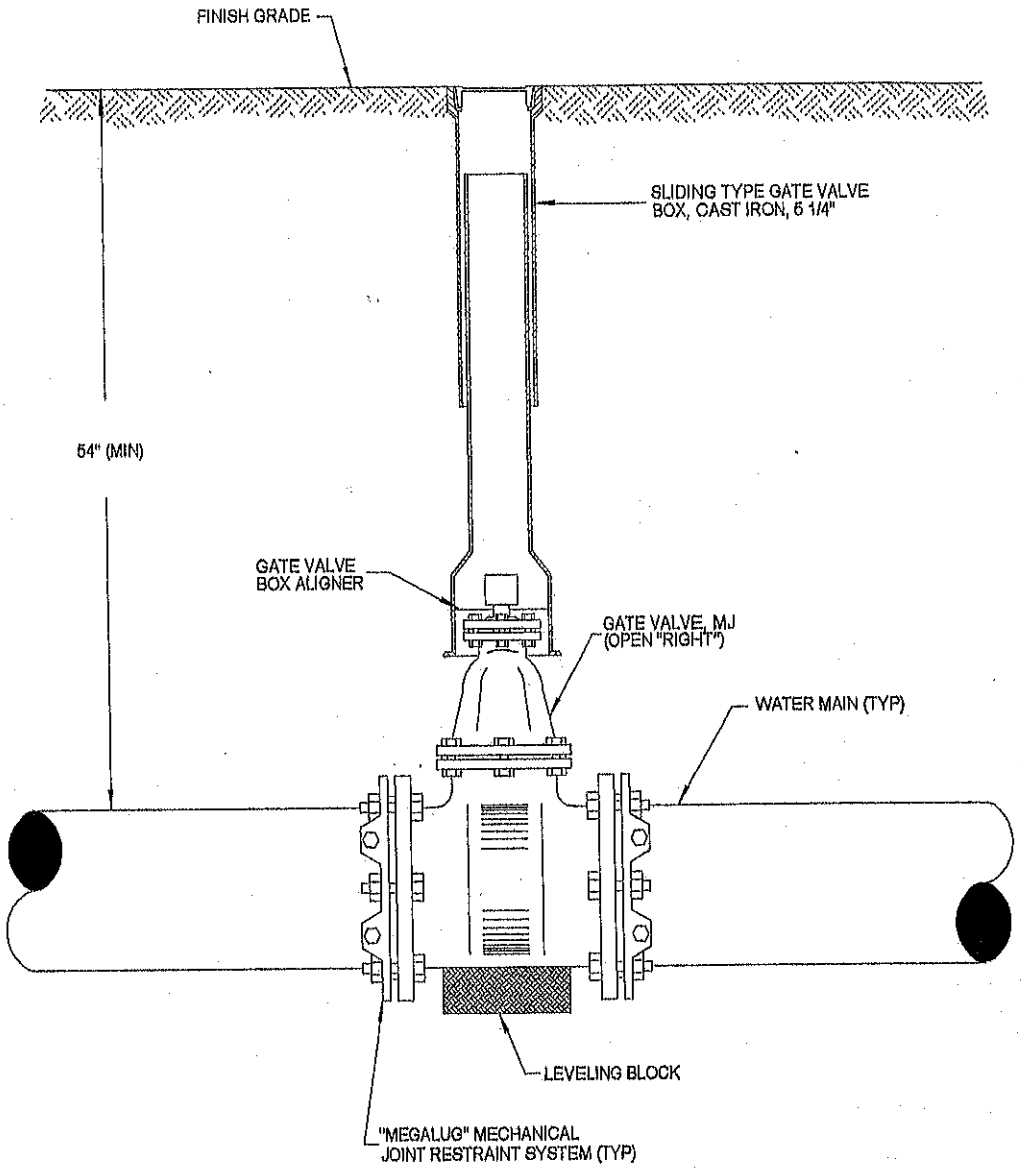

PROVIDENCE WATER	APPROVED:	DATE: 04/16/2002
		DRAWN BY: SP
TYPICAL DETAIL		CHECKED BY: SP & DH
		SCALE: NONE
	PAUL J. GADOURY, P.E. DIRECTOR OF ENGINEERING	SHEET NO. 1 OF 1
GATE VALVE	DATE	STANDARD NO.

A Providence Water guidance document

GVINST1B.DC

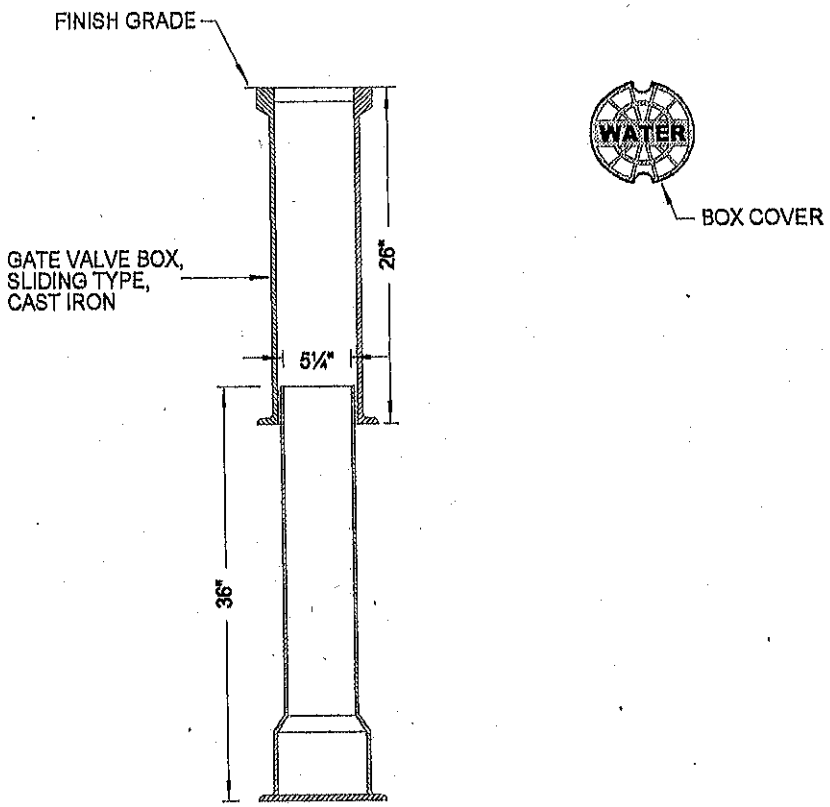

PROVIDENCE WATER	APPROVED:	DATE: 11/26/2003
		DRAWN BY: SP
TYPICAL DETAIL		CHECKED BY: SP & DH
		SCALE: NONE
5¼" GATE VALVE BOX	PAUL J. GADOURY, P.E. DIRECTOR OF ENGINEERING	SHEET NO. 1 OF 1
	DATE	STANDARD NO.

GVBDTL.DG

A Providence Water guidance document

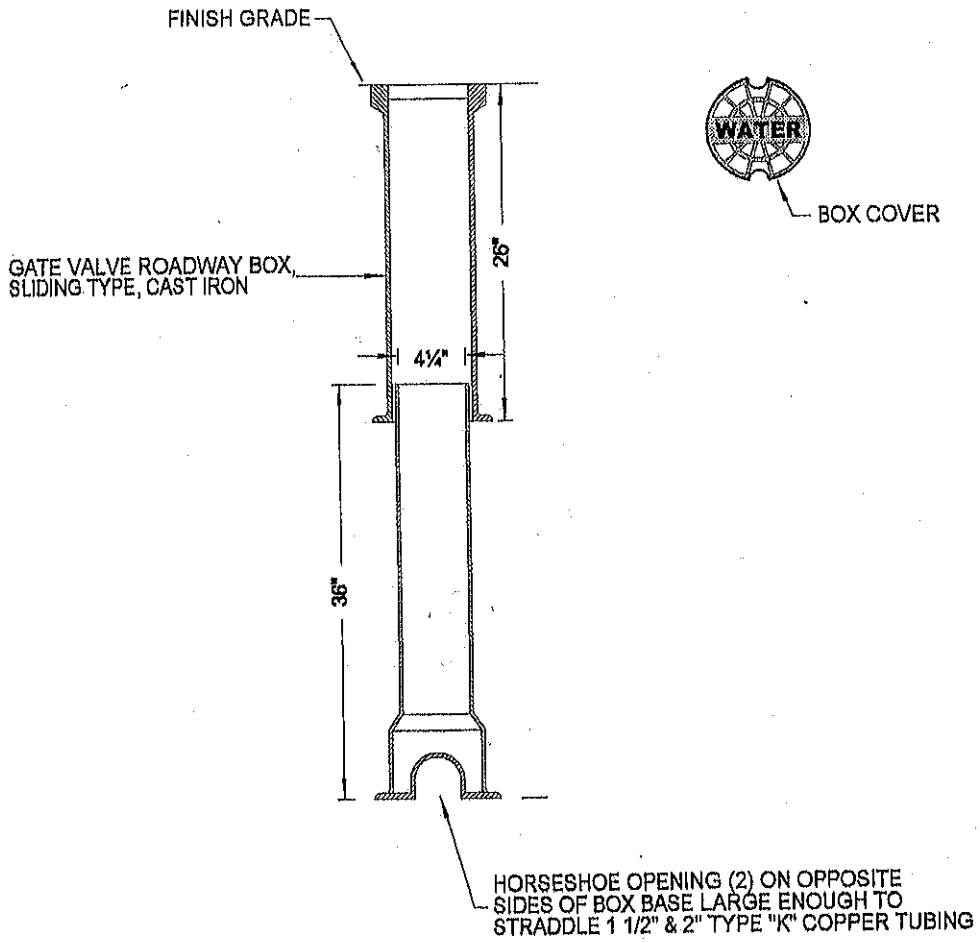

PROVIDENCE WATER	APPROVED:	DATE: 11/26/2003
		DRAWN BY: SP
TYPICAL DETAIL		CHECKED BY: SP & DH
		SCALE: NONE
4¼" GATE VALVE ROADWAY BOX	PAUL J. GADOURY, P.E. DIRECTOR OF ENGINEERING	SHEET NO. 1 OF 1
	DATE	STANDARD NO.

GVRBDTL.DG

A Providence Water guidance document

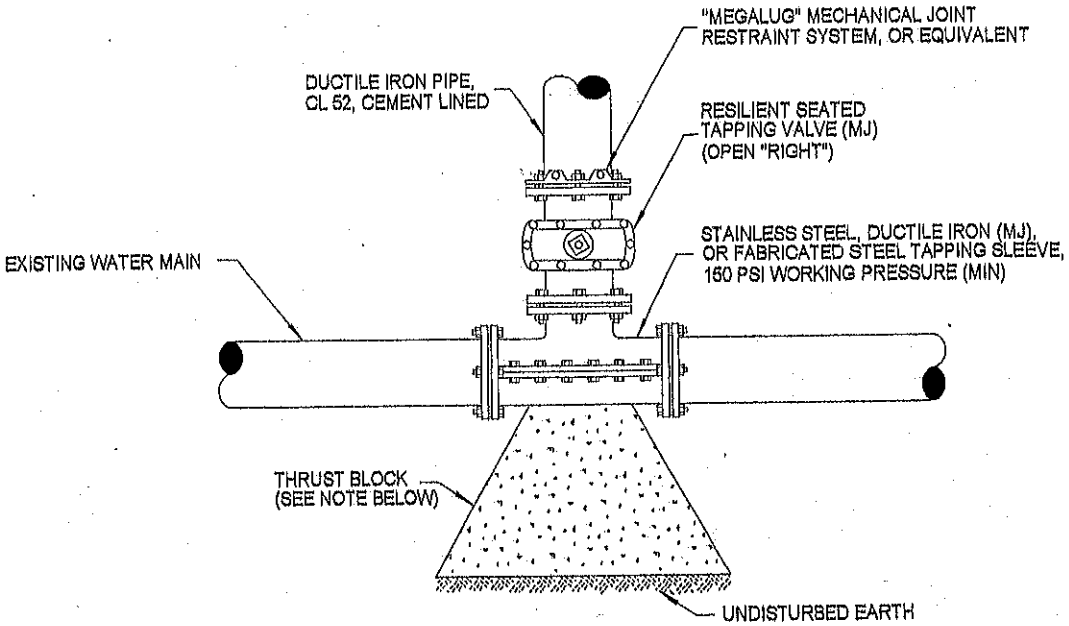

NOTE: THRUST BLOCK IS CAST-IN-PLACE (FORMED) 3,000 PSI (MIN) PORTLAND CEMENT CONCRETE BEARING AGAINST UNDISTURBED EARTH. DESIGN PARAMETERS: 150 PSI WATER PRESSURE (MIN), SOIL BEARING STRENGTH 1,500 PSF. TO BE USED IN CONJUNCTION WITH MECHANICAL JOINT RESTRAINT SYSTEM.

PROVIDENCE WATER	APPROVED:	DATE: 04/161/2002
		DRAWN BY: SP
TYPICAL DETAIL		CHECKED BY: SP & DH
		SCALE: NONE
TAPPING SLEEVE & VALVE	PAUL J. GADOURY, P.E. DIRECTOR OF ENGINEERING	SHEET NO. 1 OF 1
	DATE	STANDARD NO.

A Providence Water guidance document

TSV1A2.DC

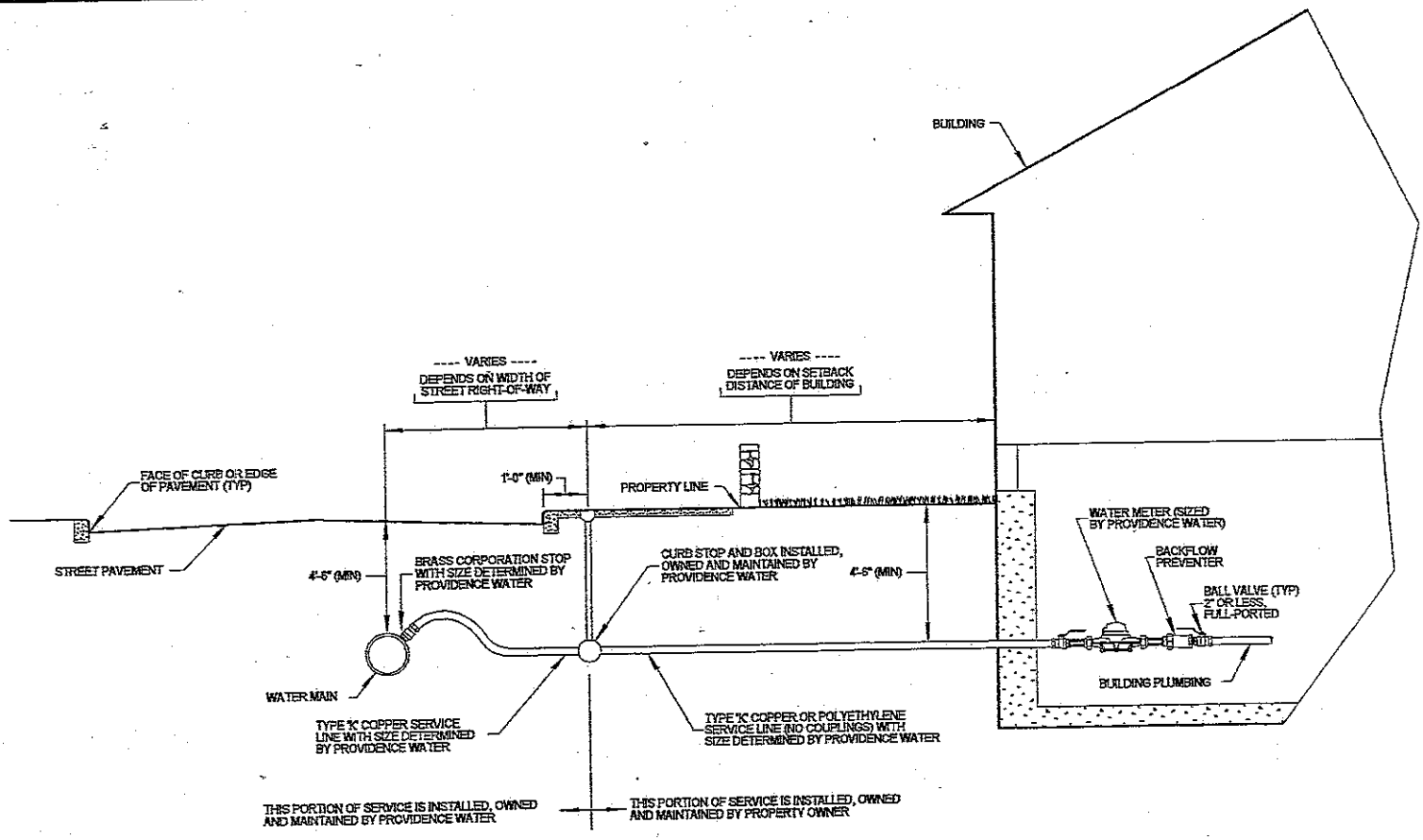

RESIDENTIAL SERVICE CONNECTION DIAGRAM

(NOT TO SCALE)

GENERAL NOTES:

WATER SERVICE SHALL BE KEPT AT LEAST TWENTY-FIVE (25) FEET AWAY FROM INDIVIDUAL SEWAGE DISPOSAL SYSTEMS (ISDS) OR CESSPOOLS. LINES CLOSER THAN THE ALLOWABLE DISTANCE SHALL BE ENCASED IN SCHEDULE 40 (MIN) POLYVINYLCHLORIDE (PVC) PIPE. INTERMEDIATE JOINTS SHALL BE JOINED TOGETHER AND SEALED TO FORM A WATERTIGHT CONNECTION. END SECTIONS SHALL BE FITTED WITH A MECHANICAL DEVICE TO MAKE THE SPACE BETWEEN SERVICE PIPE AND ENCASEMENT WATERTIGHT.

SERVICEDIAG.DC (10/03/2003)

APPENDIX B

LIST OF APPROVED MATERIALS / MANUFACTURERS
FOR USE IN THE
PROVIDENCE WATER DISTRIBUTION SYSTEM
(As of March 2004)

DUCTILE IRON PIPE

Atlantic States Cast Iron Pipe Co.
Griffin Pipe Products Co.
U.S. Pipe & Foundry Co.

DUCTILE IRON FITTINGS

Griffin Pipe Products Co.
Tyler Pipe / Union Foundry Co.
U.S. Pipe & Foundry Co.

VALVES

American Flow Control
Clow Valve Co.
Kennedy Valve
M&H Valve Co.
Mueller Co.
U.S. Pipe & Foundry Co.

FIRE HYDRANTS

Kennedy Valve - "Guardian" Model

DUCTILE IRON PIPE COUPLINGS

Dresser, Inc.
Romac Industries, Inc.
Smith-Blair, Inc.
The Ford Meter Box Co.

JOINT RESTRAINT FOR DUCTILE IRON PIPE - MECHANICAL

EBBA Iron Sales, Inc. - "Megalug"

JOINT RESTRAINT FOR DUCTILE IRON PIPE - GASKETED

U.S. Pipe & Foundry Co. - "Field Lok 350" Gasket

SERVICE BRASS

A.Y. McDonald Manufacturing Co.
Cambridge Brass
Mueller Co.
Red Hed Supply
The Ford Meter Box Co.

NOTE: This list is subject to change without notice. Customers or contractors are responsible for contacting *Providence Water* to verify their selection of materials prior to starting any construction.

INDEX

- A -

Administrative Procedures 1-1
Aligners, Gate Valve Box, *300.4.3* 3-2
Appendix A - Installation Details A-1
Appendix B - List of Approved Materials / Manufacturers B-1
Applicable Standards, *100.1* 1-1
Applications, *100.4* 1-1
Approved Materials, *100.2* 1-1
As-Built Drawings, *100.8* 1-1

- B -

Backfill and Trench Excavation, *400.1.4* 4-1
Base of Levels, *200.2* 2-1
Blowoff Assembly, Construction Procedures, *400.2.4* 4-3
Blowoff Assembly, Materials, *300.5* 3-2
Boxes, Valve, Construction Procedures, *400.2.3* 4-3
Boxes, Valve, Materials, *300.4* 3-2
Butterfly Valves, *300.3.2* 3-1

- C -

Calculations, *200.3* 2-1
Certification, Professional, *200.1* 2-1
Connections, Service, *300.7* 3-3
Construction Plans, *200.4* 2-1
Construction Procedures 4-1

- D -

Disinfection, *400.5* 4-6
Disposal of Removed Materials, *400.1.3* 4-1
Drawings, As-Built, *100.8* 1-1
Duration of Approval, *100.7* 1-1

- E -

Elevations, Base of, *200.3* 2-1
Engineering Requirements 2-1

- F -

Fees, *100.5* 1-1
Fire Flow Testing, *200.5* 2-1
Fire Hydrants, Construction Procedures, *400.2.5* 4-3
Fire Hydrants, Materials, *300.6* 3-2
Fittings and Pipe, Construction Procedures, *400.2.1* 4-1
Fittings, Materials, *300.2* 3-1

- G -

Gate Valve Box, *300.4.1* 3-2
Gate Valve Box Aligners, *300.4.3* 3-2
Gate Valve Roadway Box, *300.4.2* 3-2
Gate Valves, *300.3.1* 3-2

- H -

Hydrants, Fire, Construction Procedures, *400.2.5* 4-3
Hydrants, Fire, Materials, *300.6* 3-2

- I -

Inspection, *400.1.2* 4-1
Installation Details, Appendix A A-1

- J -

- K -

- L -

Leakage and Pressure Testing, *400.4* 4-5
Levels, Base of, *200.2* 2-1
List of Approved Materials / Manufacturers, Appendix B B-1

- M -

Materials 3-1
Modeling, Water System, *200.6* 2-1

- N -

Notification, *400.1.1* 4-1

- O -

- P -

Pipe & Fittings, Construction Procedures, *400.2.1* 4-1
Pipe, Materials, *300.1* 3-1
Plans, Construction, *200.4* 2-1
Pressure Testing and Leakage, *400.4* 4-5
Procedures, Administrative 1-1
Procedures, Construction 4-1
Professional Certification, *200.1* 2-1

- Q -

- R -

Requirements, Engineering 2-1
Residential Service Connection Diagram A-9
Restrictions, *100.3* 1-1
Review Time, *100.6* 1-1
Roadway Box, Gate Valve, *300.4.2* 3-2

- S -

Service Connections, Construction Procedures, *400.2.6* 4-4
Service Connections, Materials, *300.7* 3-3
Sleeve, Tapping, Materials, *300.3.4.1* 3-2
Standards, Applicable, *100.1* 1-1
Swing-Check Valves, Construction Procedures, *400.2.2.3* 4-3
Swing-Check Valves, Materials, *300.3.3* 3-2

- T -

Tapping Sleeve, Materials, *300.3.4.1* 3-2
Tapping Valves, Construction Procedures, *400.3.3.4* 4-3
Tapping Valves, Materials, *300.3.4* 3-2
Testing, Fire Flow, *200.5* 2-1
Time of Review, *100.6* 1-1
Thrust Restraint, *400.3* 4-4
Trench Excavation and Backfill, *400.1.4* 4-1
Typical and Installation Details, *500.1* A-1
2-Inch Blowoff Assembly A-2
Check Valve Manhole A-3
Fire Hydrant (Post Type) A-4
Gate Valve A-5
Gate Valve Box A-6
Gate Valve Roadway Box A-7
Tapping Sleeve & Valve A-8

- U -

- V -

Valve Boxes, Construction Procedures, *400.2.3* 4-3
Valve Boxes, Materials, *300.4* 3-2
Valves, Gate, Construction Procedures, *400.2.2.1* 4-3
Valves, Gate, Materials, *300.3.1* 3-1
Valves, Butterfly, Construction Procedures, *400.2.2.2* 4-3
Valves, Butterfly, Materials, *300.3.2* 3-1
Valves, Swing-Check, Construction Procedures, *400.2.2.3* 4-3
Valves, Swing-Check, Materials, *300.3.3* 3-2
Valves Tapping, Construction Procedures, *400.3.3.4* 4-3
Valves Tapping, Materials, *300.3.4* 3-2

- W -

Water System Modeling, *200.6* 2-1

- X -

- Y -

- Z -

DRAFT MEMORANDUM

DATE: April 19, 2010

TO: Mr. Kevin Fitta, P.E. – College Engineer

CC: George G. Palmisciano, P.E. (PARE)
Timothy P. Thies, P.E. (PARE)

FROM: Brendan Ennis, P.E.

RE: Draft Utility Conditions Evaluation and Improvements Plan
Rhode Island College Water Distribution System
Providence, RI
PARE Project No: 09127.00

The purpose of this memorandum is to provide draft results of Pare Corporation's (PARE) recent evaluation of the water distribution system at Rhode Island College (RIC) in Providence, RI. The evaluation was done in accordance with the Proposal and Agreement for professional services between PARE and RIC dated January 10, 2010. Subsequent sections of this memorandum include background information on the distribution system, PARE's development of a computerized hydraulic model, the results of our evaluation, and our recommendations for future system improvements.

Please note that this memorandum is a draft version of the Utility Conditions Evaluation described in section 4.0 of our June 2, 2009 proposal. At the request of RIC, the evaluation of the RIC water distribution system has been completed with preliminary mapping information, but will be updated once the campus survey, which is part of the overall project scope, is completed. Subsequent sections of this memorandum will be updated once the survey is complete and will be included in the final Utility Conditions Evaluation. Portions of the memorandum address recommendations for future system improvements, which is part of our scope for the Campus-wide Utility Improvements Plan. This memorandum is being provided in advance of our Campus-wide Utility Improvements Plan to provide

RIC personnel with information they need to complete several design projects that are ongoing as of the date of this memorandum.

1.0 WATER SYSTEM BACKGROUND

The RIC water distribution system is comprised of approximately 13,000 feet of pipe, 23 fire hydrants, and 21 valves. Pipe sizes range from 6-inches to 12-inches in diameter and pipe material consists of ductile iron (DI), cast iron (CI), asbestos cement (AC), and polyvinyl chloride (PVC). The RIC system has no storage tanks, no control valves, and no centralized booster pump stations.

The RIC system is supplied through three direct connections to the Providence Water Supply Board's (PWSB) Longview Reservoir service area – one connection on Mt. Pleasant Avenue in Providence, one connection on Oakton Street in North Providence, and one connection on Cole Road in North Providence. The Mt. Pleasant Avenue connection has an 8-inch Neptune Protectus III meter and 10-inch Watts model 909 backflow preventer in an aboveground enclosure (i.e., Hot Box) near the campus's main entrance. The Cole Road connection has a 6-inch Neptune Protectus III meter in an underground vault and no backflow preventer. The Oakton Street connection is a cross-county connection, which runs beneath the campus ball fields, and has a 6-inch Neptune Protectus III meter and 10-inch Watts model 909 backflow preventer in a Hot Box.

In general, all three connections to the PWSB system provide similar pressure to the campus. All three connections are supplied by the Longview Reservoir on Mineral Spring Avenue in North Providence, which maintains a system hydraulic grade line (HGL) of 305 feet MSL. While the three connections provide similar pressure, the RIC system is operated as two separate zones. The Mt. Pleasant Avenue and the Oakton Street connections serve the majority of the campus, and the Cole Road connection serves a small area around the existing Recreation Center. The Cole Road service area is separated from the rest of the system through a closed valve, primarily due to aesthetic water quality issues reported in the Cole Road service area (i.e., discolored water). RIC staff isolated the Cole Road service area to reduce water quality complaints in the rest of the system.

The RIC water system serves approximately 9,000 students, 1,500 of which live on-campus. There are approximately 48 buildings connected to the RIC water system, which include residence halls, academic buildings, administration buildings, and facility maintenance buildings, as well as several connections for campus irrigation. A number of buildings have booster pumps to boost domestic pressure, particularly some of the taller residence halls. The new residence hall, the Henry Barnard School, Building No. 7, and

the Adams Library have fire pumps to assist with fire protection, the largest of which is located in the new residence hall and is rated for 1,000 gpm.

2.0 HYDRAULIC MODEL DEVELOPMENT

To assist with the evaluation of the water distribution system, PARE developed a computerized hydraulic model using the latest version of Bentely's WaterGEMS hydraulic modeling software. The model was developed in general accordance with American Water Works Association's (AWWA) Document M32 – *Distribution Network Analysis for Water Utilities*.

There are two primary components to a hydraulic model – a demand database and an infrastructure database, the development of each is described below.

2.1 *Demand Database Development*

The demand database is a compilation of campus-wide water use organized by location and divided into three distinct demand scenarios – average day demand, maximum day demand, and peak hour demand.

2.1.1 Average Day Demand

Average daily demand (ADD) was estimated by reviewing meter records, provided by RIC personnel, from the PWSB connections. Meter records for a four-year period (2005 through 2009) were reviewed. The average campus-wide water use for that four-year period was approximately 105,000 gallons per day (gpd), or 73 gallons per minute (gpm). A breakdown of water supplied per PWSB connection is provided below.

TABLE 1 - Metered Water Use Summary					
	2005/2006	2006/2007	2007/2008	2008/2009	Average
Cole Road	4,605	2,851	3,064	614	2,783
Oakton Street	18,748	21,732	25,473	25,473	22,856
Mt. Pleasant Avenue	77,591	81,493	86,729	72,232	79,511
Total	**100,944**	**106,075**	**115,266**	**98,319**	**105,151**

RIC personnel provided an estimated breakdown of water use per building, which is attached.

2.1.2 Maximum Day Demand

The maximum day demand (MDD) is typically the highest water use day during the study period, in this case 2005 – 2009. Daily metered water use was not available for the campus, so the MDD was estimated based on a breakdown of monthly water use provided by RIC personnel. A breakdown of monthly estimated water use is provided on the next page.

TABLE 2 - Monthly Water Use Breakdown in GPD													
	Jan	Feb	Mar	Apr	May	Jun	Jul	Aug	Sept	Oct	Nov	Dec	Average Annual
Cooling Tower Make-Up Water	0	0	0	0	21,650	29,000	29,000	29,000	21,650	0	0	0	10,858
Central Boiler Plant Make-Up Water	9,000	9,000	9,000	9,000	9,000	9,000	9,000	9,000	9,000	9,000	9,000	9,000	9,000
Athletic Field Irrigation	0	0	0	0	12,000	12,000	15,000	15,000	12,000	12,000	0	0	6,500
General Irrigation	0	0	0	0	0	0	15,000	15,000	15,000	0	0	0	3,750
Athletic Facilities													
Recreation Center	2,150	2,150	2,150	2,150	2,150	2,150	2,150	2,150	2,150	2,150	2,150	2,150	2,150
Murray Center	1,000	1,000	1,000	1,000	1,000	1,000	1,000	1,000	1,000	1,000	1,000	1,000	1,000
Donovan Dining	15,000	15,000	15,000	15,000	15,000	5,000	5,000	5,000	15,000	15,000	15,000	15,000	12,500
Residence Halls	45,518	45,518	45,518	45,518	22,759	0	0	0	45,518	45,518	45,518	45,518	32,242
Classrooms & Offices	32,000	32,000	32,000	32,000	32,000	12,600	12,600	12,600	32,000	32,000	32,000	32,000	27,150
Total	**104,668**	**104,668**	**104,668**	**104,668**	**115,559**	**70,750**	**88,750**	**88,750**	**153,318**	**116,668**	**104,668**	**104,668**	**105,150**

It is estimated that the highest average monthly water use occurs in September, which corresponds to the first full month in which students have returned to campus after summer break and the last full month that campus irrigation systems are in use. The monthly water use for September is estimated to be approximately 153,000 gpd, or 106 gpm. This represents a multiplier of approximately 1.5 over ADD. The MDD is usually higher than maximum monthly demand, and typically, but not exclusively, occurs during the highest water use month of the year. Because daily meter records were not available for the study period, PARE estimated that the MDD multiplier for the system is probably in the range of 1.0 to 2.0 higher than the maximum monthly multiplier. Therefore, PARE added 1.5 to the maximum monthly multiplier to establish a MDD multiplier of 3.0. As such, the estimated MDD is approximately 315,000 gpd, or 219 gpm.

2.1.3 Peak Hour Demand

To establish the peak hour demand (PHD), PARE referred to TR-16[1], which provides typical peaking factors for different size systems. TR-16 was specifically developed for wastewater flows, but given that irrigation use is estimated to be a very small portion of the overall campus-wide water use, there is likely a strong correlation between wastewater generation and water use. Therefore, the peaking factors provided by TR-16 are likely to be a reasonable estimate of the peaking factors for water use at RIC. TR-16 indicates that the peaking factor for a system of this size (i.e., a system with an average daily water use of 105,000 gpd) is approximately 5.6. Therefore, the estimated PHD for the RIC campus is approximately 588,000 gpd, or 408 gpm.

A breakdown of system demand is provided below.

[1] New England Interstate Water Pollution Control Commission, *Guidance for the Design of Wastewater Treatment Works,* 1998.

TABLE 3 - RIC SYSTEM DEMAND		
	Total Volume (MGD)	Demand (gpm)
Average Day Demand	0.105 MGD	73 gpm
Maximum Day Demand	0.315 MGD	219 gpm
Peak Hour Demand	0.588 MGD	408 gpm

2.2 *Infrastructure Database Development*

The infrastructure database is a compilation of all of the physical components that make up a water system, such as pipes, hydrants, valves, meters, etc. The infrastructure database is similar to a traditional database in that each component of the system is cataloged and entered into the database individually. With each entry is included all the known characteristics of a specific component. For example, each pipe section has an entry in the database, which includes the pipe's diameter, length, age (if known), C-value, etc. The infrastructure database is organized by location and accessed through an interactive system map. Provided below is a description of the infrastructure database developed for this project and each component-type included in the database.

2.2.1 Pipes

The RIC system is comprised of approximately 13,000 feet of water mains, ranging in size from 6 to 12 inches. RIC personnel provided PARE with a preliminary system map that shows the alignment, size, and material of the system water mains. PARE utilized this system map as a basis for the development of the hydraulic model pipe network. Using the RIC system map as a reference, PARE manually entered each pipe and the pertinent information into the infrastructure database.

2.2.2 Nodes

As part of the hydraulic model development, PARE constructed a node network. The node is the most basic element in the hydraulic model and is used to represent system users, system elevations, hydrants, junctions in water mains, etc. PARE developed the node network using information available for topography, water main layout, and system demand.

Each system node is assigned three primary attributes; elevation, demand, and demand pattern. Elevation information was estimated based on available system mapping provided by RIC. Each building was assigned a node that corresponded to their domestic service and a node that corresponded to their fire service, if present. Demand information was assigned to each domestic service node based on the breakdown of water use per building provided by RIC personnel.

2.2.3 Supply Sources

The system has three connections to one main source of supply, the PWSB. To establish the boundary conditions for the supply side of the system, PARE installed pressure recorders at each PWSB connection and recorded supply side pressure for a period of 8 days. Pressure was measured from February 26, 2010 to March 5, 2010. A graph of the pressure recorded at each connection is provided below.

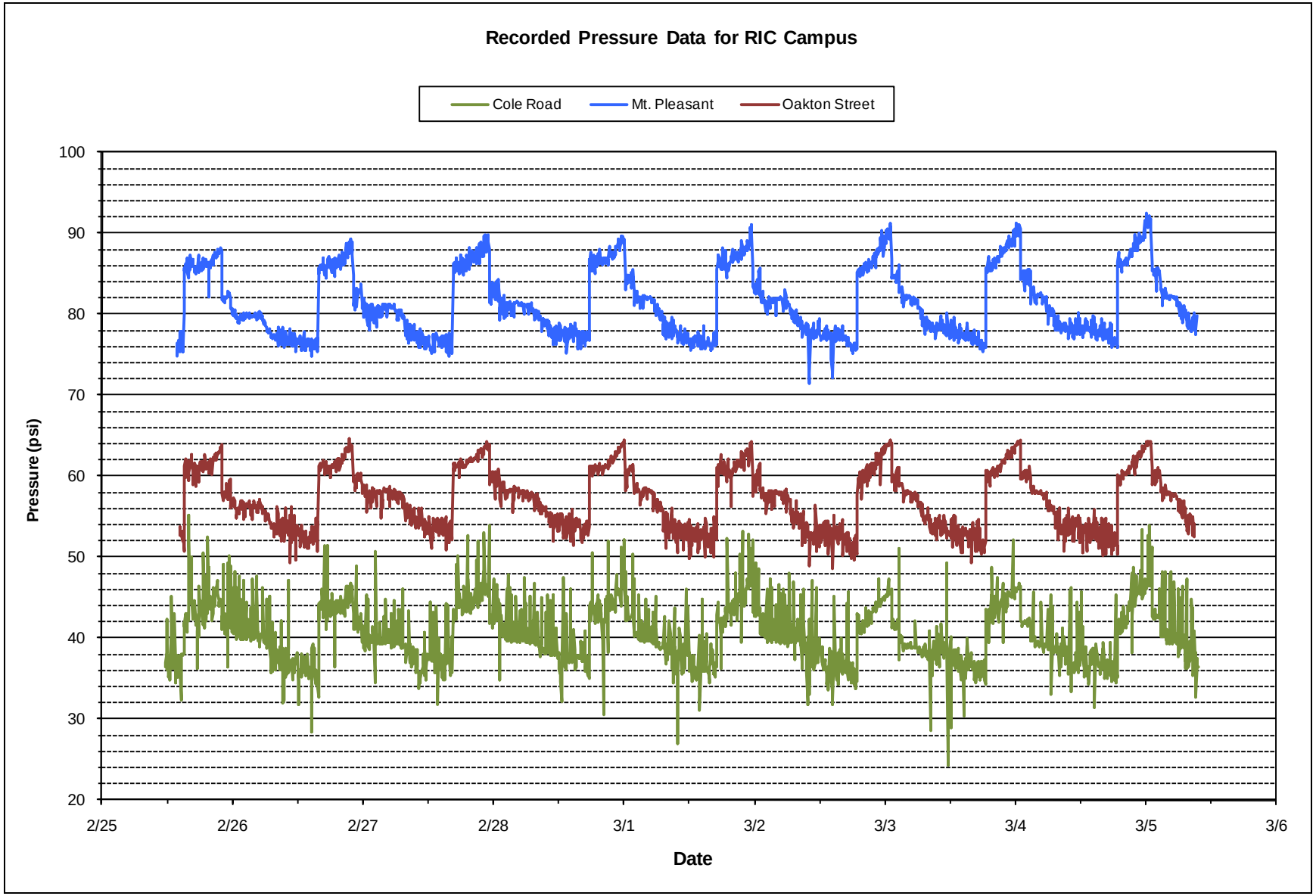
Recorded Pressure Data for RIC Campus
Cole Road
Mt. Pleasant
Oakton Street
Pressure (psi)
100
90
80
70
60
50
40
30
20
2/25
2/26
2/27
2/28
3/1
3/2
3/3
3/4
3/5
3/6
Date

At each location, PARE converted the recorded pressure to feet and added the ground surface elevation to establish the system hydraulic grade line (HGL) on the supply side of the system. The elevation information was estimated based on available mapping data and is accurate within ±5 feet. This information will be updated once preliminary mapping information is available. As a result, the HGLs observed at each location were close, but not the same. Given that each location is served through the same supply (i.e., the PWSB Longview Reservoir) it would be expected that the observed HGL at each connection would be relatively similar. PARE made minor adjustments to the HGL to make them consistent with each other. After the site survey is complete, PARE will re-evaluate the HGL data and adjust the model accordingly.

In the model, the PWSB system is represented as three separate reservoirs with relatively similar HGLs, although, as is apparent from the data collected, the HGL at all three locations varies slightly over the course of the day. A graph of the adjusted system HGL, as measured at each location, is provided below.

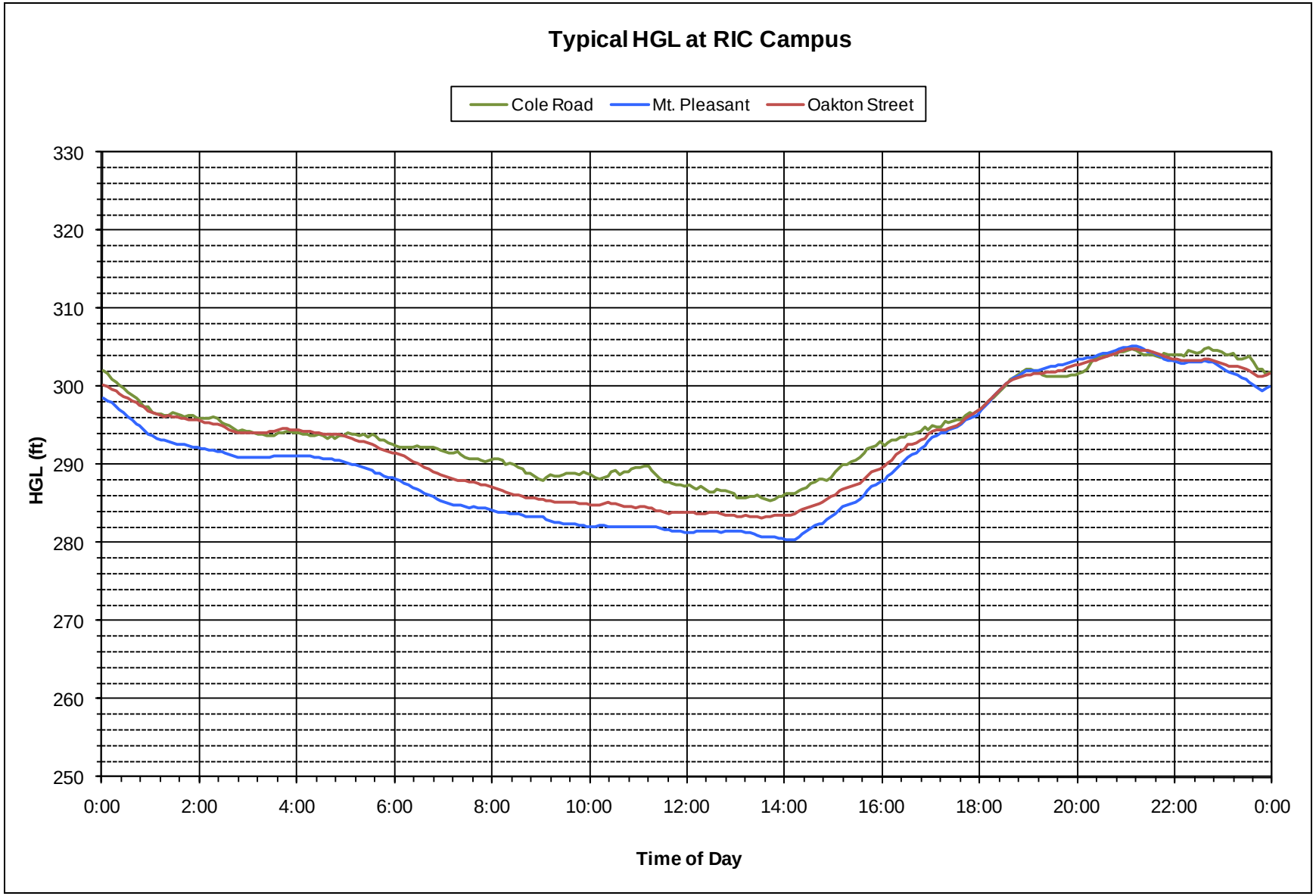
Typical HGL at RIC Campus
Cole Road
Mt. Pleasant
Oakton Street
HGL (ft)
330
320
310
300
290
280
270
260
250
0:00
2:00
4:00
6:00
8:00
10:00
12:00
14:00
16:00
18:00
20:00
22:00
0:00
Time of Day

During a steady state analysis, which represents a "snap shot" of the system, the supply side HGL is set to the lowest normal HGL observed during the monitoring period.

2.3 *Model Calibration*

Model calibration is performed in order to evaluate the model's ability to predict system performance. AWWA recommends that a hydraulic model be calibrated to within 5 to 10 percent of field-observed data. The model was calibrated by collecting flow and pressure information in the field, comparing that information to the model results, and then making minor adjustments to certain model parameters to achieve the desired model accuracy.

PARE's primary source of information for the calibration was obtained through a series of hydrant flow tests performed in December 2009. PARE personnel, with assistance from RIC staff, conducted 6 C-value tests at various locations within the system. A C-value test consists of opening a fire hydrant and measuring the flow discharging from that hydrant while also measuring the residual pressure at two upstream hydrants. Each C-value test provides three static pressure data points (one data point for each hydrant) and two residual pressure data points (one data point at each of the upstream hydrants) to which the model results can be compared.

The data obtained from a C-value test can be used to estimate the C-value of the pipe between the two residual hydrants. The location of each C-value test was selected to provide a range of pipe material, sizes and age. Of the 6 tests completed, 2 were considered unreliable due to questionable results (e.g., pressure increased over the duration of the test). Therefore, PARE utilized 4 of the 6 hydrant tests to calibrate the hydraulic model.

Based on the field data obtained, PARE made minor adjustments to the model and globally edited pipes with similar size, material, and age. The adjustments PARE made include modifying pipe roughness coefficients (i.e., C – values) and adjusting the elevation of the hydrant nodes. After adjusting the model input parameters, PARE was able to attain model results within 3 percent of field observed conditions.

3.0 SYSTEM EVALUATION

Provided herein are the results of PARE's evaluation of the existing system and our evaluation of certain system improvements, as requested by RIC personnel.

3.1 *Existing Conditions Evaluation*

When evaluating the adequacy of the existing system, PARE reviewed five important performance standards – system pressure, available fire flow, pipe velocity, pipe head loss, and system redundancy. PARE reviewed each of these criteria for the ADD, MDD, and PHD scenarios.

3.1.1. System Pressure

The model predicts that system pressure ranges from 31 to 56 during ADD, MDD, and PHD scenarios. The highest system pressures are in the area of the new residence hall and Sweet Hall and the lowest system pressures are in the center of campus around Roberts Hall and the Arts Center. AWWA suggests that system pressure should be in the range of 30 to 90 psi, and never below 20 psi. Ten States Standards[2], which is a common reference for public water system performance, suggests that system pressure should be in the range of 35 to 90 psi. While pressure on campus exceeds the minimum pressure suggested by AWWA and mostly exceeds the minimum pressure recommended by Ten States Standards, pressure is generally low. It has been reported that pressure in some buildings is too low to install adequate and necessary backflow prevention and has in the past caused problems with campus heating equipment. Therefore, it may be prudent to evaluate the feasibility of increasing system pressure campus-wide.

[2] A Report of the Water Supply Committee of the Great Lakes – Upper Mississippi River Board of State and Provincial Public Health and Environmental Managers, *Recommended Standards for Water Works,* 2007 Edition.

3.1.2 Available Fire Flow

AWWA states that the available fire flow in the system is the rate of flow available at a system hydrant while maintaining a minimum residual pressure within the system of 20 psi. PARE evaluated the available fire flow at each system hydrant and at each building fire service, for those buildings that have fire services. The available fire flow system-wide is approximately 300 gpm to 1,700 gpm. In the Cole Road service area, the available fire flow is approximately 300 gpm to 400 gpm, and in the remainder of the system available fire flow is approximately 1,200 gpm to 1,700 gpm.

The available fire service in the Cole Road area is severely limited by the small diameter (6-inch) cast iron main that serves that area. In addition, based on PARE's field investigation, the C-value for the water main is very low, in the range of 30 to 40. During a fire event, this water main is causing a significant amount of head loss in the system, which is limiting the available fire flow.

In the remainder of the campus, fire flow appears to be generally adequate; however, the individual fire flow requirements of each building were not evaluated as part of this project.

3.1.3 Pipe Velocities and Head Loss

It is important to keep pipe velocities relatively low in a water system to reduce the occurrence of scour in the pipes and to keep friction loss to a minimum. AWWA suggests that pipe segments may be deficient if they exceed any of the following criteria:

- Velocities greater than 5 ft/sec;
- Head losses greater than 10 ft/1,000 ft; or
- Head losses greater than 3 ft/1,000 ft for pipe diameters of 16 inches or greater.

AWWA goes on to say that pipe velocities up to 10 ft/sec are acceptable, but velocities above that will cause an exponential increase in head loss, which could be problematic in the system.

The maximum velocities experienced in the system will occur during a fire event when system demand is at its highest. However, given the infrequency of a significant fire event and the abnormally high flow that would occur through the system pipes, it would be inappropriate to evaluate system velocities and head loss during a fire flow scenario. Therefore, PARE utilized a PHD scenario to evaluate the adequacy of the system piping.

During a PHD, the highest reported pipe velocity is approximately 1.46 ft/sec, which occurs in only one pipe section near the Oakton Street meter. The pipe velocities in the remaining system pipes are all well below 1.0 ft/sec, with the highest around 0.76 ft/sec. The highest reported head loss in the system is approximately 1 ft/1,000 ft, which occurs in the same pipe segment outside the Oakton Street meter that has velocities around 1.46 ft/sec.

It appears as though the existing piping system is not substantially limiting flow or pressure during normal domestic demand scenarios. However, based on PARE's fire flow evaluation, the 6-inch main in the Cole Road service area is severely limiting fire flow in that area.

3.1.4 System Redundancy

The existing water system has several redundant features – including three connections to PWSB and substantial piping redundancy in the north half of the campus. Where the system is lacking redundancy is in the southern half of the campus and the area around Salisbury Drive. The water main on College Road between 6th Avenue and the Art Center has no redundancy and supplies water to numerous buildings. In addition, the cross-country connection between the Nazarian Center and Cole Road is the sole source of supply to Salisbury Drive. The Cole Road service area is served through one single connection to PWSB. A break along any of these three water mains could be severely disruptive to the system.

3.2 *Proposed Improvements Evaluation*

PARE evaluated several proposed improvements to the campus water distribution system. These improvements specifically targeted the two primary deficiencies in the system – low pressure system-wide and low fire flow in the Cole Road service area. In addition, PARE evaluated if the

system would benefit from new system looping or a new service connection to Fruit Hill Avenue. Specific improvements that PARE evaluated are:

- A new 8-inch water main on Cole Road (with a new backflow preventer in the Cole Road meter vault);
- A new system loop between Cole Road and Salisbury Drive;
- A new system loop parallel to 6th Avenue;
- A new booster pump station at the Mt. Pleasant Avenue meter connection;
- A new booster pump station at the Oakton Street meter connection;
- Two booster pump stations working in conjunction with each other, one at Mt. Pleasant and one at Oakton Street; and
- A new connection to Fruit Hill Avenue.

3.2.1 New 8-inch Water Main on Cole Road

Due to the aesthetic water quality concerns on Cole Road, as well as the low available fire flow at the proposed Recreation Center, RIC is interested in upgrading the existing 6-inch cast iron main on Cole Road with a new 8-inch pipe. If the existing pipe is upgraded, the isolation valve at the end of Cole Road could be opened, which would allow RIC to operate the system as one single pressure zone. However, to operate the system as one zone, a new backflow preventer would need to be installed at the Cole Road meter vault. More than likely, the meter vault would need to be upgraded to an aboveground Hot Box style enclosure.

With an upgraded water main on Cole Road, system pressure ranges from 31 to 56 psi during typical domestic demand scenarios (i.e., ADD, MDD, PHD). This range in pressure is substantially the same as is experienced currently.

With the upgraded water main on Cole Road, the available fire flow in the system would range from 1,200 to 2,600 gpm, a significant increase over existing conditions. Of particular concern is the available fire flow at the proposed Recreation Center. With the upgraded water main on Cole Road, the available fire flow would be approximately 2,400 gpm at 20 psi. The mechanical engineer for the proposed Recreation Center has indicated that to eliminate the need for a fire

pump, the system would need to be able to supply 500 gpm at 70 psi at the finished floor elevation of the proposed Recreation Center. With the upgraded water main on Cole Road, the residual pressure at the proposed Recreation Center during a 500 gpm fire event would be approximately 36 psi. Therefore, while the upgraded water main on Cole Road would significantly increase the available fire flow system-wide, it would not, by itself, eliminate the need for a fire pump at the proposed Recreation Center.

It is noted that system improvements described in subsequent sections of this report reflect the upgraded water main on Cole Road. It is our understanding that the water main on Cole Road will most likely be upgraded as part of the Recreation Center project and will therefore most likely be in place if/when other upgrades to the system are completed.

3.2.2 New System Loop between Cole Road and Salisbury Drive

Under this scenario, PARE assumed the new system loop between Cole Road and Salisbury Drive would be approximately 700 feet of new 8-inch ductile iron water main. The model results indicate that a loop in this location will not significantly change system pressure during normal domestic demand scenarios (i.e., ADD, MDD, and PHD). During normal conditions, the flow through this pipe ranges from 9 to 43 gpm. During a fire flow scenario, this system loop has a relatively small impact on available fire flow. Available fire flow in the system ranges from approximately 1,200 to 2,500 gpm, which is the same range of fire flow without the system loop, but with the upgrades to the water main on Cole Road. The average increase in fire flow at system hydrants is approximately 60 gpm. However, along Cole Road and Salisbury Drive, the available fire flow increases by an average rate of 400 gpm.

While a new system loop between Cole Road and Salisbury Drive does not appear to provide a substantial hydraulic benefit to the entire system, it does appear to increase available fire flow in the area. In addition, this new loop would provide significant redundancy in this area of the system.

3.2.3 New System Loop parallel to 6th Avenue

For this scenario, PARE assumed the new system loop between Library Road and College Road. This improvement could follow one of two alignments. A new 10-inch ductile iron water main

could be installed along 6th Avenue, which would likely require the replacement of approximately 240 feet of 6-inch pipe on College Road that serves a single fire hydrant. The total length of new pipe would be approximately 1,700 feet. The second option would be to install a new 10-inch water main parallel to 6th Avenue on the east side of the Murray Center. This new pipe would be installed beneath parking lots, walkways, and grassy areas, but would be considerably shorter in length, approximately 1,000 feet in total length.

Hydraulically, both alignments provide similar results. During normal conditions, the flow through this new loop ranges from 12 to 67 gpm. During a fire flow scenario, this system loop has a relatively small impact on available fire flow. Available fire flow in the system ranges from approximately 1,200 to 2,500 gpm, which is the same range of fire flow without the system loop, but with the upgrades to the water main on Cole Road. The average increase in available fire flow is approximately 50 gpm, depending on the hydrant. However, there appears to be a relatively substantial increase in available fire flow in the vicinity of the new Residential Hall, where available fire flow increased by an average rate of approximately 300 gpm.

While a new system loop on this side of campus does not appear to provide a substantial benefit hydraulically, it would improve system redundancy along College Road. Currently, there is a long length of pipe along College Road between the Art Center and the new residential hall that has no system redundancy. A break in this main could cause significant disruption to the system. In addition, it is our understanding that the Campus Master Plan has preliminarily identified areas along the western edge of the campus as having build-out potential. A new water main between College Road and Library Road could potentially serve any new buildings proposed in this area.

3.2.4 Pump Station at Mt. Pleasant Avenue

Under this scenario, there would be a new booster pump at or near the Mt. Pleasant Avenue meter. The Mt. Pleasant Avenue connection is a practical location for a new pump station as it is the largest connection to PWSB in terms of diameter (12 inches). The size of the pump(s) in the pump station is unknown at this time, but the station would need to achieve three design conditions;

1. Increase system pressure campus-wide by 25 psi;
2. Provide adequate fire flow to the new residential hall, which has the largest fire pump on campus; and
3. Provide adequate fire flow to the proposed Recreation Center to eliminate the need for a new fire pump at that location.

Increasing system pressure by 25 psi appears to be feasible without over-pressurizing the system. With an additional 25 psi, system pressure would range from approximately 56 to 81 psi. Providing adequate fire flow to the proposed Recreation Center and new Residential Hall will be more difficult and will likely dictate the size of the proposed pump station. Fire flow demand at the new residential hall is 1,000 gpm at a minimum residual suction pressure of approximately 35 psi. The fire flow demand at the proposed Recreation Center is 500 gpm at a minimum residual pressure of 70 psi. In addition to the sprinkler systems at both locations, PARE assumed that the Fire Department would utilize two outside hydrants at an average fire flow delivery rate of 500 gpm, although this would need to be verified with the local Fire Department before the design or installation of any new pump station.

To evaluate the size of the proposed pump station at Mt. Pleasant Avenue, PARE input a theoretical pump at the Mt. Pleasant Avenue meter connection with a hypothetical design point. PARE then ran the model for two scenarios, one with a 500 gpm fire flow demand at the new Recreation Center and a 500 gpm demand at the two nearest hydrants. The second scenario included a 1,000 gpm fire flow demand at the new Residential Hall and a 500 gpm demand at the two nearest hydrants. The objective of the evaluation was to identify a theoretical pump that could achieve both design conditions.

Based on the model results, a theoretical pump sized for 1,500 gpm at 100 feet of total dynamic head (TDH) with a run-out point of 2,500 gpm and a shut-off head of 150 feet appears to provide adequate fire service to both buildings. If the station were solely a fire booster pump station, this would correspond to roughly a 75 horse power (HP) fire pump, assuming a wire-to-water efficiency of 50 percent. However, given that this station would be sized to accommodate a range of domestic demand as well as fire flow, it is likely that an array of pumps would be utilized to meet system demands. For the purpose of this evaluation and for comparison purposes, we assumed a 75 HP pump would be needed for a theoretical pump station at the Mt. Pleasant Avenue connection.

During a 1,000 gpm fire flow event at the new Residential Hall, system pressure would range from 36 to 74 psi. Most of the system is in the range of 36 to 58 psi, which is similar to the range of system pressure experienced currently. During a 500 gpm fire flow event at the proposed Recreation Center, system pressure ranges from 67 to 91 psi. This range of pressure is significantly higher than what is experienced currently, but is similar to the proposed system pressure after campus-wide pressure is increased by 25 psi. It is noted that 90 psi is considered by AWWA to be the upper range of normal system pressure, so typically 91 psi would not be considered problematic in a water distribution system. However, RIC personnel should be aware that increasing system pressure to 91 psi may adversely impact some of the older piping in the system, particularly the older asbestos cement pipe.

3.2.5 Pump Station at Oakton Street

As an alternative to the Mt. Pleasant Avenue meter, the Oakton Street meter connection was considered for a new pump station. As with the proposed pump station at the Mt. Pleasant Avenue connection, PARE input a theoretical pump with a hypothetical design point at the Oakton Street connection. The model was run for both design conditions and adjustments were made to the design point of the pump.

Based on the model results, a theoretical pump sized for 1,500 gpm at 125 feet of total dynamic head (TDH) with a run-out point of 2,500 gpm and a shut-off head of 180 feet appears to provide adequate fire service to both buildings. During a 1,000-gpm fire flow event at the new Residential Hall, system pressure would range from 33 to 74 psi. During a 500-gpm fire flow event at the proposed Recreation Center, system pressure ranges from 72 to 96 psi.

The model indicates that the proposed pump(s) in the Oakton Street pump station would need to be larger, approximately 100 HP, than at the Mt. Pleasant meter connection to provide adequate fire flow to both buildings. This increase in size is due largely to the increase in head loss in the PWSB system up to the Oakton Street meter. The connection to PWSB at this location is relatively small, only 8 inches. In addition, the Hot Box at this location has a 6-inch meter, which is likely contributing to the increase in head loss in the system.

It is also noted that during a fire event at the proposed Recreation Center, system pressure would increase to approximately 96 psi, which may be too high for this system, given the age and prevalence of asbestos cement pipe.

3.2.6 Dual Pump Stations at Oakton Street and Mt. Pleasant Avenue

For redundancy, PARE evaluated the feasibility of installing dual pump stations, one at Oakton Street and one at Mt. Pleasant Avenue. The benefit of operating two stations over one is that in the event of a shut down at one connection, the other station could provide system demand.

PARE evaluated two scenarios with both stations on-line during a fire event – one scenario with a fire event at the Recreation Center and one scenario with a fire at the new Residential Hall. It appears as though 40 HP pumps with a design point of 750 gpm at 100 feet of TDH would be adequate to provide fire during both scenarios. This represents a reduction in horse power over the Oakton Street scenario (refer to section 3.2.5), and is relatively similar to the horse power requirement of the Mt. Pleasant Avenue scenario (refer to section 3.2.4). However, to achieve true redundancy, each station would need to provide adequate fire flow in the event that the other station was off-line. In other words, the Oakton Street pump station would need a 100 HP fire pump and the Mt. Pleasant Avenue pump station would need a 75 HP fire pump. It would be imprudent to provide less capacity at each station if the goal is to provide true system redundancy.

It is noted that in most public water distribution systems, individual pump stations are designed and constructed with redundancy, such as extra pumps, emergency back-up power, etc. It is not typical to provide duplicate pump stations to provide redundancy. In the case of the RIC campus, if only one station were installed, say at the Mt. Pleasant Avenue connection, and it were off-line, the campus would still have water available through the Oakton Street and Cole Road connections, although at reduced pressure. Therefore, in lieu of providing two pump stations, which would be expensive, it may be more practical to provide one new pump station and equip the other two connections with quick-disconnects or adjacent hydrants that could be connected to a booster pump during an emergency. This setup would be similar to a Fire Department connection (FDC) outside a building and could be utilized by the Fire Department in an emergency.

3.2.7 New Connection to Fruit Hill Avenue

PARE contacted the PWSB regarding the feasibility of installing a new connection to the PWSB system on Fruit Hill Avenue. PWSB indicated that the water main on Fruit Hill Avenue is a 24-

inch main that serves as a transmission main to PWSB's Fruit Hill tank and service area. PWSB personnel indicated that no new connections were allowed to this main. As such, PWSB may not allow RIC to connect to this water main, which may preclude a new connection to Fruit Hill Avenue. Therefore, PARE did not conduct a hydraulic evaluation of the Fruit Hill Avenue line.

4.0 CONCLUSIONS AND RECOMMENDATIONS

4.1 *Results Summary and Conclusions*

The model results indicate that system pressure may be too low to adequately serve the existing campus needs. System pressure currently ranges from 31 to 56 psi, which is within the range recommended by AWWA (i.e., 30 to 90 psi) but too low for some of the campus buildings.

In general, fire flow appears to be adequate and ranges from approximately 1,200 to 1,700 gpm throughout most of the campus. The only exception is the Cole Road service area, where available fire flow is between 300 and 400 gpm.

System piping does not appear to be substantially limiting system performance. Velocities in system pipes are generally below 1.0 ft/sec and head losses are generally below 1.0 ft/1,000 ft during normal demand scenarios (i.e., ADD, MDD, and PHD). The only exception is the Cole Road water main, which is a 6-inch cast iron pipe with an estimated C-value of 35. The poor condition of this water main appears to be the cause of the poor fire flow in this area of campus. In addition, it has been reported by RIC personnel that this water main causes aesthetic water quality issues when connected to the rest of the system, and is therefore isolated from the rest of the system through a closed isolation valve.

The existing water system has several redundant features – including three connections to PWSB and substantial piping redundancy in the northern half of the campus. Where the system is lacking redundancy is in the southern half of the campus and the area around Salisbury Road. The water main on College Road between 6th Avenue and the Art Center has no redundancy and supplies water to numerous buildings. In addition, the cross-country connection between the Nazarian Center and Cole Road is the sole source of supply to Salisbury Road. The Cole Road service area is served through one single connection to PWSB. A break along any of these three water mains could be severely disruptive to the system.

Based on the results of our evaluation, RIC should consider capital improvements that would address some of the more significant system deficiencies, such as increasing system pressure, improving system redundancy, and replacing the 6-inch water main on Cole Road.

4.2 *Recommendations*

PARE recommends that RIC consider implementing certain system improvements to address the deficiencies identified in previous sections of this report. A list of specific system improvements that PARE recommends is provided below.

1. PARE recommends that RIC upgrade the existing 6-inch cast iron water main on Cole Road to 8-inch ductile iron pipe. This will allow RIC to open the isolation valve at the end of Cole Road and operate the system as one single pressure zone. This will increase available fire flow in the Cole Road service area and add much needed system redundancy to this area of the system. It is our understanding that RIC is considering this upgrade as part of the proposed Recreation Center.

2. PARE recommends that RIC consider increasing system pressure campus-wide by approximately 25 psi. This will increase system pressure from 31-56 psi to 56-81 psi, and will allow RIC to install backflow preventers in buildings where pressure is currently too low to support them. In addition, this may eliminate the need for some, but probably not all, domestic booster pumps in campus buildings. While 25 psi is recommended at this time, the exact pressure increase should be evaluated more thoroughly by evaluating the specific pressure requirements at each campus building. Also, please note that while an overall increase of 25 psi will keep campus pressure within AWWA's recommended range of 30 to 90 psi, it may adversely impact some of the older asbestos cement pipes on campus.

   To increase campus pressure, PARE recommends that a single pump station be installed at the Mt. Pleasant Avenue meter connection. This station should be sized to accommodate current and future peak flow conditions as well as campus fire protection. The station should be equipped with multiple pumps of varying size to accommodate varying flow requirements. In addition, the station should be equipped with variable frequency drives (VFDs) to maintain a relatively consistent level of service over varying demand scenarios.

The station should be provided with emergency backup power in the event of a power outage.

A properly sized pump station at this location could eliminate the need for a new fire pump at the proposed Recreation Center. Prior to the design or construction of a new pump station, the actual fire flow requirements would need to be coordinated with the local Fire Department. In addition, PARE would recommend that a hydrant flow test be conducted on the PWSB system outside the campus, to gauge the PWSB's system response to a significant fire event on campus.

3. In addition to a pump station at the Mt. Pleasant Avenue meter connection, PARE recommends that the Cole Road and Oakton Street meter connections be equipped with new aboveground connections, such as quick-disconnects or new fire hydrants, that would allow the Fire Department to connect an emergency backup pump to the system in the event that the pump station at Mt. Pleasant Avenue is out of service.

4. PARE recommends that RIC consider adding system redundancy between the northern and southern half of the campus. Redundancy could be added by installing a new 10-inch water main along 6th Avenue between College Road and Library Road, or by installing a new 10-inch water main cross-county on the east side of the Murray Building between College Road and Library Road. This new water main will provide much needed system redundancy and would facilitate the development of new buildings or facilities in this area of the campus.

5. Finally, while not critical, PARE recommends that RIC consider installing a new 8-inch water main between Cole Road and Salisbury Drive. This new main would add system redundancy in this area of the system and improve fire flow along Cole Road and Salisbury Drive.

As mentioned above, this memorandum is a draft version of the Utility Conditions Evaluation that PARE is preparing for the campus. This memorandum will be updated once the campus-wide survey is complete. In addition, sections of this memorandum will be included in the Campus-wide Utility Improvements Plan. In the meantime, if you have any questions or comments, please do not hesitate to contact Tim Thies or me at your earliest convenience.

-BFE

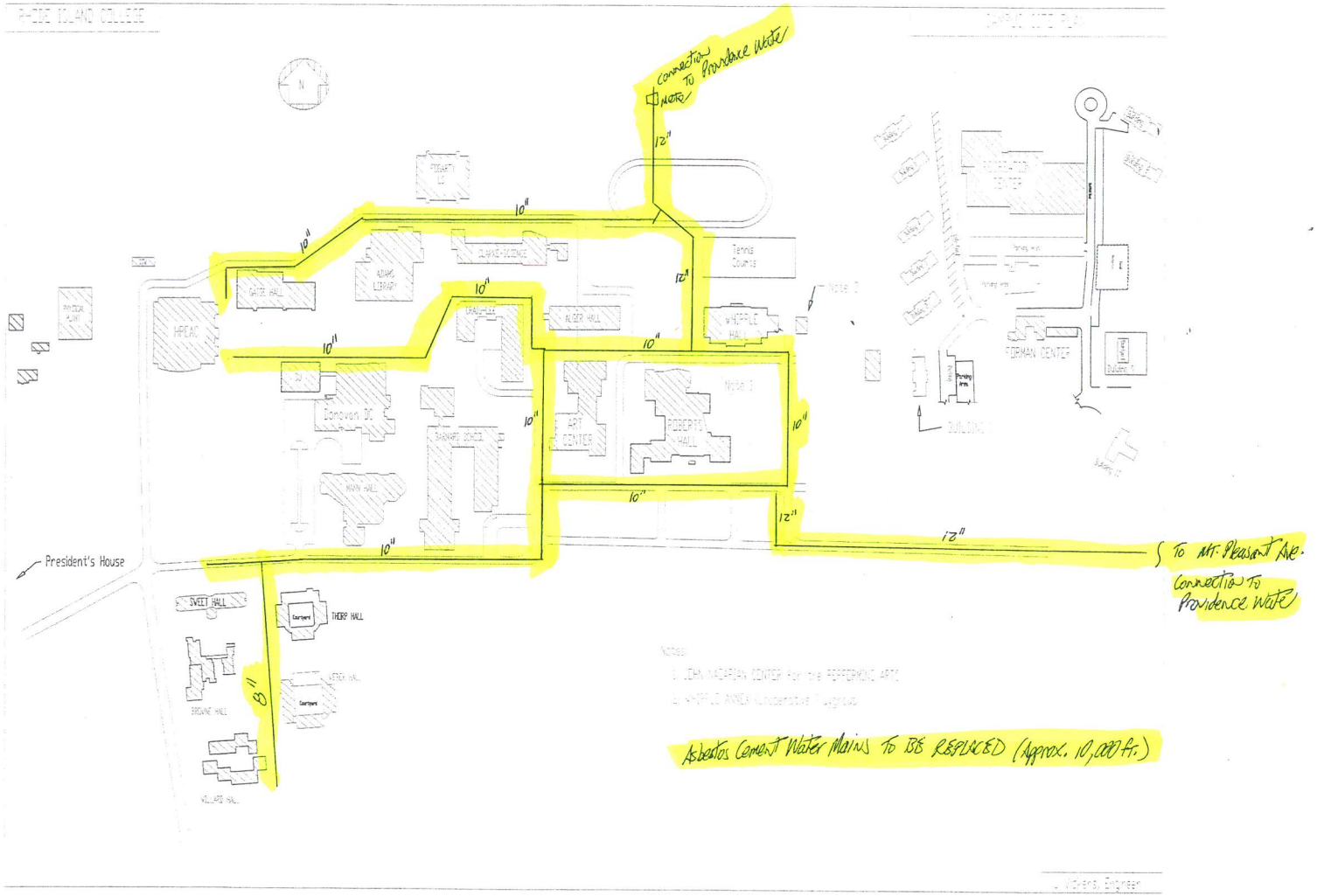

Asbestos Cement Water Mains to be REPLACED (Approx. 10,000 ft.)