ISSUED FOR CONSTRUCTION

Prepared for The:

RHODE ISLAND DEPARTMENT OF ENVIRONMENTAL MANAGEMENT

WYOMING UPPER RESERVOIR DAM REPAIRS

RI DAM No. 216

HOPKINTON / RICHMOND, RHODE ISLAND

MAY 2020

REISSUED NOVEMBER 2020

Drawing Index

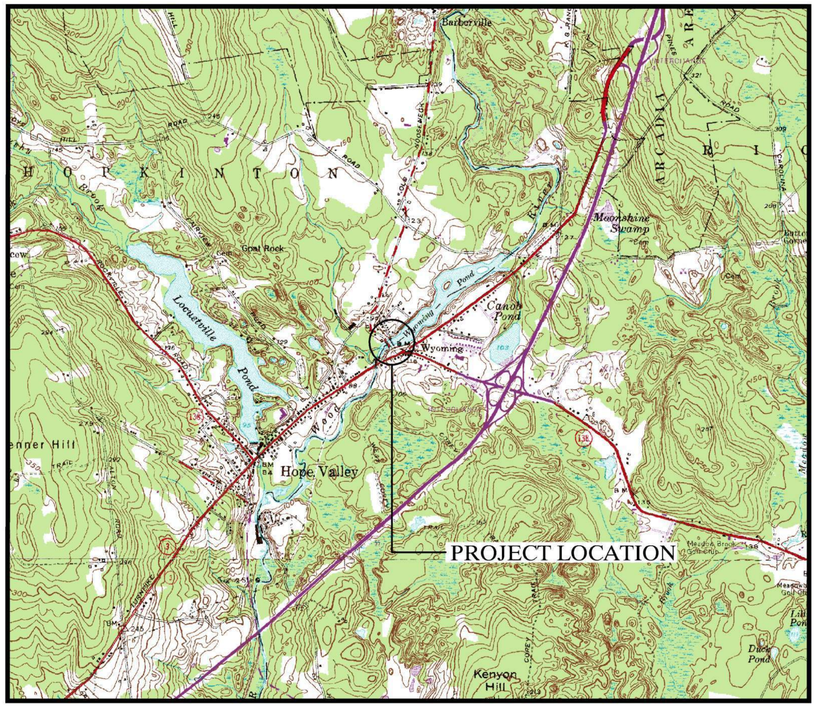

LOCUS PLAN

SCALE: 1" = 2000'

0.0 COVER SHEET

1.0 GENERAL NOTES AND LEGEND

2.0 EXISTING CONDITIONS

2.1 HISTORIC DRAWINGS 1

2.2 HISTORIC DRAWINGS 2

2.3 EROSION CONTROL AND STAGING PLAN

3.0 DEMOLITION PLAN

4.0 PROPOSED PLAN

5.0 RIGHT EMBANKMENT PLAN

5.1 RIGHT EMBANKMENT DETAILS

6.0 LOW LEVEL OUTLET PLAN

6.1 LOW LEVEL OUTLET DETAILS

7.0 SPILLWAY APRON REPAIRS

8.0 SLUICE WAY REPLACEMENT

9.0 MISCELLANEOUS DETAILS

AERIAL PLAN

SCALE: 1" = 400'

Prepared by:

PARE CORPORATION

Foxboro, Massachusetts

PARE CORPORATION

I:\JOBS\16 Jobs\16226.00 RIDEM Wyoming Upper Res Design Repairs-RI\Drawings\0.0 Cover Sheet.dwg

GENERAL NOTES:

1. FOR THE PURPOSE OF THIS PROJECT

   OWNER – RHODE ISLAND DEPARTMENT OF ENVIRONMENTAL MANAGEMENT – PLANNING AND DEVELOPMENT
   235 PROMENADE STREET
   PROVIDENCE, RI 02908

   ENGINEER – PARE CORPORATION
   10 LINCOLN ROAD, SUITE 210
   FOXBORO, MA 02035

   CONTACT – J. MATTHEW BELLISLE, P.E.

2. ALL CONSTRUCTION INDICATED ON THESE PLANS SHALL BE PERFORMED IN ACCORDANCE WITH THE LATEST EDITION OF THE RHODE ISLAND STATE BUILDING CODE, THE SPECIFICATIONS INCLUDED IN THIS CONTRACT, AND THE RIDEM OFFICE OF COMPLIANCE AND INSPECTION "RULES AND REGULATIONS FOR DAM SAFETY". THESE PLANS ARE INCOMPLETE UNLESS ACCOMPANIED BY THE SPECIFICATIONS INCLUDED IN THE CONTRACT DOCUMENTS.

3. THE PLANS WERE DEVELOPED FROM NOTES TAKEN DURING THE INSPECTION, TOPOGRAPHIC SURVEY PREPARED BY DIPRETE ENGINEERING IN OCTOBER 2016 AND TOPOGRAPHIC SURVEY BY PARE PERSONNEL JANUARY 31, 2017. UPSTREAM BATHYMETRY WAS UPDATED AS PART OF THE NOVEMBER 2020 PLAN SET REISSUE BASED ON A SURVEY COMPLETED BY DIPRETE ENGINEERING ON OCTOBER 23, 2020. ANY DISCREPANCIES ON THESE PLANS WITH REGARD TO DIMENSIONS OR CONDITIONS SHALL BE BROUGHT TO THE ATTENTION OF THE ENGINEER BEFORE PROCEEDING WITH THE AFFECTED PORTION OF WORK. BRUSH AND TREE GROWTH HAS CONTINUED SINCE THE DATE OF THE SURVEY; CONTRACTOR SHALL BE RESPONSIBLE FOR REVIEWING CURRENT EXTENTS AND SIZE OF VEGETATION. CONTRACTOR SHALL BE RESPONSIBLE FOR INCREASED CLEARING REQUIREMENTS RESULTING FROM ADDITIONAL GROWTH.

4. DEPTHS AND THICKNESS OF THE SUBSURFACE STRATA INDICATED HEREIN ARE GENERALIZED AND INFORMATION SHOWN FOR THE DAM IS INTERPOLATED AND MAY VARY.

5. THE CONTRACTOR SHALL BE RESPONSIBLE FOR VERIFYING ALL DIMENSIONS AND CONDITIONS PRIOR TO SUBMITTING BIDS. DRAWINGS FROM PREVIOUS WORK ARE PROVIDED FOR REFERENCE ONLY AND ARE NOT TO BE CONSIDERED "ASBUILT" DRAWINGS. ANY AREAS INACCESSIBLE FOR BIDDING PURPOSES SHALL BE INCLUDED IN THE WORK WITH BID ASSUMPTIONS CLEARLY DETAILED. PLANS SHALL NOT BE SCALED FOR DIMENSIONS.

6. CONSTRUCTION SHALL BE MADE FROM APPROVED SHOP DRAWINGS ONLY.

7. NOTES, TYPICAL DETAILS, AND SCHEDULES APPLY TO ALL WORK UNLESS OTHERWISE NOTED. FOR CONDITIONS NOT SPECIFICALLY SHOWN, PROVIDE DETAILS OF SIMILAR NATURE. VERIFY APPLICABILITY BY SUBMITTING SHOP DRAWINGS FOR REVIEW.

8. INFORMATION REGARDING THE LOCATION OF SURROUNDING STRUCTURES, UTILITIES, AND THE AS-BUILT CONFIGURATION AND CONDITION OF THE EXISTING DAM AND SPILLWAY IS FURNISHED SOLELY FOR THE CONVENIENCE OF THE CONTRACTOR AND SHALL BE FIELD VERIFIED. THE CONTRACTOR SHALL CONDUCT ITS OWN INDEPENDENT EXAMINATION OF SITE CONDITIONS FOR THE PURPOSE OF BIDDING, FABRICATION, AND CONSTRUCTION ASSOCIATED WITH THE PROJECT. ANY RELIANCE UPON INFORMATION MADE AVAILABLE BY THE OWNER OR THE ENGINEER SHALL BE AT THE CONTRACTOR'S RISK.

9. ELEVATIONS REFERENCE NAVD 1988. HORIZONTAL DATUM REFERENCES NAD 1983.

10. THE CONTRACTOR SHALL BE RESPONSIBLE FOR MAINTAINING AND REGULATING BASE AND STORM FLOWS THAT OCCUR ABOVE THE DRAW DOWN ELEVATION IN ACCORDANCE WITH THE RIDEM "RULES AND REGULATIONS FOR DAM SAFETY" AND AS STATED WITHIN THE CONTRACT DOCUMENTS.

11. THE CONTRACTOR SHALL BE RESPONSIBLE FOR DISPOSAL OF ALL PROJECT DEMOLITION AND EXCESS MATERIAL IN ACCORDANCE WITH RHODE ISLAND, LOCAL, AND FEDERAL LAWS.

12. THE CONTRACTOR SHALL PROTECT ALL ADJACENT STRUCTURES AND UTILITIES. THE CONTRACTOR SHALL BE RESPONSIBLE FOR REPAIR OF ALL DAMAGE TO ADJACENT STRUCTURES AND UTILITIES AT NO ADDITIONAL COST TO THE OWNER.

13. THE CONTRACTOR SHALL COMPLY WITH ALL CONDITIONS OF ALL PERMITS FOR THE WORK. THE CONTRACTOR SHALL COORDINATE SCHEDULE WITH THE OWNER AND ANTICIPATED PERMIT ISSUE DATES.

14. THE CONTRACTOR SHALL FOLLOW ALL OSHA AND OTHER APPLICABLE FEDERAL, STATE, AND LOCAL STANDARDS FOR ALL PROJECT COMPONENTS AND ACTIVITIES. THE CONTRACTOR SHALL BE SOLELY RESPONSIBLE FOR ALL SITE SAFETY PROCEDURES AND PRACTICES REGARDLESS OF THE PRESENCE OF THE OWNER OR ENGINEER.

15. ALL CONSTRUCTION ACTIVITIES SHALL BE CONFINED TO THE LIMITS OF WORK AND TEMPORARY EASEMENTS DEFINED HEREIN.

16. WHERE REFERENCE IS MADE TO ANY STANDARD SPECIFICATION, IT SHALL MEAN THE MOST RECENT SPECIFICATION, CODE, STANDARD, OR INTERIM SPECIFICATIONS OF THE ORGANIZATION REFERRED TO AND SHALL BE CONSIDERED A PART OF THESE CONTRACT DOCUMENTS TO THE EXTENT INDICATED. IN CASE OF CONFLICT, THE MORE RIGID REQUIREMENTS AND CODES SHALL GOVERN. THESE CODES INCLUDE, BUT ARE NOT LIMITED TO: AMERICAN SOCIETY FOR TESTING AND MATERIALS (ASTM).

17. THE CONTRACTOR WILL BE REQUIRED TO SUBMIT A CONSTRUCTION SCHEDULE TO THE OWNER WITHIN 3 DAYS OF THE PRE-CONSTRUCTION CONFERENCE. THE CONTRACTOR SHALL UPDATE THEIR SCHEDULE AS NEEDED AND AS REQUESTED BY THE OWNER THROUGHOUT THE COURSE OF WORK.

18. THE CONTRACTOR SHALL STAGE ALL EQUIPMENT IN THE DESIGNATED STAGING AREAS. ALL GREASING AND REFUELING ACTIVITIES SHALL OCCUR IN THE STAGING AREA.

19. THE CONTRACTOR SHALL MAINTAIN A SECURE SITE AND PROVIDE APPROPRIATE SAFETY MEASURES TO PREVENT ACCIDENTS. THE SAFETY MEASURES SHALL INCLUDE, BUT NOT BE LIMITED TO SIGNAGE, BARRICADES, FENCES, FLASHING WARNING LIGHTS, AND POLICING IF NECESSARY.

20. UPON COMPLETION OF THE PROJECT, CONTRACTOR SHALL PROVIDE TWO AS-BUILT PLAN SETS TO THE OWNER IN ACCORDANCE WITH SECTION 01720. SURVEYS DEPICTING SITE GRADES SHALL BE ACCURATE TO WITHIN 1-FOOT, WHILE ELEVATIONS OF SITE FEATURES, E.G. STRUCTURES, GATE INVERTS, WALLS, PIPES, SHALL BE ACCURATE TO WITHIN 0.01 FEET.

21. UPON COMPLETION OF THE WORK, ALL DISTURBED AREAS SHALL BE DRESSED AND SEEDED WITH SLOPE OR PLOT MIX AND MAINTAINED IN ACCORDANCE WITH THE PROJECT SPECIFICATIONS. CONTRACTOR SHALL BE REQUIRED TO WATER SEEDED SLOPES ON A DAILY BASIS UNTIL A SATISFACTORY STAND OF GRASS HAS DEVELOPED.

22. THE CONTRACTOR SHALL ATTEND WEEKLY PROGRESS MEETINGS IN ACCORDANCE TO SPECIFICATION SECTION 01200: PROJECT MEETINGS.

23. THE CONTRACTOR SHALL STOCKPILE ALL SUITABLE MATERIAL ENCOUNTERED DURING EXCAVATION AND DEMOLITION ACTIVITY FOR REUSE. THE CONTRACTOR SHALL PROVIDE TARPS, COVERS, AND OTHER MEASURES TO PROTECT STOCKPILES FROM BECOMING SATURATED, FROZEN, OR OTHERWISE UNSUITABLE FOR REUSE.

24. ITEMS NOTED AS BEING ON "HOLD" SHALL BE INCLUDED IN THE WORK AS SHOWN, HOWEVER, NO DETAILING, FABRICATION, OR CONSTRUCTION SHALL BE EXECUTED UNTIL THE "HOLD" REFERENCE IS REMOVED.

DIVERSION NOTES:

1. THE CONTRACTOR SHALL MAINTAIN FLOW THROUGHOUT CONSTRUCTION IN ACCORDANCE WITH APPLICABLE PERMITS. THE CONTRACTOR SHALL BE RESPONSIBLE FOR PREVENTING ANY SOIL OR OTHER MATERIAL FROM ENTERING THE DISCHARGE CHANNEL OR IMPOUNDMENT.

2. THE CONTRACTOR SHALL NOT PERFORM ANY DRAW DOWN OF THE IMPOUNDMENT, BEYOND THE PERMITTED CONSTRUCTION DRAW DOWN LEVEL (EL. 91) UNLESS THEY HAVE RECEIVED WRITTEN PERMISSION FROM THE OWNER OR MUST EXECUTE EMERGENCY PROCEDURES OUTLINED IN THE CONSTRUCTION FLOOD CONTINGENCY PLAN.

3. THE CONTRACTOR SHALL BE RESPONSIBLE FOR ALL LOSS AND DAMAGE DUE TO A FAILURE OF ANY COFFERDAMS OR DIVERSION STRUCTURES CONSTRUCTED DURING THE WORK.

4. THE CONTRACTOR SHALL REGULATE DISCHARGES AND PHASE CONSTRUCTION SO THAT CONSTRUCTION EQUIPMENT DOES NOT PASS THROUGH FLOWING WATER.

5. ANY NECESSARY COFFERDAMS AND DIVERSIONS SHALL BE DESIGNED BY THE CONTRACTOR AND BEAR THE STAMP OF A PROFESSIONAL ENGINEER REGISTERED IN THE STATE OF RHODE ISLAND. APPROVAL BY THE OWNER AND ENGINEER IS REQUIRED PRIOR TO INSTALLATION. ALL DIVERSIONS SHALL BE INSTALLED AND REMOVED IN THEIR ENTIRETY AT NO ADDITIONAL COST TO THE OWNER.

6. THE CONTRACTOR SHALL MAINTAIN A STOCKPILE OF MATERIAL ONSITE TO BE UTILIZED TO STABILIZE THE EXCAVATION IN THE EVENT OF HIGH WATER OR OTHER CONDITIONS WHICH MAY COMPROMISE THE COFFERDAM STABILITY. THE STOCKPILE SHALL BE MAINTAINED IN ACCORDANCE WITH THE CONSTRUCTION FLOOD CONTINGENCY PLAN TO BE DEVELOPED BY THE CONTRACTOR AND SUBJECT TO APPROVAL BY THE ENGINEER AND OWNER.

7. WITH THE APPROVAL OF THE ENGINEER, THE CONTRACTOR MAY UTILIZE WATER WITHDRAWALS FROM WYOMING UPPER RESERVOIR DAM AND/OR THE SPILLWAY CHANNEL FOR THE PURPOSES OF LOAM AND SEED OPERATIONS AND MAINTENANCE, DUST CONTROL, AND EARTHWORK COMPACTION OPERATIONS. SUCH WATER SHALL NOT BE USED FOR THE FOLLOWING BUT NOT LIMITED TO, CONCRETE AND MORTAR MIXING, EQUIPMENT WASH DOWN, MAINTENANCE (E.G. CONCRETE WASHOUT, EXTERIOR CLEANING, OR TRACK WASH DOWN), OR FROM WASHING STONE OR STRIPPED MATERIALS.

EROSION AND SEDIMENT CONTROL NOTES:

1. THE CONTRACTOR SHALL MAINTAIN ALL EROSION CONTROL DEVICES FOR THE DURATION OF THE PROJECT.

2. THE CONTRACTOR SHALL PREVENT SEDIMENT FROM ENTERING THE IMPOUNDMENT, DOWNSTREAM CHANNELS, OR RESOURCE AREAS.

3. NO WORK OR DISCHARGES, OTHER THAN THAT SHOWN, SHALL BE PERFORMED WITHIN THE WETLANDS AREA WITHOUT FIRST RECEIVING PROPER PERMITS FROM THE REGULATORY AGENCIES. CONTRACTOR SHALL BE RESPONSIBLE FOR REMOVING, RESTORING, AND REPAIRING ALL DAMAGE AS A RESULT OF UNAUTHORIZED WORK OR DISCHARGES TO THE WETLAND AREA AT NO ADDITIONAL COST.

4. UPON COMPLETION OF THE WORK, ALL DISTURBED AREAS SHALL BE DRESSED AND SEEDED WITH GRASS PLOT OR SLOPE MIX IN ACCORDANCE WITH THE PROJECT SPECIFICATIONS.

5. THE CONTRACTOR SHALL INSTALL, MOVE, AND MAINTAIN TURBIDITY BARRIERS TO PREVENT SILT FROM DEPOSITING OR FLOWING BEYOND THE LIMITS OF DISTURBANCE DURING THE COURSE OF ANY SILT PRODUCING WORK. TURBIDITY BARRIERS SHALL BE ANCHORED SECURELY AS NECESSARY TO INSURE COLLECTION OF SEDIMENT AND ENABLE THE WORK TO BE PERFORMED.

6. STOCKPILES SHALL BE A MINIMUM OF 1-FOOT FROM THE EDGE OF ANY SLOPE TO LIMIT RUNOFF DOWN THE EMBANKMENT SLOPES.

7. THE EROSION CONTROL BARRIERS BOARDING WETLANDS SHALL CONSIST OF STRAW BALES BACKED BY SILT FENCE OR AS SHOWN ON THE DRAWINGS; OTHERWISE BARRIERS SHALL CONSIST SILT FENCE.

8. EROSION CONTROL BARRIERS SHALL BE MODIFIED OR EXPANDED AS FIELD CONDITIONS WARRANT.

9. ALL EROSION CONTROL BARRIERS SHALL BE INSPECTED AT LEAST ONCE PER WEEK AND AFTER EACH PRECIPITATION EVENT OF 0.5 INCH OR GREATER.

10. ANY DAMAGED AREAS SHALL BE REPAIRED WITHIN 24 HOURS OF DISCOVERY.

11. DEWATERING BASINS SHALL CONSIST OF STRAW BALE ENCLOSURES, TANKS, PERMEABLE BLADDERS, OR OTHER ACCEPTED METHOD. DEWATERING WASTE WATERS SHALL BE PUMPED TO THE DEWATERING BASINS AND TREATED PRIOR TO DISCHARGE.

12. DISCHARGE OF TURBID WATER TO THE WYOMING UPPER POND, WOOD RIVER, OR ANY WETLAND IS PROHIBITED.

13. UPON COMPLETION OF GRADING, ALL EXPOSED SURFACES NOT OTHERWISE TO BE TREATED SHALL BE COVERED WITH A MINIMUM OF 8" OF LOAM AND SEEDED. MULCH SHALL BE APPLIED AS NECESSARY TO PROVIDE TEMPORARY STABILIZATION UNTIL PERMANENT VEGETATIVE COVER IS ESTABLISHED.

14. COFFERDAMS SHALL BE INSTALLED IN ACCORDANCE WITH THE CONTRACTORS CONTROL OF WATER PLAN. THE CONTRACTOR WILL BE RESPONSIBLE FOR CARRYING COSTS FOR PROTECTING THE DAM AGAINST INFLOWS ASSOCIATED WITH THE 10-YEAR STORM EVENT.

CONCRETE NOTES:

1. CONCRETE WORK SHALL CONFORM TO THE LATEST ADDITIONS OF THE "BUILDING CODE REQUIREMENTS FOR REINFORCED CONCRETE" (ACI 318) AND THE RHODE ISLAND STATE BUILDING CODE.

2. CONCRETE SHALL BE PROPORTIONED, MIXED, AND PLACED UNDER THE SUPERVISION OF THE APPROVED TESTING AGENCY.

3. CONCRETE SHALL BE NORMAL WEIGHT, WITH TYPE II CEMENT, AND SHALL HAVE A MINIMUM COMPRESSIVE STRENGTH AT 28 DAYS OF 5,000 PSI 3/4" AGGREGATE-TYPICAL.

4. ALL CONCRETE SHALL BE AIR-ENTRAINED WITH AN AIR CONTENT OF 6% +/- 1.5% AT THE POINT OF PLACEMENT.

5. PRODUCTS CONTAINING CALCIUM CHLORIDE SHALL NOT BE USED.

6. DO NOT BACKFILL AGAINST REINFORCED CONCRETE UNTIL WALLS AND SUPPORTING SLABS UNTIL THE CONCRETE HAS REACHED THE 7-DAY SPECIFIED STRENGTH. DO NOT DRILL INTO OR BACKFILL OVER/AGAINST NON-STRUCTURAL CONCRETE UNTIL AT LEAST 3-DAYS HAS ELAPSED FROM THE POUR.

7. ON VERTICAL FACES EXPOSED TO VIEW: PROVIDE A SMOOTH RUBBED SURFACE; FREE FROM BURRS; TIE HOLES AND HONEYCOMB-ING SHALL BE FILLED, ETC. NOT EXPOSED TO VIEW: CONCRETE SHALL BE FREE FROM BURRS; TIE HOLES AND HONEYCOMB-ING SHALL BE FILLED. HORIZONTAL SPILLWAY APRON SURFACES PROVIDE A SMOOTH FLOATED FINISH. ON EXPOSED HORIZONTAL SURFACES SUBJECT TO PEDESTRIAN TRAFFIC I.E. TOPS OF WALLS OR THE LOW-LEVEL OUTLET CHAMBER, PROVIDE A ROUGHENED BROOM FINISH.

8. ALL EXPOSED EDGES SHALL BE CHAMFERED 3/4" UNLESS NOTED OTHERWISE.

9. WHEN CONCRETE IS PLACED AGAINST PREVIOUSLY HARDENED CONCRETE, THE INTERFACE SHALL BE CLEAN, FREE OF LAITANCE, THOROUGHLY WETTED TO ENSURE ADEQUATE BOND, AND INTENTIONALLY ROUGHENED TO FULL AMPLITUDE OF APPROXIMATELY 1/4 INCH.

10. ALL CONCRETE SHALL BE PLACED IN THE DRY.

11. THE SURFACES OF CONCRETE AROUND HORIZONTAL CONSTRUCTION JOINTS SHALL BE RAKED TO PROVIDE A ROUGHENED SURFACE.

REINFORCING STEEL NOTES:

1. REINFORCING BARS SHALL BE DETAILED IN ACCORDANCE WITH ACI 315 MANUAL OF STANDARD PRACTICE FOR DETAILING REINFORCED CONCRETE STRUCTURES AND THE RHODE ISLAND STATE BUILDING CODE.

2. COMPLETE SHOP DRAWINGS AND SCHEDULES OF ALL REINFORCING STEEL SHALL BE PREPARED BY THE CONTRACTOR AND SUBMITTED TO THE ENGINEER FOR APPROVAL PRIOR TO COMMENCEMENT OF THAT PORTION OF THE WORK. ALL ACCESSORIES MUST BE SHOWN ON THE SHOP DRAWINGS.

3. REINFORCING BARS SHALL CONFORM TO ASTM A615 GRADE 60 REINFORCING. REINFORCING STEEL WHICH IS TO BE WELDED SHALL BE ASTM A706 AND SHALL ALSO BE COATED. COATING WILL BE GROUND OFF FOR FIELD WELDING LOCATIONS AND REPAIRED AFTER WELDING.

4. ALL REINFORCING STEEL SHALL BE HOT-DIPPED GALVANIZED AFTER FABRICATION IN ACCORDANCE WITH ASTM A767, OR CONTINUOUSLY GALVANIZED IN ACCORDANCE WITH ASTM A1094. ALL SUPPORTS SUCH AS CHAIRS, BOLSTERS, SPACERS, BLOCKS AND HANGERS SHALL BE OF NON-CORROSIVE MATERIAL. ALL DAMAGED, SCRATCHED OR OTHERWISE DEGRADED COATED AREAS SHALL BE REPAIRED WITH COLD GALVANIZING REPAIR PAINT AFTER ERECTION AND SHALL BE ALLOWED TO COMPLETELY CURE PRIOR TO CONCRETE PLACEMENT IN ACCORDANCE WITH ALL MANUFACTURERS RECOMMENDATIONS.

5. UNLESS NOTED ON THE DRAWINGS, THE MINIMUM CONCRETE PROTECTION (CLEAR COVER) FOR CAST-IN-PLACE CONCRETE COVER SHALL BE AS FOLLOWS:

   A. FORMED CONCRETE EXPOSED TO EARTH OR WATER.....2"

   B. CONCRETE CAST AGAINST AND PERMANENTLY EXPOSED TO EARTH.....3"

6. MINIMUM REINFORCEMENT DEVELOPMENT LENGTH SHALL BE IN ACCORDANCE WITH ACI 318 UNLESS NOTED ON THE DRAWINGS.

TIMBER NOTES:

1. LUMBER SHALL BE GRADED IN ACCORDANCE WITH NFPA STANDARDS FOR VISUALLY GRADED STRUCTURE LUMBER.

2. NEW HANDRAILINGS AND DECKING SHALL BE PRESSURE TREATED TO A MINIMUM NET RETENTION OF 0.25 PCF OF ACQ IN ACCORDANCE WITH AWPA STANDARD UC3B. ALL OTHER NEW LUMBER SHALL BE PRESSURE TREATED TO A MINIMUM NET RETENTION OF 0.4 PCF OF ACQ IN ACCORDANCE WITH AWPA STANDARD UC4A.

3. ALL FIELD CUTS AND BOLT HOLES SHALL BE PROTECTED IN ACCORDANCE WITH AWPA STANDARD M4.

4. LUMBER DIMENSIONS PROVIDED IN THE PLANS ARE STANDARD DRESSED SIZES (SDS) UNLESS SPECIFIED OTHERWISE.

PIPE NOTES:

1. ALL PIPE SHALL BE CLASS 52 DUCTILE IRON.

2. ALL JOINTS SHALL BE RESTRAINED WITH MEGA-LUGS AND THRUST BLOCKS.

CONSTRUCTION SEQUENCE:

THE FOLLOWING SEQUENCE IS INTENDED TO BE GENERAL IN NATURE AND SHALL NOT BE CONSIDERED DIRECTION BY THE ENGINEER OR THE OWNER. ALTHOUGH IT IS LIKELY THAT SOME OF THE WORK ITEMS WILL OVERLAP, CONSTRUCTION SEQUENCES FOR THE VARIOUS PROJECT COMPONENTS ARE DESCRIBED SEPARATELY AND MAY NOT NECESSARILY PROCEED IN CONSECUTIVE ORDER. COFFERDAM PHASING AS INDICATED BELOW IS CONCEPTUAL IN NATURE, AND CONTRACTORS ARE RESPONSIBLE FOR DETERMINING THE ACTUAL COFFERDAM TYPES AND ALIGNMENTS WITHIN THOSE LIMITS, AS NECESSARY, TO MEET CONTRACTORS MEANS AND METHODS. ALL WORK SHALL BE PERFORMED IN ACCORDANCE WITH THE PROJECT PLANS AND SPECIFICATIONS.

1. MOBILIZE TO THE PROJECT SITE; ESTABLISH SITE ACCESS AND STAGING AREAS.
2. INSTALL AND MAINTAIN EROSION CONTROLS.
3. CLEAR, GRUB, AND STRIP ALL VEGETATION TO THE LIMITS SHOWN ON THE PLANS.
4. INSTALL PHASE I UPSTREAM COFFERDAMS. ALLOW FLOW TO CONTINUE OVER 2/3 OF THE PRIMARY SPILLWAY.
   a. REMOVE EXISTING BRIDGE AND SLUICEWAY CONTROLS/INFRASTRUCTURE.
   b. PREPARE THE SLUICEWAY FOR THE INSTALLATION OF NEW CONTROLS AND GATES. IF GATES ARE AVAILABLE INSTALL THE GATES AND CONTROLS; OTHERWISE GATE AND CONTROL INSTALLATION CAN BE DEFERRED TO PHASE III.
   c. COMPLETE CENTER EMBANKMENT IMPROVEMENTS.
   d. REPOINT WALLS AROUND SLUICEWAY.
   e. INSTALL A NEW TIMBER FOOT BRIDGE SPANNING THE SLUICEWAY.
   f. DEMOLISH AND DISPOSE OF THE EXITING CONCRETE APRON AND CONCRETE CAPLOG ALONG THE EXISTING SPILLWAY AND EXCAVATE/DREDGE SOILS UPSTREAM OF THE PRIMARY SPILLWAY TO EXPOSE POTENTIAL VOIDS IN THE UPSTREAM SOILS WITHIN PHASE I COFFERDAM LIMITS.
   g. INSTALL A NEW CONCRETE APRON AND CAPLOG ATOP THE SPILLWAY AND INSTALL AN ENGINEERED FILL CUTOFF TRENCH ALONG THE UPSTREAM FACE OF THE PRIMARY SPILLWAY WITHIN PHASE I COFFERDAM LIMITS.
   h. REBUILD FAILED STONE MASONRY SECTIONS ALONG THE PRIMARY SPILLWAY.
   i. RE-CHINK / REPOINT STONE MASONRY TRAINING WALLS WITHIN 10 FEET UPSTREAM AND DOWNSTREAM OF FLOW AREAS.
   j. RE-CHINK THE DOWNSTREAM SPILLWAY FACE WITHIN THE LIMITS OF THE PHASE I COFFERDAM.
   k. FLOOD AND REMOVE PHASE I COFFERDAM AND DIVERT FLOW THROUGH SLUICEWAY.
   l. DRAWDOWN IMPOUNDMENT TO EL. 91.0± BY ALLOWING FLOW THROUGH SLUICEWAY.
5. INSTALL PHASE II COFFERDAMS.
   a. EXCAVATE EMBANKMENT SOILS RIGHT OF THE PRIMARY SPILLWAY AND DECONSTRUCT EXISTING DOWNSTREAM WALL. STOCKPILE WALL STONES FOR REUSE AS UPSTREAM SLOPE ARMORING.
   b. CONSTRUCT THE DOWNSTREAM RETAINING WALL AT THE RIGHT EMBANKMENT.
   c. CONSTRUCT THE LOW-LEVEL OUTLET CHAMBER.
   d. INSTALL NEW LOW-LEVEL OUTLET CONDUIT AND CONTROL GATES.
   e. BACKFILL AND REGRADE EMBANKMENT RIGHT OF SPILLWAY.
   f. PLUG FLOW AND ABANDON (FILL WITH GROUT) THE EXISTING LOW-LEVEL OUTLET. EXCAVATE, STOCKPILE, AND REPLACE UPSTREAM SEDIMENT/SOIL AS NECESSARY TO FACILITATE ABANDONMENT.
   f. DEMOLISH AND DISPOSE OF THE EXITING CONCRETE APRON AND CONCRETE CAPLOG ALONG THE EXISTING SPILLWAY AND EXCAVATE/DREDGE SOILS UPSTREAM OF THE PRIMARY SPILLWAY TO EXPOSE POTENTIAL VOIDS IN THE UPSTREAM SOILS WITHIN PHASE II COFFERDAM LIMITS.
   g. INSTALL A NEW CONCRETE APRON AND CAPLOG ATOP THE SPILLWAY AND INSTALL AN ENGINEERED FILL CUTOFF TRENCH ALONG THE UPSTREAM FACE OF THE PRIMARY SPILLWAY WITHIN PHASE II COFFERDAM LIMITS.
   j. RE-CHINK THE DOWNSTREAM SPILLWAY FACE WITHIN THE LIMITS OF THE PHASE II COFFERDAM.
   k. REMOVE PHASE II COFFERDAM.
6. IF GATES AND SLUICEWAY CONTROLS WERE NOT INSTALLED DURING PHASE I WORK DUE TO AVAILABILITY OF MATERIALS, INSTALL A LOCAL COFFERDAM TO PREVENT FLOW THROUGH THE SLUICEWAY.
   a. IF NEEDED DIVERT BASEFLOW THROUGH THE NEWLY INSTALLED LOW-LEVEL OUTLET.
   b. INSTALL SLUICEWAY GATES AND CONTROLS.
   c. REMOVE PHASE III COFFERDAM.
7. REMOVE EROSION CONTROLS, WATER DIVERSION SYSTEMS, AND COFFERDAMS. DISPOSE OF UNSUITABLE MATERIALS OFF-SITE.
8. RESTORE THE SITE AND DEMOBILIZE FROM THE SITE.

PERMIT NOTES:

THE FOLLOWING CONDITIONS ARE COPIED FROM THE RIDEM OFFICE OF COMPLIANCE AND INSPECTION – DAM SAFETY PROGRAM APPROVED PERMIT FOR REPAIR OF THE DAM. THESE CONDITIONS ARE HERE FOR AS A MATTER OF CONVENIENCE. THE FULL APPROVAL CAN BE VIEWED IN APPENDIX A OF THE CONTRACT DOCUMENTS.

1. THIS APPROVAL IS SPECIFICALLY LIMITED TO THE REPAIR WORK DETAILED IN THE SUBMITTAL TO OCI AS DESCRIBED ABOVE. MAJOR CHANGES OR REVISIONS TO THE WORK ARE NOT AUTHORIZED WITHOUT PRIOR APPROVAL;
2. THE WATER LEVEL IN WYOMING UPPER RESERVOIR MAY BE LOWERED TO ELEVATION 91.0 IN ORDER TO COMPLETE THE WORK (SPILLWAY ELEVATION 96.1);
3. LOWERING OF THE POND SHALL COMMENCE NO EARLIER THAN JULY 1 AND THE LOWERED ELEVATION SHALL BE ACHIEVED NO LATER THAN OCTOBER 1;
4. LOWERING OF THE POND SHALL NOT EXCEED THREE (3) VERTICAL INCHES PER DAY;
5. IF, WHILE THE POND IS AT A LOWERED ELEVATION, INFLOW SHALL CAUSE THE POND TO RISE, THE POND SHALL BE LOWERED AS QUICKLY AS IS SAFELY POSSIBLE BACK TO THE ELEVATION THAT WAS PRESENT PRIOR TO THE INFLOW OF WATER;
6. UPON COMPLETION OF THE WORK, THE POND SHALL BE ALLOWED TO RETURN TO THE SEASONALLY APPROPRIATE ELEVATION. DURING REFILLING OF THE POND, APPROXIMATELY 90% OF THE SEASONALLY APPROPRIATE BASE FLOW SHALL BE ALLOWED TO PASS THROUGH THE DAM AND BE MAINTAINED IN THE CHANNEL DOWNSTREAM OF THE DAM (I.E. ONLY 10% OF THE FLOW MAY BE RETAINED IN THE POND);
7. SEASONALLY APPROPRIATE BASE FLOWS SHALL BE MAINTAINED IN THE RIVER DOWNSTREAM OF THE DAM FOR THE DURATION OF THE PROJECT;
8. ANY MATERIAL UTILIZED IN THIS PROJECT MUST BE CLEAN AND FREE OF MATTER THAT COULD POLLUTE ANY WATER OF THE STATE INCLUDING FRESHWATER WETLANDS;
9. BEST MANAGEMENT PRACTICES FOR EROSION AND SEDIMENT CONTROLS SHALL BE USED AS NEEDED. TEMPORARY CONTROLS TO PREVENT SOIL FROM ERODING OFF THE SITE INTO THE ADJACENT POND OR STREAM SHALL BE INSTALLED PRIOR TO COMMENCING THE MAINTENANCE. ALL CONTROLS MUST BE MAINTAINED IN AN EFFECTIVE OPERATING CONDITION DURING THE WORK, AND ALL EXPOSED SOIL AND OTHER FILLS MUST BE PERMANENTLY STABILIZED AT THE EARLIEST POSSIBLE DATE FOLLOWING COMPLETION OF WORK. FOLLOWING STABILIZATION OF THE WORK AREA, ALL TEMPORARY SOIL EROSION CONTROLS SUCH AS SILT FENCING MUST BE REMOVED (FOR GUIDANCE SEE RHODE ISLAND SOIL EROSION AND SEDIMENT CONTROL HANDBOOK AND RHODE ISLAND STORMWATER DESIGN AND INSTALLATION STANDARDS MANUAL.);
10. ALL REPAIR WORK SHALL BE PROTECTIVE OF WATER QUALITY AND FRESHWATER WETLAND FUNCTIONS AND VALUES SO AS TO PREVENT POLLUTANTS, SEDIMENT, DIRECT DISCHARGE OF STORMWATER RUNOFF, OR ANY MATERIAL FOREIGN TO WATERS OF TEH STATE INCLUDING FRESHWATER WETLANDS, OR HAZARDOUS TO LIFE, FROM ENTERING ANY WATERS OF THE STATE INCLUDING FRESHWATER WETLANDS;
11. DURING THE REPAIR WORK, THE ENGINEER RESPONSIBLE FOR THE DESIGN SHALL MAINTAIN SUFFICIENT OVERSIGHT OF THE PROJECT TO BE ABLE TO CERTIFY, UPON COMPLETION OF THE WORK, THAT IT WAS COMPLETED IN CONFORMANCE WITH THE DOCUMENTS APPROVED HEREIN; AND
12. UPON COMPLETION OF THE REPAIR WORK AND ONLY IF THERE WAS ANY SIGNIFICANT CHANGE FROM THE APPROVED PLANS, A SET OF AS-BUILT PLANS SHALL BE PROVIDED TO OCI FOR OUR FILE.

LEGEND

EXISTING		PROPOSED
	STATE HIGHWAY LINE	
	EASEMENT BOUNDARY	
52	1' CONTOUR	52
55	5' CONTOUR	55
	EDGE OF PAVEMENT	
	CURBING	
	EDGE OF GRAVEL	
	EDGE OF WATER	
	STONE MASONRY WALL	
	FENCE	
	GUARD RAIL	
	TREELINE	
	UTILITY POLE	
OHW	OVERHEAD WIRE	
	STRAW BALES	
	SILT FENCE	
	TURBIDITY BARRIER	
	LIMIT OF DISTURBANCE	
	SOIL BORING	US# (07-31-18)
	SOIL BORING	DS# (07-31-18)
	SOIL BORING	B19-# (05-30-19 AND 05-31-19)
	WETLAND FLAGS	
	50' WETLAND OFFSET	
	200' WETLAND OFFSET	
	PROPERTY LINE	

ABBREVIATIONS

- CD — COFFER DAM
- LOD — LIMIT OF DISTURBANCE
- R&D — REMOVE & DISPOSE
- SILT — SILT FENCE
- STRAW — STRAW BALES
- TB — TURBIDITY BARRIER
- D/S = DOWNSTREAM
- U/S = UP STREAM
- EMB = EMBANKMENT
- ENG = ENGINEERED
- CP = CONTROL POINT
- BO = BLOW OFF

ISSUED FOR CONSTRUCTION

PARE
PARE CORPORATION
ENGINEERS - SCIENTISTS - PLANNERS
10 LINCOLN ROAD, SUITE 210
FOXBORO, MA 02035
508-543-1755

SCALE ADJUSTMENT GUIDE
0" 1"
BAR IS ONE INCH ON ORIGINAL DRAWING.

WYOMING UPPER RESERVOIR DAM REPAIRS
RI DAM No. 216
HOPKINTON/RICHMOND, RHODE ISLAND
OWNER: RI DEPARTMENT OF ENVIRONMENTAL MANAGEMENT

REVISIONS:

1	11-02-20	NOTE EDITS

PROJECT NO.:	16226.00
DATE:	MAY 2020
SCALE:	AS NOTED
DESIGNED BY:	DRC/BD
CHECKED BY:	DRC
DRAWN BY:	JHG/LMC
APPROVED BY:	JMB

GENERAL NOTES AND LEGEND

FIGURE NO.: 1.0

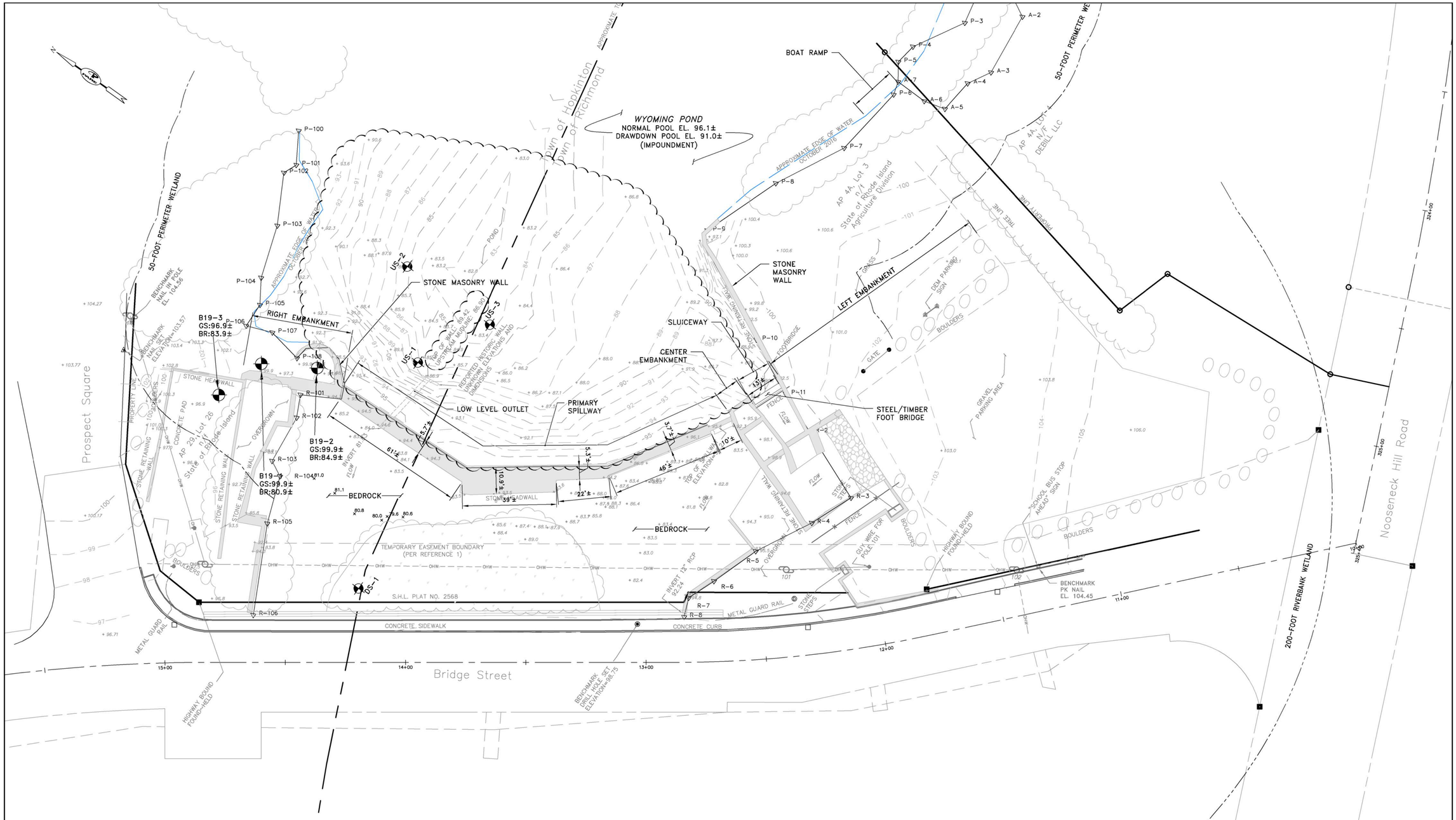

EXISTING CONDITIONS PLAN

SCALE: 1"=20'

NOTES

1. BELOW WATER SURFACE CONTOURS INDICATE THE ELEVATION OF THE TOP OF SEDIMENT.
2. DEPTHS TO HARD BOTTOM WERE OBSERVED TO VARY FROM 0 TO 3.25 FEET BELOW THE SEDIMENT SURFACE. THICKER DEPOSITS MAY OCCUR.
3. UPSTREAM IMPOUNDMENT SURFACE CONTOURS HAVE BEEN REVISED THROUGHOUT THIS NOVEMBER 2020 REISSUED PLAN SET; HOWEVER THE LIMITS OF THE REVISED CONTOURS HAVE ONLY BEEN CLOUDED ON THIS PAGE FOR CLARITY.

ISSUED FOR CONSTRUCTION

PARE
PARE CORPORATION
ENGINEERS - SCIENTISTS - PLANNERS
10 LINCOLN ROAD, SUITE 210
FOXBORO, MA 02035
508-543-1755

SCALE ADJUSTMENT GUIDE
0" 0" 1" 1"
BAR IS ONE INCH ON ORIGINAL DRAWING.

WYOMING UPPER RESERVOIR DAM REPAIRS

RI DAM No. 216
HOPKINTON/RICHMOND, RHODE ISLAND
OWNER: RI DEPARTMENT OF ENVIRONMENTAL MANAGEMENT

REVISIONS:

1	11-02-20	REVISED UPSTREAM BATHYMETRY & NOTES

PROJECT NO.:	16226.00
DATE:	MAY 2020
SCALE:	1"=20'
DESIGNED BY:	DRC/BD
CHECKED BY:	DRC
DRAWN BY:	JHG/LMC
APPROVED BY:	JMB

EXISTING CONDITIONS

FIGURE NO.: 2.0

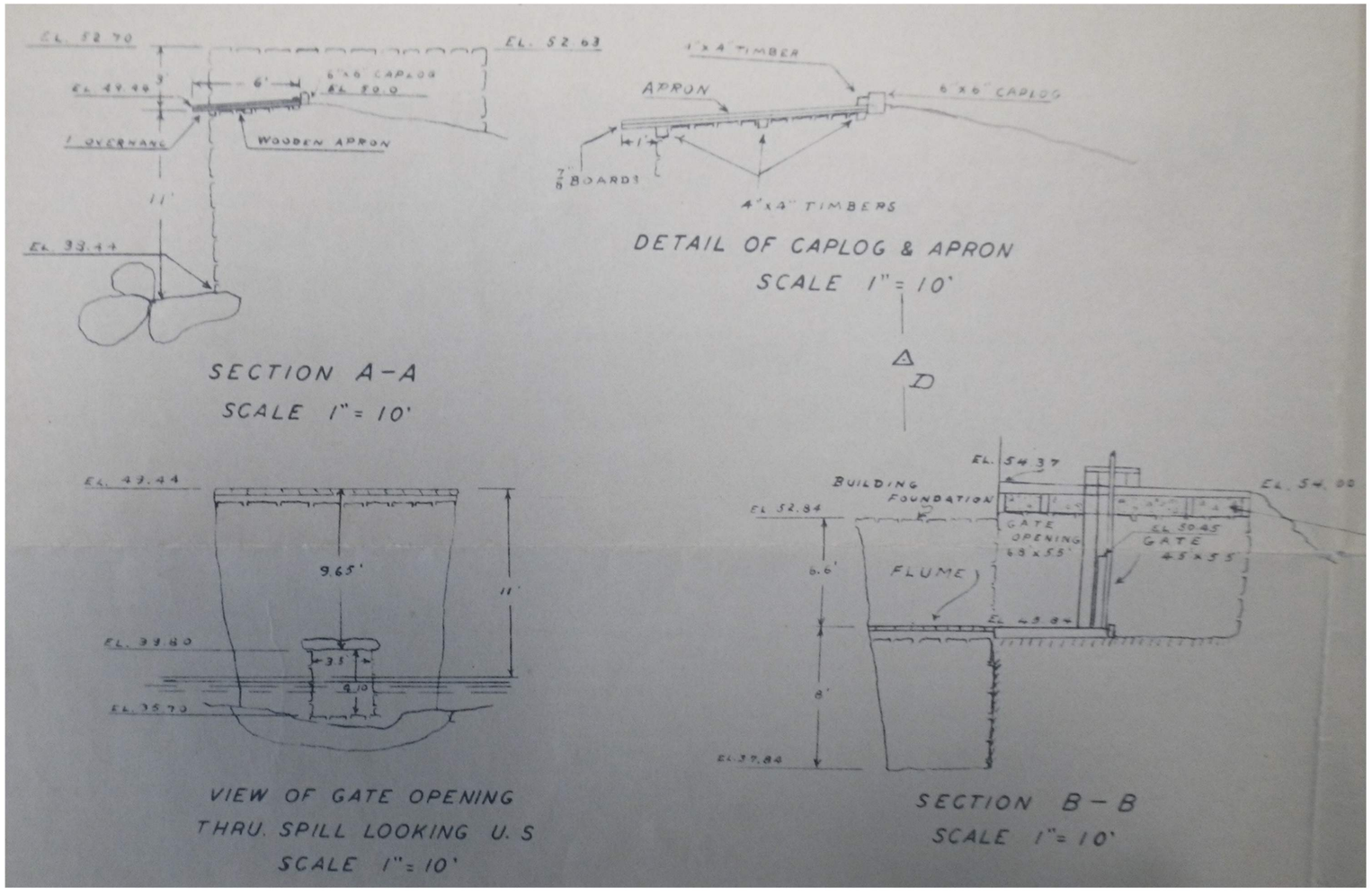

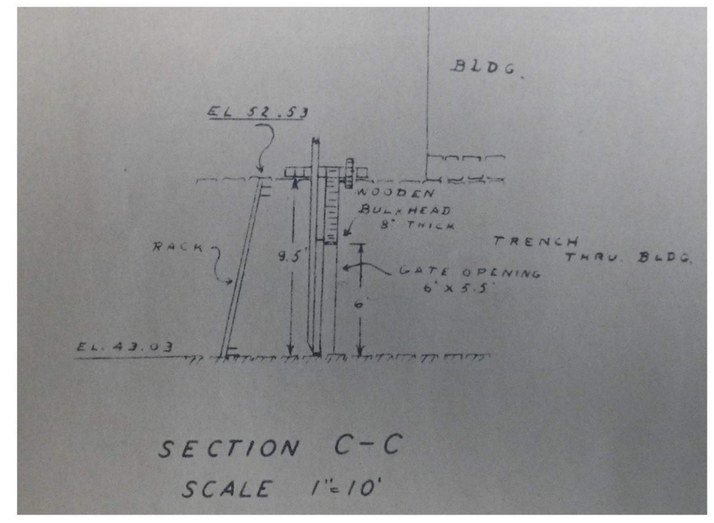

1940 DRAWINGS

NOT TO SCALE

NOTE:

DRAWINGS TAKEN FROM PLAN TITLED "WYOMING UPPER – P-216" BY THE RHODE ISLAND DEPARTMENT OF PUBLIC WORKS – DIVISION OF HARBORS AND RIVERS BY THE WORKS PROJECT ADMINISTRATION, DATED 10-7-40. COPIES OF THE FULL DRAWING ARE ON FILE AT THE RIDEM OFFICE OF PLANNING AND DEVELOPMENT.

ISSUED FOR CONSTRUCTION

PARE
PARE CORPORATION
ENGINEERS - SCIENTISTS - PLANNERS
10 LINCOLN ROAD, SUITE 210
FOXBORO, MA 02035
508-543-1755

SCALE ADJUSTMENT GUIDE
0" 1"
BAR IS ONE INCH ON ORIGINAL DRAWING.

WYOMING UPPER RESERVOIR DAM REPAIRS
RI DAM No. 216
HOPKINTON/RICHMOND, RHODE ISLAND
OWNER: RI DEPARTMENT OF ENVIRONMENTAL MANAGEMENT

REVISIONS:

PROJECT NO.:	16226.00
DATE:	MAY 2020
SCALE:	AS NOTED
DESIGNED BY:	DRC/BD
CHECKED BY:	DRC
DRAWN BY:	JHG/LMC
APPROVED BY:	JMB

HISTORIC DRAWINGS 1

FIGURE NO.: 2.1

P:\JOBS\16 Jobs\16226.00 RIDEM Wyoming Upper Res Design Repairs-RI\Drawings\2.1 – 2.2 – Historic Drawings.dwg

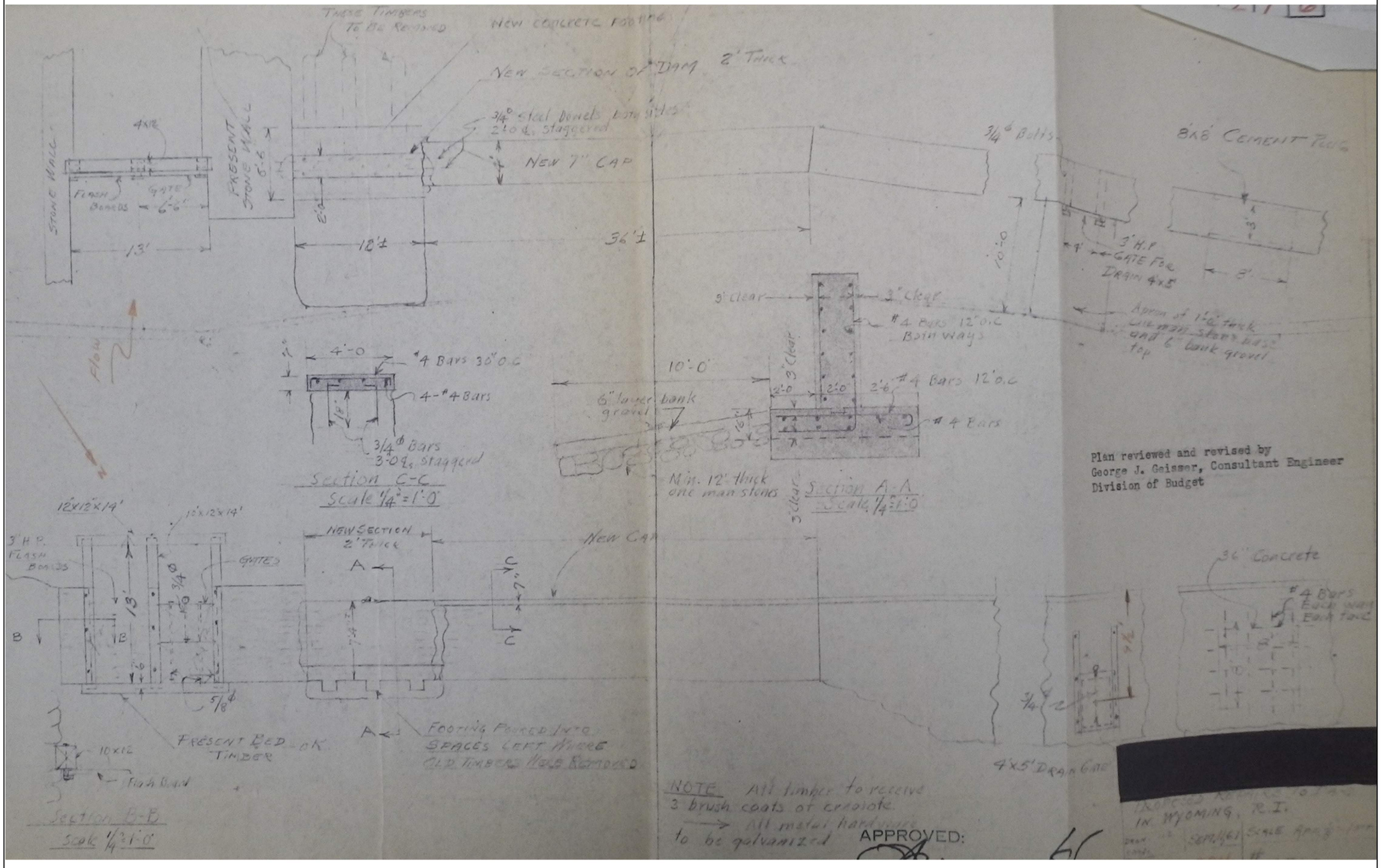

NOTE:

DRAWINGS TAKEN FROM PLAN TITLED "PROPOSED REPAIRS TO THE DAM IN WYOMING, R.I." BY THE RHODE ISLAND DEPARTMENT OF PUBLIC WORKS – DIVISION OF HARBORS AND RIVERS BY THE WORKS PROJECT ADMINISTRATION, DATED SEPTEMBER 11, 1961. COPIES OF THE FULL DRAWING ARE ON FILE AT THE RIDEM OFFICE OF PLANNING AND DEVELOPMENT.

1961 REPAIRS

NOT TO SCALE

ISSUED FOR CONSTRUCTION

PARE
PARE CORPORATION
ENGINEERS - SCIENTISTS - PLANNERS
10 LINCOLN ROAD, SUITE 210
FOXBORO, MA 02035
508-543-1755

SCALE ADJUSTMENT GUIDE
0" 1"
BAR IS ONE INCH ON ORIGINAL DRAWING.

WYOMING UPPER RESERVOIR DAM REPAIRS

RI DAM No. 216
HOPKINTON/RICHMOND, RHODE ISLAND
OWNER: RI DEPARTMENT OF ENVIRONMENTAL MANAGEMENT

REVISIONS:

PROJECT NO.:	16226.00
DATE:	MAY 2020
SCALE:	AS NOTED
DESIGNED BY:	DRC/BD
CHECKED BY:	DRC
DRAWN BY:	JHG/LMC
APPROVED BY:	JMB

HISTORIC DRAWINGS 2

FIGURE NO.: 2.2

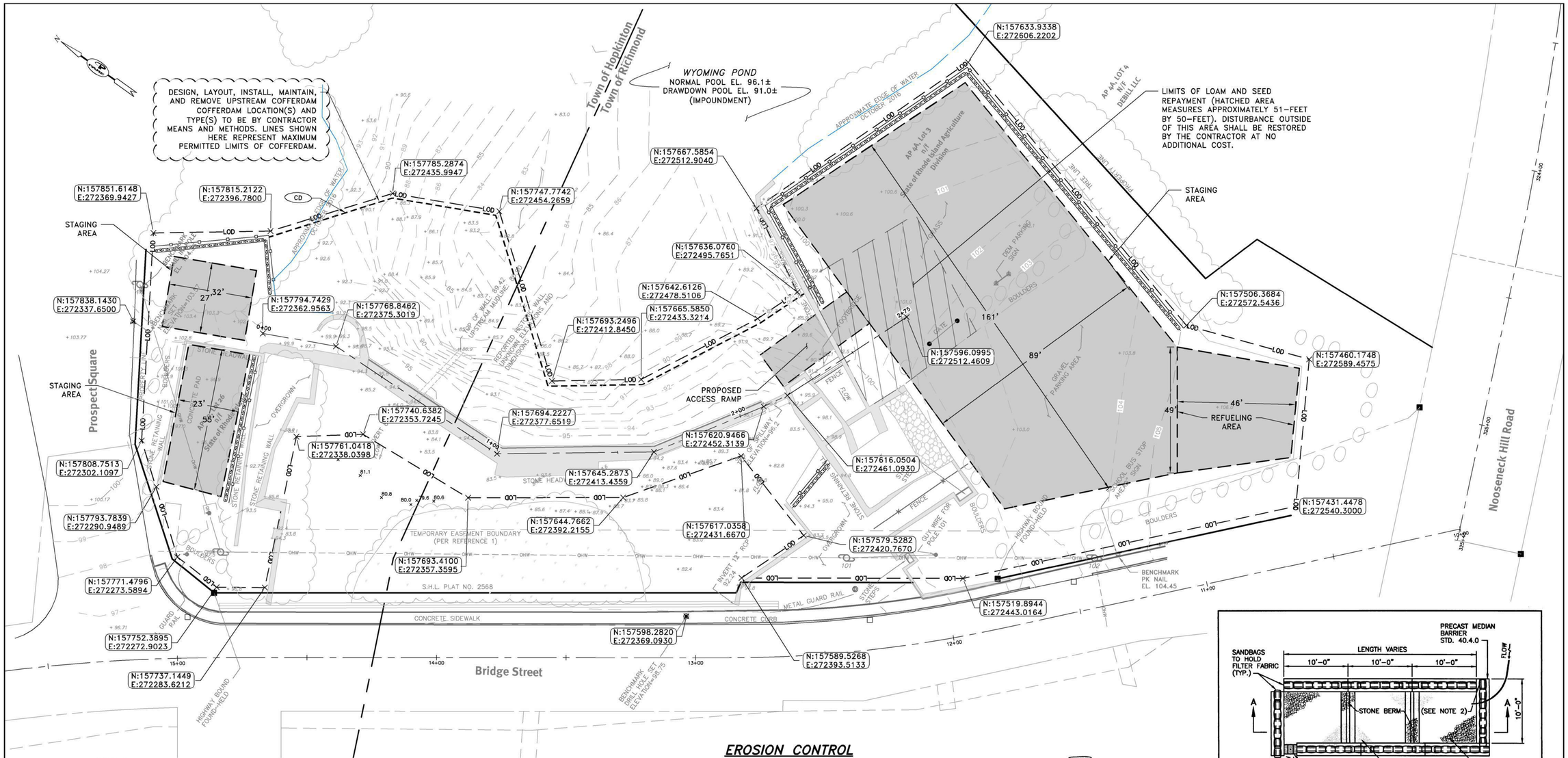

EROSION CONTROL AND STAGING PLAN

SCALE: 1"=20'

NOTES

1. IT IS NOT NECESSARY TO HAVE THE TURBIDITY BARRIER IN PLACE AT ALL TIMES; HOWEVER THE TURBIDITY BARRIER SHALL BE MOVED TO CONTAIN SILT WHEN INSTALLING AND REMOVING COFFERDAM OR COMPLETING SILT PRODUCING WORK.
2. PROPOSED ACCESS RAMP SHALL BE INSTALLED BY THE CONTRACTOR SUCH THAT IT CAN BE REMOVED IN ITS ENTIRETY. DAMAGE TO WALL SHALL BE REPAIRED AT NO ADDITIONAL COST.
3. CONTRACTOR SHALL DESIGN AND INSTALL COFFERDAM(S) AND PHASING TO FACILITATE THE CONTRACTORS MEANS AND METHODS, MAINTAIN A BASE FLOW, AND PROVIDE THE REQUIRED STORM DISCHARGE.

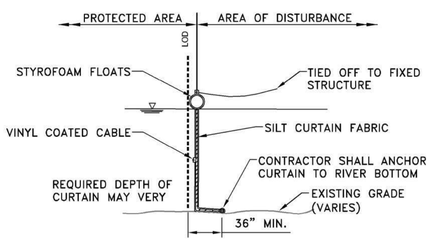

TYPICAL TURBIDITY BARRIER

NOT TO SCALE

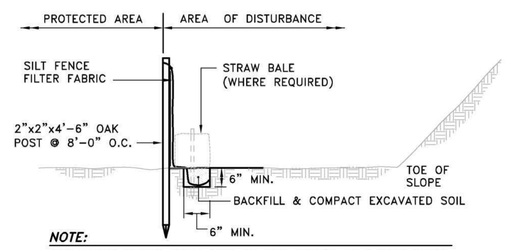

NOTE:
SILT FENCE FABRIC SHALL NOT BE SLIT. STRAW BALE POST SHALL BE DRIVEN THROUGH SILT FENCE FABRIC.

SILT FENCE DETAIL

NOT TO SCALE

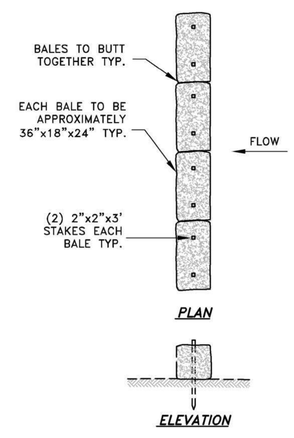

STRAW BALE DETAIL

NOT TO SCALE

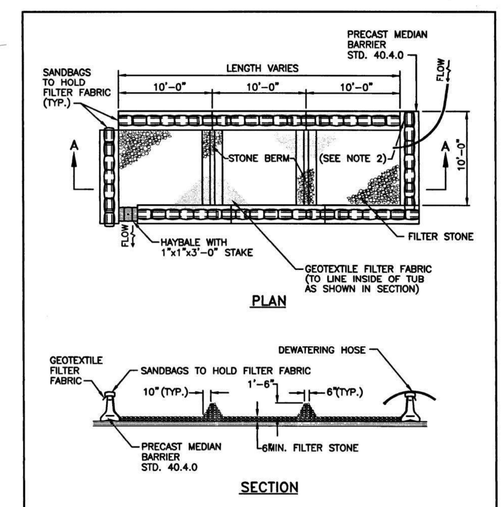

NOTS:
1. SHALL BE IN ACCORDANCE WITH SECTION 208 OF THE R.I. STANDARD SPECIFICATIONS.
2. PROVIDE ADDITIONAL SAND BAGS AS REQUIRED TO FILL SPACE BETWEEN ADJACENT BARRIERS.

RHODE ISLAND DEPARTMENT OF TRANSPORTATION

REVISIONS		
NO.	BY	DATE

DEWATERING BASIN

CHIEF ENGINEER TRANSPORTATION — CHIEF DESIGN ENGINEER TRANSPORTATION — JUNE 15, 1998 ISSUE DATE

R.I. STANDARD 9.7.0

ISSUED FOR CONSTRUCTION

PARE
PARE CORPORATION
ENGINEERS - SCIENTISTS - PLANNERS
10 LINCOLN ROAD, SUITE 210
FOXBORO, MA 02035
508-543-1755

SCALE ADJUSTMENT GUIDE
0" 1"
BAR IS ONE INCH ON ORIGINAL DRAWING.

WYOMING UPPER RESERVOIR DAM REPAIRS

RI DAM No. 216

HOPKINTON/RICHMOND, RHODE ISLAND

OWNER: RI DEPARTMENT OF ENVIRONMENTAL MANAGEMENT

REVISIONS:		
1	11-02-20	REVISED UPSTREAM BATHYMETRY & NOTES

PROJECT NO.:	16226.00
DATE:	MAY 2020
SCALE:	AS NOTED
DESIGNED BY:	DRC/BD
CHECKED BY:	DRC
DRAWN BY:	JHG/LMC
APPROVED BY:	JMB

EROSION CONTROL AND STAGING PLAN

FIGURE NO.: 2.3

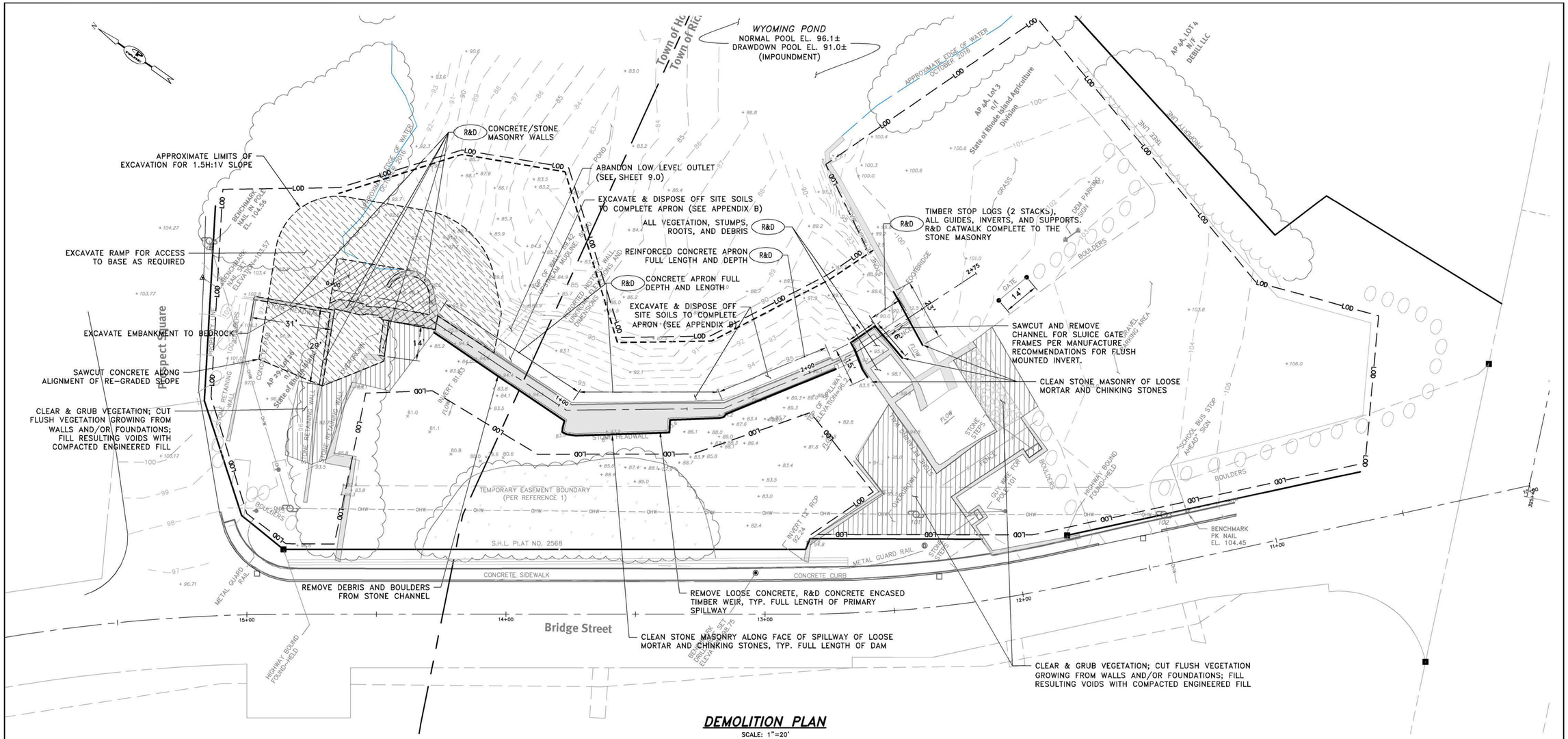

DEMOLITION PLAN

SCALE: 1"=20'

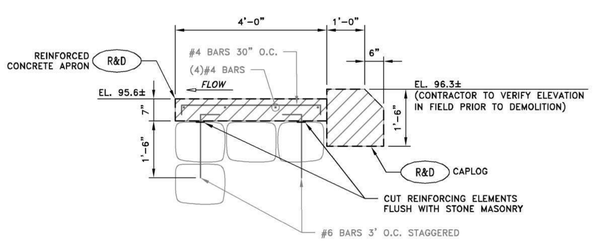

R&D REINFORCED CONCRETE APRON DETAIL

NOT TO SCALE

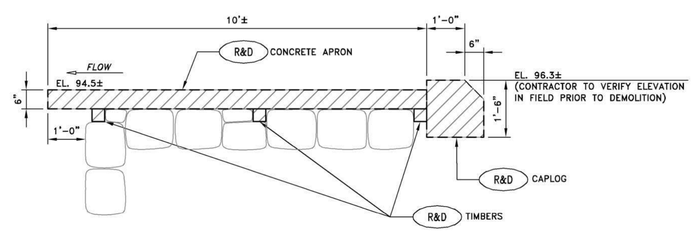

R&D CONCRETE APRON DETAIL

NOT TO SCALE

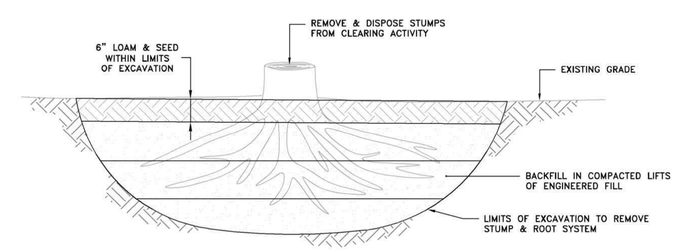

STUMP/ROOT VOID BACKFILL

NOT TO SCALE

ISSUED FOR CONSTRUCTION

PARE
PARE CORPORATION
ENGINEERS - SCIENTISTS - PLANNERS
10 LINCOLN ROAD, SUITE 210
FOXBORO, MA 02035
508-543-1755

SCALE ADJUSTMENT GUIDE
0" 1"
BAR IS ONE INCH ON ORIGINAL DRAWING.

WYOMING UPPER RESERVOIR DAM REPAIRS

RI DAM No. 216

HOPKINTON/RICHMOND, RHODE ISLAND

OWNER: RI DEPARTMENT OF ENVIRONMENTAL MANAGEMENT

REVISIONS:

1	11-02-20	REVISED UPSTREAM BATHYMETRY

PROJECT NO.:	16226.00
DATE:	MAY 2020
SCALE:	AS NOTED
DESIGNED BY:	DRC/BD
CHECKED BY:	DRC
DRAWN BY:	JHG/LMC
APPROVED BY:	JMB

DEMOLITION PLAN

FIGURE NO.: 3.0

O:\Jobs\16 Jobs\16226.00 RIDEM Wyoming Upper Res Design Repairs-RI\Drawings\3.0 - Demolition Plan.dwg

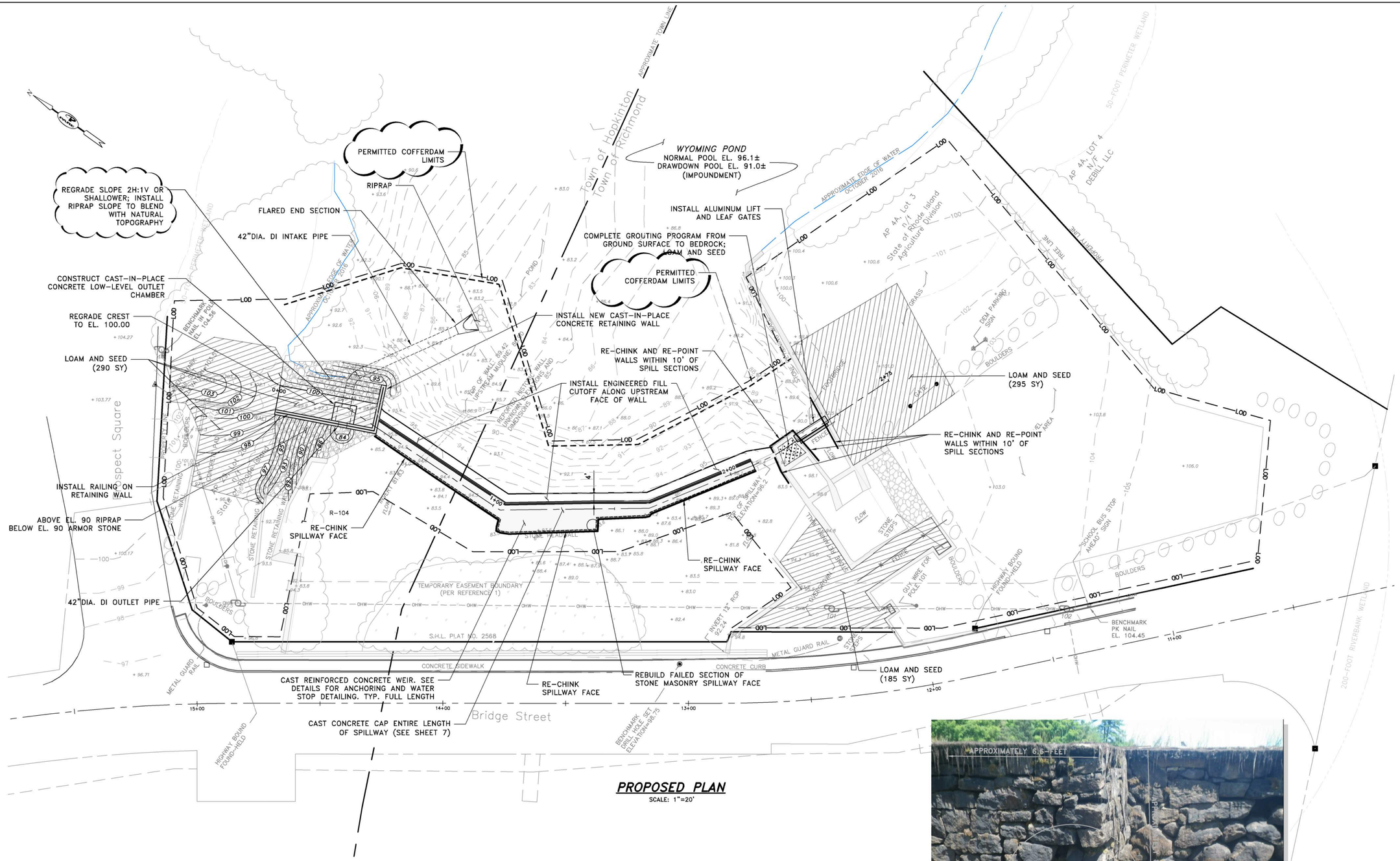

PROPOSED PLAN

SCALE: 1"=20'

REBUILD FAILED SECTION OF STONE MASONRY SPILLWAY FACE, APPROXIMATELY 4.5-FEET TALL, 4-FEET WIDE, AND 18-INCHES DEEP

FAILED SPILLWAY SECTION TO BE REBUILT

SCALE: NOT TO SCALE

ISSUED FOR CONSTRUCTION

PARE
PARE CORPORATION
ENGINEERS - SCIENTISTS - PLANNERS
10 LINCOLN ROAD, SUITE 210
FOXBORO, MA 02035
508-543-1755

SCALE ADJUSTMENT GUIDE
0" 1"
BAR IS ONE INCH ON ORIGINAL DRAWING.

WYOMING UPPER RESERVOIR DAM REPAIRS

RI DAM No. 216
HOPKINTON/RICHMOND, RHODE ISLAND
OWNER: RI DEPARTMENT OF ENVIRONMENTAL MANAGEMENT

REVISIONS:

1	11-02-20	REVISED UPSTREAM BATHYMETRY & NOTES

PROJECT NO.:	16226.00
DATE:	MAY 2020
SCALE:	AS NOTED
DESIGNED BY:	DRC/BD
CHECKED BY:	DRC
DRAWN BY:	JHG/LMC
APPROVED BY:	JMB

PROPOSED PLAN

FIGURE NO.: 4.0

Y:\JOBS\16 Jobs\16226.00 RIDEM Wyoming Upper Res Design Repairs-RI\Drawings\4.0 - Proposed Plan.dwg

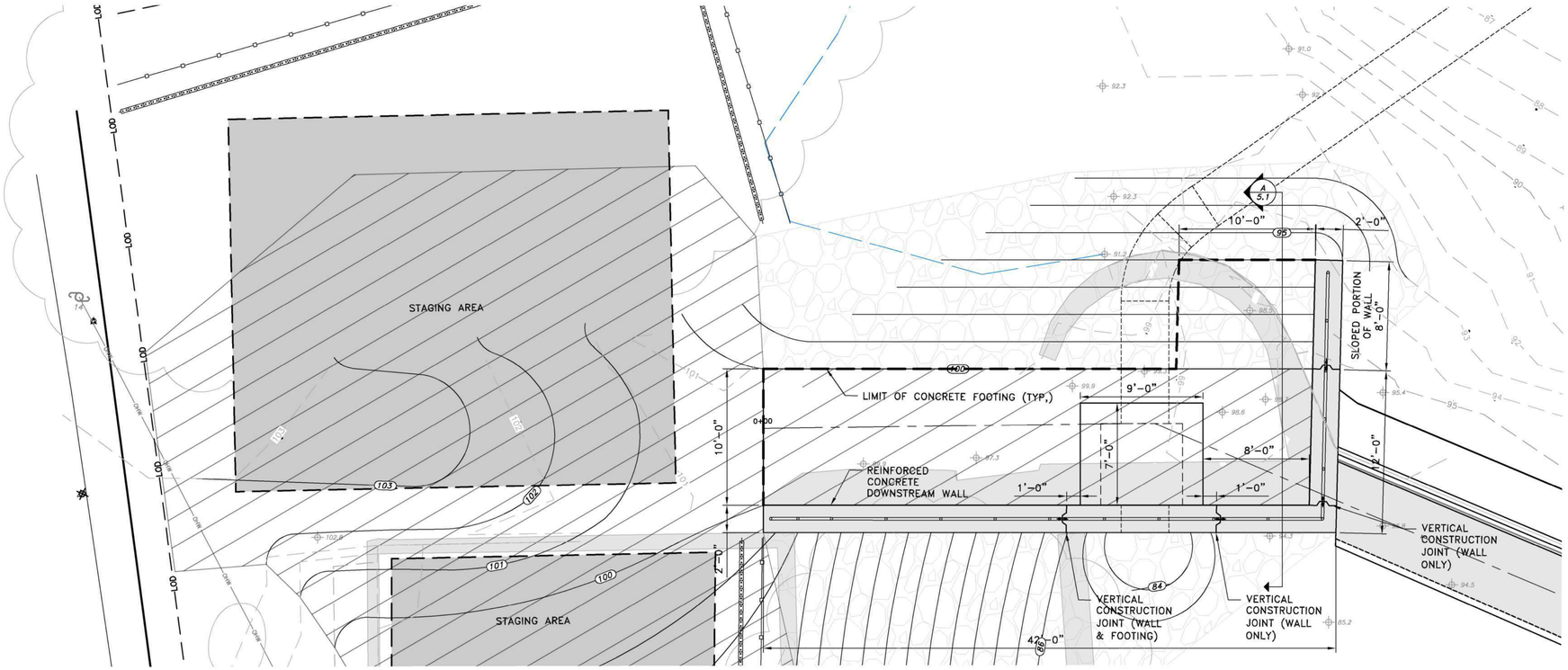

RIGHT EMBANKMENT DOWNSTREAM WALL PLAN

SCALE: 1"=5'

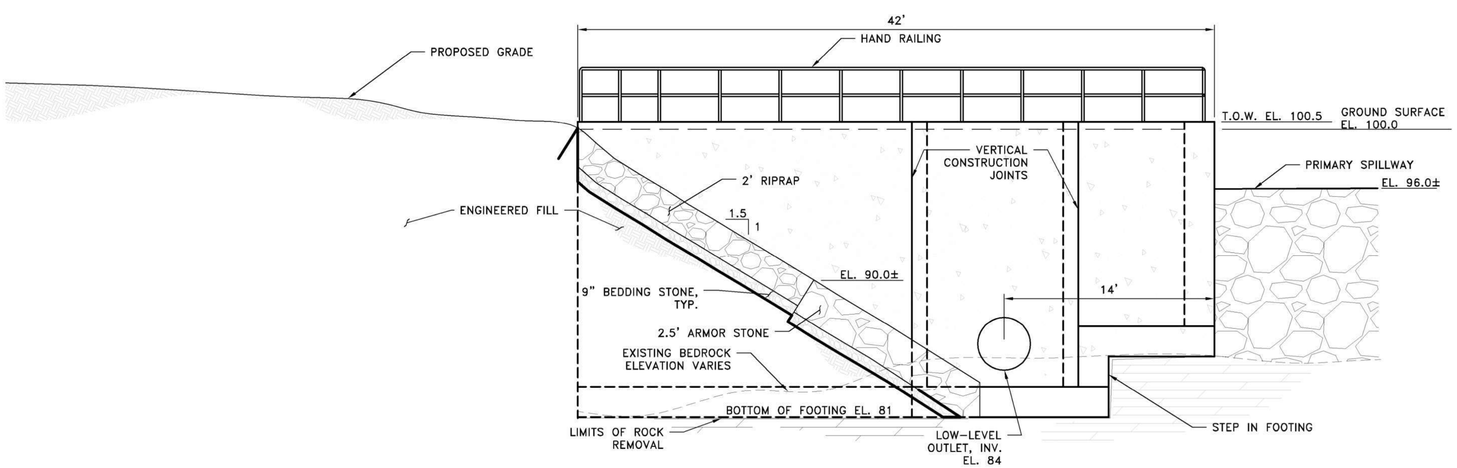

RIGHT EMBANKMENT DOWNSTREAM PROFILE

SCALE: 1"=5'

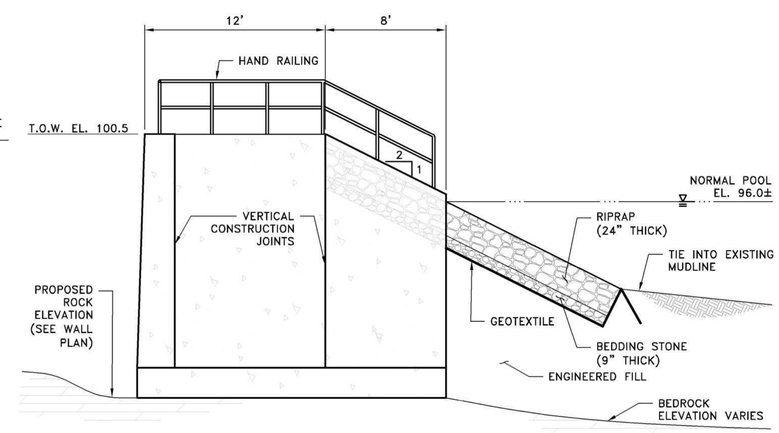

RETURN WALL PROFILE

SCALE: 1"=5'

ISSUED FOR CONSTRUCTION

PARE
PARE CORPORATION
ENGINEERS - SCIENTISTS - PLANNERS
10 LINCOLN ROAD, SUITE 210
FOXBORO, MA 02035
508-543-1755

SCALE ADJUSTMENT GUIDE
0" 1"
BAR IS ONE INCH ON ORIGINAL DRAWING.

WYOMING UPPER RESERVOIR DAM REPAIRS

RI DAM No. 216
HOPKINTON/RICHMOND, RHODE ISLAND
OWNER: RI DEPARTMENT OF ENVIRONMENTAL MANAGEMENT

REVISIONS:

1	11-02-20	REVISED UPSTREAM BATHYMETRY

PROJECT NO.:	16226.00
DATE:	MAY 2020
SCALE:	AS NOTED
DESIGNED BY:	DRC/BD
CHECKED BY:	DRC
DRAWN BY:	JHG/LMC
APPROVED BY:	JMB

RIGHT EMBANKMENT PLAN

FIGURE NO.: 5.0

R:\JOBS\16 Jobs\16226.00 RIDEM Wyoming Upper Res Design Repairs-RI\Drawings\5.0 RIGHT EMBANKMENT PLAN.dwg

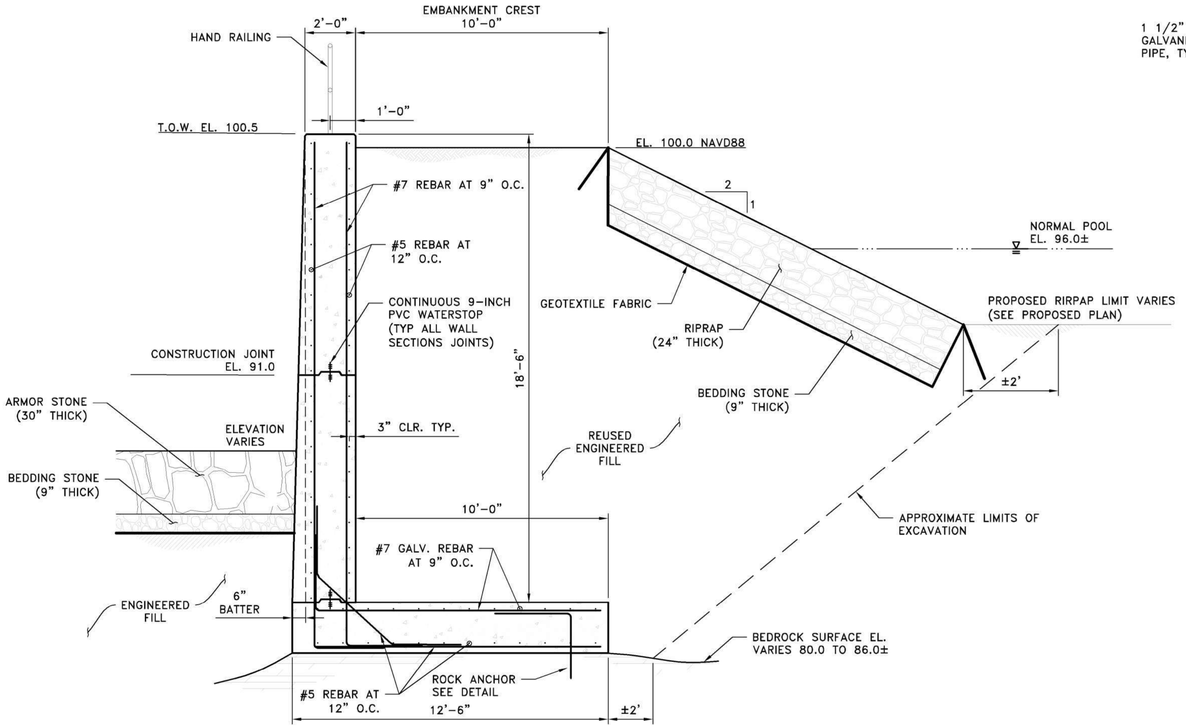

SECTION A–A: RIGHT DOWNSTREAM WALL
(A / 4.1)
SCALE: 1"=3'"

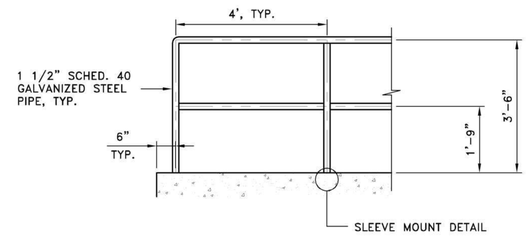

DOWNSTREAM WALL RAILING
NOT TO SCALE

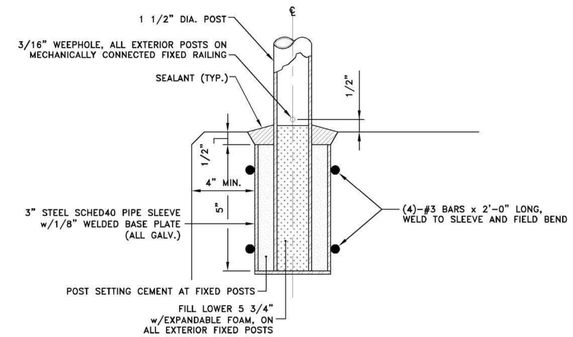

SLEEVE MOUNT DETAIL
NOT TO SCALE

SLEEVE MOUNT NOTES

1. SLEEVE DETAIL AS SHOWN IS FOR CAST–IN–PLACE SLEEVE MOUNTS.
2. SLEEVES MAY BE INSTALLED VIA CORED SLEEVES POST CONCRETE PLACEMENT PER THE SPECIFICATIONS.

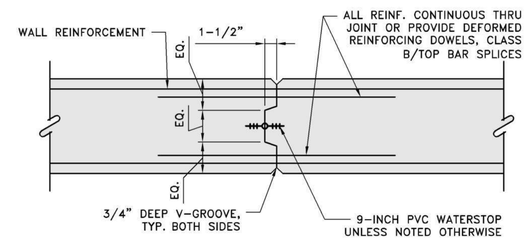

NOTE:

PROVIDE CONSTRUCTION JTS @ 60' O.C. (MAX.) ALTERNATE PLACING OF PANELS, ALLOWING 36 HOURS FROM THE END OF ONE POUR TO THE BEGINNING OF ADJACENT POURS.

TYPICAL WALL CONCRETE CONSTRUCTION JOINT DETAIL
SCALE: 1"=1'-0"

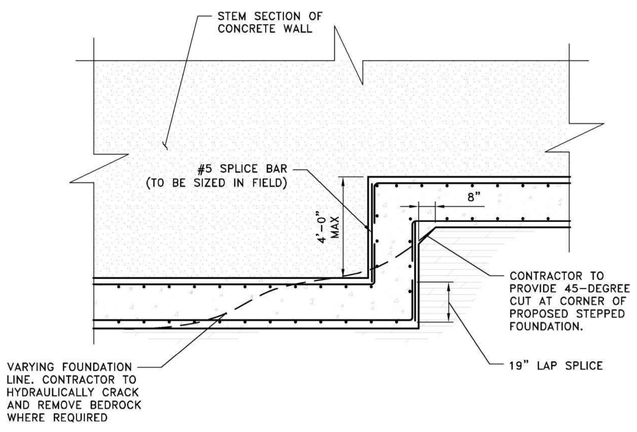

ROCK ANCHOR DETAIL
SCALE: 1"=1'

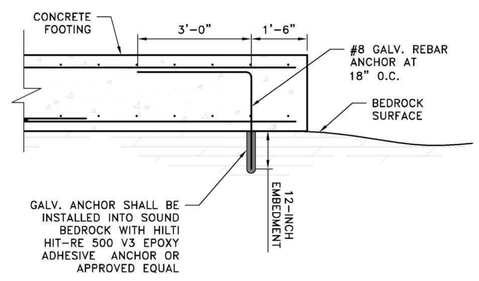

ROCK ANCHOR DETAIL
SCALE: 1"=2'

ISSUED FOR CONSTRUCTION

PARE
PARE CORPORATION
ENGINEERS - SCIENTISTS - PLANNERS
10 LINCOLN ROAD, SUITE 210
FOXBORO, MA 02035
508-543-1755

SCALE ADJUSTMENT GUIDE
0" 1"
BAR IS ONE INCH ON ORIGINAL DRAWING.

WYOMING UPPER RESERVOIR DAM REPAIRS

RI DAM No. 216
HOPKINTON/RICHMOND, RHODE ISLAND
OWNER: RI DEPARTMENT OF ENVIRONMENTAL MANAGEMENT

REVISIONS:

PROJECT NO.:	16226.00
DATE:	MAY 2020
SCALE:	AS NOTED
DESIGNED BY:	DRC/BD
CHECKED BY:	DRC
DRAWN BY:	JHG/LMC
APPROVED BY:	JMB

RIGHT EMBANKMENT DETAILS

FIGURE NO.: 5.1

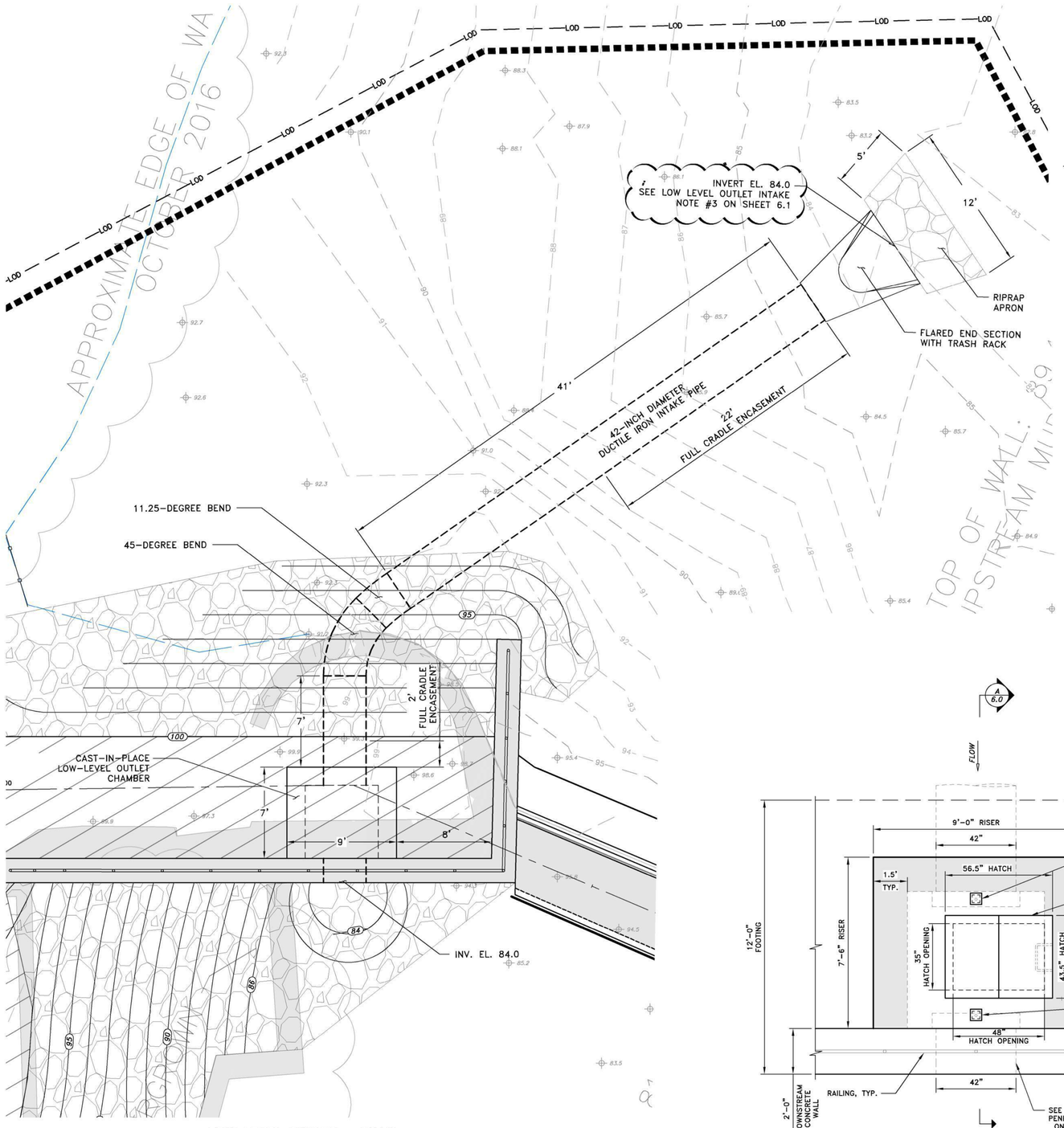

LOW LEVEL OUTLET – PLAN

SCALE: 1"=5'

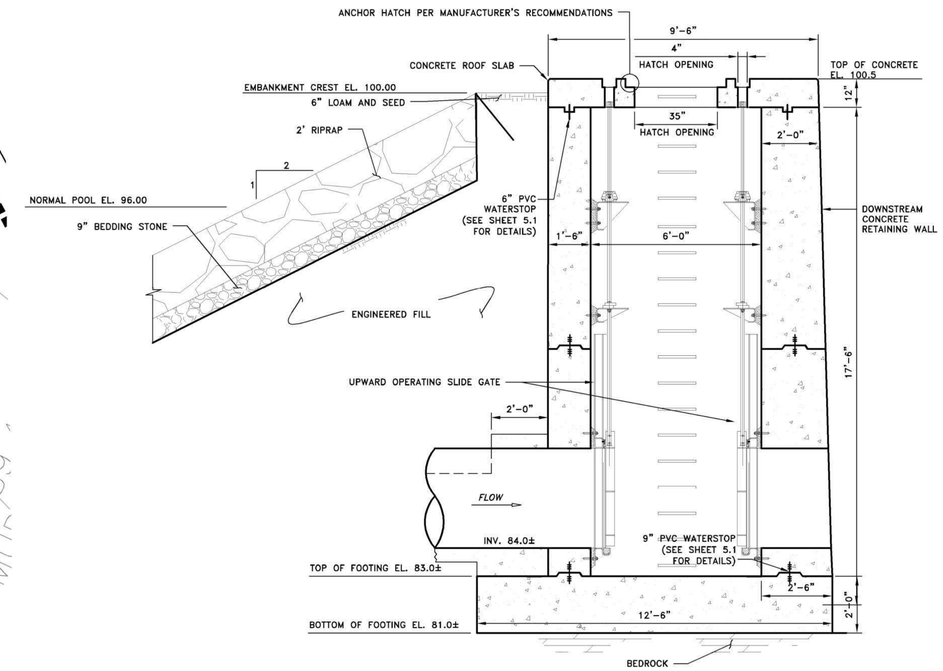

SECTION A – CONCRETE RISER

A 6.0

SCALE: 3/8"=1'-0"

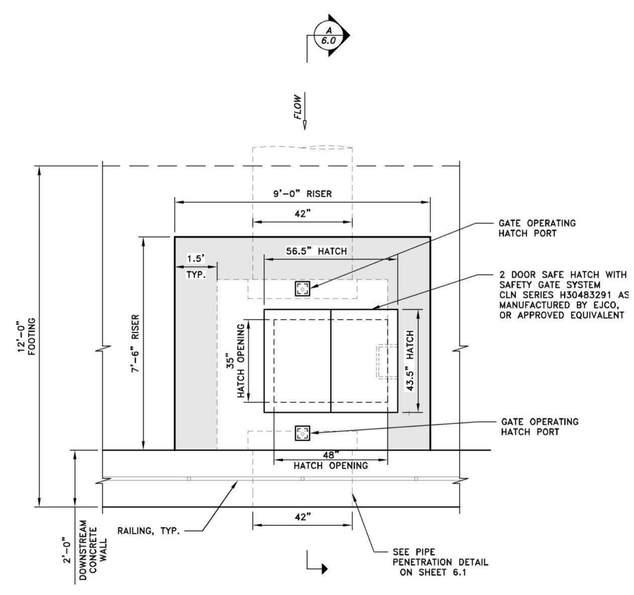

LOW-LEVEL OUTLET CHAMBER – PLAN

SCALE: 3/8"=1'-0"

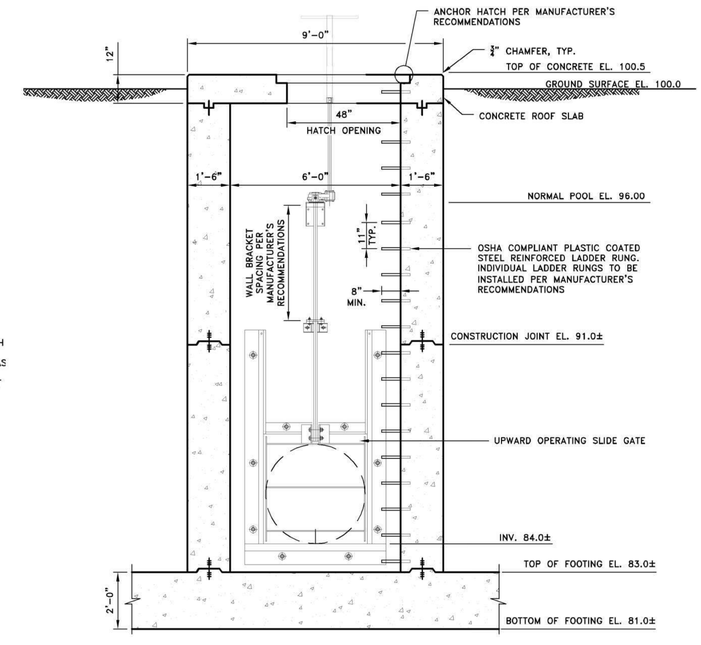

LOW-LEVEL OUTLET CHAMBER – DOWNSTREAM AND UPSTREAM ELEVATION (DOWNSTREAM ELEVATION SHOWN)

SCALE: 3/8"=1'-0"

ISSUED FOR CONSTRUCTION

PARE

PARE CORPORATION
ENGINEERS - SCIENTISTS - PLANNERS
10 LINCOLN ROAD, SUITE 210
FOXBORO, MA 02035
508-543-1755

SCALE ADJUSTMENT GUIDE

0" 1"

BAR IS ONE INCH ON ORIGINAL DRAWING.

WYOMING UPPER RESERVOIR DAM REPAIRS

RI DAM No. 216

HOPKINTON/RICHMOND, RHODE ISLAND

OWNER: RI DEPARTMENT OF ENVIRONMENTAL MANAGEMENT

REVISIONS:

1	11-02-20	REVISED UPSTREAM BATHYMETRY & NOTE

PROJECT NO.:	16226.00
DATE:	MAY 2020
SCALE:	AS NOTED
DESIGNED BY:	DRC/BD
CHECKED BY:	DRC
DRAWN BY:	JHG/LMC
APPROVED BY:	JMB

LOW LEVEL OUTLET PLAN

FIGURE NO.:

6.0

Y:\JOBS\16 Jobs\16226.00 RIDEM Wyoming Upper Res Design Repairs-RI\Drawings\6.0 LOW LEVEL OUTLET PLAN.dwg

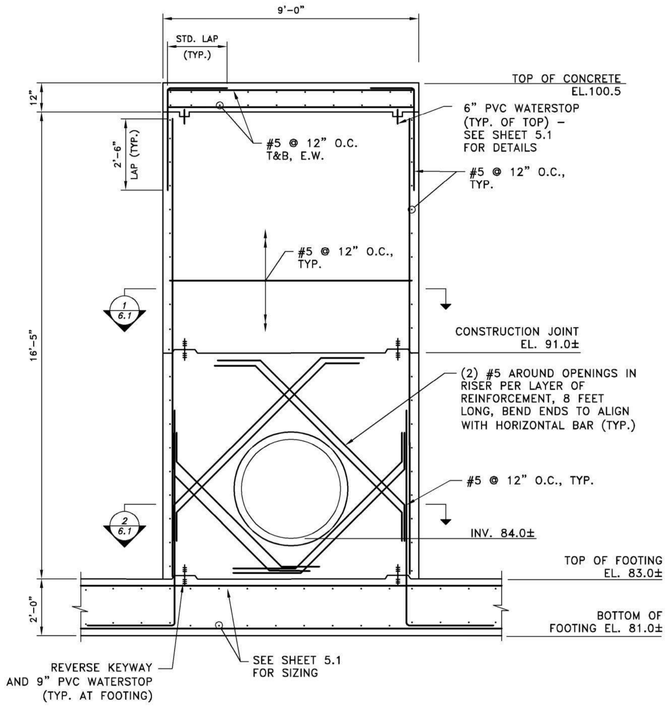

LOW LEVEL OUTLET CHAMBER – UPSTREAM ELEVATION
SCALE: 3/8"=1'-0"

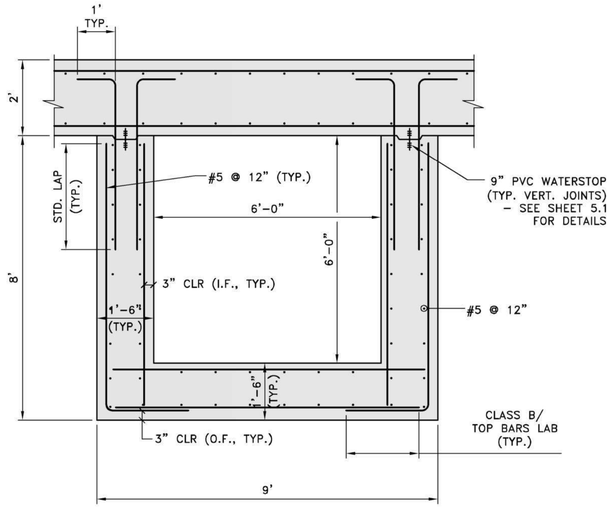

SECTION 1 (1/6.1)
SCALE: 1/2"=1'-0"

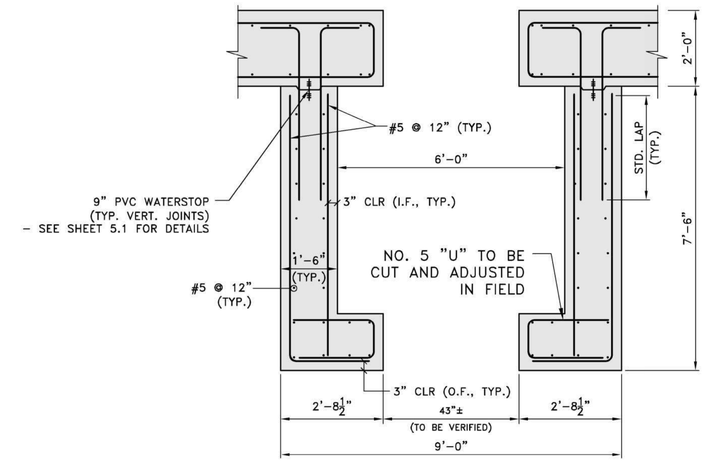

SECTION 2 (2/6.1)
SCALE: 1/2"=1'-0"

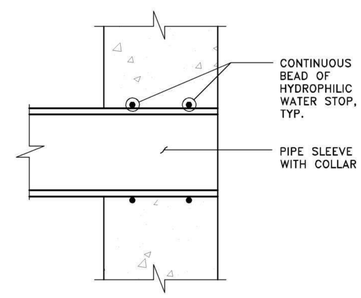

PIPE PENETRATION DETAIL
NOT TO SCALE

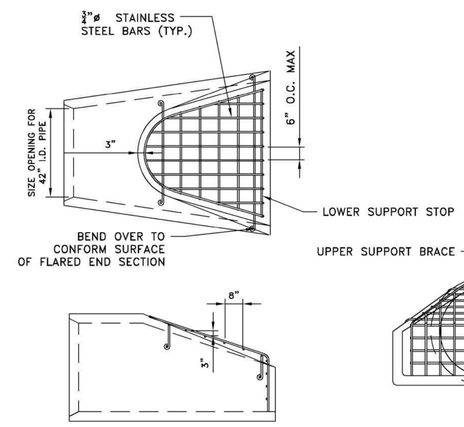

LOW LEVEL OUTLET PIPE INTAKE
NOT TO SCALE

PIPE SHALL BE FULLY ENCASED WITHIN 2' LOW-LEVEL OUTLET CHAMBER AND WHEN THE TOP OF THE PIPE WOULD EXTEND ABOVE THE GROUND SURFACE.

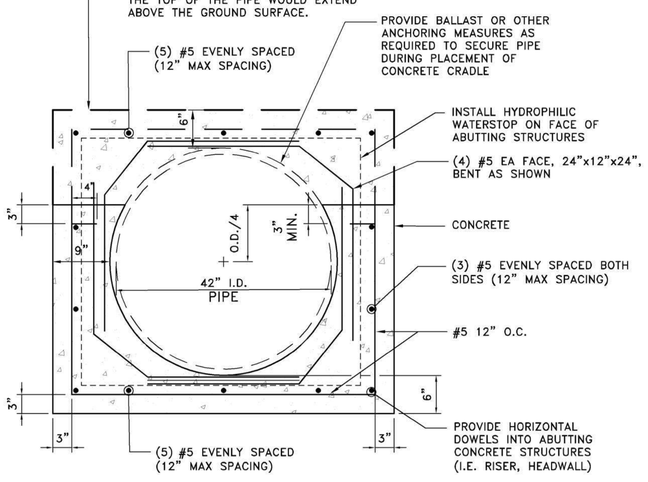

42" DIAMETER PIPE CONCRETE CRADLE DETAIL
NOT TO SCALE

NOTE:

1. 42 INCH PIPE TO BE CLASS 52 DUCTILE IRON.
2. BENDS IN DUCTILE IRON PIPE TO BE RESTRAINED WITH SERIES 1000 TUFGRIP JOINT RESTRAINTS MANUFACTURED BY TYLER UNION, OR APPROVED EQUIVALENT.
3. PIPE SHALL BE FULLY ENCASED WITHIN 2' LOW-LEVEL OUTLET CHAMBER AND WHEN THE TOP OF THE PIPE WOULD EXTEND ABOVE THE GROUND SURFACE.

LOW-LEVEL OUTLET INTAKE NOTES:

1. ALL BARS TO BE WELDED AND STAINLESS STEEL.
2. PRECAST FLARED CONCRETE END SECTION TO FOLLOW RI STD 2.3.0.
3. IT IS THE INTENT FOR THE INVERT TO BE AT ELEVATION 84 AND FOR THE FLARED END TO BE SET ON EXISTING HARD BOTTOM SURFACE. THIS MAY REQUIRE THAT THE INTAKE PIPE BE SHORTENED TO ACCOMMODATE THIS. IN THE EVENT THE INTAKE PIPE IS SHORTENED THIS DETAIL WILL REMAIN THE SAME, JUST SHIFTED TO LOCATION OF THE INTAKE.

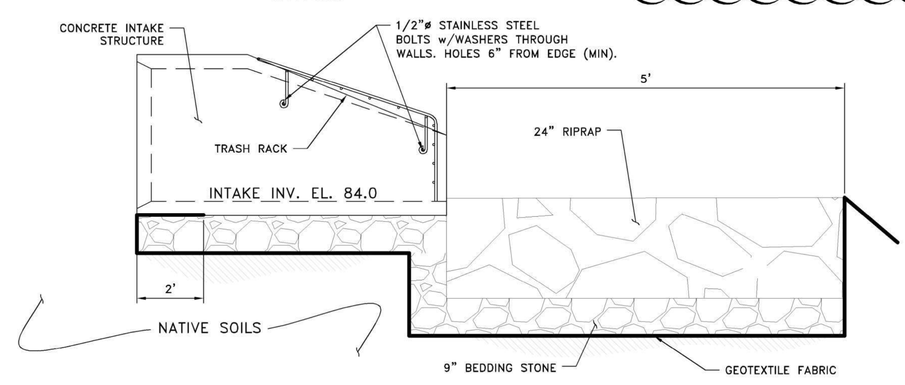

LOW LEVEL OUTLET PIPE INTAKE RIPRAP APRON
NOT TO SCALE

ISSUED FOR CONSTRUCTION

PARE
PARE CORPORATION
ENGINEERS - SCIENTISTS - PLANNERS
10 LINCOLN ROAD, SUITE 210
FOXBORO, MA 02035
508-543-1755

SCALE ADJUSTMENT GUIDE
0" 1"
BAR IS ONE INCH ON ORIGINAL DRAWING.

WYOMING UPPER RESERVOIR DAM REPAIRS
RI DAM No. 216
HOPKINTON/RICHMOND, RHODE ISLAND
OWNER: RI DEPARTMENT OF ENVIRONMENTAL MANAGEMENT

REVISIONS:		
1	11-02-20	ADD INTAKE NOTE

PROJECT NO.:	16226.00
DATE:	MAY 2020
SCALE:	AS NOTED
DESIGNED BY:	DRC/BD
CHECKED BY:	DRC
DRAWN BY:	JHG/LMC
APPROVED BY:	JMB

LOW LEVEL OUTLET DETAILS

FIGURE NO.: 6.1

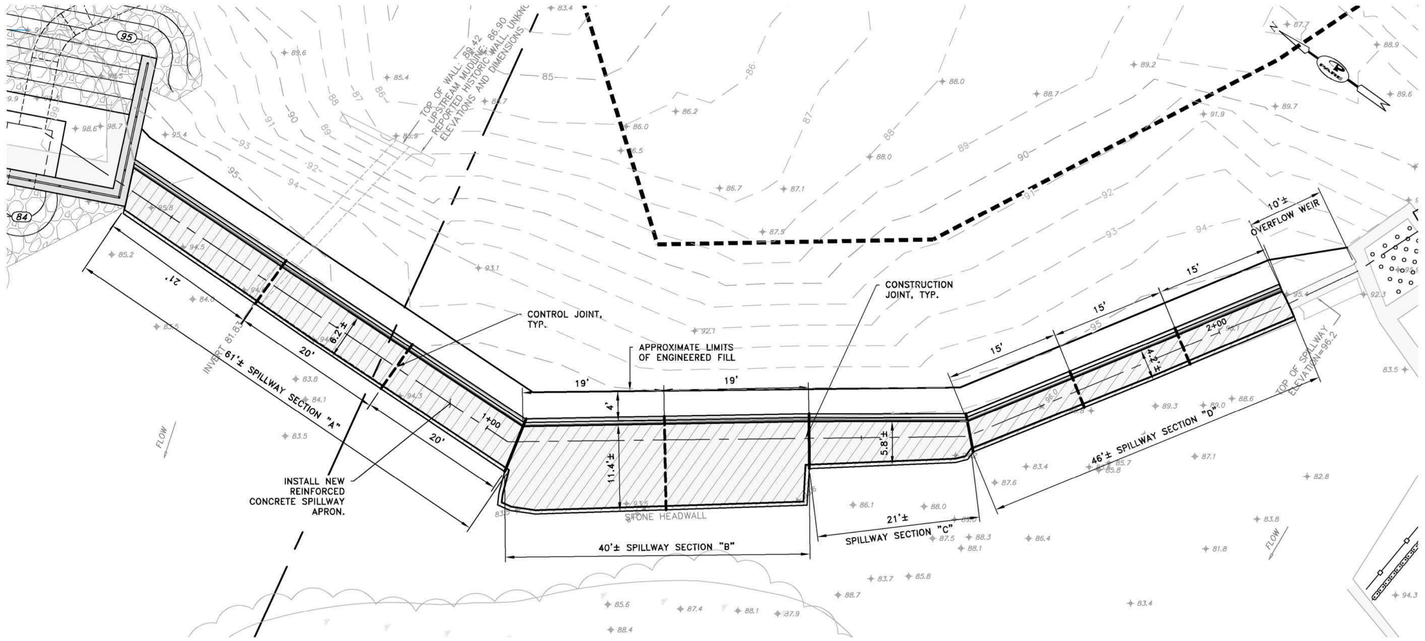

SPILLWAY APRON REPAIR PLAN

SCALE: 1"=10'

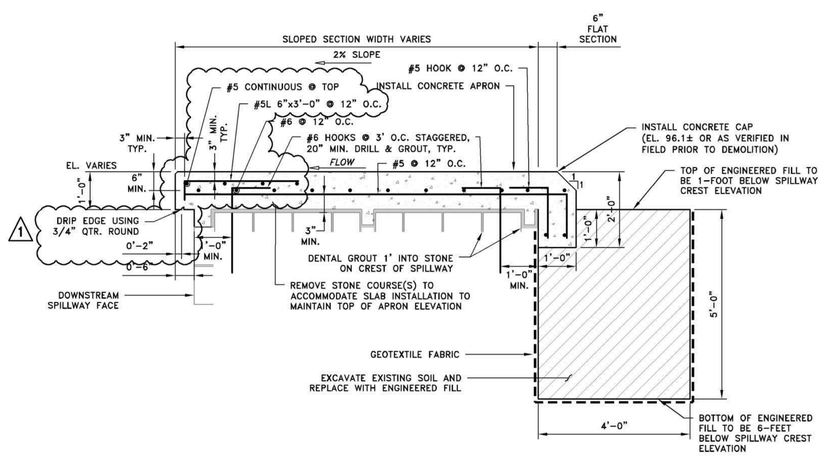

SPILLWAY APRON REPAIR DETAIL – SECTIONS "A" THROUGH "D"

SCALE: 1/2"=1'-0"

SPILLWAY REPAIR NOTES

1. HOOK BARS SHALL BE DRILLED AND GROUTED A MINIMUM OF 20" INTO UNDERLYING SPILLWAY STONE. EPOXY GROUT TO BE HILTI HIT-HY 200 OR EQUAL.
2. PRIOR TO DEMOLITION OF THE EXISTING SPILLWAY CAPLOG THE CONTRACTOR SHALL CONFIRM THE CREST ELEVATION. THE NEW SPILLWAY CAPLOG (FLAT SECTION) SHALL BE SET TO THE SAME ELEVATION.
3. THE CONSISTENCY OF THE DENTAL GROUT SHALL BE SUCH THAT THE GROUT DOES NOT RUN MORE THAN 1-FOOT INTO THE STONE MASONRY STRUCTURE.

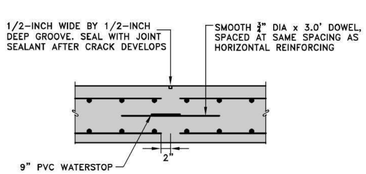

NOTES:
1. SPACE AT 20'-0" CENTER TO CENTER MAX.
2. CONSTRUCTION JOINT MAY BE SUBSTITUTED FOR A CONTROL JOINT.

TYPICAL SPILLWAY APRON CONTROL JOINT DETAIL

NOT TO SCALE

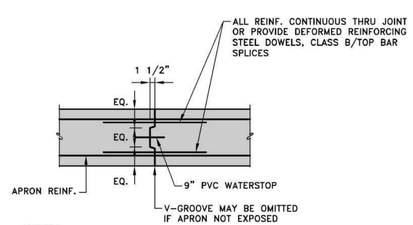

NOTES:
PROVIDE CONSTRUCTION JOINTS @ 60' O.C. (MAX.) AND AT CHANGES IN APRON LENGTH. ALTERNATE PLACING OF PANELS, ALLOWING 36 HOURS FROM THE END OF ONE POUR TO THE BEGINNING OF ADJACENT POURS.

TYPICAL SPILLWAY APRON CONSTRUCTION JOINT DETAIL

NOT TO SCALE

ISSUED FOR CONSTRUCTION

PARE
PARE CORPORATION
ENGINEERS - SCIENTISTS - PLANNERS
10 LINCOLN ROAD, SUITE 210
FOXBORO, MA 02035
508-543-1755

SCALE ADJUSTMENT GUIDE
0" 1"
BAR IS ONE INCH ON ORIGINAL DRAWING.

WYOMING UPPER RESERVOIR DAM REPAIRS

RI DAM No. 216
HOPKINTON/RICHMOND, RHODE ISLAND
OWNER: RI DEPARTMENT OF ENVIRONMENTAL MANAGEMENT

REVISIONS:		
1	9/22/2020	REBAR EDITS
2	11-02-20	REVISED UPSTREAM BATHYMETRY

PROJECT NO.:	16226.00
DATE:	MAY 2020
SCALE:	AS NOTED
DESIGNED BY:	DRC/BD
CHECKED BY:	DRC
DRAWN BY:	JHG/LMC
APPROVED BY:	JMB

SPILLWAY APRON REPAIRS

FIGURE NO.: 7.0

H:\JOBS\16 Jobs\16226.00 RIDEM Wyoming Upper Res Design Repairs-RI\Drawings\7.0- Spillway Repairs.dwg

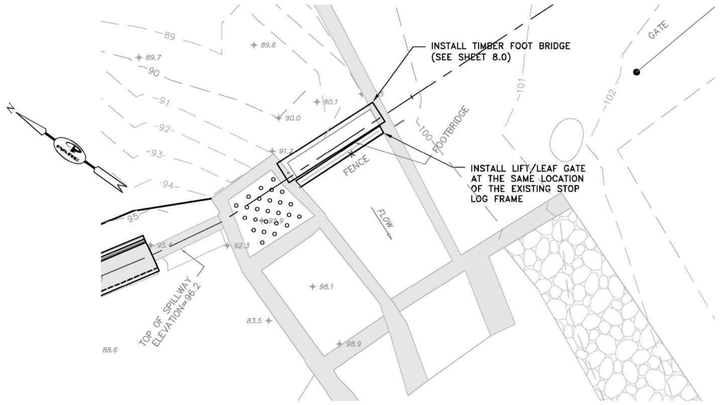

SLUICEWAY SITE PLAN

SCALE: 1"=10'

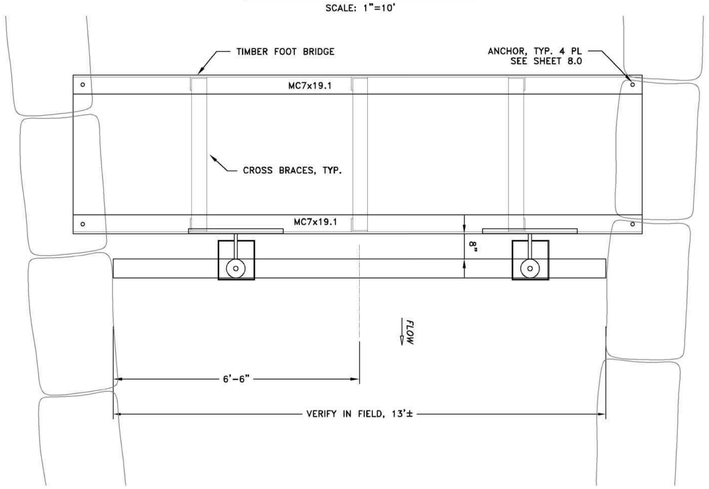

LIFT / LEAF GATE PLAN

SCALE: 1"=2'

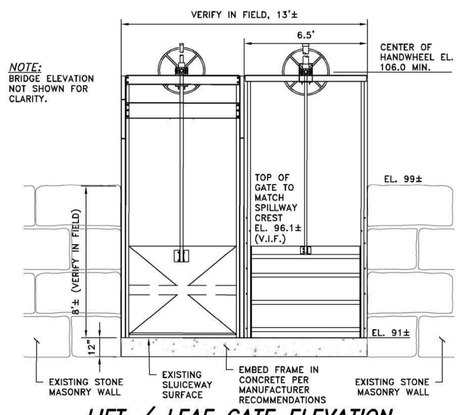

LIFT / LEAF GATE ELEVATION

SCALE: 1"=4'

GATE ELEVATION NOTES

1. BOTTOM GATE INVERT TO MATCH EXISTING SLUICEWAY INVERT AT STOPLOGS.
2. TOP OF GATE ELEVATION IN THE CLOSED POSITION TO MATCH SPILLWAY CREST OF APPROXIMATELY 96.1 FEET. CONTRACTOR TO VERIFY SPILLWAY CREST ELEVATION IN FIELD PRIOR TO ORDERING GATES.
3. MIDDLE INVERT OF LEAF GATE TO BE HALFWAY BETWEEN THE TOP AND BOTTOM OF THE GATE.
4. BOTTOM OF GATE ELEVATIONS IN THE FULLY OPEN POSITION SHALL BE ELEVATION 99.0 FEET.

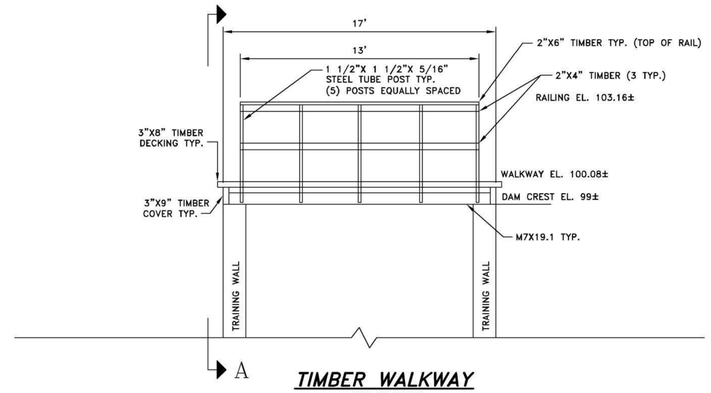

TIMBER WALKWAY

NOT TO SCALE

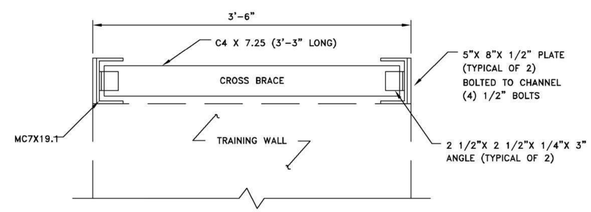

CROSS BRACE DETAIL

NOT TO SCALE

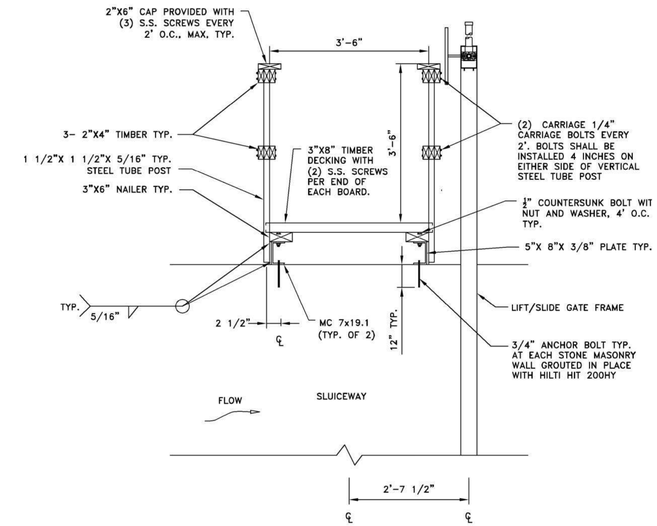

TIMBER WALKWAY SECTION A–A

NOT TO SCALE

NOTES:

1. ALL STEEL TO BE HOT–DIPPED GALVANIZED IN ACCORDANCE WITH ASTM A123 OR A153 – AS APPLICABLE.
2. 3 CROSS BRACES REQUIRED.
3. CROSS BRACE AND ANGLE CLIP EITHER BOLT OR WELD CONNECTIONS.
4. LOCATE CROSS BRACE AT QUARTER POINTS OF THE STRUCTURE.

TIMBER BRIDGE DETAILS

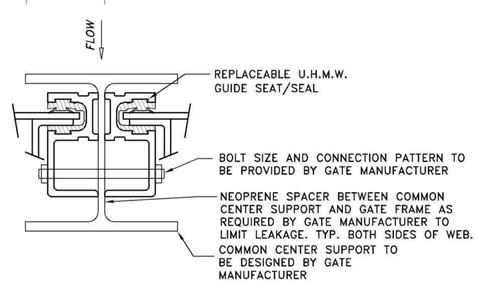

COMMON CENTER SUPPORT SECTION

NOT TO SCALE

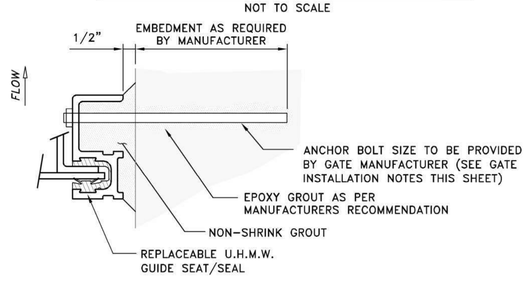

GATE FRAME CONNECTION TO STONE MASONRY WALL

NOT TO SCALE

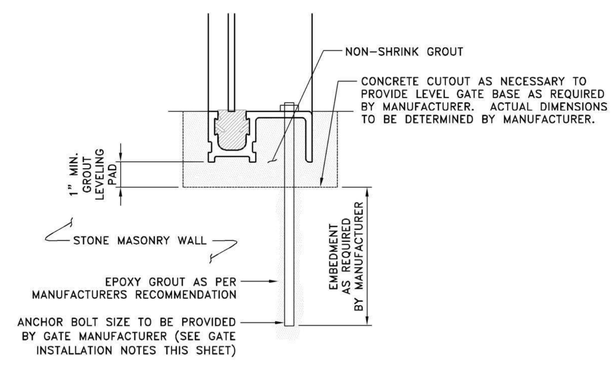

GATE FRAME CONNECTION TO SLUICEWAY INVERT

NOT TO SCALE

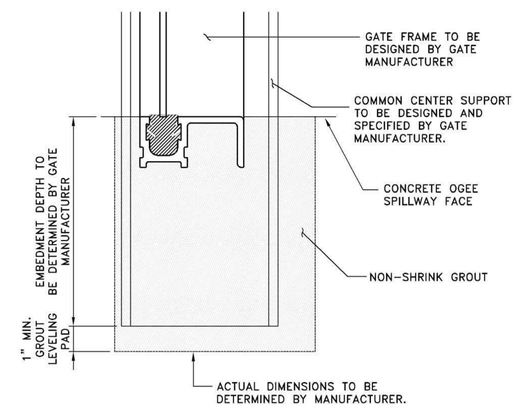

W–SECTION CENTER GATE POST TO SLUICEWAY INTERFACE

NOT TO SCALE

GATE INSTALLATION NOTES

1. EXISTING SLUICEWAY CONCRETE FLOOR SHALL BE CUTOUT AS NECESSARY TO PROVIDE A LEVEL, STABLE SURFACE FREE OF DEBRIS AND REINFORCING STEEL. REPAIR EXISTING CONCRETE AND STONE SURFACES, AFTER STOPLOG FRAME REMOVAL, AS REQUIRED.
2. COMMON CENTER SUPPORT BEAM CUTOUT SHALL BE MADE TO THE DEPTH AND THICKNESS PROVIDED BY THE GATE MANUFACTURER/DESIGNER.
3. COMMON CENTER SUPPORT BEAM DESIGN BY A PROFESSIONAL ENGINEER LICENSED IN THE STATE OF RHODE ISLAND SHALL BE PROVIDED AS A SUBMITTAL TO THE ENGINEER PRIOR TO GATE INSTALLATION.
4. ALL GATES AND SUPPORT MEMBERS SHALL BE DRY FIT AND ANY MODIFICATIONS SHALL BE SUBMITTED TO THE OWNER/ENGINEER AND GATE MANUFACTURER FOR APPROVAL PRIOR TO GATE ATTACHMENT.
5. THE EXISTING STOP LOG FRAME AND ASSOCIATED COMPONENTS SPECIFIED FOR REMOVAL SHALL BE COMPLETELY REMOVED AND DISPOSED OF OFFSITE. BOLTS OR OTHER ANCHORING DEVICES SHALL BE CUT FLUSH WITH THE STONE IN WHICH THEY ARE ANCHORED.

ISSUED FOR CONSTRUCTION

PARE
PARE CORPORATION
ENGINEERS - SCIENTISTS - PLANNERS
10 LINCOLN ROAD, SUITE 210
FOXBORO, MA 02035
508-543-1755

SCALE ADJUSTMENT GUIDE
0" 1"
BAR IS ONE INCH ON ORIGINAL DRAWING.

WYOMING UPPER RESERVOIR DAM REPAIRS

RI DAM No. 216
HOPKINTON/RICHMOND, RHODE ISLAND
OWNER: RI DEPARTMENT OF ENVIRONMENTAL MANAGEMENT

REVISIONS:

1	11–02–20	REVISED UPSTREAM BATHYMETRY

PROJECT NO.:	16226.00
DATE:	MAY 2020
SCALE:	AS NOTED
DESIGNED BY:	DRC/BD
CHECKED BY:	DRC
DRAWN BY:	JHG/LMC
APPROVED BY:	JMB

SLUICE WAY REPLACEMENT

FIGURE NO.: 8.0

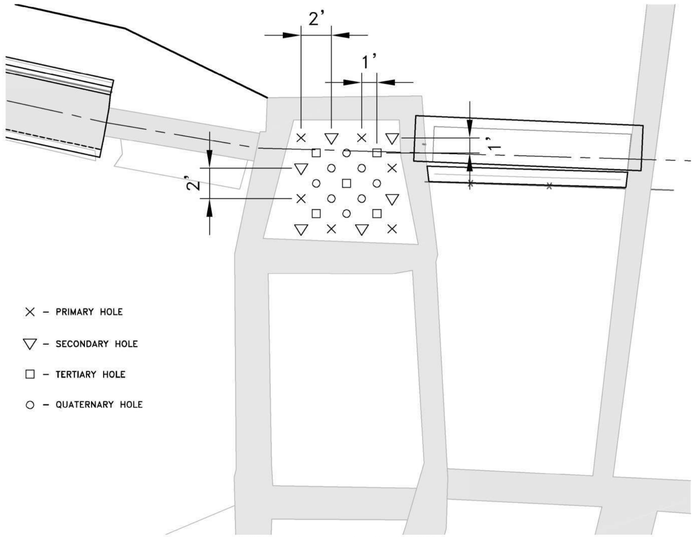

CENTER EMBANKMENT GROUTING PLAN

NOT TO SCALE

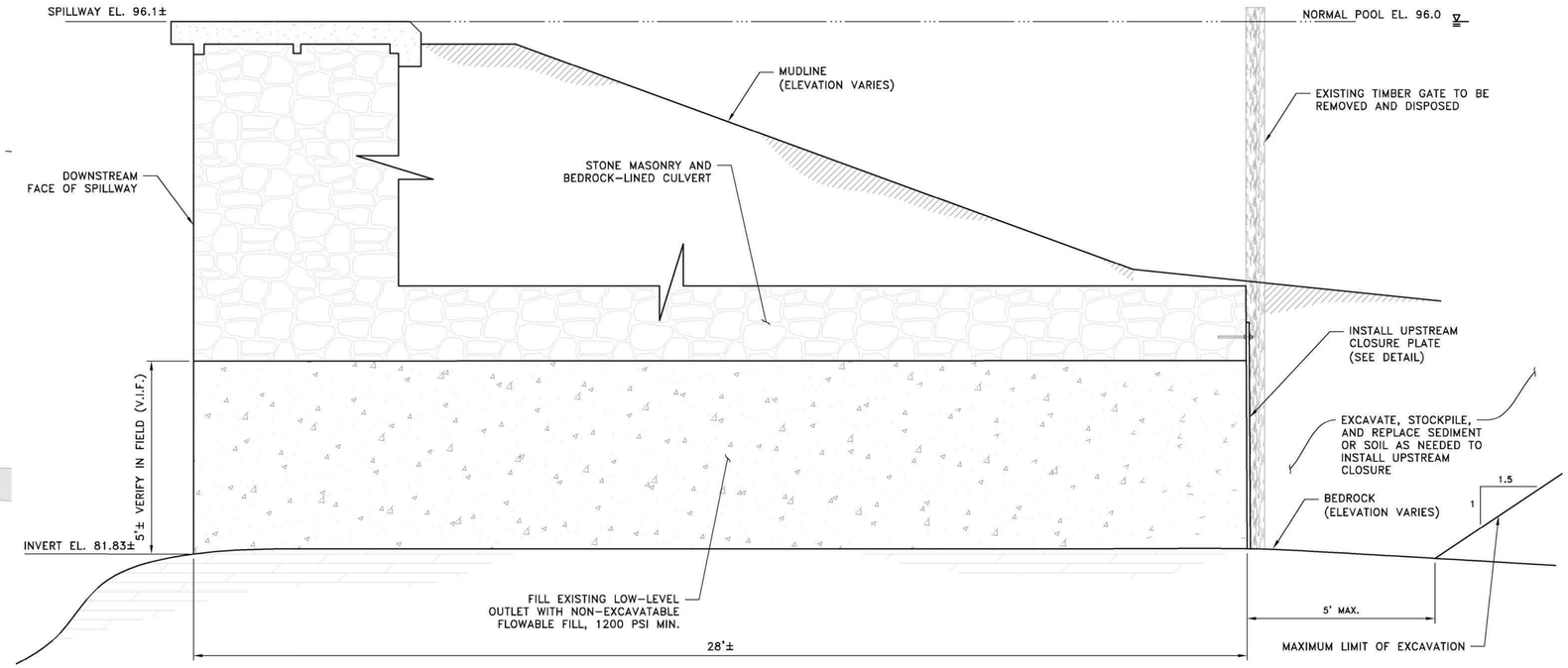

LOW-LEVEL OUTLET ABANDONMENT:

1. THE OUTLET SHALL BE FILLED SUCH THAT AIR POCKETS DO NOT FORM.
2. THE CONTRACTOR SHALL PROVIDE A SMOOTH FINISH ON THE EXPOSED FLOWABLE FILL ON THE DOWNSTREAM END OF THE OUTLET.
3. THE CONTRACTOR SHALL SUBMIT TO THE ENGINEER FOR ACCEPTANCE, THE PROCEDURE FOR ABANDONING THE OUTLET, INCLUSIVE OF FILL PLACEMENT AND MIX DESIGN, PRIOR TO ABANDONING THE OUTLET.

LOW-LEVEL OUTLET ABANDONMENT DETAIL

SCALE: 1" = 2'

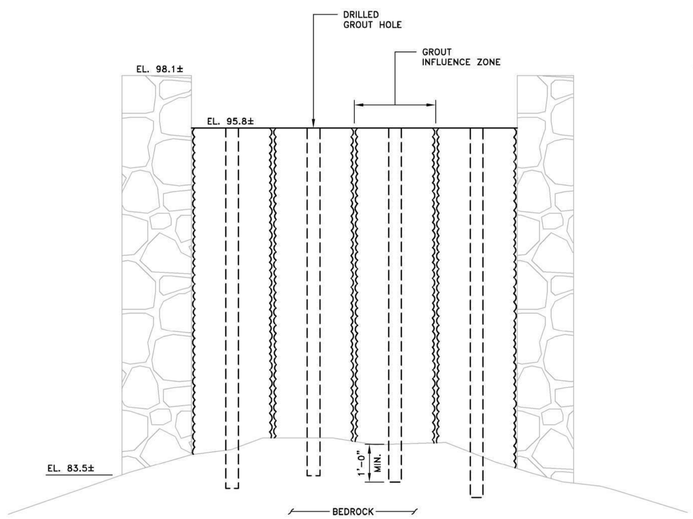

CENTER EMBANKMENT GROUTING DETAIL

NOT TO SCALE

GROUTING NOTES:

1. GROUT HOLE SHALL NOT BE LARGER THAN 3 INCHES IN DIAMETER.
2. GROUT HOLES SHALL EXTEND A MINIMUM OF 1 FOOT INTO ROCK.
3. CONTRACTOR SHALL EXPECT THAT DRILLING THROUGH STONE MASONRY TO REACH BEDROCK WILL BE REQUIRED.
4. OPEN DRILLED HOLES SHALL NOT REMAIN UNGROUTED FOR MORE THAN 2 DAYS.
5. GROUT HOLE SEQUENCE: DRILL PRIMARY AND SECONDARY HOLES, GROUT PRIMARY HOLES THEN SECONDARY HOLES; DRILL AND GROUT TERTIARY HOLES; DRILL AND GROUT QUATERNARY HOLES (AS DETERMINED BY THE ENGINEER).

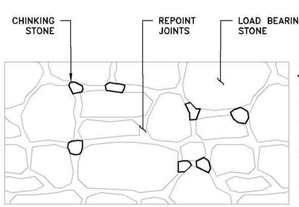

NOTES:

1. REMOVE LOOSE GROUT.
2. CHINK GAPS LARGER THAN 2 INCHES WITH STONE.
3. RE-POINT WITH MORTAR TO A DEPTH OF 6 INCHES OR UNTIL SOLID CONTACT BETWEEN LOAD BEARING STONES.
4. THE DOWNSTREAM FACE OF THE PRIMARY SPILLWAY SHALL ONLY BE RE-CHINKED.
5. STONE MASONRY TRAINING WALLS ALONG THE SLUICEWAY AND CENTER EMBANKMENT SHALL BE RE-CHINKED AND RE-POINTED.

MASONRY CHINKING/REPOINTING DETAIL

NOT TO SCALE

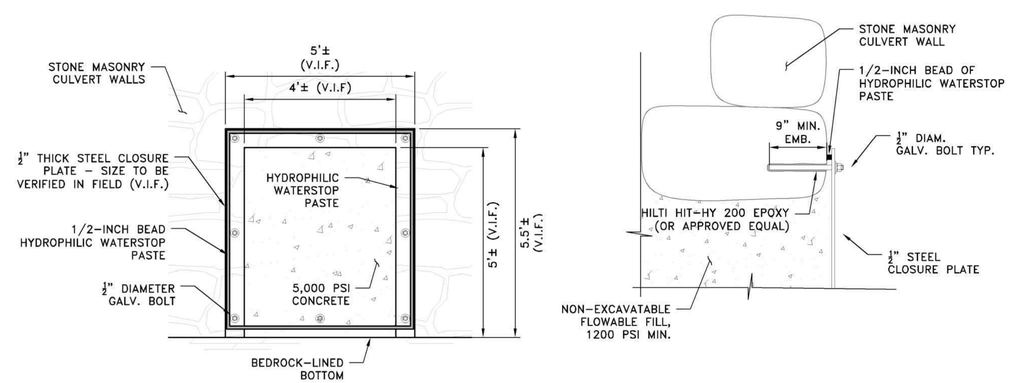

LOW-LEVEL OUTLET CLOSURE PLATE DETAIL

SCALE: NOT TO SCALE

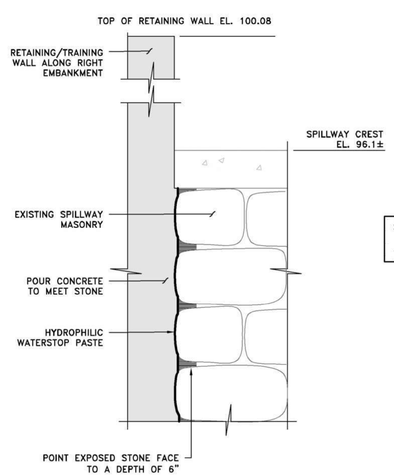

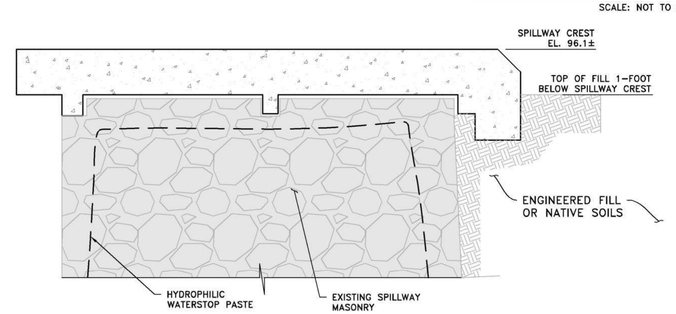

RETAINING WALL TO SPILLWAY CONNECTION DETAIL

SCALE: NOT TO SCALE

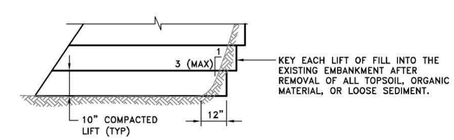

PLACEMENT OF FILL MATERIALS

NOT TO SCALE

ISSUED FOR CONSTRUCTION

PARE
PARE CORPORATION
ENGINEERS - SCIENTISTS - PLANNERS
10 LINCOLN ROAD, SUITE 210
FOXBORO, MA 02035
508-543-1755

SCALE ADJUSTMENT GUIDE
0" 1"
BAR IS ONE INCH ON ORIGINAL DRAWING.

WYOMING UPPER RESERVOIR DAM REPAIRS

RI DAM No. 216
HOPKINTON/RICHMOND, RHODE ISLAND
OWNER: RI DEPARTMENT OF ENVIRONMENTAL MANAGEMENT

REVISIONS:

PROJECT NO.:	16226.00
DATE:	MAY 2020
SCALE:	AS NOTED
DESIGNED BY:	DRC/BD
CHECKED BY:	DRC
DRAWN BY:	JHG/LMC
APPROVED BY:	JMB

MISCELLANEOUS DETAILS

FIGURE NO.: 9.0