INDEX

SHEET NO.	DRAWING NO.	DESCRIPTION
1	C0-0	COVER SHEET
2	GN1-1	GENERAL NOTES
3	SV1-1	EXISTING CONDITIONS
4	LD1-0	SITE PREPARATION AND DEMOLITION PLAN
5	L1-1	MATERIALS PLAN
6	L1-2	GRADING AND PLANTING PLAN
7	C1-1	CIVIL-SITE PLAN
8	C1-2	WATER RELOCATION PLAN
9	C1-3	SOIL EROSION AND SEDIMENT CONTROL PLAN
10	L4-1	COLUMBARIUM NICHE WALL ELEVATIONS
11	L4-2	COLUMBARIUM NICHE WALL SECTIONS
12	L4-3	COLUMBARIUM DETAILS
13	L5-1	SITE DETAILS
14	L5-2	SITE DETAILS
15	C2-1	CIVIL-SITE DETAILS
16	C2-2	CIVIL-SITE DETAILS
17	S-001	STRUCTURAL NOTES
18	S-101	FOUNDATION PLAN
19	S-301	SECTIONS AND DETAILS
20	G1-1	GEOTECHNICAL LOGS
21	E1-1	ELECTRICAL SITE PLAN
22	E2-1	ELECTRICAL DETAILS
23	IR101	IRRIGATION PLAN
24	IR201	IRRIGATION DETAILS
25	IR202	IRRIGATION DETAILS

STATE OF RHODE ISLAND

OFFICE OF VETERANS SERVICES

PLAN AND DETAILS

RHODE ISLAND VETERANS MEMORIAL CEMETERY
COLUMBARIUM PLAZA EXPANSION
CW-4 PROJECT – PHASE I
FAI # RI-19-10

EXETER
RHODE ISLAND

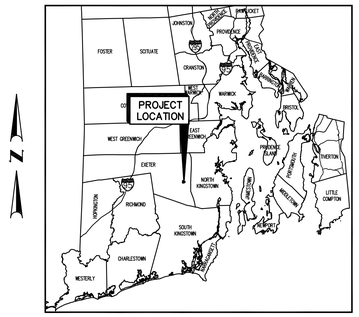

LOCATION MAP
SCALE: 1" = 8 MILES

PROJECT DETAILS
CEMETERY TOTAL AREA:
277 ACRES
CW-4 PROJECT PHASE I AREA:
1.34 ACRES / 58,392 S.F.

COLUMBARIUM NICHES: 1,400

LAYOUT PLAN
SCALE: 1"=80'

SCALES OF DRAWINGS
Plans 1 inch = 20 feet

BASE OF LEVELS
NAD 83 (2011) EPOCH: 2010.0000
NAVD 88

ARCHITECT/ENGINEER OF RECORD
BRYANT ASSOCIATES
Engineers Surveyors Construction Managers
640 George Washington Hwy, Bldg. C, Suite 100
Lincoln, RI 02865
+1 401 722 7660

CONSULTANT
LANDSCAPE ARCHITECT:
IBI Placemaking
21 Custom House Street, 3rd Floor
Boston, MA
+1 617 896 2500
IBI PLACEMAKING
21 Custom House Street, Boston, MA 02110
tel +1 617 896 2500 www.IBIplacemaking.com

CONSULTANT
Aqueous
AQUEOUS CONSULTANTS, LLC
IRRIGATION & WATER RESOURCE ENGINEERS
2 Dundee Park Drive, Suite 301B
Andover, MA 01810 | (978) 470-1695 | www.aqueous.net

CONSULTANT
MC2 ELECTRICAL ENGINEERS
MCCLANAGHAN ASSOCIATES, INC.
178 TREASURE ROAD, NARRAGANSETT, RI 02882
T: 401-524-3457
RWM@RWMENGINEERING.COM

CONSULTANT
GZA GeoEnvironmental, Inc.
Engineers and Scientists
www.gza.com

CONSULTANT
HAGER-RICHTER GEOSCIENCE, INC.
GEOPHYSICS FOR THE ENGINEERING COMMUNITY
SALEM, NEW HAMPSHIRE
Tel: 603.893.9944
FORDS, NEW JERSEY
Tel: 732.661.0555

Project Number	FAI RI-19-10
Number of Sheet	1
Total Sheets	25

\\ri-2018-dcfs01\Proj\219094\DWG\C0-0-COVER SHEET.dwg May 27, 2020 – 2:10pm lalmeida

VA FORM 08 - 6231

GENERAL

1. THE CONTRACTOR SHALL INTERPRET THIS CONTRACT AS A WHOLE, WITH THE MEANING TAKEN FROM THE CONTEXT OF THE ENTIRE CONSTRUCTION CONTRACT DOCUMENTS RATHER THAN FROM CONSIDERATION OF ONLY PARTICULAR PORTIONS OF SAID CONTRACT DOCUMENTS. THE CONTRACT DOCUMENTS INCLUDE BUT ARE NOT LIMITED TO THE FOLLOWING: BID DOCUMENT CONSTRUCTION PLANS, PROJECT MANUAL AND ALL SPECIFICATIONS, ALL SPECIFICATION APPENDICES, AND ADDENDA (SHOULD ANY BE ISSUED).

2. THE TERM "PROPOSED" (PROP) MEANS WORK TO BE CONSTRUCTED USING NEW MATERIALS OR, WHERE APPLICABLE, RE-USING EXISTING MATERIALS IDENTIFIED AS "REMOVE AND RESET" (R&R).

3. THE TERM "NOT IN CONTRACT" (NIC) SHALL BE UNDERSTOOD TO MEAN WORK DONE BY OTHERS CONTRACTED AND COMPLETED AHEAD OF THIS CONTRACT. INFORMATION SHOWN ON THESE PLANS IS BASED ON DESIGN INFORMATION. THE CONTRACTORS SHALL VERIFY AS-BUILTS AND/OR SITE CONDITIONS PRIOR TO CONSTRUCTION IN AREAS LABELED AS SUCH.

4. THE TERM "BY OTHERS" (BO) SHALL BE UNDERSTOOD TO MEAN WORK DONE BY OTHERS THAT IS COINCIDENT TO, OR TO BE DONE AFTER, WORK ISSUED UNDER THIS CONTRACT. CONTRACTOR SHALL COORDINATE WITH ADJACENT AND INTERSECTING CONTRACTS AS REQUIRED TO COMPLETE WORK ISSUED UNDER THIS CONTRACT IN CONFORMANCE WITH THE CONTRACT DOCUMENTS WITHOUT PRECLUDING THE COMPLETION OF SAID CONTRACTS.

5. THE CONTRACTOR SHALL BE SOLELY RESPONSIBLE FOR ALL SITE SECURITY AND SAFETY INCLUDING BUT NOT LIMITED TO TEMPORARY ACCESS POINTS, LAYDOWN AREAS, ETC. ALL CONSTRUCTION ACTIVITY SHALL BE IN ACCORDANCE WITH FEDERAL, , AND OSHA STANDARDS AND LOCAL REQUIREMENTS.

6. THE CONTRACTOR SHALL PROVIDE 72 HOURS NOTICE TO ALL PRIVATE PROPERTY OWNERS ABUTTING CONSTRUCTION AREAS PRIOR TO COMMENCEMENT OF WORK.

7. ALL PROPOSED BENCHMARKS AND HORIZONTAL SURVEY CONTROL AND ANY EXISTING MONUMENTATION DISTURBED DURING CONSTRUCTION SHALL BE SET / RESET BY A PROFESSIONAL LAND SURVEYOR (PLS).

8. CONTRACTOR SHALL INSTALL APPROVED EROSION CONTROL MEASURES PRIOR TO EARTHWORK OPERATION AND MAINTAIN EROSION CONTROL MEASURES AND SEEDED WIND ROWS DURING CONSTRUCTION. EROSION CONTROL SHALL BE REMOVED ONLY UPON APPROVAL OF THE ENGINEER.

9. AREAS OUTSIDE THE LIMIT OF PROPOSED WORK DISTURBED BY THE CONTRACTOR'S OPERATIONS SHALL BE RESTORED BY THE CONTRACTOR TO THEIR ORIGINAL CONDITION AT NO EXPENSE TO THE OWNER AND AT NO ADDITIONAL COST TO THE PROJECT.

10. JOINTS BETWEEN NEW BITUMINOUS CONCRETE ROADWAY PAVEMENT AND SAWCUT EXISTING PAVEMENT SHALL BE SEALED WITH HOT POURED RUBBERIZED ASPHALT SEALER AND BACKSANDED.

11. ALL AREAS DISTURBED DURING CONSTRUCTION EXCEPT PAVEMENT AND STRUCTURES SHALL RECEIVE LOAM AND SEEDING PER THE SPECIFICATIONS UNLESS OTHERWISE NOTED.

12. TREES AND SHRUBS OUTSIDE THE LIMITS OF GRADING SHALL NOT BE REMOVED EXCEPT AS NOTED.

13. THE CONTRACTOR IS PROHIBITED FROM PARKING VEHICLES OR STORING EQUIPMENT AND MATERIALS IN ANY LOCATION OUTSIDE THE LIMIT OF WORK THAT IS WITHIN A 100' BUFFER OF A WETLAND.

EXISTING CONDITIONS

1. HORIZONTAL DATUM IS REFERENCED TO THE RHODE ISLAND STATE PLANE COORDINATE SYSTEM - NORTH AMERICAN DATUM OF 1983 (2011) EPOCH: 2010.0000.

2. VERTICAL DATUM IS REFERENCED TO THE NORTH AMERICAN VERTICAL DATUM OF 1988 (NAVD88).

3. SURVEY DATA SHOWN HAS BEEN PREPARED BY BRYANT ASSOCIATES, INC., 640 GEORGE WASHINGTON HIGHWAY, BUILDING C, SUITE 100, LINCOLN, RI 02865 (401) 722-7660. GENERICALLY AND WITH SOME EXCEPTIONS, BRYANT HAS PRODUCED THE EXISTING CONDITIONS SURVEY FOR THE RHODE ISLAND VETERANS MEMORIAL CEMETERY. THE SURVEY DATA HAS BEEN COMPILED UTILIZING MANY DIFFERENT TECHNOLOGIES TO MATCH THE BEST PRACTICES AND REQUIREMENTS OF THE PROJECT. AERIAL DATA WAS PROVIDED BY BLUESKY BASED ON SURVEY CONTROLS PROVIDED BY BRYANT ASSOCIATES. THE AERIAL SURVEY WAS SUPPLEMENTED WITH GROUND SURVEY PERFORMED USING TOTAL STATIONS. THE AERIAL PHOTOGRAPHY WAS OBTAINED IN 2018. THE AERIAL MAPPING HAS BEEN AUGMENTED THROUGH A GROUND SURVEY PERFORMED IN 2018 AND UPDATES OF RECONSTRUCTED ROADWAYS, AND GEOTECHNICAL AND UTILITY SUBSURFACE INVESTIGATIONS IN 2020.

4. FOR GEOTECHNICAL REPORT, SEE SPECIFICATIONS.

5. THE SURFACE EVIDENCE OF THE UTILITIES SHOWN HAS BEEN LOCATED BY FIELD SURVEY, UNLESS NOTED OTHERWISE. THE LINEWORK REPRESENTING ALL UNDERGROUND STRUCTURES AND PIPES HAS BEEN SHOWN HEREON IN ITS APPROXIMATE LOCATION BASED ON FIELD LOCATION OF MARKED LOCATIONS FROM SUBSURFACE UTILITY INVESTIGATION FOR THE PHASE 1 COLUMBARIA CW-4 PROJECT. THE SURVEYORS MAKE NO GUARANTEES THAT THE UNDERGROUND UTILITIES SHOWN COMPRISE ALL SUCH UTILITIES IN THE AREA, EITHER IN SERVICE OR ABANDONED. THE SURVEYOR FURTHER DOES NOT WARRANT THAT THE UNDERGROUND UTILITIES SHOWN ARE IN THE EXACT LOCATION INDICATED ALTHOUGH THEY DO CERTIFY THAT THEY ARE LOCATED AS ACCURATELY AS POSSIBLE FROM INFORMATION AVAILABLE. THE SURVEYOR HAS NOT PHYSICALLY LOCATED THE UNDERGROUND UTILITIES. EVIDENCE OF ADDITIONAL UNDERGROUND UTILITIES EXIST WITHIN THE PROJECT LIMITS.

6. WETLAND BOUNDARIES WERE DELINEATED AND SURVEYED IN 2018.

7. THE CONTRACTOR SHALL CONFIRM EXISTING CONDITIONS AND REPORT ALL DISCREPANCIES BETWEEN PLANS AND ACTUAL CONDITIONS TO THE ENGINEER.

8. THE CONTRACTOR IS RESPONSIBLE FOR MAINTAINING, RELOCATING, AND REESTABLISHING SURVEY CONTROL AS NEEDED THROUGHOUT CONSTRUCTION.

JOB SPECIFIC DRAINAGE AND EROSION CONTROL NOTES:

1. FOR ALL PROJECTS WITH AT LEAST ONE (1) ACRE OF SOIL DISTURBANCE A SITE SPECIFIC SOIL EROSION AND SEDIMENT CONTROL PLAN (SESC) IS REQUIRED IN ORDER TO REMAIN IN COMPLIANCE WITH THE STORMWATER CONSTRUCTION PERMIT. THE CONTRACTOR SHALL READ, BECOME FAMILIAR WITH, AND ADHERE TO ALL OF THE PROVISIONS, CONDITIONS, AND STIPULATIONS OF THE STORMWATER CONSTRUCTION PERMIT AND THE SITE SPECIFIC SESC FOR THIS PROJECT. COPIES OF THESE DOCUMENTS ARE INCLUDED IN THE PROJECT SUPPLEMENTAL DVD/CD. ALL COSTS ASSOCIATED WITH ADHERENCE TO THE SESC SHALL BE CONSIDERED INCIDENTAL TO THE CONSTRUCTION.

2. PRIOR TO COMMENCING CONSTRUCTION ACTIVITIES, EROSION AND SEDIMENTATION CONTROLS SHALL BE INSTALLED AT THOSE AREAS INDICATED ON THE PLANS. CLEARING MAY OCCUR PRIOR TO INSTALLATION OF SUCH CONTROLS, HOWEVER NO GRUBBING, GRADING, FILLING, OR OTHER SOIL DISTURBANCE SHALL OCCUR PRIOR TO INSTALLATION. THE LIMITS OF CLEARING AND SURFACE DISTURBANCE MUST BE STRICTLY ADHERED TO IN ALL AREAS.

3. NO UNDISTURBED AREAS SHALL BE CLEARED OF EXISTING VEGETATION AFTER OCTOBER 15 OF ANY CALENDAR YEAR OR DURING ANY PERIOD OF FULL OR LIMITED WINTER SHUTDOWN. ALL DISTURBED SOILS EXPOSED PRIOR TO OCTOBER 15 OF ANY CALENDAR YEAR SHALL BE SEEDED OR PROTECTED BY THAT DATE. ANY SUCH AREAS THAT DO NOT HAVE ADEQUATE VEGETATIVE STABILIZATION, AS DETERMINED BY THE RESIDENT ENGINEER OR ENVIRONMENTAL INSPECTOR, BY NOVEMBER 15 OF ANY CALENDAR YEAR, MUST BE STABILIZED THROUGH THE USE OF EROSION CONTROL MATTING OR HAY MULCH IN ACCORDANCE WITH SPECIFICATIONS CONTAINED WITHIN THE R.I. SOIL EROSION AND SEDIMENT CONTROL HANDBOOK. IF WORK CONTINUES WITHIN ANY OF THESE AREAS DURING THE PERIOD FROM OCTOBER 15 THROUGH APRIL 15, CARE MUST BE TAKEN TO ENSURE THAT ONLY THE AREA REQUIRED FOR THAT DAY'S WORK IS EXPOSED, AND ALL ERODIBLE SOIL MUST BE RESTABILIZED WITHIN 5 WORKING DAYS. ANY WORK TO CORRECT PROBLEMS RESULTING FROM FAILURE TO COMPLY WITH THIS PROVISION SHALL BE THE RESPONSIBILITY OF THE CONTRACTOR. THERE WILL BE NO SEPARATE PAYMENT FOR THIS PROVISION, IT SHALL BE CONSIDERED INCIDENTAL TO CONSTRUCTION OPERATIONS. STABILIZATION OF ONE FORM OR ANOTHER AS DESCRIBED ABOVE SHALL BE ACHIEVED WITHIN 2 WEEKS OF FINAL GRADING.

24. ANY PUMPING OF ACCUMULATED GROUNDWATER OR SURFACE WATER IN THE PROPOSED PROJECT CONSTRUCTION AREA, WHICH MAY BE NECESSARY FOR DEWATERING, SHALL BE DISCHARGED INTO SEDIMENT TRAPS (R.I. STD. 9.7.0) CONSISTING OF A CHAMBER CONSTRUCTED OF CONCRETE MEDIAN BARRIERS (R.I. STD 40.2.0) TO BE LINED WITH A FILTER FABRIC (INCLUDING WALLS), ENCLOSED CRUSHED STONE TO DISPERSE INFLOW VELOCITY. FILTER FABRIC SHALL BE ANCHORED WITH SAND BAGS ATOP THE MEDIAN. BARRIERS AND HAYBALES SHALL BE INSTALLED AT THE OUTLET LOCATION ONE CORNER OF THE CHAMBER. THE REMOVAL OF THESE DEVICES (HAYBALES, STONE, BARRIER, SEDIMENT, ETC.) SHALL OCCUR UPON COMPLETION OF EACH CONSTRUCTION PHASE.

25. ALL TEMPORARY SOIL STOCKPILE AREAS SHALL BE PROTECTED WITH COMPOST FILTER SOCK, AND WHEN LEFT EXPOSED FOR LONG PERIODS OF TIME (GREATER THAN 20 DAYS), WITH TEMPORARY CEREAL GRAIN SEEDING. THERE SHALL BE NO SEPARATE PAYMENT FOR THESE PROVISIONS, IT SHALL BE CONSIDERED INCIDENTAL TO CONSTRUCTION OPERATIONS.

7. STOCKPILES OF MATERIAL SHALL NOT BE LOCATED WITHIN REGULATED WETLANDS OR BUFFER ZONE AREAS. THEY SHALL HAVE SIDE SLOPES NO GREATER THAN 30%.

21. THE PLANS INCLUDE SPECIFIC AREAS FOR PLACEMENT OF CONSTRUCTION DEWATERING BASINS AND/OR EQUIPMENT AND MATERIALS STORAGE AND STOCKPILING, AND IF THE CONTRACTOR ELECTS TO UTILIZE ANY OTHER AREAS FOR THESE PURPOSES, THIS SHALL BE APPROVED BY THE RESIDENT ENGINEER ONLY AFTER OBTAINING ANY NECESSARY PERMITS AND/OR PERMIT MODIFICATIONS FROM THE APPROPRIATE REGULATORY AUTHORITY(IES). ANY PERMITTING REQUIREMENTS SHALL BE THE RESPONSIBILITY OF THE CONTRACTOR AND SHALL BE ACCOMPLISHED AT NO COST TO THE OWNER.

16. JUTE MESH SHALL BE USED TO STABILIZE TOPSOIL AND/OR LOAM ON ALL SLOPES WITHIN WATER QUALITY BASINS.

16. THE TOE OF ANY FILL SLOPE IS TO REMAIN AT LEAST 1' INSIDE OF ALL EROSION CONTROLS. UNDER NO CIRCUMSTANCES SHALL THE CONTRACTOR COVER ANY PORTION OF THE EROSION CONTROL MEASURES WITH MATERIAL. ANY MATERIAL THAT IS PLACED ON ANY EROSION CONTROLS BY THE CONTRACTOR, OR ANY AGENT OF THE CONTRACTOR, SHALL BE IMMEDIATELY REMOVED BY THE CONTRACTOR, AND ANY NECESSARY REPAIRS TO THE EROSION CONTROLS ACCOMPLISHED.

23. DURING CONSTRUCTION, THE CONTRACTOR SHALL BE RESPONSIBLE FOR ALL EROSION CONTROL MAINTENANCE AND SHALL INSPECT/REPLACE ALL CONTROLS AS NEEDED. MAINTENANCE SHALL BE CARRIED OUT IN ACCORDANCE WITH SECTION 212 OF THE LATEST RIDOT STANDARD SPECIFICATIONS. THE CONTRACTOR IS RESPONSIBLE FOR CARRYING OUT NECESSARY MAINTENANCE DURING ALL PHASES OF THE PROJECT CONSTRUCTION, INCLUDING PERIODS OF "WINTER SHUTDOWN".

14. DURING CONSTRUCTION, THE CONTRACTOR SHALL BE RESPONSIBLE FOR MAINTAINING DRAINAGE AND RUNOFF FLOW DURING STORMS AND PERIODS OF RAINFALL THROUGHOUT THE WORK AREA.

15. UPON COMPLETION OF PROJECT CONSTRUCTION, AND PRIOR TO VACATING THE SITE, THE CONTRACTOR SHALL CONDUCT A FINAL INSPECTION AND REPAIR ANY VEGETATIVE SOIL EROSION AND SEDIMENTATION CONTROL MEASURES (SEEDING, PLANTING, ETC.) WHERE REQUIRED, AND REPAIR (OR REMOVE WHERE APPROPRIATE) ANY TEMPORARY SOIL EROSION AND SEDIMENTATION CONTROL DEVICE (COMPOST FILTER SOCKS, HAYBALES, SILT FENCE, ETC). AFTER PERMANENT SOIL STABILIZATION ON THE ENTIRE SITE HAS OCCURRED, ALL TEMPORARY CONTROL MEASURES MUST BE REMOVED.

16. THE CONTRACTOR MUST REPAIR AND/OR RESEED ANY AREAS THAT DO NOT DEVELOP WITHIN THE PERIOD OF ONE YEAR AND HE SHALL DO SO AT NO ADDITIONAL EXPENSE TO THE OWNER.

UTILITIES

1. THE LOCATIONS OF EXISTING UNDERGROUND UTILITIES SHOWN ARE APPROXIMATE AND HAVE NOT BEEN INDEPENDENTLY VERIFIED BY THE OWNER OR ITS REPRESENTATIVE. THE CONTRACTOR IS RESPONSIBLE FOR DETERMINING THE LOCATIONS OF ALL EXISTING UTILITIES, AND AGREES TO BE FULLY RESPONSIBLE FOR ANY AND ALL DAMAGES, WHICH MIGHT BE OCCASIONED BY THE CONTRACTOR'S FAILURE TO EXACTLY LOCATE AND PRESERVE ANY AND ALL UNDERGROUND UTILITIES. THE CONTRACTOR SHALL CONTACT "DIG SAFE" 72 HOURS PRIOR TO ANY EXCAVATION PERFORMED ON OR OFF SITE AT 1-888-344-7233 AND SHALL COORDINATE LOCATION OF NON "DIG SAFE" MEMBER UTILITIES WITHIN THE TIME FRAME SPECIFIED BY THE UTILITY OWNER.

2. THE CONTRACTOR SHALL MAKE ARRANGEMENTS AND SHALL BE RESPONSIBLE FOR PAYING ANY FEES FOR ANY POLE RELOCATION AND FOR THE ALTERATION OR ADJUSTMENT OF GAS, ELECTRIC, TELEPHONE, FIRE ALARM, AND ANY OTHER PRIVATE UTILITIES BY THE UTILITY COMPANY.

3. THE CONTRACTOR SHALL FIELD VERIFY THE LOCATION, SIZE, INVERTS, AND TYPES OF EXISTING PIPES AT ALL PROPOSED POINTS OF CONNECTION PRIOR TO ORDERING MATERIALS. WHERE AN EXISTING UTILITY IS FOUND TO CONFLICT WITH THE PROPOSED WORK, THE LOCATION, ELEVATION, AND SIZE OF THE UTILITY SHALL BE ACCURATELY DETERMINED WITHOUT DELAY BY THE CONTRACTOR, AND THE INFORMATION FURNISHED IN WRITING TO THE ENGINEER FOR THE RESOLUTION OF THE CONFLICT.

4. ALL EXISTING UTILITIES SHALL BE MAINTAINED IN PLACE AND KEPT OPERATIONAL DURING CONSTRUCTION EXCEPT AS NOTED ON THE CONTRACT DRAWINGS. ANY NECESSARY DISRUPTION TO OR ABANDONMENT OF EXISTING UTILITIES SHALL BE SUBJECT TO THE APPROVAL OF THE ENGINEER. MAINTENANCE OF EXISTING UTILITIES SHALL BE COMPLETED AT NO ADDITIONAL COST TO THE PROJECT.

5. IT SHALL BE THE RESPONSIBILITY OF THE CONTRACTOR TO NOTIFY ALL UTILITY COMPANIES AND CITIES / TOWNS THAT MAY BE AFFECTED BY ANY PORTION OF THIS CONSTRUCTION AND TO COORDINATE ALL WORK INVOLVING UTILITY COMPANIES OR CITY / TOWN FACILITIES, WHETHER THOSE FACILITIES ARE EXISTING OR PROPOSED. IT IS ALSO THE RESPONSIBILITY OF THE CONTRACTOR TO SUPPORT AND PROTECT EXISTING UTILITIES IN AND AROUND EXCAVATIONS. PROTECTION AND OR SUPPORT SHALL BE CONSIDERED INCIDENTAL WORK AND SHALL BE INCLUDED IN THE UNIT PRICE BID FOR THE ITEM BEING INSTALLED.

6. EXISTING UTILITIES TO BE RELOCATED AS PART OF THIS PROJECT SHALL BE VERIFIED WITH RESPECTIVE CONTROLLING AUTHORITY AS TO THEIR FINAL DISPOSITION.

7. ALL UTILITY SURFACE CASTINGS (COVERS, GRATES, GATE BOXES, ETC.) TO REMAIN SHALL BE ADJUSTED TO THE NEW SURFACE GRADE AS REQUIRED, WHETHER OR NOT CALLED FOR ON THE PLANS.

8. THE CONTRACTOR SHALL ALTER THE MASONRY OF THE TOP SECTION OF ALL EXISTING DRAINAGE STRUCTURES AS NECESSARY FOR CHANGES IN GRADE, AND RESET ALL WATER AND DRAINAGE FRAMES, GRATES AND BOXES TO THE PROPOSED FINISH SURFACE GRADE.

9. CONTRACTOR SHALL PROTECT ALL UNDERGROUND DRAINAGE, SEWER, AND UTILITY FACILITIES FROM ALL DAMAGE BY CONSTRUCTION. ANY DAMAGE TO THESE FACILITIES WILL BE RESTORED TO THEIR ORIGINAL CONDITION AT THE CONTRACTOR'S EXPENSE.

10. FIELD VERIFY EXISTING DRAINAGE MANHOLE AND CATCH BASIN INVERTS AND REPORT ANY DISCREPANCIES BETWEEN PLANS AND ACTUAL CONDITIONS TO THE ENGINEER PRIOR TO START OF ANY DRAINAGE INSTALLATION.

11. ALL UTILITIES SHOWN ON PLANS SHALL BE RETAINED UNLESS OTHERWISE INDICATED.

12. CONTRACTOR SHALL INSTALL, MAINTAIN, AND REMOVE APPROVED EROSION CONTROL CHECKS AROUND CATCH BASIN FRAMES AND GRATES TO PREVENT RUNOFF SEDIMENT FROM ENTERING THE DRAINAGE SYSTEM DURING CONSTRUCTION AS DIRECTED BY THE ENGINEER.

Revisions:	Date:

CONSULTANT

LANDSCAPE ARCHITECT:
IBI Placemaking
21 Custom House Street, 3rd Floor
Boston, MA
+1 617 896 2500

IBI PLACEMAKING
21 Custom House Street, Boston, MA 02110
tel +1 617 896 2500 www.IBIplacemaking.com

ARCHITECT/ENGINEER OF RECORD

BRYANT ASSOCIATES
Engineers Surveyors Construction Managers
640 George Washington Hwy, Bldg. C, Suite 100
Lincoln, RI 02865
+1 401 722 7660

STAMP

TODD E. BRAYTON
No. 9000
REGISTERED PROFESSIONAL ENGINEER (CIVIL)

State of Rhode Island and Providence Plantations
OFFICE OF VETERANS SERVICES

Drawing Title	GENERAL NOTES
Phase	100% BID DOCUMENTS
Project Title	Rhode Island Veterans Memorial Cemetery Columbarium Plaza Expansion CW-4 Project – Phase 1
Project Number	FAI RI -19-10
Building Number	
Approved: Project Director	
Location	301 South County Trail Exeter, Rhode Island
Drawing Number	GN1-1
Issue Date	5/27/2020
Checked	TEB
Drawn	TC

VA FORM 08 - 6231

\\ri-2018-dcfs01\Proj\219094\DWG\GN1-1 GENERAL NOTES.dwg May 27, 2020 - 2:07pm lalmeida 6/14/2019 12:39:03 PM

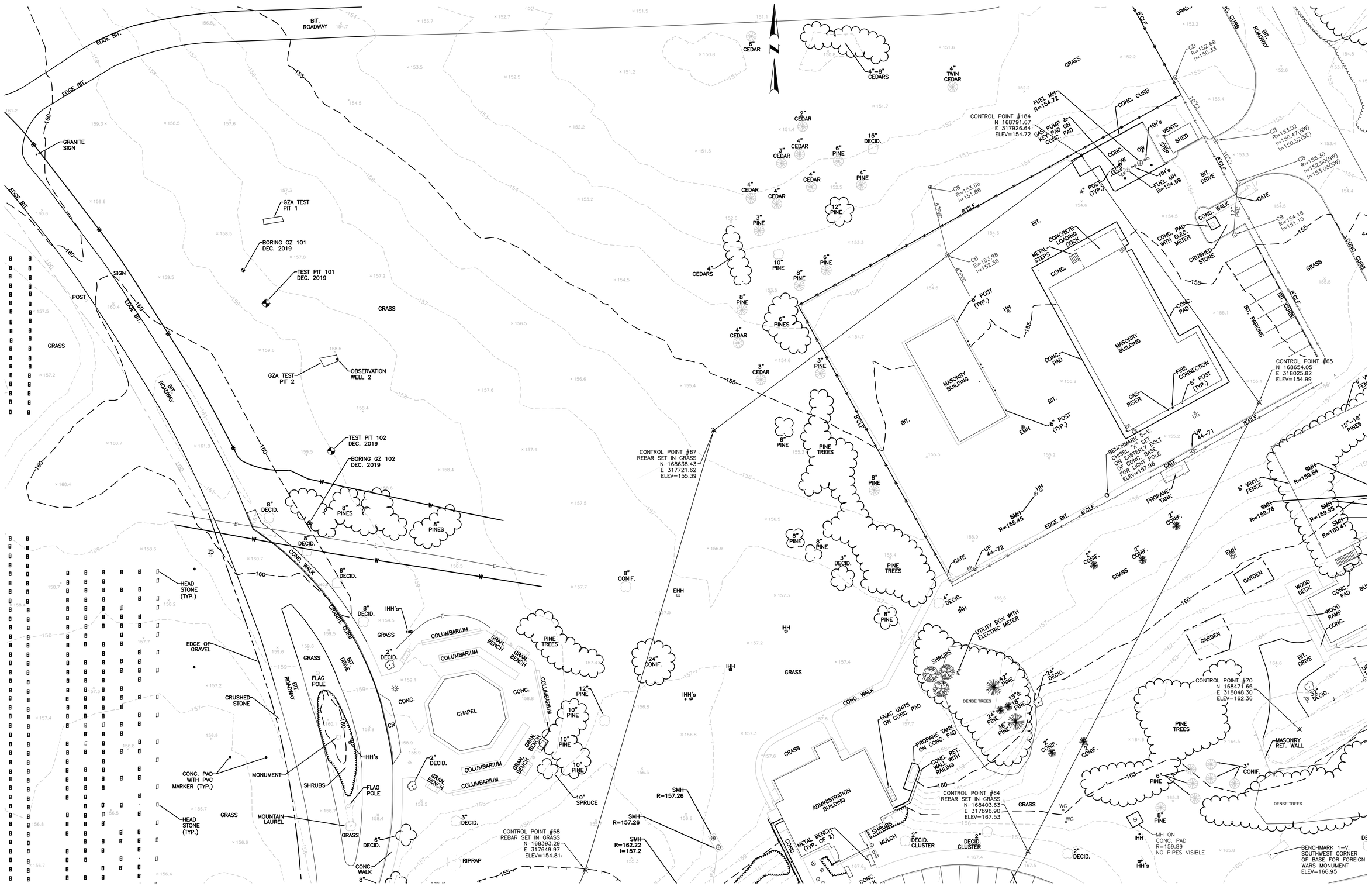

Revisions:	Date:

CONSULTANT

LANDSCAPE ARCHITECT:
IBI Placemaking
21 Custom House Street, 3rd Floor
Boston, MA
+1 617 896 2500

IBI PLACEMAKING
21 Custom House Street, Boston, MA 02110
tel +1 617 896 2500 www.ibiplacemaking.com

ARCHITECT/ENGINEER OF RECORD

BRYANT ASSOCIATES
Engineers Surveyors Construction Managers
640 George Washington Hwy, Bldg. C, Suite 100
Lincoln, RI 02865
+1 401 722 7660

STAMP

TODD E. BRAYTON
No. 9000
REGISTERED PROFESSIONAL ENGINEER (CIVIL)
3/23/2020

State of Rhode Island and Providence Plantations
OFFICE OF VETERANS SERVICES

Drawing Title	EXISTING CONDITIONS
Approved: Project Director	
Phase	100% BID DOCUMENTS
Project Title	Rhode Island Veterans Memorial Cemetery Columbarium Plaza Expansion CW-4 Project – Phase 1
Project Number	FAI RI -19-10
Building Number	
Location	301 South County Trail Exeter, Rhode Island
Issue Date	3/23/2020
Checked	TEB
Drawn	LGA
Drawing Number	SV1-1

40 0 40 80
SCALE IN FEET 1"=40'

VA FORM 08 - 6231

\\r1-2018-dcfs01\Proj\219094\DWG\SV-1-1-EXISTING CONDITIONS.dwg March 24, 2020 - 12:31pm lalmeida 6/14/2019 12:39:03 PM

LANDSCAPE DEMOLITION LEGEND

LIMIT OF WORK (L.O.W.)

LIMIT OF SOIL STOCKPILE ZONE

PLACE CONSTRUCTION FENCE ALONG L.O.W. LINES

PAVEMENT MATERIALS

(A) REMOVE AND DISPOSE EXISTING CONCRETE AND BITUMINOUS PAVEMENT INCLUDING AGGREGATE BASE, TYP

CURBS

(B) REMOVE AND DISPOSE OF EXISTING GRANITE CURB, TYP.

SITE FURNISHINGS

(C) REMOVE AND STOCKPILE FOR REUSE EXISTING DIRECTIONAL SIGN

PLANTING

TREE PROTECTION: PROVIDE 8' HT. CHAIN LINK FENCE AROUND PERIMETER OF DRIP LINE.

REMOVE AND DISPOSE EXISTING TREE AND STUMP, TYP.

CLEAR AND GRUB EXISTING LAWN. STRIP TOP 6" TOPSOIL TO BE STOCKPILED AT LOCATION INDICATED

Revisions:	Date:

CONSULTANT

LANDSCAPE ARCHITECT:
IBI Placemaking
21 Custom House Street, 3rd Floor
Boston, MA
+1 617 896 2500

IBI PLACEMAKING
21 Custom House Street, Boston, MA 02110
tel +1 617 896 2500 www.IBIplacemaking.com

ARCHITECT/ENGINEER OF RECORD

BRYANT ASSOCIATES
Engineers Surveyors Construction Managers
640 George Washington Hwy, Bldg. C, Suite 100
Lincoln, RI 02865
+1 401 722 7660

STAMP

REGISTERED LANDSCAPE ARCHITECT JOHN N. ANDERS No. 415

State of Rhode Island and Providence Plantations — Office of Veterans Services

Drawing Title: SITE PREPARATION AND DEMOLITION PLAN

Phase: 100% BID DOCUMENTS

Approved: Project Director

N — 0 20' 40' — SCALE: 1" = 20'-0"

Project Title: Rhode Island Veterans Memorial Cemetery Columbarium Plaza Expansion CW-4 Project – Phase 1

Location: 301 South County Trail, Exeter, Rhode Island

Issue Date: 3/23/2020 | Checked | Drawn

Project Number: FAI RI -19-10

Building Number

Drawing Number: LD1-0

VA FORM 08 - 6231

\\usaeast.ibigroup.com\V\IBO\123362_RIVMCColumbiNiches\7.0_Production\7.03_Design\05_Landscape\Sheets\LD1-0.dwg 6/24/2020 2:19pm shane.lougee

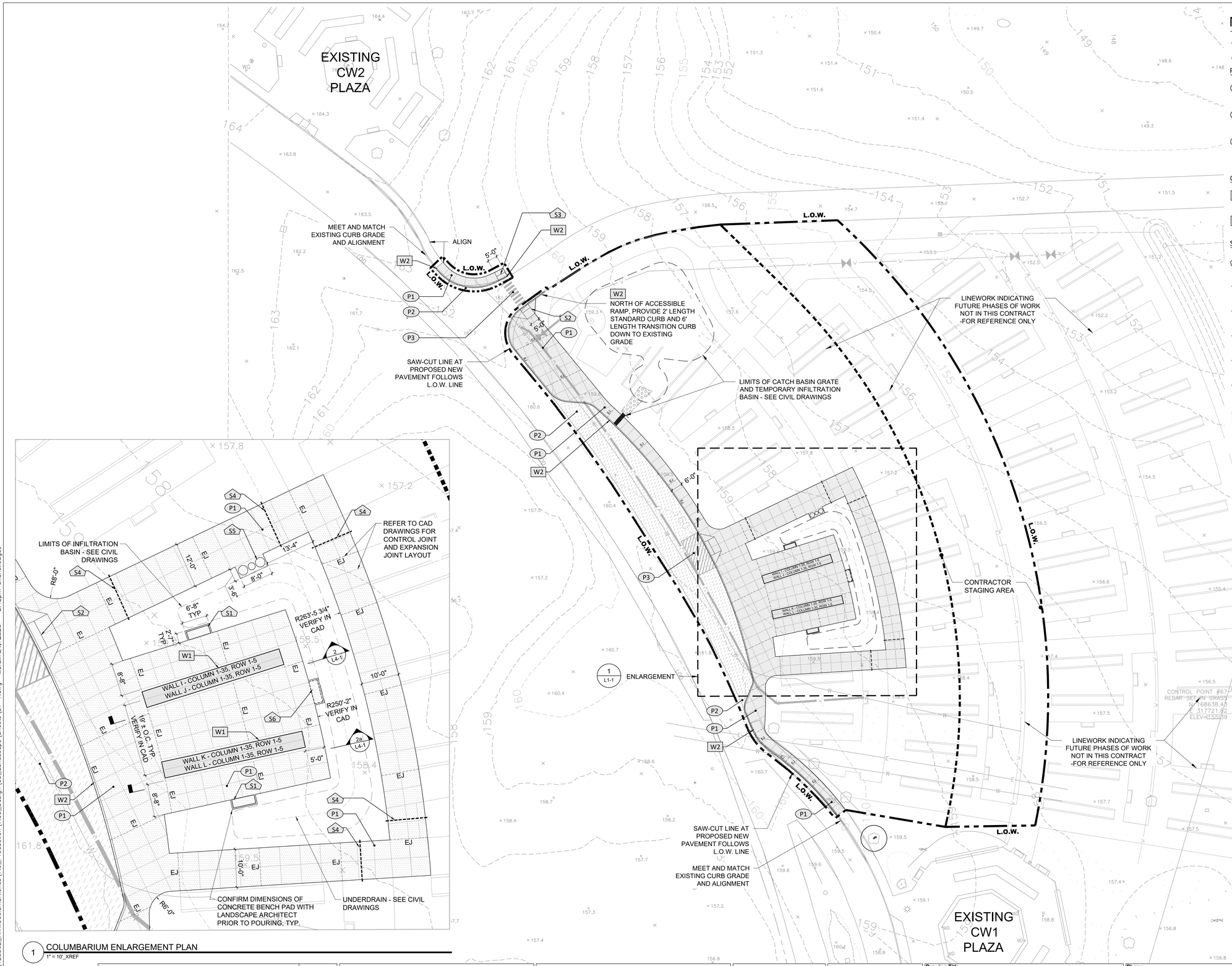

1 COLUMBARIUM ENLARGEMENT PLAN
1" = 10'_XREF

MATERIALS LEGEND

LIMIT OF WORK (L.O.W.)
LIMIT OF SOIL STOCKPILE ZONE

PAVEMENT MATERIALS

P1		STANDARD CONCRETE PAVEMENT	1 / L5-1
P2		BITUMINOUS CONCRETE PAVEMENT	3 / L5-1
P3		PAVEMENT STRIPING	
EJ		EXPANSION JOINT	3 / L5-1

GRANITE WALL & CURBS

W1	COLUMBARIUM NICHE WALL - SEE DETAIL SHEETS L4-1, L4-2, L4-3	
W2	6" GRANITE CURB	5 / L5-1

SITE IMPROVEMENTS

S1	6' BENCH - SEE SPECIFICATION	2 / L5-1
S2	ADA ACCESSIBLE RAMP WITH DETECTABLE WARNING TYPE A	
S3	ADA ACCESSIBLE RAMP WITH DETECTABLE WARNING TYPE B	
S4	(2) 8" DIA. SCH 40 PVC SLEEVE BELOW PAVEMENT	
S5	WATERING STATION	7 / L5-1
S6	RIVMC PROVIDED BENCH, INSTALLED BY CONTRACTOR	

NOTES:
1. ALL NEW CONCRETE WALKWAYS AND PLAZAS ARE PART OF A CONTIGUOUS ACCESSIBLE ROUTE.
2. CAD PLANS WILL BE UTILIZED BY THE CONTRACTOR TO DETERMINE FINAL LAYOUT. GENERAL DIMENSIONS HAVE BEEN PROVIDED FOR INTENT.

Revisions:	Date:

CONSULTANT

LANDSCAPE ARCHITECT:
IBI Placemaking
21 Custom House Street, 3rd Floor
Boston, MA
+1 617 896 2500

IBI PLACEMAKING
21 Custom House Street, Boston, MA 02110
tel +1 617 896 2500 www.ibiplacemaking.com

ARCHITECT/ENGINEER OF RECORD

BRYANT ASSOCIATES
Engineers Surveyors Construction Managers
640 George Washington Hwy, Bldg. C, Suite 100
Lincoln, RI 02865
+1 401 722 7660

STAMP

Drawing Title: MATERIALS PLAN

Phase: 100% BID DOCUMENTS

Approved: Project Director

SCALE: 1" = 20'-0"

Project Title: Rhode Island Veterans Memorial Cemetery Columbarium Plaza Expansion CW-4 Project – Phase 1

Project Number: FAI RI -19-10

Building Number:

Location: 301 South County Trail Exeter, Rhode Island

Issue Date: 3/23/2020

Checked:

Drawn:

Drawing Number: L1-1

VA FORM 08 - 6231

\\uscaest.ibigroup.com\V\BO\123362_RIVMCColumbiNiches\7.0_Production\7.03_Design\05_Landscape\Sheets\L1-1.dwg 3/23/2020 2:42pm shune.lougee

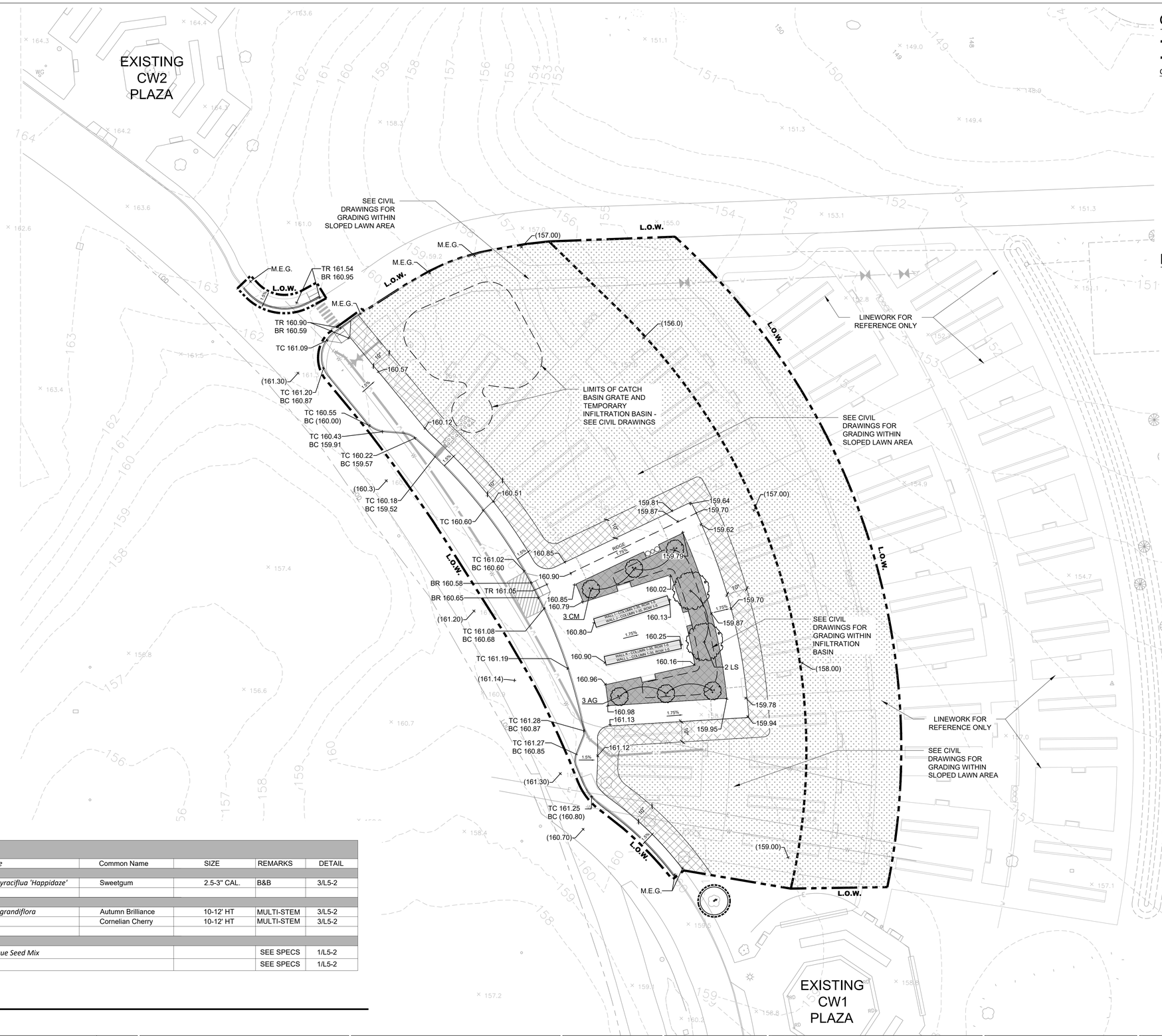

GRADING LEGEND

LIMIT OF WORK

LIMIT OF SOIL STOCKPILE ZONE

GRADING

(XX.XX)	EXISTING SPOT ELEVATION
XX.XX	PROPOSED SPOT ELEVATION
TR	TOP OF RAMP
BR	BOTTOM OF RAMP
TC	TOP OF CURB
BC	BOTTOM OF CURB
M.E.G.	MEET EXISTING GRADE

PLANTING LEGEND

EXISTING TREE TO PRESERVE AND PROTECT

DECIDUOUS CANOPY TREE: PROVIDE 24" PLANTING SOIL DEPTH IN AREAS SHOWN

ORNAMENTAL TREE: PROVIDE 24" PLANTING SOIL DEPTH IN AREAS SHOW

TURF: PROVIDE LOW MOW FESCUE SEED MIX WITH 9" DEPTH TOPSOIL FROM EXISTING STOCKPILE. PROVIDE AMENDMENTS TO TOPSOIL AS SPECIFIED. SEE SPECS

SOD LAWN: PROVIDE 9" DEPTH TOPSOIL FROM EXISTING STOCKPILE. PROVIDE AMENDMENTS TO TOPSOIL AS SPECIFIED. SEE SPECS

SOD LAWN IN TREE PLANTING ZONE: PROVIDE 24" DEPTH TOPSOIL FROM EXISTING STOCKPILE. PROVIDE AMENDMENTS TO TOPSOIL AS SPECIFIED. SEE SPECS

PLANTING SCHEDULE

KEY	Quantity	*Botanical name*	Common Name	SIZE	REMARKS	DETAIL
DECIDUOUS TREES						
LS	2	*Liquidambar styraciflua 'Happidaze'*	Sweetgum	2.5-3" CAL.	B&B	3/L5-2
ORNAMENTAL TREES						
AG	3	*Amelanchier x grandiflora*	Autumn Brilliance	10-12' HT	MULTI-STEM	3/L5-2
CM	3	*Cornus mas*	Cornelian Cherry	10-12' HT	MULTI-STEM	3/L5-2
LAWN AND GROUNDCOVER						
SEE PLANS	SEE PLANS	*Low Mow Fescue Seed Mix*			SEE SPECS	1/L5-2
SEE PLANS	SEE PLANS	*Sod*			SEE SPECS	1/L5-2

1 PLANTING SCHEDULE

Revisions: Date:

CONSULTANT

LANDSCAPE ARCHITECT:
IBI Placemaking
21 Custom House Street, 3rd Floor
Boston, MA
+1 617 896 2500

IBI PLACEMAKING
21 Custom House Street, Boston, MA 02110
tel +1 617 896 2500 www.ibiplacemaking.com

ARCHITECT/ENGINEER OF RECORD

BRYANT ASSOCIATES
Engineers Surveyors Construction Managers
640 George Washington Hwy, Bldg. C, Suite 100
Lincoln, RI 02865
+1 401 722 7660

STAMP

REGISTERED ARCHITECT JOHN N. AMODEO No. 416

State of Rhode Island and Providence Plantations OFFICE OF VETERANS SERVICES

Drawing Title: GRADING AND PLANTING PLAN

Phase: 100% BID DOCUMENTS

Approved: Project Director

N

0 20' 40'
SCALE: 1" = 20'-0"

Project Title: Rhode Island Veterans Memorial Cemetery Columbarium Plaza Expansion CW-4 Project – Phase 1

Location: 301 South County Trail Exeter, Rhode Island

Project Number: FAI RI -19-10

Building Number:

Drawing Number: L1-2

Issue Date: 3/23/2020 | Checked: | Drawn:

VA FORM 08 - 6231

\\useast.ibigroup.com\a\BO\123362_RVMCColumbiaNiches\7.0_Production\7.03_Design\05_Landscape\Sheets\L1-2.dwg 3/23/2020 2:20pm shane.lougee

GENERAL LEGEND

B-#	BORING
TP-#	TESTPIT
	SIDEWALK DRAIN
	RIP-RAP WATERWAY
	TEST PIT LOCATION
	BORING LOCATION
160	EXISTING MAJOR CONTOUR
159	EXISTING MINOR CONTOUR
160	PROPOSED MAJOR CONTOUR
161	PROPOSED MINOR CONTOUR
	STORMWATER TREATMENT TOP AND TOE OF SLOPE
	STORMWATER TREATMENTS
	LAND COVER AND TOPSOIL, SEE L1-2
	AREAS OF CONSTRAINT (RIVERS, WETLANDS & BUFFERS)

Revisions: Date:

CONSULTANT

LANDSCAPE ARCHITECT:
IBI Placemaking
21 Custom House Street, 3rd Floor
Boston, MA
+1 617 896 2500

IBI PLACEMAKING
21 Custom House Street, Boston, MA 02110
tel +1 617 896 2500 www.ibiplacemaking.com

ARCHITECT/ENGINEER OF RECORD

BRYANT ASSOCIATES
Engineers Surveyors Construction Managers
640 George Washington Hwy, Bldg. C, Suite 100
Lincoln, RI 02865
+1 401 722 7660

STAMP

TODD E. BRAYTON
No. 9000
REGISTERED PROFESSIONAL ENGINEER (CIVIL)
3/24/2020

State of Rhode Island and Providence Plantations
OFFICE OF VETERANS SERVICES

Drawing Title: CIVIL-SITE PLAN

Phase: 100% BID DOCUMENTS

Approved: Project Director

20 0 20 40
SCALE IN FEET 1"=20'

Project Title: Rhode Island Veterans Memorial Cemetery
Columbarium Plaza Expansion
CW-4 Project – Phase 1

Location: 301 South County Trail
Exeter, Rhode Island

Issue Date: 3/23/2020
Checked: TEB
Drawn: LGA

Project Number: FAI RI -19-10

Building Number:

Drawing Number: C1-1

\\ri-2018-dcfs01\Proj\219094\DWG\C1-1-CIVIL-SITE PLAN.dwg March 24, 2020 - 2:17pm lalmeida

6/14/2019 12:39:03 PM

VA FORM 08 - 6231

GENERAL LEGEND

B-#	BORING
TP-#	TESTPIT
	TEST PIT LOCATION
	BORING LOCATION
160	EXISTING MAJOR CONTOUR
159	EXISTING MINOR CONTOUR
160	PROPOSED MAJOR CONTOUR
161	PROPOSED MINOR CONTOUR
	STORMWATER TREATMENT TOP AND TOE OF SLOPE
	AREAS OF CONSTRAINT (RIVERS, WETLANDS & BUFFERS)
	PROPOSED GATE VALVE/CURB STOP
W	PROPOSED WATER PIPE
W	FUTURE WATER PIPE

NOTE:

1. INSTALL NEW WATER LINE ALONGSIDE EXISTING WATER MAIN, KEEPING EXISTING WATER LINE IN SERVICE UNTIL SHUTDOWN OF EXISTING WATER LINE AND FINAL CONNECTIONS AT BOTH ENDS TAKE PLACE.
2. CONTRACTOR TO COORDINATE EXISTING WATER LINE SHUTDOWN WITH QUONSET DEVELOPMENT CORPORATION.

Revisions:	Date:

CONSULTANT

LANDSCAPE ARCHITECT:
IBI Placemaking
21 Custom House Street, 3rd Floor
Boston, MA
+1 617 896 2500

IBI PLACEMAKING
21 Custom House Street, Boston, MA 02110
tel +1 617 896 2500 www.IBIplacemaking.com

ARCHITECT/ENGINEER OF RECORD

BRYANT ASSOCIATES
Engineers Surveyors Construction Managers
640 George Washington Hwy, Bldg. C, Suite 100
Lincoln, RI 02865
+1 401 722 7660

STAMP

TODD E. BRAYTON
No. 9000
REGISTERED PROFESSIONAL ENGINEER (CIVIL)
3/23/2020

State of Rhode Island and Providence Plantations
OFFICE OF VETERANS SERVICES

Drawing Title: WATER RELOCATION PLAN

Approved: Project Director

Phase: 100% BID DOCUMENTS

20 0 20 40
SCALE IN FEET 1"=20'

Project Title: Rhode Island Veterans Memorial Cemetery Columbarium Plaza Expansion CW-4 Project – Phase 1

Location: 301 South County Trail Exeter, Rhode Island

Issue Date: 3/23/2020 | Checked: JRC | Drawn: SKL

Project Number: FAI RI -19-10

Building Number:

Drawing Number: C1-2

VA FORM 08 - 6231

\\ri-2018-dcfs01\Proj\2219094\DWG\C1-2-WATER RELOCATION PLAN.dwg March 24, 2020 – 2:32pm talmeida 6/14/2009 12:59:03 PM

GENERAL LEGEND

- STORMWATER RUNOFF FLOW PATH
- HAY BALES
- COMPOST FILTER SOCK
- B-# BORING
- TP-# TESTPIT
- QPA QUALIFYING PERVIOUS AREAS
- PROPOSED CATCH BASIN GRATE/CURB INLET
- TEST PIT LOCATION
- BORING LOCATION
- EXISTING MAJOR CONTOUR
- EXISTING MINOR CONTOUR
- 160 PROPOSED MAJOR CONTOUR
- 161 PROPOSED MINOR CONTOUR
- STORMWATER TREATMENT TOP AND TOE OF SLOPE
- STORMWATER TREATMENTS
- LAND COVER AND TOPSOIL, SEE L1-2
- AREAS OF CONSTRAINT (RIVERS, WETLANDS & BUFFERS)

Revisions:	Date:

CONSULTANT

LANDSCAPE ARCHITECT:
IBI Placemaking
21 Custom House Street, 3rd Floor
Boston, MA
+1 617 896 2500

IBI PLACEMAKING
21 Custom House Street, Boston, MA 02110
tel +1 617 896 2500 www.ibiplacemaking.com

ARCHITECT/ENGINEER OF RECORD

BRYANT ASSOCIATES
Engineers Surveyors Construction Managers
640 George Washington Hwy, Bldg. C, Suite 100
Lincoln, RI 02865
+1 401 722 7660

STAMP

TODD E. BRAYTON
No. 9000
REGISTERED PROFESSIONAL ENGINEER (CIVIL)
12/2/2020

State of Rhode Island and Providence Plantations
OFFICE OF VETERANS SERVICES

Drawing Title
SOIL EROSION AND SEDIMENT CONTROL PLAN (SESC)

Phase
100% BID DOCUMENTS

Project Title
Rhode Island Veterans Memorial Cemetery
Columbarium Plaza Expansion
CW-4 Project – Phase 1

Project Number
FAI RI -19-10

Building Number

Approved: Project Director

20 0 20 40
SCALE IN FEET 1"=20'

Location
301 South County Trail
Exeter, Rhode Island

Issue Date 3/23/2020 | **Checked** TEB | **Drawn** LGA

Drawing Number
C1-3

\\ri-2018-dcfs01\Proj\21909A\DWG\C1-3-EROSION CONTROL.dwg March 24, 2020 - 2:15pm lalmeida 6/14/2009 12:39:03 PM

VA FORM 08 - 6231

NOTE:
GRANITE NICHE COVERS ARE OWNER PROVIDED AND CONTRACTOR INSTALLED. ALL MOUNTING BRACKETS, ROSETTES, NUTS, BOLTS, WASHERS AND MOUNTING HARDWARE ARE CONTRACTOR FURNISHED AND INSTALLED.

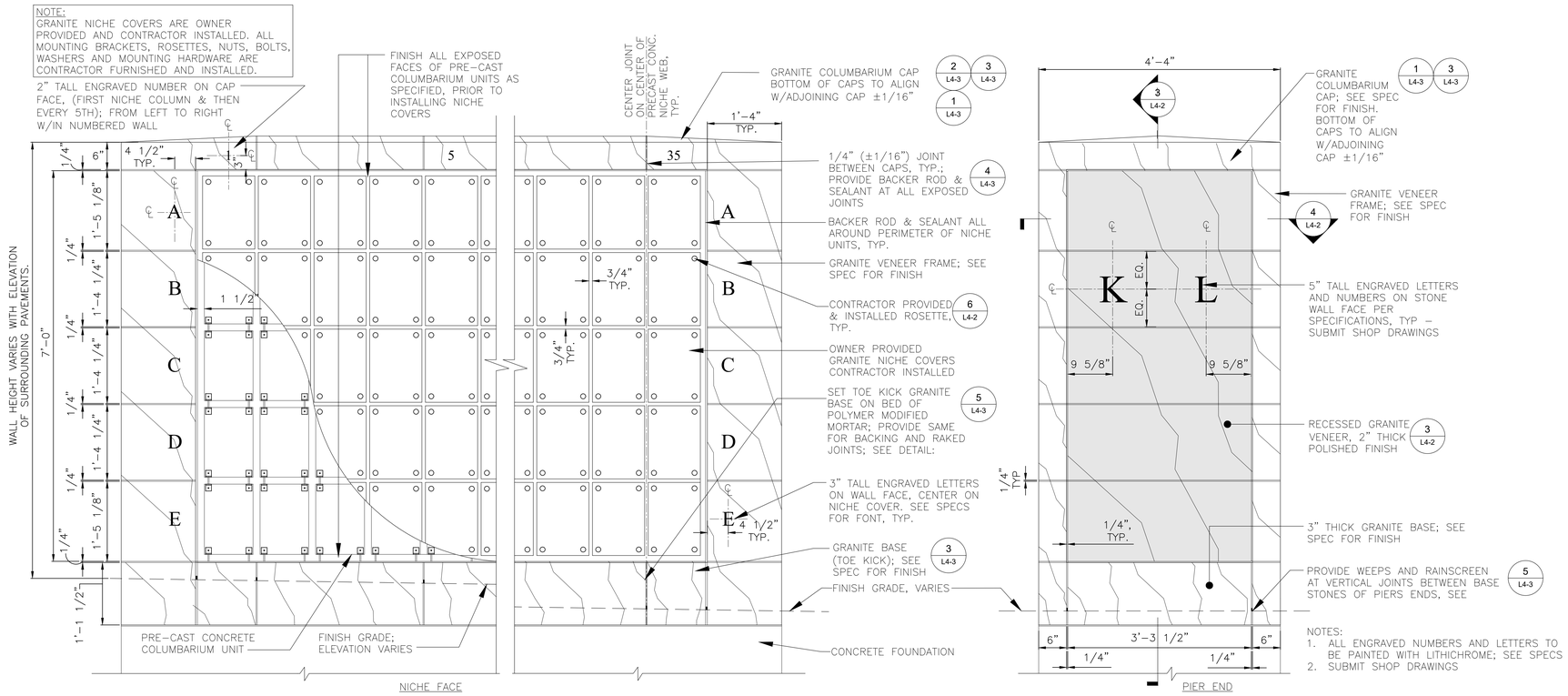

NOTES:
1. ALL ENGRAVED NUMBERS AND LETTERS TO BE PAINTED WITH LITHICHROME; SEE SPECS
2. SUBMIT SHOP DRAWINGS

1 TYPICAL COLUMBARIUM ELEVATIONS
1" = 1'-0"

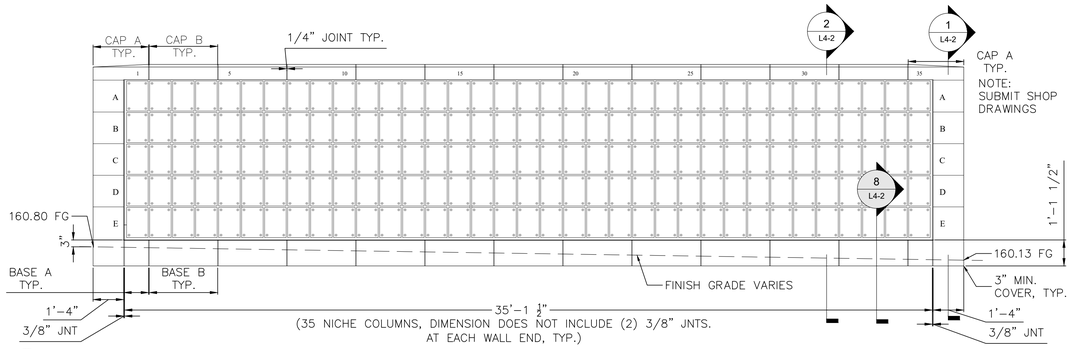

2 COLUMBARIUM WALL ELEVATION - I-J
3/8" = 1'-0"

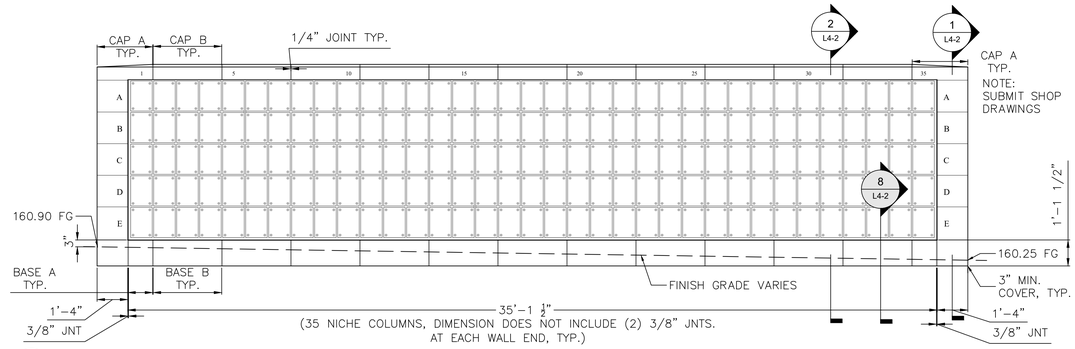

2a COLUMBARIUM WALL ELEVATION - K-L
3/8" = 1'-0"

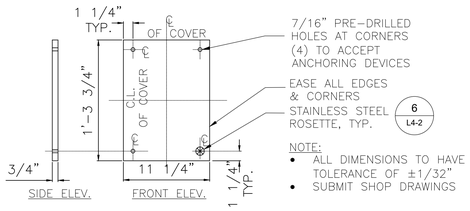

NOTE:
- ALL DIMENSIONS TO HAVE TOLERANCE OF ±1/32"
- SUBMIT SHOP DRAWINGS

3 NICHE COVER DETAIL
1 1/2" = 1'-0"

Revisions:	Date:

CONSULTANT
LANDSCAPE ARCHITECT:
IBI Placemaking
21 Custom House Street, 3rd Floor
Boston, MA
+1 617 896 2500
IBI PLACEMAKING
21 Custom House Street, Boston, MA 02110
tel +1 617 896 2500 www.ibiplacemaking.com

ARCHITECT/ENGINEER OF RECORD
BRYANT ASSOCIATES
Engineers Surveyors Construction Managers
640 George Washington Hwy, Bldg. C, Suite 100
Lincoln, RI 02865
+1 401 722 7660

STAMP
REGISTERED ARCHITECT JOHN M. AMODEO No.415

State of Rhode Island and Providence Plantations
OFFICE OF VETERANS SERVICES

Drawing Title: COLUMBARIUM NICHE WALL ELEVATIONS
Phase: 100% BID DOCUMENTS
Approved: Project Director
Project Title: Rhode Island Veterans Memorial Cemetery Columbarium Plaza Expansion CW-4 Project – Phase 1
Project Number: FAI RI -19-10
Building Number:
Location: 301 South County Trail Exeter, Rhode Island
Drawing Number: L4-1
Issue Date: 3/23/2020
Checked:
Drawn:

VA FORM 08 - 6231

\\useast.ibigroup.com\V\B0\123362_RIVMCColumbiaNiches\7.0_Production\7.03_Design\05_Landscape\Sheets\L4-1.dwg 10/4/2020 2:21pm shane.lougee

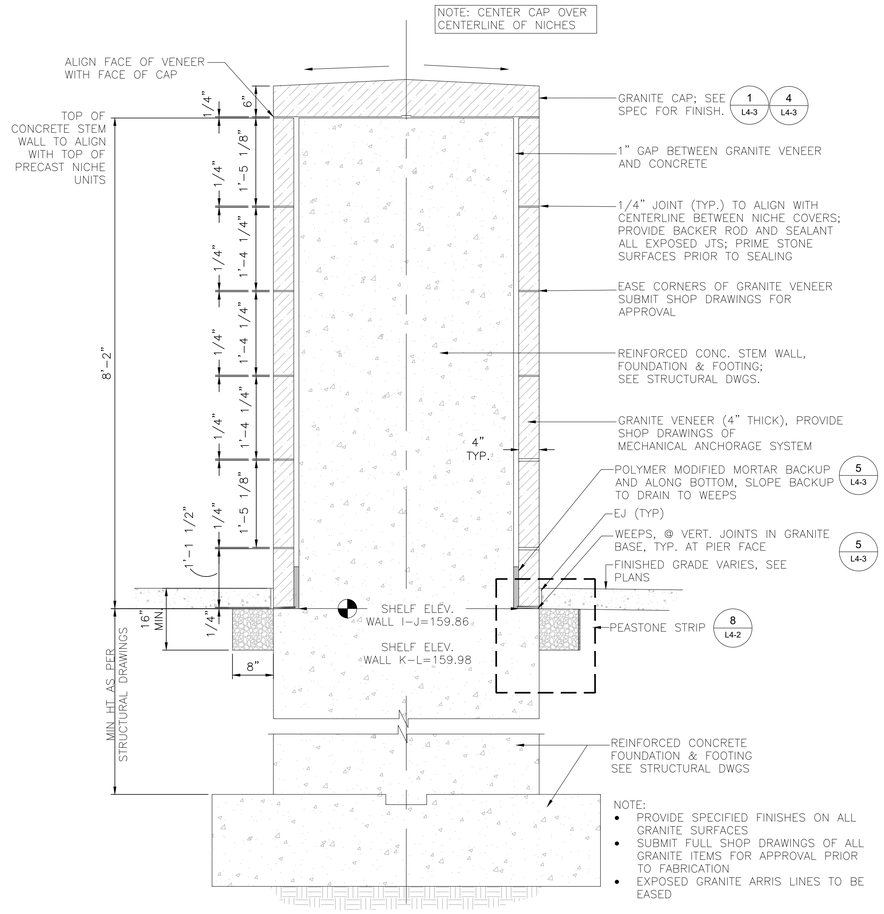

NOTE:
- PROVIDE SPECIFIED FINISHES ON ALL GRANITE SURFACES
- SUBMIT FULL SHOP DRAWINGS OF ALL GRANITE ITEMS FOR APPROVAL PRIOR TO FABRICATION
- EXPOSED GRANITE ARRIS LINES TO BE EASED

1 COLUMBARIUM WALL PIER SECTION
1" = 1'-0"

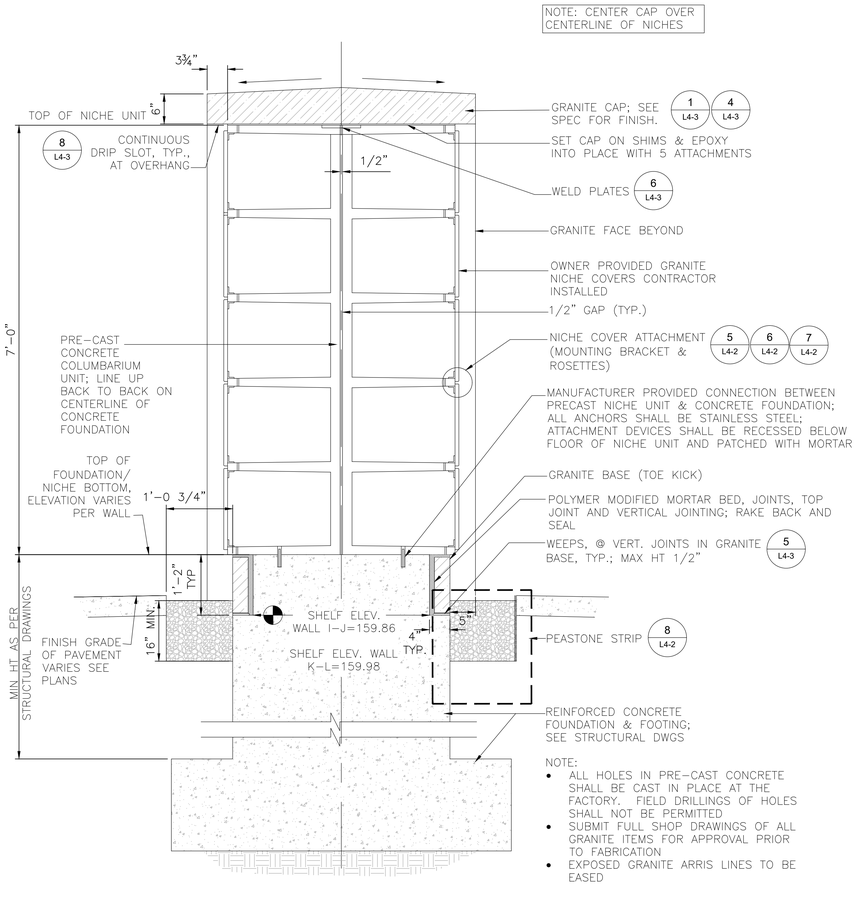

NOTE:
- ALL HOLES IN PRE-CAST CONCRETE SHALL BE CAST IN PLACE AT THE FACTORY. FIELD DRILLINGS OF HOLES SHALL NOT BE PERMITTED
- SUBMIT FULL SHOP DRAWINGS OF ALL GRANITE ITEMS FOR APPROVAL PRIOR TO FABRICATION
- EXPOSED GRANITE ARRIS LINES TO BE EASED

2 COLUMBARIUM WALL WITH NICHES
1" = 1'-0"

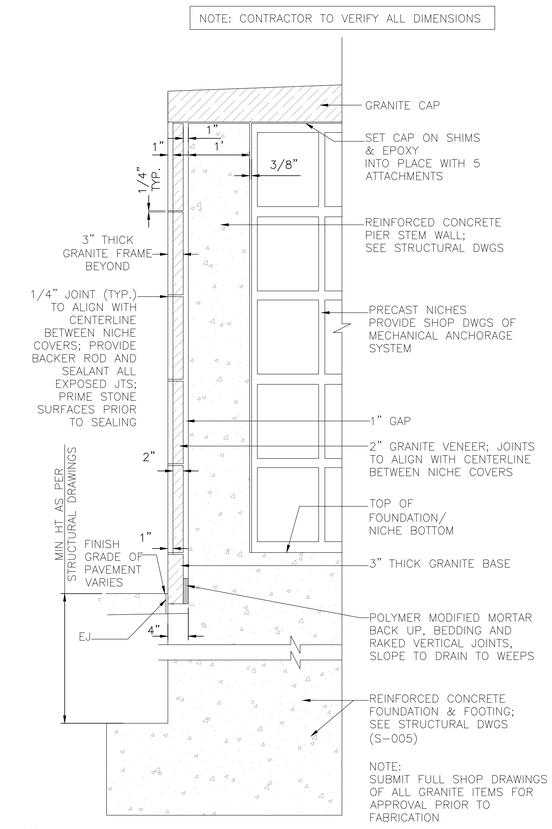

NOTE:
SUBMIT FULL SHOP DRAWINGS OF ALL GRANITE ITEMS FOR APPROVAL PRIOR TO FABRICATION

3 PIER SECTION
1" = 1'-0"

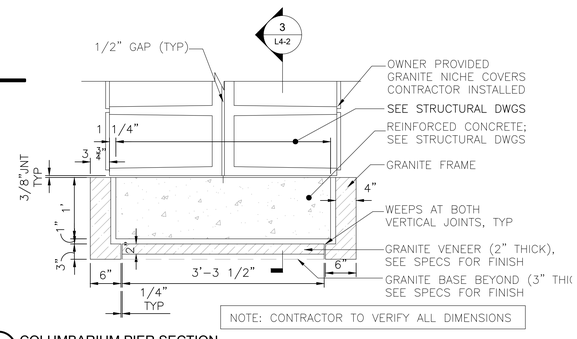

4 COLUMBARIUM PIER SECTION
1" = 1'-0"

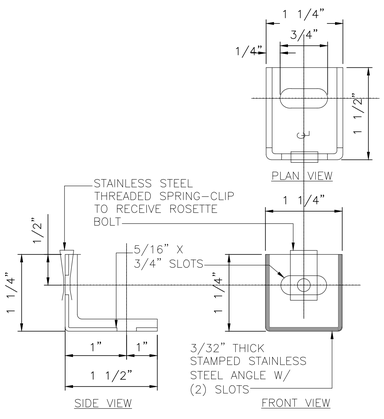

5 MOUNTING BRACKET
1" = 1'-0"

NOTE:
GRANITE NICHE COVERS ARE OWNER PROVIDED AND CONTRACTOR INSTALLED. ALL MOUNTING BRACKETS, ROSETTES, NUTS, BOLTS, WASHERS AND MOUNTING HARDWARE ARE CONTRACTOR FURNISHED AND INSTALLED.

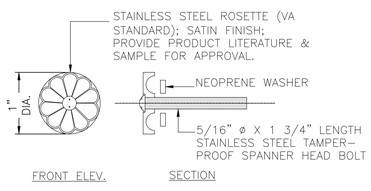

6 ROSETTS
1" = 1'-0"

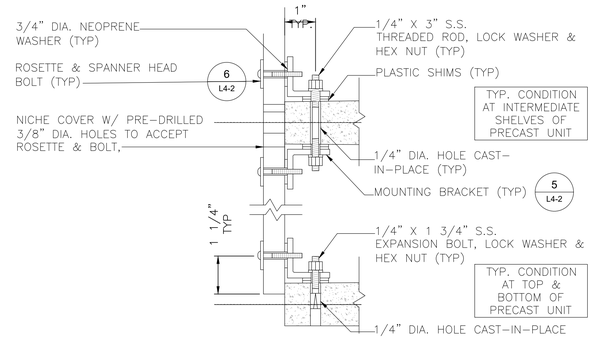

7 NICHE COVER ATTACHEMENT
1" = 1'-0"

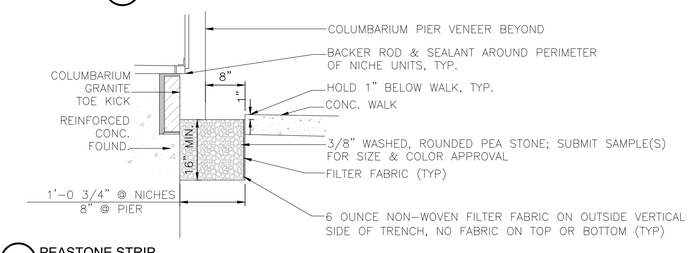

8 PEASTONE STRIP
1" = 1'-0"

Revisions:	Date:

CONSULTANT

LANDSCAPE ARCHITECT:
IBI Placemaking
21 Custom House Street, 3rd Floor
Boston, MA
+1 617 896 2500

IBI PLACEMAKING
21 Custom House Street, Boston, MA 02110
tel +1 617 896 2500 www.ibiplacemaking.com

ARCHITECT/ENGINEER OF RECORD

BRYANT ASSOCIATES
Engineers Surveyors Construction Managers
640 George Washington Hwy, Bldg. C, Suite 100
Lincoln, RI 02865
+1 401 722 7660

STAMP

Drawing Title: COLUMBARIUM NICHE WALL SECTIONS

Phase: 100% BID DOCUMENTS

Approved: Project Director

Project Title: Rhode Island Veterans Memorial Cemetery Columbarium Plaza Expansion CW-4 Project – Phase 1

Project Number: FAI RI -19-10

Building Number:

Location: 301 South County Trail Exeter, Rhode Island

Drawing Number: L4-2

Issue Date: 3/23/2020

Checked:

Drawn:

VA FORM 08 - 6231

\\usaeast.ibigroup.com\V\BO\123362_RIVMCColumbiNiches\7.0_Production\7.03_Design\05_Landscape\Sheets\L4-2.dwg 10/14/2020 2:03:20 PM – 2:22pm shane.lougee

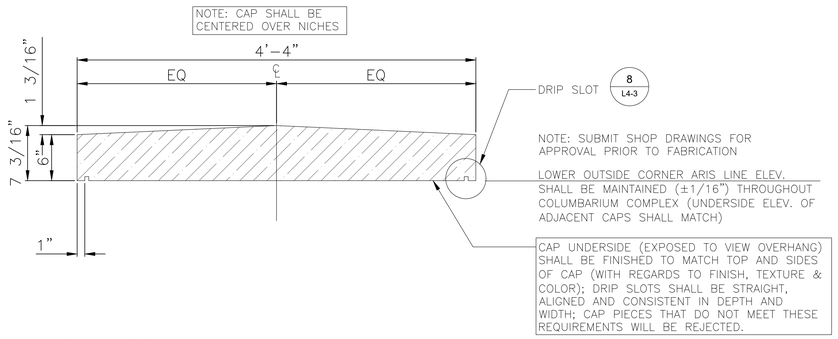

1 COLUMBARIUM PIER CAP SECTION
1" = 1'-0"

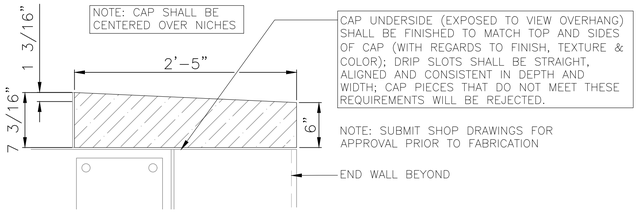

2 COLUMBARIUM PIER END CAP SECTION
1" = 1'-0"

CAP SCHEDULE

TYPE	CAP LENGTH (SEE NOTES BELOW)	CAP WIDTH
A	2'–5"	4'–4"
B	2'–11 3/4"	4'–4"

BASE SCHEDULE

TYPE	BASE LENGTH	BASE WIDTH
A	1'–0 5/8"	3"
B	2'–11 3/4"	3"

NOTES:
1. MINIMUM CAP AND BASE LENGTH SHALL BE 3 NICHE UNITS WIDE UNLESS SHOWN OTHERWISE.
2. ALL CAP AND BASE DIMENSIONS SHOWN ARE FOR INFORMATIONAL PURPOSES ONLY. CONTRACTOR SHALL FIELD VERIFY AND SHALL SHOW ON SHOP DRAWINGS.
3. CENTERLINE OF ALL CAP AND BASE JOINTS SHALL ALIGN WITH THE CENTERLINE OF PRE–CAST CONCRETE UNIT WEB (CENTERLINE OF GAP BETWEEN NICHES). ALL CAP AND BASE LENGTHS SHALL BE APPROVED BY THE RESIDENT ENGINEER PRIOR TO FABRICATION, PROVIDE SHOP DRAWINGS FOR APPROVAL; COORDINATE ALL CAP AND BASE LAYOUTS WITH THE PRE–CAST FABRICATOR.
4. PROVIDE 1/4" (± 1/16") JOINT BETWEEN PRE–CAST WALL CAP AND BASE SEGMENTS; COLOR OF SEALANT TO MATCH PRE–CAST WALL CAP.

3 CAP & BASE SCHEDULE
1" = 1'-0"

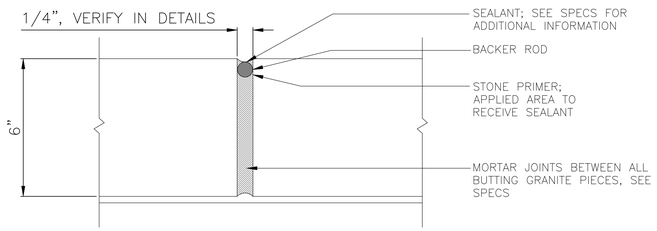

4 SEALED JOINTS - TYPICAL ALL STONE TO STONE CONNECTIONS AS INDICATED
1" = 1'-0"

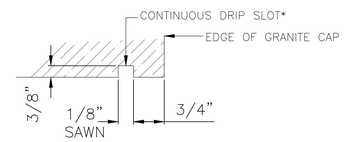

*NOTE: DRIP SLOT TO MAKE 90° CORNER AT END CAPSTONES

8 DRIP SLOT
1" = 1'-0"

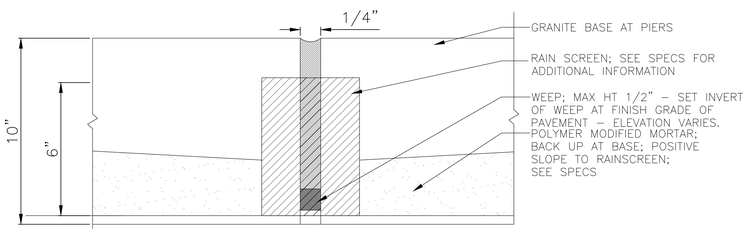

5 ELEVATION OF BASE (TOE KICK) BUTT JOINTS AT FACE OF PIERS
1" = 1'-0"

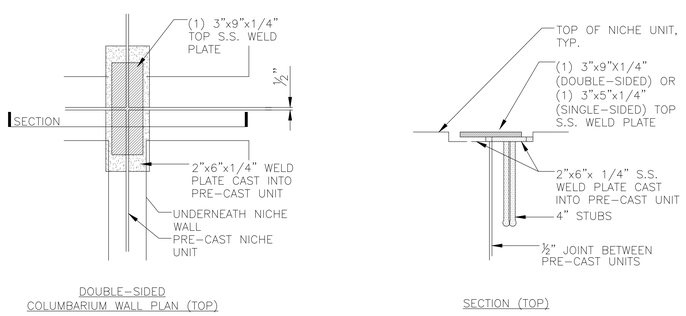

6 WELD PLATE ENLARGEMENT
1" = 1'-0"

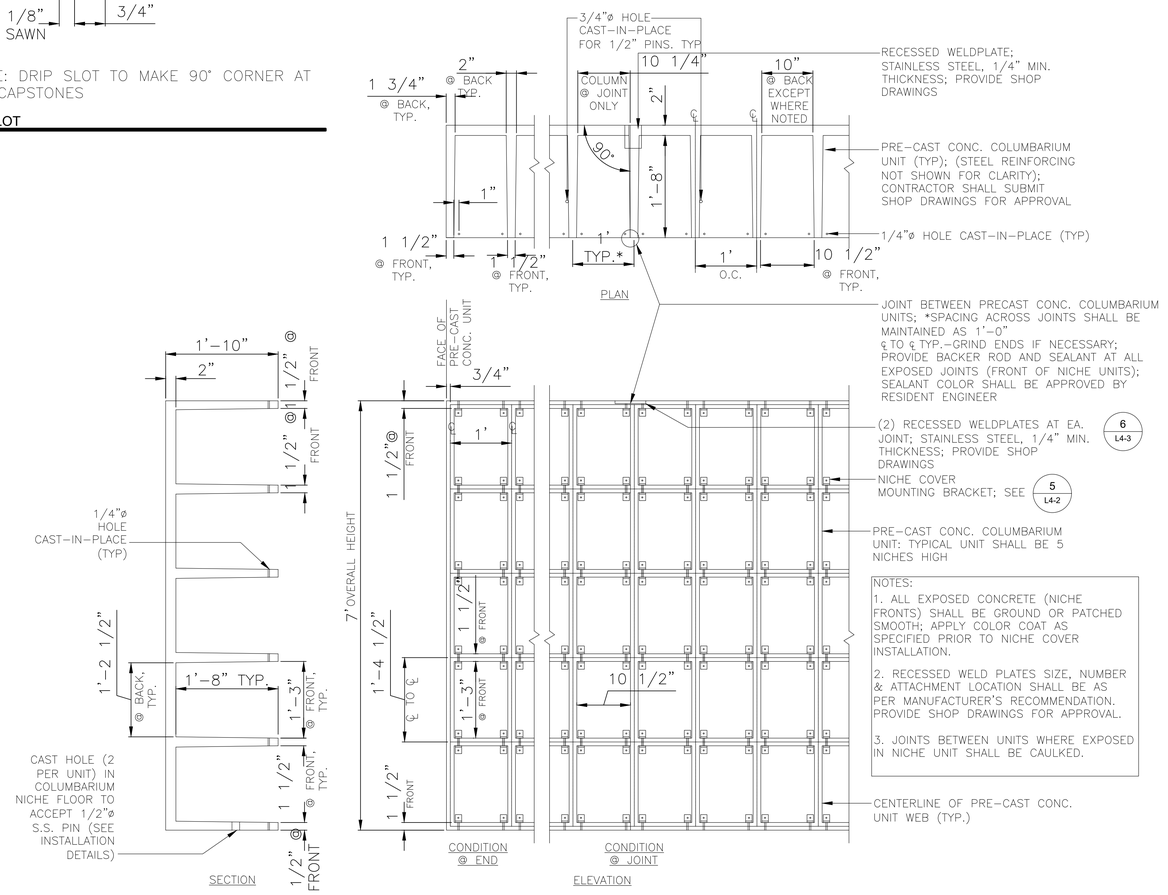

7 PRE-CAST COLUMBARIUM UNITS WITH SPECIAL INTERMEDIATE JOINT
1" = 1'-0"

Revisions:	Date:

CONSULTANT

LANDSCAPE ARCHITECT:
IBI Placemaking
21 Custom House Street, 3rd Floor
Boston, MA
+1 617 896 2500

IBI PLACEMAKING
21 Custom House Street, Boston, MA 02110
tel +1 617 896 2500 www.IBIplacemaking.com

ARCHITECT/ENGINEER OF RECORD

BRYANT ASSOCIATES
Engineers Surveyors Construction Managers
640 George Washington Hwy, Bldg. C, Suite 100
Lincoln, RI 02865
+1 401 722 7660

STAMP

Drawing Title: COLUMBARIUM DETAILS

Phase: 100% BID DOCUMENTS

Approved: Project Director

Project Title: Rhode Island Veterans Memorial Cemetery Columbarium Plaza Expansion CW-4 Project – Phase 1

Project Number: FAI RI -19-10

Building Number:

Location: 301 South County Trail Exeter, Rhode Island

Issue Date: 3/23/2020

Checked:

Drawn:

Drawing Number: L4-3

VA FORM 08 - 6231

\\usaeast.ibigroup.com\A\BO\123362_RIVMCColumbiNiches\7.0_Production\7.03_Design\05_Landscape\Sheets\L4-3 Columbarium Details.dwg March 24, 2020 – 2:22pm shane.lougee

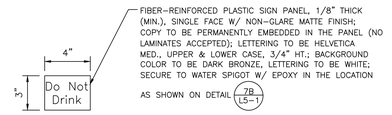

B DO NOT DRINK SIGN

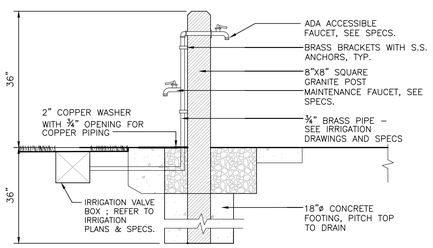

A GRANITE POST WITH FAUCET

9 GRANITE POST WITH FAUCET
N.T.S.

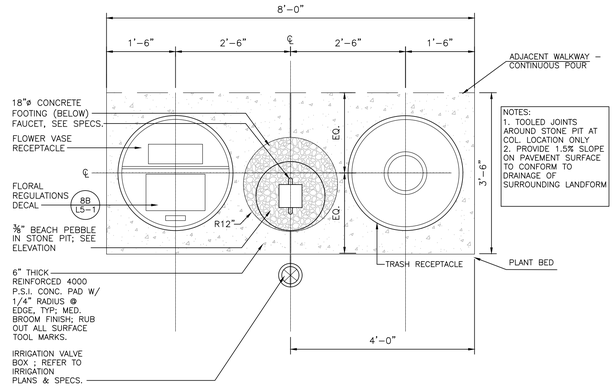

A PLAN

7 WATERING STATION
N.T.S.

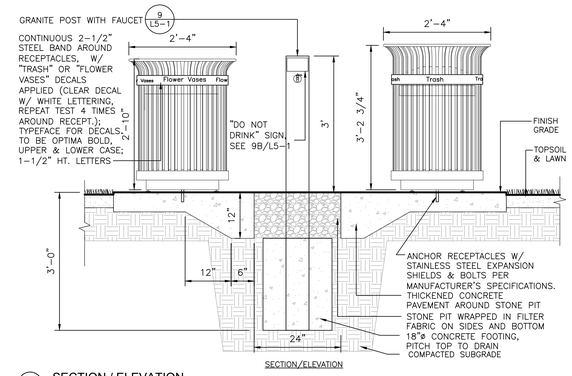

B SECTION / ELEVATION

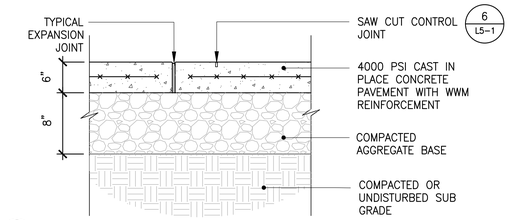

1 CONCRETE PAVEMENT
1 1/2" = 1'-0"

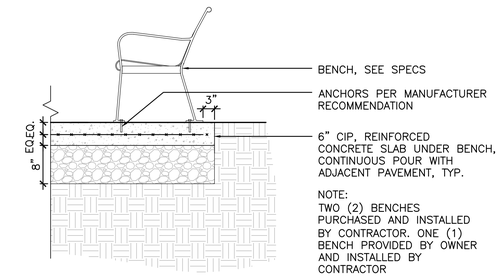

2 BENCH MOUNTING
3/4" = 1'-0"

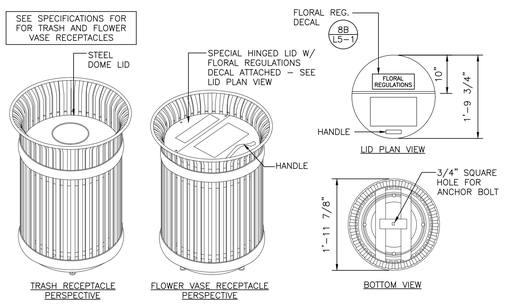

A TRASH AND FLOWER VASE RECEPTACLE DETAILS

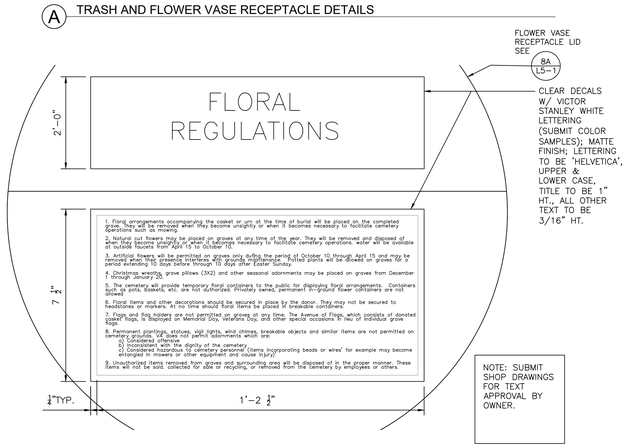

B FLORAL REGULATIONS DECAL(S)

8 TRASH AND FLOWER VASE RECEPTACLES
N.T.S.

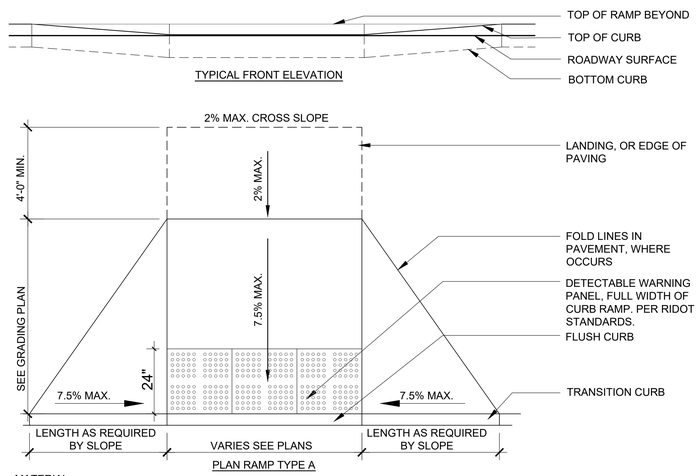

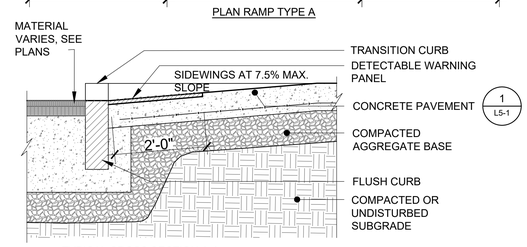

4 CURB RAMP
3/4" = 1'-0"

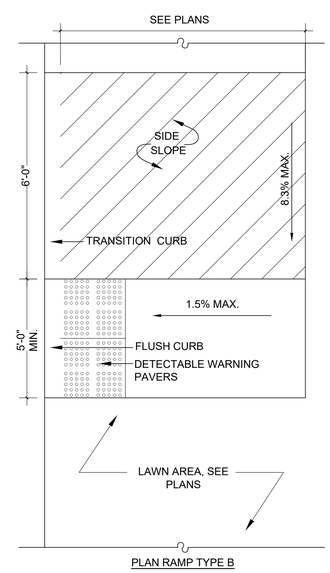

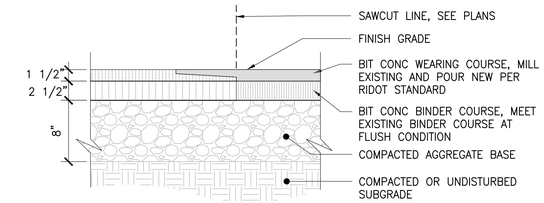

3 BITUMINOUS CONCRETE PAVEMENT PER RIDOT STANDARDS
1 1/2" = 1'-0"

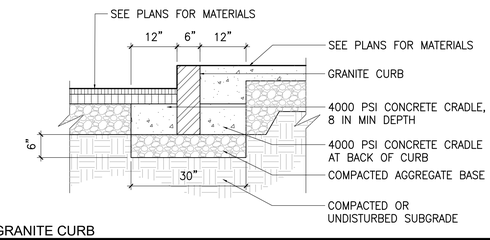

5 GRANITE CURB
3/4" = 1'-0"

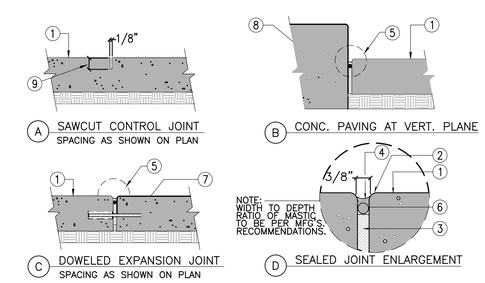

6 JOINT DETAILS
3/4" = 1'-0"

Revisions:	Date:

CONSULTANT

LANDSCAPE ARCHITECT:
IBI Placemaking
21 Custom House Street, 3rd Floor
Boston, MA
+1 617 896 2500

IBI PLACEMAKING
21 Custom House Street, Boston, MA 02110
tel +1 617 896 2500 www.ibiplacemaking.com

ARCHITECT/ENGINEER OF RECORD

BRYANT ASSOCIATES
Engineers Surveyors Construction Managers
640 George Washington Hwy, Bldg. C, Suite 100
Lincoln, RI 02865
+1 401 722 7660

STAMP

REGISTERED ARCHITECT JOHN N. AMODEO No.415

State of Rhode Island and Providence Plantations OFFICE OF VETERANS SERVICES

Drawing Title: SITE DETAILS	Phase: 100% BID DOCUMENTS
Approved: Project Director	

Project Title: Rhode Island Veterans Memorial Cemetery Columbarium Plaza Expansion CW-4 Project – Phase 1	Project Number: FAI RI -19-10
	Building Number:
Location: 301 South County Trail Exeter, Rhode Island	Drawing Number: L5-1
Issue Date: 3/23/2020 · Checked: · Drawn:	

VA FORM 08 - 6231

\\useast.ibigroup.com\J\BO\123362_RIVMCColumbiNiches\7.0_Production\7.03_Design\05_Landscape\Sheets\L5-1.dwg 3/24/2020 2:23pm shane.lougee

File Location: \\useast.ibigroup.com\J\BO\123362_RIVMCColumbiNiches\7.0_Production\7.03_Design\05_Landscape\Sheets\L5-1.dwg Last Saved: March 24, 2020, by shane.lougee Plotted: Tuesday, March 24, 2020 2:23:05 PM by Shane Lougee

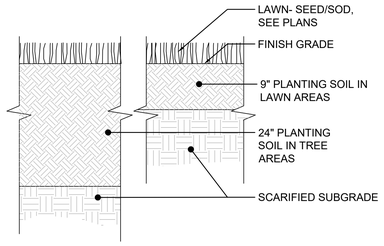

1 LAWN- SEED AND SOD
1" = 1'-0"

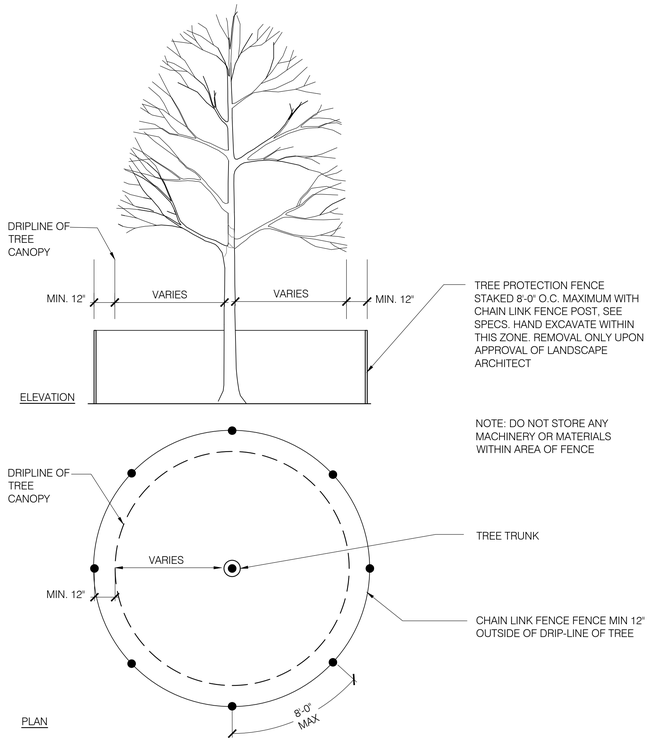

2 TREE PROTECTION
1/2" = 1'-0"

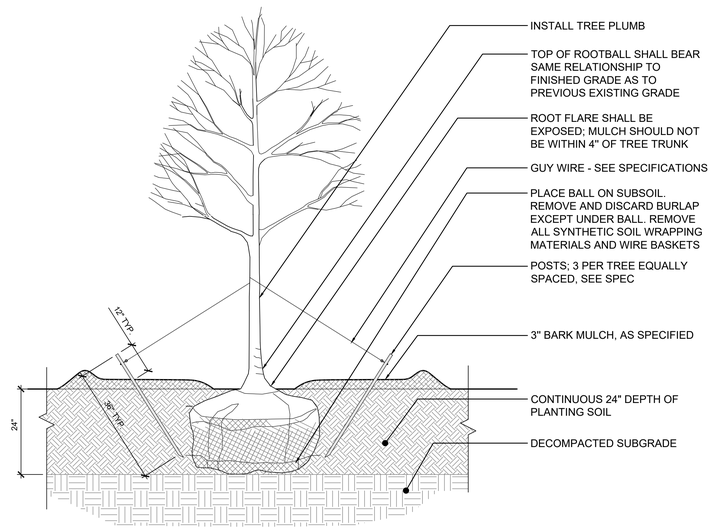

3 TREE PLANTING
1/2" = 1'-0"

Revisions:	Date:

CONSULTANT

LANDSCAPE ARCHITECT:
IBI Placemaking
21 Custom House Street, 3rd Floor
Boston, MA
+1 617 896 2500

IBI PLACEMAKING
21 Custom House Street, Boston, MA 02110
tel +1 617 896 2500 www.IBIplacemaking.com

ARCHITECT/ENGINEER OF RECORD

BRYANT ASSOCIATES
Engineers Surveyors Construction Managers
640 George Washington Hwy, Bldg. C, Suite 100
Lincoln, RI 02865
+1 401 722 7660

STAMP

REGISTERED LANDSCAPE ARCHITECT
JOHN N. AMODEO
No. 415

State of Rhode Island and Providence Plantations
OFFICE OF VETERANS SERVICES

Drawing Title	Phase	Project Title	Project Number
SITE DETAILS	100% BID DOCUMENTS	Rhode Island Veterans Memorial Cemetery Columbarium Plaza Expansion CW-4 Project – Phase 1	FAI RI -19-10
Approved: Project Director		Location: 301 South County Trail, Exeter, Rhode Island	Building Number
		Issue Date: 3/23/2020 · Checked · Drawn	Drawing Number: L5-2

VA FORM 08 - 6231

\\usaeast.ibigroup.com\a\80\123362_RWMCColumbiaNiches\7.0_Production\7.03_Design\05_Landscape\Sheets\L5-2 Site Details.dwg Layout: L5-2 March 24, 2020 - 2:29pm shane.lougee

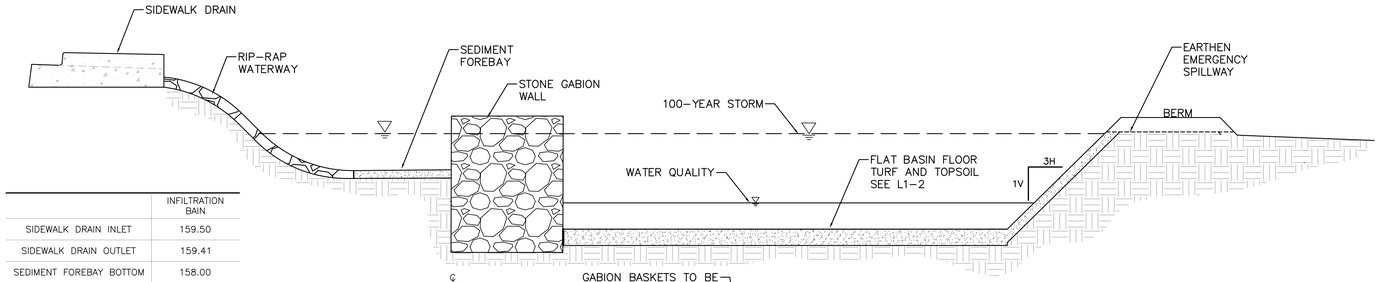

	INFILTRATION BAIN
SIDEWALK DRAIN INLET	159.50
SIDEWALK DRAIN OUTLET	159.41
SEDIMENT FOREBAY BOTTOM	158.00
GABION TOP ELEVATION	159.50
GABION BOTTOM ELEVATION	155.50
BASIN BOTTOM ELEV.	156.00
BOTTOM TOPSOIL ELEV.	155.25
MIN. BERM ELEV.	159.00
SPILLWAY ELEV.	158.81
SEASONAL HIGH GROUND WATER TABLE ELEV.	151.00
WQ STORM ELEV	156.21
"STORM EVENT ELEVATIONS 1-YEAR"	156.62
10-YEAR	157.50
100-YEAR	158.81

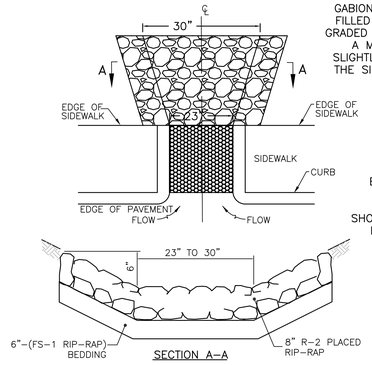

RIP-RAP WATERWAY
(NOT TO SCALE)

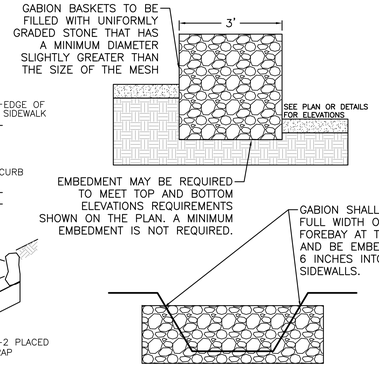

STONE GABION WALL DETAIL

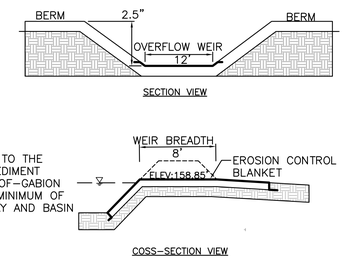

EARTHEN EMERGENCY SPILLWAY

1 INFILTRATION BASIN
(NOT TO SCALE)

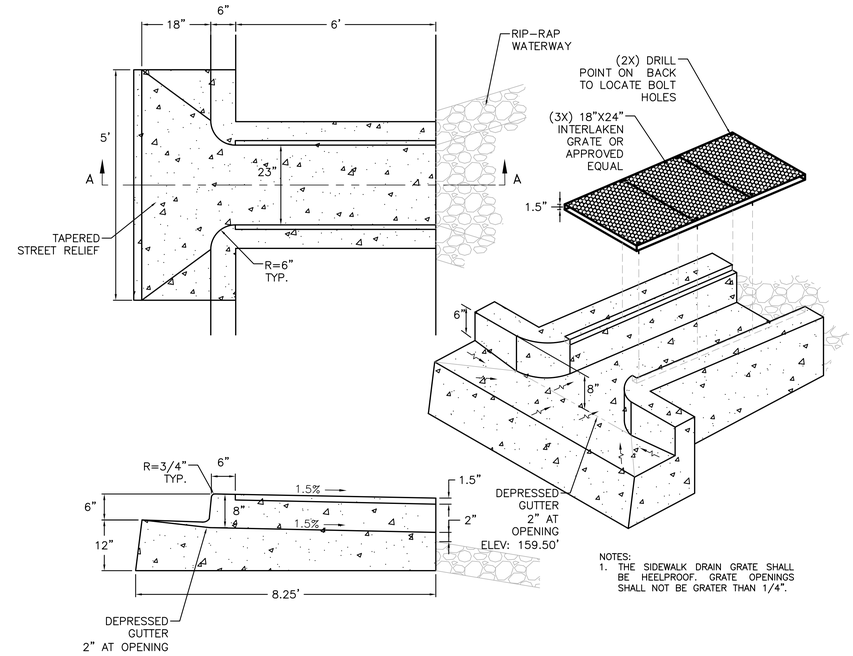

NOTES:
1. THE SIDEWALK DRAIN GRATE SHALL BE HEELPROOF. GRATE OPENINGS SHALL NOT BE GRATER THAN 1/4".

3 SIDEWALK DRAIN
(NOT TO SCALE)

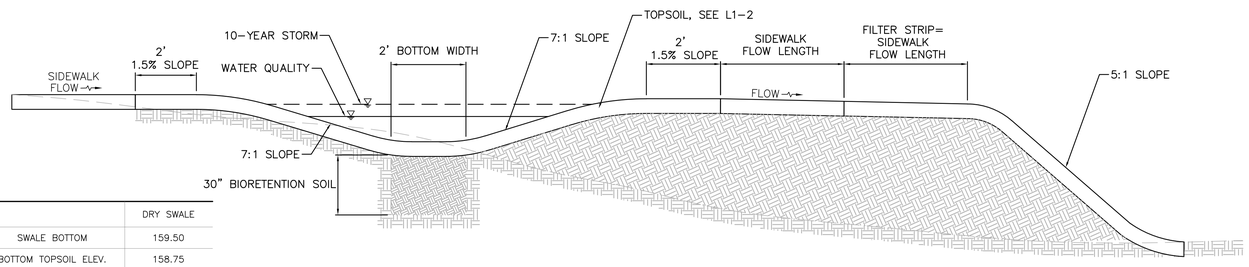

	DRY SWALE
SWALE BOTTOM	159.50
BOTTOM TOPSOIL ELEV.	158.75
BIORETENTION TOPSOIL ELEV.	156.25
SEASONAL HIGH GROUND WATER TABLE ELEV.	151.00±
STORM EVENT ELEVATIONS 1-YEAR	157.66
10-YEAR	159.85

2 DRY SWALE
(NOT TO SCALE)

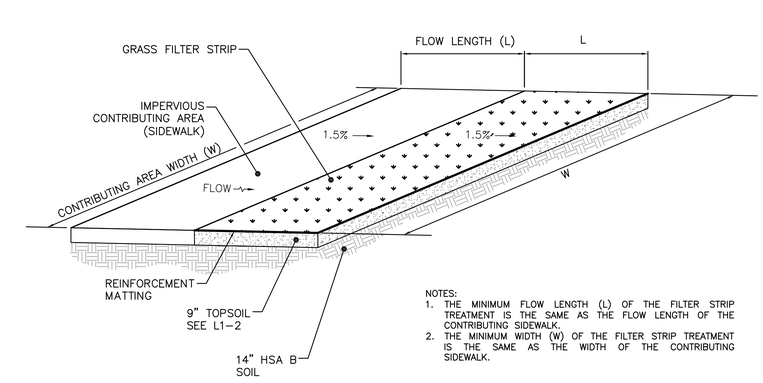

NOTES:
1. THE MINIMUM FLOW LENGTH (L) OF THE FILTER STRIP TREATMENT IS THE SAME AS THE FLOW LENGTH OF THE CONTRIBUTING SIDEWALK.
2. THE MINIMUM WIDTH (W) OF THE FILTER STRIP TREATMENT IS THE SAME AS THE WIDTH OF THE CONTRIBUTING SIDEWALK.

4 FILTER STRIP
(NOT TO SCALE)

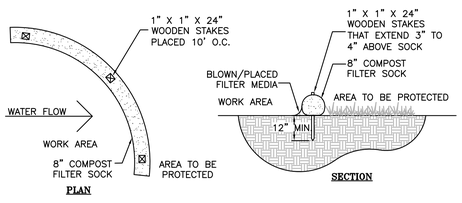

5 COMPOST FILTER SOCK DETAIL
NOT TO SCALE

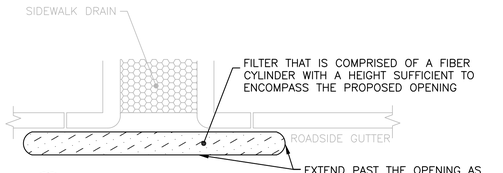

6 CURB INLET FILTER
(NOT TO SCALE)

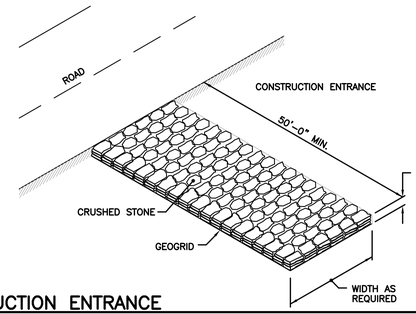

NOTE:
SHALL BE IN ACCORDANCE WITH CONSTRUCTION ENTRANCE SPECIFICATION.

5 CONSTRUCTION ENTRANCE
(NOT TO SCALE)

Revisions:	Date:

CONSULTANT

LANDSCAPE ARCHITECT:
IBI Placemaking
21 Custom House Street, 3rd Floor
Boston, MA
+1 617 896 2500

IBI PLACEMAKING
21 Custom House Street, Boston, MA 02110
tel +1 617 896 2500 www.IBIplacemaking.com

ARCHITECT/ENGINEER OF RECORD

BRYANT ASSOCIATES
Engineers Surveyors Construction Managers
640 George Washington Hwy, Bldg. C, Suite 100
Lincoln, RI 02865
+1 401 722 7660

STAMP
TODD E. BRAYTON
No. 9000
REGISTERED PROFESSIONAL ENGINEER (CIVIL)

State of Rhode Island and Providence Plantations
OFFICE OF VETERANS SERVICES

Drawing Title	CIVIL-SITE DETAILS
Phase	100% BID DOCUMENTS
Approved: Project Director	
Project Title	Rhode Island Veterans Memorial Cemetery Columbarium Plaza Expansion CW-4 Project – Phase 1
Project Number	FAI RI -19-10
Building Number	
Location	301 South County Trail Exeter, Rhode Island
Issue Date	3/23/2020
Checked	TEB
Drawn	LGA
Drawing Number	C2-1

VA FORM 08 - 6231

\\ri-2018-dcfs01\Proj\219094\DWG\C2-1-SITE-CIVIL DETAILS.dwg March 24, 2020 – 2:18pm lalmeida 6/14/2009 12:39:03 PM

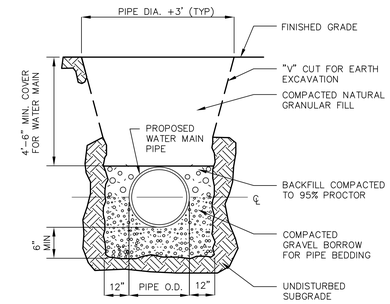

NOTES:
CONTRACTOR SHALL PROVIDE SHEETING FOR TRENCHES OR SLOPED WALLS IN ACCORDANCE WITH APPLICABLE SAFETY REGULATIONS.

TRENCH DETAIL FOR NEW WATER PIPE

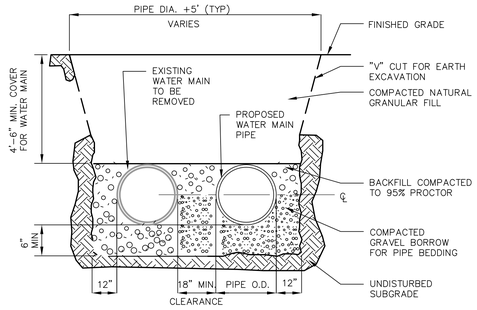

NOTES:
CONTRACTOR SHALL PROVIDE SHEETING FOR TRENCHES OR SLOPED WALLS IN ACCORDANCE WITH APPLICABLE SAFETY REGULATIONS.

TRENCH DETAIL FOR WATER PIPE RELOCATION

1 TRENCH DETAIL FOR DUCTILE IRON PIPE
(NOT TO SCALE)

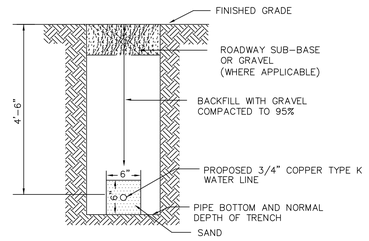

2 TRENCH DETAIL FOR WATER SERVICE
(NOT TO SCALE)

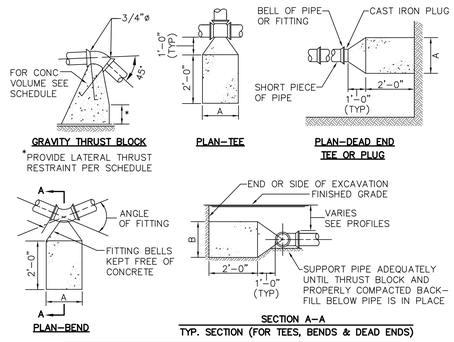

THRUST BLOCK SCHEDULE							
AREA REQUIRED BY TYPE OF FITTINGS (IN SQ. FT.)							
PIPE SIZE	END,TEE OR PLUG	1/4 BEND	1/8 BEND	1/16 BEND	1/32 BEND	*LATERAL RESTRAINT	CONC VOL.(CY)
6"	3.25	4.50	2.50	1.25	0.75	1.00	2.00
8"	5.50	8.00	4.25	2.25	1.00	1.75	3.40
12"	11.75	16.50	9.00	4.50	2.50	3.50	7.20
16"	20.50	29.00	15.75	8.00	4.00	6.00	12.50
20"							

*NOTE: HEIGHT OF THRUST BLOCK "B" SHOULD BE BETWEEN ONE TO TWO TIMES THE WIDTH OF "A".
THRUST BLOCK SCHEDULE ASSUMES 200 PSI, WATER PRESSURE 5'-6" COVER PIPE AND 3,500 psi SOIL BEARING STRENGTH.

3 THRUST BLOCK DETAIL
(NOT TO SCALE)

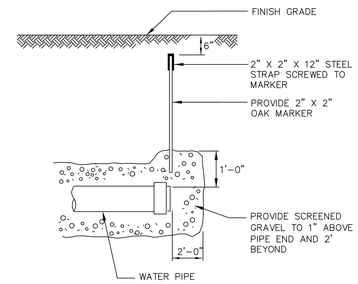

4 WATER PIPE STUB MARKER
(NOT TO SCALE)

NOTES:

1. ALL FITTINGS TO BE POLYETHYLENE WRAPPED TO PROTECT FROM CORROSION.
2. THIS PROCEDURE WILL INVOLVE A MAIN LINE SHUT DOWN THAT THE CONTRACTOR WILL COORDINATE WITH QUONSET DEVELOPMENT CORPORATION PRIOR TO THE START OF ANY WORK.

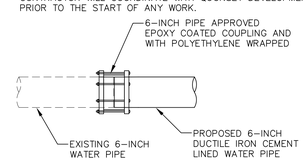

5 TYPICAL WATER PIPE CONNECTION
(NOT TO SCALE)

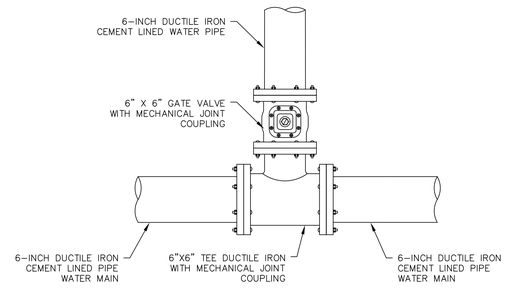

PLAN

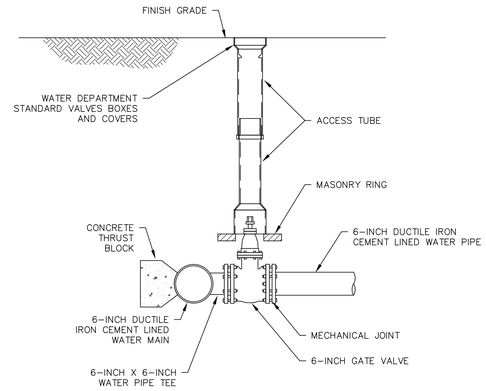

SECTION

6 TYPICAL WATER PIPE TEE CONNECTION WITH GATE VALVE
(NOT TO SCALE)

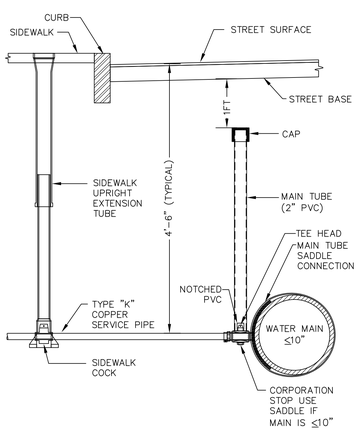

1 TYPICAL WATER CONNECTION FOR 3/4" SERVICE PIPE TO 6" WATER MAIN
(NOT TO SCALE)

Revisions:	Date:

CONSULTANT

LANDSCAPE ARCHITECT:
IBI Placemaking
21 Custom House Street, 3rd Floor
Boston, MA
+1 617 896 2500

IBI PLACEMAKING
21 Custom House Street, Boston, MA 02110
tel +1 617 896 2500 www.ibiplacemaking.com

ARCHITECT/ENGINEER OF RECORD

BRYANT ASSOCIATES
Engineers Surveyors Construction Managers
640 George Washington Hwy, Bldg. C, Suite 100
Lincoln, RI 02865
+1 401 722 7660

STAMP
TODD E. BRAYTON
REGISTERED PROFESSIONAL ENGINEER (CIVIL)
3/23/2020

State of Rhode Island and Providence Plantations
OFFICE OF VETERANS SERVICES

Drawing Title: CIVIL-SITE DETAILS
Phase: 100% BID DOCUMENTS
Project Title: Rhode Island Veterans Memorial Cemetery Columbarium Plaza Expansion CW-4 Project – Phase 1
Project Number: FAI RI -19-10
Building Number:
Approved: Project Director
Location: 301 South County Trail Exeter, Rhode Island
Drawing Number: C2-2
Issue Date: 3/23/2020
Checked: JRC
Drawn: SKL

VA FORM 08 - 6231

\\ri-2018-dcfs01\Proj\219094\DWG\C2-2-SITE-CIVIL DETAILS.dwg March 24, 2020 - 2:36pm lalmeida
6/14/2009 12:39:03 PM

GENERAL STRUCTURAL NOTES:

1. ALL STRUCTURAL DRAWINGS SHALL BE USED IN CONJUNCTION WITH THE LANDSCAPE, CIVIL, AND SHOP DRAWINGS AND SPECIFICATIONS. SOME DIMENSIONS, SECTIONS, AND DETAILS MAY BE SHOWN ON THE LANDSCAPE AND/OR CIVIL DRAWINGS.
2. THE CONTRACTOR SHALL REVIEW AND VERIFY DIMENSIONS SHOWN IN ALL PLANS AND REVIEW ALL FIELD CONDITIONS THAT MAY AFFECT THE INSTALLATION OF THE STRUCTURE(S). SHOULD DISCREPANCIES APPEAR, THE CONTRACTOR SHALL NOTIFY THE ENGINEER IN WRITING TO OBTAIN ENGINEER'S CLARIFICATION BEFORE COMMENCING WITH THE WORK.
3. FOR ALL ITEMS EMBEDDED IN OR PASSED THROUGH CONCRETE AND RECESSES NOT SHOWN ON THE STRUCTURAL DRAWINGS, THE CONTRACTOR SHALL INITIALLY REFER TO LANDSCAPE AND CIVIL DRAWINGS FOR THE TYPE, SIZE, LOCATION, AND SPECIAL INSTALLATION REQUIREMENTS FOR THESE ITEMS.
4. THE CONTRACTOR SHALL TAKE ANY AND ALL NECESSARY MEASURES TO PROTECT EXISTING STRUCTURES FROM DAMAGE WHEN WORKING IN AND AROUND EXISTING STRUCTURES PERFORMING WORK SUCH AS FOUNDATION EXCAVATION AND OTHERS.
5. SIZE AND LOCATION OF PRECAST CONCRETE NICHE UNITS AND ANCHOR BOLTS SHALL BE PER THE PRECAST CONCRETE MANUFACTURERS REQUIREMENTS. CONTRACTOR SHALL VERIFY PLACEMENT OF PRECAST CONCRETE NICHE UNITS FOR MANUFACTURERS AND VENDERS SPECIFICATIONS. IT SHALL BE THE RESPONSIBILITY OF THE CONTRACTOR TO PROVIDE FOR PROPER ATTACHMENT TO STRUCTURAL FOUNDATIONS.
6. ALL DETAILS AND SECTIONS SHOWN ON THE DRAWINGS ARE INTENDED TO BE TYPICAL AND SHALL BE CONSIDERED TO APPLY TO ANY SIMILAR SITUATION ELSEWHERE ON THE PROJECT, EXCEPT WHERE A DIFFERENT DETAIL IS SHOWN.
7. STANDARD DETAILS APPLY TO ALL SIMILAR SITUATIONS ON THE PROJECT, EXCEPT WHERE A DIFFERENT DETAIL IS SHOWN.
8. THE CONTRACT STRUCTURAL DRAWINGS AND SPECIFICATIONS REPRESENT THE FINISHED STRUCTURE. UNLESS OTHERWISE INDICATED, THEY DO NOT INDICATE THE MEANS, METHODS, TIMING, OR PROCEDURES USED TO COMPLETE THE CONSTRUCTION. TEMPORARY BRACING, SHORING, OR PROTECTION OF THE STRUCTURE AGAINST WIND, ERECTION AND OTHER SITE CONDITIONS DURING CONSTRUCTION OF THE FACILITY SHALL BE THE RESPONSIBILITY OF CONTRACTOR. THE CONTRACTOR IS SOLELY RESPONSIBLE FOR THE PROTECTION OF THE STRUCTURE DURING ALL PHASES OF DEMOLITION, CONSTRUCTION, AND INSTALLATION.
9. ALL CONSTRUCTION PROCEDURES SHALL COMPLY WITH THE SAFETY REQUIREMENTS OF OSHA, THE OWNER, AND OTHER APPLICABLE REGULATIONS.
10. SHOP DRAWINGS PREPARED BY SUPPLIERS, SUB CONTRACTORS, ETC, SHALL BE DIMENSIONED, REVIEWED, COORDINATED, AND SIGNED/STAMPED BY THE GENERAL CONTRACTOR PRIOR TO SUBMITTING TO THE STRUCTURAL ENGINEER. MANUFACTURED COMPONENTS SUCH AS STONE VENEER OR PRECAST CONCRETE SHALL BE ENGINEERED AND STAMPED PRIOR TO SUBMISSION.
11. FABRICATOR SHALL CLEARLY NOTE CHANGES MADE IN THE SHOP DRAWINGS WHICH DO NOT COMPLY WITH THE CONTRACT DOCUMENTS. REVIEWED APPROVAL SHOP DRAWINGS SHOWING ENGINEERS COMMENTS ACCOMPANIED WITH RECORD SET SHOP DRAWINGS, SHALL BE AVAILABLE FOR REFERENCE AT THE CONSTRUCTION SITE.

CONSTRUCTION RESPONSIBILITY:

1. THE CONTRACT STRUCTURAL DRAWINGS AND SPECIFICATIONS REPRESENT THE COMPLETED STRUCTURE AND ARE NOT INTENDED TO INDICATE THE METHOD OR MEANS OF CONSTRUCTION. THE CONTRACTOR SHALL SUPERVISE AND DIRECT THE WORK AND SHALL BE SOLELY RESPONSIBLE FOR ALL CONSTRUCTION MEANS, METHODS, PROCEDURES, TECHNIQUES, SEQUENCES, AND FOR JOB SAFETY.
2. THE ENGINEER DOES NOT HAVE CONTROL OR CHARGE OF, AND SHALL NOT BE RESPONSIBLE FOR, CONSTRUCTION MEANS, METHODS, TECHNIQUES, SEQUENCES, OR PROCEDURES, FOR SAFETY PRECAUTIONS AND PROGRAMS IN CONNECTION WITH THE WORK, FOR THE ACTS OR OMISSIONS OF THE CONTRACTOR, SUBCONTRACTOR, OR ANY OTHER PERSONS PERFORMING ANY OF THE WORK, OR FOR THE FAILURE OF ANY OF THEM TO CARRY OUT THE WORK IN ACCORDANCE WITH THE CONTRACT DOCUMENTS.
3. PERIODIC SITE OBSERVATION VISITS MAY BE PROVIDED BY THE STRUCTURAL ENGINEER. THE SOLE PURPOSE OF THESE OBSERVATIONS IS TO REVIEW THE GENERAL CONFORMANCE OF THE CONSTRUCTION WITH THE STRUCTURAL CONTRACT DOCUMENTS. THESE LIMITED OBSERVATIONS SHOULD NOT BE CONSTRUED AS CONTINUOUS OR EXHAUSTIVE TO VERIFY THAT ALL CONSTRUCTION IS IN COMPLIANCE WITH THE CONSTRUCTION DOCUMENTS. THE GENERAL CONTRACTOR SHALL BE RESPONSIBLE FOR PERFORMING ALL WORK IN COMPLIANCE WITH THE CONSTRUCTION DOCUMENTS.

DESIGN CRITERIA

1. THE DESIGN IS FOR COLUMBARIUM FOUNDATIONS AT THE RHODE ISLAND VETERANS MEMORIAL CEMETERY, EXETER, RHODE ISLAND.
2. RHODE ISLAND STATE BUILDING CODE - 2019
3. INTERNATIONAL BUILDING CODE - 2015
4. REFERENCE STANDARDS: UNLESS OTHERWISE NOTED, ALL STANDARDS SHALL BE CURRENT EDITION, WITH LATEST ADDENDA, IF APPLICABLE.

LOADS:

WINDLOADS:
- BASIC WIND SPEED 126 MPH
- EXPOSURE CATEGORY C
- RISK CATEGORY I

DEADLOADS:
- COLUMBARIUM WEIGHT

LIVELOADS:
- GROUND SNOWLOAD 40 PSF

SEISMIC DESIGN PARAMETERS:
- RISK CATEGORY I
- MAPPED SPECTRAL RESPONSE Ss = .168
  S1 = .059
- SITE CLASS "D"
- DESIGN SPECTRAL RESPONSE SDS= .179
  SD1= .095
- SEISMIC DESIGN CATEGORY "B"

FOUNDATION NOTES:

1. FOUNDATION DESIGN BASED ON THE GEOTECHNICAL REPORT DATED JANUARY 2020, PREPARED BY GZA GEOENVIRONMENTAL, INC.
2. CONTRACTOR SHALL BE FAMILIAR WITH THE SUBSURFACE CONDITIONS AND GEOTECHNICAL REPORT BEFORE COMMENCING EXCAVATION.
3. PER THE GEOTECHNICAL REPORT, SAMPLES COLLECTED WHILE DRILLING THE TEST BORINGS TRANSITIONED FROM MOIST TO SATURATED AT A DEPTH OF 14 FEET BELOW GROUND SURFACE.
4. FOUNDATIONS ARE DESIGNED FOR A NET ALLOWABLE BEARING CAPACITY OF 4,000 PSF. CONTRACTOR SHALL VERIFY SOIL CONDITIONS AND BEARING CAPACITY PRIOR TO CONSTRUCTION.
5. THE CONTRACTOR SHALL VISIT THE SITE PRIOR TO BIDDING. ANY PROBLEMS WITH ACCESS, INTERFERENCE, ETC. SHALL BE RESOLVED PRIOR TO MOVING ONTO THE JOB SITE.
6. CONTRACTOR SHALL BE RESPONSIBLE FOR LOCATING, PROTECTING, AND RELOCATING AS REQUIRED ALL SERVICE AND UNDERGROUND UTILITIES IN THE VICINITY OF THE WORK SITE PRIOR TO BEGINNING WORK. ALL EXCAVATIONS NEAR THESE LINES TO BE CARRIED OUT WITH EXTREME CAUTION. COORDINATE ALL RELOCATIONS WITH THE PROPERTY OWNER.
7. CLEAR THE FOUNDATION AREA BY REMOVING SURFACE VEGETATION, GRASS, SHRUBS, TREES, AND TOPSOIL FOR COMPACTION.
8. ALL BACKFILL SHALL MEET THE GRADATION REQUIREMENTS OF THE GEOTECHNICAL REPORT.
9. ON-SITE EXCAVATED MATERIAL MAY ONLY BE SUITABLE FOR USE AS GRANULAR FILL IF IT CONFORMS TO THE SPECIFICATIONS NOTED AND IS APPROVED FOR USE BY THE GEOTECHNICAL ENGINEER. REFER TO GEOTECHNICAL REPORT FOR MORE INFORMATION.
10. FILL MATERIALS ARE TO BE PLACED, COMPACTED, AND TESTED IN MAXIMUM LAYERS OF 12". COMPACTION OF ALL FILL MATERIAL SHALL ACHIEVE 95 PERCENT OF MAXIMUM DRY DENSITY AT OPTIMUM MOISTURE CONTENT IN ACCORDANCE WITH ASTM D698. ALL TESTS MUST MEET THE MINIMUM SPECIFIED SOIL BEARING CAPACITY. COMPACTION TESTING IS BY THE GEOTECHNICAL TESTING COMPANY DESIGNATED FOR THE PROJECT. SCHEDULING AND COORDINATION IS THE RESPONSIBILITY OF THE GENERAL CONTRACTOR. REPORTS OF ALL TESTING ARE TO BE PROMPTLY DELIVERED TO THE ENGINEER.
11. WHERE BOTTOMS OF FOOTING BEARING SURFACES ARE DISTURBED, THEY SHALL BE FILLED WITH THE APPROVED MATERIAL AND COMPACTED AS NOTED ABOVE.
12. THE SITE SHALL BE MAINTAINED IN A WELL DRAINED CONDITION. EXCAVATIONS SHALL BE KEPT FREE OF STANDING WATER UNTIL CONCRETE IS PLACED.
13. FOOTINGS SHALL BEAR ON NATURAL UNDISTURBED SOIL OR ENGINEERED FILL. SOILS SHALL BE OBSERVED AND APPROVED BY A GEOTECHNICAL ENGINEER PRIOR TO PLACEMENT OF FOOTING CONCRETE. IF NATURAL UNDISTURBED SOILS ARE NOT ENCOUNTERED AND/OR INADEQUATE SOILS ARE NOTED AT FOOTING BEARING LEVEL. ARCHITECT/ENGINEER SHALL BE NOTIFIED PRIOR TO PROCEEDING WITH FURTHER WORK AT THOSE FOOTING LOCATIONS.
14. PROTECT FOOTINGS FROM THE ACTION OF WATER OR FREEZING.
15. FOOTINGS ARE CENTERED UNDER WALLS ABOVE, UNLESS OTHERWISE NOTED.
16. PRIOR TO PLACEMENT OF FOOTING CONCRETE, CLEAN FOOTING EXCAVATIONS OF SNOW, WATER, MUD, DIRT, AND DEBRIS.
17. FOOTINGS SHALL NOT BE EARTH FORMED.
18. THE CONTRACT STRUCTURAL DOCUMENTS AND SPECIFICATIONS REPRESENT THE FINISHED STRUCTURE. THE MEANS AND METHODS USED TO PERFORM THE EXCAVATION IS AT THE SOLE DISCRETION OF THE CONTRACTOR, INCLUDING THE DESIGN AND INSTALLATION OF TEMPORARY BRACING OR SHORING. CONTRACTOR IS RESPONSIBLE FOR ALL CODE AND REGULATORY SAFETY REQUIREMENTS.

CONCRETE NOTES:

1. CONCRETE CONSTRUCTION SHALL CONFORM TO AMERICAN CONCRETE INSTITUTE (ACI) CODES AND SPECIFICATIONS, LATEST EDITION. REFER TO SPECIFICATIONS FOR ADDITIONAL INFORMATION.
2. CONCRETE SHALL HAVE A MINIMUM COMPRESSIVE STRENGTH OF 4,000 PSI AT 28 DAYS.
3. ALL EXPOSED CONCRETE SHALL HAVE AN AIR ENTRAINING AGENT.
4. WATER REDUCING AGENT SHALL BE IN ACCORDANCE WITH ASTM C494.
5. CONCRETE SHALL HAVE A SLUMP BETWEEN 3" TO 6".
6. CONCRETE MIX DESIGNS SHALL BE BY AN INDEPENDENT TESTING LABORATORY AND SUBMITTED FOR REVIEW & APPROVAL.
7. CAST-IN-PLACE CONCRETE SHALL BE SUBJECT TO TESTING BY AN INDEPENDENT TESTING LABORATORY. SEE PROJECT SPECIFICATIONS FOR REQUIREMENTS.
8. NON-WELDED REINFORCING STEEL SHALL BE GRADE 60 DEFORMED, BILLET-STEEL, ASTM A615, UON ALL WELDED WIRE FABRIC (WWF) SHALL BE PLAIN ASTM A185.
9. TEST CYLINDERS SHALL BE MOLDED AND LABORATORY CURED IN ACCORDANCE WITH ACI C172 (SAMPLING FRESH CONCRETE). THE CONTRACTOR SHALL OBTAIN THREE CONCRETE TEST CYLINDERS FROM EACH DAY'S CONCRETE POUR. CYLINDERS SHALL BE TESTED IN ACCORDANCE WITH THE LATEST REVISION TO ASTM C39 (COMPRESSIVE STRENGTH OF CYLINDRICAL CONCRETE SPECIMENS). FURNISH TWO (2) COPIES OF THE TEST RESULTS TO THE ENGINEER FOR THE 7 DAY BREAK AND 28 DAY BREAKS.
10. CLEAR CONCRETE COVER FOR ALL REINFORCING SHALL BE AS FOLLOWS, UNLESS OTHERWISE NOTED ON THE DRAWING:

CONCRETE ON SOIL	3"
SLAB ON GRADE	MIDHEIGHT
WALLS, STRUCTURAL SLABS	
FORMED AND EXPOSED TO EARTH OR WEATHER:	
#6 THROUGH #18	2"
#5 AND SMALLER	1 1/2"
NOT EXPOSED TO EARTH AND WEATHER:	
#11 AND SMALLER	3/4"
BEAMS AND COLUMNS (COVER TO STIRRUPS OR TIES)	1 1/2"

11. REINFORCING STEEL SHALL BE BENT, SPLICED, AND PLACED IN ACCORDANCE WITH ACI 301 (LATEST EDITION).
12. REINFORCING STEEL SHALL BE DETAILED (INCLUDING HOOKS AND BENDS) IN ACCORDANCE WITH ACI 315 AND 318. LAP ALL CONTINUOUS REINFORCEMENT 30 BAR DIAMETERS OR 2'_0" MINIMUM. PROVIDE CORNER BARS AT ALL WALL AND FOOTING INTERSECTIONS. LAP CORNER BARS 30 BAR DIAMETERS OR 2'_0" MINIMUM. LAP ADJACENT MATS OF WELDED WIRE FABRIC A MINIMUM OF 8" AT SIDES AND ENDS.
13. NO BARS PARTIALLY EMBEDDED IN HARDENED CONCRETE SHALL BE FIELD BENT UNLESS SPECIFICALLY SO DETAILED OR APPROVED BY THE STRUCTURAL ENGINEER.
14. PROVIDE ADEQUATE SUPPORT BARS AND ACCESSORIES TO HOLD REINFORCING BARS FIRMLY IN PLACE TO SPECIFIED COVERAGE.
15. CAST DOWELS, WITH STD 90° HOOK, IN FOOTINGS FOR CONCRETE PIERS AND WALLS ABOVE. DOWELS SHALL BE THE SAME SIZE AND NUMBER AS THE VERTICAL REINFORCING, UNLESS OTHERWISE NOTED.
16. CONCRETE FORMWORK IS TO BE STRIPPED WITHIN 48 HOURS BUT NOT EARLIER THAN 24 HOURS. VIBRATION OF THE CONCRETE MUST ASSURE THAT HONEYCOMBING WILL BE AT A MINIMUM. MECHANICAL VIBRATION OF ALL CONCRETE IS REQUIRED UNLESS OTHERWISE DIRECTED BY THE ENGINEER.
17. AFTER FORMS ARE REMOVED, FILL ALL VOIDS, HOLIDAYS, ETC., WITH NON-SHRINK CEMENTATIOUS GROUT. ABOVE GRADE CONCRETE IS TO BE RUBBED AND PATCHED TO ASSURE SMOOTH FINISH.

POST-INSTALLED ANCHORS:

1. POST-INSTALLED ANCHORS SHALL ONLY BE USED WHERE SPECIFIED ON THE DRAWINGS. CONTRACTOR SHALL OBTAIN APPROVAL FROM ENGINEER OF RECORD (EOR) PRIOR TO USING POST-INSTALLED ANCHORS FOR MISSING OR MISPLACED ANCHORS.
2. CARE SHALL BE GIVEN TO AVOID CONFLICTS WITH EXISTING REINFORCING WHEN DRILLING HOLES. HOLES SHALL BE DRILLED AND CLEANED PER THE MANUFACTURER'S INSTRUCTIONS. ANCHORS SHALL BE INSTALLED PER THE MANUFACTURER'S INSTALLATION INSTRUCTIONS AT NOT LESS THAN MINIMUM EDGE DISTANCES AND/OR SPACINGS INDICATED IN THE MANUFACTURER'S LITERATURE.
3. SPECIAL INSPECTION SHALL BE PROVIDED FOR ALL ADHESIVE AND MECHANICAL ANCHOR INSTALLATIONS AS REQUIRED BY THE EOR. INDEPENDENT ON-SITE PROOF LOAD TESTING SHALL BE PERFORMED AS REQUIRED BY THE EOR. CONTACT EOR FOR NUMBER OF ANCHORS REQUIRED TO BE TESTED AND REQUIRED PROOF LOAD MAGNITUDE.

4. UNLESS NOTED OTHERWISE ON DOCUMENTS, ACCEPTABLE PRODUCTS SHALL BE AS LISTED BELOW:
   - EXPANSION ANCHORS SHALL BE HILTI "KWIK BOLT TZ" OR EQUIVALENT, UNLESS OTHERWISE NOTED. INSTALL ANCHORS IN STRUCTURAL CONFORMANCE WITH THE MANUFACTURER'S RECOMMENDATIONS.
   - ADHESIVE ANCHORS (AA) SHALL BE HILTI "HIT HY-200 USING 'HAS' STANDARD RODS" OR EQUIVALENT, UNLESS OTHERWISE NOTED. USE HILTI "HIT-ICE" FOR COLD WEATHER APPLICATIONS, SEE SPECIFICATIONS FOR USAGE. INSTALL ANCHORS IN STRUCTURAL CONFORMANCE WITH THE MANUFACTURER'S RECOMMENDATIONS.

SUBMITTALS:

1. ALL SHOP DRAWINGS MUST BE REVIEWED AND STAMPED BY THE GENERAL CONTRACTOR PRIOR TO SUBMITTAL. SUBMITTAL WITHOUT CONTRACTOR REVIEW WILL RESULT IN DELAYS. THE CONTRACTOR SHALL CONFIRM THAT SHOP DRAWINGS HAVE BEEN COMPLETED AND CHECKED BY THE SUPPLIER PRIOR TO SUBMISSION.

2. SHOP DRAWING SUBMITTAL REQUIREMENTS SHALL BE IN ACCORDANCE WITH THE STRUCTURAL SPECIFICATIONS. CHANGES OR ADDITIONS MADE ON RESUBMITTED SHOP DRAWINGS SHALL BE CLEARLY INDICATED, AND THE PURPOSE OF THE RESUBMITTAL SHALL BE NOTED ON THE TRANSMITTAL. REVIEW OF RESUBMITTED SHOP DRAWINGS SHALL BE LIMITED SPECIFICALLY TO THE ITEMS NOTED FOR CORRECTION ON THE PREVIOUS SUBMITTAL.

3. THE GENERAL CONTRACTOR SHALL SUBMIT FOR STRUCTURAL ENGINEER REVIEW SHOP DRAWINGS FOR THE FOLLOWING ITEMS:
   - CONCRETE MIX DESIGNS
   - REINFORCING STEEL
   - POST-INSTALLED ANCHORS

4. MANUFACTURER'S LITERATURE: SUBMIT TWO COPIES OF MANUFACTURER'S LITERATURE FOR ALL MATERIALS AND PRODUCTS USED IN CONSTRUCTION ON THE PROJECT.

5. THE ENGINEER'S REVIEW OF SHOP DRAWINGS IS FOR GENERAL CONFORMANCE OF THE DESIGN CONCEPT. AFTER THE CONTRACTOR HAS REVIEWED THE SHOP DRAWINGS, PROMPT REVIEW BY THE ENGINEER WILL BE MADE OF ALL SUBMITTALS. FOR LARGE SUBMITTALS, REASONABLE REVIEW TIME SHALL BE ALLOWED AND MAY EXCEED TWO WEEKS. THE CONCURRENT SUBMITTAL OF MULTIPLE SHOP DRAWINGS ("DUMPING") WILL FURTHER EXTEND THE REVIEW PROCESS AND TIME FRAME NECESSARY TO PROPERLY REVIEW EACH SUBMITTAL.

6. REPRODUCTION OF THESE CONTRACT DOCUMENTS BY ANYONE FOR USE IN SHOP DRAWINGS SHALL SIGNIFY THEIR ACCEPTANCE OF ALL INFORMATION SHOWN AS BEING CORRECT. BRYANT ASSOCIATES, INC. SHALL BE INDEMNIFIED AND HELD HARMLESS FROM ALL CLAIMS, DAMAGES, LOSSES, EXPENSES OR LIABILITIES OF ANY KIND, INCLUDING ATTORNEYS FEES. THE CONTRACTOR IS RESPONSIBLE FOR PROPER CHECKING AND COORDINATING OF DETAILS, DIMENSIONS, SIZES AND QUANTITIES AS REQUIRED TO FACILITATE COMPLETE AND ACCURATE FABRICATION AND ERECTION.

SPECIAL INSPECTIONS:

1. THE CONTRACTOR SHALL COORDINATE THE TESTING AND INSPECTION SERVICES IN ACCORDANCE WITH THE PROGRESS OF THE WORK. THE CONTRACTOR SHALL PROVIDE SUFFICIENT NOTICE TO THE TESTING OR INSPECTION AGENCY OF THE REQUIRED WORK TO ALLOW ALLOCATION OF PERSONNEL. THE COST OF ANY RETESTING OR ADDITIONAL INSPECTIONS AS A RESULT OF UNINSPECTED WORK, FAILED TESTS, OR REJECTED WORK, SHALL BE BORNE BY THE CONTRACTOR.
2. THE FOLLOWING TABLE INCLUDES ITEMS REQUIRING SPECIAL INSPECTION PROVIDED BY THE OWNER. SPECIAL INSPECTIONS LISTED IN THIS TABLE MAY NOT INCLUDE ALL INSPECTIONS AND/OR TESTING THAT IS REQUIRED FOR THE PROJECT PER IBC CHAPTER 17. ADDITIONAL TESTING MAY BE REQUIRED BY THE CONTRACTOR, AS PART OF THEIR CONTRACT.

REQUIRED SPECIAL INSPECTIONS

DESCRIPTION OF WORK IBC CHAPTER 17	INSPECTION		TESTING			REMARK
	YES	NO	YES	NO	NA	
GRADING, EXCAVATION, AND FILLING	X		X			SEE TABLE 1705.6
CAST-IN-PLACE CONCRETE	X		X			SEE TABLE 1705.3
POST-INSTALLED ANCHORS	X			X		SEE TABLE 1705.3
STRUCTURAL CONCRETE REINFORCING STEEL	X			X		PERIODIC

Revisions: Date:

CONSULTANT

LANDSCAPE ARCHITECT:
IBI Placemaking
21 Custom House Street, 3rd Floor
Boston, MA
+1 617 896 2500

IBI PLACEMAKING
21 Custom House Street, Boston, MA 02110
Tel +1 617 896 2500 www.IBIplacemaking.com

ARCHITECT/ENGINEER OF RECORD

BRYANT ASSOCIATES
Engineers Surveyors Construction Managers
640 George Washington Hwy, Bldg. C, Suite 100
Lincoln, RI 02865
+1 401 722 7660

STAMP
MICHAEL E. LeBEAU
No. 6824
REGISTERED PROFESSIONAL ENGINEER
CIVIL
3-23-2020

State of Rhode Island and Providence Plantations
OFFICE OF VETERANS SERVICES

Drawing Title: STRUCTURAL NOTES

Phase: 100% BID DOCUMENTS

Approved: Project Director

Project Title: Rhode Island Veterans Memorial Cemetery
Columbarium Plaza Expansion
CW-4 Project – Phase 1

Location: 301 South County Trail
Exeter, Rhode Island

Issue Date: 3/23/2020
Checked: MEL
Drawn: RB

Project Number: FAI RI -19-10
Building Number:
Drawing Number: S-001

VA FORM 08 - 6231

H:\219094\DWG\S-001 STRUCTURAL NOTES.dwg March 27, 2020 – 1:58pm rblandin
6/14/2019 12:39:03 PM

GENERAL PLAN NOTES:

1. SEE CIVIL AND LANDSCAPE DRAWINGS FOR MORE INFORMATION.
2. SEE SHEET S-001 FOR GENERAL STRUCTURAL NOTES.
3. VERIFY ALL DIMENSIONS AND ELEVATIONS WITH LANDSCAPE AND CIVIL DRAWINGS BEFORE CONSTRUCTION COMMENCES.

FOUNDATION PLAN NOTES:

1. CENTERLINE OF FOOTING SHALL COINCIDE WITH FOUNDATION WALL CENTERLINE UNLESS SHOWN OTHERWISE.
2. BACKFILL AND COMPACT BOTH SIDES OF FOUNDATION WALLS SIMULTANEOUSLY.

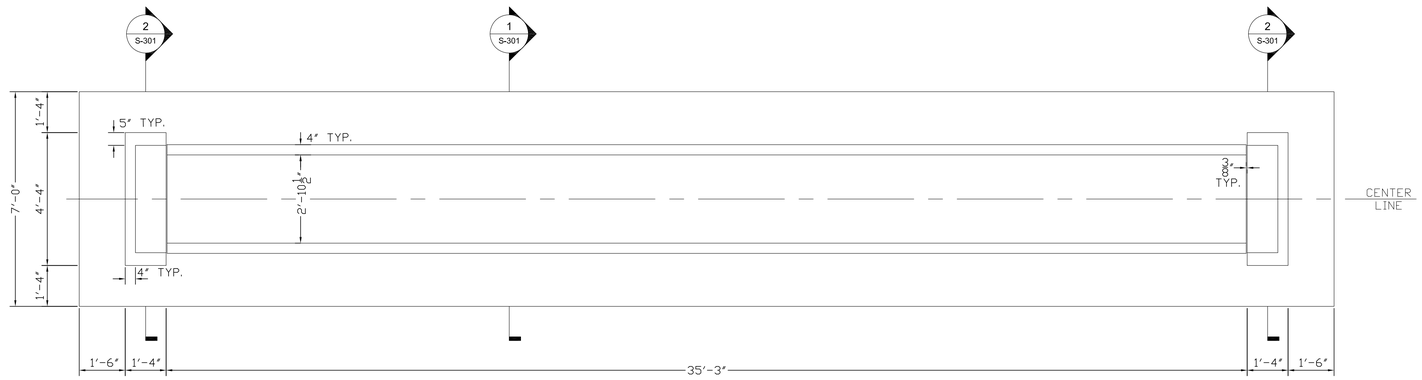

1 / S-101 COLUMBARIUM WALL FOOTING AND FOUNDATION PLAN
1/2"=1'-0"

Revisions:	Date:

CONSULTANT

LANDSCAPE ARCHITECT:
IBI Placemaking
21 Custom House Street, 3rd Floor
Boston, MA
+1 617 896 2500

IBI PLACEMAKING
21 Custom House Street, Boston, MA 02110
tel +1 617 896 2500 www.ibiplacemaking.com

ARCHITECT/ENGINEER OF RECORD

BRYANT ASSOCIATES
Engineers Surveyors Construction Managers
640 George Washington Hwy, Bldg. C, Suite 100
Lincoln, RI 02865
+1 401 722 7660

STAMP
MICHAEL E. LeBEAU
No. 6824
REGISTERED PROFESSIONAL ENGINEER
CIVIL
3-23-2020

State of Rhode Island and Providence Plantations
OFFICE OF VETERANS' SERVICES

Drawing Title: FOUNDATION PLAN	Phase: 100% BID DOCUMENTS	Project Title: Rhode Island Veterans Memorial Cemetery Columbarium Plaza Expansion CW-4 Project – Phase 1	Project Number: FAI RI -19-10
			Building Number:
Approved: Project Director		Location: 301 South County Trail Exeter, Rhode Island	Drawing Number: S-101
		Issue Date: 3/23/2020 · Checked: MEL · Drawn: RB	

H:\219094\DWG\S-101 FOUNDATION_PLAN.dwg March 27, 2020 – 1:59pm rblandin

6/14/2009 12:39:03 PM

VA FORM 08 - 6231

GENERAL PLAN NOTES:

1. SEE CIVIL AND LANDSCAPE DRAWINGS FOR MORE INFORMATION.
2. SEE SHEET S-001 FOR GENERAL STRUCTURAL NOTES.
3. VERIFY ALL DIMENSIONS AND ELEVATIONS WITH LANDSCAPE AND CIVIL DRAWINGS BEFORE CONSTRUCTION COMMENCES.

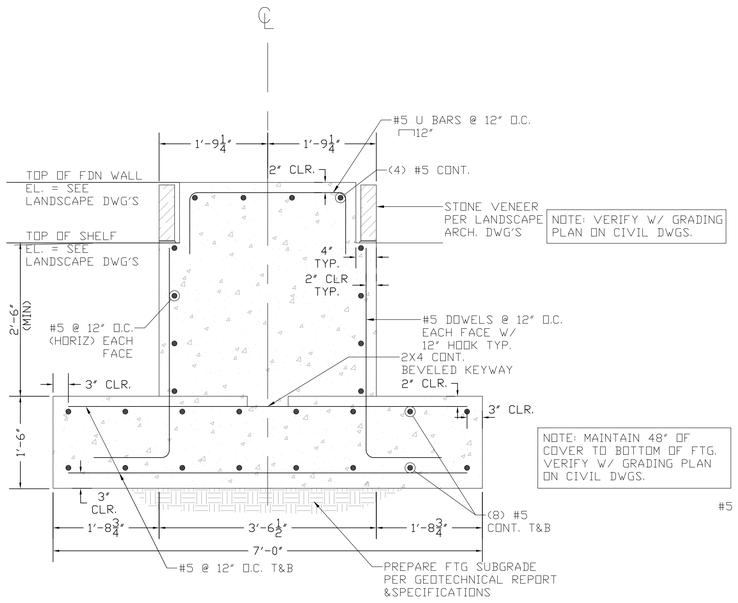

1 S-301 COLUMBARIUM WALL SECTION
1"=1'-0"

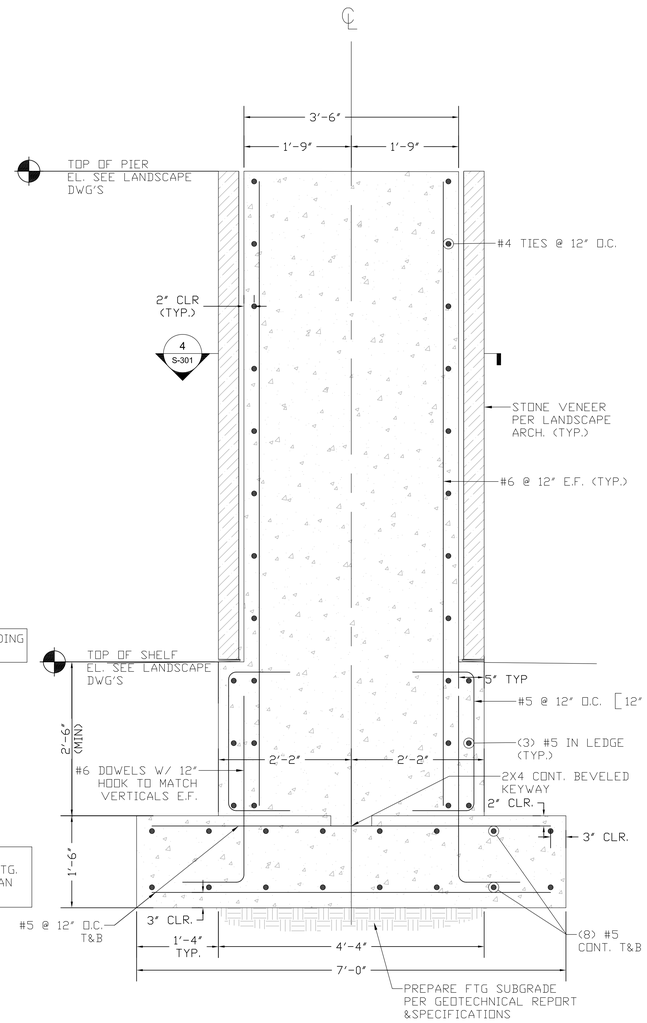

2 S-301 COLUMBARIUM PIER SECTION
1"=1'-0"

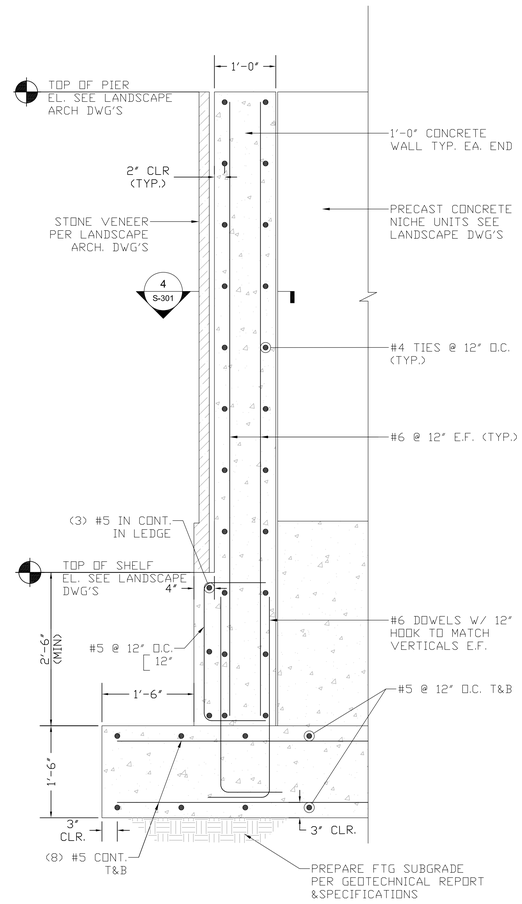

3 S-301 PIER WALL SECTION
1"=1'-0"

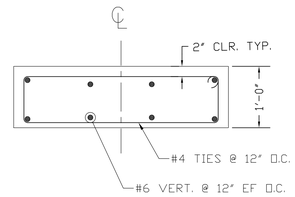

4 S-301 SECTION
1"=1'-0"

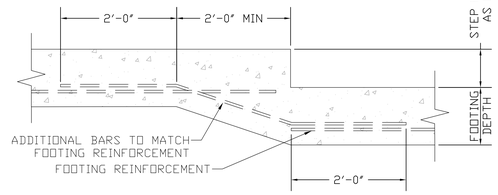

5 S-301 TYP. STEPPED FOOTING DETAIL
N.T.S.

Revisions:	Date:

CONSULTANT

LANDSCAPE ARCHITECT:
IBI Placemaking
21 Custom House Street, 3rd Floor
Boston, MA
+1 617 896 2500

IBI PLACEMAKING
21 Custom House Street, Boston, MA 02110
tel +1 617 896 2500 www.IBIplacemaking.com

ARCHITECT/ENGINEER OF RECORD

BRYANT ASSOCIATES
Engineers Surveyors Construction Managers
640 George Washington Hwy, Bldg. C, Suite 100
Lincoln, RI 02865
+1 401 722 7660

STAMP
MICHAEL E. LeBEAU
No. 6824
REGISTERED PROFESSIONAL ENGINEER CIVIL
3-23-2020

State of Rhode Island and Providence Plantations
OFFICE OF VETERANS SERVICES

Drawing Title	Phase	Project Title	Project Number
SECTIONS AND DETAILS	100% BID DOCUMENTS	Rhode Island Veterans Memorial Cemetery Columbarium Plaza Expansion CW-4 Project – Phase 1	FAI RI -19-10
Approved: Project Director			Building Number
		Location: 301 South County Trail, Exeter, Rhode Island	Drawing Number: S-301
		Issue Date: 3/23/2020 · Checked: MEL · Drawn: RB	

H:\219094\DWG\S-301 SECTION_DETAILS.dwg March 27, 2020 – 2:00pm rblandin

6/14/2009 12:39:03 PM

VA FORM 08 - 6231

TEST PIT LOG

GZA GeoEnvironmental, Inc. *Engineers and Scientists*

Bryant Associates
RI Veterans Memorial Cemetery Survey
Exeter, Rhode Island

EXPLORATION NO.: TP-01
SHEET: 1 of 1
PROJECT NO: 03.0034428.00
REVIEWED BY: Doug Le Do

Logged By: M. Landi
Contractor: Cryan Landscaping
Foreman: Dan Flynn

Boring Location: N168878, E317506.2
Ground Surface Elev. (ft.): 158.225
Date Start: 9/26/2018
Date Finish: 9/26/2018

H. Datum: RI NAD 83 FEET
V. Datum: NAVD 88

Equipment: CAT
Model: 305E2CR
Reach (ft.): 11
Capacity (cu.yd.): 1

Weather: Fog 70's
Time Start: 11:26
Time Finish: 12:13

Groundwater Depth (ft.)

Date	Time	Depth (ft.)	Symbol
9/26/18		NE	

Depth (ft)	Casing Blows (Core Rate)	Stratum Description (Modified Burmister Classification)	Elev. (ft.)	Excavation Effort	Boulder Count Qty./Class	Remark
0		Brown, fine to coarse SAND, some Silt, little fine to coarse Gravel, little Roots (Topsoil)	156.6	E		
1.0		Brown, fine to coarse SAND, some fine to coarse Gravel, trace Organics, trace Plastic, trace Silt, 1-2% Cobbles (Fill)	154.6	M		
3.0		Brown, fine to coarse SAND, some Roots, little fine to coarse Gravel, little Silt, trace Plastic, pockets of Fibrous Peat throughout, slight organic odor (Fill)	147.6	M D D D D D D		1 2 3 4 5 6
10.0		End of exploration at 10 feet.				

Test Pit Plan: North; 10 ft. × 3 ft.; Volume = 11 ± cu.yd.

LEGEND: Observed Water Level

Proportions Used: Trace (Tr) 0-10%; Little (Li) 10-20%; Some (So) 20-35%; And 35-50%

Excavation Effort: Easy E; Moderate M; Difficult D

Boulder Size Range Designation: Diameter; Letter Designation: 6 to 16 in. A; 16 to 36 in. B; > 36 in. C

REMARKS
1 - Sample S-1 taken from ±2-3' bgs.
2 - Sample S-2 taken from ±3-4' bgs.
3 - Sample S-3 taken from ±4-5' bgs.
4 - Sample S-4 taken from ±5-6' bgs.
5 - Sample S-5 taken from ±9-10' bgs.
6 - End of exploration at ±10' bgs due to extreme sidewall collapse, groundwater not encountered. (NE)

See Log Key for exploration of sample description and identification procedures. Stratification lines represent approximate boundaries between soil and bedrock types. Actual transitions may be gradual. Water level readings have been made at the times and under the conditions stated. Fluctuations of groundwater may occur due to other factors than those present at the times the measurements were made.

Exploration No.: TP-01

TEST PIT LOG

GZA GeoEnvironmental, Inc. *Engineers and Scientists*

Bryant Associates
RI Veterans Memorial Cemetery Survey
Exeter, Rhode Island

EXPLORATION NO.: TP-02 (OW)
SHEET: 1 of 1
PROJECT NO: 03.0034428.00
REVIEWED BY: Doug Le Do

Logged By: M. Landi
Contractor: Cryan Landscaping
Foreman: Dan Flynn

Boring Location: N168755.9, E317476.9
Ground Surface Elev. (ft.): 157.618
Date Start: 9/26/2018
Date Finish: 9/26/2018

H. Datum: RI NAD 83 FEET
V. Datum: NAVD 88

Equipment: CAT
Model: 305E2CR
Reach (ft.): 11
Capacity (cu.yd.): 1

Weather: Fog 70's
Time Start: 10:30
Time Finish: 11:15

Groundwater Depth (ft.)

Date	Time	Depth (ft.)	Symbol
9/26/18		NE	
10/8/18	NE		

Depth (ft)	Casing Blows (Core Rate)	Stratum Description (Modified Burmister Classification)	Elev. (ft.)	Excavation Effort	Boulder Count Qty./Class	Remark
0.5		Brown, fine to coarse SAND, some Silt, little fine to coarse Gravel, little Roots (Topsoil)	157.7	E		
4.0		Brown, fine to coarse SAND, some Silt, little fine to coarse Gravel, trace Roots (Fill)	154.2	M M M	1B	1
3'		Dark brown, fine to coarse SAND, little Roots, little Organics, little fine to coarse Gravel, trace miscellaneous Urban Debris, slight organic odor at approximately 6' bgs (Fill)	148.2	D D D D		2 3 4
10.0		End of exploration at 10 feet.				

Test Pit Plan: North; 13 ft. × 3 ft.; Volume = 14 ± cu.yd.

LEGEND: Observed Water Level

Proportions Used: Trace (Tr) 0-10%; Little (Li) 10-20%; Some (So) 20-35%; And 35-50%

Excavation Effort: Easy E; Moderate M; Difficult D

Boulder Size Range Designation: Diameter; Letter Designation: 6 to 16 in. A; 16 to 36 in. B; > 36 in. C

REMARKS
1 - Sample S-1 taken from ±1-2' bgs.
2 - Sample S-2 taken from ±6-7' bgs.
3 - Large tree stump or root encountered at ±6' bgs; unable to move with excavator; test pit extended 3' to the west.
4 - End of exploration at ±10' bgs due to extreme sidewall collapse; groundwater not encountered (NE); four inch PVC perforated pipe installed for groundwater monitoring.

See Log Key for exploration of sample description and identification procedures. Stratification lines represent approximate boundaries between soil and bedrock types. Actual transitions may be gradual. Water level readings have been made at the times and under the conditions stated. Fluctuations of groundwater may occur due to other factors than those present at the times the measurements were made.

Exploration No.: TP-02 (OW)

TEST PIT LOG

GZA GeoEnvironmental, Inc. *Engineers and Scientists*

Bryant Associates
RI Veterans Memorial Cemetery
301 South County Trail
Exeter, RI

EXPLORATION NO.: TP-101 (OW)
SHEET: 1 of 1 PROJECT NO: 34428.01 REVIEWED BY: Doug Le Do

Logged By: Jessie Chabot
Contractor: Cryan Landscape
Foreman: Dan Flynn

Boring Location: See Plan
Ground Surface Elev. (ft.): 159
Date Start: 12/16/2019
Date Finish: 12/16/2019

H. Datum: NAD 83
V. Datum: NAVD 88

Equipment: CAT
Model: 305 EZ CR
Reach (ft.): 11'
Capacity (cu.yd.): 0.25

Weather: Overcast 30's
Time Start: 06:35
Time Finish: 11:30

Groundwater Depth (ft.)

Date	Time	Depth (ft.)	Symbol
12/16/19	Not Encountered		

Depth (ft)	Casing Blows (Core Rate)	Stratum Description (Modified Burmister Classification)	Elev. (ft.)	Excavation Effort	Boulder Count Qty./Class	Remark
0		Brown fine SAND, some Silt, trace fine Gravel, trace Organics (roots), dry (Topsoil)	158.0	E		
1		Dark brown stratified with gray and black fine to medium SAND, some Silt, trace fine Gravel, trace Cobbles, trace Miscellaneous Debris (plastic), trace Organics (wood), moist (Fill)	150.0	E E E E M M M D		1 2
9		End of exploration at 9 feet.				

Test Pit Plan: North; 11 ft. × 2.5 ft.; Volume = 9 ± cu.yd.

LEGEND: Observed Water Level

Proportions Used: Trace (Tr) 0-10%; Little (Li) 10-20%; Some (So) 20-35%; And 35-50%

Excavation Effort: Easy E; Moderate M; Difficult D

Boulder Size Range Designation: Diameter; Letter Designation: 6 to 16 in. A; 16 to 36 in. B; > 36 in. C

REMARKS
1 - Removed stump from bottom of excavation at ±9'.
2 - End of exploration at ±9' bgs due to limit of excavator reach; four inch PVC perforated pipe installed for groundwater monitoring.

See Log Key for exploration of sample description and identification procedures. Stratification lines represent approximate boundaries between soil and bedrock types. Actual transitions may be gradual. Water level readings have been made at the times and under the conditions stated. Fluctuations of groundwater may occur due to other factors than those present at the times the measurements were made.

Exploration No.: TP-101 (OW)

TEST PIT LOG

GZA GeoEnvironmental, Inc. *Engineers and Scientists*

Bryant Associates
RI Veterans Memorial Cemetery
301 South County Trail
Exeter, RI

EXPLORATION NO.: TP-102 (OW)
SHEET: 1 of 1 PROJECT NO: 34428.01 REVIEWED BY: Doug Le Do

Logged By: Jessie Chabot
Contractor: Cryan Landscape
Foreman: Dan Flynn

Boring Location: See Plan
Ground Surface Elev. (ft.): 159
Date Start: 12/16/2019
Date Finish: 12/16/2019

H. Datum: NAD 83
V. Datum: NAVD 88

Equipment: CAT
Model: 305 EZ CR
Reach (ft.): 11'
Capacity (cu.yd.): 0.25

Weather: Overcast 30's
Time Start: 06:10
Time Finish: 11:45

Groundwater Depth (ft.)

Date	Time	Depth (ft.)	Symbol
12/16/19	Not Encountered		

Depth (ft)	Casing Blows (Core Rate)	Stratum Description (Modified Burmister Classification)	Elev. (ft.)	Excavation Effort	Boulder Count Qty./Class	Remark
0		Brown fine SAND, some Silt, trace fine Gravel, trace Organics (roots), dry (Topsoil)	158.0	E		
1		Light brown, fine to medium SAND, some Silt, little fine to coarse Gravel, trace Cobbles, moist (Subsoil)	157.0	E		
2		Brown fine to medium SAND, little Silt, little fine to coarse Gravel, trace Cobbles, moist (Fill)	150.0	E E E E M M M	1C	
9		End of exploration at 9 feet.				1

Test Pit Plan: North; 11 ft. × 2.5 ft.; Volume = 9 ± cu.yd.

LEGEND: Observed Water Level

Proportions Used: Trace (Tr) 0-10%; Little (Li) 10-20%; Some (So) 20-35%; And 35-50%

Excavation Effort: Easy E; Moderate M; Difficult D

Boulder Size Range Designation: Diameter; Letter Designation: 6 to 16 in. A; 16 to 36 in. B; > 36 in. C

REMARKS
1 - End of exploration at ±9' bgs due to limit of excavator reach; four inch PVC perforated pipe installed for groundwater monitoring.

See Log Key for exploration of sample description and identification procedures. Stratification lines represent approximate boundaries between soil and bedrock types. Actual transitions may be gradual. Water level readings have been made at the times and under the conditions stated. Fluctuations of groundwater may occur due to other factors than those present at the times the measurements were made.

Exploration No.: TP-102 (OW)

TEST BORING LOG

GZA GeoEnvironmental, Inc. *Engineers and Scientists*

Bryant Associates
RI Veterans Memorial Cemetery
301 South County Trail
Exeter, RI

EXPLORATION NO.: GZ-101
SHEET: 1 of 1
PROJECT NO: 34428.01
REVIEWED BY: Doug Le Do

Logged By: Jessie Chabot
Drilling Co.: Hoffman Environmental Services
Foreman: Kyle Hoffman

Type of Rig: Tracked ATV
Rig Model: Diedrich D50
Drilling Method: HSA

Boring Location: See Plan
Ground Surface Elev. (ft.): 159
Final Boring Depth (ft.): 21
Date Start - Finish: 12/21/2019 - 12/21/2019

H. Datum: NAD 83
V. Datum: NAVD 88

Hammer Type: Automatic Hammer
Hammer Weight (lb.): 140
Hammer Fall (in.): 30
Auger or Casing O.D./I.D Dia (in.): 2.25"

Sampler Type: SS
Sampler O.D. (in.): 2.0
Sampler Length (in.): 24
Rock Core Size: N/A

Groundwater Depth (ft.)

Date	Time	Stab. Time	Water	Casing
12/21/19	10:30	0.5 Hours	14'	15'

Depth (ft)	Casing Blows (Core Rate)	Sample No.	Depth (ft.)	Pen. (in)	Rec. (in)	Blows (per 6 in.)	SPT Value	Sample Description (Modified Burmister Classification)	Remark	Depth (ft)	Stratum Description	Elev. (ft.)
		S-1	0.5-2.0	24	9	3 3 2 1	5	S-1: Loose, brown SILT, little coarse Gravel, little fine Sand, trace Organics (roots, grass), moist (Topsoil)		1	TOPSOIL	158.0
5		S-2	2.0-4.0	24	7	1 1 1 1	2	S-2: Very loose, dark brown fine to coarse SAND and fine to coarse Gravel, little silt, trace Organics (wood), moist			SANDY FILL	
		S-3	4.0-6.0	24	1	1 1 1 2	2	S-3: Very loose, brown fine to medium SAND, little fine Gravel, trace Silt, moist				
		S-4	6.0-8.0	24	1	3 4 3 3	7	S-4: Loose, brown, coarse GRAVEL, trace fine to medium Sand, trace Silt, moist		1		
10		S-5	9.0-11.0	24	4	5 3 5 6	8	S-5: Loose, brown, fine to coarse GRAVEL and fine to coarse Sand, trace Silt, moist		8		151.0
15		S-6	14.0-16.0	24	14	4 6 8 7	14	S-6: Medium dense, brown fine to coarse SAND, trace fine Gravel, trace Silt, Saturated		2	GLACIAL OUTWASH	
20		S-7	19.0-21.0	24	12	20 13 7 9	20	S-7: Medium dense, brown fine to coarse SAND, trace Silt		3		
								End of exploration at 21 feet		21		138.0

REMARKS
1 - Auger grinding while drilling from ±2' to 8' bgs. Driller informed GZA that the auger was drilling through cobbles/boulders.
2 - Driller introduced water to the drill rods after collecting sample S-6.
3 - End of exploration at ±21' bgs.

See Log Key for exploration of sample description and identification procedures. Stratification lines represent approximate boundaries between soil and bedrock types. Actual transitions may be gradual. Water level readings have been made at the times and under the conditions stated. Fluctuations of groundwater may occur due to other factors than those present at the times the measurements were made.

Exploration No.: GZ-101

TEST BORING LOG

GZA GeoEnvironmental, Inc. *Engineers and Scientists*

Bryant Associates
RI Veterans Memorial Cemetery
301 South County Trail
Exeter, RI

EXPLORATION NO.: GZ-102
SHEET: 1 of 1
PROJECT NO: 34428.01
REVIEWED BY: Doug Le Do

Logged By: Jessie Chabot
Drilling Co.: Hoffman Environmental Services
Foreman: Kyle Hoffman

Type of Rig: Tracked ATV
Rig Model: Diedrich D50
Drilling Method: HSA

Boring Location: See Plan
Ground Surface Elev. (ft.): 159
Final Boring Depth (ft.): 21
Date Start - Finish: 12/21/2019 - 12/21/2019

H. Datum: NAD 83
V. Datum: NAVD 88

Hammer Type: Automatic Hammer
Hammer Weight (lb.): 140
Hammer Fall (in.): 30
Auger or Casing O.D./I.D Dia (in.): 2.25"

Sampler Type: SS
Sampler O.D. (in.): 2.0
Sampler Length (in.): 24
Rock Core Size: N/A

Groundwater Depth (ft.)

Date	Time	Stab. Time	Water	Casing
12/21/19	12:00	0.5 Hours	15.5'	15'

Depth (ft)	Casing Blows (Core Rate)	Sample No.	Depth (ft.)	Pen. (in)	Rec. (in)	Blows (per 6 in.)	SPT Value	Sample Description (Modified Burmister Classification)	Remark	Depth (ft)	Stratum Description	Elev. (ft.)
		S-1	0.5-1.0	12	3	8 8		S-1: Brown SILT, some coarse Gravel, trace fine to medium Sand, trace Organics (roots, grass), moist (Topsoil)		1	TOPSOIL	158.0
5		S-2	3.0-5.0	24	12	8 8 3 2	11	S-2: Medium dense, brown fine SAND and SILT, trace fine Gravel, moist		1	INFERRED BOULDERS/COBBLES	158.0
		S-3	5.0-7.0	24	6	1 2 9 10	11	S-3: Medium dense, brown SILT, some fine to coarse Gravel, some fine coarse Sand, moist			SANDY FILL	
		S-4	7.0-9.0	24	20	4 5 3 3	8	S-4: Top 1": Brown fine SAND and SILT, little fine to coarse Gravel, moist Middle 16": Dark brown SILT, trace Organics (roots), moist Bottom 4": Brown SILT, trace fine Gravel, moist		7		152.0
10		S-5	9.0-11.0	24	12	3 3 3 2	6	S-5: Loose, brown SILT, moist		8.25	BURIED TOPSOIL	150.8
15		S-6	14.0-16.0	24	18	3 4 8 17	12	S-6: Top 18": Medium dense, light gray SILT, trace fine to medium Sand, moist Tip of spoon: Black and brown fine to medium SAND, trace Silt, trace fine Gravel, moist			GLACIAL OUTWASH	
20		S-7	19.0-21.0	24	11	7 12 12 11	24	S-7: Medium dense, brown fine SAND and fine to coarse Gravel, trace Silt, saturated		2		
								End of exploration at 21 feet		21		138.0

REMARKS
1 - Spoon kicked out of position while collecting sample S-1. Driller stopped driving spoon and augered to ±3' bgs. Auger grinding while drilling from ±1'-2' (likely boulders).
2 - End of exploration at ±21' bgs.

See Log Key for exploration of sample description and identification procedures. Stratification lines represent approximate boundaries between soil and bedrock types. Actual transitions may be gradual. Water level readings have been made at the times and under the conditions stated. Fluctuations of groundwater may occur due to other factors than those present at the times the measurements were made.

Exploration No.: GZ-102

Revisions: Date:

CONSULTANT

LANDSCAPE ARCHITECT:
IBI Placemaking
21 Custom House Street, 3rd Floor
Boston, MA
+1 617 896 2500

IBI PLACEMAKING
21 Custom House Street, Boston, MA 02110
Tel +1 617 896 2500 www.IBIplacemaking.com

ARCHITECT/ENGINEER OF RECORD

BRYANT ASSOCIATES
Engineers Surveyors Construction Managers
640 George Washington Hwy, Bldg. C, Suite 100
Lincoln, RI 02865
+1 401 722 7660

STAMP

State of Rhode Island and Providence Plantations
Office of Veterans Services

Drawing Title	GEOTECHNICAL LOGS
Phase	100% BID DOCUMENTS
Project Title	Rhode Island Veterans Memorial Cemetery Columbarium Plaza Expansion CW-4 Project – Phase 1
Project Number	FAI RI -19-10
Building Number	
Approved: Project Director	
Location	301 South County Trail Exeter, Rhode Island
Issue Date	3/23/2020
Checked	TEB
Drawn	LOA
Drawing Number	G1-1

VA FORM 08 - 6231

\\vr-2018-dcfs01\Proj\219094\DWG\G1-1-GEOTECHNICAL LOGS.dwg March 23, 2020 - 5:55pm lalmeida 6/14/2019 12:39:03 PM

GENERAL LEGEND

B-#	BORING
TP-#	TESTPIT
	SIDEWALK DRAIN
	RIP-RAP WATERWAY
	TEST PIT LOCATION
	BORING LOCATION
—160—	EXISTING MAJOR CONTOUR
—159—	EXISTING MINOR CONTOUR
—160—	PROPOSED MAJOR CONTOUR
—161—	PROPOSED MINOR CONTOUR
	STORMWATER TREATMENT TOP AND TOE OF SLOPE
	STORMWATER TREATMENTS
	LAND COVER AND TOPSOIL, SEE L1-2
	AREAS OF CONSTRAINT (RIVERS, WETLANDS & BUFFERS)

Revisions:	Date:

CONSULTANT

MC2 ELECTRICAL ENGINEERS
MCCLANAGHAN ASSOCIATES, INC.
178 TREASURE ROAD, NARRAGANSETT, RI 02882
T: 401-524-3457
RWM@RWMENGINEERING.COM

ARCHITECT/ENGINEER OF RECORD

BRYANT ASSOCIATES
Engineers Surveyors Construction Managers
640 George Washington Hwy, Bldg. C, Suite 100
Lincoln, RI 02865
+1 401 722 7660

STAMP

ROBERT W. McCLANAGHAN
STATE OF RHODE ISLAND
No. 3419
5-21-20
REGISTERED PROFESSIONAL ENGINEER

State of Rhode Island and Providence Plantations
OFFICE OF VETERANS SERVICES

Drawing Title: ELECTRICAL-SITE PLAN

Phase: 100% BID DOCUMENTS

Approved: Project Director

20 0 20 40
SCALE IN FEET 1"=20'

Project Title: Rhode Island Veterans Memorial Cemetery
Columbarium Plaza Expansion
CW-4 Project – Phase 1

Location: 301 South County Trail
Exeter, Rhode Island

Issue Date: 3/23/2020
Checked: RWM
Drawn: RWM

Project Number: FAI RI -19-10

Building Number:

Drawing Number: E1-1

VA FORM 08 - 6231

C:\Projects 19\1927\Electric\Electrical drawings\FAI#RI-19-10_RVMC CW-4 CD 95% Civil-Structural Plans_18-02-2020\ BAI#2020B 14:29:03 EPM TRICAL-SITE PLAN.dwg March 23, 2020 - 2:22pm rwm

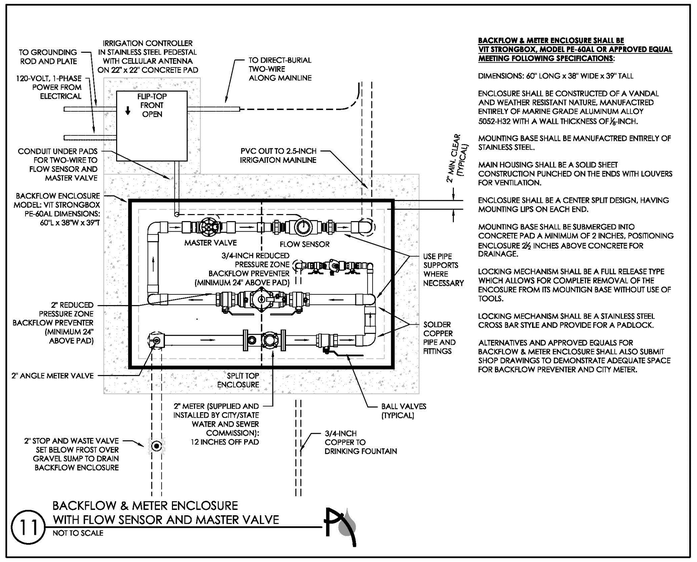

11 BACKFLOW & METER ENCLOSURE WITH FLOW SENSOR AND MASTER VALVE

NOT TO SCALE

BACKFLOW & METER ENCLOSURE SHALL BE VIT STRONGBOX, MODEL PE-60AL OR APPROVED EQUAL MEETING FOLLOWING SPECIFICATIONS:

DIMENSIONS: 60" LONG x 38" WIDE x 39" TALL

ENCLOSURE SHALL BE CONSTRUCTED OF A VANDAL AND WEATHER RESISTANT NATURE. MANUFACTRED ENTIRELY OF MARINE GRADE ALUMINUM ALLOY 5052-H32 WITH A WALL THICKNESS OF 1/8-INCH.

MOUNTING BASE SHALL BE MANUFACTRED ENTIRELY OF STAINLESS STEEL.

MAIN HOUSING SHALL BE A SOLID SHEET CONSTRUCTION PUNCHED ON THE ENDS WITH LOUVERS FOR VENTILATION.

ENCLOSURE SHALL BE A CENTER SPLIT DESIGN, HAVING MOUNTING LIPS ON EACH END.

MOUNTING BASE SHALL BE SUBMERGED INTO CONCRETE PAD A MINIMUM OF 2 INCHES, POSITIONING ENCLOSURE 5½ INCHES ABOVE CONCRETE FOR DRAINAGE.

LOCKING MECHANISM SHALL BE A FULL RELEASE TYPE WHICH ALLOWS FOR COMPLETE REMOVAL OF THE ENCOSURE FROM ITS MOUNTIGN BASE WITHOUT USE OF TOOLS.

LOCKING MECHANISM SHALL BE A STAINLESS STEEL CROSS BAR STYLE AND PROVIDE FOR A PADLOCK.

ALTERNATIVES AND APPROVED EQUALS FOR BACKFLOW & METER ENCLOSURE SHALL ALSO SUBMIT SHOP DRAWINGS TO DEMONSTRATE ADEQUATE SPACE FOR BACKFLOW PREVENTER AND CITY METER.

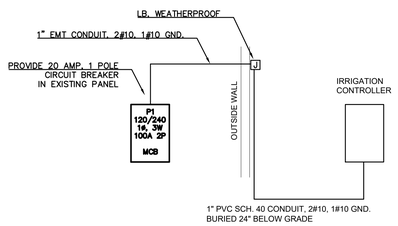

ELECTRICAL WIRING DIAGRAM

NOT TO SCALE

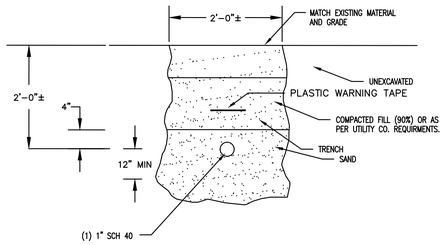

NOTE:
IF FREE OF ORGANIC OR OTHER DELETERIOUS MATERIAL, EXCAVATED MATERIAL MAY BE USED FOR BACKFILL. IF NOT PROVIDED CLEAN, COMPACTIBLE MATERIAL. COMPACT IN 8" LIFTS. REMOVE ANY LARGE ROCKS PRIOR TO BACKFILLING.

NUMBER AND SIZE OF CONDUITS ARE TYPICAL – REFER TO RISER DIAGRAM FOR ACTUAL SIZE AND NUMBER OF CONDUITS.

TRENCH DETAIL, TYPICAL

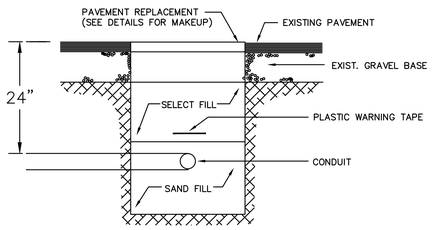

SECTION A–A

TRENCH DETAIL – THRU PAVED AREA

Revisions:	Date:

CONSULTANT

MCCLANAGHAN ASSOCIATES, INC.
mc2 ELECTRICAL ENGINEERS
178 TREASURE ROAD, NARRAGANSETT, RI 02882
T: 401-524-3457
RWM@RWMENGINEERING.COM

ARCHITECT/ENGINEER OF RECORD

BRYANT ASSOCIATES
Engineers Surveyors Construction Managers
640 George Washington Hwy, Bldg. C, Suite 100
Lincoln, RI 02865
+1 401 722 7660

STAMP

ROBERT W. McCLANAGHAN
STATE OF RHODE ISLAND
No. 3419
REGISTERED PROFESSIONAL ENGINEER
3-21-20

State of Rhode Island and Providence Plantations
OFFICE OF VETERANS SERVICES

Drawing Title	ELECTRICAL DETAILS
Phase	100% BID DOCUMENTS
Approved: Project Director	
Project Title	Rhode Island Veterans Memorial Cemetery Columbarium Plaza Expansion CW-4 Project – Phase 1
Project Number	FAI RI -19-10
Building Number	
Location	301 South County Trail Exeter, Rhode Island
Drawing Number	E2-1
Issue Date	3/23/2020
Checked	RWM
Drawn	RWM

VA FORM 08 - 6231

C:\Projects 19\1927\Electric\Electrical drawings\FAIRI-19-10_RIVMC CW-4 CD 95%Civil-Structural Plans_18-02-2020\BA42020B 12:59:03 PM TRICAL-SITE PLAN.dwg March 23, 2020 – 2:22pm rwm

IRRIGATION NOTES

1. SEE IRRIGATION DETAILS AND SPECIFICATIONS FOR ADDITIONAL REQUIRED INFORMATION.
2. CONTRACTORS DEEMED NOT QUALIFIED BASED ON EXPERIENCE AND REFERENCES PROVIDED AS PER OWNER'S REPRESENTATIVE AND ENGINEER WILL HAVE THEIR BIDS DISQUALIFIED.
3. COORDINATE FINAL LOCATION OF SPRINKLERS, NOZZLES, AND VALVE BOXES WITH FINAL APPROVED LANDSCAPE.
4. ALL PIPE AND VALVE LOCATIONS ARE DIAGRAMMATIC FOR CLARITY; CONTRACTOR SHALL FIELD VERIFY.
5. SPECIFIED VALVE BOXES IN NATURAL TURF AREAS SHALL BE APPROVED BY OWNER'S REPRESENTATIVE PRIOR TO INSTALLATION.
6. ALL CONTROL WIRE SHALL BE 14/2 AWG TWO-WIRE FOR DECODERS, GROUNDED IN ACCORDANCE WITH IRRIGATION CONTROLLER MANUFACTURER.
7. IRRIGATION SYSTEM IS DESIGNED FOR DOMESTIC WATER SUPPLY ALREADY WITHIN THE PROPERTY. PROVIDE NEW BACKFLOW PREVENTER AND RECEIVE CITY ISSUED WATER METER TO BE PLACED WITHIN ENCLOSURE AND EXTEND WATER SUPPLY TO LOCATION SHOWN ON PLAN. SYSTEM REQUIRES 60 GALLONS PER MINUTE MAXIMUM AT 70 POUNDS PER SQUARE INCH (PSI) DOWNSTREAM OF PLUMBING EQUIPMENT TO MEET SPRINKLER PRESSURE REQUIREMENTS.
8. INSTALL NEW IRRIGATION CONTROLLER IN OUTDOOR STAINLESS STEEL PEDESTAL ENCLOSURE GENERALLY WHERE SHOWN ON DRAWING AS DIRECTED BY OWNER'S REPRESENTATIVE. HARD WIRE TO 120 VOLT, DEDICATED 20-AMP CIRCUIT POWER SUPPLY USING LICENSED ELECTRICIAN. ROUTE ALL TWO-WIRE TO CONTROLLER IN CONDUIT THROUGH PEDESTAL CONCRETE PAD. GROUND IRRIGATION CONTROLLER AND DECODERS AS PER MANUFACTURER, GENERALLY AS SHOWN ON DETAILS AND DESCRIBED IN SPECIFICATIONS.
9. ALL ABOVE GROUND WIRING SHALL BE INSTALLED IN RIGID, METALLIC CONDUIT FOR VANDALISM PROTECTION.
10. COORDINATE LOCATION OF ALL EXISTING AND FUTURE UTILITIES ON SITE. CONTACT PROPER AUTHORITIES AND UTILITY COMPANIES BEFORE THE START OF WORK.
11. FLUSH ALL LATERAL LINES BEFORE INSTALLING SPRINKLERS (NO INTERNALS).
12. CONTRACTOR MUST SUBMIT IRRIGATION PRODUCTS AND SHOP DRAWINGS AS PER THE WRITTEN SPECIFICATIONS TO REVIEW ENGINEER FOR APPROVAL PRIOR TO ORDERING MATERIAL AND BEGINNING WORK.
13. MATERIAL SUBSTITUTIONS WHICH VARY FROM THE SPECIFIED PRODUCTS MUST BE SUBMITTED TO REVIEW ENGINEER FOR APPROVAL AS PART OF THE SUBMITTAL PROCESS.
14. ONCE APPROVED SUBMITTALS HAVE BEEN RETURNED TO THE CONTRACTOR, WORK MAY BEGIN. OWNER'S REPRESENTATIVE MUST BE NOTIFIED 7 DAYS IN ADVANCE OF THE START OF WORK TO COORDINATE ON-SITE SUPERVISION AND ADMINISTRATION.
15. FINAL LOCATION AND CONFIGURATION OF IRRIGATION SYSTEM SHALL BE APPROVED BY OWNER'S REPRESENTATIVE AND PER LOCAL AUTHORITIES.

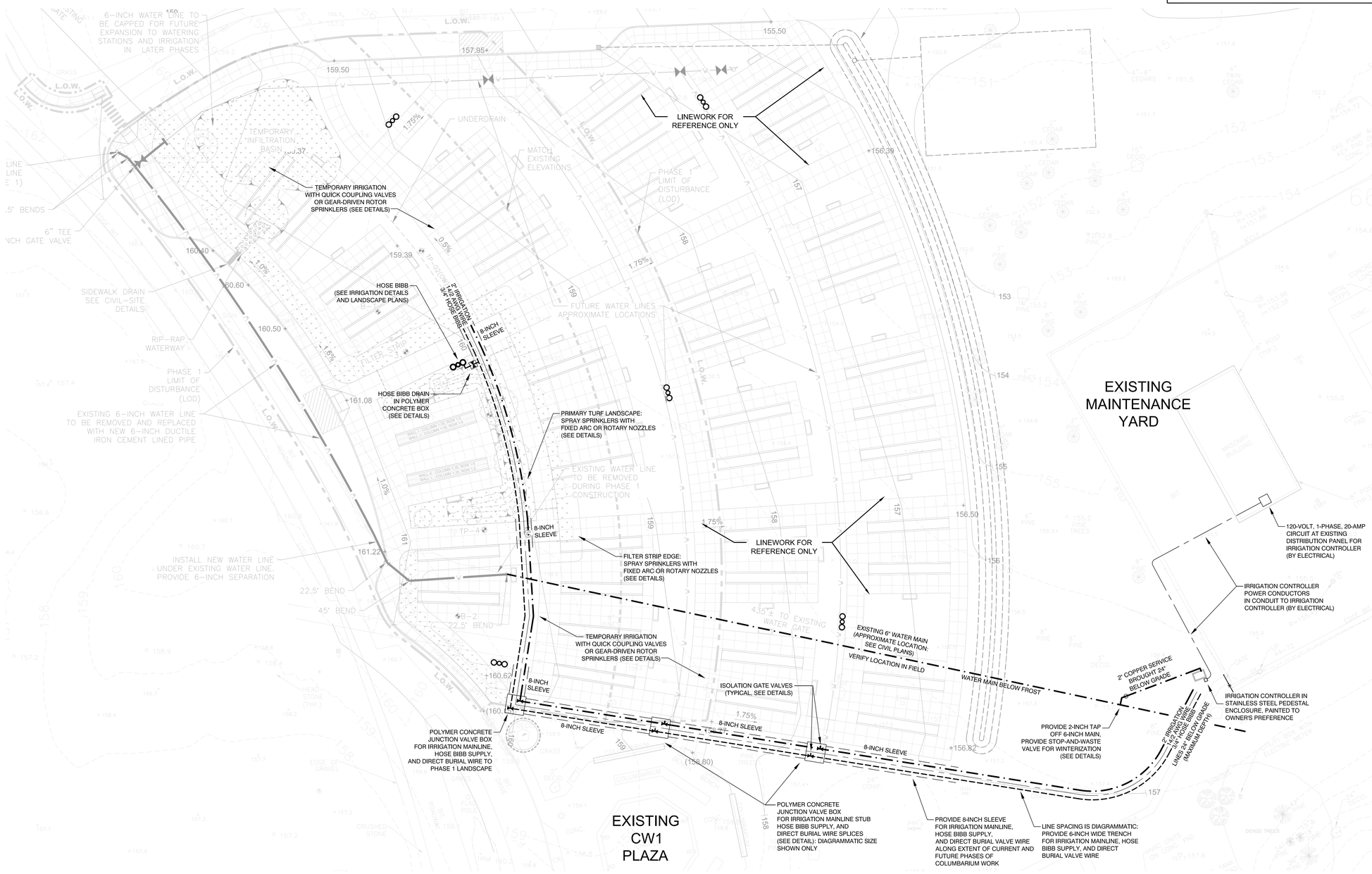

Revisions:	Date:

CONSULTANT

Aqueous

AQUEOUS CONSULTANTS, LLC
IRRIGATION & WATER RESOURCE ENGINEERS
2 Dundee Park Drive, Suite 301B
Andover, MA 01810 | (978) 470-1695 | *www.aqueous.net*

ARCHITECT/ENGINEER OF RECORD

BRYANT ASSOCIATES
Engineers Surveyors Construction Managers
640 George Washington Hwy, Bldg. C, Suite 100
Lincoln, RI 02865
+1 401 722 7660
Teresa M. Capuano

STAMP

MICHAEL IGO
No. 8840
REGISTERED PROFESSIONAL ENGINEER CIVIL

State of Rhode Island and Providence Plantations
OFFICE OF VETERANS SERVICES

Drawing Title IRRIGATION PLAN	**Phase** 100% BID DOCUMENTS	**Project Title** Rhode Island Veterans Memorial Cemetery Columbarium Plaza Expansion CW-4 Project – Phase 1	**Project Number** FAI RI -19-10
Approved: Project Director	20 0 20 40 SCALE IN FEET 1"=20'		**Building Number**
		Location 301 South County Trail Exeter, Rhode Island	**Drawing Number** IR101
		Issue Date 3/23/2020 · **Checked** MI · **Drawn** TL	

VA FORM 08 - 6231

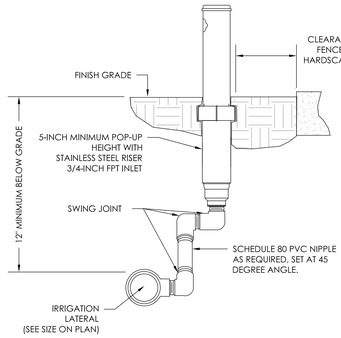

1 GEAR-DRIVEN ROTOR SPRINKLER
NOT TO SCALE

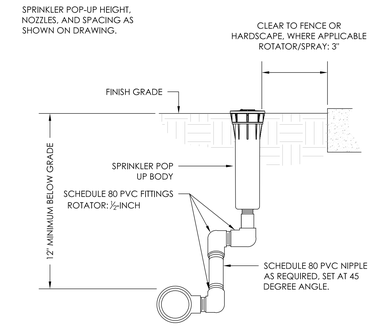

2 6-INCH & 12-INCH POP-UP SPRAY SPRINKLER
NOT TO SCALE

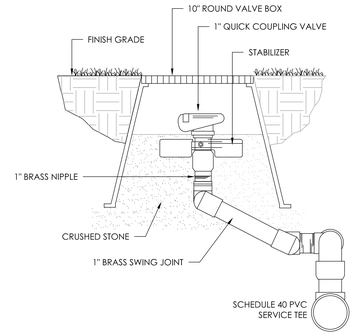

3 QUICK COUPLING VALVE
NOT TO SCALE

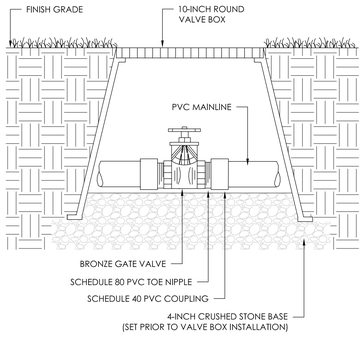

4 MAINLINE ISOLATION VALVE
NOT TO SCALE

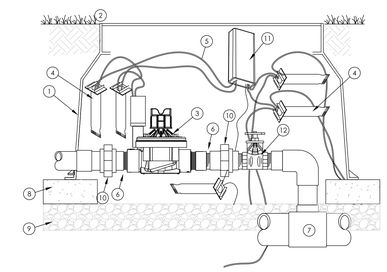

1. VALVE BOX (SEE SPECIFICATIONS)
2. FINISH GRADE
3. ELECTRIC CONTROL VALVE
4. WATERPROOF DBY-6 CONNECTORS
5. TWO WIRE
6. SCH 80 TOE NIPPLE
7. MAINLINE SERVICE TEE
8. BRICK SUPPORTS (4)
9. 4" WASHED 3/4" GRAVEL
10. PVC SLIP UNIONS
11. DECODER
12. BRONZE GATE VALVE

5 ELECTRIC ZONE VALVE WITH DECODER AND ISOLATION VALVE
NOT TO SCALE

NOTES:
1. TAPE WIRE AT 10 FOOT INTERVALS
2. TIE LOOSE LOOP OF WIRE AT CHANGES OF DIRECTION

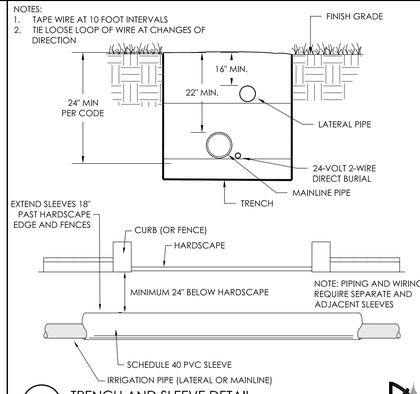

6 TRENCH AND SLEEVE DETAIL
NOT TO SCALE

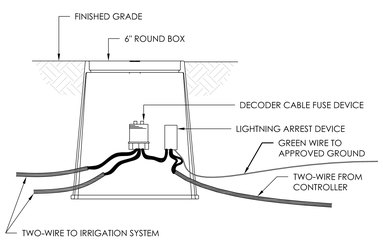

7 LIGHTNING ARREST AND DECODER FUSE DEVICE
NOT TO SCALE

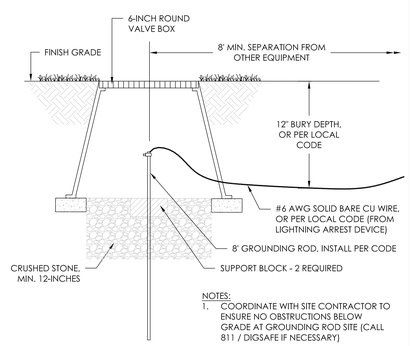

NOTES:
1. COORDINATE WITH SITE CONTRACTOR TO ENSURE NO OBSTRUCTIONS BELOW GRADE AT GROUNDING ROD SITE (CALL 811 / DIGSAFE IF NECESSARY)

8 DECODER GROUNDING DETAIL
NOT TO SCALE

NOTES:
1. LIGHTNING SURGE PROTECTOR
   - MATCHING IRRIGATION CONTROLLER MANUFACTURER.
2. MINIMUM LOCATIONS REQUIRING LIGHTNING SURGE PROTECTORS:
   - DECODER CONTROLLER - PROTECT CONTROLLER FROM SURGES ORIGINATING FROM EACH TWO-WIRE PATH. INSTALL IMMEDIATELY BEFORE CONTROLLER. GROUNDING TO A LOCATION DIFFERENT THAN CONTROLLER GROUND
   - ALONG TWO-WIRE PATH - FOLLOW MANUFACTURERS INSTRUCTIONS FOR MINIMUM REQUIRED SURGE PROTECTOR INSTALLATION. IN ADDITION, INSTALL AT LOCATIONS SHOWN ON DIAGRAM. GROUNDING ROD SHOULD BE IMMEDIATELY CLOSE TO SURGE PROTECTOR.
   - TERMINATION OF TWO-WIRE PATHS - INSTALL AT THE END OF ANY TWO-WIRE PATH. GROUNDING ROD SHOULD BE IMMEDIATELY CLOSE TO SURGE PROTECTOR.

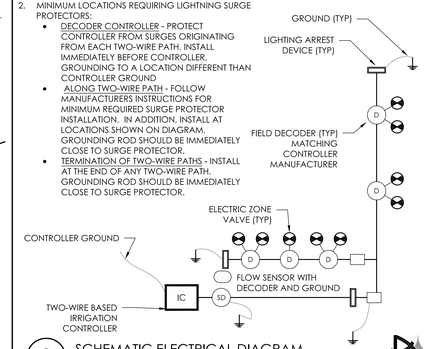

9 SCHEMATIC ELECTRICAL DIAGRAM
NOT TO SCALE

CENTRAL AND REMOTE CONTROL OPTIONS

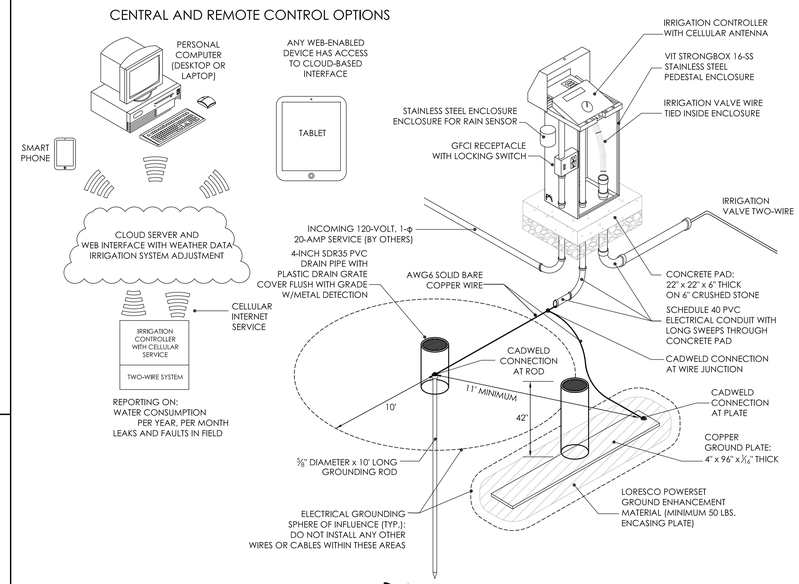

10 PEDESTAL MOUNT CONTROLLER
NOT TO SCALE

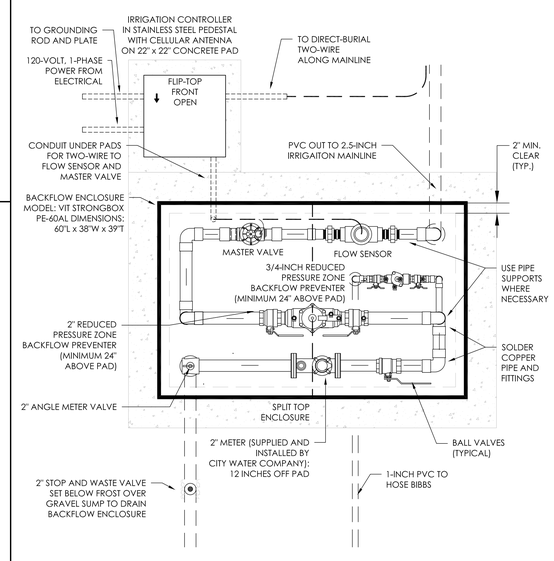

BACKFLOW & METER ENCLOSURE SHALL BE VIT STRONGBOX, MODEL PE-60AL OR APPROVED EQUAL MEETING FOLLOWING SPECIFICATIONS:

DIMENSIONS: 60" LONG x 38" WIDE x 39" TALL

ENCLOSURE SHALL BE CONSTRUCTED OF A VANDAL AND WEATHER RESISTANT NATURE, MANUFACTRED ENTIRELY OF MARINE GRADE ALUMINUM ALLOY 5052-H32 WITH A WALL THICKNESS OF ⅛-INCH.

MOUNTING BASE SHALL BE MANUFACTRED ENTIRELY OF STAINLESS STEEL.

MAIN HOUSING SHALL BE A SOLID SHEET CONSTRUCTION PUNCHED ON THE ENDS WITH LOUVERS FOR VENTILATION.

ENCLOSURE SHALL BE A CENTER SPLIT DESIGN, HAVING MOUNTING LIPS ON EACH END.

MOUNTING BASE SHALL BE SUBMERGED INTO CONCRETE PAD A MINIMUM OF 2 INCHES. POSITIONING ENCLOSURE 2½ INCHES ABOVE CONCRETE FOR DRAINAGE.

LOCKING MECHANISM SHALL BE A FULL RELEASE TYPE WHICH ALLOWS FOR COMPLETE REMOVAL OF THE ENCOSURE FROM ITS MOUNTIGN BASE WITHOUT USE OF TOOLS.

LOCKING MECHANISM SHALL BE A STAINLESS STEEL CROSS BAR STYLE AND PROVIDE FOR A PADLOCK.

ALTERNATIVES AND APPROVED EQUALS FOR BACKFLOW & METER ENCLOSURE SHALL ALSO SUBMIT SHOP DRAWINGS TO DEMONSTRATE ADEQUATE SPACE FOR BACKFLOW PREVENTER AND CITY METER.

11 BACKFLOW & METER ENCLOSURE WITH FLOW SENSOR AND MASTER VALVE
NOT TO SCALE

Revisions:	Date:

CONSULTANT

Aqueous
AQUEOUS CONSULTANTS, LLC
IRRIGATION & WATER RESOURCE ENGINEERS
2 Dundee Park Drive, Suite 301B
Andover, MA 01810 | (978) 470-1695 | www.aqueous.net

ARCHITECT/ENGINEER OF RECORD

BRYANT ASSOCIATES
Engineers Surveyors Construction Managers
640 George Washington Hwy, Bldg. C, Suite 100
Lincoln, RI 02865
+1 401 722 7660
Teresa M. Capuano

STAMP

MICHAEL IGO
No. 8840
REGISTERED PROFESSIONAL ENGINEER CIVIL

State of Rhode Island and Providence Plantations
OFFICE OF VETERANS SERVICES

Drawing Title	Phase	Project Title	Project Number
IRRIGATION DETAILS	100% BID DOCUMENTS	Rhode Island Veterans Memorial Cemetery Columbarium Plaza Expansion CW-4 Project – Phase 1	FAI RI -19-10
Approved: Project Director			Building Number
		Location: 301 South County Trail, Exeter, Rhode Island	Drawing Number: IR201
		Issue Date: 3/23/2020 · Checked: MI · Drawn: TL	

VA FORM 08 - 6231

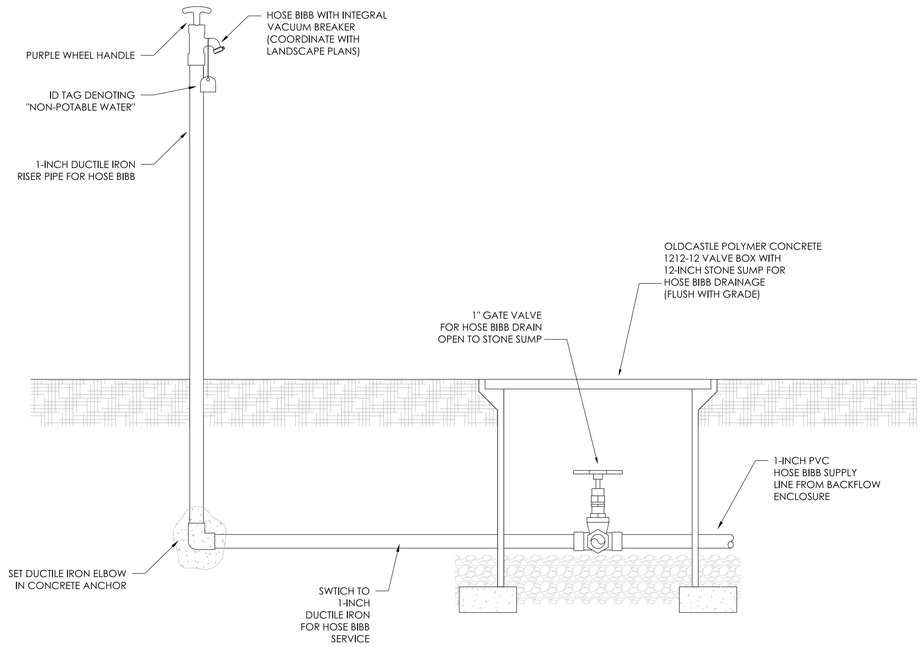

12 HOSE BIBB CONNECTION AND DRAIN
NOT TO SCALE

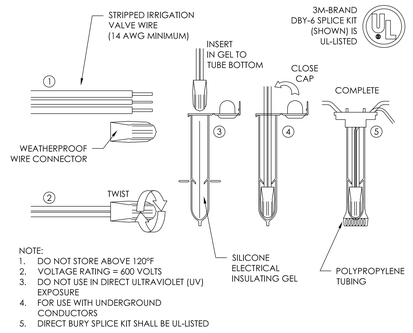

NOTE:
1. DO NOT STORE ABOVE 120°F
2. VOLTAGE RATING = 600 VOLTS
3. DO NOT USE IN DIRECT ULTRAVIOLET (UV) EXPOSURE
4. FOR USE WITH UNDERGROUND CONDUCTORS
5. DIRECT BURY SPLICE KIT SHALL BE UL-LISTED

13 DBY-6 SPLICE KIT DETAIL
NOT TO SCALE

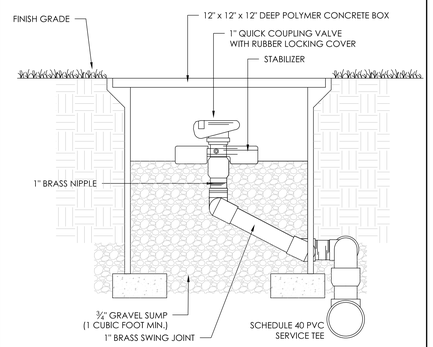

14 QUICK COUPLING VALVE IN POLYMER CONCRETE BOX
NOT TO SCALE

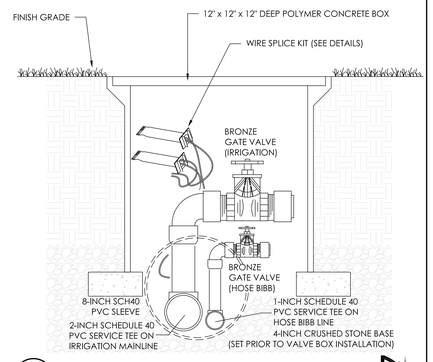

15 POLYMER CONCRETE JUNCTION BOX
NOT TO SCALE

Revisions:	Date:

CONSULTANT

AQUEOUS CONSULTANTS, LLC
IRRIGATION & WATER RESOURCE ENGINEERS
2 Dundee Park Drive, Suite 301B
Andover, MA 01810 | (978) 470-1695 | www.aqueous.net

ARCHITECT/ENGINEER OF RECORD

BRYANT ASSOCIATES
Engineers Surveyors Construction Managers
640 George Washington Hwy, Bldg. C, Suite 100
Lincoln, RI 02865
+1 401 722 7660
Teresa M. Capuano

STAMP

MICHAEL IGO
No. 8840
REGISTERED PROFESSIONAL ENGINEER CIVIL

Drawing Title: IRRIGATION DETAILS	Phase: 100% BID DOCUMENTS	Project Title: Rhode Island Veterans Memorial Cemetery Columbarium Plaza Expansion CW-4 Project – Phase 1	Project Number: FAI RI -19-10
Approved: Project Director		Location: 301 South County Trail Exeter, Rhode Island	Building Number:
		Issue Date: 3/23/2020 · Checked: MI · Drawn: TL	Drawing Number: IR202

VA FORM 08 - 6231