FED. ROAD DIV. NO.	STATE	FEDERAL AID PROJECT NO.	FISCAL YEAR	SHEET NO.	TOTAL SHEETS
01	RI	BHO–0700–005	2020	01	47

LIST OF VOLUMES

VOLUME 1 - WASHINGTON BRIDGE REHABILITATION AND WIDENING

VOLUME 2 - GANO STREET ON-RAMP BRIDGE NO. 1266

VOLUME 3 - WATERFRONT DRIVE OFF-RAMP BRIDGE NO. 1267

VOLUME 4 - I-195 WASHINGTON NORTH PHASE 2 HIGHWAY DRAWINGS

INDEX - VOL. 4

SHEET NO.	DESCRIPTION
1	COVER SHEET
2	STANDARD PLAN SYMBOLS & STANDARD LEGEND
3	STANDARD NOTES - 1
4	STANDARD NOTES - 2
5	JOB SPECIFIC SYMBOLS, LEGENDS & NOTES
6	KEY PLAN
7-10	TYPICAL SECTIONS (1-4)
11-28	MISCELLANEOUS DETAILS (1-18)
29-36	GENERAL PLANS (1-8)
37-39	PROFILES (1-4)
40-47	STRIPING PLANS (1-8)
--	MAINTENANCE AND PROTECTION OF TRAFFIC PLANS - STAGE 1 (1-6)
--	TRAFFIC CONTROL TYPICAL DETAILS (1-2)

PLANS SHEETS NOT INCLUDED IN THIS SUBMISSION, WILL BE PROVIDED IN A FUTURE ADDENDUM.

STATE OF RHODE ISLAND

DEPARTMENT OF TRANSPORTATION

PLAN, PROFILE AND SECTIONS OF PROPOSED

BRIDGE GROUP 57T–10
I–195 WASHINGTON NORTH PHASE 2

CITIES OF PROVIDENCE & EAST PROVIDENCE
COUNTY OF PROVIDENCE

R.I. CONTRACT NO.: 2020-DB-022 F.A. PROJECT NO.: BHO-0700-005

PROJECT LENGTH = 1.12 MILES

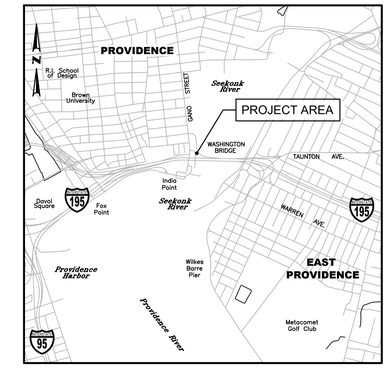

LOCATION MAP
SCALE: 1" = 2000'

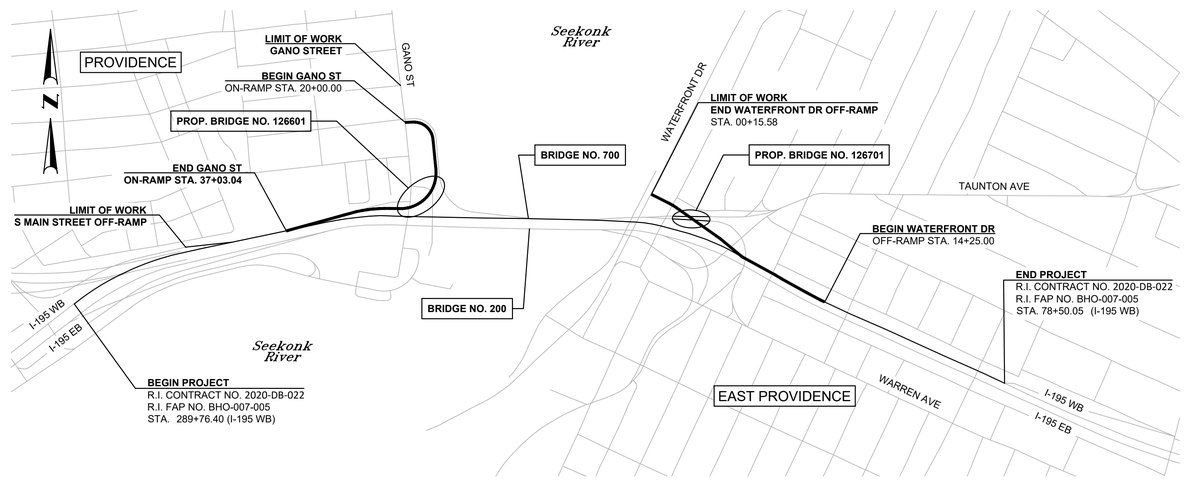

LAYOUT PLAN
SCALE: 1" = 500'

DESIGN DESIGNATION

	I-195 WB	GANO ST ON-RAMP	WATERFRONT DR OFF-RAMP
ADT (2019)	96,500 V.P.D.	10,300 V.P.D.	N/A
ADT (2045)	108,300 V.P.D.	14,000 V.P.D.	3,700 V.P.D.
D	100%/WB	100%/WB	100%/WB
K	8.1%	4.2%	4.2%
T	5%	4%	4%
DDHV	8,770 V.P.H	590 V.P.H	155 V.P.H
DHV	8,770 V.P.H	590 V.P.H	155 V.P.H
V	50 M.P.H.	25 M.P.H.	30 M.P.H.

R.I. STANDARD SPECIFICATIONS AND STANDARD DETAILS

SPECIFICATIONS TO GOVERN THIS PROJECT ARE THE R.I. STANDARD SPECIFICATIONS FOR ROAD AND BRIDGE CONSTRUCTION, AMENDED AUGUST 2013, WITH ALL REVISIONS AND THE STATE AND FEDERAL SPECIAL PROVISIONS INCLUDED IN THE CONTRACT DOCUMENTS. STANDARD DETAILS FOR THIS PROJECT ARE R.I. STANDARD DETAILS, 2015 EDITION, WITH ALL REVISIONS.

BASE TECHNICAL CONCEPT PLANS
APRIL 2020

R.I. DEPARTMENT OF TRANSPORTATION

APPROVED

ADMINISTRATOR, PROJECT MANAGEMENT — DATE

APPROVED

CHIEF ENGINEER OF INFRASTRUCTURE — DATE

APPROVED

DIRECTOR — DATE

DEPARTMENT OF TRANSPORTATION
FEDERAL HIGHWAY ADMINISTRATION

APPROVED

DIVISION ADMINISTRATOR — DATE

SCALES OF DRAWINGS

Plans	1 inch = 40 feet
Profiles	1 inch = 40 feet Horizontal
Profiles	1 inch = 8 feet Vertical
Cross Sections	1 inch = 10 feet Horizontal
Cross Sections	1 inch = 10 feet Vertical

BASE OF LEVELS

VERTICAL DATUM: NAVD 88
HORIZONTAL DATUM: R. I. STATE PLANE, NAD 83

Contract Number 2020–DB–022
Number of Sheet 01
Total Sheets 47

AECOM

DESIGNED BY: JTS
CHECKED BY: DMP
DATE: 04/22/2020
SHEET: 01
OF: 47

REVISIONS			REVISIONS		
NO.	DATE	BY	NO.	DATE	BY

BRIDGE GROUP 57T-10
I-195 WASHINGTON NORTH PHASE 2
PROVIDENCE EAST PROVIDENCE — CONTRACT -- VOLUME: 4 — RHODE ISLAND

COVER SHEET

57T–10_V4_001_COVR.DWG

FED. ROAD DIV. NO.	STATE	FEDERAL AID PROJECT NO.	FISCAL YEAR	SHEET NO.	TOTAL SHEETS
1	RI	BHO-0700-005	2020	02	47

EXISTING

	EDGE OF PAVEMENT
	BERM
	CURB
	GUARDRAIL
MB	MAILBOX
NO.	UTILITY POLE
	POLE GUY
	LUMINARE
SIGN	SIGN
(SIZE)SD	SUBDRAIN
(SIZE)D	STORMDRAIN
(SIZE)S	SANITARY SEWER
(SIZE)W	WATER MAIN
(SIZE)G	GAS MAIN
(SIZE)T	TELEPHONE DUCT
(SIZE)E	ELECTRIC DUCT
	PLUG AND CAP PIPE
	ABANDONED UTILITY
	FLARED END SECTION
	HEADWALL
WG OR GG	WATER OR GAS GATE
CB	CATCH BASIN
MH	MANHOLE
HYD	HYDRANT
1+00	BASELINE OR CENTERLINE
EXIST. S.H.L. PLAT NO. XX	STATE HIGHWAY LINE
EXIST. S.F.L. PLAT NO. XX	STATE FREEWAY LINE
EXIST. P.E.B.	PERMANENT EASEMENT LINE
EXIST. T.E.B.	TEMPORARY EASEMENT LINE
	PROPERTY LINE
CITY NAME / TOWN NAME	CITY OR TOWN LINE
PWW	PAVED WATERWAY
ELEV.	CONTOUR LINE
	OPEN DITCH
R.I.H.B.	R.I. HIGHWAY BOUND
S.B.	STONE BOUND
	RETAINING WALL
	FIELD STONE WALL
NO.	BORINGS
TYPE	FENCE
	WOOD OR BRUSH LINE
	TREES
(NAME)	RIVER OR STREAM
	WETLAND AREA
NO. TYPE MATERIAL	BUILDING
	FOUNDATION
	BUILDING TO BE REMOVED
	RAILROAD TRACKS
	CUT AND MATCH
	RIP-RAP
	CUT SLOPE
	FILL SLOPE
	ROCK CUT
00x00	SPOT GRADE
	AREA GRADED TO DRAIN
	BALED HAY RI STD 9.1.0
	BALED HAY & SILT FENCE RI STD. 9.3.0
123 124 125	EDGE OF WETLAND
	WETLAND PERIMETER
ASSF	AREA SUBJECT TO STORM FLOW
100 YR. FLOOD BOUNDARY	100-YEAR FLOOD PLAIN
	LIMIT OF DISTURBANCE
	LIMIT OF CLEARING

NEW

	EDGE OF PAVEMENT
	BERM
	CURB
	GUARDRAIL
	MAILBOX
NO.	UTILITY POLE
GUY	POLE GUY
	LUMINARE
	SIGN
N(SIZE)SD (Length Size)	SUBDRAIN
(Length Size)	STORMDRAIN
	SANITARY SEWER
N(SIZE)W	WATER MAIN
N(SIZE)G	GAS MAIN
N-#(SIZE)T	TELEPHONE DUCT
N-#(SIZE)E	ELECTRIC DUCT
	PLUG AND CAP PIPE
	ABANDONED UTILITY
	FLARED END SECTION
	HEADWALL
	WATER OR GAS GATE
	CATCH BASIN
	MANHOLE
	HYDRANT
1+00	BASELINE OR CENTERLINE
NEW S.H.L. PLAT NO. XX	STATE HIGHWAY LINE
NEW S.F.L. PLAT NO. XX	STATE FREEWAY LINE
NEW P.E.B.	PERMANENT EASEMENT LINE
NEW T.E.B.	TEMPORARY EASEMENT LINE
	PROPERTY LINE
	CITY OR TOWN LINE
	PAVED WATERWAY
ELEV.	CONTOUR LINE
	OPEN DITCH
	R.I. HIGHWAY BOUND
	STONE BOUND
	RETAINING WALL
	FIELD STONE WALL
NO.	BORINGS
	FENCE
	WOOD OR BRUSH LINE
	TREES
	RIVER OR STREAM
	WETLAND AREA
	BUILDING
	FOUNDATION
	BUILDING TO BE REMOVED
	RAILROAD TRACKS
	CUT AND MATCH
	RIP-RAP
ROADWAY / TOP OF SLOPE	CUT SLOPE
ROADWAY / TOE OF SLOPE	FILL SLOPE
ROCK SHELF / ROCK CUT	ROCK CUT
00.00	SPOT GRADE
ELEV.	AREA GRADED TO DRAIN
	BALED HAY RI STD 9.1.0
	BALED HAY & SILT FENCE RI STD. 9.3.0
	EDGE OF WETLAND
	WETLAND PERIMETER
	AREA SUBJECT TO STORM FLOW
	100-YEAR FLOOD PLAIN
LIMIT OF DISTURBANCE	LIMIT OF DISTURBANCE
LIMIT OF CLEARING	LIMIT OF CLEARING

1.1.0	UNDERDRAIN
1.3.0	CONCRETE CONNECTING COLLAR
2.1.0	CONCRETE HEADWALLS FOR PIPE CULVERTS
2.2.0	STANDARD HEADWALLS FOR MULTIPLE 3'-6" TO 7'-0' PIPE CULVERTS
2.3.0 (DIA.)	PRECAST CONCRETE FLARED END SECTION
3.2.0	BRICK/SOLID BLOCK 4'-0" ROUND MANHOLE
3.2.1 (DIA.)	BRICK/SOLID BLOCK 5'-0" OR 6'-0" ROUND MANHOLE
3.3.0	BRICK/SOLID BLOCK TYPE "D" SQUARE CATCH BASIN
3.3.2	BRICK/SOLID BLOCK TYPE "F" SQUARE CATCH BASIN
3.3.3	SOLID BLOCK FLUSH SQUARE CATCH BASIN
3.4.0	BRICK/SOLID BLOCK TYPE "D" ROUND CATCH BASIN
3.4.1	BRICK/SOLID BLOCK ROUND CATCH BASIN WITH GUTTER INLET
3.4.2	BRICK/SOLID BLOCK TYPE "F" ROUND CATCH BASIN
3.4.3	BRICK/SOLID BLOCK TYPE "R" CATCH BASIN
3.4.4	SOLID BLOCK FLUSH ROUND CATCH BASIN
3.4.5 (DIA.)	BRICK/SOLID BLOCK 5'-0" OR 6'-0" ROUND CATCH BASIN
3.5.0	SOLID BLOCK SHALLOW TYPE "F" SQUARE CATCH BASIN
3.5.1 (SIZE)	SOLID BLOCK SHALLOW 5'-0" OR 6'-0" SQUARE CATCH BASIN
3.6.0	BRICK/SOLID BLOCK DROP INLET
3.7.0 (DIA.)	BRICK/SOLID BLOCK ROUND MANHOLE OR CATCH BASIN GREATER THAN 12'-0"
4.2.0	PRECAST 4'-0" ROUND MANHOLE
4.2.1	PRECAST 5'-0" ROUND MANHOLE
4.2.2	PRECAST 6'-0" ROUND MANHOLE
4.3.0 (SIZE)	PRECAST 4'-0" OR 6'-0" SQUARE MANHOLE OR CATCH BASIN
4.4.0 (DIA.)	PRECAST 4'-0", 5'-0", OR 6'-0" ROUND CATCH BASIN
4.5.0	PRECAST CONCRETE DROP INLET
4.5.1	PRECAST CONCRETE DROP INLET LATERAL OUTLET
4.5.2	PRECAST CONCRETE DROP INLET LONGITUDINAL OUTLET
5.3.0	CATCH BASIN AND MANHOLE STEP
5.4.0	CONCRETE COLLARS
6.1.0	LIGHT-DUTY SQUARE FRAME AND ROUND COVER
6.1.1	HEAVY DUTY SQUARE FRAME AND ROUND COVER
6.2.0	LIGHT-DUTY ROUND FRAME AND COVER
6.2.1	HEAVY-DUTY ROUND FRAME AND COVER
6.3.0	SQUARE FRAME AND GRATE
6.3.1	SQUARE FRAME AND GRATE
6.3.2	SQUARE FRAME AND GRATE (BICYCLE SAFE)
6.3.3	HIGH CAPACITY FRAME AND GRATE
6.3.4	HIGH CAPACITY FRAME AND GRATE (BICYCLE SAFE)
6.4.0	ROUND FRAME AND GRATE
7.1.0S	PRECAST CONCRETE CURB (STRAIGHT)
7.1.0C	PRECAST CONCRETE CURB (CIRCULAR)
7.1.1	3'-0' PRECAST CONCRETE TRANSITION CURB
7.1.2	6'-0" PRECAST CONCRETE TRANSITION CURB
7.1.4	PRECAST 2'-0" RADIUS CORNER
7.1.5	PRECAST CONCRETE INLET STONE (FOR SQUARE CATCH BASIN)
7.1.6	PRECAST CONCRETE INLET STONE (FOR ROUND CATCH BASIN)
7.1.7	PRECAST CONCRETE APRON STONE (FOR SQUARE CATCH BASIN)
7.1.8	PRECAST CONCRETE APRON STONE (FOR ROUND CATCH BASIN)
7.2.0S	PRECAST CONCRETE SLOPED FACE CURB (STRAIGHT)
7.2.0C	PRECAST CONCRETE SLOPED FACE CURB (CIRCULAR)
7.2.1	PRECAST CONCRETE SLOPED FACE TRANSITION CURB
7.2.2	PRECAST CONCRETE TRANSITION CURB (VERTICAL FACE TO SPLOPED FACE)
7.3.0S	GRANITE CURB (STRAIGHT)
7.3.0C	GRANITE CURB (CIRCULAR)
7.3.1	3'-0" GRANITE TRANSITION CURB
7.3.2	6'-0" GRANITE TRANSITION CURB
7.3.3	GRANITE WHEELCHAIR RAMP TRANSITION CURB
7.3.4	GRANITE 2'-0" RADIUS CORNER
7.3.5	GRANITE INLET STONE (FOR SQUARE CATCH BASIN)
7.3.6	GRANITE INLET STONE (FOR ROUND CATCH BASIN)
7.3.7	GRANITE APRON STONE (FOR SQUARE CATCH BASIN)
7.3.8	GRANITE APRON STONE (FOR ROUND CATCH BASIN)
7.4.0	GRANITE SLOPED FACE CURB
7.4.1	GRANITE SLOPED FACE TRANSITION CURB
7.4.2	GRANITE TRANSITION CURB (VERTICAL FACE TO SLOPE FACE)
7.5.0	BITUMINOUS CONCRETE LIP CURB
7.5.1A	BITUMINOUS BERM (CONSTRUCTION METHOD A)
7.5.1B	BITUMINOUS BERM (CONSTRUCTION METHOD B)
7.6.0	CURB SETTING DETAIL
8.2.0	BITUMINOUS CONCRETE DITCH
8.3.0	RIP-RAP DITCH
8.4.0	PAVED WATERWAY
9.1.0	BALED HAY EROSION CHECK
9.2.0	SILT FENCE DETAIL
9.3.0	BALED HAY DITCH EROSION CHECK AND SILT FENCE COMBINED
9.4.0	BALED HAY DITCH AND SWALE EROSION CHECK
9.5.0	LOG AND HAY CHECK DAM
9.7.0	DEWATERING BASIN
9.8.0	BALED HAY CATCH BASIN INLET PROTECTION
9.9.0	CONSTRUCTION ACCESS
10.1.0	WET STONE MASONRY RETAINING WALL
10.2.0	RUBBLE MASONRY WALL
10.3.0	CONCRETE RETAINING WALL
10.4.0	STONE MASONRY STEPS
14.1.0	CONCRETE HIGHWAY BOUND
15.1.0	POST AND MOUNTINGS FOR RURAL MAILBOX
15.2.0 (NO.)	POST AND MULTIPLE MOUNTINGS FOR RURAL MAILBOXES
18.2.0	PRECAST TYPE "A" HANDHOLE
18.2.2	HEAVY DUTY TYPE "H" HANDHOLE
18.3.0	ALUMINUM LIGHTING STANDARDS
20.2.0	BI-DIRECTIONAL CONTROL DEVICE
24.6.1	STREET SIGN MOUNTING DETAIL
26.2.0	POLYETHYLENE DRUM WITH MARKINGS
26.3.0	PVC PLASTIC PIPE TYPE III BARRICADE
31.1.0	CHAIN LINK FENCE 3'-0" TO 4'-0"
31.2.0	CHAIN LINK FENCE 5'-0" TO 6'-0"
31.2.1	CHAIN LINK FENCE 5'-0" TO 6'-0" INTERMEDIATE POST
31.3.0	WOVEN WIRE RIGHT-OF-WAY FENCE (STEEL POST)
34.1.0	TYPICAL GUARDRAIL INSTALLATION
34.2.0	STEEL BEAM GUARDRAIL
34.2.1	STEEL BEAM GUARDRAIL DETAILS
34.2.2	STEEL BEAM GUARDRAIL DOUBLE FACED ASSEMBLY
34.2.3	STEEL BEAM GUARDRAIL FIXTURES
34.2.5	STEEL BEAM GUARDRAIL REFLECTORIZED TRIANGULAR DELINEATOR
34.3.1	GUARDRAIL END SECTION
34.3.2	TERMINAL END SECTION (SINGLE FACE)
34.3.3	ANCHORAGE DETAILS APPROACH END SECTION
34.3.4	ANCHORAGE DETAILS TRAILING END SECTION
34.4.0	STEEL BACKED TIMBER GUARDRAIL
34.4.1	STEEL BACKED TIMBER GUARDRAIL TERMINAL SECTION-TYPE 1
40.1.0	DOUBLE-FACED PRECAST MEDIAN BARRIER
40.2.0	SINGLE-FACED PRECAST MEDIAN BARRIER
40.2.1	SINGLE-FACED PRECAST MEDIAN BARRIER
40.3.0	PRECAST MEDIAN BARRIER TRANSITION UNIT
40.5.0	PRECAST MEDIAN BARRIER FOR TEMPORARY TRAFFIC CONTROL
43.1.0	CEMENT CONCRETE SIDEWALK
43.2.0	BITUMINOUS CONCRETE SIDEWALK
43.3.0	WHEELCHAIR RAMP
43.3.1	WHEELCHAIR RAMP FOR LIMITED RIGHT-OF-WAY AREAS
43.4.0	DRIVEWAY DEVELOPMENT FOR 3'-0" TRANSITION CURB
43.4.1	DRIVEWAY DEVELOPMENT FOR 6'-0" TRANSITION CURB
43.5.0	CEMENT CONCRETE DRIVEWAYS
48.1.0	DETECTABLE WARNING SYSTEM
51.1.0	TREE PROTECTION DEVICE
51.1.1	DRIP LINE TREE PROTECTION DEVICE FOR EXISTING TREES
51.2.0	SHRUB PROTECTION DEVICE
51.3.0	TREE WELL
51.4.0	TREE WALL

AB	ADJUST CATCH BASIN TO GRADE
ABM	ADJUST CATCH BASIN TO MANHOLE
AC	ADJUST CURB STOP TO GRADE
AD	ADJUST DRAINAGE MANHOLE TO GRADE
AE	ADJUST ELECTRIC MANHOLE TO GRADE
AFC	ADJUST FRAME AND COVER TO GRADE
AFG	ADJUST FRAME AND GRATE TO GRADE
AG	ADJUST GAS GATE BOX TO GRADE
AHH	ADJUST HANDHOLE TO GRADE
AS	ADJUST SANITARY SEWER MANHOLE TO GRADE
AT	ADJUST TELEPHONE MANHOLE TO GRADE
AW	ADJUST WATER GATE BOX TO GRADE
BCD	BITUMINOUS CONCRETE DRIVEWAY 3" BITUMINOUS CONCRETE TYPE 1-2 8" GRAVEL BORROW SUBBASE COURSE
BPS	BUILD NEW STRUCTURE OVER EXISTING PIPE
CCB	CLEAN CATCH BASIN
CCP	CUT AND CAP PIPE WITH RESTRAINT (ALL SIZES)
CFP	CLEAN AND FLUSH PIPE
CG	CLEARING AND GRUBBING
CMH	CLEAN MANHOLE
CP (DEPTH)	COLD PLANE
CPP	CUT AND PLUG PIPE (ALL TYPES, ALL SIZES)
DB	REMOVE AND DISPOSE BITUMINOUS CURB
DC	REMOVE AND DISPOSE CONCRETE CURB
DCB	REMOVE AND DISPOSE CATCH BASIN
DDI	REMOVE AND DISPOSE DROP INLET
DF	REMOVE AND DISPOSE FENCE
DFC	REMOVE AND DISPOSE FRAME AND COVER
DFE	REMOVE AND DISPOSE FLARED END SECTION
DFG	REMOVE AND DISPOSE FRAME AND GRATE
DFH	REMOVE AND DISPOSE FIRE HYDRANT
DFP	REMOVE AND DISPOSE FLEXIBLE PAVEMENT
DG	REMOVE AND DISPOSE GUARDRAIL
DH	REMOVE AND DISPOSE HEADWALL
DHB	REMOVE AND DISPOSE HIGHWAY BOUND
DHH	REMOVE AND DISPOSE HANDHOLE
DL	REMOVE AND DISPOSE LIGHT AND FOUNDATION
DMB	REMOVE AND DISPOSE MEDIAN BARRIER
DMH	REMOVE AND DISPOSE MANHOLE
DMM	REMOVE AND DISPOSE MEDIAN MARKER
DOW	REMOVE AND DISPOSE OBSERVATION WELL
DP	REMOVE AND DISPOSE PIPE
DPB	REMOVE AND DISPOSE PAVEMENT AND RIGID BASE
DRB	REMOVE AND DISPOSE RIGID BASE
DS	REMOVE AND DISPOSE SIGN
DSS	REMOVE AND DISPOSE TRAFFIC SIGNAL SYSTEM
DSW	REMOVE AND DISPOSE SIDEWALK
DTD	REMOVE AND DISPOSE TELEPHONE DUCT BANKS
DUP	REMOVE AND DISPOSE UTILITY POLE
DWW	REMOVE AND DISPOSE PAVED WATERWAY
FF	FILTER FABRIC RIPRAP FLARED END UNDERLAYMENT
GET	FLARED GUARDRAIL END TREATMENT
IA	IMPACT ATTENUATOR
IDL	IMPERVIOUS DITCH LINER
LOD	LIMIT OF DISTURBANCE
LOR	LIMIT OF REGRADING
LS	4" LOAM AND SEED
NFH	NEW FIRE HYDRANT WITH GATE VALVE
NIC	NOT IN THIS CONSTRUCTION CONTRACT
NWB	FURNISH AND INSTALL NEW WATER GATE VALVE BOX
NWVB	FURNISH AND INSTALL NEW WATER GATE VALVE AND BOX
NWCB	FURNISH AND INSTALL NEW WATER CURB STOP BOX
NWSB	FURNISH AND INSTALL NEW WATER CURB STOP AND BOX
PCD	PERMANENT CHECK DAM
PS	4" PLANTABLE SOIL AND SEED
RCB	RECONSTRUCT TYPE "D" CATCH BASIN, TO CATCH BASIN WITH GUTTER INLET
RCM	R.I.D.O.T. COMMUNICATIONS MANHOLE
RHH	REMOVE, HANDLE, HAUL, TRIM, RESET CURB EDGING, STRAIGHT, CIRCULAR (ALL TYPES)
RLP	RELOCATE LAMP POST
RMB	RELOCATE MAILBOX (BY OTHERS)
RPM	REMOVE PAVEMENT MARKINGS
RRP	RIP-RAP PAD (SEE DETAIL)
RRS	REMOVE AND RELOCATE SIGN
RUP	RELOCATE UTILITY POLE (BY OTHERS)
SB	STONE BAFFLE
SBAE	STEEL BEAM BRIDGE CONNECTION APPROACH END (W/O NESTED RAIL)
SBTE	STEEL BEAM BRIDGE CONNECTION TRAILING END (W/NESTED RAIL)
SD-	STRUCTURAL DISPOSITION - SEE CS PAGES OF SPECIFICATION
SF	REMOVE AND STOCKPILE FENCE
SGA	SPECIAL GRADED AGGREGATE
SGC	REMOVE AND STOCKPILE GRANITE CURB
SGR	REMOVE AND STOCKPILE GUARDRAIL
SH	REMOVE AND STOCKPILE HYDRANT
SS	REMOVE AND STOCKPILE SIGN
STS	REMOVE AND STOCKPILE TRAFFIC SIGNAL SYSTEM
TB	CONCRETE THRUST BLOCK
TEP	TIE EXISTING PIPE INTO NEW STRUCTURE
TNP	TIE NEW PIPE INTO EXISTING STRUCTURE
TBT	THRIE BEAM TRANSITION
TBBC	THRIE BEAM BRIDGE CONNECTION
TT	TREE TRIMMING
WCM	4" WOOD CHIP MULCH
4DY	4" EPOXY RESIN PAVEMENT MARKINGS - DOUBLE YELLOW
6W	6" EPOXY RESIN PAVEMENT MARKINGS - WHITE
12W	12" EPOXY RESIN PAVEMENT MARKINGS - WHITE
6WT	6" PREFORMED PATTERNED MARKING (HIGH PERFORMANCE TAPE)
4Y	4" EPOXY RESIN PAVEMENT MARKINGS - YELLOW
6Y	6" EPOXY RESIN PAVEMENT MARKINGS - YELLOW
P.G.L.	PROFILE GRADE LINE

THIS PLAN SHALL NOT BE ALTERED

AECOM

RHODE ISLAND DEPARTMENT OF TRANSPORTATION

DESIGNED BY: JTS
CHECKED BY: DMP
DATE: 04/22/2020
SHEET: 02
OF: 47

SCALE: NONE

REVISIONS			REVISIONS		
NO.	DATE	BY	NO.	DATE	BY

BRIDGE GROUP 57T-10
I-195 WASHINGTON NORTH PHASE 2
PROVIDENCE EAST PROVIDENCE
CONTRACT: -- VOLUME: 4 RHODE ISLAND

STANDARD PLAN SYMBOLS & STANDARD LEGEND

57T-10_V4_002_STDSYM.DWG

FED. ROAD DIV. NO.	STATE	FEDERAL AID PROJECT NO.	FISCAL YEAR	SHEET NO.	TOTAL SHEETS
1	RI	BHO-0700-005	2020	03	47

GENERAL NOTES:

1. ANY DAMAGE TO EXISTING PAVEMENT, BRIDGES, CONDUIT, SIDEWALK, FENCES, ETC., CAUSED BY THE CONTRACTOR SHALL BE REPAIRED BY THE CONTRACTOR AT NO ADDITIONAL COST TO THE STATE.

2. THE CONTRACTOR SHALL PLACE ALL EQUIPMENT AND MATERIAL AS FAR AWAY AS POSSIBLE FROM THE EDGE OF THE TRAVEL LANE SO AS NOT TO CAUSE A SAFETY HAZARD, IN ACCORDANCE WITH SECTION 106.06 OF THE R.I.D.O.T. STANDARD SPECIFICATION, LATEST EDITION.

3. IT IS THE CONTRACTOR'S RESPONSIBILITY TO ENSURE THAT THE EXISTING CONDITIONS ARE NOT OBLITERATED BEFORE CONTROL POINTS ARE LOCATED AND CONSTRUCTION LAYOUT IS ESTABLISHED. THE CONSTRUCTION LAYOUT SHALL BE PROVIDED IN SUFFICIENT DETAIL, THEREBY ENABLING HIM TO CONSTRUCT THE PROJECT IN CONFORMITY WITH THE PLANS AND SPECIFICATIONS. SURVEY WILL BE PROVIDED BY THE CONTRACTOR. THE RESIDENT ENGINEER WILL NOT AUTHORIZE CONSTRUCTION ACTIVITIES TO BEGIN UNTIL HE IS SATISFIED THAT ALL GROUND CONTROL HAS BEEN ESTABLISHED, TIED DOWN, AND DULY RECORDED IN STANDARD FIELD BOOKS.

4. ALL R.I. STD. 9.9.0 CONSTRUCTION ACCESS ROADS SHALL BE CONSTRUCTED PRIOR TO ANY ROADWAY ACCEPTING CONSTRUCTION TRAFFIC.

5. THE FREQUENCY AND APPLICATION RATES FOR THE DUST CONTROL ITEMS WILL BE AS DIRECTED BY THE ENGINEER.

6. ALL SIDEWALK AND DRIVEWAYS DESIGNATED FOR REPLACEMENT SHALL BE CUT AND MATCHED AT LOCATIONS SHOWN ON THE PLANS OR AS DIRECTED BY THE ENGINEER.

7. ASPHALT EMULSION TACK COAT SHALL BE PLACED PRIOR TO PAVEMENT PLACEMENT ON THE CONCRETE BASE OR COLD PLANED PAVEMENT, AND ON ANY NEW COURSE WHICH HAS BEEN OPEN TO TRAFFIC, OR ANY NEW COURSE WHICH HAS BEEN EXPOSED FOR MORE THAN 3 DAYS, AND/OR AS DIRECTED BY THE ENGINEER. IT SHALL ALSO BE APPLIED TO VERTICAL PAVEMENT FACES BETWEEN ADJOINING PAVEMENT SECTIONS. ALL APPLICATIONS ON BOTH HORIZONTAL AND VERTICAL SURFACES SHALL BE PAID FOR UNDER THE CONTRACT UNIT BID PRICE FOR CODE 403.0300 "ASPHALT EMULSION TACK COAT."

8. THE LIMITS OF CLEARING AND SURFACE DISTURBANCE MUST BE STRICTLY ADHERED TO IN ALL AREAS. IN ADDITION TO THOSE AREAS SPECIFICALLY DESIGNATED ON THE PLANS, THE CONTRACTOR WILL BE RESPONSIBLE FOR PROVIDING AND PLACING, AT HIS OWN EXPENSE, PLANTABLE SOIL AND SEED IN AREAS WHICH ARE OUTSIDE OF THE PROJECT'S AREAS OF DISTURBANCE AND WHICH ARE IMPACTED BY CONSTRUCTION OPERATIONS INCLUDING THOSE AREAS WHERE VEHICLES, EQUIPMENT AND MATERIALS ARE STORED WITH THE PERMISSION OF THE ENGINEER.

9. UNDER NO CIRCUMSTANCE WILL THE CONTRACTOR BE ALLOWED TO STOCKPILE REMOVED PAVEMENT MATERIALS WITHIN THE PROJECT LIMITS.

10. CLEANING AND SWEEPING OF PAVEMENT WILL INCLUDE REMOVAL OF ALL PAVEMENT DEBRIS PRIOR TO THE PLACEMENT OF EACH BITUMINOUS PAVEMENT LIFT. ALL CLEANING AND SWEEPING SHALL BE DONE TO THE SATISFACTION OF THE ENGINEER.

11. PRIOR TO INSTALLATION, ALL SIGNS, MOUNTINGS AND LOCATIONS SHALL BE APPROVED OR MODIFIED BY THE ENGINEER.

12. THE COORDINATE SYSTEM IS THE R.I. STANDARD GRID SYSTEM, NAD 83. THE VERTICAL CONTROL IS NGVD 29.

13. PAVEMENT OPERATIONS FOR CURBED SECTIONS: IN AREAS WHERE CURBING IS SET TO FINISH LINE AND GRADE, THE CONTRACTOR WILL NOT BE REQUIRED TO UTILIZE THE SENSOR AND SKY-TYPE DEVICE FOR AUTOMATIC GRADE CONTROL, BUT WILL BE ALLOWED TO MANUALLY ADJUST THE BITUMINOUS PAVER FOR CONTROLLING GRADE.

14. THE CONTRACTOR SHALL BE RESPONSIBLE FOR MAINTAINING ALL ROADWAYS FREE OF DEBRIS RESULTING FROM THEIR CONSTRUCTION OPERATIONS. ALL DEBRIS SHALL BE REMOVED TO THE SATISFACTION OF THE ENGINEER AT NO ADDITIONAL COST TO THE STATE.

15. NO FUEL STORAGE, VEHICLE REFUELING, OR EQUIPMENT STORAGE SHALL TAKE PLACE IN DESIGNATED WETLANDS, NOR WITHIN 100' OF ANY WATER BODY. THIS REQUIREMENT SHALL NOT SUPERSEDE ANY FEDERAL, STATE OR LOCAL LAW, ORDINANCE, RULE OR REGULATION THAT APPLIES TO THE SAME, UNLESS THIS REQUIREMENT IS MORE STRINGENT THAN SAID LAW, ORDINANCE, RULE OR REGULATION.

16. THE CONTRACTOR SHALL BE RESPONSIBLE TO ENSURE THAT AT THE END OF FINAL PAVING OPERATIONS, FLOW TO EXISTING DRAINAGE STRUCTURES HAS BEEN REESTABLISHED AND THAT NO ISOLATED DEPRESSIONS REMAIN. THERE SHALL BE NO SEPARATE PAYMENT FOR THIS PROVISION; IT SHALL BE CONSIDERED INCIDENTAL TO PAVING AND COLD PLANING OPERATIONS.

17. ALL EMBANKMENTS SHALL BE PLACED IN HORIZONTAL LAYERS NOT EXCEEDING 12" (AFTER COMPACTION) AND SHALL BE COMPACTED AS SPECIFIED BEFORE THE NEXT LAYER IS PLACED. ALSO, EMBANKMENT CONSTRUCTION SHALL CONFORM TO SECTION 202.03.2 OF THE R.I.D.O.T. STANDARD SPECIFICATIONS, LATEST EDITION.

18. IF THIS PROJECT IS ON A HURRICANE EVACUATION AND DIVERSIONARY ROUTE, AS DESIGNATED ON THE COVERSHEET, THE CONTRACTOR IS ADVISED THAT UPON 12 (TWELVE) HOURS NOTICE THE ROADWAY SHALL BE OPEN TO EVACUEES AND EMERGENCY PERSONNEL. ANY EXTRA WORK NECESSARY TO COMPLY WITH THIS REQUIREMENT WILL BE REIMBURSED UNDER FORCE ACCOUNT PROCEDURES.

19. THE CONTRACTOR SHALL READ, BECOME FAMILIAR WITH, AND ADHERE TO ALL OF THE PROVISIONS, CONDITIONS, AND STIPULATIONS STATED IN THE ENVIRONMENTAL APPROVALS ISSUED FOR THE PROJECT FROM THE DEPARTMENT OF ENVIRONMENTAL MANAGEMENT (RIDEM). AND/OR THE ARMY CORPS OF ENGINEERS (ACOE). AND/OR THE COASTAL RESOURCES MANAGEMENT COUNCIL (CRMC). COPIES OF EACH OF THESE PERMITS ARE INCLUDED IN THE CS PAGES OF THE CONTRACT DOCUMENTS. ALL COSTS ASSOCIATED WITH THESE CONDITIONS SHALL BE CONSIDERED INCIDENTAL TO THE CONSTRUCTION AND INCLUDED WITH THE COST FOR THE ASSOCIATED BID ITEM(S).

20. FOR ALL PROJECTS INVOLVING KNOWN SITE REMEDIATION ISSUES, THE CONTRACTOR SHALL READ, BECOME FAMILIAR WITH, AND ADHERE TO ALL OF THE CONSTRUCTION RELATED PROVISIONS, CONDITIONS, AND STIPULATIONS OF ANY REMEDIAL PLANS DEVELOPED FOR THE PROJECT. COPIES OF THESE DOCUMENTS ARE INCLUDED IN THE CS PAGES OF THE CONTRACT DOCUMENTS. ALL COSTS ASSOCIATED WITH COMPLIANCE WITH THESE DOCUMENTS SHALL BE CONSIDERED INCIDENTAL TO THE CONSTRUCTION AND INCLUDED WITH THE COST FOR THE ASSOCIATED BID ITEM(S).

21. NO UNPROTECTED CONSTRUCTED FEATURE MAY PROJECT MORE THAN 4 INCHES ABOVE THE FINISHED GRADE OF A TRAVERSABLE SLOPE IN A CLEAR ZONE, e.g. HEADWALL, DRAINAGE INLET, ETC.

22. THE REMAINING SECTION OR STUB OF A BREAKAWAY BASE MAY NOT PROJECT MORE THAN 4 INCHES ABOVE THE FINISHED GRADE OF A TRAVERSABLE SLOPE IN A CLEAR ZONE, e.g. SIGN POSTS, LIGHT POLES, FIRE HYDRANTS, ETC.

DRAINAGE AND EROSION CONTROL NOTES:

1. FOR ALL PROJECTS WITH AT LEAST ONE(1) ACRE OF SOIL DISTURBANCE. R.I.D.O.T. IS REQUIRED TO DEVELOP AND ENFORCE A SITE SPECIFIC STORM WATER POLLUTION PREVENTION PLAN (SWPPP) IN ORDER TO REMAIN IN COMPLIANCE WITH THE RIPDES GENERAL PERMIT FOR STORMWATER DISCHARGES ASSOCIATED WITH CONSTRUCTION ACTIVITIES. THE CONTRACTOR SHALL READ, BECOME FAMILIAR WITH, AND ADHERE TO ALL OF THE PROVISIONS, CONDITIONS, AND STIPULATIONS OF THE GENERAL PERMIT AND THE SITE SPECIFIC SWPPP FOR THIS PROJECT. COPIES OF THESE DOCUMENTS ARE INCLUDED IN THE CS PAGES OF THE CONTRACT DOCUMENTS. ALL COSTS ASSOCIATED WITH ADHERENCE TO THE SWPPP SHALL BE CONSIDERED INCIDENTAL TO THE CONSTRUCTION AND INCLUDED WITH THE COST FOR THE ASSOCIATED BID ITEM(S).

2. NO UNDISTURBED AREAS SHALL BE CLEARED OF EXISTING VEGETATION AFTER OCTOBER 15 OF ANY CALENDAR YEAR OR DURING ANY PERIOD OF FULL OR LIMITED WINTER SHUTDOWN. ALL DISTURBED SOILS EXPOSED PRIOR TO OCTOBER 15 OF ANY CALENDAR YEAR SHALL BE SEEDED OR PROTECTED BY THAT DATE. ANY SUCH AREAS THAT DO NOT HAVE ADEQUATE VEGETATIVE STABILIZATION, AS DETERMINED BY THE RESIDENT ENGINEER OR ENVIRONMENTAL INSPECTOR, BY NOVEMBER 15 OF ANY CALENDAR YEAR, MUST BE STABILIZED THROUGH THE USE OF EROSION CONTROL MATTING OR HAY MULCH, IN ACCORDANCE WITH SPECIFICATIONS CONTAINED WITHIN THE R.I. SOIL EROSION AND SEDIMENT CONTROL HANDBOOK. IF WORK CONTINUES WITHIN ANY OF THESE AREAS DURING THE PERIOD FROM OCTOBER 15 THROUGH APRIL 15, CARE MUST BE TAKEN TO ENSURE THAT ONLY THE AREA REQUIRED FOR THAT DAY'S WORK IS EXPOSED, AND ALL ERODIBLE SOIL MUST BE RESTABILIZED WITHIN 5 WORKING DAYS. ANY WORK TO CORRECT PROBLEMS RESULTING FROM FAILURE TO COMPLY WITH THIS PROVISION SHALL BE THE RESPONSIBILITY OF THE CONTRACTOR. THERE WILL BE NO SEPARATE PAYMENT FOR THIS PROVISION, IT SHALL BE CONSIDERED INCIDENTAL TO CONSTRUCTION OPERATIONS. STABILIZATION OF ONE FORM OR ANOTHER AS DESCRIBED ABOVE SHALL BE ACHIEVED WITHIN 2 WEEKS OF FINAL GRADING.

3. STOCKPILES OF MATERIAL SHALL NOT BE LOCATED WITHIN REGULATED WETLANDS OR BUFFER ZONE AREAS. THEY SHALL HAVE SIDE SLOPES NO GREATER THAN 30% AND STOCKPILES OF ERODABLE MATERIAL SHALL ALSO BE SEEDED AND RINGED WITH R.I. STD. 9.1.0 TO STABILIZE.

4. IF THE PLANS INCLUDE SPECIFIC AREAS FOR PLACEMENT OF CONSTRUCTION DEWATERING BASINS AND/OR EQUIPMENT AND MATERIALS STORAGE AND STOCKPILING, AND IF THE CONTRACTOR ELECTS TO UTILIZE ANY OTHER AREAS FOR THESE PURPOSES, THIS SHALL BE APPROVED BY THE ENGINEER ONLY AFTER OBTAINING ANY NECESSARY PERMITS AND/OR PERMIT MODIFICATIONS FROM THE APPROPRIATE REGULATORY AUTHORITY(IES). ANY PERMITTING REQUIREMENTS SHALL BE THE RESPONSIBILITY OF THE CONTRACTOR AND SHALL BE ACCOMPLISHED AT NO COST TO THE STATE. THE ENGINEER WILL COORDINATE SUBMISSION OF ANY REQUIRED PERMIT APPLICATION MATERIALS WITH THE R.I.D.O.T. OFFICE OF ENVIRONMENTAL PROGRAMS.

5. JUTE MESH SHALL BE USED TO STABILIZE PLANTABLE SOIL AND/OR LOAM IN ALL DITCHES, ON ALL SLOPES ADJACENT TO WETLANDS AND WETLAND PERIMETERS, AND ON ALL SLOPES WITHIN WATER QUALITY BASINS. JUTE MESH IN DITCHES SHALL EXTEND TO AN ELEVATION 2 FEET ABOVE THE BOTTOM OF THE DITCH.

6. SEEDING ON ALL SLOPES 3 TO 1 OR STEEPER SHALL CONSIST OF THE FOLLOWING APPLICATIONS UNLESS CHANGED IN THE CONTRACT.
   - a. SEEDING TYPE I.
   - b. ADHESIVE MULCH STABILIZER

7. UNVEGETATED SLOPES SHALL NOT BE UNATTENDED OR EXPOSED FOR PERIODS IN EXCESS OF 2 WEEKS OR THROUGH THE INACTIVE WINTER SEASON.

8. PRIOR TO DRAINAGE AND UTILITY CONSTRUCTION, THE CONTRACTOR IS RESPONSIBLE FOR VERIFYING THE LOCATION (HORIZONTAL AND VERTICAL) OF ALL EXISTING PIPES AND/OR STRUCTURES WHICH ARE TO BE CONNECTED. ANY VARIATION FOUND FROM THE PLANS MUST BE BROUGHT TO THE ENGINEER'S ATTENTION PRIOR TO DRAINAGE AND UTILITY CONSTRUCTION. WORK CAN COMMENCE ONLY UPON THE ENGINEER'S AUTHORIZATION.

9. ALL DRAINAGE AND UTILITY STRUCTURES WITHIN THE PAVED ROADWAY SHALL BE ADJUSTED TO GRADE WITH THE SURROUNDING PAVEMENT PRIOR TO THE WINTER SHUTDOWN.

10. DURING CONSTRUCTION, THE CONTRACTOR SHALL BE RESPONSIBLE FOR MAINTAINING DRAINAGE AND RUNOFF FLOW DURING STORMS AND PERIODS OF RAINFALL THROUGHOUT THE WORK AREA.

11. CATCH BASIN RIM GRADES NOTED ON PLANS ARE DEPRESSED 0.1' LOWER THAN THE GUTTER GRADE. RIM ELEVATIONS SHOWN ARE FINAL GRADES. THE CONTRACTOR SHALL PLACE FRAMES AND GRATES 0.1' BELOW THE GRADE CONSTRUCTED IN THIS CONTRACT OR AS DIRECTED BY THE ENGINEER.

12. PROVISIONS FOR CLEARING TO ACCESS OUTFALLS DURING THE CLEANING AND FLUSHING OF THE CLOSED DRAINAGE SYSTEM SHALL BE KEPT TO A MINIMUM.
   - a. ANY VEGETATIVE CLEARING SHALL BE LIMITED TO BRUSH AND TREES LESS THAN 3" DIAMETER.
   - b. NO HEAVY EQUIPMENT MAY ENCROACH UPON VEGETATED PERIMETER OR RIVERBANK WETLANDS AS WELL AS BIOLOGICAL WETLANDS.

13. THE CONTRACTOR SHALL INSTALL ALL EROSION CONTROL DEVICES FOR OUTLET PROTECTION PRIOR TO CLEANING AND FLUSHING STORM WATER DRAINAGE. EROSION CONTROL DEVICES SHALL REMAIN IN PLACE UNTIL ALL FLUSHED SEDIMENTS ARE REMOVED. AT ALL OUTFALL LOCATIONS WHERE PIPES ARE TO BE CLEANED AND FLUSHED, OUTLET PROTECTION (R.I. STD. 9.1.0 OR 9.3.0) SHALL BE INSTALLED TO TRAP SEDIMENTS. THESE SEDIMENTS SHALL THEN BE REMOVED AND DISPOSED OF LEGALLY BEFORE THE OUTLET PROTECTION DEVICES ARE REMOVED. IF OUTLET PROTECTION AT THE OUTFALL IS NOT FEASIBLE, THEN THE OUTLET PIPE OF THE LAST DRAINAGE STRUCTURE TO BE CLEANED SHALL BE PLUGGED TO CAPTURE ALL MATERIALS FLUSHED FROM PIPES. AFTER THE MATERIALS ARE REMOVED FROM THE DRAINAGE STRUCTURE, THE OUTLET SHALL BE UNPLUGGED TO RESUME NORMAL FUNCTIONING.

14. R.I. STD. 9.8.0 BALED HAY INLET PROTECTION SHALL BE INSTALLED AT ALL CATCH BASINS AND INLETS WHENEVER SUBBASE IS EXPOSED, AND SHALL REMAIN IN PLACE UNTIL THE ABUTTING GROUND SURFACES ARE STABILIZED.

15. WHERE BALED HAY INLET PROTECTION AND SILT FENCES ARE USED AT CATCH BASINS, THEY SHALL BE REMOVED AT THE END OF THE PROJECT OR AS DIRECTED BY THE ENGINEER IN ORDER TO PREVENT CLOGGING OF THE INLET.

DRAINAGE AND EROSION CONTROL NOTES (CONTINUED):

16. DETENTION AND RETENTION BASINS MAY BE ROUGH GRADED AND STABILIZED WITH VEGETATION AND/OR OTHER EROSION CONTROL MEASURES AS REQUIRED BY THE ENGINEER PRIOR TO USE AS TEMPORARY SEDIMENTATION BASINS DURING PROJECT CONSTRUCTION. FINAL BASIN CONSTRUCTION SHALL NOT COMMENCE UNTIL ALL SOURCES OF SEDIMENT HAVE BEEN ELIMINATED, FINAL ROADSIDE VEGETATION IS ESTABLISHED AND USE OF TEMPORARY BASINS IS NO LONGER REQUIRED AS DIRECTED BY THE ENGINEER. ANY ISSUES RELATING TO EROSION AND/OR SEDIMENT TRANSPORT INTO WETLAND AREAS RESULTING FROM SUCH USE OF SEDIMENTATION BASINS DURING CONSTRUCTION SHALL BE THE RESPONSIBILTY OF THE CONTRACTOR. ANY CORRECTIVE ACTION REQUIRED TO RESOLVE SUCH ISSUES SHALL BE COMPLETED BY THE CONTRACTOR.

17. THE TOE OF ANY FILL SLOPE IS TO REMAIN AT LEAST 1' INSIDE OF ALL EROSION CONTROLS. UNDER NO CIRCUMSTANCES SHALL THE CONTRACTOR COVER ANY PORTION OF THE EROSION CONTROL MEASURES WITH MATERIAL. ANY MATERIAL THAT IS PLACED ON ANY EROSION CONTROLS BY THE CONTRACTOR, OR ANY AGENT OF THE CONTRACTOR, SHALL BE IMMEDIATELY REMOVED BY THE CONTRACTOR, AND ANY NECESSARY REPAIRS TO THE EROSION CONTROLS ACCOMPLISHED.

18. PRIOR TO COMMENCING CONSTRUCTION ACTIVITIES, EROSION AND SEDIMENTATION CONTROLS SHALL BE INSTALLED AT THOSE AREAS INDICATED ON THE PLANS. CLEARING MAY OCCUR PRIOR TO INSTALLATION OF SUCH CONTROLS, HOWEVER NO GRUBBING, GRADING, FILLING, OR OTHER SOIL DISTURBANCE SHALL OCCUR PRIOR TO INSTALLATION. THE LIMITS OF CLEARING AND SURFACE DISTURBANCE MUST BE STRICTLY ADHERED TO IN ALL AREAS.

19. ALL HAY BALES, SILT FENCE OR TEMPORARY PROTECTION SHALL REMAIN IN PLACE UNTIL AN ACCEPTABLE STAND OF GRASS IS ESTABLISHED. IF NEEDED, TEMPORARY SEEDING CAN HELP TO MINIMIZE EROSION. TEMPORARY SEED WILL CONFORM TO R.I.D.O.T. STANDARD TEMPORARY SEED MIX.

20. THE CONTRACTOR MUST REPAIR AND/OR RESEED ANY AREAS THAT DO NOT DEVELOP WITHIN THE PERIOD OF ONE YEAR AND HE SHALL DO SO AT NO ADDITIONAL EXPENSE TO THE STATE.

21. THE NORMAL ACCEPTABLE SEASONAL SEEDING DATES ARE SPECIFIED IN SUBSECTION L.02.03 OF THE R.I.D.O.T. STANDARD SPECIFICATIONS, LATEST EDITION.

22. ADDITIONAL EROSION CONTROLS, SHALL BE INSTALLED AS DIRECTED BY THE RESIDENT ENGINEER. THESE ADDITIONAL ITEMS WILL BE PAID AT THE UNIT PRICE FOR THAT BID ITEM.

UTILITY NOTES:

1. EXISTING UTILITIES HAVE BEEN SHOWN ON THE PLANS USING THE BEST AVAILABLE INFORMATION AND ARE APPROXIMATE. BUILDING SERVICE CONNECTIONS (ELECTRIC, GAS, TELEPHONE, WATER AND SANITARY) ARE NOT SHOWN. CONTRACTOR IS TO ASSUME SERVICES ARE PRESENT TO ALL BUILDINGS.

2. THE CONTRACTOR SHALL VERIFY THE LOCATIONS OF ALL EXISTING DRAINAGE AND UTILITIES BOTH UNDERGROUND AND OVERHEAD BEFORE EXCAVATION BEGINS IN ACCORDANCE WITH CHAPTER 39-1.2 OF THE R.I. GENERAL LAWS ENTITLED "EXCAVATION NEAR UNDERGROUND UTILITY FACILITIES", WITH AMENDMENTS EFFECTIVE AS OF NOVEMBER 1, 2009 AND, WHEN NECESSARY, BY CONTACTING THE INDIVIDUAL UTILITY COMPANIES. EXCAVATION SHALL BE IN ACCORDANCE WITH ALL STATUTES, ORDINANCES, RULES AND REGULATIONS OF ANY APPLICABLE CITY, TOWN, STATE OR FEDERAL AGENCY. THE CONTRACTOR SHOULD UNDERSTAND THAT NOT ALL UTILITIES SUBSCRIBE TO THE DIG SAFE PROGRAM. IT IS THE CONTRACTOR'S RESPONSIBILITY TO NOTIFY ALL UTILITY COMPANIES AND ENSURE THAT ALL UTILITIES HAVE BEEN MARKED PRIOR TO COMMENCING THEIR WORK. ANY DAMAGE TO EXISTING UTILITIES MARKED IN THE FIELD, OR AS A RESULT OF FAILING TO CONTACT THE APPROPRIATE UTILITY COMPANY, SHALL BE REPAIRED OR REPLACED AT NO ADDITIONAL COST TO THE STATE.

3. ALL EXISTING UTILITIES TO BE ABANDONED SHALL BE CAPPED.

4. EXISTING WATER SERVICES SHALL BE RECONNECTED TO THE NEW WATER MAINS.

5. UTILITY SERVICE CONNECTIONS SHALL BE MAINTAINED TO ALL EXISTING FACILITIES TO REMAIN.

6. FIRE HYDRANTS SHALL NOT BE REMOVED FROM SERVICE WITHOUT WRITTEN AUTHORIZATION FROM THE FIRE DEPARTMENT OR THE WATER AUTHORITY.

7. ALL NEW WATER LINES SHALL BE DISINFECTED TO THE SATISFACTION OF THE WATER AUTHORITY IN ACCORDANCE WITH THE SPECIFICATIONS.

8. ALL UTILITY POLE RELATED WORK SHALL BE BY OTHERS.

THIS PLAN SHALL NOT BE ALTERED

AECOM

RHODE ISLAND
DEPARTMENT OF TRANSPORTATION

DESIGNED BY: JTS
CHECKED BY: DMP
DATE: 04/22/2020
SHEET: 03
OF: 47

SCALE: NONE

REVISIONS			REVISIONS		
NO.	DATE	BY	NO.	DATE	BY

BRIDGE GROUP 57T-10
I-195 WASHINGTON NORTH PHASE 2
PROVIDENCE
EAST PROVIDENCE
CONTRACT: -- VOLUME: 4 RHODE ISLAND

STANDARD NOTES - 1

57T-10_V4_003_STDNOTE01.DWG

FED. ROAD DIV. NO.	STATE	FEDERAL AID PROJECT NO.	FISCAL YEAR	SHEET NO.	TOTAL SHEETS
1	RI	BHO-0700-005	2020	04	47

LANDSCAPE NOTES:

1. ALL PLANT MATERIAL MUST BE TAGGED AT THE NURSERY (A RECOGNIZED GROWER OF PLANT MATERIAL) IN ACCORDANCE WITH THE R.I.D.O.T. STANDARD SPECIFICATIONS, LATEST EDITION. ALL PLANT MATERIAL MUST BE NURSERY GROWN; NO PLANTATION GROWN PLANT MATERIAL WILL BE ACCEPTED.
2. ALL PLANT SUBSTITUTIONS AND/OR CHANGES IN PLANT LOCATION MUST BE APPROVED IN ACCORDANCE WITH THE R.I.D.O.T. STANDARD SPECIFICATIONS, LATEST EDITION.
3. ALL PLANT MATERIAL IS TO BE FIELD LOCATED BY A REPRESENTATIVE FROM THE R.I.D.O.T. LANDSCAPE ARCHITECTURE UNIT.
4. A R.I.D.O.T. LANDSCAPE REPRESENTATIVE MUST BE ON SITE TO APPROVE ALL TRIMMING AND CLEARING NECESSARY TO COMPLETE THE WORK AS SHOWN ON THE PLANS.
5. ANY TOPSOIL USED AS PLANTABLE SOIL SHALL HAVE A SANDY LOAM TEXTURE RELATIVELY FREE OF SUBSOIL MATERIAL, STONES, ROOTS, LUMPS OF SOIL, TREE LIMBS, TRASH OR CONSTRUCTION DEBRIS, AND SHALL CONFORM TO SECTION M.18 OF THE R.I.D.O.T. STANDARD SPECIFICATIONS, LATEST EDITION.
6. ALL TREES AND SHRUBS SHALL BE MULCHED WITH PINE BARK MULCH IN ACCORDANCE WITH THE R.I.D.O.T. STANDARD SPECIFICATIONS, LATEST EDITION.
7. ALL TREES AND/OR SHRUBS THAT ARE PLANTED AS A BED SHALL BE MULCHED AS A BED.
8. PROVIDE A MINIMUM 6'-8" BRANCHING STANDARD ON ALL TREES INSTALLED ADJACENT TO SIDEWALKS AND/OR PEDESTRIAN ACCESS AREAS.

STRUCTURAL NOTES FOR HIGHWAY SIGNS, LUMINAIRES AND TRAFFIC SIGNALS:

GENERAL

1. ALL SUPPORT DESIGNS AND ASSOCIATED SHOP DRAWING REVIEWS SHALL BE IN CONFORMANCE WITH THE LATEST EDITION, OF THE AASHTO STANDARD SPECIFICATIONS FOR STRUCTURAL SUPPORTS FOR HIGHWAY SIGNS, LUMINAIRES AND TRAFFIC SIGNALS (THE "SPECIFICATIONS"), INCLUDING THE LATEST INTERIM SPECIFICATIONS, EXCEPT AS MODIFIED HEREIN.

CONSTRUCTION DRAWINGS AND DETAILS

1. THE FOLLOWING NOTES SHALL BE INCLUDED ON ALL PLANS AND/OR SHOP DRAWINGS IN REFERENCE TO ANCHOR BOLTS:
   - "PRETENSIONING OF ALL ANCHOR NUTS IS REQUIRED, AND SHALL BE ACCOMPLISHED BY TIGHTENING TO 1/6TH TURN BEYOND THE SNUG-TIGHT POSITION."
   - "THE MAXIMUM CLEARANCE BETWEEN THE BOTTOM OF THE LEVELING NUTS AND THE TOP OF THE CONCRETE IS CRITICAL AND SHALL NOT EXCEED THE AMOUNT SPECIFIED ON THIS DRAWING."
2. THE USE OF GROUT UNDER BASE PLATES SHALL GENERALLY NOT BE PERMITTED. IF SPECIFIC CONDITIONS WARRANT ITS USE, THE GROUT SHALL NOT BE CONSIDERED LOAD CARRYING; LOADS SHALL BE DIRECTLY SUPPORTED BY THE ANCHOR BOLTS. ADEQUATE DRAINAGE SHALL BE PROVIDED.
3. THE DAMPENING EFFECTS OF VIBRATION MITIGATION DEVICES SHALL NOT BE CONSIDERED IN THE DESIGN OF STRUCTURAL SUPPORTS FOR SIGNS AND TRAFFIC SIGNALS. IF THE CONTRACTOR CHOOSES TO USE THESE DEVICES FOR WARRANTY PURPOSES, THE TYPE OF DEVICES PROPOSED SHALL BE APPROVED BY THE DEPARTMENT PRIOR TO FABRICATION OF SUPPORTS.

TRAFFIC SIGNAL NOTES:

1. ALL SALVAGED TRAFFIC SIGNAL EQUIPMENT SHALL BE DELIVERED TO THE R.I.D.O.T. MAINTENANCE HEADQUARTERS, 360 LINCOLN AVENUE, WARWICK, RHODE ISLAND, 02888.
2. BACK PLATES SHALL BE INSTALLED ON ALL TRAFFIC SIGNAL HEADS.
3. THE CONTRACTOR SHALL SUPPLY AND INSTALL ON THE UPPER LEFT HAND CORNER OF THE BACK OF THE CONTROLLER CABINET DOOR A LAMINATED INTERSECTION GRAPHIC AND TABLE DEPICTING THE TRAFFIC DETECTOR RELAY CHANNEL ASSIGNMENTS. THE DIAGRAM SHALL BE A GRAPHIC OF THE INDIVIDUAL INTERSECTION ORIENTED SIMILAR TO THE PLANS SHOWING THE LOCATIONS OF EACH OF THE LOOP DETECTORS. THE DIAGRAM SHALL, AT A MINIMUM, INCLUDE DETECTOR NUMBERS, STREET NAME LABELS, NORTH ARROW, AND CONTROLLER CABINET LOCATION. THE ASSIGNMENT INFORMATION SHALL BE INCLUDED IN A TABLE WHICH SHALL INCLUDE, AT A MINIMUM, THE APPROACH NAME, DETECTOR NUMBER, TERMINAL NUMBER, DETECTOR RACK SLOT NUMBER, RELAY NUMBER, RELAY CHANNEL NUMBER, AND PHASE ASSOCIATED WITH EACH DETECTOR.
4. TRAFFIC CONTROLLER CABINETS, UNLESS OTHERWISE NOTED, SHALL BE NEMA TS2 TYPE 1 CABINET SIZE 6 ("P" TYPE) WITH NOMINAL DIMENSIONS OF 52"Hx44"Wx24"D.
5. ALL DELAY AND EXTENSION TIMES, AS CALLED FOR ON THE PLANS, FOR PROPOSED LOOP DETECTORS SHALL BE PROGRAMMED IN THE TRAFFIC SIGNAL CONTROLLER AND NOT THE DETECTOR RELAY.
6. A BARE GROUND WIRE SHALL BE PLACED IN ALL PVC CONDUITS AND SHALL BE BONDED TO GROUND RODS IN ACCORDANCE WITH SECTION T.03 OF THE RHODE ISLAND DEPARTMENT OF TRANSPORTATION STANDARD SPECIFICATIONS FOR ROAD AND BRIDGE CONSTRUCTION.
7. THE FINAL POSITION OF SIGNAL HEADS, PEDESTRIAN PUSHBUTTONS, DETECTORS, AND STOP LINE AND CROSSWALK PAVEMENT MARKINGS SHALL BE AS DIRECTED BY THE ENGINEER IN THE FIELD ACCORDING TO ACTUAL INTERSECTION CHARACTERISTICS.
8. A 2' MINIMUM BUFFER SHALL BE PROVIDED BETWEEN THE CURB AND ALL LATERAL OBSTRUCTIONS (INCLUDING ALL SIGNAL POLES AND TRAFFIC/PEDESTRIAN SIGNAL HEADS) TO PROVIDE ADEQUATE CLEARANCE FOR TURNING VEHICLES.
9. ALL FOUNDATIONS MUST HAVE CONES OR BARRELS BOLTED TO FOUNDATION BASES UNTIL ACTUAL POLE IS INSTALLED.
10. WHEN PLACING TRAFFIC SIGNAL HANDHOLES OR CONDUIT IN EXISTING PORTLAND CEMENT CONCRETE SIDEWALKS, THE ENTIRE SIDEWALK SQUARE OF CONCRETE SHALL BE REPLACED IN ACCORDANCE WITH R.I. STD. 43.1.0. NO PATCHES WILL BE ALLOWED.
11. ALL PEDESTRIAN PUSHBUTTONS SHALL BE COMPLIANT WITH "THE AMERICANS WITH DISABILITIES ACT ACCESSIBILITY GUIDELINES FOR BUILDINGS AND FACILITIES" (ADAAG) AND SHALL INCLUDE A PRESSURE-ACTIVATED (NON-MOVING) BUTTON. SIGNS APPLICABLE TO PUSHBUTTON ACTUATION SHALL BE INSTALLED SUCH THAT THE CROSSING ASSIGNED TO EACH BUTTON IS CLEARLY INDICATED. IF SITE CONDITIONS DO NOT ALLOW PEDESTRIAN PUSHBUTTONS TO BE INSTALLED WHERE CALLED FOR ON THE PLANS, THE R.I.D.O.T. TRAFFIC ENGINEERING UNIT SHALL BE CONSULTED WITH THROUGH AN R.F.I. PRIOR TO INSTALLING THE PUSHBUTTONS. THE FINAL PLACEMENT OF ALL PEDESTRIAN PUSHBUTTONS SHALL BE IN ACCORDANCE WITH ADAAG AND THE MANUAL ON UNIFORM TRAFFIC CONTROL DEVICES, LATEST EDITION.
12. ALL LOOP DETECTORS SHALL BE CENTERED WITHIN EACH LANE AS DELINEATED, UNLESS OTHERWISE DIMENSIONED ON PLANS.
13. ALL LOOP DETECTORS SHALL BE CUT INTO THE FINAL PAVEMENT SURFACE COURSE.
14. TRAFFIC SIGNAL CONTROLLERS SHALL BE WIRED SO THAT ANY FIRE PRE-EMPTION SHALL OVERRIDE MANUAL (PUSH BUTTON) OPERATION.
15. THE CONTRACTOR SHALL WORK CONTINUOUSLY TO RESTORE TRAFFIC SIGNAL OPERATION TO ITS INTENDED PURPOSE WHEN REPLACING THE TRAFFIC SIGNAL EQUIPMENT. A POLICE DETAIL IS REQUIRED TO DIRECT TRAFFIC AT THE INTERSECTION AT ALL TIMES WHEN THE TRAFFIC SIGNAL IS INOPERATIVE. AT NO TIME SHALL THE CONTRACTOR LEAVE THE SITE BEFORE RESTORING FULL TRAFFIC OPERATIONS.

MAINTENANCE AND PROTECTION OF TRAFFIC NOTES:

1. ALL MAINTENANCE AND PROTECTION OF TRAFFIC CONTROL SETUPS, SIGNS, CHANNELIZING DEVICES, ETC., SHALL BE IN ACCORDANCE WITH THE MANUAL ON UNIFORM TRAFFIC CONTROL DEVICES, LATEST EDITION.
2. ALL SIGN MOUNTINGS FOR TEMPORARY AND CONSTRUCTION SIGNS SHALL BE IN ACCORDANCE WITH THE R.I.D.O.T. STANDARD SPECIFICATIONS, LATEST EDITION.
3. THE CONTRACTOR SHALL COVER ALL EXISTING AND/OR TEMPORARY SIGNS THAT ARE NOT RELEVANT TO THE TRAFFIC CONTROL REQUIRED DURING ANY PARTICULAR STAGE OF THE CONTRACT.
4. ADVANCE FLAGPERSON SIGNS (W20-7A) SHALL BE USED IN ADVANCE OF ANY POINT AT WHICH A FLAGPERSON OR A POLICE OFFICER HAS BEEN STATIONED TO CONTROL TRAFFIC. WHEN NEEDED, AN APPROPRIATE DISTANCE MESSAGE MAY BE DISPLAYED ON A SUPPLEMENTAL PLATE (24"x18") BELOW THE FLAGPERSON SYMBOL SIGN. THE SIGN SHALL BE PROMPTLY REMOVED OR COVERED WHENEVER THE FLAGPERSON IS NOT AT THE STATION.
5. POLICE OFFICERS (AND NOT FLAGPERSONS) SHALL BE UTILIZED WHEN WORK WILL IMPACT SIGNALIZED INTERSECTIONS AND LIMITED ACCESS HIGHWAYS.
6. POLYETHYLENE DRUMS SHALL BE UTILIZED AS A CHANNELIZING DEVICE WHEN A TRAFFIC CONTROL SET-UP IS TO REMAIN BEYOND WORKING HOURS WHEN NO WORKERS ARE PRESENT. CONES SHALL BE UTILIZED WHEN A TRAFFIC CONTROL SET-UP IS TO REMAIN ONLY DURING WORKING HOURS AND IS SUBSEQUENTLY BROKEN DOWN AT THE END OF THE WORKDAY.
7. ARROW PANELS SHALL BE SET IN THE FLASHING FOUR CORNERS CAUTION MODE UNLESS UTILIZED FOR A MERGING TAPER. ARROW PANELS SET IN THE FLASHING ARROW MODE SHALL NOT BE UTILIZED FOR LANE SHIFTS.
8. TEMPORARY CONSTRUCTION SIGNS AND OTHER WORKZONE TRAFFIC CONTROL DEVICES THAT ARE DAMAGED OR REQUIRE RELOCATION SHALL BE REPLACED AND / OR RELOCATED UNDER THE PAY ITEM FOR "MAINTENANCE AND MOVEMENT TRAFFIC PROTECTION."
9. THE PRIVATE VEHICLES OF CONSTRUCTION WORKERS SHALL NOT BE PARKED ON THE TRAVEL LANES OR SHOULDERS. THEY MAY BE PARKED WITHIN THE STATE RIGHT-OF-WAY ONLY IN AREAS 30' BEYOND THE OUTSIDE EDGE OF THE TRAVEL LANES AND/OR IN AREAS APPROVED BY THE ENGINEER.
10. TEMPORARY CONSTRUCTION SIGNS AND OTHER TEMPORARY TRAFFIC CONTROL DEVICES SHALL BE INSTALLED PRIOR TO THE START OF WORK IN ANY AREA OPEN TO TRAFFIC, AND SHALL BE REMOVED AS SOON AS PRACTICAL WHEN THEY ARE NO LONGER APPROPRIATE.
11. THE INTENDED VEHICLE PATHS THROUGH EACH WORK ZONE SHALL BE CLEARLY MARKED AT ALL TIMES. WATERBORNE PAVEMENT MARKINGS SHALL BE INSTALLED BEFORE THE END OF THE WORK SHIFT ON ALL COLD-PLANED AND NEW ROADWAY SURFACES THAT WILL BE OPENED TO TRAFFIC AT THE END OF THE SHIFT.

THIS PLAN SHALL NOT BE ALTERED

AECOM

RI DOT

RHODE ISLAND
DEPARTMENT OF TRANSPORTATION

DESIGNED BY: JTS
CHECKED BY: DMP
DATE: 04/22/2020
SHEET: 04
OF: 47

SCALE: NONE

REVISIONS			REVISIONS		
NO.	DATE	BY	NO.	DATE	BY

BRIDGE GROUP 57T-10
I-195 WASHINGTON NORTH PHASE 2
PROVIDENCE
EAST PROVIDENCE
CONTRACT: -- VOLUME: 4
RHODE ISLAND

STANDARD NOTES - 2

57T-10_V4_004_STDNOTE02.DWG

FED. ROAD DIV. NO.	STATE	FEDERAL AID PROJECT NO.	FISCAL YEAR	SHEET NO.	TOTAL SHEETS
1	RI	BHO-0700-005	2020	05	47

JOB SPECIFIC LEGEND (HIGHWAY)

7.5.1B (18")	BITUMINOUS BERM – 18" WIDTH (SEE MISCELLANEOUS DETAILS)
7.3.0M	PROVIDENCE STANDARD GRANITE CURB (STRAIGHT OR CURVED)
7.3.1M	PROVIDENCE STANDARD 3'–0" GRANITE TRANSITION CURB
7.3.2M	PROVIDENCE STANDARD 6'–0" GRANITE TRANSITION CURB
7.3.3M	PROVIDENCE STANDARD GRANITE CURB RAMP TRANSITION CURB
7.3.4M	PROVIDENCE STANDARD GRANITE 2'–0" RADIUS CORNER
7.3.5M	PROVIDENCE STANDARD GRANITE INLET STONE
7.3.9M	PROVIDENCE STANDARD GRANITE RAMP STONE
BOS	BOTTOM OF SLOPE
BMS	CONCRETE F–SHAPE BARRIER WITH MOMENT SLAB (SEE GENERAL NOTES – NOTE NO. 18)
CC (4")	CEMENT CONCRETE (DEPTH)
CFS	COMPOST FILTER SOCK (12 INCH DIAMETER)
CTB#	CONCRETE TRANSITION BARRIER (SEE MISCELLANEOUS DETAIL SHEET NOS. 11–15)
DCMB	REMOVE AND DISPOSE CONCRETE MEDIAN BARRIER
DDCR	DRIVEWAY DEVELOPMENT FOR CURB RETURN
DEB	DEEP–EMBEDDED F SHAPE BARRIER
DGC	REMOVE AND DISPOSE GRANITE CURB
EAMT	ENERGY ABSORBING MEDIAN TERMINAL
ECB	EROSION CONTROL BLANKET (BIODEGRADABLE)
EPS	EXISTING PAVEMENT STRUCTURE
ETEA	GUARDRAIL END TREATMENT – ENERGY ABSORBING TANGENTIAL TERMINAL, TL4
ETR	EXISTING TO REMAIN
FCBC	F–SHAPE CONCRETE BARRIER WITH CONCRETE SLAB
FCBM	F–SHAPE CONCRETE BARRIER WITH MOMENT SLAB (TO BE DESIGN BY DESIGN BUILD TEAM)
FCMB	F–SHAPE CONCRETE MEDIAN BARRIER
FDP1	FULL DEPTH PAVEMENT (I–195 & RAMPS) 1½" DENSE FRICTION (FC) HMA COURSE 1½" CLASS 9.5 HMA SURFACE COURSE 8½" CLASS 19.0 HMA BASE COURSE 12" GRAVEL BORROW SUBBASE
FDP2	FULL DEPTH PAVEMENT (I–195 AT CONCRETE MEDIAN BARRIER) 1½" DENSE FRICTION (FC) HMA COURSE 1½" CLASS 9.5 HMA SURFACE COURSE 7" CLASS XX CONCRETE 12" GRAVEL BORROW SUBBASE
FDP3	FULL DEPTH PAVEMENT (GANO STREET) 2" CLASS 12.5 HMA SURFACE COURSE 6" CLASS 19.0 HMA BASE COURSE 12" GRAVEL BORROW SUBBASE
ISCD	INLET SEDIMENT CONTROL DEVICE
GTBA	W–BEAM GUARDRAIL ATTACHMENT TO F–SHAPE BARRIER – APPROACH END SECTION
GTBT	W–BEAM GUARDRAIL ATTACHMENT TO F–SHAPE BARRIER – TRAILING END SECTION
GTEA	GUARDRAIL END TREATMENT – TRAILING ANCHORAGE
ME	MATCH EXISTING
MMO1	MICROMILLING AND PAVEMENT OVERLAY (I–195 & RAMPS) 1½" PAVEMENT MICROMILLING 1½" DENSE FRICTION HMA OVERLAY
MMO2	MICROMILLING AND PAVEMENT OVERLAY (GANO STREET) 2" PAVEMENT MICROMILLING 2" CLASS 12.5 HMA OVERLAY
MSBG	MASH COMPLIANT STEEL BEAM GUARDRAIL, TL–3
NUP	NEW UTILITY POLE (BY OTHERS)
RRBP	REMOVE AND RESET HISTORIC BRIDGE PYLON
RW–1	PROPOSED RETAINING WALL TYPE 1 (SEE VOLUME 2 FOR DETAILS)
RW–2	PROPOSED RETAINING WALL TYPE 2 (SEE VOLUME 3 FOR DETAILS)
PMM	PAVEMENT MILLINGS MULCH (4" DEPTH)
PT–1	PAVEMENT TRANSITION – FULL DEPTH TO EXISTING (SEE MISCELLANEOUS DETAIL SHEET NO. 2)
PT–2	PAVEMENT TRANSITION – MICROMILLING TO EXISTING (SEE MISCELLANEOUS DETAIL SHEET NO. 2)
RRMT	REMOVE AND RESET ENERGY ABSORBING MEDIAN TERMINAL
SC–1	FULL DEPTH SAWCUT OF BITUMINOUS CONCRETE
SC–2	FULL DEPTH SAWCUT OF CONCRETE SIDEWALK
SC–3	SAWCUT AND MATCH EXISTING ASPHALT
SPSG	STEEL PIPE SINGLE LEAF SWING GATE
TOS	TOP OF SLOPE

JOB SPECIFIC PLAN SYMBOLS

EXISTING	NEW
200–CRMC JURISDICTION LINE	
	COMPOST FILTER SOCKS
	GUARDRAIL END TREATMENT ENERGY ABSORBING TANGENTIAL TERMINAL, TL4
	GUARDRAIL TRANSITION TO END POST
	METAL BEAM GUARDRAIL STEEL POST WITH W–BEAM OFFSET BLOCK (SINGLE FACE)

– PROPOSED MICROMILL AND PAVEMENT OVERLAY

– REMOVE AND DISPOSE EXISTING PAVEMENT, CURB AND CONCRETE SIDEWALK

JOB SPECIFIC GENERAL NOTES

1. ALL EXISTING ITEMS NOT REFERENCED FOR MODIFICATION WILL BE "EXISTING TO REMAIN" UNLESS NOTED OTHERWISE.
2. ALL PROPOSED GUARDRAIL AND IMPACT DEVICES SHALL CONFORM TO THE MANUAL FOR ASSESSING SAFETY HARDWARE 2016 (M.A.S.H) REQUIREMENTS AND AS DETAILED ON THE CONTRACT PLANS.
3. STEEL BEAM GUARDRAIL REFLECTORIZED TRIANGULAR DELINEATORS (R.I. STD. 34.2.5) SHALL BE FURNISHED AND INSTALLED ON ALL NEW GUARDRAIL INSTALLATIONS AT 37'–6" SPACING.
5. THE FINAL LOCATION OF ALL CURB RAMPS MUST BE COORDINATED, IN THE FIELD, WITH THE PROPOSED LOCATIONS OF UTILITY POLES, LANDSCAPING, DRAINAGE GRATES AND COVERS TO ENSURE A CLEAR PEDESTRIAN PATH.
6. THE FINAL LOCATION OF ALL DRIVEWAYS MUST BE COORDINATED IN THE FIELD.
7. NO LONGITUDINAL DROP–OFFS WILL BE ALLOWED TO REMAIN BETWEEN LANES DURING NON–CONSTRUCTION HOURS. THE CONTRACTOR SHALL SCHEDULE THE MICROMILLING OPERATIONS TO PROVIDE A CONSISTENT FULL–WIDTH PAVEMENT SURFACE AT THE END OF THE WORK DAY.
8. PAVING MATERIALS WILL BE TEMPORARILY STOCKPILED IN APPROVED AREAS.
9. FOR GRANITE CURB INSTALLATIONS, THE CONTRACTOR MAY ALTERNATIVELY REMOVE, HANDLE, HAUL, TRIM, RESET CURB EDGING, STRAIGHT (ALL TYPES) WHERE FEASIBLE AND APPROVED BY THE ENGINEER. NEW CURB TO BE INSTALLED WHERE THE AMOUNT OF EXISTING CURB BECOMES INSUFFICIENT. THE WORK SHALL CONFORM TO SECTION 906 OF THE SPECIFICATIONS.
10. CIRCULAR CURB IS REQUIRED ON CURVES WITH RADII OF 160 FT OR LESS. STRAIGHT CURB SHALL BE USED ON CURVES WITH RADII GREATER THAN 160 FT
11. PER RIDOT STANDARD SPECIFICATIONS, CLEAR AND GRUB ALL AREAS WITHIN FILL LOCATIONS AND LESS THAN 3 FEET IN HEIGHT TO SUBGRADE WITHIN THE LIMITS OF DISTURBANCE OF THE PROJECT . AFTER CLEARING AND GRUBBING, THE AREA SHALL BE STABILIZED AND FINISHED WITH LOAM AND SEED.
12. DOUBLE NESTED GUARDRAIL AND ELIMINATION OF GUARDRAIL POSTS SHALL BE INSTALLED WHERE GUARDRAIL POSTS CROSS WITH DRAINAGE PIPES.
13. NEW GUARDRAIL RUNS WITH APPROACH END TERMINALS AND TRAILING END SECTIONS SHALL HAVE RED AND GREEN DELINEATORS INSTALLED PER THE DETAIL SHOWN ON MISCELLANEOUS DETAIL SHEET NO. 9.
14. ALL BARRIER CONCRETE IS TO BE FIELD COATED AFTER FINAL INSTALLATION WITH A CONCRETE PENETRANT/SEALER. CONCRETE SHALL CURE NOT LESS THAN 28 DAYS PRIOR TO COATING.
15. CONCRETE F–SHAPE BARRIER WITH MOMENT SLAB TO BE DESIGNED BY THE DESIGN BUILD TEAM.
16. ALL PROPOSED LIGHTING AND RELOCATION OF EXISTING LIGHTING TO BE DESIGNED BY THE DESIGN BUILD TEAM.

JOB SPECIFIC TRAFFIC NOTES

1. ALL EXISTING TRAFFIC SIGNS TO REMAIN UNLESS NOTED OTHERWISE.
2. PROPOSED SIGN SYMBOLS SHOWN ON THE PLANS ARE PICTORIAL ONLY. THE ACTUAL NUMBER OF POSTS REQUIRED FOR EACH SIGN ASSEMBLY IS BASED ON R.I. STD. 24.2.0.
3. EXISTING TRAFFIC SIGNS SHALL NOT BE REMOVED/RELOCATED UNTIL NEW SIGN/POSTS HAVE BEEN INSTALLED.
4. SIGNS TO BE REMOVED AND RESET SHALL BE REMOVED FROM EXISTING SUPPORTS, PROPERLY STORED AND REMOUNTED ON NEW SIGN POSTS IN ACCORDANCE WITH R.I. STD. 24.2.0.. EXISTING SIGN SUPPORTS ARE TO BE REMOVED AND DISPOSED.
5. LOCATION OF NEW OR TO BE RELOCATED SIGNS SHALL BE AS SHOWN ON THE PLANS UNLESS OTHERWISE NOTED. EXISTING DELINEATORS IMPACTED BY GUARDRAIL INSTALLATION AND BRIDGE ABUTMENT MARKERS SHALL BE REMOVED AND REPLACED WITH NEW IN ACCORDANCE WITH SECTION T.18 OF THE R.I. STANDARD SPECIFICATIONS.
6. ALL PERMANENT PAVEMENT MARKING SHALL BE EPOXY RESIN UNLESS NOTED OTHERWISE.
7. TEMPORARY FAST–DRYING WATERBORNE PAVEMENT MARKING PAINT, 8 MILS AND 16 MILS, SHALL BE PLACED IN ACCORDANCE WITH SECTION T20.03.4 OF THE R.I. STANDARD SPECIFICATIONS AND THE REQUIREMENTS OF THE LATEST EDITION OF THE "MANUAL ON UNIFORM TRAFFIC CONTROL DEVICES", INCLUDING ALL ADDENDA; 8 MIL ON THE FINAL RIDING SURFACE OF ROADWAYS THAT WILL BE OPEN TO TRAFFIC AT THE COMPLETION OF EACH DAY'S PAVING OPERATION AND 16 MIL ON MILLED SURFACES OPEN TO TRAFFIC.
8. TEMPORARY CONSTRUCTION ZONE REFLECTIVE PAVEMENT DELINEATORS SHALL BE PLACED ON BRIDGES AND LANE SHIFTS AS SHOWN ON THE MAINTENANCE AND PROTECTION OF TRAFFIC PLANS IN ACCORDANCE WITH SECTION T.21 OF THE R.I. STANDARD SPECIFICATIONS.
9. EPOXY RESIN PAVEMENT MARKINGS SHALL BE PLACED ON THE FINAL SURFACE COURSE NO SOONER THAN TWO (2) WEEKS BUT NO LONGER THAN FOUR (4) WEEKS FROM THE COMPLETION OF PAVING OPERATIONS.

JOB SPECIFIC DRAINAGE AND UTILITY NOTES

1. ALL PROPOSED DRAINAGE STRUCTURES AND PIPES ARE SHOWN SCHEMATICALLY ON THE PLANS AND DO NOT REPRESENT A DRAINAGE DESIGN. THE DESIGN BUILD TEAM WILL NEED TO DETERMINE FINAL PIPE SIZES AND DRAINAGE STRUCTURE LOCATIONS AS WELL AS ANY MODIFICATIONS TO THE EXISTING DRAINAGE SYSTEM.
2. STORMWATER TREATMENT AREAS SHOWN ON THE PLANS REPRESENTS AREA AVAILABLE FOR A STORMWATER TREATMENT UNITS. THE DESIGN BUILD TEAM WILL NEED TO DETERMINE FINAL TYPE OF STORMWATER TREATMENT UNIT, LOCATION AND SIZE TO MEET THE REQUIREMENTS OF THE RIDOT LINEAR STORMWATER MANUAL.
3. THE DESIGN BUILD TEAM SHALL VERIFY EXISTING STORM DRAIN PIPE SIZES WHERE NEEDED TO COMPLETE THE DESIGN.
4. UNLESS NOTED OTHERWISE, ALL CATCH BASINS AND MANHOLE LOCATED WITHIN THE LIMIT OF DISTURBANCE ARE TO CLEANED.
5. ALL CLEANING AND FLUSHING OF PIPE SHALL BE COMPLETED PRIOR TO CLEANING CATCH BASINS OR MANHOLES.
6. IT IS THE INTENT OF THE PROPOSED DRAINAGE DESIGN TO AVOID EXISTING UTILITIES. AT LOCATIONS WHERE THERE IS AN UNANTICIPATED CONFLICT, THE CONTRACTOR SHALL, WHERE POSSIBLE, MODIFY THE DRAINAGE STRUCTURES SUCH THAT THE PROPOSED DRAINAGE AVOIDS THE UTILITY.
7. SANITARY SEWER, GAS, WATER AND OTHER UTILITY SERVICES SHALL BE MAINTAINED AT ALL TIMES DURING CONSTRUCTION.
8. WHERE APPLICABLE, CONTRACTOR TO FIELD VERIFY ELEVATIONS OF EXISTING UTILITIES TO REMAIN AND PROVIDE ADEQUATE COVER.
9. IT IS THE CONTRACTOR'S RESPONSIBILITY TO ENSURE THAT ALL RELOCATED UTILITY POLES ARE PROPERLY STABILIZED DURING EACH PHASE OF CONSTRUCTION.
10. ALL EXISTING MANHOLES, CATCH BASINS AND UTILITY SERVICE BOXES WITHIN THE FULL–DEPTH PAVING LIMITS SHALL BE ADJUSTED TO FINISH GRADE.
11. ANY ADJUSTMENTS TO VERZION OWNED UNDERGROUND EQUIPMENT (MANHOLES, FRAME AND COVERS, CONDUIT, ETC.) SHALL BE PERFORMED BY VERIZON.
12. UNLESS NOTED OTHERWISE, ALL EXISTING HIGHWAY LIGHTING AND APPURTENANCES (HANDHOLES, CONDUIT, ETC.) ARE TO REMAIN.

AECOM

RHODE ISLAND DEPARTMENT OF TRANSPORTATION

DESIGNED BY: JTS
CHECKED BY: DMP
DATE: 04/22/2020
SHEET: 05
OF: 47

SCALE: NONE

REVISIONS			REVISIONS		
NO.	DATE	BY	NO.	DATE	BY

BRIDGE GROUP 57T-10
I-195 WASHINGTON NORTH PHASE 2
PROVIDENCE EAST PROVIDENCE
CONTRACT: -- VOLUME: 4 RHODE ISLAND

JOB SPECIFIC NOTES AND LEGEND

57T–10_V4_005_JPSYM.DWG

FED. ROAD DIV. NO.	STATE	FEDERAL AID PROJECT NO.	FISCAL YEAR	SHEET NO.	TOTAL SHEETS
01	RI	BHO-0700-005	2020	06	47

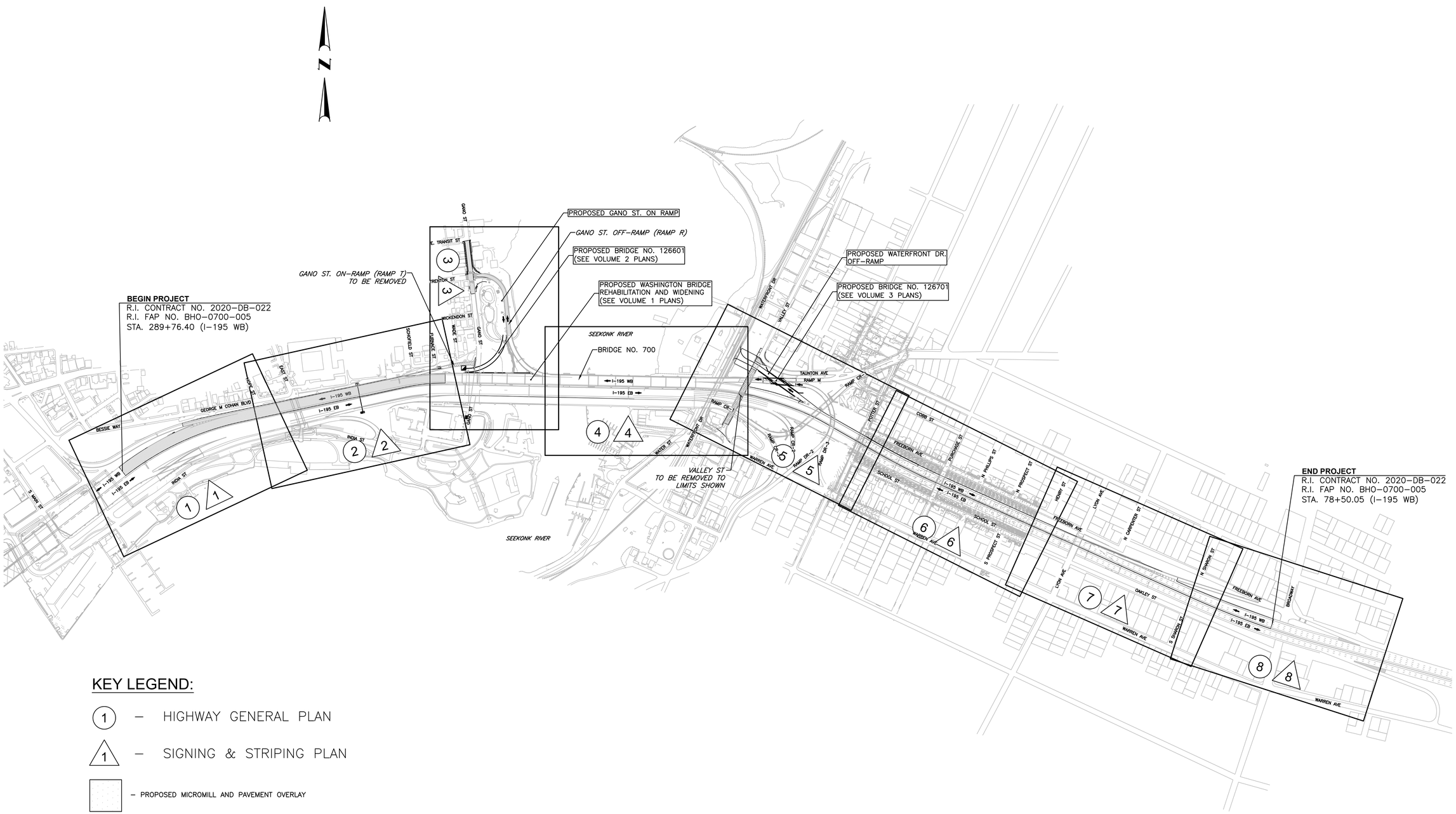

KEY LEGEND:

(1) – HIGHWAY GENERAL PLAN

(1) – SIGNING & STRIPING PLAN

– PROPOSED MICROMILL AND PAVEMENT OVERLAY

– REMOVE AND DISPOSE EXISTING PAVEMENT, CURB AND CONCRETE SIDEWALK

300 0 150 300 600 1200

GRAPHIC SCALE

AECOM

RI DOT

RHODE ISLAND
DEPARTMENT OF TRANSPORTATION

DESIGNED BY: JTS
CHECKED BY: DMP
DATE: 04/22/2020
SHEET: 06
OF: 47

REVISIONS			REVISIONS		
NO.	DATE	BY	NO.	DATE	BY

BRIDGE GROUP 57T-10
I-195 WASHINGTON NORTH PHASE 2
PROVIDENCE
EAST PROVIDENCE
CONTRACT: -- VOLUME: 4
RHODE ISLAND

KEY PLAN

57T-10_V4_006_KEY.DWG

FED. ROAD DIV. NO.	STATE	FEDERAL AID PROJECT NO.	FISCAL YEAR	SHEET NO.	TOTAL SHEETS
1	RI	BHO-0700-005	2020	07	47

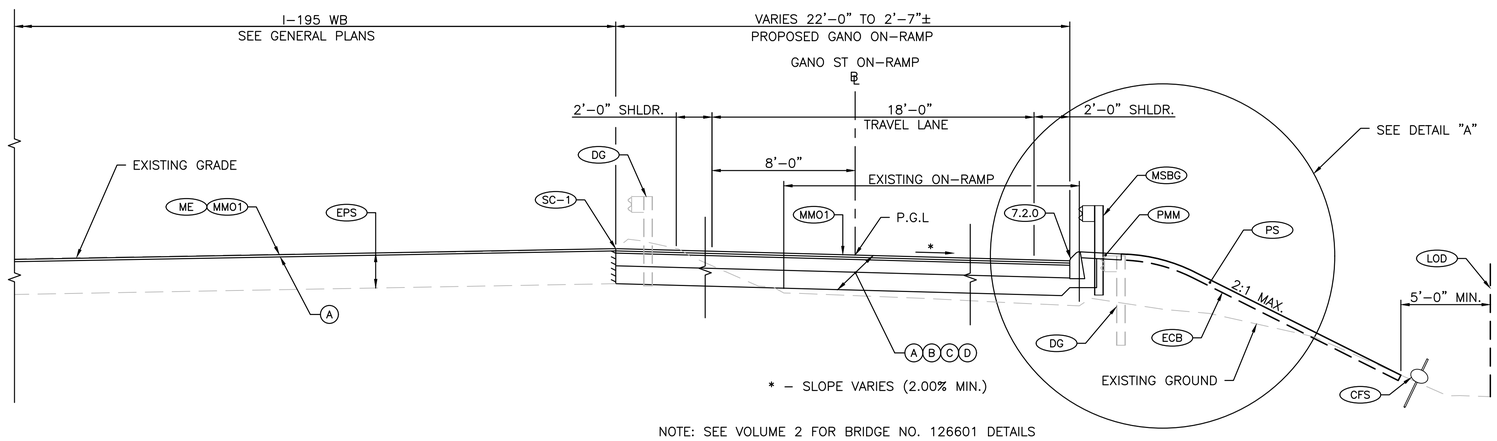

NOTE: SEE VOLUME 2 FOR BRIDGE NO. 126601 DETAILS

GANO ON-RAMP TYPICAL SECTION

STA. 29+07± (PROP. BRIDGE NO. 126601) TO STA. 34+35

SCALE: 1" = 4'

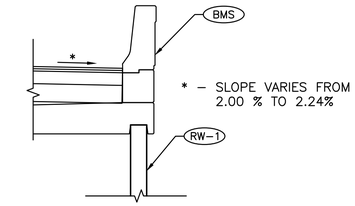

STA. 29+07 RT TO STA. 30+31 RT

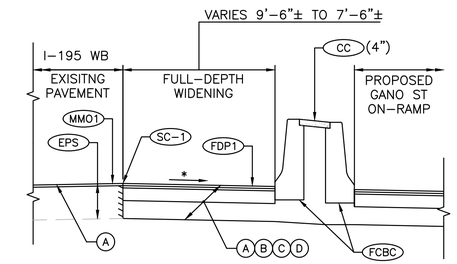

* - SLOPE VARIES

STA. 29+07 LT TO STA. 30+13 LT

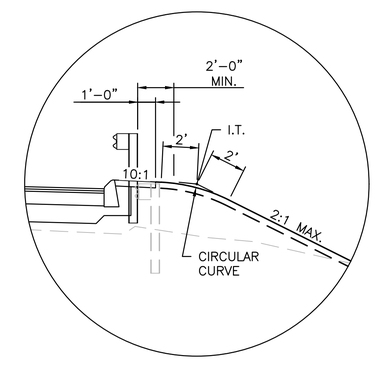

DETAIL A

SCALE: 1" = 4'

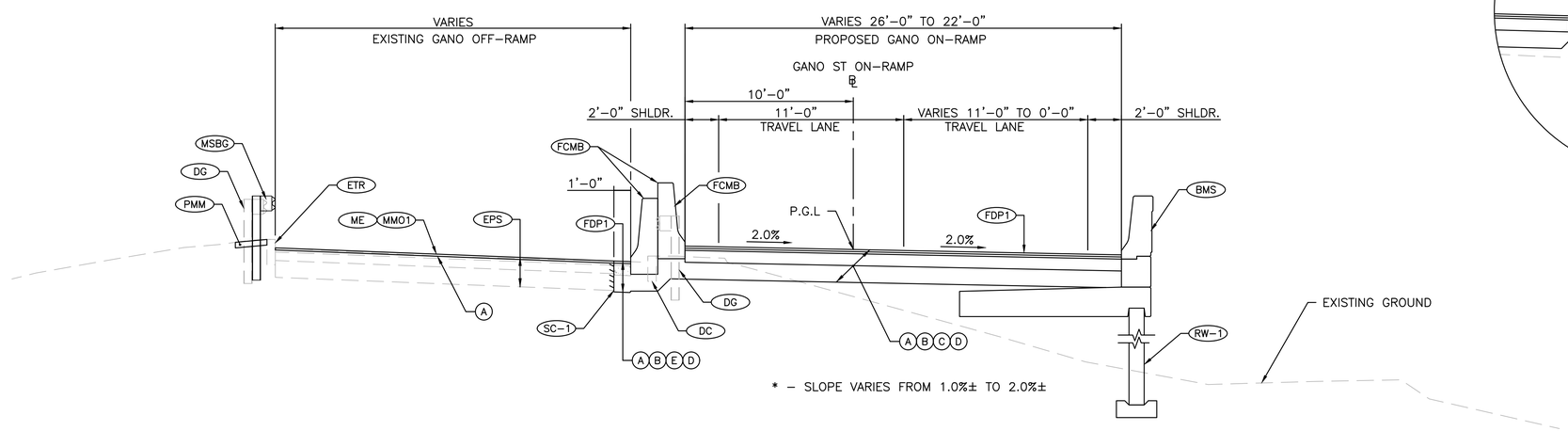

GANO ON-RAMP TYPICAL SECTION

STA. 21+05 TO STA. 25+17± (PROP. BRIDGE NO. 126601)

SCALE: 1" = 4'

PAVEMENT STRUCTURE LEGEND

- (A) - 1½" DENSE FRICTION (FC) PAVEMENT COURSE
- (B) - 1½" CLASS 9.5 HMA (MODIFIED) SURFACE COURSE
- (C) - 8½" CLASS 19.0 HMA BASE COURSE
- (D) - GRAVEL BORROW SUBBASE (12" MIN.)
- (E) - 7" CLASS XX CONCRETE

AECOM

RHODE ISLAND
DEPARTMENT OF TRANSPORTATION

DESIGNED BY: JTS
CHECKED BY: DMP
DATE: 04/22/2020
SHEET: 07
OF: 47

SCALE: NONE

REVISIONS			REVISIONS		
NO.	DATE	BY	NO.	DATE	BY

BRIDGE GROUP 57T-10
I-195 WASHINGTON NORTH PHASE 2
PROVIDENCE
EAST PROVIDENCE
CONTRACT: -- VOLUME: 4
RHODE ISLAND

TYPICAL SECTIONS - 1 OF 4

57T-10_V4_007_TYPS.DWG

FED. ROAD DIV. NO.	STATE	FEDERAL AID PROJECT NO.	FISCAL YEAR	SHEET NO.	TOTAL SHEETS
1	RI	BHO-0700-005	2020	08	47

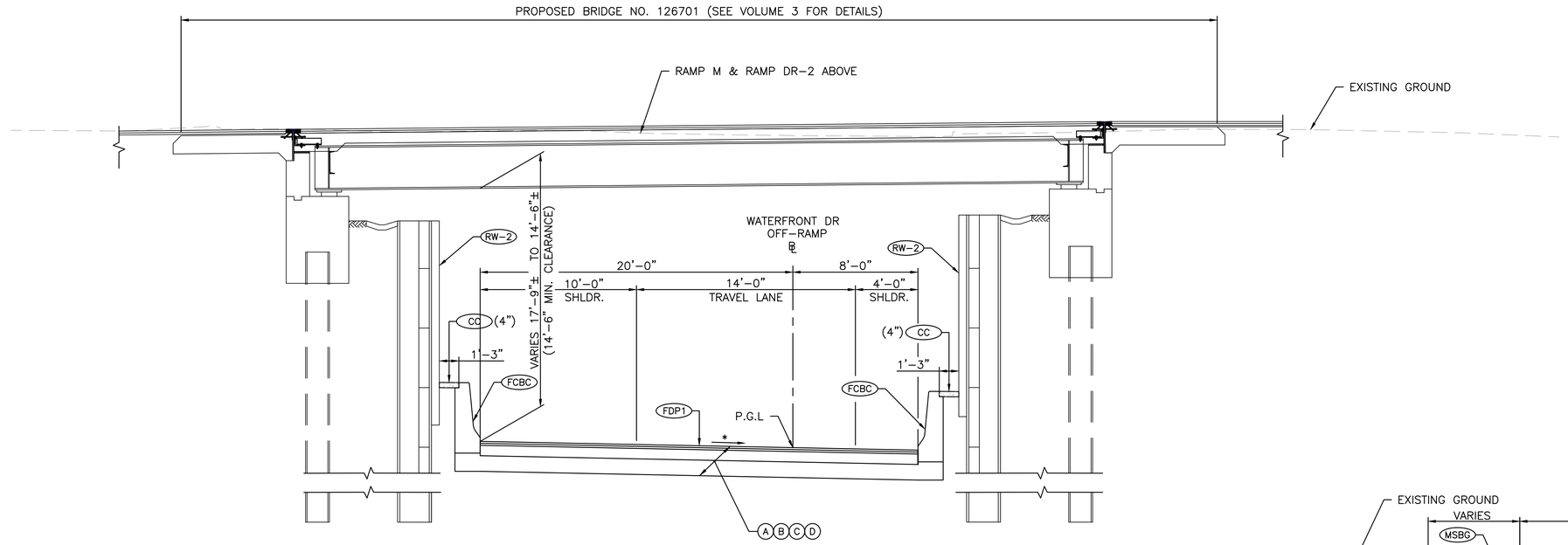

* – SLOPE VARIES FROM 2.00% TO 4.00%

NOTE: SEE VOLUME 3 FOR BRIDGE NO. 126701 DETAILS

WATERFRONT DRIVE OFF-RAMP (RAMP TYPICAL SECTION

STA. 1+97 TO STA. 2+97
STA. 2+97± TO STA. 3+70± (PROP. BRIDGE NO. 126701 ABOVE)
STA 3+70 TO STA 5+00

SCALE: 1" = 4'

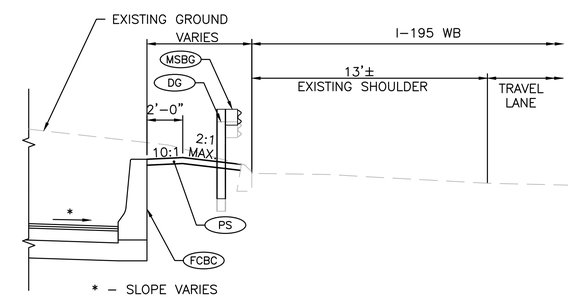

* – SLOPE VARIES

STA. 4+90 RT TO STA. 5+35± RT

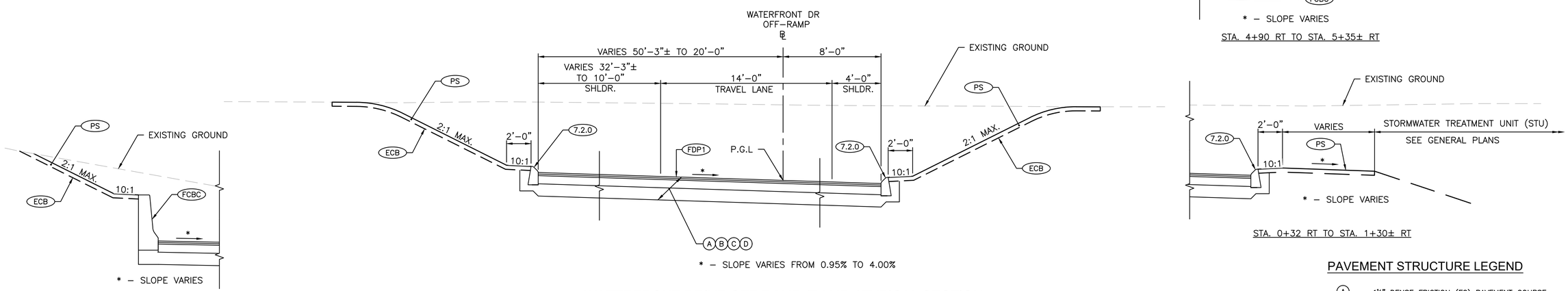

* – SLOPE VARIES FROM 0.95% TO 4.00%

WATERFRONT DRIVE OFF-RAMP (RAMP)TYPICAL SECTION

STA. 0+32 TO STA. 1+97
STA 4+90 TO STA 5+35

SCALE: 1" = 4'

* – SLOPE VARIES

STA. 5+00 LT TO STA. 5+35 LT

* – SLOPE VARIES

STA. 0+32 RT TO STA. 1+30± RT

PAVEMENT STRUCTURE LEGEND

- (A) – 1½" DENSE FRICTION (FC) PAVEMENT COURSE
- (B) – 1½" CLASS 9.5 HMA (MODIFIED) SURFACE COURSE
- (C) – 8½" CLASS 19.0 HMA BASE COURSE
- (D) – GRAVEL BORROW SUBBASE (12" MIN.)
- (E) – 7" CLASS XX CONCRETE

AECOM

RI DOT
RHODE ISLAND
DEPARTMENT OF TRANSPORTATION

DESIGNED BY: JTS
CHECKED BY: DMP
DATE: 04/22/2020
SHEET: 08
OF: 47

SCALE: NONE

REVISIONS			REVISIONS		
NO.	DATE	BY	NO.	DATE	BY

BRIDGE GROUP 57T-10
I-195 WASHINGTON NORTH PHASE 2
PROVIDENCE
EAST PROVIDENCE
CONTRACT: -- VOLUME: 4 RHODE ISLAND

TYPICAL SECTIONS - 2 OF 4

57T-10_V4_007_TYPS.DWG

FED. ROAD DIV. NO.	STATE	FEDERAL AID PROJECT NO.	FISCAL YEAR	SHEET NO.	TOTAL SHEETS
1	RI	BHO-0700-005	2020	09	47

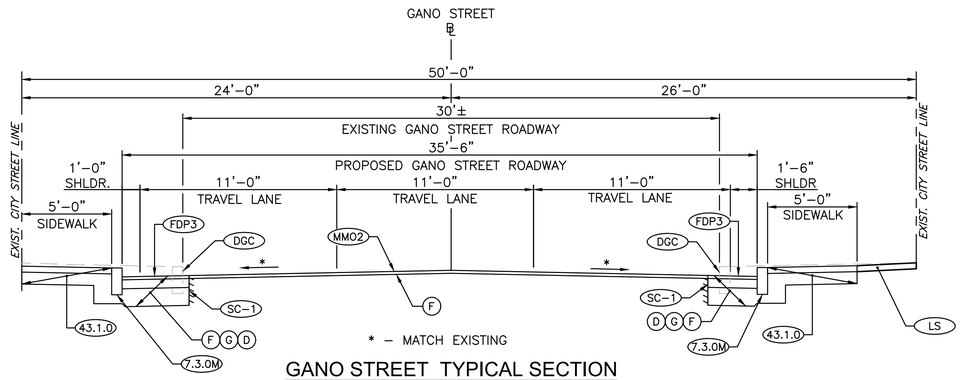

GANO STREET TYPICAL SECTION

STA. 132+77 TO STA. 134+81

SCALE: 1" = 4'

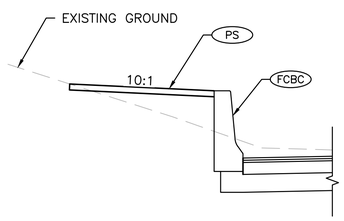

STA. 5+36 LT TO STA. 9+58 LT

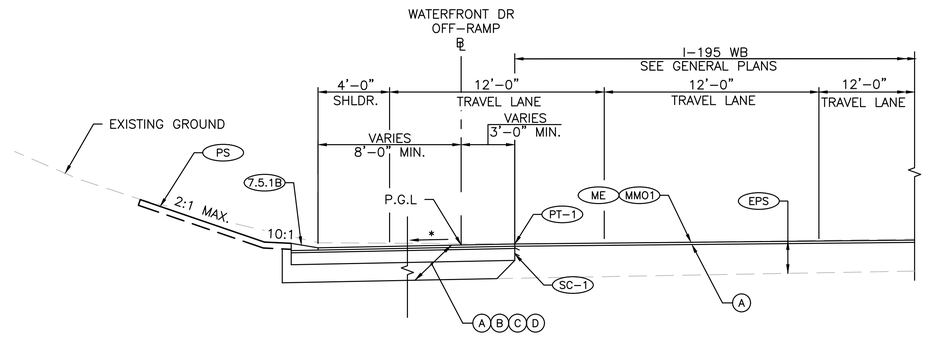

* – MATCH EXISTING I-195 WB CROSS SLOPE

WATERFRONT DRIVE OFF-RAMP & I-195 WB WIDENING TYPICAL SECTION

STA. 5+36 TO STA. 14+25

SCALE: 1" = 4'

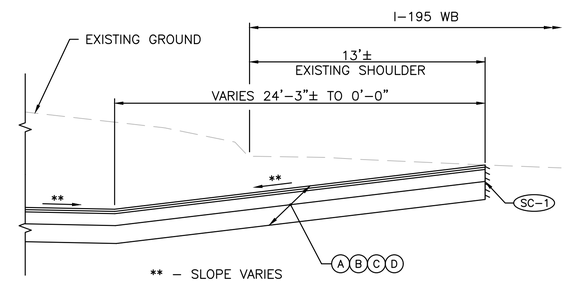

** – SLOPE VARIES

STA. 5+36 RT TO STA. 6+49 RT

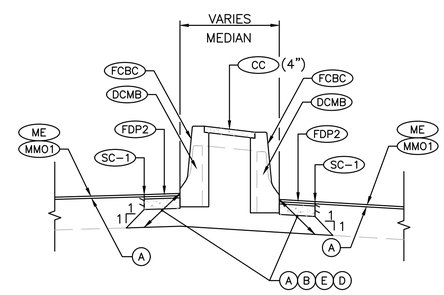

I-195 MEDIAN F SHAPE BARRIER TYPICAL SECTION

I-195 WB STA. 305+54± TO 195 WB-B STA. 20+71±
I-195 WB-E 47+97± TO I-195 WB-E 78+50

SCALE: 1" = 4'

PAVEMENT STRUCTURE LEGEND

- (A) – 1½" DENSE FRICTION (FC) PAVEMENT COURSE
- (B) – 1½" CLASS 9.5 HMA (MODIFIED) SURFACE COURSE
- (C) – 8½" CLASS 19.0 HMA BASE COURSE
- (D) – GRAVEL BORROW SUBBASE (12" MIN.)
- (E) – 7" CLASS XX CONCRETE
- (F) – 2" CLASS 12.5 HMA SURFACE COURSE
- (G) – 6" CLASS 19.0 HMA BASE COURSE

AECOM

RI DOT

RHODE ISLAND
DEPARTMENT OF TRANSPORTATION

DESIGNED BY:	JTS
CHECKED BY:	DMP
DATE:	04/22/2020
SHEET:	09
OF:	47

SCALE: NONE

REVISIONS			REVISIONS		
NO.	DATE	BY	NO.	DATE	BY

BRIDGE GROUP 57T-10
I-195 WASHINGTON NORTH PHASE 2
PROVIDENCE EAST PROVIDENCE
CONTRACT: -- VOLUME: 4 RHODE ISLAND

TYPICAL SECTIONS - 3 OF 4

57T-10_V4_007_TYPS.DWG

FED. ROAD DIV. NO.	STATE	FEDERAL AID PROJECT NO.	FISCAL YEAR	SHEET NO.	TOTAL SHEETS
1	RI	BHO-0700-005	2020	10	47

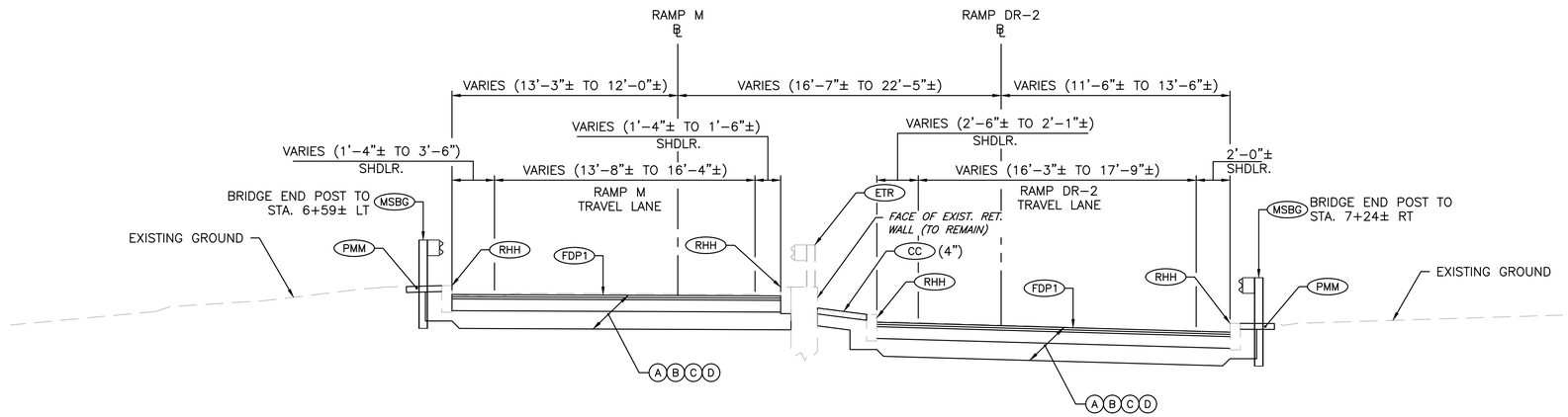

NOTE: SEE VOLUME 3 FOR BRIDGE NO. 126701 DETAILS

RAMP M & DR-2 TYPICAL SECTION

RAMP M STA. 6+15± (PROP. BRIDGE NO. 126701)
TO STA. 7+00

SCALE: 1" = 4'

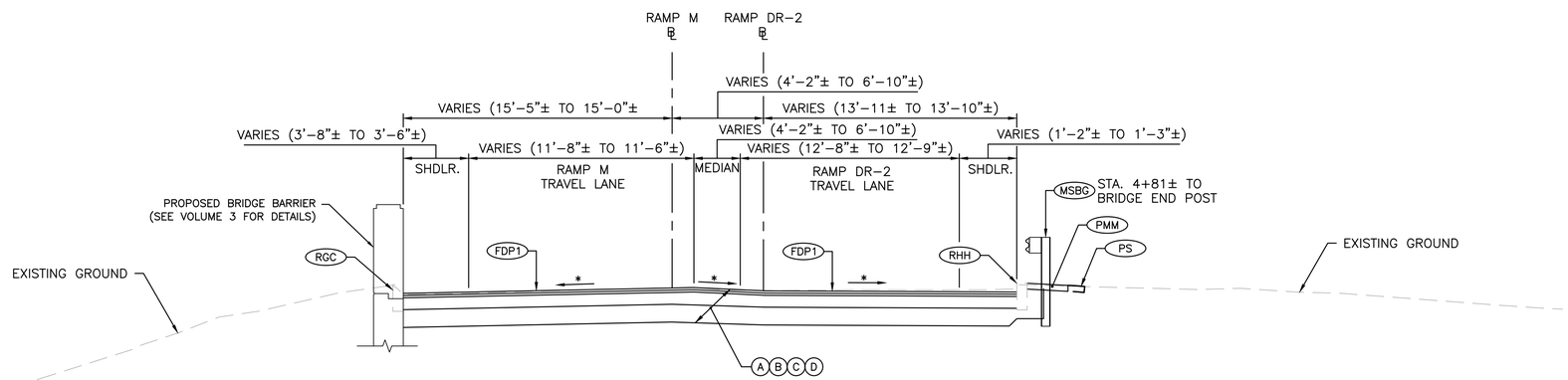

* – SLOPE VARIES

RAMP M & DR-2 TYPICAL SECTION

RAMP M STA. 4+83 TO
STA. 5+24± (PROP. BRIDGE NO. 126701)

SCALE: 1" = 4'

PAVEMENT STRUCTURE LEGEND

- (A) – 1½" DENSE FRICTION (FC) PAVEMENT COURSE
- (B) – 1½" CLASS 9.5 HMA (MODIFIED) SURFACE COURSE
- (C) – 8½" CLASS 19.0 HMA BASE COURSE
- (D) – GRAVEL BORROW SUBBASE (12" MIN.)
- (E) – 7" CLASS XX CONCRETE
- (F) – 2" CLASS 12.5 HMA SURFACE COURSE
- (G) – 6" CLASS 19.0 HMA BASE COURSE

AECOM

RI DOT
RHODE ISLAND
DEPARTMENT OF TRANSPORTATION

DESIGNED BY: JTS
CHECKED BY: DMP
DATE: 04/22/2020
SHEET: 10
OF: 47

SCALE: NONE

REVISIONS			REVISIONS		
NO.	DATE	BY	NO.	DATE	BY

BRIDGE GROUP 57T-10
I-195 WASHINGTON NORTH PHASE 2
PROVIDENCE
EAST PROVIDENCE
CONTRACT: -- VOLUME: 4
RHODE ISLAND

TYPICAL SECTIONS - 4 OF 4

57T-10_V4_007_TYPS.DWG

FED. ROAD DIV. NO.	STATE	FEDERAL AID PROJECT NO.	FISCAL YEAR	SHEET NO.	TOTAL SHEETS
1	RI	BHO-0700-005	2020	11	47

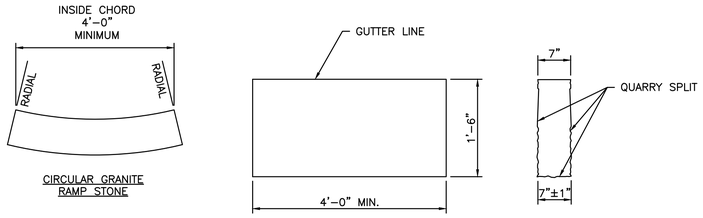

NOTES:
1. SHALL BE IN ACCORDANCE WITH SECTION 906 OF THE R.I. STANDARD SPECIFICATIONS.
2. TOP SURFACE TO BE DRESSED BY SAW. REMAINDER TO BE QUARRY SPLIT.
3. MINIMUM LENGTH OF STRAIGHT OR CIRCULAR RAMP STONE TO BE 4'-0".
4. CIRCULAR RAMP STONE IS REQUIRED ON CURVES WITH RADII OF 160'-0" OR LESS. STRAIGHT RAMP STONE TO BE USED ON CURVES OF MORE THAN 160'-0" RADIUS.
5. RAMP STONE SHALL BE SET IN ACCORDANCE WITH R.I. STD. 43.3.0 AND IN CONJUNCTION WITH R.I. STD. 7.3.3.

PROVIDENCE STANDARD
7" GRANITE RAMP STONE (7.3.9M)
NOT TO SCALE

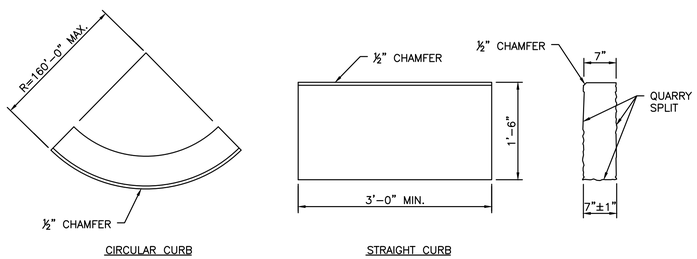

NOTES:
1. SHALL BE IN ACCORDANCE WITH SECTION 906 OF THE R.I. STANDARD SPECIFICATIONS.
2. TOP SURFACE TO BE DRESSED BY SAW. REMAINDER TO BE QUARRY SPLIT.
3. MINIMUM LENGTH OF STRAIGHT OR CIRCULAR PIECES TO BE 3'-0".
4. CIRCULAR CURB IS REQUIRED ON CURVES WITH RADII OF 160'-0" OR LESS. STRAIGHT CURB TO BE USED ON CURVES OF MORE THAN 160'-0" RADIUS.

PROVIDENCE STANDARD GRANITE CURB
STRAIGHT OR CURVED (7.3.0M)
NOT TO SCALE

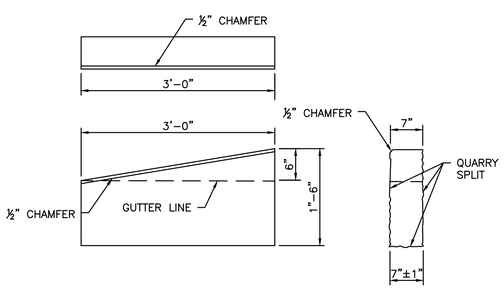

NOTES:
1. SHALL BE IN ACCORDANCE WITH SECTION 906 OF THE R.I. STANDARD SPECIFICATIONS.
2. TOP SURFACE TO BE DRESSED BY SAW. REMAINDER TO BE QUARRY SPLIT.

PROVIDENCE STANDARD 3'-0" GRANITE TRANSITION CURB (7.3.1M)
NOT TO SCALE

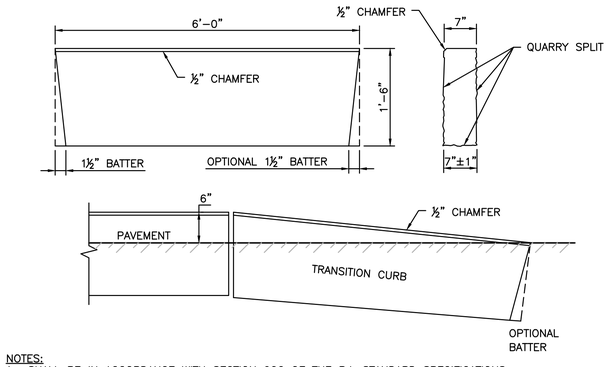

NOTES:
1. SHALL BE IN ACCORDANCE WITH SECTION 906 OF THE R.I. STANDARD SPECIFICATIONS.
2. WHERE OLD CURBING IS BEING REUSED, THE CONTRACTOR MAY CUT EXISTING CURB SECTIONS AS REQUIRED TO MEET THIS DETAIL AND THE R.I. STANDARD SPECIFICATIONS.
3. TOP SURFACE TO BE DRESSED BY SAW. REMAINDER TO BE QUARRY SPLIT.

PROVIDENCE STANDARD
6'-0" GRANITE TRANSITION CURB (7.3.2M)
NOT TO SCALE

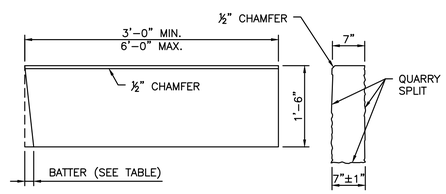

TRANSITION LENGTH (FT.)	BATTER (IN.)
6.0	1.5
7.0	1.3
8.0	1.2
9.5	1.0
11.5	0.8
15.0	0.6
18.0	0.5

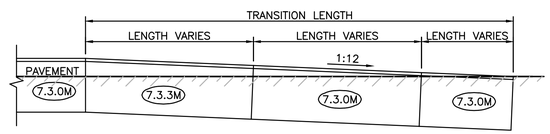

NOTES:
1. SHALL BE IN ACCORDANCE WITH SECTION 906 OF THE R.I. STANDARD SPECIFICATIONS.
2. THE CONTRACTOR MAY CUT EXISTING CURB SECTIONS AS REQUIRED TO MEET THIS DETAIL AND THE R.I. STANDARD SPECIFICATIONS,
3. WHERE OLD CURBING IS BEING REUSED. MINIMUM LENGTH OF STRAIGHT OR CIRCULAR CURB FILLER PIECES TO BE 3'-0" (GREATER LENGTHS PREFERRED).
4. TOP SURFACE TO BE DRESSED BY SAW. REMAINDER TO BE QUARRY SPLIT.

PROVIDENCE STANDARD GRANITE CURB
RAMP TRANSITION CURB (7.3.3M)
NOT TO SCALE

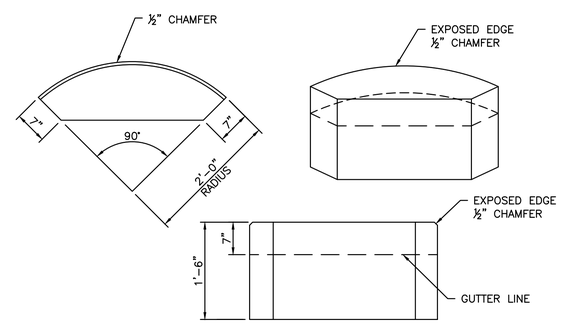

NOTES:
1. SHALL BE IN ACCORDANCE WITH SECTION 906 OF THE R.I. STANDARD SPECIFICATIONS.
2. TOP SURFACE TO BE DRESSED BY SAW. REMAINDER TO BE QUARRY SPLIT.

PROVIDENCE STANDARD GRANITE 2'-0"
RADIUS CORNER (7.3.4M)
NOT TO SCALE

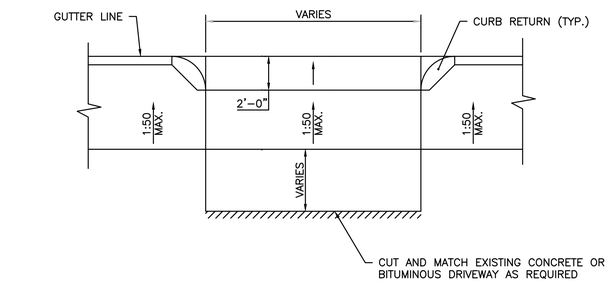

PLAN

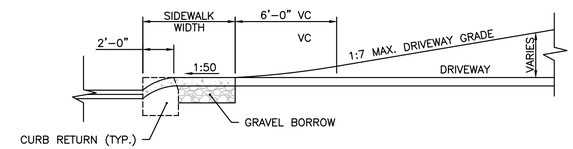

SECTION

NOTES:
1. SHALL BE IN ACCORDANCE WITH SECTION 905 OF THE R.I. STANDARD SPECIFICATIONS.

DRIVEWAY DEVELOPMENT FOR CURB RETURN (DDCR)
NOT TO SCALE

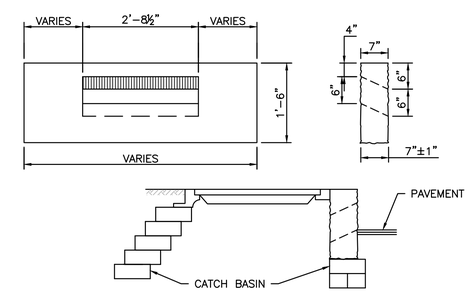

NOTES:
1. SHALL BE IN ACCORDANCE WITH SECTION 906 OF THE R.I. STANDARD SPECIFICATIONS.
2. TOP SURFACE TO BE DRESSED BY SAW. REMAINDER TO BE QUARRY SPLIT.
3. INLET STONE SHALL BE 5 FEET IN LENGTH UNLESS OTHERWISE NOTED ON THE GENERAL PLANS.

PROVIDENCE STANDARD GRANITE CURB
INLET STONE (7.3.5M)
NOT TO SCALE

AECOM

RI DOT
RHODE ISLAND
DEPARTMENT OF TRANSPORTATION

DESIGNED BY: JTS
CHECKED BY: DMP
DATE: 04/22/2020
SHEET: 11
OF: 47

SCALE: NONE

REVISIONS			REVISIONS		
NO.	DATE	BY	NO.	DATE	BY

BRIDGE GROUP 57T-10
I-195 WASHINGTON NORTH PHASE 2
PROVIDENCE
EAST PROVIDENCE
CONTRACT: -- VOLUME: 4 RHODE ISLAND

MISCELLANEOUS DETAILS - 1 OF 18

57T-10_V4_008_DETL.DWG

FED. ROAD DIV. NO.	STATE	FEDERAL AID PROJECT NO.	FISCAL YEAR	SHEET NO.	TOTAL SHEETS
1	RI	BHO-0700-005	2020	12	47

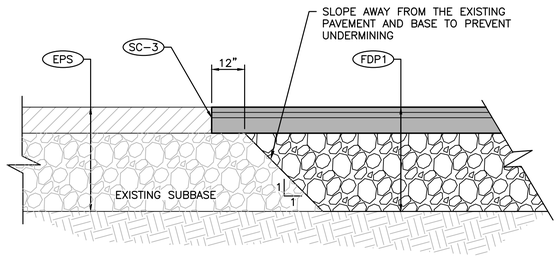

PAVEMENT TRANSITION - FULL DEPTH TO EXISTING (PT-2)
NOT TO SCALE

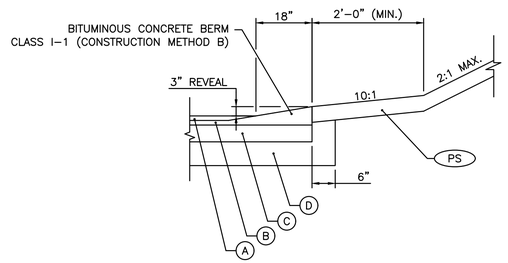

BITUMINOUS BERM CLASS I-1 (18") (7.5.1B)
NOT TO SCALE

BITUMINOUS BERM NOTES:

1. SHALL BE IN ACCORDANCE WITH SECTION 906 OF THE R.I. STANDARD SPECIFICATIONS
2. SEE R.I. STANDARD 7.5.1 FOR CONSTRUCTION METHOD B DETAILS.

(A) – 1½" DENSE FRICTION (FC) HMA COURSE
(B) – 1½" CLASS 9.5 HMA SURFACE COURSE
(C) – 8½" CLASS 19.0 HMA BASE COURSE
(D) – 12" GRAVEL BORROW SUBBASE

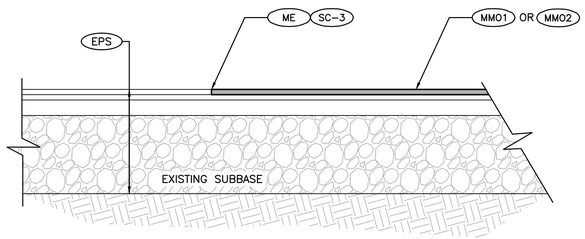

PAVEMENT TRANSITION - MIRCOMILLING TO EXISTING (PT-2)
NOT TO SCALE

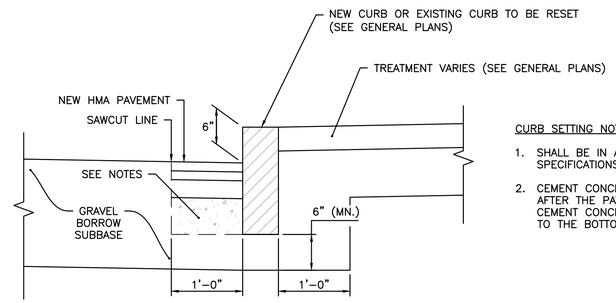

CURB SETTING DETAIL
NOT TO SCALE

CURB SETTING NOTES:

1. SHALL BE IN ACCORDANCE WITH SECTION 905 OF THE R.I. STANDARD SPECIFICATIONS
2. CEMENT CONCRETE SHALL BE USED ONLY WHEN THE CURB IS SET AFTER THE PAVEMENT BASE COURSE IS IN PLACE, OTHERWISE THE CEMENT CONCRETE WILL BE ELIMINATED AND THE GRAVEL BROUGHT UP TO THE BOTTOM OF THE BASE COURSE.

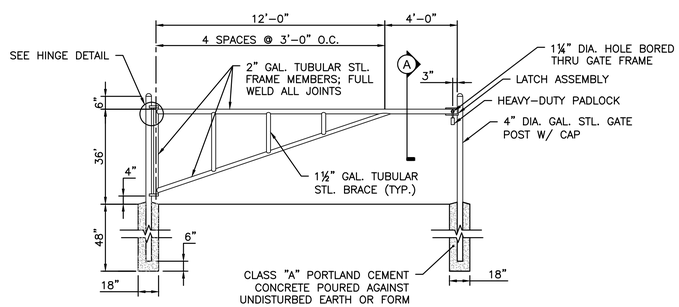

NOTE:
PROVIDE A SECOND STEEL LATCH POST WITH LATCH ASSEMBLY ADJACENT TO EDGE OF ROADWAY TO SECURE GATE IN THE OPEN POSITION.

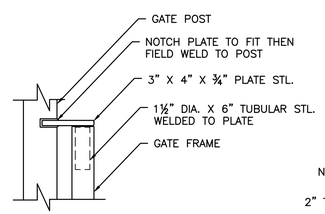

HINGE DETAIL

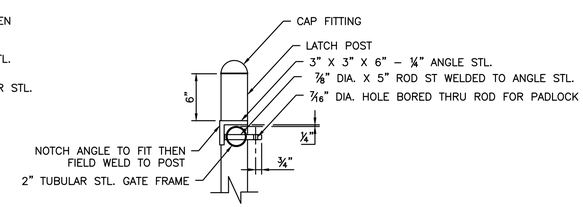

SECTION (A)

STEEL PIPE SINGLE LEAF SWING GATE (SPSG)
NOT TO SCALE

AECOM

RHODE ISLAND DEPARTMENT OF TRANSPORTATION

DESIGNED BY:	JTS
CHECKED BY:	DMP
DATE:	04/22/2020
SHEET:	12
OF:	47

SCALE: NONE

REVISIONS			REVISIONS		
NO.	DATE	BY	NO.	DATE	BY

BRIDGE GROUP 57T-10
I-195 WASHINGTON NORTH PHASE 2
PROVIDENCE EAST PROVIDENCE
CONTRACT -- VOLUME: 4
RHODE ISLAND

MISCELLANEOUS DETAILS - 2 OF18

57T-10_V4_008_DETL.DWG

FED. ROAD DIV. NO.	STATE	FEDERAL AID PROJECT NO.	FISCAL YEAR	SHEET NO.	TOTAL SHEETS
1	RI	BHO-0700-005	2020	13	47

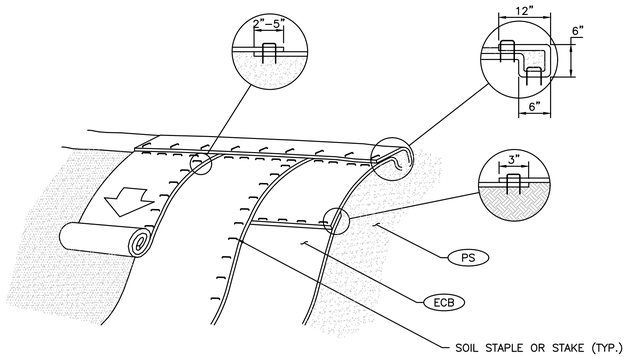

SLOPE INSTALLATION

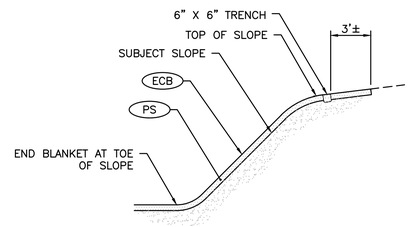

SECTION VIEW

EROSION CONTROL BLANKET NOTES:

1. PREPARE TOPSOIL BEFORE INSTALLING BLANKETS, INCLUDING ANY NECESSARY APPLICATION OF LIME, FERTILIZER, AND SEED.
2. BEGIN AT THE TOP OF THE SLOPE BY ANCHORING THE BLANKET IN A 6" DEEP X 6" WIDE TRENCH WITH APPROXIMATELY 12" OF BLANKET EXTENDED BEYOND THE UP-SLOPE PORTION OF THE TRENCH. ANCHOR THE BLANKET WITH A ROW OF STAPLES APPROXIMATELY 12" APART IN THE BOTTOM OF THE TRENCH. BACKFILL AND COMPACT THE TRENCH AFTER STAPLING. APPLY SEED TO COMPACTED SOIL AND FOLD REMAINING 12" PORTION OF BLANKET BACK OVER SEED AND COMPACTED SOIL. SECURE BLANKET OVER COMPACTED SOIL WITH A ROW OF STAPLES SPACED APPROXIMATELY 12" APART ACROSS THE WIDTH OF THE BLANKET.
3. ROLL BLANKETS DOWN SLOPE, HORIZONTALLY ACROSS FOR DITCH SIDE SLOPES. BLANKETS WILL UNROLL WITH APPROPRIATE SIDE AGAINST THE SOIL SURFACE. ALL BLANKETS MUST BE SECURELY FASTENED TO SOIL SURFACE BY PLACING STAPLES IN APPROPRIATE LOCATIONS AS SPECIFIED BY THE MANUFACTURER.
4. THE EDGES OF PARALLEL BLANKET MUST BE STAPLED WITH APPROXIMATELY 2"-5" OVERLAP DEPENDING ON BLANKET TYPE. CONSECUTIVE HORIZONTAL BLANKETS SPLICED DOWN THE SLOPE MUST BE PLACED END OVER END (SHINGLE STYLE) WITH AN APPROXIMATE 3" OVERLAP. STAPLE THROUGH OVERLAPPED AREA, APPROXIMATELY 12" APART ACROSS ENTIRE BLANKET WIDTH.
5. INSTALLATION TO BE COMPLETED IN ACCORDANCE WITH MANUFACTURER'S SPECIFICATIONS.
6. IN LOOSE SOIL CONDITIONS THE USE OF STAPLE OR STAKE LENGTHS GREATER THAN 6" MAY BE NECESSARY TO PROPERLY SECURE THE BLANKETS.

EROSION CONTROL BLANKET (ECB)

NOT TO SCALE

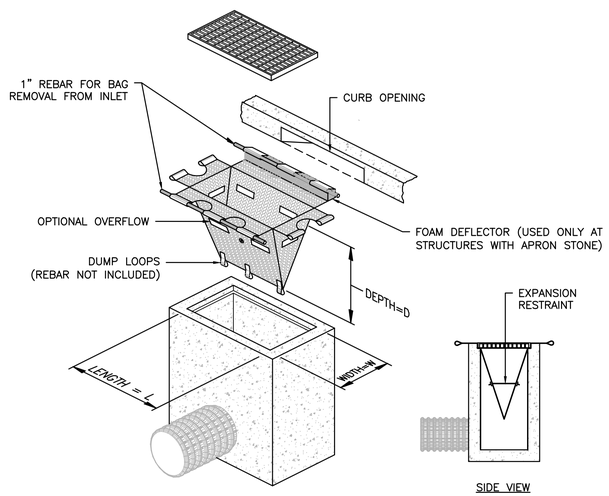

SIDE VIEW

INLET SEDIMENT CONTROL DEVICE NOTES:

1. MEASURE CATCH BASIN DIMENSIONS AND PROVIDE APPROPRIATELY-SIZED DEVICES PER MANUFACTURER'S REQUIREMENTS.
2. INSTALL INLET PROTECTION IN CATCH BASIN BEFORE COMMENCING ANY ROADWORK.
3. GRATE TO BE PLACED OVER INLET PROTECTION.
4. INLET PROTECTION SHALL BE INSPECTED PERIODICALLY AND AFTER ALL STORM EVENTS. CLEANING OR REPLACEMENT SHALL BE PERFORMED PROMPTLY AS NEEDED. MAINTAIN UNTIL DISTURBED AREAS HAVE BEEN PERMANENTLY STABILIZED WITH TOPSOIL AND GRASS.

INLET SEDIMENT CONTROL DEVICE DETAIL (ISCD)

NOT TO SCALE

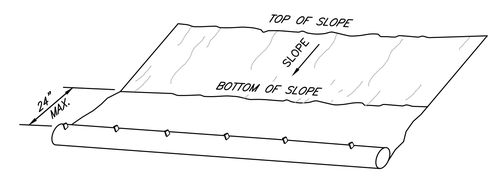

PERSPECTIVE VIEW

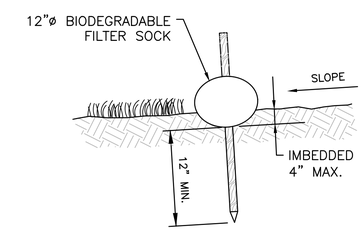

SECTION VIEW

NOTES:

1. FILTER SOCKS SHALL BE INSTALLED WHERE INDICATED ON THE GENERAL PLANS AND SHALL BE CONSTRUCTED OF 100% BIODEGRADABLE MATERIAL. A ROW OF FILTER SOCKS (WEIGHTED DOWN AND NOT STAKED) SHALL ALSO BE INSTALLED AROUND ANY SOIL STOCKPILE AREAS UTILIZED BY THE CONTRACTOR DURING CONSTRUCTION.
2. FILTER SOCKS SHALL BE TRENCHED APPROXIMATELY 4 INCHES AND STAKED SUCH THAT FILTER SOCKS DIRECTLY CONTACT SOIL AND PRECLUDE UNDERMINING OR BLOWOUTS. THE TRENCH SHALL BE APPROXIMATELY 9 INCHES WIDE. UNLESS SHOWN OTHERWISE, STAKES SHALL BE DRIVEN THROUGH THE CENTER OF THE COIR ROLL AT A SPACING OF 3-4 FEET ON CENTER AND NO GREATER THAN 6" FROM THE EACH END OF THE FILTER SOCKS. STAKES SHALL BE 1"x1" WOODEN STAKES WITH A LENGTH OF 18-24 INCHES. COMPACT SOIL EXCAVATED TO CREATE TRENCH ON UPHILL SIDE SIDE.
3. ENDS OF ADJACENT FILTER SOCKS SHALL BE TIGHTLY BUTTED OR OVERLAPPED SO THAT NO OPENING EXISTS FOR WATER TO PASS THROUGH. FILTER SOCKS SHALL BE FREE OF DAMAGE OR DEFECTS WHEN DELIVERED TO THE SHIPPER. NO VEHICLES SHALL BE DRIVEN OVER FILTER SOCKS.

COMPOST FILTER SOCK DETAIL (CFS)

NOT TO SCALE

AECOM

RI DOT
RHODE ISLAND
DEPARTMENT OF TRANSPORTATION

DESIGNED BY: JTS
CHECKED BY: DMP
DATE: 04/22/2020
SHEET: 13
OF: 47

SCALE: NONE

REVISIONS			REVISIONS		
NO.	DATE	BY	NO.	DATE	BY

BRIDGE GROUP 57T-10
I-195 WASHINGTON NORTH PHASE 2
PROVIDENCE EAST PROVIDENCE
CONTRACT -- VOLUME: 4
RHODE ISLAND

MISCELLANEOUS DETAILS - 3 OF18

57T-10_V4_008_DETL.DWG

FED. ROAD DIV. NO.	STATE	FEDERAL AID PROJECT NO.	FISCAL YEAR	SHEET NO.	TOTAL SHEETS
1	RI	BHO-0700-005	2020	14	47

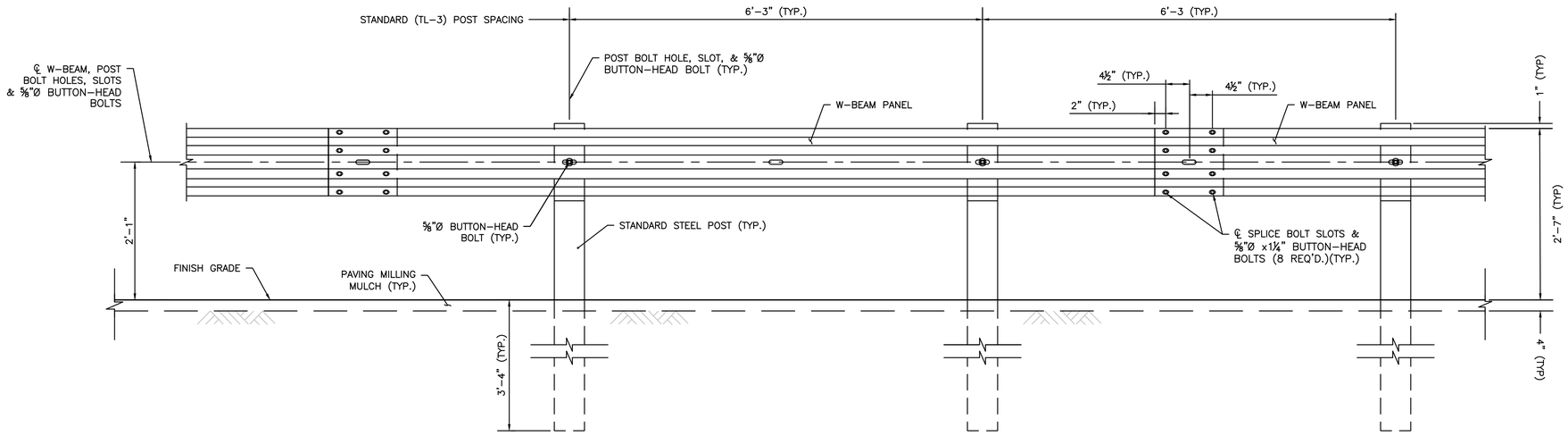

ELEVATION VIEW

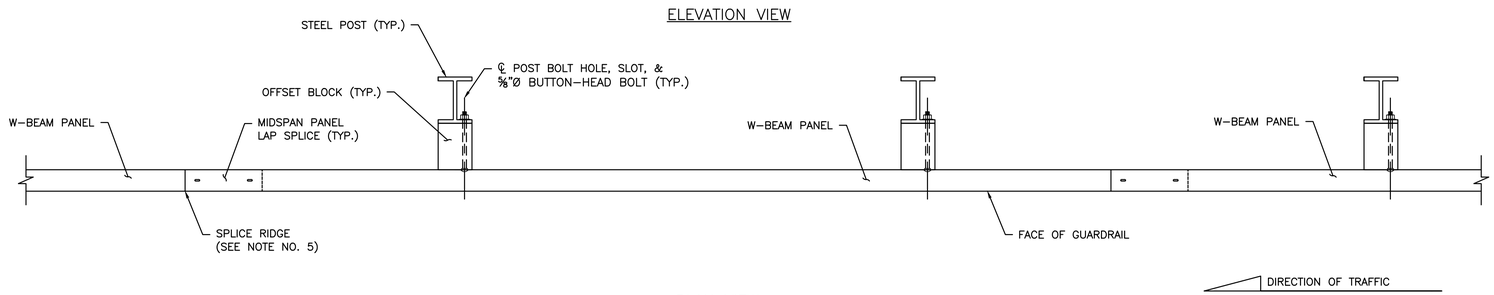

PLAN VIEW

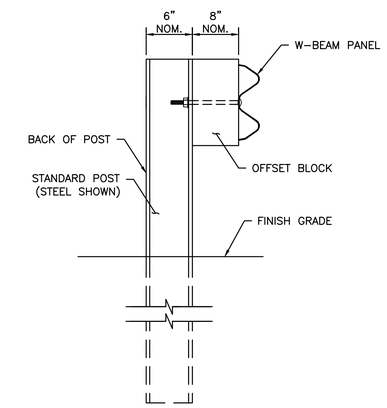

SECTION VIEW

MASH COMPLIANT STEEL BEAM GUARDRAIL, TL-3 (MSBG)

NOT TO SCALE

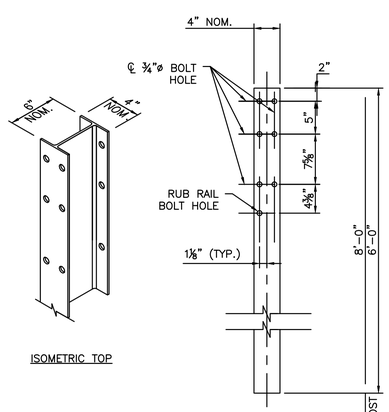

STEEL POST
(W6X8.5 OR W6X9)
NOT TO SCALE

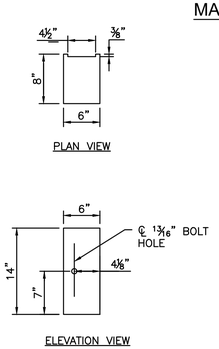

W-BEAM OFFSET BLOCK
(6"X8" NOMINAL)
NOT TO SCALE

MASH GUARDRAIL NOTES:

1. ALL DIMENSIONS OF STANDARD GUARDRAIL COMPONENTS, INCLUDING PANELS, POSTS, OFFSET BLOCKS, BOLTS, NUTS, WASHERS AND HOLES, ARE BASED UPON ENGLISH UNIT CONVERSIONS OF THE ASSHTO–ARTBA–AGC JOINT COMMITTEE TASK FORCE 13 REPORT: A GUIDE TO STANDARDIZING HIGHWAY BARRIER HARDWARE.
2. THE BEGIN OR END STATION LABELS SHOWN IN THESES STANDARDS CORRESPOND TO THE STATION AND OFFSET CALLOUTS SPECIFIED IN THE PLANS.
3. USE 12'–6" NOMINAL LENGTH PANELS UNLESS OTHERWISE INDICATED ON THE PLANS.
4. ALL LAP SPLICES SHALL BE MIDSPAN UNLESS SHOWN OTHERWISE.
5. LAP SPLICES SHALL BE CONSTRUCTED WITH THE SPLICE RIDGE ORIENTED DOWNSTREAM OF THE FINAL DIRECTION OF TRAFFIC IN THE NEAREST TRAVEL LANE. REORIENTING LAP SPLICES FOR TEMPORARY TRAFFIC CONTROL IS NOT REQUIRED.
6. STANDARD POSTS SHALL BE STEEL, UNLESS OTHERWISE INDICATED ON THE PLANS. POSTS OF A SINGLE MATERIAL TYPE SHALL BE USED THROUGHOUT AN ENTIRE RUN OF GUARDRAIL; EXCEPTIONS ARE ALLOWED ONLY WHEN SPECIFIC MATERIAL TYPES ARE REQUIRED FRO TRANSITIONS, END TREATMENTS, AND/OT ANCHORAGES.
7. OFFSET BLOCKS SHALL BE PLASTIC OR COMPOSITE MATERIAL OF THE NOMINAL DIMENSIONS SHOWN. OFFSET BLOCKS OF A SINGLE MATERIAL TYPE SHALL BE USED THROUGHOUT AN ENTIRE RUN OF GUARDRAIL; EXCEPTIONS ARE ALLOWED ONLY WHEN SPECIFIC MATERIAL TYPES ARE REQUIRED FOR TRANSITIONS, END TREATMENTS, AND/OR ANCHORAGES.
8. PAVEMENT MILLING MULCH SHALL CONFORM TO SECTION 213 OF THE R.I. STANDARD SPECIFICATIONS.
9. GUARDRAIL DELINEATORS SHALL BE INSTALLED IN ACCORDANCE WITH SECTION 901 OF THE R.I. STANDARD SPECIFICATIONS AND R.I. STANDARD 34.2.5.

AECOM

RHODE ISLAND DEPARTMENT OF TRANSPORTATION

DESIGNED BY: JTS
CHECKED BY: DMP
DATE: 04/22/2020
SHEET: 14
OF: 47

SCALE: NONE

REVISIONS			REVISIONS		
NO.	DATE	BY	NO.	DATE	BY

BRIDGE GROUP 57T-10
I-195 WASHINGTON NORTH PHASE 2
PROVIDENCE EAST PROVIDENCE
CONTRACT -- VOLUME: 4
RHODE ISLAND

MISCELLANEOUS DETAILS - 4 OF18

57T–10_V4_008_DETL.DWG

FED. ROAD DIV. NO.	STATE	FEDERAL AID PROJECT NO.	FISCAL YEAR	SHEET NO.	TOTAL SHEETS
1	RI	BHO-0700-005	2020	15	47

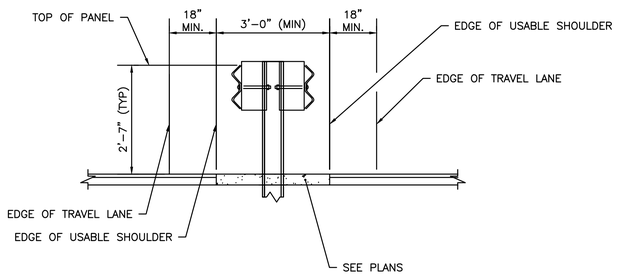

FLUSH WITH ROADWAY

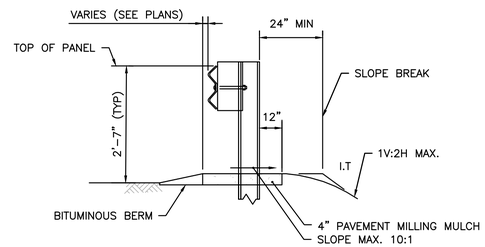

BITUMINOUS BERM

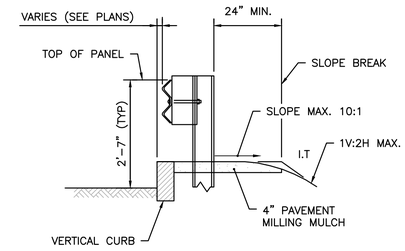

VERTICAL CURB

MASH GUARDRAIL TYPICAL SECTIONS

NOT TO SCALE

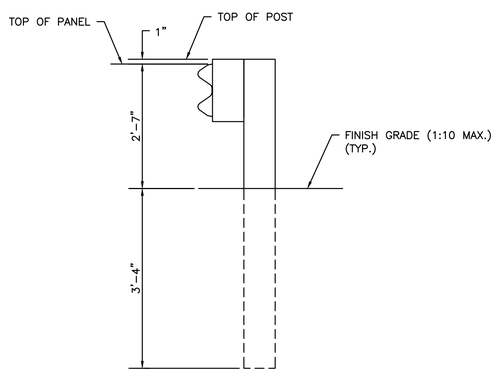

W-BEAM

NOT TO SCALE

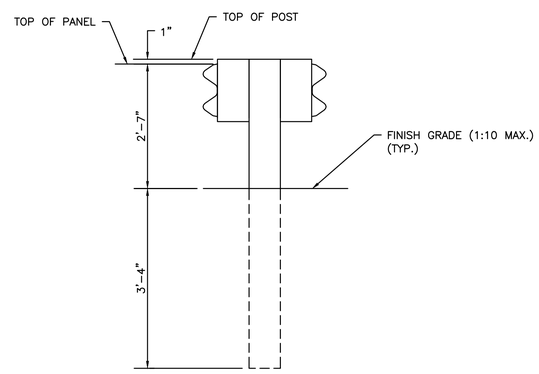

DOUBLE FACED W-BEAM

NOT TO SCALE

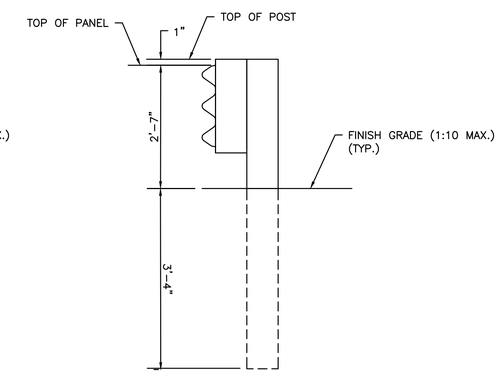

THRIE-BEAM

NOT TO SCALE

NOTES

1. CONSTRUCTION TOLERANCE FOR PANEL HEIGHT =±1".

MASH COMPLIANT GUARDRAIL MOUNTING HEIGHTS AND POST DEPTHS

NOT TO SCALE

AECOM

RI DOT

RHODE ISLAND
DEPARTMENT OF TRANSPORTATION

DESIGNED BY: JTS
CHECKED BY: DMP
DATE: 04/22/2020
SHEET: 15
OF: 47

SCALE: NONE

REVISIONS			REVISIONS		
NO.	DATE	BY	NO.	DATE	BY

BRIDGE GROUP 57T-10
I-195 WASHINGTON NORTH PHASE 2
PROVIDENCE
EAST PROVIDENCE
CONTRACT -- VOLUME: 4
RHODE ISLAND

MISCELLANEOUS DETAILS - 5 OF18

57T-10_V4_008_DETL.DWG

FED. ROAD DIV. NO.	STATE	FEDERAL AID PROJECT NO.	FISCAL YEAR	SHEET NO.	TOTAL SHEETS
1	RI	BHO-0700-005	2020	16	47

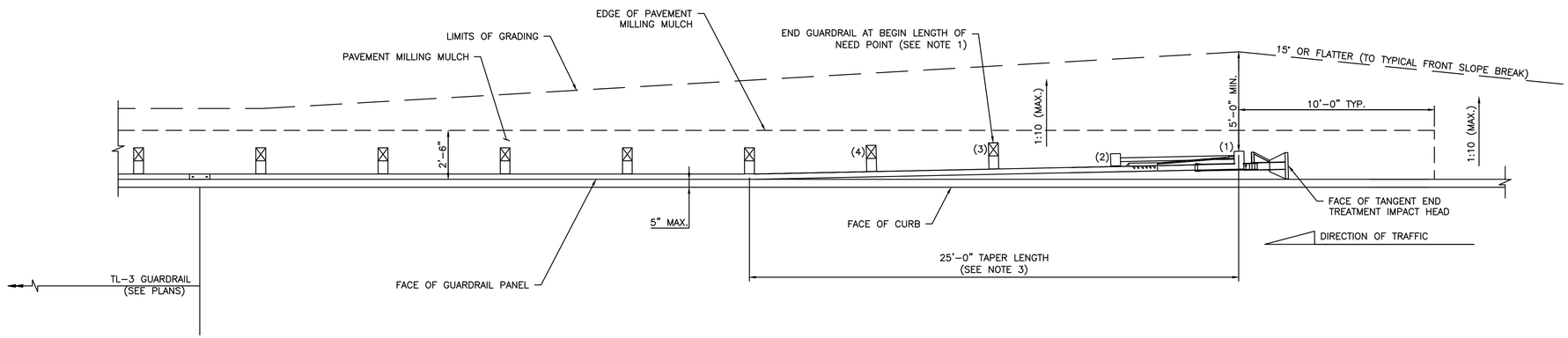

GUARDRAIL END TREATMENT - ENERGY ABSORBING TANGENTIAL TERMINAL, TL4 (ETEA)

NOT TO SCALE

GUARDRAIL END TREATMENT NOTES:

1. INSTALL GUARDRAIL AT STATIONS AND OFFSETS SHOWN IN THE PLANS. THE END OF THE GUARDRAIL SHOWN IN THE PLANS CORRESPONDS WITH THE BEGIN LENGTH OF NEED POINT FOR THE END TREATMENT (SHOWN AT POST 3, BUT MAY VARY BY MANUFACTURER). FOR DOUBLE FACED END TREATMENTS, THE END OF GUARDRAIL CORRESPONDS WITH POST 1.
2. END TREATMENTS VARY IN SIZE AND SHAPE FOR WHAT IS DEPICTED ON THE DRAWINGS. The MAXIMUM SLOPES AND MINIMUM OFFSETS DIMENSIONED FROM THE POSTS SHOW SHALL APPLY.
3. CONSTRUCT TANGENT AND DOUBLE FACED END TREATMENTS IN ACCORDANCE WITH THE MANUFACTURERS DETAILS, PROCEDURES AND SPECIFICATIONS.
4. THE FACE OF THE TANGENT END TREATMENT IMPACT HEAD SHALL BE OFFSET A MINIMUM OF 5" AND UP TO 2'-0" FROM THE FACE OF CURB TO MINIMIZE NUISANCE HITS. THE OFFSET SHALL OCCUR OVER THE ENTIRE LENGTH OF THE END TREATMENT UNLESS OTHERWISE SPECIFIED BY THE MANUFACTURE

AECOM

RHODE ISLAND DEPARTMENT OF TRANSPORTATION

DESIGNED BY: JTS
CHECKED BY: DMP
DATE: 04/22/2020
SHEET: 16
OF: 47

SCALE: NONE

REVISIONS			REVISIONS		
NO.	DATE	BY	NO.	DATE	BY

BRIDGE GROUP 57T-10
I-195 WASHINGTON NORTH PHASE 2
PROVIDENCE EAST PROVIDENCE
CONTRACT -- VOLUME: 4
RHODE ISLAND

MISCELLANEOUS DETAILS - 6 OF18

57T-10_V4_008_DETL.DWG

FED. ROAD DIV. NO.	STATE	FEDERAL AID PROJECT NO.	FISCAL YEAR	SHEET NO.	TOTAL SHEETS
1	RI	BHO-0700-005	2020	17	47

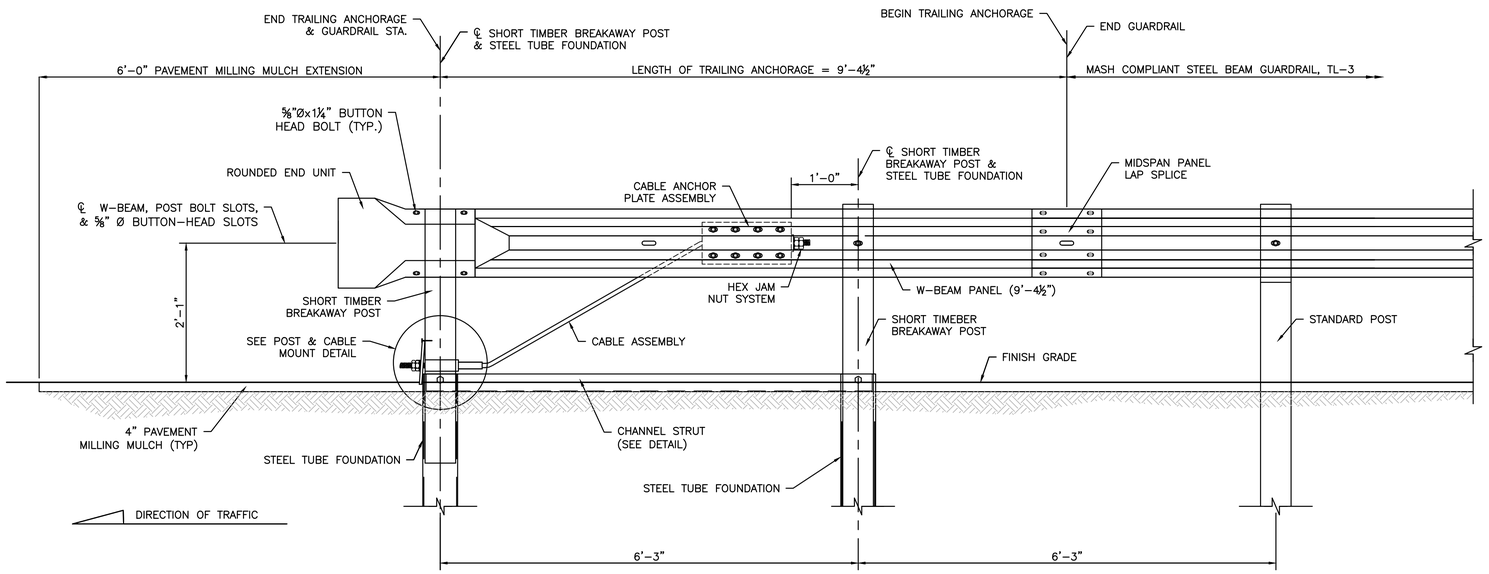

ELEVATION

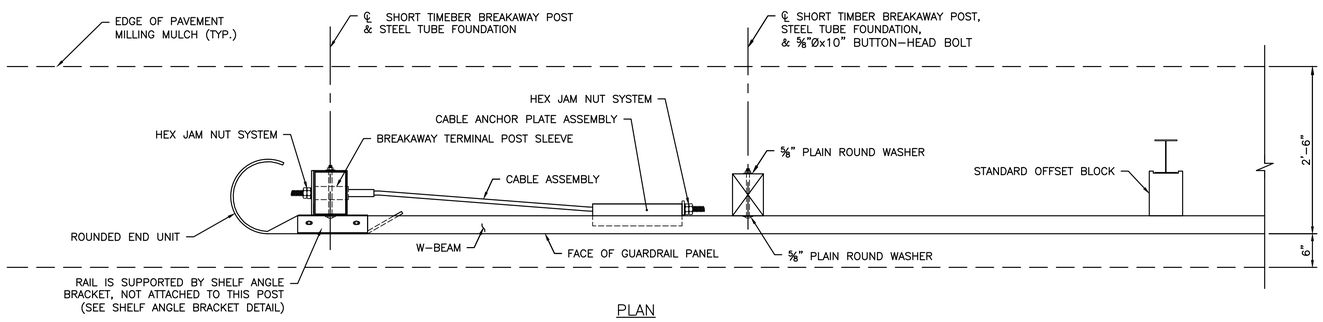

PLAN

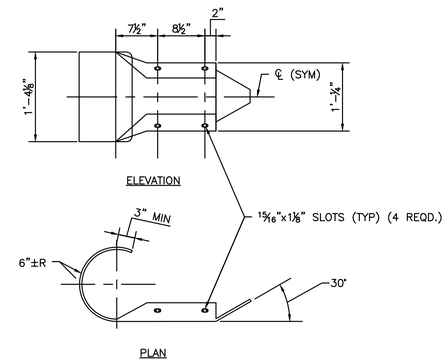

ROUNDED END UNIT

NOTES

1. LAP THE ROUNDED END UNIT OVER THE FACE OF THE W-BEAM PANEL
2. INSTALL STEEL TUBE FOUNDATIONS BY ONE OF THE FOLLOWING METHODS:
   A. EXCAVATE, INSTALL TUBE, BACKFILL, AND SUITABLY COMPACT METERIALS; OR
   B. DRIVE THE TUBE USING A DUMMY TIMBER POST TO PREVENT DAMAGE TO THE SHORT BREAKAWAY POST.

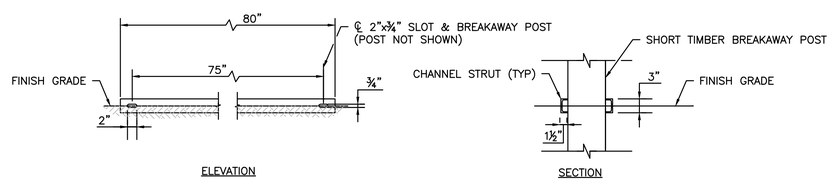

CHANNEL STRUT

GUARDRAIL END TREATMENT - TRAILING ANCHORAGE (GTEA)

NOT TO SCALE

AECOM

RHODE ISLAND DEPARTMENT OF TRANSPORTATION

DESIGNED BY:	JTS
CHECKED BY:	DMP
DATE:	04/22/2020
SHEET:	17
OF:	47

SCALE: NONE

REVISIONS			REVISIONS		
NO.	DATE	BY	NO.	DATE	BY

BRIDGE GROUP 57T-10

I-195 WASHINGTON NORTH PHASE 2

PROVIDENCE EAST PROVIDENCE — CONTRACT -- VOLUME: 4 — RHODE ISLAND

MISCELLANEOUS DETAILS - 7 OF18

57T-10_V4_008_DETL.DWG

FED. ROAD DIV. NO.	STATE	FEDERAL AID PROJECT NO.	FISCAL YEAR	SHEET NO.	TOTAL SHEETS
1	RI	BHO-0700-005	2020	18	47

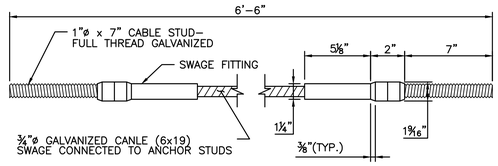

ELEVATION

CABLE ASSEMBLY

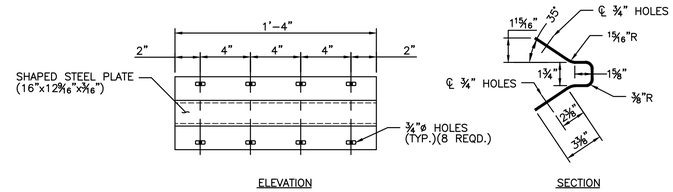

ELEVATION

SECTION

CABLE ANCHOR PLATE

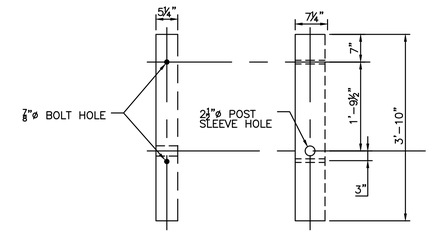

ELEVATION

SECTION

STEEL TUBE FOUNDATION

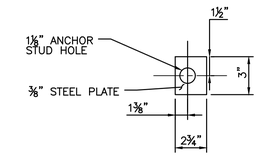

SECTION

STEEL END PLATE

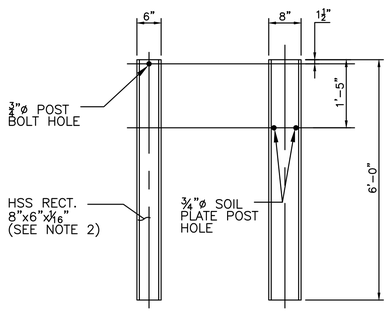

ELEVATION

SECTION

STEEL TUBE FOUNDATION

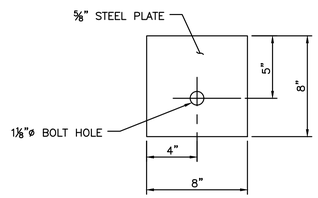

SECTION

BCT BEARING PLATE

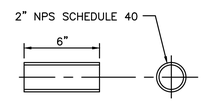

ELEVATION

SECTION

STEEL TUBE FOUNDATION

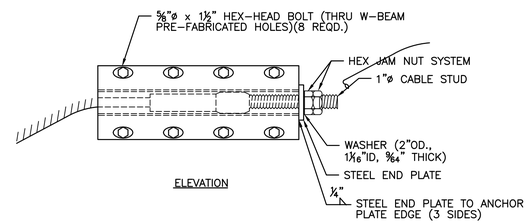

ELEVATION

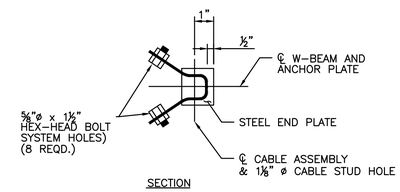

SECTION

CABLE ANCHOR PLATE ASSEMBLY

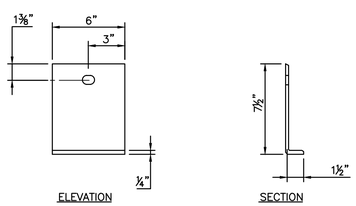

ELEVATION

SECTION

SHELF ANGLE BRACKET

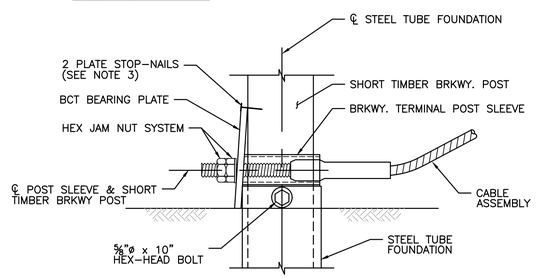

POST & CABLE MOUNT ASSEMBLY

NOTES:

1. COMPONENTS SHALL BE INSTALLED PER PLANS.
2. HEX NUTS, HEX JAM NUTS AND WASHERS SHALL BE IN ACCORDANCE WITH AASHTO-ARTBA-AGC A GUIDE TO STANDARDIZING HIGHWAY BARRIER HARDWARE. TWO HEX NUTS MAY BE USED FOR THE HEX JAM SYSTEM.
3. DRIVE TWO ASTM A153 HOT DIP GALVANIZED STEEL 2 ½" TYPE BD NAILS TO PREVENT ROTATION OF THE BCT BEARING PLATE.

ANCHORAGE TRAILING END SECTION
COMPONENT DETAILS
NOT TO SCALE

AECOM

RHODE ISLAND
DEPARTMENT OF TRANSPORTATION

DESIGNED BY: JTS
CHECKED BY: DMP
DATE: 04/22/2020
SHEET: 18
OF: 47

SCALE: NONE

REVISIONS			REVISIONS		
NO.	DATE	BY	NO.	DATE	BY

BRIDGE GROUP 57T-10
I-195 WASHINGTON NORTH PHASE 2
PROVIDENCE
EAST PROVIDENCE
CONTRACT -- VOLUME: 4
RHODE ISLAND

MISCELLANEOUS DETAILS - 8 OF18

57T-10_V4_008_DETL.DWG

FED. ROAD DIV. NO.	STATE	FEDERAL AID PROJECT NO.	FISCAL YEAR	SHEET NO.	TOTAL SHEETS
1	RI	BHO-0700-005	2020	19	47

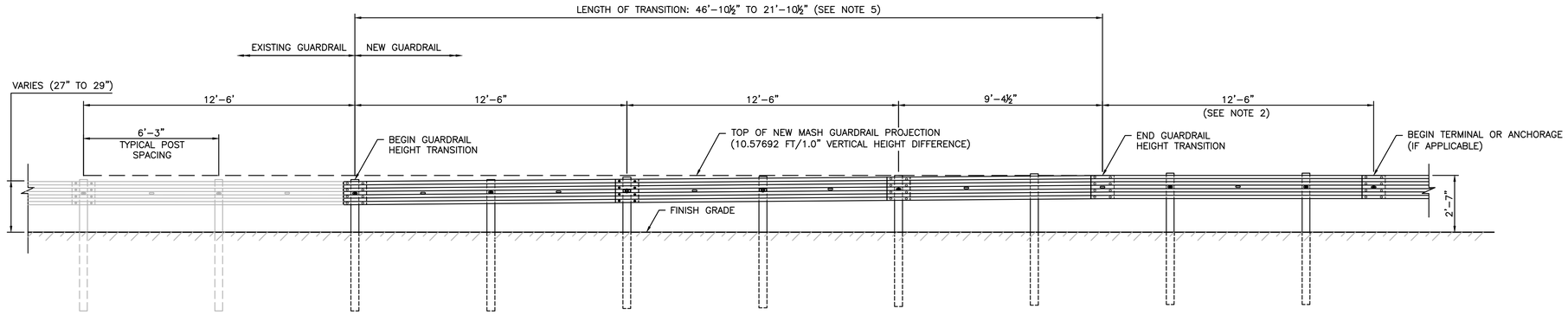

GUARDRAIL HEIGHT NOTES:

1. MAINTAIN STANDARD 1" CLEARANCE OF POST ABOVE PANEL THROUGHOUT THE ENTIRE LENGTH OF TRANSITION.
2. A MINIMUM OF ONE (1) 12'-6" PANEL SHALL BE PLACED BETWEEN THIS TRANSITION AND THE START OF ANY END TREATMENTS OR ANCHORAGE.
3. ALL NEW POSTS SHALL BE STEEL AND 72" IN LENGTH UNLESS OTHERWISE INDICATED ON THE PLANS.
4. ALL NEW OFFSET BLOCKS SHALL BE COMPOSITE UNLESS OTHERWISE INDICATED ON THE PLANS.
5. IF THE HEIGHT OF THE EXISTING GUARDRAIL IS LESS THAN 27", THE LENGTH OF THE TRANSITION SHALL BE INCREASED ACCORDINGLY. THE GUARDRAIL TRANSITION RATE SHALL NOT BE LESS THAN 10.57692 FT/ 1.0" OF HEIGHT DIFFERENCE.

GUARDRAIL HEIGHT TRANSITION - MASH COMPLIANT GUARDRAIL TO EXISTING

NOT TO SCALE

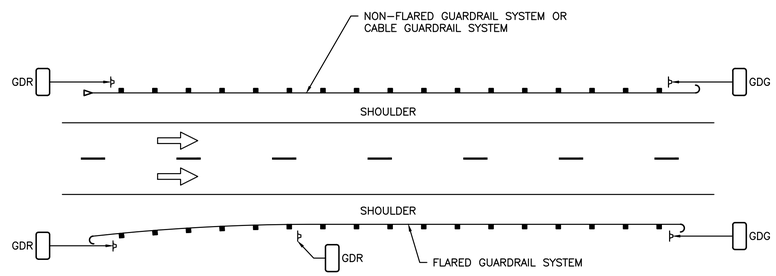

TYPICAL GUARDRAIL END DELINEATOR INSTALLATION

NOTES

1. GUARDRAIL ENDS DELINEATOR GDR AND GDG SHALL BE USED TO MARK THE STARTS AND ENDS OF A LONGITUDINAL GUARDRAIL AND SHALL BE INSTALLED IMMEDIATELY BEHIND GUARD RAIL TERMINAL ENDS (ALL TYPES) AS SHOWN ON THIS SHEET. THE HOLE SHALL BE THOROUGHLY PAINTED WITH TOUCH-UP GALVANIZED SPRAY PAINT PRIOR TO ATTACHING THE DELINEATOR POST.
2. WHEN LEDGE IS ENCOUNTED BEFORE THE 2'-0" MINIMUM EMBEDMENT DEPTH. POSTS SHALL BE SECURED A MINIMUM OF 12" INTO LEDGE.

LEGEND

- GDG GUARDRAIL END DELINEATOR – GREEN
- GDR GUARDRAIL END DELINEATOR – RED
- DELINEATOR
- DIRECTION OF TRAVEL

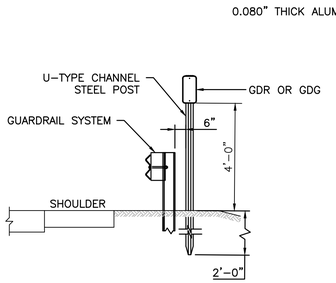

TYPICAL SHOULDER SECTION FOR GUARDRAIL END DELINEATOR

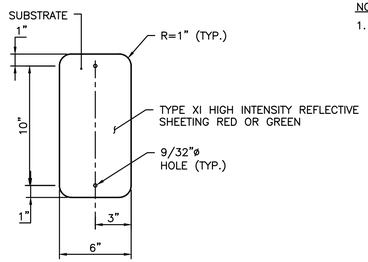

SINGLE FACE DELINEATOR PANEL 6x12

NOTE

1. THE HOLES SHALL BE THOROUGHLY PAINTED WITH A TOUCH-UP GALVANIZED SPRAY PAINT PRIOR TO ATTACHING THE DELINEATOR POST.

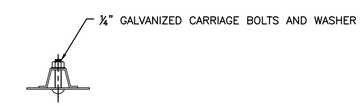

SINGLE REFLECTOR

GUARDRAIL DELINEATOR DETAILS

NOT TO SCALE

AECOM

RHODE ISLAND DEPARTMENT OF TRANSPORTATION

DESIGNED BY:	JTS
CHECKED BY:	DMP
DATE:	04/22/2020
SHEET:	19
OF:	47

SCALE: NONE

REVISIONS			REVISIONS		
NO.	DATE	BY	NO.	DATE	BY

BRIDGE GROUP 57T-10
I-195 WASHINGTON NORTH PHASE 2
PROVIDENCE EAST PROVIDENCE
CONTRACT -- VOLUME: 4
RHODE ISLAND

MISCELLANEOUS DETAILS - 9 OF18

57T-10_V4_008_DETL.DWG

FED. ROAD DIV. NO.	STATE	FEDERAL AID PROJECT NO.	FISCAL YEAR	SHEET NO.	TOTAL SHEETS
1	RI	BHO-0700-005	2020	20	47

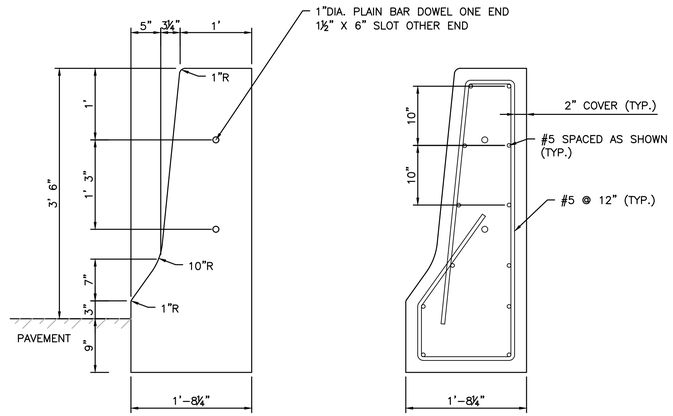

CONCRETE F-SHAPE MEDIAN BARRIER (FCMB)
NOT TO SCALE

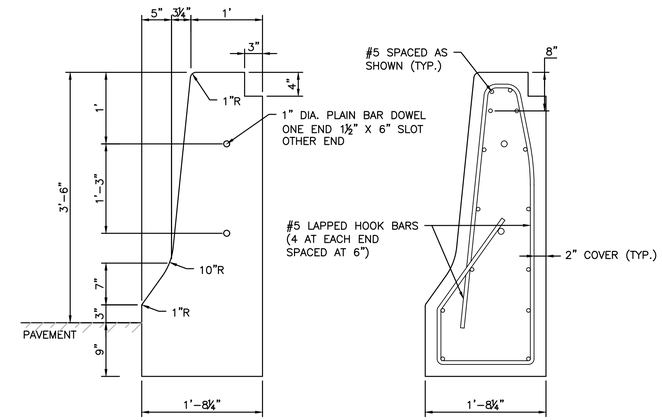

CONCRETE F-SHAPE MEDIAN BARRIER WITH CONCRETE SLAB (FCBC)
NOT TO SCALE

CONCRETE F-SHAPE BARRIERS
NOT TO SCALE

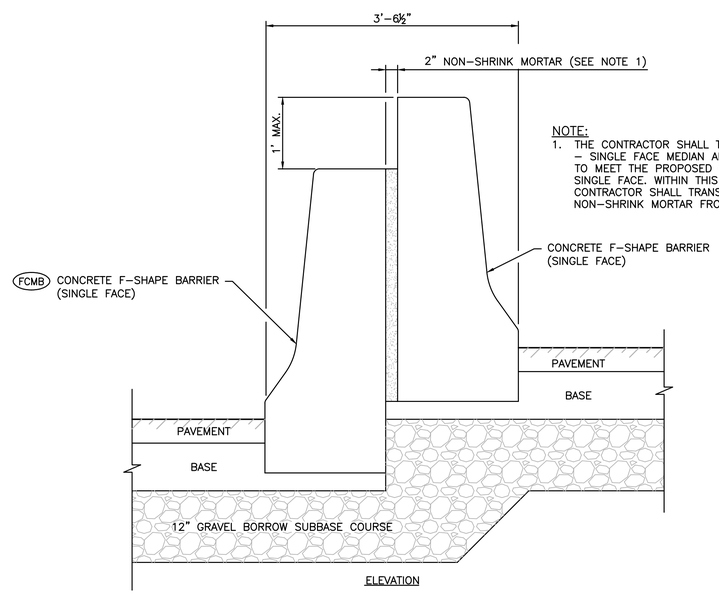

NOTE:
1. THE CONTRACTOR SHALL TRANSITION THE CONCRETE BARRIER – SINGLE FACE MEDIAN AREA BACK TO BACK OVER TEN FEET TO MEET THE PROPOSED CONCRETE BRIDGE BARRIER – SINGLE FACE. WITHIN THIS TEN FOOT TRANSITION AREA, THE CONTRACTOR SHALL TRANSITION THE WIDTH OF THE NON-SHRINK MORTAR FROM 2 INCHES TO 3 INCHES.

CONCRETE F-SHAPE MEDIAN BARRIER - SINGLE FACE BACK TO BACK
NOT TO SCALE

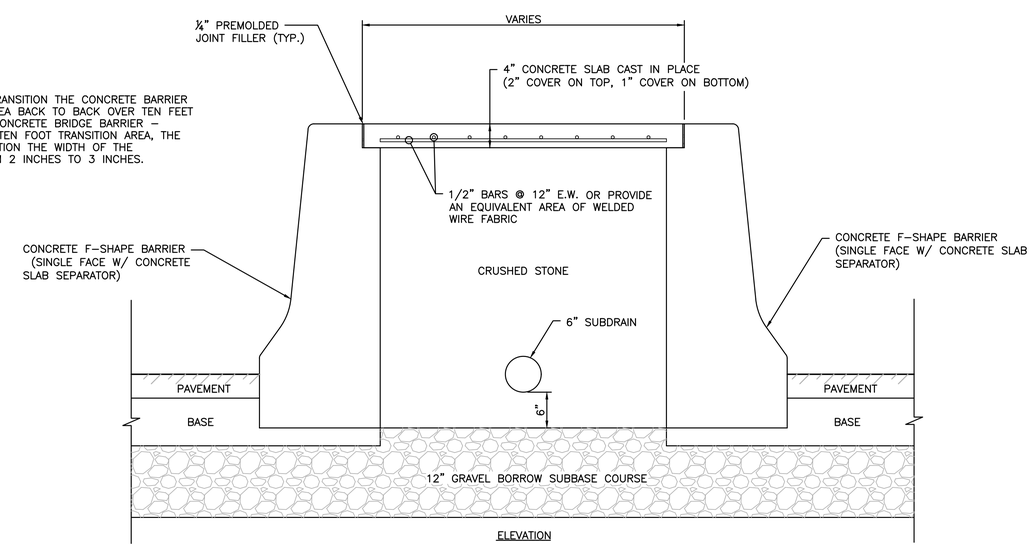

CONCRETE F-SHAPE MEDIAN BARRIER
WITH CONCRETE SEPARATOR
NOT TO SCALE

AECOM

RI DOT
RHODE ISLAND
DEPARTMENT OF TRANSPORTATION

DESIGNED BY:	JTS
CHECKED BY:	DMP
DATE:	04/22/2020
SHEET:	20
OF:	47

SCALE: NONE

REVISIONS			REVISIONS		
NO.	DATE	BY	NO.	DATE	BY

BRIDGE GROUP 57T-10
I-195 WASHINGTON NORTH PHASE 2
PROVIDENCE
EAST PROVIDENCE
CONTRACT -- VOLUME: 4
RHODE ISLAND

MISCELLANEOUS DETAILS - 10 OF18

57T-10_V4_008_DETL.DWG

FED. ROAD DIV. NO.	STATE	FEDERAL AID PROJECT NO.	FISCAL YEAR	SHEET NO.	TOTAL SHEETS
1	RI	BHO-0700-005	2020	21	47

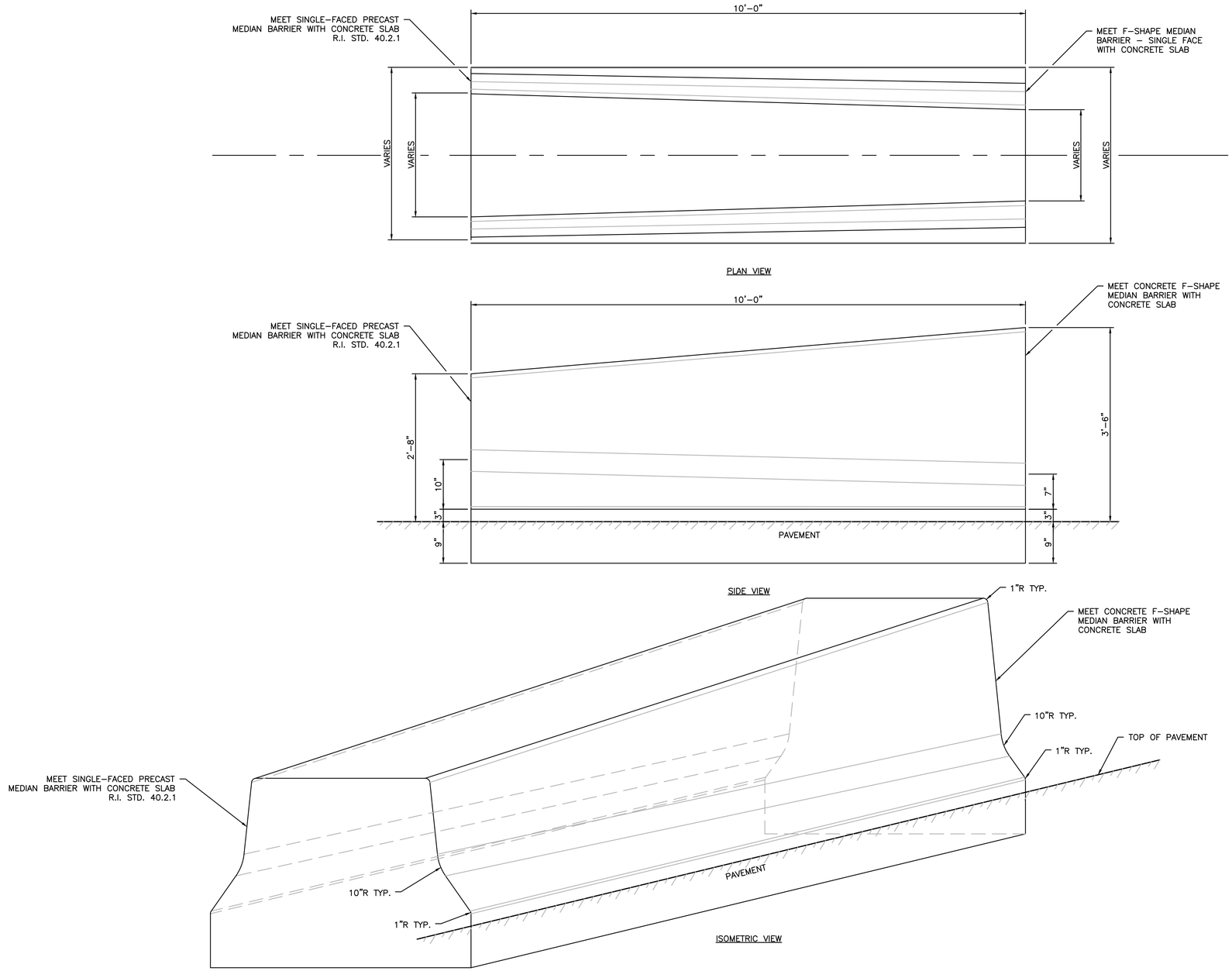

CONCRETE TRANSITION BARRIER UNIT - TYPE 2 (CTB1)
SINGLE-FACED PRECAST MEDIAN BARRIER WITH CONCRETE SLAB R.I. STD. 40.2.1 TO
CONCRETE F-SHAPE MEDIAN BARRIER WITH CONCRETE SEPARATOR
NOT TO SCALE

AECOM

RI DOT
RHODE ISLAND
DEPARTMENT OF TRANSPORTATION

DESIGNED BY: JTS
CHECKED BY: DMP
DATE: 04/22/2020
SHEET: 21
OF: 47

SCALE: NONE

REVISIONS			REVISIONS		
NO.	DATE	BY	NO.	DATE	BY

BRIDGE GROUP 57T-10
I-195 WASHINGTON NORTH PHASE 2
PROVIDENCE
EAST PROVIDENCE
CONTRACT -- VOLUME: 4
RHODE ISLAND

MISCELLANEOUS DETAILS - 11 OF18

57T-10_V4_008_DETL.DWG

FED. ROAD DIV. NO.	STATE	FEDERAL AID PROJECT NO.	FISCAL YEAR	SHEET NO.	TOTAL SHEETS
1	RI	BHO-0700-005	2020	22	47

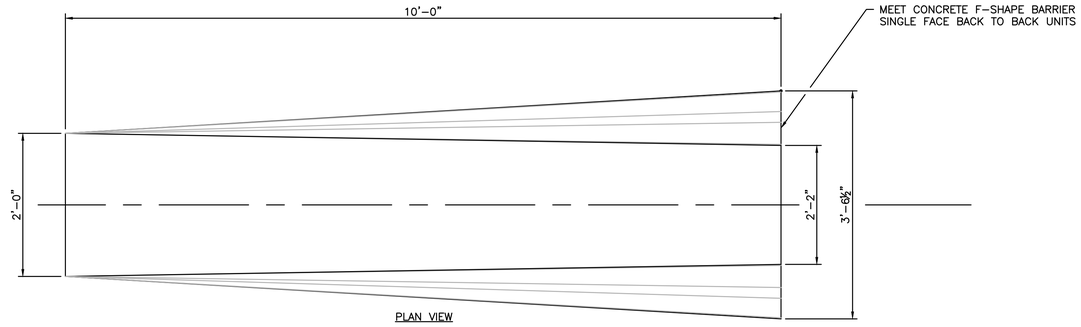

PLAN VIEW

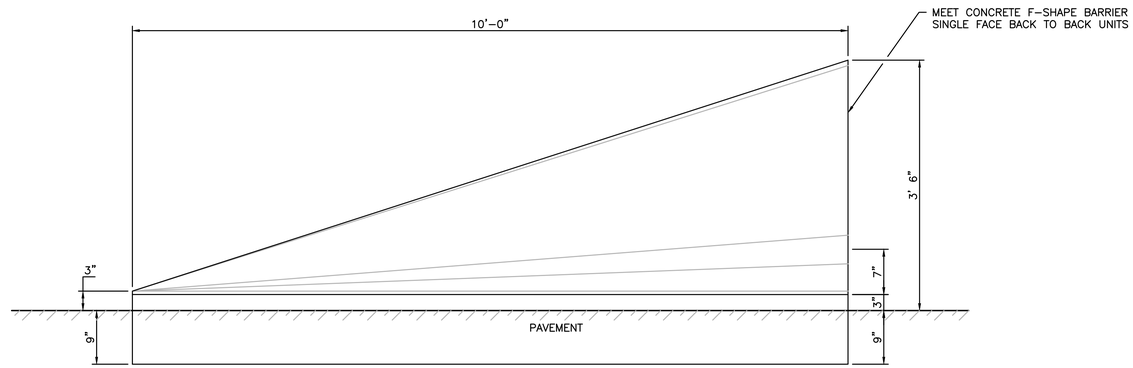

SIDE VIEW

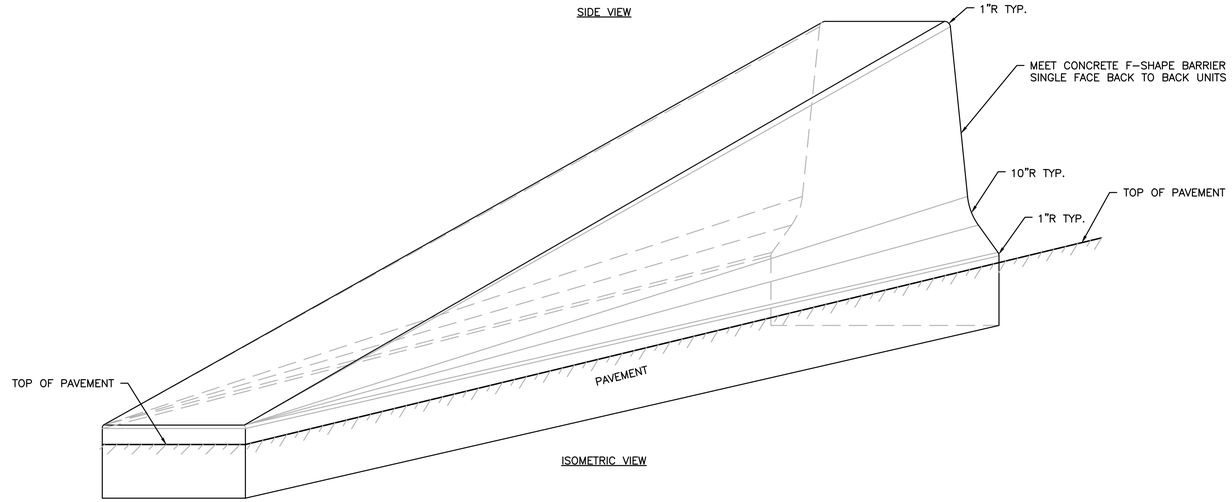

ISOMETRIC VIEW

CONCRETE TRANSITION BARRIER - CAST IN PLACE (CTB2)
F-SHAPE HEIGHT TRANSITION (3" TO 42")
NOT TO SCALE

AECOM

RI DOT
RHODE ISLAND
DEPARTMENT OF TRANSPORTATION

DESIGNED BY:	JTS
CHECKED BY:	DMP
DATE:	04/22/2020
SHEET:	22
OF:	47

SCALE: NONE

REVISIONS			REVISIONS		
NO.	DATE	BY	NO.	DATE	BY

BRIDGE GROUP 57T-10
I-195 WASHINGTON NORTH PHASE 2
PROVIDENCE
EAST PROVIDENCE
CONTRACT -- VOLUME: 4
RHODE ISLAND

MISCELLANEOUS DETAILS - 12 OF18

57T-10_V4_008_DETL.DWG

FED. ROAD DIV. NO.	STATE	FEDERAL AID PROJECT NO.	FISCAL YEAR	SHEET NO.	TOTAL SHEETS
1	RI	BHO-0700-005	2020	23	47

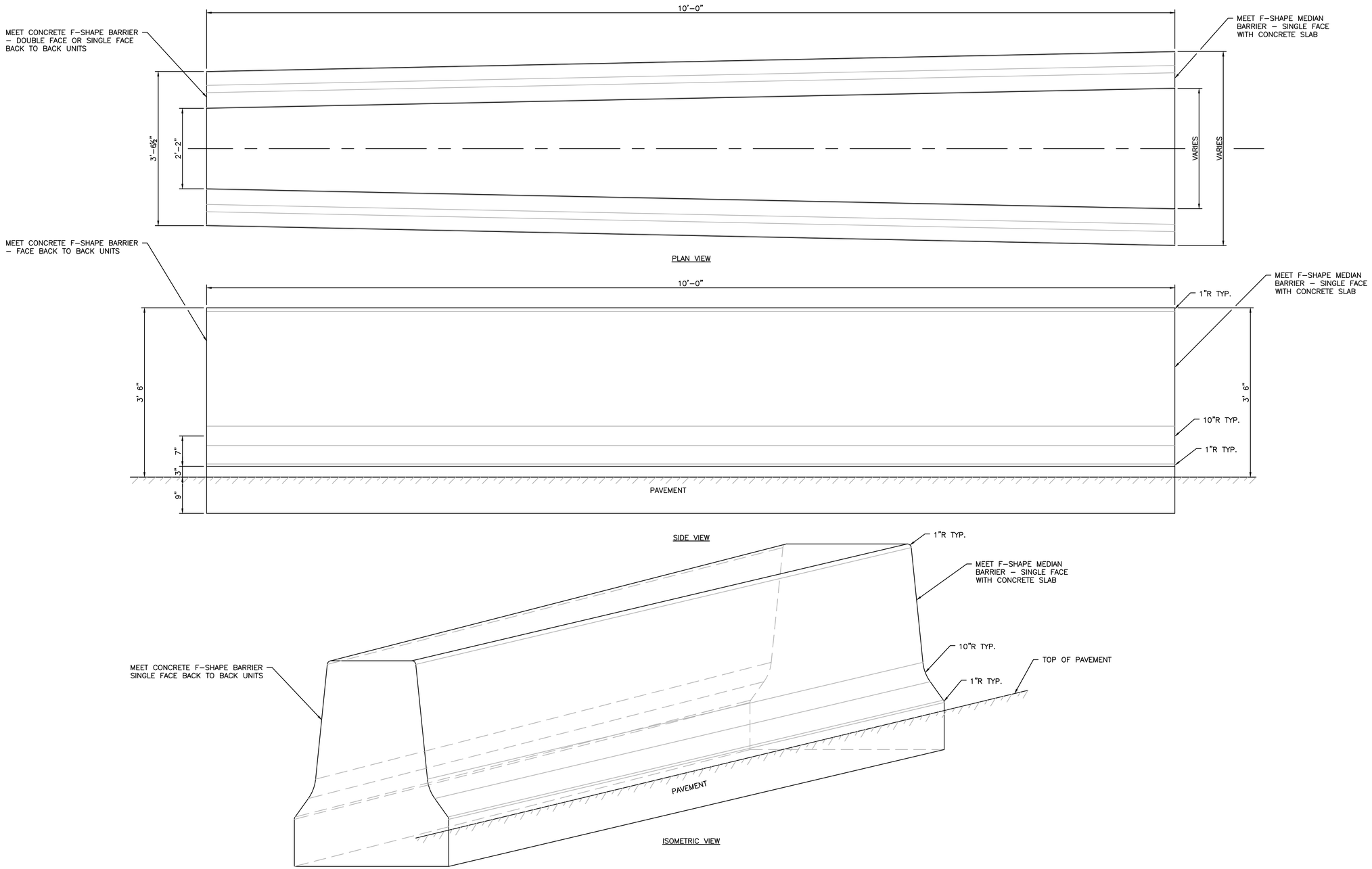

CONCRETE TRANSITION BARRIER - CAST IN PLACE (CTB3)

F-SHAPE BARRIER BACK TO BACK UNITS TO F-SHAPE BARRIER WITH CONCRETE SEPARATOR

NOT TO SCALE

AECOM

RI DOT RHODE ISLAND DEPARTMENT OF TRANSPORTATION

DESIGNED BY: JTS
CHECKED BY: DMP
DATE: 04/22/2020
SHEET: 23
OF: 47

SCALE: NONE

REVISIONS			REVISIONS		
NO.	DATE	BY	NO.	DATE	BY

BRIDGE GROUP 57T-10

I-195 WASHINGTON NORTH PHASE 2

PROVIDENCE EAST PROVIDENCE

CONTRACT -- VOLUME: 4

RHODE ISLAND

MISCELLANEOUS DETAILS - 13 OF18

57T-10_V4_008_DETL.DWG

FED. ROAD DIV. NO.	STATE	FEDERAL AID PROJECT NO.	FISCAL YEAR	SHEET NO.	TOTAL SHEETS
1	RI	BHO-0700-005	2020	24	47

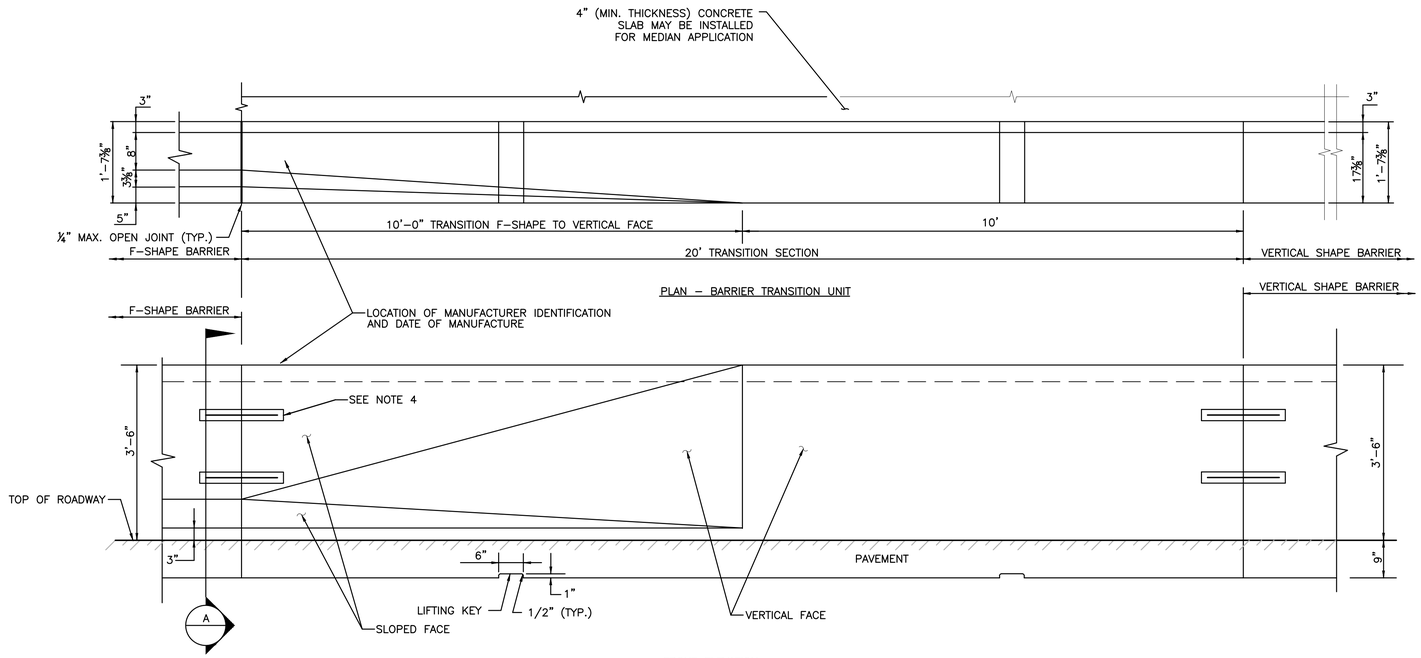

GENERAL NOTES:

1. ALTERNATE DESIGNS FOR THE LIFTING KEYS OR OTHER HANDLING DEVICES MAY BE SUBMITTED FOR APPROVAL.
2. SEE GENERAL PLANS FOR LOCATIONS.
4. PRECAST UNITS SHALL BE COATED WITH PENETRATING SEALER.
6. THE FIRST AND LAST SECTIONS OF BARRIER SHALL NOT HAVE EXPOSED PROTRUDING DOWELS.

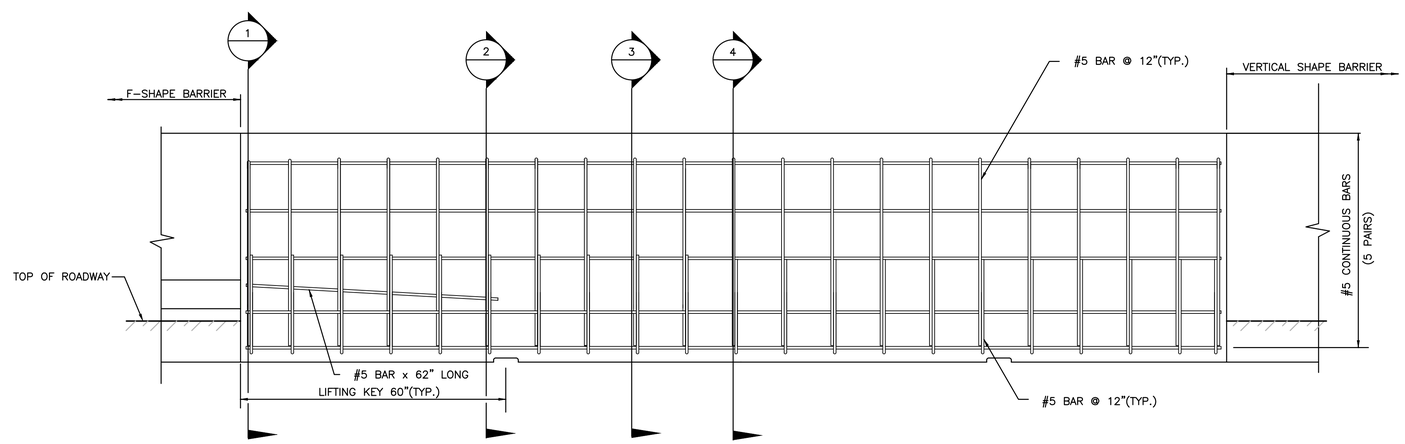

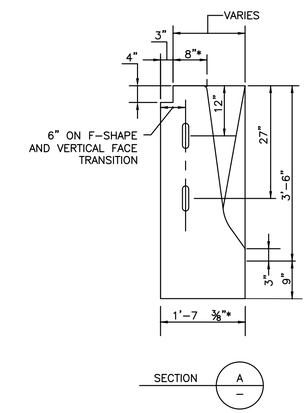

CONCRETE TRANSITION MEDIAN BARRIER UNIT - TYPE 1 (CTB4)
(42" F-SHAPE TO 42" VERTICAL SHAPE)
NOT TO SCALE

AECOM

RHODE ISLAND DEPARTMENT OF TRANSPORTATION

DESIGNED BY:	JTS
CHECKED BY:	DMP
DATE:	04/22/2020
SHEET:	24
OF:	47

SCALE: NONE

REVISIONS			REVISIONS		
NO.	DATE	BY	NO.	DATE	BY

BRIDGE GROUP 57T-10
I-195 WASHINGTON NORTH PHASE 2
PROVIDENCE EAST PROVIDENCE
CONTRACT -- VOLUME: 4
RHODE ISLAND

MISCELLANEOUS DETAILS - 14 OF18

57T-10_V4_008_DETL.DWG

FED. ROAD DIV. NO.	STATE	FEDERAL AID PROJECT NO.	FISCAL YEAR	SHEET NO.	TOTAL SHEETS
1	RI	BHO-0700-005	2020	25	47

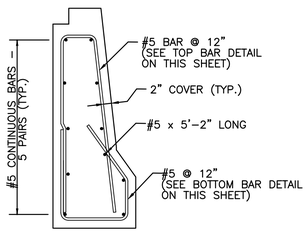

SECTION – BAR 1 (1)

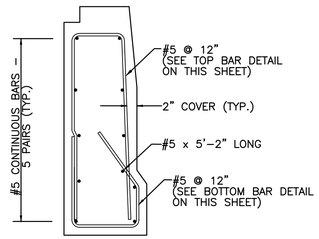

SECTION – BAR 6 (2)

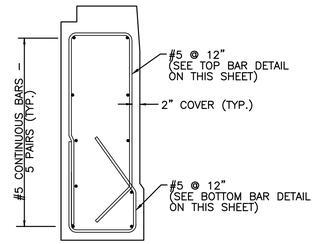

SECTION – BAR 9 (3)

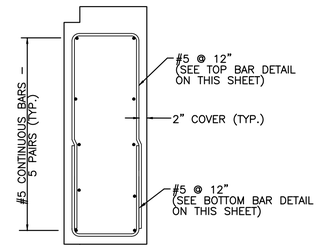

SECTION – BAR 11 (4)

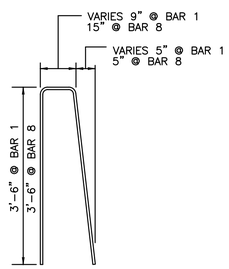

TOP BARS
BARS 1 TO 8

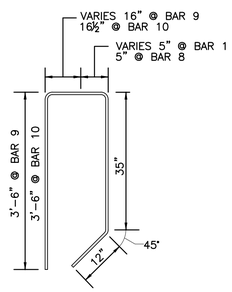

TOP BARS
BARS 9 AND 10

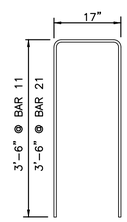

TOP BARS
BARS 11 TO 21

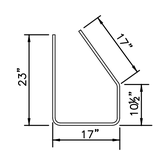

BOTTOM BARS
BARS 1 TO 10

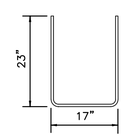

BOTTOM BARS
BARS 11 TO 21

CONCRETE MEDIAN BARRIER TRANSITION TYPE 1
REINFORCEMENT DETAILS
NOT TO SCALE

AECOM

RHODE ISLAND
DEPARTMENT OF TRANSPORTATION

DESIGNED BY: JTS
CHECKED BY: DMP
DATE: 04/22/2020
SHEET: 25
OF: 47

SCALE: NONE

REVISIONS			REVISIONS		
NO.	DATE	BY	NO.	DATE	BY

BRIDGE GROUP 57T-10
I-195 WASHINGTON NORTH PHASE 2
PROVIDENCE
EAST PROVIDENCE
CONTRACT -- VOLUME: 4
RHODE ISLAND

MISCELLANEOUS DETAILS - 15 OF18

57T-10_V4_008_DETL.DWG

FED. ROAD DIV. NO.	STATE	FEDERAL AID PROJECT NO.	FISCAL YEAR	SHEET NO.	TOTAL SHEETS
1	RI	BHO-0700-005	2020	26	47

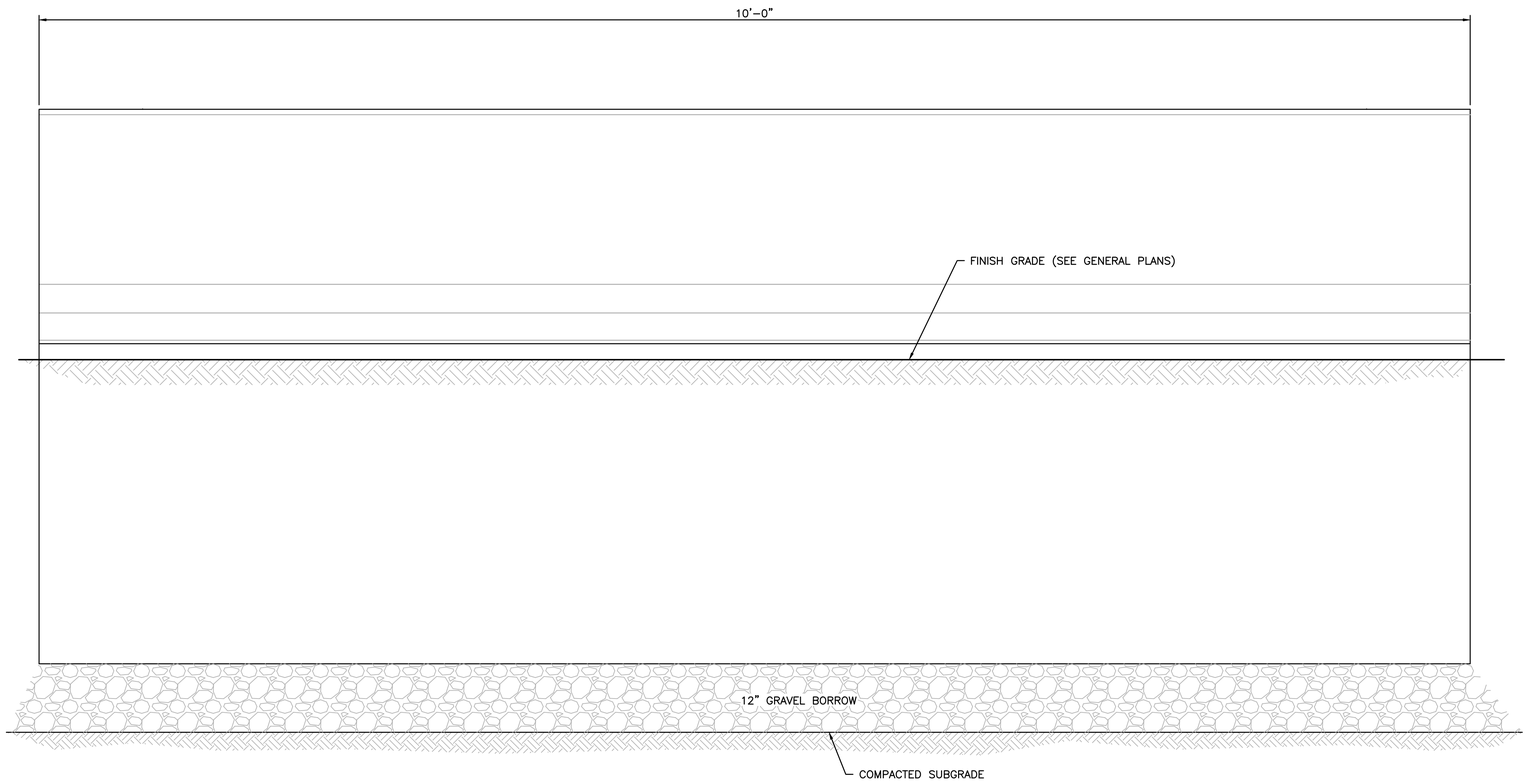

SIDE VIEW

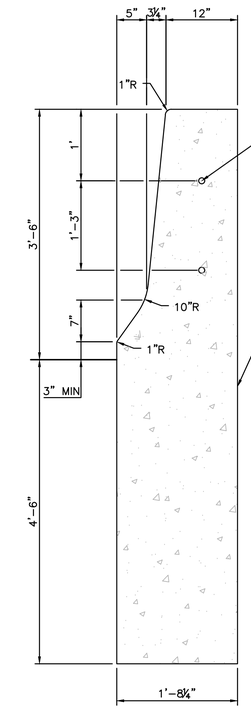

RIGHT SIDE

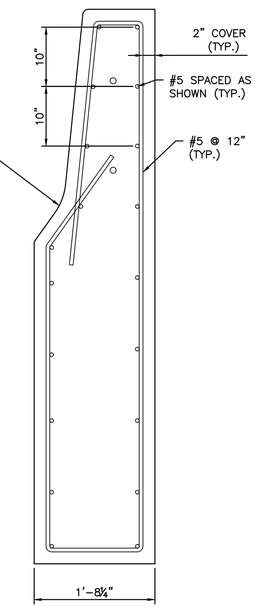

REINFORCING DETAILS

DEEP-EMBEDDED F-SHAPE BARRIER (DEB)

NOT TO SCALE

NOTES:

1. SEE GENERAL PLANS FOR LOCATIONS.
2. PRECAST BARRIER UNITS SHALL BE COATED WITH PENETRATING SEALER.
3. THE FIRST AND LAST SECTIONS OF BARRIER SHALL NOT HAVE EXPOSED PROTRUDING DOWELS.

AECOM

RI DOT

RHODE ISLAND
DEPARTMENT OF TRANSPORTATION

DESIGNED BY: JTS
CHECKED BY: DMP
DATE: 04/22/2020
SHEET: 26
OF: 47

SCALE: NONE

REVISIONS			REVISIONS		
NO.	DATE	BY	NO.	DATE	BY

BRIDGE GROUP 57T-10
I-195 WASHINGTON NORTH PHASE 2
PROVIDENCE
EAST PROVIDENCE
CONTRACT -- VOLUME: 4
RHODE ISLAND

MISCELLANEOUS DETAILS - 16 OF18

57T-10_V4_008_DETL.DWG

FED. ROAD DIV. NO.	STATE	FEDERAL AID PROJECT NO.	FISCAL YEAR	SHEET NO.	TOTAL SHEETS
1	RI	BHO-0700-005	2020	27	47

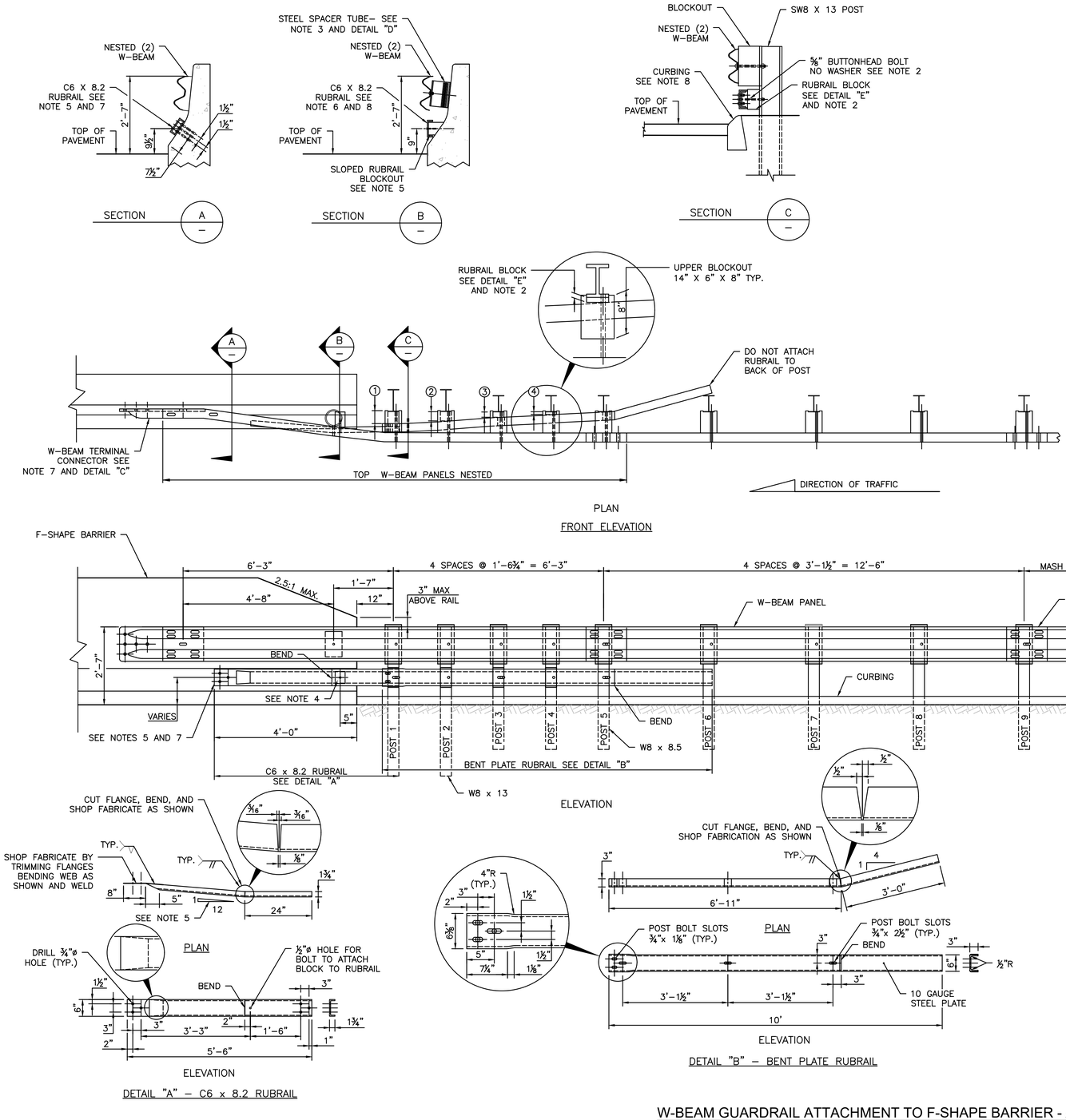

GENERAL NOTES:

1. POSTS 1 THROUGH 5 REQUIRE AN ADDITIONAL HOLE TO ATTACH LOWER BLOCKOUTS AND/OR RUBRAIL.
2. RUBRAIL BLOCKOUTS LOCATED ON POSTS 1 THROUGH 4 ARE OFFSET DRILLED AND SECURED WITH ⅝" BUTTONHEAD BOLTS (SEE CHART FOR BOLT LENGTHS). SECURE BLOCKS TO POSTS 2 AND 4. SECURE RUBRAIL AND BLOCKOUTS TO POSTS 1 AND 3. RUBRAIL IS SECURED TO POST 5 WITH A ⅝" x 4½" BUTTONHEAD BOLT. RUBRAIL IS FLARED TO BACK OF POST 6 AND NOT SECURED.
3. STEEL SPACER TUBE IS A SCHEDULE 40 GALVANIZED PIPE 6" INSIDE DIAMETER x 9" LONG. ATTACH TUBE TO RAIL ONLY WITH ⅝" x 1¼" LONG BUTTONHEAD BOLT AND RECTANGULAR PLATE WASHER. TUBE IS NOT ATTACHED TO PARAPET.
4. SEE DETAIL "F" FOR SLOPED RUBRAIL BLOCKOUT. BLOCKOUT IS ATTACHED TO RAIL ELEMENT ONLY. USE ⅜"x 3" LAG BOLT WITH FLAT WASHER.
5. SHOP FABRICATE THE C6 x 8.2 RUBRAIL END TO BE CONSISTENT WITH THE SLOPE OF F-SHAPE BARRIER AND ATTACH FLUSH WITH THE SLOPED TOE OF THE PARAPET OR BARRIER.
6. USE 10 GAUGE W-BEAM RAIL ELEMENTS.
7. ANCHORAGE:
   (A) AT EXISTING PARAPETS OR BARRIERS, RUBRAIL SHALL BE ANCHORED USING THREE ⅝"ø 6" CHEMICALLY ANCHORED BOLTS WITH WASHERS OR AS DETAILED ON STRUCTURE SHEETS. MAXIMUM BOLT PROJECTION BEYOND THE NUT SHALL BE ½".
   (B) AT EXISTING PARAPETS OR BARRIERS, THE W-BEAM TERMINAL CONNECTOR SHALL BE ANCHORED USING FIVE ⅞"ø 12" CHEMICALLY ANCHORED BOLTS WITH WASHERS, OR AS DETAILED ON THE STRUCTURE SHEETS. MAXIMUM BOLT PROJECTION BEYOND THE NUT SHALL BE ½". THE 12" MINIMUM LENGTH OF CHEMICALLY ANCHORED BOLTS SHALL INCLUDE A MINIMUM EMBEDMENT DEPTH OF 10" INTO SUITABLY REINFORCED CONCRETE, OR AS RECOMMENDED BY MANUFACTURER OF BONDING MATERIAL.
   (C) NEW PARAPETS OR BARRIERS, THE W-BEAM TERMINAL CONNECTOR AND RUBRAIL SHALL BE ANCHORED AS DETAILED ON THE STRUCTURAL PLANS.
8. FOR NEW CONSTRUCTION WHERE CURBING IS NEEDED, USE EITHER PRECAST CONCRETE SLOPE FACE CURB SET WITH A 4" REVEAL. IF EXISTING CURBING IS GRANITE SLOPE FACE CURB, RESET CURB TO A 4" REVEAL OR REMOVE IT AND REPLACE IT.
9. POSTS 1 AND 2 ARE W8 x 13, 7'-6" LONG. ALL OTHER POSTS IN TRANSITION ARE W6 x 8.5, 6'-0" LONG.
10. ADDITIONAL BLOCKOUTS WITH POSTS 1 THROUGH 6 SHOULD BE AVOIDED.
11. FOR SINGLE DIRECTION ROADWAY:
    INSTALL W-BEAM TERMINAL CONNECTOR BETWEEN NESTED GUARDRAIL ELEMENTS.
    FOR DUAL DIRECTION ROADWAY FOR APPROACHING TRAFFIC:
    INSTALL W-BEAM TERMINAL CONNECTOR BETWEEN NESTED GUARDRAIL ELEMENTS.
    FOR TRAILING END:
    INSTALL W-BEAM TERMINAL CONNECTOR OUTSIDE OF THE NESTED GUARDRAIL ELEMENTS.
12. MINIMUM RAIL HEIGHT FOR NEW CONSTRUCTION SHALL BE 2'-7".

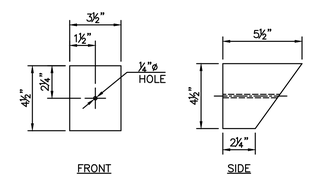

DETAIL "F"
SLOPED RUBRAIL BLOCKOUT

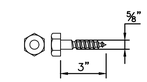

DETAIL "G" – LAG BOLT

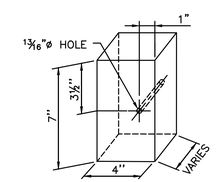

RUBRAIL BLOCKS 7" HIGH x 4" WIDE		
POST	THICKNESS	BOLT LENGTH
1	4¼"	9"
2	3¼"	5"*
3	2"	6"
4	1"	3"*
* BOLTS FOR POSTS 2 AND 4 ARE USED TO ATTACH BLOCK TO POST. RUBRAIL NOT ATTACHED TO BLOCK.		

DETAIL "E" – RUBRAIL BLOCKOUT

W-BEAM GUARDRAIL ATTACHMENT TO F-SHAPE BARRIER - APPROACH END SECTION (GTBA)

NOT TO SCALE

AECOM

RHODE ISLAND DEPARTMENT OF TRANSPORTATION

DESIGNED BY:	JTS
CHECKED BY:	DMP
DATE:	04/22/2020
SHEET:	27
OF:	47

SCALE: NONE

REVISIONS			REVISIONS		
NO.	DATE	BY	NO.	DATE	BY

BRIDGE GROUP 57T-10
I-195 WASHINGTON NORTH PHASE 2
PROVIDENCE EAST PROVIDENCE
CONTRACT -- VOLUME: 4
RHODE ISLAND

MISCELLANEOUS DETAILS - 17 OF18

57T-10_V4_008_DETL.DWG

FED. ROAD DIV. NO.	STATE	FEDERAL AID PROJECT NO.	FISCAL YEAR	SHEET NO.	TOTAL SHEETS
1	RI	BHO-0700-005	2020	28	47

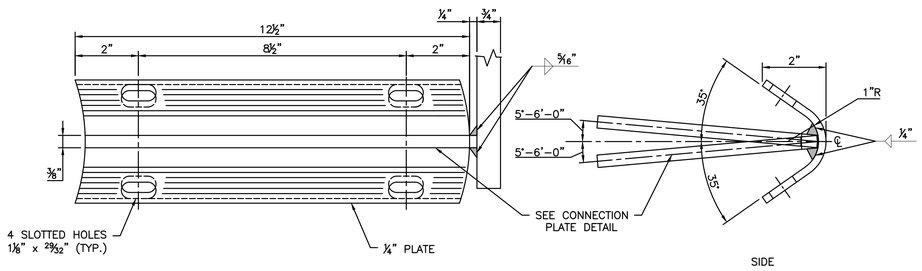

BENT PLATE
(2 REQUIRED)

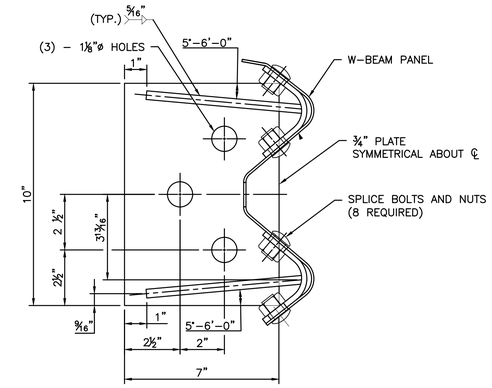

BASE PLATE AND ASSEMBLY

GENERAL NOTES:

1. FOR ANCHORAGE TO BARRIER, USE THREE 1"ø X 14" LONG, FULLY THREADED, CHEMICALLY ANCHORED BOLTS AND WASHERS WITH 12" EMBEDMENT DEPTH OR AS RECOMMENDED BY MANUFACTURER OF BONDING MATERIAL TO OBTAIN FULL STRENGTH OF ANCHOR BOLTS.
2. USE 10 GAUGE W-BEAM RAIL ELEMENTS
3. MINIMUM RAIL HEIGHT FOR NEW CONSTRUCTION SHALL BE 2'-7".

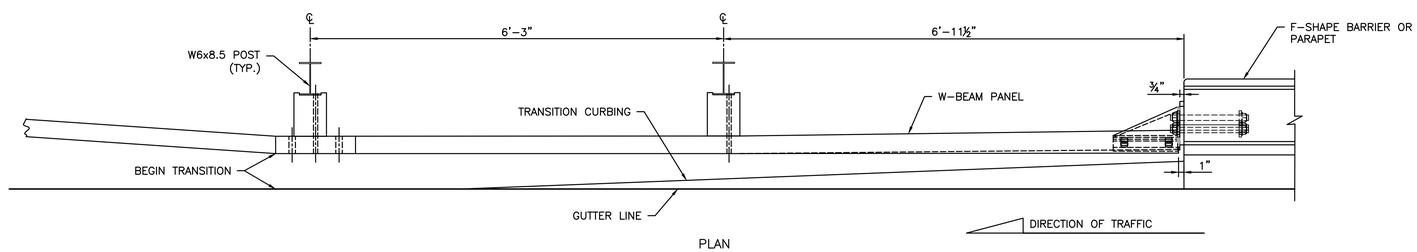

PLAN

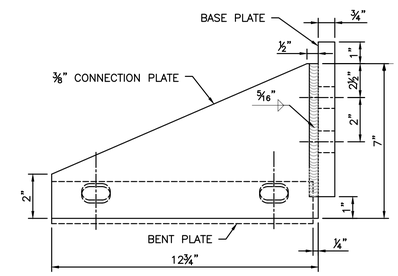

PLAN

CONNECTION PLATE DETAIL
(2 REQUIRED)

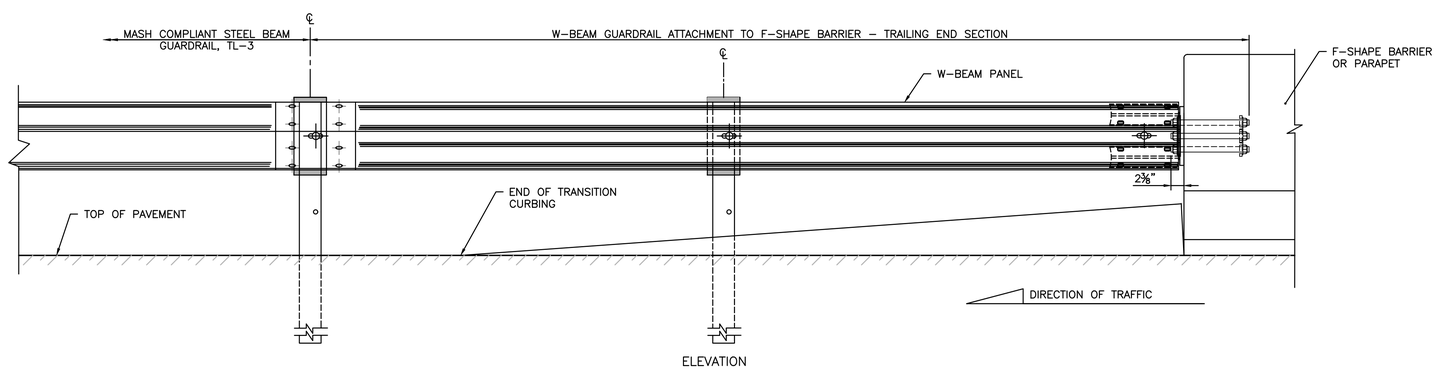

ELEVATION

ATTACHMENT OF TRAILING END OF BARRIER OR BRIDGE PARAPET

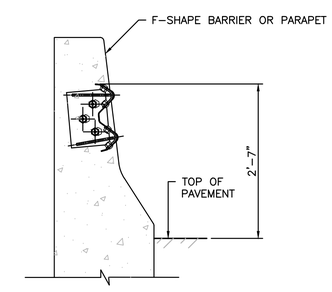

BASE PLATE AND ASSEMBLY ATTACHMENT TO TRAILING END OF CONCRETE BARRIER OR BRIDGE PARAPET

W-BEAM GUARDRAIL ATTACHMENT TO F-SHAPE BARRIER - TRAILING END SECTION (GTBT)
NOT TO SCALE

AECOM

RHODE ISLAND DEPARTMENT OF TRANSPORTATION

DESIGNED BY:	JTS
CHECKED BY:	DMP
DATE:	04/22/2020
SHEET:	28
OF:	47

SCALE: NONE

REVISIONS			REVISIONS		
NO.	DATE	BY	NO.	DATE	BY

BRIDGE GROUP 57T-10
I-195 WASHINGTON NORTH PHASE 2
PROVIDENCE / EAST PROVIDENCE
CONTRACT -- VOLUME: 4
RHODE ISLAND

MISCELLANEOUS DETAILS - 18 OF18

57T-10_V4_008_DETL.DWG

FED. ROAD DIV. NO.	STATE	FEDERAL AID PROJECT NO.	FISCAL YEAR	SHEET NO.	TOTAL SHEETS
01	RI	BHO-0700-005	2020	29	47

AECOM

RI DOT

RHODE ISLAND
DEPARTMENT OF TRANSPORTATION

DESIGNED BY:	JTS
CHECKED BY:	DMP
DATE:	04/22/2020
SHEET:	29
OF:	47

SCALE: 1"=40'

GRAPHIC SCALE

REVISIONS			REVISIONS		
NO.	DATE	BY	NO.	DATE	BY

BRIDGE GROUP 57T-10
I-195 WASHINGTON NORTH PHASE 2
PROVIDENCE
EAST PROVIDENCE
CONTRACT: -- VOLUME: 4 RHODE ISLAND

GENERAL PLAN - 1 OF 8

57T-10_V4_009_PLAN.DWG

FED. ROAD DIV. NO.	STATE	FEDERAL AID PROJECT NO.	FISCAL YEAR	SHEET NO.	TOTAL SHEETS
01	RI	BHO-0700-005	2020	30	47

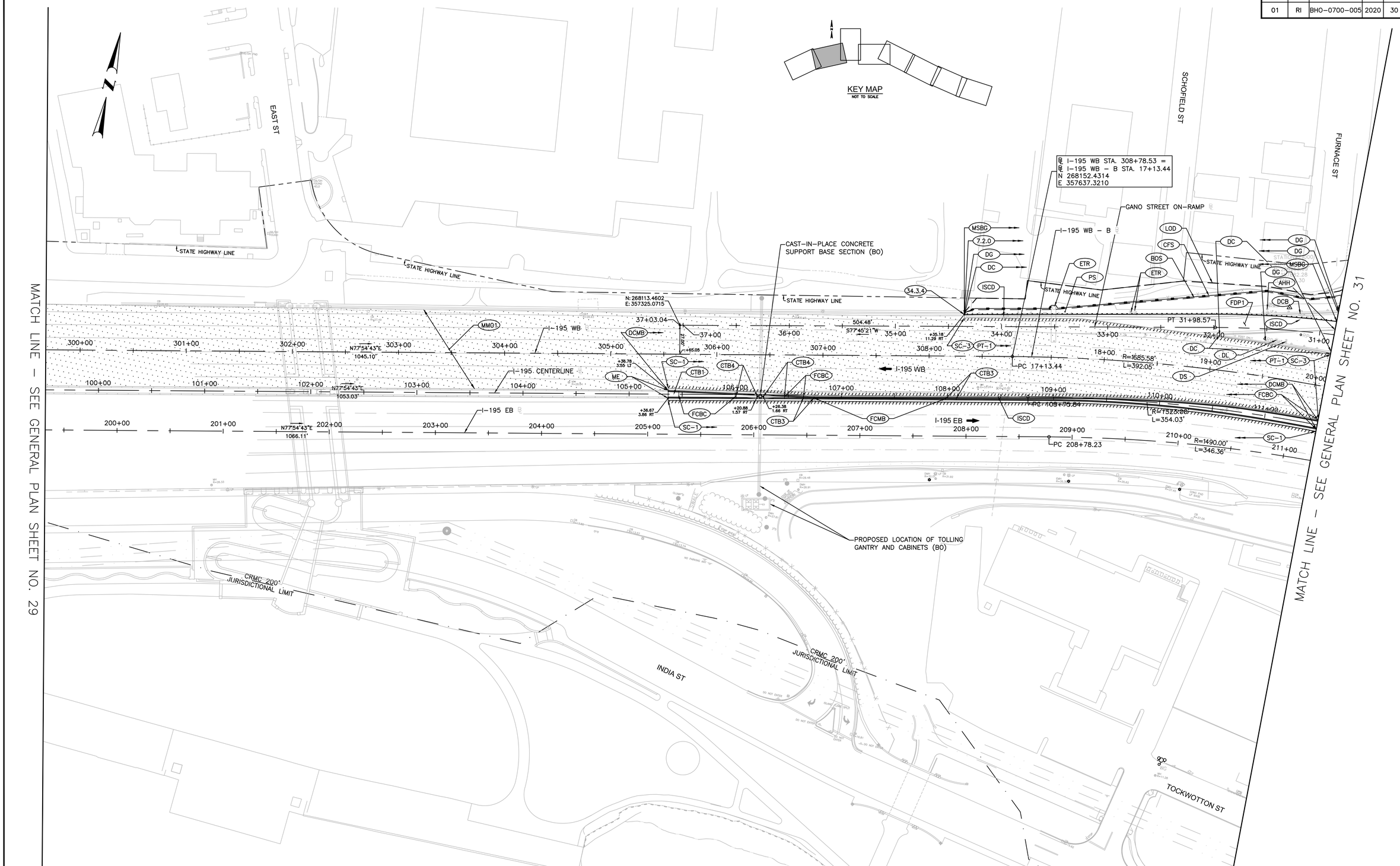

AECOM

RHODE ISLAND DEPARTMENT OF TRANSPORTATION

DESIGNED BY:	JTS
CHECKED BY:	DMP
DATE:	04/22/2020
SHEET:	30
OF:	47

SCALE: 1"=40'

GRAPHIC SCALE

REVISIONS			REVISIONS		
NO.	DATE	BY	NO.	DATE	BY

BRIDGE GROUP 57T-10

I-195 WASHINGTON NORTH PHASE 2

PROVIDENCE EAST PROVIDENCE

CONTRACT: -- VOLUME: 4 RHODE ISLAND

GENERAL PLAN - 2 OF 8

57T-10_V4_009_PLAN.DWG

FED. ROAD DIV. NO.	STATE	FEDERAL AID PROJECT NO.	FISCAL YEAR	SHEET NO.	TOTAL SHEETS
01	RI	BHO-0700-005	2020	31	47

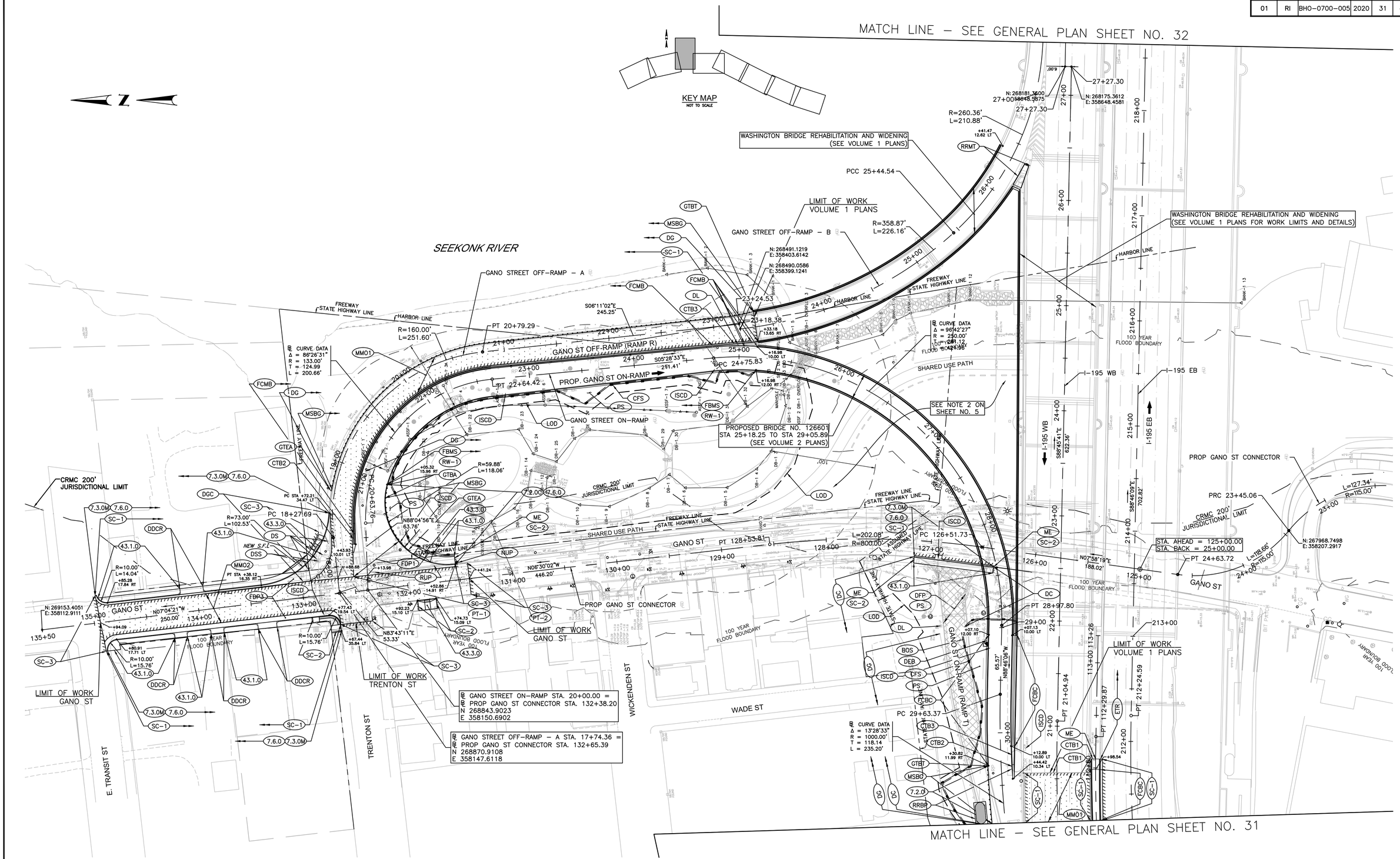

AECOM

RI DOT

RHODE ISLAND
DEPARTMENT OF TRANSPORTATION

DESIGNED BY:	JTS
CHECKED BY:	DMP
DATE:	04/22/2020
SHEET:	31
OF:	47

SCALE: 1"=40'

GRAPHIC SCALE

REVISIONS			REVISIONS		
NO.	DATE	BY	NO.	DATE	BY

BRIDGE GROUP 57T-10
I-195 WASHINGTON NORTH PHASE 2
PROVIDENCE
EAST PROVIDENCE
CONTRACT: -- VOLUME: 4 RHODE ISLAND

GENERAL PLAN - 3 OF 8

57T-10_V4_009_PLAN.DWG

FED. ROAD DIV. NO.	STATE	FEDERAL AID PROJECT NO.	FISCAL YEAR	SHEET NO.	TOTAL SHEETS
01	RI	BHO-0700-005	2020	32	47

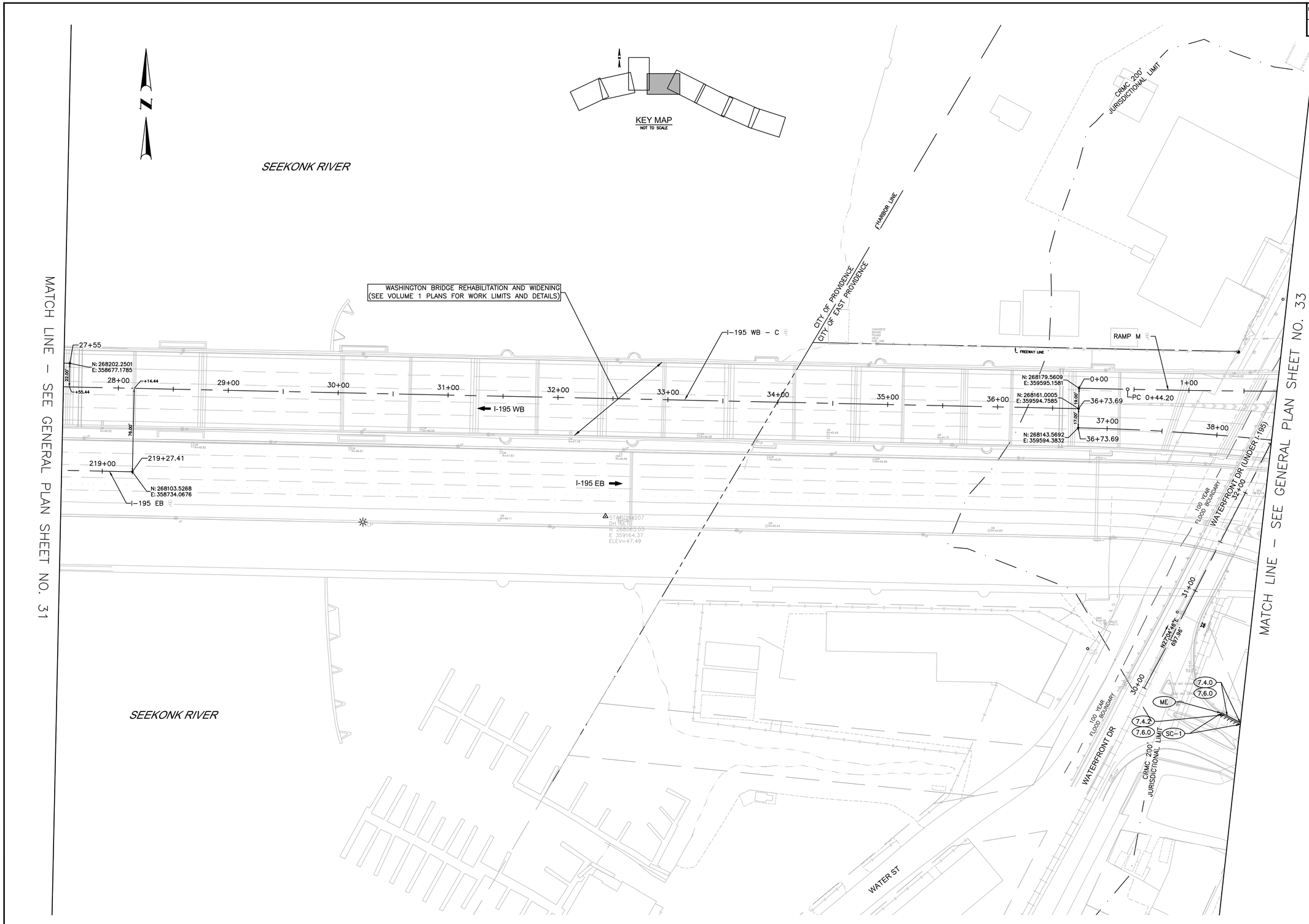

AECOM

RHODE ISLAND
DEPARTMENT OF TRANSPORTATION

DESIGNED BY:	JTS
CHECKED BY:	DMP
DATE:	04/22/2020
SHEET:	32
OF:	47

SCALE: 1"=40'

GRAPHIC SCALE

REVISIONS			REVISIONS		
NO.	DATE	BY	NO.	DATE	BY

BRIDGE GROUP 57T-10
I-195 WASHINGTON NORTH PHASE 2
PROVIDENCE
EAST PROVIDENCE
CONTRACT: -- VOLUME: 4 RHODE ISLAND

GENERAL PLAN - 4 OF 8

57T-10_V4_009_PLAN.DWG

FED. ROAD DIV. NO.	STATE	FEDERAL AID PROJECT NO.	FISCAL YEAR	SHEET NO.	TOTAL SHEETS
01	RI	BHO-0700-005	2020	33	47

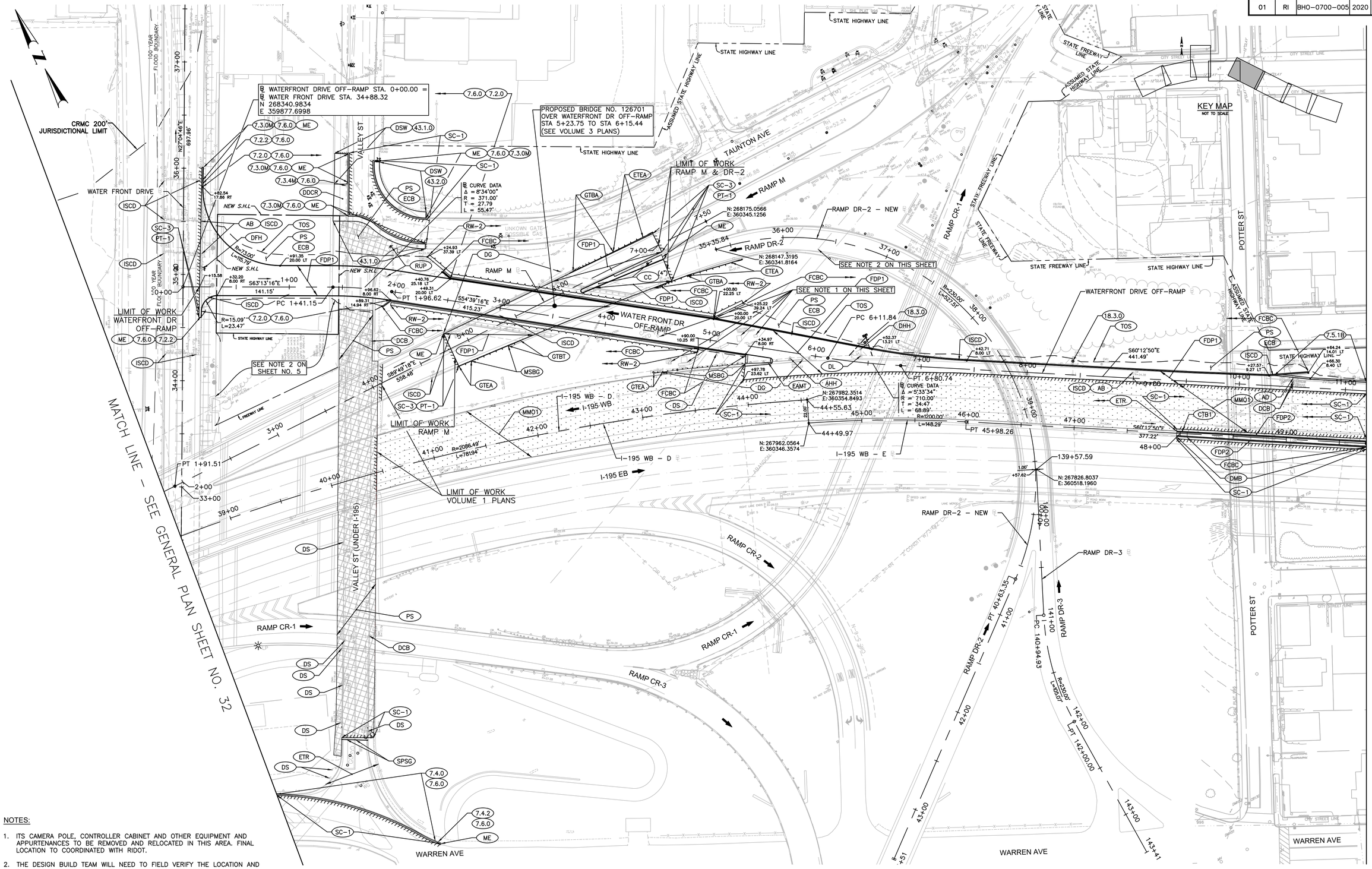

NOTES:

1. ITS CAMERA POLE, CONTROLLER CABINET AND OTHER EQUIPMENT AND APPURTENANCES TO BE REMOVED AND RELOCATED IN THIS AREA. FINAL LOCATION TO COORDINATED WITH RIDOT.
2. THE DESIGN BUILD TEAM WILL NEED TO FIELD VERIFY THE LOCATION AND INVERT ELEVATIONS OF THE EXISTING 8" VC SEWER LINE.

AECOM

RHODE ISLAND DEPARTMENT OF TRANSPORTATION

DESIGNED BY: JTS
CHECKED BY: DMP
DATE: 04/22/2020
SHEET: 33
OF: 47

SCALE: 1"=40'
GRAPHIC SCALE

REVISIONS			REVISIONS		
NO.	DATE	BY	NO.	DATE	BY

BRIDGE GROUP 57T-10
I-195 WASHINGTON NORTH PHASE 2
PROVIDENCE EAST PROVIDENCE
CONTRACT: -- VOLUME: 4 RHODE ISLAND

GENERAL PLAN - 5 OF 8

57T-10_V4_009_PLAN.DWG

FED. ROAD DIV. NO.	STATE	FEDERAL AID PROJECT NO.	FISCAL YEAR	SHEET NO.	TOTAL SHEETS
01	RI	BHO-0700-005	2020	34	47

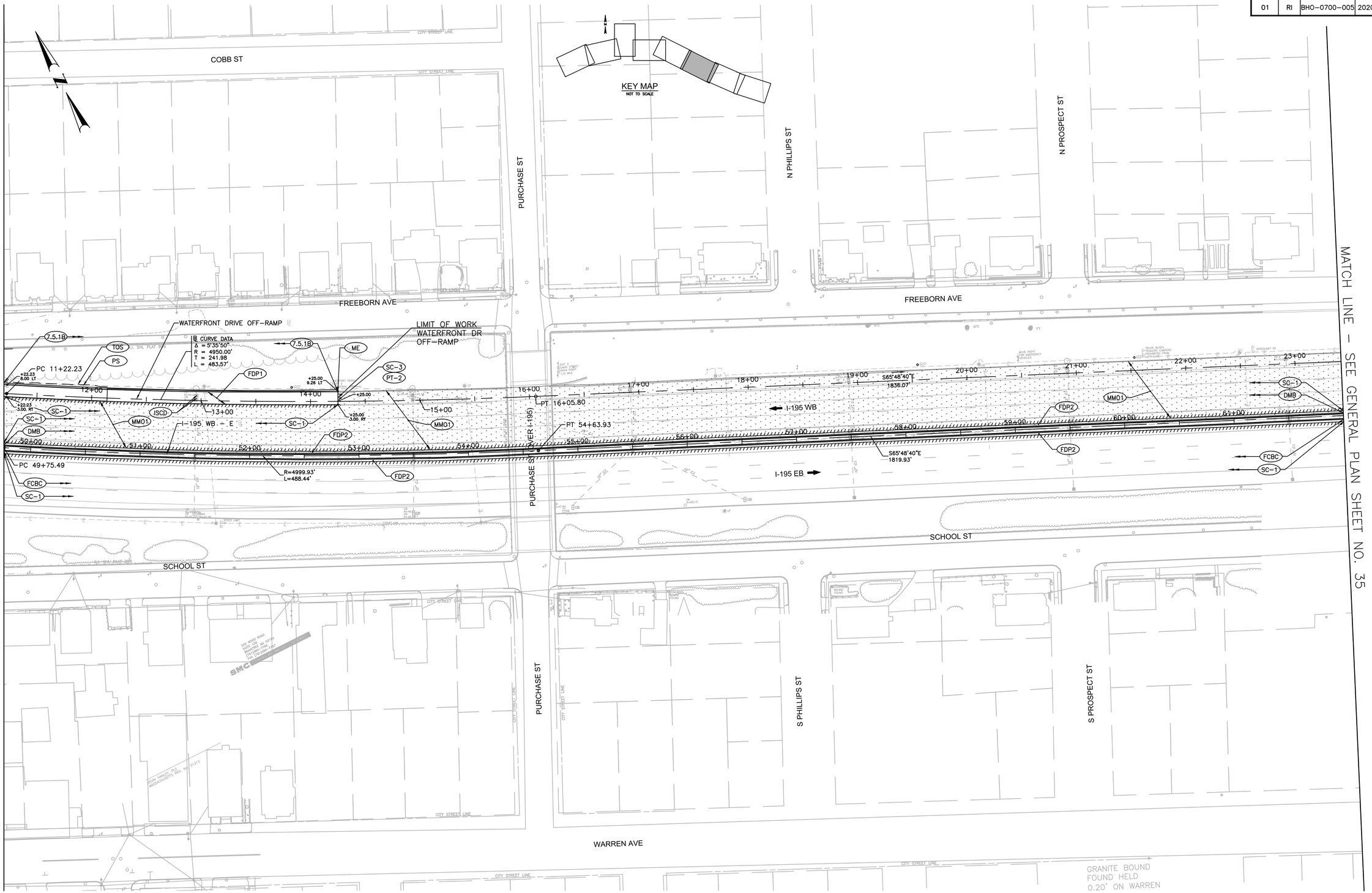

AECOM

RI DOT

RHODE ISLAND
DEPARTMENT OF TRANSPORTATION

DESIGNED BY: JTS
CHECKED BY: DMP
DATE: 04/22/2020
SHEET: 34
OF: 47

SCALE: 1"=40'
GRAPHIC SCALE

REVISIONS			REVISIONS		
NO.	DATE	BY	NO.	DATE	BY

BRIDGE GROUP 57T-10
I-195 WASHINGTON NORTH PHASE 2
PROVIDENCE
EAST PROVIDENCE
CONTRACT: -- VOLUME: 4
RHODE ISLAND

GENERAL PLAN - 6 OF 8

57T–10_V4_009_PLAN.DWG

FED. ROAD DIV. NO.	STATE	FEDERAL AID PROJECT NO.	FISCAL YEAR	SHEET NO.	TOTAL SHEETS
01	RI	BHO-0700-005	2020	35	47

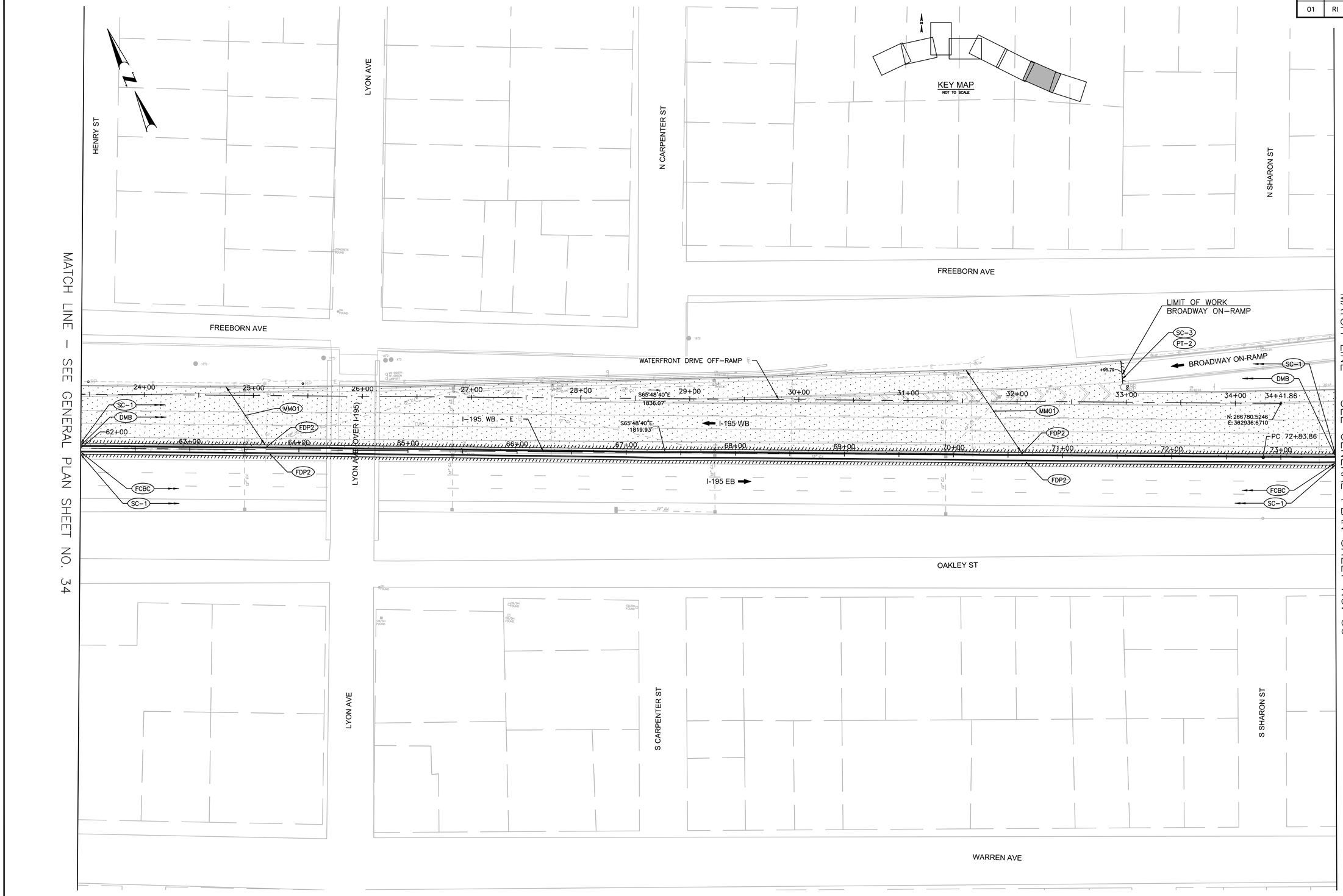

AECOM

RHODE ISLAND
DEPARTMENT OF TRANSPORTATION

DESIGNED BY:	JTS
CHECKED BY:	DMP
DATE:	04/22/2020
SHEET:	35
OF:	47

SCALE: 1"=40'
GRAPHIC SCALE

REVISIONS			REVISIONS		
NO.	DATE	BY	NO.	DATE	BY

BRIDGE GROUP 57T-10
I-195 WASHINGTON NORTH PHASE 2
PROVIDENCE
EAST PROVIDENCE
CONTRACT: -- VOLUME: 4 RHODE ISLAND

GENERAL PLAN - 7 OF 8

57T-10_V4_009_PLAN.DWG

FED. ROAD DIV. NO.	STATE	FEDERAL AID PROJECT NO.	FISCAL YEAR	SHEET NO.	TOTAL SHEETS
01	RI	BHO-0700-005	2020	36	47

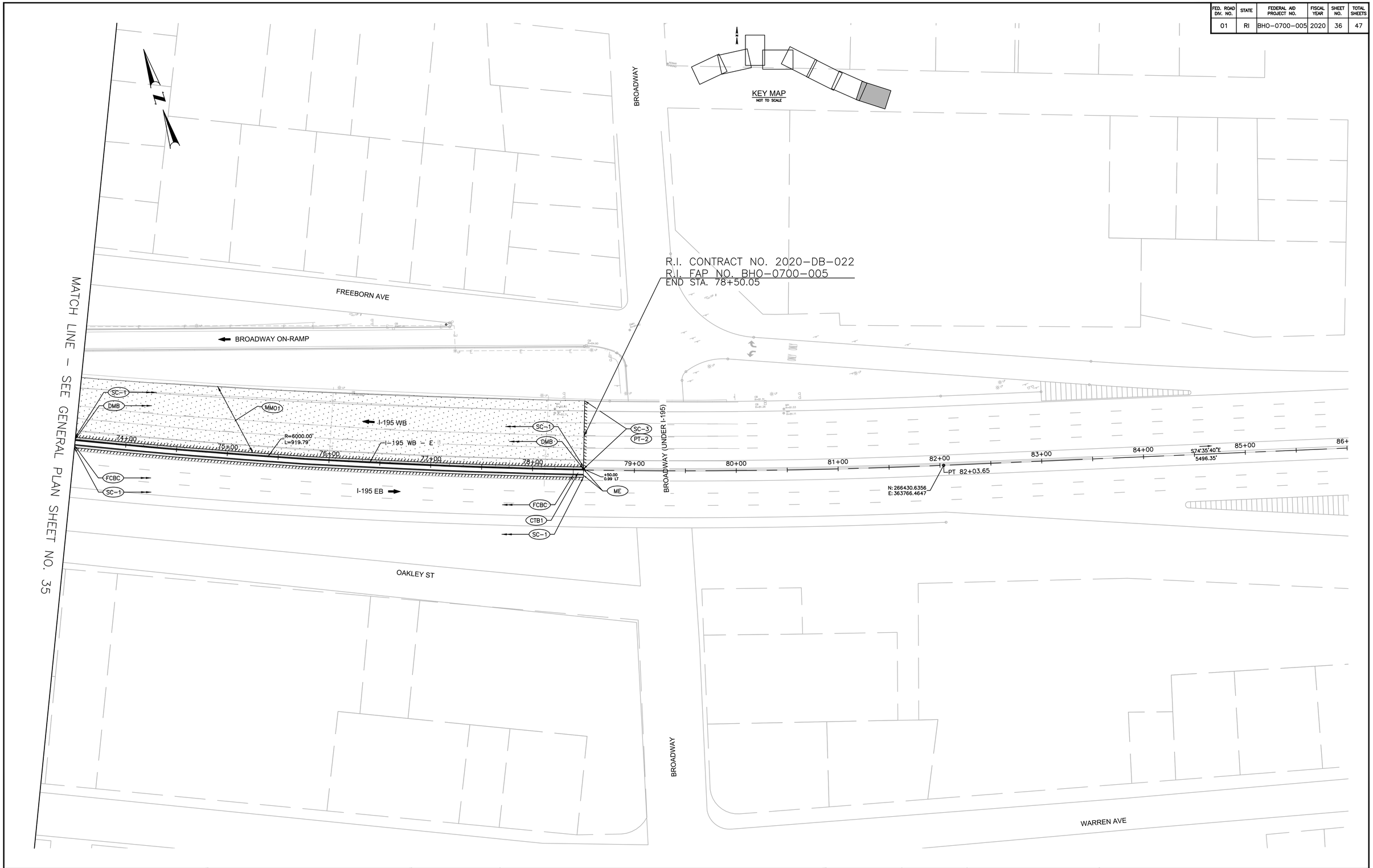

AECOM

RI DOT

RHODE ISLAND
DEPARTMENT OF TRANSPORTATION

DESIGNED BY:	JTS
CHECKED BY:	DMP
DATE:	04/22/2020
SHEET:	36
OF:	47

SCALE: 1"=40'

GRAPHIC SCALE

REVISIONS			REVISIONS		
NO.	DATE	BY	NO.	DATE	BY

BRIDGE GROUP 57T-10

I-195 WASHINGTON NORTH PHASE 2

PROVIDENCE
EAST PROVIDENCE

CONTRACT: -- VOLUME: 4 RHODE ISLAND

GENERAL PLAN - 8 OF 8

57T-10_V4_009_PLAN.DWG

FED. ROAD DIV. NO.	STATE	FEDERAL AID PROJECT NO.	FISCAL YEAR	SHEET NO.	TOTAL SHEETS
01	RI	BHO-0700-005	2020	37	47

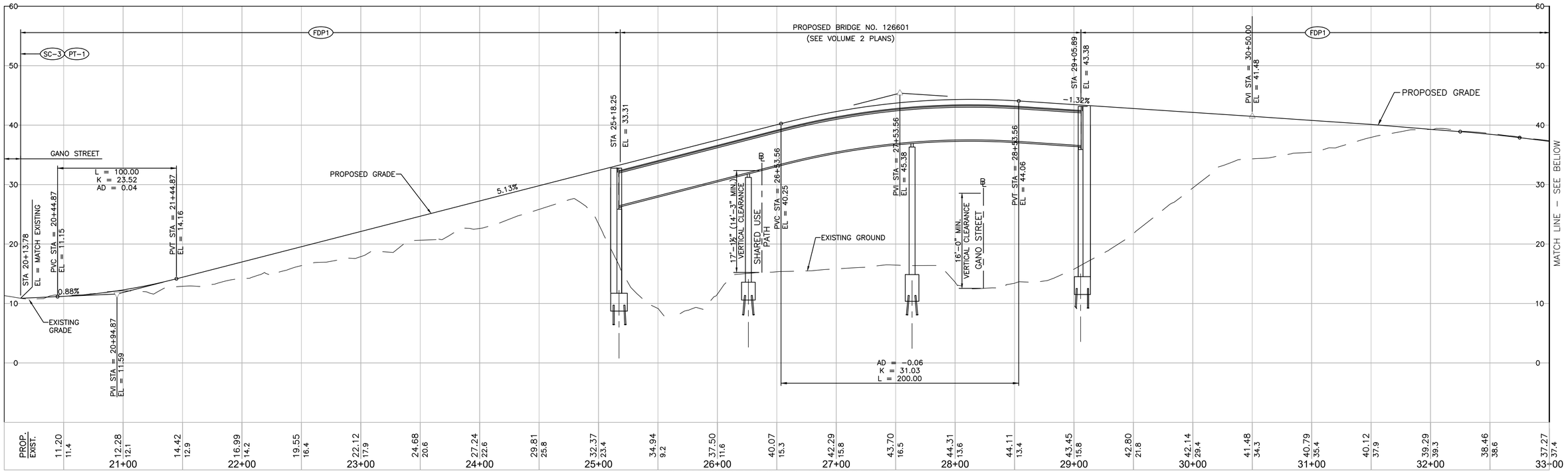

GANO STREET ON-RAMP PROFILE

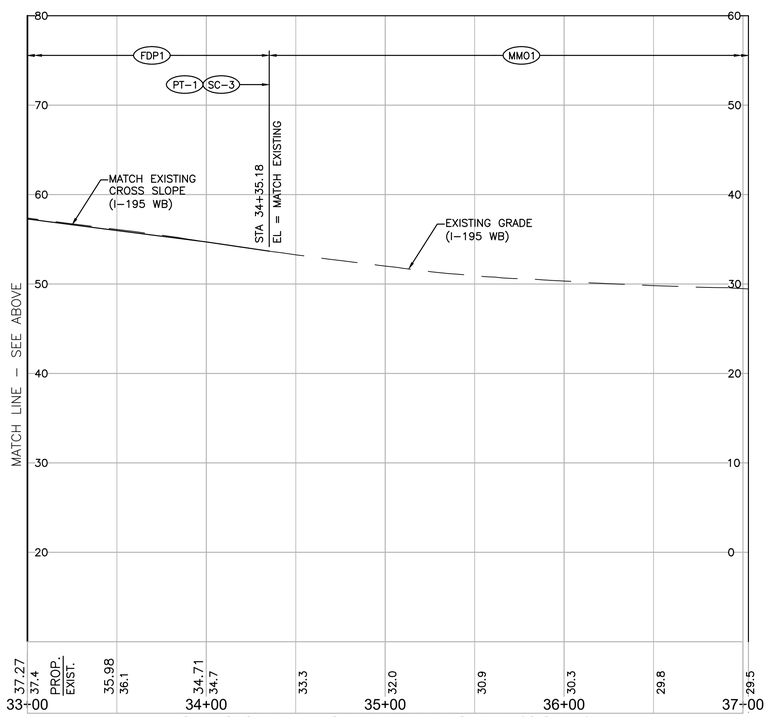

GANO STREET ON-RAMP PROFILE (CON'T)

HORIZONTAL
40 0 40 80
8 0 8 16
VERTICAL

AECOM

RHODE ISLAND
DEPARTMENT OF TRANSPORTATION

DESIGNED BY:	JTS
CHECKED BY:	DMP
DATE:	03/30/2020
SHEET:	37
OF:	47

SCALE: H:1"=40' V:1"=8'
GRAPHIC SCALE

REVISIONS			REVISIONS		
NO.	DATE	BY	NO.	DATE	BY

BRIDGE GROUP 57T-10
I-195 WASHINGTON NORTH PHASE 2
PROVIDENCE
EAST PROVIDENCE
CONTRACT: -- VOLUME: 4 RHODE ISLAND

PROFILES - 1 OF 3

57T-10_V4_010_PROF.DWG

FED. ROAD DIV. NO.	STATE	FEDERAL AID PROJECT NO.	FISCAL YEAR	SHEET NO.	TOTAL SHEETS
01	RI	BHO-0700-005	2020	38	47

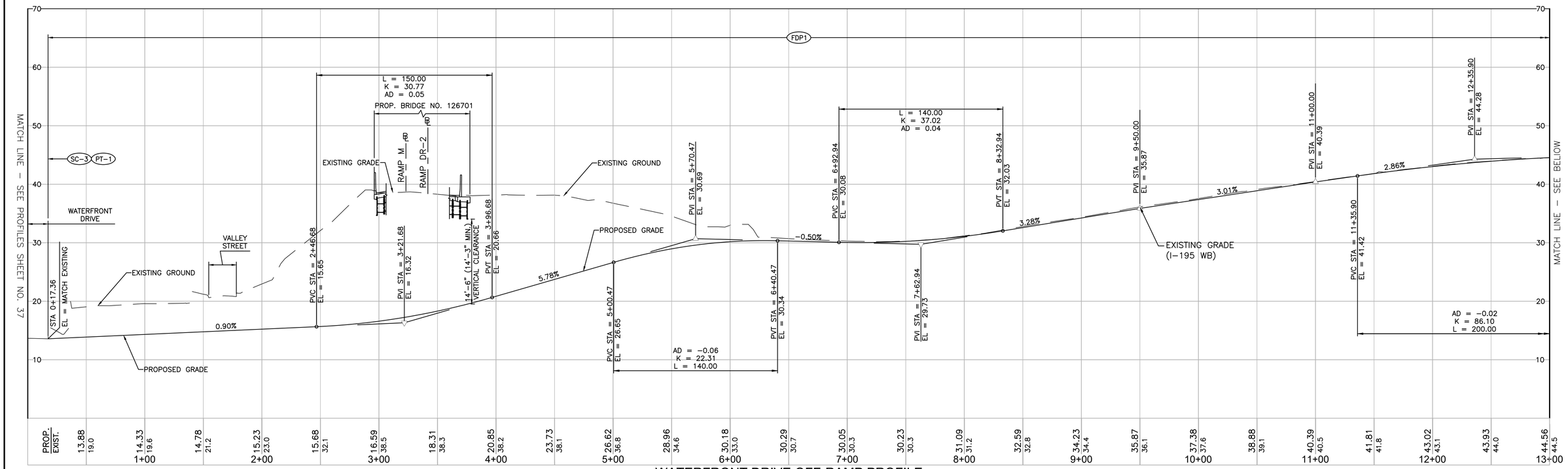

WATERFRONT DRIVE OFF-RAMP PROFILE

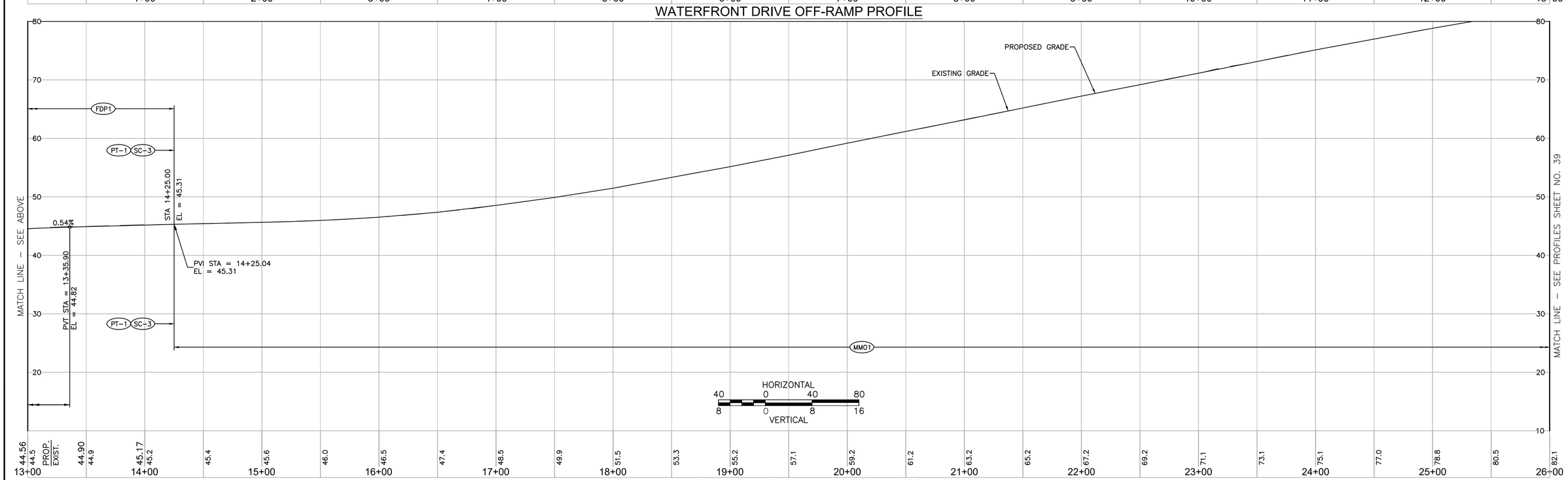

WATERFRONT DRIVE OFF-RAMP PROFILE (CON'T)

AECOM

RHODE ISLAND
DEPARTMENT OF TRANSPORTATION

DESIGNED BY: JTS
CHECKED BY: DMP
DATE: 03/30/2020
SHEET: 38
OF: 47

SCALE: H:1"=40' V:1"=8'
GRAPHIC SCALE

REVISIONS			REVISIONS		
NO.	DATE	BY	NO.	DATE	BY

BRIDGE GROUP 57T-10
I-195 WASHINGTON NORTH PHASE 2
PROVIDENCE
EAST PROVIDENCE
CONTRACT: -- VOLUME: 4
RHODE ISLAND

PROFILES - 2 OF 3

57T-10_V4_010_PROF.DWG

FED. ROAD DIV. NO.	STATE	FEDERAL AID PROJECT NO.	FISCAL YEAR	SHEET NO.	TOTAL SHEETS
01	RI	BHO-0700-005	2020	39	47

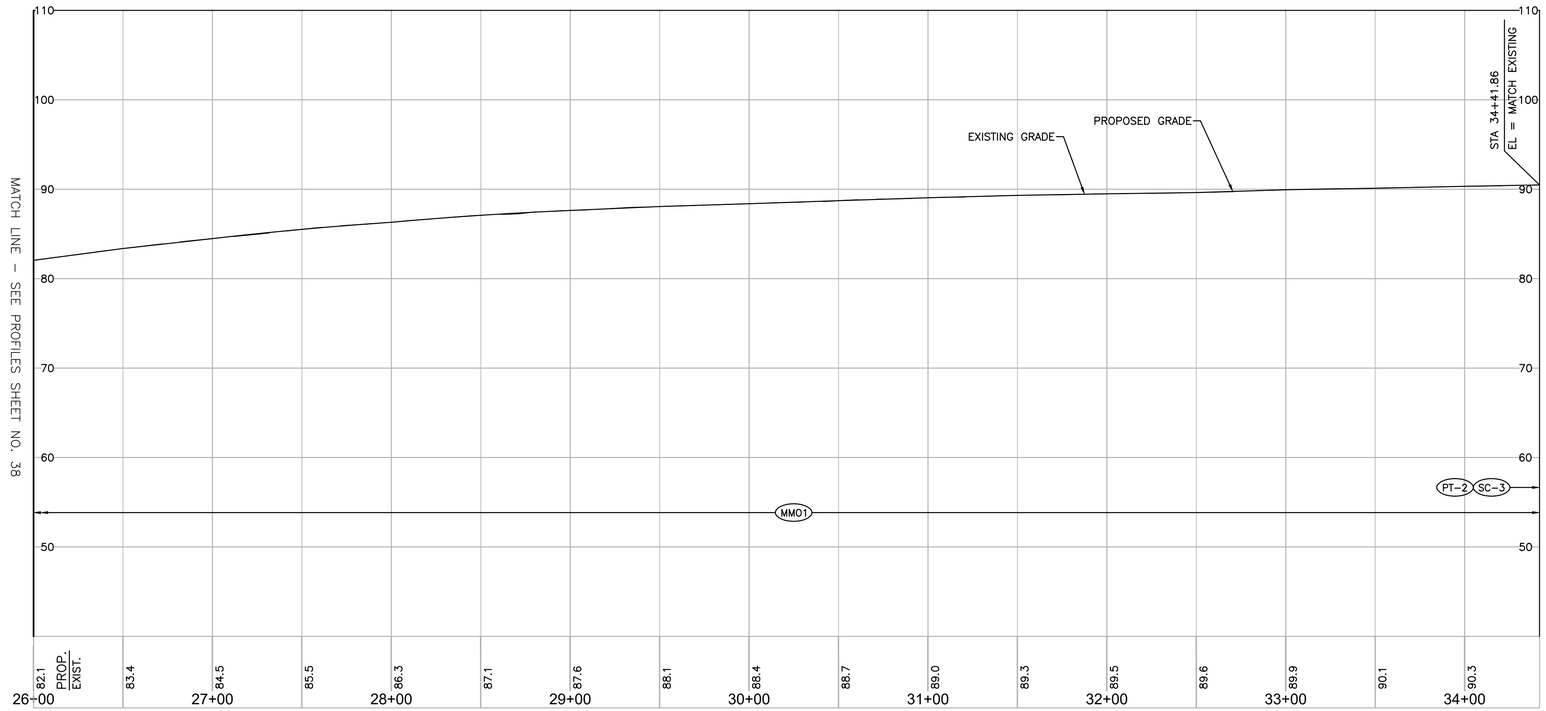

WATERFRONT DRIVE OFF-RAMP PROFILE (CON'T)

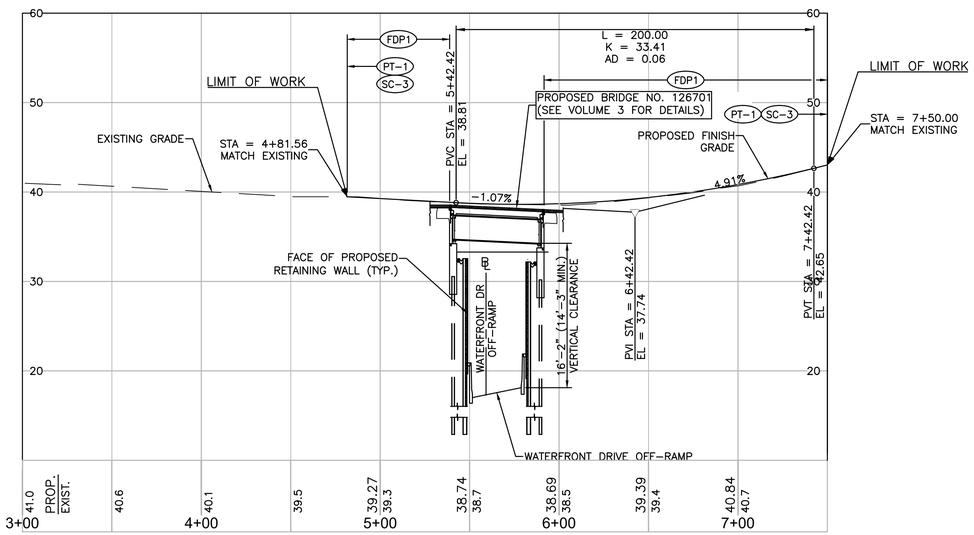

RAMP M PROFILE

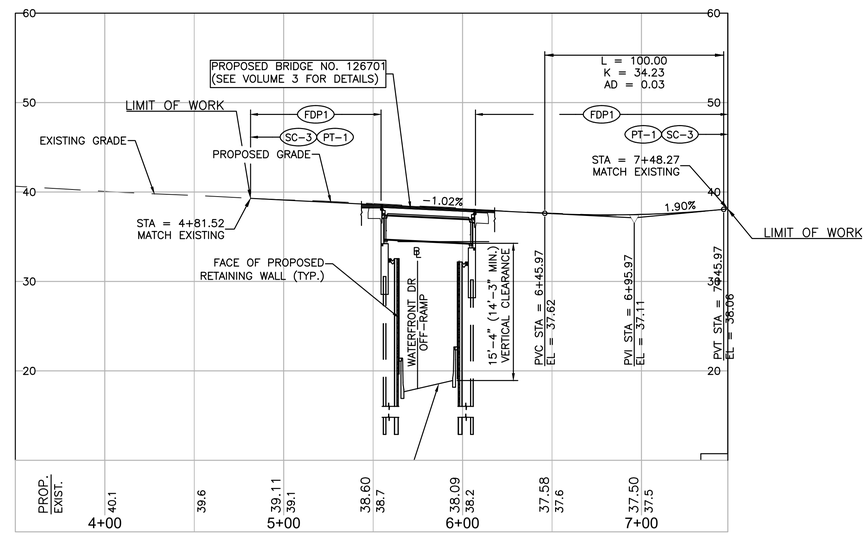

RAMP DR-2 PROFILE

HORIZONTAL
40 0 40 80
8 0 8 16
VERTICAL

AECOM

RHODE ISLAND
DEPARTMENT OF TRANSPORTATION

DESIGNED BY: JTS
CHECKED BY: DMP
DATE: 04/22/2020
SHEET: 39
OF: 47

SCALE: H:1"=40' V:1"=8'
GRAPHIC SCALE

REVISIONS			REVISIONS		
NO.	DATE	BY	NO.	DATE	BY

BRIDGE GROUP 57T-10
I-195 WASHINGTON NORTH PHASE 2
PROVIDENCE
EAST PROVIDENCE
CONTRACT: -- VOLUME: 4 RHODE ISLAND

PROFILES - 3 OF 3

57T-10_V4_010_PROF.DWG

FED. ROAD DIV. NO.	STATE	FEDERAL AID PROJECT NO.	FISCAL YEAR	SHEET NO.	TOTAL SHEETS
01	RI	BHO-0700(005)	2020	40	47

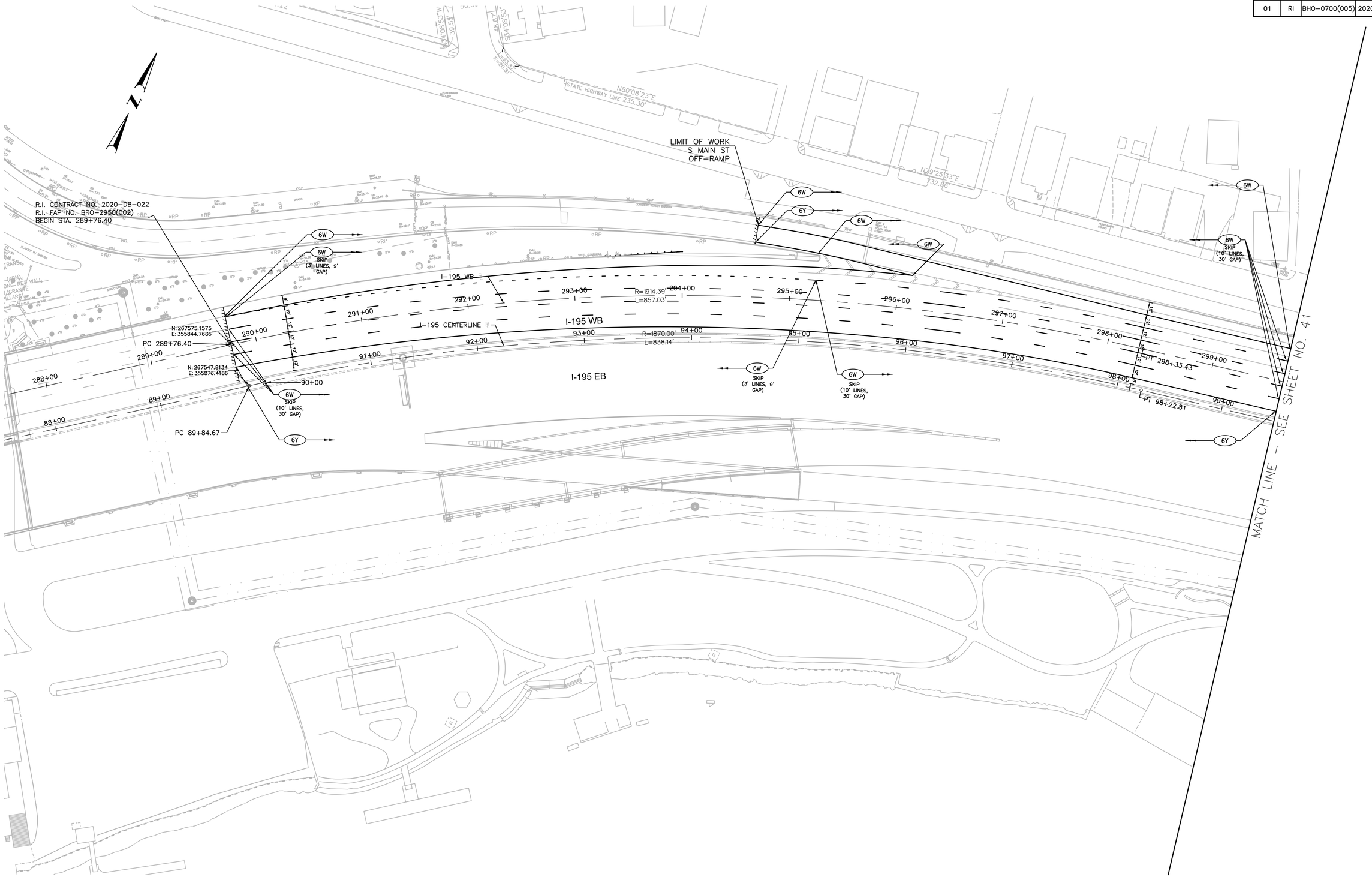

AECOM

RHODE ISLAND
DEPARTMENT OF TRANSPORTATION

DESIGNED BY:	KM
CHECKED BY:	GS
DATE:	4/23/2020
SHEET:	40
OF:	47

SCALE: 1"=40'
GRAPHIC SCALE

REVISIONS			REVISIONS		
NO.	DATE	BY	NO.	DATE	BY

BRIDGE GROUP 57T-10
I-195 WASHINGTON NORTH PHASE 2
CONTRACT -- VOLUME: 4
PROVIDENCE
EAST PROVIDENCE
RHODE ISLAND

STRIPING PLAN - 1 OF 8

57T-10_V4_011_STRP.DWG

FED. ROAD DIV. NO.	STATE	FEDERAL AID PROJECT NO.	FISCAL YEAR	SHEET NO.	TOTAL SHEETS
01	RI	BHO-0700(005)	2020	41	47

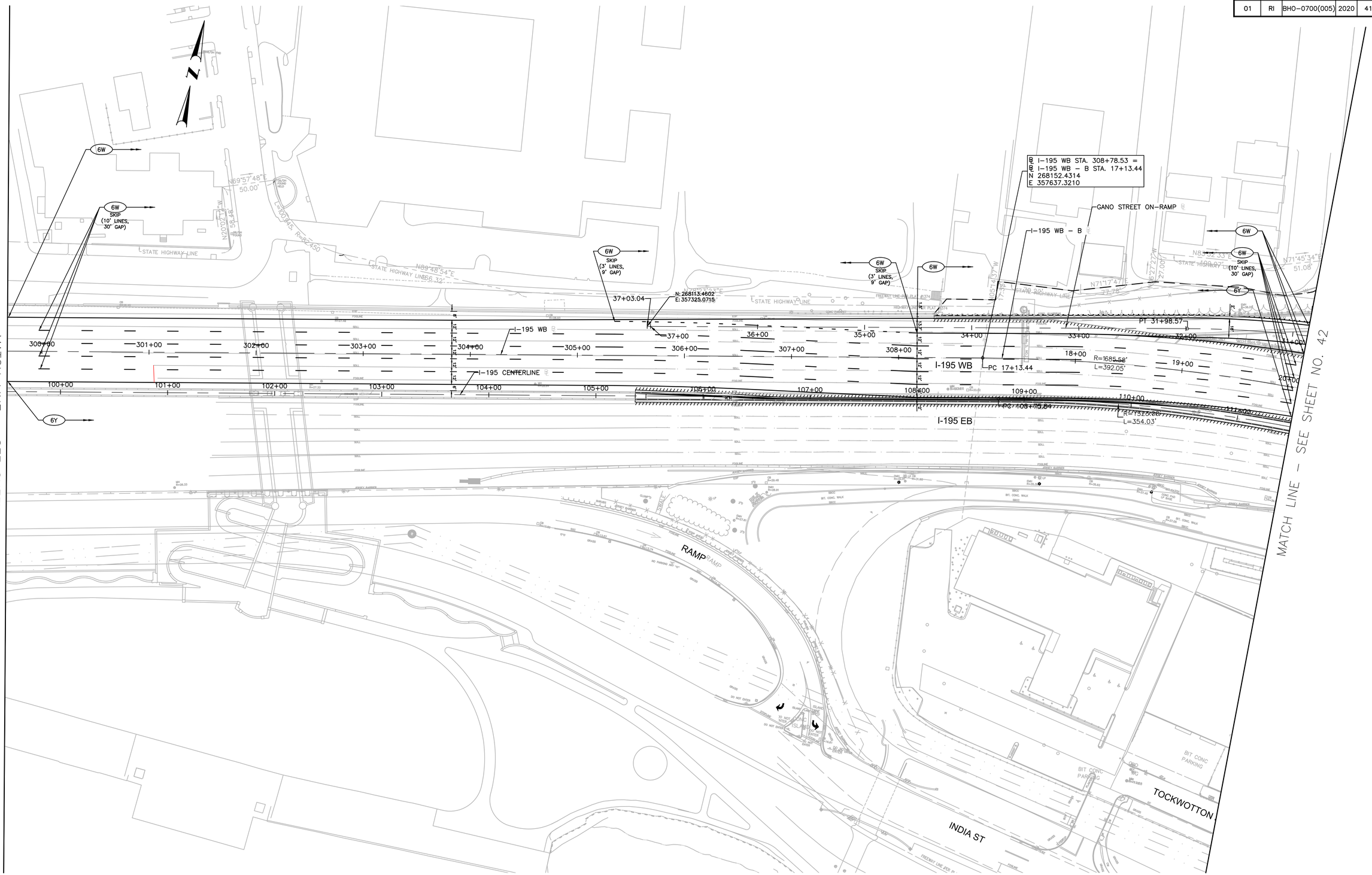

AECOM

RI DOT

RHODE ISLAND
DEPARTMENT OF TRANSPORTATION

DESIGNED BY:	KM
CHECKED BY:	GS
DATE:	4/23/2020
SHEET:	41
OF:	47

SCALE: 1"=40'

GRAPHIC SCALE

REVISIONS			REVISIONS		
NO.	DATE	BY	NO.	DATE	BY

BRIDGE GROUP 57T-10
I-195 WASHINGTON NORTH PHASE 2
PROVIDENCE
EAST PROVIDENCE
CONTRACT -- VOLUME: 4
RHODE ISLAND

STRIPING PLAN - 2 OF 8

57T-10_V4_011_STRP.DWG

FED. ROAD DIV. NO.	STATE	FEDERAL AID PROJECT NO.	FISCAL YEAR	SHEET NO.	TOTAL SHEETS
01	RI	BHO-0700(005)	2020	42	47

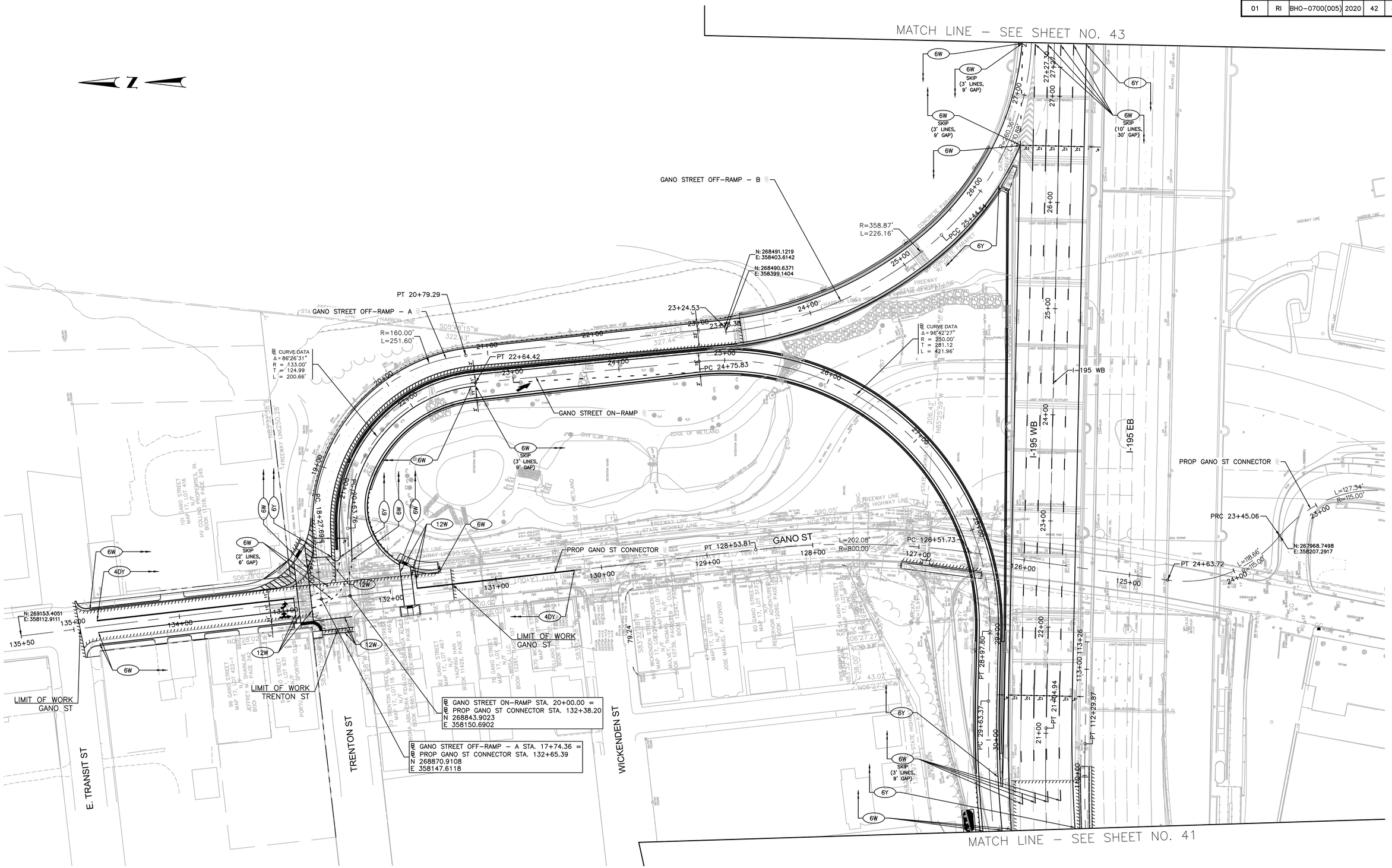

AECOM

RI DOT

RHODE ISLAND
DEPARTMENT OF TRANSPORTATION

DESIGNED BY:	KM
CHECKED BY:	GS
DATE:	4/23/2020
SHEET:	42
OF:	47

SCALE: 1"=40'

GRAPHIC SCALE

REVISIONS			REVISIONS		
NO.	DATE	BY	NO.	DATE	BY

BRIDGE GROUP 57T-10
I-195 WASHINGTON NORTH PHASE 2
PROVIDENCE
EAST PROVIDENCE
CONTRACT -- VOLUME: 4
RHODE ISLAND

STRIPING PLAN - 3 OF 8

57T-10_V4_011_STRP.DWG

FED. ROAD DIV. NO.	STATE	FEDERAL AID PROJECT NO.	FISCAL YEAR	SHEET NO.	TOTAL SHEETS
01	RI	BHO-0700(005)	2020	43	47

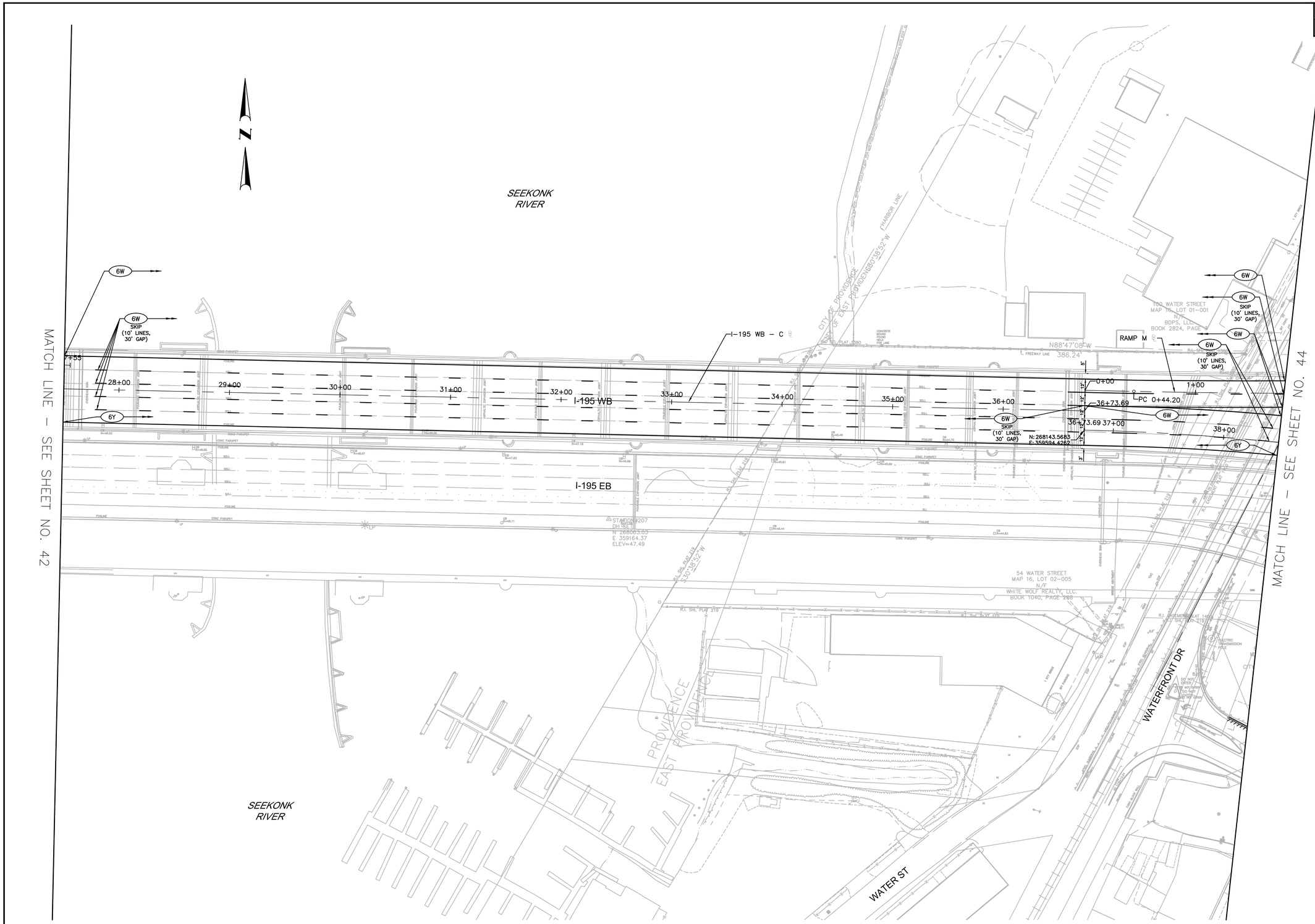

AECOM

RI DOT

RHODE ISLAND
DEPARTMENT OF TRANSPORTATION

DESIGNED BY:	KM
CHECKED BY:	GS
DATE:	4/23/2020
SHEET:	43
OF:	47

SCALE: 1"=40'

GRAPHIC SCALE

REVISIONS			REVISIONS		
NO.	DATE	BY	NO.	DATE	BY

BRIDGE GROUP 57T-10
I-195 WASHINGTON NORTH PHASE 2
CONTRACT -- VOLUME: 4

PROVIDENCE
EAST PROVIDENCE

RHODE ISLAND

STRIPING PLAN - 4 OF 8

57T-10_V4_011_STRP.DWG

FED. ROAD DIV. NO.	STATE	FEDERAL AID PROJECT NO.	FISCAL YEAR	SHEET NO.	TOTAL SHEETS
01	RI	BHO-0700(005)	2020	44	47

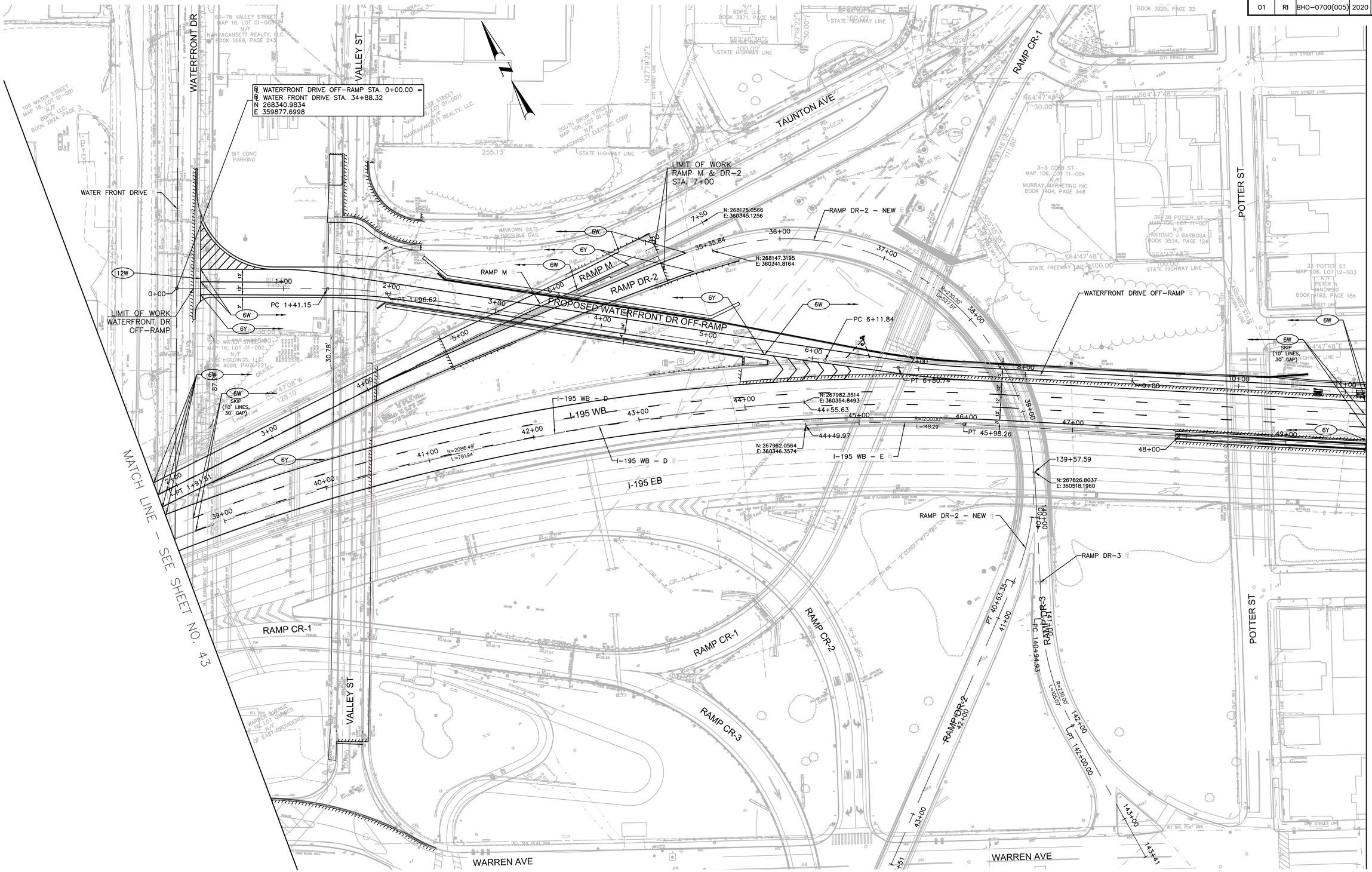

AECOM

RI DOT

RHODE ISLAND
DEPARTMENT OF TRANSPORTATION

DESIGNED BY:	KM
CHECKED BY:	GS
DATE:	4/23/2020
SHEET:	44
OF:	47

SCALE: 1"=40'

GRAPHIC SCALE

REVISIONS			REVISIONS		
NO.	DATE	BY	NO.	DATE	BY

BRIDGE GROUP 57T-10
I-195 WASHINGTON NORTH PHASE 2
PROVIDENCE
EAST PROVIDENCE
CONTRACT -- VOLUME: 4
RHODE ISLAND

STRIPING PLAN - 5 OF 8

57T-10_V4_011_STRP.DWG

FED. ROAD DIV. NO.	STATE	FEDERAL AID PROJECT NO.	FISCAL YEAR	SHEET NO.	TOTAL SHEETS
01	RI	BHO-0700(005)	2020	45	47

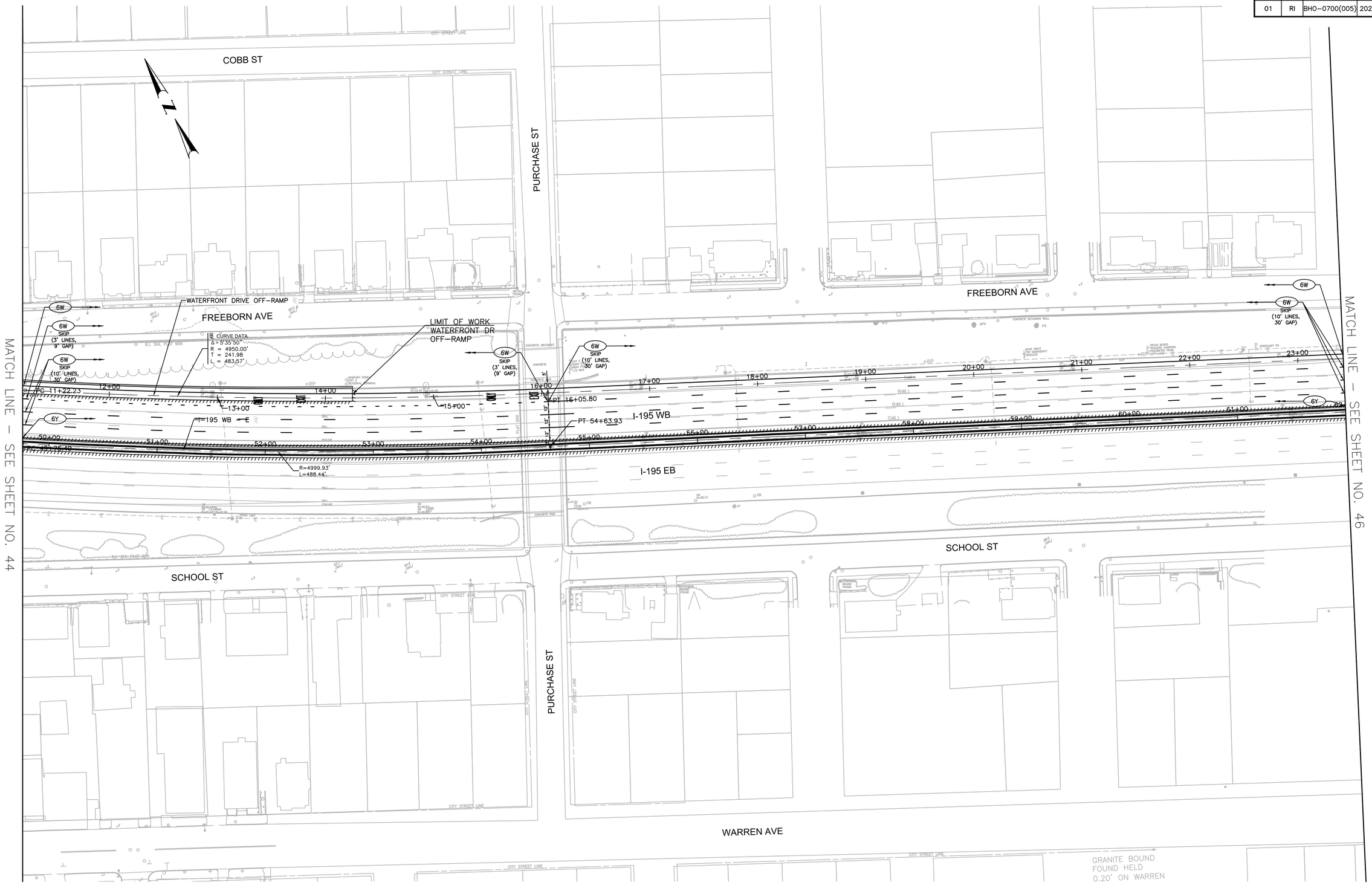

AECOM

RHODE ISLAND DEPARTMENT OF TRANSPORTATION

DESIGNED BY:	KM
CHECKED BY:	GS
DATE:	4/23/2020
SHEET:	45
OF:	47

SCALE: 1"=40'

GRAPHIC SCALE

REVISIONS			REVISIONS		
NO.	DATE	BY	NO.	DATE	BY

BRIDGE GROUP 57T-10

I-195 WASHINGTON NORTH PHASE 2

CONTRACT -- VOLUME: 4

PROVIDENCE
EAST PROVIDENCE

RHODE ISLAND

STRIPING PLAN - 6 OF 8

57T-10_V4_011_STRP.DWG

FED. ROAD DIV. NO.	STATE	FEDERAL AID PROJECT NO.	FISCAL YEAR	SHEET NO.	TOTAL SHEETS
01	RI	BHO-0700(005)	2020	46	47

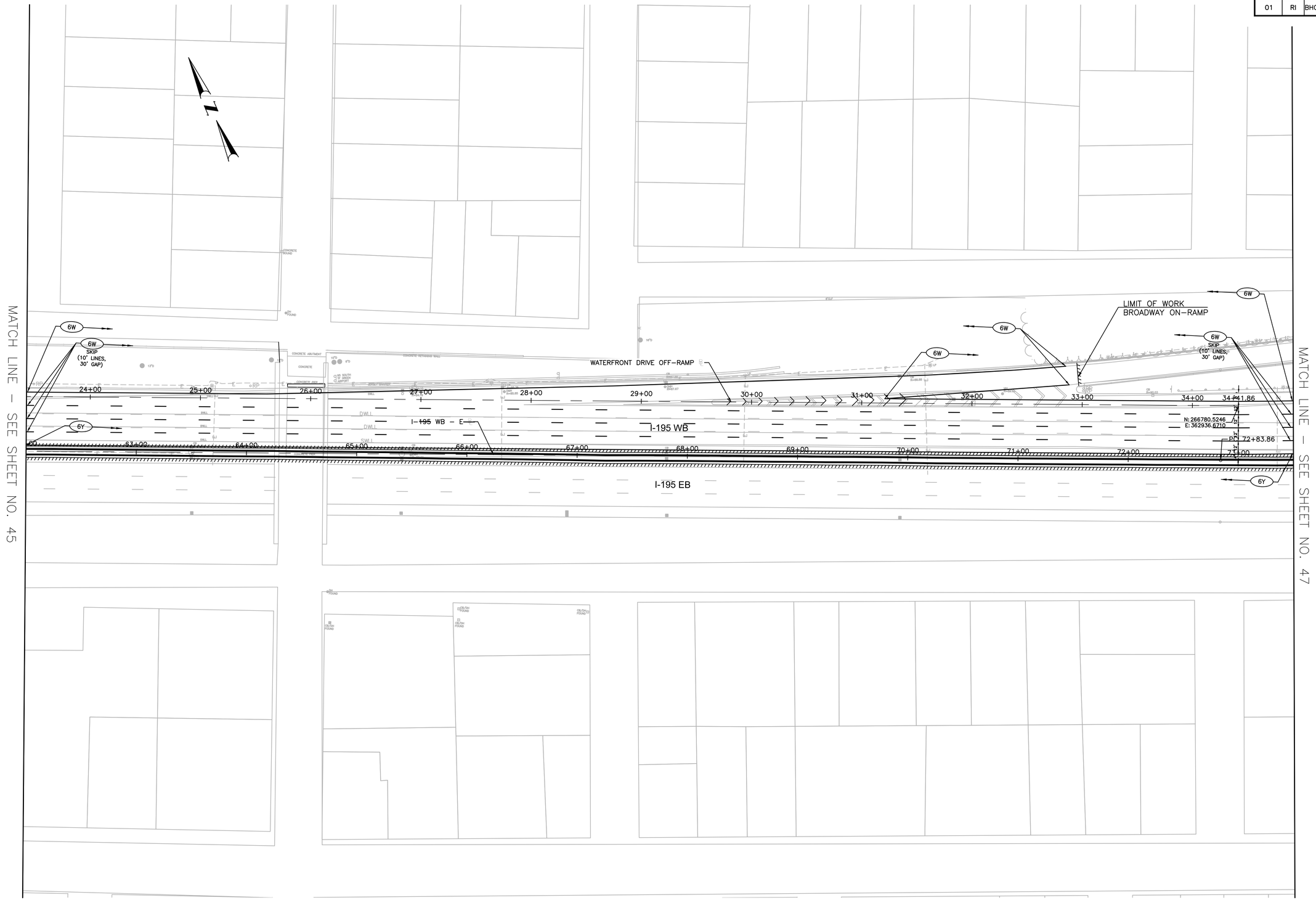

AECOM

RI DOT

RHODE ISLAND
DEPARTMENT OF TRANSPORTATION

DESIGNED BY:	KM
CHECKED BY:	GS
DATE:	4/23/2020
SHEET:	46
OF:	47

SCALE: 1"=40'

GRAPHIC SCALE

REVISIONS			REVISIONS		
NO.	DATE	BY	NO.	DATE	BY

BRIDGE GROUP 57T-10
I-195 WASHINGTON NORTH PHASE 2
PROVIDENCE
EAST PROVIDENCE
CONTRACT -- VOLUME: 4
RHODE ISLAND

STRIPING PLAN - 7 OF 8

57T-10_V4_011_STRP.DWG

FED. ROAD DIV. NO.	STATE	FEDERAL AID PROJECT NO.	FISCAL YEAR	SHEET NO.	TOTAL SHEETS
01	RI	BHO-0700(005)	2020	47	47

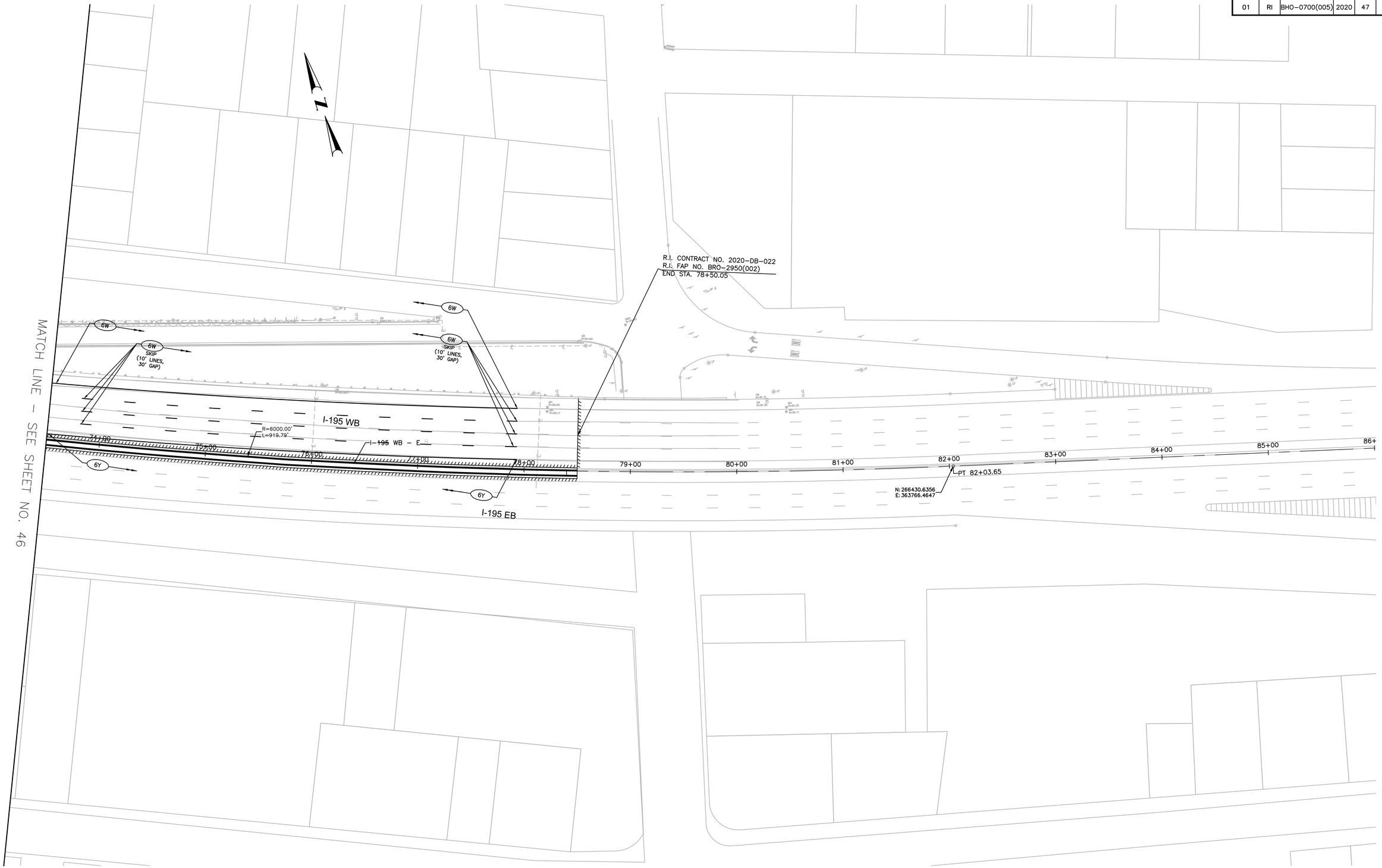

AECOM

RI DOT

RHODE ISLAND
DEPARTMENT OF TRANSPORTATION

DESIGNED BY:	KM
CHECKED BY:	GS
DATE:	4/23/2020
SHEET:	47
OF:	47

SCALE: 1"=40'

GRAPHIC SCALE

REVISIONS			REVISIONS		
NO.	DATE	BY	NO.	DATE	BY

BRIDGE GROUP 57T-10
I-195 WASHINGTON NORTH PHASE 2
PROVIDENCE
EAST PROVIDENCE
CONTRACT -- VOLUME: 4
RHODE ISLAND

STRIPING PLAN - 8 OF 8

57T-10_V4_011_STRP.DWG