FED. ROAD DIV. NO.	STATE	FEDERAL AID PROJECT NO.	FISCAL YEAR	SHEET NO.	TOTAL SHEETS
1	RI	BHO-0700(005)	2020	1	11

VOLUME 3: WATERFRONT DRIVE BRIDGE NO. 1267 BRIDGE PLANS

VOLUME 1: WASHINGTON BRIDGE REHABILITATION AND WIDENING
VOLUME 2: GANO STREET ON-RAMP BRIDGE 1266
VOLUME 3: WATERFRONT DRIVE BRIDGE NO. 1267 BRIDGE PLANS
VOLUME □: I-1□□ WASHINGTON BRIDGE NORTH

STATE OF RHODE ISLAND

DEPARTMENT OF TRANSPORTATION

PLAN, PROFILE AND SECTIONS OF PROPOSED

I-195 WASHINGTON BRIDGE NORTH PHASE 2
BRIDGE GROUP 57T-10
WATERFRONT DRIVE OFF-RAMP BRIDGE NO. 1267

CITIES OF PROVIDENCE □ EAST PROVIDENCE
COUNTY OF PROVIDENCE

R.I. CONTRACT NO.: 2020-DB-022 F.A. PRO□ECT NO.: BHO-0700□00□□

PRO□ECT LENGTH □ 1.12 MILES

INDE□ OF DRAWINGS

SHEET NO.	DESCRIPTION
1	COVER SHEET
SEE VOL. I	LIST OF ABBREVIATIONS
SEE VOL. I	□OB SPECIFIC GENERAL NOTES
2	BRIDGE GENERAL PLAN
3	TYPICAL BRIDGE SECTIONS
□	ABUTMENT AND WALL PLAN
□	ABUTMENT AND WINGWALL PILE PLAN
6	ABUTMENT AND WALL ELEVATIONS
7	ABUTMENT DETAILS
□	WALL DETAILS
□	FRAMING PLAN
10	PBU DETAILS
11	PHASE DETAILS

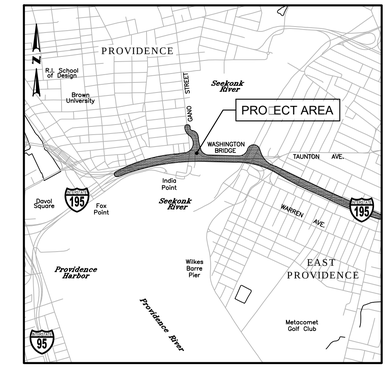

LOCATION MAP
SCALE: 1" □ 2000□

DESIGN DESIGNATION

	WATERFRONT DR OFF-RAMP
ADT	□201□□ □□□□□ V.P.D.
ADT	□20□□□ □□□□□ V.P.D.
D	□□
□	□.0□
T	□□
DDHV	□□000 V.P.H.
DHV	□□000 V.P.H.
V	30 M.P.H.

R.I. STANDARD SPECIFICATIONS AND STANDARD DETAILS

SPECIFICATIONS TO GOVERN THIS PRO□ECT ARE THE R.I. STANDARD SPECIFICATIONS FOR ROAD AND BRIDGE CONSTRUCTION□AMENDED AUGUST 2013□WITH ALL REVISIONS AND THE STATE AND FEDERAL SPECIAL PROVISIONS INCLUDED IN THE CONTRACT DOCUMENTS. STANDARD DETAILS FOR THIS PRO□ECT ARE R.I. STANDARD DETAILS□201□ EDITION□WITH ALL REVISIONS.

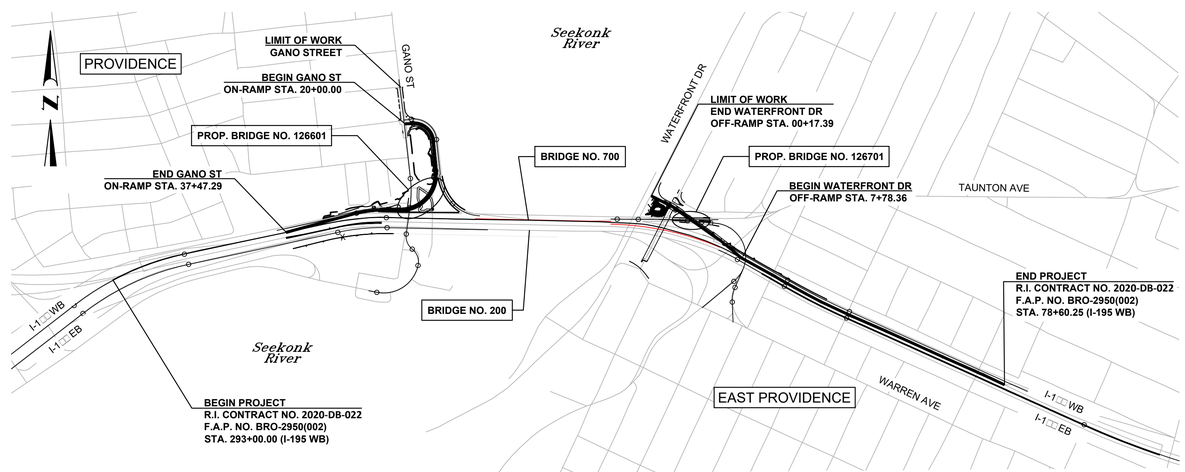

LAYOUT PLAN
SCALE: 1" □□00□

BASE TECHNICAL CONCEPT PLANS
APRIL 2020

R.I. DEPARTMENT OF TRANSPORTATION

APPROVED

ADMINISTRATOR, PROJECT MANAGEMENT DATE

APPROVED

CHIEF ENGINEER OF INFRASTRUCTURE DATE

APPROVED

DIRECTOR DATE

DEPARTMENT OF TRANSPORTATION
FEDERAL HIGHWAY ADMINISTRATION

APPROVED

DIVISION ADMINISTRATOR DATE

BASE OF LEVELS
VERTICAL DATUM: NAVD □□
HORI□ONTAL DATUM: R. I. STATE PLANE□NAD □3

Contract Number 2020-DB-022
Number of Sheet 1
Total Sheets 11

Steere ENGINEERING INC | AECOM | RI DOT

RHODE ISLAND
DEPARTMENT OF TRANSPORTATION

DESIGNED BY: SNG
CHECKED BY: JA
DATE: APRIL 2020
SHEET: 1
OF: 11

SCALE: AS NOTED

REVISIONS			REVISIONS		
NO.	DATE	BY	NO.	DATE	BY

WATERFRONT DRIVE OFF-RAMP
BRIDGE NO. 1267
EAST PROV. CONTRACT:DB-022 VOLUME:3 RHODE ISLAND

COVER SHEET

57T-10_V3_001_BCOVER.DWG

FED. ROAD DIV. NO.	STATE	FEDERAL AID PROJECT NO.	FISCAL YEAR	SHEET NO.	TOTAL SHEETS
1	RI	BHO-0700(005)	2020	2	11

WORKING POINTS				
	REFERENCED ℄	STATION	NORTHING	EASTING
W.P. 1	℄ RAMP M	5+28.53'	268175.7460	360123.6620
W.P. 1A	℄ RAMP DR-2	5+40.10'	268167.7060	360134.9990
W.P. 2	℄ RAMP M	6+10.67'	268175.4900	360205.7990
W.P. 2A	℄ RAMP DR-2	6+34.16'	268159.2620	360228.6810

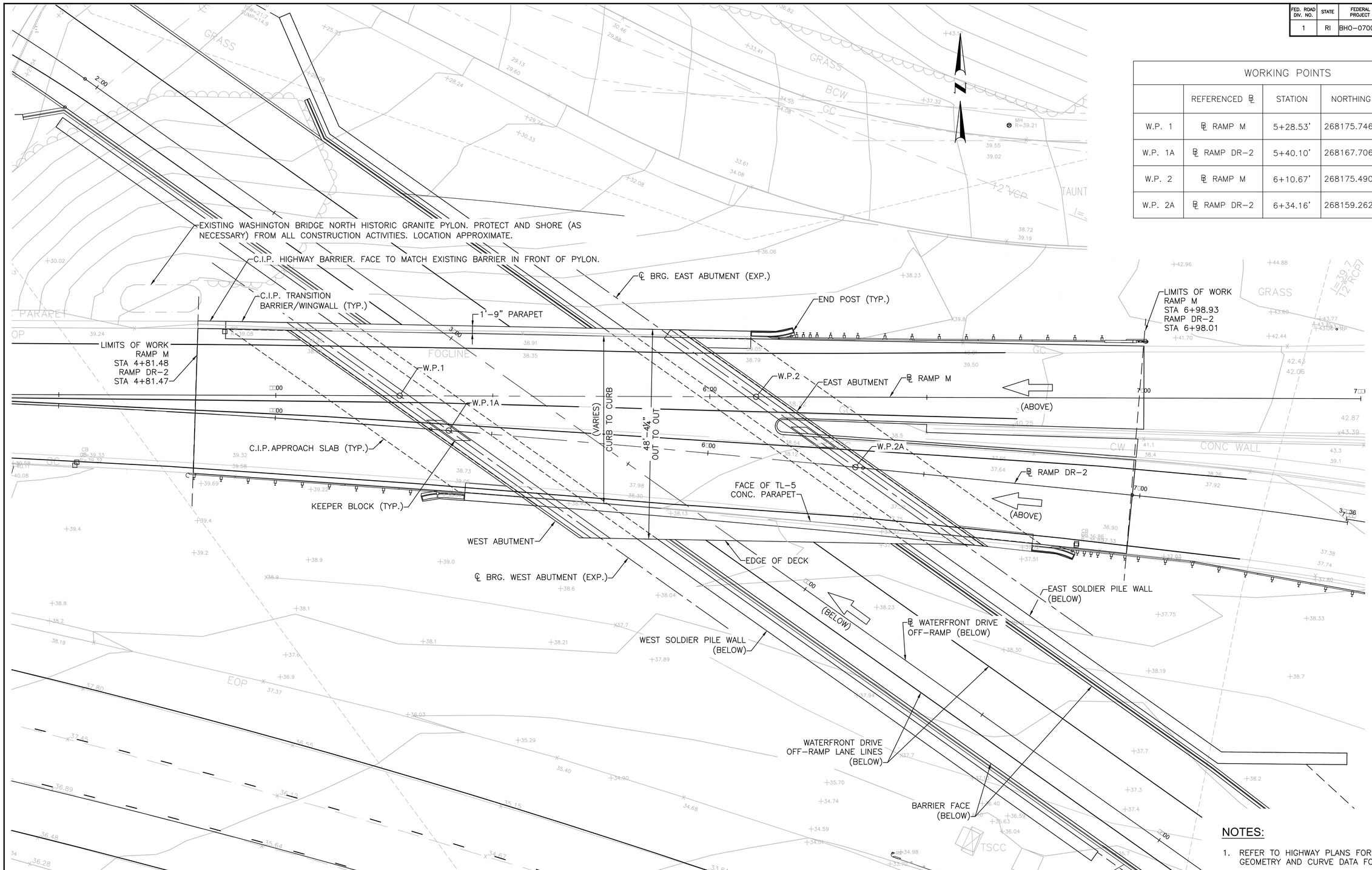

GENERAL PLAN

SCALE: 1" = 10'-0"

NOTES:

1. REFER TO HIGHWAY PLANS FOR COMPLETE GEOMETRY AND CURVE DATA FOR ROADWAYS.
2. FOR BORING LOCATIONS REFER TO ABUTMENT AND WALL PLAN.

Steere ENGINEERING INC | AECOM | RI DOT

RHODE ISLAND DEPARTMENT OF TRANSPORTATION

DESIGNED BY: SNG
CHECKED BY: JA
DATE: 04/01/2020
SHEET: 2
OF: 11

SCALE: AS NOTED

REVISIONS			REVISIONS		
NO.	DATE	BY	NO.	DATE	BY

WATERFRONT DRIVE OFF-RAMP
BRIDGE NO. 1267
CONTRACT:DB-022 VOLUME:V3
EAST PROV. RHODE ISLAND

BRIDGE GENERAL PLAN

C:\PWWORKING\AECOM_DS20_NA_2019\GAL18602\DMS09357\57T-10_V3_002_BRIDGEGENPLAN.DWG PER DPM 450.06

FED. ROAD DIV. NO.	STATE	FEDERAL AID PROJECT NO.	FISCAL YEAR	SHEET NO.	TOTAL SHEETS
1	RI	BHO-0700(005)	2020	3	11

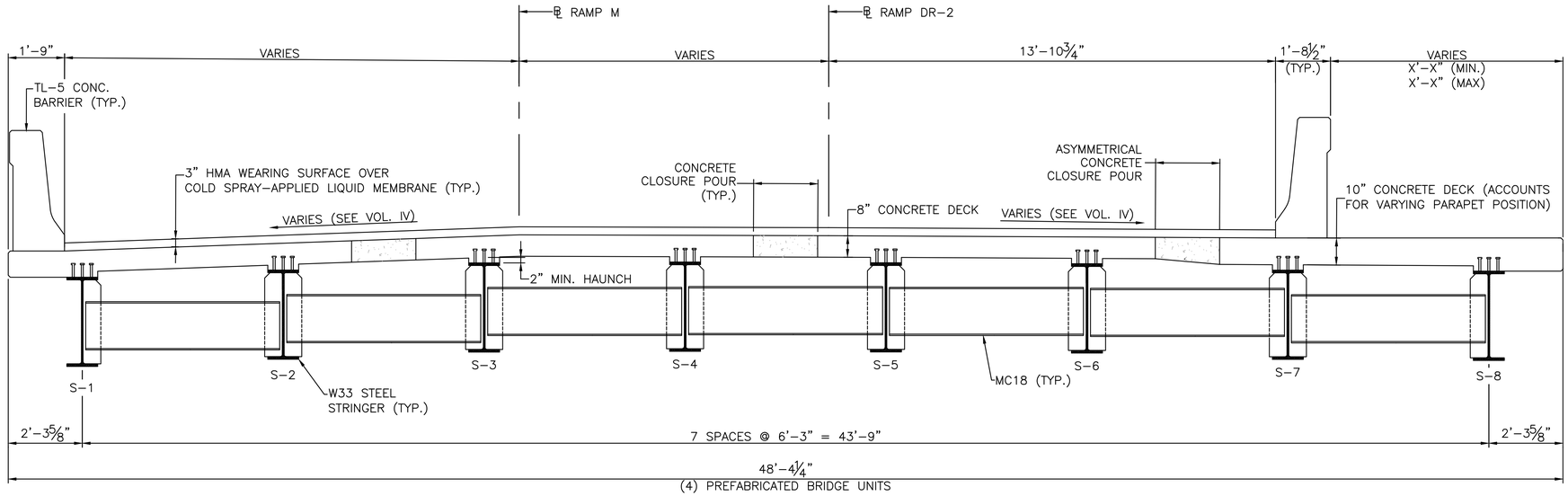

TRANSVERSE SECTION

SCALE: 1/2" = 1'-0"

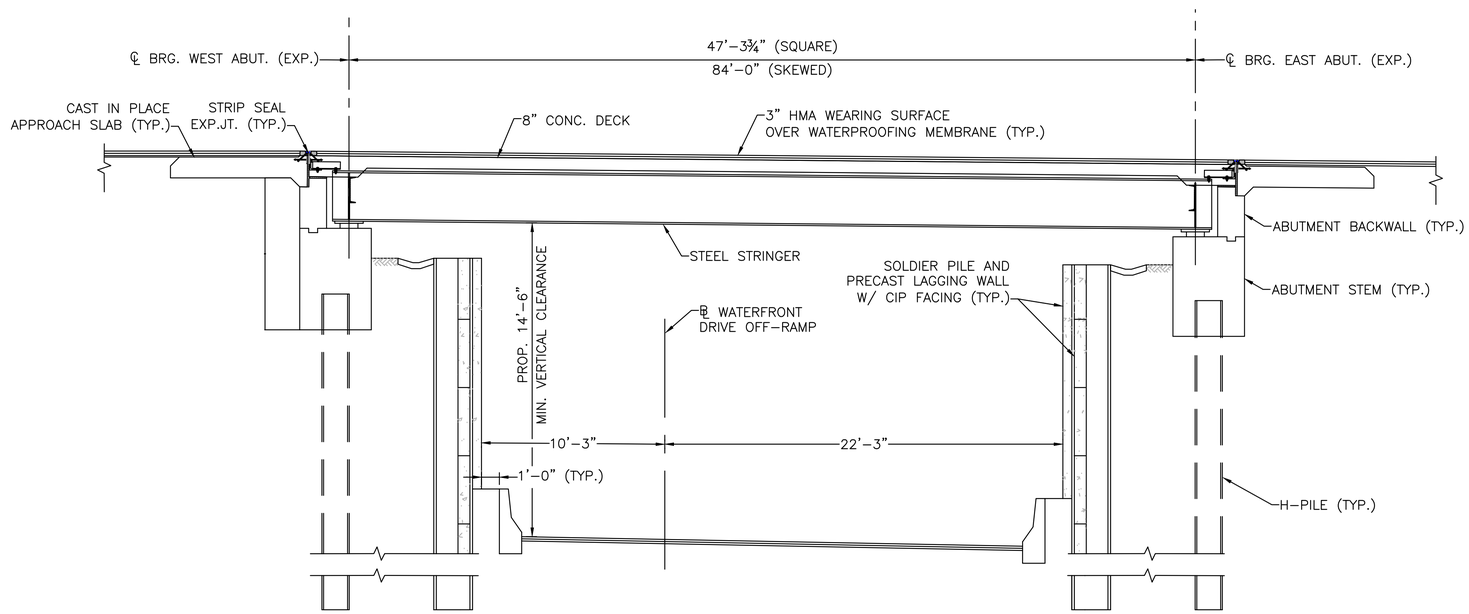

LONGITUDINAL SECTION

SCALE: 1/4" = 1'-0"

Steere ENGINEERING INC

AECOM

RI DOT

RHODE ISLAND
DEPARTMENT OF TRANSPORTATION

DESIGNED BY:	SNG
CHECKED BY:	JA
DATE:	04/01/2020
SHEET:	3
OF:	11

SCALE: AS NOTED

REVISIONS			REVISIONS		
NO.	DATE	BY	NO.	DATE	BY

WATERFRONT DRIVE OFF-RAMP
BRIDGE NO. 1267
EAST PROV. CONTRACT:DB-022 VOLUME:V3 RHODE ISLAND

TYPICAL BRIDGE SECTIONS

C:\PWWORKING\AECOM_DS20_NA_2019\GAL18602\DMS09357\57T-10_V3_003_BSECTIONS.DWG PER DPM 450.06

FED. ROAD DIV. NO.	STATE	FEDERAL AID PROJECT NO.	FISCAL YEAR	SHEET NO.	TOTAL SHEETS
1	RI	BHO-0700(005)	2020	4	11

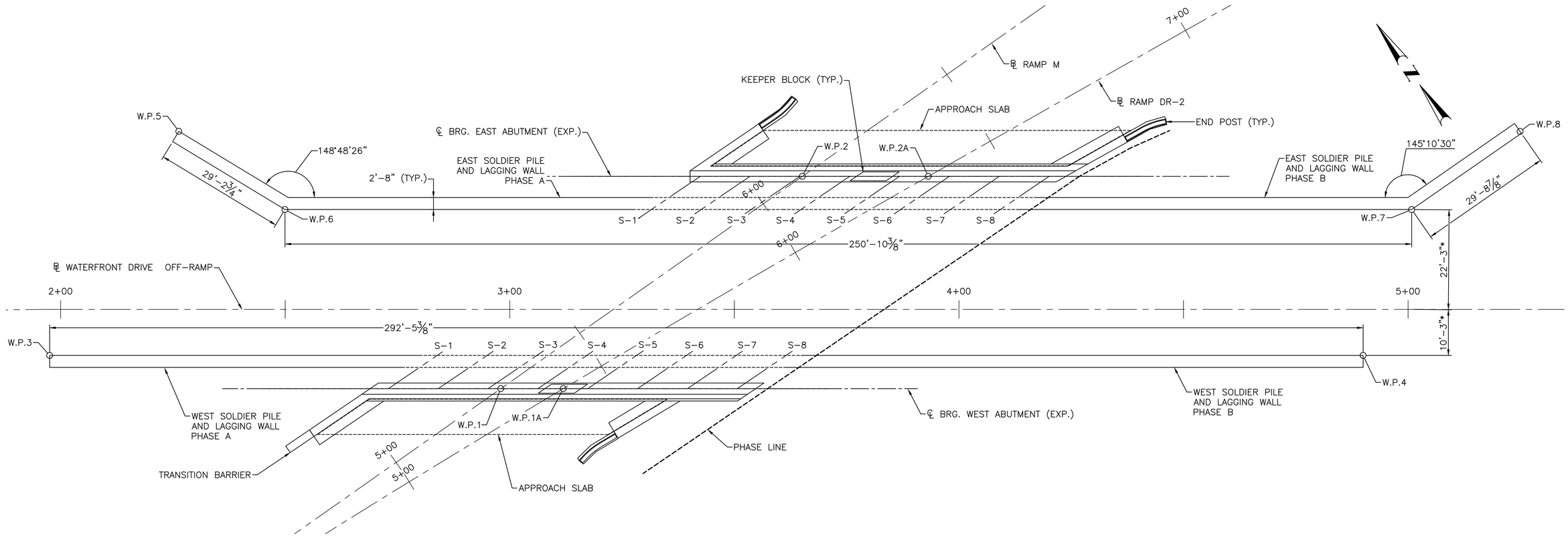

ABUTMENT AND WALL PLAN

SCALE: 3/32" = 1'-0"

NOTES:

1. PILES NOT SHOWN FOR CLARITY. FOR WALL PILE DETAILS, SEE SHEET 10. FOR ABUTMENT PILE DETAILS, SEE SHEET 9.
2. FOR WALL DETAILS SEE SHEET 12.
3. * MEASURED TO FRONT OF PILE FACING.
4. DIMENSIONS SHOWN ARE SCHEMATIC. FINAL DIMENSIONS TO BE DETERMINED BY THE DESIGN BUILD TEAM.
5. DESIGN PILES FOR POTENTIAL TENSION.

Steere ENGINEERING INC

AECOM

RI DOT

RHODE ISLAND
DEPARTMENT OF TRANSPORTATION

DESIGNED BY: SNG
CHECKED BY: JA
DATE: 04/01/2020
SHEET: 4
OF: 11

SCALE: AS NOTED

REVISIONS			REVISIONS		
NO.	DATE	BY	NO.	DATE	BY

WATERFRONT DRIVE OFF-RAMP
BRIDGE NO. 1267
EAST PROV. CONTRACT:DB-022 VOLUME:V3 RHODE ISLAND

ABUTMENT AND WALL PLAN

C:\PWWORKING\AECOM_DS20_NA_2019\GAL18602\DMS09357\57T-10_V3_004_ABUTPLAN001.DWG PER DPM 450.06

FED. ROAD DIV. NO.	STATE	FEDERAL AID PROJECT NO.	FISCAL YEAR	SHEET NO.	TOTAL SHEETS
1	RI	BHO-0700(005)	2020	5	11

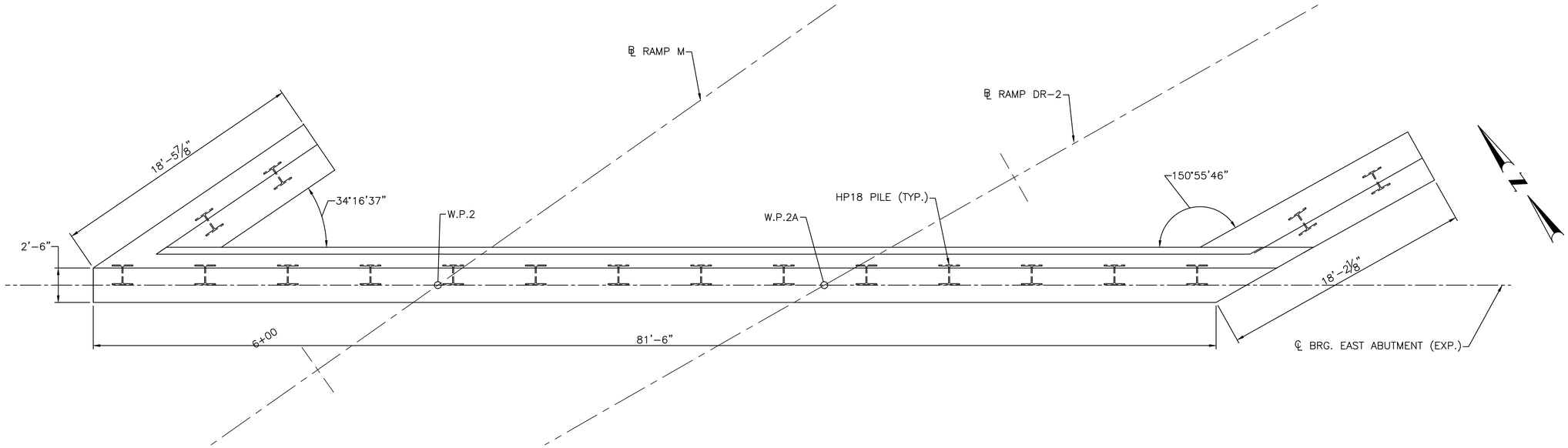

EAST ABUTMENT AND WINGWALL PILE PLAN

SCALE: 1/4" = 1'-0"

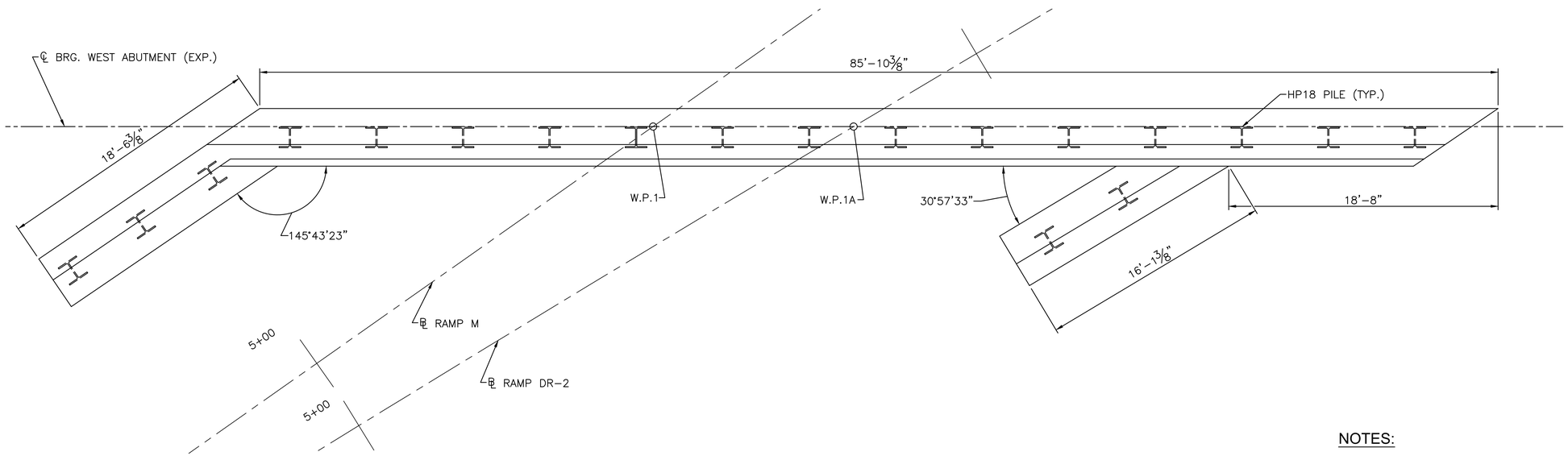

WEST ABUTMENT AND WINGWALL PILE PLAN

SCALE: 1/4" = 1'-0"

NOTES:

1. DEEP FOUNDATIONS TO BE DESIGNED BY THE DESIGN BUILD TEAM. CONTRACTOR TO DESIGN FOUNDATIONS FOR POTENTIAL UPLIFT AND TO ACCOUNT FOR THERMAL FORCES FROM EXPANSION AND CONTRACTION. BASED ON FINAL GEOTECHNICAL ANALYSIS, ADDITIONAL PILES MAY BE REQUIRED TO BE INSTALLED. SEE SHEET 8 FOR ADDITIONAL NOTES.
2. FOR WALL DETAILS SEE SHEET 12.

Steere ENGINEERING INC

AECOM

RI DOT

RHODE ISLAND
DEPARTMENT OF TRANSPORTATION

DESIGNED BY: SNG
CHECKED BY: JA
DATE: 04/01/2020
SHEET: 5
OF: 11

SCALE: AS NOTED

REVISIONS			REVISIONS		
NO.	DATE	BY	NO.	DATE	BY

WATERFRONT DRIVE OFF-RAMP
BRIDGE NO. 1267
EAST PROV. CONTRACT:DB-022 VOLUME:V3 RHODE ISLAND

ABUTMENT AND WINGWALL PILE PLAN

C:\PWWORKING\AECOM_DS20_NA_2019\GAL18602\DMS09357\57T-10_V3_005_ABUTPLAN002.DWG PER DPM 450.06

FED. ROAD DIV. NO.	STATE	FEDERAL AID PROJECT NO.	FISCAL YEAR	SHEET NO.	TOTAL SHEETS
1	RI	BHO-0700(005)	2020	6	11

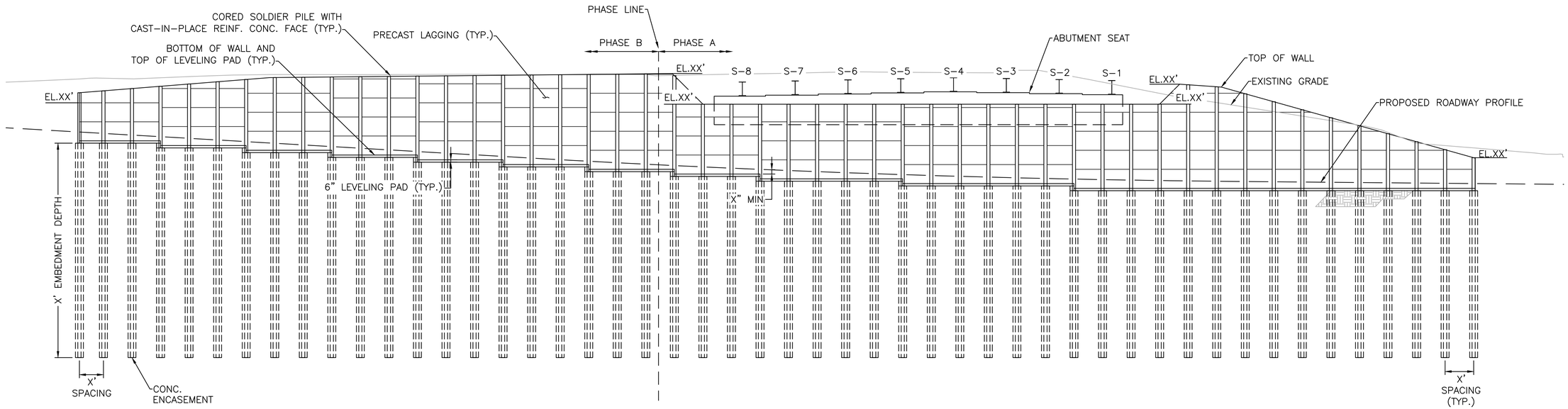

WEST ABUTMENT AND WALL ELEVATION

SCALE: 3/32" = 1'-0"

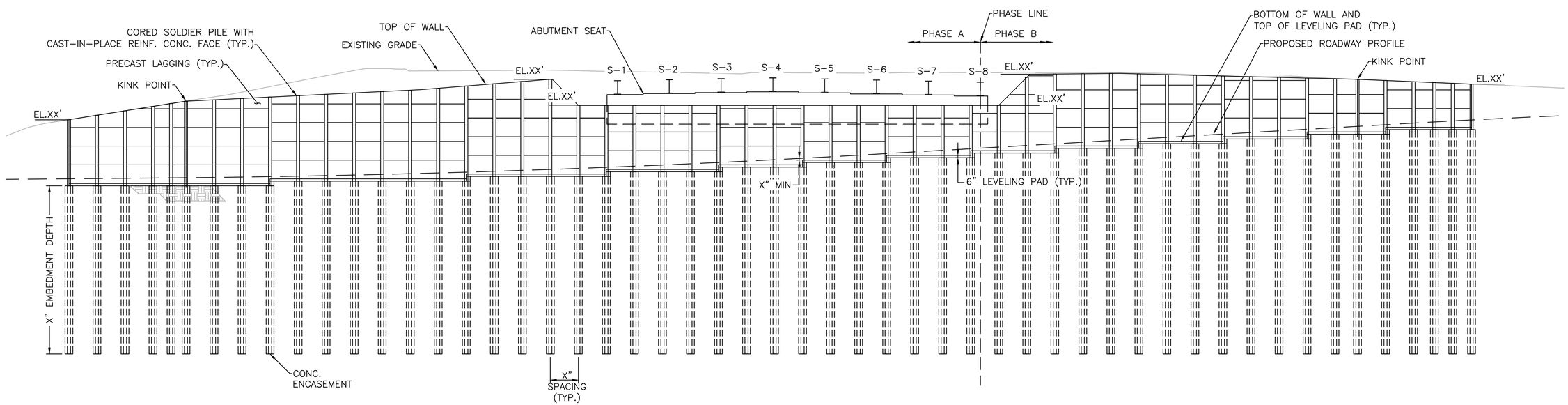

EAST ABUTMENT AND WALL ELEVATION

SCALE: 1/8" = 1'-0"

NOTES:

1. FOR SOLDIER PILE WALL DETAILS SEE WALL DETAILS SHEET.
2. ABUTMENT PILES NOT SHOWN FOR CLARITY.

Steere ENGINEERING INC

AECOM

RI DOT

RHODE ISLAND
DEPARTMENT OF TRANSPORTATION

DESIGNED BY: SNG
CHECKED BY: JA
DATE: 04/01/2020
SHEET: 6
OF: 11

SCALE: AS NOTED

REVISIONS			REVISIONS		
NO.	DATE	BY	NO.	DATE	BY

WATERFRONT DRIVE OFF-RAMP
BRIDGE NO. 1267
EAST PROV. CONTRACT:DB-022 VOLUME:V3 RHODE ISLAND

ABUTMENT AND WALL ELEVATIONS

C:\PWWORKING\AECOM_DS20_NA_2019\GAL18602\DMS09357\57T-10_V3_006_ABUTELEV001.DWG PER DPM 450.06

FED. ROAD DIV. NO.	STATE	FEDERAL AID PROJECT NO.	FISCAL YEAR	SHEET NO.	TOTAL SHEETS
1	RI	BHO-0700(005)	2020	7	11

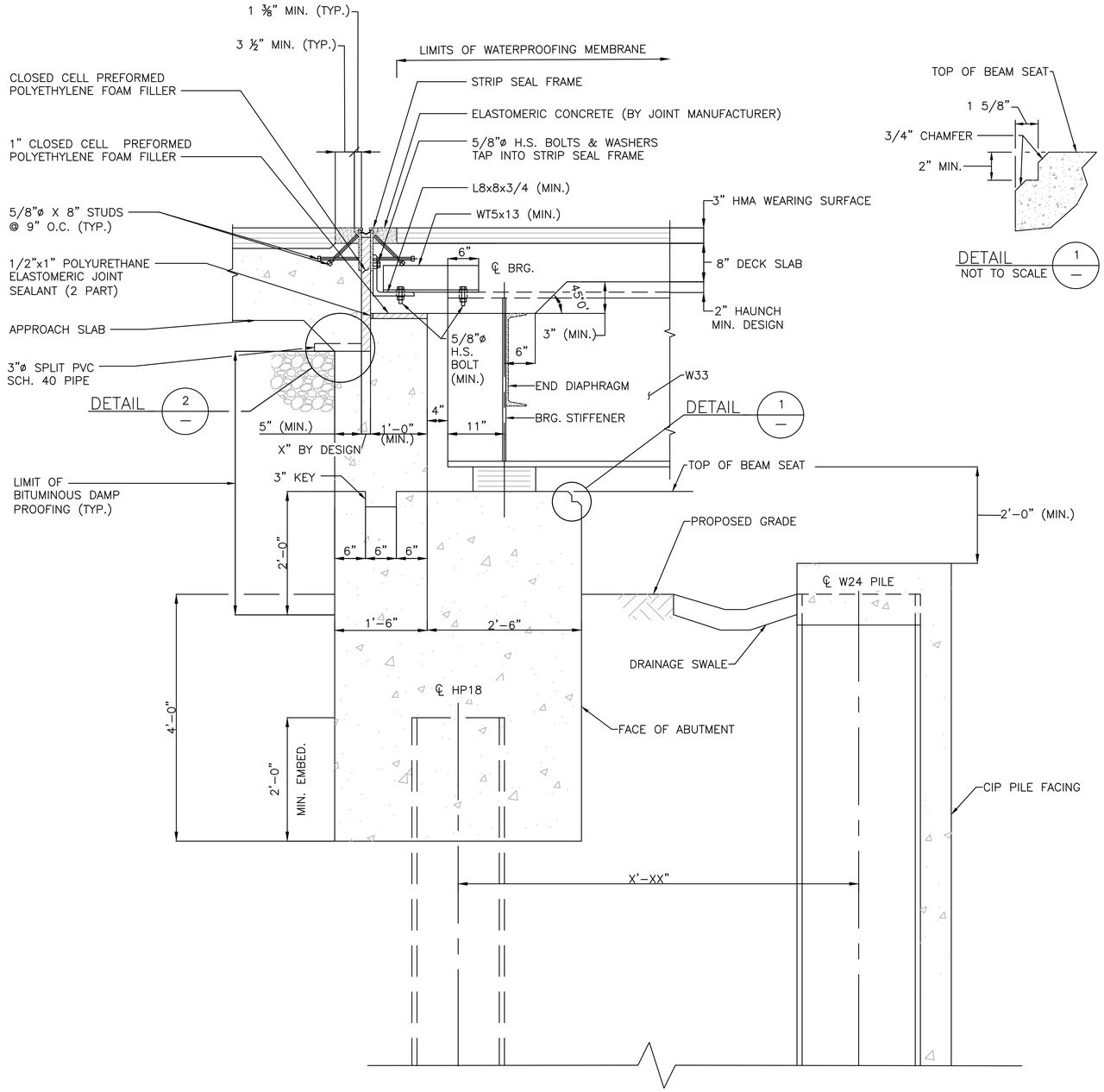

ABUTMENT TYPICAL SECTION

SCALE: 1" = 1'-0

DETAIL 1
NOT TO SCALE

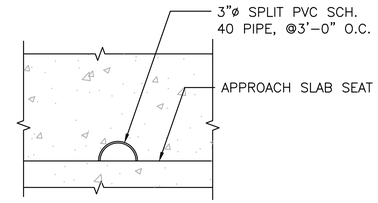

SECTION A
NOT TO SCALE

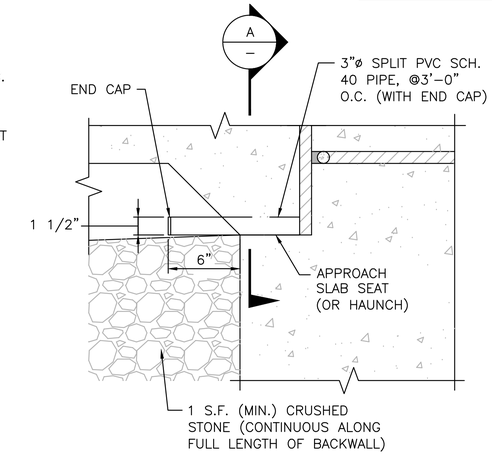

DETAIL 2
NOT TO SCALE

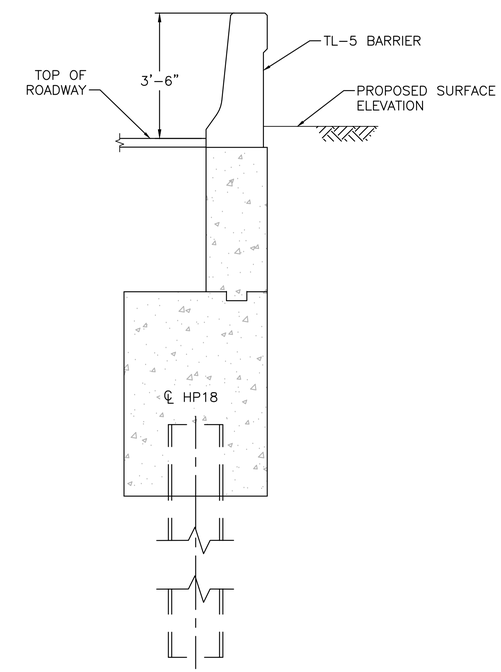

WINGWALL TYPICAL SECTION

SCALE: 1" = 1'-0

NOTES:

1. FOR SOLDIER PILE AND LAGGING DETAILS SEE WALL DETAILS SHEET.

Steere ENGINEERING INC | AECOM | RI DOT RHODE ISLAND DEPARTMENT OF TRANSPORTATION

DESIGNED BY: SNG
CHECKED BY: JA
DATE: 04/01/2020
SHEET: 7
OF: 11

SCALE: AS NOTED

REVISIONS			REVISIONS		
NO.	DATE	BY	NO.	DATE	BY

WATERFRONT DRIVE OFF-RAMP
BRIDGE NO. 1267
CONTRACT:DB-022 VOLUME:V3
EAST PROV. RHODE ISLAND

ABUTMENT DETAILS

C:\PWWORKING\AECOM_DS20_NA_2019\GAL18602\DMS09357\57T-10_V3_007_ABUTMENT DETAILS001.DWG PER DPM 450.06

FED. ROAD DIV. NO.	STATE	FEDERAL AID PROJECT NO.	FISCAL YEAR	SHEET NO.	TOTAL SHEETS
1	RI	BHO-0700(005)	2020	8	11

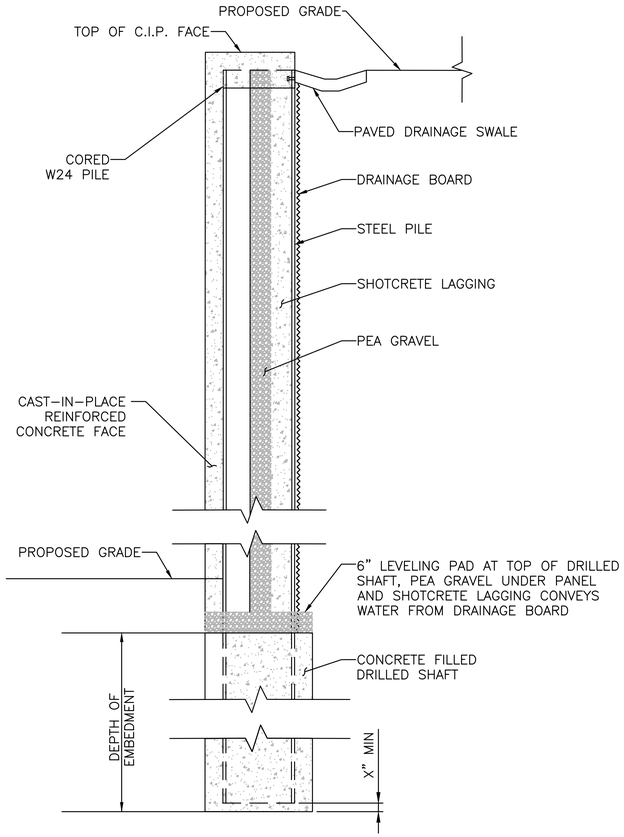

WALL AT SOLDIER PILE TYPICAL SECTION
SCALE: 1/2" = 1'-0"

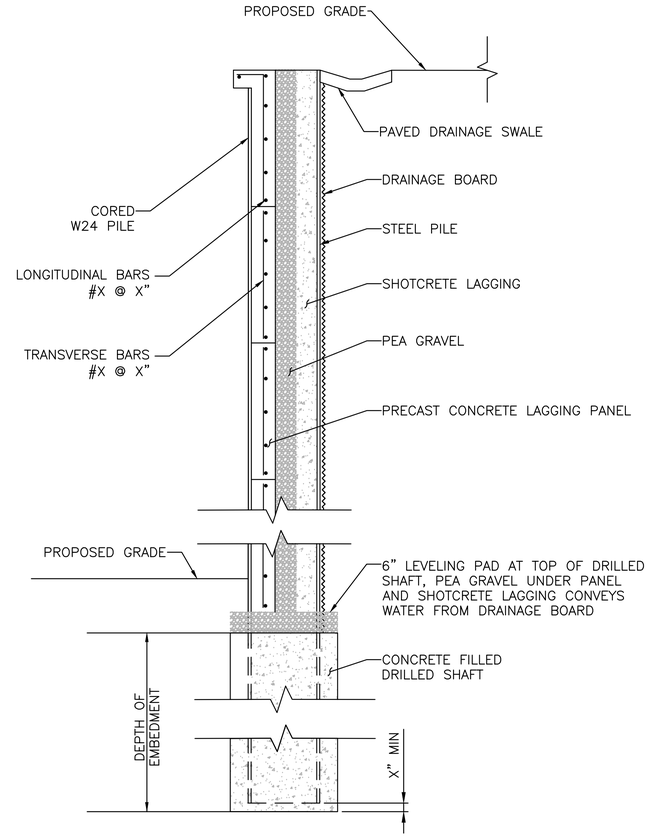

WALL AT LAGGING TYPICAL SECTION
SCALE: 1/2" = 1'-0"

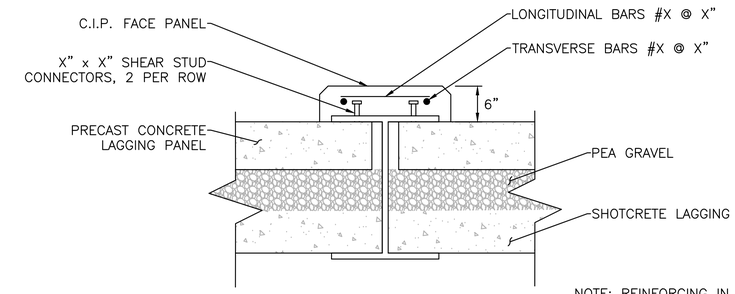

CIP FACING TYPICAL DETAIL
SCALE: 1" = 1'-0"

NOTE: REINFORCING IN LAGGING PANELS NOT SHOWN FOR CLARITY.

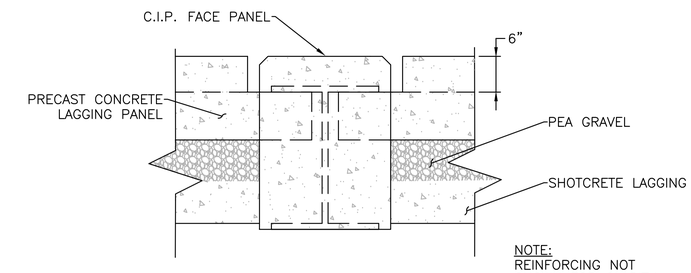

CIP FACING PLAN DETAIL
SCALE: 1" = 1'-0"

NOTE: REINFORCING NOT SHOWN FOR CLARITY.

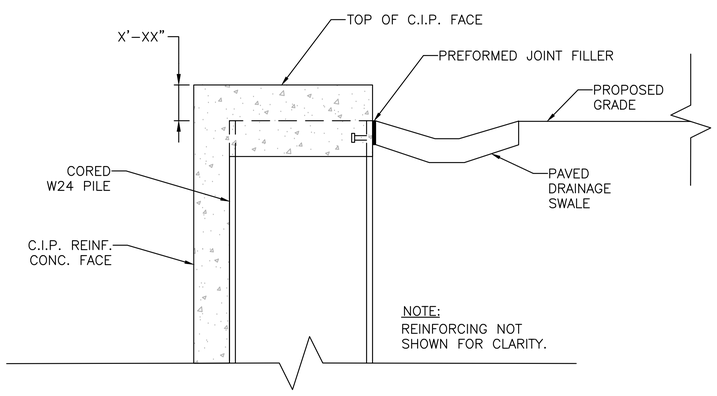

PILE FACE AND DRAINAGE SWALE DETAIL
SCALE: 1" = 1'-0"

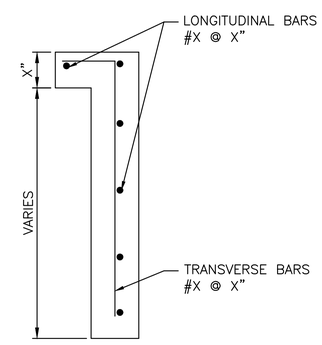

WALL TOP PANEL TYPICAL SECTION
SCALE: 1" = 1'-0"

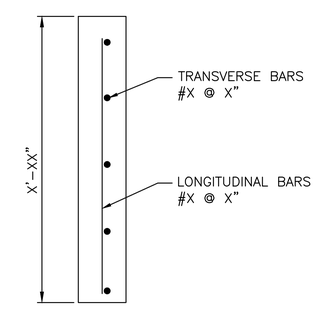

WALL PANEL TYPICAL SECTION
SCALE: 1" = 1'-0"

Steere ENGINEERING INC

AECOM

RI DOT

RHODE ISLAND
DEPARTMENT OF TRANSPORTATION

DESIGNED BY:	SNG
CHECKED BY:	JA
DATE:	04/01/2020
SHEET:	8
OF:	11

SCALE: AS NOTED

REVISIONS			REVISIONS		
NO.	DATE	BY	NO.	DATE	BY

WATERFRONT DRIVE OFF-RAMP
BRIDGE NO. 1267
EAST PROV. CONTRACT:DB-022 VOLUME:V3 RHODE ISLAND

WALL DETAILS

C:\PWWORKING\AECOM_DS20_NA_2019\GAL18602\DMS09357\57T-10_V3_008_WALL DETAILS001.DWG PER DPM 450.06

FED. ROAD DIV. NO.	STATE	FEDERAL AID PROJECT NO.	FISCAL YEAR	SHEET NO.	TOTAL SHEETS
1	RI	BHO-0700(005)	2020	9	11

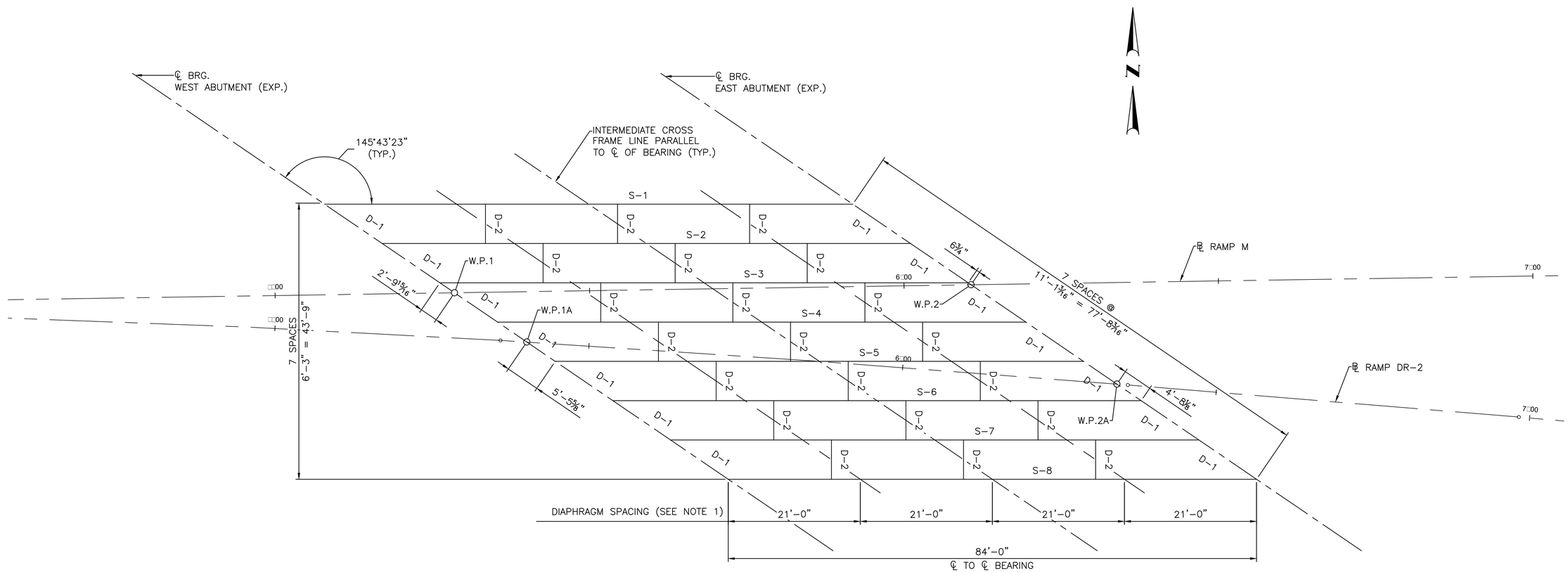

FRAMING PLAN

SCALE: 1/8" = 1'-0"

LEGEND:

S-XX	STRINGER NUMBER DESIGNATION
D-1	TYPICAL (MC18) END DIAPHRAGM
D-2	TYPICAL (MC18) INTERMEDIATE DIAPHRAGM

NOTES:

1. DIAPHRAGM SPACING IS MEASURED ALONG THE CENTERLINE OF THE INTERIOR BAYS AT QUARTER POINTS.
2. STRUCTURAL STEEL SHALL BE METALIZED THEN PREPARED AND PAINTED IN ACCORDANCE WITH RI STANDARD SPECIFICATIONS. FINAL PAINT COAT SHALL BE BLUE (SEMI-GLOSS) MATCHING MUNSELL COLOR 2.5PB 5/10

Steere ENGINEERING INC

AECOM

RI DOT

RHODE ISLAND
DEPARTMENT OF TRANSPORTATION

DESIGNED BY:	SNG
CHECKED BY:	JA
DATE:	04/01/2020
SHEET:	9
OF:	11

SCALE: AS NOTED

REVISIONS			REVISIONS		
NO.	DATE	BY	NO.	DATE	BY

WATERFRONT DRIVE OFF-RAMP
BRIDGE NO. 1267
EAST PROV. CONTRACT:DB-022 VOLUME:V3 RHODE ISLAND

FRAMING PLAN

C:\PWWORKING\AECOM_DS20_NA_2019\GAL18602\DMS09357\57T-10_V3_009_FRAMING PLAN.DWG PER DPM 450.06

FED. ROAD DIV. NO.	STATE	FEDERAL AID PROJECT NO.	FISCAL YEAR	SHEET NO.	TOTAL SHEETS
1	RI	BHO-0700(005)	2020	10	11

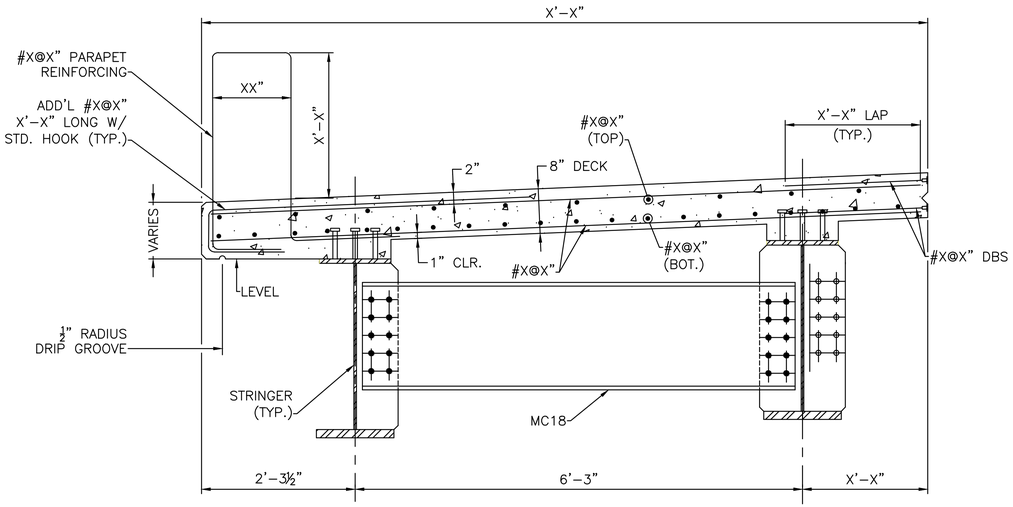

E□TERIOR PBU □S-1 □ S-2□

SCALE: 1" = 1'-0"

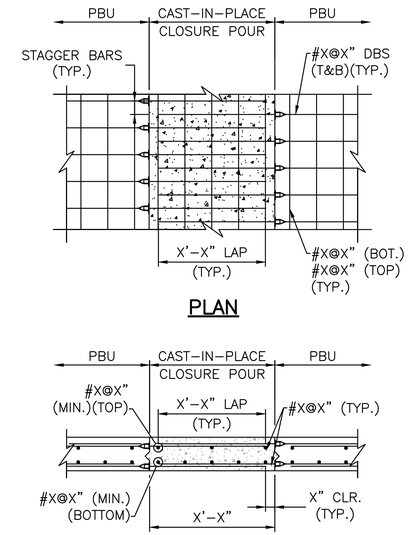

CAST-IN-PLACE CLOSURE POUR DETAIL

SCALE: 3/4" = 1'-0"

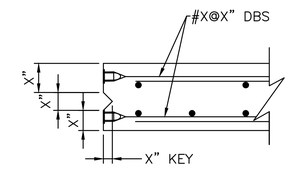

SHEAR □EY DETAIL

SCALE: 11/2" = 1'-0"

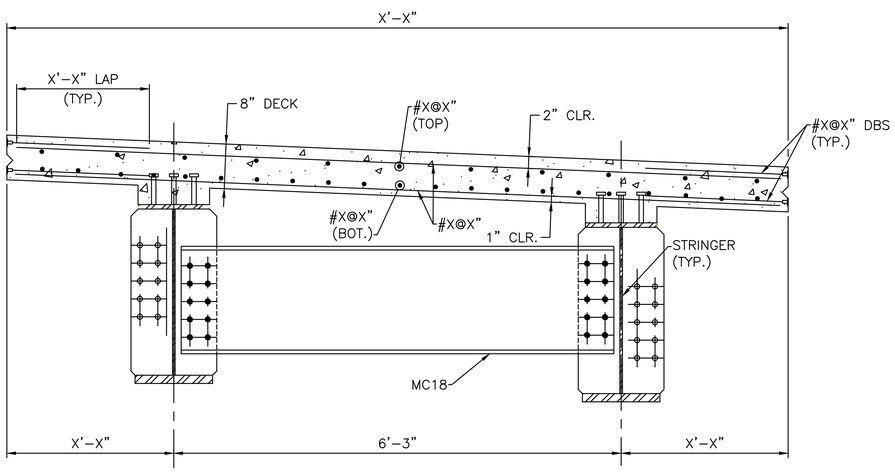

TYPICAL INTERIOR PBU SECTION

SCALE: 1" = 1'-0"

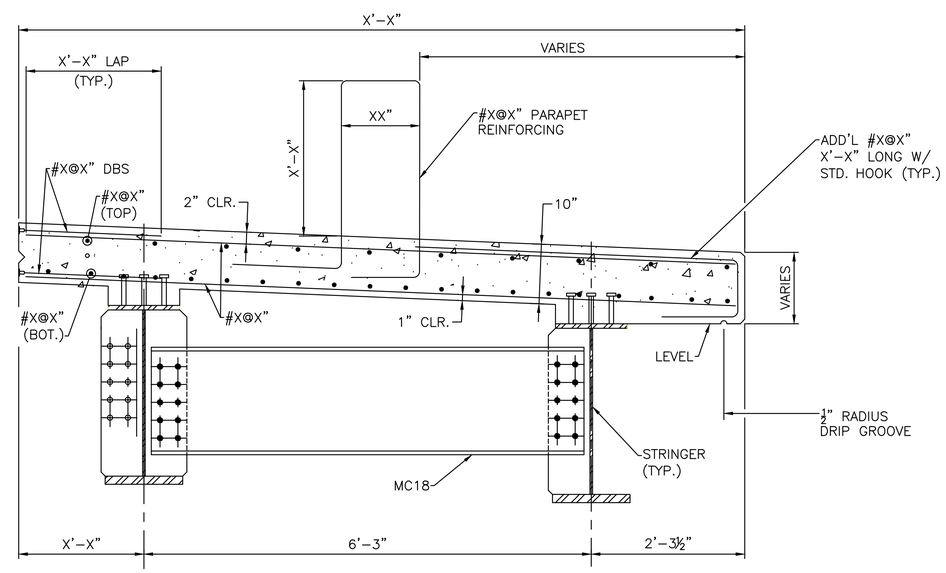

E□TERIOR PBU □S-7 □ S-□□

SCALE: 1" = 1'-0"

Steere ENGINEERING INC

AECOM

RI DOT

RHODE ISLAND
DEPARTMENT OF TRANSPORTATION

DESIGNED BY:	SNG
CHECKED BY:	JA
DATE:	04/01/2020
SHEET:	10
OF:	11

SCALE: AS NOTED

REVISIONS			REVISIONS		
NO.	DATE	BY	NO.	DATE	BY

EAST PROV.

WATERFRONT DRIVE OFF-RAMP
BRIDGE NO. 1267
CONTRACT:DB-022 VOLUME:V3 RHODE ISLAND

PBU DETAILS

C:\PWWORKING\AECOM_DS20_NA_2019\GAL18602\DMS09357\57T-10_V3_010_PBU DETAILS001.DWG PER DPM 450.06

FED. ROAD DIV. NO.	STATE	FEDERAL AID PROJECT NO.	FISCAL YEAR.	SHEET NO.	TOTAL SHEETS
1	RI	BHO-0700(005)	2020	11	11

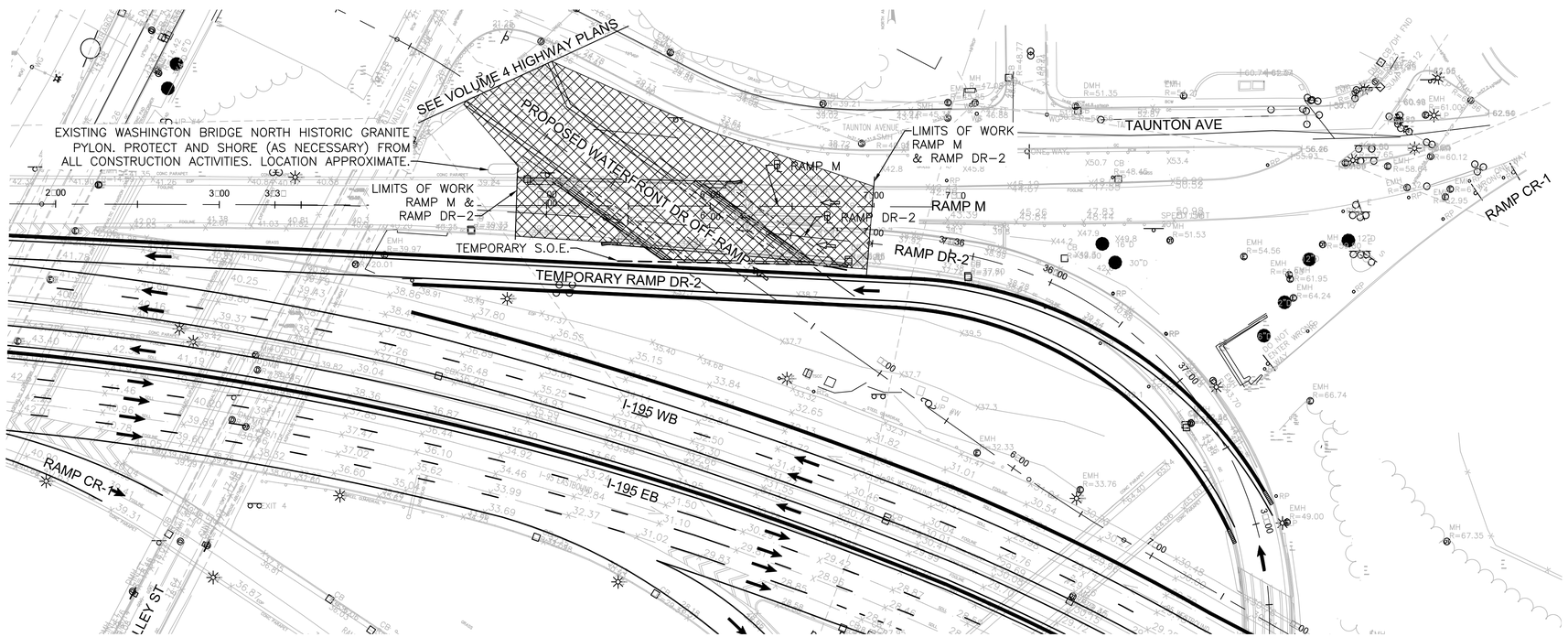

PHASE A - PLAN

SCALE: 1" = 40'-0"

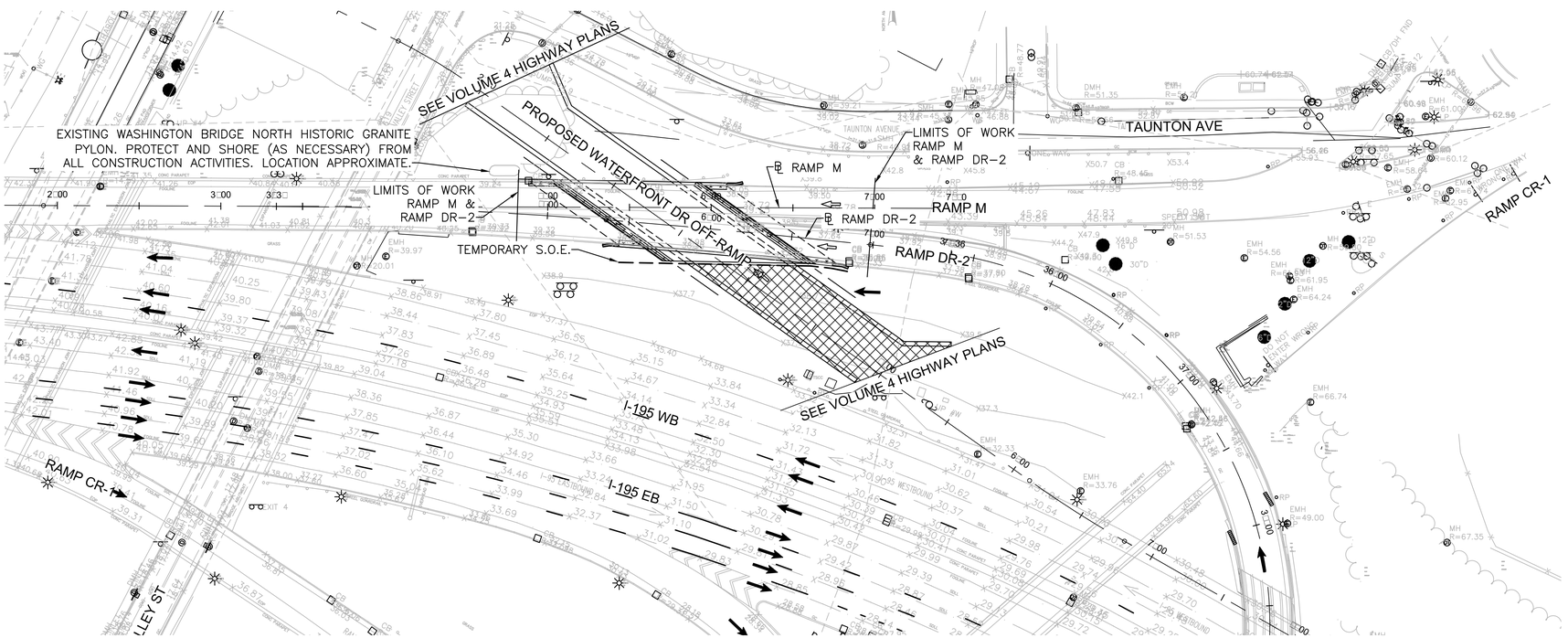

PHASE B - PLAN

SCALE: 1" = 40'-0"

SUGGESTED SEQUENCE OF CONSTRUCTION:

PHASE A - BRIDGE CONSTRUCTION

1. CLEAR AND GRUB WORK LIMITS.
2. INSTALL TEMPORARY S.O.E.
3. CONSTRUCT AND DIVERT VETERANS MEMORIAL TRAFFIC (DR-2) ONTO TEMP. RAMP. CLOSE RAMP DR-1.
4. INSTALL PHASE A WALL AND EXCAVATE DOWN TO PROPOSED WATERFRONT DRIVE OFF-RAMP GRADE.
5. INSTALL ABUTMENT AND WINGWALL PILES BEHIND WALLS.
6. CONSTRUCT ABUTMENT, WINGWALLS, END POSTS, AND APPROACH SLABS.
7. INSTALL PBUS, PERFORM CLOSURE POURS, PAVE, ETC.
8. DIVERT TRAFFIC ONTO NEW BRIDGE.

PHASE B - CONSTRUCTION

1. INSTALL PHASE B WALL AND EXCAVATE DOWN TO PROPOSED WATERFRONT DRIVE OFF-RAMP GRADE.
2. REMOVE TEMPORARY S.O.E.
3. GRADE AND PAVE WATERFRONT DRIVE OFF-RAMP.

LEGEND

DENOTES APPROXIMATE WORK ZONE LIMITS

Steere ENGINEERING INC

AECOM

RI DOT

RHODE ISLAND
DEPARTMENT OF TRANSPORTATION

DESIGNED BY:	SNG
CHECKED BY:	JA
DATE:	04/01/2020
SHEET:	11
OF:	11

SCALE: 1" = 40'-0"

REVISIONS			REVISIONS		
NO.	DATE	BY	NO.	DATE	BY

WATERFRONT DRIVE OFF-RAMP
BRIDGE NO. 1267
EAST PROV. CONTRACT:DB-022 VOLUME:V3 RHODE ISLAND

PHASE DETAILS

C:\PWWORKING\AECOM_DS20_NA_2019\GAL18602\DMS09357\57T-10_V3_011_PHASEDETL001.DWG PER DPM 450.06