April 27, 2020

STATE OF RHODE ISLAND AND PROVIDENCE PLANTATION
DEPARTMENT OF ADMINISTRATION

DIVISION OF PURCHASES BID NO. 7602871

RHODE ISLAND DEPARTMENT OF TRANSPORTATION

RHODE ISLAND CONTRACT NO.2020-CB-023

FEDERAL-AID PROJECT NO. FAP Nos: BRO-0673(002)

Bridge Group 43A - Mohegan

Broncos Highway Sta. 262+50 to Sta. 271+00

CITY/TOWN OF Burrillville

COUNTY OF PROVIDENCE

NOTICE TO PROSPECTIVE BIDDERS

ADDENDUM NO. 4 Prospective bidders and all concerned are hereby notified of the following changes in the Plans, Specifications, Proposal and Distribution of Quantities for this contract. These changes shall be incorporated in the Plans, Specifications, Proposal and Distribution of Quantities, and shall become an integral part of the Contract Documents.

A. Contract Documents

1. CS Page 3

   Remove Page CS-3 in its entirety and replace with revised Page CS-3 (R-1) attached to this Addendum No. 4.

   The "Additional Documents" section has been revised to include the existing RIDOT Bridge Rating Report dated 09/21/2018, and the existing RIDOT Routine and Special Inspection reports dated 08/02/2018 & 05/14/2019.

2. JS Page 52

   Remove Page JS-52 in its entirety and replace with revised Page JS-52 (R-1) attached to this Addendum No. 4.

   The first two paragraphs have been revised.

3. JS Page 63

   Remove Page JS-63 in its entirety and replace with revised Page JS-63 (R-1) attached to this Addendum No. 4.

   A horizontal shaft location tolerance has been added.

4. JS Page 86

   Remove Page JS-86 in its entirety and replace with revised Page JS-86 (R-2) attached to this Addendum No. 4.

   Prices for Liquid Asphalt Cement and Diesel Fuel have been updated.

5. Existing RIDOT Bridge Rating Report

   The existing RIDOT Bridge Rating Report is attached to this Addendum No. 4, and is provided to bidders for their reference only. Bidders are responsible to verify all existing field conditions and the existing structure's structural adequacy to support the contractor's construction activities.

6. Existing RIDOT Inspection Reports

   The existing RIDOT Routine and Special Inspection reports dated 08/02/2018 & 05/14/2019 are attached to this Addendum No. 4, and are provided to bidders for their reference only. Bidders are responsible to verify all existing field conditions.

B. Drawings/Plans - Change/Addition

1. Sheet 23 – Maintenance & Protection of Traffic Plan No. 3

   Remove Sheet 23 in its entirety and replace with revised Sheet 23 (R-1) attached to this Addendum No. 4.

   Note #3 has been added, and the "Special 72"x36" Sign" has been modified.

2. Sheet 48 – Pier Plan and Elevation

   Remove Sheet 48 in its entirety and replace with revised Sheet 48 (R-1) attached to this Addendum No. 4.

   Beam seat elevations have been revised.

3. Sheet 58 – Bearing Details

   Remove Sheet 58 in its entirety and replace with revised Sheet 58 (R-1) attached to this Addendum No. 4.

   Bearing details have been revised.

C. Distribution of Quantities

1. Table of Contents

   Remove Index Pages 1 (R-2) through 3 (R-2) and Page 4 in their entirety and replace them with revised Index Pages 1 (R-3) through 3 (R-3) and Page 4 (R-1) attached to this Addendum No. 4.

   The Table of Contents has been revised.

ATTACHMENTS

2. Pages 8 and 8a

   Remove Pages 8 (R-2) and 8a in their entirety and replace them with revised Pages 8 (R-3) and 8a (R-1) attached to this Addendum No. 4.

   Item Code 401.2100 "Modified Class 12.5 HMA" has been revised. Item Codes 403.0300 "Asphalt Emulsion Tack Coat" and 410.1000 "Materials/Trenches Temporary Patching" have been revised.

3. Page 24

   Remove Page 24 (R-2) in its entirety and replace it with revised Page 24 (R-3) and insert new Page 24a attached to this Addendum No. 4.

   Item Code 935.0400 "Removing Bituminous Pavement by Micro Milling" has been revised.

4. Page 40

   Remove Page 40 in its entirety and replace it with revised Page 40 (R-1) attached to this Addendum No. 4.

   "Item Code T11.0100 Anchor Guy Assembly Constructed in Place" was erroneously included in the Addendum No.3 Distribution of Quantities Report, but was not in the Quest Lite bid file, and is not a contract item. The item has been deleted from the DOQ report

5. Assembly Summary Page 4

   Remove Assembly Summary Page 4 (R-1) in its entirety and replace it with revised Page 4 (R-2) attached to this Addendum No. 4.

   The Assembly Summary "Pavement Type P (MICRO) has been revised.

ESAM EID For lori Fisch

RI Department of Transportation

Administrator, Division of Project Management

ATTACHMENTS

58	Bearing Details
59	Camber Details
60-61	Deck Reinforcing and Sections Sheet 1-2
62	Top of Forms
63	Joint Details
64-66	Miscellaneous Details 1-3
67	End Post Details
68	Boring Logs

Additional Documents

- Existing construction plans for the Mohegan Bridge No 673
- Geotechnical Data Report for the Proposed Mohegan Bridge No 673 – Lamson Engineering Corporation
- Existing RIDOT Bridge Rating Report dated 09/21/2018
- Existing RIDOT Inspection Reports dated 08/02/2018 & 05/14/2019

The Contractor shall note that some Job Specific Specifications and Contract Plans are duplicated in some of the documents in the appendices of the Contract Specific General Provisions found on the Contract CD. In the case of conflicts, the Job Specific Specifications and Contract Plans shall govern.

3. BRIDGE LOCATION

Mohegan Bridge No 673	RI Route 102 Broncos Highway over Branch River, Burrillville, Rhode Island

4. LUMP SUM BID ITEMS

The Contractor shall note that some of the items on this project are paid for on a lump sum basis or are included for payment under other lump sum item(s). In general these include but are not limited to:

- 201.9905 Remove and Salvage Traffic Signal Equipment
- 211.9901 Construction Access – Pier Reconstruction
- 701.9903 8-Inch Steel Gravity Sewer and 6-Inch Steel Force Main across the Mohegan Bridge No. 673
- 701.9906 Temporary Sewer Bypass Pumping and Piping Systems
- 702.9901 Sand Filter and Sediment Forebay North
- 702.9902 Sand Filter and Sediment Forebay South
- 800.9901 Mohegan Bridge No. 673
- 803.9901 Remove and Dispose Existing Mohegan Bridge No. 673
- 804.9901 Pilot Boring Program
- 824.9901 Temporary Jacking and Shoring of Pier Cap
- T12.9903 Maintenance of Temporary Signal System

As provided in Section 109.07 "Partial Payment of Lumps Sum Items", within ten (10) calendar days after the date of the Notice of Award, the Contractor shall

The vertical and lateral support shoring components shall be designed to support all additional girder dead, live, and lateral load force effects at the pier, incurred as a result of the removal of a portion of the existing pier structure during Phase 1. All vertical and lateral force effects shall be determined by the Contractor.

The vertical support components shall be designed, detailed, and erected such that they are fully engaged to support the design loads, through jacking or other appropriate methods as determined by the Contractor. The lateral support components shall be designed, detailed, and erected such that they provide the required additional lateral support to the remaining portion of the existing pier structure, as determined by the Contractor.

A qualified representative of the manufacturer of the jacks shall be present in the field to give the Contractor such technical site assistance as may be necessary to assure that the jacking is performed properly and safely.

At no time shall jacking be performed unless the Engineer is present. The Contractor shall provide a minimum of two day advance notice to the Engineer, prior to jacking.

In order to ensure that the structure is supported on the jack for the least possible amount of time, the Contractor shall have all materials, equipment, tools, spare parts, and labor on hand prior to commencing with the jacking operation.

The Contractor shall submit to the Engineer, a record of the jacking loads encountered just prior to the dial lock-off or final shimming, clearly indicating the corresponding jack number and substructure location.

Care must be taken to minimize disturbance to the existing site conditions. All equipment, shoring and bracing systems shall be removed upon completion of the work, and the area restored to its original condition to the approval of the Engineer, at no additional cost to the State of Rhode Island.

The lateral stability of the system must be maintained throughout the entire shoring process.

The Contractor shall be responsible for submitting shop drawings showing the proposed method, details, and backup computations for review and approval by the Engineer. The proposed method, details and backup computations shall contain provisions for the shoring and bracing.

In addition to the above requirements, the following shall apply:

1. Materials and equipment used to perform these operations shall be capable of supporting the superstructure under full load, including dead and live loads, and lateral loads, as determined by the Contractor's Engineer.

2. Designs and shop drawings shall be submitted to the Engineer in accordance with the Special Provision entitled "Plans and Shop Drawings", and shall be sealed by an Engineer registered in the State of Rhode Island. The submission shall contain a description and plan of the proposed methods and materials in

E. Centerline of shaft shall not be more than 3" from indicated plan location.

F. Elevation of the top of shaft: Within 3 inch of preliminary cut-off elevation given on the Plans.

G. After all concrete is placed, the top of the reinforcing steel cage shall be no more than 6 inches above and no more than 3 inches below plan position.

H. Excavation equipment and methods shall be designed so that the completed shaft excavation will have a planar bottom. The cutting edges of excavation equipment used to prepare the final drilled shaft tip configuration shall be normal to the vertical axis of the equipment within a tolerance of (+/-) 3/8 inch per foot of diameter.

I. Volume of concrete placed shall be compared to the theoretical volume required to fill a unit length of shaft. Comparison shall be made at the top of the rock socket and at the third point along the length of the shaft. Top of shaft shall be the final point of comparison. Actual versus theoretical rise in concrete level shall be reported immediately to the Engineer. Dimension and quality of concrete shall be evaluated by CSL testing.

Record Information

A. For each drilled shaft installed, record on drilled shaft installation log the location, alignment, dimensions, elevations of top and bottom, depth of bearing stratum penetration, description of materials encountered at all elevations, elevation of water table and drilling fluid during excavation, condition of bottom of excavation, slurry test data, concrete data, verticality and deviation from plan location, and other data called for on the report form or pertinent to the drilled shafts. Include results of bottom shaft, diameter, and verticality monitoring. Record the theoretical volume of excavation, volume of concrete placed vs. depth, and total volume of concrete placed. Provide a plot of actual concrete volume versus theoretical volume and actual rise of concrete in the shaft. Report observed irregularities to the Engineer within 24 hours of discovery.

B. Submit draft record information for each completed drilled shaft weekly. Submit final record drawings for each drilled shaft no more than one week after completion of the Work.

C. Maintain daily job records of mineral or polymer slurry testing performed under CONSTRUCTION METHODS, Control Testing of Slurry. Submit records on a weekly basis, and more frequently if variations occur or if required by the Engineer.

Date: 1/7/20
RICN: 2020-CB-023

CODE 938.1000
PRICE ADJUSTMENTS

DESCRIPTION:

a. Liquid Asphalt Cement. The Base Price of Liquid Asphalt Cement as required to implement **Subsection 938.03.1** of the Standard Specifications is $552.50 per ton as of 3/23/2020.

b. Diesel Fuel. The Base Price of Diesel Fuel as required to implement **Subsection 938.03.2** of the Standard Specifications is $1.0984 per gallon as of 3/23/2020.

c. Steel. The Base Prices of Steel (effective January 2020) as required to implement **Subsection 938.03.3** of the Standard Specifications are as listed in the following table:

FED. ROAD DIV. NO.	STATE	FEDERAL AID PROJECT NO.	FISCAL YEAR	SHEET NO.	TOTAL SHEETS
1	RI		2020	23	68

R-1

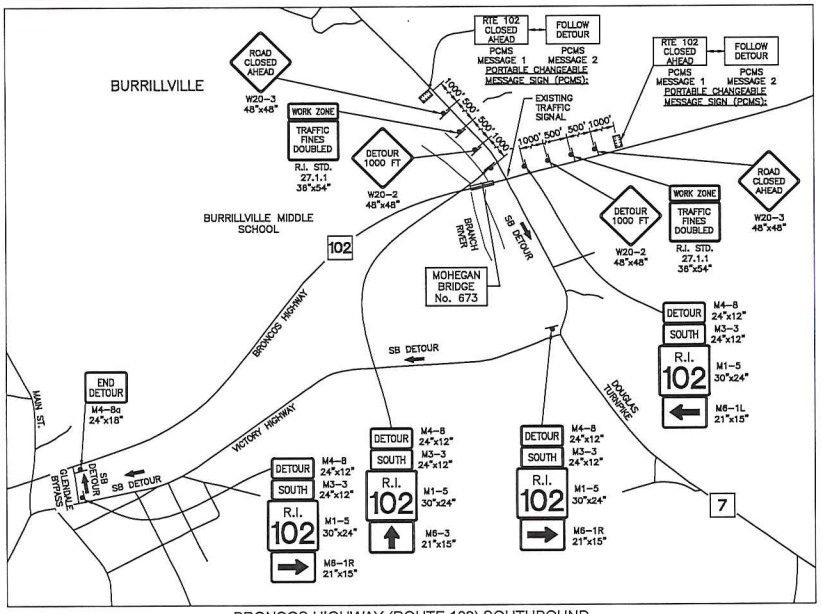

BRONCOS HIGHWAY (ROUTE 102) SOUTHBOUND
DETOUR PLAN
NOT TO SCALE

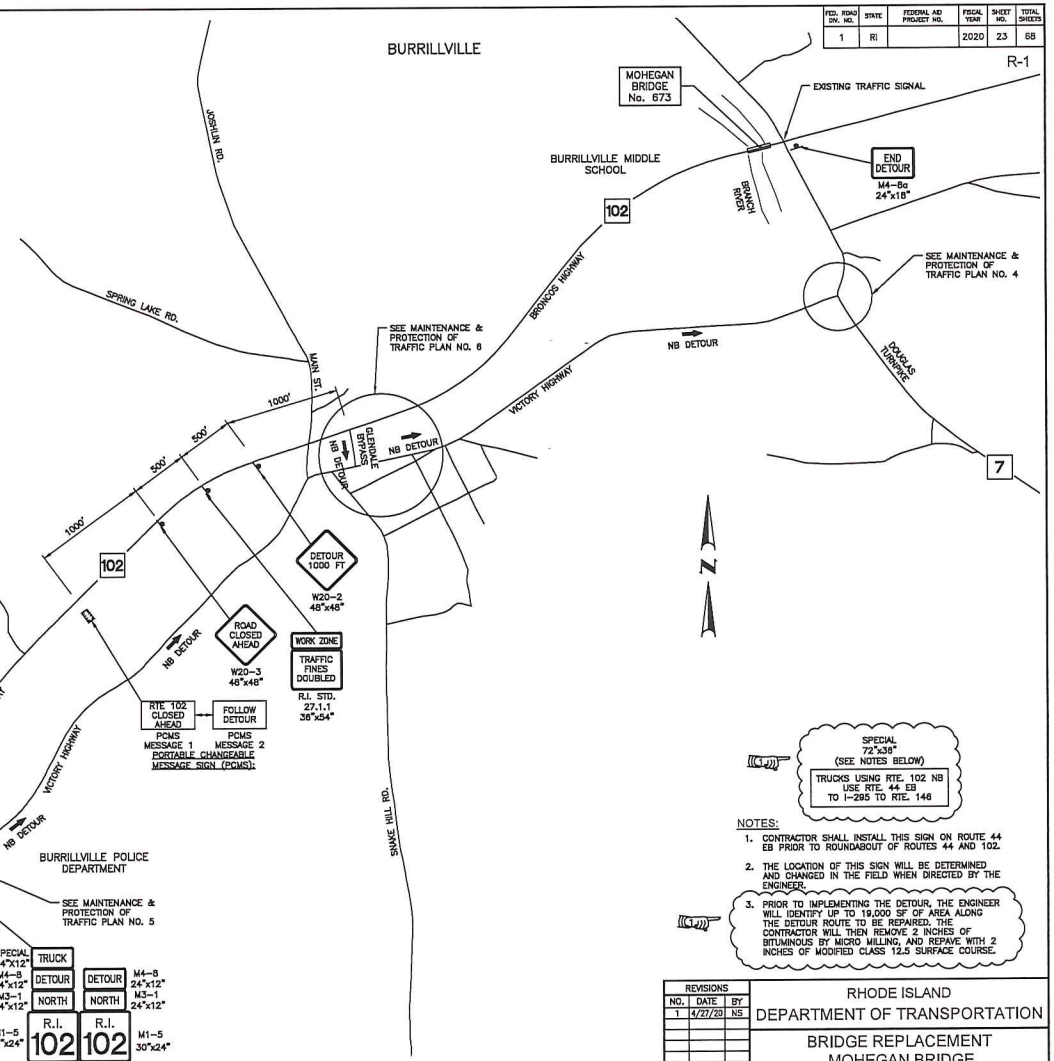

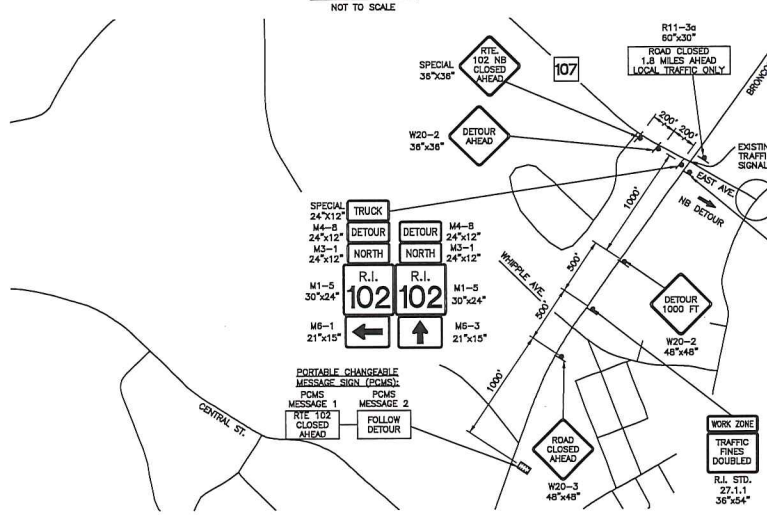

BRONCOS HIGHWAY (ROUTE 102) NORTHBOUND
DETOUR PLAN
NOT TO SCALE

SPECIAL 72"x36"
(SEE NOTES BELOW)
TRUCKS USING RTE. 102 NB USE RTE. 44 EB TO I-295 TO RTE. 146

NOTES:

1. CONTRACTOR SHALL INSTALL THIS SIGN ON ROUTE 44 EB PRIOR TO ROUNDABOUT OF ROUTES 44 AND 102.
2. THE LOCATION OF THIS SIGN WILL BE DETERMINED AND CHANGED IN THE FIELD WHEN DIRECTED BY THE ENGINEER.
3. PRIOR TO IMPLEMENTING THE DETOUR, THE ENGINEER WILL IDENTIFY UP TO 19,000 SF OF AREA ALONG THE DETOUR ROUTE TO BE REPAIRED. THE CONTRACTOR WILL THEN REMOVE 2 INCHES OF BITUMINOUS BY MICRO MILLING, AND REPAVE WITH 2 INCHES OF MODIFIED CLASS 12.5 SURFACE COURSE.

REVISIONS		
NO.	DATE	BY
1	4/27/20	NS

RHODE ISLAND
DEPARTMENT OF TRANSPORTATION

BRIDGE REPLACEMENT
MOHEGAN BRIDGE
BRIDGE No. 673 (43A)
BURRILLVILLE, RHODE ISLAND

MAINTENANCE & PROTECTION
OF TRAFFIC PLAN NO. 3

CHECKED BY _____ DATE _____ SCALE N.T.S

COMMONWEALTH ENGINEERS & CONSULTANTS, INC.
400 SMITH STREET
PROVIDENCE, RI 02908

ADDENDUM No. 4

2801A_V1_023_TCONTROL003_ADD04

FED. ROAD DIV. NO.	STATE	FEDERAL AID PROJECT NO.	FISCAL YEAR	SHEET NO.	TOTAL SHEETS
1	RI		2020	48	68

R-1

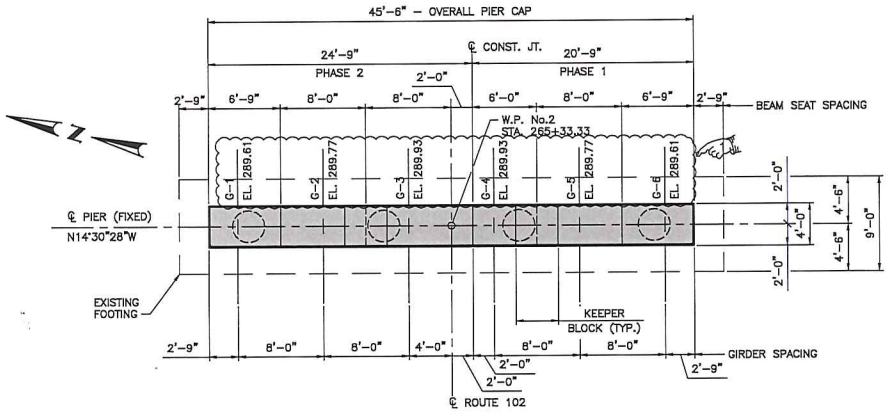

PIER PLAN
SCALE: 3/16"=1'-0"

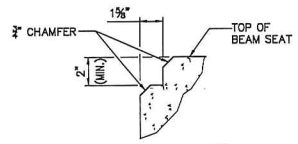

DETAIL 1
SCALE: 3"=1'-0"

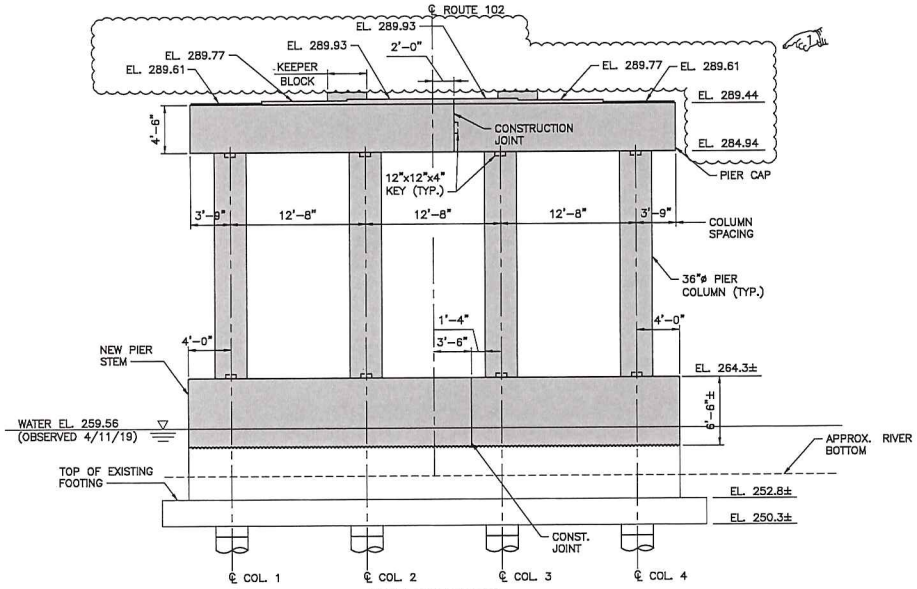

PIER ELEVATION
SCALE: 3/16"=1'-0"

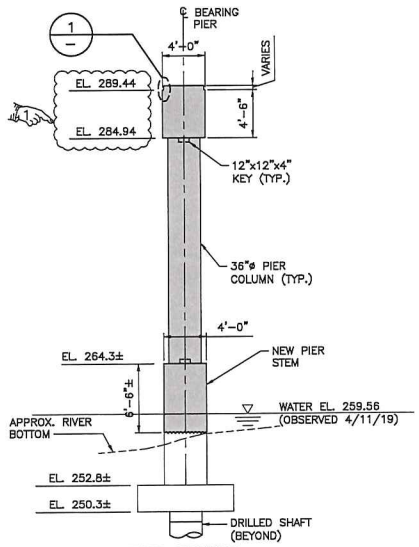

PIER SECTION
SCALE: 3/16"=1'-0"

LEGEND

DENOTES AREAS OF NEW CONCRETE

ADDENDUM No. 4

REVISIONS		
NO.	DATE	BY
1	4/16/20	DT

COMMONWEALTH ENGINEERS & CONSULTANTS, INC.
400 SMITH STREET
PROVIDENCE, RI 02908

RHODE ISLAND
DEPARTMENT OF TRANSPORTATION

BRIDGE REPLACEMENT
MOHEGAN BRIDGE
BRIDGE No. 673 (43A)
BURRILLVILLE, RHODE ISLAND

PIER PLAN
AND ELEVATION

CHECKED BY _____ DATE _____ SCALE AS SHOWN

2601A_V1_048_PIER001_ADD04

FED. ROAD DIV. NO.	STATE	FEDERAL AID PROJECT NO.	FISCAL YEAR	SHEET NO.	TOTAL SHEETS
1	RI		2020	58	68

R-1

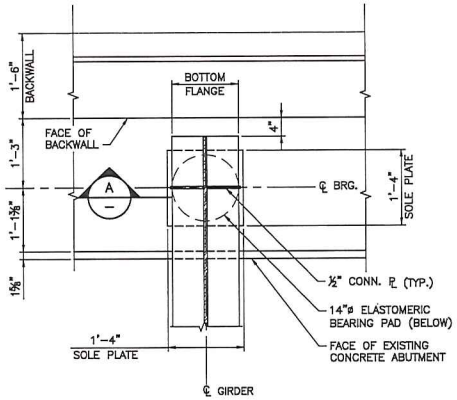

TYPICAL ABUTMENT BEARING PLAN

SCALE: 1"=1'-0"

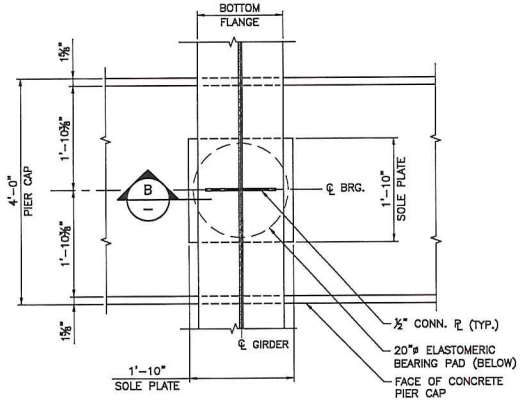

TYPICAL PIER BEARING PLAN

SCALE: 1"=1'-0"

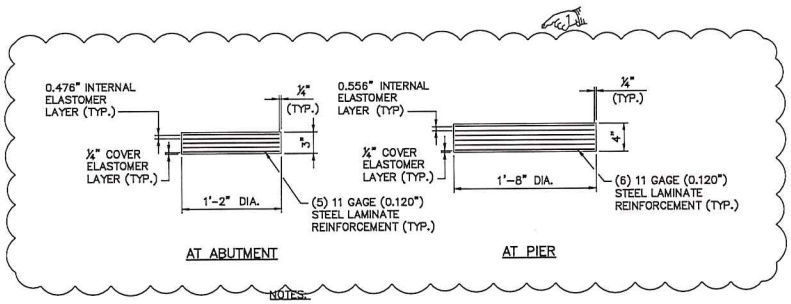

NOTES:

1. ELASTOMER SHALL HAVE A SHEAR MODULUS OF 0.160 KSI.
2. ELASTOMER SHALL HAVE A HARDNESS OF 60 DUROMETER GRADE 3.
3. STEEL LAMINATES SHALL CONFORM TO THE REQUIREMENTS OF ASTM A 1011 GRADE 36.

ELASTOMERIC BEARING PADS

SCALE: 1½"=1'-0"

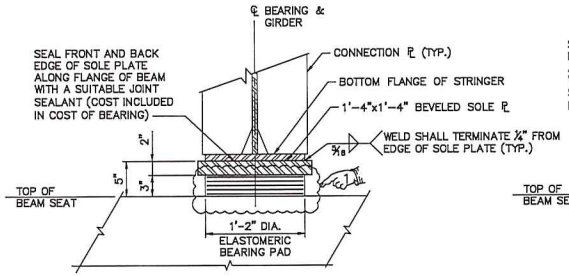

SECTION A

SCALE: 1½"=1'-0"

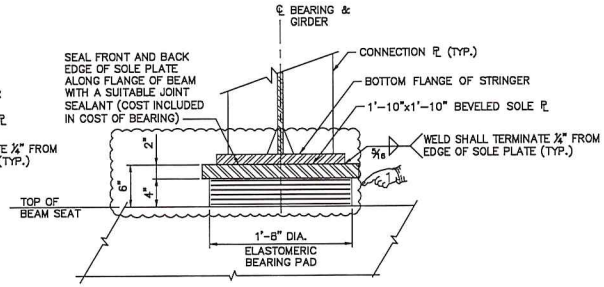

SECTION B

SCALE: 1½"=1'-0"

BEARING NOTES:

1. REFER TO SPECIAL PROVISION CODE 828.99, "ELASTOMERIC BEARINGS".
2. STEEL SOLE PLATE SHALL CONFORM TO AASHTO M 270 GRADE 50 AND SHALL BE HOT-DIP GALVANIZED IN ACCORDANCE WITH AASHTO DESIGNATION M111.
3. ELASTOMERIC BEARING PAD SHALL NOT BE VULCANIZED TO THE SOLE PLATE.
4. CENTER THE ELASTOMERIC BEARING ASSEMBLY UNDER THE BEAM DURING ERECTION.
5. THE BEARINGS ARE DESIGNED SUCH THAT THE MINIMUM TEMPERATURE SETTING RANGE FOR INSTALLATION WITHOUT THE NEED FOR TEMPERATURE ADJUSTMENT IS FROM 40°F TO 65°F. THE CONTRACTOR SHALL SUBMIT A TEMPERATURE SETTING CHART AND METHOD OF ADJUSTING THE BEARINGS, SHOULD INSTALLATION OCCUR AT A TEMPERATURE OUTSIDE THE SPECIFIED RANGE.

UP STATION SPAN 1

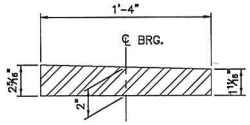

WEST ABUTMENT SOLE PLATE DETAIL

UP STATION SPAN 2

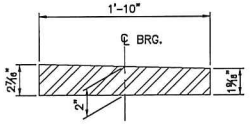

PIER SOLE PLATE DETAIL

UP STATION SPAN 2

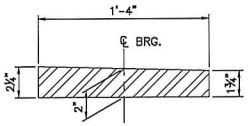

EAST ABUTMENT SOLE PLATE DETAIL

SOLE PLATE DETAILS

NOT TO SCALE

ADDENDUM No. 4

REVISIONS		
NO.	DATE	BY
1	4/16/20	DT

COMMONWEALTH ENGINEERS & CONSULTANTS, INC.
400 SMITH STREET
PROVIDENCE, RI 02908

RHODE ISLAND
DEPARTMENT OF TRANSPORTATION

BRIDGE REPLACEMENT
MOHEGAN BRIDGE
BRIDGE No. 673 (43A)
BURRILLVILLE, RHODE ISLAND

BEARING DETAILS

CHECKED BY _____ DATE _____ SCALE AS SHOWN

2601A_V1_058_BEARDETL_ADD04

Table of Contents - Distribution of Quantities

Project Name - Bridge Group 43A - Mohegan
Estimate Name - Bridge Group 43A - Mohegan (Addendum 4)
R.I. Contract No. - 2020-CB-023
FAP Nos: BRO-0673(002)

Table of Contents - Distribution of Quantities

Project Name - Bridge Group 43A - Mohegan
Estimate Name - Bridge Group 43A - Mohegan (Addendum 4)
R.I. Contract No. - 2020-CB-023
FAP Nos: BRO-0673(002)

Table of Contents - Distribution of Quantities

Project Name - Bridge Group 43A - Mohegan
Estimate Name - Bridge Group 43A - Mohegan (Addendum 4)
R.I. Contract No. - 2020-CB-023
FAP Nos: BRO-0673(002)

Table of Contents - Distribution of Quantities

Project Name - Bridge Group 43A - Mohegan
Estimate Name - Bridge Group 43A - Mohegan (Addendum 4)
R.I. Contract No. - 2020-CB-023
FAP Nos: BRO-0673(002)

Distribution of Quantities

Project Name - Bridge Group 43A - Mohegan
Estimate Name - Bridge Group 43A - Mohegan (Addendum 4)
R.I. Contract No. - 2020-CB-023
FAP Nos: BRO-0673(002)

Item No.	Item Code	Description	UM	Qty.	Pay Code	Seq. No.
021	401.2100 Cont.	262+50 TO 263+40 (MICRO)		62.84	0014	01
		267+00 TO 268+25 (MICRO)		181.68	0014	01
		BRONCOS HIGHWAY (PAVE1)				
		263+40 TO 264+20 (PAVE1)		55.21	0014	01
		266+46 TO 267+00 (PAVE1)		35.30	0014	01
		PROJECTWIDE (MICRO)				
		AS DIRECTED BY ENGINEER		272.84	0014	01
		(MICRO)				
		QUANTITY				
		ROUNDING		0.97	0014	01
		Item 401.2100 Total:		**636.00**		
022	401.3000	CLASS 9.5 HMA	TON			
		MOHEGAN BRIDGE (8.4.0)				
		STA 265+60 TO 266+00, 42' RT		5.04	0014	01
		(8.4.0)				
		STA 269.05 RT (8.4.0)		0.84	0014	01
		STA 269+05 LT (8.4.0)		0.84	0014	01
		QUANTITY				
		ROUNDING		0.28	0014	01
		Item 401.3000 Total:		**DELETED**		
023	403.0300	**ASPHALT EMULSION TACK COAT**	**SY**			
		BRONCOS (BERMA) (BERMA)				
		268+01, 29' LT TO		189.33	0014	01
		271+00,(BERMA) (BERMA)				
		268+02, 36' RT TO		188.67	0014	01
		271+00,(BERMA) (BERMA)				
		BRONCOS HIGHWAY (MICRO)				
		262+50 TO 263+40 (MICRO)		486.00	0014	01
		267+00 TO 268+25 (MICRO)		1,405.00	0014	01
		BRONCOS HIGHWAY (PAVE1)				
		263+40 TO 264+20 (PAVE1)		854.00	0014	01

Distribution of Quantities

Project Name - Bridge Group 43A - Mohegan
Estimate Name - Bridge Group 43A - Mohegan (Addendum 4)
R.I. Contract No. - 2020-CB-023
FAP Nos: BRO-0673(002)

Item No.	Item Code	Description	UM	Qty.	Pay Code	Seq. No.
023	403.0300 Cont.	266+46 TO 267+00 (PAVE1)		546.00	0014	01
		MOHEGAN BRIDGE 673 (RHHRC)				
		STA 263+85 TO 264+10 LT AND RT (RHHRC)		5.56	0014	01
		STA 266+55 TO 266+75 LT (RHHRC)		2.22	0014	01
		STA 266+55 TO 266+90 RT (RHHRC)		3.89	0014	01
		STA 267+20, 45' LT (RHHRC)		0.56	0014	01
		PROJECTWIDE (MICRO)				
		AS DIRECTED BY ENGINEER (MICRO)		2,110.00	0014	01
		QUANTITY				
		ROUNDING		0.77	0014	01
		Item 403.0300 Total:		**5,792.00**		
		MATERIAL/TRENCHES				
024	410.1000	**TEMPORARY PATCHING**	**TON**			
		MOHEGAN BRIDGE				
		CONSTRUCTION		15.00	0014	01
		PROJECTWIDE				
		AS DIRECTED BY ENGINEER		10.00	0014	01
		Item 410.1000 Total:		**25.00**		

Distribution of Quantities

Project Name - Bridge Group 43A - Mohegan
Estimate Name - Bridge Group 43A - Mohegan (Addendum 4)
R.I. Contract No. - 2020-CB-023
FAP Nos: BRO-0673(002)

Item No.	Item Code	Description	UM	Qty.	Pay Code	Seq. No.
082	932.0200 Cont.	268+02, 36' RT TO 271+00,		283.00	0014	01
		24' RT (BERMA)				
		MOHEGAN BRIDGE NO. 673				
		STA 263+41, 25' LT - 23' RT		48.00	0014	01
		STA 267+00, 28' LT - 23' RT		51.00	0014	01
		Item 932.0200 Total:		**666.00**		
083	935.0400	**REMOVING BITUMINOUS PAVEMENT BY MICRO MILLING**	**SY**			
		BRONCOS HIGHWAY (MICRO)				
		262+50 TO 263+40 (MICRO)		486.00	0014	01
		267+00 TO 268+25 (MICRO)		1,405.00	0014	01
		PROJECTWIDE (MICRO)				
		AS DIRECTED BY ENGINEER (MICRO)		2,110.00	0014	01
		Item 935.0400 Total:		**4,001.00**		
084	936.0100	**MOBILIZATION AND DEMOBILIZATION**	**LS**			
		MOHEGAN BRIDGE NO. 673				
		PER SPECIFICATIONS		1.00	0014	01
		Item 936.0100 Total:		**1.00**		
085	937.0200	**MAINTENANCE AND MOVEMENT TRAFFIC PROTECTION**	**LS**			
		MOHEGAN BRIDGE NO. 673				
		MPT		1.00	0014	01
		Item 937.0200 Total:		**1.00**		
086	943.0200	**TRAINEE MAN-HOURS**	**MHRS**			
		MOHEGAN BRIDGE NO. 673				
		PER SPECIFICATIONS		1,300.00	0014	01
		Item 943.0200 Total:		**1,300.00**		

Distribution of Quantities

Project Name - Bridge Group 43A - Mohegan
Estimate Name - Bridge Group 43A - Mohegan (Addendum 4)
R.I. Contract No. - 2020-CB-023
FAP Nos: BRO-0673(002)

Item No.	Item Code	Description	UM	Qty.	Pay Code	Seq. No.
087	L01.0104	**PLANTABLE SOIL 4 INCHES DEEP**	**SY**			
		BRONCOS HIGHWAY (PSOIL)				
		262+12 LT TO BRIDGE (PSOIL)		383.00	0014	01

Distribution of Quantities

Project Name - Bridge Group 43A - Mohegan
Estimate Name - Bridge Group 43A - Mohegan (Addendum 4)
R.I. Contract No. - 2020-CB-023
FAP Nos: BRO-0673(002)

Item No.	Item Code	Description	UM	Qty.	Pay Code	Seq. No.
135	942.0200	DETECTABLE WARNING PANEL STANDARD	SF			
		48.1.0				
		MOHEGAN BRIDGE 673				
		STA 267+90, 30' LT		8.00	0014	01
		STA 268+00, 40' RT		8.00	0014	01
		Item 942.0200 Total:		16.00		

Assembly Summary

Project Name:

Estimate Name:

R.I. Contract No.:

FAP Nos.:

Item Code	Description	Depth	Factor	Qty
Assembly: CEMENT CONCRETE SIDEWALK (CC-SW) (Unit: SY Default Quantity: 60.00)				
202.0100	EARTH EXCAVATION	12"	0.33333	
204.0100	TRIMMING AND FINE GRADING	-	1.00000	
302.0100	GRAVEL BORROW SUBBASE COURSE	8"	0.22222	
905.0110	PORTLAND CEMENT SIDEWALK MONOLITHIC STANDARD 43.1.0	4"	0.11111	
	MOHEGAN BRIDGE 673 (CC-SW)			
	STA 267+50 TO 268+00 LT (CC-SW)			50.00
	STA 267+95 TO 268+00 RT (CC-SW)			10.00
Assembly: PAVEMENT TYPE P (MICRO) (Unit: SY Default Quantity: 4001.00)				
401.2100	MODIFIED CLASS 12.5 HMA	2"	0.12931	
403.0300	ASPHALT EMULSION TACK COAT	-	1.00000	
935.0400	REMOVING BITUMINOUS PAVEMENT BY MICRO MILLING	2"	1.00000	
	BRONCOS HIGHWAY (MICRO)			
	262+50 TO 263+40 (MICRO)			486.00
	267+00 TO 268+25 (MICRO)			1405.00
	PROJECTWIDE (MICRO)			
	AS DIRECTED BY ENGINEER (MICRO)			2110.00
Assembly: PAVEMENT TYPE P-1 (PAVE1) (Unit: SY Default Quantity: 700.00)				
201.0409	REMOVE AND DISPOSE FLEXIBLE PAVEMENT	10"+/-	1.00000	
202.0100	EARTH EXCAVATION	12"	0.33333	
204.0100	TRIMMING AND FINE GRADING	-	1.00000	
302.0100	GRAVEL BORROW SUBBASE COURSE	12"	0.33333	
401.1000	CLASS 19.0 HMA	8"	0.48850	
401.2100	MODIFIED CLASS 12.5 HMA	2"	0.12931	
403.0300	ASPHALT EMULSION TACK COAT	-	2.00000	
	BRONCOS HIGHWAY (PAVE1)			
	263+40 TO 264+20 (PAVE1)			427.00
	266+46 TO 267+00 (PAVE1)			273.00

Bridge Load Rating

Prepared for

Rhode Island
Department of Transportation

BURRILLVILLE
ROUTE 102
OVER
BRANCH RIVER

Bridge No. 067301
Bridge Name: MOHEGAN BRIDGE

Date of Inspection: August 2, 2018
Date of Rating: September 21, 2018

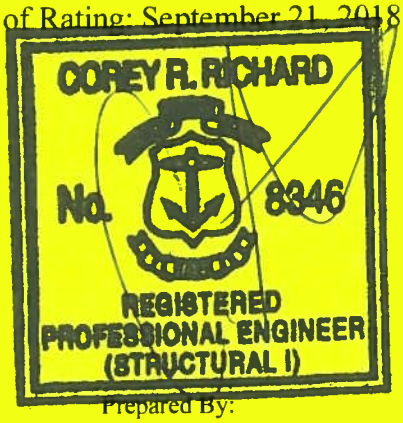

Prepared By:
AECOM
10 Orms Street
Providence, RI 02904

Bridge Load Rating

Prepared for

Rhode Island
Department of Transportation

BURRILLVILLE
ROUTE 102
OVER
BRANCH RIVER

Bridge No. 067301
Bridge Name: MOHEGAN BRIDGE

Date of Inspection: August 2, 2018
Date of Rating: September 21, 2018

COREY R. RICHARD
No. 8346
REGISTERED
PROFESSIONAL ENGINEER
(STRUCTURAL I)

Prepared By:
AECOM
10 Orms Street
Providence, RI 02904

SUMMARY OF BRIDGE RATING

Town/City:	Burrillville	Bridge No.:	067301
Route Carried:	RI 102	Crosses:	Branch River
Owner:	State Highway Agency	Year Built:	1966
Maintained By:	State Highway Agency	Year(s) Rebuilt/Rehab:	NA

VEHICLE TYPE		Strength RF	Service RF	Tons
HL-93	INV	0.44/0.36	NA	NA
	OPER	0.57	NA	NA
H20		1.65	-	33.1
TYPE 3		1.38	-	34.6
TYPE 3S2		1.08	-	38.8
TYPE 3-3		1.03	-	41.2
LTLLM		0.77	-	46.1
SU 4		1.27	-	34.3
SU 5		1.12	-	34.8
SU 6		1.03	-	35.7
SU 7		0.94	-	36.6
EV2		1.54	-	44.3
EV3		1.04	-	44.5
RI 3		0.99	-	37.4
RI 4		1.01	-	38.0
RI 5		0.77	-	40.5
RI 6		0.65	-	42.5
RI-OP1		0.86	-	48.9
RI-OP2		0.66	-	52.6
RI-OP3		0.50	-	57.0
Fatigue		2.57	NA	77.1
RIPTA		1.68	-	34.8

Grey shaded vehicle types are considered legal loads.

LRFR Evaluation Factors	
Surface Roughness Rating:	2
Gov. Condition Factor, Φ_c:	1.00
System Factor, Φ_s:	1.00
ADTT (One-Way):	697

Posting Analysis	
Posting Recommendation :	Y
Gov. Legal Rating Factor:	0.77
Gov. Legal Load Model:	LTLLM

QA/QC	
LR Engineer Name:	Matt Cuccaro, PE / Corey Richard, PE
LR Engineer License #:	8346
LR Engineer Signature:	
LR Checked By:	Joey Smith, PE
Quality Assurance By:	Robert Wright, PE
LR Date:	9/21/18

LR = Load Rating ; Gov.=Governing

Please check the following items that apply:

x	Bridge load rating is not governed by deck rating
	Bridge load rating is not governed by substructure rating
x	Connections do not control the load rating
	Exterior girder controls the load rating
	Bridge plans do not exist
	As-built load rating (from construction plans and inspection report)
x	As-inspected load rating (based on inspection report)
	Load test performed
	Refined analysis performed
	Material testing performed
x	Bridge has infinite fatigue life
	Bridge has finite fatigue life; Fatigue Serviceability Index is [x]
	Flag for web buckling / web crippling / web yielding check (if performed)
	Traffic restriction; reported rating factors for unrestricted portion
x	Bridge is located on RIPTA Bus Route

BREAKDOWN OF BRIDGE RATING

Town/City:	Burrillville	Bridge No.:	067301
Route Carried:	RI 102	Crosses:	Branch River
Owner:	State Highway Agency	Year Built:	1966
Maintained By:	State Highway Agency	Year(s) Rebuilt/Rehab:	NA

RATING LOAD (LEGAL LOADS)
Pier Cap Analysis

BRIDGE COMPONENT	DESIGN LOAD (HL-93)			LEGAL LOAD (TONS)											
	INV	OPER	TRAIN	H20	TYPE 3	TYPE 3S2	TYPE 3-3	LTLLM	SU4	SU5	SU6	SU7	EV2	EV3	RIPTA
PIER CAP BEAM STRENGTH I POSITIVE MOMENT CAP BELOW GIRDER C	2.17	2.81	1.79	11.20 (224)	9.01 (225)	6.38 (230)	5.76 (230)	3.80 (228)	8.29 (224)	7.27 (226)	6.48 (225)	5.76 (223)	7.82 (225)	5.18 (223)	10.91 (227)
PIER CAP BEAM STRENGTH I SHEAR NEAR GIRDER C	**0.44**	**0.57**	**0.36**	2.26 (45)	1.82 (46)	1.29 (46)	1.16 (47)	**0.77 (46)**	1.68 (45)	1.47 (46)	1.31 (46)	1.16 (45)	1.58 (46)	1.05 (45)	2.21 (46)
PIER CAP BEAM STRENGTH I NEGATIVE MOMENT AT EAST EDGE COLUMN A	0.59	0.76	0.48	3.03 (61)	2.44 (61)	1.72 (62)	1.56 (62)	1.03 (62)	2.24 (61)	1.97 (61)	1.75 (61)	1.56 (60)	2.11 (61)	1.40 (60)	2.95 (61)

xx.x value indicates Governing STRENGTH Limit State rating

BREAKDOWN OF BRIDGE RATING

Town/City:	Burrillville	Bridge No.:	067301
Route Carried:	RI 102	Crosses:	Branch River
Owner:	State Highway Agency	Year Built:	1966
Maintained By:	State Highway Agency	Year(s) Rebuilt/Rehab:	NA

RATING LOAD (RI PERMIT LOADS)
Pier Cap Analysis

BRIDGE COMPONENT	PERMIT LOAD (TONS)						
	RI 3	RI 4	RI 5	RI 6	RI-OP1	RI-OP2	RI-OP3
PIER CAP BEAM STRENGTH I POSITIVE MOMENT CAP BELOW GIRDER C	6.43 (245)	6.52 (245)	4.76 (249)	3.81 (248)	4.28 (242)	3.25 (260)	2.50 (282)
PIER CAP BEAM STRENGTH I SHEAR NEAR GIRDER C	1.30 (49)	1.32 (50)	0.96 (50)	0.77 (50)	**0.86 (49)**	**0.66 (53)**	**0.50 (57)**
PIER CAP BEAM STRENGTH I NEGATIVE MOMENT AT EAST EDGE COLUMN A	1.74 (66)	1.76 (66)	1.29 (67)	1.03 (67)	1.16 (65)	0.88 (70)	0.67 (76)

xx.x value indicates Governing STRENGTH Limit State rating

BREAKDOWN OF BRIDGE RATING

Town/City:	Burrillville	Bridge No.:	067301
Route Carried:	RI 102	Crosses:	Branch River
Owner:	State Highway Agency	Year Built:	1966
Maintained By:	State Highway Agency	Year(s) Rebuilt/Rehab:	NA

RATING LOAD (LEGAL LOADS)
Superstructure Analysis

BRIDGE COMPONENT	DESIGN LOAD (HL-93)		LEGAL LOAD (TONS)										
	INV	OPER	H20	TYPE 3	TYPE 3S2	TYPE 3-3	SU4	SU5	SU6	SU7	EV2	EV3	RIPTA
SPAN 2 EXT. GIRDER A STRENGTH I MOMENT MIDSPAN	1.15	1.49	3.98 (80)	3.40 (85)	2.77 (100)	2.70 (108)	3.08 (83)	2.74 (85)	2.45 (85)	2.23 (86)	3.85 (111)	2.54 (109)	4.27 (89)
SPAN 2 EXT. GIRDER A STRENGTH I SHEAR 0.50FT ALONG SPAN	0.47	0.61	**1.65 (33)**	**1.38 (35)**	**1.08 (39)**	**1.03 (41)**	**1.27 (34)**	**1.12 (35)**	**1.03 (36)**	**0.94 (37)**	**1.54 (44)**	**1.04 (45)**	**1.68 (35)**
SPAN 2 EXT. GIRDER A SERVICE II MOMENT MIDSPAN	1.74	2.27	4.50 (90)	3.84 (96)	3.12 (113)	3.05 (122)	3.47 (94)	3.10 (96)	2.77 (96)	2.52 (98)	4.34 (125)	2.87 (123)	4.82 (100)
SPAN 2 INT. GIRDER B STRENGTH I MOMENT MIDSPAN	0.94	1.21	3.24 (65)	2.77 (69)	2.26 (81)	2.20 (88)	2.51 (68)	2.24 (69)	2.00 (70)	1.82 (70)	3.46 (99)	2.28 (98)	3.48 (72)
SPAN 2 INT. GIRDER D STRENGTH I SHEAR CL BEARING PIER	0.77	1.00	2.74 (55)	2.29 (57)	1.78 (64)	1.70 (68)	2.10 (57)	1.85 (58)	1.70 (59)	1.56 (61)	2.32 (67)	1.56 (67)	2.77 (58)
SPAN 2 INT. GIRDER B SERVICE II MOMENT MIDSPAN	1.49	1.93	**3.83 (77)**	**3.28 (82)**	**2.66 (96)**	**2.60 (104)**	**2.96 (80)**	**2.64 (82)**	**2.36 (82)**	**2.15 (83)**	**4.08 (117)**	**2.70 (116)**	**4.11 (85)**
SPAN 2 EXT. GIRDER A FATIGUE AT 0.45L POINT	2.57	-	-	-	-	-	-	-	-	-	-	-	-
SPAN 2 INT. GIRDER B FATIGUE AT 0.45L POINT	2.68	-	-	-	-	-	-	-	-	-	-	-	-
SPAN 2 INT. GIRDER F END BEARING AT PIER	1.34	-	-	-	-	-	-	-	-	-	-	-	-

Note: Design loading controlled by Design Truck.

xx.x value indicates Governing STRENGTH Limit State rating

xx.x value indicates Governing SERVICE Limit State rating

BREAKDOWN OF BRIDGE RATING

Town/City:	Burrillville	Bridge No.:	067301
Route Carried:	RI 102	Crosses:	Branch River
Owner:	State Highway Agency	Year Built:	1966
Maintained By:	State Highway Agency	Year(s) Rebuilt/Rehab:	NA

RATING LOAD (RI PERMIT LOADS)
Superstructure Analysis

BRIDGE COMPONENT	PERMIT LOAD (TONS)						
	RI 3	RI 4	RI 5	RI 6	RI-OP1	RI-OP2	RI-OP3
SPAN 2 EXTERIOR GIRDER A STRENGTH II MOMENT MIDSPAN	2.39 (91)	2.45 (92)	1.92 (101)	*1.82* *(118)*	2.58 (146)	*2.72* *(217)*	2.45 (277)
SPAN 2 EXTERIOR GIRDER A STRENGTH II SHEAR 0.50FT ALONG SPAN	**0.99** **(37)**	**1.01** **(38)**	**0.77** **(41)**	**0.65** **(43)**	1.08 (61)	0.93 (75)	0.84 (95)
SPAN 2 EXTERIOR GIRDER A SERVICE II MOMENT MIDSPAN	3.20 (122)	3.28 (123)	2.57 (135)	*2.52* *(164)*	3.50 (198)	*3.67* *(294)*	*3.31* *(374)*
SPAN 2 INTERIOR GIRDER B STRENGTH II MOMENT MIDSPAN	1.95 (74)	2.00 (75)	1.57 (82)	*1.49* *(97)*	2.32 (131)	*2.45* *(196)*	2.20 (249)
SPAN 2 INTERIOR GIRDER D STRENGTH II SHEAR CL BEARING PIER	1.63 (62)	1.68 (63)	1.28 (67)	1.08 (70)	1.63 (92)	1.40 (112)	1.26 (142)
SPAN 2 INTERIOR GIRDER B SERVICE II MOMENT MIDSPAN	**2.73** **(104)**	**2.79** **(105)**	**2.19** **(115)**	***2.15*** ***(140)***	**3.29** **(186)**	***3.46*** ***(277)***	***3.12*** ***(352)***

Note: Italicized text indicates controlling values occur at 0.45L, not 0.50L.

xx.x value indicates Governing STRENGTH Limit State rating

xx.x value indicates Governing SERVICE Limit State rating

LOCATION MAP

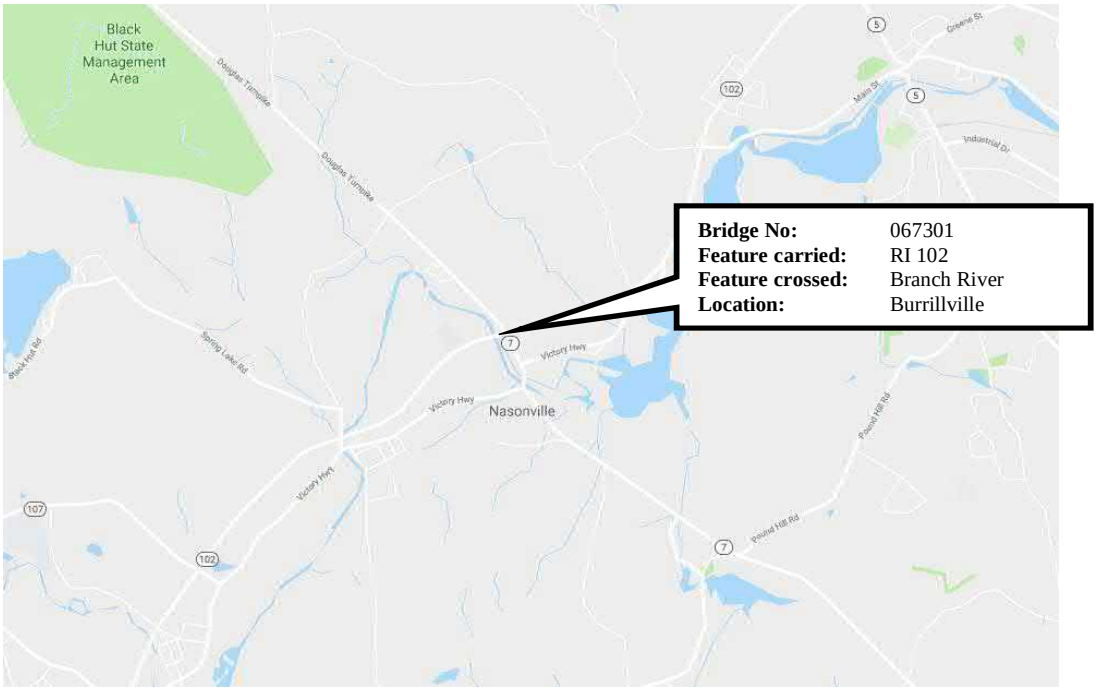

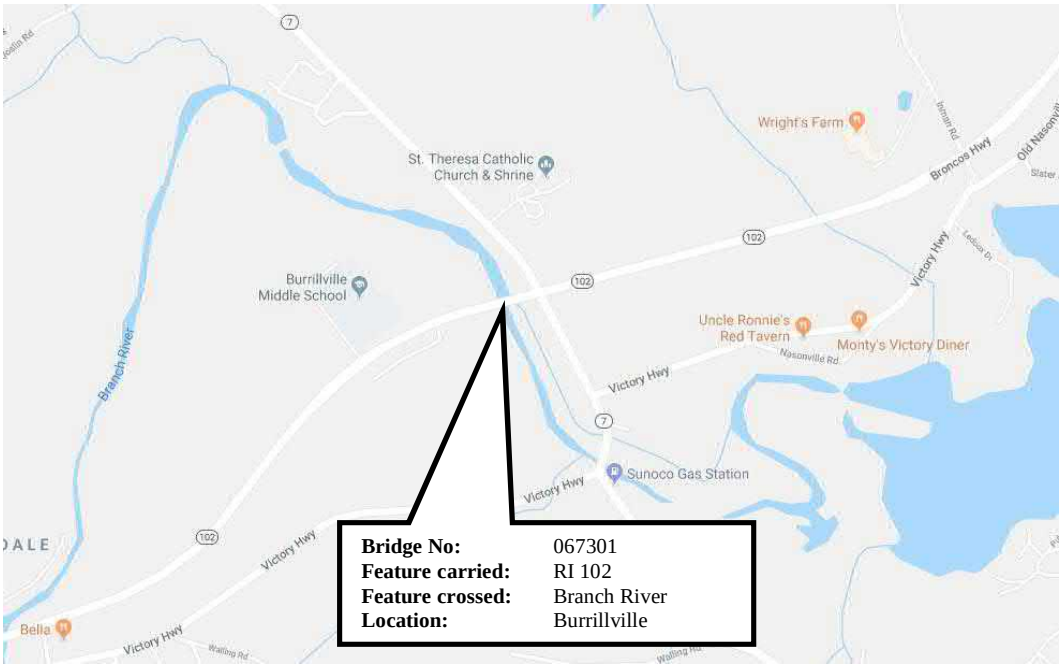

DESCRIPTION OF BRIDGE

Bridge Number:	067301
Owner:	State Highway Agency
Maintained By:	State Highway Agency
Location:	Burrillville
Route Carried:	RI 102
Feature Intersected:	Branch River

Year Built & Inspection Dates:

Latest NBI Inspection Date:	08/02/2018
Field Verification Date (if applicable):	N/A
Date of Construction:	1966
Bridge Type:	Steel Plate Girders
Original Design Loading:	HS20
Date(s) of Rebuild/Rehab:	N/A
Description of Rebuild/Rehab:	None
Posting:	Open, No Restrictions

Design:

Superstructure:	7 Steel Plate Girders composite with 7” reinforced concrete deck
Substructure:	Reinforced Concrete Abutments, Wingwalls & Pier
Bearings:	Sliding Plate Expansion at Abutments; Fixed at Pier
Bridge Spans:	Two Simple Spans – 110’-0” each
Bridge Skew:	0^0-00’-00”
Bridge Width:	50’-6” out-to-out
Roadway Width:	44’-0” curb-to-curb
Roadway Surface:	5.5” bituminous concrete wearing surface (based on inspection report)
Curbs:	Granite curbs with 7.5” reveal each side
Sidewalk/Walkway/Median:	2’-0” wide concrete safety walk with steel W guardrail each side
Utilities:	10” and 12” insulated utility pipes in Girder Bay A
Bridge Railing:	Reinforced concrete parapets with single aluminum pipe rail mounted on top (in addition to guardrails) each side
Approach Railing:	Steel W- guardrail at each approach corner

DESCRIPTION OF BRIDGE

Condition:

Wearing Surface Condition:	The bituminous concrete wearing surface is in overall good condition.
Deck Condition:	The concrete deck is in satisfactory condition. The underside contains patched areas of concrete, and several spalls and delaminations. There are some areas of exposed rebars over the pier.
Girder Condition:	The steel plate girders are in overall poor condition. The girder ends have areas of up to 100% loss. Girder ends exhibit typical peeling paint with scattered section loss to lower webs in front of bearing stiffeners and isolated loss to the webs beyond stiffeners and bottom flanges. Refer to Appendix A for more information.
Bridge Railing Condition:	The bridge railing is in overall fair condition.
Guardrail Condition:	The guardrail is in overall satisfactory condition.
Bearing Condition:	The bearings are in overall fair condition. Expansion bearings exhibit ¼” to 1” expansion. Fixed bearings show heavy rust. Refer to Appendix A for more information.
Abutment Condition:	The abutments are in overall poor condition. Both abutments exhibit areas of spalls, exposed rebar, and delaminations. Refer to Appendix A for more information.
Pier Condition:	The pier is in overall poor condition. The pier cap has up to 12" deep spalls with exposed/debonded rebar and broken stirrups, and up to full width delaminations on the underside. The columns have up to full circumference delaminations with full height cracks and scattered hairline mapcracking. Refer to Appendix A for more information.

RATING ANALYSIS CRITERIA

The objective of this load rating report is to present the results of an LRFR live load carrying capacity analysis for Bridge No. 067301, which carries Route 102 over the Branch River in Burrillville. The live load rating was performed based on the existing conditions found during the inspection conducted by AECOM on August 2, 2018.

The bridge rating calculation and bridge rating report were prepared in accordance with the following standards and guidelines:

- "AASHTO – The Manual for Bridge Evaluation, Third Edition (2018)" (MBE)
- "AASHTO LRFD Bridge Design Specifications, 8th Edition (2017)" (AASHTO LRFD)
- "RIDOT Bridge Load Rating Guidelines, August 2017". (RIDOT Guidelines)

The scope of the work for this report consists of the following:

- Review all of available design plans, bridge inspection reports, and previous bridge rating reports for the structure.

- Utilizing the Load and Resistance Factor Rating (LRFR) Method:
    - Provide Inventory and Operating level rating factors for the HL-93 Design Load (governing of truck, tandem, or fatigue).
    - Provide a single "safe load capacity" for the following Legal loads: H-20, Type 3, Type 3S2, Type 3-3, SU4, SU5, SU6, SU7, EV2, EV3, LTLLM, and RIPTA Bus.
    - Provide a single "safe load capacity" for the RIDOT routine permit vehicles RI 3, RI 4, RI 5, and RI 6; and for the RIDOT special permit vehicles RI-OP1, RI-OP2, and RI-OP3.
    - Provide all of the above load ratings regardless if the HL-93 design load is above statutory levels (RF > 1.0).

- Check LRFR limit states in accordance with the RIDOT Rating Guidelines Table 4. Use load factors for strength limit states in accordance with RIDOT Rating Guidelines Section 4.4. Use load factors for service limit states in accordance with the RIDOT Rating Guidelines Section 4.4.1.4.

RATING ASSUMPTIONS

The bridge rating calculations and bridge rating report were prepared using the following assumptions:

- Load rating analysis was performed using AASHTOWare BrR Version 6.8.2.3002.

- Limit states analyzed based on the RIDOT Rating Guidelines Table 4 are:
    - Strength I limit state ratings were calculated using the HL-93 load and Legal load vehicles.
    - Strength II limit state ratings were calculated using the permit load vehicles.
    - Service II limit state ratings were calculated using all loads and vehicles.
    - Fatigue limit state ratings were calculating using the HL-93 load.

- Per RIDOT Guidelines Section 2.2.7, a dynamic allowance of 20% is used corresponding to a surface roughness rating of 2 for Legal Loads and Permit Loads, and span lengths over 40'. A

dynamic allowance of 33% is used for Design Load HL-93 regardless of riding surface roughness rating.

- The following resistance factors and modifiers apply to all Strength limit states (see RIDOT Guidelines Section 4.2):
  - φ = varies based on LRFR resistance provisions.
  - φ_c = 1.0 for the superstructure. The inspection report designated the girders mostly as CS 1 or 2, and section losses were field measured.
  - φ_c = 0.90 for the substructure. The inspection report designated the pier cap mostly as CS 4, and section losses were field measured.
  - φ_s = 1.0 for all other girder bridges or slab bridges.
  - φ, φ_c, φ_s = 1.0 for all non-strength limit states.

- Structural elements rated using AASHTOWare BrR were modeled using information from the bridge plans and inspection reports. All applicable limit states and vehicle loadings were considered using the superstructure model created.

- The superstructure consists of two 110', seven plate girder simply supported spans. Bridge geometry, superstructure loads, and girder sections are identical for each span. Differences between spans lie in the section losses noted in the inspection report.

- Live load distribution factors were computed by the BrR program for all girders, as were the factors for each vehicle used to calculate the rating factors.

- For the superstructure rating, since spans are simply supported each span was individually modeled. Each girder was modeled based on the "As-Built" condition, and for girders exhibiting measurable losses, member alternatives labeled "As-Inspected" were also modeled. Several areas of section losses near the ends of girders were noted. Losses in front of the bearings were modeled in BrR. Losses behind the bearings were considered when performing beam end bearing load ratings.

- For the beam end locations exhibiting the largest amounts of section loss (Girders A, F & G, in Span 2, at the pier), end bearing load ratings were performed in accordance with RIDOT Guidelines Section 6.4, and as directed by RIDOT personnel. Girder B (no section losses) was also checked as the girder subject to the largest loads.

- For the LRFR Control Options in BrR, analysis output was generated at member tenth points, section change points, and user defined points of interest. Those points of interest include locations of section losses (to determine controlling shear ratings), as well as the 0.45L point along members (to determine controlling flexure ratings).

- Appendix D contains BrR generated output for each girder in Spans 1 & 2 for the Strength limit states. It was determined that the governing factors occurred in Girder A (exterior flexure and shear), Girder B (interior flexure), and Girder D (interior shear). These results are summarized in the Breakdown of Bridge Rating tables above. Span 2 girders always govern over Span 1. Based on these results we assumed that the governing Service limit state flexure results would also occur in Girders A & B; therefore Service output for only those members was included in Appendix D.

- There are two 2' safety walks on the bridge, each containing a steel W guardrail limiting the amount of pedestrian traffic the bridge would see. Therefore, pedestrian loading is not considered in this rating.

- An average wearing surface thickness of 5.5" was assumed based on the design plans and measurements observed during the bridge inspection.

- The inspection report notes the ADT and Truck ADT percentage. The percent listed reads 1%, but discussion with RIDOT confirmed that is an error and for analysis we use ADT % = 10% per RIDOT Guidelines 1.10.4.

- The concrete Pier Cap is in such poor condition that it must be rated as well. Using the previous rating report as a guide, the pier cap rating approach is as follows:
    - Generate the superstructure dead load reactions at the pier via BrR.
    - Develop a CSi Bridge model that represents a single two-span girder, and run all applicable live loads and vehicles to determine the live load girder reactions (which include impact) on the pier.
    - Determine the Live Load Distribution Factors applicable to interior and exterior girders, as well as factors on the more heavily loaded and less heavily loaded girders, for a given vehicle. Begin by considering the BrR LLDF calculations for shear for interior girders, for 1 or 2 lanes loaded. Consider this factor as the effect a vehicle has on its principally loaded girder. The supplement (1.0 - factor) to this value will be the LLDF contribution to the adjacent girder that sees a lesser percentage of the same vehicle load.
    - Employing a similar approach used in the previous load rating, determine the critical locations along the pier cap to analyze. And determine the critical forces (positive and negative moment, shear) to consider as well.
    - Create a STAAD model of the pier cap, applying cap self-weight and superstructure loads to get the max moment and shear forces in the cap at the various critical sections.
    - Calculate the moment and shear capacity of the pier cap at the critical sections.
    - Pier cap section losses are measured and noted in the inspection report. Losses at critical sections are sporadic; it was determined that the best approach to calculate the capacity would be to use a Condition Factor of 0.85.
    - Calculate the rating factors and loads due to moment and shear in the pier cap for the Strength I limit state.
    - See "Pile Cap Rating Calculations" in Appendix C, and analysis output in Appendix D for additional information.

The following material strengths are used for the bridge rating. See AASHTO LRFD Table 3.5.1-1 for material unit weights:

<u>Structural Steel Girders:</u>

Steel Strength:	f_y = 36 ksi
Min Tensile Strength:	f_u = 66 ksi
Modular Ratio:	n = 8
Unit Weight:	490 pcf

Reinforced Concrete:

Concrete Compressive Strength:	f_c = 3,000 psi
Modulus of Elasticity:	E_c = 3,625 ksi
Concrete Unit Weight (dead load):	w_{conc} = 145 pcf
Reinforcing Steel Yield:	f_y = 40,000 psi
Modulus of Elasticity (Reinforcing Steel):	$E_{csteel.reinf}$ = 29,000 ksi

Bituminous Concrete Wearing Surface:

Unit Weight:	w_{bit} = 140 pcf

Granite Curb:

Unit Weight:	$w_{granite}$ = 170 pcf

Aluminum:

Unit Weight:	$w_{aluminim}$ = 175 pcf

RATING LOADS

The following dead loads were used in the ratings:

1. Non-Composite (DC1) Loading:
   - Consists of self-weight of the steel girders, intermediate diaphragms, and deck.
     - The girder and deck self-weight is computed by AASHTOWare BrR.

2. Composite (DC2) Loading:
   - Consists of the concrete parapets and safety walks, curbs, railings and guardrails. The weights are manually calculated and applied in AASHTOWare BrR as uniform line loads per girder. Distribution of the load is in accordance with RIDOT Guidelines Section 2.1.2. See Appendix C for additional information.

3. Wearing (DW) Loading:
   - Consists of the wearing surface and utility pipe and diaphragm loads. The wearing surface load is manually calculated and applied in AASHTOWare BrR as uniform line loads distributed evenly to all girders. Utility loads are applied only to supporting girders A & B. See Appendix C for additional information.

The live loads utilized in the rating are as follows:

1. The AASHTO HL-93 loads are utilized for the Design Load Rating Factors.
2. The AASHTO H20, Type 3, Type 3S2, Type 3-3, SU4, SU5, SU6, SU7, LTLLM, EV2, EV3, and RIPTA bus vehicles are utilized for Legal Load Ratings (Tons).
3. The Rhode Island permit vehicles RI 3, RI 4, RI 5, RI 6, RI-OP1, RI-OP2, and RI-OP3 are utilized for Permit Load Ratings (Tons).

The load rating vehicles are shown in this report under the “LOAD RATING VEHICLES” section.

EVALUATION & RECOMMENDATIONS

This load rating was performed by AECOM and is based on the current condition of the structural bridge components as specified in the plans and the latest Routine Bridge Inspection dated 08/02/2018.

The overall controlling load ratings are governed by various components of the structure under varying limit states.

The Design loading is governed by shear in the pier cap beam between Columns A & B, near the Girder 'C' support. The cap rates below the statutory level for the HL-93 design load for the Strength I Limit State (Inventory RF=0.44; Operating RF=0.57; Train RF=0.36).

The postable Legal vehicles are governed by shear in Exterior Girder 'A' under the Strength I limit state, except for the LTLLM vehicle which is governed by shear in the pier cap. The governing rating factor for posting analysis is 0.77 for the LTLLM vehicle.

The Permit vehicles are governed by shear in the pier cap beam between Columns A & B, near the Girder 'C' support. The cap rates below the statutory level for several Permit vehicles; the controlling Permit load rating factor is 0.50 for the RI-OP3 vehicle.

Beam end bearing load ratings were also performed as directed by RIDOT. The controlling rating factor for the HL-93 design load was 1.34, occurring in Span 2, Girder F at the pier. Since this factor was above 1.0, in accordance with RIDOT Guidelines Section 6.4 it was unnecessary to determine rating factors for all vehicles.

CONCLUSION & RECOMMENDATIONS

AECOM recommends posting the bridge for each vehicle producing a rating factor below 1.0, subject to RIDOT's discretion. AECOM recommends that repairs are made to the pier cap in order to raise the condition factor used to calculate the pier cap capacity. Doing so would raise all Legal rating factors for the cap above 1.0 (although Design and Permit rating factors would still be below 1.0). Repairs should also be made to the ends of the girders, in order to raise the shear capacity. This structure should remain on the standard 24-month inspection cycle, with a special member inspection every year for the pier and girder ends.

REFERENCES & AVAILABLE PLANS

The following documents were used in this rating:

1. Rating procedures were prepared in accordance with the following standards:

    a. AASHTO Manual for Bridge Evaluation, Third Edition (2018)

    b. AASHTO LRFD Bridge Design Specifications, 8th Edition (2017)

    c. RIDOT Bridge Load Rating Guidelines, August 2017

2. Applicable Existing Plans (see Appendix C):

    State of Rhode Island
    Department of Public Works
    Division of Roads and Bridges
    Plan, Profile and Sections of Proposed
    State Highway
    Relocated Route 102
    Burrillville, North Smithfield, Rhode Island
    Rhode Island Federal Aid Project No. S-0330(3)
    East Avenue to Inman Road

    Mohegan Bridge Sheets B23 thru B38
    Standard Details Sheets B2 thru B6
    Dated 1966
    (Applicable Bridge Plans included later this section)

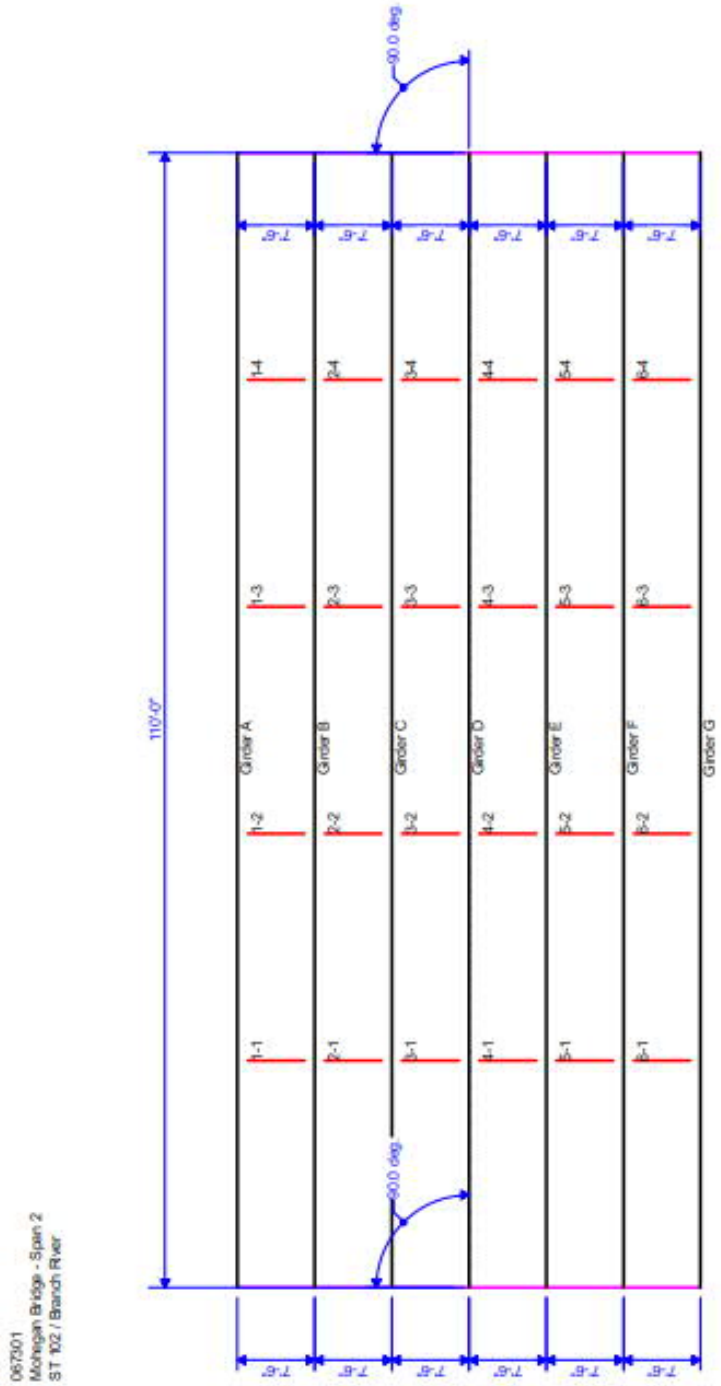

ORIENTATION PLAN
Span 2 shown; Span 1 similar

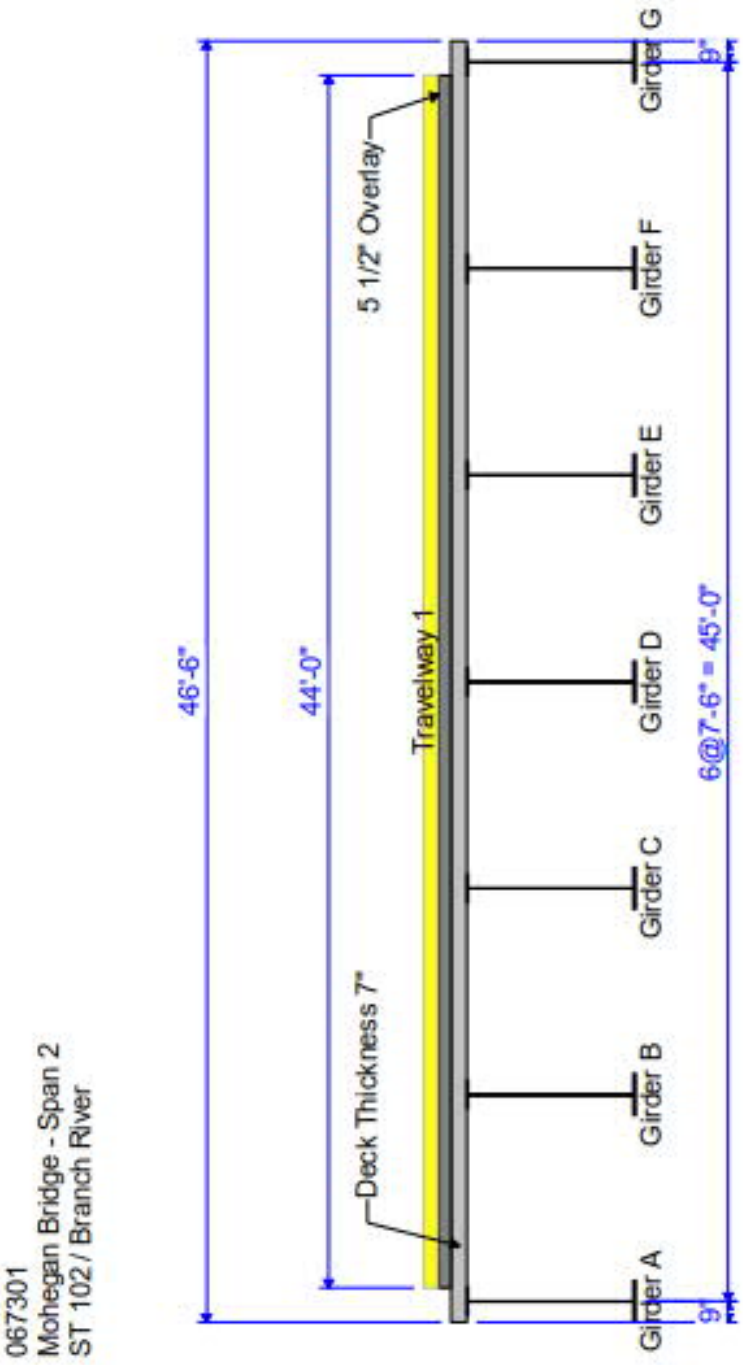

ORIENTATION SECTION
Span 2 shown; Span 1 similar

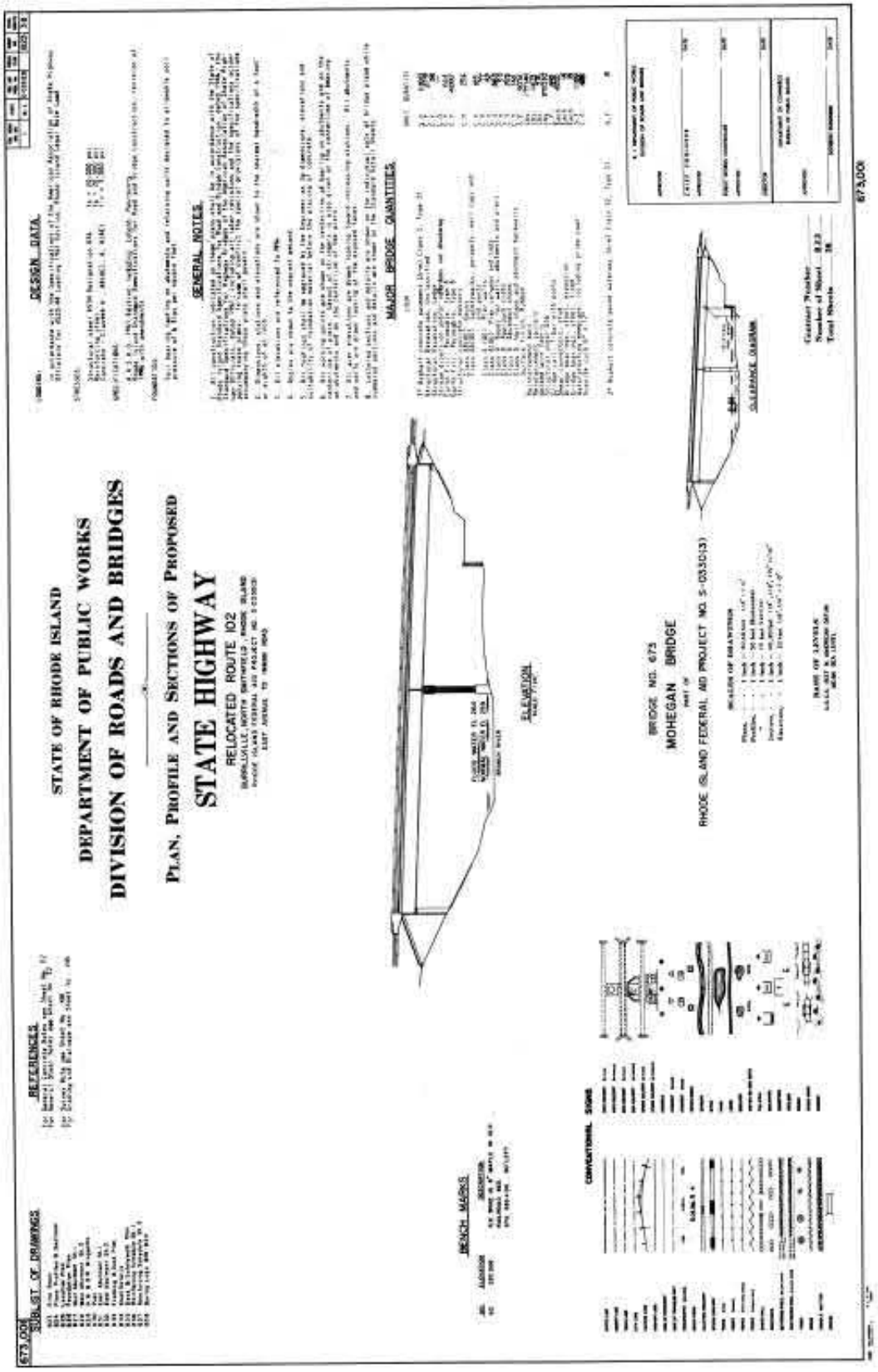
STATE OF RHODE ISLAND
DEPARTMENT OF PUBLIC WORKS
DIVISION OF ROADS AND BRIDGES
PLAN, PROFILE AND SECTIONS OF PROPOSED
STATE HIGHWAY
RELOCATED ROUTE 102
DESIGN DATA
GENERAL NOTES
MAJOR BRIDGE QUANTITIES
ELEVATION
CLEARANCE DIAGRAM
BRIDGE NO. 673
MOHEGAN BRIDGE
RHODE ISLAND FEDERAL AID PROJECT NO. S-033(13)
REFERENCES
BENCH MARKS
CONVENTIONAL SIGNS
SUBLIST OF DRAWINGS
673.00

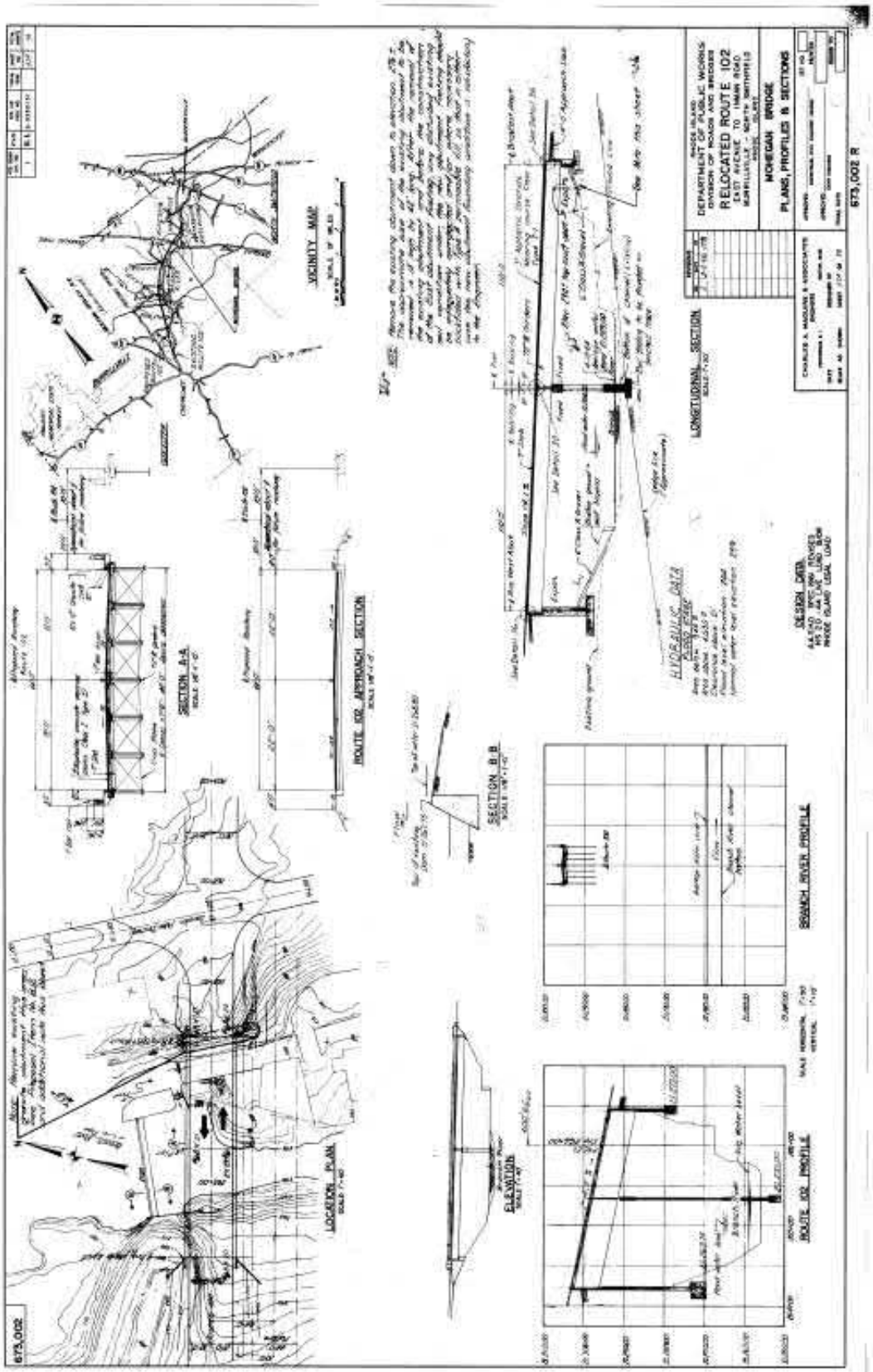
VICINITY MAP
SECTION A-A
ROUTE 102 APPROACH SECTION
SECTION B-B
LOCATION PLAN
ELEVATION
ROUTE 102 PROFILE
BRANCH RIVER PROFILE
LONGITUDINAL SECTION
HYDRAULIC DATA
DESIGN DATA
DEPARTMENT OF PUBLIC WORKS
DIVISION OF ROADS AND BRIDGES
RELOCATED ROUTE 102
MOHEGAN BRIDGE
PLANS, PROFILES & SECTIONS
673.002 R
673.002

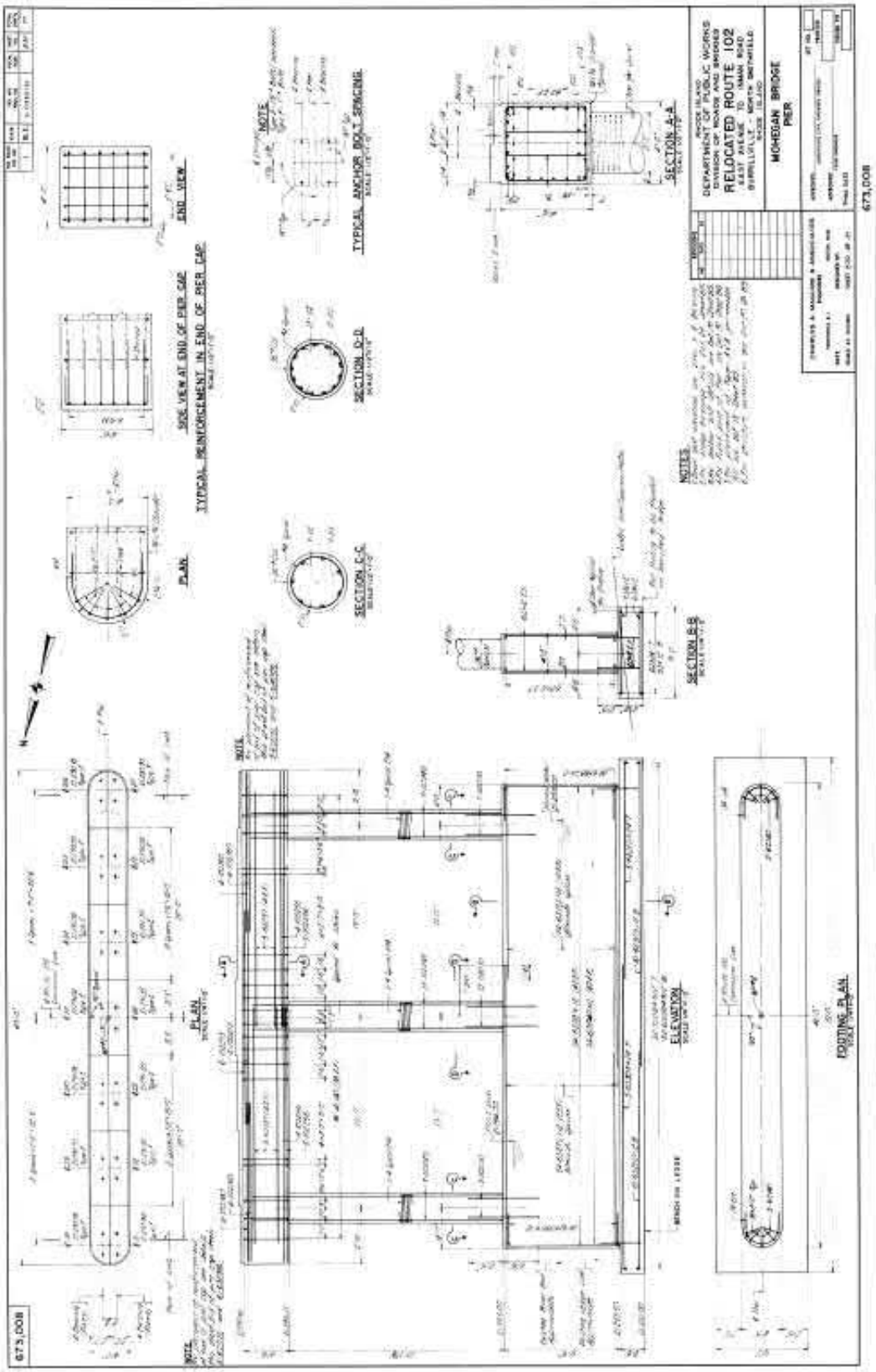
END VIEW
SIDE VIEW AT END OF PIER CAP
TYPICAL REINFORCEMENT IN END OF PIER CAP
PLAN
TYPICAL ANCHOR BOLT SPACING
SECTION C-C
SECTION D-D
SECTION A-A
SECTION B-B
PLAN
ELEVATION
FOOTING PLAN
NOTES
DEPARTMENT OF PUBLIC WORKS
DIVISION OF ROADS AND BRIDGES
RELOCATED ROUTE 102
MICHIGAN BRIDGE
PIER
673.008

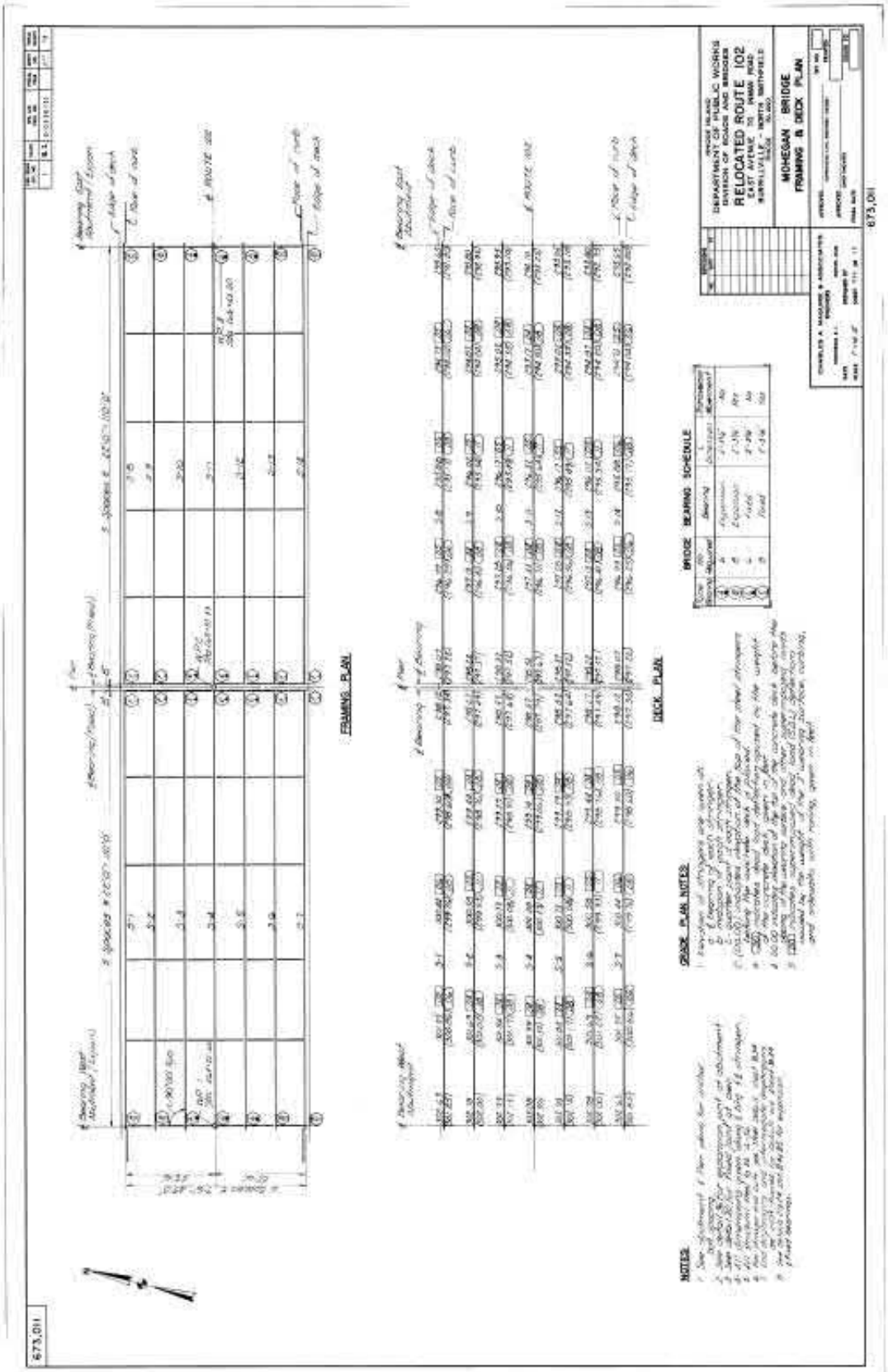
FRAMING PLAN
DECK PLAN
BRIDGE BEARING SCHEDULE
GRADE PLAN NOTES
NOTES
RELOCATED ROUTE 102
MOHEGAN BRIDGE
FRAMING & DECK PLAN
673.011

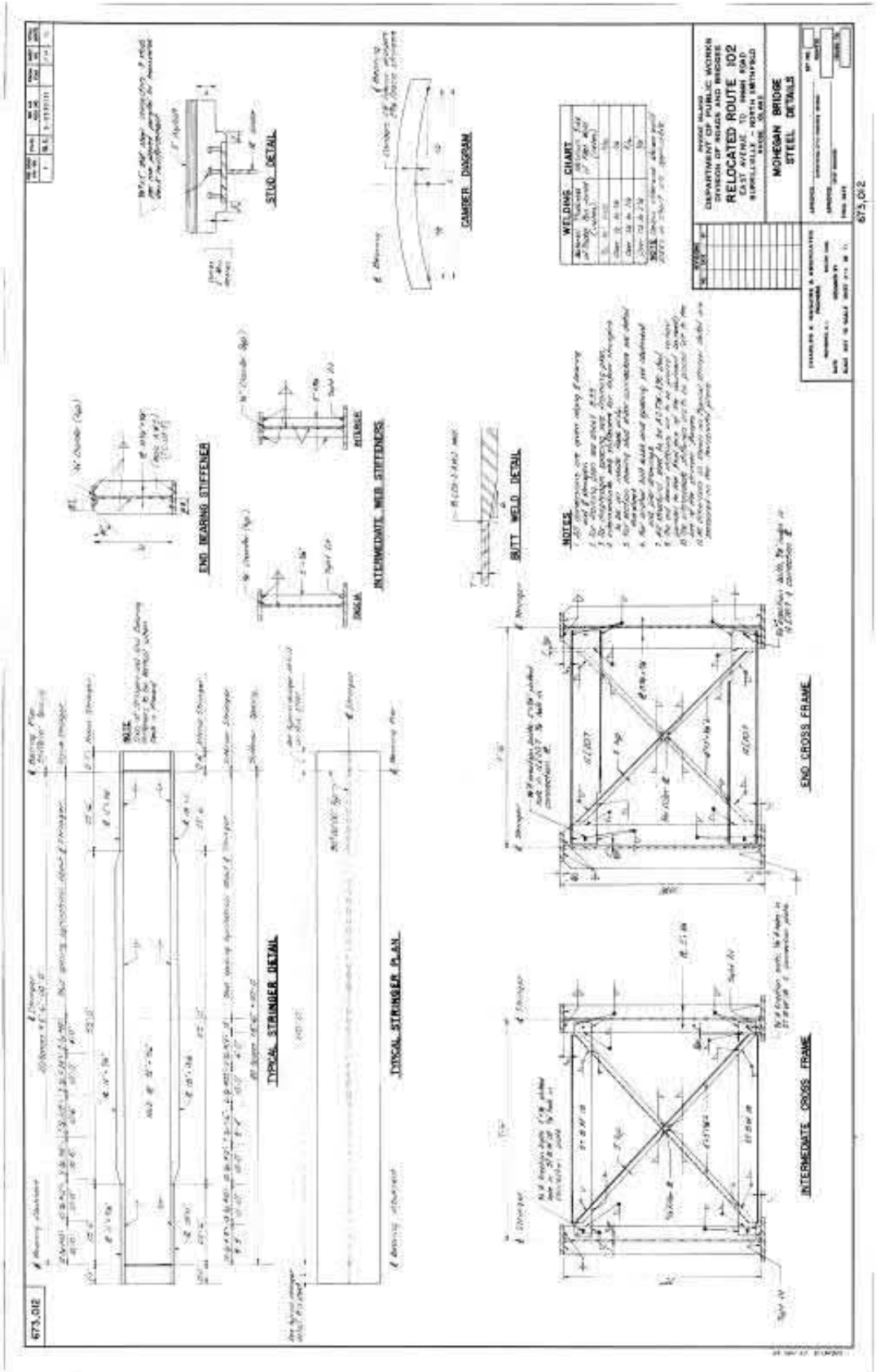
STUD DETAIL
CAMBER DIAGRAM
WELDING CHART
END BEARING STIFFENER
INTERMEDIATE WEB STIFFENERS
BUTT WELD DETAIL
NOTES
TYPICAL STRINGER DETAIL
TYPICAL STRINGER PLAN
END CROSS FRAME
INTERMEDIATE CROSS FRAME
RELOCATED ROUTE 102
MOHEGAN BRIDGE
STEEL DETAILS
673,012

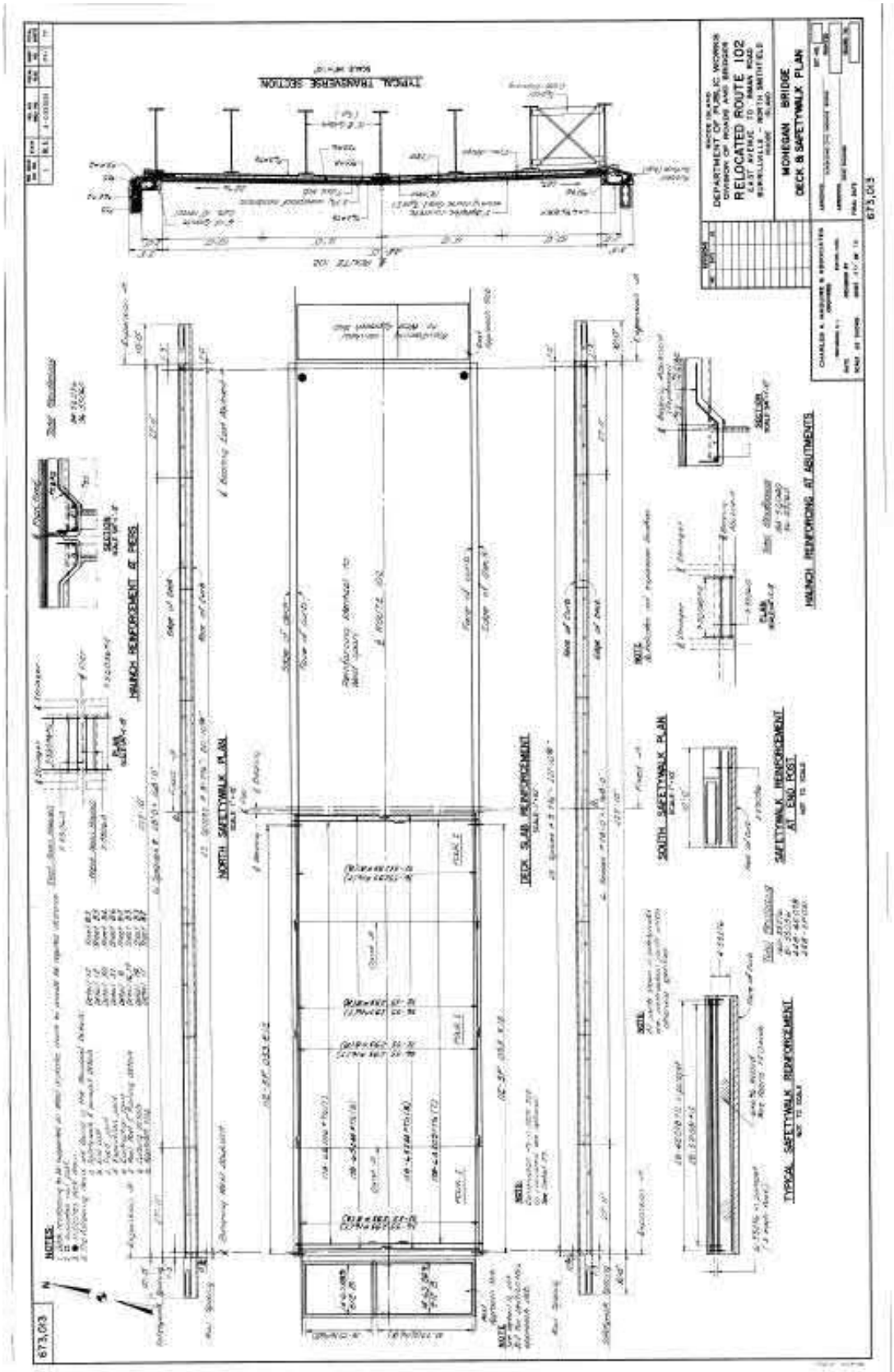
RELOCATED ROUTE 102
MONEGAN BRIDGE
DECK & SAFETYWALK PLAN
673.03
TRENCH TRANSVERSE SECTION
HAUNCH REINFORCEMENT AT PIERS
HAUNCH REINFORCING AT ABUTMENTS
NORTH SAFETYWALK PLAN
DECK SLAB REINFORCEMENT
SOUTH SAFETYWALK PLAN
SAFETYWALK REINFORCEMENT AT END POST
TYPICAL SAFETYWALK REINFORCEMENT
NOTES:

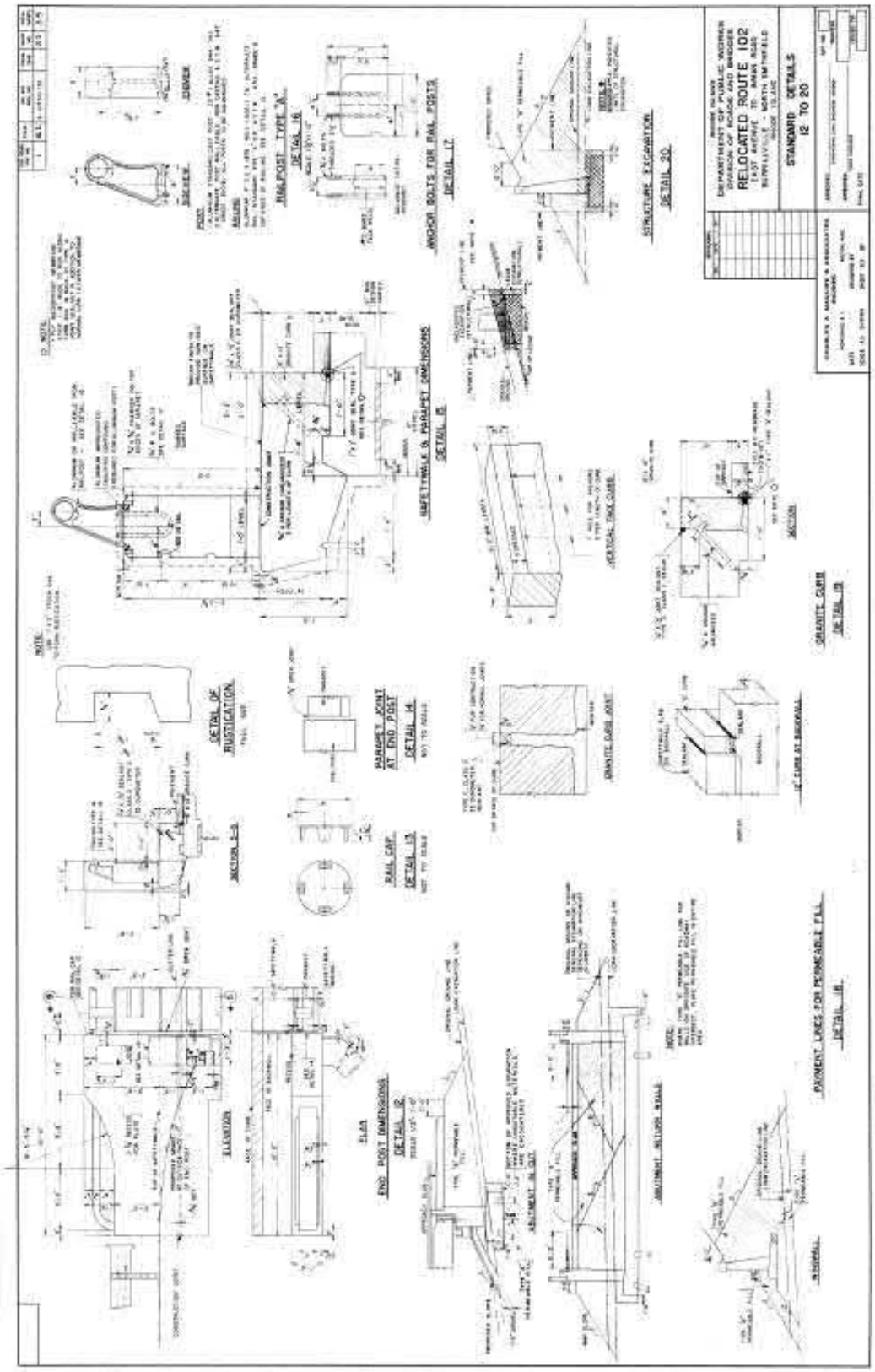
RELOCATED ROUTE 102
STANDARD DETAILS
12 TO 20
DETAIL OF RUSTICATION
PARAPET JOINT AT END POST
DETAIL 14
RAIL CAP
DETAIL 13
END POST DIMENSIONS
DETAIL 12
SLAB
ELEVATION
SECTION A-A
SECTION
RAILPOST TYPE "A"
DETAIL 16
ANCHOR BOLTS FOR RAIL POSTS
DETAIL 17
SAFETYWALK & PARAPET DIMENSIONS
DETAIL 18
STRUCTURE EXCAVATION
DETAIL 20
VERTICAL FACE CURB
GRANITE CURB
DETAIL 19
GRANITE CURB JOINT
12" CURB AT BIKEWALL
PAVEMENT LINES FOR PERMEABLE FILL
DETAIL 18
ABUTMENT RETURN WALLS
ABUTMENT BLOCK
BIKEWALL

LOAD RATING VEHICLES

DESIGN LIVE LOAD TRUCKS

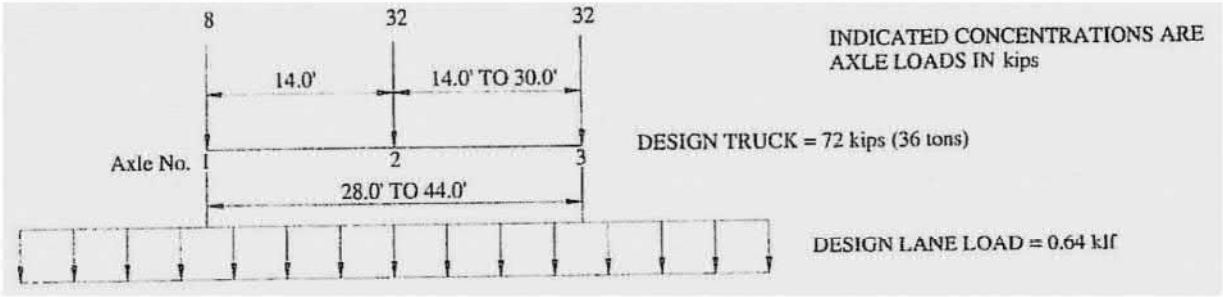

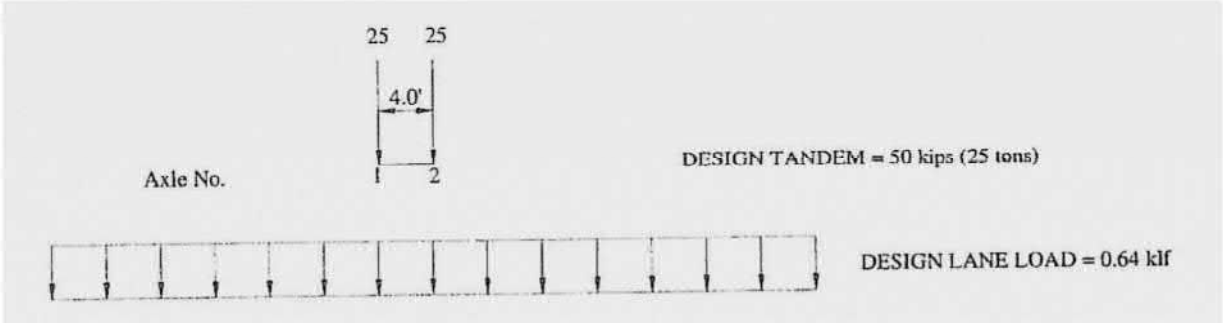

HL-93

LEGAL LIVE LOADS

MBE APPENDIX D6A

AASHTO LEGAL LOADS

a) AASHTO Trucks—Apply for all span lengths and load effects.

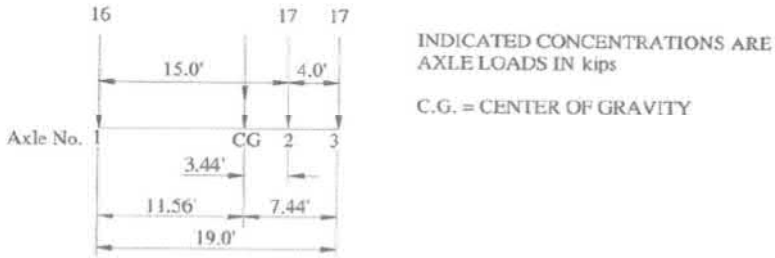

Figure D6A-1 Type 3 Unit Weight = 50 kips (25 tons).

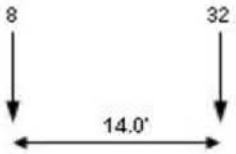

Figure H20 Weight = 40 kips (20 tons).

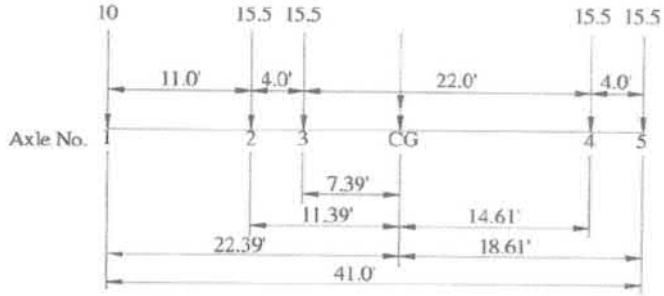

Figure D6A-2 Type 3S2 Unit Weight = 72 kips (36 tons).

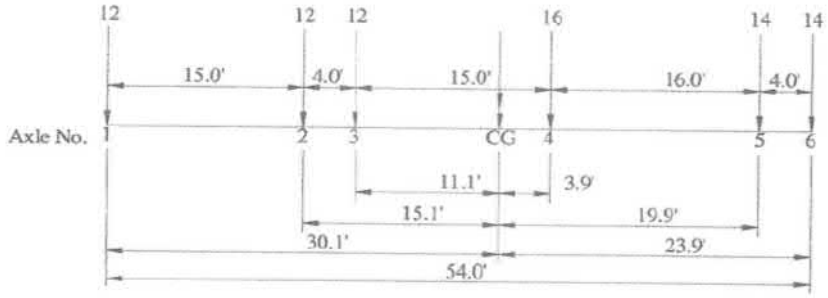

Figure D6A-3 Type 3-3 Unit Weight = 80 kips (40 tons).

LEGAL LIVE LOADS (continued)

APPENDIX A-6A.4 (continued)

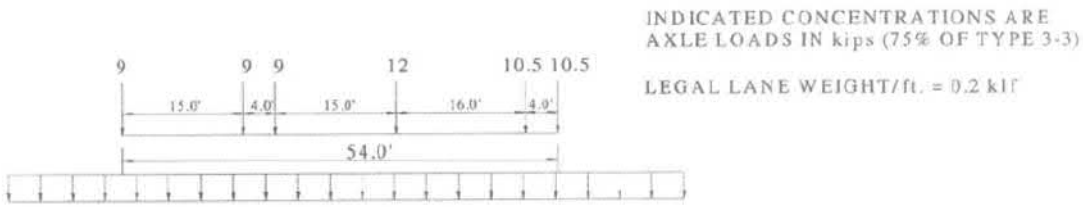

Figure D6A-4 Lane-Type Loading for Spans Greater than 200 ft.

c) Lane-Type Legal Load Model—Apply for negative moment and interior reaction for all span lengths.

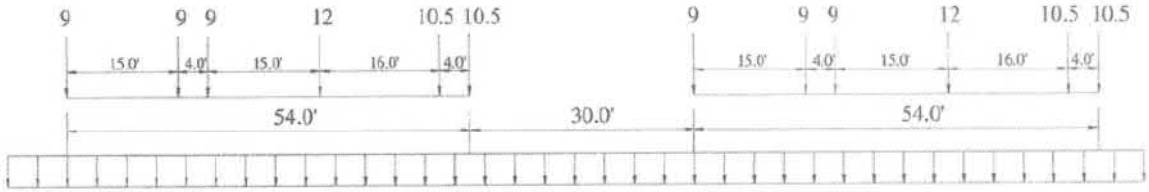

Figure D6A-5 Lane-Type Loading for Negative Moment and Interior Reaction.

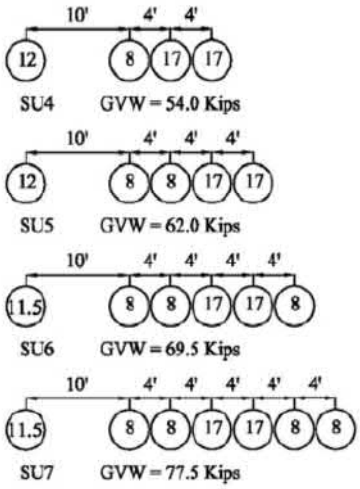

Figure D6A-7 Bridge Posting Loads for Single-Unit SHV's that Meet Federal Bridge Formula B

LEGAL LIVE LOADS (continued)

Figure - RIPTA BUS Legal Load = 41.6 kips (20.8 Tons).

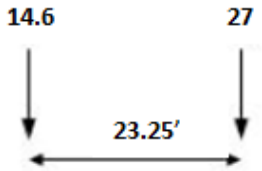

Emergency Vehicles per FHWA Memo dated November 3rd, 2016

Figure: EV2 axle weight and spacing (total weight = 57.5k = 28.8 Tons)

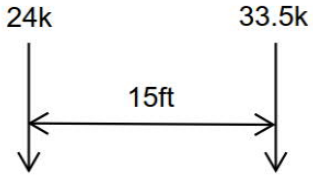

Figure: EV3 axle weight and spacing (total weight = 86k = 43 Tons)

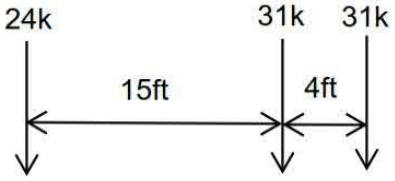

RHODE ISLAND PERMIT VEHICLES

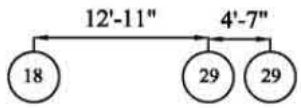

RI 3 (Formerly RI-BP1) **GVW = 76.0 Kips**

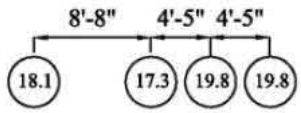

RI 4 (Formerly RI-BP2) **GVW = 75.0 Kips**

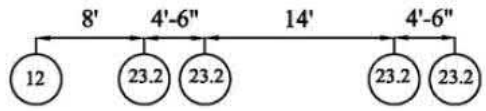

RI 5 (Formerly RI-BP3) **GVW = 104.8 Kips**

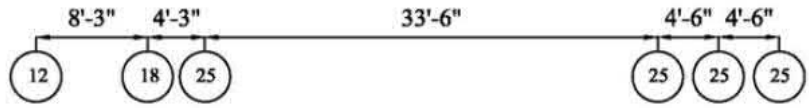

RI 6 (Formerly RI-BP4) **GVW = 130.0 Kips**

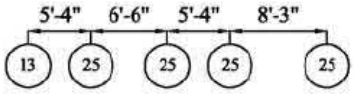

RI-OP1 **GVW = 113.0 Kips**

RI-OP2 **GVW = 160.0 Kips**

RI-OP3 **GVW = 226.0 Kips**

AGREEMENT OF INDEPENDENT REVIEWER

I hereby state that all assumptions, hand calculations, and software inputs have been verified for accuracy for the load rating of Bridge No. 067301.

Date:

Corey Richard, P.E.

APPENDIX A

INSPECTION REPORT

Rhode Island Department of Transportation

Bridge Inspection Report

Structure Inventory and Appraisal Sheet (English Units)

Name: Mohegan | Agency ID: 067301 | Inspec Date: 08/02/2018 | Inspected By: AECOM

IDENTIFICATION

	Route On Structure		44 Rhode Island
Rte. Signing Prefix 5B:	3 State Hwy		RI 102 BRONCO HWY
Level of Service 5C:	1 Mainline	Place Code 4:	Burrillville
Route Number 5D:	00102	SHD District 2:	District 1
Directional Suffix 5E:	0 N/A (NBI)	Feature Intersected 6:	BRANCH RIVER
Border Bridge Code 98:	Not Applicable (P)	County Code 3:	Providence
Border Bridge Number 99:			0.1 Mi S of JCT RI 7
Mile Post 11:	41.743 mi	Latitude 16:	41° 58' 54"
Struc Num 8:	000000000006730	Longitude 17:	071° 37' 03"
% Responsibility:			

INSPECTION

Inspection Date 90:	8/2/2018	Frequency 91:	24 months	Next Inspection:	8/2/2020
FC Inspection Date 93A:	NA	FC Frequency 92A:		Next FC Inspection:	NA
UW Inspection Date 93B:	NA	UW Frequency 92B:		Next UW Inspection:	NA
SI Date 93C:	8/2/2018	SI Frequency 92C:	12 months	Next SI:	8/2/2019
Element Insp. Date:	8/2/2018	Element Frequency:	24 months	Next Elem. Insp.:	8/2/2020

CONDITION

Deck 58: 6 Satisfactory	Super 59: 4 Poor	Sub 60: 4 Poor
Culvert 62: N N/A (NBI)	Channel/Channel Protection 61: 6 Bank Slumping	

CONDITION Poor

SD/FO: SD

SUFF RATE: 33.7

LOAD RATING AND POSTING

Inventory Rating Method 65:	3 LRFR Load & Res. Fact	Operating Rating Method 63:	3 LRFR Load & Res. Fact
Inventory Rating 66:	MS10.0	Operating Rating 64:	MS12.7
Design Load 31:	5 MS 18 (HS 20)		
Posting Status 41:	A Open, no restriction	Posting 70:	5 At/Above Legal Loads

GEOMETRIC DATA

Length Max Span 48:	110.00 ft	Structure Length 49:	226.00
Width Curb to Curb 51:	29.00 ft	Curb/Sdwlk Width L 50A:	2.00
Approach Roadway width (w/ shoulders) 32:	44.00 ft	Curb/Sidewalk Width R 50B:	2.00 ft
		Width Out to Out 52:	47.50 ft
Deck Area:	10,735.00ft²	Median 33:	0 No median
Skew 34:	0.00°	Structure Flared 35:	0 No flare
Vertical Clearance 10:	99.99 ft	Horizontal Clearance 47:	44.00 ft

Minimum Vertical Clearance Over Bridge 53:	99.99 ft
Minimum Vertical Underclearance Reference 54A:	N Feature not hwy or RR
Minimum Vertical Underclearance 54B:	0.00 ft
Minimum Lateral Underclearance Reference R 55A:	N Feature not hwy or RR
Minimum Lateral Underclearance R 55:	0.00 ft
Minimum Lateral Underclearance L 56:	0.00 ft

Rhode Island Department of Transportation

Bridge Inspection Report

Structure Inventory and Appraisal Sheet (English Units)

AGE AND SERVICE

Year Built	27:	1966	ADT	29:	13,939
Type of Service on	42A:	1 Highway	Year Reconstructed	106:	
Type of Service under	42B:	5 Waterway	Detour Length	19:	0.3 mi
Lanes on	28A:	2	Truck ADT	109:	1%
Lanes under	28B:	0	Year of ADT	30:	2014

STRUCTURE TYPE AND MATERIALS

Number of Approach Spans	46:	0	Number of Spans Main Unit	45:	2
Wearing Surface	108A:	6 Bituminous	Main Span Material Design	43A:	3 Steel
Membrane	108B:	9 Other	Main Span Material Design	43B:	02 Stringer/Girder
Deck protection	108C:	None	Deck Type	107:	1 Concrete-Cast-ir

APPRAISAL

Bridge Rail	36A:	0 Substandard	Approach Rail	36C:	0 Substandard
Transition	36B:	0 Substandard	Approach Rail Ends	36D:	0 Substandard
Str Evaluation	67:	4 Minimum Tolerable	Deck Geometry	68:	4 Tolerable
Waterway Adequacy	71:	8 Equal Desirable	Approach Alignment	72:	6 Equal Min Criteria
Scour Critical	113:	8 Stable Above Footing			
Underclearance, Vertical and Horizontal	69:	N Not applicable (NBI)			

CLASSIFICATION

Defense Highway	100:	0 Not a STRAHNET hwy	Parallel Structure	101:	No || bridge exists
Direction of Traffic	102:	2 2-way traffic	Temporary Structure	103:	Not Applicable (P)
Highway System	104:	3 On free road	NBIS Length	112:	Long Enough
Defense Hwy	110:	1 On the NHS	Functional Class	26:	14 Urban Other Princ
Toll Facility	20:	0 Not a STRAHNET hwy	Historical Significance	37:	5 Not eligible for NRHP
Owner	22:	State Highway Agency	Custodian	21:	State Highway Agency

PROPOSED IMPROVEMENTS

Bridge Cost	94:	$626,000	Type of Work	75:	35 Rehabilitate-gen.
Roadway Cost	95:	$62,600	Length of Improvement	76:	226.05
Total Cost	96:	$939,000	Future ADT	114:	16,727
Year of Cost Estimate	97:	2007	Year of Future ADT	115:	2036

NAVIGATION DATA

Navigation Control	38:	Permit Not Required	Horizontal Clearance	40:	0.0 ft
Vertical Clearance	39:	0.0 ft			
Pier Protection	111:	Not Applicable (P)	Lift Bridge Vertical Clearance	116:	

Rhode Island Department of Transportation

Bridge Inspection Report

Structure Inventory and Appraisal Sheet (English Units)

ELEMENT CONDITION STATE DATA

Str Unit	Elm/Env	Description	Total Qty	% in 1	Qty. St. 1	% in 2	Qty. St. 2	% in 3	Qty. St. 3	% in 4	Qty. St. 4
0	**12/3**	**Re Concrete Deck**	**10,735.00**	**98%**	**10,554.00**	**0%**	**0.00**	**2%**	**181.00**	**0%**	**0.00**
	510/3	Wearing Surfaces	9,944.00	100%	9,898.00	0%	2.00	0%	44.00	0%	0.00
	3210/3	*Del/Spall/Patch/Pot(Wear Surf)*	*2.00*	*0%*	*0.00*	*100%*	*2.00*	*0%*	*0.00*	*0%*	*0.00*
	3220/3	*Crack (Wearing Surface)*	*44.00*	*0%*	*0.00*	*0%*	*0.00*	*100%*	*44.00*	*0%*	*0.00*
	1080/3	Delamination/Spall/Patched Area	11.00	0%	0.00	0%	0.00	100%	11.00	0%	0.00
	1090/3	Exposed Rebar	30.00	0%	0.00	0%	0.00	100%	30.00	0%	0.00
	1120/3	Efflorescence/Rust Staining	25.00	0%	0.00	0%	0.00	100%	25.00	0%	0.00
	1130/3	Cracking (RC and Other)	110.00	0%	0.00	0%	0.00	100%	110.00	0%	0.00
0	**107/3**	**Steel Opn Girder/Beam**	**1,582.00**	**85%**	**1,350.00**	**11%**	**173.00**	**3%**	**55.00**	**0%**	**4.00**
	515/3	Steel Protective Coating	26,280.00	96%	25,260.00	0%	0.00	1%	325.00	3%	695.00
	3420/3	*Peel/Bub/Crack(Stl Protect Coat)*	*1,020.00*	*0%*	*0.00*	*0%*	*0.00*	*32%*	*325.00*	*68%*	*695.00*
	1000/3	Corrosion	232.00	0%	0.00	75%	173.00	24%	55.00	2%	4.00
	8368/3	Graffiti	482.00	100%	482.00	0%	0.00	0%	0.00	0%	0.00
0	**205/3**	**Re Conc Column**	**3.00**	**0%**	**0.00**	**33%**	**1.00**	**67%**	**2.00**	**0%**	**0.00**
	1080/3	Delamination/Spall/Patched Area	1.00	0%	0.00	100%	1.00	0%	0.00	0%	0.00
	1090/3	Exposed Rebar	1.00	0%	0.00	0%	0.00	100%	1.00	0%	0.00
	1130/3	Cracking (RC and Other)	1.00	0%	0.00	0%	0.00	100%	1.00	0%	0.00
	8368/3	Graffiti	180.00	100%	180.00	0%	0.00	0%	0.00	0%	0.00
0	**210/3**	**Re Conc Pier Wall**	**46.00**	**57%**	**26.00**	**0%**	**0.00**	**43%**	**20.00**	**0%**	**0.00**
	1130/3	Cracking (RC and Other)	20.00	0%	0.00	0%	0.00	100%	20.00	0%	0.00
	8368/3	Graffiti	426.00	100%	426.00	0%	0.00	0%	0.00	0%	0.00
0	**215/3**	**Re Conc Abutment**	**146.00**	**19%**	**28.00**	**43%**	**63.00**	**38%**	**55.00**	**0%**	**0.00**
	1080/3	Delamination/Spall/Patched Area	35.00	0%	0.00	43%	15.00	57%	20.00	0%	0.00
	1090/3	Exposed Rebar	10.00	0%	0.00	0%	0.00	100%	10.00	0%	0.00
	1120/3	Efflorescence/Rust Staining	10.00	0%	0.00	0%	0.00	100%	10.00	0%	0.00
	1130/3	Cracking (RC and Other)	15.00	0%	0.00	0%	0.00	100%	15.00	0%	0.00
	8368/3	Graffiti	756.00	100%	756.00	0%	0.00	0%	0.00	0%	0.00
0	**234/3**	**Re Conc Pier Cap**	**49.00**	**0%**	**0.00**	**0%**	**0.00**	**31%**	**15.00**	**69%**	**34.00**
	1080/3	Delamination/Spall/Patched Area	23.00	0%	0.00	0%	0.00	39%	9.00	61%	14.00
	1090/3	Exposed Rebar	20.00	0%	0.00	0%	0.00	0%	0.00	100%	20.00
	1120/3	Efflorescence/Rust Staining	5.00	0%	0.00	0%	0.00	100%	5.00	0%	0.00
	1130/3	Cracking (RC and Other)	1.00	0%	0.00	0%	0.00	100%	1.00	0%	0.00
0	**301/3**	**Pourable Joint Seal**	**49.00**	**67%**	**33.00**	**33%**	**16.00**	**0%**	**0.00**	**0%**	**0.00**
	2320/3	Seal Adhesion	16.00	0%	0.00	100%	16.00	0%	0.00	0%	0.00
0	**302/3**	**Compressn Joint Seal**	**49.00**	**6%**	**3.00**	**0%**	**0.00**	**76%**	**37.00**	**18%**	**9.00**
	2350/3	Debris Impaction	37.00	0%	0.00	0%	0.00	100%	37.00	0%	0.00
	2360/3	Adjacent Deck or Header	12.00	25%	3.00	0%	0.00	0%	0.00	75%	9.00
0	**311/3**	**Moveable Bearing**	**14.00**	**0%**	**0.00**	**71%**	**10.00**	**14%**	**2.00**	**14%**	**2.00**
	515/3	Steel Protective Coating	14.00	29%	4.00	0%	0.00	0%	0.00	71%	10.00
	3420/3	*Peel/Bub/Crack(Stl Protect Coat)*	*10.00*	*0%*	*0.00*	*0%*	*0.00*	*0%*	*0.00*	*100%*	*10.00*
	1000/3	Corrosion	7.00	0%	0.00	86%	6.00	14%	1.00	0%	0.00
	1020/3	Connection	4.00	0%	0.00	100%	4.00	0%	0.00	0%	0.00
	2220/3	Alignment	3.00	0%	0.00	0%	0.00	33%	1.00	67%	2.00
0	**313/3**	**Fixed Bearing**	**14.00**	**0%**	**0.00**	**93%**	**13.00**	**7%**	**1.00**	**0%**	**0.00**
	515/3	Steel Protective Coating	14.00	0%	0.00	0%	0.00	14%	2.00	86%	12.00
	3420/3	*Peel/Bub/Crack(Stl Protect Coat)*	*14.00*	*0%*	*0.00*	*0%*	*0.00*	*14%*	*2.00*	*86%*	*12.00*
	1000/3	Corrosion	9.00	0%	0.00	100%	9.00	0%	0.00	0%	0.00
	1020/3	Connection	5.00	0%	0.00	80%	4.00	20%	1.00	0%	0.00
0	**321/3**	**Re Conc Approach Slab**	**880.00**	**100%**	**880.00**	**0%**	**0.00**	**0%**	**0.00**	**0%**	**0.00**
	510/3	Wearing Surfaces	880.00	68%	594.00	0%	0.00	33%	286.00	0%	0.00
	3220/3	*Crack (Wearing Surface)*	*286.00*	*0%*	*0.00*	*0%*	*0.00*	*100%*	*286.00*	*0%*	*0.00*
0	**8214/3**	**R/C Wingwall**	**54.00**	**50%**	**27.00**	**50%**	**27.00**	**0%**	**0.00**	**0%**	**0.00**
	1120/3	Efflorescence/Rust Staining	27.00	100%	27.00	0%	0.00	0%	0.00	0%	0.00
	1130/3	Cracking (RC and Other)	27.00	0%	0.00	100%	27.00	0%	0.00	0%	0.00
	8368/3	Graffiti	120.00	100%	120.00	0%	0.00	0%	0.00	0%	0.00
0	**8218/3**	**Backwall, All Types**	**98.00**	**0%**	**0.00**	**63%**	**62.00**	**36%**	**35.00**	**1%**	**1.00**

	1080/3	Delamination/Spall/Patched Area	17.00	0%	0.00	0%	0.00	100%	17.00	0%	0.00
	1090/3	Exposed Rebar	8.00	0%	0.00	0%	0.00	88%	7.00	13%	1.00
	1120/3	Efflorescence/Rust Staining	30.00	0%	0.00	100%	30.00	0%	0.00	0%	0.00
	1130/3	Cracking (RC and Other)	31.00	0%	0.00	100%	31.00	0%	0.00	0%	0.00
	1180/3	Abrasion	1.00	0%	0.00	100%	1.00	0%	0.00	0%	0.00
0	**8305/3**	**Asphaltic Joint Material**	**49.00**	**100%**	**49.00**	**0%**	**0.00**	**0%**	**0.00**	**0%**	**0.00**
0	**8335/3**	**Guardrail, Vehicular**	**848.00**	**81%**	**684.00**	**17%**	**140.00**	**3%**	**24.00**	**0%**	**0.00**
	515/3	Steel Protective Coating	848.00	90%	763.00	10%	85.00	0%	0.00	0%	0.00
	1000/3	Corrosion	85.00	0%	0.00	100%	85.00	0%	0.00	0%	0.00
	7000/3	Damage	78.00	0%	0.00	69%	54.00	31%	24.00	0%	0.00
0	**8336/3**	**Conc Bridge Parapet**	**448.00**	**82%**	**368.00**	**9%**	**40.00**	**9%**	**40.00**	**0%**	**0.00**
	1120/3	Efflorescence/Rust Staining	40.00	0%	0.00	0%	0.00	100%	40.00	0%	0.00
	1130/3	Cracking (RC and Other)	40.00	0%	0.00	100%	40.00	0%	0.00	0%	0.00
0	**8370/3**	**Steel Diaphragms**	**72.00**	**64%**	**46.00**	**11%**	**8.00**	**25%**	**18.00**	**0%**	**0.00**
	515/3	Steel Protective Coating	864.00	71%	612.00	0%	0.00	0%	0.00	29%	252.00
	3420/3	*Peel/Bub/Crack(Stl Protect Coat)*	*252.00*	*0%*	*0.00*	*0%*	*0.00*	*0%*	*0.00*	*100%*	*252.00*
	1000/3	Corrosion	24.00	0%	0.00	25%	6.00	75%	18.00	0%	0.00
	8368/3	Graffiti	54.00	100%	54.00	0%	0.00	0%	0.00	0%	0.00
	8375/3	Loose or Missing Bolts defect	2.00	0%	0.00	100%	2.00	0%	0.00	0%	0.00
0	**8398/1**	**Curb/sidewalks - Con**	**448.00**	**88%**	**394.00**	**12%**	**54.00**	**0%**	**0.00**	**0%**	**0.00**
	1180/1	Abrasion	54.00	0%	0.00	100%	54.00	0%	0.00	0%	0.00

Rhode Island Department of Transportation

Bridge Inspection Report

Structure Inventory and Appraisal Sheet (English Units)

STRUCTURE UNIT: 0

ELEM NBR	ELEMENT NAME	ENV	INSP. DATE	QUANTITY	UNITS	QTY CS 1	QTY CS 2	QTY CS 3	QTY CS 4
12	**Re Concrete Deck**	**3**	**08/02/2018**	**10,735.00**	**sq.ft**	**10,554.00**	**0.00**	**181.00**	**0.00**

There is a reinforced concrete deck overlaid with a bituminous wearing surface throughout the bridge (see photos 5 -8).

510	Wearing Surfaces	3	08/02/2018	9,944.00	sq.ft	9,898.00	2.00	44.00	0.00

There is a bituminous wearing surface throughout the bridge.

There is typically light vegetation growth along the curbs with light debris and sand accumulation throughout the bridge (see photo 13).

3210	*Del/Spall/Patch/Pot(Wear Surf)*	*3*	*08/02/2018*	*2.00*	*sq.ft*	*0.00*	*2.00*	*0.00*	*0.00*

There is a 2'-0" long x up to 10" wide x 4" deep spall filled with sand/debris at the pier deck joint on the east shoulder (see photo 14).

There is a 2'-0" long x 1'-0" wide x 1" deep spall at midpsan of span 2 near the east shoulder (see photo 10).

3220	*Crack (Wearing Surface)*	*3*	*08/02/2018*	*44.00*	*sq.ft*	*0.00*	*0.00*	*44.00*	*0.00*

Up to 1/4" wide sealed and unsealed cracks throughout (see photos 7 & 8).

There is a full width x up to 1/4" wide transverse crack over the pier where the deck joint has been paved over(see photo 12).

1080	Delamination/Spall/Patched Area	3	08/02/2018	11.00	sq.ft	0.00	0.00	11.00	0.00

The underside of the reinforced concrete deck contains the following spalls and delaminations:

SPAN #1:
- There are concrete patched areas in bay 'B' - 'C' at south abutment #1.
- West overhang at pier: 10" wide x 4" long x 4" deep spall.
- East overhang at south abutment #1: 2'-0" long x 1'-0" high x 4" deep haunch spall.
- East overhang at midspan: 6" long x 1'-0" wide x 1" deep spall with exposed rebar.
- Bay 'A' between diaphragm 2-4: two (2) 5'-0" long x 1'-0" long delaminations with minor spalls (see photo 23).
- Bay 'A' between pier and diaphragm: 3'-0" long x 2'-0" wide delamination.
- Bay 'A' at pier: 2'-5" long x 2'-0" wide delamination and adjacent 10" long x 18" wide spall around drain hole. (see photo 22).

ABOVE THE PIER & BEYOND BEARING:
- There are up to 4'-0" wide x 6" long x 7" deep spalls with exposed rebars in bay 'B', 'E' and 'F' (see photo 26).
- There are up to full width x up to 6" long X 1'-0" wide spalls with exposed rebars in bay 'C' and 'D' (see photo 24).

SPAN #2:
- Bay 'F' at pier: two (2) 3'-0" wide x 16" long delamination and 1'-0" wide x 8" long delamination (see photo 27).

1090	Exposed Rebar	3	08/02/2018	30.00	sq.ft	0.00	0.00	30.00	0.00

See Defect 1080 - Delamination/Spall/Patched area for comments associated with exposed rebar.

1120	Efflorescence/Rust Staining	3	08/02/2018	25.00	sq.ft	0.00	0.00	25.00	0.00

The underside of deck typically exhibits isolatted scattered rust staining in bay 'A' through 'F' at both abutments and at the pier in span 1 and 2 (see photo 25).

1130	Cracking (RC and Other)	3	08/02/2018	110.00	sq.ft	0.00	0.00	110.00	0.00

There are scattered up to full length hairline transverse cracks, some with rust staining in bay 'D' and 'F' at pier 1 span 1 (see photo 25) and bay 'B' - 'D' at pier 1 span 2.

There are scattered hairline mapcracking with rust staining throughout bay 'E' in span 2.

ELEM NBR	ELEMENT NAME	ENV	INSP. DATE	QUANTITY	UNITS	QTY CS 1	QTY CS 2	QTY CS 3	QTY CS 4
107	**Steel Opn Girder/Beam**	**3**	**08/02/2018**	**1,582.00**	**ft**	**1,350.00**	**173.00**	**55.00**	**4.00**

There are seven (7) welded steel plate girders labeled girder 'A' through 'G' from west to east (see photos 6).

The girder ends have areas of up to 100% loss. See attached document "Element 107 - Corrosion.pdf" for conditions and locations.

515	Steel Protective Coating	3	08/02/2018	26,280.00	sq.ft	25,260.00	0.00	325.00	695.00

The steel girders have a painted steel protective coating.

3420	*Peel/Bub/Crack(Stl Protect Coat)*	*3*	*08/02/2018*	*1,020.00*	*sq.ft*	*0.00*	*0.00*	*325.00*	*695.00*

There is typically areas of heavy peeling paint of the girder ends at pier in both span 1 and 2 (see photos 28-37).

1000	Corrosion	3	08/02/2018	232.00	ft	0.00	173.00	55.00	4.00

Girder ends exhibits typical peeling paint with scattered section loss to lower webs in front of bearing stiffeners and isolated loss to the webs beyond stiffeners and bottom flanges (see photos 28-37).

See attached document "Element 107 - Corrosion.pdf" for locations and conditions.

8368	Graffiti	3	08/02/2018	482.00	ft	482.00	0.00	0.00	0.00

There are typically heavy areas of graffiti of the girder ends and diaphragms at north abutment #2 (see photos 33 & 46) . There are also scattered isolated areas of light graffiti of griders 'B' and 'C' at midspan.

ELEM NBR	ELEMENT NAME	ENV	INSP. DATE	QUANTITY	UNITS	QTY CS 1	QTY CS 2	QTY CS 3	QTY CS 4
205	**Re Conc Column**	**3**	**08/02/2018**	**3.00**	**each**	**0.00**	**1.00**	**2.00**	**0.00**

There are three (3) reinforced concrete columns labeled column "A" through "C" from west to east (see photos 49 & 54).

See attached documents "Pier #1 North Face.pdf and Pier #1 South Face.pdf" for locations and conditions.

1080	Delamination/Spall/Patched Area	3	08/02/2018	1.00	each	0.00	1.00	0.00	0.00

The columns have up to full circumference delaminations and up to 6'-0" high x 4'-0" wide x 3-1/2" deep spalls at the top of the columns (see photos 49-55).

See attached documents " Pier #1 North Face and Pier #1 South Face" for locations and conditions.

1090	Exposed Rebar	3	08/02/2018	1.00	each	0.00	0.00	1.00	0.00

See Defect 1080 - Delaminations/Spalls/Patched Area for comments.

1130	Cracking (RC and Other)	3	08/02/2018	1.00	each	0.00	0.00	1.00	0.00

There are up to 3/16" wide x full height cracks in the columns and scattered hairline mapcracking on columns 'A' and 'C '.

See attached documents "Pier #1 South Face.pdf and Pier #1 North Face.pdf" for locations and conditions.

8368	Graffiti	3	08/02/2018	180.00	each	180.00	0.00	0.00	0.00

All the columns have areas of moderate graffiti (see photos 54).

See attached documents "Pier #1 North Face.pdf and Pier #1 South Face.pdf" for locations and conditions.

ELEM NBR	ELEMENT NAME	ENV	INSP. DATE	QUANTITY	UNITS	QTY CS 1	QTY CS 2	QTY CS 3	QTY CS 4
210	**Re Conc Pier Wall**	**3**	**08/02/2018**	**46.00**	**ft**	**26.00**	**0.00**	**20.00**	**0.00**

There is a reinforced concrete pier wall in the river channel that supports the three (3) concrete columns (see photos 49 & 54).

See attached documents "Pier #1 North Face.pdf and Pier #1 South Face.pdf" for locations and conditions.

1130	Cracking (RC and Other)	3	08/02/2018	20.00	ft	0.00	0.00	20.00	0.00

The pier wall have scattered mapcracking areas up to 4'-0" high x 15'-0" long x up to 1/8" wide. There are two (2) 1/16 " wide x full height vertical cracks that continues across the topside between columns 'A' and 'B' (see photo 53).

See attached documents "Pier #1 North Face.pdf and Pier #1 South Face.pdf" for locations and conditions.

8368	Graffiti	3	08/02/2018	426.00	ft	426.00	0.00	0.00	0.00

Both faces of the pier wall have areas of moderate graffiti (see photos 49 & 54).

See attached documents "Pier #1 North Face.pdf and Pier #1 South Face.pdf" for locations and conditions.

ELEM NBR	ELEMENT NAME	ENV	INSP. DATE	QUANTITY	UNITS	QTY CS 1	QTY CS 2	QTY CS 3	QTY CS 4
215	**Re Conc Abutment**	**3**	**08/02/2018**	**146.00**	**ft**	**28.00**	**63.00**	**55.00**	**0.00**

There are reinforced concrete abutments at both ends of the bridge labeled south abutment #1 and north abutment #2 (see photos 42 & 45).

The bridge seat at south abutment #1 has up to 20" high build-up of construction debris (see photos 43 & 44).

See attached documents "South Abutment #1.pdf and North Abutment #2.pdf" for locations and conditions.

1080	Delamination/Spall/Patched Area	3	08/02/2018	35.00	ft	0.00	15.00	20.00	0.00

The south abutment #1 has up to 8'-0" high x up to 20" wide x up to 2" deep spalls, some with exposed rebar and full height x up to 54" wide delaminations (see photo 43).

The north abutment #2 has up to 15" wide x up to 15" high x up to 2-1/2" deep spalls and up to 51" wide x 36" high delaminations (see photo 45).

See attached documents "South Abutment #1.pdf and North Abutment #2.pdf" for locations and conditions.

1090	Exposed Rebar	3	08/02/2018	10.00	ft	0.00	0.00	10.00	0.00

The south abutment #1 has spalls with exposed rebar up to 2'-0" in diameter x 3" deep (see photo 42).

See attached documents "South Abutment #1.pdf and North Abutment #2.pdf" for locations and conditions.

1120	Efflorescence/Rust Staining	3	08/02/2018	10.00	ft	0.00	0.00	10.00	0.00

The abutments exhibits areas of hairline vertical and mapcracks with and without efflorescence and rust stains (see photos 42 & 45).

See attached documents "South Abutment #1.pdf and North Abutment #2.pdf" for locations and conditions.

1130	Cracking (RC and Other)	3	08/02/2018	15.00	ft	0.00	0.00	15.00	0.00

See Defect 1120 - Efflorescence /Rust Staining for comments.

8368	Graffiti	3	08/02/2018	756.00	ft	756.00	0.00	0.00	0.00

The south abutment #1 has an area of moderate graffiti (see photo 42).
The North Abutment # 2 has an area of moderate-heavy graffiti (see photos 45 & 46).

See attached documents "South Abutment #1.pdf and North Abutment #2.pdf" for locations and conditions.

ELEM NBR	ELEMENT NAME	ENV	INSP. DATE	QUANTITY	UNITS	QTY CS 1	QTY CS 2	QTY CS 3	QTY CS 4
234	Re Conc Pier Cap	3	08/02/2018	49.00	ft	0.00	0.00	15.00	34.00

Pier 1 has a reinforced concrete pier cap; the north face has significantly greater deterioration than the south face (see photos 49 & 54).

See attached documents "Pier #1 North Face.pdf and Pier #1 South Face.pdf" for locations and conditions.

1080	Delamination/Spall/Patched Area	3	08/02/2018	23.00	ft	0.00	0.00	9.00	14.00

The pier cap has up to 20'-0" long x up to 40" high x up to 12" deep spalls with exposed/debonded rebar and broken stirrups and up to full width delaminations on the underside (see photos 49-51).

See attached documents "Pier #1 North Face.pdf and Pier #1 South Face.pdf" for locations and conditions.

1090	Exposed Rebar	3	08/02/2018	20.00	ft	0.00	0.00	0.00	20.00

See Defect 1080 - Delamination/Spall/Patched Area for comments

1120	Efflorescence/Rust Staining	3	08/02/2018	5.00	ft	0.00	0.00	5.00	0.00

The pier cap has hairline vertical, horizontal and mapcracking up to 8'-0" wide x full height, some with efflorescence and rust stains throughout (see photos 49-51, 54 & 55).

See attached documents "Pier #1 North Face.pdf and Pier #1 South Face.pdf" for locations and conditions.

1130	Cracking (RC and Other)	3	08/02/2018	1.00	ft	0.00	0.00	1.00	0.00

See Defect 1120 - Efflorescence and Rust Staining for comments.

ELEM NBR	ELEMENT NAME	ENV	INSP. DATE	QUANTITY	UNITS	QTY CS 1	QTY CS 2	QTY CS 3	QTY CS 4
301	Pourable Joint Seal	3	08/02/2018	49.00	ft	33.00	16.00	0.00	0.00

There is a pourable deck joint seal at the pier deck joint (see photos 12-14). The pourable deck joint seal has been paved over in the travel lanes, has light vegetation growth and light accumulation of sand/debris along the curb line (see photo 13).

2320	Seal Adhesion	3	08/02/2018	16.00	ft	0.00	16.00	0.00	0.00

There is a full width x up to 1/4" wide transverse crack over the pier deck joint where the seal has been paved over (see photos 12 & 14). There is a 4'-0" wide x 1'-0" long x 1" deep depression with failed adhesion filled with sand/debris at the west curb (see photo 13).

ELEM NBR	ELEMENT NAME	ENV	INSP. DATE	QUANTITY	UNITS	QTY CS 1	QTY CS 2	QTY CS 3	QTY CS 4
302	Compressn Joint Seal	3	08/02/2018	49.00	ft	3.00	0.00	37.00	9.00

There is a compression joint seal at north abutment #2 (see photo 15).

2350	Debris Impaction	3	08/02/2018	37.00	ft	0.00	0.00	37.00	0.00

The north deck joint has light-moderate accumlation of sand/debris (see photos 15 & 16).

2360	Adjacent Deck or Header	3	08/02/2018	12.00	ft	3.00	0.00	0.00	9.00

There is a 1'-6" long x 6" wide x 2" deep spall and a 7'-6" wide x 3" deep spall undermining the joint armor (see photos 15 & 16).

ELEM NBR	ELEMENT NAME	ENV	INSP. DATE	QUANTITY	UNITS	QTY CS 1	QTY CS 2	QTY CS 3	QTY CS 4
311	**Moveable Bearing**	**3**	**08/02/2018**	**14.00**	**each**	**0.00**	**10.00**	**2.00**	**2.00**

There are fourteen (14) moveable bearings lableded bearing 'A' through 'G' at south abutment #1 and north abutment #2.

The south abutment #1 bearings typically exhibit 1/2" expansion at 90's degrees fahrenheit.

The north abutment #2 bearing 'A' is expanded 1/4" (see photo 32) and bearing 'B' is expanded 1" north at 90's degrees Fahrenheit. Bearings 'B' through 'F' at south abutment #1 are covered in heavy construction debris (see photo 44).

515	Steel Protective Coating	3	08/02/2018	14.00	sq.ft	4.00	0.00	0.00	10.00

The moveable bearings have a painted steel protective coating.

3420	*Peel/Bub/Crack(Stl Protect Coat)*	*3*	*08/02/2018*	*10.00*	*sq.ft*	*0.00*	*0.00*	*0.00*	*10.00*

The bearings at both abutment typically exhibits up to 100% loss of the painted steel protective coating (see photos 28, 32 & 33).

1000	Corrosion	3	08/02/2018	7.00	each	0.00	6.00	1.00	0.00

The bearings at both abutments exhibit heavy rust throughout.

SOUTH ABUTMENT #1:

- Bearing "A" has complete loss of the East keeper plate.
- Bearing "G" has complete loss of the East keeper plate

NORTH ABUTMENT #2:

- Bearing "B" has pack rust throughout up to 1/4".

1020	Connection	3	08/02/2018	4.00	each	0.00	4.00	0.00	0.00

SOUTH ABUTMENT #1: The previously noted comments below were unable to be verified, bearings 'B' through 'F' are covered in heavy construction debris (see photo 44).

- Bearing 'A' is missing the east anchor bolt.
- Bearing 'F' is missing the east anchor bolt.

NORTH ABUTMENT #2:

- Bearing 'C' is missing the East anchor bolt nut.
- Bearing 'D' is missing the East anchor bolt nut.
- Bearing 'F' is missing the East anchor bolt nut.
- Bearing 'G' is missing both the East and West anchor bolt nuts.

2220	Alignment	3	08/02/2018	3.00	each	0.00	0.00	1.00	2.00

SOUTH ABUTMENT #1:

The previously noted comments below were unable to be verified, bearings 'B' through 'F' are covered in heavy construction debris.

- Bearing A is shifted 1" to the East. There is also up to 5/8" gap between the sole plate and the masonry plate on the East side.
- Bearing F exhibits out of plane movement with 4" expansion on the East side and 1/2" expansion on the West side.
- Bearing G is shifted 1-1/2" to the West and is in contact with the West anchor bolt.

ELEM NBR	ELEMENT NAME	ENV	INSP. DATE	QUANTITY	UNITS	QTY CS 1	QTY CS 2	QTY CS 3	QTY CS 4
313	**Fixed Bearing**	**3**	**08/02/2018**	**14.00**	**each**	**0.00**	**13.00**	**1.00**	**0.00**

There are fourteen (14) fixed bearings lableded bearing 'A' through 'G' at pier 1 in span 1 and 2 (see photo 41).

515	Steel Protective Coating	3	08/02/2018	14.00	sq.ft	0.00	0.00	2.00	12.00

The fixed bearings have a steel painted protective system.

3420	*Peel/Bub/Crack(Stl Protect Coat*	*3*	*08/02/2018*	*14.00*	*sq.ft*	*0.00*	*0.00*	*2.00*	*12.00*

There is typically up to 100% failure of the painted steel protective coating throughout (see photo 41).

1000	Corrosion	3	08/02/2018	9.00	each	0.00	9.00	0.00	0.00

There is typically heavy rust of the fixed bearings and up to 1/8" section loss to the anchor bolt nuts and bearing assemblies throughout (see photo 41).

1020	Connection	3	08/02/2018	5.00	each	0.00	4.00	1.00	0.00

There is typically up to 1/4" thick of pack rust between bearing plates (see photo 41).

- Bearing "B" in Span 1 has the East anchor bolt nut backed off 1".
- Bearing "G" in Span 1 is missing the West anchor bolt (see photo 41).
- Bearings A, F, and G in Span 2 are missing one (1) anchor bolt nut.

ELEM NBR	ELEMENT NAME	ENV	INSP. DATE	QUANTITY	UNITS	QTY CS 1	QTY CS 2	QTY CS 3	QTY CS 4
321	**Re Conc Approach Slab**	**3**	**08/02/2018**	**880.00**	**sq.ft**	**880.00**	**0.00**	**0.00**	**0.00**

The reinforced concrete approach slabs labeled south and north approach roadway have a bituminous concrete overlay (see photos 17 & 18). Both approaches typically have light-moderate accumulations of sand/debris and light vegetation growth along the curblines.

There are minor areas of depression in both north and south the travel lanes (see photos 17 & 18).

510	Wearing Surfaces	3	08/02/2018	880.00	sq.ft	594.00	0.00	286.00	0.00

The south and north approaches have a bituminous wearing surface.

3220	*Crack (Wearing Surface)*	*3*	*08/02/2018*	*286.00*	*sq.ft*	*0.00*	*0.00*	*286.00*	*0.00*

There are up to 1/2" wide cracks and hairline mapcracking in the south and north approach roadways (see photo 17).

ELEM NBR	ELEMENT NAME	ENV	INSP. DATE	QUANTITY	UNITS	QTY CS 1	QTY CS 2	QTY CS 3	QTY CS 4
8214	**R/C Wingwall**	**3**	**08/02/2018**	**54.00**	**(LF)**	**27.00**	**27.00**	**0.00**	**0.00**

There are four (4) reinforced concrete wingwalls at each corner of the bridge (see photos 56-59).

1120	Efflorescence/Rust Staining	3	08/02/2018	27.00	(LF)	27.00	0.00	0.00	0.00

See Defect 1130 - Cracking (RC and Other).

1130	Cracking (RC and Other)	3	08/02/2018	27.00	(LF)	0.00	27.00	0.00	0.00

The wingwalls typically exhibits mapcracking with moderate efflorescence throughout (see photos 56-59).

8368	Graffiti	3	08/02/2018	120.00	(LF)	120.00	0.00	0.00	0.00

There are up to 6'-0" high x up to 15'-0" wide area of light-moderate graffiti on the wingwalls (see photos 56-59).

ELEM NBR	ELEMENT NAME	ENV	INSP. DATE	QUANTITY	UNITS	QTY CS 1	QTY CS 2	QTY CS 3	QTY CS 4
8218	**Backwall, All Types**	**3**	**08/02/2018**	**98.00**	**(LF)**	**0.00**	**62.00**	**35.00**	**1.00**

There are reinforced backwalls at south abutment #1 and north abutment #2 (see photos 42 & 45).

See attached documents "South Abutment #1.pdf and North Abutment #2.pdf" for locations and conditions.

1080	Delamination/Spall/Patched Area	3	08/02/2018	17.00	(LF)	0.00	0.00	17.00	0.00

The reinforced concrete backwalls have spalls up to 8'-0" long x 2'-0" high x up to 6" deep, some with exposed rebar and up to 7'-0" long x up to full height delaminations (see photos 47 & 59).

See attached documents "South Abutment #1.pdf and North Abutment #2.pdf" for locations and conditions.

1090	Exposed Rebar	3	08/02/2018	8.00	(LF)	0.00	0.00	7.00	1.00

See Defect 1080 - Delaminations/Spall/Patched Area for additional comments.

1120	Efflorescence/Rust Staining	3	08/02/2018	30.00	(LF)	0.00	30.00	0.00	0.00

There are hairline vertical, horizontal and map cracks, some with efflorescence throughout the reinforced concrete backwalls (see photo 48).

See attached documents "South Abutment #1.pdf and North Abutment #2.pdf" for locations and conditions.

1130	Cracking (RC and Other)	3	08/02/2018	31.00	(LF)	0.00	31.00	0.00	0.00

See Defect 1130 - Cracking (RC and Other) for comments.

1180	Abrasion	3	08/02/2018	1.00	(LF)	0.00	1.00	0.00	0.00

At the south abutment #1 backwall under the east overhang there is a 2'-3" high x 1'-2" long area of moderate scaling.

See attached documents "South Abutment #1.pdf" for locations and conditions.

ELEM NBR	ELEMENT NAME	ENV	INSP. DATE	QUANTITY	UNITS	QTY CS 1	QTY CS 2	QTY CS 3	QTY CS 4
8305	**Asphaltic Joint Material**	**3**	**08/02/2018**	**49.00**	**(LF)**	**49.00**	**0.00**	**0.00**	**0.00**

There is a new asphaltic joint plug over the south deck joint at south abutment #1 (see photo 11).

ELEM NBR	ELEMENT NAME	ENV	INSP. DATE	QUANTITY	UNITS	QTY CS 1	QTY CS 2	QTY CS 3	QTY CS 4
8335	**Guardrail, Vehicular**	**3**	**08/02/2018**	**848.00**	**(LF)**	**684.00**	**140.00**	**24.00**	**0.00**

There are steel vehicular guardrails at all corners and continuous over the bridge (see photos 1, 2, 19-21)

515	Steel Protective Coating	3	08/02/2018	848.00	sq.ft	763.00	85.00	0.00	0.00

The steel guardrails exhibit scattered areas of light surface rust.

1000	Corrosion	3	08/02/2018	85.00	(LF)	0.00	85.00	0.00	0.00

The guardrail exhibits scattered areas of light rust.

7000	Damage	3	08/02/2018	78.00	(LF)	0.00	54.00	24.00	0.00

- The southeast approach guardrail exhibits a 12'-6" long area of moderate collision damage 100'-0" from the bridge.
- The northeast approach guardrail exhibits a 12'-0" long area of moderate collision damage 45'-0" from the bridge.
- The northwest approach guardrail exhibits a 25'-0" area of light collision damage 37'-0" from the bridge.

- The west guardrail on the bridge exhibits two (2) areas of 6'-0" long impact damage in span 1 (see photo 21) and a 12'-0" long section of moderate collision damage in Span 1 and an area of moderate collision damage 2'-0" long in Span 2.

- The East guardrail on the bridge exhibits an area of 6'-0" long light collision damage in span 2 near north abutment #2.

ELEM NBR	ELEMENT NAME	ENV	INSP. DATE	QUANTITY	UNITS	QTY CS 1	QTY CS 2	QTY CS 3	QTY CS 4
8336	**Conc Bridge Parapet**	**3**	**08/02/2018**	**448.00**	**(LF)**	**368.00**	**40.00**	**40.00**	**0.00**

There are concrete bridge parapets over the west and east side of the bridge (see photos 19-21).

1120	Efflorescence/Rust Staining	3	08/02/2018	40.00	(LF)	0.00	0.00	40.00	0.00

The parapets along the west and east fascia exhibit vertical and horizontal cracks up to 1/16" wide with rust and efflorescence and hairline map cracks (see photos 20 & 21).

The end block at each corner exhibits wide spread map cracking with efflorescence and rust bleeding (Photo 1).

1130	Cracking (RC and Other)	3	08/02/2018	40.00	(LF)	0.00	40.00	0.00	0.00

The parapets along the west and east fascia exhibit vertical and horizontal cracks up to 1/16" wide with rust and efflorescence and hairline map cracks (see photos 20 & 21).

ELEM NBR	ELEMENT NAME	ENV	INSP. DATE	QUANTITY	UNITS	QTY CS 1	QTY CS 2	QTY CS 3	QTY CS 4
8370	**Steel Diaphragms**	**3**	**08/02/2018**	**72.00**	**(EA)**	**46.00**	**8.00**	**18.00**	**0.00**

There are end diaphragms at both abutments and at the pier. There are four (4) intermediate diaphragms in each bay between girder 'A' through 'G' (see photos 5 & 6).

515	Steel Protective Coating	3	08/02/2018	864.00	sq.ft	612.00	0.00	0.00	252.00

The steel diaphragms have a painted steel protective coating.

3420	*Peel/Bub/Crack(Stl Protect Coat)*	*3*	*08/02/2018*	*252.00*	*sq.ft*	*0.00*	*0.00*	*0.00*	*252.00*

There are typically areas of scattered isolated peeling paint and light-moderate rust of the intermediate diaphragms throughout in both span 1 and 2 (see photo 39).

There is typically up to 100% loss to the protective coating of the end diaphgrams at the pier in both span 1 and 2 (see photos 33-35, 37 & 38).

1000	Corrosion	3	08/02/2018	24.00	(EA)	0.00	6.00	18.00	0.00

There are up to 100% loss to the horizontal and diagonal members, heavy rust and peeling paint of the end diaphragms at the pier in both span 1 and 2 (see photos 33-35).

SOUTH ABUTMENT #1:
- Bay 'F'

PIER 1 (SPAN 1):
- Bay 'A' and 'D'

PIER 1 (SPAN 2):
- Bay 'A' (see photo 37).
- Bay 'C' through 'E' (see photo 34 & 35)
- Bay 'F' (see photo 38).

NORTH ABUTMENT #2:
- BAY 'A' (see photo 33).

8368	Graffiti	3	08/02/2018	54.00	(EA)	54.00	0.00	0.00	0.00

There are numerous areas of heavy graffiti of the end diaphragms at north abutment #2 (see photo 45).

8375	Loose or Missing Bolts defect	3	08/02/2018	2.00	(EA)	0.00	2.00	0.00	0.00

There are missing connection bolt(s) at the following locations:

- Girder 'A' at pier 1 in span 2 (see photo 31 & 37).
- Girder 'G' at pier 1 in span 2 (see photo 38).

ELEM NBR	ELEMENT NAME	ENV	INSP. DATE	QUANTITY	UNITS	QTY CS 1	QTY CS 2	QTY CS 3	QTY CS 4
8398	**Curb/sidewalks - Con**	**1**	**08/02/2018**	**448.00**	**ft**	**394.00**	**54.00**	**0.00**	**0.00**

There is a reinforced concrete safety walk between the vehicular guardrails and the concrete bridge parapets (see photo 19, 20 & 21). The granite curbs exhibit scrapes and rust stains throughout.

The deck joint seals at the east safety walk are dislodged at pier and north abutment #2 (see photo 19).

The average of both west and east curb reveal is 7.5".

1180	Abrasion	1	08/02/2018	54.00	ft	0.00	54.00	0.00	0.00

There is a 10'-0" long x full width x 1" deep scale/abrasion of the east safety walk at pier 1 in span 2 (see photo 19).

There is a 6'-0" long x 1'-6" wide area of scale of the south approach west safety walk in span 1. Also, there is an 18'-0" long x 1'-6" wide area of scale near the midpsan of the safety walk in span 1.

BRIDGE NOTES

EQUIPMENT USED: 60-foot snooper truck.

TRAFFIC CONTROL: Crash truck.

POLICE DETAIL NEEDED: Yes.

DEFLECTION AND VIBRATION: Light to moderate vibration was noted during live load conditions.

UTILITIES: There are 10in and 12in diameter insulated utilities pipes in bay 'A' with scattered light rust in the insulation (see photo 40). There is a missing nut on the utility support at bay 'A' in span 1 at south abutment #1.

CHANNEL NOTES: There is a spillway on the west side of the bridge and the channel mainly flows in span 1. There are abandoned dam structures in span 2 . The channel in Span 1 consists of rocks and gravel. There is a tree debris upstream and light overhang tree growth downstream (see photos 60-61).

VEGETATION: All corners of the bridge are heavily vegetated with overhanging trees (see photo 9).

EMBANKMENT EROSION: The northwest channel is lined with concrete and has been slightly undermined.

INSPECTION NOTES

ROUTINE AND SPECIAL INSPECTION

AECOM
Team Leader: Timothy Franciosa, PE
Team Member: Minh Pham
Date: 8/02/2018
Weather: 90s, Clear

ORIENTATION: The Branch River flows from east to west. The bridge is logged from south to north and west to east.

SCOPE: The scope is the routine inspection and special inspection of the substructure elements.

NBI RATINGS: The overall condition of the bridge is 4-Poor. Item 59 - Superstructure has been downgraded from 5 (fair) to 4 (poor) due to deteriorated conditions of the girder ends. Item 58 - Deck: 6 (satisfactory), Item 60 - Substructure: 4 (poor) and Item 61 - Channel: 6 (Bank Slumping) have not changed since the previous inspection.

SCHEDULE NOTES

Rhode Island Department of Transportation

Bridge Inspection Report

Structure Inventory and Appraisal Sheet (English Units)

Equipment

Aerial Lift	☐
Boat	☐
Underbridgeinspvel	☑
Scaffolding	☐
BoesemansChair	☐
Waders	☐
Rail Mount Elliot	☐
Crash Truck	☑
Air Monitor	☐
Ladder	☐
Bucket Truck	☐
Rigging	☐
Floats	☐
Climbing	☐
Rail Mount Bucket Truck	☐
Light Tower	☐

Poison Ivy	☑
Heavy Vegetation	☑
Hurricane Evac Route ?	☐

Cones	Yes
Traffic Setup Req	Yes
Police Req	Yes
Night Insp Req	No
Signs	Yes

Speed Limit	
Prep Time	4
Crew Slize	2
Under Insp Vehicle Time	1
Traffic Control Time	1
Mile Post	41.74
Crew Days	1
Time Report Time	46
Bucket Truck Time	

Site Access Notes

Avg Curb Reveal North/East	7.50
Avg Curb Reveal South/West	7.50
Posted Weight Limit	
Posting Sign ?	☐
Post Signs Legible	-1
Post Sign Rec	-1
Adv Min Vert Clear Sign	-1
Min Ver tClear Signs Leg	-1
Min Vert Clear Post Vales	
Min Vert Clear Sign Rec	-1
Old Rating and Postings	
RR Mile Post	
US DOT/AAR No.	

Telephone	☐
Sewer	☐
Cable	☐
Oil	☐
Fire Alarm	☐
OH Lines Present	☑
Water	☑
Gas	☐
Electric	☐
Fiber Optic	☐

Rhode Island Department of Transportation

Bridge Inspection Report

Structure Inventory and Appraisal Sheet (English Units)

Work Candidates

Assigned to Agency

Status	Priority	Action	Date Proposed	Notes
Unknown	High	Joints-Replace	07/25/2015	[AI Engineers] - The deck joint over south abutment #1 is open and water can freely flow throughout the joint. Replace the whole joint Total 30 LF.
Unknown	High	Substructure Patch spalls	07/25/2015	[AI Engineers] - Both abutment stems, pier cap, columns and backwalls exhibit hollow areas, extensive spalls with exposed corroded rebars throughout. Repair the delaminated concrete [VHB, for TranSystems] - Both abutment stems have been patched and repaired under the fascia girders. Patching and/or repair of the pier cap, columns and backwalls still remains.

Bridge #067301 - RI 102 Bronco Highway OVER Branch River Routine and Special Member Inspection Date: 08/02/18
Element 107 - Steel Opn Girder/Beam

AECOM

SPAN	GIRDER	LOCATION	DESCRIPTION	Photo (s)	Changes
1	A	SOUTH ABUTMENT #1	SEE SKETCH 4	28	1
	G		1/4" DEEP SECTION LOSS x 2-1/2" HIGH x 1'-8" LONG OF WEST FACE WEB. UP TO 1/2" REMAINING x 1'-6" WIDE x 6" LONG OF BOTTOM FLANGE.	-	-
	D	PIER 1 IN SPAN 1	3/16" DEEP SECTION LOSS x 3" HIGH x 12" LONG OF EAST FACE WEB.	-	1
	E		1/8" DEEP SECTION LOSS x 4" HIGH x 20" LONG OF WEST FACE WEB.	-	1
	G		1/4" DEEP SECTION LOSS x 6" HIGH x 2'-0" LONG OF WEST FACE WEB.	30	1
2	A	PIER 1 IN SPAN 2	SEE SKETCH 2	29, 31 & 37	1
	B		1/8" DEEP SECTION LOSS x 2" HIGH x 10" LONG OF EAST FACE WEB.	-	2
	C		1/8" DEEP SECTION LOSS x 2" HIGH x 10" LONG OF EAST AND WEST FACES WEB.	-	2
	D		1/8" DEEP SECTION LOSS x 2" HIGH x 10" LONG OF WEST FACE WEB. 3/16" DEEP SECTION LOSS x 17" HIGH x 8'-0" LONG OF EAST FACE WEB.	-	2
	E		SEE SKETCH 3	34	1
	F		SEE SKETCH 3	35	1
	G		SEE SKETCH 1	36	1
	A	NORTH ABUTMENT #2	SEE SKETCH 4	32 & 33	1
	G	NORTH ABUTMENT #2	3/16" DEEP SECTION LOSS x 5" HIGH x 3'-0" LONG OF THE WEST FACE AT BOTTOM OF WEB; 3/16" LOSS x 1'-1" HIGH x 6" LONG AT TOP OF WEB. 1/8" REMAINING SECTION LOSS x 6" HIGH x UP TO 12" LONG OF THE WEB BEYOND THE BEARING.	-	1

1 CHANGE IN PREVIOUSLY NOTED CONDITION (08/04/17 SPECIAL INSPECTION)

2 NEWLY DOCUMENTED CONDITION (08/02/18 ROUTINE AND SPECIAL INSPECTION)

SKETCH 1

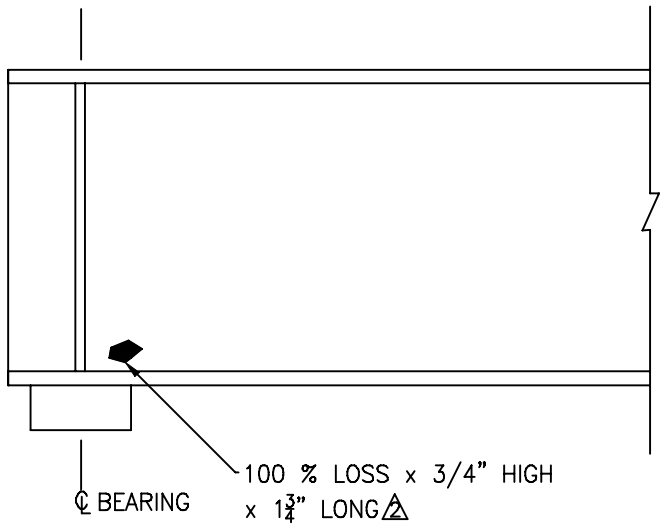

GIRDER 'G' – EAST FACE

AT PIER #1 SPAN 2

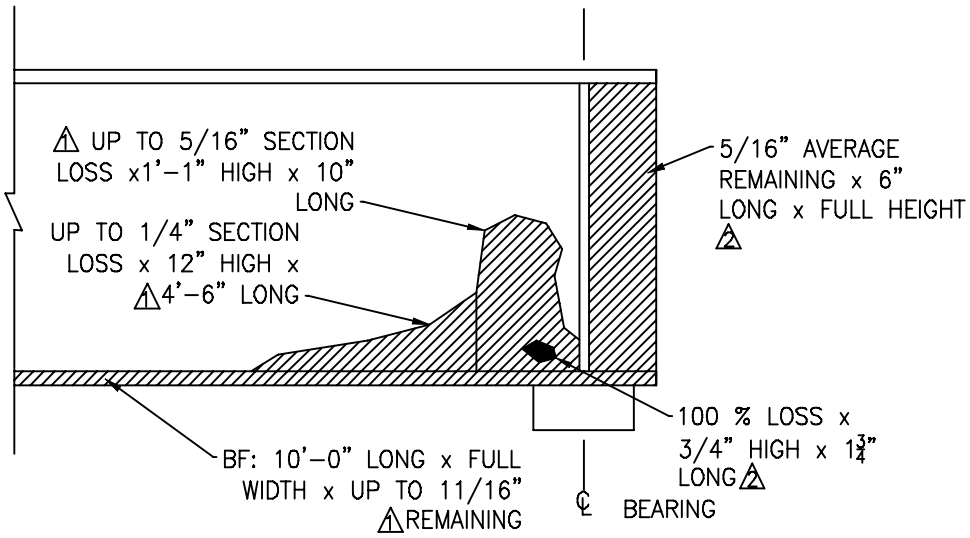

GIRDER 'G' – WEST FACE

AT PIER #1 SPAN 2

LEGEND:

SECTION LOSS

100% LOSS

△1 CHANGE IN PREVIOUSLY NOTED CONDITION (08/04/17 SPECIAL INSPECTION)

△2 NEWLY DOCUMENTED CONDITION (08/02/18 ROUTINE INSPECTION)

REVISED BY:	DATE DRAWN:	AECOM	BRIDGE #067301 MOHEGAN BRIDGE OVER BRANCH RIVER BURRILLVILLE, RI	NOT TO SCALE	INSPECTED BY:	DATE INSPECTED:
MP	09/04/2018				TVF & MP	09/04/2018

SKETCH 2

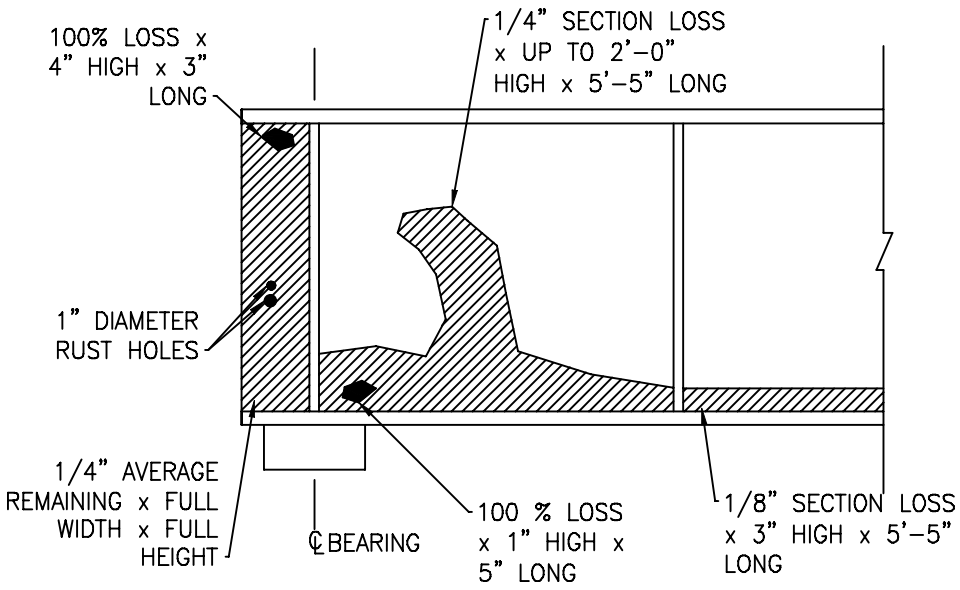

GIRDER 'A' – EAST FACE

AT PIER #1 SPAN 2

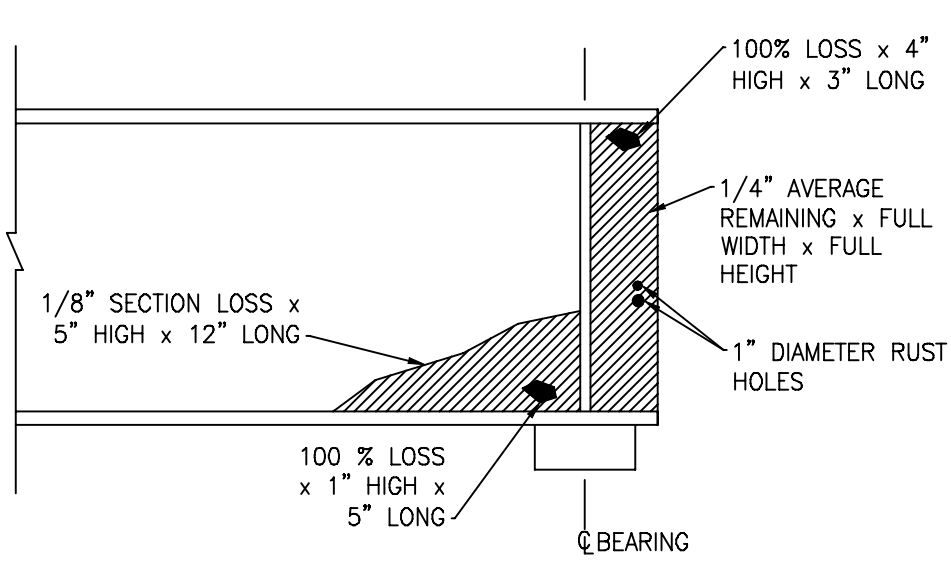

GIRDER 'A' – WEST FACE

AT PIER #1 SPAN 2

LEGEND:

SECTION LOSS

100% LOSS

1 CHANGE IN PREVIOUSLY NOTED CONDITION (08/04/17 SPECIAL INSPECTION)

2 NEWLY DOCUMENTED CONDITION (08/02/18 ROUTINE INSPECTION)

DRAWN BY:	DATE DRAWN:				INSPECTED BY:	DATE INSPECTED:
MP	09/04/2018	AECOM	BRIDGE #067301 MOHEGAN BRIDGE OVER BRANCH RIVER BURRILLVILLE, RI	NOT TO SCALE	TVF & MP	09/04/2018

SKETCH 3

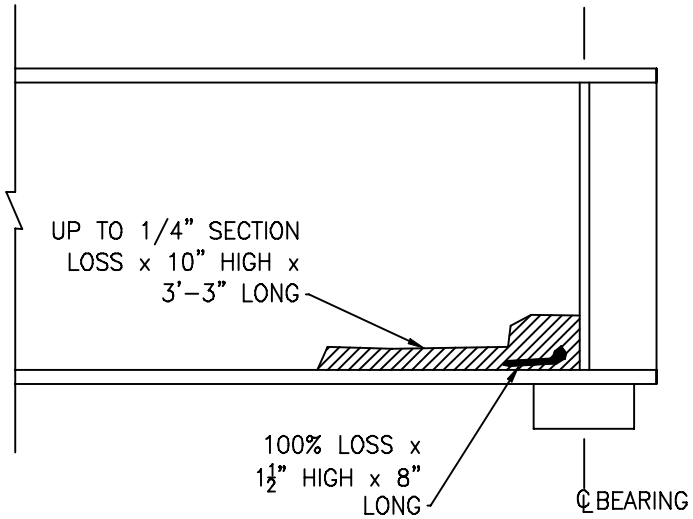

GIRDER 'E' – WEST FACE

AT PIER #1 SPAN 2

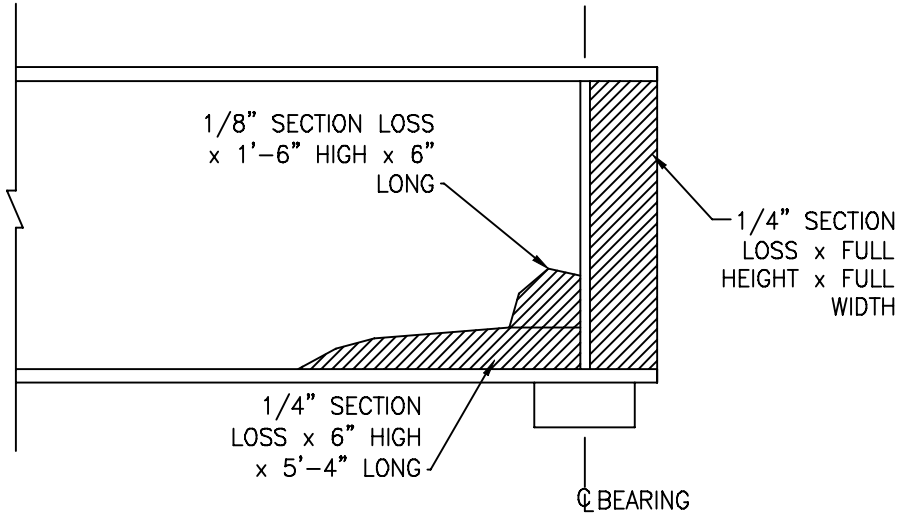

GIRDER 'F' – WEST FACE

AT PIER #1 SPAN 2

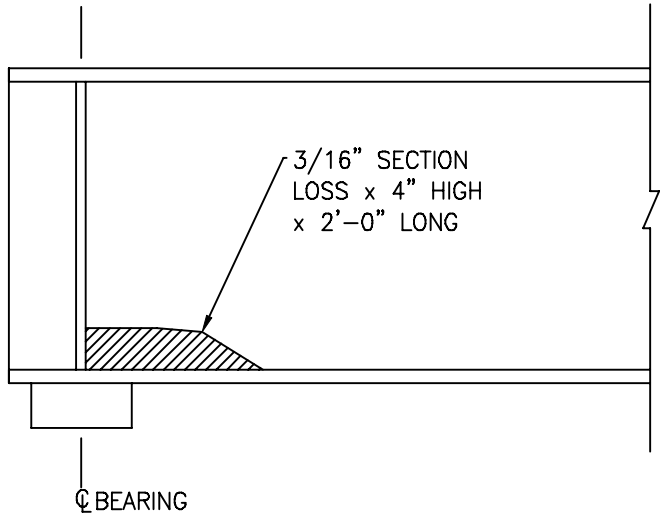

GIRDER 'F' – EAST FACE

AT PIER #1 SPAN 2

LEGEND:

- SECTION LOSS
- 100% LOSS
- 1 CHANGE IN PREVIOUSLY NOTED CONDITION (08/04/17 SPECIAL INSPECTION)
- 2 NEWLY DOCUMENTED CONDITION (08/02/18 ROUTINE INSPECTION)

DRAWN BY:	DATE DRAWN:	AECOM	BRIDGE #067301 MOHEGAN BRIDGE OVER BRANCH RIVER BURRILLVILLE, RI	NOT TO SCALE	INSPECTED BY:	DATE INSPECTED:
MP	09/04/2018				TVF & MP	09/04/2018

SKETCH 4

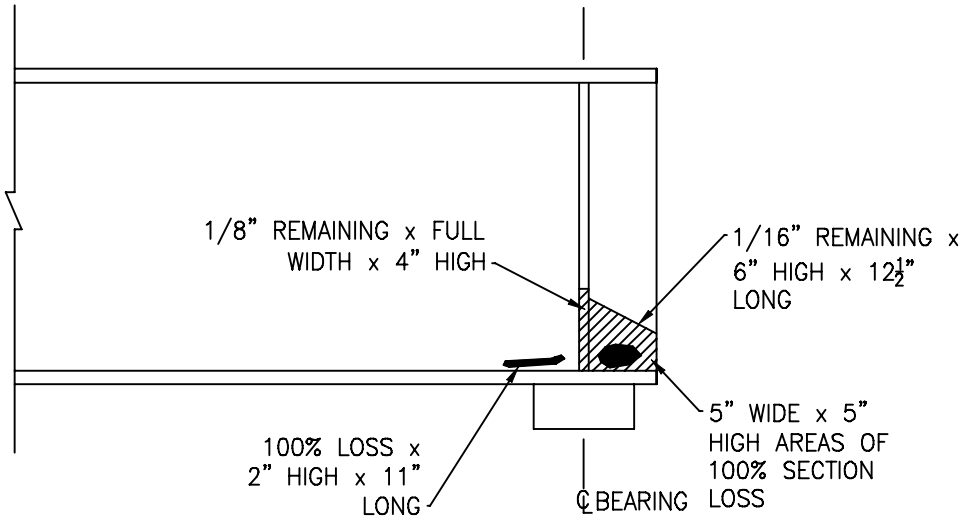

GIRDER 'A' – WEST FACE

AT SOUTH ABUTMENT #1 SPAN 1

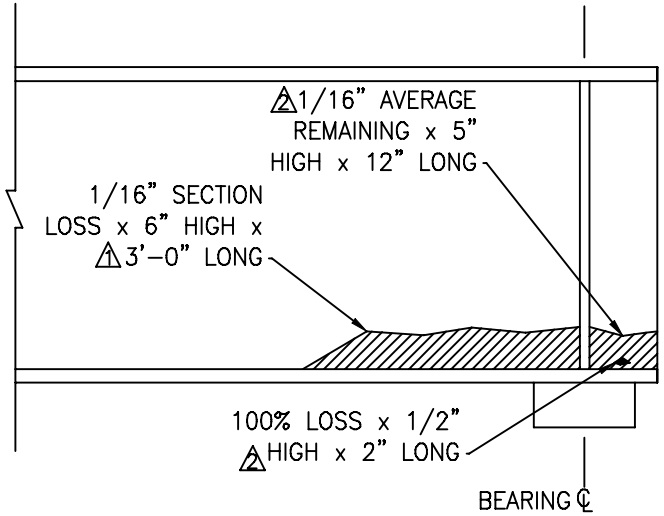

GIRDER 'A' – EAST FACE

AT NORTH ABUTMENT #2 SPAN 2

LEGEND:

- SECTION LOSS
- 100% LOSS
- 1 CHANGE IN PREVIOUSLY NOTED CONDITION (08/04/17 SPECIAL INSPECTION)
- 2 NEWLY DOCUMENTED CONDITION (08/02/18 ROUTINE INSPECTION)

DRAWN BY:	DATE DRAWN:	AECOM	BRIDGE #067301 MOHEGAN BRIDGE OVER BRANCH RIVER BURRILLVILLE, RI	NOT TO SCALE	INSPECTED BY:	DATE INSPECTED:
MP	09/04/2018				TVF & MP	09/04/2018

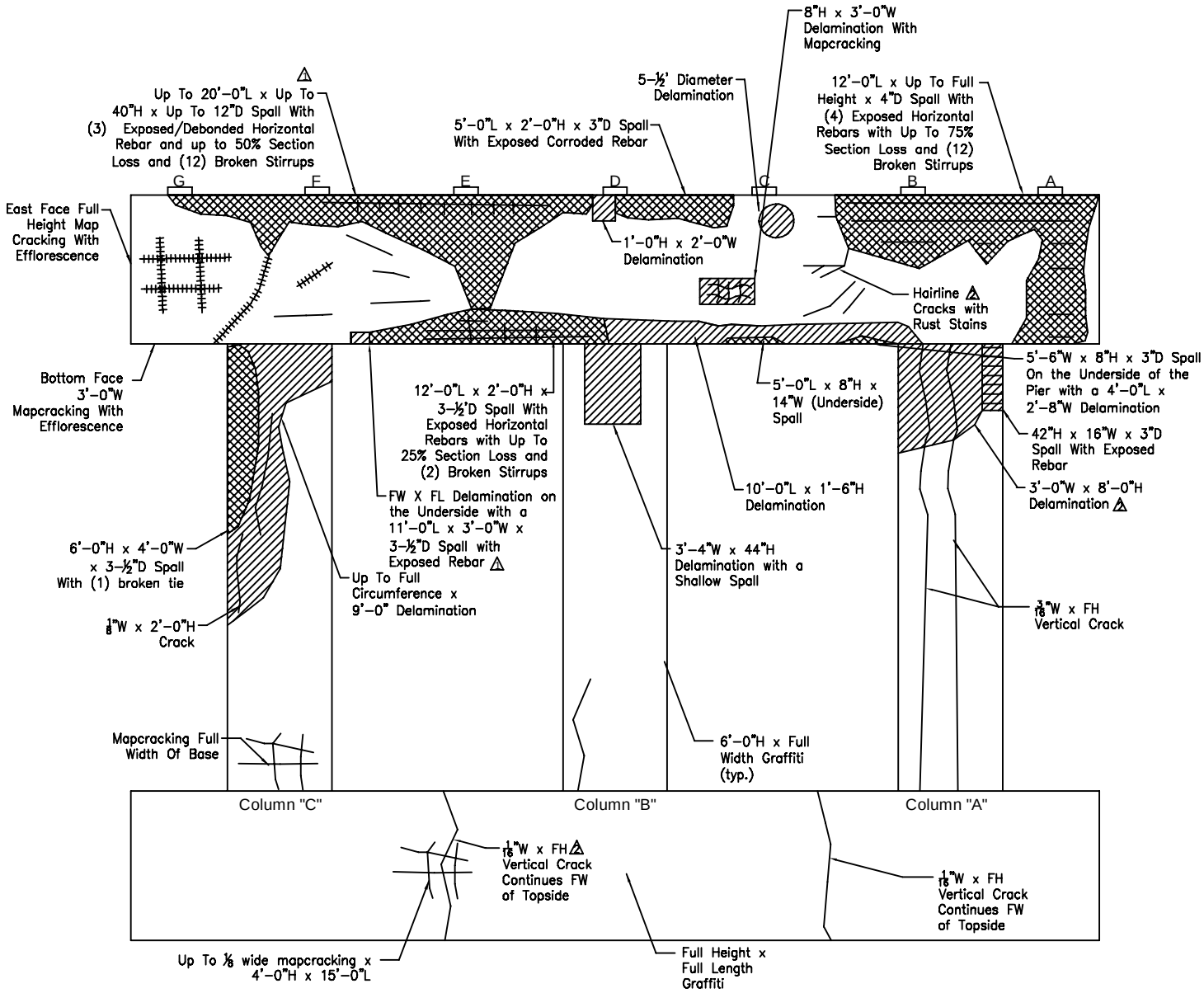

Pier #1 - North Face

GENERAL NOTES:

Pier cap has hairline mapcracking up to full width x full height with efflorescence & rust stains throughout (typ.)

LEGEND:

- HAIRLINE CRACKS
- HAIRLINE CRACKS WITH EFFLORSCENCE
- MAP CRACKS
- DELAMINATION
- SPALLING AREA
- SCALE
- HONEYCOMB AREA
- 1 CHANGE IN PREVIOUSLY NOTED CONDITION (08/04/17 SPECIAL INSPECTION)
- 2 NEWLY DOCUMENTED CONDITION (08/02/18 ROUTINE INSPECTION)

Bridge # 067301
Route 102 over Branch River
Burrillville, RI

REVISIONS BY:	REVISIONS:	AECOM	NOT TO SCALE	INSPECTED BY:	DATE INSPECTED:
MP	09/04/2018			TVF & MP	08/02/2018

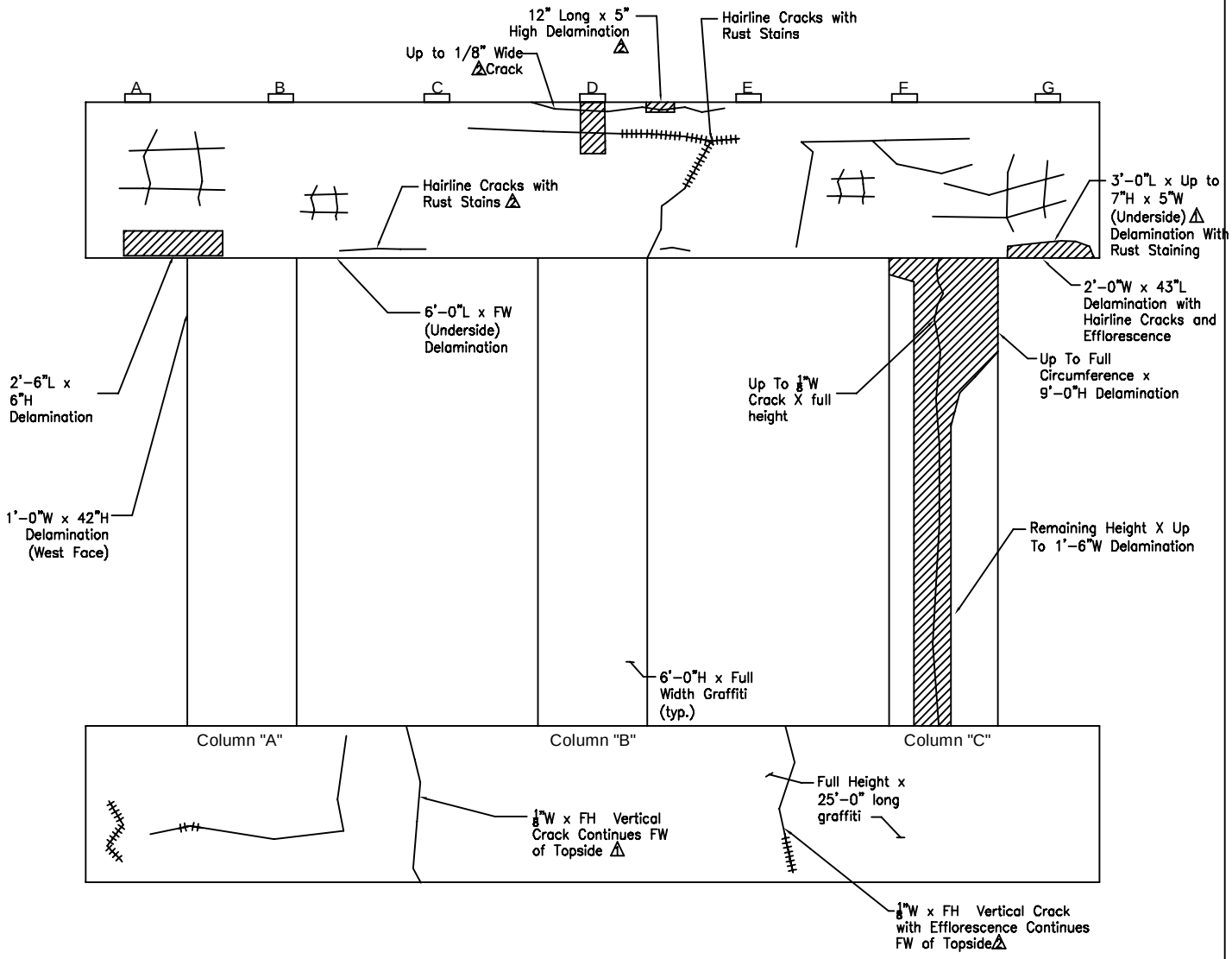

Pier #1 - South Face

LEGEND:

- HAIRLINE CRACKS
- HAIRLINE CRACKS WITH EFFLORSCENCE
- MAP CRACKS
- DELAMINATION
- SPALLING AREA
- SCALE
- HONEYCOMB AREA
- 1 CHANGE IN PREVIOUSLY NOTED CONDITION (08/04/17 SPECIAL INSPECTION)
- 2 NEWLY DOCUMENTED CONDITION (08/02/18 ROUTINE INSPECTION)

Bridge # 067301
Route 102 over Branch River
Burrillville, RI

REVISIONS BY:	REVISIONS:	AECOM	NOT TO SCALE	INSPECTED BY:	DATE INSPECTED:
MP	09/04/2018			TVF & MP	08/02/2018

APPENDIX B

PHOTOS

PHOTOS #1 **ROUTINE AND SPECIAL INSPECTION**

BRIDGE #067301 | SOUTH APPROACH (LOOKING NORTH) | 8/2/2018

PHOTOS #2 **ROUTINE AND SPECIAL INSPECTION**

BRIDGE #067301 | NORTH APPROACH (LOOKING SOUTH) | 8/2/2018

PHOTOS #3 **ROUTINE AND SPECIAL INSPECTION**

BRIDGE #067301 EAST ELEVATION (LOOKING SOUTH) 8/2/2018

PHOTOS #4 **ROUTINE AND SPECIAL INSPECTION**

BRIDGE #067301 WEST ELEVATION (LOOKING SOUTH) 8/2/2018

PHOTOS #5 **ROUTINE AND SPECIAL INSPECTION**

BRIDGE #067301 GENERAL UNDERSIDE – SPAN 1 (LOOKING NORTH) 8/2/2018

PHOTOS #6 **ROUTINE AND SPECIAL INSPECTION**

BRIDGE #067301 GENERAL UNDERSIDE – SPAN 2 (LOOKING SOUTH) 8/2/2018

PHOTOS #7 **ROUTINE AND SPECIAL INSPECTION**

BRIDGE #067301 | GENERAL TOPSIDE – SPAN 1 (LOOKING SOUTHWEST) | 8/2/2018

PHOTOS #8 **ROUTINE AND SPECIAL INSPECTION**

BRIDGE #067301 | GENERAL TOPSIDE – SPAN 2 (LOOKING NORTHWEST) | 8/2/2018

PHOTOS #9 **ROUTINE AND SPECIAL INSPECTION**

BRIDGE #067301 | MIDPSAN OF SPAN 2 AT GIRDER 'A' (LOOKING NORTH) | 8/2/2018

PHOTOS #10 **ROUTINE AND SPECIAL INSPECTION**

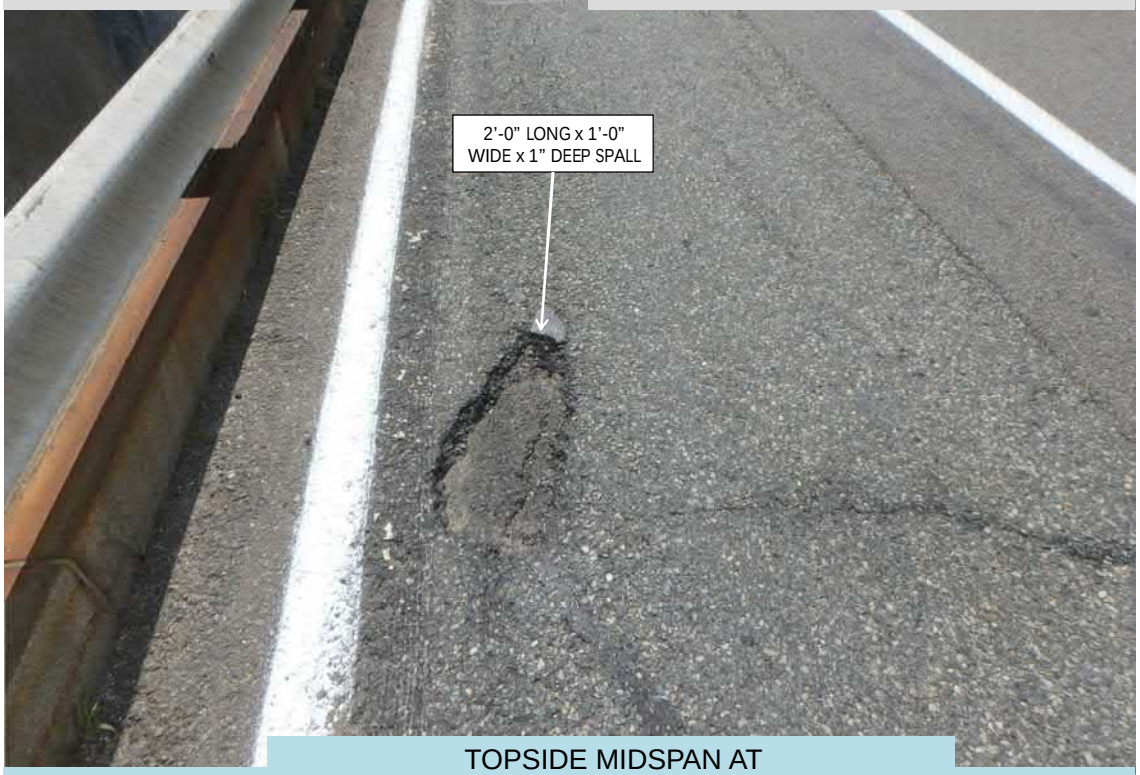

BRIDGE #067301 | TOPSIDE MIDSPAN AT EAST SHOULDER IN SPAN 2 (LOOKING SOUTH) | 8/2/2018

PHOTOS #11 **ROUTINE AND SPECIAL INSPECTION**

BRIDGE #067301 | SOUTH DECK JOINT AT SOUTH ABUTMENT#1 (LOOKING EAST) | 8/2/2018

PHOTOS #12 **ROUTINE AND SPECIAL INSPECTION**

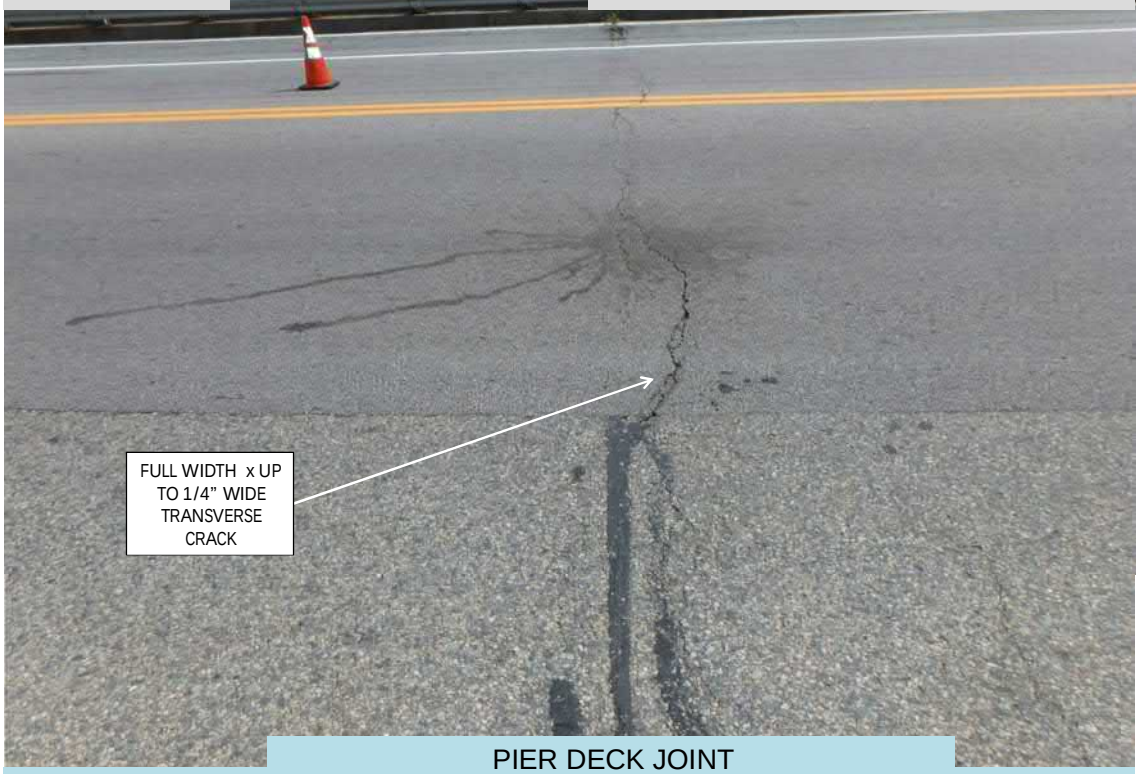

BRIDGE #067301 | PIER DECK JOINT AT PIER 1 (LOOKING EAST) | 8/2/2018

PHOTOS #13 **ROUTINE AND SPECIAL INSPECTION**

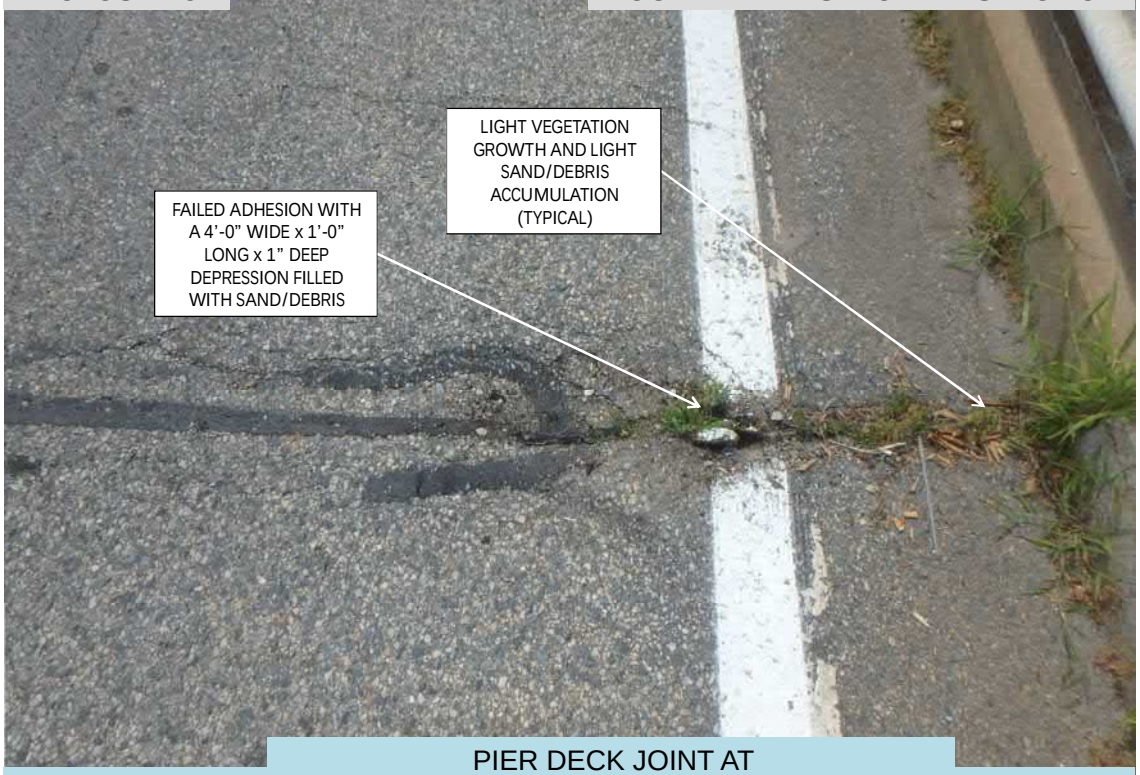

BRIDGE #067301 PIER DECK JOINT AT PIER 1 WEST SHOULDER (LOOKING SOUTH) 8/2/2018

PHOTOS #14 **ROUTINE AND SPECIAL INSPECTION**

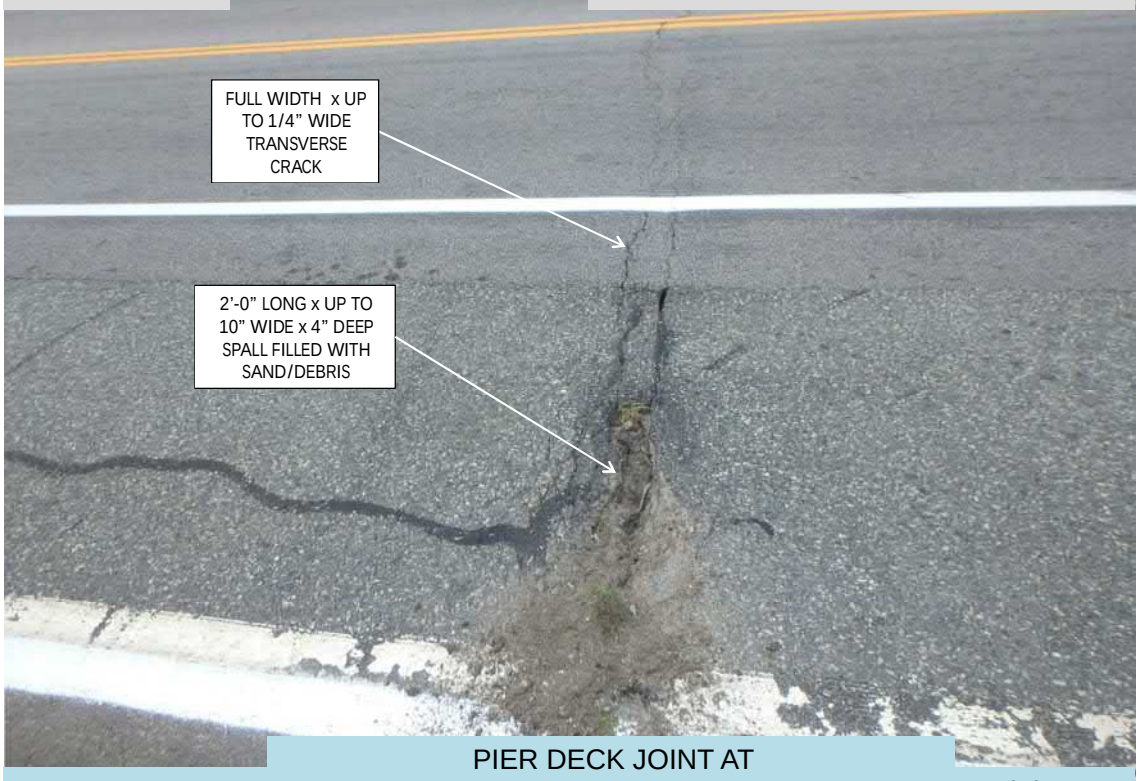

BRIDGE #067301 PIER DECK JOINT AT PIER 1 EAST SHOULDER (LOOKING WEST) 8/2/2018

PHOTOS #15 **ROUTINE AND SPECIAL INSPECTION**

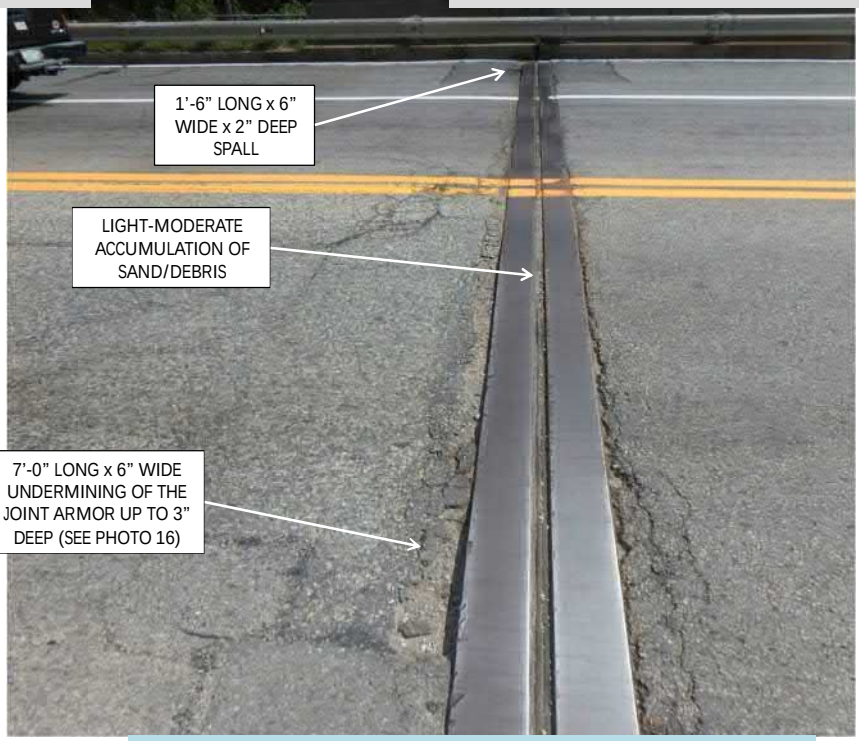

BRIDGE #067301 | NORTH DECK JOINT AT NORTH ABUTMENT #2 (LOOKING EAST) | 8/2/2018

PHOTOS #16 **ROUTINE AND SPECIAL INSPECTION**

BRIDGE #067301 | NORTH DECK JOINT AT NORTH ABUTMENT #2 (LOOKING EAST) | 8/2/2018

PHOTOS #17 **ROUTINE AND SPECIAL INSPECTION**

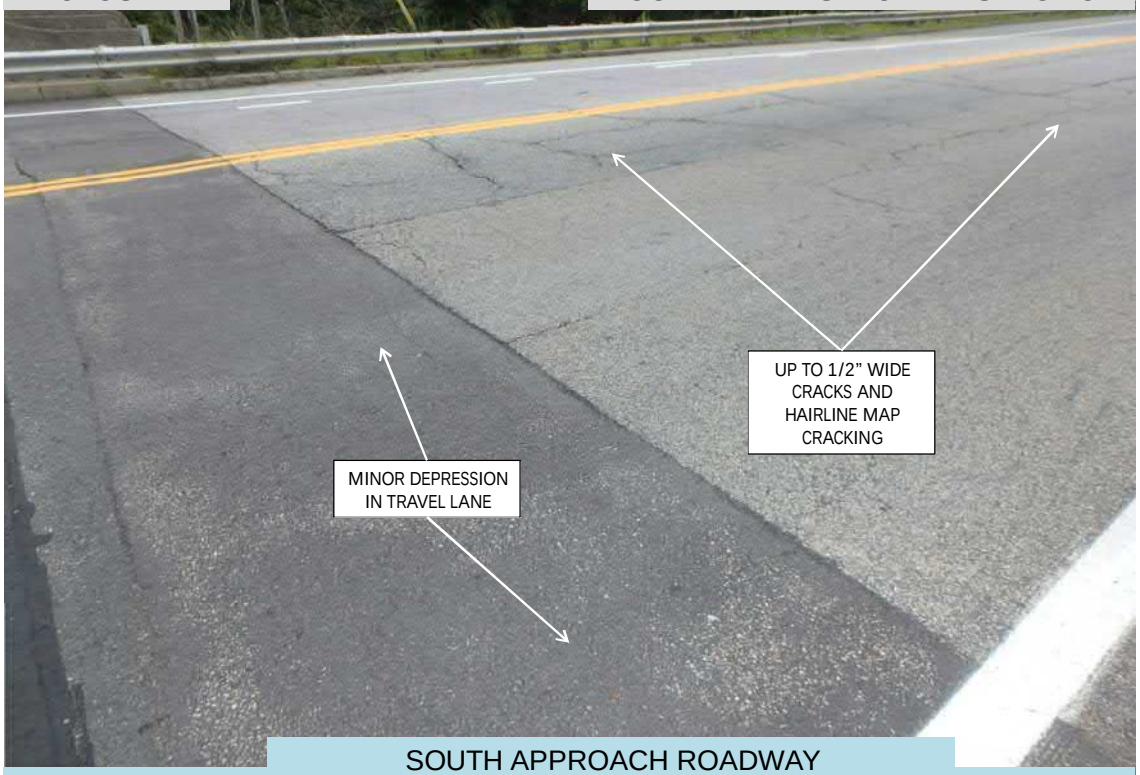

BRIDGE #067301 | SOUTH APPROACH ROADWAY (LOOKING SOUTHEAST) | 8/2/2018

PHOTOS #18 **ROUTINE AND SPECIAL INSPECTION**

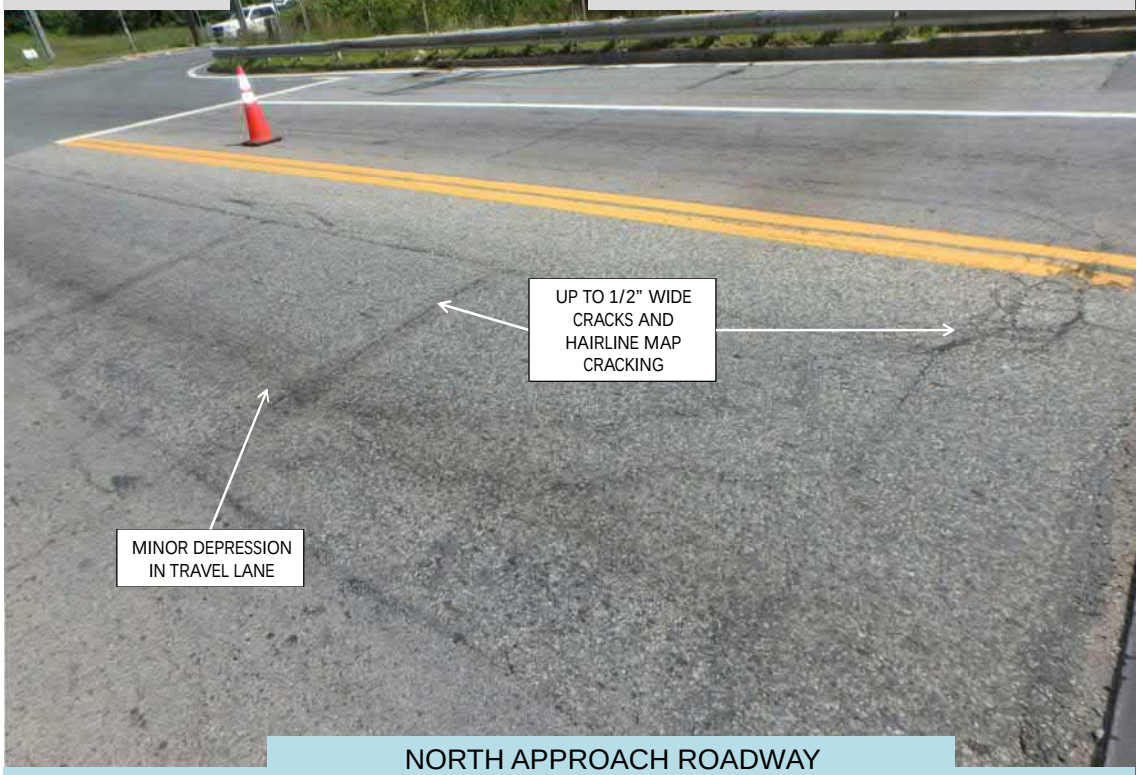

BRIDGE #067301 | NORTH APPROACH ROADWAY (LOOKING NORTHEAST) | 8/2/2018

PHOTOS #19 **ROUTINE AND SPECIAL INSPECTION**

BRIDGE #067301 EAST SAFETY WALK AT PIER 1 IN SPAN 2 (LOOKING NORTH) 8/2/2018

PHOTOS #20 **ROUTINE AND SPECIAL INSPECTION**

BRIDGE #067301 WEST BRIDGE RAIL AT PIER 1 IN SPAN 1 (LOOKING SOUTHWEST) 8/2/2018

PHOTOS #21 **ROUTINE AND SPECIAL INSPECTION**

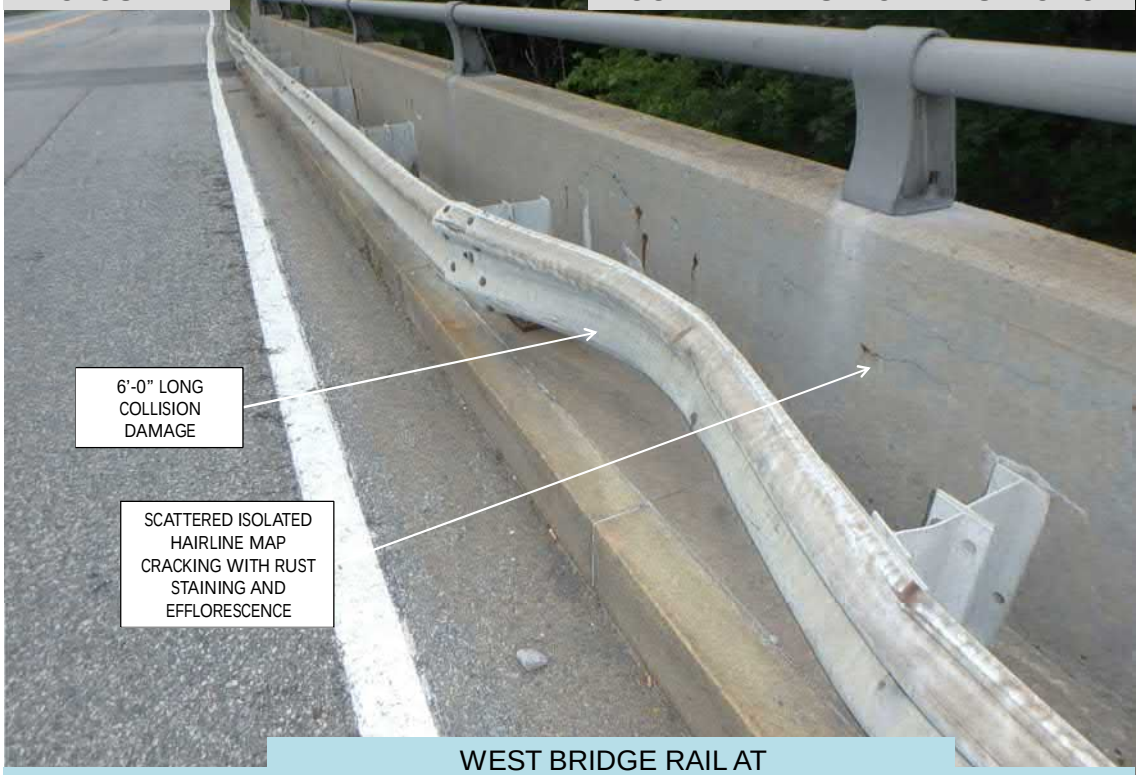

BRIDGE #067301 — WEST BRIDGE RAIL AT MIDSPAN IN SPAN 1 (LOOKING SOUTHWEST) — 8/2/2018

PHOTOS #22 **ROUTINE AND SPECIAL INSPECTION**

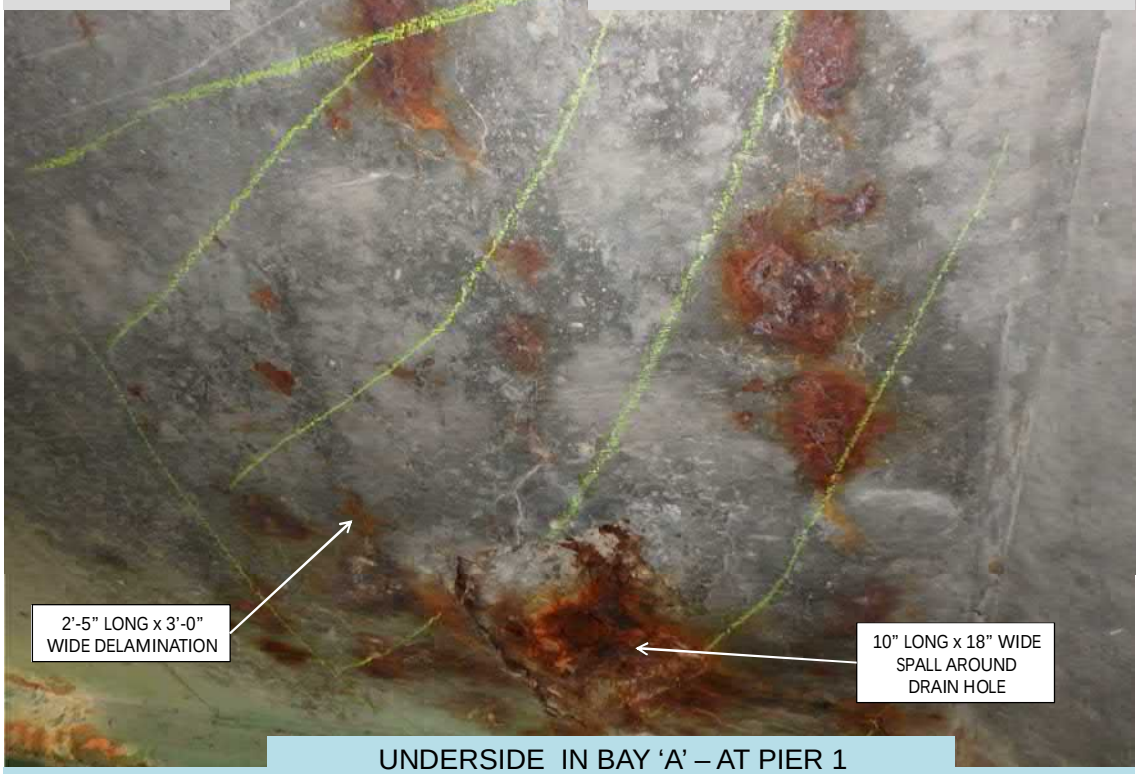

BRIDGE #067301 — UNDERSIDE IN BAY 'A' – AT PIER 1 IN SPAN 1 (LOOKING SOUTH) — 8/2/2018

PHOTOS #23 **ROUTINE AND SPECIAL INSPECTION**

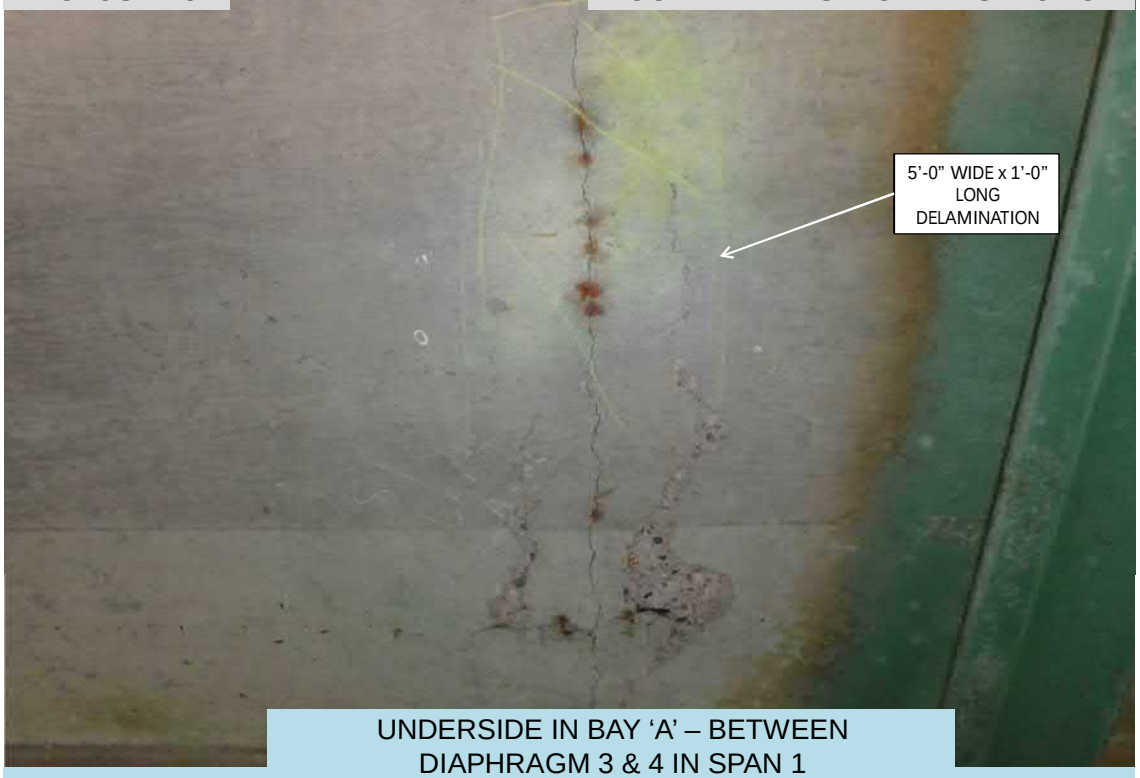

UNDERSIDE IN BAY 'A' – BETWEEN DIAPHRAGM 3 & 4 IN SPAN 1 (LOOKING EAST)

BRIDGE #067301 8/2/2018

PHOTOS #24 **ROUTINE AND SPECIAL INSPECTION**

UNDERSIDE IN BAY 'C' – ABOVE PIER 1 BEYOND END DIAPHRAGM (LOOKING EAST)

BRIDGE #067301 8/2/2018

PHOTOS #25 **ROUTINE AND SPECIAL INSPECTION**

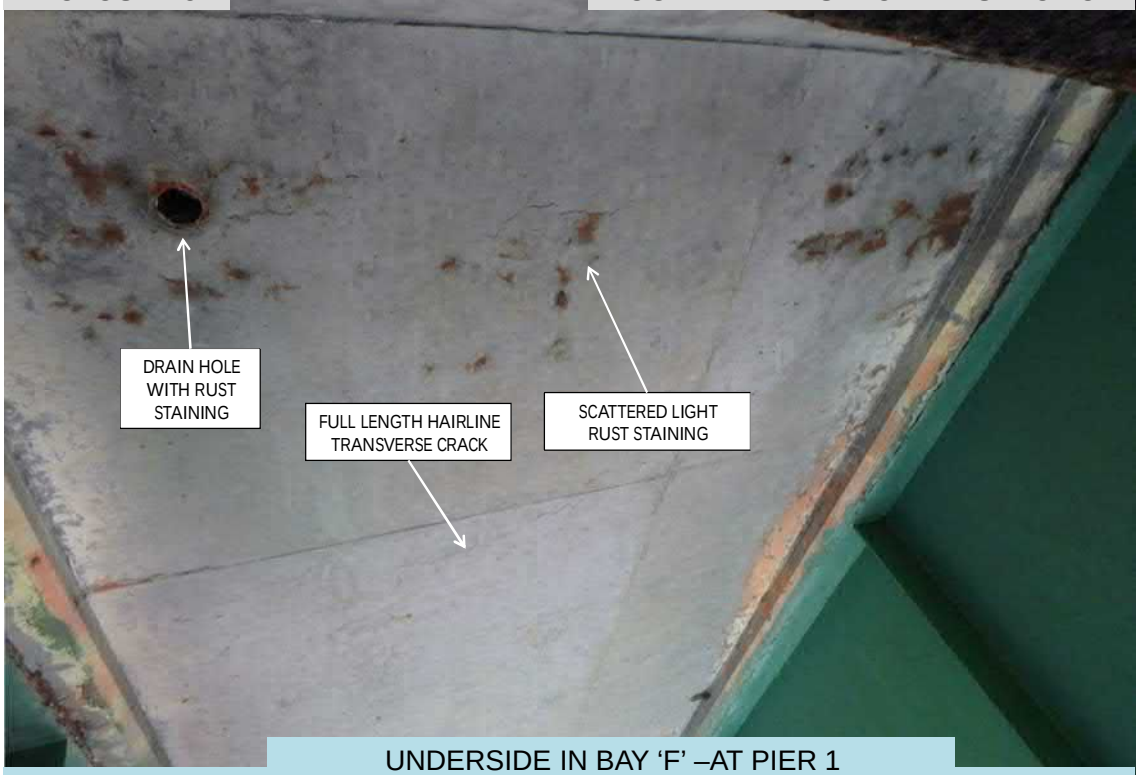

UNDERSIDE IN BAY 'F' –AT PIER 1 IN SPAN 1 (LOOKING SOUTH)

BRIDGE #067301 8/2/2018

PHOTOS #26 **ROUTINE AND SPECIAL INSPECTION**

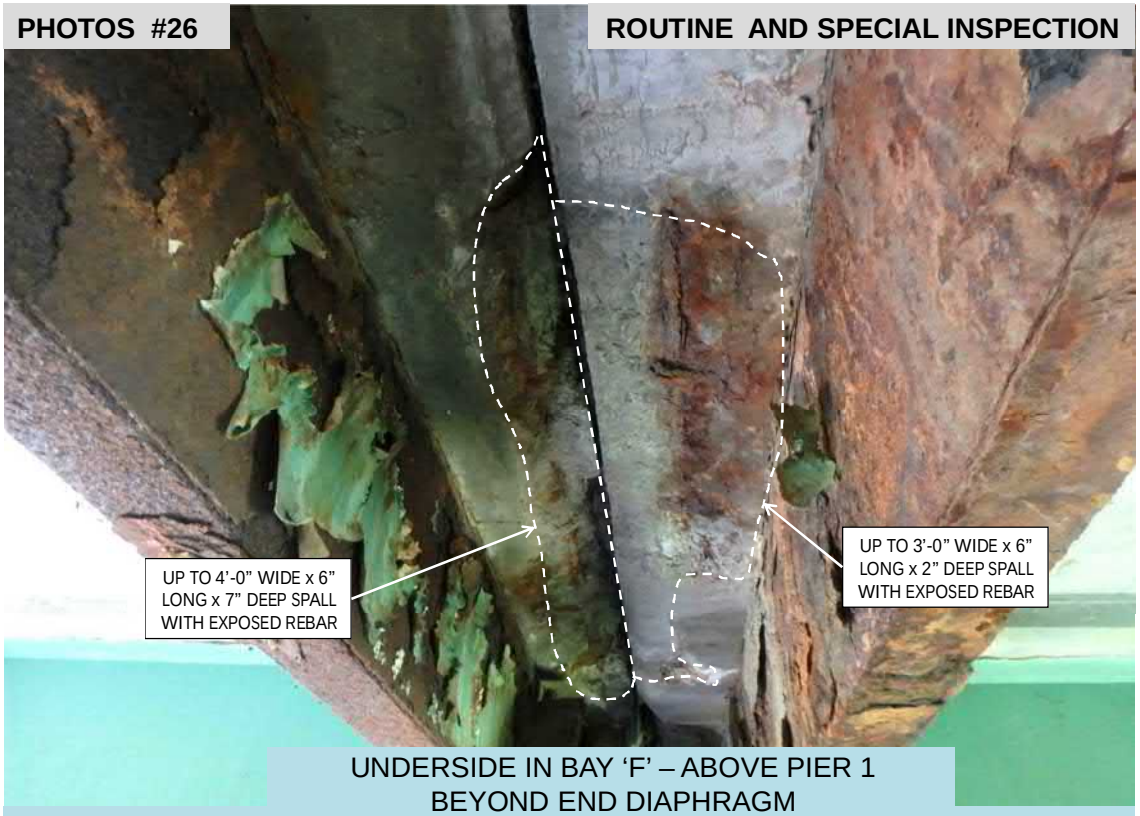

UNDERSIDE IN BAY 'F' – ABOVE PIER 1 BEYOND END DIAPHRAGM (LOOKING WEST)

BRIDGE #067301 8/2/2018

PHOTOS #27 **ROUTINE AND SPECIAL INSPECTION**

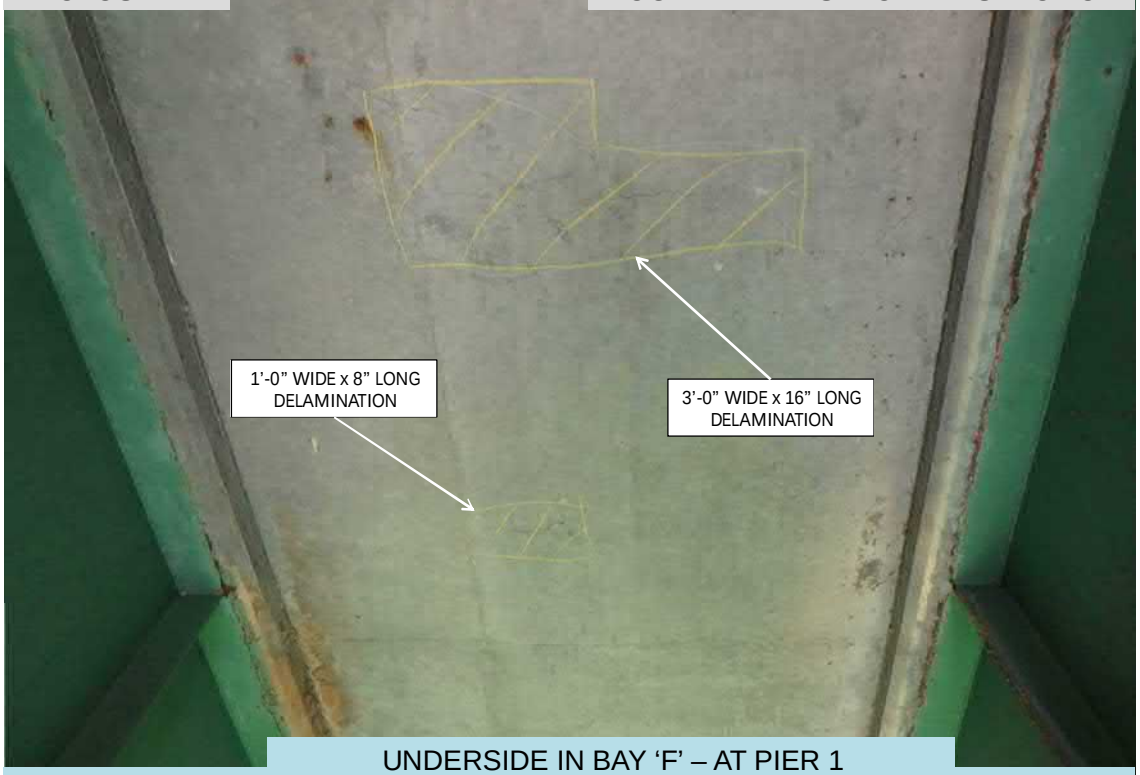

BRIDGE #067301 | UNDERSIDE IN BAY 'F' – AT PIER 1 IN SPAN 2 (LOOKING NORTH) | 8/2/2018

PHOTOS #28 **ROUTINE AND SPECIAL INSPECTION**

BRIDGE #067301 | GIRDER 'A' – WEST FACE AT SOUTH ABUTMENT #1 IN SPAN 1 (LOOKING EAST) | 8/2/2018

PHOTOS #29 **ROUTINE AND SPECIAL INSPECTION**

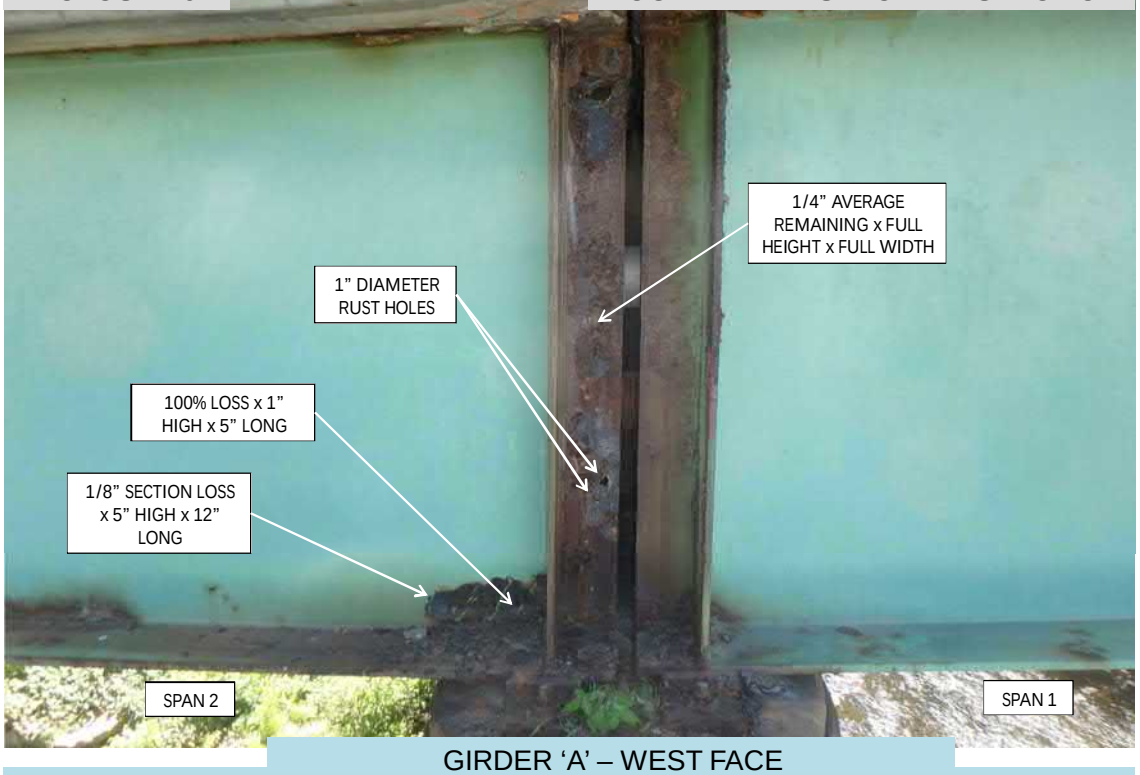

GIRDER 'A' – WEST FACE
AT PIER 1 IN SPAN 1 & 2 (LOOKING EAST)

BRIDGE #067301 8/2/2018

PHOTOS #30 **ROUTINE AND SPECIAL INSPECTION**

GIRDER 'G' – WEST FACE
AT PIER 1 IN SPAN 1 (LOOKING EAST)

BRIDGE #067301 8/2/2018

PHOTOS #31 **ROUTINE AND SPECIAL INSPECTION**

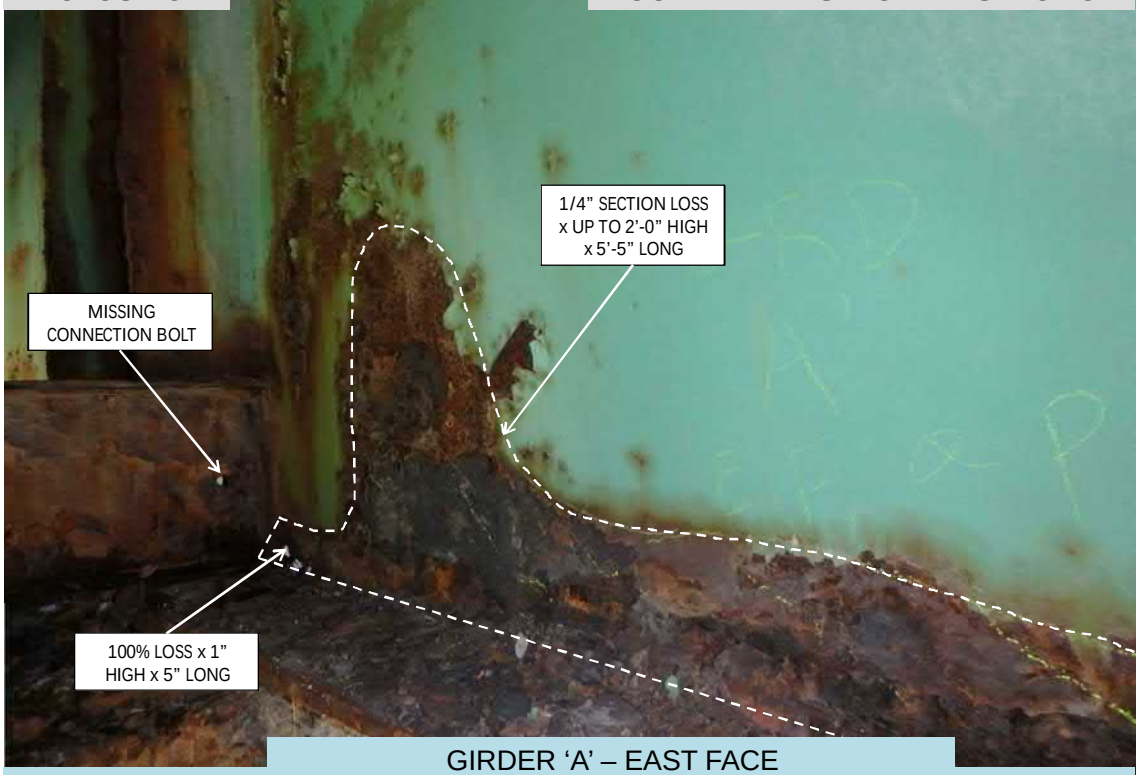

GIRDER 'A' – EAST FACE
AT PIER 1 IN SPAN 2 (LOOKING NORTHWEST)

BRIDGE #067301 8/2/2018

PHOTOS #32 **ROUTINE AND SPECIAL INSPECTION**

GIRDER 'A' – WEST FACE AT NORTH
ABUTMENT #2 IN SPAN 2 (LOOKING EAST)

BRIDGE #067301 8/2/2018

PHOTOS #33 **ROUTINE AND SPECIAL INSPECTION**

BRIDGE #067301 GIRDER 'A' – EAST FACE AT NORTH ABUTMENT #2 IN SPAN 2 (LOOKING WEST) 8/2/2018

PHOTOS #34 **ROUTINE AND SPECIAL INSPECTION**

BRIDGE #067301 GIRDER 'E' – WEST FACE AT PIER 1 IN SPAN 2 (LOOKING EAST) 8/2/2018

PHOTOS #35 **ROUTINE AND SPECIAL INSPECTION**

BRIDGE #067301 GIRDER 'F' – WEST FACE AT PIER 1 IN SPAN 2 (LOOKING NORTHEAST) 8/2/2018

PHOTOS #36 **ROUTINE AND SPECIAL INSPECTION**

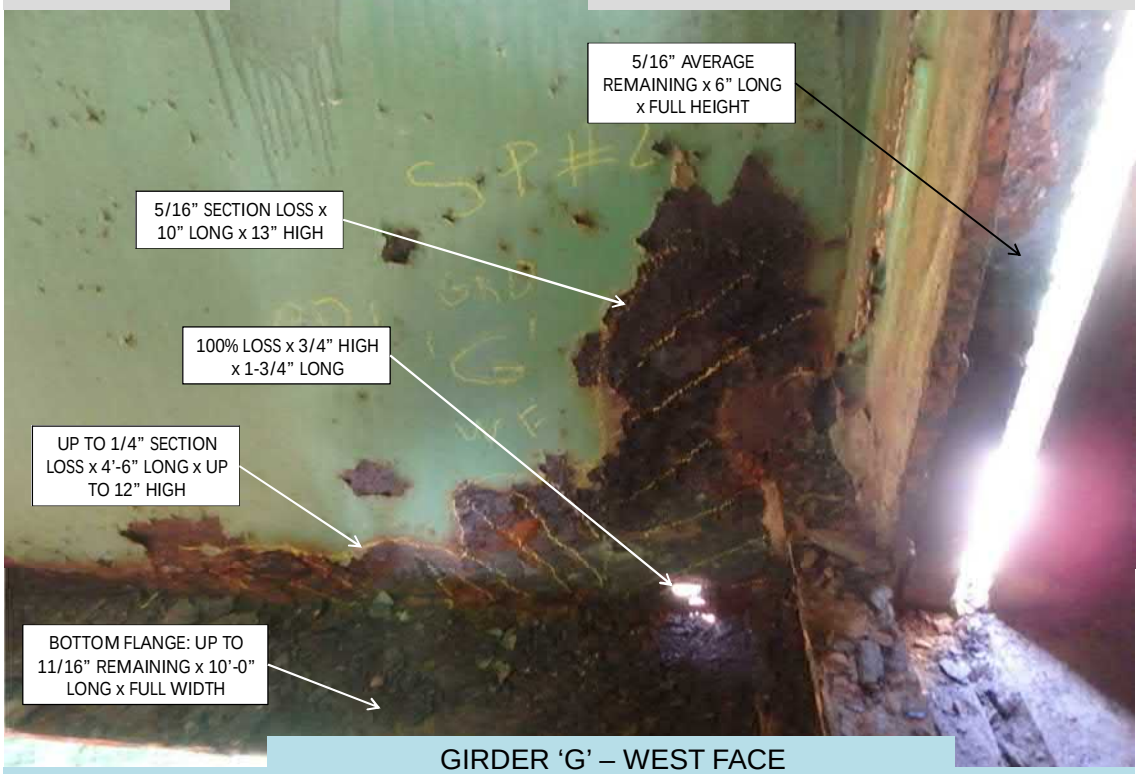

BRIDGE #067301 GIRDER 'G' – WEST FACE AT PIER 1 IN SPAN 2 (LOOKING EAST) 8/2/2018

PHOTOS #37 **ROUTINE AND SPECIAL INSPECTION**

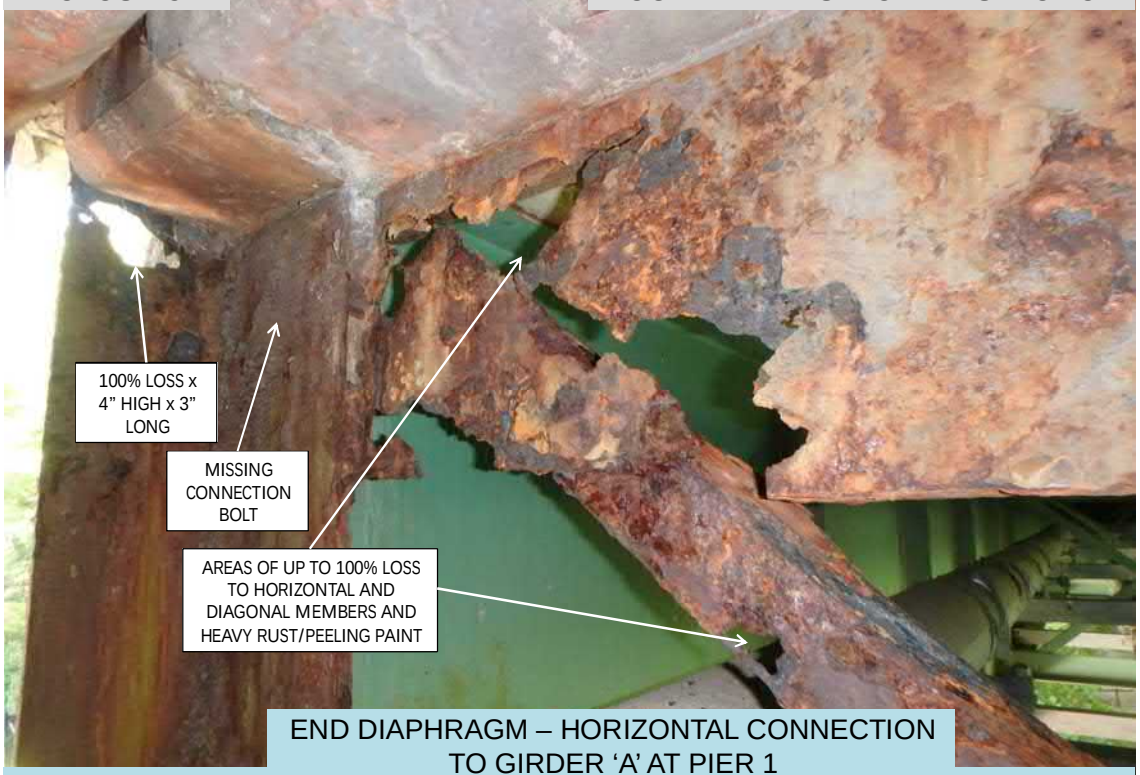

END DIAPHRAGM – HORIZONTAL CONNECTION TO GIRDER 'A' AT PIER 1 IN SPAN 2 (LOOKING WEST)

BRIDGE #067301 8/2/2018

PHOTOS #38 **ROUTINE AND SPECIAL INSPECTION**

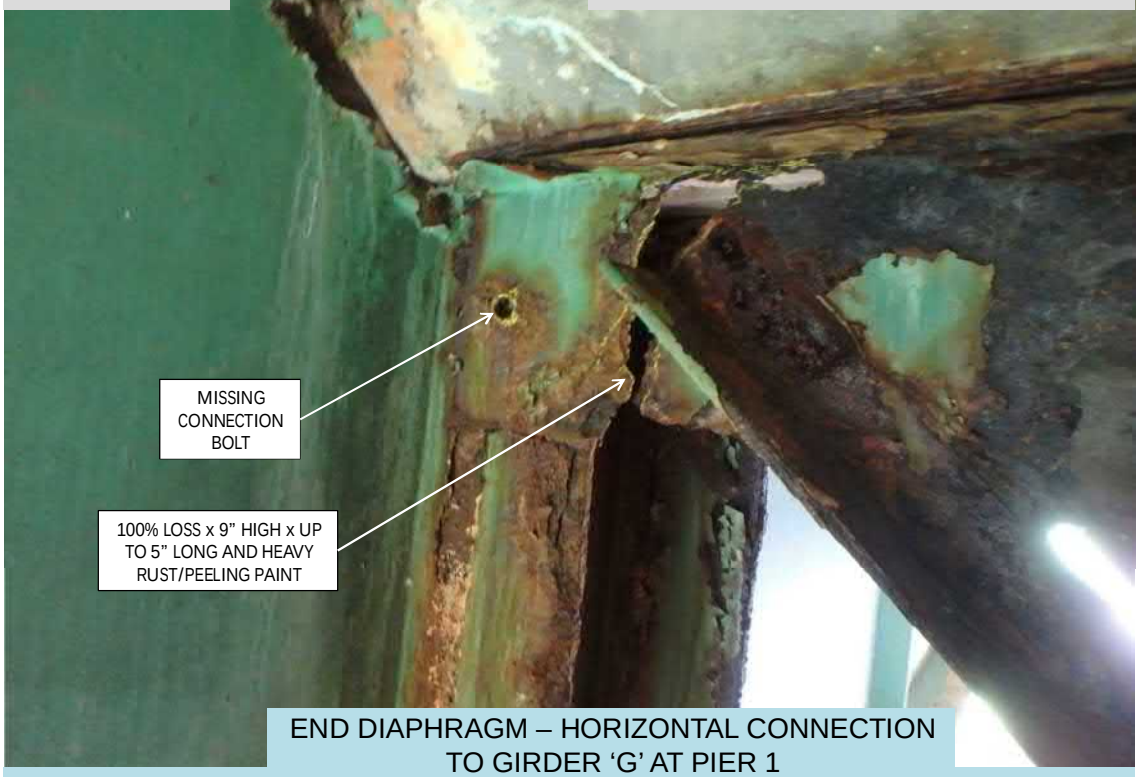

END DIAPHRAGM – HORIZONTAL CONNECTION TO GIRDER 'G' AT PIER 1 IN SPAN 2 (LOOKING EAST)

BRIDGE #067301 8/2/2018

PHOTOS #39 **ROUTINE AND SPECIAL INSPECTION**

DIAPHRAGM #2 – BAY 'C'
IN SPAN 2 (LOOKING SOUTH)

BRIDGE #067301 8/2/2018

PHOTOS #40 **ROUTINE AND SPECIAL INSPECTION**

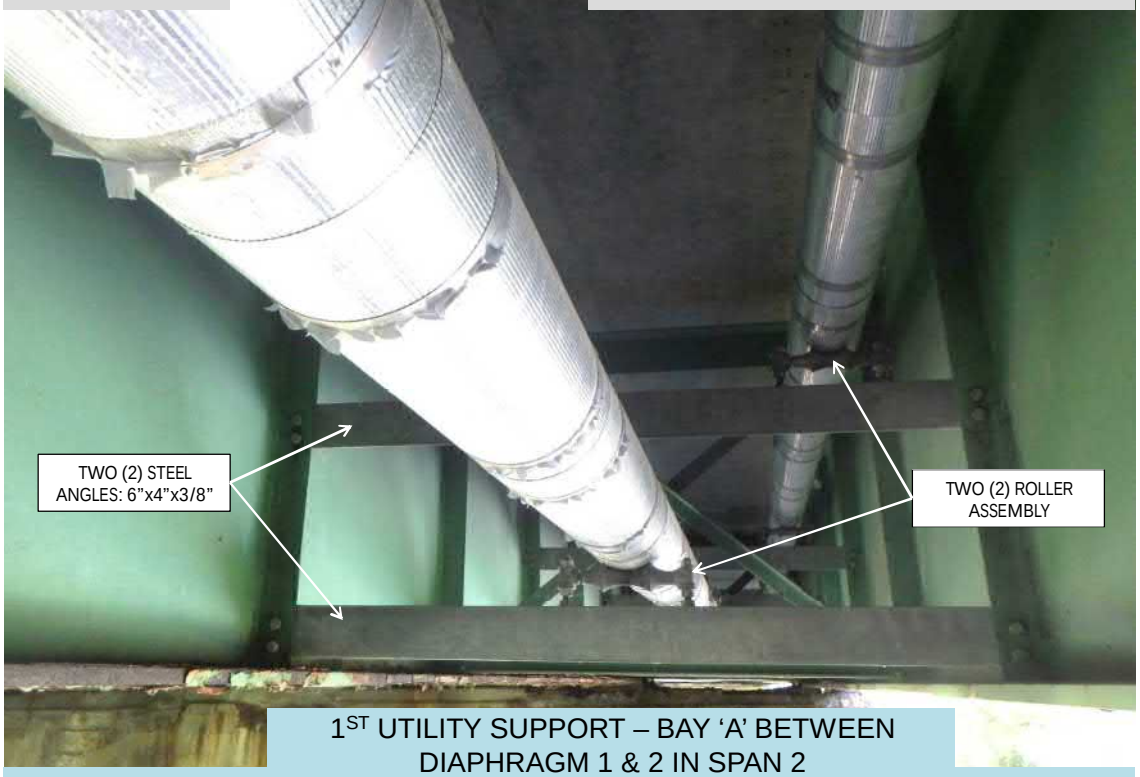

1ST UTILITY SUPPORT – BAY 'A' BETWEEN
DIAPHRAGM 1 & 2 IN SPAN 2
(LOOKING SOUTH)

BRIDGE #067301 8/2/2018

PHOTOS #41 **ROUTINE AND SPECIAL INSPECTION**

BRIDGE #067301 BEARING 'G' – AT PIER 1 IN SPAN 2 (LOOKING EAST) 8/2/2018

PHOTOS #42 **ROUTINE AND SPECIAL INSPECTION**

BRIDGE #067301 SOUTH ABUTMENT #1 GENERAL ELEVATION (LOOKING SOUTH) 8/2/2018

PHOTOS #43 **ROUTINE AND SPECIAL INSPECTION**

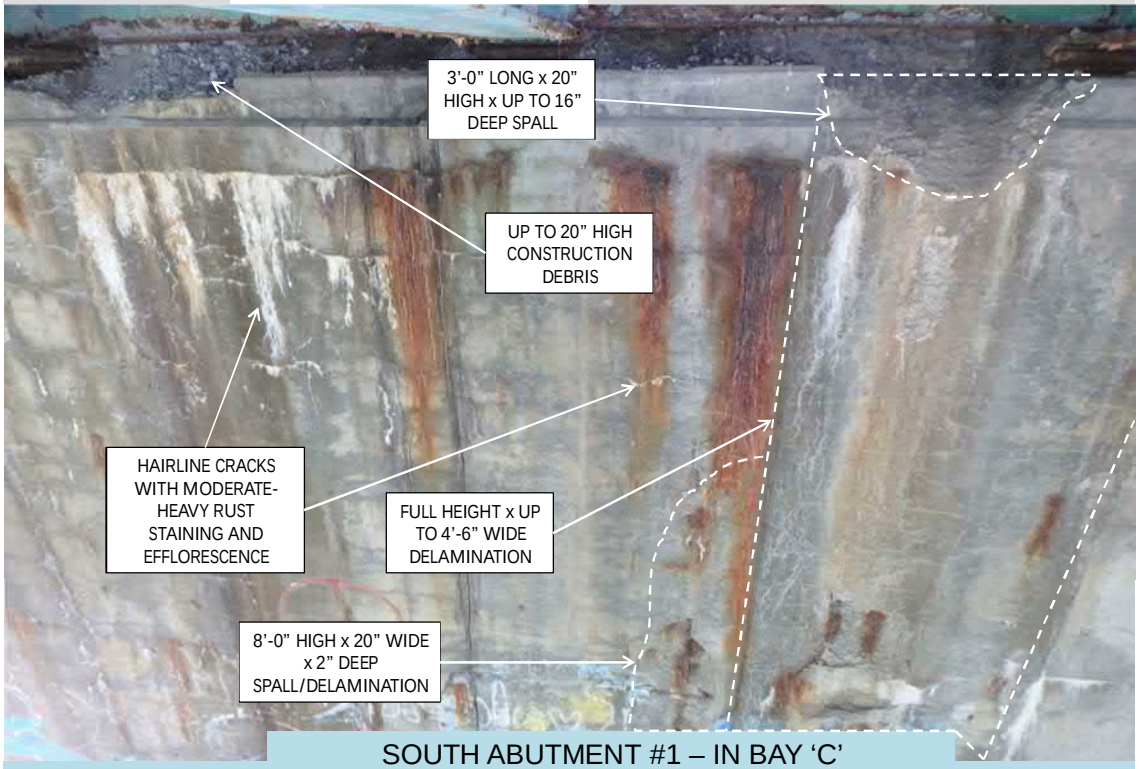

BRIDGE #067301 SOUTH ABUTMENT #1 – IN BAY 'C' (LOOKING SOUTH) 8/2/2018

PHOTOS #44 **ROUTINE AND SPECIAL INSPECTION**

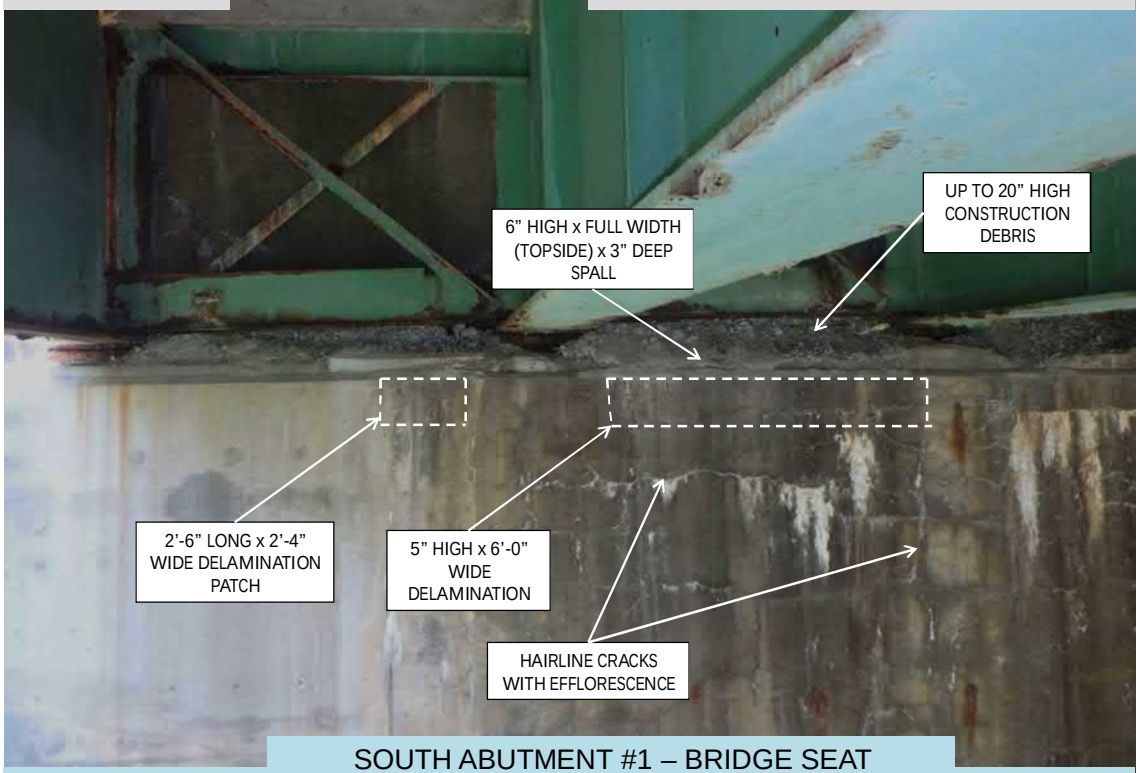

BRIDGE #067301 SOUTH ABUTMENT #1 – BRIDGE SEAT BETWEEN BAY 'E' & 'F' (LOOKING SOUTH) 8/2/2018

PHOTOS #45 **ROUTINE AND SPECIAL INSPECTION**

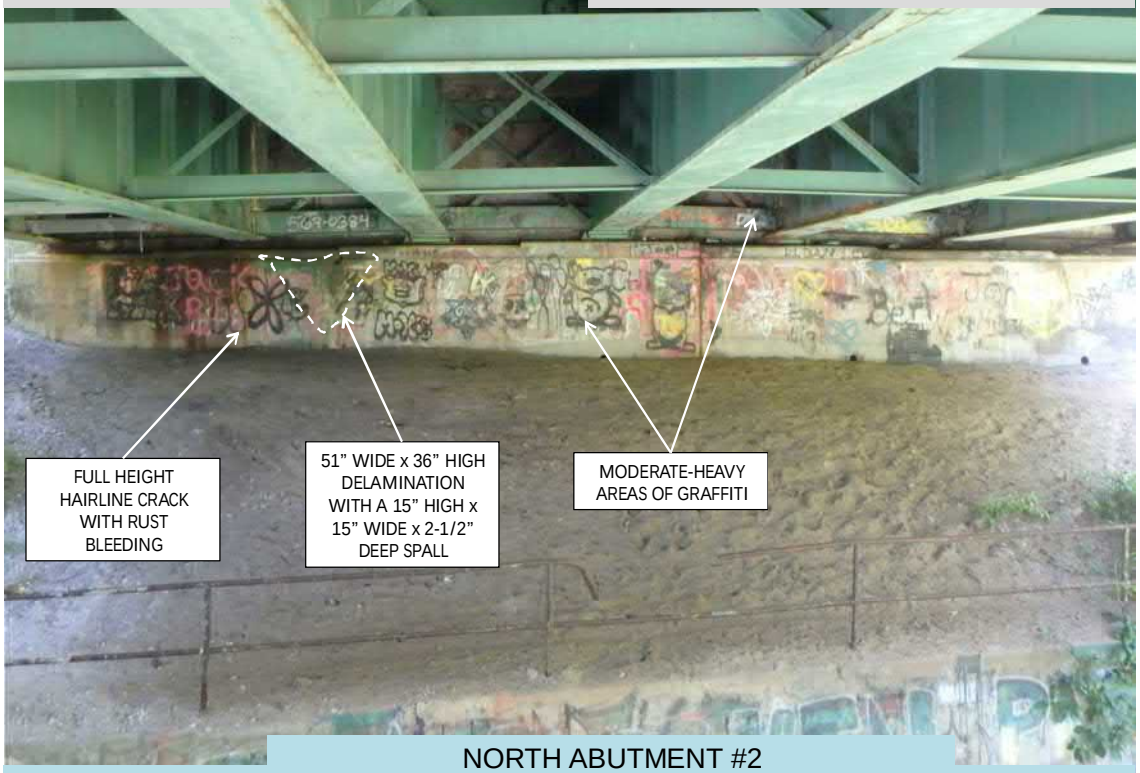

BRIDGE #067301 NORTH ABUTMENT #2 GENERAL ELEVATION (LOOKING NORTH) 8/2/2018

PHOTOS #46 **ROUTINE AND SPECIAL INSPECTION**

BRIDGE #067301 NORTH ABUTMENT #2 – BREASTWALL FROM GIRDER 'G' (LOOKING NORTHWEST) 8/2/2018

PHOTOS #47 **ROUTINE AND SPECIAL INSPECTION**

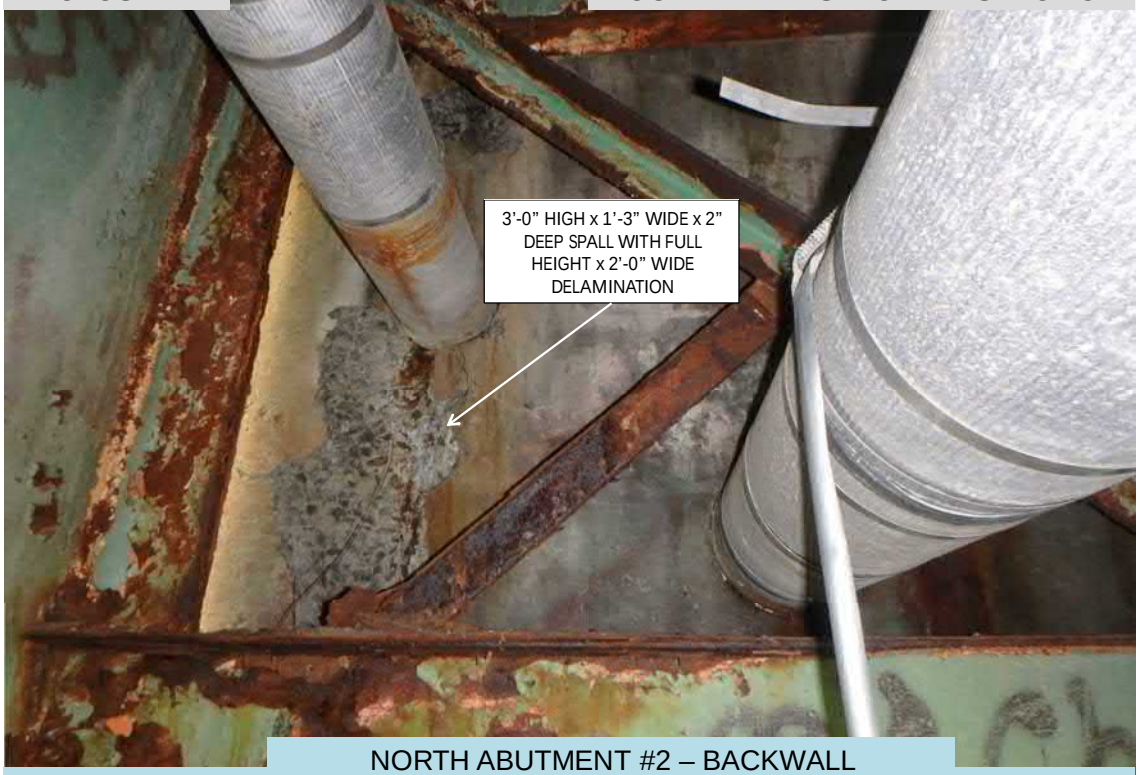

BRIDGE #067301 NORTH ABUTMENT #2 – BACKWALL IN BAY 'A' (LOOKING NORTH) 8/2/2018

PHOTOS #48 **ROUTINE AND SPECIAL INSPECTION**

BRIDGE #067301 NORTH ABUTMENT #2 – BACKWALL BEHIND GIRDER 'G' (LOOKING NORTH) 8/2/2018

PHOTOS #49 **ROUTINE AND SPECIAL INSPECTION**

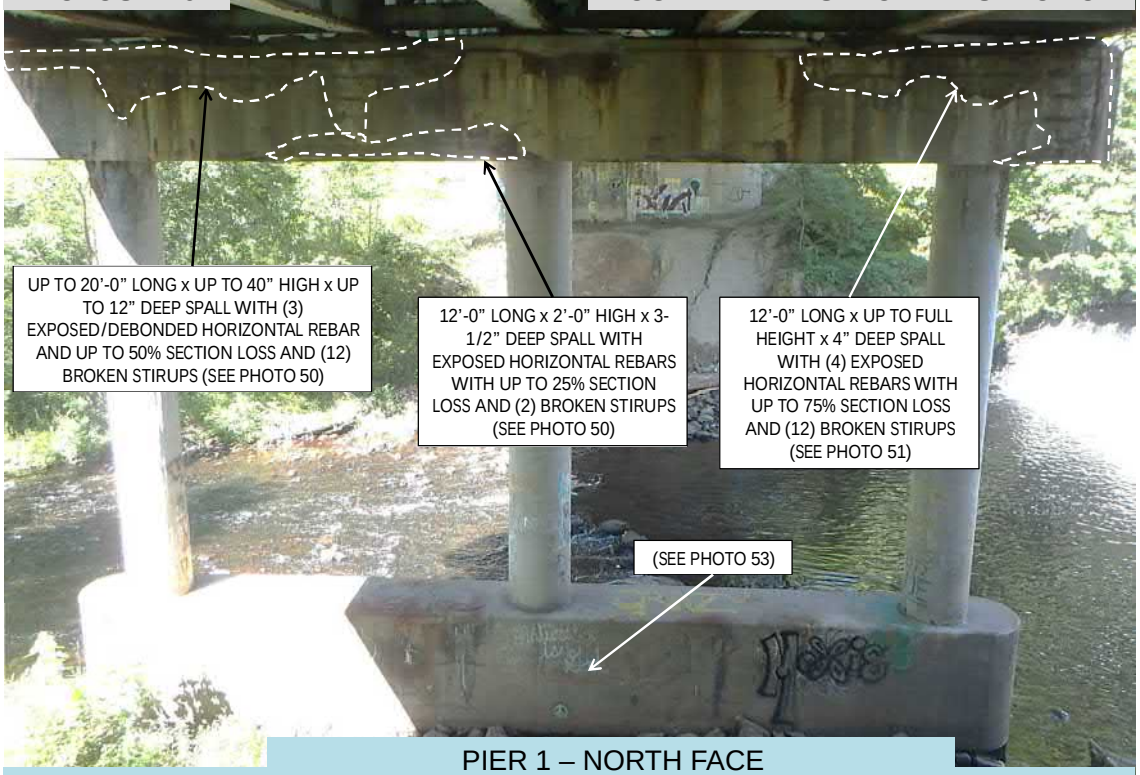

BRIDGE #067301 PIER 1 – NORTH FACE GENERAL ELEVATION (LOOKING SOUTH) 8/2/2018

PHOTOS #50 **ROUTINE AND SPECIAL INSPECTION**

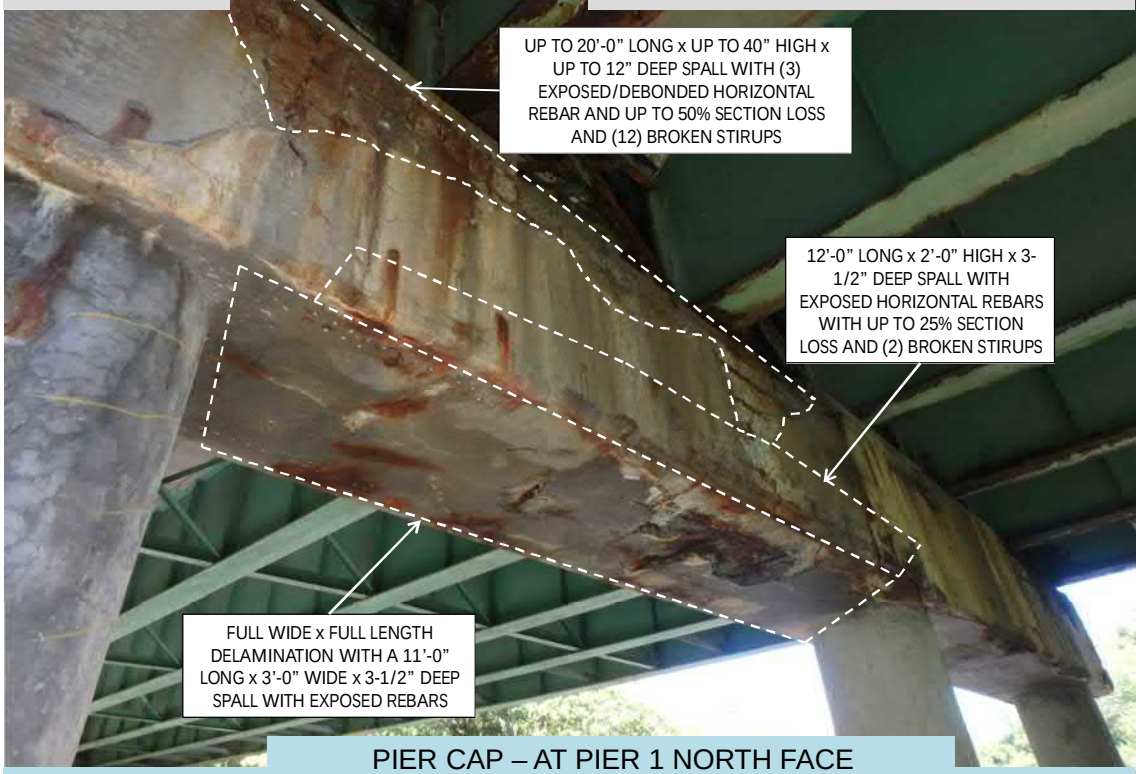

BRIDGE #067301 PIER CAP – AT PIER 1 NORTH FACE BETWEEN COLUMN 'B' & 'C' (LOOKING SOUTH) 8/2/2018

PHOTOS #51 **ROUTINE AND SPECIAL INSPECTION**

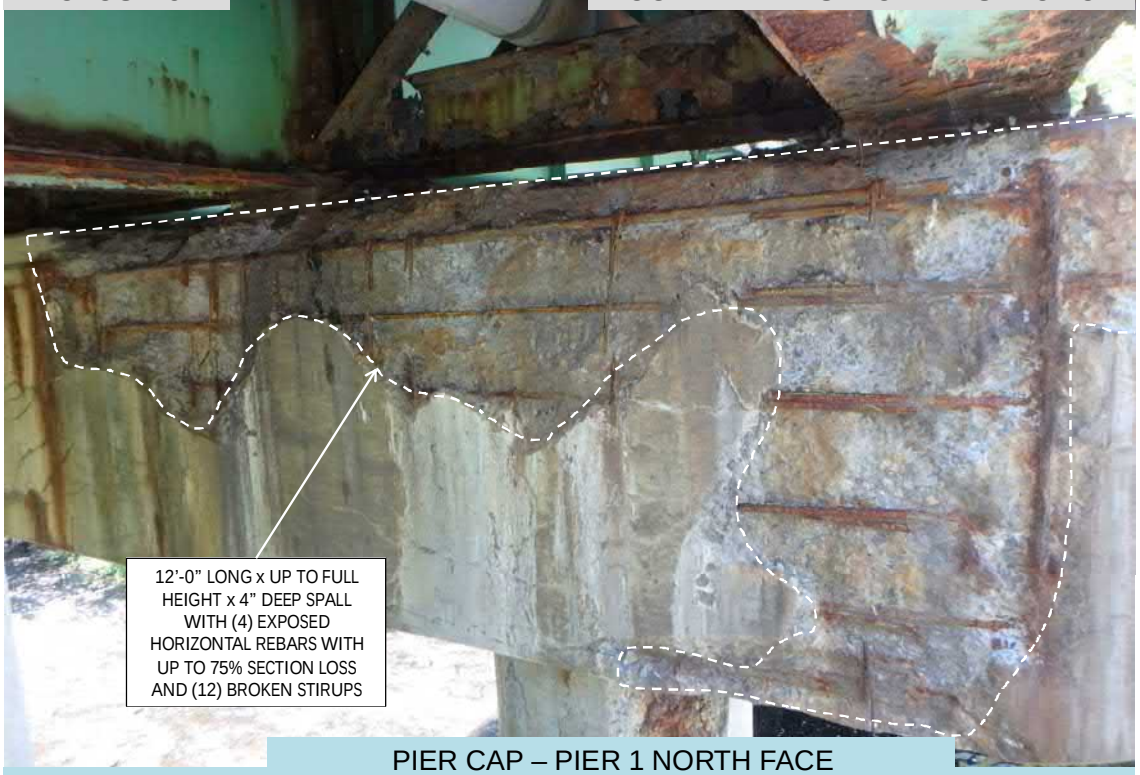

BRIDGE #067301 | PIER CAP – PIER 1 NORTH FACE ABOVE COLUMN 'A' (LOOKING NORTH) | 8/2/2018

PHOTOS #52 **ROUTINE AND SPECIAL INSPECTION**

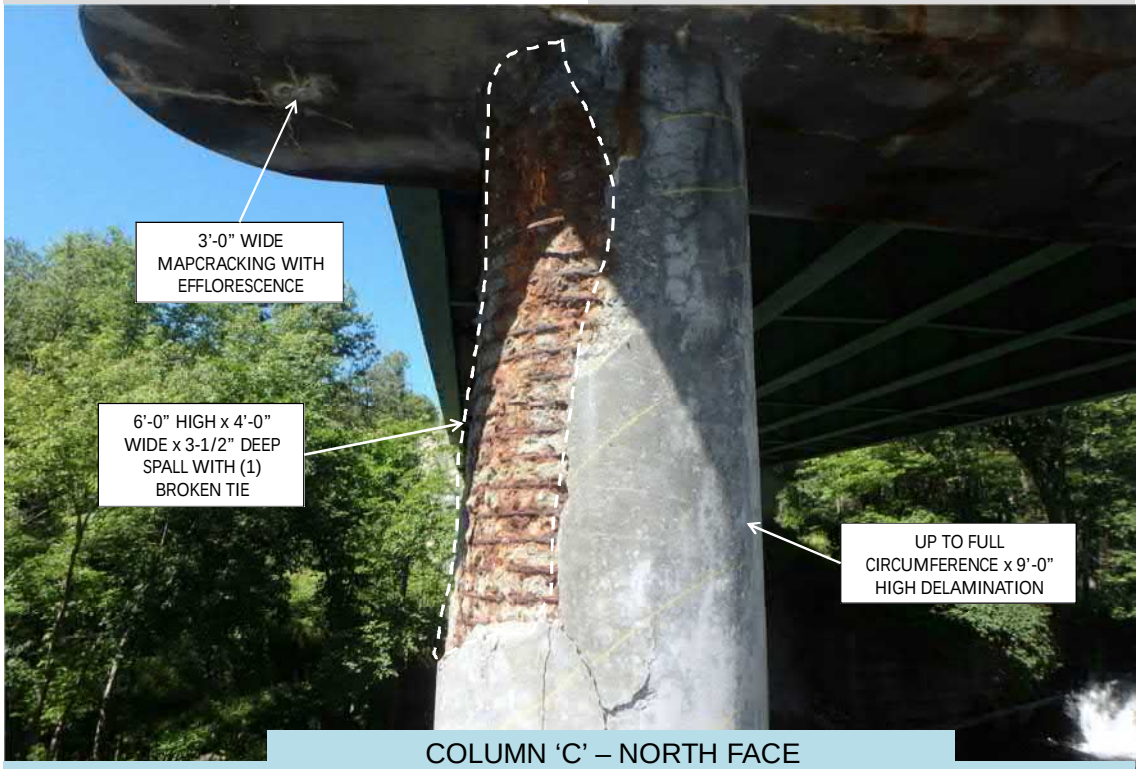

BRIDGE #067301 | COLUMN 'C' – NORTH FACE AT PIER 1 (LOOKING SOUTH) | 8/2/2018

PHOTOS #53 **ROUTINE AND SPECIAL INSPECTION**

BRIDGE #067301 PIER WALL – PIER 1 NORTH FACE (LOOKING SOUTHEAST) 8/2/2018

PHOTOS #54 **ROUTINE AND SPECIAL INSPECTION**

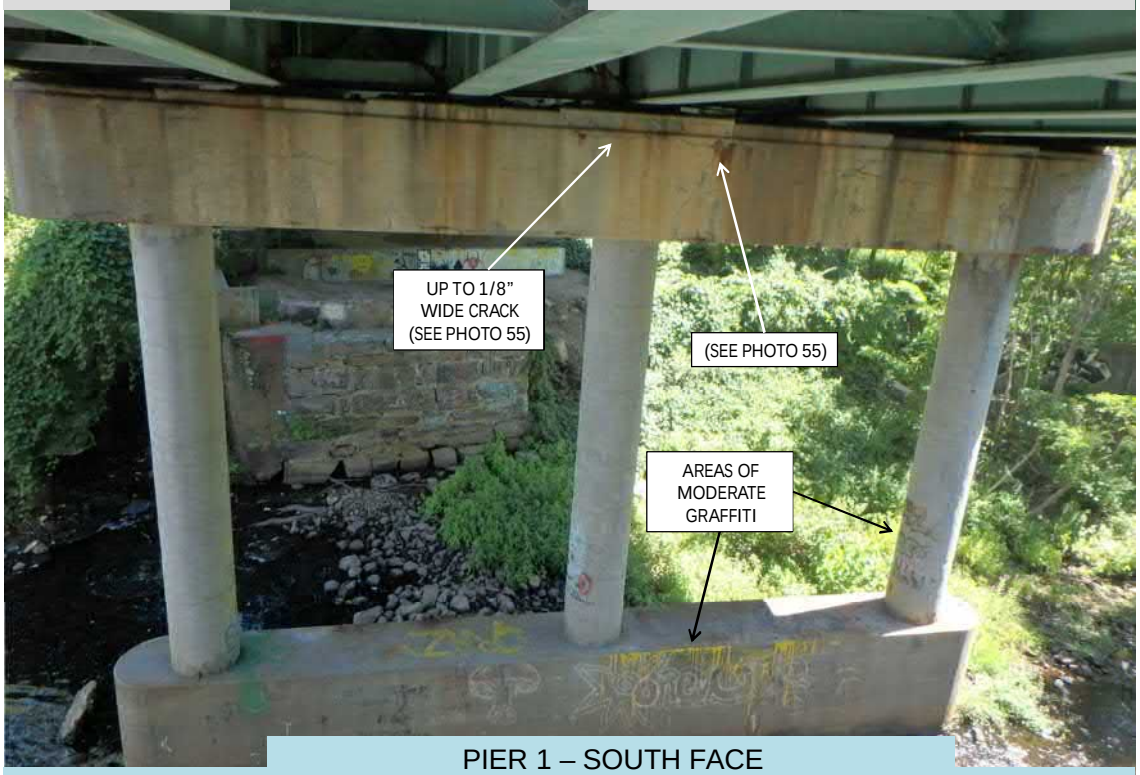

BRIDGE #067301 PIER 1 – SOUTH FACE GENERAL ELEVATION (LOOKING NORTH) 8/2/2018

PHOTOS #55 **ROUTINE AND SPECIAL INSPECTION**

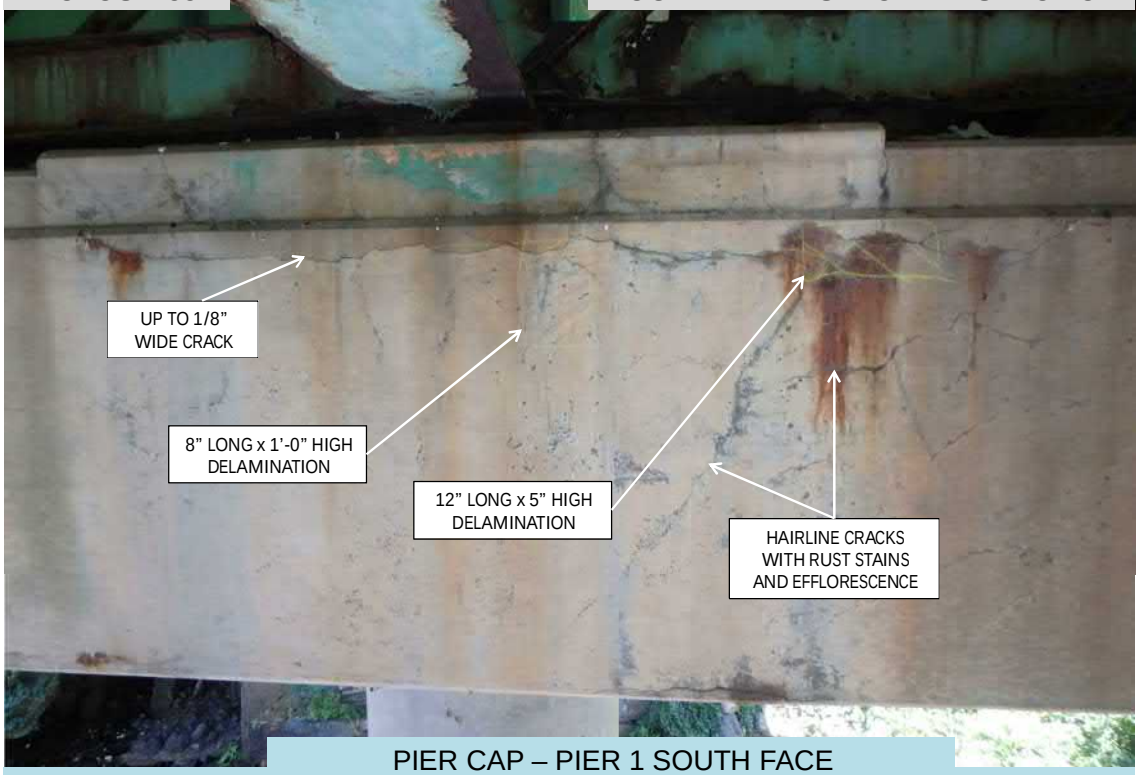

BRIDGE #067301 | PIER CAP – PIER 1 SOUTH FACE ABOVE COLUMN 'B' (LOOKING NORTH) | 8/2/2018

PHOTOS #56 **ROUTINE AND SPECIAL INSPECTION**

BRIDGE #067301 | SOUTHWEST WINGWALL AT SOUTH ABUTMENT #1 (LOOKING SOUTH) | 8/2/2018

PHOTOS #57 **ROUTINE AND SPECIAL INSPECTION**

SOUTHEAST WINGWALL
GENERAL ELEVATION (LOOKING SOUTH)

BRIDGE #067301 8/2/2018

PHOTOS #58 **ROUTINE AND SPECIAL INSPECTION**

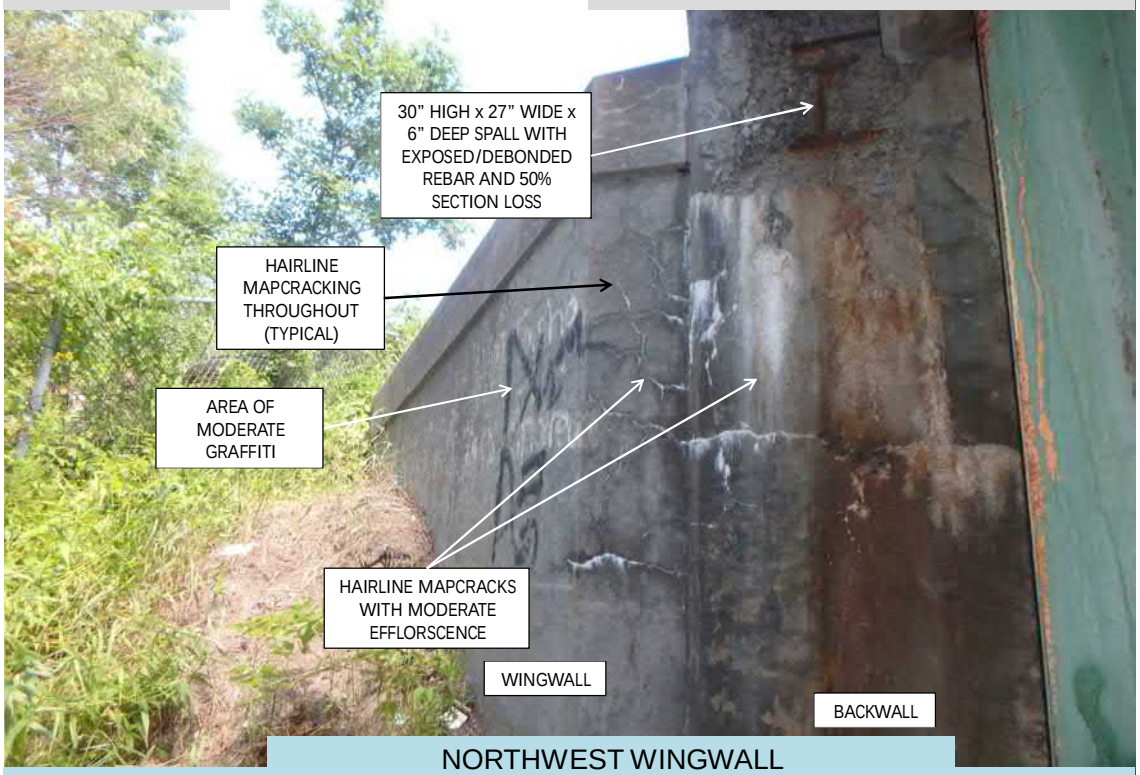

NORTHWEST WINGWALL
GENERAL ELEVATION (LOOKING NORTH)

BRIDGE #067301 8/2/2018

PHOTOS #59 **ROUTINE AND SPECIAL INSPECTION**

NORTHEAST WINGWALL

BRIDGE #067301 GENERAL ELEVATION (LOOKING NORTHEAST) 8/2/2018

PHOTOS #60 **ROUTINE AND SPECIAL INSPECTION**

UPSTREAM

BRIDGE #067301 (LOOKING EAST) 8/2/2018

PHOTOS #61 **ROUTINE AND SPECIAL INSPECTION**

BRIDGE #067301 DOWNSTREAM (LOOKING WEST) 8/2/2018

APPENDIX C

COMPUTATIONS

Appendix C Table of Contents

LOAD DEVELOPMENT FOR BRIDGE 067301

Input

Bridge Info:

Bridge ID: 067301

Bridge Name: Mohegan Bridge

Location: Burrillville, RI

Facility Carried: RI Route 102

Feature Intersected: Branch River

Construction Date: 1966

References:

AASHTO LRFD Bridge Design Specifications, 8th Edition, 2017 ("AASHTO")

AASHTO Manual for Bridge Evaluation, 3rd Edition 2018 ("MBE")

RIDOT Load Rating Guidelines August 2017 ("RIDOT")

Bridge 673 Design Plans, dated 1966 ("Plans")

Material Properties:

Concrete Strength:	$f'_c := 3ksi$	Plans Sheet B2
Structural Steel Strength (A36):	$f_{y.36} := 36ksi$	
Structural Steel Min Tensile Strength (A36):	$f_{u.36} := 66ksi$	MBE Table 6A.6.2.1-1
Reinforcing Steel Strength:	$f_{y\_re} := 40ksi$	For f.s = 20 ksi
Unit Weight of Concrete	$w_{conc} := 145pcf$	AASHTO Table 3.5.1-1
Concrete Modulus of Elasticity:	$E_c := 120000 \cdot 0.145^2 \cdot 3^{0.33} \cdot 1ksi = 3625 \cdot ksi$	AASHTO 5.4.2.4
Modular Ratio:	$n := 8.07$	AASHTO 6.10.1.1.1b
Unit Weight of Bituminous Concrete	$w_{bitconc} := 140pcf$	
Unit Weight of Granite	$w_{granite} := 170pcf$	
Unit Weight of Steel	$w_{steel} := 490 \cdot pcf$	
Unit Weight of Aluminum	$w_{alum} := 175pcf$	

Bridge Geometry:

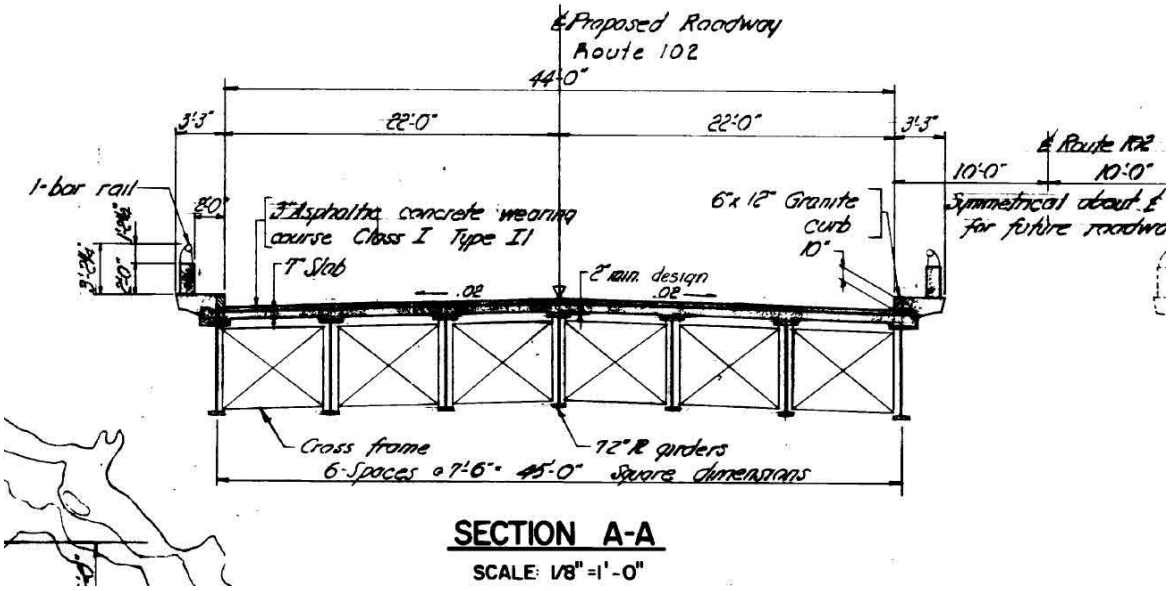

SECTION A-A

SCALE: 1/8" = 1'-0"

Span 1 Total Length (CL Brg-to-CL Brg):	$L_{sp1} := 110 \cdot ft$
Span 2 Total Length (CL Brg-to-CL Brg):	$L_{sp2} := 110 \cdot ft$
Overall Bridge Deck Width:	$W_{slab} := 45ft + 9in + 9 \cdot in = 46.5\,ft$
Roadway Width:	$W_{roadway} := 44 \cdot ft$
Deck Overhang Width used in BrR	$b_{ovhng} := 9in$
Deck Thickness:	$t_{deck} := 7 \cdot in$
Girder Spacing:	$s_{girder} := 7ft + 6 \cdot in = 7.5\,ft$
Number of beams	$n_{bm} := 7$
Number of interior beams	$n_{int.bm} := 5$
Number of exterior beams	$n_{ext.bm} := 2$

Bridge Geometry (continued):

Bridge Deck Wearing Surface: per Plans, the design wearing surface thickness is 3". This included a 10" reveal of a 12" granite curb on top of a 1" grout base. Noted during the 8/2/18 bridge inspection was an overall average curb reveal of 7.5". This would indicate that the wearing surface is now 5.5" (1" grout + 12" curb - 7.5" reveal).

Wearing surface thickness: $t_{wearing} := 5.5 \cdot in$

Intermediate Cross Frames

8 WF 18 Beam Length: $L_8 := 6.5ft$

8 WF 18 Beam Weight: $w_8 := 18plf$

Angle L 4x3x3/8 Length $L_L := 96.33in = 8.027\,ft$ (Use Pyth Th. w=72", h=64")

Angle L 4x3x3/8 Weight: $w_L := 8.5plf$

Connection Plate Width: $b_p := 5in = 0.417\,ft$

Connection Plate Thickness: $t_p := 0.375 \cdot in = 0.031\,ft$

Connection Plate Length: $L_p := 72in = 6\,ft$

Section Properties:

**********Steel plate girder dimensions and section properties input into AASHTO BrR;

Cross frame member section properties copied from AASHTO BrR library;

All girders are composite with the reinforced concrete deck;

Effective flange widths generated by AASHTO BrR.**********

Noncomposite DL (DC1 Stage 1):

Steel Non-Composite DL:

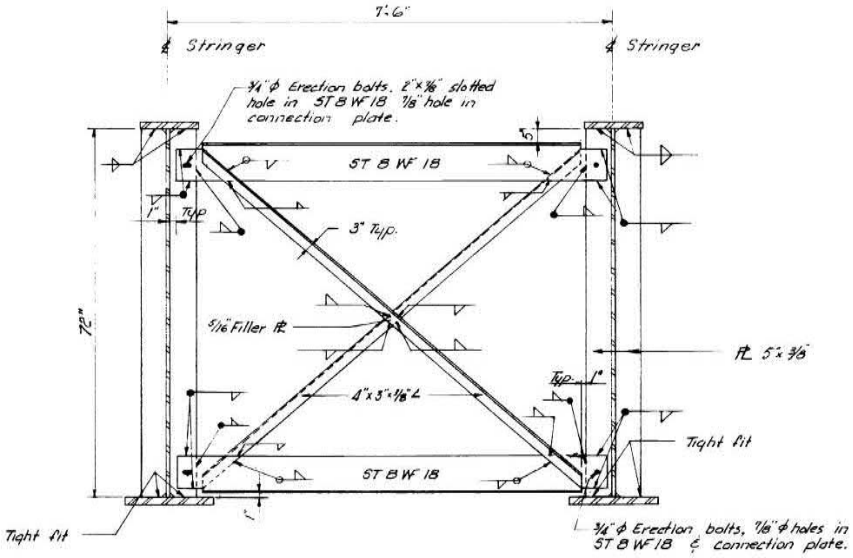

INTERMEDIATE CROSS FRAME

Cross Frame Load:

Total Weight of 8 WF 18 Beams: $W_{T8} := 2\left(w_8 \cdot L_8\right) = 234\,\text{lbf}$

Total Weight of Plates: $W_{Tp} := 2\left(w_{steel} \cdot L_p \cdot b_p \cdot t_p\right) = 76.562\,\text{lbf}$

Total Weight of Angles: $W_{TL} := 2\left(w_L \cdot L_L\right) = 136.467\,\text{lbf}$

Total Cross Frame Weight (include additional 5%): $W_{Tdia} := 1.05\left(W_{T8} + W_{Tp} + W_{TL}\right) = 0.469 \cdot \text{kip}$

Number of Int. Cross Frames per span: $n_{cf} := 4$

For End Cross Frames, assume that load is transferred directly to the bearings and can be neglected in BrR model.

Concrete Non-Composite DL:

-slab self-weight computed by AASHTO BrR

-calculate weight of haunches

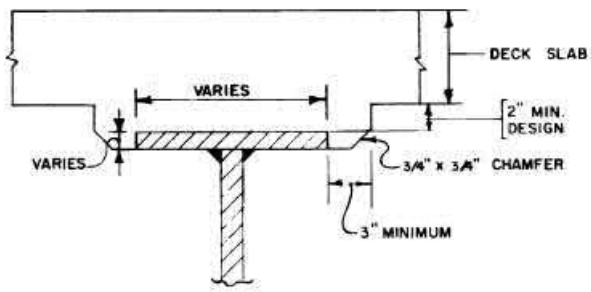

TYPICAL HAUNCH

DETAIL 38

SCALE: 1 1/2" = 1'-0"

All Beams:

Top flange thickness: $t_f := 0.875in$ Use max thickness throughout

Top flange width: $b_f := 12in$

Thickness of haunch: $t_h := t_f + 2in = 2.875 \cdot in$

Width of haunch: $b_h := b_f + 3in + 3in = 18 \cdot in$

DC1 Load:

Weight of haunch, each girder: $wt_{haunch} := w_{conc} \cdot (b_h \cdot t_h) = 0.052 \cdot klf$

Note: the equation above assumes the haunch concrete height = 2" + mid span top flange thickness. The minimum haunch height = 2" therefore the actual overall haunch is taller. The equation used here provides a reasonable approximation of haunch dimension for weight calculation purposes.

Superimposed DL (DC2 Stage 2 and DW Stage 2):

DC2 Stage 2: Parapet/Safetywalk, Granite Curbs, Bridge Rail, Guardrail

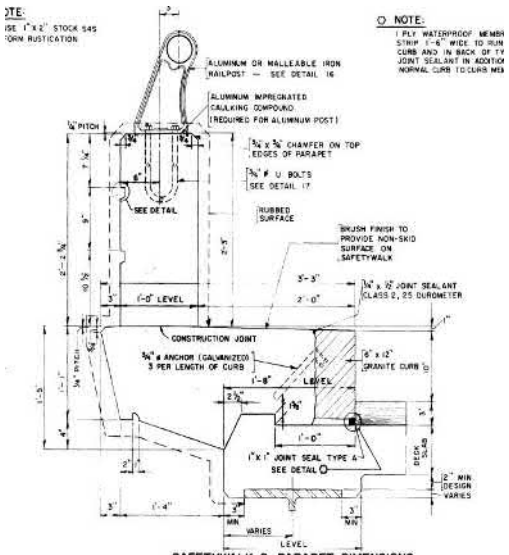

SAFETYWALK & PARAPET DIMENSIONS

DETAIL 15

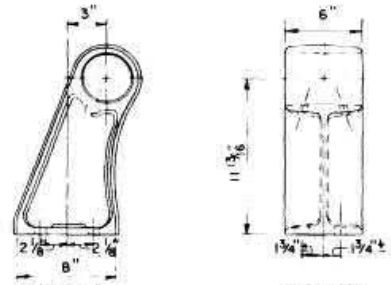

POST

1. ALUMINUM STANDARD CAST POST - 20# (ALLOY 344 T4)
2. ALTERNATE POST MALLEABLE IRON CASTING A.S.T.M. A47 GRADE 35018, ALL POSTS TO BE GALVANIZED.

RAILING

ALUMINUM 4" O.D. X .1875 WALL (6061) T6. ALTERNATE RAIL - STANDARD PIPE 4" O.D. A.S.T.M. A53 - GRADE B. CAP ENDS OF RAILING. SEE DETAIL 13.

RAILPOST TYPE "A"

DETAIL 16

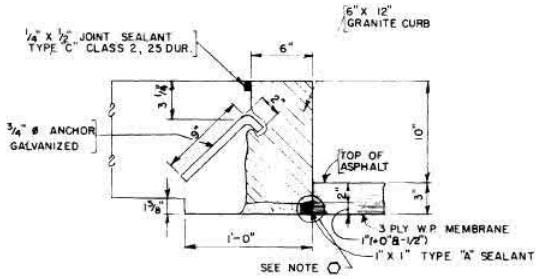

SECTION

GRANITE CURB

DETAIL 19

Concrete parapet: $wt_{para} := (2ft + 3in)(1ft)w_{conc} = 0.326 \cdot klf$

Concrete safetywalk: $wt_{sw} := (2ft + 9in)(1ft + 2in)w_{conc} = 0.465 \cdot klf$

Granite Curbs: $wt_{curb} := (6in \cdot 12in) \cdot w_{granite} = 0.085 \cdot klf$

Bridge Rail: $wt_{rail} := \pi \cdot (4in) \cdot 0.1875in \cdot w_{alum} = 0.003 \cdot klf$

Assume 10 posts per span;
divide total post weight per span length

$$wt_{post} := \frac{20lbf \cdot 10}{L_{sp1}} = 0.002 \cdot klf$$

$wt_{bridgerail} := wt_{rail} + wt_{post} = 0.005 \cdot klf$

Grout: $wt_{grt} := (6in \cdot 1 \cdot in) \cdot w_{conc} = 0.006 \cdot klf$

Guardrail: $w_{guard} := 9plf$

W Guardrail does not appear on plans
Estimate guardrail and post dimensions
and assume 15 posts per span;
divide total weight per span length

$$w_{gpost} := \frac{9plf \cdot 18in \cdot 15}{L_{sp1}} = 0.002 \cdot klf$$

$$w_{guardrail} := w_{guard} + w_{gpost} = 0.011 \cdot klf$$

Guardrail load assumptions source:
https://www.idealshield.com//wp-content/uploads/2015/09/Hwy_Gdrl_Specifications-1.pdf

Total DC2 Stage 2 Weight:

$$wt_{DC2} := 2 \cdot \left(wt_{para} + wt_{sw} + wt_{curb} + wt_{grt} + wt_{bridgerail} + w_{guardrail}\right) = 1.796 \cdot klf$$

-Per RIDOT Section 2.1.2; SDL for non-LRFD designed bridges must be checked for even distibution; 50/50 distribution and 60/40 distribution. Whichever distribution method produces the highest controlling rating factors for the superstructure as a whole shall be used for all bridge members.

$$wt_{DC2.even} := \frac{wt_{DC2}}{n_{bm}} = 0.257 \cdot klf$$

$$wt_{DC2.60.40.ext} := \frac{\left(0.6wt_{DC2}\right)}{n_{ext.bm}} = 0.539 \cdot klf$$

$$wt_{DC2.60.40.int} := \frac{\left(0.4wt_{DC2}\right)}{n_{int.bm}} = 0.144 \cdot klf$$

$$wt_{DC2.50.50.ext} := \frac{\left(0.5wt_{DC2}\right)}{n_{ext.bm}} = 0.449 \cdot klf$$

$$wt_{DC2.50.50.int} := \frac{\left(0.5wt_{DC2}\right)}{n_{int.bm}} = 0.180 \cdot klf$$

Note: Three iterations of the BrR model were run using each of the SDL distribution method values calculated here. The highest controlling rating factors were produced using the even distribution method.

Summary of DC2 Loads:

Total DC2 load on Exterior Beams: $wt_{DC2.ext} := wt_{DC2.even} = 0.257 \cdot klf$

Total DC2 load on Interior Beams: $wt_{DC2.int} := wt_{DC2.even} = 0.257 \cdot klf$

DW Stage 2: Wearing Surface, Utilities

Wearing Surface:

In accordance with RIDOT 2.1.3, this load shall be evenly distributed to all girders. The wearing surface thickness is based on a field measurement, so the Strength limit state load factor (DW) for wearing surface only shall be 1.25. The DW load factor for utilities shall remain at 1.50. Therefore to obtain a singular unfactored DW load that when factored by 1.50 will produce the correct factored value, multiply the wearing surface load by a factor of 1.25/1.50.

Weight of wearing surface $wt_{wear} := \frac{W_{roadway} \cdot t_{wearing} \cdot w_{bitconc} \cdot 1.25}{n_{bm} \cdot 1.50} = 0.336 \cdot klf$

Utilities:

Per RIDOT 2.1.4, the weight of utility pipes and supports shall be included under the DW load case. Utility loads shall be distributed evenly among supporting girders.

No utility information exists in the plans. Loads are based on information gathered from the previous rating report and during the 8/2/18 inspection.

In Girder Bay A, there are 10" and 12" insulated utilities. Assume these contain 4" and 6" pipes. Per RIDOT 2.1.4, use 125plf for 4" pipe and 250plf for 6" pipe, and divide these loads evenly between girders A & B.

Utility Diaphragm Weight:

Members don't appear on plans. Based on inspection report and photos, supports are L6x4x3/8" with (assumed) 5" x 3/8" connection plates, located in girder bay A only, 10 locations per span, 2 angles (top & bottom) per location, each 7'-3" long.

Utility Support Weight: $w_{util} := 12.3plf$

Utility Support Length: $l_{util} := 7.25ft$

Utility Diaphragm Load per location: $W_{util} := 2 \cdot w_{util} \cdot l_{util} + W_{Tp} = 254.912\,lbf$

Number of utility supports per span $n_{us} := 10$

Total Uniform utility support load $US := \frac{W_{util} \cdot n_{us}}{L_{sp1}} = 0.023 \cdot klf$

Summary of DW Loads:

Girders A & B $Girder_{AB} := wt_{wear} + \frac{(US + 125plf + 250plf)}{2} = 0.535 \cdot klf$

Girders C thru G $Girder_{CG} := wt_{wear} = 0.336 \cdot klf$

Project #	60330198	Page	
Client	RIDOT	Date	9/6/2018
Site	Bridge 067301 Rating	By	MJC
Subject	BrR Input - Section Losses	App.	J. Smith

AECOM

Goal:
Summarize section loss input for BrR program model

User Input

Backup Info / Supporting documents:
Bridge 673 Design Plans, dated 1966 ("Plans")
Inspection Report Field Notes (attached)

Deterioration Profile

Span 1

Girder A

Web

Area in2	Width Loss in	Height Loss in	Thick. Loss %	Support #	Start Dist. ft	Length ft	End Distance ft
31.5	0.4375	2	2.8%	1	0.00	0.92	0.92

Girder D

Web

Area in2	Width Loss in	Height Loss in	Thick. Loss %	Support #	Start Dist. ft	Length ft	End Distance ft
31.5	0.1875	3	1.8%	1	109.00	1.00	110.00

Girder E

Web

Area in2	Width Loss in	Height Loss in	Thick. Loss %	Support #	Start Dist. ft	Length ft	End Distance ft
31.5	0.125	4	1.6%	1	108.33	1.67	110.00

Project #	60330198	Page	
Client	RIDOT	Date	9/6/2018
Site	Bridge 067301 Rating	By	MJC
Subject	BrR Input - Section Losses	App.	J. Smith

AECOM

Span 2

Girder A

Web

Area in2	Width Loss in	Height Loss in	Thick. Loss %	Support #	Start Dist. ft	Length ft	End Distance ft
31.5	0.125	5	2.0%	1	0.00	1.00	1.00

Web

Area in2	Width Loss in	Height Loss in	Thick. Loss %	Support #	Start Dist. ft	Length ft	End Distance ft	
31.5	0.4375	1	1.4%	1	0.00	0.50	0.50	actually 5" long but min BrR input = 6"

Web

Area in2	Width Loss in	Height Loss in	Thick. Loss %	Support #	Start Dist. ft	Length ft	End Distance ft	
31.5	0.25	24	19.0%	1	0.50	0.50	1.00	See note below

Web

Area in2	Width Loss in	Height Loss in	Thick. Loss %	Support #	Start Dist. ft	Length ft	End Distance ft	
31.5	0.125	3	1.2%	1	1.00	9.84	10.84	See note below

Web

Area in2	Width Loss in	Height Loss in	Thick. Loss %	Support #	Start Dist. ft	Length ft	End Distance ft
31.5	0.0625	6	1.2%	1	107.00	3.00	110.00

Note: These 2 entries seek to model the losses on Girder A at Pier, East Face. Field notes indicate 1/4" loss up to 24" high for 5'-5" but as shown in Photo 19, that 24" occurs only for first 6" of girder. And the loss over the remaining 4'-11" is approximately 6" high. Therefore the losses seen at the first 10'-10" of girder were modeled this way.

Girder B Web

Area in2	Width Loss in	Height Loss in	Thick. Loss %	Support #	Start Dist. ft	Length ft	End Distance ft
31.5	0.125	2	0.8%	1	0.00	0.83	0.83

Girder C Web

Area in2	Width Loss in	Height Loss in	Thick. Loss %	Support #	Start Dist. ft	Length ft	End Distance ft
31.5	0.25	2	1.6%	1	0.00	0.83	0.83

Girder D Web

Area in2	Width Loss in	Height Loss in	Thick. Loss %	Support #	Start Dist. ft	Length ft	End Distance ft
31.5	0.1875	17	10.1%	1	0.00	8.00	8.00

Area in2	Width Loss in	Height Loss in	Thick. Loss %	Support #	Start Dist. ft	Length ft	End Distance ft
31.5	0.125	2	0.8%	1	0.00	0.83	0.83

Project #	60330198	Page	
Client	RIDOT	Date	9/6/2018
Site	Bridge 067301 Rating	By	MJC
Subject	BrR Input - Section Losses	App.	J. Smith

AECOM

Span 2

Girder E

Web

Area in2	Width Loss in	Height Loss in	Thick. Loss %	Support #	Start Dist. ft	Length ft	End Distance ft
31.5	0.125	2	0.8%	1	0.00	0.83	0.83

Girder F

Web

Area in2	Width Loss in	Height Loss in	Thick. Loss %	Support #	Start Dist. ft	Length ft	End Distance ft
31.5	0.25	6	4.8%	1	0.00	5.33	5.33

Web

Area in2	Width Loss in	Height Loss in	Thick. Loss %	Support #	Start Dist. ft	Length ft	End Distance ft
31.5	0.125	12	4.8%	1	0.00	0.50	0.50

Girder G

Web

Area in2	Width Loss in	Height Loss in	Thick. Loss %	Support #	Start Dist. ft	Length ft	End Distance ft
31.5	0.25	12	9.5%	1	0.83	3.67	4.50

Area in2	Width Loss in	Height Loss in	Thick. Loss %	Support #	Start Dist. ft	Length ft	End Distance ft
31.5	0.3125	13	12.9%	1	0.00	0.83	0.83

Area in2	Width Loss in	Height Loss in	Thick. Loss %	Support #	Start Dist. ft	Length ft	End Distance ft	
31.5	*0.4375*	*0.75*	*1.0%*	*1*	*0.25*	*0.15*	*0.40*	See note below
31.5	0.1275	0.75	0.3%	1	0.25	0.50	0.75	modified for BrR input (min length = 6")

Bottom Flange

Width in	Thickness in	Width Loss %	Thick. Loss %	Support #	Start Dist. ft	Length ft	End Distance ft
18.0	0.3125	0%	31%	1	0.00	10.00	10.00

Note:

Hole in web	Width	Height	Length	Volume	
Actual	0.4375	0.75	1.75	0.574	cu in

Determine dimensions that represent same volume of loss but spread over the min allowed distance 6"

	Width	Height	Length	Volume	
Modified	0.1275	0.75	6.0	0.574	cu in

Project #	60330198	Page	
Client	RIDOT	Date	9/6/2018
Site	Bridge 067301 Rating	By	MJC
Subject	BrR Input - Section Losses	App.	

AECOM

Copies of AECOM Inspection Report Field Notes:

Framing Plan sketch 1 of 2

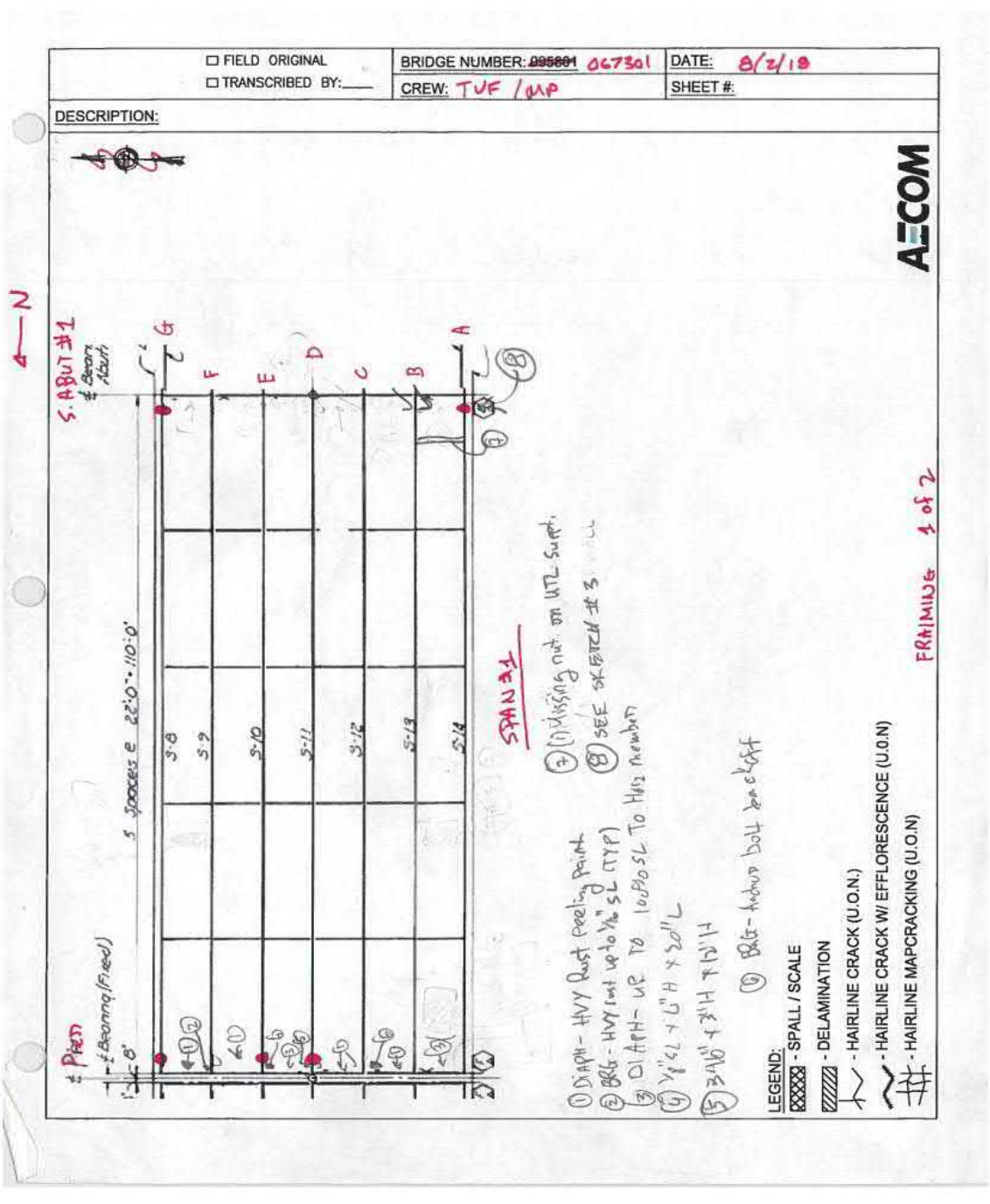

Project #	60330198	Page	
Client	RIDOT	Date	9/6/2018
Site	Bridge 067301 Rating	By	MJC
Subject	BrR Input - Section Losses	App.	

AECOM

Copies of AECOM Inspection Report Field Notes:

Framing Plan sketch 2 of 2

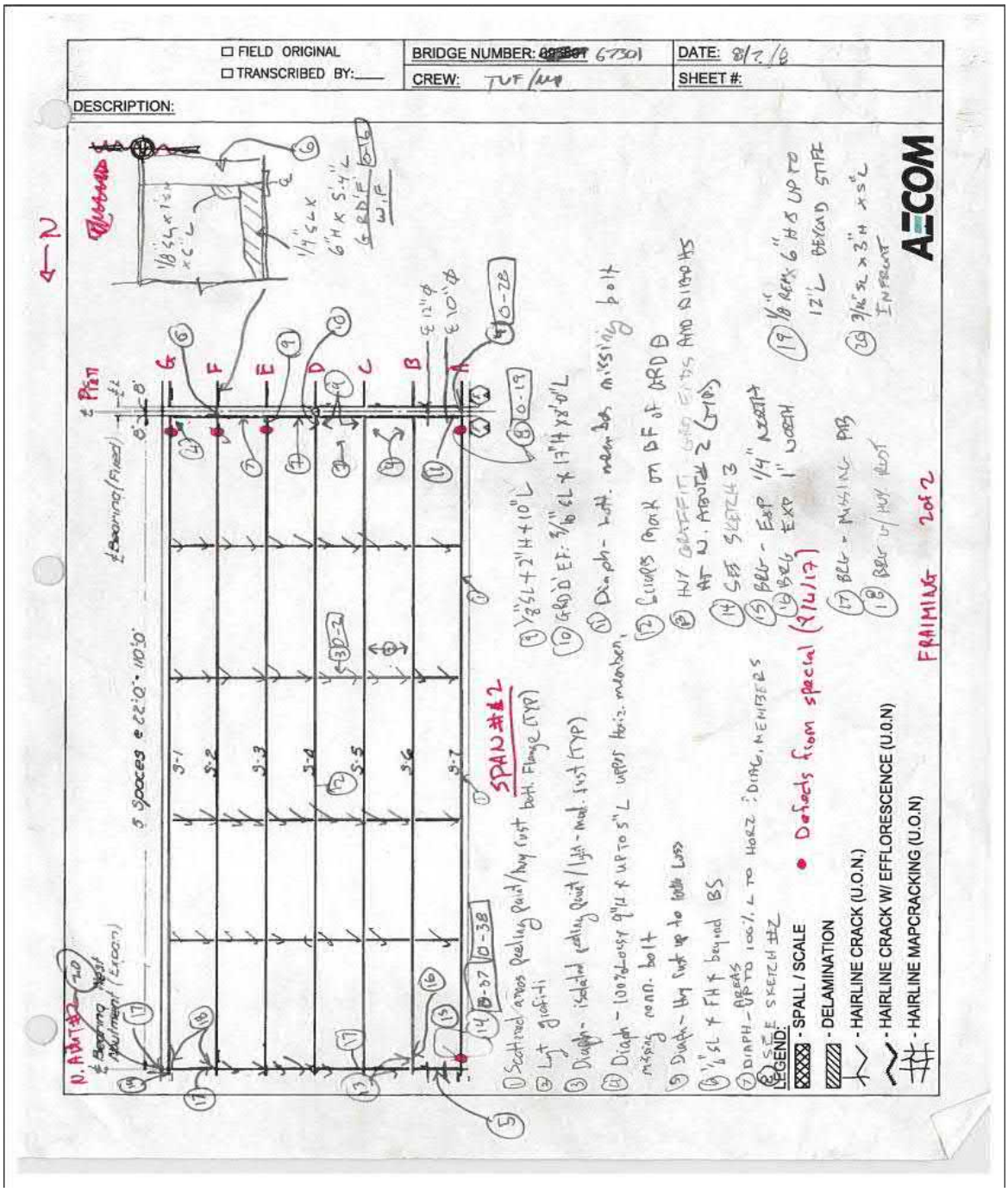

Project #	60330198	Page	
Client	RIDOT	Date	9/6/2018
Site	Bridge 067301 Rating	By	MJC
Subject	BrR Input - Section Losses	App.	

AECOM

Copies of AECOM Inspection Report Field Notes:

Girders Sketch 1

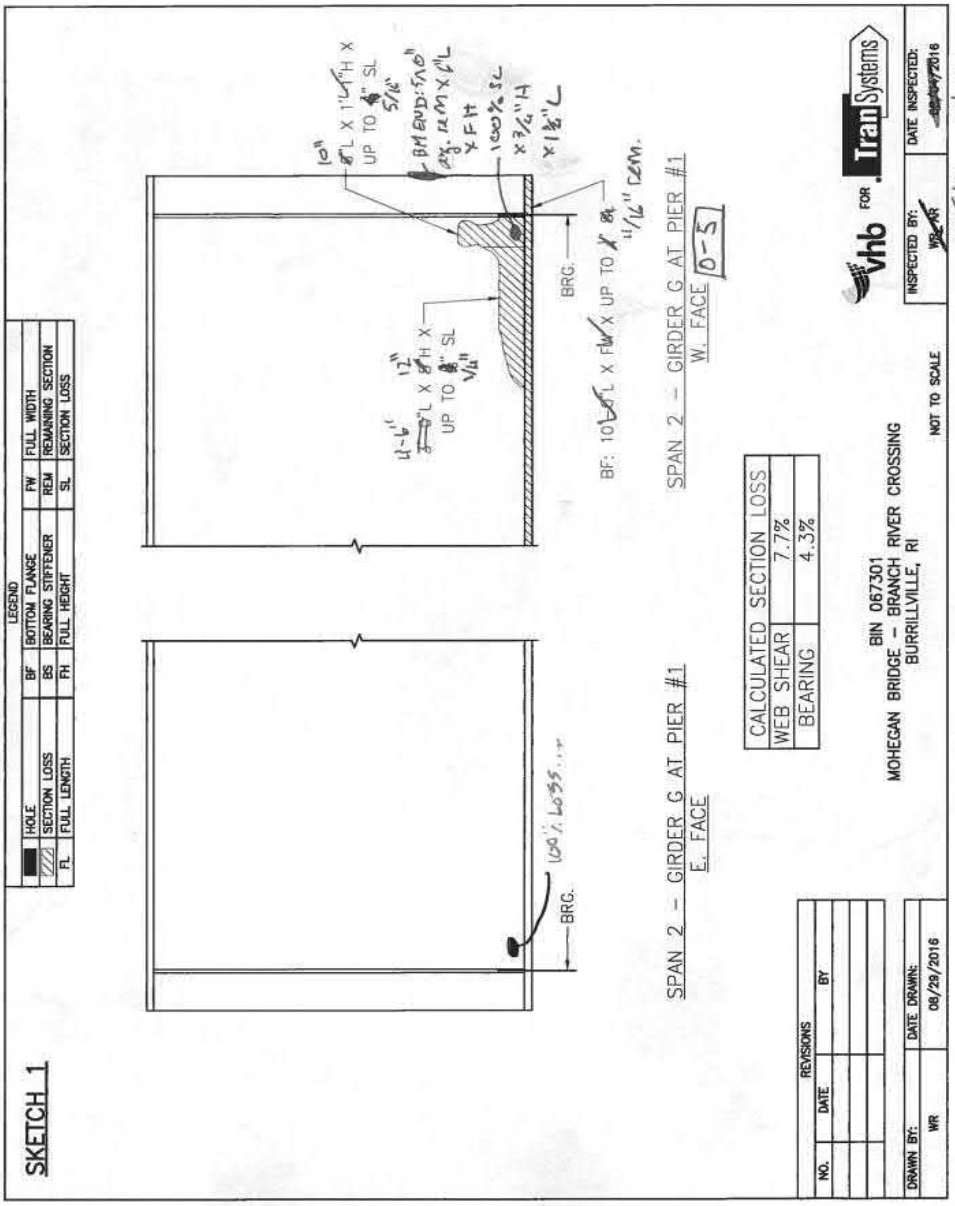

Project #	60330198	Page	
Client	RIDOT	Date	9/6/2018
Site	Bridge 067301 Rating	By	MJC
Subject	BrR Input - Section Losses	App.	

AECOM

Copies of AECOM Inspection Report Field Notes:

Girders Sketch 2

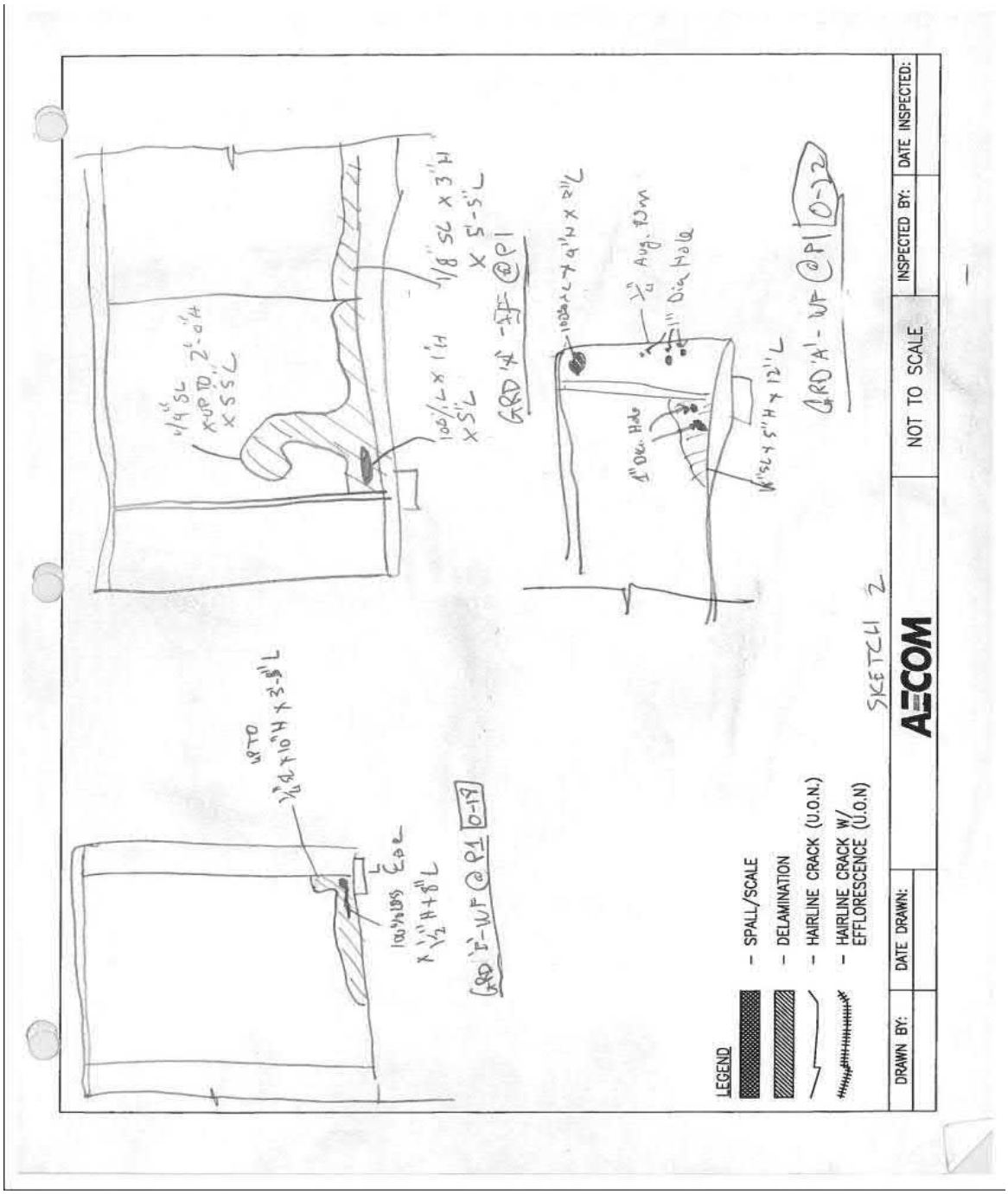

Copies of AECOM Inspection Report Field Notes:

Girders Sketch 3

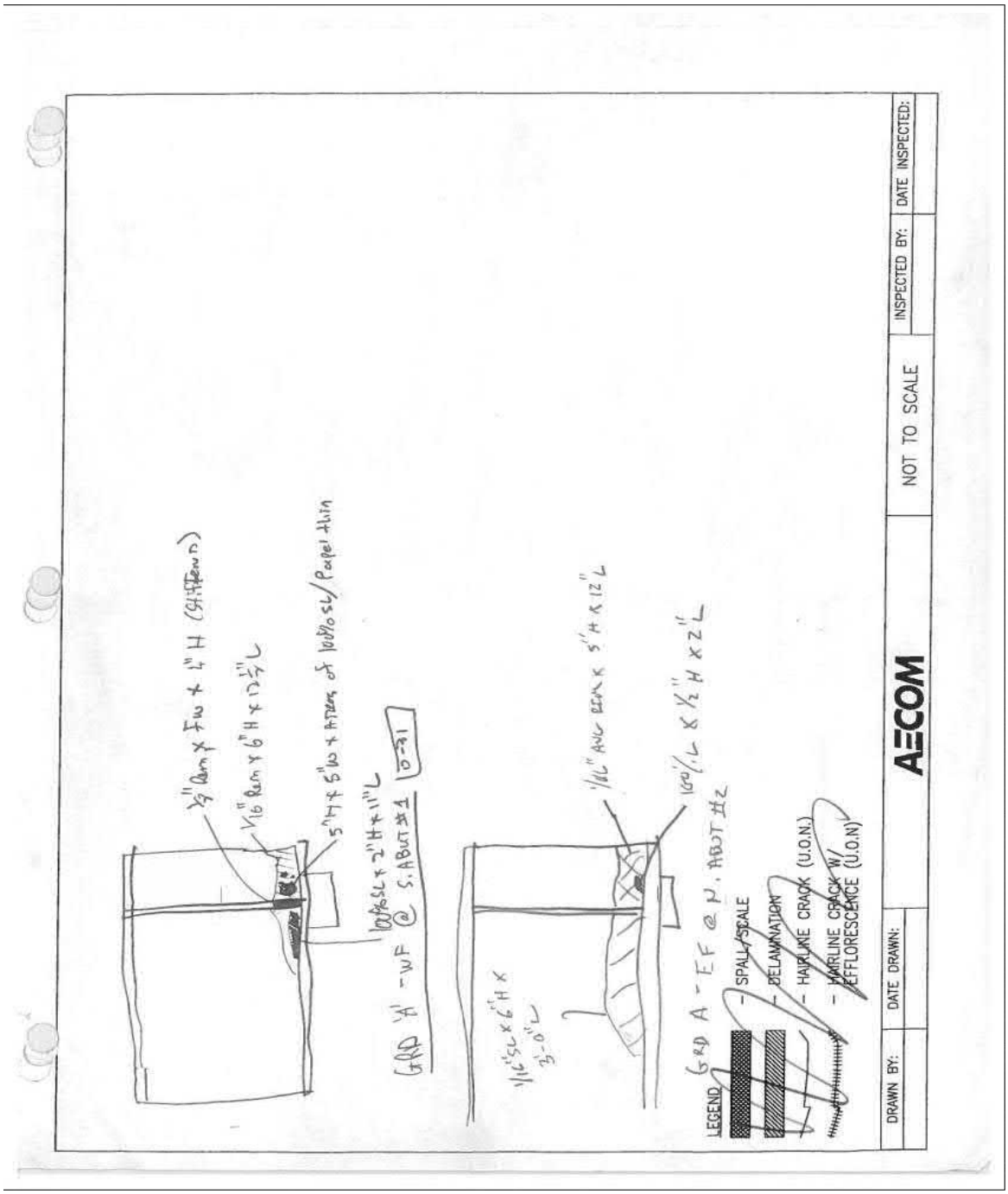

Goal:
Determine Rating Factors and Loads for Pier Cap

User Input

Backup Info / Supporting documents:
RIDOT Load Rating Guidelines August 2017 ("RIDOT")
AASHTO Manual for Bridge Evaluation, 3rd Edition 2018 ("MBE")
AASHTO LRFD Bridge Design Specifications, 8th Edition, 2017 ("AASHTO")
Bridge 673 Design Plans, dated 1966 ("Plans")
Previous 067301 Load Rating Report by TranSystems, dated 2011
Inspection Report by AECOM, dated 2018
067301 BrR model output
CSi model "Pier Cap reactions"
STAAD model "673 pier cap"

Notes / Assumptions:
BrR output: Span 2 Reactions are identical to Span 1 Reactions; for each girder, DL reactions are same for each vehicle
Pier cap section losses are measured and noted in the inspection report. Losses at critical sections are sporadic; it was determined that the best approach to calculate the capacity would be to use a Condition Factor of 0.85.

Steps:
Summarize Dead Load (DC, DW) girder reactions from BrR model output
Calculate pier cap bridge seat self weight for Dead Load
Create CSi model to determine Live Load (LL+I) girder reactions at the pier
Using BrR live load distribution factor calculations, determine LLDFs for use here
Determine critical forces (+M, -M, V) and critical sections of pier cap to analyze based on inspection of previous load rating
Create STAAD model to produce unfactored forces in pier cap at critical sections
Calculate pier cap moment and shear capacities for Strength I limit state
Calculate Strength I limit state rating factors and loads

Pier Cap Dead Load Reaction

DL Input values are for one span only, and in kips

Reactions

Span 1	DC	DW
Girder A	50.04	29.43
Girder B	64.47	29.43
Girder C	64.47	18.48
Girder D	64.47	18.48
Girder E	64.47	18.48
Girder F	64.47	18.48
Girder G	50.04	18.48

Total Reactions for Spans 1 & 2 Combined on Pier Cap (kips)

	DC	DW
Girder A	100.1	58.9
Girder B	128.9	58.9
Girder C	128.9	37.0
Girder D	128.9	37.0
Girder E	128.9	37.0
Girder F	128.9	37.0
Girder G	100.1	37.0

Calculate additional pier cap dead load due to bridge seat concrete

Seat Height	5.00	in	estimate of average height
Seat Width	44.75	in	
Concrete	0.145	kcf	
Load	0.225	klf	apply to all pier cap members in STAAD model

Pier Cap Live Load Reactions

Create a CSi model for one member with supports at 110'
Run all rating vehicle configurations along member to generate max pier reactions
Impact is included in CSi model. 33% for HL-93, 20% for all other vehicles.
Load Case "HL-93 NEG" represents HL-93 truck train ("HL-93 TRAIN" in STAAD); see AASHTO 3.6.1.3.1

Pier reactions per vehicle (kips)

Vehicle	LL Reaction
HL-93	182.4
HL-93 NEG	221.4
H20	47.8
TYPE 3	59.4
TYPE 3S2	83.9
TYPE 3-3	91.9
LTLLM	139.8
SU4	64.3
SU5	73.7
SU6	82.5
SU7	91.9
EV2	68.4
EV3	102.2
RI-3	90.5
RI-4	89.4
RI-5	123.8
RI-6	147.6
RI-OP1	134.2
RI-OP2	177.6
RI-OP3	231.2
RIPTA	49.1

Live Load Distribution Factors

Determine values of LLDF to apply to interior and exterior girders, as well as to the more heavily loaded vs less heavily loaded girders, for a given vehicle. Begin by considering the BrR LLDF calculations for shear for interior girders, for 1 or 2 lanes loaded. Consider this factor as the effect a vehicle has on its principally loaded girder. The supplement (1 - factor) to this value will be the LLDF effect on the adjacent girder that sees a lesser percentage of the same vehicle load.

	Interior	
For one lane loaded	0.660	per BrR calculation
For multiple lanes loaded	0.779	per BrR calculation

For Single Vehicle Load Cases		For Mutiple Vehicle Load Cases	
Principle Distribution Factor	0.660	Principle Distribution Factor	0.779
Supplemental Distribution Factor	0.340	Supplemental Distribution Factor	0.221

Live Load Application in STAAD model

Based on the previous load rating report approach and confirmed by AECOM inspection, the live load configurations that will produce the worst case Moment and Shear effects in the Pier Cap are the following:

Case 1 2 vehicles, principally loading girders B & C (supplemental loading on girders A & D)
Case 2 1 vehicle, principally loading girder C (supplemental loading on girder D)
Case 3 2 vehicles, principally loading girders C & E (supplemental loading on girders B & F)

These vehicle configurations are intended to examine the pier cap at the following "critical sections". Forces considered, STAAD model nodes, and applicable Live Load cases are noted.

Critical Section #	Cap Location	Force Considered	Node	LL Case #
CS1	Inside (right) edge of Column A	Max negative moment	9	1
CS2	Pier Cap between Girders B & C	Max shear	14	2
CS3	Pier Cap below Girder C	Max positive moment	20	1
CS4	Pier Cap near Girder C	Max shear	22	1
CS5	Inside (left) edge of Column B	Max negative moment	26	3

STAAD model nodes for Girder Reactions

Girder	Node
Girder A	3
Girder B	12
Girder C	20
Girder D	28
Girder E	36
Girder F	44
Girder G	53

STAAD Model Live Loads

Determine load values and applicable model nodes per Live Load case
Each vehicle has a Load 1 (LL Reaction * Principle Distribution Factor) and Load 2 (LL Reaction * Supplemental Distribution Factor)
Depending on the Load Case, Loads will be applied to various nodes representing forces at appropriate girders

Live Load Case 1

Vehicle	Load 1	On Nodes	Load 2	On Nodes
HL-93	142	12, 20	40	3, 28
HL-93 NEG	172	12, 20	49	3, 28
H20	37	12, 20	11	3, 28
TYPE 3	46	12, 20	13	3, 28
TYPE 3S2	65	12, 20	19	3, 28
TYPE 3-3	72	12, 20	20	3, 28
LTLLM	109	12, 20	31	3, 28
SU4	50	12, 20	14	3, 28
SU5	57	12, 20	16	3, 28
SU6	64	12, 20	18	3, 28
SU7	72	12, 20	20	3, 28
EV2	53	12, 20	15	3, 28
EV3	80	12, 20	23	3, 28
RI-3	71	12, 20	20	3, 28
RI-4	70	12, 20	20	3, 28
RI-5	96	12, 20	27	3, 28
RI-6	115	12, 20	33	3, 28
RI-OP1	105	12, 20	30	3, 28
RI-OP2	138	12, 20	39	3, 28
RI-OP3	180	12, 20	51	3, 28
RIPTA	38	12, 20	11	3, 28

Live Load Case 2

Vehicle	Load 1	On Node	Load 2	On Node
HL-93	120	20	62	28
HL-93 NEG	146	20	75	28
H20	32	20	16	28
TYPE 3	39	20	20	28
TYPE 3S2	55	20	29	28
TYPE 3-3	61	20	31	28
LTLLM	92	20	48	28
SU4	42	20	22	28
SU5	49	20	25	28
SU6	54	20	28	28
SU7	61	20	31	28
EV2	45	20	23	28
EV3	67	20	35	28
RI-3	60	20	31	28
RI-4	59	20	30	28
RI-5	82	20	42	28
RI-6	97	20	50	28
RI-OP1	89	20	46	28
RI-OP2	117	20	60	28
RI-OP3	153	20	79	28
RIPTA	32	20	17	28

Live Load Case 3

Vehicle	Load 1	On Nodes	Load 2	On Nodes
HL-93	142	20, 36	40	12, 44
HL-93 NEG	172	20, 36	49	12, 44
H20	37	20, 36	11	12, 44
TYPE 3	46	20, 36	13	12, 44
TYPE 3S2	65	20, 36	19	12, 44
TYPE 3-3	72	20, 36	20	12, 44
LTLLM	109	20, 36	31	12, 44
SU4	50	20, 36	14	12, 44
SU5	57	20, 36	16	12, 44
SU6	64	20, 36	18	12, 44
SU7	72	20, 36	20	12, 44
EV2	53	20, 36	15	12, 44
EV3	80	20, 36	23	12, 44
RI-3	71	20, 36	20	12, 44
RI-4	70	20, 36	20	12, 44
RI-5	96	20, 36	27	12, 44
RI-6	115	20, 36	33	12, 44
RI-OP1	105	20, 36	30	12, 44
RI-OP2	138	20, 36	39	12, 44
RI-OP3	180	20, 36	51	12, 44
RIPTA	38	20, 36	11	12, 44

Project #	60330198	Page	
Client	RIDOT	Date	9/10/2018
Site	Bridge 067301 Rating	By	MJC
Subject	Pile Cap Rating	App.	JTS

AECOM

STAAD Live Load Cases

No.	Live Load	Case	No.	Live Load	Case	No.	Live Load	Case
4	HL-93	Case 1	25	HL-93	Case 2	46	HL-93	Case 3
5	H20	Case 1	26	H20	Case 2	47	H20	Case 3
6	TYPE 3	Case 1	27	TYPE 3	Case 2	48	TYPE 3	Case 3
7	TYPE 3S2	Case 1	28	TYPE 3S2	Case 2	49	TYPE 3S2	Case 3
8	TYPE 3-3	Case 1	29	TYPE 3-3	Case 2	50	TYPE 3-3	Case 3
9	SU4	Case 1	30	SU4	Case 2	51	SU4	Case 3
10	SU5	Case 1	31	SU5	Case 2	52	SU5	Case 3
11	SU6	Case 1	32	SU6	Case 2	53	SU6	Case 3
12	SU7	Case 1	33	SU7	Case 2	54	SU7	Case 3
13	RI-3	Case 1	34	RI-3	Case 2	55	RI-3	Case 3
14	RI-4	Case 1	35	RI-4	Case 2	56	RI-4	Case 3
15	RI-5	Case 1	36	RI-5	Case 2	57	RI-5	Case 3
16	RI-6	Case 1	37	RI-6	Case 2	58	RI-6	Case 3
17	RI-OP1	Case 1	38	RI-OP1	Case 2	59	RI-OP1	Case 3
18	RI-OP2	Case 1	39	RI-OP2	Case 2	60	RI-OP2	Case 3
19	RI-OP3	Case 1	40	RI-OP3	Case 2	61	RI-OP3	Case 3
20	EV2	Case 1	41	EV2	Case 2	62	EV2	Case 3
21	EV3	Case 1	42	EV3	Case 2	63	EV3	Case 3
22	RIPTA	Case 1	43	RIPTA	Case 2	64	RIPTA	Case 3
23	HL-93 TRAIN	Case 1	44	HL-93 TRAIN	Case 2	65	HL-93 TRAIN	Case 3
24	LTLLM	Case 1	45	LTLLM	Case 2	66	LTLLM	Case 3

STAAD Output

Case 1 Shear V (kip) - CS4			
Beam	21	Factor	Load
Node	22	Str I	
Cap Self Wt	11.3	1.25	14.2
DC	97.3	1.25	121.6
DW	29.7	1.25	37.2
HL-93 Inv	107.2	1.75	187.6
HL-93 Oper	107.2	1.35	144.7
H20	27.9	1.30	36.3
TYPE 3	34.7	1.30	45.1
TYPE 3S2	49.1	1.30	63.8
TYPE 3-3	54.4	1.30	70.7
SU4	37.7	1.30	49.1
SU5	43.0	1.30	55.9
SU6	48.3	1.30	62.8
SU7	54.4	1.30	70.7
RI-3	53.6	1.18	63.2
RI-4	52.8	1.18	62.4
RI-5	72.5	1.18	85.5
RI-6	86.8	1.23	106.8
RI-OP1	79.3	1.20	95.1
RI-OP2	104.2	1.20	125.0
RI-OP3	135.9	1.20	163.1
EV2	40.0	1.30	52.0
EV3	60.4	1.30	78.5
RIPTA	28.7	1.30	37.3
HL-93 NEG	129.8	1.75	227.2
LTLLM	82.3	1.30	107.0

Case 2 Shear V (kip) - CS2			
Beam	14	Factor	Load
Node	14	Str I	
Cap Self Wt	11.3	1.25	14.2
DC	31.6	1.25	39.5
DW	7.3	1.25	9.1
HL-93 Inv	39.2	1.75	68.6
HL-93 Oper	39.2	1.35	53.0
H20	10.5	1.30	13.6
TYPE 3	12.7	1.30	16.6
TYPE 3S2	18.0	1.30	23.4
TYPE 3-3	19.9	1.30	25.9
SU4	13.7	1.30	17.8
SU5	16.0	1.30	20.8
SU6	17.7	1.30	22.9
SU7	19.9	1.30	25.9
RI-3	19.6	1.18	23.1
RI-4	19.3	1.18	22.8
RI-5	26.8	1.18	31.6
RI-6	31.7	1.23	39.0
RI-OP1	29.1	1.20	34.9
RI-OP2	38.2	1.20	45.9
RI-OP3	50.0	1.20	60.0
EV2	14.7	1.30	19.1
EV3	21.9	1.30	28.5
RIPTA	10.5	1.30	13.6
HL-93 NEG	47.7	1.75	83.5
LTLLM	30.1	1.30	39.1

Project #	60330198	Page	
Client	RIDOT	Date	9/10/2018
Site	Bridge 067301 Rating	By	MJC
Subject	Pile Cap Rating	App.	JTS

AECOM

Case 1 Moment M (kip*ft) - CS1			
Beam	9	Factor	Load
Node	9	Str I	
Cap Self Wt	60.5	1.25	75.6
DC	404.8	1.25	506.0
DW	152.3	1.25	190.4
HL-93 Inv	445.9	1.75	780.3
HL-93 Oper	445.9	1.35	602.0
H20	116.2	1.30	151.0
TYPE 3	144.4	1.30	187.8
TYPE 3S2	204.1	1.30	265.3
TYPE 3-3	226.1	1.30	293.9
SU4	157.0	1.30	204.1
SU5	179.0	1.30	232.7
SU6	201.0	1.30	261.3
SU7	226.1	1.30	293.9
RI-3	223.0	1.18	263.1
RI-4	219.8	1.18	259.4
RI-5	301.5	1.18	355.7
RI-6	361.1	1.23	444.2
RI-OP1	329.7	1.20	395.7
RI-OP2	433.3	1.20	520.0
RI-OP3	565.2	1.20	678.3
EV2	166.4	1.30	216.4
EV3	251.2	1.30	326.6
RIPTA	119.3	1.30	155.1
HL-93 NEG	540.1	1.75	945.2
LTLLM	342.3	1.30	445.0

Case 1 Moment M (kip*ft) - CS3			
Beam	19	Factor	Load
Node	20	Str I	
Cap Self Wt	24.6	1.25	30.7
DC	233.4	1.25	291.7
DW	67.7	1.25	84.6
HL-93 Inv	257.1	1.75	449.9
HL-93 Oper	257.1	1.35	347.1
H20	67.0	1.30	87.1
TYPE 3	83.3	1.30	108.3
TYPE 3S2	117.7	1.30	153.0
TYPE 3-3	130.4	1.30	169.5
SU4	90.5	1.30	117.7
SU5	103.2	1.30	134.2
SU6	115.9	1.30	150.6
SU7	130.4	1.30	169.5
RI-3	128.5	1.18	151.7
RI-4	126.7	1.18	149.5
RI-5	173.8	1.18	205.1
RI-6	208.2	1.23	256.1
RI-OP1	190.1	1.20	228.1
RI-OP2	249.8	1.20	299.8
RI-OP3	325.9	1.20	391.1
EV2	96.0	1.30	124.7
EV3	144.8	1.30	188.3
RIPTA	68.8	1.30	89.4
HL-93 NEG	311.4	1.75	544.9
LTLLM	197.3	1.30	256.5

Case 3 Moment M (kip*ft) - CS5			
Beam	25	Factor	Load
Node	26	Str I	
Cap Self Wt	60.5	1.25	75.6
DC	350.5	1.25	438.1
DW	110.7	1.25	138.3
HL-93 Inv	339.3	1.75	593.7
HL-93 Oper	339.3	1.35	458.0
H20	88.7	1.30	115.3
TYPE 3	109.9	1.30	142.9
TYPE 3S2	155.6	1.30	202.3
TYPE 3-3	171.9	1.30	223.5
SU4	119.4	1.30	155.3
SU5	136.2	1.30	177.0
SU6	152.9	1.30	198.8
SU7	171.9	1.30	223.5
RI-3	169.6	1.18	200.2
RI-4	167.4	1.18	197.5
RI-5	229.4	1.18	270.6
RI-6	275.0	1.23	338.3
RI-OP1	251.1	1.20	301.3
RI-OP2	329.8	1.20	395.7
RI-OP3	430.2	1.20	516.3
EV2	126.7	1.30	164.7
EV3	191.4	1.30	248.8
RIPTA	90.9	1.30	118.2
HL-93 NEG	411.2	1.75	719.6
LTLLM	260.6	1.30	338.7

Pier Cap Capacity

Calculate the capacity in the pier cap at each critical section for the forces to be considered

Concrete unit weight, wc	0.145	kcf	
Concrete strength, f'c	3.000	ksi	
Rebar Strength, fy	40	ksi	
β1	0.85	for 3 ksi concrete	AASHTO 5.6.2.2
β	2		
θ	45		

Critical Section # ->	CS1	CS2	CS3	CS4	CS5	
STAAD Model Node ->	9	14	20	22	26	
Force Considered ->	-M	V	+M	V	-M	
Pier Cap Width, in	48.0	48.0	48.0	48.0	48.0	
Pier Cap Depth, in	54.0	54.0	54.0	54.0	54.0	
Rebar Cover, in	2.00	2.00	2.00	2.00	2.00	
Stirrup Bar Size	4	4	4	4	4	
Stirrup Bar Diameter, in	0.50	0.50	0.50	0.50	0.50	

For Moment

Rebar (Outer) Row 1						
Bar size	10	10	10	10	10	
Bar diameter	1.27	1.27	1.27	1.27	1.27	
Bar area	1.27	1.27	1.27	1.27	1.27	
No. bars	4	5	5	5	6	
As1, in2	5.08	6.35	6.35	6.35	7.62	= Bar Area * # bars
ys 1, in	3.14	3.14	3.14	3.14	3.14	= extreme edge to CL bar row

Bar (Inner) Row 2						
Bar size	10	10	10	10	10	
Bar diameter	1.27	1.27	1.27	1.27	1.27	
Bar area	1.27	1.27	1.27	1.27	1.27	
No. bars	4	4	4	4	5	
As2, in 2	5.08	5.08	5.08	5.08	6.35	= Bar Area * # bars
ys 2, in	6.64	6.64	6.64	6.64	6.64	= extreme edge to CL bar row

As total, in2	10.16	11.43	11.43	11.43	13.97
de, in	49.115	49.309	49.309	49.309	49.274
dv, in	47.455	47.442	47.442	47.442	46.991

de = d - [Σ (As ys) / Σ As] AASHTO Eq. C5.7.2.8-1

dv = max (0.9 de, 0.72 h, de-a/2) AASHTO 5.7.2.8

For Shear

Av, in2	0.80	0.80	0.80	0.80	0.80	for four #4 bars
spacing s, in	6.0	7.0	24.0	18.0	15.0	
α	90	90	90	90	90	

c	3.91	4.39	4.39	4.39	5.37	c = As fy / 0.85 f'c β b
a	3.32	3.74	3.74	3.74	4.57	a = c β1
Mn, k-ft	1607	1808	1808	1808	2188	

Mn = As fy (d - a/2) AASHTO Eq. 5.6.3.2.2-1

Vs, k	253.1	216.9	63.3	84.3	100.2
Vc, k	249.3	249.3	249.3	249.3	246.9
Vn 1, k	502.4	466.2	312.5	333.6	347.2
Vn 2, k	1708	1708	1708	1708	1692
Vn, k	502.4	466.2	312.5	333.6	347.2

$Vs = Av\ fy\ dv\ (\cot\theta + \cot\alpha)\ \sin\alpha\ /\ s$ AASHTO Eq 5.7.3.3-4

$Vc = 0.0316\ \beta\ \lambda\ \sqrt{f'c}\ bv\ dv$ AASHTO Eq 5.7.3.3-3

$Vn\ 1 = Vc + Vs$ AASHTO Eq 5.7.3.3-1

$Vn\ 2 = 0.25\ f'c\ bv\ dv$ AASHTO Eq 5.7.3.3-2

$Vn = \min(Vn\ 1, Vn\ 2)$

Critical Section # ->	CS1	CS2	CS3	CS4	CS5	
STAAD Model Node ->	9	14	20	22	26	
Force Considered ->	-M	V	+M	V	-M	
Capacity, k-ft or k	1607	466	1808	334	2188	
Resistance factor, ϕ	0.9	0.9	0.9	0.9	0.9	Moment and Shear, AASHTO 5.5.4.2
Condition factor, ϕ_c	0.85	0.85	0.85	0.85	0.85	For "poor" condition, RIDOT Table 3
System factor, ϕ_s	1.0	1.0	1.0	1.0	1.0	MBE Table 6A.4.2.4-1
Factored Capacity	1229.5	356.6	1382.8	255.2	1674.0	

Critical Section # ->	CS1	CS2	CS3	CS4	CS5
STAAD Model Node ->	9	14	20	22	26
Live Load Case # ->	1	2	1	1	3
Force Considered ->	-M	V	+M	V	-M
Factored Dead Load, k					
DC	581.6	53.7	322.4	135.8	513.7
DW	190.4	9.1	84.6	37.2	138.3
Factored Live Load, k					
HL-93 Inv	780.3	68.6	449.9	187.6	593.7
HL-93 Oper	602.0	53.0	347.1	144.7	458.0
H20	151.0	13.6	87.1	36.3	115.3
TYPE 3	187.8	16.6	108.3	45.1	142.9
TYPE 3S2	265.3	23.4	153.0	63.8	202.3
TYPE 3-3	293.9	25.9	169.5	70.7	223.5
SU4	204.1	17.8	117.7	49.1	155.3
SU5	232.7	20.8	134.2	55.9	177.0
SU6	261.3	22.9	150.6	62.8	198.8
SU7	293.9	25.9	169.5	70.7	223.5
RI-3	263.1	23.1	151.7	63.2	200.2
RI-4	259.4	22.8	149.5	62.4	197.5
RI-5	355.7	31.6	205.1	85.5	270.6
RI-6	444.2	39.0	256.1	106.8	338.3
RI-OP1	395.7	34.9	228.1	95.1	301.3
RI-OP2	520.0	45.9	299.8	125.0	395.7
RI-OP3	678.3	60.0	391.1	163.1	516.3
EV2	216.4	19.1	124.7	52.0	164.7
EV3	326.6	28.5	188.3	78.5	248.8
RIPTA	155.1	13.6	89.4	37.3	118.2
HL-93 NEG	945.2	83.5	544.9	227.2	719.6
LTLLM	445.0	39.1	256.5	107.0	338.7

Rating Factors (values under 1.0 highlighted)

Load Case					
HL-93 Inv	0.59	4.28	2.17	0.44	1.72
HL-93 Oper	0.76	5.55	2.81	0.57	2.23
H20	3.03	21.61	11.20	2.26	8.87
TYPE 3	2.44	17.73	9.01	1.82	7.15
TYPE 3S2	1.72	12.57	6.38	1.29	5.05
TYPE 3-3	1.56	11.34	5.76	1.16	4.57
SU4	2.24	16.46	8.29	1.68	6.58
SU5	1.97	14.11	7.27	1.47	5.77
SU6	1.75	12.81	6.48	1.31	5.14
SU7	1.56	11.34	5.76	1.16	4.57
RI-3	1.74	12.70	6.43	1.30	5.11
RI-4	1.76	12.91	6.52	1.32	5.17
RI-5	1.29	9.29	4.76	0.96	3.78
RI-6	1.03	7.53	3.81	0.77	3.02
RI-OP1	1.16	8.42	4.28	0.86	3.39
RI-OP2	0.88	6.40	3.25	0.66	2.58
RI-OP3	0.67	4.90	2.50	0.50	1.98
EV2	2.11	15.37	7.82	1.58	6.21
EV3	1.40	10.32	5.18	1.05	4.11
RIPTA	2.95	21.61	10.91	2.21	8.65
HL-93 NEG	0.48	3.52	1.79	0.36	1.42
LTLLM	1.03	7.52	3.80	0.77	3.02

Rating Loads (tons)

Load Case					
HL-93 Inv	-	-	-	-	-
HL-93 Oper	-	-	-	-	-
H20	60.6	432.2	224.1	45.3	177.3
TYPE 3	60.9	443.3	225.3	45.5	178.8
TYPE 3S2	62.1	452.6	229.6	46.4	181.9
TYPE 3-3	62.3	453.4	230.3	46.6	182.9
SU4	60.5	444.5	223.9	45.3	177.7
SU5	60.9	437.5	225.5	45.6	179.0
SU6	60.8	445.0	225.1	45.5	178.7
SU7	60.3	439.3	223.1	45.1	177.2
RI-3	66.1	482.5	244.5	49.4	194.0
RI-4	66.1	484.2	244.7	49.5	194.0
RI-5	67.4	486.8	249.3	50.4	197.9
RI-6	66.9	489.7	247.7	50.1	196.3
RI-OP1	65.3	475.6	241.7	48.9	191.6
RI-OP2	70.4	512.2	260.4	52.6	206.6
RI-OP3	76.2	553.3	282.0	57.0	223.7
EV2	60.8	441.8	224.9	45.5	178.4
EV3	60.2	443.8	222.8	45.0	176.6
RIPTA	61.3	449.5	226.9	45.9	179.8
HL-93 NEG	-	-	-	-	-
LTLLM	61.7	451.0	228.2	46.1	181.0

Critical Section # ->	CS1	CS2	CS3	CS4	CS5
Force Considered ->	-M	V	+M	V	-M
Min Design RF	0.48	3.52	1.79	0.36	1.42
Min Legal RF	1.03	7.52	3.80	0.77	3.02
Min Permit RF	0.67	4.90	2.50	0.50	1.98

067301 - BEAM END BEARING LOAD RATINGS SPAN 2 - GIRDER F AT PIER

MATHCAD Constants:

$kip := 1000lbf$ $ksi := \frac{kip}{in^2}$ $psi := 1\frac{lbf}{in^2}$ $pcf := 1\frac{lbf}{ft^3}$ $kcf := 1\frac{kip}{ft^3}$ $psf := 1\frac{lbf}{ft^2}$ $ftk := 1ft \cdot 1kip$ $Ton := 2kip$

References

Bridge Plans
Reference RIDOT Bridge Load Rating Guidelines Sections 6.3 & 6.4.
AASHTO LRFD 8th Edition Section 6.10.11.2, Bearing Stiffeners

Section Properties

Girder F, Span 2 at Pier:
Beam end web beyond the bearing centerline has full height 1/4" section loss x 6" long.
Partial height 1/4" and 1/8" section loss in front of bearing; determine weighted average of losses.
Bearing Stiffeners - no measured losses.
See Inspection Report Sketch #3

Steel Material Properties

Yield Strength: $F_{yw} := 36ksi$ (ASTM A36)

Modulus of Elasticity: $E := 29000ksi$

Existing Section

Full Web Thickness: $t_w := 0.4375 \cdot in$

Flange Thickness: $t_f := 1.0 \cdot in$

Flange Width: $b_f := 18.0 \cdot in$

Depth of Section: $d := 72 \cdot in + 1in + 0.625in = 73.625 \cdot in$

Web Height: $h_w := 72.0in$

Bearing Stiffener Thickness: $t_s := 0.75in$

Bearing Stiffener Chamfer $chamfer := 0.75in$

Section Examined for Bearing

Length in front of bearing $L_f := 9t_w = 3.938 \cdot in$

Length in back of bearing $L_b := L_f = 3.938 \cdot in$

Effective Section per AASHTO 6.10.11.2.4b

Bearing Stiffener Length $L_s := \frac{\left(12in - \frac{7}{16}in\right)}{2} - chamfer = 5.031 \cdot in$

Use contact width for one bearing stiffener on top flange

Section Loss In Front of Bearing - Adjusted Web Thickness

Depth of Loss in front of bearing: $d_{loss1} := 18.0 \cdot in$ use total height of losses

Thickness of Loss in front of bearing: $t_{loss1} := 0.1875 \cdot in$ take average of 1/4", 1/8" losses

Web Width Adjusted for Losses in front of bearing: $t_{w.adj1} := \frac{h_w \cdot t_w - d_{loss1} \cdot t_{loss1}}{h_w} = 0.391 \cdot in$

Section Loss Beyond Bearing - Adjusted Web Thickness

Depth of Loss beyond bearing: $d_{loss2} := h_w = 72 \cdot in$

Thickness of Loss beyond bearing: $t_{loss2} := 0.25 \cdot in$

Web Width Adjusted for Losses beyond bearing: $t_{w.adj2} := \frac{h_w \cdot t_w - d_{loss2} \cdot t_{loss2}}{h_w} = 0.187 \cdot in$

Weighted Average Adjusted Web Thickness

Weight Average Web Width Adjusted for Losses: $t_{w.adj} := \frac{t_{w.adj1} + t_{w.adj2}}{2} = 0.289 \cdot in$

Area used for Bearing Resistance Capacity

Web Area $Area_{web} := L_f \cdot t_{w.adj1} + L_b \cdot t_{w.adj2} = 2.28 \cdot in^2$

Stiffener Area $Area_{stiff} := L_s \cdot t_s \cdot 2 = 7.55 \cdot in^2$

Total Gross Area $A_g := Area_{web} + Area_{stiff} = 9.82 \cdot in^2$

Bearing Capacity Calculation - AASHTO 6.9.4

Effective Length Factor: $k := 0.75$ AASHTO 4.6.2.5

Moment of Inertia $I_s := \frac{\left[t_s \cdot \left(2L_s + t_{w.adj}\right)^3 + \left[\left(L_f + L_b - t_s\right) \cdot t_{w.adj}^{\ 3}\right]\right]}{12} = 69.3 \cdot in^4$

Radius of gyration: $r_s := \sqrt{\frac{I_s}{A_g}} = 2.657 \cdot in$

Elastic Critical Buckling Resistance: $P_e := \frac{\pi^2 \cdot E \cdot A_g}{\left(\frac{k \cdot h_w}{r_s}\right)^2} = 6806.1 \cdot kip$ Eq. 6.9.4.1.2-1

Nominal Yield Resistance: $P_o := F_{yw} \cdot A_g = 353.6 \cdot kip$

Ratio $ratio := \frac{P_e}{P_o} = 19$

Nominal Compressive Resistance: $P_n := if\left[ratio < 0.44, 0.877 \cdot P_e, \left[0.658^{\left(\frac{P_o}{P_e}\right)}\right] P_o\right] = 346 \cdot kip$

Eq. 6.9.4.1.1-1, -2

Axial Compression Resistance factor for steel: $\phi_c := 0.95$ AASHTO 6.5.4.2

Factored Compressive Resistance: $P_r := \phi_c \cdot P_n = 328.7 \cdot kip$ Eq. 6.9.2.1-1

Factored Dead Load and Live Load Shear Forces (From AASHTOWare BrR)

Notes:
Span 2 HL-93 shear reactions from BrR are provided. Live load includes IM.

Load Factors $\gamma_{DC} := 1.25$ $\gamma_{DW} := 1.25$ $\gamma_{LL.IM} := 1.75$ γ_{DW} use 1.25 when field losses are measured

BrR Unfactored Loads:

Unfactored DC Shear: $V_{DC} := 64.47 \cdot kip$

Unfactored DW Shear: $V_{DW} := 18.48 \cdot kip$

Unfactored HL-93 Live Load Shear: $V_{LL.IM} := 95.70 \cdot kip$

Factored Loads:

Factored DC Shear: $\gamma_{DC} \cdot V_{DC} = 80.59 \cdot kip$

Factored DW Shear: $\gamma_{DW} \cdot V_{DW} = 23.1 \cdot kip$

Governing Factored HL-93 Live Load Shear: $\gamma_{LL.IM} \cdot V_{LL.IM} = 167.47 \cdot kip$

LRFR Beam End Bearing Rating Factors

Beam End Bearing - LRFR RATING - HL93 Design Truck Loading

$$RF_{HL93} := \frac{P_r - \gamma_{DC} \cdot V_{DC} - \gamma_{DW} \cdot V_{DW}}{\gamma_{LL.IM} \cdot V_{LL.IM}}$$

$$\boxed{RF_{HL93} = 1.34}$$

Since RF for HL93 > 1.0, beam end bearing rating factors for all vehicles need not be calculated per RIDOT Section 6.4.

067301 - BEAM END BEARING LOAD RATINGS SPAN 2 - GIRDER A AT PIER

MATHCAD Constants:

$kip := 1000lbf$ $ksi := \frac{kip}{in^2}$ $psi := 1\frac{lbf}{in^2}$ $pcf := 1\frac{lbf}{ft^3}$ $kcf := 1\frac{kip}{ft^3}$ $psf := 1\frac{lbf}{ft^2}$ $ftk := 1ft \cdot 1kip$ $Ton := 2kip$

References

Bridge Plans
Reference RIDOT Bridge Load Rating Guidelines Sections 6.3 & 6.4.
AASHTO LRFD 8th Edition Section 6.10.11.2, Bearing Stiffeners

Section Properties

Girder A, Span 2 at Pier:
Beam end web beyond the bearing centerline has full height 3/16" section loss x 6" long.
Partial height 3/8" section loss in front of bearing; determine weighted average of losses.
See Inspection Report Sketch #2

Steel Material Properties

Yield Strength: $F_{yw} := 36ksi$ (ASTM A36)

Modulus of Elasticity: $E := 29000ksi$

Existing Section

Full Web Thickness: $t_w := 0.4375 \cdot in$

Flange Thickness: $t_f := 1.0 \cdot in$

Flange Width: $b_f := 18.0 \cdot in$

Depth of Section: $d := 72 \cdot in + 1in + 0.625in = 73.625 \cdot in$

Web Height: $h_w := 72.0in$

Bearing Stiffener Thickness: $t_s := 0.75in$

Bearing Stiffener Chamfer $chamfer := 0.75in$

Section Examined for Bearing

Length in front of bearing $L_f := 9t_w = 3.938 \cdot in$

Length in back of bearing $L_b := L_f = 3.938 \cdot in$

Effective Section per AASHTO 6.10.11.2.4b

Bearing Stiffener Length $L_s := \frac{\left(12in - \frac{7}{16}in\right)}{2} - chamfer = 5.031 \cdot in$

Use contact width for one bearing stiffener on top flange

Section Loss In Front of Bearing - Adjusted Web Thickness

Depth of Loss in front of bearing: $d_{loss1} := 5.0 \cdot in$ use total height of losses

Thickness of Loss in front of bearing: $t_{loss1} := 0.375 \cdot in$ 1/4" loss EF, 1/8" loss WF

Web Width Adjusted for Losses in front of bearing: $t_{w.adj1} := \frac{h_w \cdot t_w - d_{loss1} \cdot t_{loss1}}{h_w} = 0.411 \cdot in$

Section Loss Beyond Bearing - Adjusted Web Thickness

Depth of Loss beyond bearing: $d_{loss2} := h_w = 72 \cdot in$

Thickness of Loss beyond bearing: $t_{loss2} := 0.1875 \cdot in$ 1/4" remaining

Web Width Adjusted for Losses beyond bearing: $t_{w.adj2} := \frac{h_w \cdot t_w - d_{loss2} \cdot t_{loss2}}{h_w} = 0.25 \cdot in$

Weighted Average Adjusted Web Thickness

Weight Average Web Width Adjusted for Losses: $t_{w.adj} := \frac{t_{w.adj1} + t_{w.adj2}}{2} = 0.331 \cdot in$

Area used for Bearing Resistance Capacity

Web Area $Area_{web} := L_f \cdot t_{w.adj1} + L_b \cdot t_{w.adj2} = 2.6 \cdot in^2$

Stiffener Area $Area_{stiff} := L_s \cdot t_s \cdot 2 = 7.55 \cdot in^2$

Total Gross Area $A_g := Area_{web} + Area_{stiff} = 10.15 \cdot in^2$

Bearing Capacity Calculation - AASHTO 6.9.4

Effective Length Factor: $k := 0.75$ AASHTO 4.6.2.5

Moment of Inertia $I_s := \frac{\left[t_s \cdot \left(2L_s + t_{w.adj}\right)^3 + \left[\left(L_f + L_b - t_s\right) \cdot t_{w.adj}^{\ 3}\right]\right]}{12} = 70.2 \cdot in^4$

Radius of gyration: $r_s := \sqrt{\frac{I_s}{A_g}} = 2.629 \cdot in$

Elastic Critical Buckling Resistance: $P_e := \frac{\pi^2 \cdot E \cdot A_g}{\left(\frac{k \cdot h_w}{r_s}\right)^2} = 6889.3 \cdot kip$ Eq. 6.9.4.1.2-1

Nominal Yield Resistance: $P_o := F_{yw} \cdot A_g = 365.4 \cdot kip$

Ratio $ratio := \frac{P_e}{P_o} = 19$

Nominal Compressive Resistance: $P_n := if\left[ratio < 0.44, 0.877 \cdot P_e, \left[0.658^{\left(\frac{P_o}{P_e}\right)}\right] P_o\right] = 357.4 \cdot kip$

Eq. 6.9.4.1.1-1, -2

Axial Compression Resistance factor for steel: $\phi_c := 0.95$ AASHTO 6.5.4.2

Factored Compressive Resistance: $P_r := \phi_c \cdot P_n = 339.6 \cdot kip$ Eq. 6.9.2.1-1

Factored Dead Load and Live Load Shear Forces (From AASHTOWare BrR)

Notes:
Span 2 HL-93 shear reactions from BrR are provided. Live load includes IM.

Load Factors $\gamma_{DC} := 1.25$ $\gamma_{DW} := 1.25$ $\gamma_{LL.IM} := 1.75$ γ_{DW} use 1.25 when field losses are measured

BrR Unfactored Loads:

Unfactored DC Shear: $V_{DC} := 50.04 \cdot kip$

Unfactored DW Shear: $V_{DW} := 29.43 \cdot kip$

Unfactored HL-93 Live Load Shear: $V_{LL.IM} := 73.70 \cdot kip$

Factored Loads:

Factored DC Shear: $\gamma_{DC} \cdot V_{DC} = 62.55 \cdot kip$

Factored DW Shear: $\gamma_{DW} \cdot V_{DW} = 36.788 \cdot kip$

Governing Factored HL-93 Live Load Shear: $\gamma_{LL.IM} \cdot V_{LL.IM} = 128.97 \cdot kip$

LRFR Beam End Bearing Rating Factors

Beam End Bearing - LRFR RATING - HL93 Design Truck Loading

$$RF_{HL93} := \frac{P_r - \gamma_{DC} \cdot V_{DC} - \gamma_{DW} \cdot V_{DW}}{\gamma_{LL.IM} \cdot V_{LL.IM}} \qquad \boxed{RF_{HL93} = 1.86}$$

Since RF for HL93 > 1.0, beam end bearing rating factors for all vehicles need not be calculated per RIDOT Section 6.4.

067301 - BEAM END BEARING LOAD RATINGS SPAN 2 - GIRDER B AT PIER

MATHCAD Constants:

$kip := 1000lbf$ $ksi := \frac{kip}{in^2}$ $psi := 1\frac{lbf}{in^2}$ $pcf := 1\frac{lbf}{ft^3}$ $kcf := 1\frac{kip}{ft^3}$ $psf := 1\frac{lbf}{ft^2}$ $ftk := 1ft \cdot 1kip$ $Ton := 2kip$

References

Bridge Plans
Reference RIDOT Bridge Load Rating Guidelines Sections 6.3 & 6.4.
AASHTO LRFD 8th Edition Section 6.10.11.2, Bearing Stiffeners

Section Properties

Girder B, Span 2 at Pier:
No losses noted.

Steel Material Properties

Yield Strength: $F_{yw} := 36ksi$ (ASTM A36)

Modulus of Elasticity: $E := 29000ksi$

Existing Section

Full Web Thickness: $t_w := 0.4375 \cdot in$

Flange Thickness: $t_f := 1.0 \cdot in$

Flange Width: $b_f := 18.0 \cdot in$

Depth of Section: $d := 72 \cdot in + 1in + 0.625in = 73.625 \cdot in$

Web Height: $h_w := 72.0in$

Bearing Stiffener Thickness: $t_s := 0.75in$

Bearing Stiffener Chamfer $chamfer := 0.75in$

Section Examined for Bearing

Length in front of bearing $L_f := 9t_w = 3.938 \cdot in$

Length in back of bearing $L_b := L_f = 3.938 \cdot in$

Effective Section per AASHTO 6.10.11.2.4b

Bearing Stiffener Length $L_s := \frac{\left(12in - \frac{7}{16}in\right)}{2} - chamfer = 5.031 \cdot in$

Use contact width for one bearing stiffener on top flange

Section Loss In Front of Bearing - Adjusted Web Thickness

Depth of Loss in front of bearing: $d_{loss1} := 0.0 \cdot in$ use total height of losses

Thickness of Loss in front of bearing: $t_{loss1} := 0.0 \cdot in$ 1/4" loss EF, 1/8" loss WF

Web Width Adjusted for Losses in front of bearing: $t_{w.adj1} := \frac{h_w \cdot t_w - d_{loss1} \cdot t_{loss1}}{h_w} = 0.437 \cdot in$

Section Loss Beyond Bearing - Adjusted Web Thickness

Depth of Loss beyond bearing: $d_{loss2} := h_w = 72 \cdot in$

Thickness of Loss beyond bearing: $t_{loss2} := 0.0 \cdot in$

Web Width Adjusted for Losses beyond bearing: $t_{w.adj2} := \frac{h_w \cdot t_w - d_{loss2} \cdot t_{loss2}}{h_w} = 0.437 \cdot in$

Weighted Average Adjusted Web Thickness

Weight Average Web Width Adjusted for Losses: $t_{w.adj} := \frac{t_{w.adj1} + t_{w.adj2}}{2} = 0.437 \cdot in$

Area used for Bearing Resistance Capacity

Web Area $Area_{web} := L_f \cdot t_{w.adj1} + L_b \cdot t_{w.adj2} = 3.45 \cdot in^2$

Stiffener Area $Area_{stiff} := L_s \cdot t_s \cdot 2 = 7.55 \cdot in^2$

Total Gross Area $A_g := Area_{web} + Area_{stiff} = 10.99 \cdot in^2$

Bearing Capacity Calculation - AASHTO 6.9.4

Effective Length Factor: $k := 0.75$ AASHTO 4.6.2.5

Moment of Inertia $I_s := \frac{\left[t_s \cdot \left(2L_s + t_{w.adj}\right)^3 + \left[\left(L_f + L_b - t_s\right) \cdot t_{w.adj}^{\ 3}\right]\right]}{12} = 72.4 \cdot in^4$

Radius of gyration: $r_s := \sqrt{\frac{I_s}{A_g}} = 2.566 \cdot in$

Elastic Critical Buckling Resistance: $P_e := \frac{\pi^2 \cdot E \cdot A_g}{\left(\frac{k \cdot h_w}{r_s}\right)^2} = 7106.5 \cdot kip$ Eq. 6.9.4.1.2-1

Nominal Yield Resistance: $P_o := F_{yw} \cdot A_g = 395.7 \cdot kip$

Ratio $ratio := \frac{P_e}{P_o} = 18$

Nominal Compressive Resistance: $P_n := if\left[ratio < 0.44, 0.877 \cdot P_e, \left[0.658^{\left(\frac{P_o}{P_e}\right)}\right] P_o\right] = 386.6 \cdot kip$

Eq. 6.9.4.1.1-1, -2

Axial Compression Resistance factor for steel: $\phi_c := 0.95$ AASHTO 6.5.4.2

Factored Compressive Resistance: $P_r := \phi_c \cdot P_n = 367.3 \cdot kip$ Eq. 6.9.2.1-1

Factored Dead Load and Live Load Shear Forces (From AASHTOWare BrR)

Notes:
Span 2 HL-93 shear reactions from BrR are provided. Live load includes IM.

Load Factors $\gamma_{DC} := 1.25$ $\gamma_{DW} := 1.25$ $\gamma_{LL.IM} := 1.75$ γ_{DW} use 1.25 when field losses are measured

BrR Unfactored Loads:

Unfactored DC Shear: $V_{DC} := 64.47 \cdot kip$

Unfactored DW Shear: $V_{DW} := 29.43 \cdot kip$

Unfactored HL-93 Live Load Shear: $V_{LL.IM} := 95.70 \cdot kip$

Factored Loads:

Factored DC Shear: $\gamma_{DC} \cdot V_{DC} = 80.59 \cdot kip$

Factored DW Shear: $\gamma_{DW} \cdot V_{DW} = 36.788 \cdot kip$

Governing Factored HL-93 Live Load Shear: $\gamma_{LL.IM} \cdot V_{LL.IM} = 167.47 \cdot kip$

LRFR Beam End Bearing Rating Factors

Beam End Bearing - LRFR RATING - HL93 Design Truck Loading

$$RF_{HL93} := \frac{P_r - \gamma_{DC} \cdot V_{DC} - \gamma_{DW} \cdot V_{DW}}{\gamma_{LL.IM} \cdot V_{LL.IM}}$$

$$\boxed{RF_{HL93} = 1.49}$$

Since RF for HL93 > 1.0, beam end bearing rating factors for all vehicles need not be calculated per RIDOT Section 6.4.

067301 - BEAM END BEARING LOAD RATINGS SPAN 2 - GIRDER G AT PIER

MATHCAD Constants:

$kip := 1000lbf$ $ksi := \frac{kip}{in^2}$ $psi := 1\frac{lbf}{in^2}$ $pcf := 1\frac{lbf}{ft^3}$ $kcf := 1\frac{kip}{ft^3}$ $psf := 1\frac{lbf}{ft^2}$ $ftk := 1ft \cdot 1kip$ $Ton := 2kip$

References

Bridge Plans
Reference RIDOT Bridge Load Rating Guidelines Sections 6.3 & 6.4.
AASHTO LRFD 8th Edition Section 6.10.11.2, Bearing Stiffeners

Section Properties

Girder G, Span 2 at Pier:
Beam end web beyond the bearing centerline has full height 1/8" section loss x 6" long.
Partial height 5/16" section loss in front of bearing; determine weighted average of losses.
See Inspection Report Sketch #1.

Steel Material Properties

Yield Strength: $F_{yw} := 36ksi$ (ASTM A36)

Modulus of Elasticity: $E := 29000ksi$

Existing Section

Full Web Thickness: $t_w := 0.4375 \cdot in$

Flange Thickness: $t_f := 0.6875 \cdot in$

Flange Width: $b_f := 18.0 \cdot in$

Depth of Section: $d := 72 \cdot in + 1in + 0.625in = 73.625 \cdot in$

Web Height: $h_w := 72.0in$

Bearing Stiffener Thickness: $t_s := 0.75in$

Bearing Stiffener Chamfer $chamfer := 0.75in$

Section Examined for Bearing

Length in front of bearing $L_f := 9t_w = 3.938 \cdot in$

Length in back of bearing $L_b := L_f = 3.938 \cdot in$

Effective Section per AASHTO 6.10.11.2.4b

Bearing Stiffener Length $L_s := \frac{\left(12in - \frac{7}{16}in\right)}{2} - chamfer = 5.031 \cdot in$

Use contact width for one bearing stiffener on top flange

Section Loss In Front of Bearing - Adjusted Web Thickness

Depth of Loss in front of bearing: $d_{loss1} := 13.0 \cdot in$

Thickness of Loss in front of bearing: $t_{loss1} := 0.3125 \cdot in$

Web Width Adjusted for Losses in front of bearing: $t_{w.adj1} := \frac{h_w \cdot t_w - d_{loss1} \cdot t_{loss1}}{h_w} = 0.381 \cdot in$

Section Loss Beyond Bearing - Adjusted Web Thickness

Depth of Loss beyond bearing: $d_{loss2} := h_w = 72 \cdot in$

Thickness of Loss beyond bearing: $t_{loss2} := 0.125 \cdot in$

Web Width Adjusted for Losses beyond bearing: $t_{w.adj2} := \frac{h_w \cdot t_w - d_{loss2} \cdot t_{loss2}}{h_w} = 0.312 \cdot in$

Weighted Average Adjusted Web Thickness

Weight Average Web Width Adjusted for Losses: $t_{w.adj} := \frac{t_{w.adj1} + t_{w.adj2}}{2} = 0.347 \cdot in$

Area used for Bearing Resistance Capacity

Web Area $Area_{web} := L_f \cdot t_{w.adj1} + L_b \cdot t_{w.adj2} = 2.73 \cdot in^2$

Stiffener Area $Area_{stiff} := L_s \cdot t_s \cdot 2 = 7.55 \cdot in^2$

Total Gross Area $A_g := Area_{web} + Area_{stiff} = 10.28 \cdot in^2$

Bearing Capacity Calculation - AASHTO 6.9.4

Effective Length Factor: $k := 0.75$ AASHTO 4.6.2.5

Moment of Inertia $I_s := \frac{\left[t_s \cdot \left(2L_s + t_{w.adj}\right)^3 + \left[\left(L_f + L_b - t_s\right) \cdot t_{w.adj}^{\ 3}\right]\right]}{12} = 70.5 \cdot in^4$

Radius of gyration: $r_s := \sqrt{\frac{I_s}{A_g}} = 2.619 \cdot in$

Elastic Critical Buckling Resistance: $P_e := \frac{\pi^2 \cdot E \cdot A_g}{\left(\frac{k \cdot h_w}{r_s}\right)^2} = 6921.6 \cdot kip$ Eq. 6.9.4.1.2-1

Nominal Yield Resistance: $P_o := F_{yw} \cdot A_g = 370 \cdot kip$

Ratio $ratio := \frac{P_e}{P_o} = 19$

Nominal Compressive Resistance: $P_n := if\left[ratio < 0.44, 0.877 \cdot P_e, \left[0.658^{\left(\frac{P_o}{P_e}\right)}\right] P_o\right] = 361.8 \cdot kip$

Eq. 6.9.4.1.1-1, -2

Axial Compression Resistance factor for steel: $\phi_c := 0.95$ AASHTO 6.5.4.2

Factored Compressive Resistance: $P_r := \phi_c \cdot P_n = 343.7 \cdot kip$ Eq. 6.9.2.1-1

Factored Dead Load and Live Load Shear Forces (From AASHTOWare BrR)

Notes:
Span 2 HL-93 shear reactions from BrR are provided. Live load includes IM.

Load Factors $\gamma_{DC} := 1.25$ $\gamma_{DW} := 1.25$ $\gamma_{LL.IM} := 1.75$ γ_{DW} use 1.25 when field losses are measured

BrR Unfactored Loads:

Unfactored DC Shear: $V_{DC} := 50.04 \cdot kip$

Unfactored DW Shear: $V_{DW} := 18.48 \cdot kip$

Unfactored HL-93 Live Load Shear: $V_{LL.IM} := 73.70 \cdot kip$

Factored Loads:

Factored DC Shear: $\gamma_{DC} \cdot V_{DC} = 62.55 \cdot kip$

Factored DW Shear: $\gamma_{DW} \cdot V_{DW} = 23.1 \cdot kip$

Governing Factored HL-93 Live Load Shear: $\gamma_{LL.IM} \cdot V_{LL.IM} = 128.97 \cdot kip$

LRFR Beam End Bearing Rating Factors

Beam End Bearing - LRFR RATING - HL93 Design Truck Loading

$$RF_{HL93} := \frac{P_r - \gamma_{DC} \cdot V_{DC} - \gamma_{DW} \cdot V_{DW}}{\gamma_{LL.IM} \cdot V_{LL.IM}} \qquad \boxed{RF_{HL93} = 2.00}$$

Since RF for HL93 > 1.0, beam end bearing rating factors for all vehicles need not be calculated per RIDOT Section 6.4.

APPENDIX D

COMPUTER INPUT / OUTPUT

Appendix D Table of Contents

Superstructure Analysis

Pier Cap Analysis

Username: brr
Date: Wednesday, September 12, 2018 15:38:31

Bridge ID 067301 Mohegan Bridge

NBI Structure ID (8):
Description: Two span simply supported steel girder bridge

Description

Location:	Burrillville
Total Length:	221.33 *(ft)*
Facility Carried:	ST 102
Route Number:	102
Feature Intersected:	Branch River
Mi Post:	*(mi)*
Units:	US Customary
Year Built:	1966
Recent ADTT:	697
District:	
County:	
Owner:	
National Highway System:	
Functional Class:	

Global Reference Point

X Coordinate:	0.000 *(ft)*
Y Coordinate:	0.000 *(ft)*
Elevation:	*(ft)*
Longitude:	*(Degrees)*
Latitude:	*(Degrees)*

Materials

Structural Steel

Name:	**ASTM A36**
Description:	ASTM A 36
Specified minimum yield strength (Fy):	36.000 *(ksi)*
Specified minimum tensile strength (Fu):	58.000 *(ksi)*
Coefficient of thermal expansion:	0.0000065000 *(1/F)*
Density:	0.4900 *(kcf)*
Modulus of elasticity (E):	29000.00 *(ksi)*

Concrete

Name:	**Deck concrete**
Description:	3 ksi concrete
Specified compressive strength at 28 days (f'c):	3.000 *(ksi)*
Initial specified compressive strength (f'ci):	*(ksi)*
Coefficient of thermal expansion:	0.0000060000 *(1/F)*
Density (for dead loads):	0.145 *(kcf)*
Density (for modulus of elasticity):	0.145 *(kcf)*
Std Modulus of elasticity (Ec):	3155.92 *(ksi)*

LRFD Modulus of elasticity (Ec):	3625.49 *(ksi)*
Poisson's ratio:	0.200
Modulus of rupture:	0.416 *(ksi)*
Shear factor:	1.000
Composition of concrete:	Normal
Std Initial modulus of elasticity (Eci):	0.00 *(ksi)*
LRFD Initial modulus of elasticity (Eci):	0.00 *(ksi)*
Splitting tensile strength (fct):	*(ksi)*

Reinforcing Steel

Name:	**Grade 40 Reinf Steel**
Description:	Deck rebar
Specified yield strength (Fy):	40.000 *(ksi)*
Modulus of elasticity (Es):	29000.00 *(ksi)*
Ultimate strength (Fu):	*(ksi)*
Type:	Plain

No prestressing strand materials.

No timber materials.

Beam Shapes

Steel Shapes

Steel Angles

Name:	**L 4x3x0.375**
Description:	L 4x3x0.375 Imported from AISC Tables (1994)
Angle size 1:	4.0000 *(in)*
Angle size 2:	3.0000 *(in)*
Thickness:	0.3750 *(in)*
k:	*(in)*
Xyy:	0.7820 *(in)*
Yxx:	1.2800 *(in)*
tan(tetha):	
Cross sectional Area (A):	2.480 *(in^2)*
Nominal load:	8.500 *(lb/ft)*
Moment of Inertia Ixx:	3.960 *(in^4)*
Moment of Inertia Iyy:	1.920 *(in^4)*
Rzz:	0.6440 *(in)*

No steel channels.

Steel I Shapes

Name: **W 8x18**

Description:	W 8x18 Imported from AISC Tables (1994)
Depth (d):	8.1400 *(in)*
Flange width (bf):	5.2500 *(in)*
Flange thickness (tf):	0.3300 *(in)*
Web thickness (tw):	0.2300 *(in)*
k:	0.7500 *(in)*
k1:	*(in)*
Cross sectional area:	5.260 *(in^2)*
Nominal load:	18.000 *(lb/ft)*
Ixx:	61.900 *(in^4)*
Iyy:	7.970 *(in^4)*
Zx:	17.000 *(in^3)*
Zy:	4.660 *(in^3)*
Nominal Depth:	8.0000 *(in)*
Type:	W Shape

No steel structural tee shapes.

Prestressed Shapes

No prestressed shapes.

Timber Shapes

No timber shapes.

Appurtenances

No concrete railings.

No steel railings.

Impact

Standard Impact Factor

Type:	Standard - AASHTO

LRFD Dynamic Load Allowance

Fatigue and fracture limit states:	15.0 *(%)*
All other limit states:	33.0 *(%)*

Factors

No LFD Factors specified.

No LRFD Factors specified.

No Bridge Alternatives defined.

Superstructure Definition Span 1

Definition

Units:	US Customary
Number of spans:	1
Number of girders:	7

Span	Length *(ft)*
1	110.0000

Frame Structure Simplified Definition:

Support	Frame Connection
1	
2	

Girder Spacing Display Type: Perpendicular

Average Humidity: *(%)*

Analysis

Default Library Factors

Factor Override

Analysis Module

Analysis Method: ASD
Analysis Module:
Analysis Module Component:
Properties:

Analysis Method: LFD
Analysis Module:
Analysis Module Component:
Properties:

Analysis Method: LRFD
Analysis Module:
Analysis Module Component:
Properties:

Analysis Method: LRFR
Analysis Module:
Analysis Module Component:
Properties:

Analysis Method: Distribution Factors
Analysis Module:
Analysis Module Component:
Properties:

Default rating method: LFD

Impact

Standard Impact Factor

Type:	Standard - AASHTO

LRFD Dynamic Load Allowance

Fatigue and fracture limit states:	15.0 *(%)*
All other limit states:	33.0 *(%)*

Structure Framing Plan Details

Layout

Support	Skew *(Degrees)*
1	0.0000
2	0.0000

Girder Spacing Orientation: Perpendicular

Girder Bay	Girder Spacing Start *(ft)*	End *(ft)*
1	7.5000	7.5000
2	7.5000	7.5000
3	7.5000	7.5000
4	7.5000	7.5000
5	7.5000	7.5000
6	7.5000	7.5000

Diaphragms

Girder Bay 1

Distance Left Girder *(ft)*	Distance Right Girder *(ft)*	Diaphragm Spacing *(ft)*	Number of Spaces	Diaphragm Weight *(kip)*
0.00	0.00	22.00	4	0.4690

Girder Bay 2

Distance Left Girder *(ft)*	Distance Right Girder *(ft)*	Diaphragm Spacing *(ft)*	Number of Spaces	Diaphragm Weight *(kip)*
0.00	0.00	22.00	4	0.4690

Girder Bay 3

Distance Left Girder *(ft)*	Distance Right Girder *(ft)*	Diaphragm Spacing *(ft)*	Number of Spaces	Diaphragm Weight *(kip)*
0.00	0.00	22.00	4	0.4690

Girder Bay 4

Distance Left Girder *(ft)*	Distance Right Girder *(ft)*	Diaphragm Spacing *(ft)*	Number of Spaces	Diaphragm Weight *(kip)*
0.00	0.00	22.00	4	0.4690

Girder Bay 5

Distance Left Girder *(ft)*	Distance Right Girder *(ft)*	Diaphragm Spacing *(ft)*	Number of Spaces	Diaphragm Weight *(kip)*
0.00	0.00	22.00	4	0.4690

Girder Bay 6

Distance Left Girder (ft)	Distance Right Girder (ft)	Diaphragm Spacing (ft)	Number of Spaces	Diaphragm Weight (kip)
0.00	0.00	22.00	4	0.4690

Structure Typical Section

Deck

Left start width:	23.25	*(ft)*
Left end width:	23.25	*(ft)*
Right start width:	23.25	*(ft)*
Right end width:	23.25	*(ft)*
Left start overhang:	0.75	*(ft)*
Left end overhang:	0.75	*(ft)*

Deck (Cont'd)

Deck concrete:	Deck concrete	
Total deck thickness:	7.0000	*(in)*
Deck crack control parameter:		*(kip/in)*
Sustained modular ratio factor:	3.000	

Lane Position

Offset Left Start:	-22.00	*(ft)*
Offset Left End:	-22.00	*(ft)*
Offset Right Start:	22.00	*(ft)*
Offset Right End:	22.00	*(ft)*

Wearing Surface

Wearing surface material:		
Description:		
Wearing surface thickness:	5.5000	*(in)*
Wearing surface density:	0.000	*(pcf)*
Load case:	DW	

Load Case Description

Load Case Name	Description	Stage	Type	Time (Days)
DC2	Superimposed Dead Loa...	Composite (long te...	D,DC	
DW	Wearing Surface & Uti...	Composite (long te...	D,DW	
DC1	Non-composite Dead Lo...	Non-composite (Sta...	D,DC	

Superstructure Loads

Uniform Temperature

Load Case:	DC2	
Temperature rise:		*(F)*
Temperature fall:		*(F)*

Gradient Temperature

Load Case:		
Temperature value T1:		*(F)*
Temperature value T2:		*(F)*
Temperature value T3:		*(F)*

Wind

Load Case:
Design Pressure: *(psf)*
Wind Load Path: Truss action
DL Distribution
Stage 1 Dead Load Distribution: Tributary Area
Stage 2 Dead Load Distribution: Independent 3D Elastic

Shear Connector Definitions
Name: 7/8" Stud
Connector Type: Stud
Stud Diameter: 0.8750 *(in)*
Stud Height: 5.0000 *(in)*
LRFD Steel Minimum Tensile Strength: 66.000 *(ksi)*

Stiffener Definitions

Transverse Stiffeners

Name: Web Stiffener Single
Stiffener number: Single
Plate Width: 5.0000 *(in)*
Plate Thickness: 0.3750 *(in)*
Material: ASTM A36
Top Gap: 0.0000 *(in)*
Bottom Gap: 0.0000 *(in)*
Top Weld:
Web Weld:
Bottom Weld:

Name: Web Stiffener Pair
Stiffener number: Pair
Plate Width: 5.0000 *(in)*
Plate Thickness: 0.3750 *(in)*
Material: ASTM A36
Top Gap: 0.0000 *(in)*
Bottom Gap: 0.0000 *(in)*
Top Weld:
Web Weld:
Bottom Weld:

Bearing Stiffeners

Name: Bearing Stiffener
Plate Width: 8.7500 *(in)*
Plate Thickness: 0.7500 *(in)*
Material: ASTM A36
Top outside clip length: 2.9688 *(in)*
Top inside horizontal clip length: 0.7500 *(in)*
Top inside vertical clip length: 0.7500 *(in)*
Bottom outside clip length: 0.0000 *(in)*

Bottom inside horizontal clip length: 0.7500 *(in)*
Bottom inside vertical clip length: 0.7500 *(in)*
Top Weld:
Web Weld:
Bottom Weld:
No prestress stress limits.

No prestress properties.

No vertical shear reinforcement definitions.

No horizontal shear reinforcement definitions.

Member Girder A

Link with: None
Description: S-1 in plans

Existing: Girder A - As Inspected - S-1 in plans
Current: Girder A - As Inspected - S-1 in plans
Number of Spans: 1

Span Number	Span Length *(ft)*
1	110.000000

Support	Frame Connection
1	
2	

Pedestrian load: *(lb/ft)*

Member Loads

Distributed Loads

Distance *(ft)*	Length *(ft)*	Start *(kip/ft)*	End *(kip/ft)*	Load Case Name
0.00	110.00	0.535	0.535	DW
0.00	110.00	0.257	0.257	DC2
0.00	110.00	0.052	0.052	DC1

Member Loads - Settlement

Support Number	Horizontal *(in)*	Vertical *(in)*	Rotational *(Radians)*	Load Case Name
1				
2				

Support Constraints

General

Support	Support

Number	Type	X Translation	Y Translation	Z Rotation
1	Roller	Free	Fixed	Free
2	Pinned	Fixed	Fixed	Free

Elastic

Support Number	X Translation *(kip/ft)*	Y Translation *(kip/ft)*	Z Rotation *(kip-in/rad)*	Override Computed Z Rotation
1				
2				

Member Alternative Girder A - As Built

Description: S-1 in plans

Description

Material Type: Steel
Girder Type: Plate
Member units: US Customary
Girder property input method: Schedule based
Left end X: 13.0000 *(in)*
Right end X: 7.0000 *(in)*
Additional Self Load: *(kip/ft)*
Additional Self Load %: *(%)*

Analysis Module

Analysis Method: ASD
Analysis Module: AASHTO ASD
Analysis Module Component:
Properties:

Analysis Method: LFD
Analysis Module: AASHTO LFD
Analysis Module Component:
Properties:

Analysis Method: LRFD
Analysis Module: AASHTO LRFD
Analysis Module Component:
Properties:

Analysis Method: LRFR
Analysis Module: AASHTO LRFR
Analysis Module Component:
Properties:

Analysis Method: Distribution Factors
Analysis Module: BrR Dist Fact
Analysis Module Component:
Properties:

Default rating method: LRFR

Factors

Factor Override
LRFD:
LFD:
ASD Factors

	Inventory	Operating
Structural steel		
Concrete		
PS Concrete Comp.		
PS Concrete Tens.		
PS Moment Cap.		
Reinforcement		
Bearing Stiffener		
Stirrup		
Timber	NA	

Default Materials

Structural steel:	ASTM A36
Deck concrete:	Deck concrete
Deck reinforcement:	Grade 40 Reinf Steel
Welds:	
Bolts:	

Impact

Standard Impact Factor

Type:	Standard - AASHTO

LRFD Dynamic Load Allowance

Fatigue and fracture limit states:	15.0 *(%)*
All other limit states:	33.0 *(%)*

Live Load Distribution

Standard

	Distribution Factor (Wheels)			
Lanes Loaded	Shear	Shear at Supports	Moment	Deflection
1 Lane				
Multi-Lane				

LRFD

Distance *(ft)*	Length *(ft)*	Type	1 Lane	Multi-Lane
0.00	110.000	Moment	0.463	0.600
0.00	110.000	Shear	0.463	0.600
0.00	110.000	Deflectio...	0.171	0.364

Girder Profile

Web

Begin Depth	Depth Vary	End Depth	Thickness	Distance	Length	Material

(in)		(in)	(in)	(ft)	(ft)	
72.0000	None	72.0000	0.4375	0.00	110.00	ASTM A36

Top Flange

Begin Width (in)	End Width (in)	Thickness (in)	Distance (ft)	Length (ft)	Material
12.0000	12.0000	0.6250	0.00	25.50	ASTM A36
12.0000	12.0000	0.8750	25.50	59.00	ASTM A36
12.0000	12.0000	0.6250	84.50	25.50	ASTM A36

Bottom Flange

Begin Width (in)	End Width (in)	Thickness (in)	Distance (ft)	Length (ft)	Material
18.0000	18.0000	1.0000	0.00	25.50	ASTM A36
18.0000	18.0000	1.3750	25.50	59.00	ASTM A36
18.0000	18.0000	1.0000	84.50	25.50	ASTM A36

Deck Profile

Deck Concrete

Material (LRFD)	Distance n (ft)	Length (ft)	Total Thickness (in)	Structural Thickness (in)	Effective Width (Std) (in)	Effective Width (in)
Deck concrete	0.00 8.00...	110.00		7.0000	51.0000	54.0000

Shear Connectors

Start Distance (ft)	Length (ft)	Connector Name	Number per Row	Number of Spaces	Transverse Spacing (in)
0.00	110.00	Composite			

Bracing Ranges

Lateral Support

Distance (ft)	Length (ft)
0.00	110.00

Stiffener Ranges

Transverse Stiffener Ranges (Location)

Name	Distance (ft)	Number	Spacing (in)
Web Stiffener Sing...	0.00	19	66.0000

Bearing Stiffener Locations

Support 1

Stiffener Pair	Name	Offset (in)

1	Bearing Stiffener	0.0000

Support 2

Stiffener Pair	Name	Offset *(in)*
1	Bearing Stiffener	0.0000

Points of Interest

Distance from left most support:	0.00 *(ft)*
Side:	Right
Transverse Stiffeners	
Override Schedule:	FALSE
Stiffener spacing:	*(in)*
Stiffener width:	*(in)*
Stiffener thickness:	*(in)*
Material:	ASTM A36
Stiffener number:	Single
Stiffener type:	Plate
Other Stiffeners	
Bearing Stiffener	
Override Schedule:	FALSE
Stiffener width:	*(in)*
Stiffener thickness:	*(in)*
Material:	ASTM A36
Clip:	*(in)*
Number of pairs:	
Pair spacing:	*(in)*
Attachment Type:	Welds
Longitudinal Stiffener	
Override Schedule:	FALSE
Stiffener width:	*(in)*
Stiffener thickness:	*(in)*
Material:	ASTM A36
Distance from flange to stiffener:	*(in)*
Distance measured from:	Top Flange
Fatigue	
Number of cycles:	0
Bracing	
Deck provides lateral support:	
Override diaphragm schedule:	FALSE
Distance to left diaphragm:	*(ft)*
Distance to right diaphragm:	*(ft)*
Diaphragm at this location:	FALSE
ASD	
Compression flange unsupported length:	*(ft)*
Tension Field Action	Ignore combined shear and bending
Riveted Section	
Net moment of inertia:	*(in^4)*
Distance to centroid:	*(in)*
Net area of web:	*(in^2)*
Top plate allowable shear:	*(ksi)*

Bottom plate allowable shear:	*(ksi)*
Percent area top flange:	*(%)*
Percent area bottom flange:	*(%)*

Distance from left most support:	49.50 *(ft)*
Side:	Right
<u>Transverse Stiffeners</u>	
Override Schedule:	FALSE
Stiffener spacing:	*(in)*
Stiffener width:	*(in)*
Stiffener thickness:	*(in)*
Material:	ASTM A36
Stiffener number:	Single
Stiffener type:	Plate
<u>Other Stiffeners</u>	
Bearing Stiffener	
Override Schedule:	FALSE
Stiffener width:	*(in)*
Stiffener thickness:	*(in)*
Material:	ASTM A36
Clip:	*(in)*
Number of pairs:	
Pair spacing:	*(in)*
Attachment Type:	Welds
Longitudinal Stiffener	
Override Schedule:	FALSE
Stiffener width:	*(in)*
Stiffener thickness:	*(in)*
Material:	ASTM A36
Distance from flange to stiffener:	*(in)*
Distance measured from:	Top Flange
<u>Fatigue</u>	
Number of cycles:	0
<u>Bracing</u>	
Deck provides lateral support:	
Override diaphragm schedule:	FALSE
Distance to left diaphragm:	*(ft)*
Distance to right diaphragm:	*(ft)*
Diaphragm at this location:	FALSE
<u>ASD</u>	
Compression flange unsupported length:	*(ft)*
Tension Field Action	Ignore combined shear and bending
Riveted Section	
Net moment of inertia:	*(in^4)*
Distance to centroid:	*(in)*
Net area of web:	*(in^2)*
Top plate allowable shear:	*(ksi)*
Bottom plate allowable shear:	*(ksi)*
Percent area top flange:	*(%)*
Percent area bottom flange:	*(%)*

Member Alternative Girder A - As Inspected

Description: S-1 in plans

Description

Material Type:	Steel
Girder Type:	Plate
Member units:	US Customary
Girder property input method:	Schedule based
Left end X:	13.0000 *(in)*
Right end X:	7.0000 *(in)*
Additional Self Load:	*(kip/ft)*
Additional Self Load %:	*(%)*

Analysis Module

Analysis Method:	ASD
Analysis Module:	AASHTO ASD
Analysis Module Component:	
Properties:	
Analysis Method:	LFD
Analysis Module:	AASHTO LFD
Analysis Module Component:	
Properties:	
Analysis Method:	LRFD
Analysis Module:	AASHTO LRFD
Analysis Module Component:	
Properties:	
Analysis Method:	LRFR
Analysis Module:	AASHTO LRFR
Analysis Module Component:	
Properties:	
Analysis Method:	Distribution Factors
Analysis Module:	BrR Dist Fact
Analysis Module Component:	
Properties:	
Default rating method:	LRFR

Factors

Factor Override

LRFD:

LFD:

ASD Factors

	Inventory	Operating
Structural steel		
Concrete		

PS Concrete Comp.	
PS Concrete Tens.	
PS Moment Cap.	
Reinforcement	
Bearing Stiffener	
Stirrup	
Timber	NA

Default Materials

Structural steel:	ASTM A36
Deck concrete:	Deck concrete
Deck reinforcement:	Grade 40 Reinf Steel
Welds:	
Bolts:	

Impact

Standard Impact Factor

Type:	Standard - AASHTO
LRFD Dynamic Load Allowance	
Fatigue and fracture limit states:	15.0 *(%)*
All other limit states:	33.0 *(%)*

Live Load Distribution

Standard

	Distribution Factor (Wheels)			
Lanes Loaded	Shear	Shear at Supports	Moment	Deflection
1 Lane				
Multi-Lane				

LRFD

Distance *(ft)*	Length *(ft)*	Type	1 Lane	Multi-Lane
0.00	110.000	Moment	0.463	0.600
0.00	110.000	Shear	0.463	0.600
0.00	110.000	Deflectio...	0.171	0.364

Girder Profile

Web

Begin Depth *(in)*	Depth Vary	End Depth *(in)*	Thickness *(in)*	Distance *(ft)*	Length *(ft)*	Material
72.0000	None	72.0000	0.4375	0.00	110.00	ASTM A36

Top Flange

Begin Width *(in)*	End Width *(in)*	Thickness *(in)*	Distance *(ft)*	Length *(ft)*	Material

12.0000	12.0000	0.6250	0.00	25.50	ASTM A36
12.0000	12.0000	0.8750	25.50	59.00	ASTM A36
12.0000	12.0000	0.6250	84.50	25.50	ASTM A36

Bottom Flange

Begin Width (in)	End Width (in)	Thickness (in)	Distance (ft)	Length (ft)	Material
18.0000	18.0000	1.0000	0.00	25.50	ASTM A36
18.0000	18.0000	1.3750	25.50	59.00	ASTM A36
18.0000	18.0000	1.0000	84.50	25.50	ASTM A36

Deck Profile

Deck Concrete

Material (LRFD)	Distance n (ft)	Length (ft)	Total Thickness (in)	Structural Thickness (in)	Effective Width (Std) (in)	Effective Width (in)
Deck concrete	0.00 8.00...	110.00		7.0000	51.0000	54.0000

Shear Connectors

Start Distance (ft)	Length (ft)	Connector Name	Number per Row	Number of Spaces	Transverse Spacing (in)
0.00	110.00	Composite			

Bracing Ranges

Lateral Support

Distance (ft)	Length (ft)
0.00	110.00

Stiffener Ranges

Transverse Stiffener Ranges (Location)

Name	Distance (ft)	Number	Spacing (in)
Web Stiffener Sing...	0.00	19	66.0000

Bearing Stiffener Locations

Support 1

Stiffener Pair	Name	Offset (in)
1	Bearing Stiffener	0.0000

Support 2

Stiffener Pair	Name	Offset (in)
1	Bearing Stiffener	0.0000

Points of Interest

Distance from left most support:	0.00 *(ft)*
Side:	Right
Transverse Stiffeners	
Override Schedule:	FALSE
Stiffener spacing:	*(in)*
Stiffener width:	*(in)*
Stiffener thickness:	*(in)*
Material:	ASTM A36
Stiffener number:	Single
Stiffener type:	Plate
Other Stiffeners	
Bearing Stiffener	
Override Schedule:	FALSE
Stiffener width:	*(in)*
Stiffener thickness:	*(in)*
Material:	ASTM A36
Clip:	*(in)*
Number of pairs:	
Pair spacing:	*(in)*
Attachment Type:	Welds
Longitudinal Stiffener	
Override Schedule:	FALSE
Stiffener width:	*(in)*
Stiffener thickness:	*(in)*
Material:	ASTM A36
Distance from flange to stiffener:	*(in)*
Distance measured from:	Top Flange
Fatigue	
Number of cycles:	0
Bracing	
Deck provides lateral support:	
Override diaphragm schedule:	FALSE
Distance to left diaphragm:	*(ft)*
Distance to right diaphragm:	*(ft)*
Diaphragm at this location:	FALSE
ASD	
Compression flange unsupported length:	*(ft)*
Tension Field Action	Ignore combined shear and bending
Riveted Section	
Net moment of inertia:	*(in^4)*
Distance to centroid:	*(in)*
Net area of web:	*(in^2)*
Top plate allowable shear:	*(ksi)*
Bottom plate allowable shear:	*(ksi)*
Percent area top flange:	*(%)*
Percent area bottom flange:	*(%)*

Distance from left most support:	49.50 *(ft)*
Side:	Right

Transverse Stiffeners

Override Schedule:	FALSE
Stiffener spacing:	*(in)*
Stiffener width:	*(in)*
Stiffener thickness:	*(in)*
Material:	ASTM A36
Stiffener number:	Single
Stiffener type:	Plate

Other Stiffeners

Bearing Stiffener

Override Schedule:	FALSE
Stiffener width:	*(in)*
Stiffener thickness:	*(in)*
Material:	ASTM A36
Clip:	*(in)*
Number of pairs:	
Pair spacing:	*(in)*
Attachment Type:	Welds

Longitudinal Stiffener

Override Schedule:	FALSE
Stiffener width:	*(in)*
Stiffener thickness:	*(in)*
Material:	ASTM A36
Distance from flange to stiffener:	*(in)*
Distance measured from:	Top Flange

Fatigue

Number of cycles:	0

Bracing

Deck provides lateral support:	
Override diaphragm schedule:	FALSE
Distance to left diaphragm:	*(ft)*
Distance to right diaphragm:	*(ft)*
Diaphragm at this location:	FALSE

ASD

Compression flange unsupported length:	*(ft)*
Tension Field Action	Ignore combined shear and bending

Riveted Section

Net moment of inertia:	*(in^4)*
Distance to centroid:	*(in)*
Net area of web:	*(in^2)*
Top plate allowable shear:	*(ksi)*
Bottom plate allowable shear:	*(ksi)*
Percent area top flange:	*(%)*
Percent area bottom flange:	*(%)*

Web Deterioration

Thickness Loss	Start Distance	Length
(%)	*(ft)*	*(ft)*

2.8	0.00	0.92

Member Girder B

Link with: None
Description:

Existing: Girder B - S-2 in plans
Current: Girder B - S-2 in plans
Number of Spans: 1

Span Number	Span Length *(ft)*
1	110.000000

Support	Frame Connection
1	
2	

Pedestrian load: *(lb/ft)*

Member Loads

Distributed Loads

Distance *(ft)*	Length *(ft)*	Start *(kip/ft)*	End *(kip/ft)*	Load Case Name
0.00	110.00	0.052	0.052	DC1
0.00	110.00	0.257	0.257	DC2
0.00	110.00	0.535	0.535	DW

Member Loads - Settlement

Support Number	Horizontal *(in)*	Vertical *(in)*	Rotational *(Radians)*	Load Case Name
1				
2				

Support Constraints

General

Support Number	Support Type	X Translation	Y Translation	Z Rotation
1	Roller	Free	Fixed	Free
2	Pinned	Fixed	Fixed	Free

Elastic

Support Number	X Translation *(kip/ft)*	Y Translation *(kip/ft)*	Z Rotation *(kip-in/rad)*	Override Computed Z Rotation
1				
2				

Member Alternative Girder B

Description: S-2 in plans

Description

Material Type:	Steel
Girder Type:	Plate
Member units:	US Customary
Girder property input method:	Schedule based
Left end X:	11.0000 *(in)*
Right end X:	6.0000 *(in)*
Additional Self Load:	*(kip/ft)*
Additional Self Load %:	*(%)*

Analysis Module

Analysis Method:	ASD
Analysis Module:	AASHTO ASD
Analysis Module Component:	
Properties:	

Analysis Method:	LFD
Analysis Module:	AASHTO LFD
Analysis Module Component:	
Properties:	

Analysis Method:	LRFD
Analysis Module:	AASHTO LRFD
Analysis Module Component:	
Properties:	

Analysis Method:	LRFR
Analysis Module:	AASHTO LRFR
Analysis Module Component:	
Properties:	

Analysis Method:	Distribution Factors
Analysis Module:	BrR Dist Fact
Analysis Module Component:	
Properties:	

Default rating method: LRFR

Factors

Factor Override

LRFD:

LFD:

ASD Factors

	Inventory	Operating
Structural steel		
Concrete		
PS Concrete Comp.		
PS Concrete Tens.		
PS Moment Cap.		
Reinforcement		
Bearing Stiffener		

Stirrup	
Timber	NA

Default Materials

Structural steel:	ASTM A36
Deck concrete:	Deck concrete
Deck reinforcement:	Grade 40 Reinf Steel
Welds:	
Bolts:	

Impact

Standard Impact Factor

Type:	Standard - AASHTO
LRFD Dynamic Load Allowance	
Fatigue and fracture limit states:	15.0 *(%)*
All other limit states:	33.0 *(%)*

Live Load Distribution

Standard

D i s t r i b u t i o n F a c t o r (Wheels)

Lanes Loaded	Shear	Shear at Supports	Moment	Deflection
1 Lane				
Multi-Lane				

LRFD

Distance *(ft)*	Length *(ft)*	Type	1 Lane	Multi-Lane
0.00	110.000	Moment	0.457	0.654
0.00	110.000	Shear	0.660	0.779
0.00	110.000	Deflectio...	0.171	0.364

Girder Profile

Web

Begin Depth *(in)*	Depth Vary	End Depth *(in)*	Thickness *(in)*	Distance *(ft)*	Length *(ft)*	Material
72.0000	None	72.0000	0.4375	0.00	110.00	ASTM A36

Top Flange

Begin Width *(in)*	End Width *(in)*	Thickness *(in)*	Distance *(ft)*	Length *(ft)*	Material
12.0000	12.0000	0.6250	0.00	25.50	ASTM A36
12.0000	12.0000	0.8750	25.50	59.00	ASTM A36
12.0000	12.0000	0.6250	84.50	25.50	ASTM A36

Bottom Flange

Begin Width (in)	End Width (in)	Thickness (in)	Distance (ft)	Length (ft)	Material
18.0000	18.0000	1.0000	0.00	25.50	ASTM A36
18.0000	18.0000	1.3750	25.50	59.00	ASTM A36
18.0000	18.0000	1.0000	84.50	25.50	ASTM A36

Deck Profile

Deck Concrete

Material (LRFD)	Distance n (ft)	Length (ft)	Total Thickness (in)	Structural Thickness (in)	Effective Width (Std) (in)	Effective Width (in)
Deck concrete	0.00 8.00...	110.00		7.0000	84.0000	90.0000

Shear Connectors

Start Distance (ft)	Length (ft)	Connector Name	Number per Row	Number of Spaces	Transverse Spacing (in)
0.00	110.00	Composite			

Bracing Ranges

Lateral Support

Distance (ft)	Length (ft)
0.00	110.00

Stiffener Ranges

Transverse Stiffener Ranges (Location)

Name	Distance (ft)	Number	Spacing (in)
Web Stiffener Pair	0.00	19	66.0000

Bearing Stiffener Locations

Support 1

Stiffener Pair	Name	Offset (in)
1	Bearing Stiffener	0.0000

Support 2

Stiffener Pair	Name	Offset (in)
1	Bearing Stiffener	0.0000

Points of Interest

Distance from left most support: 49.50 *(ft)*

Side: Right

Transverse Stiffeners

Override Schedule: FALSE

Stiffener spacing:	*(in)*
Stiffener width:	*(in)*
Stiffener thickness:	*(in)*
Material:	ASTM A36
Stiffener number:	Single
Stiffener type:	Plate
Other Stiffeners	
Bearing Stiffener	
Override Schedule:	FALSE
Stiffener width:	*(in)*
Stiffener thickness:	*(in)*
Material:	ASTM A36
Clip:	*(in)*
Number of pairs:	
Pair spacing:	*(in)*
Attachment Type:	Welds
Longitudinal Stiffener	
Override Schedule:	FALSE
Stiffener width:	*(in)*
Stiffener thickness:	*(in)*
Material:	ASTM A36
Distance from flange to stiffener:	*(in)*
Distance measured from:	Top Flange
Fatigue	
Number of cycles:	0
Bracing	
Deck provides lateral support:	
Override diaphragm schedule:	FALSE
Distance to left diaphragm:	*(ft)*
Distance to right diaphragm:	*(ft)*
Diaphragm at this location:	FALSE
ASD	
Compression flange unsupported length:	*(ft)*
Tension Field Action	Ignore combined shear and bending
Riveted Section	
Net moment of inertia:	*(in^4)*
Distance to centroid:	*(in)*
Net area of web:	*(in^2)*
Top plate allowable shear:	*(ksi)*
Bottom plate allowable shear:	*(ksi)*
Percent area top flange:	*(%)*
Percent area bottom flange:	*(%)*

Member Girder C

Link with: None
Description:

Existing: Girder C - S-3 in plans

Current: Girder C - S-3 in plans
Number of Spans: 1

Span Number	Span Length *(ft)*
1	110.000000

Support	Frame Connection
1	
2	

Pedestrian load: *(lb/ft)*

Member Loads

Distributed Loads

Distance *(ft)*	Length *(ft)*	Start *(kip/ft)*	End *(kip/ft)*	Load Case Name
0.00	110.00	0.052	0.052	DC1
0.00	110.00	0.257	0.257	DC2
0.00	110.00	0.336	0.336	DW

Member Loads - Settlement

Support Number	Horizontal *(in)*	Vertical *(in)*	Rotational *(Radians)*	Load Case Name
1				
2				

Support Constraints

General

Support Number	Support Type	X Translation	Y Translation	Z Rotation
1	Roller	Free	Fixed	Free
2	Pinned	Fixed	Fixed	Free

Elastic

Support Number	X Translation *(kip/ft)*	Y Translation *(kip/ft)*	Z Rotation *(kip-in/rad)*	Override Computed Z Rotation
1				
2				

Member Alternative Girder C

Description: S-3 in plans

Description

Material Type: Steel
Girder Type: Plate
Member units: US Customary
Girder property input method: Schedule based
Left end X: 11.0000 *(in)*
Right end X: 6.0000 *(in)*

Additional Self Load: *(kip/ft)*
Additional Self Load %: *(%)*
Analysis Module
Analysis Method: ASD
Analysis Module: AASHTO ASD
Analysis Module Component:
Properties:

Analysis Method: LFD
Analysis Module: AASHTO LFD
Analysis Module Component:
Properties:

Analysis Method: LRFD
Analysis Module: AASHTO LRFD
Analysis Module Component:
Properties:

Analysis Method: LRFR
Analysis Module: AASHTO LRFR
Analysis Module Component:
Properties:

Analysis Method: Distribution Factors
Analysis Module: BrR Dist Fact
Analysis Module Component:
Properties:

Default rating method: LRFR

Factors
Factor Override
LRFD:
LFD:
ASD Factors

	Inventory	Operating
Structural steel		
Concrete		
PS Concrete Comp.		
PS Concrete Tens.		
PS Moment Cap.		
Reinforcement		
Bearing Stiffener		
Stirrup		
Timber	NA	

Default Materials
Structural steel: ASTM A36
Deck concrete: Deck concrete

Deck reinforcement: Grade 40 Reinf Steel
Welds:
Bolts:

Impact

Standard Impact Factor

Type: Standard - AASHTO

LRFD Dynamic Load Allowance

Fatigue and fracture limit states: 15.0 *(%)*
All other limit states: 33.0 *(%)*

Live Load Distribution

Standard

Distribution Factor (Wheels)

Lanes Loaded	Shear	Shear at Supports	Moment	Deflection
1 Lane				
Multi-Lane				

LRFD

Distance *(ft)*	Length *(ft)*	Type	1 Lane	Multi-Lane
0.00	110.000	Moment	0.457	0.654
0.00	110.000	Shear	0.660	0.779
0.00	110.000	Deflectio...	0.171	0.364

Girder Profile

Web

Begin Depth *(in)*	Depth Vary	End Depth *(in)*	Thickness *(in)*	Distance *(ft)*	Length *(ft)*	Material
72.0000	None	72.0000	0.4375	0.00	110.00	ASTM A36

Top Flange

Begin Width *(in)*	End Width *(in)*	Thickness *(in)*	Distance *(ft)*	Length *(ft)*	Material
12.0000	12.0000	0.6250	0.00	25.50	ASTM A36
12.0000	12.0000	0.8750	25.50	59.00	ASTM A36
12.0000	12.0000	0.6250	84.50	25.50	ASTM A36

Bottom Flange

Begin Width *(in)*	End Width *(in)*	Thickness *(in)*	Distance *(ft)*	Length *(ft)*	Material
18.0000	18.0000	1.0000	0.00	25.50	ASTM A36
18.0000	18.0000	1.3750	25.50	59.00	ASTM A36
18.0000	18.0000	1.0000	84.50	25.50	ASTM A36

Deck Profile

Deck Concrete

Material (LRFD)	Distance n	Length	Total Thickness	Structural Thickness	Effective Width (Std)	Effective Width
	(ft)	*(ft)*	*(in)*	*(in)*	*(in)*	*(in)*
Deck concrete	0.00 8.00...	110.00		7.0000	84.0000	90.0000

Shear Connectors

Start Distance	Length	Connector Name	Number per Row	Number of Spaces	Transverse Spacing
(ft)	*(ft)*				*(in)*
0.00	110.00	Composite			

Bracing Ranges

Lateral Support

Distance	Length
(ft)	*(ft)*
0.00	110.00

Stiffener Ranges

Transverse Stiffener Ranges (Location)

Name	Distance	Number	Spacing
	(ft)		*(in)*
Web Stiffener Pair	0.00	19	66.0000

Bearing Stiffener Locations

Support 1

Stiffener Pair	Name	Offset
		(in)
1	Bearing Stiffener	0.0000

Support 2

Stiffener Pair	Name	Offset
		(in)
1	Bearing Stiffener	0.0000

Points of Interest

Distance from left most support:	49.50 *(ft)*
Side:	Right
Transverse Stiffeners	
Override Schedule:	FALSE
Stiffener spacing:	*(in)*
Stiffener width:	*(in)*
Stiffener thickness:	*(in)*
Material:	ASTM A36
Stiffener number:	Single
Stiffener type:	Plate
Other Stiffeners	

Bearing Stiffener

Override Schedule:	FALSE
Stiffener width:	*(in)*
Stiffener thickness:	*(in)*
Material:	ASTM A36
Clip:	*(in)*
Number of pairs:	
Pair spacing:	*(in)*
Attachment Type:	Welds

Longitudinal Stiffener

Override Schedule:	FALSE
Stiffener width:	*(in)*
Stiffener thickness:	*(in)*
Material:	ASTM A36
Distance from flange to stiffener:	*(in)*
Distance measured from:	Top Flange

Fatigue

Number of cycles:	0

Bracing

Deck provides lateral support:	
Override diaphragm schedule:	FALSE
Distance to left diaphragm:	*(ft)*
Distance to right diaphragm:	*(ft)*
Diaphragm at this location:	FALSE

ASD

Compression flange unsupported length:	*(ft)*
Tension Field Action	Ignore combined shear and bending

Riveted Section

Net moment of inertia:	*(in^4)*
Distance to centroid:	*(in)*
Net area of web:	*(in^2)*
Top plate allowable shear:	*(ksi)*
Bottom plate allowable shear:	*(ksi)*
Percent area top flange:	*(%)*
Percent area bottom flange:	*(%)*

Member Girder D

Link with: None
Description:

Existing: Girder D - As Inspected - S-4 in plans
Current: Girder D - As Inspected - S-4 in plans
Number of Spans: 1

Span Number	Span Length *(ft)*
1	110.000000

Support	Frame Connection
1	
2	

Pedestrian load: *(lb/ft)*

Member Loads

Distributed Loads

Distance *(ft)*	Length *(ft)*	Start *(kip/ft)*	End *(kip/ft)*	Load Case Name
0.00	110.00	0.052	0.052	DC1
0.00	110.00	0.257	0.257	DC2
0.00	110.00	0.336	0.336	DW

Member Loads - Settlement

Support Number	Horizontal *(in)*	Vertical *(in)*	Rotational *(Radians)*	Load Case Name
1				
2				

Support Constraints

General

Support Number	Support Type	X Translation	Y Translation	Z Rotation
1	Roller	Free	Fixed	Free
2	Pinned	Fixed	Fixed	Free

Elastic

Support Number	X Translation *(kip/ft)*	Y Translation *(kip/ft)*	Z Rotation *(kip-in/rad)*	Override Computed Z Rotation
1				
2				

Member Alternative Girder D - As Built

Description: S-4 in plans

Description

Material Type: Steel
Girder Type: Plate
Member units: US Customary
Girder property input method: Schedule based
Left end X: 11.0000 *(in)*
Right end X: 6.0000 *(in)*
Additional Self Load: *(kip/ft)*
Additional Self Load %: *(%)*

Analysis Module

Analysis Method: ASD
Analysis Module: AASHTO ASD
Analysis Module Component:
Properties:

Analysis Method: LFD
Analysis Module: AASHTO LFD
Analysis Module Component:
Properties:

Analysis Method: LRFD
Analysis Module: AASHTO LRFD
Analysis Module Component:
Properties:

Analysis Method: LRFR
Analysis Module: AASHTO LRFR
Analysis Module Component:
Properties:

Analysis Method: Distribution Factors
Analysis Module: BrR Dist Fact
Analysis Module Component:
Properties:

Default rating method: LRFR

Factors
Factor Override
LRFD:
LFD:
ASD Factors

	Inventory	Operating
Structural steel		
Concrete		
PS Concrete Comp.		
PS Concrete Tens.		
PS Moment Cap.		
Reinforcement		
Bearing Stiffener		
Stirrup		
Timber	NA	

Default Materials
Structural steel: ASTM A36
Deck concrete: Deck concrete
Deck reinforcement: Grade 40 Reinf Steel
Welds:
Bolts:

Impact
Standard Impact Factor
Type: Standard - AASHTO

LRFD Dynamic Load Allowance

Fatigue and fracture limit states:	15.0	*(%)*
All other limit states:	33.0	*(%)*

Live Load Distribution

Standard

D i s t r i b u t i o n F a c t o r (Wheels)

Lanes Loaded	Shear	Shear at Supports	Moment	Deflection
1 Lane				
Multi-Lane				

LRFD

Distance *(ft)*	Length *(ft)*	Type	1 Lane	Multi-Lane
0.00	110.000	Moment	0.457	0.654
0.00	110.000	Shear	0.660	0.779
0.00	110.000	Deflectio...	0.171	0.364

Girder Profile

Web

Begin Depth *(in)*	Depth Vary	End Depth *(in)*	Thickness *(in)*	Distance *(ft)*	Length *(ft)*	Material
72.0000	None	72.0000	0.4375	0.00	110.00	ASTM A36

Top Flange

Begin Width *(in)*	End Width *(in)*	Thickness *(in)*	Distance *(ft)*	Length *(ft)*	Material
12.0000	12.0000	0.6250	0.00	25.50	ASTM A36
12.0000	12.0000	0.8750	25.50	59.00	ASTM A36
12.0000	12.0000	0.6250	84.50	25.50	ASTM A36

Bottom Flange

Begin Width *(in)*	End Width *(in)*	Thickness *(in)*	Distance *(ft)*	Length *(ft)*	Material
18.0000	18.0000	1.0000	0.00	25.50	ASTM A36
18.0000	18.0000	1.3750	25.50	59.00	ASTM A36
18.0000	18.0000	1.0000	84.50	25.50	ASTM A36

Deck Profile

Deck Concrete

Material (LRFD)	Distance n *(ft)*	Length *(ft)*	Total Thickness *(in)*	Structural Thickness *(in)*	Effective Width (Std) *(in)*	Effective Width *(in)*
Deck concrete	0.00	110.00		7.0000	84.0000	90.0000

8.00...

Shear Connectors

Start Distance (ft)	Length (ft)	Connector Name	Number per Row	Number of Spaces	Transverse Spacing (in)
0.00	110.00	Composite			

Bracing Ranges

Lateral Support

Distance (ft)	Length (ft)
0.00	110.00

Stiffener Ranges

Transverse Stiffener Ranges (Location)

Name	Distance (ft)	Number	Spacing (in)
Web Stiffener Pair	0.00	19	66.0000

Bearing Stiffener Locations

Support 1

Stiffener Pair	Name	Offset (in)
1	Bearing Stiffener	0.0000

Support 2

Stiffener Pair	Name	Offset (in)
1	Bearing Stiffener	0.0000

Points of Interest

Distance from left most support:	49.50 (ft)
Side:	Right

Transverse Stiffeners

Override Schedule:	FALSE
Stiffener spacing:	(in)
Stiffener width:	(in)
Stiffener thickness:	(in)
Material:	ASTM A36
Stiffener number:	Single
Stiffener type:	Plate

Other Stiffeners

Bearing Stiffener

Override Schedule:	FALSE
Stiffener width:	(in)
Stiffener thickness:	(in)
Material:	ASTM A36
Clip:	(in)
Number of pairs:	

Pair spacing:	*(in)*
Attachment Type:	Welds
Longitudinal Stiffener	
Override Schedule:	FALSE
Stiffener width:	*(in)*
Stiffener thickness:	*(in)*
Material:	ASTM A36
Distance from flange to stiffener:	*(in)*
Distance measured from:	Top Flange
Fatigue	
Number of cycles:	0
Bracing	
Deck provides lateral support:	
Override diaphragm schedule:	FALSE
Distance to left diaphragm:	*(ft)*
Distance to right diaphragm:	*(ft)*
Diaphragm at this location:	FALSE
ASD	
Compression flange unsupported length:	*(ft)*
Tension Field Action	Ignore combined shear and bending
Riveted Section	
Net moment of inertia:	*(in^4)*
Distance to centroid:	*(in)*
Net area of web:	*(in^2)*
Top plate allowable shear:	*(ksi)*
Bottom plate allowable shear:	*(ksi)*
Percent area top flange:	*(%)*
Percent area bottom flange:	*(%)*

Member Alternative Girder D - As Inspected

Description: S-4 in plans

Description

Material Type:	Steel
Girder Type:	Plate
Member units:	US Customary
Girder property input method:	Schedule based
Left end X:	11.0000 *(in)*
Right end X:	6.0000 *(in)*
Additional Self Load:	*(kip/ft)*
Additional Self Load %:	*(%)*
Analysis Module	
Analysis Method:	ASD
Analysis Module:	AASHTO ASD
Analysis Module Component:	
Properties:	
Analysis Method:	LFD
Analysis Module:	AASHTO LFD

Analysis Module Component:
Properties:

Analysis Method: LRFD
Analysis Module: AASHTO LRFD
Analysis Module Component:
Properties:

Analysis Method: LRFR
Analysis Module: AASHTO LRFR
Analysis Module Component:
Properties:

Analysis Method: Distribution Factors
Analysis Module: BrR Dist Fact
Analysis Module Component:
Properties:

Default rating method: LRFR

Factors
Factor Override
LRFD:
LFD:
ASD Factors

	Inventory	Operating
Structural steel		
Concrete		
PS Concrete Comp.		
PS Concrete Tens.		
PS Moment Cap.		
Reinforcement		
Bearing Stiffener		
Stirrup		
Timber	NA	

Default Materials
Structural steel: ASTM A36
Deck concrete: Deck concrete
Deck reinforcement: Grade 40 Reinf Steel
Welds:
Bolts:

Impact
Standard Impact Factor
Type: Standard - AASHTO
LRFD Dynamic Load Allowance
Fatigue and fracture limit states: 15.0 *(%)*
All other limit states: 33.0 *(%)*

Live Load Distribution

Standard

Lanes Loaded	Distribution Factor (Wheels) Shear	Shear at Supports	Moment	Deflection
1 Lane				
Multi-Lane				

LRFD

Distance (ft)	Length (ft)	Type	1 Lane	Multi-Lane
0.00	110.000	Moment	0.457	0.654
0.00	110.000	Shear	0.660	0.779
0.00	110.000	Deflectio...	0.171	0.364

Girder Profile

Web

Begin Depth (in)	Depth Vary	End Depth (in)	Thickness (in)	Distance (ft)	Length (ft)	Material
72.0000	None	72.0000	0.4375	0.00	110.00	ASTM A36

Top Flange

Begin Width (in)	End Width (in)	Thickness (in)	Distance (ft)	Length (ft)	Material
12.0000	12.0000	0.6250	0.00	25.50	ASTM A36
12.0000	12.0000	0.8750	25.50	59.00	ASTM A36
12.0000	12.0000	0.6250	84.50	25.50	ASTM A36

Bottom Flange

Begin Width (in)	End Width (in)	Thickness (in)	Distance (ft)	Length (ft)	Material
18.0000	18.0000	1.0000	0.00	25.50	ASTM A36
18.0000	18.0000	1.3750	25.50	59.00	ASTM A36
18.0000	18.0000	1.0000	84.50	25.50	ASTM A36

Deck Profile

Deck Concrete

Material (LRFD)	Distance n (ft)	Length (ft)	Total Thickness (in)	Structural Thickness (in)	Effective Width (Std) (in)	Effective Width (in)
Deck concrete	0.00 8.00...	110.00		7.0000	84.0000	90.0000

Shear Connectors

Start Distance (ft)	Length (ft)	Connector Name	Number per Row	Number of Spaces	Transverse Spacing (in)
0.00	110.00	Composite			

Bracing Ranges

Lateral Support

Distance (ft)	Length (ft)
0.00	110.00

Stiffener Ranges

Transverse Stiffener Ranges (Location)

Name	Distance (ft)	Number	Spacing (in)
Web Stiffener Pair	0.00	19	66.0000

Bearing Stiffener Locations

Support 1

Stiffener Pair	Name	Offset (in)
1	Bearing Stiffener	0.0000

Support 2

Stiffener Pair	Name	Offset (in)
1	Bearing Stiffener	0.0000

Points of Interest

Distance from left most support:	49.50 (ft)
Side:	Right
Transverse Stiffeners	
Override Schedule:	FALSE
Stiffener spacing:	(in)
Stiffener width:	(in)
Stiffener thickness:	(in)
Material:	ASTM A36
Stiffener number:	Single
Stiffener type:	Plate
Other Stiffeners	
Bearing Stiffener	
Override Schedule:	FALSE
Stiffener width:	(in)
Stiffener thickness:	(in)
Material:	ASTM A36
Clip:	(in)
Number of pairs:	
Pair spacing:	(in)
Attachment Type:	Welds
Longitudinal Stiffener	

Override Schedule:	FALSE
Stiffener width:	*(in)*
Stiffener thickness:	*(in)*
Material:	ASTM A36
Distance from flange to stiffener:	*(in)*
Distance measured from:	Top Flange
Fatigue	
Number of cycles:	0
Bracing	
Deck provides lateral support:	
Override diaphragm schedule:	FALSE
Distance to left diaphragm:	*(ft)*
Distance to right diaphragm:	*(ft)*
Diaphragm at this location:	FALSE
ASD	
Compression flange unsupported length:	*(ft)*
Tension Field Action	Ignore combined shear and bending
Riveted Section	
Net moment of inertia:	*(in^4)*
Distance to centroid:	*(in)*
Net area of web:	*(in^2)*
Top plate allowable shear:	*(ksi)*
Bottom plate allowable shear:	*(ksi)*
Percent area top flange:	*(%)*
Percent area bottom flange:	*(%)*

Web Deterioration

Thickness Loss	Start Distance	Length
(%)	*(ft)*	*(ft)*
1.8	109.00	1.00

Member Girder E

Link with: None
Description:

Existing: Girder E - As Inspected - S-5 in plans
Current: Girder E - As Inspected - S-5 in plans
Number of Spans: 1

Span Number	Span Length *(ft)*
1	110.000000

Support	Frame Connection
1	
2	

Pedestrian load: *(lb/ft)*

Member Loads

Distributed Loads

Distance (ft)	Length (ft)	Start (kip/ft)	End (kip/ft)	Load Case Name
0.00	110.00	0.052	0.052	DC1
0.00	110.00	0.257	0.257	DC2
0.00	110.00	0.336	0.336	DW

Member Loads - Settlement

Support Number	Horizontal (in)	Vertical (in)	Rotational (Radians)	Load Case Name
1				
2				

Support Constraints

General

Support Number	Support Type	X Translation	Y Translation	Z Rotation
1	Roller	Free	Fixed	Free
2	Pinned	Fixed	Fixed	Free

Elastic

Support Number	X Translation (kip/ft)	Y Translation (kip/ft)	Z Rotation (kip-in/rad)	Override Computed Z Rotation
1				
2				

Member Alternative Girder E - As Built

Description: S-5 in plans

Description

Material Type: Steel
Girder Type: Plate
Member units: US Customary
Girder property input method: Schedule based
Left end X: 11.0000 *(in)*
Right end X: 6.0000 *(in)*
Additional Self Load: *(kip/ft)*
Additional Self Load %: *(%)*

Analysis Module

Analysis Method: ASD
Analysis Module: AASHTO ASD
Analysis Module Component:
Properties:

Analysis Method: LFD
Analysis Module: AASHTO LFD
Analysis Module Component:
Properties:

Analysis Method: LRFD
Analysis Module: AASHTO LRFD
Analysis Module Component:
Properties:

Analysis Method: LRFR
Analysis Module: AASHTO LRFR
Analysis Module Component:
Properties:

Analysis Method: Distribution Factors
Analysis Module: BrR Dist Fact
Analysis Module Component:
Properties:

Default rating method: LRFR

Factors
Factor Override
LRFD:
LFD:
ASD Factors

	Inventory	Operating
Structural steel		
Concrete		
PS Concrete Comp.		
PS Concrete Tens.		
PS Moment Cap.		
Reinforcement		
Bearing Stiffener		
Stirrup		
Timber	NA	

Default Materials
Structural steel: ASTM A36
Deck concrete: Deck concrete
Deck reinforcement: Grade 40 Reinf Steel
Welds:
Bolts:

Impact
Standard Impact Factor
Type: Standard - AASHTO
LRFD Dynamic Load Allowance
Fatigue and fracture limit states: 15.0 *(%)*
All other limit states: 33.0 *(%)*

Live Load Distribution

Standard

D i s t r i b u t i o n F a c t o r (Wheels)

Lanes Loaded	Shear	Shear at Supports	Moment	Deflection
1 Lane				
Multi-Lane				

LRFD

Distance (ft)	Length (ft)	Type	1 Lane	Multi-Lane
0.00	110.000	Moment	0.457	0.654
0.00	110.000	Shear	0.660	0.779
0.00	110.000	Deflectio...	0.171	0.364

Girder Profile

Web

Begin Depth (in)	Depth Vary	End Depth (in)	Thickness (in)	Distance (ft)	Length (ft)	Material
72.0000	None	72.0000	0.4375	0.00	110.00	ASTM A36

Top Flange

Begin Width (in)	End Width (in)	Thickness (in)	Distance (ft)	Length (ft)	Material
12.0000	12.0000	0.6250	0.00	25.50	ASTM A36
12.0000	12.0000	0.8750	25.50	59.00	ASTM A36
12.0000	12.0000	0.6250	84.50	25.50	ASTM A36

Bottom Flange

Begin Width (in)	End Width (in)	Thickness (in)	Distance (ft)	Length (ft)	Material
18.0000	18.0000	1.0000	0.00	25.50	ASTM A36
18.0000	18.0000	1.3750	25.50	59.00	ASTM A36
18.0000	18.0000	1.0000	84.50	25.50	ASTM A36

Deck Profile

Deck Concrete

Material (LRFD)	Distance n (ft)	Length (ft)	Total Thickness (in)	Structural Thickness (in)	Effective Width (Std) (in)	Effective Width (in)
Deck concrete	0.00 8.00...	110.00		7.0000	84.0000	90.0000

Shear Connectors

Start Distance	Length	Connector Name	Number per Row	Number of Spaces	Transverse Spacing

(ft)	(ft)		(in)
0.00	110.00	Composite	

Bracing Ranges

Lateral Support

Distance (ft)	Length (ft)
0.00	110.00

Stiffener Ranges

Transverse Stiffener Ranges (Location)

Name	Distance (ft)	Number	Spacing (in)
Web Stiffener Pair	0.00	19	66.0000

Bearing Stiffener Locations

Support 1

Stiffener Pair	Name	Offset (in)
1	Bearing Stiffener	0.0000

Support 2

Stiffener Pair	Name	Offset (in)
1	Bearing Stiffener	0.0000

Points of Interest

Distance from left most support:	49.50 (ft)
Side:	Right
Transverse Stiffeners	
Override Schedule:	FALSE
Stiffener spacing:	(in)
Stiffener width:	(in)
Stiffener thickness:	(in)
Material:	ASTM A36
Stiffener number:	Single
Stiffener type:	Plate
Other Stiffeners	
Bearing Stiffener	
Override Schedule:	FALSE
Stiffener width:	(in)
Stiffener thickness:	(in)
Material:	ASTM A36
Clip:	(in)
Number of pairs:	
Pair spacing:	(in)
Attachment Type:	Welds
Longitudinal Stiffener	
Override Schedule:	FALSE
Stiffener width:	(in)

Stiffener thickness:	*(in)*
Material:	ASTM A36
Distance from flange to stiffener:	*(in)*
Distance measured from:	Top Flange
Fatigue	
Number of cycles:	0
Bracing	
Deck provides lateral support:	
Override diaphragm schedule:	FALSE
Distance to left diaphragm:	*(ft)*
Distance to right diaphragm:	*(ft)*
Diaphragm at this location:	FALSE
ASD	
Compression flange unsupported length:	*(ft)*
Tension Field Action	Ignore combined shear and bending
Riveted Section	
Net moment of inertia:	*(in^4)*
Distance to centroid:	*(in)*
Net area of web:	*(in^2)*
Top plate allowable shear:	*(ksi)*
Bottom plate allowable shear:	*(ksi)*
Percent area top flange:	*(%)*
Percent area bottom flange:	*(%)*

Member Alternative Girder E - As Inspected

Description: S-5 in plans

Description	
Material Type:	Steel
Girder Type:	Plate
Member units:	US Customary
Girder property input method:	Schedule based
Left end X:	11.0000 *(in)*
Right end X:	6.0000 *(in)*
Additional Self Load:	*(kip/ft)*
Additional Self Load %:	*(%)*
Analysis Module	
Analysis Method:	ASD
Analysis Module:	AASHTO ASD
Analysis Module Component:	
Properties:	
Analysis Method:	LFD
Analysis Module:	AASHTO LFD
Analysis Module Component:	
Properties:	
Analysis Method:	LRFD
Analysis Module:	AASHTO LRFD

Analysis Module Component:
Properties:

Analysis Method: LRFR
Analysis Module: AASHTO LRFR
Analysis Module Component:
Properties:

Analysis Method: Distribution Factors
Analysis Module: BrR Dist Fact
Analysis Module Component:
Properties:

Default rating method: LRFR

Factors
Factor Override
LRFD:
LFD:
ASD Factors

	Inventory	Operating
Structural steel		
Concrete		
PS Concrete Comp.		
PS Concrete Tens.		
PS Moment Cap.		
Reinforcement		
Bearing Stiffener		
Stirrup		
Timber	NA	

Default Materials
Structural steel: ASTM A36
Deck concrete: Deck concrete
Deck reinforcement: Grade 40 Reinf Steel
Welds:
Bolts:

Impact
Standard Impact Factor
Type: Standard - AASHTO
LRFD Dynamic Load Allowance
Fatigue and fracture limit states: 15.0 *(%)*
All other limit states: 33.0 *(%)*

Live Load Distribution
Standard

	Distribution Factor (Wheels)
Lanes	Shear at

Loaded	Shear	Supports	Moment	Deflection
1 Lane				
Multi-Lane				

LRFD

Distance (ft)	Length (ft)	Type	1 Lane	Multi-Lane
0.00	110.000	Moment	0.457	0.654
0.00	110.000	Shear	0.660	0.779
0.00	110.000	Deflectio...	0.171	0.364

Girder Profile

Web

Begin Depth (in)	Depth Vary	End Depth (in)	Thickness (in)	Distance (ft)	Length (ft)	Material
72.0000	None	72.0000	0.4375	0.00	110.00	ASTM A36

Top Flange

Begin Width (in)	End Width (in)	Thickness (in)	Distance (ft)	Length (ft)	Material
12.0000	12.0000	0.6250	0.00	25.50	ASTM A36
12.0000	12.0000	0.8750	25.50	59.00	ASTM A36
12.0000	12.0000	0.6250	84.50	25.50	ASTM A36

Bottom Flange

Begin Width (in)	End Width (in)	Thickness (in)	Distance (ft)	Length (ft)	Material
18.0000	18.0000	1.0000	0.00	25.50	ASTM A36
18.0000	18.0000	1.3750	25.50	59.00	ASTM A36
18.0000	18.0000	1.0000	84.50	25.50	ASTM A36

Deck Profile

Deck Concrete

Material (LRFD)	Distance n (ft)	Length (ft)	Total Thickness (in)	Structural Thickness (in)	Effective Width (Std) (in)	Effective Width (in)
Deck concrete	0.00 8.00...	110.00		7.0000	84.0000	90.0000

Shear Connectors

Start Distance (ft)	Length (ft)	Connector Name	Number per Row	Number of Spaces	Transverse Spacing (in)
0.00	110.00	Composite			

Bracing Ranges

Lateral Support

Distance (ft)	Length (ft)
0.00	110.00

Stiffener Ranges

Transverse Stiffener Ranges (Location)

Name	Distance (ft)	Number	Spacing (in)
Web Stiffener Pair	0.00	19	66.0000

Bearing Stiffener Locations

Support 1

Stiffener Pair	Name	Offset (in)
1	Bearing Stiffener	0.0000

Support 2

Stiffener Pair	Name	Offset (in)
1	Bearing Stiffener	0.0000

Points of Interest

Distance from left most support:	49.50 *(ft)*
Side:	Right

Transverse Stiffeners

Override Schedule:	FALSE
Stiffener spacing:	*(in)*
Stiffener width:	*(in)*
Stiffener thickness:	*(in)*
Material:	ASTM A36
Stiffener number:	Single
Stiffener type:	Plate

Other Stiffeners

Bearing Stiffener

Override Schedule:	FALSE
Stiffener width:	*(in)*
Stiffener thickness:	*(in)*
Material:	ASTM A36
Clip:	*(in)*
Number of pairs:	
Pair spacing:	*(in)*
Attachment Type:	Welds

Longitudinal Stiffener

Override Schedule:	FALSE
Stiffener width:	*(in)*
Stiffener thickness:	*(in)*
Material:	ASTM A36
Distance from flange to stiffener:	*(in)*

Distance measured from:	Top Flange
Fatigue	
Number of cycles:	0
Bracing	
Deck provides lateral support:	
Override diaphragm schedule:	FALSE
Distance to left diaphragm:	*(ft)*
Distance to right diaphragm:	*(ft)*
Diaphragm at this location:	FALSE
ASD	
Compression flange unsupported length:	*(ft)*
Tension Field Action	Ignore combined shear and bending
Riveted Section	
Net moment of inertia:	*(in^4)*
Distance to centroid:	*(in)*
Net area of web:	*(in^2)*
Top plate allowable shear:	*(ksi)*
Bottom plate allowable shear:	*(ksi)*
Percent area top flange:	*(%)*
Percent area bottom flange:	*(%)*

Web Deterioration

Thickness Loss	Start Distance	Length
(%)	*(ft)*	*(ft)*
1.6	108.33	1.67

Member Girder F

Link with: None
Description:

Existing: Girder F - S-6 in plans
Current: Girder F - S-6 in plans
Number of Spans: 1

Span Number	Span Length *(ft)*
1	110.000000

Support	Frame Connection
1	
2	

Pedestrian load: *(lb/ft)*

Member Loads

Distributed Loads

Distance	Length	Start	End	Load Case Name

(ft)	*(ft)*	*(kip/ft)*	*(kip/ft)*	
0.00	110.00	0.052	0.052	DC1
0.00	110.00	0.257	0.257	DC2
0.00	110.00	0.336	0.336	DW

Member Loads - Settlement

Support Number	Horizontal *(in)*	Vertical *(in)*	Rotational *(Radians)*	Load Case Name
1				
2				

Support Constraints

General

Support Number	Support Type	X Translation	Y Translation	Z Rotation
1	Roller	Free	Fixed	Free
2	Pinned	Fixed	Fixed	Free

Elastic

Support Number	X Translation *(kip/ft)*	Y Translation *(kip/ft)*	Z Rotation *(kip-in/rad)*	Override Computed Z Rotation
1				
2				

Member Alternative Girder F

Description: S-6 in plans

Description

Material Type: Steel
Girder Type: Plate
Member units: US Customary
Girder property input method: Schedule based
Left end X: 11.0000 *(in)*
Right end X: 6.0000 *(in)*
Additional Self Load: *(kip/ft)*
Additional Self Load %: *(%)*

Analysis Module

Analysis Method: ASD
Analysis Module: AASHTO ASD
Analysis Module Component:
Properties:

Analysis Method: LFD
Analysis Module: AASHTO LFD
Analysis Module Component:
Properties:

Analysis Method: LRFD
Analysis Module: AASHTO LRFD
Analysis Module Component:
Properties:

Analysis Method: LRFR
Analysis Module: AASHTO LRFR
Analysis Module Component:
Properties:

Analysis Method: Distribution Factors
Analysis Module: BrR Dist Fact
Analysis Module Component:
Properties:

Default rating method: LRFR

Factors
Factor Override
LRFD:
LFD:
ASD Factors

	Inventory	Operating
Structural steel		
Concrete		
PS Concrete Comp.		
PS Concrete Tens.		
PS Moment Cap.		
Reinforcement		
Bearing Stiffener		
Stirrup		
Timber	NA	

Default Materials

Structural steel:	ASTM A36
Deck concrete:	Deck concrete
Deck reinforcement:	Grade 40 Reinf Steel
Welds:	
Bolts:	

Impact
Standard Impact Factor

Type:	Standard - AASHTO
LRFD Dynamic Load Allowance	
Fatigue and fracture limit states:	15.0 *(%)*
All other limit states:	33.0 *(%)*

Live Load Distribution
Standard

	Distribution Factor (Wheels)			
Lanes Loaded	Shear	Shear at Supports	Moment	Deflection
1 Lane				

Multi-Lane

LRFD

Distance (ft)	Length (ft)	Type	1 Lane	Multi-Lane
0.00	110.000	Moment	0.457	0.654
0.00	110.000	Shear	0.660	0.779
0.00	110.000	Deflectio...	0.171	0.364

Girder Profile

Web

Begin Depth (in)	Depth Vary	End Depth (in)	Thickness (in)	Distance (ft)	Length (ft)	Material
72.0000	None	72.0000	0.4375	0.00	110.00	ASTM A36

Top Flange

Begin Width (in)	End Width (in)	Thickness (in)	Distance (ft)	Length (ft)	Material
12.0000	12.0000	0.6250	0.00	25.50	ASTM A36
12.0000	12.0000	0.8750	25.50	59.00	ASTM A36
12.0000	12.0000	0.6250	84.50	25.50	ASTM A36

Bottom Flange

Begin Width (in)	End Width (in)	Thickness (in)	Distance (ft)	Length (ft)	Material
18.0000	18.0000	1.0000	0.00	25.50	ASTM A36
18.0000	18.0000	1.3750	25.50	59.00	ASTM A36
18.0000	18.0000	1.0000	84.50	25.50	ASTM A36

Deck Profile

Deck Concrete

Material (LRFD)	Distance n (ft)	Length (ft)	Total Thickness (in)	Structural Thickness (in)	Effective Width (Std) (in)	Effective Width (in)
Deck concrete	0.00 8.00...	110.00		7.0000	84.0000	90.0000

Shear Connectors

Start Distance (ft)	Length (ft)	Connector Name	Number per Row	Number of Spaces	Transverse Spacing (in)
0.00	110.00	Composite			

Bracing Ranges

Lateral Support

Distance (ft)	Length (ft)
0.00	110.00

Stiffener Ranges

Transverse Stiffener Ranges (Location)

Name	Distance (ft)	Number	Spacing (in)
Web Stiffener Pair	0.00	19	66.0000

Bearing Stiffener Locations

Support 1

Stiffener Pair	Name	Offset (in)
1	Bearing Stiffener	0.0000

Support 2

Stiffener Pair	Name	Offset (in)
1	Bearing Stiffener	0.0000

Points of Interest

Distance from left most support:	49.50 *(ft)*
Side:	Right
Transverse Stiffeners	
Override Schedule:	FALSE
Stiffener spacing:	*(in)*
Stiffener width:	*(in)*
Stiffener thickness:	*(in)*
Material:	ASTM A36
Stiffener number:	Single
Stiffener type:	Plate
Other Stiffeners	
Bearing Stiffener	
Override Schedule:	FALSE
Stiffener width:	*(in)*
Stiffener thickness:	*(in)*
Material:	ASTM A36
Clip:	*(in)*
Number of pairs:	
Pair spacing:	*(in)*
Attachment Type:	Welds
Longitudinal Stiffener	
Override Schedule:	FALSE
Stiffener width:	*(in)*
Stiffener thickness:	*(in)*
Material:	ASTM A36
Distance from flange to stiffener:	*(in)*
Distance measured from:	Top Flange
Fatigue	

Number of cycles:	0
Bracing	
Deck provides lateral support:	
Override diaphragm schedule:	FALSE
Distance to left diaphragm:	*(ft)*
Distance to right diaphragm:	*(ft)*
Diaphragm at this location:	FALSE
ASD	
Compression flange unsupported length:	*(ft)*
Tension Field Action	Ignore combined shear and bending
Riveted Section	
Net moment of inertia:	*(in^4)*
Distance to centroid:	*(in)*
Net area of web:	*(in^2)*
Top plate allowable shear:	*(ksi)*
Bottom plate allowable shear:	*(ksi)*
Percent area top flange:	*(%)*
Percent area bottom flange:	*(%)*

Member Girder G

Link with: None
Description:

Existing: Girder G - S-7 in plans
Current: Girder G - S-7 in plans
Number of Spans: 1

Span Number	Span Length *(ft)*
1	110.000000

Support	Frame Connection
1	
2	

Pedestrian load: *(lb/ft)*

Member Loads

Distributed Loads

Distance *(ft)*	Length *(ft)*	Start *(kip/ft)*	End *(kip/ft)*	Load Case Name
0.00	110.00	0.052	0.052	DC1
0.00	110.00	0.257	0.257	DC2
0.00	110.00	0.336	0.336	DW

Member Loads - Settlement

Support Number	Horizontal *(in)*	Vertical *(in)*	Rotational *(Radians)*	Load Case Name

1
2

Support Constraints

General

Support Number	Support Type	X Translation	Y Translation	Z Rotation
1	Roller	Free	Fixed	Free
2	Pinned	Fixed	Fixed	Free

Elastic

Support Number	X Translation *(kip/ft)*	Y Translation *(kip/ft)*	Z Rotation *(kip-in/rad)*	Override Computed Z Rotation
1				
2				

Member Alternative Girder G

Description: S-7 in plans

Description

Material Type: Steel
Girder Type: Plate
Member units: US Customary
Girder property input method: Schedule based
Left end X: 13.0000 *(in)*
Right end X: 7.0000 *(in)*
Additional Self Load: *(kip/ft)*
Additional Self Load %: *(%)*

Analysis Module

Analysis Method: ASD
Analysis Module: AASHTO ASD
Analysis Module Component:
Properties:

Analysis Method: LFD
Analysis Module: AASHTO LFD
Analysis Module Component:
Properties:

Analysis Method: LRFD
Analysis Module: AASHTO LRFD
Analysis Module Component:
Properties:

Analysis Method: LRFR
Analysis Module: AASHTO LRFR
Analysis Module Component:
Properties:

Analysis Method: Distribution Factors
Analysis Module: BrR Dist Fact

Analysis Module Component:
Properties:

Default rating method: LRFR

Factors
Factor Override
LRFD:
LFD:
ASD Factors

	Inventory	Operating
Structural steel		
Concrete		
PS Concrete Comp.		
PS Concrete Tens.		
PS Moment Cap.		
Reinforcement		
Bearing Stiffener		
Stirrup		
Timber	NA	

Default Materials

Structural steel:	ASTM A36
Deck concrete:	Deck concrete
Deck reinforcement:	Grade 40 Reinf Steel
Welds:	
Bolts:	

Impact

Standard Impact Factor

Type:	Standard - AASHTO
LRFD Dynamic Load Allowance	
Fatigue and fracture limit states:	15.0 *(%)*
All other limit states:	33.0 *(%)*

Live Load Distribution

Standard

	Distribution Factor (Wheels)			
Lanes Loaded	Shear	Shear at Supports	Moment	Deflection
1 Lane				
Multi-Lane				

LRFD

Distance *(ft)*	Length *(ft)*	Type	1 Lane	Multi-Lane
0.00	110.000	Moment	0.463	0.600
0.00	110.000	Shear	0.463	0.600
0.00	110.000	Deflectio...	0.171	0.364

Girder Profile

Web

Begin Depth (in)	Depth Vary	End Depth (in)	Thickness (in)	Distance (ft)	Length (ft)	Material
72.0000	None	72.0000	0.4375	0.00	110.00	ASTM A36

Top Flange

Begin Width (in)	End Width (in)	Thickness (in)	Distance (ft)	Length (ft)	Material
12.0000	12.0000	0.6250	0.00	25.50	ASTM A36
12.0000	12.0000	0.8750	25.50	59.00	ASTM A36
12.0000	12.0000	0.6250	84.50	25.50	ASTM A36

Bottom Flange

Begin Width (in)	End Width (in)	Thickness (in)	Distance (ft)	Length (ft)	Material
18.0000	18.0000	1.0000	0.00	25.50	ASTM A36
18.0000	18.0000	1.3750	25.50	59.00	ASTM A36
18.0000	18.0000	1.0000	84.50	25.50	ASTM A36

Deck Profile

Deck Concrete

Material (LRFD)	Distance n (ft)	Length (ft)	Total Thickness (in)	Structural Thickness (in)	Effective Width (Std) (in)	Effective Width (in)
Deck concrete	0.00 8.00...	110.00		7.0000	51.0000	54.0000

Shear Connectors

Start Distance (ft)	Length (ft)	Connector Name	Number per Row	Number of Spaces	Transverse Spacing (in)
0.00	110.00	Composite			

Bracing Ranges

Lateral Support

Distance (ft)	Length (ft)
0.00	110.00

Stiffener Ranges

Transverse Stiffener Ranges (Location)

Name	Distance (ft)	Number	Spacing (in)

Web Stiffener Sing...	0.00	19	66.0000

Bearing Stiffener Locations

Support 1

Stiffener Pair	Name	Offset *(in)*
1	Bearing Stiffener	0.0000

Support 2

Stiffener Pair	Name	Offset *(in)*
1	Bearing Stiffener	0.0000

Points of Interest

Distance from left most support:	49.50 *(ft)*
Side:	Right
Transverse Stiffeners	
Override Schedule:	FALSE
Stiffener spacing:	*(in)*
Stiffener width:	*(in)*
Stiffener thickness:	*(in)*
Material:	ASTM A36
Stiffener number:	Single
Stiffener type:	Plate
Other Stiffeners	
Bearing Stiffener	
Override Schedule:	FALSE
Stiffener width:	*(in)*
Stiffener thickness:	*(in)*
Material:	ASTM A36
Clip:	*(in)*
Number of pairs:	
Pair spacing:	*(in)*
Attachment Type:	Welds
Longitudinal Stiffener	
Override Schedule:	FALSE
Stiffener width:	*(in)*
Stiffener thickness:	*(in)*
Material:	ASTM A36
Distance from flange to stiffener:	*(in)*
Distance measured from:	Top Flange
Fatigue	
Number of cycles:	0
Bracing	
Deck provides lateral support:	
Override diaphragm schedule:	FALSE
Distance to left diaphragm:	*(ft)*
Distance to right diaphragm:	*(ft)*
Diaphragm at this location:	FALSE
ASD	
Compression flange unsupported length:	*(ft)*

Tension Field Action Ignore combined shear and bending
Riveted Section
Net moment of inertia: *(in^4)*
Distance to centroid: *(in)*
Net area of web: *(in^2)*
Top plate allowable shear: *(ksi)*
Bottom plate allowable shear: *(ksi)*
Percent area top flange: *(%)*
Percent area bottom flange: *(%)*

Superstructure Definition Span 2

Definition
Units: US Customary
Number of spans: 1
Number of girders: 7

Span	Length *(ft)*
1	110.0000

Frame Structure Simplified Definition:

Support	Frame Connection
1	
2	

Girder Spacing Display Type: Perpendicular
Average Humidity: *(%)*
Analysis
Default Library Factors
Factor Override
Analysis Module
Analysis Method: ASD
Analysis Module:
Analysis Module Component:
Properties:

Analysis Method: LFD
Analysis Module:
Analysis Module Component:
Properties:

Analysis Method: LRFD
Analysis Module:
Analysis Module Component:
Properties:

Analysis Method: LRFR
Analysis Module:
Analysis Module Component:
Properties:

Analysis Method: Distribution Factors
Analysis Module:
Analysis Module Component:
Properties:

Default rating method: LFD

Impact

Standard Impact Factor

Type: Standard - AASHTO

LRFD Dynamic Load Allowance

Fatigue and fracture limit states: 15.0 *(%)*

All other limit states: 33.0 *(%)*

Structure Framing Plan Details

Layout

Support	Skew *(Degrees)*
1	0.0000
2	0.0000

Girder Spacing Orientation: Perpendicular

Girder Bay	Girder Spacing Start *(ft)*	End *(ft)*
1	7.5000	7.5000
2	7.5000	7.5000
3	7.5000	7.5000
4	7.5000	7.5000
5	7.5000	7.5000
6	7.5000	7.5000

Diaphragms

Girder Bay 1

Distance Left Girder *(ft)*	Distance Right Girder *(ft)*	Diaphragm Spacing *(ft)*	Number of Spaces	Diaphragm Weight *(kip)*
0.00	0.00	22.00	4	0.4690

Girder Bay 2

Distance Left Girder *(ft)*	Distance Right Girder *(ft)*	Diaphragm Spacing *(ft)*	Number of Spaces	Diaphragm Weight *(kip)*
0.00	0.00	22.00	4	0.4690

Girder Bay 3

Distance Left Girder *(ft)*	Distance Right Girder *(ft)*	Diaphragm Spacing *(ft)*	Number of Spaces	Diaphragm Weight *(kip)*
0.00	0.00	22.00	4	0.4690

Girder Bay 4

Distance	Distance	Diaphragm	Number of	Diaphragm

Left Girder (ft)	Right Girder (ft)	Spacing (ft)	Spaces	Weight (kip)
0.00	0.00	22.00	4	0.4690

Girder Bay 5

Distance Left Girder (ft)	Distance Right Girder (ft)	Diaphragm Spacing (ft)	Number of Spaces	Diaphragm Weight (kip)
0.00	0.00	22.00	4	0.4690

Girder Bay 6

Distance Left Girder (ft)	Distance Right Girder (ft)	Diaphragm Spacing (ft)	Number of Spaces	Diaphragm Weight (kip)
0.00	0.00	22.00	4	0.4690

Structure Typical Section

Deck

Left start width: 23.25 *(ft)*
Left end width: 23.25 *(ft)*
Right start width: 23.25 *(ft)*
Right end width: 23.25 *(ft)*
Left start overhang: 0.75 *(ft)*
Left end overhang: 0.75 *(ft)*

Deck (Cont'd)

Deck concrete: Deck concrete
Total deck thickness: 7.0000 *(in)*
Deck crack control parameter: *(kip/in)*
Sustained modular ratio factor: 3.000

Lane Position

Offset Left Start: -22.00 *(ft)*
Offset Left End: -22.00 *(ft)*
Offset Right Start: 22.00 *(ft)*
Offset Right End: 22.00 *(ft)*

Wearing Surface

Wearing surface material:
Description:
Wearing surface thickness: 5.5000 *(in)*
Wearing surface density: 0.000 *(pcf)*
Load case: DW

Load Case Description

Load Case Name	Description	Stage	Type	Time (Days)
DC1	Non-composite Dead Lo...	Non-composite (Sta...	D,DC	
DC2	Superimposed Dead Loa...	Composite (long te...	D,DC	
DW	Wearing Surface & Uti...	Composite (long te...	D,DW	

Superstructure Loads

DL Distribution

Stage 1 Dead Load Distribution: Tributary Area

Stage 2 Dead Load Distribution: Uniformly to All Girders

Shear Connector Definitions

Name: 7/8" Stud
Connector Type: Stud
Stud Diameter: 0.8750 *(in)*
Stud Height: 5.0000 *(in)*
LRFD Steel Minimum Tensile Strength: 66.000 *(ksi)*

<u>Stiffener Definitions</u>

Transverse Stiffeners

Name: Web Stiffener Single
Stiffener number: Single
Plate Width: 5.0000 *(in)*
Plate Thickness: 0.3750 *(in)*
Material: ASTM A36
Top Gap: 0.0000 *(in)*
Bottom Gap: 0.0000 *(in)*
Top Weld:
Web Weld:
Bottom Weld:

Name: Web Stiffener Pair
Stiffener number: Pair
Plate Width: 5.0000 *(in)*
Plate Thickness: 0.3750 *(in)*
Material: ASTM A36
Top Gap: 0.0000 *(in)*
Bottom Gap: 0.0000 *(in)*
Top Weld:
Web Weld:
Bottom Weld:

Bearing Stiffeners

Name: Bearing Stiffener
Plate Width: 8.7500 *(in)*
Plate Thickness: 0.7500 *(in)*
Material: ASTM A36
Top outside clip length: 2.9688 *(in)*
Top inside horizontal clip length: 0.7500 *(in)*
Top inside vertical clip length: 0.7500 *(in)*
Bottom outside clip length: 0.0000 *(in)*
Bottom inside horizontal clip length: 0.7500 *(in)*
Bottom inside vertical clip length: 0.7500 *(in)*
Top Weld:
Web Weld:
Bottom Weld:

No prestress stress limits.

No prestress properties.

No vertical shear reinforcement definitions.

No horizontal shear reinforcement definitions.

Member Girder A

Link with: None
Description:

Existing: Girder A - As Inspected - S-8 in plans
Current: Girder A - As Inspected - S-8 in plans
Number of Spans: 1

Span Number	Span Length *(ft)*
1	110.000000

Support	Frame Connection
1	
2	

Pedestrian load: *(lb/ft)*

Member Loads

Distributed Loads

Distance *(ft)*	Length *(ft)*	Start *(kip/ft)*	End *(kip/ft)*	Load Case Name
0.00	110.00	0.052	0.052	DC1
0.00	110.00	0.257	0.257	DC2
0.00	110.00	0.535	0.535	DW

Member Loads - Settlement

Support Number	Horizontal *(in)*	Vertical *(in)*	Rotational *(Radians)*	Load Case Name
1				
2				

Support Constraints

General

Support Number	Support Type	X Translation	Y Translation	Z Rotation
1	Pinned	Fixed	Fixed	Free
2	Roller	Free	Fixed	Free

Elastic

Support Number	X Translation *(kip/ft)*	Y Translation *(kip/ft)*	Z Rotation *(kip-in/rad)*	Override Computed Z Rotation
1				
2				

Member Alternative Girder A - As Built

Description: S-8 in plans

Description

Material Type: Steel
Girder Type: Plate
Member units: US Customary
Girder property input method: Schedule based
Left end X: 7.0000 *(in)*
Right end X: 13.0000 *(in)*
Additional Self Load: *(kip/ft)*
Additional Self Load %: *(%)*

Analysis Module

Analysis Method: ASD
Analysis Module: AASHTO ASD
Analysis Module Component:
Properties:

Analysis Method: LFD
Analysis Module: AASHTO LFD
Analysis Module Component:
Properties:

Analysis Method: LRFD
Analysis Module: AASHTO LRFD
Analysis Module Component:
Properties:

Analysis Method: LRFR
Analysis Module: AASHTO LRFR
Analysis Module Component:
Properties:

Analysis Method: Distribution Factors
Analysis Module: BrR Dist Fact
Analysis Module Component:
Properties:

Default rating method: LRFR

Factors

Factor Override

LRFD:
LFD:

ASD Factors

	Inventory	Operating

Structural steel	
Concrete	
PS Concrete Comp.	
PS Concrete Tens.	
PS Moment Cap.	
Reinforcement	
Bearing Stiffener	
Stirrup	
Timber	NA

Default Materials

Structural steel:	ASTM A36
Deck concrete:	Deck concrete
Deck reinforcement:	Grade 40 Reinf Steel
Welds:	
Bolts:	

Impact

Standard Impact Factor

Type:	Standard - AASHTO

LRFD Dynamic Load Allowance

Fatigue and fracture limit states:	15.0 *(%)*
All other limit states:	33.0 *(%)*

Live Load Distribution

Standard

	Distribution Factor (Wheels)			
Lanes Loaded	Shear	Shear at Supports	Moment	Deflection
1 Lane				
Multi-Lane				

LRFD

Distance *(ft)*	Length *(ft)*	Type	1 Lane	Multi-Lane
0.00	110.000	Moment	0.463	0.600
0.00	110.000	Shear	0.463	0.600
0.00	110.000	Deflectio...	0.171	0.364

Girder Profile

Web

Begin Depth *(in)*	Depth Vary	End Depth *(in)*	Thickness *(in)*	Distance *(ft)*	Length *(ft)*	Material
72.0000	None	72.0000	0.4375	0.00	110.00	ASTM A36

Top Flange

Begin	End

Width (in)	Width (in)	Thickness (in)	Distance (ft)	Length (ft)	Material
12.0000	12.0000	0.6250	0.00	25.50	ASTM A36
12.0000	12.0000	0.8750	25.50	59.00	ASTM A36
12.0000	12.0000	0.6250	84.50	25.50	ASTM A36

Bottom Flange

Begin Width (in)	End Width (in)	Thickness (in)	Distance (ft)	Length (ft)	Material
18.0000	18.0000	1.0000	0.00	25.50	ASTM A36
18.0000	18.0000	1.3750	25.50	59.00	ASTM A36
18.0000	18.0000	1.0000	84.50	25.50	ASTM A36

Deck Profile

Deck Concrete

Material (LRFD)	Distance n (ft)	Length (ft)	Total Thickness (in)	Structural Thickness (in)	Effective Width (Std) (in)	Effective Width (in)
Deck concrete	0.00 8.00...	110.00		7.0000	51.0000	54.0000

Shear Connectors

Start Distance (ft)	Length (ft)	Connector Name	Number per Row	Number of Spaces	Transverse Spacing (in)
0.00	110.00	Composite			

Bracing Ranges

Lateral Support

Distance (ft)	Length (ft)
0.00	110.00

Stiffener Ranges

Transverse Stiffener Ranges (Location)

Name	Distance (ft)	Number	Spacing (in)
Web Stiffener Sing...	0.00	19	66.0000

Bearing Stiffener Locations

Support 1

Stiffener Pair	Name	Offset (in)
1	Bearing Stiffener	0.0000

Support 2

Stiffener Pair	Name	Offset (in)

1	Bearing Stiffener	0.0000

Points of Interest

Distance from left most support:	49.50 *(ft)*
Side:	Right
Transverse Stiffeners	
Override Schedule:	FALSE
Stiffener spacing:	*(in)*
Stiffener width:	*(in)*
Stiffener thickness:	*(in)*
Material:	ASTM A36
Stiffener number:	Single
Stiffener type:	Plate
Other Stiffeners	
Bearing Stiffener	
Override Schedule:	FALSE
Stiffener width:	*(in)*
Stiffener thickness:	*(in)*
Material:	ASTM A36
Clip:	*(in)*
Number of pairs:	
Pair spacing:	*(in)*
Attachment Type:	Welds
Longitudinal Stiffener	
Override Schedule:	FALSE
Stiffener width:	*(in)*
Stiffener thickness:	*(in)*
Material:	ASTM A36
Distance from flange to stiffener:	*(in)*
Distance measured from:	Top Flange
Fatigue	
Number of cycles:	0
Bracing	
Deck provides lateral support:	
Override diaphragm schedule:	FALSE
Distance to left diaphragm:	*(ft)*
Distance to right diaphragm:	*(ft)*
Diaphragm at this location:	FALSE
ASD	
Compression flange unsupported length:	*(ft)*
Tension Field Action	Ignore combined shear and bending
Riveted Section	
Net moment of inertia:	*(in^4)*
Distance to centroid:	*(in)*
Net area of web:	*(in^2)*
Top plate allowable shear:	*(ksi)*
Bottom plate allowable shear:	*(ksi)*
Percent area top flange:	*(%)*
Percent area bottom flange:	*(%)*

Member Alternative Girder A - As Inspected

Description: S-8 in plans

Description

Material Type:	Steel
Girder Type:	Plate
Member units:	US Customary
Girder property input method:	Schedule based
Left end X:	7.0000 *(in)*
Right end X:	13.0000 *(in)*
Additional Self Load:	*(kip/ft)*
Additional Self Load %:	*(%)*

Analysis Module

Analysis Method:	ASD
Analysis Module:	AASHTO ASD
Analysis Module Component:	
Properties:	
Analysis Method:	LFD
Analysis Module:	AASHTO LFD
Analysis Module Component:	
Properties:	
Analysis Method:	LRFD
Analysis Module:	AASHTO LRFD
Analysis Module Component:	
Properties:	
Analysis Method:	LRFR
Analysis Module:	AASHTO LRFR
Analysis Module Component:	
Properties:	
Analysis Method:	Distribution Factors
Analysis Module:	BrR Dist Fact
Analysis Module Component:	
Properties:	
Default rating method:	LRFR

Factors

Factor Override

LRFD:

LFD:

ASD Factors

	Inventory	Operating
Structural steel		
Concrete		
PS Concrete Comp.		

PS Concrete Tens.	
PS Moment Cap.	
Reinforcement	
Bearing Stiffener	
Stirrup	
Timber	NA

Default Materials

Structural steel:	ASTM A36
Deck concrete:	Deck concrete
Deck reinforcement:	Grade 40 Reinf Steel
Welds:	
Bolts:	

Impact

Standard Impact Factor

Type:	Standard - AASHTO

LRFD Dynamic Load Allowance

Fatigue and fracture limit states:	15.0 *(%)*
All other limit states:	33.0 *(%)*

Live Load Distribution

Standard

D i s t r i b u t i o n F a c t o r (Wheels)

Lanes Loaded	Shear	Shear at Supports	Moment	Deflection
1 Lane	1.277	0.667	1.277	0.286
Multi-Lane	1.277	0.667	1.277	0.771

LRFD

Distance *(ft)*	Length *(ft)*	Type	1 Lane	Multi-Lane
0.00	110.000	Moment	0.463	0.600
0.00	110.000	Shear	0.463	0.600
0.00	110.000	Deflectio...	0.171	0.364

Girder Profile

Web

Begin Depth *(in)*	Depth Vary	End Depth *(in)*	Thickness *(in)*	Distance *(ft)*	Length *(ft)*	Material
72.0000	None	72.0000	0.4375	0.00	110.00	ASTM A36

Top Flange

Begin Width *(in)*	End Width *(in)*	Thickness *(in)*	Distance *(ft)*	Length *(ft)*	Material
12.0000	12.0000	0.6250	0.00	25.50	ASTM A36

12.0000	12.0000	0.8750	25.50	59.00	ASTM A36
12.0000	12.0000	0.6250	84.50	25.50	ASTM A36

Bottom Flange

Begin Width (in)	End Width (in)	Thickness (in)	Distance (ft)	Length (ft)	Material
18.0000	18.0000	1.0000	0.00	25.50	ASTM A36
18.0000	18.0000	1.3750	25.50	59.00	ASTM A36
18.0000	18.0000	1.0000	84.50	25.50	ASTM A36

Deck Profile

Deck Concrete

Material (LRFD)	Distance n (ft)	Length (ft)	Total Thickness (in)	Structural Thickness (in)	Effective Width (Std) (in)	Effective Width (in)
Deck concrete	0.00 8.00...	110.00		7.0000	51.0000	54.0000

Shear Connectors

Start Distance (ft)	Length (ft)	Connector Name	Number per Row	Number of Spaces	Transverse Spacing (in)
0.00	110.00	Composite			

Bracing Ranges

Lateral Support

Distance (ft)	Length (ft)
0.00	110.00

Stiffener Ranges

Transverse Stiffener Ranges (Location)

Name	Distance (ft)	Number	Spacing (in)
Web Stiffener Sing...	0.00	19	66.0000

Bearing Stiffener Locations

Support 1

Stiffener Pair	Name	Offset (in)
1	Bearing Stiffener	0.0000

Support 2

Stiffener Pair	Name	Offset (in)
1	Bearing Stiffener	0.0000

Points of Interest

Distance from left most support:	49.50 *(ft)*
Side:	Right
Transverse Stiffeners	
Override Schedule:	FALSE
Stiffener spacing:	*(in)*
Stiffener width:	*(in)*
Stiffener thickness:	*(in)*
Material:	ASTM A36
Stiffener number:	Single
Stiffener type:	Plate
Other Stiffeners	
Bearing Stiffener	
Override Schedule:	FALSE
Stiffener width:	*(in)*
Stiffener thickness:	*(in)*
Material:	ASTM A36
Clip:	*(in)*
Number of pairs:	
Pair spacing:	*(in)*
Attachment Type:	Welds
Longitudinal Stiffener	
Override Schedule:	FALSE
Stiffener width:	*(in)*
Stiffener thickness:	*(in)*
Material:	ASTM A36
Distance from flange to stiffener:	*(in)*
Distance measured from:	Top Flange
Fatigue	
Number of cycles:	0
Bracing	
Deck provides lateral support:	
Override diaphragm schedule:	FALSE
Distance to left diaphragm:	*(ft)*
Distance to right diaphragm:	*(ft)*
Diaphragm at this location:	FALSE
ASD	
Compression flange unsupported length:	*(ft)*
Tension Field Action	Ignore combined shear and bending
Riveted Section	
Net moment of inertia:	*(in^4)*
Distance to centroid:	*(in)*
Net area of web:	*(in^2)*
Top plate allowable shear:	*(ksi)*
Bottom plate allowable shear:	*(ksi)*
Percent area top flange:	*(%)*
Percent area bottom flange:	*(%)*

Web Deterioration

Thickness	Start	Length

Loss	Distance	
(%)	*(ft)*	*(ft)*
2.0	0.00	1.00
1.4	0.00	0.50
19.0	0.50	0.50
1.2	1.00	9.84
1.2	107.00	3.00

Member Alternative Copy of Girder A - As Inspected

Description: S-8 in plans

Description

Material Type: Steel
Girder Type: Plate
Member units: US Customary
Girder property input method: Schedule based
Left end X: 7.0000 *(in)*
Right end X: 13.0000 *(in)*
Additional Self Load: *(kip/ft)*
Additional Self Load %: *(%)*

Analysis Module

Analysis Method: ASD
Analysis Module: AASHTO ASD
Analysis Module Component:
Properties:

Analysis Method: LFD
Analysis Module: AASHTO LFD
Analysis Module Component:
Properties:

Analysis Method: LRFD
Analysis Module: AASHTO LRFD
Analysis Module Component:
Properties:

Analysis Method: LRFR
Analysis Module: AASHTO LRFR
Analysis Module Component:
Properties:

Analysis Method: Distribution Factors
Analysis Module: BrR Dist Fact
Analysis Module Component:
Properties:

Default rating method: LRFR

Factors

Factor Override

LRFD:

LFD:
ASD Factors

	Inventory	Operating
Structural steel		
Concrete		
PS Concrete Comp.		
PS Concrete Tens.		
PS Moment Cap.		
Reinforcement		
Bearing Stiffener		
Stirrup		
Timber	NA	

Default Materials

Structural steel:	ASTM A36
Deck concrete:	Deck concrete
Deck reinforcement:	Grade 40 Reinf Steel
Welds:	
Bolts:	

Impact

Standard Impact Factor

Type:	Standard - AASHTO

LRFD Dynamic Load Allowance

Fatigue and fracture limit states:	15.0 *(%)*
All other limit states:	33.0 *(%)*

Live Load Distribution

Standard

D i s t r i b u t i o n F a c t o r (Wheels)

Lanes Loaded	Shear	Shear at Supports	Moment	Deflection
1 Lane	1.277	0.667	1.277	0.286
Multi-Lane	1.277	0.667	1.277	0.771

LRFD

Distance *(ft)*	Length *(ft)*	Type	1 Lane	Multi-Lane
0.00	110.000	Moment	0.463	0.600
0.00	110.000	Shear	0.463	0.600
0.00	110.000	Deflectio...	0.171	0.364

Girder Profile

Web

Begin Depth *(in)*	Depth Vary	End Depth *(in)*	Thickness *(in)*	Distance *(ft)*	Length *(ft)*	Material
72.0000	None	72.0000	0.4375	0.00	110.00	ASTM A36

Top Flange

Begin Width (in)	End Width (in)	Thickness (in)	Distance (ft)	Length (ft)	Material
12.0000	12.0000	0.6250	0.00	25.50	ASTM A36
12.0000	12.0000	0.8750	25.50	59.00	ASTM A36
12.0000	12.0000	0.6250	84.50	25.50	ASTM A36

Bottom Flange

Begin Width (in)	End Width (in)	Thickness (in)	Distance (ft)	Length (ft)	Material
18.0000	18.0000	1.0000	0.00	25.50	ASTM A36
18.0000	18.0000	1.3750	25.50	59.00	ASTM A36
18.0000	18.0000	1.0000	84.50	25.50	ASTM A36

Deck Profile

Deck Concrete

Material (LRFD)	Distance n (ft)	Length (ft)	Total Thickness (in)	Structural Thickness (in)	Effective Width (Std) (in)	Effective Width (in)
Deck concrete	0.00 8.00...	110.00		7.0000	51.0000	54.0000

Shear Connectors

Start Distance (ft)	Length (ft)	Connector Name	Number per Row	Number of Spaces	Transverse Spacing (in)
0.00	110.00	Composite			

Bracing Ranges

Lateral Support

Distance (ft)	Length (ft)
0.00	110.00

Stiffener Ranges

Transverse Stiffener Ranges (Location)

Name	Distance (ft)	Number	Spacing (in)
Web Stiffener Sing...	0.00	19	66.0000

Bearing Stiffener Locations

Support 1

Stiffener Pair	Name	Offset (in)
1	Bearing Stiffener	0.0000

Support 2

Stiffener Pair	Name	Offset (in)
1	Bearing Stiffener	0.0000

Points of Interest

Distance from left most support:	49.50 *(ft)*
Side:	Right
Transverse Stiffeners	
Override Schedule:	FALSE
Stiffener spacing:	*(in)*
Stiffener width:	*(in)*
Stiffener thickness:	*(in)*
Material:	ASTM A36
Stiffener number:	Single
Stiffener type:	Plate
Other Stiffeners	
Bearing Stiffener	
Override Schedule:	FALSE
Stiffener width:	*(in)*
Stiffener thickness:	*(in)*
Material:	ASTM A36
Clip:	*(in)*
Number of pairs:	
Pair spacing:	*(in)*
Attachment Type:	Welds
Longitudinal Stiffener	
Override Schedule:	FALSE
Stiffener width:	*(in)*
Stiffener thickness:	*(in)*
Material:	ASTM A36
Distance from flange to stiffener:	*(in)*
Distance measured from:	Top Flange
Fatigue	
Number of cycles:	0
Bracing	
Deck provides lateral support:	
Override diaphragm schedule:	FALSE
Distance to left diaphragm:	*(ft)*
Distance to right diaphragm:	*(ft)*
Diaphragm at this location:	FALSE
ASD	
Compression flange unsupported length:	*(ft)*
Tension Field Action	Ignore combined shear and bending
Riveted Section	
Net moment of inertia:	*(in^4)*
Distance to centroid:	*(in)*
Net area of web:	*(in^2)*
Top plate allowable shear:	*(ksi)*
Bottom plate allowable shear:	*(ksi)*

Percent area top flange: *(%)*
Percent area bottom flange: *(%)*

Web Deterioration

Thickness Loss *(%)*	Start Distance *(ft)*	Length *(ft)*
2.0	0.00	1.00
1.4	0.00	0.50
19.0	0.50	0.50
1.2	1.00	9.84
1.2	107.00	3.00

Member Girder B

Link with: None
Description:

Existing: Girder B - As Inspected - S-9 in plans
Current: Girder B - As Inspected - S-9 in plans
Number of Spans: 1

Span Number	Span Length *(ft)*
1	110.000000

Support	Frame Connection
1	
2	

Pedestrian load: *(lb/ft)*

Member Loads

Distributed Loads

Distance *(ft)*	Length *(ft)*	Start *(kip/ft)*	End *(kip/ft)*	Load Case Name
0.00	110.00	0.052	0.052	DC1
0.00	110.00	0.257	0.257	DC2
0.00	110.00	0.535	0.535	DW

Member Loads - Settlement

Support Number	Horizontal *(in)*	Vertical *(in)*	Rotational *(Radians)*	Load Case Name
1				
2				

Support Constraints

General

Support	Support

Number	Type	X Translation	Y Translation	Z Rotation
1	Pinned	Fixed	Fixed	Free
2	Roller	Free	Fixed	Free

Elastic

Support Number	X Translation *(kip/ft)*	Y Translation *(kip/ft)*	Z Rotation *(kip-in/rad)*	Override Computed Z Rotation
1				
2				

Member Alternative Girder B - As Built

Description: S-9 in plans

Description

Material Type: Steel
Girder Type: Plate
Member units: US Customary
Girder property input method: Schedule based
Left end X: 6.0000 *(in)*
Right end X: 11.0000 *(in)*
Additional Self Load: *(kip/ft)*
Additional Self Load %: *(%)*

Analysis Module

Analysis Method: ASD
Analysis Module: AASHTO ASD
Analysis Module Component:
Properties:

Analysis Method: LFD
Analysis Module: AASHTO LFD
Analysis Module Component:
Properties:

Analysis Method: LRFD
Analysis Module: AASHTO LRFD
Analysis Module Component:
Properties:

Analysis Method: LRFR
Analysis Module: AASHTO LRFR
Analysis Module Component:
Properties:

Analysis Method: Distribution Factors
Analysis Module: BrR Dist Fact
Analysis Module Component:
Properties:

Default rating method: LRFR

Factors

Factor Override
LRFD:
LFD:
ASD Factors

	Inventory	Operating
Structural steel		
Concrete		
PS Concrete Comp.		
PS Concrete Tens.		
PS Moment Cap.		
Reinforcement		
Bearing Stiffener		
Stirrup		
Timber	NA	

Default Materials

Structural steel:	ASTM A36
Deck concrete:	Deck concrete
Deck reinforcement:	Grade 40 Reinf Steel
Welds:	
Bolts:	

Impact

Standard Impact Factor

Type:	Standard - AASHTO

LRFD Dynamic Load Allowance

Fatigue and fracture limit states:	15.0 *(%)*
All other limit states:	33.0 *(%)*

Live Load Distribution

Standard

	Distribution Factor (Wheels)			
Lanes Loaded	Shear	Shear at Supports	Moment	Deflection
1 Lane				
Multi-Lane				

LRFD

Distance *(ft)*	Length *(ft)*	Type	1 Lane	Multi-Lane
0.00	110.000	Moment	0.457	0.654
0.00	110.000	Shear	0.660	0.779
0.00	110.000	Deflectio...	0.171	0.364

Girder Profile

Web

Begin Depth	Depth Vary	End Depth	Thickness	Distance	Length	Material

(in)		(in)	(in)	(ft)	(ft)	
72.0000	None	72.0000	0.4375	0.00	110.00	ASTM A36

Top Flange

Begin Width (in)	End Width (in)	Thickness (in)	Distance (ft)	Length (ft)	Material
12.0000	12.0000	0.6250	0.00	25.50	ASTM A36
12.0000	12.0000	0.8750	25.50	59.00	ASTM A36
12.0000	12.0000	0.6250	84.50	25.50	ASTM A36

Bottom Flange

Begin Width (in)	End Width (in)	Thickness (in)	Distance (ft)	Length (ft)	Material
18.0000	18.0000	1.0000	0.00	25.50	ASTM A36
18.0000	18.0000	1.3750	25.50	59.00	ASTM A36
18.0000	18.0000	1.0000	84.50	25.50	ASTM A36

Deck Profile

Deck Concrete

Material (LRFD)	Distance n (ft)	Length (ft)	Total Thickness (in)	Structural Thickness (in)	Effective Width (Std) (in)	Effective Width (in)
Deck concrete	0.00 8.00...	110.00		7.0000	84.0000	90.0000

Shear Connectors

Start Distance (ft)	Length (ft)	Connector Name	Number per Row	Number of Spaces	Transverse Spacing (in)
0.00	110.00	Composite			

Bracing Ranges

Lateral Support

Distance (ft)	Length (ft)
0.00	110.00

Stiffener Ranges

Transverse Stiffener Ranges (Location)

Name	Distance (ft)	Number	Spacing (in)
Web Stiffener Pair	0.00	19	66.0000

Bearing Stiffener Locations

Support 1

Stiffener Pair	Name	Offset (in)

1	Bearing Stiffener	0.0000

Support 2

Stiffener Pair	Name	Offset *(in)*
1	Bearing Stiffener	0.0000

Points of Interest

Distance from left most support:	49.50 *(ft)*
Side:	Right
Transverse Stiffeners	
Override Schedule:	FALSE
Stiffener spacing:	*(in)*
Stiffener width:	*(in)*
Stiffener thickness:	*(in)*
Material:	ASTM A36
Stiffener number:	Single
Stiffener type:	Plate
Other Stiffeners	
Bearing Stiffener	
Override Schedule:	FALSE
Stiffener width:	*(in)*
Stiffener thickness:	*(in)*
Material:	ASTM A36
Clip:	*(in)*
Number of pairs:	
Pair spacing:	*(in)*
Attachment Type:	Welds
Longitudinal Stiffener	
Override Schedule:	FALSE
Stiffener width:	*(in)*
Stiffener thickness:	*(in)*
Material:	ASTM A36
Distance from flange to stiffener:	*(in)*
Distance measured from:	Top Flange
Fatigue	
Number of cycles:	0
Bracing	
Deck provides lateral support:	
Override diaphragm schedule:	FALSE
Distance to left diaphragm:	*(ft)*
Distance to right diaphragm:	*(ft)*
Diaphragm at this location:	FALSE
ASD	
Compression flange unsupported length:	*(ft)*
Tension Field Action	Ignore combined shear and bending
Riveted Section	
Net moment of inertia:	*(in^4)*
Distance to centroid:	*(in)*
Net area of web:	*(in^2)*
Top plate allowable shear:	*(ksi)*

Bottom plate allowable shear: *(ksi)*
Percent area top flange: *(%)*
Percent area bottom flange: *(%)*

Member Alternative Girder B - As Inspected

Description: S-9 in plans

Description

Material Type: Steel
Girder Type: Plate
Member units: US Customary
Girder property input method: Schedule based
Left end X: 6.0000 *(in)*
Right end X: 11.0000 *(in)*
Additional Self Load: *(kip/ft)*
Additional Self Load %: *(%)*

Analysis Module

Analysis Method: ASD
Analysis Module: AASHTO ASD
Analysis Module Component:
Properties:

Analysis Method: LFD
Analysis Module: AASHTO LFD
Analysis Module Component:
Properties:

Analysis Method: LRFD
Analysis Module: AASHTO LRFD
Analysis Module Component:
Properties:

Analysis Method: LRFR
Analysis Module: AASHTO LRFR
Analysis Module Component:
Properties:

Analysis Method: Distribution Factors
Analysis Module: BrR Dist Fact
Analysis Module Component:
Properties:

Default rating method: LRFR

Factors

Factor Override

LRFD:
LFD:

ASD Factors

	Inventory	Operating
Structural steel		
Concrete		
PS Concrete Comp.		
PS Concrete Tens.		
PS Moment Cap.		
Reinforcement		
Bearing Stiffener		
Stirrup		
Timber	NA	

Default Materials

Structural steel:	ASTM A36
Deck concrete:	Deck concrete
Deck reinforcement:	Grade 40 Reinf Steel
Welds:	
Bolts:	

Impact

Standard Impact Factor

Type:	Standard - AASHTO

LRFD Dynamic Load Allowance

Fatigue and fracture limit states:	15.0 *(%)*
All other limit states:	33.0 *(%)*

Live Load Distribution

Standard

	Distribution Factor (Wheels)			
Lanes Loaded	Shear	Shear at Supports	Moment	Deflection
1 Lane				
Multi-Lane				

LRFD

Distance *(ft)*	Length *(ft)*	Type	1 Lane	Multi-Lane
0.00	110.000	Moment	0.457	0.654
0.00	110.000	Shear	0.660	0.779
0.00	110.000	Deflectio...	0.171	0.364

Girder Profile

Web

Begin Depth *(in)*	Depth Vary	End Depth *(in)*	Thickness *(in)*	Distance *(ft)*	Length *(ft)*	Material
72.0000	None	72.0000	0.4375	0.00	110.00	ASTM A36

Top Flange

Begin Width (in)	End Width (in)	Thickness (in)	Distance (ft)	Length (ft)	Material
12.0000	12.0000	0.6250	0.00	25.50	ASTM A36
12.0000	12.0000	0.8750	25.50	59.00	ASTM A36
12.0000	12.0000	0.6250	84.50	25.50	ASTM A36

Bottom Flange

Begin Width (in)	End Width (in)	Thickness (in)	Distance (ft)	Length (ft)	Material
18.0000	18.0000	1.0000	0.00	25.50	ASTM A36
18.0000	18.0000	1.3750	25.50	59.00	ASTM A36
18.0000	18.0000	1.0000	84.50	25.50	ASTM A36

Deck Profile

Deck Concrete

Material (LRFD)	Distance n (ft)	Length (ft)	Total Thickness (in)	Structural Thickness (in)	Effective Width (Std) (in)	Effective Width (in)
Deck concrete	0.00 8.00...	110.00		7.0000	84.0000	90.0000

Shear Connectors

Start Distance (ft)	Length (ft)	Connector Name	Number per Row	Number of Spaces	Transverse Spacing (in)
0.00	110.00	Composite			

Bracing Ranges

Lateral Support

Distance (ft)	Length (ft)
0.00	110.00

Stiffener Ranges

Transverse Stiffener Ranges (Location)

Name	Distance (ft)	Number	Spacing (in)
Web Stiffener Pair	0.00	19	66.0000

Bearing Stiffener Locations

Support 1

Stiffener Pair	Name	Offset (in)
1	Bearing Stiffener	0.0000

Support 2

Stiffener Offset

Pair	Name	*(in)*
1	Bearing Stiffener	0.0000

Points of Interest

Distance from left most support:	49.50 *(ft)*
Side:	Right
Transverse Stiffeners	
Override Schedule:	FALSE
Stiffener spacing:	*(in)*
Stiffener width:	*(in)*
Stiffener thickness:	*(in)*
Material:	ASTM A36
Stiffener number:	Single
Stiffener type:	Plate
Other Stiffeners	
Bearing Stiffener	
Override Schedule:	FALSE
Stiffener width:	*(in)*
Stiffener thickness:	*(in)*
Material:	ASTM A36
Clip:	*(in)*
Number of pairs:	
Pair spacing:	*(in)*
Attachment Type:	Welds
Longitudinal Stiffener	
Override Schedule:	FALSE
Stiffener width:	*(in)*
Stiffener thickness:	*(in)*
Material:	ASTM A36
Distance from flange to stiffener:	*(in)*
Distance measured from:	Top Flange
Fatigue	
Number of cycles:	0
Bracing	
Deck provides lateral support:	
Override diaphragm schedule:	FALSE
Distance to left diaphragm:	*(ft)*
Distance to right diaphragm:	*(ft)*
Diaphragm at this location:	FALSE
ASD	
Compression flange unsupported length:	*(ft)*
Tension Field Action	Ignore combined shear and bending
Riveted Section	
Net moment of inertia:	*(in^4)*
Distance to centroid:	*(in)*
Net area of web:	*(in^2)*
Top plate allowable shear:	*(ksi)*
Bottom plate allowable shear:	*(ksi)*
Percent area top flange:	*(%)*
Percent area bottom flange:	*(%)*

Web Deterioration

Thickness Loss (%)	Start Distance (ft)	Length (ft)
0.8	0.00	0.83

Member Girder C

Link with: None
Description:

Existing: Girder C - As Inspected - S-10 in plans
Current: Girder C - As Inspected - S-10 in plans
Number of Spans: 1

Span Number	Span Length (ft)
1	110.000000

Support	Frame Connection
1	
2	

Pedestrian load: *(lb/ft)*

Member Loads

Distributed Loads

Distance (ft)	Length (ft)	Start (kip/ft)	End (kip/ft)	Load Case Name
0.00	110.00	0.052	0.052	DC1
0.00	110.00	0.257	0.257	DC2
0.00	110.00	0.336	0.336	DW

Member Loads - Settlement

Support Number	Horizontal (in)	Vertical (in)	Rotational (Radians)	Load Case Name
1				
2				

Support Constraints

General

Support Number	Support Type	X Translation	Y Translation	Z Rotation
1	Pinned	Fixed	Fixed	Free
2	Roller	Free	Fixed	Free

Elastic

Support	X Translation	Y Translation	Z Rotation	Override Computed

Number	(kip/ft)	(kip/ft)	(kip-in/rad)	Z Rotation
1				
2				

Member Alternative Girder C - As Built

Description: S-10 in plans

Description

Material Type: Steel
Girder Type: Plate
Member units: US Customary
Girder property input method: Schedule based
Left end X: 6.0000 *(in)*
Right end X: 11.0000 *(in)*
Additional Self Load: *(kip/ft)*
Additional Self Load %: *(%)*

Analysis Module

Analysis Method: ASD
Analysis Module: AASHTO ASD
Analysis Module Component:
Properties:

Analysis Method: LFD
Analysis Module: AASHTO LFD
Analysis Module Component:
Properties:

Analysis Method: LRFD
Analysis Module: AASHTO LRFD
Analysis Module Component:
Properties:

Analysis Method: LRFR
Analysis Module: AASHTO LRFR
Analysis Module Component:
Properties:

Analysis Method: Distribution Factors
Analysis Module: BrR Dist Fact
Analysis Module Component:
Properties:

Default rating method: LRFR

Factors

Factor Override

LRFD:
LFD:

ASD Factors

	Inventory	Operating
Structural steel		

Concrete	
PS Concrete Comp.	
PS Concrete Tens.	
PS Moment Cap.	
Reinforcement	
Bearing Stiffener	
Stirrup	
Timber	NA

Default Materials

Structural steel:	ASTM A36
Deck concrete:	Deck concrete
Deck reinforcement:	Grade 40 Reinf Steel
Welds:	
Bolts:	

Impact

Standard Impact Factor

Type:	Standard - AASHTO

LRFD Dynamic Load Allowance

Fatigue and fracture limit states:	15.0 *(%)*
All other limit states:	33.0 *(%)*

Live Load Distribution

Standard

	Distribution Factor (Wheels)			
Lanes Loaded	Shear	Shear at Supports	Moment	Deflection
1 Lane				
Multi-Lane				

LRFD

Distance *(ft)*	Length *(ft)*	Type	1 Lane	Multi-Lane
0.00	110.000	Moment	0.457	0.654
0.00	110.000	Shear	0.660	0.779
0.00	110.000	Deflectio...	0.171	0.364

Girder Profile

Web

Begin Depth *(in)*	Depth Vary	End Depth *(in)*	Thickness *(in)*	Distance *(ft)*	Length *(ft)*	Material
72.0000	None	72.0000	0.4375	0.00	110.00	ASTM A36

Top Flange

Begin Width	End Width	Thickness	Distance	Length	Material

(in)	(in)	(in)	(ft)	(ft)	
12.0000	12.0000	0.6250	0.00	25.50	ASTM A36
12.0000	12.0000	0.8750	25.50	59.00	ASTM A36
12.0000	12.0000	0.6250	84.50	25.50	ASTM A36

Bottom Flange

Begin Width (in)	End Width (in)	Thickness (in)	Distance (ft)	Length (ft)	Material
18.0000	18.0000	1.0000	0.00	25.50	ASTM A36
18.0000	18.0000	1.3750	25.50	59.00	ASTM A36
18.0000	18.0000	1.0000	84.50	25.50	ASTM A36

Deck Profile

Deck Concrete

Material (LRFD)	Distance n (ft)	Length (ft)	Total Thickness (in)	Structural Thickness (in)	Effective Width (Std) (in)	Effective Width (in)
Deck concrete	0.00 8.00...	110.00		7.0000	84.0000	90.0000

Shear Connectors

Start Distance (ft)	Length (ft)	Connector Name	Number per Row	Number of Spaces	Transverse Spacing (in)
0.00	110.00	Composite			

Bracing Ranges

Lateral Support

Distance (ft)	Length (ft)
0.00	110.00

Stiffener Ranges

Transverse Stiffener Ranges (Location)

Name	Distance (ft)	Number	Spacing (in)
Web Stiffener Pair	0.00	19	66.0000

Bearing Stiffener Locations

Support 1

Stiffener Pair	Name	Offset (in)
1	Bearing Stiffener	0.0000

Support 2

Stiffener Pair	Name	Offset (in)
1	Bearing Stiffener	0.0000

Points of Interest

Distance from left most support:	49.50 *(ft)*
Side:	Right
Transverse Stiffeners	
Override Schedule:	FALSE
Stiffener spacing:	*(in)*
Stiffener width:	*(in)*
Stiffener thickness:	*(in)*
Material:	ASTM A36
Stiffener number:	Single
Stiffener type:	Plate
Other Stiffeners	
Bearing Stiffener	
Override Schedule:	FALSE
Stiffener width:	*(in)*
Stiffener thickness:	*(in)*
Material:	ASTM A36
Clip:	*(in)*
Number of pairs:	
Pair spacing:	*(in)*
Attachment Type:	Welds
Longitudinal Stiffener	
Override Schedule:	FALSE
Stiffener width:	*(in)*
Stiffener thickness:	*(in)*
Material:	ASTM A36
Distance from flange to stiffener:	*(in)*
Distance measured from:	Top Flange
Fatigue	
Number of cycles:	0
Bracing	
Deck provides lateral support:	
Override diaphragm schedule:	FALSE
Distance to left diaphragm:	*(ft)*
Distance to right diaphragm:	*(ft)*
Diaphragm at this location:	FALSE
ASD	
Compression flange unsupported length:	*(ft)*
Tension Field Action	Ignore combined shear and bending
Riveted Section	
Net moment of inertia:	*(in^4)*
Distance to centroid:	*(in)*
Net area of web:	*(in^2)*
Top plate allowable shear:	*(ksi)*
Bottom plate allowable shear:	*(ksi)*
Percent area top flange:	*(%)*
Percent area bottom flange:	*(%)*

Member Alternative Girder C - As Inspected

Description: S-10 in plans

Description

Material Type:	Steel
Girder Type:	Plate
Member units:	US Customary
Girder property input method:	Schedule based
Left end X:	6.0000 *(in)*
Right end X:	11.0000 *(in)*
Additional Self Load:	*(kip/ft)*
Additional Self Load %:	*(%)*

Analysis Module

Analysis Method:	ASD
Analysis Module:	AASHTO ASD
Analysis Module Component:	
Properties:	

Analysis Method:	LFD
Analysis Module:	AASHTO LFD
Analysis Module Component:	
Properties:	

Analysis Method:	LRFD
Analysis Module:	AASHTO LRFD
Analysis Module Component:	
Properties:	

Analysis Method:	LRFR
Analysis Module:	AASHTO LRFR
Analysis Module Component:	
Properties:	

Analysis Method:	Distribution Factors
Analysis Module:	BrR Dist Fact
Analysis Module Component:	
Properties:	

Default rating method: LRFR

Factors

Factor Override

LRFD:

LFD:

ASD Factors

	Inventory	Operating
Structural steel		
Concrete		
PS Concrete Comp.		
PS Concrete Tens.		

PS Moment Cap.	
Reinforcement	
Bearing Stiffener	
Stirrup	
Timber	NA

Default Materials

Structural steel:	ASTM A36
Deck concrete:	Deck concrete
Deck reinforcement:	Grade 40 Reinf Steel
Welds:	
Bolts:	

Impact

Standard Impact Factor

Type:	Standard - AASHTO

LRFD Dynamic Load Allowance

Fatigue and fracture limit states:	15.0 *(%)*
All other limit states:	33.0 *(%)*

Live Load Distribution

Standard

	Distribution Factor (Wheels)			
Lanes Loaded	Shear	Shear at Supports	Moment	Deflection
1 Lane				
Multi-Lane				

LRFD

Distance *(ft)*	Length *(ft)*	Type	1 Lane	Multi-Lane
0.00	110.000	Moment	0.457	0.654
0.00	110.000	Shear	0.660	0.779
0.00	110.000	Deflectio...	0.171	0.364

Girder Profile

Web

Begin Depth *(in)*	Depth Vary	End Depth *(in)*	Thickness *(in)*	Distance *(ft)*	Length *(ft)*	Material
72.0000	None	72.0000	0.4375	0.00	110.00	ASTM A36

Top Flange

Begin Width *(in)*	End Width *(in)*	Thickness *(in)*	Distance *(ft)*	Length *(ft)*	Material
12.0000	12.0000	0.6250	0.00	25.50	ASTM A36
12.0000	12.0000	0.8750	25.50	59.00	ASTM A36

12.0000	12.0000	0.6250	84.50	25.50	ASTM A36

Bottom Flange

Begin Width (in)	End Width (in)	Thickness (in)	Distance (ft)	Length (ft)	Material
18.0000	18.0000	1.0000	0.00	25.50	ASTM A36
18.0000	18.0000	1.3750	25.50	59.00	ASTM A36
18.0000	18.0000	1.0000	84.50	25.50	ASTM A36

Deck Profile

Deck Concrete

Material (LRFD)	Distance n (ft)	Length (ft)	Total Thickness (in)	Structural Thickness (in)	Effective Width (Std) (in)	Effective Width (in)
Deck concrete	0.00 8.00...	110.00		7.0000	84.0000	90.0000

Shear Connectors

Start Distance (ft)	Length (ft)	Connector Name	Number per Row	Number of Spaces	Transverse Spacing (in)
0.00	110.00	Composite			

Bracing Ranges

Lateral Support

Distance (ft)	Length (ft)
0.00	110.00

Stiffener Ranges

Transverse Stiffener Ranges (Location)

Name	Distance (ft)	Number	Spacing (in)
Web Stiffener Pair	0.00	19	66.0000

Bearing Stiffener Locations

Support 1

Stiffener Pair	Name	Offset (in)
1	Bearing Stiffener	0.0000

Support 2

Stiffener Pair	Name	Offset (in)
1	Bearing Stiffener	0.0000

Points of Interest

Distance from left most support: 49.50 *(ft)*

Side:	Right
Transverse Stiffeners	
Override Schedule:	FALSE
Stiffener spacing:	*(in)*
Stiffener width:	*(in)*
Stiffener thickness:	*(in)*
Material:	ASTM A36
Stiffener number:	Single
Stiffener type:	Plate
Other Stiffeners	
Bearing Stiffener	
Override Schedule:	FALSE
Stiffener width:	*(in)*
Stiffener thickness:	*(in)*
Material:	ASTM A36
Clip:	*(in)*
Number of pairs:	
Pair spacing:	*(in)*
Attachment Type:	Welds
Longitudinal Stiffener	
Override Schedule:	FALSE
Stiffener width:	*(in)*
Stiffener thickness:	*(in)*
Material:	ASTM A36
Distance from flange to stiffener:	*(in)*
Distance measured from:	Top Flange
Fatigue	
Number of cycles:	0
Bracing	
Deck provides lateral support:	
Override diaphragm schedule:	FALSE
Distance to left diaphragm:	*(ft)*
Distance to right diaphragm:	*(ft)*
Diaphragm at this location:	FALSE
ASD	
Compression flange unsupported length:	*(ft)*
Tension Field Action	Ignore combined shear and bending
Riveted Section	
Net moment of inertia:	*(in^4)*
Distance to centroid:	*(in)*
Net area of web:	*(in^2)*
Top plate allowable shear:	*(ksi)*
Bottom plate allowable shear:	*(ksi)*
Percent area top flange:	*(%)*
Percent area bottom flange:	*(%)*

Web Deterioration

Thickness Loss	Start Distance	Length

(%)	(ft)	(ft)
1.6	0.00	0.83

Member Girder D

Link with: None
Description:

Existing: Girder D - As Inspected - S-11 in plans
Current: Girder D - As Inspected - S-11 in plans
Number of Spans: 1

Span Number	Span Length (ft)
1	110.000000

Support	Frame Connection
1	
2	

Pedestrian load: (lb/ft)

Member Loads

Distributed Loads

Distance (ft)	Length (ft)	Start (kip/ft)	End (kip/ft)	Load Case Name
0.00	110.00	0.052	0.052	DC1
0.00	110.00	0.257	0.257	DC2
0.00	110.00	0.336	0.336	DW

Member Loads - Settlement

Support Number	Horizontal (in)	Vertical (in)	Rotational (Radians)	Load Case Name
1				
2				

Support Constraints

General

Support Number	Support Type	X Translation	Y Translation	Z Rotation
1	Pinned	Fixed	Fixed	Free
2	Roller	Free	Fixed	Free

Elastic

Support Number	X Translation (kip/ft)	Y Translation (kip/ft)	Z Rotation (kip-in/rad)	Override Computed Z Rotation
1				
2				

Member Alternative Girder D - As Built

Description: S-11 in plans

Description

Material Type:	Steel
Girder Type:	Plate
Member units:	US Customary
Girder property input method:	Schedule based
Left end X:	6.0000 *(in)*
Right end X:	11.0000 *(in)*
Additional Self Load:	*(kip/ft)*
Additional Self Load %:	*(%)*

Analysis Module

Analysis Method:	ASD
Analysis Module:	AASHTO ASD
Analysis Module Component:	
Properties:	

Analysis Method:	LFD
Analysis Module:	AASHTO LFD
Analysis Module Component:	
Properties:	

Analysis Method:	LRFD
Analysis Module:	AASHTO LRFD
Analysis Module Component:	
Properties:	

Analysis Method:	LRFR
Analysis Module:	AASHTO LRFR
Analysis Module Component:	
Properties:	

Analysis Method:	Distribution Factors
Analysis Module:	BrR Dist Fact
Analysis Module Component:	
Properties:	

Default rating method: LRFR

Factors

Factor Override

LRFD:

LFD:

ASD Factors

	Inventory	Operating
Structural steel		
Concrete		
PS Concrete Comp.		
PS Concrete Tens.		
PS Moment Cap.		
Reinforcement		

Bearing Stiffener	
Stirrup	
Timber	NA

Default Materials

Structural steel:	ASTM A36
Deck concrete:	Deck concrete
Deck reinforcement:	Grade 40 Reinf Steel
Welds:	
Bolts:	

Impact

Standard Impact Factor

Type:	Standard - AASHTO

LRFD Dynamic Load Allowance

Fatigue and fracture limit states:	15.0 *(%)*
All other limit states:	33.0 *(%)*

Live Load Distribution

Standard

	Distribution Factor (Wheels)			
Lanes Loaded	Shear	Shear at Supports	Moment	Deflection
1 Lane				
Multi-Lane				

LRFD

Distance *(ft)*	Length *(ft)*	Type	1 Lane	Multi-Lane
0.00	110.000	Moment	0.457	0.654
0.00	110.000	Shear	0.660	0.779
0.00	110.000	Deflectio...	0.171	0.364

Girder Profile

Web

Begin Depth *(in)*	Depth Vary	End Depth *(in)*	Thickness *(in)*	Distance *(ft)*	Length *(ft)*	Material
72.0000	None	72.0000	0.4375	0.00	110.00	ASTM A36

Top Flange

Begin Width *(in)*	End Width *(in)*	Thickness *(in)*	Distance *(ft)*	Length *(ft)*	Material
12.0000	12.0000	0.6250	0.00	25.50	ASTM A36
12.0000	12.0000	0.8750	25.50	59.00	ASTM A36
12.0000	12.0000	0.6250	84.50	25.50	ASTM A36

Bottom Flange

Begin Width (in)	End Width (in)	Thickness (in)	Distance (ft)	Length (ft)	Material
18.0000	18.0000	1.0000	0.00	25.50	ASTM A36
18.0000	18.0000	1.3750	25.50	59.00	ASTM A36
18.0000	18.0000	1.0000	84.50	25.50	ASTM A36

Deck Profile

Deck Concrete

Material (LRFD)	Distance n (ft)	Length (ft)	Total Thickness (in)	Structural Thickness (in)	Effective Width (Std) (in)	Effective Width (in)
Deck concrete	0.00 8.00...	110.00		7.0000	84.0000	90.0000

Shear Connectors

Start Distance (ft)	Length (ft)	Connector Name	Number per Row	Number of Spaces	Transverse Spacing (in)
0.00	110.00	Composite			

Bracing Ranges

Lateral Support

Distance (ft)	Length (ft)
0.00	110.00

Stiffener Ranges

Transverse Stiffener Ranges (Location)

Name	Distance (ft)	Number	Spacing (in)
Web Stiffener Pair	0.00	19	66.0000

Bearing Stiffener Locations

Support 1

Stiffener Pair	Name	Offset (in)
1	Bearing Stiffener	0.0000

Support 2

Stiffener Pair	Name	Offset (in)
1	Bearing Stiffener	0.0000

Points of Interest

Distance from left most support: 49.50 *(ft)*

Side: Right

Transverse Stiffeners

Override Schedule:	FALSE
Stiffener spacing:	*(in)*
Stiffener width:	*(in)*
Stiffener thickness:	*(in)*
Material:	ASTM A36
Stiffener number:	Single
Stiffener type:	Plate

Other Stiffeners

Bearing Stiffener

Override Schedule:	FALSE
Stiffener width:	*(in)*
Stiffener thickness:	*(in)*
Material:	ASTM A36
Clip:	*(in)*
Number of pairs:	
Pair spacing:	*(in)*
Attachment Type:	Welds

Longitudinal Stiffener

Override Schedule:	FALSE
Stiffener width:	*(in)*
Stiffener thickness:	*(in)*
Material:	ASTM A36
Distance from flange to stiffener:	*(in)*
Distance measured from:	Top Flange

Fatigue

Number of cycles:	0

Bracing

Deck provides lateral support:	
Override diaphragm schedule:	FALSE
Distance to left diaphragm:	*(ft)*
Distance to right diaphragm:	*(ft)*
Diaphragm at this location:	FALSE

ASD

Compression flange unsupported length:	*(ft)*
Tension Field Action	Ignore combined shear and bending

Riveted Section

Net moment of inertia:	*(in^4)*
Distance to centroid:	*(in)*
Net area of web:	*(in^2)*
Top plate allowable shear:	*(ksi)*
Bottom plate allowable shear:	*(ksi)*
Percent area top flange:	*(%)*
Percent area bottom flange:	*(%)*

Member Alternative Girder D - As Inspected

Description: S-11 in plans

Description

Material Type:	Steel

Girder Type: Plate
Member units: US Customary
Girder property input method: Schedule based
Left end X: 6.0000 *(in)*
Right end X: 11.0000 *(in)*
Additional Self Load: *(kip/ft)*
Additional Self Load %: *(%)*
Analysis Module
Analysis Method: ASD
Analysis Module: AASHTO ASD
Analysis Module Component:
Properties:

Analysis Method: LFD
Analysis Module: AASHTO LFD
Analysis Module Component:
Properties:

Analysis Method: LRFD
Analysis Module: AASHTO LRFD
Analysis Module Component:
Properties:

Analysis Method: LRFR
Analysis Module: AASHTO LRFR
Analysis Module Component:
Properties:

Analysis Method: Distribution Factors
Analysis Module: BrR Dist Fact
Analysis Module Component:
Properties:

Default rating method: LRFR

<u>Factors</u>
Factor Override
LRFD:
LFD:
ASD Factors

	Inventory	Operating
Structural steel		
Concrete		
PS Concrete Comp.		
PS Concrete Tens.		
PS Moment Cap.		
Reinforcement		
Bearing Stiffener		
Stirrup		
Timber	NA	

Default Materials

Structural steel:	ASTM A36
Deck concrete:	Deck concrete
Deck reinforcement:	Grade 40 Reinf Steel
Welds:	
Bolts:	

Impact

Standard Impact Factor

Type:	Standard - AASHTO

LRFD Dynamic Load Allowance

Fatigue and fracture limit states:	15.0 *(%)*
All other limit states:	33.0 *(%)*

Live Load Distribution

Standard

D i s t r i b u t i o n F a c t o r (Wheels)

Lanes Loaded	Shear	Shear at Supports	Moment	Deflection
1 Lane				
Multi-Lane				

LRFD

Distance *(ft)*	Length *(ft)*	Type	1 Lane	Multi-Lane
0.00	110.000	Moment	0.457	0.654
0.00	110.000	Shear	0.660	0.779
0.00	110.000	Deflectio...	0.171	0.364

Girder Profile

Web

Begin Depth *(in)*	Depth Vary	End Depth *(in)*	Thickness *(in)*	Distance *(ft)*	Length *(ft)*	Material
72.0000	None	72.0000	0.4375	0.00	110.00	ASTM A36

Top Flange

Begin Width *(in)*	End Width *(in)*	Thickness *(in)*	Distance *(ft)*	Length *(ft)*	Material
12.0000	12.0000	0.6250	0.00	25.50	ASTM A36
12.0000	12.0000	0.8750	25.50	59.00	ASTM A36
12.0000	12.0000	0.6250	84.50	25.50	ASTM A36

Bottom Flange

Begin Width	End Width	Thickness	Distance	Length	Material

(in)	(in)	(in)	(ft)	(ft)	
18.0000	18.0000	1.0000	0.00	25.50	ASTM A36
18.0000	18.0000	1.3750	25.50	59.00	ASTM A36
18.0000	18.0000	1.0000	84.50	25.50	ASTM A36

Deck Profile

Deck Concrete

Material (LRFD)	Distance n	Length	Total Thickness	Structural Thickness	Effective Width (Std)	Effective Width
	(ft)	(ft)	(in)	(in)	(in)	(in)
Deck concrete	0.00 8.00...	110.00		7.0000	84.0000	90.0000

Shear Connectors

Start Distance	Length	Connector Name	Number per Row	Number of Spaces	Transverse Spacing
(ft)	(ft)				(in)
0.00	110.00	Composite			

Bracing Ranges

Lateral Support

Distance	Length
(ft)	(ft)
0.00	110.00

Stiffener Ranges

Transverse Stiffener Ranges (Location)

Name	Distance	Number	Spacing
	(ft)		(in)
Web Stiffener Pair	0.00	19	66.0000

Bearing Stiffener Locations

Support 1

Stiffener Pair	Name	Offset
		(in)
1	Bearing Stiffener	0.0000

Support 2

Stiffener Pair	Name	Offset
		(in)
1	Bearing Stiffener	0.0000

Points of Interest

Distance from left most support:	49.50 (ft)
Side:	Right
Transverse Stiffeners	
Override Schedule:	FALSE
Stiffener spacing:	(in)
Stiffener width:	(in)

Stiffener thickness:	*(in)*
Material:	ASTM A36
Stiffener number:	Single
Stiffener type:	Plate
Other Stiffeners	
Bearing Stiffener	
Override Schedule:	FALSE
Stiffener width:	*(in)*
Stiffener thickness:	*(in)*
Material:	ASTM A36
Clip:	*(in)*
Number of pairs:	
Pair spacing:	*(in)*
Attachment Type:	Welds
Longitudinal Stiffener	
Override Schedule:	FALSE
Stiffener width:	*(in)*
Stiffener thickness:	*(in)*
Material:	ASTM A36
Distance from flange to stiffener:	*(in)*
Distance measured from:	Top Flange
Fatigue	
Number of cycles:	0
Bracing	
Deck provides lateral support:	
Override diaphragm schedule:	FALSE
Distance to left diaphragm:	*(ft)*
Distance to right diaphragm:	*(ft)*
Diaphragm at this location:	FALSE
ASD	
Compression flange unsupported length:	*(ft)*
Tension Field Action	Ignore combined shear and bending
Riveted Section	
Net moment of inertia:	*(in^4)*
Distance to centroid:	*(in)*
Net area of web:	*(in^2)*
Top plate allowable shear:	*(ksi)*
Bottom plate allowable shear:	*(ksi)*
Percent area top flange:	*(%)*
Percent area bottom flange:	*(%)*

Web Deterioration

Thickness Loss	Start Distance	Length
(%)	*(ft)*	*(ft)*
10.1	0.00	8.00
0.8	0.00	0.83

Member Girder E

Link with: None
Description:

Existing: Girder E - As Inspected - S-12 in plans
Current: Girder E - As Inspected - S-12 in plans
Number of Spans: 1

Span Number	Span Length *(ft)*
1	110.000000

Support	Frame Connection
1	
2	

Pedestrian load: *(lb/ft)*

Member Loads

Distributed Loads

Distance *(ft)*	Length *(ft)*	Start *(kip/ft)*	End *(kip/ft)*	Load Case Name
0.00	110.00	0.052	0.052	DC1
0.00	110.00	0.257	0.257	DC2
0.00	110.00	0.336	0.336	DW

Member Loads - Settlement

Support Number	Horizontal *(in)*	Vertical *(in)*	Rotational *(Radians)*	Load Case Name
1				
2				

Support Constraints

General

Support Number	Support Type	X Translation	Y Translation	Z Rotation
1	Pinned	Fixed	Fixed	Free
2	Roller	Free	Fixed	Free

Elastic

Support Number	X Translation *(kip/ft)*	Y Translation *(kip/ft)*	Z Rotation *(kip-in/rad)*	Override Computed Z Rotation
1				
2				

Member Alternative Girder E

Description: S-12 in plans

Description

Material Type: Steel
Girder Type: Plate

Member units: US Customary
Girder property input method: Schedule based
Left end X: 6.0000 *(in)*
Right end X: 11.0000 *(in)*
Additional Self Load: *(kip/ft)*
Additional Self Load %: *(%)*
Analysis Module
Analysis Method: ASD
Analysis Module: AASHTO ASD
Analysis Module Component:
Properties:

Analysis Method: LFD
Analysis Module: AASHTO LFD
Analysis Module Component:
Properties:

Analysis Method: LRFD
Analysis Module: AASHTO LRFD
Analysis Module Component:
Properties:

Analysis Method: LRFR
Analysis Module: AASHTO LRFR
Analysis Module Component:
Properties:

Analysis Method: Distribution Factors
Analysis Module: BrR Dist Fact
Analysis Module Component:
Properties:

Default rating method: LRFR

<u>Factors</u>
Factor Override
LRFD:
LFD:
ASD Factors

	Inventory	Operating
Structural steel		
Concrete		
PS Concrete Comp.		
PS Concrete Tens.		
PS Moment Cap.		
Reinforcement		
Bearing Stiffener		
Stirrup		
Timber	NA	

Default Materials

Structural steel:	ASTM A36
Deck concrete:	Deck concrete
Deck reinforcement:	Grade 40 Reinf Steel
Welds:	
Bolts:	

Impact

Standard Impact Factor

Type:	Standard - AASHTO

LRFD Dynamic Load Allowance

Fatigue and fracture limit states:	15.0 *(%)*
All other limit states:	33.0 *(%)*

Live Load Distribution

Standard

	Distribution Factor (Wheels)			
Lanes Loaded	Shear	Shear at Supports	Moment	Deflection
1 Lane				
Multi-Lane				

LRFD

Distance *(ft)*	Length *(ft)*	Type	1 Lane	Multi-Lane
0.00	110.000	Moment	0.457	0.654
0.00	110.000	Shear	0.660	0.779
0.00	110.000	Deflectio...	0.171	0.364

Girder Profile

Web

Begin Depth *(in)*	Depth Vary	End Depth *(in)*	Thickness *(in)*	Distance *(ft)*	Length *(ft)*	Material
72.0000	None	72.0000	0.4375	0.00	110.00	ASTM A36

Top Flange

Begin Width *(in)*	End Width *(in)*	Thickness *(in)*	Distance *(ft)*	Length *(ft)*	Material
12.0000	12.0000	0.6250	0.00	25.50	ASTM A36
12.0000	12.0000	0.8750	25.50	59.00	ASTM A36
12.0000	12.0000	0.6250	84.50	25.50	ASTM A36

Bottom Flange

Begin Width *(in)*	End Width *(in)*	Thickness *(in)*	Distance *(ft)*	Length *(ft)*	Material

18.0000	18.0000	1.0000	0.00	25.50	ASTM A36
18.0000	18.0000	1.3750	25.50	59.00	ASTM A36
18.0000	18.0000	1.0000	84.50	25.50	ASTM A36

Deck Profile

Deck Concrete

Material (LRFD)	Distance n	Length	Total Thickness	Structural Thickness	Effective Width (Std)	Effective Width
	(ft)	*(ft)*	*(in)*	*(in)*	*(in)*	*(in)*
Deck concrete	0.00 8.00...	110.00		7.0000	84.0000	90.0000

Shear Connectors

Start Distance	Length	Connector Name	Number per Row	Number of Spaces	Transverse Spacing
(ft)	*(ft)*				*(in)*
0.00	110.00	Composite			

Bracing Ranges

Lateral Support

Distance	Length
(ft)	*(ft)*
0.00	110.00

Stiffener Ranges

Transverse Stiffener Ranges (Location)

Name	Distance	Number	Spacing
	(ft)		*(in)*
Web Stiffener Pair	0.00	19	66.0000

Bearing Stiffener Locations

Support 1

Stiffener Pair	Name	Offset
		(in)
1	Bearing Stiffener	0.0000

Support 2

Stiffener Pair	Name	Offset
		(in)
1	Bearing Stiffener	0.0000

Points of Interest

Distance from left most support:	49.50 *(ft)*
Side:	Right

Transverse Stiffeners

Override Schedule:	FALSE
Stiffener spacing:	*(in)*
Stiffener width:	*(in)*
Stiffener thickness:	*(in)*

Material:	ASTM A36
Stiffener number:	Single
Stiffener type:	Plate
Other Stiffeners	
Bearing Stiffener	
Override Schedule:	FALSE
Stiffener width:	*(in)*
Stiffener thickness:	*(in)*
Material:	ASTM A36
Clip:	*(in)*
Number of pairs:	
Pair spacing:	*(in)*
Attachment Type:	Welds
Longitudinal Stiffener	
Override Schedule:	FALSE
Stiffener width:	*(in)*
Stiffener thickness:	*(in)*
Material:	ASTM A36
Distance from flange to stiffener:	*(in)*
Distance measured from:	Top Flange
Fatigue	
Number of cycles:	0
Bracing	
Deck provides lateral support:	
Override diaphragm schedule:	FALSE
Distance to left diaphragm:	*(ft)*
Distance to right diaphragm:	*(ft)*
Diaphragm at this location:	FALSE
ASD	
Compression flange unsupported length:	*(ft)*
Tension Field Action	Ignore combined shear and bending
Riveted Section	
Net moment of inertia:	*(in^4)*
Distance to centroid:	*(in)*
Net area of web:	*(in^2)*
Top plate allowable shear:	*(ksi)*
Bottom plate allowable shear:	*(ksi)*
Percent area top flange:	*(%)*
Percent area bottom flange:	*(%)*

Member Alternative Girder E - As Inspected

Description: S-12 in plans

Description

Material Type:	Steel
Girder Type:	Plate
Member units:	US Customary
Girder property input method:	Schedule based
Left end X:	6.0000 *(in)*

Right end X: 11.0000 *(in)*
Additional Self Load: *(kip/ft)*
Additional Self Load %: *(%)*
Analysis Module
Analysis Method: ASD
Analysis Module: AASHTO ASD
Analysis Module Component:
Properties:

Analysis Method: LFD
Analysis Module: AASHTO LFD
Analysis Module Component:
Properties:

Analysis Method: LRFD
Analysis Module: AASHTO LRFD
Analysis Module Component:
Properties:

Analysis Method: LRFR
Analysis Module: AASHTO LRFR
Analysis Module Component:
Properties:

Analysis Method: Distribution Factors
Analysis Module: BrR Dist Fact
Analysis Module Component:
Properties:

Default rating method: LRFR

Factors
Factor Override
LRFD:
LFD:
ASD Factors

	Inventory	Operating
Structural steel		
Concrete		
PS Concrete Comp.		
PS Concrete Tens.		
PS Moment Cap.		
Reinforcement		
Bearing Stiffener		
Stirrup		
Timber	NA	

Default Materials
Structural steel: ASTM A36

Deck concrete:	Deck concrete
Deck reinforcement:	Grade 40 Reinf Steel
Welds:	
Bolts:	

Impact

Standard Impact Factor

Type:	Standard - AASHTO

LRFD Dynamic Load Allowance

Fatigue and fracture limit states:	15.0 *(%)*
All other limit states:	33.0 *(%)*

Live Load Distribution

Standard

D i s t r i b u t i o n F a c t o r (Wheels)

Lanes Loaded	Shear	Shear at Supports	Moment	Deflection
1 Lane				
Multi-Lane				

LRFD

Distance *(ft)*	Length *(ft)*	Type	1 Lane	Multi-Lane
0.00	110.000	Moment	0.457	0.654
0.00	110.000	Shear	0.660	0.779
0.00	110.000	Deflectio...	0.171	0.364

Girder Profile

Web

Begin Depth *(in)*	Depth Vary	End Depth *(in)*	Thickness *(in)*	Distance *(ft)*	Length *(ft)*	Material
72.0000	None	72.0000	0.4375	0.00	110.00	ASTM A36

Top Flange

Begin Width *(in)*	End Width *(in)*	Thickness *(in)*	Distance *(ft)*	Length *(ft)*	Material
12.0000	12.0000	0.6250	0.00	25.50	ASTM A36
12.0000	12.0000	0.8750	25.50	59.00	ASTM A36
12.0000	12.0000	0.6250	84.50	25.50	ASTM A36

Bottom Flange

Begin Width *(in)*	End Width *(in)*	Thickness *(in)*	Distance *(ft)*	Length *(ft)*	Material
18.0000	18.0000	1.0000	0.00	25.50	ASTM A36
18.0000	18.0000	1.3750	25.50	59.00	ASTM A36
18.0000	18.0000	1.0000	84.50	25.50	ASTM A36

Deck Profile

Deck Concrete

Material (LRFD)	Distance n	Length	Total Thickness	Structural Thickness	Effective Width (Std)	Effective Width
	(ft)	*(ft)*	*(in)*	*(in)*	*(in)*	*(in)*
Deck concrete	0.00 8.00...	110.00		7.0000	84.0000	90.0000

Shear Connectors

Start Distance	Length	Connector Name	Number per Row	Number of Spaces	Transverse Spacing
(ft)	*(ft)*				*(in)*
0.00	110.00	Composite			

Bracing Ranges

Lateral Support

Distance	Length
(ft)	*(ft)*
0.00	110.00

Stiffener Ranges

Transverse Stiffener Ranges (Location)

Name	Distance	Number	Spacing
	(ft)		*(in)*
Web Stiffener Pair	0.00	19	66.0000

Bearing Stiffener Locations

Support 1

Stiffener Pair	Name	Offset
		(in)
1	Bearing Stiffener	0.0000

Support 2

Stiffener Pair	Name	Offset
		(in)
1	Bearing Stiffener	0.0000

Points of Interest

Distance from left most support:	49.50 *(ft)*
Side:	Right
Transverse Stiffeners	
Override Schedule:	FALSE
Stiffener spacing:	*(in)*
Stiffener width:	*(in)*
Stiffener thickness:	*(in)*
Material:	ASTM A36
Stiffener number:	Single
Stiffener type:	Plate

Other Stiffeners

Bearing Stiffener

Override Schedule:	FALSE
Stiffener width:	*(in)*
Stiffener thickness:	*(in)*
Material:	ASTM A36
Clip:	*(in)*
Number of pairs:	
Pair spacing:	*(in)*
Attachment Type:	Welds

Longitudinal Stiffener

Override Schedule:	FALSE
Stiffener width:	*(in)*
Stiffener thickness:	*(in)*
Material:	ASTM A36
Distance from flange to stiffener:	*(in)*
Distance measured from:	Top Flange

Fatigue

Number of cycles:	0

Bracing

Deck provides lateral support:	
Override diaphragm schedule:	FALSE
Distance to left diaphragm:	*(ft)*
Distance to right diaphragm:	*(ft)*
Diaphragm at this location:	FALSE

ASD

Compression flange unsupported length:	*(ft)*
Tension Field Action	Ignore combined shear and bending

Riveted Section

Net moment of inertia:	*(in^4)*
Distance to centroid:	*(in)*
Net area of web:	*(in^2)*
Top plate allowable shear:	*(ksi)*
Bottom plate allowable shear:	*(ksi)*
Percent area top flange:	*(%)*
Percent area bottom flange:	*(%)*

Web Deterioration

Thickness Loss	Start Distance	Length
(%)	*(ft)*	*(ft)*
0.8	0.00	0.83

Member Girder F

Link with: None

Description:

Existing: Girder F - As Inspected - S-13 in plans

Current: Girder F - As Inspected - S-13 in plans

Number of Spans: 1

Span Number	Span Length (ft)
1	110.000000

Support	Frame Connection
1	
2	

Pedestrian load: *(lb/ft)*

Member Loads

Distributed Loads

Distance (ft)	Length (ft)	Start (kip/ft)	End (kip/ft)	Load Case Name
0.00	110.00	0.052	0.052	DC1
0.00	110.00	0.257	0.257	DC2
0.00	110.00	0.336	0.336	DW

Member Loads - Settlement

Support Number	Horizontal (in)	Vertical (in)	Rotational (Radians)	Load Case Name
1				
2				

Support Constraints

General

Support Number	Support Type	X Translation	Y Translation	Z Rotation
1	Pinned	Fixed	Fixed	Free
2	Roller	Free	Fixed	Free

Elastic

Support Number	X Translation (kip/ft)	Y Translation (kip/ft)	Z Rotation (kip-in/rad)	Override Computed Z Rotation
1				
2				

Member Alternative Girder F - As Built

Description: S-13 in plans

Description

Material Type: Steel

Girder Type: Plate

Member units: US Customary

Girder property input method: Schedule based

Left end X: 6.0000 *(in)*

Right end X: 11.0000 *(in)*

Additional Self Load: *(kip/ft)*

Additional Self Load %: *(%)*

Analysis Module

Analysis Method: ASD
Analysis Module: AASHTO ASD
Analysis Module Component:
Properties:

Analysis Method: LFD
Analysis Module: AASHTO LFD
Analysis Module Component:
Properties:

Analysis Method: LRFD
Analysis Module: AASHTO LRFD
Analysis Module Component:
Properties:

Analysis Method: LRFR
Analysis Module: AASHTO LRFR
Analysis Module Component:
Properties:

Analysis Method: Distribution Factors
Analysis Module: BrR Dist Fact
Analysis Module Component:
Properties:

Default rating method: LRFR

Factors

Factor Override

LRFD:
LFD:

ASD Factors

	Inventory	Operating
Structural steel		
Concrete		
PS Concrete Comp.		
PS Concrete Tens.		
PS Moment Cap.		
Reinforcement		
Bearing Stiffener		
Stirrup		
Timber	NA	

Default Materials

Structural steel: ASTM A36
Deck concrete: Deck concrete
Deck reinforcement: Grade 40 Reinf Steel

Welds:
Bolts:

Impact

Standard Impact Factor

Type:	Standard - AASHTO
LRFD Dynamic Load Allowance	
Fatigue and fracture limit states:	15.0 *(%)*
All other limit states:	33.0 *(%)*

Live Load Distribution

Standard

D i s t r i b u t i o n F a c t o r (Wheels)

Lanes Loaded	Shear	Shear at Supports	Moment	Deflection
1 Lane				
Multi-Lane				

LRFD

Distance *(ft)*	Length *(ft)*	Type	1 Lane	Multi-Lane
0.00	110.000	Moment	0.457	0.654
0.00	110.000	Shear	0.660	0.779
0.00	110.000	Deflectio...	0.171	0.364

Girder Profile

Web

Begin Depth *(in)*	Depth Vary	End Depth *(in)*	Thickness *(in)*	Distance *(ft)*	Length *(ft)*	Material
72.0000	None	72.0000	0.4375	0.00	110.00	ASTM A36

Top Flange

Begin Width *(in)*	End Width *(in)*	Thickness *(in)*	Distance *(ft)*	Length *(ft)*	Material
12.0000	12.0000	0.6250	0.00	25.50	ASTM A36
12.0000	12.0000	0.8750	25.50	59.00	ASTM A36
12.0000	12.0000	0.6250	84.50	25.50	ASTM A36

Bottom Flange

Begin Width *(in)*	End Width *(in)*	Thickness *(in)*	Distance *(ft)*	Length *(ft)*	Material
18.0000	18.0000	1.0000	0.00	25.50	ASTM A36
18.0000	18.0000	1.3750	25.50	59.00	ASTM A36
18.0000	18.0000	1.0000	84.50	25.50	ASTM A36

Deck Profile

Deck Concrete

Material (LRFD)	Distance n (ft)	Length (ft)	Total Thickness (in)	Structural Thickness (in)	Effective Width (Std) (in)	Effective Width (in)
Deck concrete	0.00 8.00...	110.00		7.0000	84.0000	90.0000

Shear Connectors

Start Distance (ft)	Length (ft)	Connector Name	Number per Row	Number of Spaces	Transverse Spacing (in)
0.00	110.00	Composite			

Bracing Ranges

Lateral Support

Distance (ft)	Length (ft)
0.00	110.00

Stiffener Ranges

Transverse Stiffener Ranges (Location)

Name	Distance (ft)	Number	Spacing (in)
Web Stiffener Pair	0.00	19	66.0000

Bearing Stiffener Locations

Support 1

Stiffener Pair	Name	Offset (in)
1	Bearing Stiffener	0.0000

Support 2

Stiffener Pair	Name	Offset (in)
1	Bearing Stiffener	0.0000

Points of Interest

Distance from left most support:	49.50 (ft)
Side:	Right

Transverse Stiffeners

Override Schedule:	FALSE
Stiffener spacing:	(in)
Stiffener width:	(in)
Stiffener thickness:	(in)
Material:	ASTM A36
Stiffener number:	Single
Stiffener type:	Plate

Other Stiffeners

Bearing Stiffener

Override Schedule:	FALSE
Stiffener width:	*(in)*
Stiffener thickness:	*(in)*
Material:	ASTM A36
Clip:	*(in)*
Number of pairs:	
Pair spacing:	*(in)*
Attachment Type:	Welds
Longitudinal Stiffener	
Override Schedule:	FALSE
Stiffener width:	*(in)*
Stiffener thickness:	*(in)*
Material:	ASTM A36
Distance from flange to stiffener:	*(in)*
Distance measured from:	Top Flange
Fatigue	
Number of cycles:	0
Bracing	
Deck provides lateral support:	
Override diaphragm schedule:	FALSE
Distance to left diaphragm:	*(ft)*
Distance to right diaphragm:	*(ft)*
Diaphragm at this location:	FALSE
ASD	
Compression flange unsupported length:	*(ft)*
Tension Field Action	Ignore combined shear and bending
Riveted Section	
Net moment of inertia:	*(in^4)*
Distance to centroid:	*(in)*
Net area of web:	*(in^2)*
Top plate allowable shear:	*(ksi)*
Bottom plate allowable shear:	*(ksi)*
Percent area top flange:	*(%)*
Percent area bottom flange:	*(%)*

Member Alternative Girder F - As Inspected

Description: S-13 in plans

Description

Material Type:	Steel
Girder Type:	Plate
Member units:	US Customary
Girder property input method:	Schedule based
Left end X:	6.0000 *(in)*
Right end X:	11.0000 *(in)*
Additional Self Load:	*(kip/ft)*
Additional Self Load %:	*(%)*
Analysis Module	
Analysis Method:	ASD

Analysis Module: AASHTO ASD
Analysis Module Component:
Properties:

Analysis Method: LFD
Analysis Module: AASHTO LFD
Analysis Module Component:
Properties:

Analysis Method: LRFD
Analysis Module: AASHTO LRFD
Analysis Module Component:
Properties:

Analysis Method: LRFR
Analysis Module: AASHTO LRFR
Analysis Module Component:
Properties:

Analysis Method: Distribution Factors
Analysis Module: BrR Dist Fact
Analysis Module Component:
Properties:

Default rating method: LRFR

Factors
Factor Override
LRFD:
LFD:
ASD Factors

	Inventory	Operating
Structural steel		
Concrete		
PS Concrete Comp.		
PS Concrete Tens.		
PS Moment Cap.		
Reinforcement		
Bearing Stiffener		
Stirrup		
Timber	NA	

Default Materials
Structural steel: ASTM A36
Deck concrete: Deck concrete
Deck reinforcement: Grade 40 Reinf Steel
Welds:
Bolts:

Impact

Standard Impact Factor

Type:	Standard - AASHTO

LRFD Dynamic Load Allowance

Fatigue and fracture limit states:	15.0 *(%)*
All other limit states:	33.0 *(%)*

Live Load Distribution

Standard

	Distribution Factor (Wheels)			
Lanes Loaded	Shear	Shear at Supports	Moment	Deflection
1 Lane				
Multi-Lane				

LRFD

Distance *(ft)*	Length *(ft)*	Type	1 Lane	Multi-Lane
0.00	110.000	Moment	0.457	0.654
0.00	110.000	Shear	0.660	0.779
0.00	110.000	Deflectio...	0.171	0.364

Girder Profile

Web

Begin Depth *(in)*	End Depth Vary	End Depth *(in)*	Thickness *(in)*	Distance *(ft)*	Length *(ft)*	Material
72.0000	None	72.0000	0.4375	0.00	110.00	ASTM A36

Top Flange

Begin Width *(in)*	End Width *(in)*	Thickness *(in)*	Distance *(ft)*	Length *(ft)*	Material
12.0000	12.0000	0.6250	0.00	25.50	ASTM A36
12.0000	12.0000	0.8750	25.50	59.00	ASTM A36
12.0000	12.0000	0.6250	84.50	25.50	ASTM A36

Bottom Flange

Begin Width *(in)*	End Width *(in)*	Thickness *(in)*	Distance *(ft)*	Length *(ft)*	Material
18.0000	18.0000	1.0000	0.00	25.50	ASTM A36
18.0000	18.0000	1.3750	25.50	59.00	ASTM A36
18.0000	18.0000	1.0000	84.50	25.50	ASTM A36

Deck Profile

Deck Concrete

Material	Distance	Length	Total Thickness	Structural Thickness	Effective Width (Std)	Effective Width

(LRFD)	n					
	(ft)	*(ft)*	*(in)*	*(in)*	*(in)*	*(in)*
Deck concrete	0.00	110.00		7.0000	84.0000	90.0000
	8.00...					

Shear Connectors

Start Distance *(ft)*	Length *(ft)*	Connector Name	Number per Row	Number of Spaces	Transverse Spacing *(in)*
0.00	110.00	Composite			

Bracing Ranges

Lateral Support

Distance *(ft)*	Length *(ft)*
0.00	110.00

Stiffener Ranges

Transverse Stiffener Ranges (Location)

Name	Distance *(ft)*	Number	Spacing *(in)*
Web Stiffener Pair	0.00	19	66.0000

Bearing Stiffener Locations

Support 1

Stiffener Pair	Name	Offset *(in)*
1	Bearing Stiffener	0.0000

Support 2

Stiffener Pair	Name	Offset *(in)*
1	Bearing Stiffener	0.0000

Points of Interest

Distance from left most support:	49.50 *(ft)*
Side:	Right
Transverse Stiffeners	
Override Schedule:	FALSE
Stiffener spacing:	*(in)*
Stiffener width:	*(in)*
Stiffener thickness:	*(in)*
Material:	ASTM A36
Stiffener number:	Single
Stiffener type:	Plate
Other Stiffeners	
Bearing Stiffener	
Override Schedule:	FALSE
Stiffener width:	*(in)*
Stiffener thickness:	*(in)*

Material:	ASTM A36
Clip:	*(in)*
Number of pairs:	
Pair spacing:	*(in)*
Attachment Type:	Welds
Longitudinal Stiffener	
Override Schedule:	FALSE
Stiffener width:	*(in)*
Stiffener thickness:	*(in)*
Material:	ASTM A36
Distance from flange to stiffener:	*(in)*
Distance measured from:	Top Flange
Fatigue	
Number of cycles:	0
Bracing	
Deck provides lateral support:	
Override diaphragm schedule:	FALSE
Distance to left diaphragm:	*(ft)*
Distance to right diaphragm:	*(ft)*
Diaphragm at this location:	FALSE
ASD	
Compression flange unsupported length:	*(ft)*
Tension Field Action	Ignore combined shear and bending
Riveted Section	
Net moment of inertia:	*(in^4)*
Distance to centroid:	*(in)*
Net area of web:	*(in^2)*
Top plate allowable shear:	*(ksi)*
Bottom plate allowable shear:	*(ksi)*
Percent area top flange:	*(%)*
Percent area bottom flange:	*(%)*

Web Deterioration

Thickness Loss	Start Distance	Length
(%)	*(ft)*	*(ft)*
4.8	0.00	5.33
4.8	0.00	0.50

Member Girder G

Link with: None
Description:

Existing: Girder G - As Inspected - S-14 in plans
Current: Girder G - As Inspected - S-14 in plans
Number of Spans: 1

Span Number	Span Length *(ft)*

1	110.000000

Support	Frame Connection
1	
2	

Pedestrian load: *(lb/ft)*

Member Loads

Distributed Loads

Distance *(ft)*	Length *(ft)*	Start *(kip/ft)*	End *(kip/ft)*	Load Case Name
0.00	110.00	0.052	0.052	DC1
0.00	110.00	0.257	0.257	DC2
0.00	110.00	0.336	0.336	DW

Member Loads - Settlement

Support Number	Horizontal *(in)*	Vertical *(in)*	Rotational *(Radians)*	Load Case Name
1				
2				

Support Constraints

General

Support Number	Support Type	X Translation	Y Translation	Z Rotation
1	Pinned	Fixed	Fixed	Free
2	Roller	Free	Fixed	Free

Elastic

Support Number	X Translation *(kip/ft)*	Y Translation *(kip/ft)*	Z Rotation *(kip-in/rad)*	Override Computed Z Rotation
1				
2				

Member Alternative Girder G - As Built

Description: S-14 in plans

Description

Material Type:	Steel
Girder Type:	Plate
Member units:	US Customary
Girder property input method:	Schedule based
Left end X:	7.0000 *(in)*
Right end X:	13.0000 *(in)*
Additional Self Load:	*(kip/ft)*
Additional Self Load %:	*(%)*

Analysis Module

Analysis Method:	ASD
Analysis Module:	AASHTO ASD

Analysis Module Component:
Properties:

Analysis Method: LFD
Analysis Module: AASHTO LFD
Analysis Module Component:
Properties:

Analysis Method: LRFD
Analysis Module: AASHTO LRFD
Analysis Module Component:
Properties:

Analysis Method: LRFR
Analysis Module: AASHTO LRFR
Analysis Module Component:
Properties:

Analysis Method: Distribution Factors
Analysis Module: BrR Dist Fact
Analysis Module Component:
Properties:

Default rating method: LRFR

Factors
Factor Override
LRFD:
LFD:
ASD Factors

	Inventory	Operating
Structural steel		
Concrete		
PS Concrete Comp.		
PS Concrete Tens.		
PS Moment Cap.		
Reinforcement		
Bearing Stiffener		
Stirrup		
Timber	NA	

Default Materials
Structural steel: ASTM A36
Deck concrete: Deck concrete
Deck reinforcement: Grade 40 Reinf Steel
Welds:
Bolts:

Impact

Standard Impact Factor

Type:	Standard - AASHTO
LRFD Dynamic Load Allowance	
Fatigue and fracture limit states:	15.0 *(%)*
All other limit states:	33.0 *(%)*

Live Load Distribution

Standard

	Distribution Factor (Wheels)			
Lanes Loaded	Shear	Shear at Supports	Moment	Deflection
1 Lane				
Multi-Lane				

LRFD

Distance *(ft)*	Length *(ft)*	Type	1 Lane	Multi-Lane
0.00	110.000	Moment	0.463	0.600
0.00	110.000	Shear	0.463	0.600
0.00	110.000	Deflectio...	0.171	0.364

Girder Profile

Web

Begin Depth *(in)*	Depth Vary	End Depth *(in)*	Thickness *(in)*	Distance *(ft)*	Length *(ft)*	Material
72.0000	None	72.0000	0.4375	0.00	110.00	ASTM A36

Top Flange

Begin Width *(in)*	End Width *(in)*	Thickness *(in)*	Distance *(ft)*	Length *(ft)*	Material
12.0000	12.0000	0.6250	0.00	25.50	ASTM A36
12.0000	12.0000	0.8750	25.50	59.00	ASTM A36
12.0000	12.0000	0.6250	84.50	25.50	ASTM A36

Bottom Flange

Begin Width *(in)*	End Width *(in)*	Thickness *(in)*	Distance *(ft)*	Length *(ft)*	Material
18.0000	18.0000	1.0000	0.00	25.50	ASTM A36
18.0000	18.0000	1.3750	25.50	59.00	ASTM A36
18.0000	18.0000	1.0000	84.50	25.50	ASTM A36

Deck Profile

Deck Concrete

Material (LRFD)	Distance n	Length	Total Thickness	Structural Thickness	Effective Width (Std)	Effective Width

	(ft)	(ft)	(in)	(in)	(in)	(in)
Deck concrete	0.00 8.00...	110.00		7.0000	51.0000	54.0000

Shear Connectors

Start Distance (ft)	Length (ft)	Connector Name	Number per Row	Number of Spaces	Transverse Spacing (in)
0.00	110.00	Composite			

Bracing Ranges

Lateral Support

Distance (ft)	Length (ft)
0.00	110.00

Stiffener Ranges

Transverse Stiffener Ranges (Location)

Name	Distance (ft)	Number	Spacing (in)
Web Stiffener Sing...	0.00	19	66.0000

Bearing Stiffener Locations

Support 1

Stiffener Pair	Name	Offset (in)
1	Bearing Stiffener	0.0000

Support 2

Stiffener Pair	Name	Offset (in)
1	Bearing Stiffener	0.0000

Points of Interest

Distance from left most support:	49.50 (ft)
Side:	Right

Transverse Stiffeners

Override Schedule:	FALSE
Stiffener spacing:	(in)
Stiffener width:	(in)
Stiffener thickness:	(in)
Material:	ASTM A36
Stiffener number:	Single
Stiffener type:	Plate

Other Stiffeners

Bearing Stiffener

Override Schedule:	FALSE
Stiffener width:	(in)
Stiffener thickness:	(in)
Material:	ASTM A36

Clip:	*(in)*
Number of pairs:	
Pair spacing:	*(in)*
Attachment Type:	Welds
Longitudinal Stiffener	
Override Schedule:	FALSE
Stiffener width:	*(in)*
Stiffener thickness:	*(in)*
Material:	ASTM A36
Distance from flange to stiffener:	*(in)*
Distance measured from:	Top Flange
Fatigue	
Number of cycles:	0
Bracing	
Deck provides lateral support:	
Override diaphragm schedule:	FALSE
Distance to left diaphragm:	*(ft)*
Distance to right diaphragm:	*(ft)*
Diaphragm at this location:	FALSE
ASD	
Compression flange unsupported length:	*(ft)*
Tension Field Action	Ignore combined shear and bending
Riveted Section	
Net moment of inertia:	*(in^4)*
Distance to centroid:	*(in)*
Net area of web:	*(in^2)*
Top plate allowable shear:	*(ksi)*
Bottom plate allowable shear:	*(ksi)*
Percent area top flange:	*(%)*
Percent area bottom flange:	*(%)*

Member Alternative Girder G - As Inspected

Description: S-14 in plans

Description

Material Type:	Steel
Girder Type:	Plate
Member units:	US Customary
Girder property input method:	Schedule based
Left end X:	7.0000 *(in)*
Right end X:	13.0000 *(in)*
Additional Self Load:	*(kip/ft)*
Additional Self Load %:	*(%)*
Analysis Module	
Analysis Method:	ASD
Analysis Module:	AASHTO ASD
Analysis Module Component:	
Properties:	

Analysis Method: LFD
Analysis Module: AASHTO LFD
Analysis Module Component:
Properties:

Analysis Method: LRFD
Analysis Module: AASHTO LRFD
Analysis Module Component:
Properties:

Analysis Method: LRFR
Analysis Module: AASHTO LRFR
Analysis Module Component:
Properties:

Analysis Method: Distribution Factors
Analysis Module: BrR Dist Fact
Analysis Module Component:
Properties:

Default rating method: LRFR

Factors
Factor Override
LRFD:
LFD:
ASD Factors

	Inventory	Operating
Structural steel		
Concrete		
PS Concrete Comp.		
PS Concrete Tens.		
PS Moment Cap.		
Reinforcement		
Bearing Stiffener		
Stirrup		
Timber	NA	

Default Materials
Structural steel: ASTM A36
Deck concrete: Deck concrete
Deck reinforcement: Grade 40 Reinf Steel
Welds:
Bolts:

Impact
Standard Impact Factor
Type: Standard - AASHTO
LRFD Dynamic Load Allowance

Fatigue and fracture limit states: 15.0 *(%)*
All other limit states: 33.0 *(%)*

Live Load Distribution

Standard

D i s t r i b u t i o n F a c t o r (Wheels)

Lanes Loaded	Shear	Shear at Supports	Moment	Deflection
1 Lane				
Multi-Lane				

LRFD

Distance *(ft)*	Length *(ft)*	Type	1 Lane	Multi-Lane
0.00	110.000	Moment	0.463	0.600
0.00	110.000	Shear	0.463	0.600
0.00	110.000	Deflectio...	0.171	0.364

Girder Profile

Web

Begin Depth *(in)*	Depth Vary	End Depth *(in)*	Thickness *(in)*	Distance *(ft)*	Length *(ft)*	Material
72.0000	None	72.0000	0.4375	0.00	110.00	ASTM A36

Top Flange

Begin Width *(in)*	End Width *(in)*	Thickness *(in)*	Distance *(ft)*	Length *(ft)*	Material
12.0000	12.0000	0.6250	0.00	25.50	ASTM A36
12.0000	12.0000	0.8750	25.50	59.00	ASTM A36
12.0000	12.0000	0.6250	84.50	25.50	ASTM A36

Bottom Flange

Begin Width *(in)*	End Width *(in)*	Thickness *(in)*	Distance *(ft)*	Length *(ft)*	Material
18.0000	18.0000	1.0000	0.00	25.50	ASTM A36
18.0000	18.0000	1.3750	25.50	59.00	ASTM A36
18.0000	18.0000	1.0000	84.50	25.50	ASTM A36

Deck Profile

Deck Concrete

Material (LRFD)	Distance n *(ft)*	Length *(ft)*	Total Thickness *(in)*	Structural Thickness *(in)*	Effective Width (Std) *(in)*	Effective Width *(in)*
Deck concrete	0.00 8.00...	110.00		7.0000	51.0000	54.0000

Shear Connectors

Start Distance (ft)	Length (ft)	Connector Name	Number per Row	Number of Spaces	Transverse Spacing (in)
0.00	110.00	Composite			

Bracing Ranges

Lateral Support

Distance (ft)	Length (ft)
0.00	110.00

Stiffener Ranges

Transverse Stiffener Ranges (Location)

Name	Distance (ft)	Number	Spacing (in)
Web Stiffener Sing...	0.00	19	66.0000

Bearing Stiffener Locations

Support 1

Stiffener Pair	Name	Offset (in)
1	Bearing Stiffener	0.0000

Support 2

Stiffener Pair	Name	Offset (in)
1	Bearing Stiffener	0.0000

Points of Interest

Distance from left most support:	49.50 *(ft)*
Side:	Right

Transverse Stiffeners

Override Schedule:	FALSE
Stiffener spacing:	*(in)*
Stiffener width:	*(in)*
Stiffener thickness:	*(in)*
Material:	ASTM A36
Stiffener number:	Single
Stiffener type:	Plate

Other Stiffeners

Bearing Stiffener

Override Schedule:	FALSE
Stiffener width:	*(in)*
Stiffener thickness:	*(in)*
Material:	ASTM A36
Clip:	*(in)*
Number of pairs:	
Pair spacing:	*(in)*

Attachment Type:	Welds
Longitudinal Stiffener	
Override Schedule:	FALSE
Stiffener width:	*(in)*
Stiffener thickness:	*(in)*
Material:	ASTM A36
Distance from flange to stiffener:	*(in)*
Distance measured from:	Top Flange
Fatigue	
Number of cycles:	0
Bracing	
Deck provides lateral support:	
Override diaphragm schedule:	FALSE
Distance to left diaphragm:	*(ft)*
Distance to right diaphragm:	*(ft)*
Diaphragm at this location:	FALSE
ASD	
Compression flange unsupported length:	*(ft)*
Tension Field Action	Ignore combined shear and bending
Riveted Section	
Net moment of inertia:	*(in^4)*
Distance to centroid:	*(in)*
Net area of web:	*(in^2)*
Top plate allowable shear:	*(ksi)*
Bottom plate allowable shear:	*(ksi)*
Percent area top flange:	*(%)*
Percent area bottom flange:	*(%)*

Top Flange Deterioration

Width Loss	Thickness Loss	Start Distance	Length
(%)	*(%)*	*(ft)*	*(ft)*

Bottom Flange Deterioration

Width Loss	Thickness Loss	Start Distance	Length
(%)	*(%)*	*(ft)*	*(ft)*
0.0	31.0	0.00	10.00

Web Deterioration

Thickness Loss	Start Distance	Length
(%)	*(ft)*	*(ft)*
12.9	0.00	0.83
0.3	0.25	0.50
9.5	0.83	3.67

Bridge Name: Mohegan Bridge
NBI Structure ID:
Bridge ID: 067301

Analyzed By: BrR
Analyze Date: Friday, September 14, 2018 20:20:59
Analysis Engine: AASHTO LRFR Engine Version 6.8.2.3002
Analysis Preference Setting: None

Report By: brr
Report Date: Friday, September 14, 2018 20:22:25

Structure Definition Name: Span 1
Member Name: Girder A
Member Alternative Name: Girder A - As Inspected

Load and Resistance Factor Rating Summary

Live Load		Rating Factor	Girder Summary Controls	Capacity (Ton)	Span	Location (ft)	Percent	Impact	Lane
EV2	Legal	3.845	STRENGTH-I Steel Flexure Stress	110.54	1	55.00	50.0	As Requested	As Requested
EV3	Legal	2.538	STRENGTH-I Steel Flexure Stress	109.12	1	55.00	50.0	As Requested	As Requested
HL-93 (US)	Inventory	1.147	STRENGTH-I Steel Flexure Stress	41.30	1	55.00	50.0	As Requested	As Requested
HL-93 (US)	Operating	1.487	STRENGTH-I Steel Flexure Stress	53.54	1	55.00	50.0	As Requested	As Requested
SU4	Legal	3.076	STRENGTH-I Steel Flexure Stress	83.06	1	55.00	50.0	As Requested	As Requested
SU5	Legal	2.743	STRENGTH-I Steel Flexure Stress	85.04	1	55.00	50.0	As Requested	As Requested
SU6	Legal	2.454	STRENGTH-I Steel Flexure Stress	85.27	1	55.00	50.0	As Requested	As Requested
SU7	Legal	2.228	STRENGTH-I Steel Flexure Stress	86.32	1	55.00	50.0	As Requested	As Requested
Type 3	Legal	3.404	STRENGTH-I Steel Flexure Stress	85.10	1	55.00	50.0	As Requested	As Requested
Type 3-3	Legal	2.699	STRENGTH-I Steel Flexure Stress	107.95	1	55.00	50.0	As Requested	As Requested
Type 3S2	Legal	2.767	STRENGTH-I Steel Flexure Stress	99.61	1	55.00	50.0	As Requested	As Requested
RI-3	Permit	2.394	STRENGTH-II Steel Flexure Stress	90.98	1	55.00	50.0	As Requested	As Requested
RI-4	Permit	2.452	STRENGTH-II Steel Flexure Stress	91.96	1	55.00	50.0	As Requested	As Requested
RI-5	Permit	1.920	STRENGTH-II Steel Flexure Stress	100.63	1	55.00	50.0	As Requested	As Requested

RI-6	Permit	1.817	STRENGTH-II Steel Flexure Stress	118.10	1	49.50	45.0	As Requested	As Requested
RIDOT H20 Truck	Legal	3.981	STRENGTH-I Steel Flexure Stress	79.62	1	55.00	50.0	As Requested	As Requested
RI-OP 1	Permit	2.582	STRENGTH-II Steel Flexure Stress	145.86	1	55.00	50.0	As Requested	As Requested
RI-OP 2	Permit	2.718	STRENGTH-II Steel Flexure Stress	217.47	1	49.50	45.0	As Requested	As Requested
RI-OP 3	Permit	2.447	STRENGTH-II Steel Flexure Stress	276.55	1	55.00	50.0	As Requested	As Requested
RIPTA Bus	Legal	4.266	STRENGTH-I Steel Flexure Stress	88.73	1	55.00	50.0	As Requested	As Requested

Note:
"N/A" indicates not applicable
"**" indicates not available

Report by Action: ☑ **Flexure** ☑ **Shear** ☑ **Overload** ☑ **Interaction** ☑ **Critical**

Detailed Rating Results
Girder A - As Inspected
EV2
Axle Load
Impact: As Requested
Lane: As Requested

Span 1

Location (ft)	Percent	Limit State	Units	Capacity	DL + Adj -LL*	LL	Legal Rating Factor	Legal Load Rating (Ton)
0.00	0.0	Flexure	KSI	-36.00	-0.00	-0.00	99.000	2846.25
0.00	**0.0**	**Shear**	**KIPS**	**308.86**	**79.47**	**30.12**	**5.163**	**148.44**
0.00	0.0	Overload	KSI	-36.00	-0.00	-0.00	99.000	2846.25
0.92	0.8	Flexure	KSI	-35.76	-0.60	-0.07	99.000	2846.25
0.92	**0.8**	**Shear**	**KIPS**	**308.86**	**78.17**	**29.85**	**5.254**	**151.06**
0.92	0.8	Overload	KSI	-36.00	-0.60	-0.07	99.000	2846.25
11.00	**10.0**	**Flexure**	**KSI**	**36.00**	**5.79**	**1.80**	**12.101**	**347.91**
11.00	10.0	Shear	KIPS	542.44	63.87	26.93	13.048	375.14
11.00	10.0	Overload	KSI	36.00	5.79	1.80	12.160	349.60
22.00	**20.0**	**Flexure**	**KSI**	**36.00**	**10.32**	**3.17**	**5.397**	**155.17**
22.00	20.0	Shear	KIPS	542.44	48.26	23.73	15.484	445.17
22.00	20.0	Overload	KSI	36.00	10.32	3.17	5.798	166.69
25.50	**23.2**	**Flexure**	**KSI**	**36.00**	**11.49**	**3.51**	**4.523**	**130.02**
25.50	23.2	Shear	KIPS	542.44	43.06	22.72	16.413	471.87
25.50	23.2	Overload	KSI	36.00	11.49	3.51	4.970	142.88
33.00	**30.0**	**Flexure**	**KSI**	**36.00**	**10.65**	**3.32**	**5.047**	**145.11**
33.00	30.0	Shear	KIPS	542.44	32.17	20.54	18.700	537.63
33.00	30.0	Overload	KSI	36.00	10.65	3.32	5.459	156.94
44.00	**40.0**	**Flexure**	**KSI**	**36.00**	**12.19**	**3.74**	**4.060**	**116.73**
44.00	40.0	Shear	KIPS	542.44	16.20	17.34	23.094	663.96
44.00	40.0	Overload	KSI	36.00	12.19	3.74	4.532	130.29
49.50	**45.0**	**Flexure**	**KSI**	**36.00**	**12.57**	**3.82**	**3.873**	**111.35**
49.50	45.0	Shear	KIPS	542.44	7.98	15.75	25.974	746.75
49.50	45.0	Overload	KSI	36.00	12.57	3.82	4.360	125.36
55.00	**50.0**	**Flexure**	**KSI**	**36.00**	**12.69**	**3.81**	**3.845**	**110.54**
55.00	50.0	Shear	KIPS	542.44	0.00	-14.15	29.487	847.76
55.00	50.0	Overload	KSI	36.00	12.69	3.81	4.341	124.82

66.00	**60.0**	**Flexure**	**KSI**	**36.00**	**12.19**	**3.74**	**4.060**	**116.73**
66.00	60.0	Shear	KIPS	542.44	-16.20	-17.34	23.094	663.96
66.00	60.0	Overload	KSI	36.00	12.19	3.74	4.532	130.29
77.00	**70.0**	**Flexure**	**KSI**	**36.00**	**10.65**	**3.32**	**5.047**	**145.11**
77.00	70.0	Shear	KIPS	542.44	-32.17	-20.54	18.700	537.63
77.00	70.0	Overload	KSI	36.00	10.65	3.32	5.459	156.94
84.50	**76.8**	**Flexure**	**KSI**	**36.00**	**11.49**	**3.51**	**4.523**	**130.02**
84.50	76.8	Shear	KIPS	542.44	-43.06	-22.72	16.413	471.87
84.50	76.8	Overload	KSI	36.00	11.49	3.51	4.970	142.88
88.00	**80.0**	**Flexure**	**KSI**	**36.00**	**10.32**	**3.17**	**5.397**	**155.17**
88.00	80.0	Shear	KIPS	542.44	-48.26	-23.73	15.484	445.17
88.00	80.0	Overload	KSI	36.00	10.32	3.17	5.798	166.69
99.00	**90.0**	**Flexure**	**KSI**	**36.00**	**5.79**	**1.80**	**12.101**	**347.91**
99.00	90.0	Shear	KIPS	542.44	-63.87	-26.93	13.048	375.14
99.00	90.0	Overload	KSI	36.00	5.79	1.80	12.160	349.60
110.00	100.0	Flexure	KSI	-36.00	-0.00	-0.00	99.000	2846.25
110.00	**100.0**	**Shear**	**KIPS**	**336.32**	**-79.47**	**-30.12**	**5.865**	**168.61**
110.00	100.0	Overload	KSI	-36.00	-0.00	-0.00	99.000	2846.25

Detailed Rating Results
Girder A - As Inspected
EV3
Axle Load
Impact: As Requested
Lane: As Requested

Span 1

Location (ft)	Percent	Limit State	Units	Capacity	DL + Adj -LL*	LL	Legal Rating Factor	Legal Load Rating (Ton)
0.00	0.0	Flexure	KSI	-36.00	-0.00	-0.00	99.000	4257.00
0.00	**0.0**	**Shear**	**KIPS**	**308.86**	**79.47**	**44.84**	**3.468**	**149.14**
0.00	0.0	Overload	KSI	-36.00	-0.00	-0.00	99.000	4257.00
0.92	0.8	Flexure	KSI	-36.00	-0.60	-0.11	99.000	4257.00
0.92	**0.8**	**Shear**	**KIPS**	**308.86**	**78.17**	**44.44**	**3.530**	**151.77**
0.92	0.8	Overload	KSI	-36.00	-0.60	-0.11	99.000	4257.00
11.00	**10.0**	**Flexure**	**KSI**	**36.00**	**5.79**	**2.67**	**8.133**	**349.74**
11.00	10.0	Shear	KIPS	542.44	63.87	40.06	8.770	377.10
11.00	10.0	Overload	KSI	36.00	5.79	2.67	8.173	351.43
22.00	**20.0**	**Flexure**	**KSI**	**36.00**	**10.32**	**4.71**	**3.630**	**156.09**
22.00	20.0	Shear	KIPS	542.44	48.26	35.28	10.414	447.82

22.00	20.0	Overload	KSI	36.00	10.32	4.71	3.900	167.68
25.50	**23.2**	**Flexure**	**KSI**	**36.00**	**11.49**	**5.22**	**3.043**	**130.83**
25.50	23.2	Shear	KIPS	542.44	43.06	33.76	11.042	474.80
25.50	23.2	Overload	KSI	36.00	11.49	5.22	3.343	143.76
33.00	**30.0**	**Flexure**	**KSI**	**36.00**	**10.65**	**4.93**	**3.398**	**146.11**
33.00	30.0	Shear	KIPS	542.44	32.17	30.51	12.589	541.33
33.00	30.0	Overload	KSI	36.00	10.65	4.93	3.675	158.02
44.00	**40.0**	**Flexure**	**KSI**	**36.00**	**12.19**	**5.58**	**2.719**	**116.91**
44.00	40.0	Shear	KIPS	542.44	16.20	25.73	15.567	669.37
44.00	40.0	Overload	KSI	36.00	12.19	5.58	3.034	130.48
49.50	**45.0**	**Flexure**	**KSI**	**36.00**	**12.57**	**5.74**	**2.575**	**110.71**
49.50	45.0	Shear	KIPS	542.44	7.98	23.34	17.522	753.46
49.50	45.0	Overload	KSI	36.00	12.57	5.74	2.899	124.64
55.00	**50.0**	**Flexure**	**KSI**	**36.00**	**12.69**	**5.77**	**2.538**	**109.12**
55.00	50.0	Shear	KIPS	542.44	0.00	-20.95	19.913	856.25
55.00	50.0	Overload	KSI	36.00	12.69	5.77	2.866	123.22
66.00	**60.0**	**Flexure**	**KSI**	**36.00**	**12.19**	**5.58**	**2.719**	**116.91**
66.00	60.0	Shear	KIPS	542.44	-16.20	-25.73	15.567	669.37
66.00	60.0	Overload	KSI	36.00	12.19	5.58	3.034	130.48
77.00	**70.0**	**Flexure**	**KSI**	**36.00**	**10.65**	**4.93**	**3.398**	**146.11**
77.00	70.0	Shear	KIPS	542.44	-32.17	-30.51	12.589	541.33
77.00	70.0	Overload	KSI	36.00	10.65	4.93	3.675	158.02
84.50	**76.8**	**Flexure**	**KSI**	**36.00**	**11.49**	**5.22**	**3.043**	**130.83**
84.50	76.8	Shear	KIPS	542.44	-43.06	-33.76	11.042	474.80
84.50	76.8	Overload	KSI	36.00	11.49	5.22	3.343	143.76
88.00	**80.0**	**Flexure**	**KSI**	**36.00**	**10.32**	**4.71**	**3.630**	**156.09**
88.00	80.0	Shear	KIPS	542.44	-48.26	-35.28	10.414	447.82
88.00	80.0	Overload	KSI	36.00	10.32	4.71	3.900	167.68
99.00	**90.0**	**Flexure**	**KSI**	**36.00**	**5.79**	**2.67**	**8.133**	**349.74**
99.00	90.0	Shear	KIPS	542.44	-63.87	-40.06	8.770	377.10
99.00	90.0	Overload	KSI	36.00	5.79	2.67	8.173	351.43
110.00	100.0	Flexure	KSI	-36.00	-0.00	-0.00	99.000	4257.00
110.00	**100.0**	**Shear**	**KIPS**	**336.32**	**-79.47**	**-44.84**	**3.940**	**169.40**
110.00	100.0	Overload	KSI	-36.00	-0.00	-0.00	99.000	4257.00

Detailed Rating Results
Girder A - As Inspected
HL-93 (US)
Truck + Lane
Impact: As Requested
Lane: As Requested

Span 1

Location (ft)	Percent	Limit State	Units	Capacity	DL + Adj-LL*	LL	Inventory Rating Factor	Inventory Load Rating (Ton)	Operating Rating Factor	Operating Load Rating (Ton)
0.00	0.0	Flexure	KSI	-36.00	-0.00	-0.00	99.000	3564.00	99.000	3564.00
0.00	**0.0**	**Shear**	**KIPS**	**308.86**	**79.47**	**73.70**	**1.567**	**56.43**	**2.032**	**73.15**
0.00	0.0	Overload	KSI	-36.00	-0.00	-0.00	99.000	3564.00	99.000	3564.00
0.92	0.8	Flexure	KSI	36.00	0.53	0.41	49.231	1772.32	63.818	2297.45
0.92	**0.8**	**Shear**	**KIPS**	**308.86**	**78.17**	**72.87**	**1.599**	**57.56**	**2.073**	**74.62**
0.92	0.8	Overload	KSI	36.00	0.53	0.41	63.228	2276.20	82.196	2959.06
11.00	**10.0**	**Flexure**	**KSI**	**36.00**	**5.79**	**4.39**	**3.676**	**132.34**	**4.765**	**171.55**
11.00	10.0	Shear	KIPS	542.44	63.87	63.94	4.082	146.94	5.291	190.47
11.00	10.0	Overload	KSI	36.00	5.79	4.39	4.973	179.01	6.464	232.72
22.00	**20.0**	**Flexure**	**KSI**	**36.00**	**10.32**	**7.74**	**1.641**	**59.07**	**2.127**	**76.57**
22.00	20.0	Shear	KIPS	542.44	48.26	54.61	4.999	179.96	6.480	233.28
22.00	20.0	Overload	KSI	36.00	10.32	7.74	2.373	85.43	3.085	111.05
25.50	**23.2**	**Flexure**	**KSI**	**36.00**	**11.49**	**8.59**	**1.375**	**49.51**	**1.783**	**64.19**
25.50	23.2	Shear	KIPS	542.44	43.06	51.72	5.354	192.76	6.941	249.87
25.50	23.2	Overload	KSI	36.00	11.49	8.59	2.035	73.24	2.645	95.22
33.00	**30.0**	**Flexure**	**KSI**	**36.00**	**10.65**	**8.10**	**1.536**	**55.30**	**1.991**	**71.69**
33.00	30.0	Shear	KIPS	542.44	32.17	45.69	6.244	224.78	8.094	291.39
33.00	30.0	Overload	KSI	36.00	10.65	8.10	2.237	80.52	2.908	104.67
44.00	**40.0**	**Flexure**	**KSI**	**36.00**	**12.19**	**9.19**	**1.226**	**44.13**	**1.589**	**57.21**
44.00	40.0	Shear	KIPS	542.44	16.20	37.20	7.998	287.94	10.368	373.26
44.00	40.0	Overload	KSI	36.00	12.19	9.19	1.842	66.30	2.394	86.20
49.50	**45.0**	**Flexure**	**KSI**	**36.00**	**12.57**	**9.45**	**1.162**	**41.85**	**1.507**	**54.25**
49.50	45.0	Shear	KIPS	542.44	7.98	33.11	9.176	330.32	11.894	428.19
49.50	45.0	Overload	KSI	36.00	12.57	9.45	1.762	63.42	2.290	82.45
55.00	**50.0**	**Flexure**	**KSI**	**36.00**	**12.69**	**9.49**	**1.147**	**41.30**	**1.487**	**53.54**
55.00	50.0	Shear	KIPS	542.44	0.00	-29.13	10.640	383.03	13.792	496.52
55.00	50.0	Overload	KSI	36.00	12.69	9.49	1.744	62.79	2.267	81.62
66.00	**60.0**	**Flexure**	**KSI**	**36.00**	**12.19**	**9.19**	**1.226**	**44.13**	**1.589**	**57.21**
66.00	60.0	Shear	KIPS	542.44	-16.20	-37.20	7.998	287.94	10.368	373.26
66.00	60.0	Overload	KSI	36.00	12.19	9.19	1.842	66.30	2.394	86.20
77.00	**70.0**	**Flexure**	**KSI**	**36.00**	**10.65**	**8.10**	**1.536**	**55.30**	**1.991**	**71.69**
77.00	70.0	Shear	KIPS	542.44	-32.17	-45.69	6.244	224.78	8.094	291.39
77.00	70.0	Overload	KSI	36.00	10.65	8.10	2.237	80.52	2.908	104.67
84.50	**76.8**	**Flexure**	**KSI**	**36.00**	**11.49**	**8.59**	**1.375**	**49.51**	**1.783**	**64.19**
84.50	76.8	Shear	KIPS	542.44			5.354	192.76	6.941	249.87

					-43.06	-51.72				
84.50	76.8	Overload	KSI	36.00	11.49	8.59	2.035	73.24	2.645	95.22
88.00	**80.0**	**Flexure**	**KSI**	**36.00**	**10.32**	**7.74**	**1.641**	**59.07**	**2.127**	**76.57**
88.00	80.0	Shear	KIPS	542.44	-48.26	-54.61	4.999	179.96	6.480	233.28
88.00	80.0	Overload	KSI	36.00	10.32	7.74	2.373	85.43	3.085	111.05
99.00	**90.0**	**Flexure**	**KSI**	**36.00**	**5.79**	**4.39**	**3.676**	**132.34**	**4.765**	**171.55**
99.00	90.0	Shear	KIPS	542.44	-63.87	-63.94	4.082	146.94	5.291	190.47
99.00	90.0	Overload	KSI	36.00	5.79	4.39	4.973	179.01	6.464	232.72
110.00	100.0	Flexure	KSI	-36.00	-0.00	-0.00	99.000	3564.00	99.000	3564.00
110.00	**100.0**	**Shear**	**KIPS**	**336.32**	**-79.47**	**-73.70**	**1.780**	**64.09**	**2.308**	**83.09**
110.00	100.0	Overload	KSI	-36.00	-0.00	-0.00	99.000	3564.00	99.000	3564.00

Detailed Rating Results
Girder A - As Inspected
HL-93 (US)
Tandem + Lane
Impact: As Requested
Lane: As Requested

Span 1

Location (ft)	Percent	Limit State	Units	Capacity	DL + Adj-LL*	LL	Inventory Rating Factor	Inventory Load Rating (Ton)	Operating Rating Factor	Operating Load Rating (Ton)
0.00	0.0	Flexure	KSI	-36.00	-0.00	-0.00	99.000	3564.00	99.000	3564.00
0.00	**0.0**	**Shear**	**KIPS**	**308.86**	**79.47**	**60.29**	**1.916**	**68.97**	**2.484**	**89.41**
0.00	0.0	Overload	KSI	-36.00	-0.00	-0.00	99.000	3564.00	99.000	3564.00
0.92	0.8	Flexure	KSI	36.00	0.53	0.34	60.150	2165.41	77.973	2807.01
0.92	**0.8**	**Shear**	**KIPS**	**308.86**	**78.17**	**59.61**	**1.955**	**70.37**	**2.534**	**91.22**
0.92	0.8	Overload	KSI	36.00	0.53	0.34	77.251	2781.05	99.000	3564.00
11.00	**10.0**	**Flexure**	**KSI**	**36.00**	**5.79**	**3.62**	**4.466**	**160.79**	**5.790**	**208.43**
11.00	10.0	Shear	KIPS	542.44	63.87	52.29	4.991	179.67	6.470	232.91
11.00	10.0	Overload	KSI	36.00	5.79	3.62	6.042	217.50	7.854	282.75
22.00	**20.0**	**Flexure**	**KSI**	**36.00**	**10.32**	**6.42**	**1.978**	**71.22**	**2.565**	**92.33**
22.00	20.0	Shear	KIPS	542.44	48.26	44.71	6.105	219.79	7.914	284.91
22.00	20.0	Overload	KSI	36.00	10.32	6.42	2.861	103.00	3.720	133.90
25.50	**23.2**	**Flexure**	**KSI**	**36.00**	**11.49**	**7.14**	**1.654**	**59.53**	**2.144**	**77.17**
25.50	23.2	Shear	KIPS	542.44	43.06	42.39	6.534	235.22	8.470	304.91

25.50	23.2	Overload	KSI	36.00	11.49	7.14	2.446	88.06	3.180	114.48
33.00	**30.0**	**Flexure**	**KSI**	**36.00**	**10.65**	**6.78**	**1.834**	**66.02**	**2.377**	**85.58**
33.00	30.0	Shear	KIPS	542.44	32.17	37.55	7.597	273.50	9.848	354.54
33.00	30.0	Overload	KSI	36.00	10.65	6.78	2.670	96.12	3.471	124.96
44.00	**40.0**	**Flexure**	**KSI**	**36.00**	**12.19**	**7.73**	**1.458**	**52.48**	**1.890**	**68.03**
44.00	40.0	Shear	KIPS	542.44	16.20	30.82	9.655	347.59	12.516	450.58
44.00	40.0	Overload	KSI	36.00	12.19	7.73	2.190	78.85	2.847	102.51
49.50	**45.0**	**Flexure**	**KSI**	**36.00**	**12.57**	**7.96**	**1.380**	**49.67**	**1.789**	**64.39**
49.50	45.0	Shear	KIPS	542.44	7.98	27.61	11.006	396.20	14.266	513.59
49.50	45.0	Overload	KSI	36.00	12.57	7.96	2.091	75.28	2.718	97.86
55.00	**50.0**	**Flexure**	**KSI**	**36.00**	**12.69**	**8.02**	**1.357**	**48.85**	**1.759**	**63.32**
55.00	50.0	Shear	KIPS	542.44	0.00	-24.50	12.649	455.38	16.397	590.30
55.00	50.0	Overload	KSI	36.00	12.69	8.02	2.063	74.25	2.681	96.53
66.00	**60.0**	**Flexure**	**KSI**	**36.00**	**12.19**	**7.73**	**1.458**	**52.48**	**1.890**	**68.03**
66.00	60.0	Shear	KIPS	542.44	-16.20	-30.82	9.655	347.59	12.516	450.58
66.00	60.0	Overload	KSI	36.00	12.19	7.73	2.190	78.85	2.847	102.51
77.00	**70.0**	**Flexure**	**KSI**	**36.00**	**10.65**	**6.78**	**1.834**	**66.02**	**2.377**	**85.58**
77.00	70.0	Shear	KIPS	542.44	-32.17	-37.55	7.597	273.50	9.848	354.54
77.00	70.0	Overload	KSI	36.00	10.65	6.78	2.670	96.12	3.471	124.96
84.50	**76.8**	**Flexure**	**KSI**	**36.00**	**11.49**	**7.14**	**1.654**	**59.53**	**2.144**	**77.17**
84.50	76.8	Shear	KIPS	542.44	-43.06	-42.39	6.534	235.22	8.470	304.91
84.50	76.8	Overload	KSI	36.00	11.49	7.14	2.446	88.06	3.180	114.48
88.00	**80.0**	**Flexure**	**KSI**	**36.00**	**10.32**	**6.42**	**1.978**	**71.22**	**2.565**	**92.33**
88.00	80.0	Shear	KIPS	542.44	-48.26	-44.71	6.105	219.79	7.914	284.91
88.00	80.0	Overload	KSI	36.00	10.32	6.42	2.861	103.00	3.720	133.90
99.00	**90.0**	**Flexure**	**KSI**	**36.00**	**5.79**	**3.62**	**4.466**	**160.79**	**5.790**	**208.43**
99.00	90.0	Shear	KIPS	542.44	-63.87	-52.29	4.991	179.67	6.470	232.91
99.00	90.0	Overload	KSI	36.00	5.79	3.62	6.042	217.50	7.854	282.75
110.00	100.0	Flexure	KSI	-36.00	-0.00	-0.00	99.000	3564.00	99.000	3564.00
110.00	**100.0**	**Shear**	**KIPS**	**336.32**	**-79.47**	**-60.29**	**2.176**	**78.35**	**2.821**	**101.56**
110.00	100.0	Overload	KSI	-36.00	-0.00	-0.00	99.000	3564.00	99.000	3564.00

Detailed Rating Results
Girder A - As Inspected
LRFD Fatigue Truck (US)
Axle Load
Impact: As Requested
Lane: As Requested

Span 1

Location (ft)	Percent	Limit State	Units	Capacity	DL + Adj-LL*	LL	Inventory Rating Factor	Inventory Load Rating (Ton)
0.92	0.8	Interaction	KSI	16.00	0.00	0.22	73.078	2192.35
11.00	10.0	Interaction	KSI	12.00	0.00	2.32	5.179	155.38
22.00	20.0	Interaction	KSI	12.00	0.00	4.00	2.998	89.93
25.50	23.2	Interaction	KSI	16.00	0.00	4.49	3.560	106.80
33.00	30.0	Interaction	KSI	12.00	0.00	4.13	2.904	87.11
44.00	40.0	Interaction	KSI	12.00	0.00	4.62	2.597	77.92
49.50	45.0	Interaction	KSI	12.00	0.00	4.67	2.567	77.02
55.00	50.0	Interaction	KSI	12.00	0.00	4.60	2.608	78.23
66.00	60.0	Interaction	KSI	12.00	0.00	4.62	2.597	77.92
77.00	70.0	Interaction	KSI	12.00	0.00	4.13	2.904	87.11
84.50	76.8	Interaction	KSI	16.00	0.00	4.41	3.631	108.92
88.00	80.0	Interaction	KSI	12.00	0.00	4.00	2.998	89.93
99.00	90.0	Interaction	KSI	12.00	0.00	2.32	5.179	155.38

Detailed Rating Results
Girder A - As Inspected
SU4
Axle Load
Impact: As Requested
Lane: As Requested

Span 1

Location (ft)	Percent	Limit State	Units	Capacity	DL + Adj -LL*	LL	Legal Rating Factor	Legal Load Rating (Ton)
0.00	0.0	Flexure	KSI	-36.00	-0.00	-0.00	99.000	2673.00
0.00	0.0	Shear	KIPS	308.86	79.47	36.60	4.249	114.72
0.00	0.0	Overload	KSI	-36.00	-0.00	-0.00	99.000	2673.00
0.92	0.8	Flexure	KSI	-35.90	-0.60	-0.09	99.000	2673.00
0.92	0.8	Shear	KIPS	308.86	78.17	36.28	4.324	116.74
0.92	0.8	Overload	KSI	-36.00	-0.60	-0.09	99.000	2673.00
11.00	10.0	Flexure	KSI	36.00	5.79	2.18	9.960	268.92
11.00	10.0	Shear	KIPS	542.44	63.87	32.71	10.739	289.97

11.00	10.0	Overload	KSI	36.00	5.79	2.18	10.008	270.23
22.00	**20.0**	**Flexure**	**KSI**	**36.00**	**10.32**	**3.85**	**4.443**	**119.97**
22.00	20.0	Shear	KIPS	542.44	48.26	28.83	12.748	344.19
22.00	20.0	Overload	KSI	36.00	10.32	3.85	4.773	128.88
25.50	**23.2**	**Flexure**	**KSI**	**36.00**	**11.49**	**4.27**	**3.724**	**100.54**
25.50	23.2	Shear	KIPS	542.44	43.06	27.59	13.514	364.87
25.50	23.2	Overload	KSI	36.00	11.49	4.27	4.092	110.48
33.00	**30.0**	**Flexure**	**KSI**	**36.00**	**10.65**	**4.03**	**4.157**	**112.23**
33.00	30.0	Shear	KIPS	542.44	32.17	24.94	15.401	415.82
33.00	30.0	Overload	KSI	36.00	10.65	4.03	4.496	121.39
44.00	**40.0**	**Flexure**	**KSI**	**36.00**	**12.19**	**4.60**	**3.298**	**89.06**
44.00	40.0	Shear	KIPS	542.44	16.20	21.05	19.029	513.78
44.00	40.0	Overload	KSI	36.00	12.19	4.60	3.681	99.40
49.50	**45.0**	**Flexure**	**KSI**	**36.00**	**12.57**	**4.73**	**3.123**	**84.31**
49.50	45.0	Shear	KIPS	542.44	7.98	19.11	21.408	578.02
49.50	45.0	Overload	KSI	36.00	12.57	4.73	3.516	94.92
55.00	**50.0**	**Flexure**	**KSI**	**36.00**	**12.69**	**4.76**	**3.076**	**83.06**
55.00	50.0	Shear	KIPS	542.44	0.00	-17.16	24.313	656.46
55.00	50.0	Overload	KSI	36.00	12.69	4.76	3.474	93.79
66.00	**60.0**	**Flexure**	**KSI**	**36.00**	**12.19**	**4.60**	**3.298**	**89.06**
66.00	60.0	Shear	KIPS	542.44	-16.20	-21.05	19.029	513.78
66.00	60.0	Overload	KSI	36.00	12.19	4.60	3.681	99.40
77.00	**70.0**	**Flexure**	**KSI**	**36.00**	**10.65**	**4.03**	**4.157**	**112.23**
77.00	70.0	Shear	KIPS	542.44	-32.17	-24.94	15.401	415.82
77.00	70.0	Overload	KSI	36.00	10.65	4.03	4.496	121.39
84.50	**76.8**	**Flexure**	**KSI**	**36.00**	**11.49**	**4.27**	**3.724**	**100.54**
84.50	76.8	Shear	KIPS	542.44	-43.06	-27.59	13.514	364.87
84.50	76.8	Overload	KSI	36.00	11.49	4.27	4.092	110.48
88.00	**80.0**	**Flexure**	**KSI**	**36.00**	**10.32**	**3.85**	**4.443**	**119.97**
88.00	80.0	Shear	KIPS	542.44	-48.26	-28.83	12.748	344.19
88.00	80.0	Overload	KSI	36.00	10.32	3.85	4.773	128.88
99.00	**90.0**	**Flexure**	**KSI**	**36.00**	**5.79**	**2.18**	**9.960**	**268.92**
99.00	90.0	Shear	KIPS	542.44	-63.87	-32.71	10.739	289.97
99.00	90.0	Overload	KSI	36.00	5.79	2.18	10.008	270.23
110.00	100.0	Flexure	KSI	-36.00	-0.00	-0.00	99.000	2673.00
110.00	**100.0**	**Shear**	**KIPS**	**336.32**	**-79.47**	**-36.60**	**4.826**	**130.30**
110.00	100.0	Overload	KSI	-36.00	-0.00	-0.00	99.000	2673.00

Detailed Rating Results
Girder A - As Inspected
SU5
Axle Load
Impact: As Requested

Lane: As Requested

Span 1

Location (ft)	Percent	Limit State	Units	Capacity	DL + Adj -LL*	LL	Legal Rating Factor	Legal Load Rating (Ton)
0.00	0.0	Flexure	KSI	-36.00	-0.00	-0.00	99.000	3069.00
0.00	**0.0**	**Shear**	**KIPS**	**308.86**	**79.47**	**41.42**	**3.755**	**116.39**
0.00	0.0	Overload	KSI	-36.00	-0.00	-0.00	99.000	3069.00
0.92	0.8	Flexure	KSI	-36.00	-0.60	-0.10	99.000	3069.00
0.92	**0.8**	**Shear**	**KIPS**	**308.86**	**78.17**	**41.05**	**3.821**	**118.46**
0.92	0.8	Overload	KSI	-36.00	-0.60	-0.10	99.000	3069.00
11.00	**10.0**	**Flexure**	**KSI**	**36.00**	**5.79**	**2.47**	**8.817**	**273.33**
11.00	10.0	Shear	KIPS	542.44	63.87	36.96	9.507	294.71
11.00	10.0	Overload	KSI	36.00	5.79	2.47	8.860	274.65
22.00	**20.0**	**Flexure**	**KSI**	**36.00**	**10.32**	**4.34**	**3.942**	**122.20**
22.00	20.0	Shear	KIPS	542.44	48.26	32.49	11.310	350.60
22.00	20.0	Overload	KSI	36.00	10.32	4.34	4.235	131.28
25.50	**23.2**	**Flexure**	**KSI**	**36.00**	**11.49**	**4.81**	**3.306**	**102.50**
25.50	23.2	Shear	KIPS	542.44	43.06	31.07	11.999	371.97
25.50	23.2	Overload	KSI	36.00	11.49	4.81	3.633	112.63
33.00	**30.0**	**Flexure**	**KSI**	**36.00**	**10.65**	**4.55**	**3.680**	**114.09**
33.00	30.0	Shear	KIPS	542.44	32.17	28.03	13.703	424.80
33.00	30.0	Overload	KSI	36.00	10.65	4.55	3.980	123.39
44.00	**40.0**	**Flexure**	**KSI**	**36.00**	**12.19**	**5.19**	**2.925**	**90.68**
44.00	40.0	Shear	KIPS	542.44	16.20	23.56	16.999	526.97
44.00	40.0	Overload	KSI	36.00	12.19	5.19	3.265	101.22
49.50	**45.0**	**Flexure**	**KSI**	**36.00**	**12.57**	**5.32**	**2.777**	**86.07**
49.50	45.0	Shear	KIPS	542.44	7.98	21.33	19.175	594.42
49.50	45.0	Overload	KSI	36.00	12.57	5.32	3.126	96.90
55.00	**50.0**	**Flexure**	**KSI**	**36.00**	**12.69**	**5.34**	**2.743**	**85.04**
55.00	50.0	Shear	KIPS	542.44	0.00	-19.10	21.847	677.26
55.00	50.0	Overload	KSI	36.00	12.69	5.34	3.098	96.03
66.00	**60.0**	**Flexure**	**KSI**	**36.00**	**12.19**	**5.19**	**2.925**	**90.68**
66.00	60.0	Shear	KIPS	542.44	-16.20	-23.56	16.999	526.97
66.00	60.0	Overload	KSI	36.00	12.19	5.19	3.265	101.22
77.00	**70.0**	**Flexure**	**KSI**	**36.00**	**10.65**	**4.55**	**3.680**	**114.09**
77.00	70.0	Shear	KIPS	542.44	-32.17	-28.03	13.703	424.80
77.00	70.0	Overload	KSI	36.00	10.65	4.55	3.980	123.39
84.50	**76.8**	**Flexure**	**KSI**	**36.00**	**11.49**	**4.81**	**3.306**	**102.50**
84.50	76.8	Shear	KIPS	542.44	-43.06	-31.07	11.999	371.97

84.50	76.8	Overload	KSI	36.00	11.49	4.81	3.633	112.63
88.00	**80.0**	**Flexure**	**KSI**	**36.00**	**10.32**	**4.34**	**3.942**	**122.20**
88.00	80.0	Shear	KIPS	542.44	-48.26	-32.49	11.310	350.60
88.00	80.0	Overload	KSI	36.00	10.32	4.34	4.235	131.28
99.00	**90.0**	**Flexure**	**KSI**	**36.00**	**5.79**	**2.47**	**8.817**	**273.33**
99.00	90.0	Shear	KIPS	542.44	-63.87	-36.96	9.507	294.71
99.00	90.0	Overload	KSI	36.00	5.79	2.47	8.860	274.65
110.00	100.0	Flexure	KSI	-36.00	-0.00	-0.00	99.000	3069.00
110.00	**100.0**	**Shear**	**KIPS**	**336.32**	**-79.47**	**-41.42**	**4.265**	**132.21**
110.00	100.0	Overload	KSI	-36.00	-0.00	-0.00	99.000	3069.00

Detailed Rating Results
Girder A - As Inspected
SU6
Axle Load
Impact: As Requested
Lane: As Requested

Span 1

Location (ft)	Percent	Limit State	Units	Capacity	DL + Adj -LL*	LL	Legal Rating Factor	Legal Load Rating (Ton)
0.00	0.0	Flexure	KSI	-36.00	-0.00	-0.00	99.000	3440.25
0.00	**0.0**	**Shear**	**KIPS**	**308.86**	**79.47**	**45.28**	**3.434**	**119.34**
0.00	0.0	Overload	KSI	-36.00	-0.00	-0.00	99.000	3440.25
0.92	0.8	Flexure	KSI	-36.00	-0.60	-0.11	99.000	3440.25
0.92	**0.8**	**Shear**	**KIPS**	**308.86**	**78.17**	**44.86**	**3.496**	**121.49**
0.92	0.8	Overload	KSI	-36.00	-0.60	-0.11	99.000	3440.25
11.00	**10.0**	**Flexure**	**KSI**	**36.00**	**5.79**	**2.69**	**8.090**	**281.12**
11.00	10.0	Shear	KIPS	542.44	63.87	40.28	8.723	303.12
11.00	10.0	Overload	KSI	36.00	5.79	2.69	8.129	282.49
22.00	**20.0**	**Flexure**	**KSI**	**36.00**	**10.32**	**4.81**	**3.553**	**123.48**
22.00	20.0	Shear	KIPS	542.44	48.26	35.27	10.418	362.02
22.00	20.0	Overload	KSI	36.00	10.32	4.81	3.817	132.65
25.50	**23.2**	**Flexure**	**KSI**	**36.00**	**11.49**	**5.35**	**2.969**	**103.19**
25.50	23.2	Shear	KIPS	542.44	43.06	33.68	11.069	384.66
25.50	23.2	Overload	KSI	36.00	11.49	5.35	3.263	113.39
33.00	**30.0**	**Flexure**	**KSI**	**36.00**	**10.65**	**5.07**	**3.302**	**114.75**
33.00	30.0	Shear	KIPS	542.44	32.17	30.27	12.688	440.92
33.00	30.0	Overload	KSI	36.00	10.65	5.07	3.572	124.11
44.00	**40.0**	**Flexure**	**KSI**	**36.00**	**12.19**	**5.76**	**2.633**	**91.50**

44.00	40.0	Shear	KIPS	542.44	16.20	25.27	15.854	550.93
44.00	40.0	Overload	KSI	36.00	12.19	5.76	2.939	102.13
49.50	**45.0**	**Flexure**	**KSI**	**36.00**	**12.57**	**5.93**	**2.491**	**86.57**
49.50	45.0	Shear	KIPS	542.44	7.98	22.76	17.969	624.41
49.50	45.0	Overload	KSI	36.00	12.57	5.93	2.805	97.46
55.00	**50.0**	**Flexure**	**KSI**	**36.00**	**12.69**	**5.97**	**2.454**	**85.27**
55.00	50.0	Shear	KIPS	542.44	0.00	-20.26	20.594	715.65
55.00	50.0	Overload	KSI	36.00	12.69	5.97	2.771	96.28
66.00	**60.0**	**Flexure**	**KSI**	**36.00**	**12.19**	**5.76**	**2.633**	**91.50**
66.00	60.0	Shear	KIPS	542.44	-16.20	-25.27	15.854	550.93
66.00	60.0	Overload	KSI	36.00	12.19	5.76	2.939	102.13
77.00	**70.0**	**Flexure**	**KSI**	**36.00**	**10.65**	**5.07**	**3.302**	**114.75**
77.00	70.0	Shear	KIPS	542.44	-32.17	-30.27	12.688	440.92
77.00	70.0	Overload	KSI	36.00	10.65	5.07	3.572	124.11
84.50	**76.8**	**Flexure**	**KSI**	**36.00**	**11.49**	**5.35**	**2.969**	**103.19**
84.50	76.8	Shear	KIPS	542.44	-43.06	-33.68	11.069	384.66
84.50	76.8	Overload	KSI	36.00	11.49	5.35	3.263	113.39
88.00	**80.0**	**Flexure**	**KSI**	**36.00**	**10.32**	**4.81**	**3.553**	**123.48**
88.00	80.0	Shear	KIPS	542.44	-48.26	-35.27	10.418	362.02
88.00	80.0	Overload	KSI	36.00	10.32	4.81	3.817	132.65
99.00	**90.0**	**Flexure**	**KSI**	**36.00**	**5.79**	**2.69**	**8.090**	**281.12**
99.00	90.0	Shear	KIPS	542.44	-63.87	-40.28	8.723	303.12
99.00	90.0	Overload	KSI	36.00	5.79	2.69	8.129	282.49
110.00	100.0	Flexure	KSI	-36.00	-0.00	-0.00	99.000	3440.25
110.00	**100.0**	**Shear**	**KIPS**	**336.32**	**-79.47**	**-45.28**	**3.901**	**135.56**
110.00	100.0	Overload	KSI	-36.00	-0.00	-0.00	99.000	3440.25

Detailed Rating Results
Girder A - As Inspected
SU7
Axle Load
Impact: As Requested
Lane: As Requested

Span 1

Location (ft)	Percent	Limit State	Units	Capacity	DL + Adj -LL*	LL	Legal Rating Factor	Legal Load Rating (Ton)
0.00	0.0	Flexure	KSI	-36.00	-0.00	-0.00	99.000	3836.25
0.00	**0.0**	**Shear**	**KIPS**	**308.86**	**79.47**	**49.22**	**3.159**	**122.43**
0.00	0.0	Overload	KSI	-36.00	-0.00	-0.00	99.000	3836.25

0.92	0.8	Flexure	KSI	-36.00	-0.60	-0.12	99.000	3836.25
0.92	**0.8**	**Shear**	**KIPS**	**308.86**	**78.17**	**48.76**	**3.217**	**124.66**
0.92	0.8	Overload	KSI	36.00	0.53	0.27	94.728	3670.70
11.00	**10.0**	**Flexure**	**KSI**	**36.00**	**5.79**	**2.91**	**7.466**	**289.31**
11.00	10.0	Shear	KIPS	542.44	63.87	43.64	8.050	311.95
11.00	10.0	Overload	KSI	36.00	5.79	2.91	7.502	290.72
22.00	**20.0**	**Flexure**	**KSI**	**36.00**	**10.32**	**5.21**	**3.281**	**127.12**
22.00	20.0	Shear	KIPS	542.44	48.26	38.06	9.655	374.11
22.00	20.0	Overload	KSI	36.00	10.32	5.21	3.524	136.56
25.50	**23.2**	**Flexure**	**KSI**	**36.00**	**11.49**	**5.82**	**2.730**	**105.78**
25.50	23.2	Shear	KIPS	542.44	43.06	36.29	10.275	398.14
25.50	23.2	Overload	KSI	36.00	11.49	5.82	3.000	116.24
33.00	**30.0**	**Flexure**	**KSI**	**36.00**	**10.65**	**5.57**	**3.009**	**116.62**
33.00	30.0	Shear	KIPS	542.44	32.17	32.48	11.824	458.19
33.00	30.0	Overload	KSI	36.00	10.65	5.57	3.255	126.13
44.00	**40.0**	**Flexure**	**KSI**	**36.00**	**12.19**	**6.33**	**2.396**	**92.86**
44.00	40.0	Shear	KIPS	542.44	16.20	26.90	14.890	576.97
44.00	40.0	Overload	KSI	36.00	12.19	6.33	2.675	103.64
49.50	**45.0**	**Flexure**	**KSI**	**36.00**	**12.57**	**6.52**	**2.269**	**87.91**
49.50	45.0	Shear	KIPS	542.44	7.98	24.11	16.964	657.35
49.50	45.0	Overload	KSI	36.00	12.57	6.52	2.554	98.97
55.00	**50.0**	**Flexure**	**KSI**	**36.00**	**12.69**	**6.58**	**2.228**	**86.32**
55.00	50.0	Shear	KIPS	542.44	0.00	-21.32	19.570	758.34
55.00	50.0	Overload	KSI	36.00	12.69	6.58	2.515	97.47
66.00	**60.0**	**Flexure**	**KSI**	**36.00**	**12.19**	**6.33**	**2.396**	**92.86**
66.00	60.0	Shear	KIPS	542.44	-16.20	-26.90	14.890	576.97
66.00	60.0	Overload	KSI	36.00	12.19	6.33	2.675	103.64
77.00	**70.0**	**Flexure**	**KSI**	**36.00**	**10.65**	**5.57**	**3.009**	**116.62**
77.00	70.0	Shear	KIPS	542.44	-32.17	-32.48	11.824	458.19
77.00	70.0	Overload	KSI	36.00	10.65	5.57	3.255	126.13
84.50	**76.8**	**Flexure**	**KSI**	**36.00**	**11.49**	**5.82**	**2.730**	**105.78**
84.50	76.8	Shear	KIPS	542.44	-43.06	-36.29	10.275	398.14
84.50	76.8	Overload	KSI	36.00	11.49	5.82	3.000	116.24
88.00	**80.0**	**Flexure**	**KSI**	**36.00**	**10.32**	**5.21**	**3.281**	**127.12**
88.00	80.0	Shear	KIPS	542.44	-48.26	-38.06	9.655	374.11
88.00	80.0	Overload	KSI	36.00	10.32	5.21	3.524	136.56
99.00	**90.0**	**Flexure**	**KSI**	**36.00**	**5.79**	**2.91**	**7.466**	**289.31**
99.00	90.0	Shear	KIPS	542.44	-63.87	-43.64	8.050	311.95
99.00	90.0	Overload	KSI	36.00	5.79	2.91	7.502	290.72
110.00	100.0	Flexure	KSI	-36.00	-0.00	-0.00	99.000	3836.25
110.00	**100.0**	**Shear**	**KIPS**	**336.32**	**-79.47**	**-49.22**	**3.589**	**139.06**
110.00	100.0	Overload	KSI	-36.00	-0.00	-0.00	99.000	3836.25

Detailed Rating Results
Girder A - As Inspected
Type 3
Axle Load
Impact: As Requested
Lane: As Requested

Span 1

Location (ft)	Percent	Limit State	Units	Capacity	DL + Adj -LL*	LL	Legal Rating Factor	Legal Load Rating (Ton)
0.00	0.0	Flexure	KSI	-36.00	-0.00	-0.00	99.000	2475.00
0.00	**0.0**	**Shear**	**KIPS**	**308.86**	**79.47**	**33.56**	**4.633**	**115.83**
0.00	0.0	Overload	KSI	-36.00	-0.00	-0.00	99.000	2475.00
0.92	0.8	Flexure	KSI	-35.84	-0.60	-0.08	99.000	2475.00
0.92	**0.8**	**Shear**	**KIPS**	**308.86**	**78.17**	**33.26**	**4.715**	**117.88**
0.92	0.8	Overload	KSI	-36.00	-0.60	-0.08	99.000	2475.00
11.00	**10.0**	**Flexure**	**KSI**	**36.00**	**5.79**	**2.00**	**10.874**	**271.85**
11.00	10.0	Shear	KIPS	542.44	63.87	29.96	11.725	293.12
11.00	10.0	Overload	KSI	36.00	5.79	2.00	10.927	273.17
22.00	**20.0**	**Flexure**	**KSI**	**36.00**	**10.32**	**3.52**	**4.858**	**121.45**
22.00	20.0	Shear	KIPS	542.44	48.26	26.36	13.938	348.44
22.00	20.0	Overload	KSI	36.00	10.32	3.52	5.219	130.47
25.50	**23.2**	**Flexure**	**KSI**	**36.00**	**11.49**	**3.90**	**4.074**	**101.84**
25.50	23.2	Shear	KIPS	542.44	43.06	25.22	14.783	369.58
25.50	23.2	Overload	KSI	36.00	11.49	3.90	4.476	111.91
33.00	**30.0**	**Flexure**	**KSI**	**36.00**	**10.65**	**3.68**	**4.553**	**113.84**
33.00	30.0	Shear	KIPS	542.44	32.17	22.76	16.871	421.78
33.00	30.0	Overload	KSI	36.00	10.65	3.68	4.925	123.12
44.00	**40.0**	**Flexure**	**KSI**	**36.00**	**12.19**	**4.17**	**3.637**	**90.93**
44.00	40.0	Shear	KIPS	542.44	16.20	19.16	20.900	522.51
44.00	40.0	Overload	KSI	36.00	12.19	4.17	4.060	101.49
49.50	**45.0**	**Flexure**	**KSI**	**36.00**	**12.57**	**4.29**	**3.449**	**86.22**
49.50	45.0	Shear	KIPS	542.44	7.98	17.36	23.555	588.86
49.50	45.0	Overload	KSI	36.00	12.57	4.29	3.883	97.06
55.00	**50.0**	**Flexure**	**KSI**	**36.00**	**12.69**	**4.30**	**3.404**	**85.10**
55.00	50.0	Shear	KIPS	542.44	0.00	-15.56	26.808	670.20
55.00	50.0	Overload	KSI	36.00	12.69	4.30	3.844	96.09
66.00	**60.0**	**Flexure**	**KSI**	**36.00**	**12.19**	**4.17**	**3.637**	**90.93**
66.00	60.0	Shear	KIPS	542.44	-16.20	-19.16	20.900	522.51

66.00	60.0	Overload	KSI	36.00	12.19	4.17	4.060	101.49
77.00	**70.0**	**Flexure**	**KSI**	**36.00**	**10.65**	**3.68**	**4.553**	**113.84**
77.00	70.0	Shear	KIPS	542.44	-32.17	-22.76	16.871	421.78
77.00	70.0	Overload	KSI	36.00	10.65	3.68	4.925	123.12
84.50	**76.8**	**Flexure**	**KSI**	**36.00**	**11.49**	**3.90**	**4.074**	**101.84**
84.50	76.8	Shear	KIPS	542.44	-43.06	-25.22	14.783	369.58
84.50	76.8	Overload	KSI	36.00	11.49	3.90	4.476	111.91
88.00	**80.0**	**Flexure**	**KSI**	**36.00**	**10.32**	**3.52**	**4.858**	**121.45**
88.00	80.0	Shear	KIPS	542.44	-48.26	-26.36	13.938	348.44
88.00	80.0	Overload	KSI	36.00	10.32	3.52	5.219	130.47
99.00	**90.0**	**Flexure**	**KSI**	**36.00**	**5.79**	**2.00**	**10.874**	**271.85**
99.00	90.0	Shear	KIPS	542.44	-63.87	-29.96	11.725	293.12
99.00	90.0	Overload	KSI	36.00	5.79	2.00	10.927	273.17
110.00	100.0	Flexure	KSI	-36.00	-0.00	-0.00	99.000	2475.00
110.00	**100.0**	**Shear**	**KIPS**	**336.32**	**-79.47**	**-33.56**	**5.263**	**131.57**
110.00	100.0	Overload	KSI	-36.00	-0.00	-0.00	99.000	2475.00

Detailed Rating Results
Girder A - As Inspected
Type 3-3
Axle Load
Impact: As Requested
Lane: As Requested

Span 1

Location (ft)	Percent	Limit State	Units	Capacity	DL + Adj -LL*	LL	Legal Rating Factor	Legal Load Rating (Ton)
0.00	0.0	Flexure	KSI	-36.00	-0.00	-0.00	99.000	3960.00
0.00	**0.0**	**Shear**	**KIPS**	**308.86**	**79.47**	**45.08**	**3.449**	**137.97**
0.00	0.0	Overload	KSI	-36.00	-0.00	-0.00	99.000	3960.00
0.92	0.8	Flexure	KSI	-36.00	-0.60	-0.11	99.000	3960.00
0.92	**0.8**	**Shear**	**KIPS**	**308.86**	**78.17**	**44.60**	**3.517**	**140.66**
0.92	0.8	Overload	KSI	-36.00	-0.60	-0.11	99.000	3960.00
11.00	**10.0**	**Flexure**	**KSI**	**36.00**	**5.79**	**2.62**	**8.286**	**331.43**
11.00	10.0	Shear	KIPS	542.44	63.87	39.32	8.934	357.36
11.00	10.0	Overload	KSI	36.00	5.79	2.62	8.326	333.04
22.00	**20.0**	**Flexure**	**KSI**	**36.00**	**10.32**	**4.52**	**3.786**	**151.46**
22.00	20.0	Shear	KIPS	542.44	48.26	33.56	10.948	437.92
22.00	20.0	Overload	KSI	36.00	10.32	4.52	4.068	162.71
25.50	**23.2**	**Flexure**	**KSI**	**36.00**	**11.49**	**4.99**	**3.186**	**127.44**

25.50	23.2	Shear	KIPS	542.44	43.06	31.73	11.749	469.97
25.50	23.2	Overload	KSI	36.00	11.49	4.99	3.501	140.04
33.00	**30.0**	**Flexure**	**KSI**	**36.00**	**10.65**	**4.63**	**3.615**	**144.59**
33.00	30.0	Shear	KIPS	542.44	32.17	27.80	13.813	552.52
33.00	30.0	Overload	KSI	36.00	10.65	4.63	3.910	156.38
44.00	**40.0**	**Flexure**	**KSI**	**36.00**	**12.19**	**5.23**	**2.902**	**116.07**
44.00	40.0	Shear	KIPS	542.44	16.20	22.04	18.170	726.80
44.00	40.0	Overload	KSI	36.00	12.19	5.23	3.239	129.54
49.50	**45.0**	**Flexure**	**KSI**	**36.00**	**12.57**	**5.41**	**2.734**	**109.36**
49.50	45.0	Shear	KIPS	542.44	7.98	19.16	21.342	853.69
49.50	45.0	Overload	KSI	36.00	12.57	5.41	3.078	123.12
55.00	**50.0**	**Flexure**	**KSI**	**36.00**	**12.69**	**5.43**	**2.699**	**107.95**
55.00	50.0	Shear	KIPS	542.44	0.00	-16.28	25.623	1024.91
55.00	50.0	Overload	KSI	36.00	12.69	5.43	3.047	121.90
66.00	**60.0**	**Flexure**	**KSI**	**36.00**	**12.19**	**5.23**	**2.902**	**116.07**
66.00	60.0	Shear	KIPS	542.44	-16.20	-22.04	18.170	726.80
66.00	60.0	Overload	KSI	36.00	12.19	5.23	3.239	129.54
77.00	**70.0**	**Flexure**	**KSI**	**36.00**	**10.65**	**4.63**	**3.615**	**144.59**
77.00	70.0	Shear	KIPS	542.44	-32.17	-27.80	13.813	552.52
77.00	70.0	Overload	KSI	36.00	10.65	4.63	3.910	156.38
84.50	**76.8**	**Flexure**	**KSI**	**36.00**	**11.49**	**4.99**	**3.186**	**127.44**
84.50	76.8	Shear	KIPS	542.44	-43.06	-31.73	11.749	469.97
84.50	76.8	Overload	KSI	36.00	11.49	4.99	3.501	140.04
88.00	**80.0**	**Flexure**	**KSI**	**36.00**	**10.32**	**4.52**	**3.786**	**151.46**
88.00	80.0	Shear	KIPS	542.44	-48.26	-33.56	10.948	437.92
88.00	80.0	Overload	KSI	36.00	10.32	4.52	4.068	162.71
99.00	**90.0**	**Flexure**	**KSI**	**36.00**	**5.79**	**2.62**	**8.286**	**331.43**
99.00	90.0	Shear	KIPS	542.44	-63.87	-39.32	8.934	357.36
99.00	90.0	Overload	KSI	36.00	5.79	2.62	8.326	333.04
110.00	100.0	Flexure	KSI	-36.00	-0.00	-0.00	99.000	3960.00
110.00	**100.0**	**Shear**	**KIPS**	**336.32**	**-79.47**	**-45.08**	**3.918**	**156.72**
110.00	100.0	Overload	KSI	-36.00	-0.00	-0.00	99.000	3960.00

Detailed Rating Results
Girder A - As Inspected
Type 3S2
Axle Load
Impact: As Requested
Lane: As Requested

Span 1

Location							**Legal Rating**	**Legal**

(ft)	Percent	Limit State	Units	Capacity	DL + Adj -LL*	LL	Factor	Load Rating (Ton)
0.00	0.0	Flexure	KSI	-36.00	-0.00	-0.00	99.000	3564.00
0.00	**0.0**	**Shear**	**KIPS**	**308.86**	**79.47**	**43.07**	**3.611**	**129.99**
0.00	0.0	Overload	KSI	-36.00	-0.00	-0.00	99.000	3564.00
0.92	0.8	Flexure	KSI	-36.00	-0.60	-0.10	99.000	3564.00
0.92	**0.8**	**Shear**	**KIPS**	**308.86**	**78.17**	**42.64**	**3.679**	**132.44**
0.92	0.8	Overload	KSI	-36.00	-0.60	-0.10	99.000	3564.00
11.00	**10.0**	**Flexure**	**KSI**	**36.00**	**5.79**	**2.53**	**8.601**	**309.62**
11.00	10.0	Shear	KIPS	542.44	63.87	37.88	9.274	333.85
11.00	10.0	Overload	KSI	36.00	5.79	2.53	8.642	311.13
22.00	**20.0**	**Flexure**	**KSI**	**36.00**	**10.32**	**4.37**	**3.917**	**141.00**
22.00	20.0	Shear	KIPS	542.44	48.26	32.70	11.237	404.54
22.00	20.0	Overload	KSI	36.00	10.32	4.37	4.208	151.48
25.50	**23.2**	**Flexure**	**KSI**	**36.00**	**11.49**	**4.85**	**3.277**	**117.97**
25.50	23.2	Shear	KIPS	542.44	43.06	31.05	12.007	432.24
25.50	23.2	Overload	KSI	36.00	11.49	4.85	3.601	129.64
33.00	**30.0**	**Flexure**	**KSI**	**36.00**	**10.65**	**4.61**	**3.635**	**130.84**
33.00	30.0	Shear	KIPS	542.44	32.17	27.52	13.958	502.47
33.00	30.0	Overload	KSI	36.00	10.65	4.61	3.931	141.52
44.00	**40.0**	**Flexure**	**KSI**	**36.00**	**12.19**	**5.20**	**2.916**	**104.97**
44.00	40.0	Shear	KIPS	542.44	16.20	22.33	17.936	645.68
44.00	40.0	Overload	KSI	36.00	12.19	5.20	3.254	117.16
49.50	**45.0**	**Flexure**	**KSI**	**36.00**	**12.57**	**5.32**	**2.779**	**100.04**
49.50	45.0	Shear	KIPS	542.44	7.98	19.74	20.720	745.91
49.50	45.0	Overload	KSI	36.00	12.57	5.32	3.129	112.63
55.00	**50.0**	**Flexure**	**KSI**	**36.00**	**12.69**	**5.29**	**2.767**	**99.61**
55.00	50.0	Shear	KIPS	542.44	0.00	-17.15	24.332	875.95
55.00	50.0	Overload	KSI	36.00	12.69	5.29	3.124	112.48
66.00	**60.0**	**Flexure**	**KSI**	**36.00**	**12.19**	**5.20**	**2.916**	**104.97**
66.00	60.0	Shear	KIPS	542.44	-16.20	-22.33	17.936	645.68
66.00	60.0	Overload	KSI	36.00	12.19	5.20	3.254	117.16
77.00	**70.0**	**Flexure**	**KSI**	**36.00**	**10.65**	**4.61**	**3.635**	**130.84**
77.00	70.0	Shear	KIPS	542.44	-32.17	-27.52	13.958	502.47
77.00	70.0	Overload	KSI	36.00	10.65	4.61	3.931	141.52
84.50	**76.8**	**Flexure**	**KSI**	**36.00**	**11.49**	**4.85**	**3.277**	**117.97**
84.50	76.8	Shear	KIPS	542.44	-43.06	-31.05	12.007	432.24
84.50	76.8	Overload	KSI	36.00	11.49	4.85	3.601	129.64
88.00	**80.0**	**Flexure**	**KSI**	**36.00**	**10.32**	**4.37**	**3.917**	**141.00**
88.00	80.0	Shear	KIPS	542.44	-48.26	-32.70	11.237	404.54
88.00	80.0	Overload	KSI	36.00	10.32	4.37	4.208	151.48

99.00	**90.0**	**Flexure**	**KSI**	**36.00**	**5.79**	**2.53**	**8.601**	**309.62**
99.00	90.0	Shear	KIPS	542.44	-63.87	-37.88	9.274	333.85
99.00	90.0	Overload	KSI	36.00	5.79	2.53	8.642	311.13
110.00	100.0	Flexure	KSI	-36.00	-0.00	-0.00	99.000	3564.00
110.00	**100.0**	**Shear**	**KIPS**	**336.32**	**-79.47**	**-43.07**	**4.101**	**147.65**
110.00	100.0	Overload	KSI	-36.00	-0.00	-0.00	99.000	3564.00

Detailed Rating Results
Girder A - As Inspected
RI-3
Axle Load
Impact: As Requested
Lane: As Requested

Span 1

Location (ft)	Percent	Limit State	Units	Capacity	DL + Adj -LL*	LL	Permit Rating Factor	Permit Load Rating (Ton)
0.00	0.0	Flexure	KSI	-36.00	-0.00	-0.00	99.000	3762.00
0.00	**0.0**	**Shear**	**KIPS**	**308.86**	**79.47**	**51.79**	**3.299**	**125.37**
0.00	0.0	Overload	KSI	-36.00	-0.00	-0.00	99.000	3762.00
0.92	0.8	Flexure	KSI	-36.00	-0.60	-0.12	99.000	3762.00
0.92	**0.8**	**Shear**	**KIPS**	**308.86**	**78.17**	**51.33**	**3.357**	**127.58**
0.92	0.8	Overload	KSI	-36.00	-0.60	-0.12	99.000	3762.00
11.00	**10.0**	**Flexure**	**KSI**	**36.00**	**5.79**	**3.09**	**7.730**	**293.73**
11.00	10.0	Shear	KIPS	542.44	63.87	46.32	8.334	316.71
11.00	10.0	Overload	KSI	36.00	5.79	3.09	9.190	349.21
22.00	**20.0**	**Flexure**	**KSI**	**36.00**	**10.32**	**5.45**	**3.445**	**130.93**
22.00	20.0	Shear	KIPS	542.44	48.26	40.84	9.885	375.63
22.00	20.0	Overload	KSI	36.00	10.32	5.45	4.379	166.42
25.50	**23.2**	**Flexure**	**KSI**	**36.00**	**11.49**	**6.05**	**2.887**	**109.69**
25.50	23.2	Shear	KIPS	542.44	43.06	39.10	10.476	398.08
25.50	23.2	Overload	KSI	36.00	11.49	6.05	3.753	142.61
33.00	**30.0**	**Flexure**	**KSI**	**36.00**	**10.65**	**5.72**	**3.220**	**122.36**
33.00	30.0	Shear	KIPS	542.44	32.17	35.37	11.930	453.34
33.00	30.0	Overload	KSI	36.00	10.65	5.72	4.120	156.58
44.00	**40.0**	**Flexure**	**KSI**	**36.00**	**12.19**	**6.46**	**2.579**	**97.99**
44.00	40.0	Shear	KIPS	542.44	16.20	29.90	14.719	559.32
44.00	40.0	Overload	KSI	36.00	12.19	6.46	3.405	129.41
49.50	**45.0**	**Flexure**	**KSI**	**36.00**	**12.57**	**6.67**	**2.436**	**92.56**
49.50	45.0	Shear	KIPS	542.44	7.98	27.16	16.544	628.68

49.50	45.0	Overload	KSI	36.00	12.57	6.67	3.245	123.29
55.00	**50.0**	**Flexure**	**KSI**	**36.00**	**12.69**	**6.72**	**2.394**	**90.98**
55.00	50.0	Shear	KIPS	542.44	0.00	-24.43	18.768	713.18
55.00	50.0	Overload	KSI	36.00	12.69	6.72	3.199	121.55
66.00	**60.0**	**Flexure**	**KSI**	**36.00**	**12.19**	**6.46**	**2.579**	**97.99**
66.00	60.0	Shear	KIPS	542.44	-16.20	-29.90	14.719	559.32
66.00	60.0	Overload	KSI	36.00	12.19	6.46	3.405	129.41
77.00	**70.0**	**Flexure**	**KSI**	**36.00**	**10.65**	**5.72**	**3.220**	**122.36**
77.00	70.0	Shear	KIPS	542.44	-32.17	-35.37	11.930	453.34
77.00	70.0	Overload	KSI	36.00	10.65	5.72	4.120	156.58
84.50	**76.8**	**Flexure**	**KSI**	**36.00**	**11.49**	**6.05**	**2.887**	**109.69**
84.50	76.8	Shear	KIPS	542.44	-43.06	-39.10	10.476	398.08
84.50	76.8	Overload	KSI	36.00	11.49	6.05	3.753	142.61
88.00	**80.0**	**Flexure**	**KSI**	**36.00**	**10.32**	**5.45**	**3.445**	**130.93**
88.00	80.0	Shear	KIPS	542.44	-48.26	-40.84	9.885	375.63
88.00	80.0	Overload	KSI	36.00	10.32	5.45	4.379	166.42
99.00	**90.0**	**Flexure**	**KSI**	**36.00**	**5.79**	**3.09**	**7.730**	**293.73**
99.00	90.0	Shear	KIPS	542.44	-63.87	-46.32	8.334	316.71
99.00	90.0	Overload	KSI	36.00	5.79	3.09	9.190	349.21
110.00	100.0	Flexure	KSI	-36.00	-0.00	-0.00	99.000	3762.00
110.00	**100.0**	**Shear**	**KIPS**	**336.32**	**-79.47**	**-51.79**	**3.748**	**142.41**
110.00	100.0	Overload	KSI	-36.00	-0.00	-0.00	99.000	3762.00

Detailed Rating Results
Girder A - As Inspected
RI-4
Axle Load
Impact: As Requested
Lane: As Requested

Span 1

Location (ft)	Percent	Limit State	Units	Capacity	DL + Adj -LL*	LL	Permit Rating Factor	Permit Load Rating (Ton)
0.00	0.0	Flexure	KSI	-36.00	-0.00	-0.00	99.000	3712.50
0.00	**0.0**	**Shear**	**KIPS**	**308.86**	**79.47**	**50.35**	**3.394**	**127.26**
0.00	0.0	Overload	KSI	-36.00	-0.00	-0.00	99.000	3712.50
0.92	0.8	Flexure	KSI	-36.00	-0.60	-0.12	99.000	3712.50
0.92	**0.8**	**Shear**	**KIPS**	**308.86**	**78.17**	**49.90**	**3.454**	**129.51**
0.92	0.8	Overload	KSI	-36.00	-0.60	-0.12	99.000	3712.50
11.00	**10.0**	**Flexure**	**KSI**	**36.00**	**5.79**	**3.00**	**7.964**	**298.66**

11.00	10.0	Shear	KIPS	542.44	63.87	44.95	8.588	322.03
11.00	10.0	Overload	KSI	36.00	5.79	3.00	9.469	355.09
22.00	**20.0**	**Flexure**	**KSI**	**36.00**	**10.32**	**5.28**	**3.558**	**133.43**
22.00	20.0	Shear	KIPS	542.44	48.26	39.55	10.208	382.81
22.00	20.0	Overload	KSI	36.00	10.32	5.28	4.523	169.60
25.50	**23.2**	**Flexure**	**KSI**	**36.00**	**11.49**	**5.85**	**2.984**	**111.88**
25.50	23.2	Shear	KIPS	542.44	43.06	37.83	10.828	406.03
25.50	23.2	Overload	KSI	36.00	11.49	5.85	3.879	145.46
33.00	**30.0**	**Flexure**	**KSI**	**36.00**	**10.65**	**5.56**	**3.310**	**124.12**
33.00	30.0	Shear	KIPS	542.44	32.17	34.15	12.357	463.37
33.00	30.0	Overload	KSI	36.00	10.65	5.56	4.235	158.83
44.00	**40.0**	**Flexure**	**KSI**	**36.00**	**12.19**	**6.35**	**2.624**	**98.40**
44.00	40.0	Shear	KIPS	542.44	16.20	28.75	15.307	574.02
44.00	40.0	Overload	KSI	36.00	12.19	6.35	3.465	129.94
49.50	**45.0**	**Flexure**	**KSI**	**36.00**	**12.57**	**6.53**	**2.487**	**93.25**
49.50	45.0	Shear	KIPS	542.44	7.98	26.05	17.251	646.91
49.50	45.0	Overload	KSI	36.00	12.57	6.53	3.312	124.21
55.00	**50.0**	**Flexure**	**KSI**	**36.00**	**12.69**	**6.56**	**2.452**	**91.96**
55.00	50.0	Shear	KIPS	542.44	0.00	-23.35	19.633	736.25
55.00	50.0	Overload	KSI	36.00	12.69	6.56	3.276	122.87
66.00	**60.0**	**Flexure**	**KSI**	**36.00**	**12.19**	**6.35**	**2.624**	**98.40**
66.00	60.0	Shear	KIPS	542.44	-16.20	-28.75	15.307	574.02
66.00	60.0	Overload	KSI	36.00	12.19	6.35	3.465	129.94
77.00	**70.0**	**Flexure**	**KSI**	**36.00**	**10.65**	**5.56**	**3.310**	**124.12**
77.00	70.0	Shear	KIPS	542.44	-32.17	-34.15	12.357	463.37
77.00	70.0	Overload	KSI	36.00	10.65	5.56	4.235	158.83
84.50	**76.8**	**Flexure**	**KSI**	**36.00**	**11.49**	**5.85**	**2.984**	**111.88**
84.50	76.8	Shear	KIPS	542.44	-43.06	-37.83	10.828	406.03
84.50	76.8	Overload	KSI	36.00	11.49	5.85	3.879	145.46
88.00	**80.0**	**Flexure**	**KSI**	**36.00**	**10.32**	**5.28**	**3.558**	**133.43**
88.00	80.0	Shear	KIPS	542.44	-48.26	-39.55	10.208	382.81
88.00	80.0	Overload	KSI	36.00	10.32	5.28	4.523	169.60
99.00	**90.0**	**Flexure**	**KSI**	**36.00**	**5.79**	**3.00**	**7.964**	**298.66**
99.00	90.0	Shear	KIPS	542.44	-63.87	-44.95	8.588	322.03
99.00	90.0	Overload	KSI	36.00	5.79	3.00	9.469	355.09
110.00	100.0	Flexure	KSI	-36.00	-0.00	-0.00	99.000	3712.50
110.00	**100.0**	**Shear**	**KIPS**	**336.32**	**-79.47**	**-50.35**	**3.855**	**144.55**
110.00	100.0	Overload	KSI	-36.00	-0.00	-0.00	99.000	3712.50

Detailed Rating Results
Girder A - As Inspected
RI-5
Axle Load

Impact: As Requested
Lane: As Requested

Span 1

Location (ft)	Percent	Limit State	Units	Capacity	DL + Adj -LL*	LL	Permit Rating Factor	Permit Load Rating (Ton)
0.00	0.0	Flexure	KSI	-36.00	-0.00	-0.00	99.000	5187.60
0.00	**0.0**	**Shear**	**KIPS**	**308.86**	**79.47**	**66.03**	**2.588**	**135.59**
0.00	0.0	Overload	KSI	-36.00	-0.00	-0.00	99.000	5187.60
0.92	0.8	Flexure	KSI	36.00	0.53	0.37	81.323	4261.31
0.92	**0.8**	**Shear**	**KIPS**	**308.86**	**78.17**	**65.41**	**2.635**	**138.07**
0.92	0.8	Overload	KSI	36.00	0.53	0.37	91.798	4810.20
11.00	**10.0**	**Flexure**	**KSI**	**36.00**	**5.79**	**3.90**	**6.121**	**320.73**
11.00	10.0	Shear	KIPS	542.44	63.87	58.49	6.600	345.83
11.00	10.0	Overload	KSI	36.00	5.79	3.90	7.277	381.33
22.00	**20.0**	**Flexure**	**KSI**	**36.00**	**10.32**	**6.80**	**2.762**	**144.75**
22.00	20.0	Shear	KIPS	542.44	48.26	50.94	7.925	415.29
22.00	20.0	Overload	KSI	36.00	10.32	6.80	3.511	183.99
25.50	**23.2**	**Flexure**	**KSI**	**36.00**	**11.49**	**7.57**	**2.309**	**120.97**
25.50	23.2	Shear	KIPS	542.44	43.06	48.54	8.439	442.19
25.50	23.2	Overload	KSI	36.00	11.49	7.57	3.001	157.27
33.00	**30.0**	**Flexure**	**KSI**	**36.00**	**10.65**	**7.17**	**2.567**	**134.52**
33.00	30.0	Shear	KIPS	542.44	32.17	43.40	9.724	509.52
33.00	30.0	Overload	KSI	36.00	10.65	7.17	3.285	172.14
44.00	**40.0**	**Flexure**	**KSI**	**36.00**	**12.19**	**8.15**	**2.045**	**107.15**
44.00	40.0	Shear	KIPS	542.44	16.20	35.85	12.275	643.23
44.00	40.0	Overload	KSI	36.00	12.19	8.15	2.700	141.50
49.50	**45.0**	**Flexure**	**KSI**	**36.00**	**12.57**	**8.37**	**1.941**	**101.69**
49.50	45.0	Shear	KIPS	542.44	7.98	32.08	14.009	734.07
49.50	45.0	Overload	KSI	36.00	12.57	8.37	2.585	135.46
55.00	**50.0**	**Flexure**	**KSI**	**36.00**	**12.69**	**8.38**	**1.920**	**100.63**
55.00	50.0	Shear	KIPS	542.44	0.00	-28.31	16.196	848.67
55.00	50.0	Overload	KSI	36.00	12.69	8.38	2.566	134.45
66.00	**60.0**	**Flexure**	**KSI**	**36.00**	**12.19**	**8.15**	**2.045**	**107.15**
66.00	60.0	Shear	KIPS	542.44	-16.20	-35.85	12.275	643.23
66.00	60.0	Overload	KSI	36.00	12.19	8.15	2.700	141.50
77.00	**70.0**	**Flexure**	**KSI**	**36.00**	**10.65**	**7.17**	**2.567**	**134.52**
77.00	70.0	Shear	KIPS	542.44	-32.17	-43.40	9.724	509.52
77.00	70.0	Overload	KSI	36.00	10.65	7.17	3.285	172.14
84.50	**76.8**	**Flexure**	**KSI**	**36.00**	**11.49**	**7.57**	**2.309**	**120.97**

84.50	76.8	Shear	KIPS	542.44	-43.06	-48.54	8.439	442.19
84.50	76.8	Overload	KSI	36.00	11.49	7.57	3.001	157.27
88.00	**80.0**	**Flexure**	**KSI**	**36.00**	**10.32**	**6.80**	**2.762**	**144.75**
88.00	80.0	Shear	KIPS	542.44	-48.26	-50.94	7.925	415.29
88.00	80.0	Overload	KSI	36.00	10.32	6.80	3.511	183.99
99.00	**90.0**	**Flexure**	**KSI**	**36.00**	**5.79**	**3.90**	**6.121**	**320.73**
99.00	90.0	Shear	KIPS	542.44	-63.87	-58.49	6.600	345.83
99.00	90.0	Overload	KSI	36.00	5.79	3.90	7.277	381.33
110.00	100.0	Flexure	KSI	-36.00	-0.00	-0.00	99.000	5187.60
110.00	**100.0**	**Shear**	**KIPS**	**336.32**	**-79.47**	**-66.03**	**2.939**	**154.01**
110.00	100.0	Overload	KSI	-36.00	-0.00	-0.00	99.000	5187.60

Detailed Rating Results
Girder A - As Inspected
RI-6
Axle Load
Impact: As Requested
Lane: As Requested

Span 1

Location (ft)	Percent	Limit State	Units	Capacity	DL + Adj -LL*	LL	Permit Rating Factor	Permit Load Rating (Ton)
0.00	0.0	Flexure	KSI	-36.00	-0.00	-0.00	99.000	6435.00
0.00	**0.0**	**Shear**	**KIPS**	**308.86**	**79.47**	**74.91**	**2.188**	**142.25**
0.00	0.0	Overload	KSI	-36.00	-0.00	-0.00	99.000	6435.00
0.92	0.8	Flexure	KSI	36.00	0.53	0.42	68.843	4474.80
0.92	**0.8**	**Shear**	**KIPS**	**308.86**	**78.17**	**74.13**	**2.231**	**144.99**
0.92	0.8	Overload	KSI	36.00	0.53	0.42	80.995	5264.64
11.00	**10.0**	**Flexure**	**KSI**	**36.00**	**5.79**	**4.38**	**5.240**	**340.61**
11.00	10.0	Shear	KIPS	542.44	63.87	65.55	5.650	367.26
11.00	10.0	Overload	KSI	36.00	5.79	4.38	6.493	422.07
22.00	**20.0**	**Flexure**	**KSI**	**36.00**	**10.32**	**7.52**	**2.397**	**155.81**
22.00	20.0	Shear	KIPS	542.44	48.26	56.19	6.894	448.11
22.00	20.0	Overload	KSI	36.00	10.32	7.52	3.176	206.41
25.50	**23.2**	**Flexure**	**KSI**	**36.00**	**11.49**	**8.33**	**2.012**	**130.78**
25.50	23.2	Shear	KIPS	542.44	43.06	53.21	7.386	480.10
25.50	23.2	Overload	KSI	36.00	11.49	8.33	2.726	177.21
33.00	**30.0**	**Flexure**	**KSI**	**36.00**	**10.65**	**7.78**	**2.271**	**147.58**
33.00	30.0	Shear	KIPS	542.44	32.17	46.83	8.646	561.97
33.00	30.0	Overload	KSI	36.00	10.65	7.78	3.028	196.84

44.00	**40.0**	**Flexure**	**KSI**	**36.00**	**12.19**	**8.51**	**1.880**	**122.21**
44.00	40.0	Shear	KIPS	542.44	16.20	37.47	11.269	732.49
44.00	40.0	Overload	KSI	36.00	12.19	8.51	2.588	168.20
49.50	**45.0**	**Flexure**	**KSI**	**36.00**	**12.57**	**8.58**	**1.817**	**118.10**
49.50	45.0	Shear	KIPS	542.44	7.98	32.79	13.150	854.73
49.50	45.0	Overload	KSI	36.00	12.57	8.58	2.522	163.96
55.00	**50.0**	**Flexure**	**KSI**	**36.00**	**12.69**	**8.39**	**1.840**	**119.60**
55.00	50.0	Shear	KIPS	542.44	0.00	-28.11	15.648	1017.13
55.00	50.0	Overload	KSI	36.00	12.69	8.39	2.562	166.54
66.00	**60.0**	**Flexure**	**KSI**	**36.00**	**12.19**	**8.51**	**1.880**	**122.21**
66.00	60.0	Shear	KIPS	542.44	-16.20	-37.47	11.269	732.49
66.00	60.0	Overload	KSI	36.00	12.19	8.51	2.588	168.20
77.00	**70.0**	**Flexure**	**KSI**	**36.00**	**10.65**	**7.78**	**2.271**	**147.58**
77.00	70.0	Shear	KIPS	542.44	-32.17	-46.83	8.646	561.97
77.00	70.0	Overload	KSI	36.00	10.65	7.78	3.028	196.84
84.50	**76.8**	**Flexure**	**KSI**	**36.00**	**11.49**	**8.33**	**2.012**	**130.78**
84.50	76.8	Shear	KIPS	542.44	-43.06	-53.21	7.386	480.10
84.50	76.8	Overload	KSI	36.00	11.49	8.33	2.726	177.21
88.00	**80.0**	**Flexure**	**KSI**	**36.00**	**10.32**	**7.52**	**2.397**	**155.81**
88.00	80.0	Shear	KIPS	542.44	-48.26	-56.19	6.894	448.11
88.00	80.0	Overload	KSI	36.00	10.32	7.52	3.176	206.41
99.00	**90.0**	**Flexure**	**KSI**	**36.00**	**5.79**	**4.38**	**5.240**	**340.61**
99.00	90.0	Shear	KIPS	542.44	-63.87	-65.55	5.650	367.26
99.00	90.0	Overload	KSI	36.00	5.79	4.38	6.493	422.07
110.00	100.0	Flexure	KSI	-36.00	-0.00	-0.00	99.000	6435.00
110.00	**100.0**	**Shear**	**KIPS**	**336.32**	**-79.47**	**-74.91**	**2.486**	**161.58**
110.00	100.0	Overload	KSI	-36.00	-0.00	-0.00	99.000	6435.00

Detailed Rating Results
Girder A - As Inspected
RIDOT H20 Truck
Axle Load
Impact: As Requested
Lane: As Requested

Span 1

Location (ft)	Percent	Limit State	Units	Capacity	DL + Adj -LL*	LL	Legal Rating Factor	Legal Load Rating (Ton)
0.00	0.0	Flexure	KSI	-36.00	-0.00	-0.00	99.000	1980.00
0.00	**0.0**	**Shear**	**KIPS**	**308.86**	**79.47**	**28.07**	**5.541**	**110.82**

0.00	0.0	Overload	KSI	-36.00	-0.00	-0.00	99.000	1980.00
0.92	0.8	Flexure	KSI	-35.71	-0.60	-0.07	99.000	1980.00
0.92	**0.8**	**Shear**	**KIPS**	**308.86**	**78.17**	**27.83**	**5.637**	**112.74**
0.92	0.8	Overload	KSI	-36.00	-0.60	-0.07	99.000	1980.00
11.00	**10.0**	**Flexure**	**KSI**	**36.00**	**5.79**	**1.68**	**12.937**	**258.73**
11.00	10.0	Shear	KIPS	542.44	63.87	25.19	13.949	278.98
11.00	10.0	Overload	KSI	36.00	5.79	1.68	13.000	259.99
22.00	**20.0**	**Flexure**	**KSI**	**36.00**	**10.32**	**2.98**	**5.742**	**114.84**
22.00	20.0	Shear	KIPS	542.44	48.26	22.31	16.473	329.47
22.00	20.0	Overload	KSI	36.00	10.32	2.98	6.168	123.37
25.50	**23.2**	**Flexure**	**KSI**	**36.00**	**11.49**	**3.31**	**4.803**	**96.06**
25.50	23.2	Shear	KIPS	542.44	43.06	21.39	17.430	348.59
25.50	23.2	Overload	KSI	36.00	11.49	3.31	5.277	105.55
33.00	**30.0**	**Flexure**	**KSI**	**36.00**	**10.65**	**3.14**	**5.336**	**106.72**
33.00	30.0	Shear	KIPS	542.44	32.17	19.43	19.770	395.40
33.00	30.0	Overload	KSI	36.00	10.65	3.14	5.771	115.42
44.00	**40.0**	**Flexure**	**KSI**	**36.00**	**12.19**	**3.56**	**4.256**	**85.12**
44.00	40.0	Shear	KIPS	542.44	16.20	16.55	24.207	484.15
44.00	40.0	Overload	KSI	36.00	12.19	3.56	4.750	95.01
49.50	**45.0**	**Flexure**	**KSI**	**36.00**	**12.57**	**3.66**	**4.037**	**80.74**
49.50	45.0	Shear	KIPS	542.44	7.98	15.11	27.076	541.51
49.50	45.0	Overload	KSI	36.00	12.57	3.66	4.545	90.90
55.00	**50.0**	**Flexure**	**KSI**	**36.00**	**12.69**	**3.68**	**3.981**	**79.62**
55.00	50.0	Shear	KIPS	542.44	0.00	-13.67	30.531	610.63
55.00	50.0	Overload	KSI	36.00	12.69	3.68	4.495	89.90
66.00	**60.0**	**Flexure**	**KSI**	**36.00**	**12.19**	**3.56**	**4.256**	**85.12**
66.00	60.0	Shear	KIPS	542.44	-16.20	-16.55	24.207	484.15
66.00	60.0	Overload	KSI	36.00	12.19	3.56	4.750	95.01
77.00	**70.0**	**Flexure**	**KSI**	**36.00**	**10.65**	**3.14**	**5.336**	**106.72**
77.00	70.0	Shear	KIPS	542.44	-32.17	-19.43	19.770	395.40
77.00	70.0	Overload	KSI	36.00	10.65	3.14	5.771	115.42
84.50	**76.8**	**Flexure**	**KSI**	**36.00**	**11.49**	**3.31**	**4.803**	**96.06**
84.50	76.8	Shear	KIPS	542.44	-43.06	-21.39	17.430	348.59
84.50	76.8	Overload	KSI	36.00	11.49	3.31	5.277	105.55
88.00	**80.0**	**Flexure**	**KSI**	**36.00**	**10.32**	**2.98**	**5.742**	**114.84**
88.00	80.0	Shear	KIPS	542.44	-48.26	-22.31	16.473	329.47
88.00	80.0	Overload	KSI	36.00	10.32	2.98	6.168	123.37
99.00	**90.0**	**Flexure**	**KSI**	**36.00**	**5.79**	**1.68**	**12.937**	**258.73**
99.00	90.0	Shear	KIPS	542.44	-63.87	-25.19	13.949	278.98
99.00	90.0	Overload	KSI	36.00	5.79	1.68	13.000	259.99
110.00	100.0	Flexure	KSI	-36.00	-0.00	-0.00	99.000	1980.00
110.00	**100.0**	**Shear**	**KIPS**	**336.32**	**-79.47**	**-28.07**	**6.294**	**125.87**
110.00	100.0	Overload	KSI	-36.00	-0.00	-0.00	99.000	1980.00

Detailed Rating Results
Girder A - As Inspected
RI-OP 1
Axle Load
Impact: As Requested
Lane: As Requested

Span 1

Location (ft)	Percent	Limit State	Units	Capacity	DL + Adj -LL*	LL	Permit Rating Factor	Permit Load Rating (Ton)
0.00	0.0	Flexure	KSI	-36.00	-0.00	-0.00	99.000	5593.50
0.00	**0.0**	**Shear**	**KIPS**	**308.86**	**79.47**	**46.50**	**3.623**	**204.68**
0.00	0.0	Overload	KSI	-36.00	-0.00	-0.00	99.000	5593.50
0.92	0.8	Flexure	KSI	-36.00	-0.60	-0.11	99.000	5593.50
0.92	**0.8**	**Shear**	**KIPS**	**308.86**	**78.17**	**46.07**	**3.689**	**208.41**
0.92	0.8	Overload	KSI	-36.00	-0.60	-0.11	99.000	5593.50
11.00	**10.0**	**Flexure**	**KSI**	**36.00**	**5.79**	**2.75**	**8.552**	**483.21**
11.00	10.0	Shear	KIPS	542.44	63.87	41.27	9.222	521.02
11.00	10.0	Overload	KSI	36.00	5.79	2.75	10.313	582.67
22.00	**20.0**	**Flexure**	**KSI**	**36.00**	**10.32**	**4.89**	**3.787**	**213.99**
22.00	20.0	Shear	KIPS	542.44	48.26	36.04	11.045	624.03
22.00	20.0	Overload	KSI	36.00	10.32	4.89	4.883	275.87
25.50	**23.2**	**Flexure**	**KSI**	**36.00**	**11.49**	**5.44**	**3.164**	**178.79**
25.50	23.2	Shear	KIPS	542.44	43.06	34.38	11.748	663.78
25.50	23.2	Overload	KSI	36.00	11.49	5.44	4.173	235.75
33.00	**30.0**	**Flexure**	**KSI**	**36.00**	**10.65**	**5.15**	**3.521**	**198.96**
33.00	30.0	Shear	KIPS	542.44	32.17	30.81	13.503	762.93
33.00	30.0	Overload	KSI	36.00	10.65	5.15	4.570	258.22
44.00	**40.0**	**Flexure**	**KSI**	**36.00**	**12.19**	**5.90**	**2.785**	**157.34**
44.00	40.0	Shear	KIPS	542.44	16.20	25.58	16.962	958.35
44.00	40.0	Overload	KSI	36.00	12.19	5.90	3.730	210.74
49.50	**45.0**	**Flexure**	**KSI**	**36.00**	**12.57**	**6.10**	**2.627**	**148.43**
49.50	45.0	Shear	KIPS	542.44	7.98	22.97	19.293	1090.04
49.50	45.0	Overload	KSI	36.00	12.57	6.10	3.549	200.52
55.00	**50.0**	**Flexure**	**KSI**	**36.00**	**12.69**	**6.15**	**2.582**	**145.86**
55.00	50.0	Shear	KIPS	542.44	0.00	-20.35	22.210	1254.89
55.00	50.0	Overload	KSI	36.00	12.69	6.15	3.498	197.64
66.00	**60.0**	**Flexure**	**KSI**	**36.00**	**12.19**	**5.90**	**2.785**	**157.34**
66.00	60.0	Shear	KIPS	542.44	-16.20	-25.58	16.962	958.35

66.00	60.0	Overload	KSI	36.00	12.19	5.90	3.730	210.74
77.00	**70.0**	**Flexure**	**KSI**	**36.00**	**10.65**	**5.15**	**3.521**	**198.96**
77.00	70.0	Shear	KIPS	542.44	-32.17	-30.81	13.503	762.93
77.00	70.0	Overload	KSI	36.00	10.65	5.15	4.570	258.22
84.50	**76.8**	**Flexure**	**KSI**	**36.00**	**11.49**	**5.44**	**3.164**	**178.79**
84.50	76.8	Shear	KIPS	542.44	-43.06	-34.38	11.748	663.78
84.50	76.8	Overload	KSI	36.00	11.49	5.44	4.173	235.75
88.00	**80.0**	**Flexure**	**KSI**	**36.00**	**10.32**	**4.89**	**3.787**	**213.99**
88.00	80.0	Shear	KIPS	542.44	-48.26	-36.04	11.045	624.03
88.00	80.0	Overload	KSI	36.00	10.32	4.89	4.883	275.87
99.00	**90.0**	**Flexure**	**KSI**	**36.00**	**5.79**	**2.75**	**8.552**	**483.21**
99.00	90.0	Shear	KIPS	542.44	-63.87	-41.27	9.222	521.02
99.00	90.0	Overload	KSI	36.00	5.79	2.75	10.313	582.67
110.00	100.0	Flexure	KSI	-36.00	-0.00	-0.00	99.000	5593.50
110.00	**100.0**	**Shear**	**KIPS**	**336.32**	**-79.47**	**-46.50**	**4.115**	**232.49**
110.00	100.0	Overload	KSI	-36.00	-0.00	-0.00	99.000	5593.50

Detailed Rating Results
Girder A - As Inspected
RI-OP 2
Axle Load
Impact: As Requested
Lane: As Requested

Span 1

Location (ft)	Percent	Limit State	Units	Capacity	DL + Adj -LL*	LL	Permit Rating Factor	Permit Load Rating (Ton)
0.00	0.0	Flexure	KSI	-36.00	-0.00	-0.00	99.000	7920.00
0.00	**0.0**	**Shear**	**KIPS**	**308.86**	**79.47**	**54.05**	**3.117**	**249.33**
0.00	0.0	Overload	KSI	-36.00	-0.00	-0.00	99.000	7920.00
0.92	0.8	Flexure	KSI	36.00	0.53	0.30	98.141	7851.30
0.92	**0.8**	**Shear**	**KIPS**	**308.86**	**78.17**	**53.44**	**3.180**	**254.39**
0.92	0.8	Overload	KSI	-36.00	-0.60	-0.13	99.000	7920.00
11.00	**10.0**	**Flexure**	**KSI**	**36.00**	**5.79**	**3.11**	**7.567**	**605.35**
11.00	10.0	Shear	KIPS	542.44	63.87	46.65	8.159	652.72
11.00	10.0	Overload	KSI	36.00	5.79	3.11	9.124	729.95
22.00	**20.0**	**Flexure**	**KSI**	**36.00**	**10.32**	**5.37**	**3.449**	**275.95**
22.00	20.0	Shear	KIPS	542.44	48.26	39.24	10.144	811.53
22.00	20.0	Overload	KSI	36.00	10.32	5.37	4.447	355.73
25.50	**23.2**	**Flexure**	**KSI**	**36.00**	**11.49**	**5.90**	**2.919**	**233.52**

25.50	23.2	Shear	KIPS	542.44	43.06	36.89	10.950	875.96
25.50	23.2	Overload	KSI	36.00	11.49	5.90	3.849	307.92
33.00	**30.0**	**Flexure**	**KSI**	**36.00**	**10.65**	**5.46**	**3.322**	**265.76**
33.00	30.0	Shear	KIPS	542.44	32.17	31.84	13.069	1045.49
33.00	30.0	Overload	KSI	36.00	10.65	5.46	4.312	344.92
44.00	**40.0**	**Flexure**	**KSI**	**36.00**	**12.19**	**5.90**	**2.786**	**222.89**
44.00	40.0	Shear	KIPS	542.44	16.20	24.76	17.522	1401.79
44.00	40.0	Overload	KSI	36.00	12.19	5.90	3.732	298.53
49.50	**45.0**	**Flexure**	**KSI**	**36.00**	**12.57**	**5.89**	**2.718**	**217.47**
49.50	45.0	Shear	KIPS	542.44	7.98	21.36	20.742	1659.38
49.50	45.0	Overload	KSI	36.00	12.57	5.89	3.672	293.80
55.00	**50.0**	**Flexure**	**KSI**	**36.00**	**12.69**	**5.75**	**2.762**	**220.95**
55.00	50.0	Shear	KIPS	542.44	0.00	-18.09	24.995	1999.60
55.00	50.0	Overload	KSI	36.00	12.69	5.75	3.742	299.39
66.00	**60.0**	**Flexure**	**KSI**	**36.00**	**12.19**	**5.90**	**2.786**	**222.89**
66.00	60.0	Shear	KIPS	542.44	-16.20	-24.76	17.522	1401.79
66.00	60.0	Overload	KSI	36.00	12.19	5.90	3.732	298.53
77.00	**70.0**	**Flexure**	**KSI**	**36.00**	**10.65**	**5.46**	**3.322**	**265.76**
77.00	70.0	Shear	KIPS	542.44	-32.17	-31.84	13.069	1045.49
77.00	70.0	Overload	KSI	36.00	10.65	5.46	4.312	344.92
84.50	**76.8**	**Flexure**	**KSI**	**36.00**	**11.49**	**5.90**	**2.919**	**233.52**
84.50	76.8	Shear	KIPS	542.44	-43.06	-36.89	10.950	875.96
84.50	76.8	Overload	KSI	36.00	11.49	5.90	3.849	307.92
88.00	**80.0**	**Flexure**	**KSI**	**36.00**	**10.32**	**5.37**	**3.449**	**275.95**
88.00	80.0	Shear	KIPS	542.44	-48.26	-39.24	10.144	811.53
88.00	80.0	Overload	KSI	36.00	10.32	5.37	4.447	355.73
99.00	**90.0**	**Flexure**	**KSI**	**36.00**	**5.79**	**3.11**	**7.567**	**605.35**
99.00	90.0	Shear	KIPS	542.44	-63.87	-46.65	8.159	652.72
99.00	90.0	Overload	KSI	36.00	5.79	3.11	9.124	729.95
110.00	100.0	Flexure	KSI	-36.00	-0.00	-0.00	99.000	7920.00
110.00	**100.0**	**Shear**	**KIPS**	**336.32**	**-79.47**	**-54.05**	**3.540**	**283.21**
110.00	100.0	Overload	KSI	-36.00	-0.00	-0.00	99.000	7920.00

Detailed Rating Results
Girder A - As Inspected
RI-OP 3
Axle Load
Impact: As Requested
Lane: As Requested

Span 1

Location							**Permit Rating**	**Permit**

(ft)	Percent	Limit State	Units	Capacity	DL + Adj -LL*	LL	Factor	Load Rating (Ton)
0.00	0.0	Flexure	KSI	-36.00	-0.00	-0.00	99.000	11187.00
0.00	**0.0**	**Shear**	**KIPS**	**308.86**	**79.47**	**60.36**	**2.791**	**315.41**
0.00	0.0	Overload	KSI	-36.00	-0.00	-0.00	99.000	11187.00
0.92	0.8	Flexure	KSI	36.00	0.53	0.33	88.159	9962.00
0.92	**0.8**	**Shear**	**KIPS**	**308.86**	**78.17**	**59.49**	**2.856**	**322.78**
0.92	0.8	Overload	KSI	-36.00	-0.60	-0.14	99.000	11187.00
11.00	**10.0**	**Flexure**	**KSI**	**36.00**	**5.79**	**3.38**	**6.977**	**788.43**
11.00	10.0	Shear	KIPS	542.44	63.87	50.28	7.570	855.37
11.00	10.0	Overload	KSI	36.00	5.79	3.38	8.413	950.71
22.00	**20.0**	**Flexure**	**KSI**	**36.00**	**10.32**	**5.70**	**3.247**	**366.94**
22.00	20.0	Shear	KIPS	542.44	48.26	41.21	9.660	1091.59
22.00	20.0	Overload	KSI	36.00	10.32	5.70	4.186	473.04
25.50	**23.2**	**Flexure**	**KSI**	**36.00**	**11.49**	**6.27**	**2.748**	**310.52**
25.50	23.2	Shear	KIPS	542.44	43.06	38.74	10.427	1178.25
25.50	23.2	Overload	KSI	36.00	11.49	6.27	3.623	409.45
33.00	**30.0**	**Flexure**	**KSI**	**36.00**	**10.65**	**5.80**	**3.127**	**353.36**
33.00	30.0	Shear	KIPS	542.44	32.17	33.43	12.445	1406.26
33.00	30.0	Overload	KSI	36.00	10.65	5.80	4.059	458.62
44.00	**40.0**	**Flexure**	**KSI**	**36.00**	**12.19**	**6.43**	**2.557**	**288.89**
44.00	40.0	Shear	KIPS	542.44	16.20	26.43	16.418	1855.24
44.00	40.0	Overload	KSI	36.00	12.19	6.43	3.424	386.93
49.50	**45.0**	**Flexure**	**KSI**	**36.00**	**12.57**	**6.54**	**2.448**	**276.58**
49.50	45.0	Shear	KIPS	542.44	7.98	23.52	18.836	2128.46
49.50	45.0	Overload	KSI	36.00	12.57	6.54	3.307	373.66
55.00	**50.0**	**Flexure**	**KSI**	**36.00**	**12.69**	**6.49**	**2.447**	**276.55**
55.00	50.0	Shear	KIPS	542.44	0.00	-20.75	21.788	2461.99
55.00	50.0	Overload	KSI	36.00	12.69	6.49	3.316	374.73
66.00	**60.0**	**Flexure**	**KSI**	**36.00**	**12.19**	**6.43**	**2.557**	**288.89**
66.00	60.0	Shear	KIPS	542.44	-16.20	-26.43	16.418	1855.24
66.00	60.0	Overload	KSI	36.00	12.19	6.43	3.424	386.93
77.00	**70.0**	**Flexure**	**KSI**	**36.00**	**10.65**	**5.80**	**3.127**	**353.36**
77.00	70.0	Shear	KIPS	542.44	-32.17	-33.43	12.445	1406.26
77.00	70.0	Overload	KSI	36.00	10.65	5.80	4.059	458.62
84.50	**76.8**	**Flexure**	**KSI**	**36.00**	**11.49**	**6.27**	**2.748**	**310.52**
84.50	76.8	Shear	KIPS	542.44	-43.06	-38.74	10.427	1178.25
84.50	76.8	Overload	KSI	36.00	11.49	6.27	3.623	409.45
88.00	**80.0**	**Flexure**	**KSI**	**36.00**	**10.32**	**5.70**	**3.247**	**366.94**
88.00	80.0	Shear	KIPS	542.44	-48.26	-41.21	9.660	1091.59
88.00	80.0	Overload	KSI	36.00	10.32	5.70	4.186	473.04

99.00	**90.0**	**Flexure**	**KSI**	**36.00**	**5.79**	**3.38**	**6.977**	**788.43**
99.00	90.0	Shear	KIPS	542.44	-63.87	-50.28	7.570	855.37
99.00	90.0	Overload	KSI	36.00	5.79	3.38	8.413	950.71
110.00	100.0	Flexure	KSI	-36.00	-0.00	-0.00	99.000	11187.00
110.00	**100.0**	**Shear**	**KIPS**	**336.32**	**-79.47**	**-60.36**	**3.170**	**358.26**
110.00	100.0	Overload	KSI	-36.00	-0.00	-0.00	99.000	11187.00

Detailed Rating Results
Girder A - As Inspected
RIPTA Bus
Axle Load
Impact: As Requested
Lane: As Requested

Span 1

Location (ft)	Percent	Limit State	Units	Capacity	DL + Adj -LL*	LL	Legal Rating Factor	Legal Load Rating (Ton)
0.00	0.0	Flexure	KSI	-36.00	-0.00	-0.00	99.000	2059.20
0.00	**0.0**	**Shear**	**KIPS**	**308.86**	**79.47**	**27.73**	**5.608**	**116.65**
0.00	0.0	Overload	KSI	-36.00	-0.00	-0.00	99.000	2059.20
0.92	0.8	Flexure	KSI	-35.71	-0.60	-0.07	99.000	2059.20
0.92	**0.8**	**Shear**	**KIPS**	**308.86**	**78.17**	**27.48**	**5.708**	**118.73**
0.92	0.8	Overload	KSI	-36.00	-0.60	-0.07	99.000	2059.20
11.00	**10.0**	**Flexure**	**KSI**	**36.00**	**5.79**	**1.65**	**13.173**	**274.00**
11.00	10.0	Shear	KIPS	542.44	63.87	24.73	14.204	295.44
11.00	10.0	Overload	KSI	36.00	5.79	1.65	13.237	275.33
22.00	**20.0**	**Flexure**	**KSI**	**36.00**	**10.32**	**2.90**	**5.892**	**122.55**
22.00	20.0	Shear	KIPS	542.44	48.26	21.74	16.903	351.59
22.00	20.0	Overload	KSI	36.00	10.32	2.90	6.329	131.65
25.50	**23.2**	**Flexure**	**KSI**	**36.00**	**11.49**	**3.22**	**4.942**	**102.80**
25.50	23.2	Shear	KIPS	542.44	43.06	20.79	17.936	373.07
25.50	23.2	Overload	KSI	36.00	11.49	3.22	5.431	112.96
33.00	**30.0**	**Flexure**	**KSI**	**36.00**	**10.65**	**3.03**	**5.530**	**115.03**
33.00	30.0	Shear	KIPS	542.44	32.17	18.74	20.490	426.19
33.00	30.0	Overload	KSI	36.00	10.65	3.03	5.981	124.41
44.00	**40.0**	**Flexure**	**KSI**	**36.00**	**12.19**	**3.39**	**4.472**	**93.01**
44.00	40.0	Shear	KIPS	542.44	16.20	15.75	25.433	529.01
44.00	40.0	Overload	KSI	36.00	12.19	3.39	4.991	103.81
49.50	**45.0**	**Flexure**	**KSI**	**36.00**	**12.57**	**3.45**	**4.279**	**89.01**
49.50	45.0	Shear	KIPS	542.44	7.98	14.25	28.700	596.96

49.50	45.0	Overload	KSI	36.00	12.57	3.45	4.818	100.21
55.00	**50.0**	**Flexure**	**KSI**	**36.00**	**12.69**	**3.43**	**4.266**	**88.73**
55.00	50.0	Shear	KIPS	542.44	0.00	-12.75	32.716	680.50
55.00	50.0	Overload	KSI	36.00	12.69	3.43	4.817	100.19
66.00	**60.0**	**Flexure**	**KSI**	**36.00**	**12.19**	**3.39**	**4.472**	**93.01**
66.00	60.0	Shear	KIPS	542.44	-16.20	-15.75	25.433	529.01
66.00	60.0	Overload	KSI	36.00	12.19	3.39	4.991	103.81
77.00	**70.0**	**Flexure**	**KSI**	**36.00**	**10.65**	**3.03**	**5.530**	**115.03**
77.00	70.0	Shear	KIPS	542.44	-32.17	-18.74	20.490	426.19
77.00	70.0	Overload	KSI	36.00	10.65	3.03	5.981	124.41
84.50	**76.8**	**Flexure**	**KSI**	**36.00**	**11.49**	**3.22**	**4.942**	**102.80**
84.50	76.8	Shear	KIPS	542.44	-43.06	-20.79	17.936	373.07
84.50	76.8	Overload	KSI	36.00	11.49	3.22	5.431	112.96
88.00	**80.0**	**Flexure**	**KSI**	**36.00**	**10.32**	**2.90**	**5.892**	**122.55**
88.00	80.0	Shear	KIPS	542.44	-48.26	-21.74	16.903	351.59
88.00	80.0	Overload	KSI	36.00	10.32	2.90	6.329	131.65
99.00	**90.0**	**Flexure**	**KSI**	**36.00**	**5.79**	**1.65**	**13.173**	**274.00**
99.00	90.0	Shear	KIPS	542.44	-63.87	-24.73	14.204	295.44
99.00	90.0	Overload	KSI	36.00	5.79	1.65	13.237	275.33
110.00	100.0	Flexure	KSI	-36.00	-0.00	-0.00	99.000	2059.20
110.00	**100.0**	**Shear**	**KIPS**	**336.32**	**-79.47**	**-27.73**	**6.370**	**132.50**
110.00	100.0	Overload	KSI	-36.00	-0.00	-0.00	99.000	2059.20

Note:
*Adj-LL is only applicable for Permit load rating.

Bridge Name: Mohegan Bridge
NBI Structure ID:
Bridge ID: 067301

Analyzed By: BrR
Analyze Date: Friday, September 14, 2018 20:26:17
Analysis Engine: AASHTO LRFR Engine Version 6.8.2.3002
Analysis Preference Setting: None

Report By: brr
Report Date: Friday, September 14, 2018 20:28:03

Structure Definition Name: Span 1
Member Name: Girder B
Member Alternative Name: Girder B

Load and Resistance Factor Rating Summary

Live Load		Rating Factor	Girder Summary Controls	Capacity (Ton)	Span	Location (ft)	Percent	Impact	Lane
EV2	Legal	3.455	STRENGTH-I Steel Flexure Stress	99.34	1	55.00	50.0	As Requested	As Requested
EV3	Legal	2.281	STRENGTH-I Steel Flexure Stress	98.07	1	55.00	50.0	As Requested	As Requested
HL-93 (US)	Inventory	0.935	STRENGTH-I Steel Flexure Stress	33.65	1	55.00	50.0	As Requested	As Requested
HL-93 (US)	Operating	1.212	STRENGTH-I Steel Flexure Stress	43.63	1	55.00	50.0	As Requested	As Requested
SU4	Legal	2.506	STRENGTH-I Steel Flexure Stress	67.68	1	55.00	50.0	As Requested	As Requested
SU5	Legal	2.235	STRENGTH-I Steel Flexure Stress	69.29	1	55.00	50.0	As Requested	As Requested
SU6	Legal	1.999	STRENGTH-I Steel Flexure Stress	69.47	1	55.00	50.0	As Requested	As Requested
SU7	Legal	1.815	STRENGTH-I Steel Flexure Stress	70.33	1	55.00	50.0	As Requested	As Requested
Type 3	Legal	2.773	STRENGTH-I Steel Flexure Stress	69.33	1	55.00	50.0	As Requested	As Requested
Type 3-3	Legal	2.199	STRENGTH-I Steel Flexure Stress	87.95	1	55.00	50.0	As Requested	As Requested
Type 3S2	Legal	2.255	STRENGTH-I Steel Flexure Stress	81.16	1	55.00	50.0	As Requested	As Requested
RI-3	Permit	1.951	STRENGTH-II Steel Flexure Stress	74.13	1	55.00	50.0	As Requested	As Requested
RI-4	Permit	1.998	STRENGTH-II Steel Flexure Stress	74.93	1	55.00	50.0	As Requested	As Requested
RI-5	Permit	1.565	STRENGTH-II Steel Flexure Stress	81.99	1	55.00	50.0	As Requested	As Requested

RI-6	Permit	1.485	STRENGTH-II Steel Flexure Stress	96.51	1	49.50	45.0	As Requested	As Requested
RIDOT H20 Truck	Legal	3.244	STRENGTH-I Steel Flexure Stress	64.87	1	55.00	50.0	As Requested	As Requested
RI-OP 1	Permit	2.320	STRENGTH-II Steel Flexure Stress	131.09	1	55.00	50.0	As Requested	As Requested
RI-OP 2	Permit	2.288	STRENGTH-II Steel Shear	183.02	1	110.00	100.0	As Requested	As Requested
RI-OP 3	Permit	2.049	STRENGTH-II Steel Shear	231.52	1	110.00	100.0	As Requested	As Requested
RIPTA Bus	Legal	3.476	STRENGTH-I Steel Flexure Stress	72.29	1	55.00	50.0	As Requested	As Requested

Note:
"N/A" indicates not applicable
"**" indicates not available

Report by Action: ☑ **Flexure** ☑ **Shear** ☑ **Overload** ☑ **Interaction** ☑ **Critical**

Detailed Rating Results
Girder B
EV2
Axle Load
Impact: As Requested
Lane: As Requested

Span 1

Location (ft)	Percent	Limit State	Units	Capacity	DL + Adj -LL*	LL	Legal Rating Factor	Legal Load Rating (Ton)
0.00	0.0	Flexure	KSI	-36.00	-0.00	-0.00	99.000	2846.25
0.00	**0.0**	**Shear**	**KIPS**	**336.32**	**93.90**	**42.95**	**3.790**	**108.96**
0.00	0.0	Overload	KSI	-36.00	-0.00	-0.00	99.000	2846.25
11.00	10.0	Flexure	KSI	36.00	6.81	1.71	12.149	349.28
11.00	**10.0**	**Shear**	**KIPS**	**542.44**	**75.50**	**38.39**	**8.859**	**254.71**
11.00	10.0	Overload	KSI	36.00	6.81	1.71	12.314	354.03
22.00	**20.0**	**Flexure**	**KSI**	**36.00**	**12.14**	**3.02**	**5.100**	**146.63**
22.00	20.0	Shear	KIPS	542.44	57.10	33.84	10.608	304.97
22.00	20.0	Overload	KSI	36.00	12.14	3.02	5.626	161.75
25.50	**23.2**	**Flexure**	**KSI**	**36.00**	**13.51**	**3.35**	**4.181**	**120.20**
25.50	23.2	Shear	KIPS	542.44	50.78	32.39	11.281	324.33
25.50	23.2	Overload	KSI	36.00	13.51	3.35	4.755	136.71
33.00	**30.0**	**Flexure**	**KSI**	**36.00**	**12.51**	**3.17**	**4.736**	**136.17**
33.00	30.0	Shear	KIPS	542.44	37.99	29.29	12.924	371.55
33.00	30.0	Overload	KSI	36.00	12.51	3.17	5.271	151.54
44.00	**40.0**	**Flexure**	**KSI**	**36.00**	**14.31**	**3.56**	**3.692**	**106.15**
44.00	40.0	Shear	KIPS	542.44	19.23	24.73	16.078	462.25
44.00	40.0	Overload	KSI	36.00	14.31	3.56	4.291	123.38
49.50	**45.0**	**Flexure**	**KSI**	**36.00**	**14.76**	**3.64**	**3.491**	**100.37**
49.50	45.0	Shear	KIPS	542.44	9.38	22.45	18.156	521.98
49.50	45.0	Overload	KSI	36.00	14.76	3.64	4.108	118.10
55.00	**50.0**	**Flexure**	**KSI**	**36.00**	**14.90**	**3.64**	**3.455**	**99.34**
55.00	50.0	Shear	KIPS	542.44	0.00	-20.18	20.679	594.54
55.00	50.0	Overload	KSI	36.00	14.90	3.64	4.083	117.38
66.00	**60.0**	**Flexure**	**KSI**	**36.00**	**14.31**	**3.56**	**3.692**	**106.15**
66.00	60.0	Shear	KIPS	542.44	-19.23	-24.73	16.078	462.25
66.00	60.0	Overload	KSI	36.00	14.31	3.56	4.291	123.38

77.00	**70.0**	**Flexure**	**KSI**	**36.00**	**12.51**	**3.17**	**4.736**	**136.17**
77.00	70.0	Shear	KIPS	542.44	-37.99	-29.29	12.924	371.55
77.00	70.0	Overload	KSI	36.00	12.51	3.17	5.271	151.54
84.50	**76.8**	**Flexure**	**KSI**	**36.00**	**13.51**	**3.35**	**4.181**	**120.20**
84.50	76.8	Shear	KIPS	542.44	-50.78	-32.39	11.281	324.33
84.50	76.8	Overload	KSI	36.00	13.51	3.35	4.755	136.71
88.00	**80.0**	**Flexure**	**KSI**	**36.00**	**12.14**	**3.02**	**5.100**	**146.63**
88.00	80.0	Shear	KIPS	542.44	-57.10	-33.84	10.608	304.97
88.00	80.0	Overload	KSI	36.00	12.14	3.02	5.626	161.75
99.00	90.0	Flexure	KSI	36.00	6.81	1.71	12.149	349.28
99.00	**90.0**	**Shear**	**KIPS**	**542.44**	**-75.50**	**-38.39**	**8.859**	**254.71**
99.00	90.0	Overload	KSI	36.00	6.81	1.71	12.314	354.03
110.00	100.0	Flexure	KSI	-36.00	-0.00	-0.00	99.000	2846.25
110.00	**100.0**	**Shear**	**KIPS**	**336.32**	**-93.90**	**-42.95**	**3.790**	**108.96**
110.00	100.0	Overload	KSI	-36.00	-0.00	-0.00	99.000	2846.25

Detailed Rating Results
Girder B
EV3
Axle Load
Impact: As Requested
Lane: As Requested

Span 1

Location (ft)	Percent	Limit State	Units	Capacity	DL + Adj -LL*	LL	Legal Rating Factor	Legal Load Rating (Ton)
0.00	0.0	Flexure	KSI	-36.00	-0.00	-0.00	99.000	4257.00
0.00	**0.0**	**Shear**	**KIPS**	**336.32**	**93.90**	**63.93**	**2.546**	**109.47**
0.00	0.0	Overload	KSI	-36.00	-0.00	-0.00	99.000	4257.00
11.00	10.0	Flexure	KSI	36.00	6.81	2.55	8.165	351.11
11.00	**10.0**	**Shear**	**KIPS**	**542.44**	**75.50**	**57.12**	**5.954**	**256.04**
11.00	10.0	Overload	KSI	36.00	6.81	2.55	8.276	355.88
22.00	**20.0**	**Flexure**	**KSI**	**36.00**	**12.14**	**4.49**	**3.430**	**147.50**
22.00	20.0	Shear	KIPS	542.44	57.10	50.31	7.135	306.79
22.00	20.0	Overload	KSI	36.00	12.14	4.49	3.784	162.71
25.50	**23.2**	**Flexure**	**KSI**	**36.00**	**13.51**	**4.97**	**2.813**	**120.94**
25.50	23.2	Shear	KIPS	542.44	50.78	48.15	7.589	326.35
25.50	23.2	Overload	KSI	36.00	13.51	4.97	3.199	137.56
33.00	**30.0**	**Flexure**	**KSI**	**36.00**	**12.51**	**4.70**	**3.189**	**137.11**
33.00	30.0	Shear	KIPS	542.44	37.99	43.50	8.700	374.11

33.00	30.0	Overload	KSI	36.00	12.51	4.70	3.548	152.58
44.00	**40.0**	**Flexure**	**KSI**	**36.00**	**14.31**	**5.32**	**2.472**	**106.31**
44.00	40.0	Shear	KIPS	542.44	19.23	36.69	10.838	466.02
44.00	40.0	Overload	KSI	36.00	14.31	5.32	2.874	123.56
49.50	**45.0**	**Flexure**	**KSI**	**36.00**	**14.76**	**5.48**	**2.321**	**99.80**
49.50	45.0	Shear	KIPS	542.44	9.38	33.29	12.248	526.67
49.50	45.0	Overload	KSI	36.00	14.76	5.48	2.731	117.42
55.00	**50.0**	**Flexure**	**KSI**	**36.00**	**14.90**	**5.51**	**2.281**	**98.07**
55.00	50.0	Shear	KIPS	542.44	0.00	-29.88	13.965	600.49
55.00	50.0	Overload	KSI	36.00	14.90	5.51	2.695	115.88
66.00	**60.0**	**Flexure**	**KSI**	**36.00**	**14.31**	**5.32**	**2.472**	**106.31**
66.00	60.0	Shear	KIPS	542.44	-19.23	-36.69	10.838	466.02
66.00	60.0	Overload	KSI	36.00	14.31	5.32	2.874	123.56
77.00	**70.0**	**Flexure**	**KSI**	**36.00**	**12.51**	**4.70**	**3.189**	**137.11**
77.00	70.0	Shear	KIPS	542.44	-37.99	-43.50	8.700	374.11
77.00	70.0	Overload	KSI	36.00	12.51	4.70	3.548	152.58
84.50	**76.8**	**Flexure**	**KSI**	**36.00**	**13.51**	**4.97**	**2.813**	**120.94**
84.50	76.8	Shear	KIPS	542.44	-50.78	-48.15	7.589	326.35
84.50	76.8	Overload	KSI	36.00	13.51	4.97	3.199	137.56
88.00	**80.0**	**Flexure**	**KSI**	**36.00**	**12.14**	**4.49**	**3.430**	**147.50**
88.00	80.0	Shear	KIPS	542.44	-57.10	-50.31	7.135	306.79
88.00	80.0	Overload	KSI	36.00	12.14	4.49	3.784	162.71
99.00	90.0	Flexure	KSI	36.00	6.81	2.55	8.165	351.11
99.00	**90.0**	**Shear**	**KIPS**	**542.44**	**-75.50**	**-57.12**	**5.954**	**256.04**
99.00	90.0	Overload	KSI	36.00	6.81	2.55	8.276	355.88
110.00	100.0	Flexure	KSI	-36.00	-0.00	-0.00	99.000	4257.00
110.00	**100.0**	**Shear**	**KIPS**	**336.32**	**-93.90**	**-63.93**	**2.546**	**109.47**
110.00	100.0	Overload	KSI	-36.00	-0.00	-0.00	99.000	4257.00

Detailed Rating Results
Girder B
HL-93 (US)
Truck + Lane
Impact: As Requested
Lane: As Requested

Span 1

Location (ft)	Percent	Limit State	Units	Capacity	DL + Adj-LL*	LL	Inventory Rating Factor	Inventory Load Rating (Ton)	Operating Rating Factor	Operating Load Rating (Ton)

0.00	0.0	Flexure	KSI	-36.00	-0.00	-0.00	99.000	3564.00	99.000	3564.00
0.00	**0.0**	**Shear**	**KIPS**	**336.32**	**93.90**	**95.70**	**1.263**	**45.49**	**1.638**	**58.96**
0.00	0.0	Overload	KSI	-36.00	-0.00	-0.00	99.000	3564.00	99.000	3564.00
11.00	10.0	Flexure	KSI	36.00	6.81	4.62	3.346	120.45	4.337	156.14
11.00	**10.0**	**Shear**	**KIPS**	**542.44**	**75.50**	**83.03**	**3.043**	**109.56**	**3.945**	**142.02**
11.00	10.0	Overload	KSI	36.00	6.81	4.62	4.565	164.35	5.935	213.65
22.00	**20.0**	**Flexure**	**KSI**	**36.00**	**12.14**	**8.13**	**1.406**	**50.61**	**1.822**	**65.60**
22.00	20.0	Shear	KIPS	542.44	57.10	70.90	3.761	135.39	4.875	175.50
22.00	20.0	Overload	KSI	36.00	12.14	8.13	2.088	75.15	2.714	97.70
25.50	**23.2**	**Flexure**	**KSI**	**36.00**	**13.51**	**9.02**	**1.153**	**41.50**	**1.494**	**53.79**
25.50	23.2	Shear	KIPS	542.44	50.78	67.16	4.042	145.50	5.239	188.60
25.50	23.2	Overload	KSI	36.00	13.51	9.02	1.765	63.54	2.294	82.60
33.00	**30.0**	**Flexure**	**KSI**	**36.00**	**12.51**	**8.52**	**1.307**	**47.05**	**1.694**	**60.99**
33.00	30.0	Shear	KIPS	542.44	37.99	59.33	4.739	170.59	6.143	221.14
33.00	30.0	Overload	KSI	36.00	12.51	8.52	1.958	70.48	2.545	91.63
44.00	**40.0**	**Flexure**	**KSI**	**36.00**	**14.31**	**9.67**	**1.011**	**36.38**	**1.310**	**47.16**
44.00	40.0	Shear	KIPS	542.44	19.23	48.31	6.115	220.14	7.927	285.37
44.00	40.0	Overload	KSI	36.00	14.31	9.67	1.581	56.92	2.056	74.00
49.50	**45.0**	**Flexure**	**KSI**	**36.00**	**14.76**	**9.94**	**0.950**	**34.20**	**1.232**	**44.33**
49.50	45.0	Shear	KIPS	542.44	9.38	43.00	7.043	253.56	9.130	328.68
49.50	45.0	Overload	KSI	36.00	14.76	9.94	1.505	54.17	1.956	70.42
55.00	**50.0**	**Flexure**	**KSI**	**36.00**	**14.90**	**9.98**	**0.935**	**33.65**	**1.212**	**43.63**
55.00	50.0	Shear	KIPS	542.44	0.00	-37.83	8.194	294.99	10.622	382.39
55.00	50.0	Overload	KSI	36.00	14.90	9.98	1.487	53.53	1.933	69.59
66.00	**60.0**	**Flexure**	**KSI**	**36.00**	**14.31**	**9.67**	**1.011**	**36.38**	**1.310**	**47.16**
66.00	60.0	Shear	KIPS	542.44	-19.23	-48.31	6.115	220.14	7.927	285.37
66.00	60.0	Overload	KSI	36.00	14.31	9.67	1.581	56.92	2.056	74.00
77.00	**70.0**	**Flexure**	**KSI**	**36.00**	**12.51**	**8.52**	**1.307**	**47.05**	**1.694**	**60.99**
77.00	70.0	Shear	KIPS	542.44	-37.99	-59.33	4.739	170.59	6.143	221.14
77.00	70.0	Overload	KSI	36.00	12.51	8.52	1.958	70.48	2.545	91.63
84.50	**76.8**	**Flexure**	**KSI**	**36.00**	**13.51**	**9.02**	**1.153**	**41.50**	**1.494**	**53.79**
84.50	76.8	Shear	KIPS	542.44	-50.78	-67.16	4.042	145.50	5.239	188.60
84.50	76.8	Overload	KSI	36.00	13.51	9.02	1.765	63.54	2.294	82.60
88.00	**80.0**	**Flexure**	**KSI**	**36.00**	**12.14**	**8.13**	**1.406**	**50.61**	**1.822**	**65.60**
88.00	80.0	Shear	KIPS	542.44	-57.10	-70.90	3.761	135.39	4.875	175.50
88.00	80.0	Overload	KSI	36.00	12.14	8.13	2.088	75.15	2.714	97.70
99.00	90.0	Flexure	KSI	36.00	6.81	4.62	3.346	120.45	4.337	156.14
99.00	**90.0**	**Shear**	**KIPS**	**542.44**	**-75.50**	**-83.03**	**3.043**	**109.56**	**3.945**	**142.02**

99.00	90.0	Overload	KSI	36.00	6.81	4.62	4.565	164.35	5.935	213.65
110.00	100.0	Flexure	KSI	-36.00	-0.00	-0.00	99.000	3564.00	99.000	3564.00
110.00	**100.0**	**Shear**	**KIPS**	**336.32**	**-93.90**	**-95.70**	**1.263**	**45.49**	**1.638**	**58.96**
110.00	100.0	Overload	KSI	-36.00	-0.00	-0.00	99.000	3564.00	99.000	3564.00

Detailed Rating Results
Girder B
HL-93 (US)
Tandem + Lane
Impact: As Requested
Lane: As Requested

Span 1

Location (ft)	Percent	Limit State	Units	Capacity	DL + Adj-LL*	LL	Inventory Rating Factor	Inventory Load Rating (Ton)	Operating Rating Factor	Operating Load Rating (Ton)
0.00	0.0	Flexure	KSI	-36.00	-0.00	-0.00	99.000	3564.00	99.000	3564.00
0.00	**0.0**	**Shear**	**KIPS**	**336.32**	**93.90**	**78.29**	**1.544**	**55.60**	**2.002**	**72.07**
0.00	0.0	Overload	KSI	-36.00	-0.00	-0.00	99.000	3564.00	99.000	3564.00
11.00	10.0	Flexure	KSI	36.00	6.81	3.80	4.065	146.35	5.270	189.71
11.00	**10.0**	**Shear**	**KIPS**	**542.44**	**75.50**	**67.90**	**3.721**	**133.97**	**4.824**	**173.66**
11.00	10.0	Overload	KSI	36.00	6.81	3.80	5.547	199.68	7.211	259.59
22.00	**20.0**	**Flexure**	**KSI**	**36.00**	**12.14**	**6.74**	**1.695**	**61.02**	**2.197**	**79.10**
22.00	20.0	Shear	KIPS	542.44	57.10	58.06	4.593	165.35	5.954	214.34
22.00	20.0	Overload	KSI	36.00	12.14	6.74	2.517	90.61	3.272	117.80
25.50	**23.2**	**Flexure**	**KSI**	**36.00**	**13.51**	**7.50**	**1.386**	**49.89**	**1.797**	**64.68**
25.50	23.2	Shear	KIPS	542.44	50.78	55.04	4.932	177.54	6.393	230.15
25.50	23.2	Overload	KSI	36.00	13.51	7.50	2.122	76.39	2.759	99.31
33.00	**30.0**	**Flexure**	**KSI**	**36.00**	**12.51**	**7.14**	**1.560**	**56.17**	**2.023**	**72.81**
33.00	30.0	Shear	KIPS	542.44	37.99	48.76	5.766	207.57	7.474	269.07
33.00	30.0	Overload	KSI	36.00	12.51	7.14	2.337	84.15	3.039	109.39
44.00	**40.0**	**Flexure**	**KSI**	**36.00**	**14.31**	**8.14**	**1.202**	**43.27**	**1.558**	**56.09**
44.00	40.0	Shear	KIPS	542.44	19.23	40.02	7.382	265.75	9.569	344.49
44.00	40.0	Overload	KSI	36.00	14.31	8.14	1.880	67.69	2.444	88.00
49.50	**45.0**	**Flexure**	**KSI**	**36.00**	**14.76**	**8.37**	**1.128**	**40.59**	**1.462**	**52.62**
49.50	45.0	Shear	KIPS	542.44	9.38	35.85	8.448	304.13	10.951	394.24
49.50	45.0	Overload	KSI	36.00	14.76	8.37	1.786	64.30	2.322	83.59
55.00	**50.0**	**Flexure**	**KSI**	**36.00**	**14.90**	**8.44**	**1.106**	**39.80**	**1.433**	**51.59**
55.00	50.0	Shear	KIPS	542.44	0.00	-31.82	9.742	350.70	12.628	454.62

55.00	50.0	Overload	KSI	36.00	14.90	8.44	1.759	63.31	2.286	82.30
66.00	**60.0**	**Flexure**	**KSI**	**36.00**	**14.31**	**8.14**	**1.202**	**43.27**	**1.558**	**56.09**
66.00	60.0	Shear	KIPS	542.44	-19.23	-40.02	7.382	265.75	9.569	344.49
66.00	60.0	Overload	KSI	36.00	14.31	8.14	1.880	67.69	2.444	88.00
77.00	**70.0**	**Flexure**	**KSI**	**36.00**	**12.51**	**7.14**	**1.560**	**56.17**	**2.023**	**72.81**
77.00	70.0	Shear	KIPS	542.44	-37.99	-48.76	5.766	207.57	7.474	269.07
77.00	70.0	Overload	KSI	36.00	12.51	7.14	2.337	84.15	3.039	109.39
84.50	**76.8**	**Flexure**	**KSI**	**36.00**	**13.51**	**7.50**	**1.386**	**49.89**	**1.797**	**64.68**
84.50	76.8	Shear	KIPS	542.44	-50.78	-55.04	4.932	177.54	6.393	230.15
84.50	76.8	Overload	KSI	36.00	13.51	7.50	2.122	76.39	2.759	99.31
88.00	**80.0**	**Flexure**	**KSI**	**36.00**	**12.14**	**6.74**	**1.695**	**61.02**	**2.197**	**79.10**
88.00	80.0	Shear	KIPS	542.44	-57.10	-58.06	4.593	165.35	5.954	214.34
88.00	80.0	Overload	KSI	36.00	12.14	6.74	2.517	90.61	3.272	117.80
99.00	90.0	Flexure	KSI	36.00	6.81	3.80	4.065	146.35	5.270	189.71
99.00	**90.0**	**Shear**	**KIPS**	**542.44**	**-75.50**	**-67.90**	**3.721**	**133.97**	**4.824**	**173.66**
99.00	90.0	Overload	KSI	36.00	6.81	3.80	5.547	199.68	7.211	259.59
110.00	100.0	Flexure	KSI	-36.00	-0.00	-0.00	99.000	3564.00	99.000	3564.00
110.00	**100.0**	**Shear**	**KIPS**	**336.32**	**-93.90**	**-78.29**	**1.544**	**55.60**	**2.002**	**72.07**
110.00	100.0	Overload	KSI	-36.00	-0.00	-0.00	99.000	3564.00	99.000	3564.00

Detailed Rating Results
Girder B
LRFD Fatigue Truck (US)
Axle Load
Impact: As Requested
Lane: As Requested

Span 1

Location (ft)	Percent	Limit State	Units	Capacity	DL + Adj-LL*	LL	Inventory Rating Factor	Inventory Load Rating (Ton)
11.00	**10.0**	**Interaction**	**KSI**	**12.00**	**0.00**	**2.21**	**5.428**	**162.85**
22.00	**20.0**	**Interaction**	**KSI**	**12.00**	**0.00**	**3.82**	**3.142**	**94.26**
25.50	**23.2**	**Interaction**	**KSI**	**16.00**	**0.00**	**4.28**	**3.739**	**112.17**
33.00	**30.0**	**Interaction**	**KSI**	**12.00**	**0.00**	**3.96**	**3.034**	**91.02**

44.00	**40.0**	**Interaction**	**KSI**	**12.00**	**0.00**	**4.42**	**2.714**	**81.43**
49.50	**45.0**	**Interaction**	**KSI**	**12.00**	**0.00**	**4.47**	**2.683**	**80.48**
55.00	**50.0**	**Interaction**	**KSI**	**12.00**	**0.00**	**4.40**	**2.725**	**81.74**
66.00	**60.0**	**Interaction**	**KSI**	**12.00**	**0.00**	**4.42**	**2.714**	**81.43**
77.00	**70.0**	**Interaction**	**KSI**	**12.00**	**0.00**	**3.96**	**3.034**	**91.02**
84.50	**76.8**	**Interaction**	**KSI**	**16.00**	**0.00**	**4.20**	**3.805**	**114.16**
88.00	**80.0**	**Interaction**	**KSI**	**12.00**	**0.00**	**3.82**	**3.142**	**94.26**
99.00	**90.0**	**Interaction**	**KSI**	**12.00**	**0.00**	**2.21**	**5.428**	**162.85**

Detailed Rating Results
Girder B
SU4
Axle Load
Impact: As Requested
Lane: As Requested

Span 1

Location (ft)	Percent	Limit State	Units	Capacity	DL + Adj -LL*	LL	Legal Rating Factor	Legal Load Rating (Ton)
0.00	0.0	Flexure	KSI	-36.00	-0.00	-0.00	99.000	2673.00
0.00	**0.0**	**Shear**	**KIPS**	**336.32**	**93.90**	**47.53**	**3.425**	**92.47**
0.00	0.0	Overload	KSI	-36.00	-0.00	-0.00	99.000	2673.00
11.00	10.0	Flexure	KSI	36.00	6.81	2.29	9.065	244.76
11.00	**10.0**	**Shear**	**KIPS**	**542.44**	**75.50**	**42.48**	**8.008**	**216.20**
11.00	10.0	Overload	KSI	36.00	6.81	2.29	9.189	248.09
22.00	**20.0**	**Flexure**	**KSI**	**36.00**	**12.14**	**4.04**	**3.807**	**102.78**
22.00	20.0	Shear	KIPS	542.44	57.10	37.43	9.590	258.94
22.00	20.0	Overload	KSI	36.00	12.14	4.04	4.199	113.38
25.50	**23.2**	**Flexure**	**KSI**	**36.00**	**13.51**	**4.48**	**3.121**	**84.26**
25.50	23.2	Shear	KIPS	542.44	50.78	35.82	10.200	275.40
25.50	23.2	Overload	KSI	36.00	13.51	4.48	3.550	95.84
33.00	**30.0**	**Flexure**	**KSI**	**36.00**	**12.51**	**4.24**	**3.536**	**95.48**
33.00	30.0	Shear	KIPS	542.44	37.99	32.38	11.688	315.58
33.00	30.0	Overload	KSI	36.00	12.51	4.24	3.936	106.26
44.00	**40.0**	**Flexure**	**KSI**	**36.00**	**14.31**	**4.84**	**2.719**	**73.42**
44.00	40.0	Shear	KIPS	542.44	19.23	27.33	14.548	392.80
44.00	40.0	Overload	KSI	36.00	14.31	4.84	3.161	85.33
49.50	**45.0**	**Flexure**	**KSI**	**36.00**	**14.76**	**4.98**	**2.552**	**68.90**
49.50	45.0	Shear	KIPS	542.44	9.38	24.81	16.433	443.69
49.50	45.0	Overload	KSI	36.00	14.76	4.98	3.003	81.07

55.00	**50.0**	**Flexure**	**KSI**	**36.00**	**14.90**	**5.01**	**2.506**	**67.68**
55.00	50.0	Shear	KIPS	542.44	0.00	-22.28	18.725	505.57
55.00	50.0	Overload	KSI	36.00	14.90	5.01	2.962	79.97
66.00	**60.0**	**Flexure**	**KSI**	**36.00**	**14.31**	**4.84**	**2.719**	**73.42**
66.00	60.0	Shear	KIPS	542.44	-19.23	-27.33	14.548	392.80
66.00	60.0	Overload	KSI	36.00	14.31	4.84	3.161	85.33
77.00	**70.0**	**Flexure**	**KSI**	**36.00**	**12.51**	**4.24**	**3.536**	**95.48**
77.00	70.0	Shear	KIPS	542.44	-37.99	-32.38	11.688	315.58
77.00	70.0	Overload	KSI	36.00	12.51	4.24	3.936	106.26
84.50	**76.8**	**Flexure**	**KSI**	**36.00**	**13.51**	**4.48**	**3.121**	**84.26**
84.50	76.8	Shear	KIPS	542.44	-50.78	-35.82	10.200	275.40
84.50	76.8	Overload	KSI	36.00	13.51	4.48	3.550	95.84
88.00	**80.0**	**Flexure**	**KSI**	**36.00**	**12.14**	**4.04**	**3.807**	**102.78**
88.00	80.0	Shear	KIPS	542.44	-57.10	-37.43	9.590	258.94
88.00	80.0	Overload	KSI	36.00	12.14	4.04	4.199	113.38
99.00	90.0	Flexure	KSI	36.00	6.81	2.29	9.065	244.76
99.00	**90.0**	**Shear**	**KIPS**	**542.44**	**-75.50**	**-42.48**	**8.008**	**216.20**
99.00	90.0	Overload	KSI	36.00	6.81	2.29	9.189	248.09
110.00	100.0	Flexure	KSI	-36.00	-0.00	-0.00	99.000	2673.00
110.00	**100.0**	**Shear**	**KIPS**	**336.32**	**-93.90**	**-47.53**	**3.425**	**92.47**
110.00	100.0	Overload	KSI	-36.00	-0.00	-0.00	99.000	2673.00

Detailed Rating Results
Girder B
SU5
Axle Load
Impact: As Requested
Lane: As Requested

Span 1

Location (ft)	Percent	Limit State	Units	Capacity	DL + Adj -LL*	LL	Legal Rating Factor	Legal Load Rating (Ton)
0.00	0.0	Flexure	KSI	-36.00	-0.00	-0.00	99.000	3069.00
0.00	**0.0**	**Shear**	**KIPS**	**336.32**	**93.90**	**53.78**	**3.026**	**93.82**
0.00	0.0	Overload	KSI	-36.00	-0.00	-0.00	99.000	3069.00
11.00	10.0	Flexure	KSI	36.00	6.81	2.59	8.025	248.77
11.00	**10.0**	**Shear**	**KIPS**	**542.44**	**75.50**	**47.98**	**7.088**	**219.74**
11.00	10.0	Overload	KSI	36.00	6.81	2.59	8.134	252.15
22.00	**20.0**	**Flexure**	**KSI**	**36.00**	**12.14**	**4.56**	**3.377**	**104.69**
22.00	20.0	Shear	KIPS	542.44	57.10	42.19	8.508	263.76

22.00	20.0	Overload	KSI	36.00	12.14	4.56	3.725	115.49
25.50	**23.2**	**Flexure**	**KSI**	**36.00**	**13.51**	**5.05**	**2.771**	**85.90**
25.50	23.2	Shear	KIPS	542.44	50.78	40.34	9.057	280.77
25.50	23.2	Overload	KSI	36.00	13.51	5.05	3.152	97.71
33.00	**30.0**	**Flexure**	**KSI**	**36.00**	**12.51**	**4.79**	**3.131**	**97.06**
33.00	30.0	Shear	KIPS	542.44	37.99	36.39	10.400	322.39
33.00	30.0	Overload	KSI	36.00	12.51	4.79	3.484	108.01
44.00	**40.0**	**Flexure**	**KSI**	**36.00**	**14.31**	**5.46**	**2.412**	**74.76**
44.00	40.0	Shear	KIPS	542.44	19.23	30.60	12.996	402.89
44.00	40.0	Overload	KSI	36.00	14.31	5.46	2.803	86.89
49.50	**45.0**	**Flexure**	**KSI**	**36.00**	**14.76**	**5.60**	**2.269**	**70.34**
49.50	45.0	Shear	KIPS	542.44	9.38	27.70	14.719	456.28
49.50	45.0	Overload	KSI	36.00	14.76	5.60	2.670	82.77
55.00	**50.0**	**Flexure**	**KSI**	**36.00**	**14.90**	**5.62**	**2.235**	**69.29**
55.00	50.0	Shear	KIPS	542.44	0.00	-24.80	16.825	521.58
55.00	50.0	Overload	KSI	36.00	14.90	5.62	2.641	81.87
66.00	**60.0**	**Flexure**	**KSI**	**36.00**	**14.31**	**5.46**	**2.412**	**74.76**
66.00	60.0	Shear	KIPS	542.44	-19.23	-30.60	12.996	402.89
66.00	60.0	Overload	KSI	36.00	14.31	5.46	2.803	86.89
77.00	**70.0**	**Flexure**	**KSI**	**36.00**	**12.51**	**4.79**	**3.131**	**97.06**
77.00	70.0	Shear	KIPS	542.44	-37.99	-36.39	10.400	322.39
77.00	70.0	Overload	KSI	36.00	12.51	4.79	3.484	108.01
84.50	**76.8**	**Flexure**	**KSI**	**36.00**	**13.51**	**5.05**	**2.771**	**85.90**
84.50	76.8	Shear	KIPS	542.44	-50.78	-40.34	9.057	280.77
84.50	76.8	Overload	KSI	36.00	13.51	5.05	3.152	97.71
88.00	**80.0**	**Flexure**	**KSI**	**36.00**	**12.14**	**4.56**	**3.377**	**104.69**
88.00	80.0	Shear	KIPS	542.44	-57.10	-42.19	8.508	263.76
88.00	80.0	Overload	KSI	36.00	12.14	4.56	3.725	115.49
99.00	90.0	Flexure	KSI	36.00	6.81	2.59	8.025	248.77
99.00	**90.0**	**Shear**	**KIPS**	**542.44**	**-75.50**	**-47.98**	**7.088**	**219.74**
99.00	90.0	Overload	KSI	36.00	6.81	2.59	8.134	252.15
110.00	100.0	Flexure	KSI	-36.00	-0.00	-0.00	99.000	3069.00
110.00	**100.0**	**Shear**	**KIPS**	**336.32**	**-93.90**	**-53.78**	**3.026**	**93.82**
110.00	100.0	Overload	KSI	-36.00	-0.00	-0.00	99.000	3069.00

Detailed Rating Results
Girder B
SU6
Axle Load
Impact: As Requested
Lane: As Requested

Span 1

Location (ft)	Percent	Limit State	Units	Capacity	DL + Adj -LL*	LL	Legal Rating Factor	Legal Load Rating (Ton)
0.00	0.0	Flexure	KSI	-36.00	-0.00	-0.00	99.000	3440.25
0.00	**0.0**	**Shear**	**KIPS**	**336.32**	**93.90**	**58.80**	**2.768**	**96.20**
0.00	0.0	Overload	KSI	-36.00	-0.00	-0.00	99.000	3440.25
11.00	10.0	Flexure	KSI	36.00	6.81	2.82	7.363	255.87
11.00	**10.0**	**Shear**	**KIPS**	**542.44**	**75.50**	**52.30**	**6.504**	**226.01**
11.00	10.0	Overload	KSI	36.00	6.81	2.82	7.463	259.34
22.00	**20.0**	**Flexure**	**KSI**	**36.00**	**12.14**	**5.05**	**3.044**	**105.79**
22.00	20.0	Shear	KIPS	542.44	57.10	45.80	7.837	272.35
22.00	20.0	Overload	KSI	36.00	12.14	5.05	3.358	116.70
25.50	**23.2**	**Flexure**	**KSI**	**36.00**	**13.51**	**5.62**	**2.489**	**86.48**
25.50	23.2	Shear	KIPS	542.44	50.78	43.73	8.355	290.34
25.50	23.2	Overload	KSI	36.00	13.51	5.62	2.831	98.36
33.00	**30.0**	**Flexure**	**KSI**	**36.00**	**12.51**	**5.34**	**2.809**	**97.63**
33.00	30.0	Shear	KIPS	542.44	37.99	39.30	9.630	334.63
33.00	30.0	Overload	KSI	36.00	12.51	5.34	3.127	108.65
44.00	**40.0**	**Flexure**	**KSI**	**36.00**	**14.31**	**6.06**	**2.171**	**75.44**
44.00	40.0	Shear	KIPS	542.44	19.23	32.81	12.121	421.21
44.00	40.0	Overload	KSI	36.00	14.31	6.06	2.523	87.68
49.50	**45.0**	**Flexure**	**KSI**	**36.00**	**14.76**	**6.24**	**2.036**	**70.75**
49.50	45.0	Shear	KIPS	542.44	9.38	29.56	13.793	479.30
49.50	45.0	Overload	KSI	36.00	14.76	6.24	2.395	83.24
55.00	**50.0**	**Flexure**	**KSI**	**36.00**	**14.90**	**6.28**	**1.999**	**69.47**
55.00	50.0	Shear	KIPS	542.44	0.00	-26.31	15.860	551.15
55.00	50.0	Overload	KSI	36.00	14.90	6.28	2.362	82.09
66.00	**60.0**	**Flexure**	**KSI**	**36.00**	**14.31**	**6.06**	**2.171**	**75.44**
66.00	60.0	Shear	KIPS	542.44	-19.23	-32.81	12.121	421.21
66.00	60.0	Overload	KSI	36.00	14.31	6.06	2.523	87.68
77.00	**70.0**	**Flexure**	**KSI**	**36.00**	**12.51**	**5.34**	**2.809**	**97.63**
77.00	70.0	Shear	KIPS	542.44	-37.99	-39.30	9.630	334.63
77.00	70.0	Overload	KSI	36.00	12.51	5.34	3.127	108.65
84.50	**76.8**	**Flexure**	**KSI**	**36.00**	**13.51**	**5.62**	**2.489**	**86.48**
84.50	76.8	Shear	KIPS	542.44	-50.78	-43.73	8.355	290.34
84.50	76.8	Overload	KSI	36.00	13.51	5.62	2.831	98.36
88.00	**80.0**	**Flexure**	**KSI**	**36.00**	**12.14**	**5.05**	**3.044**	**105.79**
88.00	80.0	Shear	KIPS	542.44	-57.10	-45.80	7.837	272.35
88.00	80.0	Overload	KSI	36.00	12.14	5.05	3.358	116.70
99.00	90.0	Flexure	KSI	36.00	6.81	2.82	7.363	255.87
99.00	**90.0**	**Shear**	**KIPS**	**542.44**	**-75.50**	**-52.30**	**6.504**	**226.01**

99.00	90.0	Overload	KSI	36.00	6.81	2.82	7.463	259.34
110.00	100.0	Flexure	KSI	-36.00	-0.00	-0.00	99.000	3440.25
110.00	**100.0**	**Shear**	**KIPS**	**336.32**	**-93.90**	**-58.80**	**2.768**	**96.20**
110.00	100.0	Overload	KSI	-36.00	-0.00	-0.00	99.000	3440.25

Detailed Rating Results
Girder B
SU7
Axle Load
Impact: As Requested
Lane: As Requested

Span 1

Location (ft)	Percent	Limit State	Units	Capacity	DL + Adj -LL*	LL	Legal Rating Factor	Legal Load Rating (Ton)
0.00	0.0	Flexure	KSI	-36.00	-0.00	-0.00	99.000	3836.25
0.00	**0.0**	**Shear**	**KIPS**	**336.32**	**93.90**	**63.91**	**2.547**	**98.69**
0.00	0.0	Overload	KSI	-36.00	-0.00	-0.00	99.000	3836.25
11.00	10.0	Flexure	KSI	36.00	6.81	3.06	6.795	263.32
11.00	**10.0**	**Shear**	**KIPS**	**542.44**	**75.50**	**56.67**	**6.003**	**232.60**
11.00	10.0	Overload	KSI	36.00	6.81	3.06	6.888	266.90
22.00	**20.0**	**Flexure**	**KSI**	**36.00**	**12.14**	**5.47**	**2.810**	**108.91**
22.00	20.0	Shear	KIPS	542.44	57.10	49.42	7.263	281.45
22.00	20.0	Overload	KSI	36.00	12.14	5.47	3.100	120.14
25.50	**23.2**	**Flexure**	**KSI**	**36.00**	**13.51**	**6.12**	**2.288**	**88.65**
25.50	23.2	Shear	KIPS	542.44	50.78	47.12	7.755	300.52
25.50	23.2	Overload	KSI	36.00	13.51	6.12	2.602	100.83
33.00	**30.0**	**Flexure**	**KSI**	**36.00**	**12.51**	**5.86**	**2.560**	**99.21**
33.00	30.0	Shear	KIPS	542.44	37.99	42.18	8.974	347.73
33.00	30.0	Overload	KSI	36.00	12.51	5.86	2.849	110.41
44.00	**40.0**	**Flexure**	**KSI**	**36.00**	**14.31**	**6.66**	**1.976**	**76.55**
44.00	40.0	Shear	KIPS	542.44	19.23	34.93	11.384	441.12
44.00	40.0	Overload	KSI	36.00	14.31	6.66	2.296	88.98
49.50	**45.0**	**Flexure**	**KSI**	**36.00**	**14.76**	**6.86**	**1.854**	**71.85**
49.50	45.0	Shear	KIPS	542.44	9.38	31.31	13.022	504.59
49.50	45.0	Overload	KSI	36.00	14.76	6.86	2.182	84.54
55.00	**50.0**	**Flexure**	**KSI**	**36.00**	**14.90**	**6.92**	**1.815**	**70.33**
55.00	50.0	Shear	KIPS	542.44	0.00	-27.69	15.072	584.03
55.00	50.0	Overload	KSI	36.00	14.90	6.92	2.145	83.10
66.00	**60.0**	**Flexure**	**KSI**	**36.00**	**14.31**	**6.66**	**1.976**	**76.55**

66.00	60.0	Shear	KIPS	542.44	-19.23	-34.93	11.384	441.12
66.00	60.0	Overload	KSI	36.00	14.31	6.66	2.296	88.98
77.00	**70.0**	**Flexure**	**KSI**	**36.00**	**12.51**	**5.86**	**2.560**	**99.21**
77.00	70.0	Shear	KIPS	542.44	-37.99	-42.18	8.974	347.73
77.00	70.0	Overload	KSI	36.00	12.51	5.86	2.849	110.41
84.50	**76.8**	**Flexure**	**KSI**	**36.00**	**13.51**	**6.12**	**2.288**	**88.65**
84.50	76.8	Shear	KIPS	542.44	-50.78	-47.12	7.755	300.52
84.50	76.8	Overload	KSI	36.00	13.51	6.12	2.602	100.83
88.00	**80.0**	**Flexure**	**KSI**	**36.00**	**12.14**	**5.47**	**2.810**	**108.91**
88.00	80.0	Shear	KIPS	542.44	-57.10	-49.42	7.263	281.45
88.00	80.0	Overload	KSI	36.00	12.14	5.47	3.100	120.14
99.00	90.0	Flexure	KSI	36.00	6.81	3.06	6.795	263.32
99.00	**90.0**	**Shear**	**KIPS**	**542.44**	**-75.50**	**-56.67**	**6.003**	**232.60**
99.00	90.0	Overload	KSI	36.00	6.81	3.06	6.888	266.90
110.00	100.0	Flexure	KSI	-36.00	-0.00	-0.00	99.000	3836.25
110.00	**100.0**	**Shear**	**KIPS**	**336.32**	**-93.90**	**-63.91**	**2.547**	**98.69**
110.00	100.0	Overload	KSI	-36.00	-0.00	-0.00	99.000	3836.25

Detailed Rating Results
Girder B
Type 3
Axle Load
Impact: As Requested
Lane: As Requested

Span 1

Location (ft)	Percent	Limit State	Units	Capacity	DL + Adj -LL*	LL	Legal Rating Factor	Legal Load Rating (Ton)
0.00	0.0	Flexure	KSI	-36.00	-0.00	-0.00	99.000	2475.00
0.00	**0.0**	**Shear**	**KIPS**	**336.32**	**93.90**	**43.58**	**3.735**	**93.37**
0.00	0.0	Overload	KSI	-36.00	-0.00	-0.00	99.000	2475.00
11.00	10.0	Flexure	KSI	36.00	6.81	2.10	9.897	247.43
11.00	**10.0**	**Shear**	**KIPS**	**542.44**	**75.50**	**38.91**	**8.742**	**218.55**
11.00	10.0	Overload	KSI	36.00	6.81	2.10	10.032	250.79
22.00	**20.0**	**Flexure**	**KSI**	**36.00**	**12.14**	**3.70**	**4.162**	**104.05**
22.00	20.0	Shear	KIPS	542.44	57.10	34.23	10.486	262.14
22.00	20.0	Overload	KSI	36.00	12.14	3.70	4.591	114.78
25.50	**23.2**	**Flexure**	**KSI**	**36.00**	**13.51**	**4.10**	**3.414**	**85.35**
25.50	23.2	Shear	KIPS	542.44	50.78	32.75	11.158	278.96
25.50	23.2	Overload	KSI	36.00	13.51	4.10	3.883	97.08

33.00	**30.0**	**Flexure**	**KSI**	**36.00**	**12.51**	**3.87**	**3.874**	**96.85**
33.00	30.0	Shear	KIPS	542.44	37.99	29.56	12.804	320.10
33.00	30.0	Overload	KSI	36.00	12.51	3.87	4.311	107.78
44.00	**40.0**	**Flexure**	**KSI**	**36.00**	**14.31**	**4.39**	**2.999**	**74.97**
44.00	40.0	Shear	KIPS	542.44	19.23	24.88	15.979	399.48
44.00	40.0	Overload	KSI	36.00	14.31	4.39	3.485	87.13
49.50	**45.0**	**Flexure**	**KSI**	**36.00**	**14.76**	**4.51**	**2.818**	**70.46**
49.50	45.0	Shear	KIPS	542.44	9.38	22.55	18.081	452.02
49.50	45.0	Overload	KSI	36.00	14.76	4.51	3.316	82.90
55.00	**50.0**	**Flexure**	**KSI**	**36.00**	**14.90**	**4.53**	**2.773**	**69.33**
55.00	50.0	Shear	KIPS	542.44	0.00	-20.21	20.646	516.15
55.00	50.0	Overload	KSI	36.00	14.90	4.53	3.277	81.93
66.00	**60.0**	**Flexure**	**KSI**	**36.00**	**14.31**	**4.39**	**2.999**	**74.97**
66.00	60.0	Shear	KIPS	542.44	-19.23	-24.88	15.979	399.48
66.00	60.0	Overload	KSI	36.00	14.31	4.39	3.485	87.13
77.00	**70.0**	**Flexure**	**KSI**	**36.00**	**12.51**	**3.87**	**3.874**	**96.85**
77.00	70.0	Shear	KIPS	542.44	-37.99	-29.56	12.804	320.10
77.00	70.0	Overload	KSI	36.00	12.51	3.87	4.311	107.78
84.50	**76.8**	**Flexure**	**KSI**	**36.00**	**13.51**	**4.10**	**3.414**	**85.35**
84.50	76.8	Shear	KIPS	542.44	-50.78	-32.75	11.158	278.96
84.50	76.8	Overload	KSI	36.00	13.51	4.10	3.883	97.08
88.00	**80.0**	**Flexure**	**KSI**	**36.00**	**12.14**	**3.70**	**4.162**	**104.05**
88.00	80.0	Shear	KIPS	542.44	-57.10	-34.23	10.486	262.14
88.00	80.0	Overload	KSI	36.00	12.14	3.70	4.591	114.78
99.00	90.0	Flexure	KSI	36.00	6.81	2.10	9.897	247.43
99.00	**90.0**	**Shear**	**KIPS**	**542.44**	**-75.50**	**-38.91**	**8.742**	**218.55**
99.00	90.0	Overload	KSI	36.00	6.81	2.10	10.032	250.79
110.00	100.0	Flexure	KSI	-36.00	-0.00	-0.00	99.000	2475.00
110.00	**100.0**	**Shear**	**KIPS**	**336.32**	**-93.90**	**-43.58**	**3.735**	**93.37**
110.00	100.0	Overload	KSI	-36.00	-0.00	-0.00	99.000	2475.00

Detailed Rating Results
Girder B
Type 3-3
Axle Load
Impact: As Requested
Lane: As Requested

Span 1

Location (ft)	Percent		Units	Capacity		LL	Legal Rating Factor	Legal Load Rating (Ton)

		Limit State			DL + Adj -LL*			
0.00	0.0	Flexure	KSI	-36.00	-0.00	-0.00	99.000	3960.00
0.00	**0.0**	**Shear**	**KIPS**	**336.32**	**93.90**	**58.54**	**2.780**	**111.22**
0.00	0.0	Overload	KSI	-36.00	-0.00	-0.00	99.000	3960.00
11.00	10.0	Flexure	KSI	36.00	6.81	2.76	7.541	301.66
11.00	**10.0**	**Shear**	**KIPS**	**542.44**	**75.50**	**51.06**	**6.661**	**266.46**
11.00	10.0	Overload	KSI	36.00	6.81	2.76	7.644	305.75
22.00	**20.0**	**Flexure**	**KSI**	**36.00**	**12.14**	**4.74**	**3.244**	**129.76**
22.00	20.0	Shear	KIPS	542.44	57.10	43.58	8.236	329.45
22.00	20.0	Overload	KSI	36.00	12.14	4.74	3.578	143.14
25.50	**23.2**	**Flexure**	**KSI**	**36.00**	**13.51**	**5.24**	**2.670**	**106.80**
25.50	23.2	Shear	KIPS	542.44	50.78	41.20	8.868	354.73
25.50	23.2	Overload	KSI	36.00	13.51	5.24	3.037	121.48
33.00	**30.0**	**Flexure**	**KSI**	**36.00**	**12.51**	**4.88**	**3.075**	**123.01**
33.00	30.0	Shear	KIPS	542.44	37.99	36.10	10.483	419.32
33.00	30.0	Overload	KSI	36.00	12.51	4.88	3.422	136.89
44.00	**40.0**	**Flexure**	**KSI**	**36.00**	**14.31**	**5.50**	**2.392**	**95.69**
44.00	40.0	Shear	KIPS	542.44	19.23	28.62	13.892	555.67
44.00	40.0	Overload	KSI	36.00	14.31	5.50	2.780	111.22
49.50	**45.0**	**Flexure**	**KSI**	**36.00**	**14.76**	**5.69**	**2.234**	**89.38**
49.50	45.0	Shear	KIPS	542.44	9.38	24.88	16.383	655.30
49.50	45.0	Overload	KSI	36.00	14.76	5.69	2.629	105.16
55.00	**50.0**	**Flexure**	**KSI**	**36.00**	**14.90**	**5.71**	**2.199**	**87.95**
55.00	50.0	Shear	KIPS	542.44	0.00	-21.15	19.733	789.33
55.00	50.0	Overload	KSI	36.00	14.90	5.71	2.598	103.93
66.00	**60.0**	**Flexure**	**KSI**	**36.00**	**14.31**	**5.50**	**2.392**	**95.69**
66.00	60.0	Shear	KIPS	542.44	-19.23	-28.62	13.892	555.67
66.00	60.0	Overload	KSI	36.00	14.31	5.50	2.780	111.22
77.00	**70.0**	**Flexure**	**KSI**	**36.00**	**12.51**	**4.88**	**3.075**	**123.01**
77.00	70.0	Shear	KIPS	542.44	-37.99	-36.10	10.483	419.32
77.00	70.0	Overload	KSI	36.00	12.51	4.88	3.422	136.89
84.50	**76.8**	**Flexure**	**KSI**	**36.00**	**13.51**	**5.24**	**2.670**	**106.80**
84.50	76.8	Shear	KIPS	542.44	-50.78	-41.20	8.868	354.73
84.50	76.8	Overload	KSI	36.00	13.51	5.24	3.037	121.48
88.00	**80.0**	**Flexure**	**KSI**	**36.00**	**12.14**	**4.74**	**3.244**	**129.76**
88.00	80.0	Shear	KIPS	542.44	-57.10	-43.58	8.236	329.45
88.00	80.0	Overload	KSI	36.00	12.14	4.74	3.578	143.14
99.00	90.0	Flexure	KSI	36.00	6.81	2.76	7.541	301.66
99.00	**90.0**	**Shear**	**KIPS**	**542.44**	**-75.50**	**-51.06**	**6.661**	**266.46**
99.00	90.0	Overload	KSI	36.00	6.81	2.76	7.644	305.75
110.00	100.0	Flexure	KSI	-36.00	-0.00	-0.00	99.000	3960.00
110.00	**100.0**	**Shear**	**KIPS**	**336.32**	**-93.90**	**-58.54**	**2.780**	**111.22**

110.00	100.0	Overload	KSI	-36.00	-0.00	-0.00	99.000	3960.00

Detailed Rating Results
Girder B
Type 3S2
Axle Load
Impact: As Requested
Lane: As Requested

Span 1

Location (ft)	Percent	Limit State	Units	Capacity	DL + Adj -LL*	LL	Legal Rating Factor	Legal Load Rating (Ton)
0.00	0.0	Flexure	KSI	-36.00	-0.00	-0.00	99.000	3564.00
0.00	**0.0**	**Shear**	**KIPS**	**336.32**	**93.90**	**55.92**	**2.911**	**104.78**
0.00	0.0	Overload	KSI	-36.00	-0.00	-0.00	99.000	3564.00
11.00	10.0	Flexure	KSI	36.00	6.81	2.66	7.828	281.81
11.00	**10.0**	**Shear**	**KIPS**	**542.44**	**75.50**	**49.19**	**6.915**	**248.93**
11.00	10.0	Overload	KSI	36.00	6.81	2.66	7.934	285.64
22.00	**20.0**	**Flexure**	**KSI**	**36.00**	**12.14**	**4.58**	**3.356**	**120.80**
22.00	20.0	Shear	KIPS	542.44	57.10	42.46	8.454	304.34
22.00	20.0	Overload	KSI	36.00	12.14	4.58	3.702	133.26
25.50	**23.2**	**Flexure**	**KSI**	**36.00**	**13.51**	**5.09**	**2.746**	**98.87**
25.50	23.2	Shear	KIPS	542.44	50.78	40.32	9.063	326.26
25.50	23.2	Overload	KSI	36.00	13.51	5.09	3.124	112.46
33.00	**30.0**	**Flexure**	**KSI**	**36.00**	**12.51**	**4.85**	**3.092**	**111.32**
33.00	30.0	Shear	KIPS	542.44	37.99	35.73	10.593	381.34
33.00	30.0	Overload	KSI	36.00	12.51	4.85	3.441	123.88
44.00	**40.0**	**Flexure**	**KSI**	**36.00**	**14.31**	**5.48**	**2.404**	**86.54**
44.00	40.0	Shear	KIPS	542.44	19.23	29.00	13.713	493.65
44.00	40.0	Overload	KSI	36.00	14.31	5.48	2.794	100.58
49.50	**45.0**	**Flexure**	**KSI**	**36.00**	**14.76**	**5.60**	**2.271**	**81.76**
49.50	45.0	Shear	KIPS	542.44	9.38	25.63	15.905	572.56
49.50	45.0	Overload	KSI	36.00	14.76	5.60	2.672	96.20
55.00	**50.0**	**Flexure**	**KSI**	**36.00**	**14.90**	**5.57**	**2.255**	**81.16**
55.00	50.0	Shear	KIPS	542.44	0.00	-22.27	18.739	674.60
55.00	50.0	Overload	KSI	36.00	14.90	5.57	2.664	95.90
66.00	**60.0**	**Flexure**	**KSI**	**36.00**	**14.31**	**5.48**	**2.404**	**86.54**
66.00	60.0	Shear	KIPS	542.44	-19.23	-29.00	13.713	493.65
66.00	60.0	Overload	KSI	36.00	14.31	5.48	2.794	100.58
77.00	**70.0**	**Flexure**	**KSI**	**36.00**	**12.51**	**4.85**	**3.092**	**111.32**

77.00	70.0	Shear	KIPS	542.44	-37.99	-35.73	10.593	381.34
77.00	70.0	Overload	KSI	36.00	12.51	4.85	3.441	123.88
84.50	**76.8**	**Flexure**	**KSI**	**36.00**	**13.51**	**5.09**	**2.746**	**98.87**
84.50	76.8	Shear	KIPS	542.44	-50.78	-40.32	9.063	326.26
84.50	76.8	Overload	KSI	36.00	13.51	5.09	3.124	112.46
88.00	**80.0**	**Flexure**	**KSI**	**36.00**	**12.14**	**4.58**	**3.356**	**120.80**
88.00	80.0	Shear	KIPS	542.44	-57.10	-42.46	8.454	304.34
88.00	80.0	Overload	KSI	36.00	12.14	4.58	3.702	133.26
99.00	90.0	Flexure	KSI	36.00	6.81	2.66	7.828	281.81
99.00	**90.0**	**Shear**	**KIPS**	**542.44**	**-75.50**	**-49.19**	**6.915**	**248.93**
99.00	90.0	Overload	KSI	36.00	6.81	2.66	7.934	285.64
110.00	100.0	Flexure	KSI	-36.00	-0.00	-0.00	99.000	3564.00
110.00	**100.0**	**Shear**	**KIPS**	**336.32**	**-93.90**	**-55.92**	**2.911**	**104.78**
110.00	100.0	Overload	KSI	-36.00	-0.00	-0.00	99.000	3564.00

Detailed Rating Results
Girder B
RI-3
Axle Load
Impact: As Requested
Lane: As Requested

Span 1

Location (ft)	Percent	Limit State	Units	Capacity	DL + Adj -LL*	LL	Permit Rating Factor	Permit Load Rating (Ton)
0.00	0.0	Flexure	KSI	-36.00	-0.00	-0.00	99.000	3762.00
0.00	**0.0**	**Shear**	**KIPS**	**336.32**	**93.90**	**67.25**	**2.660**	**101.06**
0.00	0.0	Overload	KSI	-36.00	-0.00	-0.00	99.000	3762.00
11.00	10.0	Flexure	KSI	36.00	6.81	3.25	7.035	267.34
11.00	**10.0**	**Shear**	**KIPS**	**542.44**	**75.50**	**60.14**	**6.214**	**236.14**
11.00	10.0	Overload	KSI	36.00	6.81	3.25	8.437	320.61
22.00	**20.0**	**Flexure**	**KSI**	**36.00**	**12.14**	**5.73**	**2.952**	**112.17**
22.00	20.0	Shear	KIPS	542.44	57.10	53.03	7.437	282.60
22.00	20.0	Overload	KSI	36.00	12.14	5.73	3.853	146.40
25.50	**23.2**	**Flexure**	**KSI**	**36.00**	**13.51**	**6.35**	**2.419**	**91.93**
25.50	23.2	Shear	KIPS	542.44	50.78	50.77	7.907	300.47
25.50	23.2	Overload	KSI	36.00	13.51	6.35	3.256	123.72
33.00	**30.0**	**Flexure**	**KSI**	**36.00**	**12.51**	**6.01**	**2.739**	**104.10**
33.00	30.0	Shear	KIPS	542.44	37.99	45.93	9.054	344.05
33.00	30.0	Overload	KSI	36.00	12.51	6.01	3.607	137.06

44.00	**40.0**	**Flexure**	**KSI**	**36.00**	**14.31**	**6.80**	**2.126**	**80.79**
44.00	40.0	Shear	KIPS	542.44	19.23	38.82	11.253	427.63
44.00	40.0	Overload	KSI	36.00	14.31	6.80	2.924	111.10
49.50	**45.0**	**Flexure**	**KSI**	**36.00**	**14.76**	**7.02**	**1.991**	**75.64**
49.50	45.0	Shear	KIPS	542.44	9.38	35.27	12.699	482.58
49.50	45.0	Overload	KSI	36.00	14.76	7.02	2.771	105.31
55.00	**50.0**	**Flexure**	**KSI**	**36.00**	**14.90**	**7.08**	**1.951**	**74.13**
55.00	50.0	Shear	KIPS	542.44	0.00	-31.72	14.454	549.24
55.00	50.0	Overload	KSI	36.00	14.90	7.08	2.727	103.63
66.00	**60.0**	**Flexure**	**KSI**	**36.00**	**14.31**	**6.80**	**2.126**	**80.79**
66.00	60.0	Shear	KIPS	542.44	-19.23	-38.82	11.253	427.63
66.00	60.0	Overload	KSI	36.00	14.31	6.80	2.924	111.10
77.00	**70.0**	**Flexure**	**KSI**	**36.00**	**12.51**	**6.01**	**2.739**	**104.10**
77.00	70.0	Shear	KIPS	542.44	-37.99	-45.93	9.054	344.05
77.00	70.0	Overload	KSI	36.00	12.51	6.01	3.607	137.06
84.50	**76.8**	**Flexure**	**KSI**	**36.00**	**13.51**	**6.35**	**2.419**	**91.93**
84.50	76.8	Shear	KIPS	542.44	-50.78	-50.77	7.907	300.47
84.50	76.8	Overload	KSI	36.00	13.51	6.35	3.256	123.72
88.00	**80.0**	**Flexure**	**KSI**	**36.00**	**12.14**	**5.73**	**2.952**	**112.17**
88.00	80.0	Shear	KIPS	542.44	-57.10	-53.03	7.437	282.60
88.00	80.0	Overload	KSI	36.00	12.14	5.73	3.853	146.40
99.00	90.0	Flexure	KSI	36.00	6.81	3.25	7.035	267.34
99.00	**90.0**	**Shear**	**KIPS**	**542.44**	**-75.50**	**-60.14**	**6.214**	**236.14**
99.00	90.0	Overload	KSI	36.00	6.81	3.25	8.437	320.61
110.00	100.0	Flexure	KSI	-36.00	-0.00	-0.00	99.000	3762.00
110.00	**100.0**	**Shear**	**KIPS**	**336.32**	**-93.90**	**-67.25**	**2.660**	**101.06**
110.00	100.0	Overload	KSI	-36.00	-0.00	-0.00	99.000	3762.00

Detailed Rating Results
Girder B
RI-4
Axle Load
Impact: As Requested
Lane: As Requested

Span 1

Location (ft)	Percent	Limit State	Units	Capacity	DL + Adj -LL*	LL	Permit Rating Factor	Permit Load Rating (Ton)
0.00	0.0	Flexure	KSI	-36.00	-0.00	-0.00	99.000	3712.50
0.00	**0.0**	**Shear**	**KIPS**	**336.32**	**93.90**	**65.38**	**2.735**	**102.58**

0.00	0.0	Overload	KSI	-36.00	-0.00	-0.00	99.000	3712.50
11.00	10.0	Flexure	KSI	36.00	6.81	3.15	7.249	271.83
11.00	**10.0**	**Shear**	**KIPS**	**542.44**	**75.50**	**58.37**	**6.403**	**240.11**
11.00	10.0	Overload	KSI	36.00	6.81	3.15	8.693	326.00
22.00	**20.0**	**Flexure**	**KSI**	**36.00**	**12.14**	**5.55**	**3.048**	**114.31**
22.00	20.0	Shear	KIPS	542.44	57.10	51.36	7.680	288.00
22.00	20.0	Overload	KSI	36.00	12.14	5.55	3.979	149.20
25.50	**23.2**	**Flexure**	**KSI**	**36.00**	**13.51**	**6.15**	**2.500**	**93.77**
25.50	23.2	Shear	KIPS	542.44	50.78	49.12	8.173	306.48
25.50	23.2	Overload	KSI	36.00	13.51	6.15	3.365	126.19
33.00	**30.0**	**Flexure**	**KSI**	**36.00**	**12.51**	**5.85**	**2.816**	**105.59**
33.00	30.0	Shear	KIPS	542.44	37.99	44.34	9.378	351.66
33.00	30.0	Overload	KSI	36.00	12.51	5.85	3.708	139.04
44.00	**40.0**	**Flexure**	**KSI**	**36.00**	**14.31**	**6.68**	**2.163**	**81.12**
44.00	40.0	Shear	KIPS	542.44	19.23	37.33	11.703	438.87
44.00	40.0	Overload	KSI	36.00	14.31	6.68	2.975	111.56
49.50	**45.0**	**Flexure**	**KSI**	**36.00**	**14.76**	**6.87**	**2.032**	**76.21**
49.50	45.0	Shear	KIPS	542.44	9.38	33.83	13.242	496.58
49.50	45.0	Overload	KSI	36.00	14.76	6.87	2.829	106.09
55.00	**50.0**	**Flexure**	**KSI**	**36.00**	**14.90**	**6.91**	**1.998**	**74.93**
55.00	50.0	Shear	KIPS	542.44	0.00	-30.32	15.120	567.02
55.00	50.0	Overload	KSI	36.00	14.90	6.91	2.794	104.76
66.00	**60.0**	**Flexure**	**KSI**	**36.00**	**14.31**	**6.68**	**2.163**	**81.12**
66.00	60.0	Shear	KIPS	542.44	-19.23	-37.33	11.703	438.87
66.00	60.0	Overload	KSI	36.00	14.31	6.68	2.975	111.56
77.00	**70.0**	**Flexure**	**KSI**	**36.00**	**12.51**	**5.85**	**2.816**	**105.59**
77.00	70.0	Shear	KIPS	542.44	-37.99	-44.34	9.378	351.66
77.00	70.0	Overload	KSI	36.00	12.51	5.85	3.708	139.04
84.50	**76.8**	**Flexure**	**KSI**	**36.00**	**13.51**	**6.15**	**2.500**	**93.77**
84.50	76.8	Shear	KIPS	542.44	-50.78	-49.12	8.173	306.48
84.50	76.8	Overload	KSI	36.00	13.51	6.15	3.365	126.19
88.00	**80.0**	**Flexure**	**KSI**	**36.00**	**12.14**	**5.55**	**3.048**	**114.31**
88.00	80.0	Shear	KIPS	542.44	-57.10	-51.36	7.680	288.00
88.00	80.0	Overload	KSI	36.00	12.14	5.55	3.979	149.20
99.00	90.0	Flexure	KSI	36.00	6.81	3.15	7.249	271.83
99.00	**90.0**	**Shear**	**KIPS**	**542.44**	**-75.50**	**-58.37**	**6.403**	**240.11**
99.00	90.0	Overload	KSI	36.00	6.81	3.15	8.693	326.00
110.00	100.0	Flexure	KSI	-36.00	-0.00	-0.00	99.000	3712.50
110.00	**100.0**	**Shear**	**KIPS**	**336.32**	**-93.90**	**-65.38**	**2.735**	**102.58**
110.00	100.0	Overload	KSI	-36.00	-0.00	-0.00	99.000	3712.50

Detailed Rating Results
Girder B

RI-5
Axle Load
Impact: As Requested
Lane: As Requested

Span 1

Location (ft)	Percent	Limit State	Units	Capacity	DL + Adj -LL*	LL	Permit Rating Factor	Permit Load Rating (Ton)
0.00	0.0	Flexure	KSI	-36.00	-0.00	-0.00	99.000	5187.60
0.00	**0.0**	**Shear**	**KIPS**	**336.32**	**93.90**	**85.74**	**2.086**	**109.29**
0.00	0.0	Overload	KSI	-36.00	-0.00	-0.00	99.000	5187.60
11.00	10.0	Flexure	KSI	36.00	6.81	4.10	5.571	291.92
11.00	**10.0**	**Shear**	**KIPS**	**542.44**	**75.50**	**75.95**	**4.921**	**257.86**
11.00	10.0	Overload	KSI	36.00	6.81	4.10	6.681	350.09
22.00	**20.0**	**Flexure**	**KSI**	**36.00**	**12.14**	**7.14**	**2.367**	**124.01**
22.00	20.0	Shear	KIPS	542.44	57.10	66.15	5.962	312.43
22.00	20.0	Overload	KSI	36.00	12.14	7.14	3.089	161.86
25.50	**23.2**	**Flexure**	**KSI**	**36.00**	**13.51**	**7.95**	**1.935**	**101.38**
25.50	23.2	Shear	KIPS	542.44	50.78	63.03	6.370	333.76
25.50	23.2	Overload	KSI	36.00	13.51	7.95	2.604	136.43
33.00	**30.0**	**Flexure**	**KSI**	**36.00**	**12.51**	**7.54**	**2.184**	**114.44**
33.00	30.0	Shear	KIPS	542.44	37.99	56.35	7.379	386.69
33.00	30.0	Overload	KSI	36.00	12.51	7.54	2.876	150.69
44.00	**40.0**	**Flexure**	**KSI**	**36.00**	**14.31**	**8.58**	**1.686**	**88.34**
44.00	40.0	Shear	KIPS	542.44	19.23	46.55	9.385	491.78
44.00	40.0	Overload	KSI	36.00	14.31	8.58	2.318	121.48
49.50	**45.0**	**Flexure**	**KSI**	**36.00**	**14.76**	**8.81**	**1.586**	**83.11**
49.50	45.0	Shear	KIPS	542.44	9.38	41.65	10.753	563.48
49.50	45.0	Overload	KSI	36.00	14.76	8.81	2.208	115.69
55.00	**50.0**	**Flexure**	**KSI**	**36.00**	**14.90**	**8.82**	**1.565**	**81.99**
55.00	50.0	Shear	KIPS	542.44	0.00	-36.76	12.473	653.60
55.00	50.0	Overload	KSI	36.00	14.90	8.82	2.188	114.63
66.00	**60.0**	**Flexure**	**KSI**	**36.00**	**14.31**	**8.58**	**1.686**	**88.34**
66.00	60.0	Shear	KIPS	542.44	-19.23	-46.55	9.385	491.78
66.00	60.0	Overload	KSI	36.00	14.31	8.58	2.318	121.48
77.00	**70.0**	**Flexure**	**KSI**	**36.00**	**12.51**	**7.54**	**2.184**	**114.44**
77.00	70.0	Shear	KIPS	542.44	-37.99	-56.35	7.379	386.69
77.00	70.0	Overload	KSI	36.00	12.51	7.54	2.876	150.69
84.50	**76.8**	**Flexure**	**KSI**	**36.00**	**13.51**	**7.95**	**1.935**	**101.38**
84.50	76.8	Shear	KIPS	542.44	-50.78	-63.03	6.370	333.76

84.50	76.8	Overload	KSI	36.00	13.51	7.95	2.604	136.43
88.00	**80.0**	**Flexure**	**KSI**	**36.00**	**12.14**	**7.14**	**2.367**	**124.01**
88.00	80.0	Shear	KIPS	542.44	-57.10	-66.15	5.962	312.43
88.00	80.0	Overload	KSI	36.00	12.14	7.14	3.089	161.86
99.00	90.0	Flexure	KSI	36.00	6.81	4.10	5.571	291.92
99.00	**90.0**	**Shear**	**KIPS**	**542.44**	**-75.50**	**-75.95**	**4.921**	**257.86**
99.00	90.0	Overload	KSI	36.00	6.81	4.10	6.681	350.09
110.00	100.0	Flexure	KSI	-36.00	-0.00	-0.00	99.000	5187.60
110.00	**100.0**	**Shear**	**KIPS**	**336.32**	**-93.90**	**-85.74**	**2.086**	**109.29**
110.00	100.0	Overload	KSI	-36.00	-0.00	-0.00	99.000	5187.60

Detailed Rating Results
Girder B
RI-6
Axle Load
Impact: As Requested
Lane: As Requested

Span 1

Location (ft)	Percent	Limit State	Units	Capacity	DL + Adj -LL*	LL	Permit Rating Factor	Permit Load Rating (Ton)
0.00	0.0	Flexure	KSI	-36.00	-0.00	-0.00	99.000	6435.00
0.00	**0.0**	**Shear**	**KIPS**	**336.32**	**93.90**	**97.27**	**1.764**	**114.67**
0.00	0.0	Overload	KSI	-36.00	-0.00	-0.00	99.000	6435.00
11.00	10.0	Flexure	KSI	36.00	6.81	4.60	4.769	310.01
11.00	**10.0**	**Shear**	**KIPS**	**542.44**	**75.50**	**85.11**	**4.213**	**273.84**
11.00	10.0	Overload	KSI	36.00	6.81	4.60	5.961	387.49
22.00	**20.0**	**Flexure**	**KSI**	**36.00**	**12.14**	**7.90**	**2.054**	**133.48**
22.00	20.0	Shear	KIPS	542.44	57.10	72.96	5.187	337.12
22.00	20.0	Overload	KSI	36.00	12.14	7.90	2.794	181.58
25.50	**23.2**	**Flexure**	**KSI**	**36.00**	**13.51**	**8.75**	**1.686**	**109.60**
25.50	23.2	Shear	KIPS	542.44	50.78	69.09	5.575	362.38
25.50	23.2	Overload	KSI	36.00	13.51	8.75	2.365	153.73
33.00	**30.0**	**Flexure**	**KSI**	**36.00**	**12.51**	**8.18**	**1.932**	**125.56**
33.00	30.0	Shear	KIPS	542.44	37.99	60.81	6.561	426.49
33.00	30.0	Overload	KSI	36.00	12.51	8.18	2.651	172.31
44.00	**40.0**	**Flexure**	**KSI**	**36.00**	**14.31**	**8.95**	**1.550**	**100.75**
44.00	40.0	Shear	KIPS	542.44	19.23	48.65	8.616	560.02
44.00	40.0	Overload	KSI	36.00	14.31	8.95	2.222	144.40
49.50	**45.0**	**Flexure**	**KSI**	**36.00**	**14.76**	**9.02**	**1.485**	**96.51**

49.50	45.0	Shear	KIPS	542.44	9.38	42.58	10.094	656.10
49.50	45.0	Overload	KSI	36.00	14.76	9.02	2.154	140.04
55.00	**50.0**	**Flexure**	**KSI**	**36.00**	**14.90**	**8.83**	**1.499**	**97.45**
55.00	50.0	Shear	KIPS	542.44	0.00	-36.50	12.051	783.33
55.00	50.0	Overload	KSI	36.00	14.90	8.83	2.185	141.99
66.00	**60.0**	**Flexure**	**KSI**	**36.00**	**14.31**	**8.95**	**1.550**	**100.75**
66.00	60.0	Shear	KIPS	542.44	-19.23	-48.65	8.616	560.02
66.00	60.0	Overload	KSI	36.00	14.31	8.95	2.222	144.40
77.00	**70.0**	**Flexure**	**KSI**	**36.00**	**12.51**	**8.18**	**1.932**	**125.56**
77.00	70.0	Shear	KIPS	542.44	-37.99	-60.81	6.561	426.49
77.00	70.0	Overload	KSI	36.00	12.51	8.18	2.651	172.31
84.50	**76.8**	**Flexure**	**KSI**	**36.00**	**13.51**	**8.75**	**1.686**	**109.60**
84.50	76.8	Shear	KIPS	542.44	-50.78	-69.09	5.575	362.38
84.50	76.8	Overload	KSI	36.00	13.51	8.75	2.365	153.73
88.00	**80.0**	**Flexure**	**KSI**	**36.00**	**12.14**	**7.90**	**2.054**	**133.48**
88.00	80.0	Shear	KIPS	542.44	-57.10	-72.96	5.187	337.12
88.00	80.0	Overload	KSI	36.00	12.14	7.90	2.794	181.58
99.00	90.0	Flexure	KSI	36.00	6.81	4.60	4.769	310.01
99.00	**90.0**	**Shear**	**KIPS**	**542.44**	**-75.50**	**-85.11**	**4.213**	**273.84**
99.00	90.0	Overload	KSI	36.00	6.81	4.60	5.961	387.49
110.00	100.0	Flexure	KSI	-36.00	-0.00	-0.00	99.000	6435.00
110.00	**100.0**	**Shear**	**KIPS**	**336.32**	**-93.90**	**-97.27**	**1.764**	**114.67**
110.00	100.0	Overload	KSI	-36.00	-0.00	-0.00	99.000	6435.00

Detailed Rating Results
Girder B
RIDOT H20 Truck
Axle Load
Impact: As Requested
Lane: As Requested

Span 1

Location (ft)	Percent	Limit State	Units	Capacity	DL + Adj -LL*	LL	Legal Rating Factor	Legal Load Rating (Ton)
0.00	0.0	Flexure	KSI	-36.00	-0.00	-0.00	99.000	1980.00
0.00	**0.0**	**Shear**	**KIPS**	**336.32**	**93.90**	**36.44**	**4.466**	**89.33**
0.00	0.0	Overload	KSI	-36.00	-0.00	-0.00	99.000	1980.00
11.00	10.0	Flexure	KSI	36.00	6.81	1.77	11.775	235.49
11.00	**10.0**	**Shear**	**KIPS**	**542.44**	**75.50**	**32.70**	**10.401**	**208.01**
11.00	10.0	Overload	KSI	36.00	6.81	1.77	11.935	238.69

22.00	**20.0**	**Flexure**	**KSI**	**36.00**	**12.14**	**3.13**	**4.919**	**98.38**
22.00	20.0	Shear	KIPS	542.44	57.10	28.96	12.393	247.86
22.00	20.0	Overload	KSI	36.00	12.14	3.13	5.426	108.53
25.50	**23.2**	**Flexure**	**KSI**	**36.00**	**13.51**	**3.48**	**4.025**	**80.50**
25.50	23.2	Shear	KIPS	542.44	50.78	27.77	13.156	263.12
25.50	23.2	Overload	KSI	36.00	13.51	3.48	4.578	91.56
33.00	**30.0**	**Flexure**	**KSI**	**36.00**	**12.51**	**3.30**	**4.540**	**90.79**
33.00	30.0	Shear	KIPS	542.44	37.99	25.22	15.004	300.08
33.00	30.0	Overload	KSI	36.00	12.51	3.30	5.052	101.04
44.00	**40.0**	**Flexure**	**KSI**	**36.00**	**14.31**	**3.75**	**3.509**	**70.18**
44.00	40.0	Shear	KIPS	542.44	19.23	21.49	18.508	370.15
44.00	40.0	Overload	KSI	36.00	14.31	3.75	4.078	81.56
49.50	**45.0**	**Flexure**	**KSI**	**36.00**	**14.76**	**3.85**	**3.299**	**65.99**
49.50	45.0	Shear	KIPS	542.44	9.38	19.62	20.783	415.67
49.50	45.0	Overload	KSI	36.00	14.76	3.85	3.882	77.64
55.00	**50.0**	**Flexure**	**KSI**	**36.00**	**14.90**	**3.87**	**3.244**	**64.87**
55.00	50.0	Shear	KIPS	542.44	0.00	-17.75	23.513	470.27
55.00	50.0	Overload	KSI	36.00	14.90	3.87	3.833	76.65
66.00	**60.0**	**Flexure**	**KSI**	**36.00**	**14.31**	**3.75**	**3.509**	**70.18**
66.00	60.0	Shear	KIPS	542.44	-19.23	-21.49	18.508	370.15
66.00	60.0	Overload	KSI	36.00	14.31	3.75	4.078	81.56
77.00	**70.0**	**Flexure**	**KSI**	**36.00**	**12.51**	**3.30**	**4.540**	**90.79**
77.00	70.0	Shear	KIPS	542.44	-37.99	-25.22	15.004	300.08
77.00	70.0	Overload	KSI	36.00	12.51	3.30	5.052	101.04
84.50	**76.8**	**Flexure**	**KSI**	**36.00**	**13.51**	**3.48**	**4.025**	**80.50**
84.50	76.8	Shear	KIPS	542.44	-50.78	-27.77	13.156	263.12
84.50	76.8	Overload	KSI	36.00	13.51	3.48	4.578	91.56
88.00	**80.0**	**Flexure**	**KSI**	**36.00**	**12.14**	**3.13**	**4.919**	**98.38**
88.00	80.0	Shear	KIPS	542.44	-57.10	-28.96	12.393	247.86
88.00	80.0	Overload	KSI	36.00	12.14	3.13	5.426	108.53
99.00	90.0	Flexure	KSI	36.00	6.81	1.77	11.775	235.49
99.00	**90.0**	**Shear**	**KIPS**	**542.44**	**-75.50**	**-32.70**	**10.401**	**208.01**
99.00	90.0	Overload	KSI	36.00	6.81	1.77	11.935	238.69
110.00	100.0	Flexure	KSI	-36.00	-0.00	-0.00	99.000	1980.00
110.00	**100.0**	**Shear**	**KIPS**	**336.32**	**-93.90**	**-36.44**	**4.466**	**89.33**
110.00	100.0	Overload	KSI	-36.00	-0.00	-0.00	99.000	1980.00

Detailed Rating Results
Girder B
RI-OP 1
Axle Load
Impact: As Requested
Lane: As Requested

Span 1

Location (ft)	Percent	Limit State	Units	Capacity	DL + Adj -LL*	LL	Permit Rating Factor	Permit Load Rating (Ton)
0.00	0.0	Flexure	KSI	-36.00	-0.00	-0.00	99.000	5593.50
0.00	**0.0**	**Shear**	**KIPS**	**336.32**	**93.90**	**66.31**	**2.659**	**150.24**
0.00	0.0	Overload	KSI	-36.00	-0.00	-0.00	99.000	5593.50
11.00	10.0	Flexure	KSI	36.00	6.81	2.62	8.586	485.11
11.00	**10.0**	**Shear**	**KIPS**	**542.44**	**75.50**	**58.85**	**6.261**	**353.76**
11.00	10.0	Overload	KSI	36.00	6.81	2.62	10.443	590.04
22.00	**20.0**	**Flexure**	**KSI**	**36.00**	**12.14**	**4.66**	**3.579**	**202.22**
22.00	20.0	Shear	KIPS	542.44	57.10	51.39	7.566	427.50
22.00	20.0	Overload	KSI	36.00	12.14	4.66	4.738	267.69
25.50	**23.2**	**Flexure**	**KSI**	**36.00**	**13.51**	**5.18**	**2.925**	**165.27**
25.50	23.2	Shear	KIPS	542.44	50.78	49.02	8.075	456.24
25.50	23.2	Overload	KSI	36.00	13.51	5.18	3.993	225.58
33.00	**30.0**	**Flexure**	**KSI**	**36.00**	**12.51**	**4.92**	**3.304**	**186.70**
33.00	30.0	Shear	KIPS	542.44	37.99	43.94	9.332	527.25
33.00	30.0	Overload	KSI	36.00	12.51	4.92	4.413	249.33
44.00	**40.0**	**Flexure**	**KSI**	**36.00**	**14.31**	**5.63**	**2.532**	**143.08**
44.00	40.0	Shear	KIPS	542.44	19.23	36.48	11.809	667.21
44.00	40.0	Overload	KSI	36.00	14.31	5.63	3.532	199.56
49.50	**45.0**	**Flexure**	**KSI**	**36.00**	**14.76**	**5.82**	**2.368**	**133.80**
49.50	45.0	Shear	KIPS	542.44	9.38	32.75	13.486	761.93
49.50	45.0	Overload	KSI	36.00	14.76	5.82	3.344	188.91
55.00	**50.0**	**Flexure**	**KSI**	**36.00**	**14.90**	**5.87**	**2.320**	**131.09**
55.00	50.0	Shear	KIPS	542.44	0.00	-29.02	15.576	880.05
55.00	50.0	Overload	KSI	36.00	14.90	5.87	3.290	185.87
66.00	**60.0**	**Flexure**	**KSI**	**36.00**	**14.31**	**5.63**	**2.532**	**143.08**
66.00	60.0	Shear	KIPS	542.44	-19.23	-36.48	11.809	667.21
66.00	60.0	Overload	KSI	36.00	14.31	5.63	3.532	199.56
77.00	**70.0**	**Flexure**	**KSI**	**36.00**	**12.51**	**4.92**	**3.304**	**186.70**
77.00	70.0	Shear	KIPS	542.44	-37.99	-43.94	9.332	527.25
77.00	70.0	Overload	KSI	36.00	12.51	4.92	4.413	249.33
84.50	**76.8**	**Flexure**	**KSI**	**36.00**	**13.51**	**5.18**	**2.925**	**165.27**
84.50	76.8	Shear	KIPS	542.44	-50.78	-49.02	8.075	456.24
84.50	76.8	Overload	KSI	36.00	13.51	5.18	3.993	225.58
88.00	**80.0**	**Flexure**	**KSI**	**36.00**	**12.14**	**4.66**	**3.579**	**202.22**
88.00	80.0	Shear	KIPS	542.44	-57.10	-51.39	7.566	427.50
88.00	80.0	Overload	KSI	36.00	12.14	4.66	4.738	267.69

99.00	90.0	Flexure	KSI	36.00	6.81	2.62	8.586	485.11
99.00	**90.0**	**Shear**	**KIPS**	**542.44**	**-75.50**	**-58.85**	**6.261**	**353.76**
99.00	90.0	Overload	KSI	36.00	6.81	2.62	10.443	590.04
110.00	100.0	Flexure	KSI	-36.00	-0.00	-0.00	99.000	5593.50
110.00	**100.0**	**Shear**	**KIPS**	**336.32**	**-93.90**	**-66.31**	**2.659**	**150.24**
110.00	100.0	Overload	KSI	-36.00	-0.00	-0.00	99.000	5593.50

Detailed Rating Results
Girder B
RI-OP 2
Axle Load
Impact: As Requested
Lane: As Requested

Span 1

Location (ft)	Percent	Limit State	Units	Capacity	DL + Adj -LL*	LL	Permit Rating Factor	Permit Load Rating (Ton)
0.00	0.0	Flexure	KSI	-36.00	-0.00	-0.00	99.000	7920.00
0.00	**0.0**	**Shear**	**KIPS**	**336.32**	**93.90**	**77.08**	**2.288**	**183.02**
0.00	0.0	Overload	KSI	-36.00	-0.00	-0.00	99.000	7920.00
11.00	10.0	Flexure	KSI	36.00	6.81	2.96	7.597	607.73
11.00	**10.0**	**Shear**	**KIPS**	**542.44**	**75.50**	**66.52**	**5.540**	**443.18**
11.00	10.0	Overload	KSI	36.00	6.81	2.96	9.240	739.19
22.00	**20.0**	**Flexure**	**KSI**	**36.00**	**12.14**	**5.11**	**3.260**	**260.76**
22.00	20.0	Shear	KIPS	542.44	57.10	55.96	6.949	555.96
22.00	20.0	Overload	KSI	36.00	12.14	5.11	4.315	345.19
25.50	**23.2**	**Flexure**	**KSI**	**36.00**	**13.51**	**5.62**	**2.698**	**215.87**
25.50	23.2	Shear	KIPS	542.44	50.78	52.60	7.526	602.08
25.50	23.2	Overload	KSI	36.00	13.51	5.62	3.683	294.63
33.00	**30.0**	**Flexure**	**KSI**	**36.00**	**12.51**	**5.21**	**3.117**	**249.39**
33.00	30.0	Shear	KIPS	542.44	37.99	45.40	9.032	722.52
33.00	30.0	Overload	KSI	36.00	12.51	5.21	4.163	333.04
44.00	**40.0**	**Flexure**	**KSI**	**36.00**	**14.31**	**5.63**	**2.534**	**202.69**
44.00	40.0	Shear	KIPS	542.44	19.23	35.31	12.199	975.93
44.00	40.0	Overload	KSI	36.00	14.31	5.63	3.534	282.70
49.50	**45.0**	**Flexure**	**KSI**	**36.00**	**14.76**	**5.62**	**2.450**	**196.03**
49.50	45.0	Shear	KIPS	542.44	9.38	30.46	14.499	1159.90
49.50	45.0	Overload	KSI	36.00	14.76	5.62	3.460	276.79
55.00	**50.0**	**Flexure**	**KSI**	**36.00**	**14.90**	**5.48**	**2.482**	**198.57**
55.00	50.0	Shear	KIPS	542.44	0.00	-25.79	17.529	1402.31

55.00	50.0	Overload	KSI	36.00	14.90	5.48	3.520	281.56
66.00	**60.0**	**Flexure**	**KSI**	**36.00**	**14.31**	**5.63**	**2.534**	**202.69**
66.00	60.0	Shear	KIPS	542.44	-19.23	-35.31	12.199	975.93
66.00	60.0	Overload	KSI	36.00	14.31	5.63	3.534	282.70
77.00	**70.0**	**Flexure**	**KSI**	**36.00**	**12.51**	**5.21**	**3.117**	**249.39**
77.00	70.0	Shear	KIPS	542.44	-37.99	-45.40	9.032	722.52
77.00	70.0	Overload	KSI	36.00	12.51	5.21	4.163	333.04
84.50	**76.8**	**Flexure**	**KSI**	**36.00**	**13.51**	**5.62**	**2.698**	**215.87**
84.50	76.8	Shear	KIPS	542.44	-50.78	-52.60	7.526	602.08
84.50	76.8	Overload	KSI	36.00	13.51	5.62	3.683	294.63
88.00	**80.0**	**Flexure**	**KSI**	**36.00**	**12.14**	**5.11**	**3.260**	**260.76**
88.00	80.0	Shear	KIPS	542.44	-57.10	-55.96	6.949	555.96
88.00	80.0	Overload	KSI	36.00	12.14	5.11	4.315	345.19
99.00	90.0	Flexure	KSI	36.00	6.81	2.96	7.597	607.73
99.00	**90.0**	**Shear**	**KIPS**	**542.44**	**-75.50**	**-66.52**	**5.540**	**443.18**
99.00	90.0	Overload	KSI	36.00	6.81	2.96	9.240	739.19
110.00	100.0	Flexure	KSI	-36.00	-0.00	-0.00	99.000	7920.00
110.00	**100.0**	**Shear**	**KIPS**	**336.32**	**-93.90**	**-77.08**	**2.288**	**183.02**
110.00	100.0	Overload	KSI	-36.00	-0.00	-0.00	99.000	7920.00

Detailed Rating Results
Girder B
RI-OP 3
Axle Load
Impact: As Requested
Lane: As Requested

Span 1

Location (ft)	Percent	Limit State	Units	Capacity	DL + Adj -LL*	LL	Permit Rating Factor	Permit Load Rating (Ton)
0.00	0.0	Flexure	KSI	-36.00	-0.00	-0.00	99.000	11187.00
0.00	**0.0**	**Shear**	**KIPS**	**336.32**	**93.90**	**86.06**	**2.049**	**231.52**
0.00	0.0	Overload	KSI	-36.00	-0.00	-0.00	99.000	11187.00
11.00	10.0	Flexure	KSI	36.00	6.81	3.22	7.005	791.54
11.00	**10.0**	**Shear**	**KIPS**	**542.44**	**75.50**	**71.70**	**5.140**	**580.77**
11.00	10.0	Overload	KSI	36.00	6.81	3.22	8.520	962.75
22.00	**20.0**	**Flexure**	**KSI**	**36.00**	**12.14**	**5.43**	**3.069**	**346.76**
22.00	20.0	Shear	KIPS	542.44	57.10	58.76	6.618	747.82
22.00	20.0	Overload	KSI	36.00	12.14	5.43	4.062	459.02
25.50	**23.2**	**Flexure**	**KSI**	**36.00**	**13.51**	**5.97**	**2.540**	**287.05**

25.50	23.2	Shear	KIPS	542.44	50.78	55.23	7.167	809.86
25.50	23.2	Overload	KSI	36.00	13.51	5.97	3.467	391.79
33.00	**30.0**	**Flexure**	**KSI**	**36.00**	**12.51**	**5.54**	**2.934**	**331.59**
33.00	30.0	Shear	KIPS	542.44	37.99	47.67	8.600	971.84
33.00	30.0	Overload	KSI	36.00	12.51	5.54	3.919	442.83
44.00	**40.0**	**Flexure**	**KSI**	**36.00**	**14.31**	**6.13**	**2.325**	**262.71**
44.00	40.0	Shear	KIPS	542.44	19.23	37.69	11.430	1291.63
44.00	40.0	Overload	KSI	36.00	14.31	6.13	3.243	366.40
49.50	**45.0**	**Flexure**	**KSI**	**36.00**	**14.76**	**6.24**	**2.206**	**249.32**
49.50	45.0	Shear	KIPS	542.44	9.38	33.54	13.166	1487.79
49.50	45.0	Overload	KSI	36.00	14.76	6.24	3.115	352.03
55.00	**50.0**	**Flexure**	**KSI**	**36.00**	**14.90**	**6.19**	**2.199**	**248.54**
55.00	50.0	Shear	KIPS	542.44	0.00	-29.58	15.280	1726.59
55.00	50.0	Overload	KSI	36.00	14.90	6.19	3.119	352.41
66.00	**60.0**	**Flexure**	**KSI**	**36.00**	**14.31**	**6.13**	**2.325**	**262.71**
66.00	60.0	Shear	KIPS	542.44	-19.23	-37.69	11.430	1291.63
66.00	60.0	Overload	KSI	36.00	14.31	6.13	3.243	366.40
77.00	**70.0**	**Flexure**	**KSI**	**36.00**	**12.51**	**5.54**	**2.934**	**331.59**
77.00	70.0	Shear	KIPS	542.44	-37.99	-47.67	8.600	971.84
77.00	70.0	Overload	KSI	36.00	12.51	5.54	3.919	442.83
84.50	**76.8**	**Flexure**	**KSI**	**36.00**	**13.51**	**5.97**	**2.540**	**287.05**
84.50	76.8	Shear	KIPS	542.44	-50.78	-55.23	7.167	809.86
84.50	76.8	Overload	KSI	36.00	13.51	5.97	3.467	391.79
88.00	**80.0**	**Flexure**	**KSI**	**36.00**	**12.14**	**5.43**	**3.069**	**346.76**
88.00	80.0	Shear	KIPS	542.44	-57.10	-58.76	6.618	747.82
88.00	80.0	Overload	KSI	36.00	12.14	5.43	4.062	459.02
99.00	90.0	Flexure	KSI	36.00	6.81	3.22	7.005	791.54
99.00	**90.0**	**Shear**	**KIPS**	**542.44**	**-75.50**	**-71.70**	**5.140**	**580.77**
99.00	90.0	Overload	KSI	36.00	6.81	3.22	8.520	962.75
110.00	100.0	Flexure	KSI	-36.00	-0.00	-0.00	99.000	11187.00
110.00	**100.0**	**Shear**	**KIPS**	**336.32**	**-93.90**	**-86.06**	**2.049**	**231.52**
110.00	100.0	Overload	KSI	-36.00	-0.00	-0.00	99.000	11187.00

Detailed Rating Results
Girder B
RIPTA Bus
Axle Load
Impact: As Requested
Lane: As Requested

Span 1

Location							**Legal Rating**	**Legal**

(ft)	Percent	Limit State	Units	Capacity	DL + Adj -LL*	LL	Factor	Load Rating (Ton)
0.00	0.0	Flexure	KSI	-36.00	-0.00	-0.00	99.000	2059.20
0.00	**0.0**	**Shear**	**KIPS**	**336.32**	**93.90**	**36.01**	**4.521**	**94.03**
0.00	0.0	Overload	KSI	-36.00	-0.00	-0.00	99.000	2059.20
11.00	10.0	Flexure	KSI	36.00	6.81	1.73	11.990	249.39
11.00	**10.0**	**Shear**	**KIPS**	**542.44**	**75.50**	**32.12**	**10.591**	**220.29**
11.00	10.0	Overload	KSI	36.00	6.81	1.73	12.153	252.78
22.00	**20.0**	**Flexure**	**KSI**	**36.00**	**12.14**	**3.05**	**5.048**	**104.99**
22.00	20.0	Shear	KIPS	542.44	57.10	28.23	12.717	264.50
22.00	20.0	Overload	KSI	36.00	12.14	3.05	5.568	115.81
25.50	**23.2**	**Flexure**	**KSI**	**36.00**	**13.51**	**3.38**	**4.142**	**86.15**
25.50	23.2	Shear	KIPS	542.44	50.78	26.99	13.538	281.59
25.50	23.2	Overload	KSI	36.00	13.51	3.38	4.711	97.99
33.00	**30.0**	**Flexure**	**KSI**	**36.00**	**12.51**	**3.19**	**4.705**	**97.86**
33.00	30.0	Shear	KIPS	542.44	37.99	24.34	15.550	323.44
33.00	30.0	Overload	KSI	36.00	12.51	3.19	5.236	108.91
44.00	**40.0**	**Flexure**	**KSI**	**36.00**	**14.31**	**3.57**	**3.687**	**76.68**
44.00	40.0	Shear	KIPS	542.44	19.23	20.45	19.445	404.45
44.00	40.0	Overload	KSI	36.00	14.31	3.57	4.285	89.12
49.50	**45.0**	**Flexure**	**KSI**	**36.00**	**14.76**	**3.63**	**3.497**	**72.74**
49.50	45.0	Shear	KIPS	542.44	9.38	18.51	22.031	458.24
49.50	45.0	Overload	KSI	36.00	14.76	3.63	4.115	85.59
55.00	**50.0**	**Flexure**	**KSI**	**36.00**	**14.90**	**3.61**	**3.476**	**72.29**
55.00	50.0	Shear	KIPS	542.44	0.00	-16.56	25.196	524.08
55.00	50.0	Overload	KSI	36.00	14.90	3.61	4.107	85.42
66.00	**60.0**	**Flexure**	**KSI**	**36.00**	**14.31**	**3.57**	**3.687**	**76.68**
66.00	60.0	Shear	KIPS	542.44	-19.23	-20.45	19.445	404.45
66.00	60.0	Overload	KSI	36.00	14.31	3.57	4.285	89.12
77.00	**70.0**	**Flexure**	**KSI**	**36.00**	**12.51**	**3.19**	**4.705**	**97.86**
77.00	70.0	Shear	KIPS	542.44	-37.99	-24.34	15.550	323.44
77.00	70.0	Overload	KSI	36.00	12.51	3.19	5.236	108.91
84.50	**76.8**	**Flexure**	**KSI**	**36.00**	**13.51**	**3.38**	**4.142**	**86.15**
84.50	76.8	Shear	KIPS	542.44	-50.78	-26.99	13.538	281.59
84.50	76.8	Overload	KSI	36.00	13.51	3.38	4.711	97.99
88.00	**80.0**	**Flexure**	**KSI**	**36.00**	**12.14**	**3.05**	**5.048**	**104.99**
88.00	80.0	Shear	KIPS	542.44	-57.10	-28.23	12.717	264.50
88.00	80.0	Overload	KSI	36.00	12.14	3.05	5.568	115.81
99.00	90.0	Flexure	KSI	36.00	6.81	1.73	11.990	249.39
99.00	**90.0**	**Shear**	**KIPS**	**542.44**	**-75.50**	**-32.12**	**10.591**	**220.29**
99.00	90.0	Overload	KSI	36.00	6.81	1.73	12.153	252.78

110.00	100.0	Flexure	KSI	-36.00	-0.00	-0.00	99.000	2059.20
110.00	**100.0**	**Shear**	**KIPS**	**336.32**	**-93.90**	**-36.01**	**4.521**	**94.03**
110.00	100.0	Overload	KSI	-36.00	-0.00	-0.00	99.000	2059.20

Note:
*Adj-LL is only applicable for Permit load rating.

Bridge Name: Mohegan Bridge
NBI Structure ID:
Bridge ID: 067301

Analyzed By: BrR
Analyze Date: Friday, September 14, 2018 20:31:48
Analysis Engine: AASHTO LRFR Engine Version 6.8.2.3002
Analysis Preference Setting: None

Report By: brr
Report Date: Friday, September 14, 2018 20:32:54

Structure Definition Name: Span 1
Member Name: Girder C
Member Alternative Name: Girder C

Load and Resistance Factor Rating Summary

Live Load		Rating Factor	Girder Summary Controls	Capacity (Ton)	Span	Location (ft)	Percent	Impact	Lane
EV2	Legal	3.946	STRENGTH-I Steel Flexure Stress	113.46	1	55.00	50.0	As Requested	As Requested
EV3	Legal	2.605	STRENGTH-I Steel Flexure Stress	112.00	1	55.00	50.0	As Requested	As Requested
HL-93 (US)	Inventory	1.068	STRENGTH-I Steel Flexure Stress	38.44	1	55.00	50.0	As Requested	As Requested
HL-93 (US)	Operating	1.384	STRENGTH-I Steel Flexure Stress	49.82	1	55.00	50.0	As Requested	As Requested
SU4	Legal	2.863	STRENGTH-I Steel Flexure Stress	77.29	1	55.00	50.0	As Requested	As Requested
SU5	Legal	2.553	STRENGTH-I Steel Flexure Stress	79.13	1	55.00	50.0	As Requested	As Requested
SU6	Legal	2.283	STRENGTH-I Steel Flexure Stress	79.35	1	55.00	50.0	As Requested	As Requested
SU7	Legal	2.073	STRENGTH-I Steel Flexure Stress	80.32	1	55.00	50.0	As Requested	As Requested
Type 3	Legal	3.167	STRENGTH-I Steel Flexure Stress	79.18	1	55.00	50.0	As Requested	As Requested
Type 3-3	Legal	2.511	STRENGTH-I Steel Flexure Stress	100.45	1	55.00	50.0	As Requested	As Requested
Type 3S2	Legal	2.575	STRENGTH-I Steel Flexure Stress	92.69	1	55.00	50.0	As Requested	As Requested
RI-3	Permit	2.228	STRENGTH-II Steel Flexure Stress	84.66	1	55.00	50.0	As Requested	As Requested
RI-4	Permit	2.282	STRENGTH-II Steel Flexure Stress	85.58	1	55.00	50.0	As Requested	As Requested
RI-5	Permit	1.787	STRENGTH-II Steel Flexure Stress	93.64	1	55.00	50.0	As Requested	As Requested

RI-6	Permit	1.691	STRENGTH-II Steel Flexure Stress	109.93	1	49.50	45.0	As Requested	As Requested
RIDOT H20 Truck	Legal	3.704	STRENGTH-I Steel Flexure Stress	74.09	1	55.00	50.0	As Requested	As Requested
RI-OP 1	Permit	2.650	STRENGTH-II Steel Flexure Stress	149.71	1	55.00	50.0	As Requested	As Requested
RI-OP 2	Permit	2.465	STRENGTH-II Steel Shear	197.22	1	110.00	100.0	As Requested	As Requested
RI-OP 3	Permit	2.208	STRENGTH-II Steel Shear	249.48	1	110.00	100.0	As Requested	As Requested
RIPTA Bus	Legal	3.970	STRENGTH-I Steel Flexure Stress	82.57	1	55.00	50.0	As Requested	As Requested

Note:
"N/A" indicates not applicable
"**" indicates not available

Report by Action: ☑ **Flexure** ☑ **Shear** ☑ **Overload** ☑ **Interaction** ☑ **Critical**

Detailed Rating Results
Girder C
EV2
Axle Load
Impact: As Requested
Lane: As Requested

Span 1

Location (ft)	Percent	Limit State	Units	Capacity	DL + Adj -LL*	LL	Legal Rating Factor	Legal Load Rating (Ton)
0.00	0.0	Flexure	KSI	-36.00	-0.00	-0.00	99.000	2846.25
0.00	**0.0**	**Shear**	**KIPS**	**336.32**	**82.95**	**42.95**	**4.084**	**117.42**
0.00	0.0	Overload	KSI	-36.00	-0.00	-0.00	99.000	2846.25
11.00	10.0	Flexure	KSI	36.00	6.11	1.71	12.616	362.72
11.00	**10.0**	**Shear**	**KIPS**	**542.44**	**66.74**	**38.39**	**9.123**	**262.27**
11.00	10.0	Overload	KSI	36.00	6.11	1.71	12.626	362.99
22.00	**20.0**	**Flexure**	**KSI**	**36.00**	**10.91**	**3.02**	**5.571**	**160.18**
22.00	20.0	Shear	KIPS	542.44	50.54	33.84	10.832	311.41
22.00	20.0	Overload	KSI	36.00	10.91	3.02	5.940	170.78
25.50	**23.2**	**Flexure**	**KSI**	**36.00**	**12.14**	**3.35**	**4.654**	**133.79**
25.50	23.2	Shear	KIPS	542.44	44.91	32.39	11.490	330.34
25.50	23.2	Overload	KSI	36.00	12.14	3.35	5.070	145.78
33.00	**30.0**	**Flexure**	**KSI**	**36.00**	**11.21**	**3.17**	**5.210**	**149.78**
33.00	30.0	Shear	KIPS	542.44	33.61	29.29	13.096	376.51
33.00	30.0	Overload	KSI	36.00	11.21	3.17	5.587	160.62
44.00	**40.0**	**Flexure**	**KSI**	**36.00**	**12.83**	**3.56**	**4.173**	**119.97**
44.00	40.0	Shear	KIPS	542.44	17.04	24.73	16.180	465.19
44.00	40.0	Overload	KSI	36.00	12.83	3.56	4.612	132.59
49.50	**45.0**	**Flexure**	**KSI**	**36.00**	**13.23**	**3.64**	**3.976**	**114.32**
49.50	45.0	Shear	KIPS	542.44	8.29	22.45	18.212	523.59
49.50	45.0	Overload	KSI	36.00	13.23	3.64	4.431	127.40
55.00	**50.0**	**Flexure**	**KSI**	**36.00**	**13.36**	**3.64**	**3.946**	**113.46**
55.00	50.0	Shear	KIPS	542.44	0.00	-20.18	20.679	594.54
55.00	50.0	Overload	KSI	36.00	13.36	3.64	4.410	126.79
66.00	**60.0**	**Flexure**	**KSI**	**36.00**	**12.83**	**3.56**	**4.173**	**119.97**
66.00	60.0	Shear	KIPS	542.44	-17.04	-24.73	16.180	465.19
66.00	60.0	Overload	KSI	36.00	12.83	3.56	4.612	132.59

77.00	**70.0**	**Flexure**	**KSI**	**36.00**	**11.21**	**3.17**	**5.210**	**149.78**
77.00	70.0	Shear	KIPS	542.44	-33.61	-29.29	13.096	376.51
77.00	70.0	Overload	KSI	36.00	11.21	3.17	5.587	160.62
84.50	**76.8**	**Flexure**	**KSI**	**36.00**	**12.14**	**3.35**	**4.654**	**133.79**
84.50	76.8	Shear	KIPS	542.44	-44.91	-32.39	11.490	330.34
84.50	76.8	Overload	KSI	36.00	12.14	3.35	5.070	145.78
88.00	**80.0**	**Flexure**	**KSI**	**36.00**	**10.91**	**3.02**	**5.571**	**160.18**
88.00	80.0	Shear	KIPS	542.44	-50.54	-33.84	10.832	311.41
88.00	80.0	Overload	KSI	36.00	10.91	3.02	5.940	170.78
99.00	90.0	Flexure	KSI	36.00	6.11	1.71	12.616	362.72
99.00	**90.0**	**Shear**	**KIPS**	**542.44**	**-66.74**	**-38.39**	**9.123**	**262.27**
99.00	90.0	Overload	KSI	36.00	6.11	1.71	12.626	362.99
110.00	100.0	Flexure	KSI	-36.00	-0.00	-0.00	99.000	2846.25
110.00	**100.0**	**Shear**	**KIPS**	**336.32**	**-82.95**	**-42.95**	**4.084**	**117.42**
110.00	100.0	Overload	KSI	-36.00	-0.00	-0.00	99.000	2846.25

Detailed Rating Results
Girder C
EV3
Axle Load
Impact: As Requested
Lane: As Requested

Span 1

Location (ft)	Percent	Limit State	Units	Capacity	DL + Adj -LL*	LL	Legal Rating Factor	Legal Load Rating (Ton)
0.00	0.0	Flexure	KSI	-36.00	-0.00	-0.00	99.000	4257.00
0.00	**0.0**	**Shear**	**KIPS**	**336.32**	**82.95**	**63.93**	**2.743**	**117.96**
0.00	0.0	Overload	KSI	-36.00	-0.00	-0.00	99.000	4257.00
11.00	10.0	Flexure	KSI	36.00	6.11	2.55	8.479	364.62
11.00	**10.0**	**Shear**	**KIPS**	**542.44**	**66.74**	**57.12**	**6.131**	**263.65**
11.00	10.0	Overload	KSI	36.00	6.11	2.55	8.486	364.89
22.00	**20.0**	**Flexure**	**KSI**	**36.00**	**10.91**	**4.49**	**3.747**	**161.13**
22.00	20.0	Shear	KIPS	542.44	50.54	50.31	7.285	313.26
22.00	20.0	Overload	KSI	36.00	10.91	4.49	3.995	171.80
25.50	**23.2**	**Flexure**	**KSI**	**36.00**	**12.14**	**4.97**	**3.131**	**134.62**
25.50	23.2	Shear	KIPS	542.44	44.91	48.15	7.730	332.40
25.50	23.2	Overload	KSI	36.00	12.14	4.97	3.411	146.68
33.00	**30.0**	**Flexure**	**KSI**	**36.00**	**11.21**	**4.70**	**3.507**	**150.81**
33.00	30.0	Shear	KIPS	542.44	33.61	43.50	8.816	379.10

33.00	30.0	Overload	KSI	36.00	11.21	4.70	3.761	161.72
44.00	**40.0**	**Flexure**	**KSI**	**36.00**	**12.83**	**5.32**	**2.794**	**120.15**
44.00	40.0	Shear	KIPS	542.44	17.04	36.69	10.907	468.98
44.00	40.0	Overload	KSI	36.00	12.83	5.32	3.088	132.79
49.50	**45.0**	**Flexure**	**KSI**	**36.00**	**13.23**	**5.48**	**2.643**	**113.67**
49.50	45.0	Shear	KIPS	542.44	8.29	33.29	12.286	528.30
49.50	45.0	Overload	KSI	36.00	13.23	5.48	2.946	126.67
55.00	**50.0**	**Flexure**	**KSI**	**36.00**	**13.36**	**5.51**	**2.605**	**112.00**
55.00	50.0	Shear	KIPS	542.44	0.00	-29.88	13.965	600.49
55.00	50.0	Overload	KSI	36.00	13.36	5.51	2.911	125.17
66.00	**60.0**	**Flexure**	**KSI**	**36.00**	**12.83**	**5.32**	**2.794**	**120.15**
66.00	60.0	Shear	KIPS	542.44	-17.04	-36.69	10.907	468.98
66.00	60.0	Overload	KSI	36.00	12.83	5.32	3.088	132.79
77.00	**70.0**	**Flexure**	**KSI**	**36.00**	**11.21**	**4.70**	**3.507**	**150.81**
77.00	70.0	Shear	KIPS	542.44	-33.61	-43.50	8.816	379.10
77.00	70.0	Overload	KSI	36.00	11.21	4.70	3.761	161.72
84.50	**76.8**	**Flexure**	**KSI**	**36.00**	**12.14**	**4.97**	**3.131**	**134.62**
84.50	76.8	Shear	KIPS	542.44	-44.91	-48.15	7.730	332.40
84.50	76.8	Overload	KSI	36.00	12.14	4.97	3.411	146.68
88.00	**80.0**	**Flexure**	**KSI**	**36.00**	**10.91**	**4.49**	**3.747**	**161.13**
88.00	80.0	Shear	KIPS	542.44	-50.54	-50.31	7.285	313.26
88.00	80.0	Overload	KSI	36.00	10.91	4.49	3.995	171.80
99.00	90.0	Flexure	KSI	36.00	6.11	2.55	8.479	364.62
99.00	**90.0**	**Shear**	**KIPS**	**542.44**	**-66.74**	**-57.12**	**6.131**	**263.65**
99.00	90.0	Overload	KSI	36.00	6.11	2.55	8.486	364.89
110.00	100.0	Flexure	KSI	-36.00	-0.00	-0.00	99.000	4257.00
110.00	**100.0**	**Shear**	**KIPS**	**336.32**	**-82.95**	**-63.93**	**2.743**	**117.96**
110.00	100.0	Overload	KSI	-36.00	-0.00	-0.00	99.000	4257.00

Detailed Rating Results
Girder C
HL-93 (US)
Truck + Lane
Impact: As Requested
Lane: As Requested

Span 1

Location (ft)	Percent	Limit State	Units	Capacity	DL + Adj-LL*	LL	Inventory Rating Factor	Inventory Load Rating (Ton)	Operating Rating Factor	Operating Load Rating (Ton)

0.00	0.0	Flexure	KSI	-36.00	-0.00	-0.00	99.000	3564.00	99.000	3564.00
0.00	**0.0**	**Shear**	**KIPS**	**336.32**	**82.95**	**95.70**	**1.362**	**49.01**	**1.765**	**63.54**
0.00	0.0	Overload	KSI	-36.00	-0.00	-0.00	99.000	3564.00	99.000	3564.00
11.00	10.0	Flexure	KSI	36.00	6.11	4.62	3.475	125.08	4.504	162.15
11.00	**10.0**	**Shear**	**KIPS**	**542.44**	**66.74**	**83.03**	**3.134**	**112.81**	**4.062**	**146.24**
11.00	10.0	Overload	KSI	36.00	6.11	4.62	4.681	168.51	6.085	219.06
22.00	**20.0**	**Flexure**	**KSI**	**36.00**	**10.91**	**8.13**	**1.536**	**55.28**	**1.991**	**71.66**
22.00	20.0	Shear	KIPS	542.44	50.54	70.90	3.840	138.25	4.978	179.21
22.00	20.0	Overload	KSI	36.00	10.91	8.13	2.204	79.35	2.865	103.15
25.50	**23.2**	**Flexure**	**KSI**	**36.00**	**12.14**	**9.02**	**1.283**	**46.19**	**1.663**	**59.88**
25.50	23.2	Shear	KIPS	542.44	44.91	67.16	4.116	148.19	5.336	192.10
25.50	23.2	Overload	KSI	36.00	12.14	9.02	1.882	67.75	2.447	88.07
33.00	**30.0**	**Flexure**	**KSI**	**36.00**	**11.21**	**8.52**	**1.438**	**51.75**	**1.863**	**67.09**
33.00	30.0	Shear	KIPS	542.44	33.61	59.33	4.802	172.87	6.225	224.09
33.00	30.0	Overload	KSI	36.00	11.21	8.52	2.075	74.70	2.698	97.11
44.00	**40.0**	**Flexure**	**KSI**	**36.00**	**12.83**	**9.67**	**1.142**	**41.12**	**1.481**	**53.30**
44.00	40.0	Shear	KIPS	542.44	17.04	48.31	6.154	221.54	7.977	287.18
44.00	40.0	Overload	KSI	36.00	12.83	9.67	1.699	61.17	2.209	79.53
49.50	**45.0**	**Flexure**	**KSI**	**36.00**	**13.23**	**9.94**	**1.082**	**38.95**	**1.403**	**50.50**
49.50	45.0	Shear	KIPS	542.44	8.29	43.00	7.065	254.34	9.158	329.70
49.50	45.0	Overload	KSI	36.00	13.23	9.94	1.623	58.44	2.110	75.97
55.00	**50.0**	**Flexure**	**KSI**	**36.00**	**13.36**	**9.98**	**1.068**	**38.44**	**1.384**	**49.82**
55.00	50.0	Shear	KIPS	542.44	0.00	-37.83	8.194	294.99	10.622	382.39
55.00	50.0	Overload	KSI	36.00	13.36	9.98	1.606	57.82	2.088	75.17
66.00	**60.0**	**Flexure**	**KSI**	**36.00**	**12.83**	**9.67**	**1.142**	**41.12**	**1.481**	**53.30**
66.00	60.0	Shear	KIPS	542.44	-17.04	-48.31	6.154	221.54	7.977	287.18
66.00	60.0	Overload	KSI	36.00	12.83	9.67	1.699	61.17	2.209	79.53
77.00	**70.0**	**Flexure**	**KSI**	**36.00**	**11.21**	**8.52**	**1.438**	**51.75**	**1.863**	**67.09**
77.00	70.0	Shear	KIPS	542.44	-33.61	-59.33	4.802	172.87	6.225	224.09
77.00	70.0	Overload	KSI	36.00	11.21	8.52	2.075	74.70	2.698	97.11
84.50	**76.8**	**Flexure**	**KSI**	**36.00**	**12.14**	**9.02**	**1.283**	**46.19**	**1.663**	**59.88**
84.50	76.8	Shear	KIPS	542.44	-44.91	-67.16	4.116	148.19	5.336	192.10
84.50	76.8	Overload	KSI	36.00	12.14	9.02	1.882	67.75	2.447	88.07
88.00	**80.0**	**Flexure**	**KSI**	**36.00**	**10.91**	**8.13**	**1.536**	**55.28**	**1.991**	**71.66**
88.00	80.0	Shear	KIPS	542.44	-50.54	-70.90	3.840	138.25	4.978	179.21
88.00	80.0	Overload	KSI	36.00	10.91	8.13	2.204	79.35	2.865	103.15
99.00	90.0	Flexure	KSI	36.00	6.11	4.62	3.475	125.08	4.504	162.15
99.00	**90.0**	**Shear**	**KIPS**	**542.44**	**-66.74**	**-83.03**	**3.134**	**112.81**	**4.062**	**146.24**

99.00	90.0	Overload	KSI	36.00	6.11	4.62	4.681	168.51	6.085	219.06
110.00	100.0	Flexure	KSI	-36.00	-0.00	-0.00	99.000	3564.00	99.000	3564.00
110.00	**100.0**	**Shear**	**KIPS**	**336.32**	**-82.95**	**-95.70**	**1.362**	**49.01**	**1.765**	**63.54**
110.00	100.0	Overload	KSI	-36.00	-0.00	-0.00	99.000	3564.00	99.000	3564.00

Detailed Rating Results
Girder C
HL-93 (US)
Tandem + Lane
Impact: As Requested
Lane: As Requested

Span 1

Location (ft)	Percent	Limit State	Units	Capacity	DL + Adj-LL*	LL	Inventory Rating Factor	Inventory Load Rating (Ton)	Operating Rating Factor	Operating Load Rating (Ton)
0.00	0.0	Flexure	KSI	-36.00	-0.00	-0.00	99.000	3564.00	99.000	3564.00
0.00	**0.0**	**Shear**	**KIPS**	**336.32**	**82.95**	**78.29**	**1.664**	**59.91**	**2.157**	**77.66**
0.00	0.0	Overload	KSI	-36.00	-0.00	-0.00	99.000	3564.00	99.000	3564.00
11.00	10.0	Flexure	KSI	36.00	6.11	3.80	4.222	151.98	5.472	197.01
11.00	**10.0**	**Shear**	**KIPS**	**542.44**	**66.74**	**67.90**	**3.832**	**137.95**	**4.967**	**178.82**
11.00	10.0	Overload	KSI	36.00	6.11	3.80	5.687	204.73	7.393	266.15
22.00	**20.0**	**Flexure**	**KSI**	**36.00**	**10.91**	**6.74**	**1.852**	**66.66**	**2.400**	**86.41**
22.00	20.0	Shear	KIPS	542.44	50.54	58.06	4.690	168.84	6.080	218.87
22.00	20.0	Overload	KSI	36.00	10.91	6.74	2.658	95.67	3.455	124.38
25.50	**23.2**	**Flexure**	**KSI**	**36.00**	**12.14**	**7.50**	**1.543**	**55.53**	**2.000**	**71.99**
25.50	23.2	Shear	KIPS	542.44	44.91	55.04	5.023	180.83	6.512	234.41
25.50	23.2	Overload	KSI	36.00	12.14	7.50	2.263	81.46	2.941	105.89
33.00	**30.0**	**Flexure**	**KSI**	**36.00**	**11.21**	**7.14**	**1.716**	**61.78**	**2.225**	**80.09**
33.00	30.0	Shear	KIPS	542.44	33.61	48.76	5.843	210.34	7.574	272.66
33.00	30.0	Overload	KSI	36.00	11.21	7.14	2.477	89.19	3.221	115.94
44.00	**40.0**	**Flexure**	**KSI**	**36.00**	**12.83**	**8.14**	**1.358**	**48.90**	**1.761**	**63.39**
44.00	40.0	Shear	KIPS	542.44	17.04	40.02	7.429	267.43	9.630	346.67
44.00	40.0	Overload	KSI	36.00	12.83	8.14	2.021	72.75	2.627	94.57
49.50	**45.0**	**Flexure**	**KSI**	**36.00**	**13.23**	**8.37**	**1.284**	**46.24**	**1.665**	**59.94**
49.50	45.0	Shear	KIPS	542.44	8.29	35.85	8.474	305.07	10.985	395.46
49.50	45.0	Overload	KSI	36.00	13.23	8.37	1.927	69.36	2.505	90.17
55.00	**50.0**	**Flexure**	**KSI**	**36.00**	**13.36**	**8.44**	**1.263**	**45.46**	**1.637**	**58.93**
55.00	50.0	Shear	KIPS	542.44	0.00	-31.82	9.742	350.70	12.628	454.62

55.00	50.0	Overload	KSI	36.00	13.36	8.44	1.900	68.38	2.469	88.90
66.00	**60.0**	**Flexure**	**KSI**	**36.00**	**12.83**	**8.14**	**1.358**	**48.90**	**1.761**	**63.39**
66.00	60.0	Shear	KIPS	542.44	-17.04	-40.02	7.429	267.43	9.630	346.67
66.00	60.0	Overload	KSI	36.00	12.83	8.14	2.021	72.75	2.627	94.57
77.00	**70.0**	**Flexure**	**KSI**	**36.00**	**11.21**	**7.14**	**1.716**	**61.78**	**2.225**	**80.09**
77.00	70.0	Shear	KIPS	542.44	-33.61	-48.76	5.843	210.34	7.574	272.66
77.00	70.0	Overload	KSI	36.00	11.21	7.14	2.477	89.19	3.221	115.94
84.50	**76.8**	**Flexure**	**KSI**	**36.00**	**12.14**	**7.50**	**1.543**	**55.53**	**2.000**	**71.99**
84.50	76.8	Shear	KIPS	542.44	-44.91	-55.04	5.023	180.83	6.512	234.41
84.50	76.8	Overload	KSI	36.00	12.14	7.50	2.263	81.46	2.941	105.89
88.00	**80.0**	**Flexure**	**KSI**	**36.00**	**10.91**	**6.74**	**1.852**	**66.66**	**2.400**	**86.41**
88.00	80.0	Shear	KIPS	542.44	-50.54	-58.06	4.690	168.84	6.080	218.87
88.00	80.0	Overload	KSI	36.00	10.91	6.74	2.658	95.67	3.455	124.38
99.00	90.0	Flexure	KSI	36.00	6.11	3.80	4.222	151.98	5.472	197.01
99.00	**90.0**	**Shear**	**KIPS**	**542.44**	**-66.74**	**-67.90**	**3.832**	**137.95**	**4.967**	**178.82**
99.00	90.0	Overload	KSI	36.00	6.11	3.80	5.687	204.73	7.393	266.15
110.00	100.0	Flexure	KSI	-36.00	-0.00	-0.00	99.000	3564.00	99.000	3564.00
110.00	**100.0**	**Shear**	**KIPS**	**336.32**	**-82.95**	**-78.29**	**1.664**	**59.91**	**2.157**	**77.66**
110.00	100.0	Overload	KSI	-36.00	-0.00	-0.00	99.000	3564.00	99.000	3564.00

Detailed Rating Results
Girder C
LRFD Fatigue Truck (US)
Axle Load
Impact: As Requested
Lane: As Requested

Span 1

Location (ft)	Percent	Limit State	Units	Capacity	DL + Adj-LL*	LL	Inventory Rating Factor	Inventory Load Rating (Ton)
11.00	**10.0**	**Interaction**	**KSI**	**12.00**	**0.00**	**2.21**	**5.428**	**162.85**
22.00	**20.0**	**Interaction**	**KSI**	**12.00**	**0.00**	**3.82**	**3.142**	**94.26**
25.50	**23.2**	**Interaction**	**KSI**	**16.00**	**0.00**	**4.28**	**3.739**	**112.17**
33.00	**30.0**	**Interaction**	**KSI**	**12.00**	**0.00**	**3.96**	**3.034**	**91.02**

44.00	**40.0**	**Interaction**	**KSI**	**12.00**	**0.00**	**4.42**	**2.714**	**81.43**
49.50	**45.0**	**Interaction**	**KSI**	**12.00**	**0.00**	**4.47**	**2.683**	**80.48**
55.00	**50.0**	**Interaction**	**KSI**	**12.00**	**0.00**	**4.40**	**2.725**	**81.74**
66.00	**60.0**	**Interaction**	**KSI**	**12.00**	**0.00**	**4.42**	**2.714**	**81.43**
77.00	**70.0**	**Interaction**	**KSI**	**12.00**	**0.00**	**3.96**	**3.034**	**91.02**
84.50	**76.8**	**Interaction**	**KSI**	**16.00**	**0.00**	**4.20**	**3.805**	**114.16**
88.00	**80.0**	**Interaction**	**KSI**	**12.00**	**0.00**	**3.82**	**3.142**	**94.26**
99.00	**90.0**	**Interaction**	**KSI**	**12.00**	**0.00**	**2.21**	**5.428**	**162.85**

Detailed Rating Results
Girder C
SU4
Axle Load
Impact: As Requested
Lane: As Requested

Span 1

Location (ft)	Percent	Limit State	Units	Capacity	DL + Adj -LL*	LL	Legal Rating Factor	Legal Load Rating (Ton)
0.00	0.0	Flexure	KSI	-36.00	-0.00	-0.00	99.000	2673.00
0.00	**0.0**	**Shear**	**KIPS**	**336.32**	**82.95**	**47.53**	**3.691**	**99.64**
0.00	0.0	Overload	KSI	-36.00	-0.00	-0.00	99.000	2673.00
11.00	10.0	Flexure	KSI	36.00	6.11	2.29	9.414	254.18
11.00	**10.0**	**Shear**	**KIPS**	**542.44**	**66.74**	**42.48**	**8.245**	**222.63**
11.00	10.0	Overload	KSI	36.00	6.11	2.29	9.421	254.37
22.00	**20.0**	**Flexure**	**KSI**	**36.00**	**10.91**	**4.04**	**4.158**	**112.28**
22.00	20.0	Shear	KIPS	542.44	50.54	37.43	9.793	264.41
22.00	20.0	Overload	KSI	36.00	10.91	4.04	4.434	119.71
25.50	**23.2**	**Flexure**	**KSI**	**36.00**	**12.14**	**4.48**	**3.474**	**93.79**
25.50	23.2	Shear	KIPS	542.44	44.91	35.82	10.389	280.51
25.50	23.2	Overload	KSI	36.00	12.14	4.48	3.785	102.19
33.00	**30.0**	**Flexure**	**KSI**	**36.00**	**11.21**	**4.24**	**3.890**	**105.03**
33.00	30.0	Shear	KIPS	542.44	33.61	32.38	11.844	319.79
33.00	30.0	Overload	KSI	36.00	11.21	4.24	4.171	112.62
44.00	**40.0**	**Flexure**	**KSI**	**36.00**	**12.83**	**4.84**	**3.073**	**82.98**
44.00	40.0	Shear	KIPS	542.44	17.04	27.33	14.641	395.30
44.00	40.0	Overload	KSI	36.00	12.83	4.84	3.397	91.71
49.50	**45.0**	**Flexure**	**KSI**	**36.00**	**13.23**	**4.98**	**2.907**	**78.48**
49.50	45.0	Shear	KIPS	542.44	8.29	24.81	16.484	445.07
49.50	45.0	Overload	KSI	36.00	13.23	4.98	3.239	87.46

55.00	**50.0**	**Flexure**	**KSI**	**36.00**	**13.36**	**5.01**	**2.863**	**77.29**
55.00	50.0	Shear	KIPS	542.44	0.00	-22.28	18.725	505.57
55.00	50.0	Overload	KSI	36.00	13.36	5.01	3.199	86.38
66.00	**60.0**	**Flexure**	**KSI**	**36.00**	**12.83**	**4.84**	**3.073**	**82.98**
66.00	60.0	Shear	KIPS	542.44	-17.04	-27.33	14.641	395.30
66.00	60.0	Overload	KSI	36.00	12.83	4.84	3.397	91.71
77.00	**70.0**	**Flexure**	**KSI**	**36.00**	**11.21**	**4.24**	**3.890**	**105.03**
77.00	70.0	Shear	KIPS	542.44	-33.61	-32.38	11.844	319.79
77.00	70.0	Overload	KSI	36.00	11.21	4.24	4.171	112.62
84.50	**76.8**	**Flexure**	**KSI**	**36.00**	**12.14**	**4.48**	**3.474**	**93.79**
84.50	76.8	Shear	KIPS	542.44	-44.91	-35.82	10.389	280.51
84.50	76.8	Overload	KSI	36.00	12.14	4.48	3.785	102.19
88.00	**80.0**	**Flexure**	**KSI**	**36.00**	**10.91**	**4.04**	**4.158**	**112.28**
88.00	80.0	Shear	KIPS	542.44	-50.54	-37.43	9.793	264.41
88.00	80.0	Overload	KSI	36.00	10.91	4.04	4.434	119.71
99.00	90.0	Flexure	KSI	36.00	6.11	2.29	9.414	254.18
99.00	**90.0**	**Shear**	**KIPS**	**542.44**	**-66.74**	**-42.48**	**8.245**	**222.63**
99.00	90.0	Overload	KSI	36.00	6.11	2.29	9.421	254.37
110.00	100.0	Flexure	KSI	-36.00	-0.00	-0.00	99.000	2673.00
110.00	**100.0**	**Shear**	**KIPS**	**336.32**	**-82.95**	**-47.53**	**3.691**	**99.64**
110.00	100.0	Overload	KSI	-36.00	-0.00	-0.00	99.000	2673.00

Detailed Rating Results
Girder C
SU5
Axle Load
Impact: As Requested
Lane: As Requested

Span 1

Location (ft)	Percent	Limit State	Units	Capacity	DL + Adj -LL*	LL	Legal Rating Factor	Legal Load Rating (Ton)
0.00	0.0	Flexure	KSI	-36.00	-0.00	-0.00	99.000	3069.00
0.00	**0.0**	**Shear**	**KIPS**	**336.32**	**82.95**	**53.78**	**3.261**	**101.10**
0.00	0.0	Overload	KSI	-36.00	-0.00	-0.00	99.000	3069.00
11.00	10.0	Flexure	KSI	36.00	6.11	2.59	8.334	258.34
11.00	**10.0**	**Shear**	**KIPS**	**542.44**	**66.74**	**47.98**	**7.299**	**226.27**
11.00	10.0	Overload	KSI	36.00	6.11	2.59	8.340	258.53
22.00	**20.0**	**Flexure**	**KSI**	**36.00**	**10.91**	**4.56**	**3.689**	**114.37**
22.00	20.0	Shear	KIPS	542.44	50.54	42.19	8.688	269.33

22.00	20.0	Overload	KSI	36.00	10.91	4.56	3.934	121.94
25.50	**23.2**	**Flexure**	**KSI**	**36.00**	**12.14**	**5.05**	**3.084**	**95.62**
25.50	23.2	Shear	KIPS	542.44	44.91	40.34	9.225	285.97
25.50	23.2	Overload	KSI	36.00	12.14	5.05	3.361	104.18
33.00	**30.0**	**Flexure**	**KSI**	**36.00**	**11.21**	**4.79**	**3.444**	**106.76**
33.00	30.0	Shear	KIPS	542.44	33.61	36.39	10.539	326.69
33.00	30.0	Overload	KSI	36.00	11.21	4.79	3.693	114.48
44.00	**40.0**	**Flexure**	**KSI**	**36.00**	**12.83**	**5.46**	**2.726**	**84.50**
44.00	40.0	Shear	KIPS	542.44	17.04	30.60	13.079	405.45
44.00	40.0	Overload	KSI	36.00	12.83	5.46	3.012	93.38
49.50	**45.0**	**Flexure**	**KSI**	**36.00**	**13.23**	**5.60**	**2.585**	**80.12**
49.50	45.0	Shear	KIPS	542.44	8.29	27.70	14.764	457.69
49.50	45.0	Overload	KSI	36.00	13.23	5.60	2.880	89.28
55.00	**50.0**	**Flexure**	**KSI**	**36.00**	**13.36**	**5.62**	**2.553**	**79.13**
55.00	50.0	Shear	KIPS	542.44	0.00	-24.80	16.825	521.58
55.00	50.0	Overload	KSI	36.00	13.36	5.62	2.853	88.44
66.00	**60.0**	**Flexure**	**KSI**	**36.00**	**12.83**	**5.46**	**2.726**	**84.50**
66.00	60.0	Shear	KIPS	542.44	-17.04	-30.60	13.079	405.45
66.00	60.0	Overload	KSI	36.00	12.83	5.46	3.012	93.38
77.00	**70.0**	**Flexure**	**KSI**	**36.00**	**11.21**	**4.79**	**3.444**	**106.76**
77.00	70.0	Shear	KIPS	542.44	-33.61	-36.39	10.539	326.69
77.00	70.0	Overload	KSI	36.00	11.21	4.79	3.693	114.48
84.50	**76.8**	**Flexure**	**KSI**	**36.00**	**12.14**	**5.05**	**3.084**	**95.62**
84.50	76.8	Shear	KIPS	542.44	-44.91	-40.34	9.225	285.97
84.50	76.8	Overload	KSI	36.00	12.14	5.05	3.361	104.18
88.00	**80.0**	**Flexure**	**KSI**	**36.00**	**10.91**	**4.56**	**3.689**	**114.37**
88.00	80.0	Shear	KIPS	542.44	-50.54	-42.19	8.688	269.33
88.00	80.0	Overload	KSI	36.00	10.91	4.56	3.934	121.94
99.00	90.0	Flexure	KSI	36.00	6.11	2.59	8.334	258.34
99.00	**90.0**	**Shear**	**KIPS**	**542.44**	**-66.74**	**-47.98**	**7.299**	**226.27**
99.00	90.0	Overload	KSI	36.00	6.11	2.59	8.340	258.53
110.00	100.0	Flexure	KSI	-36.00	-0.00	-0.00	99.000	3069.00
110.00	**100.0**	**Shear**	**KIPS**	**336.32**	**-82.95**	**-53.78**	**3.261**	**101.10**
110.00	100.0	Overload	KSI	-36.00	-0.00	-0.00	99.000	3069.00

Detailed Rating Results
Girder C
SU6
Axle Load
Impact: As Requested
Lane: As Requested

Span 1

Location (ft)	Percent	Limit State	Units	Capacity	DL + Adj -LL*	LL	Legal Rating Factor	Legal Load Rating (Ton)
0.00	0.0	Flexure	KSI	-36.00	-0.00	-0.00	99.000	3440.25
0.00	**0.0**	**Shear**	**KIPS**	**336.32**	**82.95**	**58.80**	**2.983**	**103.67**
0.00	0.0	Overload	KSI	-36.00	-0.00	-0.00	99.000	3440.25
11.00	10.0	Flexure	KSI	36.00	6.11	2.82	7.646	265.71
11.00	**10.0**	**Shear**	**KIPS**	**542.44**	**66.74**	**52.30**	**6.697**	**232.72**
11.00	10.0	Overload	KSI	36.00	6.11	2.82	7.652	265.91
22.00	**20.0**	**Flexure**	**KSI**	**36.00**	**10.91**	**5.05**	**3.326**	**115.56**
22.00	20.0	Shear	KIPS	542.44	50.54	45.80	8.003	278.10
22.00	20.0	Overload	KSI	36.00	10.91	5.05	3.546	123.21
25.50	**23.2**	**Flexure**	**KSI**	**36.00**	**12.14**	**5.62**	**2.770**	**96.26**
25.50	23.2	Shear	KIPS	542.44	44.91	43.73	8.510	295.72
25.50	23.2	Overload	KSI	36.00	12.14	5.62	3.018	104.88
33.00	**30.0**	**Flexure**	**KSI**	**36.00**	**11.21**	**5.34**	**3.090**	**107.39**
33.00	30.0	Shear	KIPS	542.44	33.61	39.30	9.758	339.09
33.00	30.0	Overload	KSI	36.00	11.21	5.34	3.314	115.15
44.00	**40.0**	**Flexure**	**KSI**	**36.00**	**12.83**	**6.06**	**2.454**	**85.26**
44.00	40.0	Shear	KIPS	542.44	17.04	32.81	12.198	423.88
44.00	40.0	Overload	KSI	36.00	12.83	6.06	2.712	94.23
49.50	**45.0**	**Flexure**	**KSI**	**36.00**	**13.23**	**6.24**	**2.319**	**80.58**
49.50	45.0	Shear	KIPS	542.44	8.29	29.56	13.836	480.79
49.50	45.0	Overload	KSI	36.00	13.23	6.24	2.584	89.80
55.00	**50.0**	**Flexure**	**KSI**	**36.00**	**13.36**	**6.28**	**2.283**	**79.35**
55.00	50.0	Shear	KIPS	542.44	0.00	-26.31	15.860	551.15
55.00	50.0	Overload	KSI	36.00	13.36	6.28	2.552	88.67
66.00	**60.0**	**Flexure**	**KSI**	**36.00**	**12.83**	**6.06**	**2.454**	**85.26**
66.00	60.0	Shear	KIPS	542.44	-17.04	-32.81	12.198	423.88
66.00	60.0	Overload	KSI	36.00	12.83	6.06	2.712	94.23
77.00	**70.0**	**Flexure**	**KSI**	**36.00**	**11.21**	**5.34**	**3.090**	**107.39**
77.00	70.0	Shear	KIPS	542.44	-33.61	-39.30	9.758	339.09
77.00	70.0	Overload	KSI	36.00	11.21	5.34	3.314	115.15
84.50	**76.8**	**Flexure**	**KSI**	**36.00**	**12.14**	**5.62**	**2.770**	**96.26**
84.50	76.8	Shear	KIPS	542.44	-44.91	-43.73	8.510	295.72
84.50	76.8	Overload	KSI	36.00	12.14	5.62	3.018	104.88
88.00	**80.0**	**Flexure**	**KSI**	**36.00**	**10.91**	**5.05**	**3.326**	**115.56**
88.00	80.0	Shear	KIPS	542.44	-50.54	-45.80	8.003	278.10
88.00	80.0	Overload	KSI	36.00	10.91	5.05	3.546	123.21
99.00	90.0	Flexure	KSI	36.00	6.11	2.82	7.646	265.71
99.00	**90.0**	**Shear**	**KIPS**	**542.44**	**-66.74**	**-52.30**	**6.697**	**232.72**

99.00	90.0	Overload	KSI	36.00	6.11	2.82	7.652	265.91
110.00	100.0	Flexure	KSI	-36.00	-0.00	-0.00	99.000	3440.25
110.00	**100.0**	**Shear**	**KIPS**	**336.32**	**-82.95**	**-58.80**	**2.983**	**103.67**
110.00	100.0	Overload	KSI	-36.00	-0.00	-0.00	99.000	3440.25

Detailed Rating Results
Girder C
SU7
Axle Load
Impact: As Requested
Lane: As Requested

Span 1

Location (ft)	Percent	Limit State	Units	Capacity	DL + Adj -LL*	LL	Legal Rating Factor	Legal Load Rating (Ton)
0.00	0.0	Flexure	KSI	-36.00	-0.00	-0.00	99.000	3836.25
0.00	**0.0**	**Shear**	**KIPS**	**336.32**	**82.95**	**63.91**	**2.744**	**106.34**
0.00	0.0	Overload	KSI	-36.00	-0.00	-0.00	99.000	3836.25
11.00	10.0	Flexure	KSI	36.00	6.11	3.06	7.057	273.45
11.00	**10.0**	**Shear**	**KIPS**	**542.44**	**66.74**	**56.67**	**6.181**	**239.51**
11.00	10.0	Overload	KSI	36.00	6.11	3.06	7.062	273.65
22.00	**20.0**	**Flexure**	**KSI**	**36.00**	**10.91**	**5.47**	**3.070**	**118.97**
22.00	20.0	Shear	KIPS	542.44	50.54	49.42	7.417	287.39
22.00	20.0	Overload	KSI	36.00	10.91	5.47	3.273	126.85
25.50	**23.2**	**Flexure**	**KSI**	**36.00**	**12.14**	**6.12**	**2.547**	**98.68**
25.50	23.2	Shear	KIPS	542.44	44.91	47.12	7.899	306.09
25.50	23.2	Overload	KSI	36.00	12.14	6.12	2.775	107.52
33.00	**30.0**	**Flexure**	**KSI**	**36.00**	**11.21**	**5.86**	**2.816**	**109.13**
33.00	30.0	Shear	KIPS	542.44	33.61	42.18	9.093	352.37
33.00	30.0	Overload	KSI	36.00	11.21	5.86	3.020	117.02
44.00	**40.0**	**Flexure**	**KSI**	**36.00**	**12.83**	**6.66**	**2.233**	**86.52**
44.00	40.0	Shear	KIPS	542.44	17.04	34.93	11.456	443.92
44.00	40.0	Overload	KSI	36.00	12.83	6.66	2.468	95.62
49.50	**45.0**	**Flexure**	**KSI**	**36.00**	**13.23**	**6.86**	**2.112**	**81.83**
49.50	45.0	Shear	KIPS	542.44	8.29	31.31	13.062	506.15
49.50	45.0	Overload	KSI	36.00	13.23	6.86	2.353	91.19
55.00	**50.0**	**Flexure**	**KSI**	**36.00**	**13.36**	**6.92**	**2.073**	**80.32**
55.00	50.0	Shear	KIPS	542.44	0.00	-27.69	15.072	584.03
55.00	50.0	Overload	KSI	36.00	13.36	6.92	2.317	89.76
66.00	**60.0**	**Flexure**	**KSI**	**36.00**	**12.83**	**6.66**	**2.233**	**86.52**

66.00	60.0	Shear	KIPS	542.44	-17.04	-34.93	11.456	443.92
66.00	60.0	Overload	KSI	36.00	12.83	6.66	2.468	95.62
77.00	**70.0**	**Flexure**	**KSI**	**36.00**	**11.21**	**5.86**	**2.816**	**109.13**
77.00	70.0	Shear	KIPS	542.44	-33.61	-42.18	9.093	352.37
77.00	70.0	Overload	KSI	36.00	11.21	5.86	3.020	117.02
84.50	**76.8**	**Flexure**	**KSI**	**36.00**	**12.14**	**6.12**	**2.547**	**98.68**
84.50	76.8	Shear	KIPS	542.44	-44.91	-47.12	7.899	306.09
84.50	76.8	Overload	KSI	36.00	12.14	6.12	2.775	107.52
88.00	**80.0**	**Flexure**	**KSI**	**36.00**	**10.91**	**5.47**	**3.070**	**118.97**
88.00	80.0	Shear	KIPS	542.44	-50.54	-49.42	7.417	287.39
88.00	80.0	Overload	KSI	36.00	10.91	5.47	3.273	126.85
99.00	90.0	Flexure	KSI	36.00	6.11	3.06	7.057	273.45
99.00	**90.0**	**Shear**	**KIPS**	**542.44**	**-66.74**	**-56.67**	**6.181**	**239.51**
99.00	90.0	Overload	KSI	36.00	6.11	3.06	7.062	273.65
110.00	100.0	Flexure	KSI	-36.00	-0.00	-0.00	99.000	3836.25
110.00	**100.0**	**Shear**	**KIPS**	**336.32**	**-82.95**	**-63.91**	**2.744**	**106.34**
110.00	100.0	Overload	KSI	-36.00	-0.00	-0.00	99.000	3836.25

Detailed Rating Results
Girder C
Type 3
Axle Load
Impact: As Requested
Lane: As Requested

Span 1

Location (ft)	Percent	Limit State	Units	Capacity	DL + Adj -LL*	LL	Legal Rating Factor	Legal Load Rating (Ton)
0.00	0.0	Flexure	KSI	-36.00	-0.00	-0.00	99.000	2475.00
0.00	**0.0**	**Shear**	**KIPS**	**336.32**	**82.95**	**43.58**	**4.024**	**100.61**
0.00	0.0	Overload	KSI	-36.00	-0.00	-0.00	99.000	2475.00
11.00	10.0	Flexure	KSI	36.00	6.11	2.10	10.278	256.94
11.00	**10.0**	**Shear**	**KIPS**	**542.44**	**66.74**	**38.91**	**9.002**	**225.05**
11.00	10.0	Overload	KSI	36.00	6.11	2.10	10.285	257.13
22.00	**20.0**	**Flexure**	**KSI**	**36.00**	**10.91**	**3.70**	**4.547**	**113.67**
22.00	20.0	Shear	KIPS	542.44	50.54	34.23	10.707	267.67
22.00	20.0	Overload	KSI	36.00	10.91	3.70	4.848	121.19
25.50	**23.2**	**Flexure**	**KSI**	**36.00**	**12.14**	**4.10**	**3.800**	**95.00**
25.50	23.2	Shear	KIPS	542.44	44.91	32.75	11.365	284.13
25.50	23.2	Overload	KSI	36.00	12.14	4.10	4.140	103.51

33.00	**30.0**	**Flexure**	**KSI**	**36.00**	**11.21**	**3.87**	**4.261**	**106.53**
33.00	30.0	Shear	KIPS	542.44	33.61	29.56	12.975	324.37
33.00	30.0	Overload	KSI	36.00	11.21	3.87	4.569	114.24
44.00	**40.0**	**Flexure**	**KSI**	**36.00**	**12.83**	**4.39**	**3.389**	**84.73**
44.00	40.0	Shear	KIPS	542.44	17.04	24.88	16.081	402.02
44.00	40.0	Overload	KSI	36.00	12.83	4.39	3.746	93.64
49.50	**45.0**	**Flexure**	**KSI**	**36.00**	**13.23**	**4.51**	**3.210**	**80.25**
49.50	45.0	Shear	KIPS	542.44	8.29	22.55	18.137	453.42
49.50	45.0	Overload	KSI	36.00	13.23	4.51	3.577	89.43
55.00	**50.0**	**Flexure**	**KSI**	**36.00**	**13.36**	**4.53**	**3.167**	**79.18**
55.00	50.0	Shear	KIPS	542.44	0.00	-20.21	20.646	516.15
55.00	50.0	Overload	KSI	36.00	13.36	4.53	3.540	88.49
66.00	**60.0**	**Flexure**	**KSI**	**36.00**	**12.83**	**4.39**	**3.389**	**84.73**
66.00	60.0	Shear	KIPS	542.44	-17.04	-24.88	16.081	402.02
66.00	60.0	Overload	KSI	36.00	12.83	4.39	3.746	93.64
77.00	**70.0**	**Flexure**	**KSI**	**36.00**	**11.21**	**3.87**	**4.261**	**106.53**
77.00	70.0	Shear	KIPS	542.44	-33.61	-29.56	12.975	324.37
77.00	70.0	Overload	KSI	36.00	11.21	3.87	4.569	114.24
84.50	**76.8**	**Flexure**	**KSI**	**36.00**	**12.14**	**4.10**	**3.800**	**95.00**
84.50	76.8	Shear	KIPS	542.44	-44.91	-32.75	11.365	284.13
84.50	76.8	Overload	KSI	36.00	12.14	4.10	4.140	103.51
88.00	**80.0**	**Flexure**	**KSI**	**36.00**	**10.91**	**3.70**	**4.547**	**113.67**
88.00	80.0	Shear	KIPS	542.44	-50.54	-34.23	10.707	267.67
88.00	80.0	Overload	KSI	36.00	10.91	3.70	4.848	121.19
99.00	90.0	Flexure	KSI	36.00	6.11	2.10	10.278	256.94
99.00	**90.0**	**Shear**	**KIPS**	**542.44**	**-66.74**	**-38.91**	**9.002**	**225.05**
99.00	90.0	Overload	KSI	36.00	6.11	2.10	10.285	257.13
110.00	100.0	Flexure	KSI	-36.00	-0.00	-0.00	99.000	2475.00
110.00	**100.0**	**Shear**	**KIPS**	**336.32**	**-82.95**	**-43.58**	**4.024**	**100.61**
110.00	100.0	Overload	KSI	-36.00	-0.00	-0.00	99.000	2475.00

Detailed Rating Results
Girder C
Type 3-3
Axle Load
Impact: As Requested
Lane: As Requested

Span 1

Location (ft)	Percent		Units	Capacity		LL	Legal Rating Factor	Legal Load Rating (Ton)

		Limit State			DL + Adj -LL*			
0.00	0.0	Flexure	KSI	-36.00	-0.00	-0.00	99.000	3960.00
0.00	**0.0**	**Shear**	**KIPS**	**336.32**	**82.95**	**58.54**	**2.996**	**119.85**
0.00	0.0	Overload	KSI	-36.00	-0.00	-0.00	99.000	3960.00
11.00	10.0	Flexure	KSI	36.00	6.11	2.76	7.831	313.26
11.00	**10.0**	**Shear**	**KIPS**	**542.44**	**66.74**	**51.06**	**6.859**	**274.37**
11.00	10.0	Overload	KSI	36.00	6.11	2.76	7.837	313.49
22.00	**20.0**	**Flexure**	**KSI**	**36.00**	**10.91**	**4.74**	**3.544**	**141.75**
22.00	20.0	Shear	KIPS	542.44	50.54	43.58	8.410	336.41
22.00	20.0	Overload	KSI	36.00	10.91	4.74	3.778	151.13
25.50	**23.2**	**Flexure**	**KSI**	**36.00**	**12.14**	**5.24**	**2.972**	**118.88**
25.50	23.2	Shear	KIPS	542.44	44.91	41.20	9.033	361.31
25.50	23.2	Overload	KSI	36.00	12.14	5.24	3.238	129.53
33.00	**30.0**	**Flexure**	**KSI**	**36.00**	**11.21**	**4.88**	**3.383**	**135.31**
33.00	30.0	Shear	KIPS	542.44	33.61	36.10	10.623	424.92
33.00	30.0	Overload	KSI	36.00	11.21	4.88	3.627	145.09
44.00	**40.0**	**Flexure**	**KSI**	**36.00**	**12.83**	**5.50**	**2.704**	**108.14**
44.00	40.0	Shear	KIPS	542.44	17.04	28.62	13.980	559.20
44.00	40.0	Overload	KSI	36.00	12.83	5.50	2.988	119.52
49.50	**45.0**	**Flexure**	**KSI**	**36.00**	**13.23**	**5.69**	**2.545**	**101.80**
49.50	45.0	Shear	KIPS	542.44	8.29	24.88	16.433	657.33
49.50	45.0	Overload	KSI	36.00	13.23	5.69	2.836	113.44
55.00	**50.0**	**Flexure**	**KSI**	**36.00**	**13.36**	**5.71**	**2.511**	**100.45**
55.00	50.0	Shear	KIPS	542.44	0.00	-21.15	19.733	789.33
55.00	50.0	Overload	KSI	36.00	13.36	5.71	2.807	112.26
66.00	**60.0**	**Flexure**	**KSI**	**36.00**	**12.83**	**5.50**	**2.704**	**108.14**
66.00	60.0	Shear	KIPS	542.44	-17.04	-28.62	13.980	559.20
66.00	60.0	Overload	KSI	36.00	12.83	5.50	2.988	119.52
77.00	**70.0**	**Flexure**	**KSI**	**36.00**	**11.21**	**4.88**	**3.383**	**135.31**
77.00	70.0	Shear	KIPS	542.44	-33.61	-36.10	10.623	424.92
77.00	70.0	Overload	KSI	36.00	11.21	4.88	3.627	145.09
84.50	**76.8**	**Flexure**	**KSI**	**36.00**	**12.14**	**5.24**	**2.972**	**118.88**
84.50	76.8	Shear	KIPS	542.44	-44.91	-41.20	9.033	361.31
84.50	76.8	Overload	KSI	36.00	12.14	5.24	3.238	129.53
88.00	**80.0**	**Flexure**	**KSI**	**36.00**	**10.91**	**4.74**	**3.544**	**141.75**
88.00	80.0	Shear	KIPS	542.44	-50.54	-43.58	8.410	336.41
88.00	80.0	Overload	KSI	36.00	10.91	4.74	3.778	151.13
99.00	90.0	Flexure	KSI	36.00	6.11	2.76	7.831	313.26
99.00	**90.0**	**Shear**	**KIPS**	**542.44**	**-66.74**	**-51.06**	**6.859**	**274.37**
99.00	90.0	Overload	KSI	36.00	6.11	2.76	7.837	313.49
110.00	100.0	Flexure	KSI	-36.00	-0.00	-0.00	99.000	3960.00
110.00	**100.0**	**Shear**	**KIPS**	**336.32**	**-82.95**	**-58.54**	**2.996**	**119.85**

110.00	100.0	Overload	KSI	-36.00	-0.00	-0.00	99.000	3960.00

Detailed Rating Results
Girder C
Type 3S2
Axle Load
Impact: As Requested
Lane: As Requested

Span 1

Location (ft)	Percent	Limit State	Units	Capacity	DL + Adj -LL*	LL	Legal Rating Factor	Legal Load Rating (Ton)
0.00	0.0	Flexure	KSI	-36.00	-0.00	-0.00	99.000	3564.00
0.00	**0.0**	**Shear**	**KIPS**	**336.32**	**82.95**	**55.92**	**3.136**	**112.91**
0.00	0.0	Overload	KSI	-36.00	-0.00	-0.00	99.000	3564.00
11.00	10.0	Flexure	KSI	36.00	6.11	2.66	8.129	292.65
11.00	**10.0**	**Shear**	**KIPS**	**542.44**	**66.74**	**49.19**	**7.120**	**256.32**
11.00	10.0	Overload	KSI	36.00	6.11	2.66	8.135	292.87
22.00	**20.0**	**Flexure**	**KSI**	**36.00**	**10.91**	**4.58**	**3.666**	**131.96**
22.00	20.0	Shear	KIPS	542.44	50.54	42.46	8.632	310.77
22.00	20.0	Overload	KSI	36.00	10.91	4.58	3.908	140.70
25.50	**23.2**	**Flexure**	**KSI**	**36.00**	**12.14**	**5.09**	**3.057**	**110.05**
25.50	23.2	Shear	KIPS	542.44	44.91	40.32	9.231	332.31
25.50	23.2	Overload	KSI	36.00	12.14	5.09	3.331	119.91
33.00	**30.0**	**Flexure**	**KSI**	**36.00**	**11.21**	**4.85**	**3.401**	**122.45**
33.00	30.0	Shear	KIPS	542.44	33.61	35.73	10.734	386.43
33.00	30.0	Overload	KSI	36.00	11.21	4.85	3.647	131.30
44.00	**40.0**	**Flexure**	**KSI**	**36.00**	**12.83**	**5.48**	**2.717**	**97.80**
44.00	40.0	Shear	KIPS	542.44	17.04	29.00	13.800	496.79
44.00	40.0	Overload	KSI	36.00	12.83	5.48	3.003	108.09
49.50	**45.0**	**Flexure**	**KSI**	**36.00**	**13.23**	**5.60**	**2.587**	**93.13**
49.50	45.0	Shear	KIPS	542.44	8.29	25.63	15.954	574.34
49.50	45.0	Overload	KSI	36.00	13.23	5.60	2.883	103.78
55.00	**50.0**	**Flexure**	**KSI**	**36.00**	**13.36**	**5.57**	**2.575**	**92.69**
55.00	50.0	Shear	KIPS	542.44	0.00	-22.27	18.739	674.60
55.00	50.0	Overload	KSI	36.00	13.36	5.57	2.878	103.59
66.00	**60.0**	**Flexure**	**KSI**	**36.00**	**12.83**	**5.48**	**2.717**	**97.80**
66.00	60.0	Shear	KIPS	542.44	-17.04	-29.00	13.800	496.79
66.00	60.0	Overload	KSI	36.00	12.83	5.48	3.003	108.09
77.00	**70.0**	**Flexure**	**KSI**	**36.00**	**11.21**	**4.85**	**3.401**	**122.45**

77.00	70.0	Shear	KIPS	542.44	-33.61	-35.73	10.734	386.43
77.00	70.0	Overload	KSI	36.00	11.21	4.85	3.647	131.30
84.50	**76.8**	**Flexure**	**KSI**	**36.00**	**12.14**	**5.09**	**3.057**	**110.05**
84.50	76.8	Shear	KIPS	542.44	-44.91	-40.32	9.231	332.31
84.50	76.8	Overload	KSI	36.00	12.14	5.09	3.331	119.91
88.00	**80.0**	**Flexure**	**KSI**	**36.00**	**10.91**	**4.58**	**3.666**	**131.96**
88.00	80.0	Shear	KIPS	542.44	-50.54	-42.46	8.632	310.77
88.00	80.0	Overload	KSI	36.00	10.91	4.58	3.908	140.70
99.00	90.0	Flexure	KSI	36.00	6.11	2.66	8.129	292.65
99.00	**90.0**	**Shear**	**KIPS**	**542.44**	**-66.74**	**-49.19**	**7.120**	**256.32**
99.00	90.0	Overload	KSI	36.00	6.11	2.66	8.135	292.87
110.00	100.0	Flexure	KSI	-36.00	-0.00	-0.00	99.000	3564.00
110.00	**100.0**	**Shear**	**KIPS**	**336.32**	**-82.95**	**-55.92**	**3.136**	**112.91**
110.00	100.0	Overload	KSI	-36.00	-0.00	-0.00	99.000	3564.00

Detailed Rating Results
Girder C
RI-3
Axle Load
Impact: As Requested
Lane: As Requested

Span 1

Location (ft)	Percent	Limit State	Units	Capacity	DL + Adj -LL*	LL	Permit Rating Factor	Permit Load Rating (Ton)
0.00	0.0	Flexure	KSI	-36.00	-0.00	-0.00	99.000	3762.00
0.00	**0.0**	**Shear**	**KIPS**	**336.32**	**82.95**	**67.25**	**2.866**	**108.90**
0.00	0.0	Overload	KSI	-36.00	-0.00	-0.00	99.000	3762.00
11.00	10.0	Flexure	KSI	36.00	6.11	3.25	7.306	277.62
11.00	**10.0**	**Shear**	**KIPS**	**542.44**	**66.74**	**60.14**	**6.399**	**243.16**
11.00	10.0	Overload	KSI	36.00	6.11	3.25	8.650	328.72
22.00	**20.0**	**Flexure**	**KSI**	**36.00**	**10.91**	**5.73**	**3.225**	**122.54**
22.00	20.0	Shear	KIPS	542.44	50.54	53.03	7.594	288.56
22.00	20.0	Overload	KSI	36.00	10.91	5.73	4.068	154.58
25.50	**23.2**	**Flexure**	**KSI**	**36.00**	**12.14**	**6.35**	**2.693**	**102.33**
25.50	23.2	Shear	KIPS	542.44	44.91	50.77	8.054	306.04
25.50	23.2	Overload	KSI	36.00	12.14	6.35	3.471	131.92
33.00	**30.0**	**Flexure**	**KSI**	**36.00**	**11.21**	**6.01**	**3.013**	**114.50**
33.00	30.0	Shear	KIPS	542.44	33.61	45.93	9.175	348.64
33.00	30.0	Overload	KSI	36.00	11.21	6.01	3.823	145.27

44.00	**40.0**	**Flexure**	**KSI**	**36.00**	**12.83**	**6.80**	**2.403**	**91.31**
44.00	40.0	Shear	KIPS	542.44	17.04	38.82	11.325	430.34
44.00	40.0	Overload	KSI	36.00	12.83	6.80	3.142	119.39
49.50	**45.0**	**Flexure**	**KSI**	**36.00**	**13.23**	**7.02**	**2.267**	**86.16**
49.50	45.0	Shear	KIPS	542.44	8.29	35.27	12.739	484.07
49.50	45.0	Overload	KSI	36.00	13.23	7.02	2.989	113.60
55.00	**50.0**	**Flexure**	**KSI**	**36.00**	**13.36**	**7.08**	**2.228**	**84.66**
55.00	50.0	Shear	KIPS	542.44	0.00	-31.72	14.454	549.24
55.00	50.0	Overload	KSI	36.00	13.36	7.08	2.946	111.94
66.00	**60.0**	**Flexure**	**KSI**	**36.00**	**12.83**	**6.80**	**2.403**	**91.31**
66.00	60.0	Shear	KIPS	542.44	-17.04	-38.82	11.325	430.34
66.00	60.0	Overload	KSI	36.00	12.83	6.80	3.142	119.39
77.00	**70.0**	**Flexure**	**KSI**	**36.00**	**11.21**	**6.01**	**3.013**	**114.50**
77.00	70.0	Shear	KIPS	542.44	-33.61	-45.93	9.175	348.64
77.00	70.0	Overload	KSI	36.00	11.21	6.01	3.823	145.27
84.50	**76.8**	**Flexure**	**KSI**	**36.00**	**12.14**	**6.35**	**2.693**	**102.33**
84.50	76.8	Shear	KIPS	542.44	-44.91	-50.77	8.054	306.04
84.50	76.8	Overload	KSI	36.00	12.14	6.35	3.471	131.92
88.00	**80.0**	**Flexure**	**KSI**	**36.00**	**10.91**	**5.73**	**3.225**	**122.54**
88.00	80.0	Shear	KIPS	542.44	-50.54	-53.03	7.594	288.56
88.00	80.0	Overload	KSI	36.00	10.91	5.73	4.068	154.58
99.00	90.0	Flexure	KSI	36.00	6.11	3.25	7.306	277.62
99.00	**90.0**	**Shear**	**KIPS**	**542.44**	**-66.74**	**-60.14**	**6.399**	**243.16**
99.00	90.0	Overload	KSI	36.00	6.11	3.25	8.650	328.72
110.00	100.0	Flexure	KSI	-36.00	-0.00	-0.00	99.000	3762.00
110.00	**100.0**	**Shear**	**KIPS**	**336.32**	**-82.95**	**-67.25**	**2.866**	**108.90**
110.00	100.0	Overload	KSI	-36.00	-0.00	-0.00	99.000	3762.00

Detailed Rating Results
Girder C
RI-4
Axle Load
Impact: As Requested
Lane: As Requested

Span 1

Location (ft)	Percent	Limit State	Units	Capacity	DL + Adj -LL*	LL	Permit Rating Factor	Permit Load Rating (Ton)
0.00	0.0	Flexure	KSI	-36.00	-0.00	-0.00	99.000	3712.50
0.00	**0.0**	**Shear**	**KIPS**	**336.32**	**82.95**	**65.38**	**2.948**	**110.54**

0.00	0.0	Overload	KSI	-36.00	-0.00	-0.00	99.000	3712.50
11.00	10.0	Flexure	KSI	36.00	6.11	3.15	7.528	282.29
11.00	**10.0**	**Shear**	**KIPS**	**542.44**	**66.74**	**58.37**	**6.593**	**247.25**
11.00	10.0	Overload	KSI	36.00	6.11	3.15	8.913	334.24
22.00	**20.0**	**Flexure**	**KSI**	**36.00**	**10.91**	**5.55**	**3.330**	**124.88**
22.00	20.0	Shear	KIPS	542.44	50.54	51.36	7.842	294.08
22.00	20.0	Overload	KSI	36.00	10.91	5.55	4.201	157.53
25.50	**23.2**	**Flexure**	**KSI**	**36.00**	**12.14**	**6.15**	**2.783**	**104.37**
25.50	23.2	Shear	KIPS	542.44	44.91	49.12	8.324	312.16
25.50	23.2	Overload	KSI	36.00	12.14	6.15	3.588	134.55
33.00	**30.0**	**Flexure**	**KSI**	**36.00**	**11.21**	**5.85**	**3.097**	**116.15**
33.00	30.0	Shear	KIPS	542.44	33.61	44.34	9.503	356.36
33.00	30.0	Overload	KSI	36.00	11.21	5.85	3.930	147.36
44.00	**40.0**	**Flexure**	**KSI**	**36.00**	**12.83**	**6.68**	**2.445**	**91.68**
44.00	40.0	Shear	KIPS	542.44	17.04	37.33	11.777	441.65
44.00	40.0	Overload	KSI	36.00	12.83	6.68	3.197	119.89
49.50	**45.0**	**Flexure**	**KSI**	**36.00**	**13.23**	**6.87**	**2.315**	**86.80**
49.50	45.0	Shear	KIPS	542.44	8.29	33.83	13.283	498.11
49.50	45.0	Overload	KSI	36.00	13.23	6.87	3.052	114.45
55.00	**50.0**	**Flexure**	**KSI**	**36.00**	**13.36**	**6.91**	**2.282**	**85.58**
55.00	50.0	Shear	KIPS	542.44	0.00	-30.32	15.120	567.02
55.00	50.0	Overload	KSI	36.00	13.36	6.91	3.017	113.15
66.00	**60.0**	**Flexure**	**KSI**	**36.00**	**12.83**	**6.68**	**2.445**	**91.68**
66.00	60.0	Shear	KIPS	542.44	-17.04	-37.33	11.777	441.65
66.00	60.0	Overload	KSI	36.00	12.83	6.68	3.197	119.89
77.00	**70.0**	**Flexure**	**KSI**	**36.00**	**11.21**	**5.85**	**3.097**	**116.15**
77.00	70.0	Shear	KIPS	542.44	-33.61	-44.34	9.503	356.36
77.00	70.0	Overload	KSI	36.00	11.21	5.85	3.930	147.36
84.50	**76.8**	**Flexure**	**KSI**	**36.00**	**12.14**	**6.15**	**2.783**	**104.37**
84.50	76.8	Shear	KIPS	542.44	-44.91	-49.12	8.324	312.16
84.50	76.8	Overload	KSI	36.00	12.14	6.15	3.588	134.55
88.00	**80.0**	**Flexure**	**KSI**	**36.00**	**10.91**	**5.55**	**3.330**	**124.88**
88.00	80.0	Shear	KIPS	542.44	-50.54	-51.36	7.842	294.08
88.00	80.0	Overload	KSI	36.00	10.91	5.55	4.201	157.53
99.00	90.0	Flexure	KSI	36.00	6.11	3.15	7.528	282.29
99.00	**90.0**	**Shear**	**KIPS**	**542.44**	**-66.74**	**-58.37**	**6.593**	**247.25**
99.00	90.0	Overload	KSI	36.00	6.11	3.15	8.913	334.24
110.00	100.0	Flexure	KSI	-36.00	-0.00	-0.00	99.000	3712.50
110.00	**100.0**	**Shear**	**KIPS**	**336.32**	**-82.95**	**-65.38**	**2.948**	**110.54**
110.00	100.0	Overload	KSI	-36.00	-0.00	-0.00	99.000	3712.50

Detailed Rating Results
Girder C

RI-5
Axle Load
Impact: As Requested
Lane: As Requested

Span 1

Location (ft)	Percent	Limit State	Units	Capacity	DL + Adj -LL*	LL	Permit Rating Factor	Permit Load Rating (Ton)
0.00	0.0	Flexure	KSI	-36.00	-0.00	-0.00	99.000	5187.60
0.00	**0.0**	**Shear**	**KIPS**	**336.32**	**82.95**	**85.74**	**2.248**	**117.77**
0.00	0.0	Overload	KSI	-36.00	-0.00	-0.00	99.000	5187.60
11.00	10.0	Flexure	KSI	36.00	6.11	4.10	5.785	303.15
11.00	**10.0**	**Shear**	**KIPS**	**542.44**	**66.74**	**75.95**	**5.067**	**265.52**
11.00	10.0	Overload	KSI	36.00	6.11	4.10	6.850	358.94
22.00	**20.0**	**Flexure**	**KSI**	**36.00**	**10.91**	**7.14**	**2.585**	**135.47**
22.00	20.0	Shear	KIPS	542.44	50.54	66.15	6.088	319.03
22.00	20.0	Overload	KSI	36.00	10.91	7.14	3.261	170.90
25.50	**23.2**	**Flexure**	**KSI**	**36.00**	**12.14**	**7.95**	**2.154**	**112.84**
25.50	23.2	Shear	KIPS	542.44	44.91	63.03	6.488	339.95
25.50	23.2	Overload	KSI	36.00	12.14	7.95	2.776	145.47
33.00	**30.0**	**Flexure**	**KSI**	**36.00**	**11.21**	**7.54**	**2.402**	**125.88**
33.00	30.0	Shear	KIPS	542.44	33.61	56.35	7.478	391.85
33.00	30.0	Overload	KSI	36.00	11.21	7.54	3.048	159.71
44.00	**40.0**	**Flexure**	**KSI**	**36.00**	**12.83**	**8.58**	**1.905**	**99.84**
44.00	40.0	Shear	KIPS	542.44	17.04	46.55	9.445	494.90
44.00	40.0	Overload	KSI	36.00	12.83	8.58	2.491	130.55
49.50	**45.0**	**Flexure**	**KSI**	**36.00**	**13.23**	**8.81**	**1.806**	**94.66**
49.50	45.0	Shear	KIPS	542.44	8.29	41.65	10.787	565.23
49.50	45.0	Overload	KSI	36.00	13.23	8.81	2.382	124.81
55.00	**50.0**	**Flexure**	**KSI**	**36.00**	**13.36**	**8.82**	**1.787**	**93.64**
55.00	50.0	Shear	KIPS	542.44	0.00	-36.76	12.473	653.60
55.00	50.0	Overload	KSI	36.00	13.36	8.82	2.363	123.82
66.00	**60.0**	**Flexure**	**KSI**	**36.00**	**12.83**	**8.58**	**1.905**	**99.84**
66.00	60.0	Shear	KIPS	542.44	-17.04	-46.55	9.445	494.90
66.00	60.0	Overload	KSI	36.00	12.83	8.58	2.491	130.55
77.00	**70.0**	**Flexure**	**KSI**	**36.00**	**11.21**	**7.54**	**2.402**	**125.88**
77.00	70.0	Shear	KIPS	542.44	-33.61	-56.35	7.478	391.85
77.00	70.0	Overload	KSI	36.00	11.21	7.54	3.048	159.71
84.50	**76.8**	**Flexure**	**KSI**	**36.00**	**12.14**	**7.95**	**2.154**	**112.84**
84.50	76.8	Shear	KIPS	542.44	-44.91	-63.03	6.488	339.95

84.50	76.8	Overload	KSI	36.00	12.14	7.95	2.776	145.47
88.00	**80.0**	**Flexure**	**KSI**	**36.00**	**10.91**	**7.14**	**2.585**	**135.47**
88.00	80.0	Shear	KIPS	542.44	-50.54	-66.15	6.088	319.03
88.00	80.0	Overload	KSI	36.00	10.91	7.14	3.261	170.90
99.00	90.0	Flexure	KSI	36.00	6.11	4.10	5.785	303.15
99.00	**90.0**	**Shear**	**KIPS**	**542.44**	**-66.74**	**-75.95**	**5.067**	**265.52**
99.00	90.0	Overload	KSI	36.00	6.11	4.10	6.850	358.94
110.00	100.0	Flexure	KSI	-36.00	-0.00	-0.00	99.000	5187.60
110.00	**100.0**	**Shear**	**KIPS**	**336.32**	**-82.95**	**-85.74**	**2.248**	**117.77**
110.00	100.0	Overload	KSI	-36.00	-0.00	-0.00	99.000	5187.60

Detailed Rating Results
Girder C
RI-6
Axle Load
Impact: As Requested
Lane: As Requested

Span 1

Location (ft)	Percent	Limit State	Units	Capacity	DL + Adj -LL*	LL	Permit Rating Factor	Permit Load Rating (Ton)
0.00	0.0	Flexure	KSI	-36.00	-0.00	-0.00	99.000	6435.00
0.00	**0.0**	**Shear**	**KIPS**	**336.32**	**82.95**	**97.27**	**1.901**	**123.56**
0.00	0.0	Overload	KSI	-36.00	-0.00	-0.00	99.000	6435.00
11.00	10.0	Flexure	KSI	36.00	6.11	4.60	4.953	321.94
11.00	**10.0**	**Shear**	**KIPS**	**542.44**	**66.74**	**85.11**	**4.338**	**281.97**
11.00	10.0	Overload	KSI	36.00	6.11	4.60	6.112	397.29
22.00	**20.0**	**Flexure**	**KSI**	**36.00**	**10.91**	**7.90**	**2.243**	**145.82**
22.00	20.0	Shear	KIPS	542.44	50.54	72.96	5.296	344.24
22.00	20.0	Overload	KSI	36.00	10.91	7.90	2.950	191.72
25.50	**23.2**	**Flexure**	**KSI**	**36.00**	**12.14**	**8.75**	**1.877**	**122.00**
25.50	23.2	Shear	KIPS	542.44	44.91	69.09	5.678	369.10
25.50	23.2	Overload	KSI	36.00	12.14	8.75	2.522	163.92
33.00	**30.0**	**Flexure**	**KSI**	**36.00**	**11.21**	**8.18**	**2.125**	**138.11**
33.00	30.0	Shear	KIPS	542.44	33.61	60.81	6.649	432.18
33.00	30.0	Overload	KSI	36.00	11.21	8.18	2.810	182.63
44.00	**40.0**	**Flexure**	**KSI**	**36.00**	**12.83**	**8.95**	**1.752**	**113.87**
44.00	40.0	Shear	KIPS	542.44	17.04	48.65	8.670	563.58
44.00	40.0	Overload	KSI	36.00	12.83	8.95	2.387	155.19
49.50	**45.0**	**Flexure**	**KSI**	**36.00**	**13.23**	**9.02**	**1.691**	**109.93**

49.50	45.0	Shear	KIPS	542.44	8.29	42.58	10.125	658.14
49.50	45.0	Overload	KSI	36.00	13.23	9.02	2.324	151.07
55.00	**50.0**	**Flexure**	**KSI**	**36.00**	**13.36**	**8.83**	**1.712**	**111.29**
55.00	50.0	Shear	KIPS	542.44	0.00	-36.50	12.051	783.33
55.00	50.0	Overload	KSI	36.00	13.36	8.83	2.360	153.38
66.00	**60.0**	**Flexure**	**KSI**	**36.00**	**12.83**	**8.95**	**1.752**	**113.87**
66.00	60.0	Shear	KIPS	542.44	-17.04	-48.65	8.670	563.58
66.00	60.0	Overload	KSI	36.00	12.83	8.95	2.387	155.19
77.00	**70.0**	**Flexure**	**KSI**	**36.00**	**11.21**	**8.18**	**2.125**	**138.11**
77.00	70.0	Shear	KIPS	542.44	-33.61	-60.81	6.649	432.18
77.00	70.0	Overload	KSI	36.00	11.21	8.18	2.810	182.63
84.50	**76.8**	**Flexure**	**KSI**	**36.00**	**12.14**	**8.75**	**1.877**	**122.00**
84.50	76.8	Shear	KIPS	542.44	-44.91	-69.09	5.678	369.10
84.50	76.8	Overload	KSI	36.00	12.14	8.75	2.522	163.92
88.00	**80.0**	**Flexure**	**KSI**	**36.00**	**10.91**	**7.90**	**2.243**	**145.82**
88.00	80.0	Shear	KIPS	542.44	-50.54	-72.96	5.296	344.24
88.00	80.0	Overload	KSI	36.00	10.91	7.90	2.950	191.72
99.00	90.0	Flexure	KSI	36.00	6.11	4.60	4.953	321.94
99.00	**90.0**	**Shear**	**KIPS**	**542.44**	**-66.74**	**-85.11**	**4.338**	**281.97**
99.00	90.0	Overload	KSI	36.00	6.11	4.60	6.112	397.29
110.00	100.0	Flexure	KSI	-36.00	-0.00	-0.00	99.000	6435.00
110.00	**100.0**	**Shear**	**KIPS**	**336.32**	**-82.95**	**-97.27**	**1.901**	**123.56**
110.00	100.0	Overload	KSI	-36.00	-0.00	-0.00	99.000	6435.00

Detailed Rating Results
Girder C
RIDOT H20 Truck
Axle Load
Impact: As Requested
Lane: As Requested

Span 1

Location (ft)	Percent	Limit State	Units	Capacity	DL + Adj -LL*	LL	Legal Rating Factor	Legal Load Rating (Ton)
0.00	0.0	Flexure	KSI	-36.00	-0.00	-0.00	99.000	1980.00
0.00	**0.0**	**Shear**	**KIPS**	**336.32**	**82.95**	**36.44**	**4.813**	**96.26**
0.00	0.0	Overload	KSI	-36.00	-0.00	-0.00	99.000	1980.00
11.00	10.0	Flexure	KSI	36.00	6.11	1.77	12.228	244.55
11.00	**10.0**	**Shear**	**KIPS**	**542.44**	**66.74**	**32.70**	**10.710**	**214.19**
11.00	10.0	Overload	KSI	36.00	6.11	1.77	12.237	244.73

22.00	**20.0**	**Flexure**	**KSI**	**36.00**	**10.91**	**3.13**	**5.374**	**107.48**
22.00	20.0	Shear	KIPS	542.44	50.54	28.96	12.655	253.10
22.00	20.0	Overload	KSI	36.00	10.91	3.13	5.730	114.59
25.50	**23.2**	**Flexure**	**KSI**	**36.00**	**12.14**	**3.48**	**4.480**	**89.61**
25.50	23.2	Shear	KIPS	542.44	44.91	27.77	13.400	268.00
25.50	23.2	Overload	KSI	36.00	12.14	3.48	4.882	97.63
33.00	**30.0**	**Flexure**	**KSI**	**36.00**	**11.21**	**3.30**	**4.993**	**99.87**
33.00	30.0	Shear	KIPS	542.44	33.61	25.22	15.204	304.08
33.00	30.0	Overload	KSI	36.00	11.21	3.30	5.355	107.09
44.00	**40.0**	**Flexure**	**KSI**	**36.00**	**12.83**	**3.75**	**3.966**	**79.31**
44.00	40.0	Shear	KIPS	542.44	17.04	21.49	18.625	372.50
44.00	40.0	Overload	KSI	36.00	12.83	3.75	4.383	87.65
49.50	**45.0**	**Flexure**	**KSI**	**36.00**	**13.23**	**3.85**	**3.758**	**75.16**
49.50	45.0	Shear	KIPS	542.44	8.29	19.62	20.848	416.96
49.50	45.0	Overload	KSI	36.00	13.23	3.85	4.188	83.76
55.00	**50.0**	**Flexure**	**KSI**	**36.00**	**13.36**	**3.87**	**3.704**	**74.09**
55.00	50.0	Shear	KIPS	542.44	0.00	-17.75	23.513	470.27
55.00	50.0	Overload	KSI	36.00	13.36	3.87	4.140	82.80
66.00	**60.0**	**Flexure**	**KSI**	**36.00**	**12.83**	**3.75**	**3.966**	**79.31**
66.00	60.0	Shear	KIPS	542.44	-17.04	-21.49	18.625	372.50
66.00	60.0	Overload	KSI	36.00	12.83	3.75	4.383	87.65
77.00	**70.0**	**Flexure**	**KSI**	**36.00**	**11.21**	**3.30**	**4.993**	**99.87**
77.00	70.0	Shear	KIPS	542.44	-33.61	-25.22	15.204	304.08
77.00	70.0	Overload	KSI	36.00	11.21	3.30	5.355	107.09
84.50	**76.8**	**Flexure**	**KSI**	**36.00**	**12.14**	**3.48**	**4.480**	**89.61**
84.50	76.8	Shear	KIPS	542.44	-44.91	-27.77	13.400	268.00
84.50	76.8	Overload	KSI	36.00	12.14	3.48	4.882	97.63
88.00	**80.0**	**Flexure**	**KSI**	**36.00**	**10.91**	**3.13**	**5.374**	**107.48**
88.00	80.0	Shear	KIPS	542.44	-50.54	-28.96	12.655	253.10
88.00	80.0	Overload	KSI	36.00	10.91	3.13	5.730	114.59
99.00	90.0	Flexure	KSI	36.00	6.11	1.77	12.228	244.55
99.00	**90.0**	**Shear**	**KIPS**	**542.44**	**-66.74**	**-32.70**	**10.710**	**214.19**
99.00	90.0	Overload	KSI	36.00	6.11	1.77	12.237	244.73
110.00	100.0	Flexure	KSI	-36.00	-0.00	-0.00	99.000	1980.00
110.00	**100.0**	**Shear**	**KIPS**	**336.32**	**-82.95**	**-36.44**	**4.813**	**96.26**
110.00	100.0	Overload	KSI	-36.00	-0.00	-0.00	99.000	1980.00

Detailed Rating Results
Girder C
RI-OP 1
Axle Load
Impact: As Requested
Lane: As Requested

Span 1

Location (ft)	Percent	Limit State	Units	Capacity	DL + Adj -LL*	LL	Permit Rating Factor	Permit Load Rating (Ton)
0.00	0.0	Flexure	KSI	-36.00	-0.00	-0.00	99.000	5593.50
0.00	**0.0**	**Shear**	**KIPS**	**336.32**	**82.95**	**66.31**	**2.866**	**161.90**
0.00	0.0	Overload	KSI	-36.00	-0.00	-0.00	99.000	5593.50
11.00	10.0	Flexure	KSI	36.00	6.11	2.62	8.916	503.77
11.00	**10.0**	**Shear**	**KIPS**	**542.44**	**66.74**	**58.85**	**6.447**	**364.26**
11.00	10.0	Overload	KSI	36.00	6.11	2.62	10.707	604.97
22.00	**20.0**	**Flexure**	**KSI**	**36.00**	**10.91**	**4.66**	**3.910**	**220.91**
22.00	20.0	Shear	KIPS	542.44	50.54	51.39	7.726	436.53
22.00	20.0	Overload	KSI	36.00	10.91	4.66	5.002	282.64
25.50	**23.2**	**Flexure**	**KSI**	**36.00**	**12.14**	**5.18**	**3.256**	**183.96**
25.50	23.2	Shear	KIPS	542.44	44.91	49.02	8.225	464.70
25.50	23.2	Overload	KSI	36.00	12.14	5.18	4.257	240.53
33.00	**30.0**	**Flexure**	**KSI**	**36.00**	**11.21**	**4.92**	**3.635**	**205.37**
33.00	30.0	Shear	KIPS	542.44	33.61	43.94	9.456	534.29
33.00	30.0	Overload	KSI	36.00	11.21	4.92	4.677	264.26
44.00	**40.0**	**Flexure**	**KSI**	**36.00**	**12.83**	**5.63**	**2.862**	**161.71**
44.00	40.0	Shear	KIPS	542.44	17.04	36.48	11.884	671.45
44.00	40.0	Overload	KSI	36.00	12.83	5.63	3.796	214.46
49.50	**45.0**	**Flexure**	**KSI**	**36.00**	**13.23**	**5.82**	**2.697**	**152.40**
49.50	45.0	Shear	KIPS	542.44	8.29	32.75	13.527	764.29
49.50	45.0	Overload	KSI	36.00	13.23	5.82	3.607	203.79
55.00	**50.0**	**Flexure**	**KSI**	**36.00**	**13.36**	**5.87**	**2.650**	**149.71**
55.00	50.0	Shear	KIPS	542.44	0.00	-29.02	15.576	880.05
55.00	50.0	Overload	KSI	36.00	13.36	5.87	3.553	200.77
66.00	**60.0**	**Flexure**	**KSI**	**36.00**	**12.83**	**5.63**	**2.862**	**161.71**
66.00	60.0	Shear	KIPS	542.44	-17.04	-36.48	11.884	671.45
66.00	60.0	Overload	KSI	36.00	12.83	5.63	3.796	214.46
77.00	**70.0**	**Flexure**	**KSI**	**36.00**	**11.21**	**4.92**	**3.635**	**205.37**
77.00	70.0	Shear	KIPS	542.44	-33.61	-43.94	9.456	534.29
77.00	70.0	Overload	KSI	36.00	11.21	4.92	4.677	264.26
84.50	**76.8**	**Flexure**	**KSI**	**36.00**	**12.14**	**5.18**	**3.256**	**183.96**
84.50	76.8	Shear	KIPS	542.44	-44.91	-49.02	8.225	464.70
84.50	76.8	Overload	KSI	36.00	12.14	5.18	4.257	240.53
88.00	**80.0**	**Flexure**	**KSI**	**36.00**	**10.91**	**4.66**	**3.910**	**220.91**
88.00	80.0	Shear	KIPS	542.44	-50.54	-51.39	7.726	436.53
88.00	80.0	Overload	KSI	36.00	10.91	4.66	5.002	282.64

99.00	90.0	Flexure	KSI	36.00	6.11	2.62	8.916	503.77
99.00	**90.0**	**Shear**	**KIPS**	**542.44**	**-66.74**	**-58.85**	**6.447**	**364.26**
99.00	90.0	Overload	KSI	36.00	6.11	2.62	10.707	604.97
110.00	100.0	Flexure	KSI	-36.00	-0.00	-0.00	99.000	5593.50
110.00	**100.0**	**Shear**	**KIPS**	**336.32**	**-82.95**	**-66.31**	**2.866**	**161.90**
110.00	100.0	Overload	KSI	-36.00	-0.00	-0.00	99.000	5593.50

Detailed Rating Results
Girder C
RI-OP 2
Axle Load
Impact: As Requested
Lane: As Requested

Span 1

Location (ft)	Percent	Limit State	Units	Capacity	DL + Adj -LL*	LL	Permit Rating Factor	Permit Load Rating (Ton)
0.00	0.0	Flexure	KSI	-36.00	-0.00	-0.00	99.000	7920.00
0.00	**0.0**	**Shear**	**KIPS**	**336.32**	**82.95**	**77.08**	**2.465**	**197.22**
0.00	0.0	Overload	KSI	-36.00	-0.00	-0.00	99.000	7920.00
11.00	10.0	Flexure	KSI	36.00	6.11	2.96	7.889	631.11
11.00	**10.0**	**Shear**	**KIPS**	**542.44**	**66.74**	**66.52**	**5.704**	**456.34**
11.00	10.0	Overload	KSI	36.00	6.11	2.96	9.474	757.89
22.00	**20.0**	**Flexure**	**KSI**	**36.00**	**10.91**	**5.11**	**3.561**	**284.86**
22.00	20.0	Shear	KIPS	542.44	50.54	55.96	7.096	567.69
22.00	20.0	Overload	KSI	36.00	10.91	5.11	4.556	364.46
25.50	**23.2**	**Flexure**	**KSI**	**36.00**	**12.14**	**5.62**	**3.003**	**240.28**
25.50	23.2	Shear	KIPS	542.44	44.91	52.60	7.666	613.24
25.50	23.2	Overload	KSI	36.00	12.14	5.62	3.927	314.16
33.00	**30.0**	**Flexure**	**KSI**	**36.00**	**11.21**	**5.21**	**3.429**	**274.32**
33.00	30.0	Shear	KIPS	542.44	33.61	45.40	9.152	732.16
33.00	30.0	Overload	KSI	36.00	11.21	5.21	4.412	352.99
44.00	**40.0**	**Flexure**	**KSI**	**36.00**	**12.83**	**5.63**	**2.863**	**229.08**
44.00	40.0	Shear	KIPS	542.44	17.04	35.31	12.277	982.13
44.00	40.0	Overload	KSI	36.00	12.83	5.63	3.798	303.81
49.50	**45.0**	**Flexure**	**KSI**	**36.00**	**13.23**	**5.62**	**2.791**	**223.28**
49.50	45.0	Shear	KIPS	542.44	8.29	30.46	14.544	1163.50
49.50	45.0	Overload	KSI	36.00	13.23	5.62	3.732	298.58
55.00	**50.0**	**Flexure**	**KSI**	**36.00**	**13.36**	**5.48**	**2.835**	**226.79**
55.00	50.0	Shear	KIPS	542.44	0.00	-25.79	17.529	1402.31

55.00	50.0	Overload	KSI	36.00	13.36	5.48	3.802	304.13
66.00	**60.0**	**Flexure**	**KSI**	**36.00**	**12.83**	**5.63**	**2.863**	**229.08**
66.00	60.0	Shear	KIPS	542.44	-17.04	-35.31	12.277	982.13
66.00	60.0	Overload	KSI	36.00	12.83	5.63	3.798	303.81
77.00	**70.0**	**Flexure**	**KSI**	**36.00**	**11.21**	**5.21**	**3.429**	**274.32**
77.00	70.0	Shear	KIPS	542.44	-33.61	-45.40	9.152	732.16
77.00	70.0	Overload	KSI	36.00	11.21	5.21	4.412	352.99
84.50	**76.8**	**Flexure**	**KSI**	**36.00**	**12.14**	**5.62**	**3.003**	**240.28**
84.50	76.8	Shear	KIPS	542.44	-44.91	-52.60	7.666	613.24
84.50	76.8	Overload	KSI	36.00	12.14	5.62	3.927	314.16
88.00	**80.0**	**Flexure**	**KSI**	**36.00**	**10.91**	**5.11**	**3.561**	**284.86**
88.00	80.0	Shear	KIPS	542.44	-50.54	-55.96	7.096	567.69
88.00	80.0	Overload	KSI	36.00	10.91	5.11	4.556	364.46
99.00	90.0	Flexure	KSI	36.00	6.11	2.96	7.889	631.11
99.00	**90.0**	**Shear**	**KIPS**	**542.44**	**-66.74**	**-66.52**	**5.704**	**456.34**
99.00	90.0	Overload	KSI	36.00	6.11	2.96	9.474	757.89
110.00	100.0	Flexure	KSI	-36.00	-0.00	-0.00	99.000	7920.00
110.00	**100.0**	**Shear**	**KIPS**	**336.32**	**-82.95**	**-77.08**	**2.465**	**197.22**
110.00	100.0	Overload	KSI	-36.00	-0.00	-0.00	99.000	7920.00

Detailed Rating Results
Girder C
RI-OP 3
Axle Load
Impact: As Requested
Lane: As Requested

Span 1

Location (ft)	Percent	Limit State	Units	Capacity	DL + Adj -LL*	LL	Permit Rating Factor	Permit Load Rating (Ton)
0.00	0.0	Flexure	KSI	-36.00	-0.00	-0.00	99.000	11187.00
0.00	**0.0**	**Shear**	**KIPS**	**336.32**	**82.95**	**86.06**	**2.208**	**249.48**
0.00	0.0	Overload	KSI	-36.00	-0.00	-0.00	99.000	11187.00
11.00	10.0	Flexure	KSI	36.00	6.11	3.22	7.274	821.98
11.00	**10.0**	**Shear**	**KIPS**	**542.44**	**66.74**	**71.70**	**5.292**	**598.02**
11.00	10.0	Overload	KSI	36.00	6.11	3.22	8.735	987.11
22.00	**20.0**	**Flexure**	**KSI**	**36.00**	**10.91**	**5.43**	**3.352**	**378.80**
22.00	20.0	Shear	KIPS	542.44	50.54	58.76	6.758	763.60
22.00	20.0	Overload	KSI	36.00	10.91	5.43	4.289	484.65
25.50	**23.2**	**Flexure**	**KSI**	**36.00**	**12.14**	**5.97**	**2.828**	**319.51**

25.50	23.2	Shear	KIPS	542.44	44.91	55.23	7.300	824.87
25.50	23.2	Overload	KSI	36.00	12.14	5.97	3.697	417.76
33.00	**30.0**	**Flexure**	**KSI**	**36.00**	**11.21**	**5.54**	**3.228**	**364.75**
33.00	30.0	Shear	KIPS	542.44	33.61	47.67	8.715	984.81
33.00	30.0	Overload	KSI	36.00	11.21	5.54	4.154	469.35
44.00	**40.0**	**Flexure**	**KSI**	**36.00**	**12.83**	**6.13**	**2.627**	**296.91**
44.00	40.0	Shear	KIPS	542.44	17.04	37.69	11.503	1299.83
44.00	40.0	Overload	KSI	36.00	12.83	6.13	3.485	393.76
49.50	**45.0**	**Flexure**	**KSI**	**36.00**	**13.23**	**6.24**	**2.513**	**283.98**
49.50	45.0	Shear	KIPS	542.44	8.29	33.54	13.207	1492.39
49.50	45.0	Overload	KSI	36.00	13.23	6.24	3.361	379.75
55.00	**50.0**	**Flexure**	**KSI**	**36.00**	**13.36**	**6.19**	**2.512**	**283.85**
55.00	50.0	Shear	KIPS	542.44	0.00	-29.58	15.280	1726.59
55.00	50.0	Overload	KSI	36.00	13.36	6.19	3.369	380.66
66.00	**60.0**	**Flexure**	**KSI**	**36.00**	**12.83**	**6.13**	**2.627**	**296.91**
66.00	60.0	Shear	KIPS	542.44	-17.04	-37.69	11.503	1299.83
66.00	60.0	Overload	KSI	36.00	12.83	6.13	3.485	393.76
77.00	**70.0**	**Flexure**	**KSI**	**36.00**	**11.21**	**5.54**	**3.228**	**364.75**
77.00	70.0	Shear	KIPS	542.44	-33.61	-47.67	8.715	984.81
77.00	70.0	Overload	KSI	36.00	11.21	5.54	4.154	469.35
84.50	**76.8**	**Flexure**	**KSI**	**36.00**	**12.14**	**5.97**	**2.828**	**319.51**
84.50	76.8	Shear	KIPS	542.44	-44.91	-55.23	7.300	824.87
84.50	76.8	Overload	KSI	36.00	12.14	5.97	3.697	417.76
88.00	**80.0**	**Flexure**	**KSI**	**36.00**	**10.91**	**5.43**	**3.352**	**378.80**
88.00	80.0	Shear	KIPS	542.44	-50.54	-58.76	6.758	763.60
88.00	80.0	Overload	KSI	36.00	10.91	5.43	4.289	484.65
99.00	90.0	Flexure	KSI	36.00	6.11	3.22	7.274	821.98
99.00	**90.0**	**Shear**	**KIPS**	**542.44**	**-66.74**	**-71.70**	**5.292**	**598.02**
99.00	90.0	Overload	KSI	36.00	6.11	3.22	8.735	987.11
110.00	100.0	Flexure	KSI	-36.00	-0.00	-0.00	99.000	11187.00
110.00	**100.0**	**Shear**	**KIPS**	**336.32**	**-82.95**	**-86.06**	**2.208**	**249.48**
110.00	100.0	Overload	KSI	-36.00	-0.00	-0.00	99.000	11187.00

Detailed Rating Results
Girder C
RIPTA Bus
Axle Load
Impact: As Requested
Lane: As Requested

Span 1

Location							**Legal Rating**	**Legal**

(ft)	Percent	Limit State	Units	Capacity	DL + Adj -LL*	LL	Factor	Load Rating (Ton)
0.00	0.0	Flexure	KSI	-36.00	-0.00	-0.00	99.000	2059.20
0.00	**0.0**	**Shear**	**KIPS**	**336.32**	**82.95**	**36.01**	**4.871**	**101.32**
0.00	0.0	Overload	KSI	-36.00	-0.00	-0.00	99.000	2059.20
11.00	10.0	Flexure	KSI	36.00	6.11	1.73	12.451	258.98
11.00	**10.0**	**Shear**	**KIPS**	**542.44**	**66.74**	**32.12**	**10.905**	**226.83**
11.00	10.0	Overload	KSI	36.00	6.11	1.73	12.460	259.17
22.00	**20.0**	**Flexure**	**KSI**	**36.00**	**10.91**	**3.05**	**5.514**	**114.69**
22.00	20.0	Shear	KIPS	542.44	50.54	28.23	12.985	270.09
22.00	20.0	Overload	KSI	36.00	10.91	3.05	5.879	122.28
25.50	**23.2**	**Flexure**	**KSI**	**36.00**	**12.14**	**3.38**	**4.610**	**95.90**
25.50	23.2	Shear	KIPS	542.44	44.91	26.99	13.789	286.81
25.50	23.2	Overload	KSI	36.00	12.14	3.38	5.023	104.49
33.00	**30.0**	**Flexure**	**KSI**	**36.00**	**11.21**	**3.19**	**5.175**	**107.65**
33.00	30.0	Shear	KIPS	542.44	33.61	24.34	15.758	327.76
33.00	30.0	Overload	KSI	36.00	11.21	3.19	5.550	115.43
44.00	**40.0**	**Flexure**	**KSI**	**36.00**	**12.83**	**3.57**	**4.166**	**86.66**
44.00	40.0	Shear	KIPS	542.44	17.04	20.45	19.568	407.02
44.00	40.0	Overload	KSI	36.00	12.83	3.57	4.605	95.78
49.50	**45.0**	**Flexure**	**KSI**	**36.00**	**13.23**	**3.63**	**3.983**	**82.86**
49.50	45.0	Shear	KIPS	542.44	8.29	18.51	22.099	459.65
49.50	45.0	Overload	KSI	36.00	13.23	3.63	4.439	92.33
55.00	**50.0**	**Flexure**	**KSI**	**36.00**	**13.36**	**3.61**	**3.970**	**82.57**
55.00	50.0	Shear	KIPS	542.44	0.00	-16.56	25.196	524.08
55.00	50.0	Overload	KSI	36.00	13.36	3.61	4.436	92.27
66.00	**60.0**	**Flexure**	**KSI**	**36.00**	**12.83**	**3.57**	**4.166**	**86.66**
66.00	60.0	Shear	KIPS	542.44	-17.04	-20.45	19.568	407.02
66.00	60.0	Overload	KSI	36.00	12.83	3.57	4.605	95.78
77.00	**70.0**	**Flexure**	**KSI**	**36.00**	**11.21**	**3.19**	**5.175**	**107.65**
77.00	70.0	Shear	KIPS	542.44	-33.61	-24.34	15.758	327.76
77.00	70.0	Overload	KSI	36.00	11.21	3.19	5.550	115.43
84.50	**76.8**	**Flexure**	**KSI**	**36.00**	**12.14**	**3.38**	**4.610**	**95.90**
84.50	76.8	Shear	KIPS	542.44	-44.91	-26.99	13.789	286.81
84.50	76.8	Overload	KSI	36.00	12.14	3.38	5.023	104.49
88.00	**80.0**	**Flexure**	**KSI**	**36.00**	**10.91**	**3.05**	**5.514**	**114.69**
88.00	80.0	Shear	KIPS	542.44	-50.54	-28.23	12.985	270.09
88.00	80.0	Overload	KSI	36.00	10.91	3.05	5.879	122.28
99.00	90.0	Flexure	KSI	36.00	6.11	1.73	12.451	258.98
99.00	**90.0**	**Shear**	**KIPS**	**542.44**	**-66.74**	**-32.12**	**10.905**	**226.83**
99.00	90.0	Overload	KSI	36.00	6.11	1.73	12.460	259.17

110.00	100.0	Flexure	KSI	-36.00	-0.00	-0.00	99.000	2059.20
110.00	**100.0**	**Shear**	**KIPS**	**336.32**	**-82.95**	**-36.01**	**4.871**	**101.32**
110.00	100.0	Overload	KSI	-36.00	-0.00	-0.00	99.000	2059.20

Note:
*Adj-LL is only applicable for Permit load rating.

Bridge Name: Mohegan Bridge
NBI Structure ID:
Bridge ID: 067301

Analyzed By: BrR
Analyze Date: Friday, September 14, 2018 20:34:36
Analysis Engine: AASHTO LRFR Engine Version 6.8.2.3002
Analysis Preference Setting: None

Report By: brr
Report Date: Friday, September 14, 2018 20:35:26

Structure Definition Name: Span 1
Member Name: Girder D
Member Alternative Name: Girder D - As Inspected

Load and Resistance Factor Rating Summary

Live Load		Rating Factor	Girder Summary Controls	Capacity (Ton)	Span	Location (ft)	Percent	Impact	Lane
EV2	Legal	3.765	STRENGTH-I Steel Shear	108.23	1	110.00	100.0	As Requested	As Requested
EV3	Legal	2.529	STRENGTH-I Steel Shear	108.74	1	110.00	100.0	As Requested	As Requested
HL-93 (US)	Inventory	1.068	STRENGTH-I Steel Flexure Stress	38.44	1	55.00	50.0	As Requested	As Requested
HL-93 (US)	Operating	1.384	STRENGTH-I Steel Flexure Stress	49.82	1	55.00	50.0	As Requested	As Requested
SU4	Legal	2.863	STRENGTH-I Steel Flexure Stress	77.29	1	55.00	50.0	As Requested	As Requested
SU5	Legal	2.553	STRENGTH-I Steel Flexure Stress	79.13	1	55.00	50.0	As Requested	As Requested
SU6	Legal	2.283	STRENGTH-I Steel Flexure Stress	79.35	1	55.00	50.0	As Requested	As Requested
SU7	Legal	2.073	STRENGTH-I Steel Flexure Stress	80.32	1	55.00	50.0	As Requested	As Requested
Type 3	Legal	3.167	STRENGTH-I Steel Flexure Stress	79.18	1	55.00	50.0	As Requested	As Requested
Type 3-3	Legal	2.511	STRENGTH-I Steel Flexure Stress	100.45	1	55.00	50.0	As Requested	As Requested
Type 3S2	Legal	2.575	STRENGTH-I Steel Flexure Stress	92.69	1	55.00	50.0	As Requested	As Requested
RI-3	Permit	2.228	STRENGTH-II Steel Flexure Stress	84.66	1	55.00	50.0	As Requested	As Requested
RI-4	Permit	2.282	STRENGTH-II Steel Flexure Stress	85.58	1	55.00	50.0	As Requested	As Requested
RI-5	Permit	1.787	STRENGTH-II Steel Flexure Stress	93.64	1	55.00	50.0	As Requested	As Requested
RI-6	Permit	1.691		109.93	1	49.50	45.0	As Requested	As Requested

			STRENGTH-II Steel Flexure Stress						
RIDOT H20 Truck	Legal	3.704	STRENGTH-I Steel Flexure Stress	74.09	1	55.00	50.0	As Requested	As Requested
RI-OP 1	Permit	2.641	STRENGTH-II Steel Shear	149.24	1	110.00	100.0	As Requested	As Requested
RI-OP 2	Permit	2.272	STRENGTH-II Steel Shear	181.79	1	110.00	100.0	As Requested	As Requested
RI-OP 3	Permit	2.035	STRENGTH-II Steel Shear	229.97	1	110.00	100.0	As Requested	As Requested
RIPTA Bus	Legal	3.970	STRENGTH-I Steel Flexure Stress	82.57	1	55.00	50.0	As Requested	As Requested

Note:
"N/A" indicates not applicable
"**" indicates not available

Report by Action: ☑ Flexure ☑ Shear ☑ Overload ☑ Interaction ☑ Critical

Detailed Rating Results
Girder D - As Inspected
EV2
Axle Load
Impact: As Requested
Lane: As Requested

Span 1

Location (ft)	Percent	Limit State	Units	Capacity	DL + Adj -LL*	LL	Legal Rating Factor	Legal Load Rating (Ton)
0.00	0.0	Flexure	KSI	-36.00	-0.00	-0.00	99.000	2846.25
0.00	**0.0**	**Shear**	**KIPS**	**336.32**	**82.95**	**42.95**	**4.084**	**117.42**
0.00	0.0	Overload	KSI	-36.00	-0.00	-0.00	99.000	2846.25
11.00	10.0	Flexure	KSI	36.00	6.11	1.71	12.616	362.72
11.00	**10.0**	**Shear**	**KIPS**	**542.44**	**66.74**	**38.39**	**9.123**	**262.27**
11.00	10.0	Overload	KSI	36.00	6.11	1.71	12.626	362.99
22.00	**20.0**	**Flexure**	**KSI**	**36.00**	**10.91**	**3.02**	**5.571**	**160.18**
22.00	20.0	Shear	KIPS	542.44	50.54	33.84	10.832	311.41
22.00	20.0	Overload	KSI	36.00	10.91	3.02	5.940	170.78
25.50	**23.2**	**Flexure**	**KSI**	**36.00**	**12.14**	**3.35**	**4.654**	**133.79**
25.50	23.2	Shear	KIPS	542.44	44.91	32.39	11.490	330.34
25.50	23.2	Overload	KSI	36.00	12.14	3.35	5.070	145.78
33.00	**30.0**	**Flexure**	**KSI**	**36.00**	**11.21**	**3.17**	**5.210**	**149.78**
33.00	30.0	Shear	KIPS	542.44	33.61	29.29	13.096	376.51
33.00	30.0	Overload	KSI	36.00	11.21	3.17	5.587	160.62
44.00	**40.0**	**Flexure**	**KSI**	**36.00**	**12.83**	**3.56**	**4.173**	**119.97**
44.00	40.0	Shear	KIPS	542.44	17.04	24.73	16.180	465.19
44.00	40.0	Overload	KSI	36.00	12.83	3.56	4.612	132.59
49.50	**45.0**	**Flexure**	**KSI**	**36.00**	**13.23**	**3.64**	**3.976**	**114.32**
49.50	45.0	Shear	KIPS	542.44	8.29	22.45	18.212	523.59
49.50	45.0	Overload	KSI	36.00	13.23	3.64	4.431	127.40
55.00	**50.0**	**Flexure**	**KSI**	**36.00**	**13.36**	**3.64**	**3.946**	**113.46**
55.00	50.0	Shear	KIPS	542.44	0.00	-20.18	20.679	594.54
55.00	50.0	Overload	KSI	36.00	13.36	3.64	4.410	126.79
66.00	**60.0**	**Flexure**	**KSI**	**36.00**	**12.83**	**3.56**	**4.173**	**119.97**
66.00	60.0	Shear	KIPS	542.44	-17.04	-24.73	16.180	465.19
66.00	60.0	Overload	KSI	36.00	12.83	3.56	4.612	132.59

77.00	**70.0**	**Flexure**	**KSI**	**36.00**	**11.21**	**3.17**	**5.210**	**149.78**
77.00	70.0	Shear	KIPS	542.44	-33.61	-29.29	13.096	376.51
77.00	70.0	Overload	KSI	36.00	11.21	3.17	5.587	160.62
84.50	**76.8**	**Flexure**	**KSI**	**36.00**	**12.14**	**3.35**	**4.654**	**133.79**
84.50	76.8	Shear	KIPS	542.44	-44.91	-32.39	11.490	330.34
84.50	76.8	Overload	KSI	36.00	12.14	3.35	5.070	145.78
88.00	**80.0**	**Flexure**	**KSI**	**36.00**	**10.91**	**3.02**	**5.571**	**160.18**
88.00	80.0	Shear	KIPS	542.44	-50.54	-33.84	10.832	311.41
88.00	80.0	Overload	KSI	36.00	10.91	3.02	5.940	170.78
99.00	90.0	Flexure	KSI	36.00	6.11	1.71	12.616	362.72
99.00	**90.0**	**Shear**	**KIPS**	**542.44**	**-66.74**	**-38.39**	**9.123**	**262.27**
99.00	90.0	Overload	KSI	36.00	6.11	1.71	12.626	362.99
109.00	99.1	Flexure	KSI	-36.00	-0.71	-0.05	99.000	2846.25
109.00	**99.1**	**Shear**	**KIPS**	**318.49**	**-81.48**	**-42.53**	**3.836**	**110.29**
109.00	99.1	Overload	KSI	-36.00	-0.71	-0.05	99.000	2846.25
110.00	100.0	Flexure	KSI	-36.00	-0.00	-0.00	99.000	2846.25
110.00	**100.0**	**Shear**	**KIPS**	**318.49**	**-82.95**	**-42.95**	**3.765**	**108.23**
110.00	100.0	Overload	KSI	-36.00	-0.00	-0.00	99.000	2846.25

Detailed Rating Results
Girder D - As Inspected
EV3
Axle Load
Impact: As Requested
Lane: As Requested

Span 1

Location (ft)	Percent	Limit State	Units	Capacity	DL + Adj -LL*	LL	Legal Rating Factor	Legal Load Rating (Ton)
0.00	0.0	Flexure	KSI	-36.00	-0.00	-0.00	99.000	4257.00
0.00	**0.0**	**Shear**	**KIPS**	**336.32**	**82.95**	**63.93**	**2.743**	**117.96**
0.00	0.0	Overload	KSI	-36.00	-0.00	-0.00	99.000	4257.00
11.00	10.0	Flexure	KSI	36.00	6.11	2.55	8.479	364.62
11.00	**10.0**	**Shear**	**KIPS**	**542.44**	**66.74**	**57.12**	**6.131**	**263.65**
11.00	10.0	Overload	KSI	36.00	6.11	2.55	8.486	364.89
22.00	**20.0**	**Flexure**	**KSI**	**36.00**	**10.91**	**4.49**	**3.747**	**161.13**
22.00	20.0	Shear	KIPS	542.44	50.54	50.31	7.285	313.26
22.00	20.0	Overload	KSI	36.00	10.91	4.49	3.995	171.80
25.50	**23.2**	**Flexure**	**KSI**	**36.00**	**12.14**	**4.97**	**3.131**	**134.62**
25.50	23.2	Shear	KIPS	542.44	44.91	48.15	7.730	332.40

25.50	23.2	Overload	KSI	36.00	12.14	4.97	3.411	146.68
33.00	**30.0**	**Flexure**	**KSI**	**36.00**	**11.21**	**4.70**	**3.507**	**150.81**
33.00	30.0	Shear	KIPS	542.44	33.61	43.50	8.816	379.10
33.00	30.0	Overload	KSI	36.00	11.21	4.70	3.761	161.72
44.00	**40.0**	**Flexure**	**KSI**	**36.00**	**12.83**	**5.32**	**2.794**	**120.15**
44.00	40.0	Shear	KIPS	542.44	17.04	36.69	10.907	468.98
44.00	40.0	Overload	KSI	36.00	12.83	5.32	3.088	132.79
49.50	**45.0**	**Flexure**	**KSI**	**36.00**	**13.23**	**5.48**	**2.643**	**113.67**
49.50	45.0	Shear	KIPS	542.44	8.29	33.29	12.286	528.30
49.50	45.0	Overload	KSI	36.00	13.23	5.48	2.946	126.67
55.00	**50.0**	**Flexure**	**KSI**	**36.00**	**13.36**	**5.51**	**2.605**	**112.00**
55.00	50.0	Shear	KIPS	542.44	0.00	-29.88	13.965	600.49
55.00	50.0	Overload	KSI	36.00	13.36	5.51	2.911	125.17
66.00	**60.0**	**Flexure**	**KSI**	**36.00**	**12.83**	**5.32**	**2.794**	**120.15**
66.00	60.0	Shear	KIPS	542.44	-17.04	-36.69	10.907	468.98
66.00	60.0	Overload	KSI	36.00	12.83	5.32	3.088	132.79
77.00	**70.0**	**Flexure**	**KSI**	**36.00**	**11.21**	**4.70**	**3.507**	**150.81**
77.00	70.0	Shear	KIPS	542.44	-33.61	-43.50	8.816	379.10
77.00	70.0	Overload	KSI	36.00	11.21	4.70	3.761	161.72
84.50	**76.8**	**Flexure**	**KSI**	**36.00**	**12.14**	**4.97**	**3.131**	**134.62**
84.50	76.8	Shear	KIPS	542.44	-44.91	-48.15	7.730	332.40
84.50	76.8	Overload	KSI	36.00	12.14	4.97	3.411	146.68
88.00	**80.0**	**Flexure**	**KSI**	**36.00**	**10.91**	**4.49**	**3.747**	**161.13**
88.00	80.0	Shear	KIPS	542.44	-50.54	-50.31	7.285	313.26
88.00	80.0	Overload	KSI	36.00	10.91	4.49	3.995	171.80
99.00	90.0	Flexure	KSI	36.00	6.11	2.55	8.479	364.62
99.00	**90.0**	**Shear**	**KIPS**	**542.44**	**-66.74**	**-57.12**	**6.131**	**263.65**
99.00	90.0	Overload	KSI	36.00	6.11	2.55	8.486	364.89
109.00	99.1	Flexure	KSI	-36.00	-0.71	-0.07	99.000	4257.00
109.00	**99.1**	**Shear**	**KIPS**	**318.49**	**-81.48**	**-63.32**	**2.577**	**110.81**
109.00	99.1	Overload	KSI	-36.00	-0.71	-0.07	99.000	4257.00
110.00	100.0	Flexure	KSI	-36.00	-0.00	-0.00	99.000	4257.00
110.00	**100.0**	**Shear**	**KIPS**	**318.49**	**-82.95**	**-63.93**	**2.529**	**108.74**
110.00	100.0	Overload	KSI	-36.00	-0.00	-0.00	99.000	4257.00

Detailed Rating Results
Girder D - As Inspected
HL-93 (US)
Truck + Lane
Impact: As Requested
Lane: As Requested

Span 1

Location (ft)	Percent	Limit State	Units	Capacity	DL + Adj-LL*	LL	Inventory Rating Factor	Inventory Load Rating (Ton)	Operating Rating Factor	Operating Load Rating (Ton)
0.00	0.0	Flexure	KSI	-36.00	-0.00	-0.00	99.000	3564.00	99.000	3564.00
0.00	**0.0**	**Shear**	**KIPS**	**336.32**	**82.95**	**95.70**	**1.362**	**49.01**	**1.765**	**63.54**
0.00	0.0	Overload	KSI	-36.00	-0.00	-0.00	99.000	3564.00	99.000	3564.00
11.00	10.0	Flexure	KSI	36.00	6.11	4.62	3.475	125.08	4.504	162.15
11.00	**10.0**	**Shear**	**KIPS**	**542.44**	**66.74**	**83.03**	**3.134**	**112.81**	**4.062**	**146.24**
11.00	10.0	Overload	KSI	36.00	6.11	4.62	4.681	168.51	6.085	219.06
22.00	**20.0**	**Flexure**	**KSI**	**36.00**	**10.91**	**8.13**	**1.536**	**55.28**	**1.991**	**71.66**
22.00	20.0	Shear	KIPS	542.44	50.54	70.90	3.840	138.25	4.978	179.21
22.00	20.0	Overload	KSI	36.00	10.91	8.13	2.204	79.35	2.865	103.15
25.50	**23.2**	**Flexure**	**KSI**	**36.00**	**12.14**	**9.02**	**1.283**	**46.19**	**1.663**	**59.88**
25.50	23.2	Shear	KIPS	542.44	44.91	67.16	4.116	148.19	5.336	192.10
25.50	23.2	Overload	KSI	36.00	12.14	9.02	1.882	67.75	2.447	88.07
33.00	**30.0**	**Flexure**	**KSI**	**36.00**	**11.21**	**8.52**	**1.438**	**51.75**	**1.863**	**67.09**
33.00	30.0	Shear	KIPS	542.44	33.61	59.33	4.802	172.87	6.225	224.09
33.00	30.0	Overload	KSI	36.00	11.21	8.52	2.075	74.70	2.698	97.11
44.00	**40.0**	**Flexure**	**KSI**	**36.00**	**12.83**	**9.67**	**1.142**	**41.12**	**1.481**	**53.30**
44.00	40.0	Shear	KIPS	542.44	17.04	48.31	6.154	221.54	7.977	287.18
44.00	40.0	Overload	KSI	36.00	12.83	9.67	1.699	61.17	2.209	79.53
49.50	**45.0**	**Flexure**	**KSI**	**36.00**	**13.23**	**9.94**	**1.082**	**38.95**	**1.403**	**50.50**
49.50	45.0	Shear	KIPS	542.44	8.29	43.00	7.065	254.34	9.158	329.70
49.50	45.0	Overload	KSI	36.00	13.23	9.94	1.623	58.44	2.110	75.97
55.00	**50.0**	**Flexure**	**KSI**	**36.00**	**13.36**	**9.98**	**1.068**	**38.44**	**1.384**	**49.82**
55.00	50.0	Shear	KIPS	542.44	0.00	-37.83	8.194	294.99	10.622	382.39
55.00	50.0	Overload	KSI	36.00	13.36	9.98	1.606	57.82	2.088	75.17
66.00	**60.0**	**Flexure**	**KSI**	**36.00**	**12.83**	**9.67**	**1.142**	**41.12**	**1.481**	**53.30**
66.00	60.0	Shear	KIPS	542.44	-17.04	-48.31	6.154	221.54	7.977	287.18
66.00	60.0	Overload	KSI	36.00	12.83	9.67	1.699	61.17	2.209	79.53
77.00	**70.0**	**Flexure**	**KSI**	**36.00**	**11.21**	**8.52**	**1.438**	**51.75**	**1.863**	**67.09**
77.00	70.0	Shear	KIPS	542.44	-33.61	-59.33	4.802	172.87	6.225	224.09
77.00	70.0	Overload	KSI	36.00	11.21	8.52	2.075	74.70	2.698	97.11
84.50	**76.8**	**Flexure**	**KSI**	**36.00**	**12.14**	**9.02**	**1.283**	**46.19**	**1.663**	**59.88**
84.50	76.8	Shear	KIPS	542.44	-44.91	-67.16	4.116	148.19	5.336	192.10
84.50	76.8	Overload	KSI	36.00	12.14	9.02	1.882	67.75	2.447	88.07
88.00	**80.0**	**Flexure**	**KSI**	**36.00**	**10.91**	**8.13**	**1.536**	**55.28**	**1.991**	**71.66**

88.00	80.0	Shear	KIPS	542.44	-50.54	-70.90	3.840	138.25	4.978	179.21
88.00	80.0	Overload	KSI	36.00	10.91	8.13	2.204	79.35	2.865	103.15
99.00	90.0	Flexure	KSI	36.00	6.11	4.62	3.475	125.08	4.504	162.15
99.00	**90.0**	**Shear**	**KIPS**	**542.44**	**-66.74**	**-83.03**	**3.134**	**112.81**	**4.062**	**146.24**
99.00	90.0	Overload	KSI	36.00	6.11	4.62	4.681	168.51	6.085	219.06
109.00	99.1	Flexure	KSI	36.00	0.61	0.47	43.007	1548.26	55.750	2007.01
109.00	**99.1**	**Shear**	**KIPS**	**318.49**	**-81.48**	**-94.52**	**1.282**	**46.16**	**1.662**	**59.84**
109.00	99.1	Overload	KSI	36.00	0.61	0.47	55.235	1988.45	71.805	2584.98
110.00	100.0	Flexure	KSI	-36.00	-0.00	-0.00	99.000	3564.00	99.000	3564.00
110.00	**100.0**	**Shear**	**KIPS**	**318.49**	**-82.95**	**-95.70**	**1.255**	**45.18**	**1.627**	**58.57**
110.00	100.0	Overload	KSI	-36.00	-0.00	-0.00	99.000	3564.00	99.000	3564.00

Detailed Rating Results
Girder D - As Inspected
HL-93 (US)
Tandem + Lane
Impact: As Requested
Lane: As Requested

Span 1

Location (ft)	Percent	Limit State	Units	Capacity	DL + Adj-LL*	LL	Inventory Rating Factor	Inventory Load Rating (Ton)	Operating Rating Factor	Operating Load Rating (Ton)
0.00	0.0	Flexure	KSI	-36.00	-0.00	-0.00	99.000	3564.00	99.000	3564.00
0.00	**0.0**	**Shear**	**KIPS**	**336.32**	**82.95**	**78.29**	**1.664**	**59.91**	**2.157**	**77.66**
0.00	0.0	Overload	KSI	-36.00	-0.00	-0.00	99.000	3564.00	99.000	3564.00
11.00	10.0	Flexure	KSI	36.00	6.11	3.80	4.222	151.98	5.472	197.01
11.00	**10.0**	**Shear**	**KIPS**	**542.44**	**66.74**	**67.90**	**3.832**	**137.95**	**4.967**	**178.82**
11.00	10.0	Overload	KSI	36.00	6.11	3.80	5.687	204.73	7.393	266.15
22.00	**20.0**	**Flexure**	**KSI**	**36.00**	**10.91**	**6.74**	**1.852**	**66.66**	**2.400**	**86.41**
22.00	20.0	Shear	KIPS	542.44	50.54	58.06	4.690	168.84	6.080	218.87
22.00	20.0	Overload	KSI	36.00	10.91	6.74	2.658	95.67	3.455	124.38
25.50	**23.2**	**Flexure**	**KSI**	**36.00**	**12.14**	**7.50**	**1.543**	**55.53**	**2.000**	**71.99**
25.50	23.2	Shear	KIPS	542.44	44.91	55.04	5.023	180.83	6.512	234.41
25.50	23.2	Overload	KSI	36.00	12.14	7.50	2.263	81.46	2.941	105.89
33.00	**30.0**	**Flexure**	**KSI**	**36.00**	**11.21**	**7.14**	**1.716**	**61.78**	**2.225**	**80.09**
33.00	30.0	Shear	KIPS	542.44	33.61	48.76	5.843	210.34	7.574	272.66

33.00	30.0	Overload	KSI	36.00	11.21	7.14	2.477	89.19	3.221	115.94
44.00	**40.0**	**Flexure**	**KSI**	**36.00**	**12.83**	**8.14**	**1.358**	**48.90**	**1.761**	**63.39**
44.00	40.0	Shear	KIPS	542.44	17.04	40.02	7.429	267.43	9.630	346.67
44.00	40.0	Overload	KSI	36.00	12.83	8.14	2.021	72.75	2.627	94.57
49.50	**45.0**	**Flexure**	**KSI**	**36.00**	**13.23**	**8.37**	**1.284**	**46.24**	**1.665**	**59.94**
49.50	45.0	Shear	KIPS	542.44	8.29	35.85	8.474	305.07	10.985	395.46
49.50	45.0	Overload	KSI	36.00	13.23	8.37	1.927	69.36	2.505	90.17
55.00	**50.0**	**Flexure**	**KSI**	**36.00**	**13.36**	**8.44**	**1.263**	**45.46**	**1.637**	**58.93**
55.00	50.0	Shear	KIPS	542.44	0.00	-31.82	9.742	350.70	12.628	454.62
55.00	50.0	Overload	KSI	36.00	13.36	8.44	1.900	68.38	2.469	88.90
66.00	**60.0**	**Flexure**	**KSI**	**36.00**	**12.83**	**8.14**	**1.358**	**48.90**	**1.761**	**63.39**
66.00	60.0	Shear	KIPS	542.44	-17.04	-40.02	7.429	267.43	9.630	346.67
66.00	60.0	Overload	KSI	36.00	12.83	8.14	2.021	72.75	2.627	94.57
77.00	**70.0**	**Flexure**	**KSI**	**36.00**	**11.21**	**7.14**	**1.716**	**61.78**	**2.225**	**80.09**
77.00	70.0	Shear	KIPS	542.44	-33.61	-48.76	5.843	210.34	7.574	272.66
77.00	70.0	Overload	KSI	36.00	11.21	7.14	2.477	89.19	3.221	115.94
84.50	**76.8**	**Flexure**	**KSI**	**36.00**	**12.14**	**7.50**	**1.543**	**55.53**	**2.000**	**71.99**
84.50	76.8	Shear	KIPS	542.44	-44.91	-55.04	5.023	180.83	6.512	234.41
84.50	76.8	Overload	KSI	36.00	12.14	7.50	2.263	81.46	2.941	105.89
88.00	**80.0**	**Flexure**	**KSI**	**36.00**	**10.91**	**6.74**	**1.852**	**66.66**	**2.400**	**86.41**
88.00	80.0	Shear	KIPS	542.44	-50.54	-58.06	4.690	168.84	6.080	218.87
88.00	80.0	Overload	KSI	36.00	10.91	6.74	2.658	95.67	3.455	124.38
99.00	90.0	Flexure	KSI	36.00	6.11	3.80	4.222	151.98	5.472	197.01
99.00	**90.0**	**Shear**	**KIPS**	**542.44**	**-66.74**	**-67.90**	**3.832**	**137.95**	**4.967**	**178.82**
99.00	90.0	Overload	KSI	36.00	6.11	3.80	5.687	204.73	7.393	266.15
109.00	99.1	Flexure	KSI	36.00	0.61	0.38	52.544	1891.58	68.112	2452.04
109.00	**99.1**	**Shear**	**KIPS**	**318.49**	**-81.48**	**-77.32**	**1.567**	**56.43**	**2.032**	**73.15**
109.00	99.1	Overload	KSI	36.00	0.61	0.38	67.482	2429.37	87.727	3158.18
110.00	100.0	Flexure	KSI	-36.00	-0.00	-0.00	99.000	3564.00	99.000	3564.00
110.00	**100.0**	**Shear**	**KIPS**	**318.49**	**-82.95**	**-78.29**	**1.534**	**55.23**	**1.989**	**71.59**
110.00	100.0	Overload	KSI	-36.00	-0.00	-0.00	99.000	3564.00	99.000	3564.00

Detailed Rating Results
Girder D - As Inspected
LRFD Fatigue Truck (US)
Axle Load
Impact: As Requested

Lane: As Requested

Span 1

Location (ft)	Percent	Limit State	Units	Capacity	DL + Adj-LL*	LL	Inventory Rating Factor	Inventory Load Rating (Ton)
11.00	**10.0**	**Interaction**	**KSI**	**12.00**	**0.00**	**2.21**	**5.428**	**162.85**
22.00	**20.0**	**Interaction**	**KSI**	**12.00**	**0.00**	**3.82**	**3.142**	**94.26**
25.50	**23.2**	**Interaction**	**KSI**	**16.00**	**0.00**	**4.28**	**3.739**	**112.17**
33.00	**30.0**	**Interaction**	**KSI**	**12.00**	**0.00**	**3.96**	**3.034**	**91.02**
44.00	**40.0**	**Interaction**	**KSI**	**12.00**	**0.00**	**4.42**	**2.714**	**81.43**
49.50	**45.0**	**Interaction**	**KSI**	**12.00**	**0.00**	**4.47**	**2.683**	**80.48**
55.00	**50.0**	**Interaction**	**KSI**	**12.00**	**0.00**	**4.40**	**2.725**	**81.74**
66.00	**60.0**	**Interaction**	**KSI**	**12.00**	**0.00**	**4.42**	**2.714**	**81.43**
77.00	**70.0**	**Interaction**	**KSI**	**12.00**	**0.00**	**3.96**	**3.034**	**91.02**
84.50	**76.8**	**Interaction**	**KSI**	**16.00**	**0.00**	**4.20**	**3.805**	**114.16**
88.00	**80.0**	**Interaction**	**KSI**	**12.00**	**0.00**	**3.82**	**3.142**	**94.26**
99.00	**90.0**	**Interaction**	**KSI**	**12.00**	**0.00**	**2.21**	**5.428**	**162.85**
109.00	**99.1**	**Interaction**	**KSI**	**16.00**	**0.00**	**0.23**	**70.447**	**2113.40**

Detailed Rating Results
Girder D - As Inspected
SU4
Axle Load
Impact: As Requested
Lane: As Requested

Span 1

Location (ft)	Percent	Limit State	Units	Capacity	DL + Adj -LL*	LL	Legal Rating Factor	Legal Load Rating (Ton)
0.00	0.0	Flexure	KSI	-36.00	-0.00	-0.00	99.000	2673.00
0.00	**0.0**	**Shear**	**KIPS**	**336.32**	**82.95**	**47.53**	**3.691**	**99.64**
0.00	0.0	Overload	KSI	-36.00	-0.00	-0.00	99.000	2673.00
11.00	10.0	Flexure	KSI	36.00	6.11	2.29	9.414	254.18
11.00	**10.0**	**Shear**	**KIPS**	**542.44**	**66.74**	**42.48**	**8.245**	**222.63**
11.00	10.0	Overload	KSI	36.00	6.11	2.29	9.421	254.37
22.00	**20.0**	**Flexure**	**KSI**	**36.00**	**10.91**	**4.04**	**4.158**	**112.28**

22.00	20.0	Shear	KIPS	542.44	50.54	37.43	9.793	264.41
22.00	20.0	Overload	KSI	36.00	10.91	4.04	4.434	119.71
25.50	**23.2**	**Flexure**	**KSI**	**36.00**	**12.14**	**4.48**	**3.474**	**93.79**
25.50	23.2	Shear	KIPS	542.44	44.91	35.82	10.389	280.51
25.50	23.2	Overload	KSI	36.00	12.14	4.48	3.785	102.19
33.00	**30.0**	**Flexure**	**KSI**	**36.00**	**11.21**	**4.24**	**3.890**	**105.03**
33.00	30.0	Shear	KIPS	542.44	33.61	32.38	11.844	319.79
33.00	30.0	Overload	KSI	36.00	11.21	4.24	4.171	112.62
44.00	**40.0**	**Flexure**	**KSI**	**36.00**	**12.83**	**4.84**	**3.073**	**82.98**
44.00	40.0	Shear	KIPS	542.44	17.04	27.33	14.641	395.30
44.00	40.0	Overload	KSI	36.00	12.83	4.84	3.397	91.71
49.50	**45.0**	**Flexure**	**KSI**	**36.00**	**13.23**	**4.98**	**2.907**	**78.48**
49.50	45.0	Shear	KIPS	542.44	8.29	24.81	16.484	445.07
49.50	45.0	Overload	KSI	36.00	13.23	4.98	3.239	87.46
55.00	**50.0**	**Flexure**	**KSI**	**36.00**	**13.36**	**5.01**	**2.863**	**77.29**
55.00	50.0	Shear	KIPS	542.44	0.00	-22.28	18.725	505.57
55.00	50.0	Overload	KSI	36.00	13.36	5.01	3.199	86.38
66.00	**60.0**	**Flexure**	**KSI**	**36.00**	**12.83**	**4.84**	**3.073**	**82.98**
66.00	60.0	Shear	KIPS	542.44	-17.04	-27.33	14.641	395.30
66.00	60.0	Overload	KSI	36.00	12.83	4.84	3.397	91.71
77.00	**70.0**	**Flexure**	**KSI**	**36.00**	**11.21**	**4.24**	**3.890**	**105.03**
77.00	70.0	Shear	KIPS	542.44	-33.61	-32.38	11.844	319.79
77.00	70.0	Overload	KSI	36.00	11.21	4.24	4.171	112.62
84.50	**76.8**	**Flexure**	**KSI**	**36.00**	**12.14**	**4.48**	**3.474**	**93.79**
84.50	76.8	Shear	KIPS	542.44	-44.91	-35.82	10.389	280.51
84.50	76.8	Overload	KSI	36.00	12.14	4.48	3.785	102.19
88.00	**80.0**	**Flexure**	**KSI**	**36.00**	**10.91**	**4.04**	**4.158**	**112.28**
88.00	80.0	Shear	KIPS	542.44	-50.54	-37.43	9.793	264.41
88.00	80.0	Overload	KSI	36.00	10.91	4.04	4.434	119.71
99.00	90.0	Flexure	KSI	36.00	6.11	2.29	9.414	254.18
99.00	**90.0**	**Shear**	**KIPS**	**542.44**	**-66.74**	**-42.48**	**8.245**	**222.63**
99.00	90.0	Overload	KSI	36.00	6.11	2.29	9.421	254.37
109.00	99.1	Flexure	KSI	-36.00	-0.71	-0.07	99.000	2673.00
109.00	**99.1**	**Shear**	**KIPS**	**318.49**	**-81.48**	**-47.07**	**3.467**	**93.60**
109.00	99.1	Overload	KSI	-36.00	-0.71	-0.07	99.000	2673.00
110.00	100.0	Flexure	KSI	-36.00	-0.00	-0.00	99.000	2673.00
110.00	**100.0**	**Shear**	**KIPS**	**318.49**	**-82.95**	**-47.53**	**3.402**	**91.85**
110.00	100.0	Overload	KSI	-36.00	-0.00	-0.00	99.000	2673.00

Detailed Rating Results
Girder D - As Inspected
SU5
Axle Load

D231

Impact: As Requested
Lane: As Requested

Span 1

Location (ft)	Percent	Limit State	Units	Capacity	DL + Adj -LL*	LL	Legal Rating Factor	Legal Load Rating (Ton)
0.00	0.0	Flexure	KSI	-36.00	-0.00	-0.00	99.000	3069.00
0.00	**0.0**	**Shear**	**KIPS**	**336.32**	**82.95**	**53.78**	**3.261**	**101.10**
0.00	0.0	Overload	KSI	-36.00	-0.00	-0.00	99.000	3069.00
11.00	10.0	Flexure	KSI	36.00	6.11	2.59	8.334	258.34
11.00	**10.0**	**Shear**	**KIPS**	**542.44**	**66.74**	**47.98**	**7.299**	**226.27**
11.00	10.0	Overload	KSI	36.00	6.11	2.59	8.340	258.53
22.00	**20.0**	**Flexure**	**KSI**	**36.00**	**10.91**	**4.56**	**3.689**	**114.37**
22.00	20.0	Shear	KIPS	542.44	50.54	42.19	8.688	269.33
22.00	20.0	Overload	KSI	36.00	10.91	4.56	3.934	121.94
25.50	**23.2**	**Flexure**	**KSI**	**36.00**	**12.14**	**5.05**	**3.084**	**95.62**
25.50	23.2	Shear	KIPS	542.44	44.91	40.34	9.225	285.97
25.50	23.2	Overload	KSI	36.00	12.14	5.05	3.361	104.18
33.00	**30.0**	**Flexure**	**KSI**	**36.00**	**11.21**	**4.79**	**3.444**	**106.76**
33.00	30.0	Shear	KIPS	542.44	33.61	36.39	10.539	326.69
33.00	30.0	Overload	KSI	36.00	11.21	4.79	3.693	114.48
44.00	**40.0**	**Flexure**	**KSI**	**36.00**	**12.83**	**5.46**	**2.726**	**84.50**
44.00	40.0	Shear	KIPS	542.44	17.04	30.60	13.079	405.45
44.00	40.0	Overload	KSI	36.00	12.83	5.46	3.012	93.38
49.50	**45.0**	**Flexure**	**KSI**	**36.00**	**13.23**	**5.60**	**2.585**	**80.12**
49.50	45.0	Shear	KIPS	542.44	8.29	27.70	14.764	457.69
49.50	45.0	Overload	KSI	36.00	13.23	5.60	2.880	89.28
55.00	**50.0**	**Flexure**	**KSI**	**36.00**	**13.36**	**5.62**	**2.553**	**79.13**
55.00	50.0	Shear	KIPS	542.44	0.00	-24.80	16.825	521.58
55.00	50.0	Overload	KSI	36.00	13.36	5.62	2.853	88.44
66.00	**60.0**	**Flexure**	**KSI**	**36.00**	**12.83**	**5.46**	**2.726**	**84.50**
66.00	60.0	Shear	KIPS	542.44	-17.04	-30.60	13.079	405.45
66.00	60.0	Overload	KSI	36.00	12.83	5.46	3.012	93.38
77.00	**70.0**	**Flexure**	**KSI**	**36.00**	**11.21**	**4.79**	**3.444**	**106.76**
77.00	70.0	Shear	KIPS	542.44	-33.61	-36.39	10.539	326.69
77.00	70.0	Overload	KSI	36.00	11.21	4.79	3.693	114.48
84.50	**76.8**	**Flexure**	**KSI**	**36.00**	**12.14**	**5.05**	**3.084**	**95.62**
84.50	76.8	Shear	KIPS	542.44	-44.91	-40.34	9.225	285.97
84.50	76.8	Overload	KSI	36.00	12.14	5.05	3.361	104.18
88.00	**80.0**	**Flexure**	**KSI**	**36.00**	**10.91**	**4.56**	**3.689**	**114.37**

88.00	80.0	Shear	KIPS	542.44	-50.54	-42.19	8.688	269.33
88.00	80.0	Overload	KSI	36.00	10.91	4.56	3.934	121.94
99.00	90.0	Flexure	KSI	36.00	6.11	2.59	8.334	258.34
99.00	**90.0**	**Shear**	**KIPS**	**542.44**	**-66.74**	**-47.98**	**7.299**	**226.27**
99.00	90.0	Overload	KSI	36.00	6.11	2.59	8.340	258.53
109.00	99.1	Flexure	KSI	-36.00	-0.71	-0.07	99.000	3069.00
109.00	**99.1**	**Shear**	**KIPS**	**318.49**	**-81.48**	**-53.25**	**3.064**	**94.98**
109.00	99.1	Overload	KSI	36.00	0.61	0.26	98.295	3047.15
110.00	100.0	Flexure	KSI	-36.00	-0.00	-0.00	99.000	3069.00
110.00	**100.0**	**Shear**	**KIPS**	**318.49**	**-82.95**	**-53.78**	**3.006**	**93.19**
110.00	100.0	Overload	KSI	-36.00	-0.00	-0.00	99.000	3069.00

Detailed Rating Results
Girder D - As Inspected
SU6
Axle Load
Impact: As Requested
Lane: As Requested

Span 1

Location (ft)	Percent	Limit State	Units	Capacity	DL + Adj -LL*	LL	Legal Rating Factor	Legal Load Rating (Ton)
0.00	0.0	Flexure	KSI	-36.00	-0.00	-0.00	99.000	3440.25
0.00	**0.0**	**Shear**	**KIPS**	**336.32**	**82.95**	**58.80**	**2.983**	**103.67**
0.00	0.0	Overload	KSI	-36.00	-0.00	-0.00	99.000	3440.25
11.00	10.0	Flexure	KSI	36.00	6.11	2.82	7.646	265.71
11.00	**10.0**	**Shear**	**KIPS**	**542.44**	**66.74**	**52.30**	**6.697**	**232.72**
11.00	10.0	Overload	KSI	36.00	6.11	2.82	7.652	265.91
22.00	**20.0**	**Flexure**	**KSI**	**36.00**	**10.91**	**5.05**	**3.326**	**115.56**
22.00	20.0	Shear	KIPS	542.44	50.54	45.80	8.003	278.10
22.00	20.0	Overload	KSI	36.00	10.91	5.05	3.546	123.21
25.50	**23.2**	**Flexure**	**KSI**	**36.00**	**12.14**	**5.62**	**2.770**	**96.26**
25.50	23.2	Shear	KIPS	542.44	44.91	43.73	8.510	295.72
25.50	23.2	Overload	KSI	36.00	12.14	5.62	3.018	104.88
33.00	**30.0**	**Flexure**	**KSI**	**36.00**	**11.21**	**5.34**	**3.090**	**107.39**
33.00	30.0	Shear	KIPS	542.44	33.61	39.30	9.758	339.09
33.00	30.0	Overload	KSI	36.00	11.21	5.34	3.314	115.15
44.00	**40.0**	**Flexure**	**KSI**	**36.00**	**12.83**	**6.06**	**2.454**	**85.26**
44.00	40.0	Shear	KIPS	542.44	17.04	32.81	12.198	423.88
44.00	40.0	Overload	KSI	36.00	12.83	6.06	2.712	94.23

49.50	**45.0**	**Flexure**	**KSI**	**36.00**	**13.23**	**6.24**	**2.319**	**80.58**
49.50	45.0	Shear	KIPS	542.44	8.29	29.56	13.836	480.79
49.50	45.0	Overload	KSI	36.00	13.23	6.24	2.584	89.80
55.00	**50.0**	**Flexure**	**KSI**	**36.00**	**13.36**	**6.28**	**2.283**	**79.35**
55.00	50.0	Shear	KIPS	542.44	0.00	-26.31	15.860	551.15
55.00	50.0	Overload	KSI	36.00	13.36	6.28	2.552	88.67
66.00	**60.0**	**Flexure**	**KSI**	**36.00**	**12.83**	**6.06**	**2.454**	**85.26**
66.00	60.0	Shear	KIPS	542.44	-17.04	-32.81	12.198	423.88
66.00	60.0	Overload	KSI	36.00	12.83	6.06	2.712	94.23
77.00	**70.0**	**Flexure**	**KSI**	**36.00**	**11.21**	**5.34**	**3.090**	**107.39**
77.00	70.0	Shear	KIPS	542.44	-33.61	-39.30	9.758	339.09
77.00	70.0	Overload	KSI	36.00	11.21	5.34	3.314	115.15
84.50	**76.8**	**Flexure**	**KSI**	**36.00**	**12.14**	**5.62**	**2.770**	**96.26**
84.50	76.8	Shear	KIPS	542.44	-44.91	-43.73	8.510	295.72
84.50	76.8	Overload	KSI	36.00	12.14	5.62	3.018	104.88
88.00	**80.0**	**Flexure**	**KSI**	**36.00**	**10.91**	**5.05**	**3.326**	**115.56**
88.00	80.0	Shear	KIPS	542.44	-50.54	-45.80	8.003	278.10
88.00	80.0	Overload	KSI	36.00	10.91	5.05	3.546	123.21
99.00	90.0	Flexure	KSI	36.00	6.11	2.82	7.646	265.71
99.00	**90.0**	**Shear**	**KIPS**	**542.44**	**-66.74**	**-52.30**	**6.697**	**232.72**
99.00	90.0	Overload	KSI	36.00	6.11	2.82	7.652	265.91
109.00	99.1	Flexure	KSI	36.00	0.61	0.29	94.265	3275.72
109.00	**99.1**	**Shear**	**KIPS**	**318.49**	**-81.48**	**-58.20**	**2.803**	**97.41**
109.00	99.1	Overload	KSI	36.00	0.61	0.29	89.935	3125.23
110.00	100.0	Flexure	KSI	-36.00	-0.00	-0.00	99.000	3440.25
110.00	**100.0**	**Shear**	**KIPS**	**318.49**	**-82.95**	**-58.80**	**2.750**	**95.56**
110.00	100.0	Overload	KSI	-36.00	-0.00	-0.00	99.000	3440.25

Detailed Rating Results
Girder D - As Inspected
SU7
Axle Load
Impact: As Requested
Lane: As Requested

Span 1

Location (ft)	Percent	Limit State	Units	Capacity	DL + Adj -LL*	LL	Legal Rating Factor	Legal Load Rating (Ton)
0.00	0.0	Flexure	KSI	-36.00	-0.00	-0.00	99.000	3836.25
0.00	**0.0**	**Shear**	**KIPS**	**336.32**	**82.95**	**63.91**	**2.744**	**106.34**

0.00	0.0	Overload	KSI	-36.00	-0.00	-0.00	99.000	3836.25
11.00	10.0	Flexure	KSI	36.00	6.11	3.06	7.057	273.45
11.00	**10.0**	**Shear**	**KIPS**	**542.44**	**66.74**	**56.67**	**6.181**	**239.51**
11.00	10.0	Overload	KSI	36.00	6.11	3.06	7.062	273.65
22.00	**20.0**	**Flexure**	**KSI**	**36.00**	**10.91**	**5.47**	**3.070**	**118.97**
22.00	20.0	Shear	KIPS	542.44	50.54	49.42	7.417	287.39
22.00	20.0	Overload	KSI	36.00	10.91	5.47	3.273	126.85
25.50	**23.2**	**Flexure**	**KSI**	**36.00**	**12.14**	**6.12**	**2.547**	**98.68**
25.50	23.2	Shear	KIPS	542.44	44.91	47.12	7.899	306.09
25.50	23.2	Overload	KSI	36.00	12.14	6.12	2.775	107.52
33.00	**30.0**	**Flexure**	**KSI**	**36.00**	**11.21**	**5.86**	**2.816**	**109.13**
33.00	30.0	Shear	KIPS	542.44	33.61	42.18	9.093	352.37
33.00	30.0	Overload	KSI	36.00	11.21	5.86	3.020	117.02
44.00	**40.0**	**Flexure**	**KSI**	**36.00**	**12.83**	**6.66**	**2.233**	**86.52**
44.00	40.0	Shear	KIPS	542.44	17.04	34.93	11.456	443.92
44.00	40.0	Overload	KSI	36.00	12.83	6.66	2.468	95.62
49.50	**45.0**	**Flexure**	**KSI**	**36.00**	**13.23**	**6.86**	**2.112**	**81.83**
49.50	45.0	Shear	KIPS	542.44	8.29	31.31	13.062	506.15
49.50	45.0	Overload	KSI	36.00	13.23	6.86	2.353	91.19
55.00	**50.0**	**Flexure**	**KSI**	**36.00**	**13.36**	**6.92**	**2.073**	**80.32**
55.00	50.0	Shear	KIPS	542.44	0.00	-27.69	15.072	584.03
55.00	50.0	Overload	KSI	36.00	13.36	6.92	2.317	89.76
66.00	**60.0**	**Flexure**	**KSI**	**36.00**	**12.83**	**6.66**	**2.233**	**86.52**
66.00	60.0	Shear	KIPS	542.44	-17.04	-34.93	11.456	443.92
66.00	60.0	Overload	KSI	36.00	12.83	6.66	2.468	95.62
77.00	**70.0**	**Flexure**	**KSI**	**36.00**	**11.21**	**5.86**	**2.816**	**109.13**
77.00	70.0	Shear	KIPS	542.44	-33.61	-42.18	9.093	352.37
77.00	70.0	Overload	KSI	36.00	11.21	5.86	3.020	117.02
84.50	**76.8**	**Flexure**	**KSI**	**36.00**	**12.14**	**6.12**	**2.547**	**98.68**
84.50	76.8	Shear	KIPS	542.44	-44.91	-47.12	7.899	306.09
84.50	76.8	Overload	KSI	36.00	12.14	6.12	2.775	107.52
88.00	**80.0**	**Flexure**	**KSI**	**36.00**	**10.91**	**5.47**	**3.070**	**118.97**
88.00	80.0	Shear	KIPS	542.44	-50.54	-49.42	7.417	287.39
88.00	80.0	Overload	KSI	36.00	10.91	5.47	3.273	126.85
99.00	90.0	Flexure	KSI	36.00	6.11	3.06	7.057	273.45
99.00	**90.0**	**Shear**	**KIPS**	**542.44**	**-66.74**	**-56.67**	**6.181**	**239.51**
99.00	90.0	Overload	KSI	36.00	6.11	3.06	7.062	273.65
109.00	99.1	Flexure	KSI	36.00	0.61	0.31	86.742	3361.25
109.00	**99.1**	**Shear**	**KIPS**	**318.49**	**-81.48**	**-63.25**	**2.579**	**99.95**
109.00	99.1	Overload	KSI	36.00	0.61	0.31	82.757	3206.82
110.00	100.0	Flexure	KSI	-36.00	-0.00	-0.00	99.000	3836.25
110.00	**100.0**	**Shear**	**KIPS**	**318.49**	**-82.95**	**-63.91**	**2.530**	**98.03**
110.00	100.0	Overload	KSI	-36.00	-0.00	-0.00	99.000	3836.25

Detailed Rating Results
Girder D - As Inspected
Type 3
Axle Load
Impact: As Requested
Lane: As Requested

Span 1

Location (ft)	Percent	Limit State	Units	Capacity	DL + Adj -LL*	LL	Legal Rating Factor	Legal Load Rating (Ton)
0.00	0.0	Flexure	KSI	-36.00	-0.00	-0.00	99.000	2475.00
0.00	**0.0**	**Shear**	**KIPS**	**336.32**	**82.95**	**43.58**	**4.024**	**100.61**
0.00	0.0	Overload	KSI	-36.00	-0.00	-0.00	99.000	2475.00
11.00	10.0	Flexure	KSI	36.00	6.11	2.10	10.278	256.94
11.00	**10.0**	**Shear**	**KIPS**	**542.44**	**66.74**	**38.91**	**9.002**	**225.05**
11.00	10.0	Overload	KSI	36.00	6.11	2.10	10.285	257.13
22.00	**20.0**	**Flexure**	**KSI**	**36.00**	**10.91**	**3.70**	**4.547**	**113.67**
22.00	20.0	Shear	KIPS	542.44	50.54	34.23	10.707	267.67
22.00	20.0	Overload	KSI	36.00	10.91	3.70	4.848	121.19
25.50	**23.2**	**Flexure**	**KSI**	**36.00**	**12.14**	**4.10**	**3.800**	**95.00**
25.50	23.2	Shear	KIPS	542.44	44.91	32.75	11.365	284.13
25.50	23.2	Overload	KSI	36.00	12.14	4.10	4.140	103.51
33.00	**30.0**	**Flexure**	**KSI**	**36.00**	**11.21**	**3.87**	**4.261**	**106.53**
33.00	30.0	Shear	KIPS	542.44	33.61	29.56	12.975	324.37
33.00	30.0	Overload	KSI	36.00	11.21	3.87	4.569	114.24
44.00	**40.0**	**Flexure**	**KSI**	**36.00**	**12.83**	**4.39**	**3.389**	**84.73**
44.00	40.0	Shear	KIPS	542.44	17.04	24.88	16.081	402.02
44.00	40.0	Overload	KSI	36.00	12.83	4.39	3.746	93.64
49.50	**45.0**	**Flexure**	**KSI**	**36.00**	**13.23**	**4.51**	**3.210**	**80.25**
49.50	45.0	Shear	KIPS	542.44	8.29	22.55	18.137	453.42
49.50	45.0	Overload	KSI	36.00	13.23	4.51	3.577	89.43
55.00	**50.0**	**Flexure**	**KSI**	**36.00**	**13.36**	**4.53**	**3.167**	**79.18**
55.00	50.0	Shear	KIPS	542.44	0.00	-20.21	20.646	516.15
55.00	50.0	Overload	KSI	36.00	13.36	4.53	3.540	88.49
66.00	**60.0**	**Flexure**	**KSI**	**36.00**	**12.83**	**4.39**	**3.389**	**84.73**
66.00	60.0	Shear	KIPS	542.44	-17.04	-24.88	16.081	402.02
66.00	60.0	Overload	KSI	36.00	12.83	4.39	3.746	93.64
77.00	**70.0**	**Flexure**	**KSI**	**36.00**	**11.21**	**3.87**	**4.261**	**106.53**
77.00	70.0	Shear	KIPS	542.44	-33.61	-29.56	12.975	324.37

77.00	70.0	Overload	KSI	36.00	11.21	3.87	4.569	114.24
84.50	**76.8**	**Flexure**	**KSI**	**36.00**	**12.14**	**4.10**	**3.800**	**95.00**
84.50	76.8	Shear	KIPS	542.44	-44.91	-32.75	11.365	284.13
84.50	76.8	Overload	KSI	36.00	12.14	4.10	4.140	103.51
88.00	**80.0**	**Flexure**	**KSI**	**36.00**	**10.91**	**3.70**	**4.547**	**113.67**
88.00	80.0	Shear	KIPS	542.44	-50.54	-34.23	10.707	267.67
88.00	80.0	Overload	KSI	36.00	10.91	3.70	4.848	121.19
99.00	90.0	Flexure	KSI	36.00	6.11	2.10	10.278	256.94
99.00	**90.0**	**Shear**	**KIPS**	**542.44**	**-66.74**	**-38.91**	**9.002**	**225.05**
99.00	90.0	Overload	KSI	36.00	6.11	2.10	10.285	257.13
109.00	99.1	Flexure	KSI	-36.00	-0.71	-0.06	99.000	2475.00
109.00	**99.1**	**Shear**	**KIPS**	**318.49**	**-81.48**	**-43.16**	**3.781**	**94.51**
109.00	99.1	Overload	KSI	-36.00	-0.71	-0.06	99.000	2475.00
110.00	100.0	Flexure	KSI	-36.00	-0.00	-0.00	99.000	2475.00
110.00	**100.0**	**Shear**	**KIPS**	**318.49**	**-82.95**	**-43.58**	**3.710**	**92.74**
110.00	100.0	Overload	KSI	-36.00	-0.00	-0.00	99.000	2475.00

Detailed Rating Results
Girder D - As Inspected
Type 3-3
Axle Load
Impact: As Requested
Lane: As Requested

Span 1

Location (ft)	Percent	Limit State	Units	Capacity	DL + Adj -LL*	LL	Legal Rating Factor	Legal Load Rating (Ton)
0.00	0.0	Flexure	KSI	-36.00	-0.00	-0.00	99.000	3960.00
0.00	**0.0**	**Shear**	**KIPS**	**336.32**	**82.95**	**58.54**	**2.996**	**119.85**
0.00	0.0	Overload	KSI	-36.00	-0.00	-0.00	99.000	3960.00
11.00	10.0	Flexure	KSI	36.00	6.11	2.76	7.831	313.26
11.00	**10.0**	**Shear**	**KIPS**	**542.44**	**66.74**	**51.06**	**6.859**	**274.37**
11.00	10.0	Overload	KSI	36.00	6.11	2.76	7.837	313.49
22.00	**20.0**	**Flexure**	**KSI**	**36.00**	**10.91**	**4.74**	**3.544**	**141.75**
22.00	20.0	Shear	KIPS	542.44	50.54	43.58	8.410	336.41
22.00	20.0	Overload	KSI	36.00	10.91	4.74	3.778	151.13
25.50	**23.2**	**Flexure**	**KSI**	**36.00**	**12.14**	**5.24**	**2.972**	**118.88**
25.50	23.2	Shear	KIPS	542.44	44.91	41.20	9.033	361.31
25.50	23.2	Overload	KSI	36.00	12.14	5.24	3.238	129.53
33.00	**30.0**	**Flexure**	**KSI**	**36.00**	**11.21**	**4.88**	**3.383**	**135.31**

33.00	30.0	Shear	KIPS	542.44	33.61	36.10	10.623	424.92
33.00	30.0	Overload	KSI	36.00	11.21	4.88	3.627	145.09
44.00	**40.0**	**Flexure**	**KSI**	**36.00**	**12.83**	**5.50**	**2.704**	**108.14**
44.00	40.0	Shear	KIPS	542.44	17.04	28.62	13.980	559.20
44.00	40.0	Overload	KSI	36.00	12.83	5.50	2.988	119.52
49.50	**45.0**	**Flexure**	**KSI**	**36.00**	**13.23**	**5.69**	**2.545**	**101.80**
49.50	45.0	Shear	KIPS	542.44	8.29	24.88	16.433	657.33
49.50	45.0	Overload	KSI	36.00	13.23	5.69	2.836	113.44
55.00	**50.0**	**Flexure**	**KSI**	**36.00**	**13.36**	**5.71**	**2.511**	**100.45**
55.00	50.0	Shear	KIPS	542.44	0.00	-21.15	19.733	789.33
55.00	50.0	Overload	KSI	36.00	13.36	5.71	2.807	112.26
66.00	**60.0**	**Flexure**	**KSI**	**36.00**	**12.83**	**5.50**	**2.704**	**108.14**
66.00	60.0	Shear	KIPS	542.44	-17.04	-28.62	13.980	559.20
66.00	60.0	Overload	KSI	36.00	12.83	5.50	2.988	119.52
77.00	**70.0**	**Flexure**	**KSI**	**36.00**	**11.21**	**4.88**	**3.383**	**135.31**
77.00	70.0	Shear	KIPS	542.44	-33.61	-36.10	10.623	424.92
77.00	70.0	Overload	KSI	36.00	11.21	4.88	3.627	145.09
84.50	**76.8**	**Flexure**	**KSI**	**36.00**	**12.14**	**5.24**	**2.972**	**118.88**
84.50	76.8	Shear	KIPS	542.44	-44.91	-41.20	9.033	361.31
84.50	76.8	Overload	KSI	36.00	12.14	5.24	3.238	129.53
88.00	**80.0**	**Flexure**	**KSI**	**36.00**	**10.91**	**4.74**	**3.544**	**141.75**
88.00	80.0	Shear	KIPS	542.44	-50.54	-43.58	8.410	336.41
88.00	80.0	Overload	KSI	36.00	10.91	4.74	3.778	151.13
99.00	90.0	Flexure	KSI	36.00	6.11	2.76	7.831	313.26
99.00	**90.0**	**Shear**	**KIPS**	**542.44**	**-66.74**	**-51.06**	**6.859**	**274.37**
99.00	90.0	Overload	KSI	36.00	6.11	2.76	7.837	313.49
109.00	99.1	Flexure	KSI	36.00	0.61	0.29	94.826	3793.05
109.00	**99.1**	**Shear**	**KIPS**	**318.49**	**-81.48**	**-57.86**	**2.820**	**112.79**
109.00	99.1	Overload	KSI	36.00	0.61	0.29	90.470	3618.78
110.00	100.0	Flexure	KSI	-36.00	-0.00	-0.00	99.000	3960.00
110.00	**100.0**	**Shear**	**KIPS**	**318.49**	**-82.95**	**-58.54**	**2.762**	**110.47**
110.00	100.0	Overload	KSI	-36.00	-0.00	-0.00	99.000	3960.00

Detailed Rating Results
Girder D - As Inspected
Type 3S2
Axle Load
Impact: As Requested
Lane: As Requested

Span 1

Location							Legal Rating	Legal

(ft)	Percent	Limit State	Units	Capacity	DL + Adj -LL*	LL	Factor	Load Rating (Ton)
0.00	0.0	Flexure	KSI	-36.00	-0.00	-0.00	99.000	3564.00
0.00	**0.0**	**Shear**	**KIPS**	**336.32**	**82.95**	**55.92**	**3.136**	**112.91**
0.00	0.0	Overload	KSI	-36.00	-0.00	-0.00	99.000	3564.00
11.00	10.0	Flexure	KSI	36.00	6.11	2.66	8.129	292.65
11.00	**10.0**	**Shear**	**KIPS**	**542.44**	**66.74**	**49.19**	**7.120**	**256.32**
11.00	10.0	Overload	KSI	36.00	6.11	2.66	8.135	292.87
22.00	**20.0**	**Flexure**	**KSI**	**36.00**	**10.91**	**4.58**	**3.666**	**131.96**
22.00	20.0	Shear	KIPS	542.44	50.54	42.46	8.632	310.77
22.00	20.0	Overload	KSI	36.00	10.91	4.58	3.908	140.70
25.50	**23.2**	**Flexure**	**KSI**	**36.00**	**12.14**	**5.09**	**3.057**	**110.05**
25.50	23.2	Shear	KIPS	542.44	44.91	40.32	9.231	332.31
25.50	23.2	Overload	KSI	36.00	12.14	5.09	3.331	119.91
33.00	**30.0**	**Flexure**	**KSI**	**36.00**	**11.21**	**4.85**	**3.401**	**122.45**
33.00	30.0	Shear	KIPS	542.44	33.61	35.73	10.734	386.43
33.00	30.0	Overload	KSI	36.00	11.21	4.85	3.647	131.30
44.00	**40.0**	**Flexure**	**KSI**	**36.00**	**12.83**	**5.48**	**2.717**	**97.80**
44.00	40.0	Shear	KIPS	542.44	17.04	29.00	13.800	496.79
44.00	40.0	Overload	KSI	36.00	12.83	5.48	3.003	108.09
49.50	**45.0**	**Flexure**	**KSI**	**36.00**	**13.23**	**5.60**	**2.587**	**93.13**
49.50	45.0	Shear	KIPS	542.44	8.29	25.63	15.954	574.34
49.50	45.0	Overload	KSI	36.00	13.23	5.60	2.883	103.78
55.00	**50.0**	**Flexure**	**KSI**	**36.00**	**13.36**	**5.57**	**2.575**	**92.69**
55.00	50.0	Shear	KIPS	542.44	0.00	-22.27	18.739	674.60
55.00	50.0	Overload	KSI	36.00	13.36	5.57	2.878	103.59
66.00	**60.0**	**Flexure**	**KSI**	**36.00**	**12.83**	**5.48**	**2.717**	**97.80**
66.00	60.0	Shear	KIPS	542.44	-17.04	-29.00	13.800	496.79
66.00	60.0	Overload	KSI	36.00	12.83	5.48	3.003	108.09
77.00	**70.0**	**Flexure**	**KSI**	**36.00**	**11.21**	**4.85**	**3.401**	**122.45**
77.00	70.0	Shear	KIPS	542.44	-33.61	-35.73	10.734	386.43
77.00	70.0	Overload	KSI	36.00	11.21	4.85	3.647	131.30
84.50	**76.8**	**Flexure**	**KSI**	**36.00**	**12.14**	**5.09**	**3.057**	**110.05**
84.50	76.8	Shear	KIPS	542.44	-44.91	-40.32	9.231	332.31
84.50	76.8	Overload	KSI	36.00	12.14	5.09	3.331	119.91
88.00	**80.0**	**Flexure**	**KSI**	**36.00**	**10.91**	**4.58**	**3.666**	**131.96**
88.00	80.0	Shear	KIPS	542.44	-50.54	-42.46	8.632	310.77
88.00	80.0	Overload	KSI	36.00	10.91	4.58	3.908	140.70
99.00	90.0	Flexure	KSI	36.00	6.11	2.66	8.129	292.65
99.00	**90.0**	**Shear**	**KIPS**	**542.44**	**-66.74**	**-49.19**	**7.120**	**256.32**
99.00	90.0	Overload	KSI	36.00	6.11	2.66	8.135	292.87

109.00	99.1	Flexure	KSI	-36.00	-0.71	-0.08	99.000	3564.00
109.00	**99.1**	**Shear**	**KIPS**	**318.49**	**-81.48**	**-55.31**	**2.950**	**106.19**
109.00	99.1	Overload	KSI	36.00	0.61	0.27	94.640	3407.04
110.00	100.0	Flexure	KSI	-36.00	-0.00	-0.00	99.000	3564.00
110.00	**100.0**	**Shear**	**KIPS**	**318.49**	**-82.95**	**-55.92**	**2.891**	**104.08**
110.00	100.0	Overload	KSI	-36.00	-0.00	-0.00	99.000	3564.00

Detailed Rating Results
Girder D - As Inspected
RI-3
Axle Load
Impact: As Requested
Lane: As Requested

Span 1

Location (ft)	Percent	Limit State	Units	Capacity	DL + Adj -LL*	LL	Permit Rating Factor	Permit Load Rating (Ton)
0.00	0.0	Flexure	KSI	-36.00	-0.00	-0.00	99.000	3762.00
0.00	**0.0**	**Shear**	**KIPS**	**336.32**	**82.95**	**67.25**	**2.866**	**108.90**
0.00	0.0	Overload	KSI	-36.00	-0.00	-0.00	99.000	3762.00
11.00	10.0	Flexure	KSI	36.00	6.11	3.25	7.306	277.62
11.00	**10.0**	**Shear**	**KIPS**	**542.44**	**66.74**	**60.14**	**6.399**	**243.16**
11.00	10.0	Overload	KSI	36.00	6.11	3.25	8.650	328.72
22.00	**20.0**	**Flexure**	**KSI**	**36.00**	**10.91**	**5.73**	**3.225**	**122.54**
22.00	20.0	Shear	KIPS	542.44	50.54	53.03	7.594	288.56
22.00	20.0	Overload	KSI	36.00	10.91	5.73	4.068	154.58
25.50	**23.2**	**Flexure**	**KSI**	**36.00**	**12.14**	**6.35**	**2.693**	**102.33**
25.50	23.2	Shear	KIPS	542.44	44.91	50.77	8.054	306.04
25.50	23.2	Overload	KSI	36.00	12.14	6.35	3.471	131.92
33.00	**30.0**	**Flexure**	**KSI**	**36.00**	**11.21**	**6.01**	**3.013**	**114.50**
33.00	30.0	Shear	KIPS	542.44	33.61	45.93	9.175	348.64
33.00	30.0	Overload	KSI	36.00	11.21	6.01	3.823	145.27
44.00	**40.0**	**Flexure**	**KSI**	**36.00**	**12.83**	**6.80**	**2.403**	**91.31**
44.00	40.0	Shear	KIPS	542.44	17.04	38.82	11.325	430.34
44.00	40.0	Overload	KSI	36.00	12.83	6.80	3.142	119.39
49.50	**45.0**	**Flexure**	**KSI**	**36.00**	**13.23**	**7.02**	**2.267**	**86.16**
49.50	45.0	Shear	KIPS	542.44	8.29	35.27	12.739	484.07
49.50	45.0	Overload	KSI	36.00	13.23	7.02	2.989	113.60
55.00	**50.0**	**Flexure**	**KSI**	**36.00**	**13.36**	**7.08**	**2.228**	**84.66**
55.00	50.0	Shear	KIPS	542.44	0.00	-31.72	14.454	549.24

55.00	50.0	Overload	KSI	36.00	13.36	7.08	2.946	111.94
66.00	**60.0**	**Flexure**	**KSI**	**36.00**	**12.83**	**6.80**	**2.403**	**91.31**
66.00	60.0	Shear	KIPS	542.44	-17.04	-38.82	11.325	430.34
66.00	60.0	Overload	KSI	36.00	12.83	6.80	3.142	119.39
77.00	**70.0**	**Flexure**	**KSI**	**36.00**	**11.21**	**6.01**	**3.013**	**114.50**
77.00	70.0	Shear	KIPS	542.44	-33.61	-45.93	9.175	348.64
77.00	70.0	Overload	KSI	36.00	11.21	6.01	3.823	145.27
84.50	**76.8**	**Flexure**	**KSI**	**36.00**	**12.14**	**6.35**	**2.693**	**102.33**
84.50	76.8	Shear	KIPS	542.44	-44.91	-50.77	8.054	306.04
84.50	76.8	Overload	KSI	36.00	12.14	6.35	3.471	131.92
88.00	**80.0**	**Flexure**	**KSI**	**36.00**	**10.91**	**5.73**	**3.225**	**122.54**
88.00	80.0	Shear	KIPS	542.44	-50.54	-53.03	7.594	288.56
88.00	80.0	Overload	KSI	36.00	10.91	5.73	4.068	154.58
99.00	90.0	Flexure	KSI	36.00	6.11	3.25	7.306	277.62
99.00	**90.0**	**Shear**	**KIPS**	**542.44**	**-66.74**	**-60.14**	**6.399**	**243.16**
99.00	90.0	Overload	KSI	36.00	6.11	3.25	8.650	328.72
109.00	99.1	Flexure	KSI	36.00	0.61	0.33	90.519	3439.73
109.00	**99.1**	**Shear**	**KIPS**	**318.49**	**-81.48**	**-66.60**	**2.692**	**102.29**
109.00	99.1	Overload	KSI	-36.00	-0.71	-0.09	99.000	3762.00
110.00	100.0	Flexure	KSI	-36.00	-0.00	-0.00	99.000	3762.00
110.00	**100.0**	**Shear**	**KIPS**	**318.49**	**-82.95**	**-67.25**	**2.642**	**100.38**
110.00	100.0	Overload	KSI	-36.00	-0.00	-0.00	99.000	3762.00

Detailed Rating Results
Girder D - As Inspected
RI-4
Axle Load
Impact: As Requested
Lane: As Requested

Span 1

Location (ft)	Percent	Limit State	Units	Capacity	DL + Adj -LL*	LL	Permit Rating Factor	Permit Load Rating (Ton)
0.00	0.0	Flexure	KSI	-36.00	-0.00	-0.00	99.000	3712.50
0.00	**0.0**	**Shear**	**KIPS**	**336.32**	**82.95**	**65.38**	**2.948**	**110.54**
0.00	0.0	Overload	KSI	-36.00	-0.00	-0.00	99.000	3712.50
11.00	10.0	Flexure	KSI	36.00	6.11	3.15	7.528	282.29
11.00	**10.0**	**Shear**	**KIPS**	**542.44**	**66.74**	**58.37**	**6.593**	**247.25**
11.00	10.0	Overload	KSI	36.00	6.11	3.15	8.913	334.24
22.00	**20.0**	**Flexure**	**KSI**	**36.00**	**10.91**	**5.55**	**3.330**	**124.88**

22.00	20.0	Shear	KIPS	542.44	50.54	51.36	7.842	294.08
22.00	20.0	Overload	KSI	36.00	10.91	5.55	4.201	157.53
25.50	**23.2**	**Flexure**	**KSI**	**36.00**	**12.14**	**6.15**	**2.783**	**104.37**
25.50	23.2	Shear	KIPS	542.44	44.91	49.12	8.324	312.16
25.50	23.2	Overload	KSI	36.00	12.14	6.15	3.588	134.55
33.00	**30.0**	**Flexure**	**KSI**	**36.00**	**11.21**	**5.85**	**3.097**	**116.15**
33.00	30.0	Shear	KIPS	542.44	33.61	44.34	9.503	356.36
33.00	30.0	Overload	KSI	36.00	11.21	5.85	3.930	147.36
44.00	**40.0**	**Flexure**	**KSI**	**36.00**	**12.83**	**6.68**	**2.445**	**91.68**
44.00	40.0	Shear	KIPS	542.44	17.04	37.33	11.777	441.65
44.00	40.0	Overload	KSI	36.00	12.83	6.68	3.197	119.89
49.50	**45.0**	**Flexure**	**KSI**	**36.00**	**13.23**	**6.87**	**2.315**	**86.80**
49.50	45.0	Shear	KIPS	542.44	8.29	33.83	13.283	498.11
49.50	45.0	Overload	KSI	36.00	13.23	6.87	3.052	114.45
55.00	**50.0**	**Flexure**	**KSI**	**36.00**	**13.36**	**6.91**	**2.282**	**85.58**
55.00	50.0	Shear	KIPS	542.44	0.00	-30.32	15.120	567.02
55.00	50.0	Overload	KSI	36.00	13.36	6.91	3.017	113.15
66.00	**60.0**	**Flexure**	**KSI**	**36.00**	**12.83**	**6.68**	**2.445**	**91.68**
66.00	60.0	Shear	KIPS	542.44	-17.04	-37.33	11.777	441.65
66.00	60.0	Overload	KSI	36.00	12.83	6.68	3.197	119.89
77.00	**70.0**	**Flexure**	**KSI**	**36.00**	**11.21**	**5.85**	**3.097**	**116.15**
77.00	70.0	Shear	KIPS	542.44	-33.61	-44.34	9.503	356.36
77.00	70.0	Overload	KSI	36.00	11.21	5.85	3.930	147.36
84.50	**76.8**	**Flexure**	**KSI**	**36.00**	**12.14**	**6.15**	**2.783**	**104.37**
84.50	76.8	Shear	KIPS	542.44	-44.91	-49.12	8.324	312.16
84.50	76.8	Overload	KSI	36.00	12.14	6.15	3.588	134.55
88.00	**80.0**	**Flexure**	**KSI**	**36.00**	**10.91**	**5.55**	**3.330**	**124.88**
88.00	80.0	Shear	KIPS	542.44	-50.54	-51.36	7.842	294.08
88.00	80.0	Overload	KSI	36.00	10.91	5.55	4.201	157.53
99.00	90.0	Flexure	KSI	36.00	6.11	3.15	7.528	282.29
99.00	**90.0**	**Shear**	**KIPS**	**542.44**	**-66.74**	**-58.37**	**6.593**	**247.25**
99.00	90.0	Overload	KSI	36.00	6.11	3.15	8.913	334.24
109.00	99.1	Flexure	KSI	36.00	0.61	0.32	93.116	3491.86
109.00	**99.1**	**Shear**	**KIPS**	**318.49**	**-81.48**	**-64.74**	**2.769**	**103.84**
109.00	99.1	Overload	KSI	-36.00	-0.71	-0.09	99.000	3712.50
110.00	100.0	Flexure	KSI	-36.00	-0.00	-0.00	99.000	3712.50
110.00	**100.0**	**Shear**	**KIPS**	**318.49**	**-82.95**	**-65.38**	**2.717**	**101.89**
110.00	100.0	Overload	KSI	-36.00	-0.00	-0.00	99.000	3712.50

Detailed Rating Results
Girder D - As Inspected
RI-5
Axle Load

Impact: As Requested
Lane: As Requested

Span 1

Location (ft)	Percent	Limit State	Units	Capacity	DL + Adj -LL*	LL	Permit Rating Factor	Permit Load Rating (Ton)
0.00	0.0	Flexure	KSI	-36.00	-0.00	-0.00	99.000	5187.60
0.00	**0.0**	**Shear**	**KIPS**	**336.32**	**82.95**	**85.74**	**2.248**	**117.77**
0.00	0.0	Overload	KSI	-36.00	-0.00	-0.00	99.000	5187.60
11.00	10.0	Flexure	KSI	36.00	6.11	4.10	5.785	303.15
11.00	**10.0**	**Shear**	**KIPS**	**542.44**	**66.74**	**75.95**	**5.067**	**265.52**
11.00	10.0	Overload	KSI	36.00	6.11	4.10	6.850	358.94
22.00	**20.0**	**Flexure**	**KSI**	**36.00**	**10.91**	**7.14**	**2.585**	**135.47**
22.00	20.0	Shear	KIPS	542.44	50.54	66.15	6.088	319.03
22.00	20.0	Overload	KSI	36.00	10.91	7.14	3.261	170.90
25.50	**23.2**	**Flexure**	**KSI**	**36.00**	**12.14**	**7.95**	**2.154**	**112.84**
25.50	23.2	Shear	KIPS	542.44	44.91	63.03	6.488	339.95
25.50	23.2	Overload	KSI	36.00	12.14	7.95	2.776	145.47
33.00	**30.0**	**Flexure**	**KSI**	**36.00**	**11.21**	**7.54**	**2.402**	**125.88**
33.00	30.0	Shear	KIPS	542.44	33.61	56.35	7.478	391.85
33.00	30.0	Overload	KSI	36.00	11.21	7.54	3.048	159.71
44.00	**40.0**	**Flexure**	**KSI**	**36.00**	**12.83**	**8.58**	**1.905**	**99.84**
44.00	40.0	Shear	KIPS	542.44	17.04	46.55	9.445	494.90
44.00	40.0	Overload	KSI	36.00	12.83	8.58	2.491	130.55
49.50	**45.0**	**Flexure**	**KSI**	**36.00**	**13.23**	**8.81**	**1.806**	**94.66**
49.50	45.0	Shear	KIPS	542.44	8.29	41.65	10.787	565.23
49.50	45.0	Overload	KSI	36.00	13.23	8.81	2.382	124.81
55.00	**50.0**	**Flexure**	**KSI**	**36.00**	**13.36**	**8.82**	**1.787**	**93.64**
55.00	50.0	Shear	KIPS	542.44	0.00	-36.76	12.473	653.60
55.00	50.0	Overload	KSI	36.00	13.36	8.82	2.363	123.82
66.00	**60.0**	**Flexure**	**KSI**	**36.00**	**12.83**	**8.58**	**1.905**	**99.84**
66.00	60.0	Shear	KIPS	542.44	-17.04	-46.55	9.445	494.90
66.00	60.0	Overload	KSI	36.00	12.83	8.58	2.491	130.55
77.00	**70.0**	**Flexure**	**KSI**	**36.00**	**11.21**	**7.54**	**2.402**	**125.88**
77.00	70.0	Shear	KIPS	542.44	-33.61	-56.35	7.478	391.85
77.00	70.0	Overload	KSI	36.00	11.21	7.54	3.048	159.71
84.50	**76.8**	**Flexure**	**KSI**	**36.00**	**12.14**	**7.95**	**2.154**	**112.84**
84.50	76.8	Shear	KIPS	542.44	-44.91	-63.03	6.488	339.95
84.50	76.8	Overload	KSI	36.00	12.14	7.95	2.776	145.47
88.00	**80.0**	**Flexure**	**KSI**	**36.00**	**10.91**	**7.14**	**2.585**	**135.47**

88.00	80.0	Shear	KIPS	542.44	-50.54	-66.15	6.088	319.03
88.00	80.0	Overload	KSI	36.00	10.91	7.14	3.261	170.90
99.00	90.0	Flexure	KSI	36.00	6.11	4.10	5.785	303.15
99.00	**90.0**	**Shear**	**KIPS**	**542.44**	**-66.74**	**-75.95**	**5.067**	**265.52**
99.00	90.0	Overload	KSI	36.00	6.11	4.10	6.850	358.94
109.00	99.1	Flexure	KSI	36.00	0.61	0.42	71.046	3722.82
109.00	**99.1**	**Shear**	**KIPS**	**318.49**	**-81.48**	**-84.85**	**2.113**	**110.71**
109.00	99.1	Overload	KSI	36.00	0.61	0.42	80.198	4202.35
110.00	100.0	Flexure	KSI	-36.00	-0.00	-0.00	99.000	5187.60
110.00	**100.0**	**Shear**	**KIPS**	**318.49**	**-82.95**	**-85.74**	**2.072**	**108.56**
110.00	100.0	Overload	KSI	-36.00	-0.00	-0.00	99.000	5187.60

Detailed Rating Results
Girder D - As Inspected
RI-6
Axle Load
Impact: As Requested
Lane: As Requested

Span 1

Location (ft)	Percent	Limit State	Units	Capacity	DL + Adj -LL*	LL	Permit Rating Factor	Permit Load Rating (Ton)
0.00	0.0	Flexure	KSI	-36.00	-0.00	-0.00	99.000	6435.00
0.00	**0.0**	**Shear**	**KIPS**	**336.32**	**82.95**	**97.27**	**1.901**	**123.56**
0.00	0.0	Overload	KSI	-36.00	-0.00	-0.00	99.000	6435.00
11.00	10.0	Flexure	KSI	36.00	6.11	4.60	4.953	321.94
11.00	**10.0**	**Shear**	**KIPS**	**542.44**	**66.74**	**85.11**	**4.338**	**281.97**
11.00	10.0	Overload	KSI	36.00	6.11	4.60	6.112	397.29
22.00	**20.0**	**Flexure**	**KSI**	**36.00**	**10.91**	**7.90**	**2.243**	**145.82**
22.00	20.0	Shear	KIPS	542.44	50.54	72.96	5.296	344.24
22.00	20.0	Overload	KSI	36.00	10.91	7.90	2.950	191.72
25.50	**23.2**	**Flexure**	**KSI**	**36.00**	**12.14**	**8.75**	**1.877**	**122.00**
25.50	23.2	Shear	KIPS	542.44	44.91	69.09	5.678	369.10
25.50	23.2	Overload	KSI	36.00	12.14	8.75	2.522	163.92
33.00	**30.0**	**Flexure**	**KSI**	**36.00**	**11.21**	**8.18**	**2.125**	**138.11**
33.00	30.0	Shear	KIPS	542.44	33.61	60.81	6.649	432.18
33.00	30.0	Overload	KSI	36.00	11.21	8.18	2.810	182.63
44.00	**40.0**	**Flexure**	**KSI**	**36.00**	**12.83**	**8.95**	**1.752**	**113.87**
44.00	40.0	Shear	KIPS	542.44	17.04	48.65	8.670	563.58
44.00	40.0	Overload	KSI	36.00	12.83	8.95	2.387	155.19

49.50	**45.0**	**Flexure**	**KSI**	**36.00**	**13.23**	**9.02**	**1.691**	**109.93**
49.50	45.0	Shear	KIPS	542.44	8.29	42.58	10.125	658.14
49.50	45.0	Overload	KSI	36.00	13.23	9.02	2.324	151.07
55.00	**50.0**	**Flexure**	**KSI**	**36.00**	**13.36**	**8.83**	**1.712**	**111.29**
55.00	50.0	Shear	KIPS	542.44	0.00	-36.50	12.051	783.33
55.00	50.0	Overload	KSI	36.00	13.36	8.83	2.360	153.38
66.00	**60.0**	**Flexure**	**KSI**	**36.00**	**12.83**	**8.95**	**1.752**	**113.87**
66.00	60.0	Shear	KIPS	542.44	-17.04	-48.65	8.670	563.58
66.00	60.0	Overload	KSI	36.00	12.83	8.95	2.387	155.19
77.00	**70.0**	**Flexure**	**KSI**	**36.00**	**11.21**	**8.18**	**2.125**	**138.11**
77.00	70.0	Shear	KIPS	542.44	-33.61	-60.81	6.649	432.18
77.00	70.0	Overload	KSI	36.00	11.21	8.18	2.810	182.63
84.50	**76.8**	**Flexure**	**KSI**	**36.00**	**12.14**	**8.75**	**1.877**	**122.00**
84.50	76.8	Shear	KIPS	542.44	-44.91	-69.09	5.678	369.10
84.50	76.8	Overload	KSI	36.00	12.14	8.75	2.522	163.92
88.00	**80.0**	**Flexure**	**KSI**	**36.00**	**10.91**	**7.90**	**2.243**	**145.82**
88.00	80.0	Shear	KIPS	542.44	-50.54	-72.96	5.296	344.24
88.00	80.0	Overload	KSI	36.00	10.91	7.90	2.950	191.72
99.00	90.0	Flexure	KSI	36.00	6.11	4.60	4.953	321.94
99.00	**90.0**	**Shear**	**KIPS**	**542.44**	**-66.74**	**-85.11**	**4.338**	**281.97**
99.00	90.0	Overload	KSI	36.00	6.11	4.60	6.112	397.29
109.00	99.1	Flexure	KSI	36.00	0.61	0.47	60.148	3909.65
109.00	**99.1**	**Shear**	**KIPS**	**318.49**	**-81.48**	**-96.16**	**1.789**	**116.26**
109.00	99.1	Overload	KSI	36.00	0.61	0.47	70.765	4599.75
110.00	100.0	Flexure	KSI	-36.00	-0.00	-0.00	99.000	6435.00
110.00	**100.0**	**Shear**	**KIPS**	**318.49**	**-82.95**	**-97.27**	**1.752**	**113.90**
110.00	100.0	Overload	KSI	-36.00	-0.00	-0.00	99.000	6435.00

Detailed Rating Results
Girder D - As Inspected
RIDOT H20 Truck
Axle Load
Impact: As Requested
Lane: As Requested

Span 1

Location (ft)	Percent	Limit State	Units	Capacity	DL + Adj -LL*	LL	Legal Rating Factor	Legal Load Rating (Ton)
0.00	0.0	Flexure	KSI	-36.00	-0.00	-0.00	99.000	1980.00
0.00	**0.0**	**Shear**	**KIPS**	**336.32**	**82.95**	**36.44**	**4.813**	**96.26**

0.00	0.0	Overload	KSI	-36.00	-0.00	-0.00	99.000	1980.00
11.00	10.0	Flexure	KSI	36.00	6.11	1.77	12.228	244.55
11.00	**10.0**	**Shear**	**KIPS**	**542.44**	**66.74**	**32.70**	**10.710**	**214.19**
11.00	10.0	Overload	KSI	36.00	6.11	1.77	12.237	244.73
22.00	**20.0**	**Flexure**	**KSI**	**36.00**	**10.91**	**3.13**	**5.374**	**107.48**
22.00	20.0	Shear	KIPS	542.44	50.54	28.96	12.655	253.10
22.00	20.0	Overload	KSI	36.00	10.91	3.13	5.730	114.59
25.50	**23.2**	**Flexure**	**KSI**	**36.00**	**12.14**	**3.48**	**4.480**	**89.61**
25.50	23.2	Shear	KIPS	542.44	44.91	27.77	13.400	268.00
25.50	23.2	Overload	KSI	36.00	12.14	3.48	4.882	97.63
33.00	**30.0**	**Flexure**	**KSI**	**36.00**	**11.21**	**3.30**	**4.993**	**99.87**
33.00	30.0	Shear	KIPS	542.44	33.61	25.22	15.204	304.08
33.00	30.0	Overload	KSI	36.00	11.21	3.30	5.355	107.09
44.00	**40.0**	**Flexure**	**KSI**	**36.00**	**12.83**	**3.75**	**3.966**	**79.31**
44.00	40.0	Shear	KIPS	542.44	17.04	21.49	18.625	372.50
44.00	40.0	Overload	KSI	36.00	12.83	3.75	4.383	87.65
49.50	**45.0**	**Flexure**	**KSI**	**36.00**	**13.23**	**3.85**	**3.758**	**75.16**
49.50	45.0	Shear	KIPS	542.44	8.29	19.62	20.848	416.96
49.50	45.0	Overload	KSI	36.00	13.23	3.85	4.188	83.76
55.00	**50.0**	**Flexure**	**KSI**	**36.00**	**13.36**	**3.87**	**3.704**	**74.09**
55.00	50.0	Shear	KIPS	542.44	0.00	-17.75	23.513	470.27
55.00	50.0	Overload	KSI	36.00	13.36	3.87	4.140	82.80
66.00	**60.0**	**Flexure**	**KSI**	**36.00**	**12.83**	**3.75**	**3.966**	**79.31**
66.00	60.0	Shear	KIPS	542.44	-17.04	-21.49	18.625	372.50
66.00	60.0	Overload	KSI	36.00	12.83	3.75	4.383	87.65
77.00	**70.0**	**Flexure**	**KSI**	**36.00**	**11.21**	**3.30**	**4.993**	**99.87**
77.00	70.0	Shear	KIPS	542.44	-33.61	-25.22	15.204	304.08
77.00	70.0	Overload	KSI	36.00	11.21	3.30	5.355	107.09
84.50	**76.8**	**Flexure**	**KSI**	**36.00**	**12.14**	**3.48**	**4.480**	**89.61**
84.50	76.8	Shear	KIPS	542.44	-44.91	-27.77	13.400	268.00
84.50	76.8	Overload	KSI	36.00	12.14	3.48	4.882	97.63
88.00	**80.0**	**Flexure**	**KSI**	**36.00**	**10.91**	**3.13**	**5.374**	**107.48**
88.00	80.0	Shear	KIPS	542.44	-50.54	-28.96	12.655	253.10
88.00	80.0	Overload	KSI	36.00	10.91	3.13	5.730	114.59
99.00	90.0	Flexure	KSI	36.00	6.11	1.77	12.228	244.55
99.00	**90.0**	**Shear**	**KIPS**	**542.44**	**-66.74**	**-32.70**	**10.710**	**214.19**
99.00	90.0	Overload	KSI	36.00	6.11	1.77	12.237	244.73
109.00	99.1	Flexure	KSI	-36.00	-0.71	-0.05	99.000	1980.00
109.00	**99.1**	**Shear**	**KIPS**	**318.49**	**-81.48**	**-36.10**	**4.519**	**90.38**
109.00	99.1	Overload	KSI	-36.00	-0.71	-0.05	99.000	1980.00
110.00	100.0	Flexure	KSI	-36.00	-0.00	-0.00	99.000	1980.00
110.00	**100.0**	**Shear**	**KIPS**	**318.49**	**-82.95**	**-36.44**	**4.436**	**88.73**
110.00	100.0	Overload	KSI	-36.00	-0.00	-0.00	99.000	1980.00

Detailed Rating Results
Girder D - As Inspected
RI-OP 1
Axle Load
Impact: As Requested
Lane: As Requested

Span 1

Location (ft)	Percent	Limit State	Units	Capacity	DL + Adj -LL*	LL	Permit Rating Factor	Permit Load Rating (Ton)
0.00	0.0	Flexure	KSI	-36.00	-0.00	-0.00	99.000	5593.50
0.00	**0.0**	**Shear**	**KIPS**	**336.32**	**82.95**	**66.31**	**2.866**	**161.90**
0.00	0.0	Overload	KSI	-36.00	-0.00	-0.00	99.000	5593.50
11.00	10.0	Flexure	KSI	36.00	6.11	2.62	8.916	503.77
11.00	**10.0**	**Shear**	**KIPS**	**542.44**	**66.74**	**58.85**	**6.447**	**364.26**
11.00	10.0	Overload	KSI	36.00	6.11	2.62	10.707	604.97
22.00	**20.0**	**Flexure**	**KSI**	**36.00**	**10.91**	**4.66**	**3.910**	**220.91**
22.00	20.0	Shear	KIPS	542.44	50.54	51.39	7.726	436.53
22.00	20.0	Overload	KSI	36.00	10.91	4.66	5.002	282.64
25.50	**23.2**	**Flexure**	**KSI**	**36.00**	**12.14**	**5.18**	**3.256**	**183.96**
25.50	23.2	Shear	KIPS	542.44	44.91	49.02	8.225	464.70
25.50	23.2	Overload	KSI	36.00	12.14	5.18	4.257	240.53
33.00	**30.0**	**Flexure**	**KSI**	**36.00**	**11.21**	**4.92**	**3.635**	**205.37**
33.00	30.0	Shear	KIPS	542.44	33.61	43.94	9.456	534.29
33.00	30.0	Overload	KSI	36.00	11.21	4.92	4.677	264.26
44.00	**40.0**	**Flexure**	**KSI**	**36.00**	**12.83**	**5.63**	**2.862**	**161.71**
44.00	40.0	Shear	KIPS	542.44	17.04	36.48	11.884	671.45
44.00	40.0	Overload	KSI	36.00	12.83	5.63	3.796	214.46
49.50	**45.0**	**Flexure**	**KSI**	**36.00**	**13.23**	**5.82**	**2.697**	**152.40**
49.50	45.0	Shear	KIPS	542.44	8.29	32.75	13.527	764.29
49.50	45.0	Overload	KSI	36.00	13.23	5.82	3.607	203.79
55.00	**50.0**	**Flexure**	**KSI**	**36.00**	**13.36**	**5.87**	**2.650**	**149.71**
55.00	50.0	Shear	KIPS	542.44	0.00	-29.02	15.576	880.05
55.00	50.0	Overload	KSI	36.00	13.36	5.87	3.553	200.77
66.00	**60.0**	**Flexure**	**KSI**	**36.00**	**12.83**	**5.63**	**2.862**	**161.71**
66.00	60.0	Shear	KIPS	542.44	-17.04	-36.48	11.884	671.45
66.00	60.0	Overload	KSI	36.00	12.83	5.63	3.796	214.46
77.00	**70.0**	**Flexure**	**KSI**	**36.00**	**11.21**	**4.92**	**3.635**	**205.37**
77.00	70.0	Shear	KIPS	542.44	-33.61	-43.94	9.456	534.29

77.00	70.0	Overload	KSI	36.00	11.21	4.92	4.677	264.26
84.50	**76.8**	**Flexure**	**KSI**	**36.00**	**12.14**	**5.18**	**3.256**	**183.96**
84.50	76.8	Shear	KIPS	542.44	-44.91	-49.02	8.225	464.70
84.50	76.8	Overload	KSI	36.00	12.14	5.18	4.257	240.53
88.00	**80.0**	**Flexure**	**KSI**	**36.00**	**10.91**	**4.66**	**3.910**	**220.91**
88.00	80.0	Shear	KIPS	542.44	-50.54	-51.39	7.726	436.53
88.00	80.0	Overload	KSI	36.00	10.91	4.66	5.002	282.64
99.00	90.0	Flexure	KSI	36.00	6.11	2.62	8.916	503.77
99.00	**90.0**	**Shear**	**KIPS**	**542.44**	**-66.74**	**-58.85**	**6.447**	**364.26**
99.00	90.0	Overload	KSI	36.00	6.11	2.62	10.707	604.97
109.00	99.1	Flexure	KSI	-36.00	-0.71	-0.07	99.000	5593.50
109.00	**99.1**	**Shear**	**KIPS**	**318.49**	**-81.48**	**-65.63**	**2.693**	**152.16**
109.00	99.1	Overload	KSI	-36.00	-0.71	-0.07	99.000	5593.50
110.00	100.0	Flexure	KSI	-36.00	-0.00	-0.00	99.000	5593.50
110.00	**100.0**	**Shear**	**KIPS**	**318.49**	**-82.95**	**-66.31**	**2.641**	**149.24**
110.00	100.0	Overload	KSI	-36.00	-0.00	-0.00	99.000	5593.50

Detailed Rating Results
Girder D - As Inspected
RI-OP 2
Axle Load
Impact: As Requested
Lane: As Requested

Span 1

Location (ft)	Percent	Limit State	Units	Capacity	DL + Adj -LL*	LL	Permit Rating Factor	Permit Load Rating (Ton)
0.00	0.0	Flexure	KSI	-36.00	-0.00	-0.00	99.000	7920.00
0.00	**0.0**	**Shear**	**KIPS**	**336.32**	**82.95**	**77.08**	**2.465**	**197.22**
0.00	0.0	Overload	KSI	-36.00	-0.00	-0.00	99.000	7920.00
11.00	10.0	Flexure	KSI	36.00	6.11	2.96	7.889	631.11
11.00	**10.0**	**Shear**	**KIPS**	**542.44**	**66.74**	**66.52**	**5.704**	**456.34**
11.00	10.0	Overload	KSI	36.00	6.11	2.96	9.474	757.89
22.00	**20.0**	**Flexure**	**KSI**	**36.00**	**10.91**	**5.11**	**3.561**	**284.86**
22.00	20.0	Shear	KIPS	542.44	50.54	55.96	7.096	567.69
22.00	20.0	Overload	KSI	36.00	10.91	5.11	4.556	364.46
25.50	**23.2**	**Flexure**	**KSI**	**36.00**	**12.14**	**5.62**	**3.003**	**240.28**
25.50	23.2	Shear	KIPS	542.44	44.91	52.60	7.666	613.24
25.50	23.2	Overload	KSI	36.00	12.14	5.62	3.927	314.16
33.00	**30.0**	**Flexure**	**KSI**	**36.00**	**11.21**	**5.21**	**3.429**	**274.32**

33.00	30.0	Shear	KIPS	542.44	33.61	45.40	9.152	732.16
33.00	30.0	Overload	KSI	36.00	11.21	5.21	4.412	352.99
44.00	**40.0**	**Flexure**	**KSI**	**36.00**	**12.83**	**5.63**	**2.863**	**229.08**
44.00	40.0	Shear	KIPS	542.44	17.04	35.31	12.277	982.13
44.00	40.0	Overload	KSI	36.00	12.83	5.63	3.798	303.81
49.50	**45.0**	**Flexure**	**KSI**	**36.00**	**13.23**	**5.62**	**2.791**	**223.28**
49.50	45.0	Shear	KIPS	542.44	8.29	30.46	14.544	1163.50
49.50	45.0	Overload	KSI	36.00	13.23	5.62	3.732	298.58
55.00	**50.0**	**Flexure**	**KSI**	**36.00**	**13.36**	**5.48**	**2.835**	**226.79**
55.00	50.0	Shear	KIPS	542.44	0.00	-25.79	17.529	1402.31
55.00	50.0	Overload	KSI	36.00	13.36	5.48	3.802	304.13
66.00	**60.0**	**Flexure**	**KSI**	**36.00**	**12.83**	**5.63**	**2.863**	**229.08**
66.00	60.0	Shear	KIPS	542.44	-17.04	-35.31	12.277	982.13
66.00	60.0	Overload	KSI	36.00	12.83	5.63	3.798	303.81
77.00	**70.0**	**Flexure**	**KSI**	**36.00**	**11.21**	**5.21**	**3.429**	**274.32**
77.00	70.0	Shear	KIPS	542.44	-33.61	-45.40	9.152	732.16
77.00	70.0	Overload	KSI	36.00	11.21	5.21	4.412	352.99
84.50	**76.8**	**Flexure**	**KSI**	**36.00**	**12.14**	**5.62**	**3.003**	**240.28**
84.50	76.8	Shear	KIPS	542.44	-44.91	-52.60	7.666	613.24
84.50	76.8	Overload	KSI	36.00	12.14	5.62	3.927	314.16
88.00	**80.0**	**Flexure**	**KSI**	**36.00**	**10.91**	**5.11**	**3.561**	**284.86**
88.00	80.0	Shear	KIPS	542.44	-50.54	-55.96	7.096	567.69
88.00	80.0	Overload	KSI	36.00	10.91	5.11	4.556	364.46
99.00	90.0	Flexure	KSI	36.00	6.11	2.96	7.889	631.11
99.00	**90.0**	**Shear**	**KIPS**	**542.44**	**-66.74**	**-66.52**	**5.704**	**456.34**
99.00	90.0	Overload	KSI	36.00	6.11	2.96	9.474	757.89
109.00	99.1	Flexure	KSI	36.00	0.61	0.31	94.589	7567.12
109.00	**99.1**	**Shear**	**KIPS**	**318.49**	**-81.48**	**-76.12**	**2.322**	**185.77**
109.00	99.1	Overload	KSI	-36.00	-0.71	-0.09	99.000	7920.00
110.00	100.0	Flexure	KSI	-36.00	-0.00	-0.00	99.000	7920.00
110.00	**100.0**	**Shear**	**KIPS**	**318.49**	**-82.95**	**-77.08**	**2.272**	**181.79**
110.00	100.0	Overload	KSI	-36.00	-0.00	-0.00	99.000	7920.00

Detailed Rating Results
Girder D - As Inspected
RI-OP 3
Axle Load
Impact: As Requested
Lane: As Requested

Span 1

Location							**Permit Rating**	**Permit**

(ft)	Percent	Limit State	Units	Capacity	DL + Adj -LL*	LL	Factor	Load Rating (Ton)
0.00	0.0	Flexure	KSI	-36.00	-0.00	-0.00	99.000	11187.00
0.00	**0.0**	**Shear**	**KIPS**	**336.32**	**82.95**	**86.06**	**2.208**	**249.48**
0.00	0.0	Overload	KSI	-36.00	-0.00	-0.00	99.000	11187.00
11.00	10.0	Flexure	KSI	36.00	6.11	3.22	7.274	821.98
11.00	**10.0**	**Shear**	**KIPS**	**542.44**	**66.74**	**71.70**	**5.292**	**598.02**
11.00	10.0	Overload	KSI	36.00	6.11	3.22	8.735	987.11
22.00	**20.0**	**Flexure**	**KSI**	**36.00**	**10.91**	**5.43**	**3.352**	**378.80**
22.00	20.0	Shear	KIPS	542.44	50.54	58.76	6.758	763.60
22.00	20.0	Overload	KSI	36.00	10.91	5.43	4.289	484.65
25.50	**23.2**	**Flexure**	**KSI**	**36.00**	**12.14**	**5.97**	**2.828**	**319.51**
25.50	23.2	Shear	KIPS	542.44	44.91	55.23	7.300	824.87
25.50	23.2	Overload	KSI	36.00	12.14	5.97	3.697	417.76
33.00	**30.0**	**Flexure**	**KSI**	**36.00**	**11.21**	**5.54**	**3.228**	**364.75**
33.00	30.0	Shear	KIPS	542.44	33.61	47.67	8.715	984.81
33.00	30.0	Overload	KSI	36.00	11.21	5.54	4.154	469.35
44.00	**40.0**	**Flexure**	**KSI**	**36.00**	**12.83**	**6.13**	**2.627**	**296.91**
44.00	40.0	Shear	KIPS	542.44	17.04	37.69	11.503	1299.83
44.00	40.0	Overload	KSI	36.00	12.83	6.13	3.485	393.76
49.50	**45.0**	**Flexure**	**KSI**	**36.00**	**13.23**	**6.24**	**2.513**	**283.98**
49.50	45.0	Shear	KIPS	542.44	8.29	33.54	13.207	1492.39
49.50	45.0	Overload	KSI	36.00	13.23	6.24	3.361	379.75
55.00	**50.0**	**Flexure**	**KSI**	**36.00**	**13.36**	**6.19**	**2.512**	**283.85**
55.00	50.0	Shear	KIPS	542.44	0.00	-29.58	15.280	1726.59
55.00	50.0	Overload	KSI	36.00	13.36	6.19	3.369	380.66
66.00	**60.0**	**Flexure**	**KSI**	**36.00**	**12.83**	**6.13**	**2.627**	**296.91**
66.00	60.0	Shear	KIPS	542.44	-17.04	-37.69	11.503	1299.83
66.00	60.0	Overload	KSI	36.00	12.83	6.13	3.485	393.76
77.00	**70.0**	**Flexure**	**KSI**	**36.00**	**11.21**	**5.54**	**3.228**	**364.75**
77.00	70.0	Shear	KIPS	542.44	-33.61	-47.67	8.715	984.81
77.00	70.0	Overload	KSI	36.00	11.21	5.54	4.154	469.35
84.50	**76.8**	**Flexure**	**KSI**	**36.00**	**12.14**	**5.97**	**2.828**	**319.51**
84.50	76.8	Shear	KIPS	542.44	-44.91	-55.23	7.300	824.87
84.50	76.8	Overload	KSI	36.00	12.14	5.97	3.697	417.76
88.00	**80.0**	**Flexure**	**KSI**	**36.00**	**10.91**	**5.43**	**3.352**	**378.80**
88.00	80.0	Shear	KIPS	542.44	-50.54	-58.76	6.758	763.60
88.00	80.0	Overload	KSI	36.00	10.91	5.43	4.289	484.65
99.00	90.0	Flexure	KSI	36.00	6.11	3.22	7.274	821.98
99.00	**90.0**	**Shear**	**KIPS**	**542.44**	**-66.74**	**-71.70**	**5.292**	**598.02**
99.00	90.0	Overload	KSI	36.00	6.11	3.22	8.735	987.11

109.00	99.1	Flexure	KSI	36.00	0.61	0.35	84.988	9603.63
109.00	**99.1**	**Shear**	**KIPS**	**318.49**	**-81.48**	**-84.72**	**2.086**	**235.77**
109.00	99.1	Overload	KSI	36.00	0.61	0.35	97.300	10994.89
110.00	100.0	Flexure	KSI	-36.00	-0.00	-0.00	99.000	11187.00
110.00	**100.0**	**Shear**	**KIPS**	**318.49**	**-82.95**	**-86.06**	**2.035**	**229.97**
110.00	100.0	Overload	KSI	-36.00	-0.00	-0.00	99.000	11187.00

Detailed Rating Results
Girder D - As Inspected
RIPTA Bus
Axle Load
Impact: As Requested
Lane: As Requested

Span 1

Location (ft)	Percent	Limit State	Units	Capacity	DL + Adj -LL*	LL	Legal Rating Factor	Legal Load Rating (Ton)
0.00	0.0	Flexure	KSI	-36.00	-0.00	-0.00	99.000	2059.20
0.00	**0.0**	**Shear**	**KIPS**	**336.32**	**82.95**	**36.01**	**4.871**	**101.32**
0.00	0.0	Overload	KSI	-36.00	-0.00	-0.00	99.000	2059.20
11.00	10.0	Flexure	KSI	36.00	6.11	1.73	12.451	258.98
11.00	**10.0**	**Shear**	**KIPS**	**542.44**	**66.74**	**32.12**	**10.905**	**226.83**
11.00	10.0	Overload	KSI	36.00	6.11	1.73	12.460	259.17
22.00	**20.0**	**Flexure**	**KSI**	**36.00**	**10.91**	**3.05**	**5.514**	**114.69**
22.00	20.0	Shear	KIPS	542.44	50.54	28.23	12.985	270.09
22.00	20.0	Overload	KSI	36.00	10.91	3.05	5.879	122.28
25.50	**23.2**	**Flexure**	**KSI**	**36.00**	**12.14**	**3.38**	**4.610**	**95.90**
25.50	23.2	Shear	KIPS	542.44	44.91	26.99	13.789	286.81
25.50	23.2	Overload	KSI	36.00	12.14	3.38	5.023	104.49
33.00	**30.0**	**Flexure**	**KSI**	**36.00**	**11.21**	**3.19**	**5.175**	**107.65**
33.00	30.0	Shear	KIPS	542.44	33.61	24.34	15.758	327.76
33.00	30.0	Overload	KSI	36.00	11.21	3.19	5.550	115.43
44.00	**40.0**	**Flexure**	**KSI**	**36.00**	**12.83**	**3.57**	**4.166**	**86.66**
44.00	40.0	Shear	KIPS	542.44	17.04	20.45	19.568	407.02
44.00	40.0	Overload	KSI	36.00	12.83	3.57	4.605	95.78
49.50	**45.0**	**Flexure**	**KSI**	**36.00**	**13.23**	**3.63**	**3.983**	**82.86**
49.50	45.0	Shear	KIPS	542.44	8.29	18.51	22.099	459.65
49.50	45.0	Overload	KSI	36.00	13.23	3.63	4.439	92.33
55.00	**50.0**	**Flexure**	**KSI**	**36.00**	**13.36**	**3.61**	**3.970**	**82.57**
55.00	50.0	Shear	KIPS	542.44	0.00	-16.56	25.196	524.08

55.00	50.0	Overload	KSI	36.00	13.36	3.61	4.436	92.27
66.00	**60.0**	**Flexure**	**KSI**	**36.00**	**12.83**	**3.57**	**4.166**	**86.66**
66.00	60.0	Shear	KIPS	542.44	-17.04	-20.45	19.568	407.02
66.00	60.0	Overload	KSI	36.00	12.83	3.57	4.605	95.78
77.00	**70.0**	**Flexure**	**KSI**	**36.00**	**11.21**	**3.19**	**5.175**	**107.65**
77.00	70.0	Shear	KIPS	542.44	-33.61	-24.34	15.758	327.76
77.00	70.0	Overload	KSI	36.00	11.21	3.19	5.550	115.43
84.50	**76.8**	**Flexure**	**KSI**	**36.00**	**12.14**	**3.38**	**4.610**	**95.90**
84.50	76.8	Shear	KIPS	542.44	-44.91	-26.99	13.789	286.81
84.50	76.8	Overload	KSI	36.00	12.14	3.38	5.023	104.49
88.00	**80.0**	**Flexure**	**KSI**	**36.00**	**10.91**	**3.05**	**5.514**	**114.69**
88.00	80.0	Shear	KIPS	542.44	-50.54	-28.23	12.985	270.09
88.00	80.0	Overload	KSI	36.00	10.91	3.05	5.879	122.28
99.00	90.0	Flexure	KSI	36.00	6.11	1.73	12.451	258.98
99.00	**90.0**	**Shear**	**KIPS**	**542.44**	**-66.74**	**-32.12**	**10.905**	**226.83**
99.00	90.0	Overload	KSI	36.00	6.11	1.73	12.460	259.17
109.00	99.1	Flexure	KSI	-36.00	-0.71	-0.05	99.000	2059.20
109.00	**99.1**	**Shear**	**KIPS**	**318.49**	**-81.48**	**-35.65**	**4.576**	**95.19**
109.00	99.1	Overload	KSI	-36.00	-0.71	-0.05	99.000	2059.20
110.00	100.0	Flexure	KSI	-36.00	-0.00	-0.00	99.000	2059.20
110.00	**100.0**	**Shear**	**KIPS**	**318.49**	**-82.95**	**-36.01**	**4.490**	**93.40**
110.00	100.0	Overload	KSI	-36.00	-0.00	-0.00	99.000	2059.20

Note:
*Adj-LL is only applicable for Permit load rating.

Bridge Name: Mohegan Bridge
NBI Structure ID:
Bridge ID: 067301

Analyzed By: BrR
Analyze Date: Friday, September 14, 2018 20:37:22
Analysis Engine: AASHTO LRFR Engine Version 6.8.2.3002
Analysis Preference Setting: None

Report By: brr
Report Date: Friday, September 14, 2018 20:38:15

Structure Definition Name: Span 1
Member Name: Girder E
Member Alternative Name: Girder E - As Inspected

Load and Resistance Factor Rating Summary

Live Load		Rating Factor	Girder Summary Controls	Capacity (Ton)	Span	Location (ft)	Percent	Impact	Lane
EV2	Legal	3.799	STRENGTH-I Steel Shear	109.23	1	110.00	100.0	As Requested	As Requested
EV3	Legal	2.552	STRENGTH-I Steel Shear	109.75	1	110.00	100.0	As Requested	As Requested
HL-93 (US)	Inventory	1.068	STRENGTH-I Steel Flexure Stress	38.44	1	55.00	50.0	As Requested	As Requested
HL-93 (US)	Operating	1.384	STRENGTH-I Steel Flexure Stress	49.82	1	55.00	50.0	As Requested	As Requested
SU4	Legal	2.863	STRENGTH-I Steel Flexure Stress	77.29	1	55.00	50.0	As Requested	As Requested
SU5	Legal	2.553	STRENGTH-I Steel Flexure Stress	79.13	1	55.00	50.0	As Requested	As Requested
SU6	Legal	2.283	STRENGTH-I Steel Flexure Stress	79.35	1	55.00	50.0	As Requested	As Requested
SU7	Legal	2.073	STRENGTH-I Steel Flexure Stress	80.32	1	55.00	50.0	As Requested	As Requested
Type 3	Legal	3.167	STRENGTH-I Steel Flexure Stress	79.18	1	55.00	50.0	As Requested	As Requested
Type 3-3	Legal	2.511	STRENGTH-I Steel Flexure Stress	100.45	1	55.00	50.0	As Requested	As Requested
Type 3S2	Legal	2.575	STRENGTH-I Steel Flexure Stress	92.69	1	55.00	50.0	As Requested	As Requested
RI-3	Permit	2.228	STRENGTH-II Steel Flexure Stress	84.66	1	55.00	50.0	As Requested	As Requested
RI-4	Permit	2.282	STRENGTH-II Steel Flexure Stress	85.58	1	55.00	50.0	As Requested	As Requested
RI-5	Permit	1.787	STRENGTH-II Steel Flexure Stress	93.64	1	55.00	50.0	As Requested	As Requested
RI-6	Permit	1.691		109.93	1	49.50	45.0	As Requested	As Requested

			STRENGTH-II Steel Flexure Stress						
RIDOT H20 Truck	Legal	3.704	STRENGTH-I Steel Flexure Stress	74.09	1	55.00	50.0	As Requested	As Requested
RI-OP 1	Permit	2.650	STRENGTH-II Steel Flexure Stress	149.71	1	55.00	50.0	As Requested	As Requested
RI-OP 2	Permit	2.293	STRENGTH-II Steel Shear	183.48	1	110.00	100.0	As Requested	As Requested
RI-OP 3	Permit	2.054	STRENGTH-II Steel Shear	232.10	1	110.00	100.0	As Requested	As Requested
RIPTA Bus	Legal	3.970	STRENGTH-I Steel Flexure Stress	82.57	1	55.00	50.0	As Requested	As Requested

Note:
"N/A" indicates not applicable
"**" indicates not available

Report by Action: ☑ Flexure ☑ Shear ☑ Overload ☑ Interaction ☑ Critical

Detailed Rating Results
Girder E - As Inspected
EV2
Axle Load
Impact: As Requested
Lane: As Requested

Span 1

Location (ft)	Percent	Limit State	Units	Capacity	DL + Adj -LL*	LL	Legal Rating Factor	Legal Load Rating (Ton)
0.00	0.0	Flexure	KSI	-36.00	-0.00	-0.00	99.000	2846.25
0.00	**0.0**	**Shear**	**KIPS**	**336.32**	**82.95**	**42.95**	**4.084**	**117.42**
0.00	0.0	Overload	KSI	-36.00	-0.00	-0.00	99.000	2846.25
11.00	10.0	Flexure	KSI	36.00	6.11	1.71	12.616	362.72
11.00	**10.0**	**Shear**	**KIPS**	**542.44**	**66.74**	**38.39**	**9.123**	**262.27**
11.00	10.0	Overload	KSI	36.00	6.11	1.71	12.626	362.99
22.00	**20.0**	**Flexure**	**KSI**	**36.00**	**10.91**	**3.02**	**5.571**	**160.18**
22.00	20.0	Shear	KIPS	542.44	50.54	33.84	10.832	311.41
22.00	20.0	Overload	KSI	36.00	10.91	3.02	5.940	170.78
25.50	**23.2**	**Flexure**	**KSI**	**36.00**	**12.14**	**3.35**	**4.654**	**133.79**
25.50	23.2	Shear	KIPS	542.44	44.91	32.39	11.490	330.34
25.50	23.2	Overload	KSI	36.00	12.14	3.35	5.070	145.78
33.00	**30.0**	**Flexure**	**KSI**	**36.00**	**11.21**	**3.17**	**5.210**	**149.78**
33.00	30.0	Shear	KIPS	542.44	33.61	29.29	13.096	376.51
33.00	30.0	Overload	KSI	36.00	11.21	3.17	5.587	160.62
44.00	**40.0**	**Flexure**	**KSI**	**36.00**	**12.83**	**3.56**	**4.173**	**119.97**
44.00	40.0	Shear	KIPS	542.44	17.04	24.73	16.180	465.19
44.00	40.0	Overload	KSI	36.00	12.83	3.56	4.612	132.59
49.50	**45.0**	**Flexure**	**KSI**	**36.00**	**13.23**	**3.64**	**3.976**	**114.32**
49.50	45.0	Shear	KIPS	542.44	8.29	22.45	18.212	523.59
49.50	45.0	Overload	KSI	36.00	13.23	3.64	4.431	127.40
55.00	**50.0**	**Flexure**	**KSI**	**36.00**	**13.36**	**3.64**	**3.946**	**113.46**
55.00	50.0	Shear	KIPS	542.44	0.00	-20.18	20.679	594.54
55.00	50.0	Overload	KSI	36.00	13.36	3.64	4.410	126.79
66.00	**60.0**	**Flexure**	**KSI**	**36.00**	**12.83**	**3.56**	**4.173**	**119.97**
66.00	60.0	Shear	KIPS	542.44	-17.04	-24.73	16.180	465.19
66.00	60.0	Overload	KSI	36.00	12.83	3.56	4.612	132.59

77.00	**70.0**	**Flexure**	**KSI**	**36.00**	**11.21**	**3.17**	**5.210**	**149.78**
77.00	70.0	Shear	KIPS	542.44	-33.61	-29.29	13.096	376.51
77.00	70.0	Overload	KSI	36.00	11.21	3.17	5.587	160.62
84.50	**76.8**	**Flexure**	**KSI**	**36.00**	**12.14**	**3.35**	**4.654**	**133.79**
84.50	76.8	Shear	KIPS	542.44	-44.91	-32.39	11.490	330.34
84.50	76.8	Overload	KSI	36.00	12.14	3.35	5.070	145.78
88.00	**80.0**	**Flexure**	**KSI**	**36.00**	**10.91**	**3.02**	**5.571**	**160.18**
88.00	80.0	Shear	KIPS	542.44	-50.54	-33.84	10.832	311.41
88.00	80.0	Overload	KSI	36.00	10.91	3.02	5.940	170.78
99.00	90.0	Flexure	KSI	36.00	6.11	1.71	12.616	362.72
99.00	**90.0**	**Shear**	**KIPS**	**542.44**	**-66.74**	**-38.39**	**9.123**	**262.27**
99.00	90.0	Overload	KSI	36.00	6.11	1.71	12.626	362.99
108.33	98.5	Flexure	KSI	36.00	1.02	0.29	92.835	2669.01
108.33	**98.5**	**Shear**	**KIPS**	**320.44**	**-80.49**	**-42.26**	**3.920**	**112.70**
108.33	98.5	Overload	KSI	36.00	1.02	0.29	88.828	2553.80
110.00	100.0	Flexure	KSI	-36.00	-0.00	-0.00	99.000	2846.25
110.00	**100.0**	**Shear**	**KIPS**	**320.44**	**-82.95**	**-42.95**	**3.799**	**109.23**
110.00	100.0	Overload	KSI	-36.00	-0.00	-0.00	99.000	2846.25

Detailed Rating Results
Girder E - As Inspected
EV3
Axle Load
Impact: As Requested
Lane: As Requested

Span 1

Location (ft)	Percent	Limit State	Units	Capacity	DL + Adj -LL*	LL	Legal Rating Factor	Legal Load Rating (Ton)
0.00	0.0	Flexure	KSI	-36.00	-0.00	-0.00	99.000	4257.00
0.00	**0.0**	**Shear**	**KIPS**	**336.32**	**82.95**	**63.93**	**2.743**	**117.96**
0.00	0.0	Overload	KSI	-36.00	-0.00	-0.00	99.000	4257.00
11.00	10.0	Flexure	KSI	36.00	6.11	2.55	8.479	364.62
11.00	**10.0**	**Shear**	**KIPS**	**542.44**	**66.74**	**57.12**	**6.131**	**263.65**
11.00	10.0	Overload	KSI	36.00	6.11	2.55	8.486	364.89
22.00	**20.0**	**Flexure**	**KSI**	**36.00**	**10.91**	**4.49**	**3.747**	**161.13**
22.00	20.0	Shear	KIPS	542.44	50.54	50.31	7.285	313.26
22.00	20.0	Overload	KSI	36.00	10.91	4.49	3.995	171.80
25.50	**23.2**	**Flexure**	**KSI**	**36.00**	**12.14**	**4.97**	**3.131**	**134.62**
25.50	23.2	Shear	KIPS	542.44	44.91	48.15	7.730	332.40

25.50	23.2	Overload	KSI	36.00	12.14	4.97	3.411	146.68
33.00	**30.0**	**Flexure**	**KSI**	**36.00**	**11.21**	**4.70**	**3.507**	**150.81**
33.00	30.0	Shear	KIPS	542.44	33.61	43.50	8.816	379.10
33.00	30.0	Overload	KSI	36.00	11.21	4.70	3.761	161.72
44.00	**40.0**	**Flexure**	**KSI**	**36.00**	**12.83**	**5.32**	**2.794**	**120.15**
44.00	40.0	Shear	KIPS	542.44	17.04	36.69	10.907	468.98
44.00	40.0	Overload	KSI	36.00	12.83	5.32	3.088	132.79
49.50	**45.0**	**Flexure**	**KSI**	**36.00**	**13.23**	**5.48**	**2.643**	**113.67**
49.50	45.0	Shear	KIPS	542.44	8.29	33.29	12.286	528.30
49.50	45.0	Overload	KSI	36.00	13.23	5.48	2.946	126.67
55.00	**50.0**	**Flexure**	**KSI**	**36.00**	**13.36**	**5.51**	**2.605**	**112.00**
55.00	50.0	Shear	KIPS	542.44	0.00	-29.88	13.965	600.49
55.00	50.0	Overload	KSI	36.00	13.36	5.51	2.911	125.17
66.00	**60.0**	**Flexure**	**KSI**	**36.00**	**12.83**	**5.32**	**2.794**	**120.15**
66.00	60.0	Shear	KIPS	542.44	-17.04	-36.69	10.907	468.98
66.00	60.0	Overload	KSI	36.00	12.83	5.32	3.088	132.79
77.00	**70.0**	**Flexure**	**KSI**	**36.00**	**11.21**	**4.70**	**3.507**	**150.81**
77.00	70.0	Shear	KIPS	542.44	-33.61	-43.50	8.816	379.10
77.00	70.0	Overload	KSI	36.00	11.21	4.70	3.761	161.72
84.50	**76.8**	**Flexure**	**KSI**	**36.00**	**12.14**	**4.97**	**3.131**	**134.62**
84.50	76.8	Shear	KIPS	542.44	-44.91	-48.15	7.730	332.40
84.50	76.8	Overload	KSI	36.00	12.14	4.97	3.411	146.68
88.00	**80.0**	**Flexure**	**KSI**	**36.00**	**10.91**	**4.49**	**3.747**	**161.13**
88.00	80.0	Shear	KIPS	542.44	-50.54	-50.31	7.285	313.26
88.00	80.0	Overload	KSI	36.00	10.91	4.49	3.995	171.80
99.00	90.0	Flexure	KSI	36.00	6.11	2.55	8.479	364.62
99.00	**90.0**	**Shear**	**KIPS**	**542.44**	**-66.74**	**-57.12**	**6.131**	**263.65**
99.00	90.0	Overload	KSI	36.00	6.11	2.55	8.486	364.89
108.33	98.5	Flexure	KSI	36.00	1.02	0.43	62.365	2681.71
108.33	**98.5**	**Shear**	**KIPS**	**320.44**	**-80.49**	**-62.90**	**2.634**	**113.24**
108.33	98.5	Overload	KSI	36.00	1.02	0.43	59.673	2565.95
110.00	100.0	Flexure	KSI	-36.00	-0.00	-0.00	99.000	4257.00
110.00	**100.0**	**Shear**	**KIPS**	**320.44**	**-82.95**	**-63.93**	**2.552**	**109.75**
110.00	100.0	Overload	KSI	-36.00	-0.00	-0.00	99.000	4257.00

Detailed Rating Results
Girder E - As Inspected
HL-93 (US)
Truck + Lane
Impact: As Requested
Lane: As Requested

Span 1

Location (ft)	Percent	Limit State	Units	Capacity	DL + Adj-LL*	LL	Inventory Rating Factor	Inventory Load Rating (Ton)	Operating Rating Factor	Operating Load Rating (Ton)
0.00	0.0	Flexure	KSI	-36.00	-0.00	-0.00	99.000	3564.00	99.000	3564.00
0.00	**0.0**	**Shear**	**KIPS**	**336.32**	**82.95**	**95.70**	**1.362**	**49.01**	**1.765**	**63.54**
0.00	0.0	Overload	KSI	-36.00	-0.00	-0.00	99.000	3564.00	99.000	3564.00
11.00	10.0	Flexure	KSI	36.00	6.11	4.62	3.475	125.08	4.504	162.15
11.00	**10.0**	**Shear**	**KIPS**	**542.44**	**66.74**	**83.03**	**3.134**	**112.81**	**4.062**	**146.24**
11.00	10.0	Overload	KSI	36.00	6.11	4.62	4.681	168.51	6.085	219.06
22.00	**20.0**	**Flexure**	**KSI**	**36.00**	**10.91**	**8.13**	**1.536**	**55.28**	**1.991**	**71.66**
22.00	20.0	Shear	KIPS	542.44	50.54	70.90	3.840	138.25	4.978	179.21
22.00	20.0	Overload	KSI	36.00	10.91	8.13	2.204	79.35	2.865	103.15
25.50	**23.2**	**Flexure**	**KSI**	**36.00**	**12.14**	**9.02**	**1.283**	**46.19**	**1.663**	**59.88**
25.50	23.2	Shear	KIPS	542.44	44.91	67.16	4.116	148.19	5.336	192.10
25.50	23.2	Overload	KSI	36.00	12.14	9.02	1.882	67.75	2.447	88.07
33.00	**30.0**	**Flexure**	**KSI**	**36.00**	**11.21**	**8.52**	**1.438**	**51.75**	**1.863**	**67.09**
33.00	30.0	Shear	KIPS	542.44	33.61	59.33	4.802	172.87	6.225	224.09
33.00	30.0	Overload	KSI	36.00	11.21	8.52	2.075	74.70	2.698	97.11
44.00	**40.0**	**Flexure**	**KSI**	**36.00**	**12.83**	**9.67**	**1.142**	**41.12**	**1.481**	**53.30**
44.00	40.0	Shear	KIPS	542.44	17.04	48.31	6.154	221.54	7.977	287.18
44.00	40.0	Overload	KSI	36.00	12.83	9.67	1.699	61.17	2.209	79.53
49.50	**45.0**	**Flexure**	**KSI**	**36.00**	**13.23**	**9.94**	**1.082**	**38.95**	**1.403**	**50.50**
49.50	45.0	Shear	KIPS	542.44	8.29	43.00	7.065	254.34	9.158	329.70
49.50	45.0	Overload	KSI	36.00	13.23	9.94	1.623	58.44	2.110	75.97
55.00	**50.0**	**Flexure**	**KSI**	**36.00**	**13.36**	**9.98**	**1.068**	**38.44**	**1.384**	**49.82**
55.00	50.0	Shear	KIPS	542.44	0.00	-37.83	8.194	294.99	10.622	382.39
55.00	50.0	Overload	KSI	36.00	13.36	9.98	1.606	57.82	2.088	75.17
66.00	**60.0**	**Flexure**	**KSI**	**36.00**	**12.83**	**9.67**	**1.142**	**41.12**	**1.481**	**53.30**
66.00	60.0	Shear	KIPS	542.44	-17.04	-48.31	6.154	221.54	7.977	287.18
66.00	60.0	Overload	KSI	36.00	12.83	9.67	1.699	61.17	2.209	79.53
77.00	**70.0**	**Flexure**	**KSI**	**36.00**	**11.21**	**8.52**	**1.438**	**51.75**	**1.863**	**67.09**
77.00	70.0	Shear	KIPS	542.44	-33.61	-59.33	4.802	172.87	6.225	224.09
77.00	70.0	Overload	KSI	36.00	11.21	8.52	2.075	74.70	2.698	97.11
84.50	**76.8**	**Flexure**	**KSI**	**36.00**	**12.14**	**9.02**	**1.283**	**46.19**	**1.663**	**59.88**
84.50	76.8	Shear	KIPS	542.44	-44.91	-67.16	4.116	148.19	5.336	192.10
84.50	76.8	Overload	KSI	36.00	12.14	9.02	1.882	67.75	2.447	88.07
88.00	**80.0**	**Flexure**	**KSI**	**36.00**	**10.91**	**8.13**	**1.536**	**55.28**	**1.991**	**71.66**

88.00	80.0	Shear	KIPS	542.44	-50.54	-70.90	3.840	138.25	4.978	179.21
88.00	80.0	Overload	KSI	36.00	10.91	8.13	2.204	79.35	2.865	103.15
99.00	90.0	Flexure	KSI	36.00	6.11	4.62	3.475	125.08	4.504	162.15
99.00	**90.0**	**Shear**	**KIPS**	**542.44**	**-66.74**	**-83.03**	**3.134**	**112.81**	**4.062**	**146.24**
99.00	90.0	Overload	KSI	36.00	6.11	4.62	4.681	168.51	6.085	219.06
108.33	98.5	Flexure	KSI	36.00	1.02	0.78	25.553	919.90	33.124	1192.46
108.33	**98.5**	**Shear**	**KIPS**	**320.44**	**-80.49**	**-93.74**	**1.313**	**47.26**	**1.702**	**61.26**
108.33	98.5	Overload	KSI	36.00	1.02	0.78	32.913	1184.87	42.787	1540.33
110.00	100.0	Flexure	KSI	-36.00	-0.00	-0.00	99.000	3564.00	99.000	3564.00
110.00	**100.0**	**Shear**	**KIPS**	**320.44**	**-82.95**	**-95.70**	**1.267**	**45.60**	**1.642**	**59.11**
110.00	100.0	Overload	KSI	-36.00	-0.00	-0.00	99.000	3564.00	99.000	3564.00

Detailed Rating Results
Girder E - As Inspected
HL-93 (US)
Tandem + Lane
Impact: As Requested
Lane: As Requested

Span 1

Location (ft)	Percent	Limit State	Units	Capacity	DL + Adj-LL*	LL	Inventory Rating Factor	Inventory Load Rating (Ton)	Operating Rating Factor	Operating Load Rating (Ton)
0.00	0.0	Flexure	KSI	-36.00	-0.00	-0.00	99.000	3564.00	99.000	3564.00
0.00	**0.0**	**Shear**	**KIPS**	**336.32**	**82.95**	**78.29**	**1.664**	**59.91**	**2.157**	**77.66**
0.00	0.0	Overload	KSI	-36.00	-0.00	-0.00	99.000	3564.00	99.000	3564.00
11.00	10.0	Flexure	KSI	36.00	6.11	3.80	4.222	151.98	5.472	197.01
11.00	**10.0**	**Shear**	**KIPS**	**542.44**	**66.74**	**67.90**	**3.832**	**137.95**	**4.967**	**178.82**
11.00	10.0	Overload	KSI	36.00	6.11	3.80	5.687	204.73	7.393	266.15
22.00	**20.0**	**Flexure**	**KSI**	**36.00**	**10.91**	**6.74**	**1.852**	**66.66**	**2.400**	**86.41**
22.00	20.0	Shear	KIPS	542.44	50.54	58.06	4.690	168.84	6.080	218.87
22.00	20.0	Overload	KSI	36.00	10.91	6.74	2.658	95.67	3.455	124.38
25.50	**23.2**	**Flexure**	**KSI**	**36.00**	**12.14**	**7.50**	**1.543**	**55.53**	**2.000**	**71.99**
25.50	23.2	Shear	KIPS	542.44	44.91	55.04	5.023	180.83	6.512	234.41
25.50	23.2	Overload	KSI	36.00	12.14	7.50	2.263	81.46	2.941	105.89
33.00	**30.0**	**Flexure**	**KSI**	**36.00**	**11.21**	**7.14**	**1.716**	**61.78**	**2.225**	**80.09**
33.00	30.0	Shear	KIPS	542.44	33.61	48.76	5.843	210.34	7.574	272.66

33.00	30.0	Overload	KSI	36.00	11.21	7.14	2.477	89.19	3.221	115.94
44.00	**40.0**	**Flexure**	**KSI**	**36.00**	**12.83**	**8.14**	**1.358**	**48.90**	**1.761**	**63.39**
44.00	40.0	Shear	KIPS	542.44	17.04	40.02	7.429	267.43	9.630	346.67
44.00	40.0	Overload	KSI	36.00	12.83	8.14	2.021	72.75	2.627	94.57
49.50	**45.0**	**Flexure**	**KSI**	**36.00**	**13.23**	**8.37**	**1.284**	**46.24**	**1.665**	**59.94**
49.50	45.0	Shear	KIPS	542.44	8.29	35.85	8.474	305.07	10.985	395.46
49.50	45.0	Overload	KSI	36.00	13.23	8.37	1.927	69.36	2.505	90.17
55.00	**50.0**	**Flexure**	**KSI**	**36.00**	**13.36**	**8.44**	**1.263**	**45.46**	**1.637**	**58.93**
55.00	50.0	Shear	KIPS	542.44	0.00	-31.82	9.742	350.70	12.628	454.62
55.00	50.0	Overload	KSI	36.00	13.36	8.44	1.900	68.38	2.469	88.90
66.00	**60.0**	**Flexure**	**KSI**	**36.00**	**12.83**	**8.14**	**1.358**	**48.90**	**1.761**	**63.39**
66.00	60.0	Shear	KIPS	542.44	-17.04	-40.02	7.429	267.43	9.630	346.67
66.00	60.0	Overload	KSI	36.00	12.83	8.14	2.021	72.75	2.627	94.57
77.00	**70.0**	**Flexure**	**KSI**	**36.00**	**11.21**	**7.14**	**1.716**	**61.78**	**2.225**	**80.09**
77.00	70.0	Shear	KIPS	542.44	-33.61	-48.76	5.843	210.34	7.574	272.66
77.00	70.0	Overload	KSI	36.00	11.21	7.14	2.477	89.19	3.221	115.94
84.50	**76.8**	**Flexure**	**KSI**	**36.00**	**12.14**	**7.50**	**1.543**	**55.53**	**2.000**	**71.99**
84.50	76.8	Shear	KIPS	542.44	-44.91	-55.04	5.023	180.83	6.512	234.41
84.50	76.8	Overload	KSI	36.00	12.14	7.50	2.263	81.46	2.941	105.89
88.00	**80.0**	**Flexure**	**KSI**	**36.00**	**10.91**	**6.74**	**1.852**	**66.66**	**2.400**	**86.41**
88.00	80.0	Shear	KIPS	542.44	-50.54	-58.06	4.690	168.84	6.080	218.87
88.00	80.0	Overload	KSI	36.00	10.91	6.74	2.658	95.67	3.455	124.38
99.00	90.0	Flexure	KSI	36.00	6.11	3.80	4.222	151.98	5.472	197.01
99.00	**90.0**	**Shear**	**KIPS**	**542.44**	**-66.74**	**-67.90**	**3.832**	**137.95**	**4.967**	**178.82**
99.00	90.0	Overload	KSI	36.00	6.11	3.80	5.687	204.73	7.393	266.15
108.33	98.5	Flexure	KSI	36.00	1.02	0.64	31.208	1123.50	40.455	1456.39
108.33	**98.5**	**Shear**	**KIPS**	**320.44**	**-80.49**	**-76.68**	**1.605**	**57.77**	**2.080**	**74.89**
108.33	98.5	Overload	KSI	36.00	1.02	0.64	40.198	1447.12	52.257	1881.25
110.00	100.0	Flexure	KSI	-36.00	-0.00	-0.00	99.000	3564.00	99.000	3564.00
110.00	**100.0**	**Shear**	**KIPS**	**320.44**	**-82.95**	**-78.29**	**1.548**	**55.74**	**2.007**	**72.25**
110.00	100.0	Overload	KSI	-36.00	-0.00	-0.00	99.000	3564.00	99.000	3564.00

Detailed Rating Results
Girder E - As Inspected
LRFD Fatigue Truck (US)
Axle Load
Impact: As Requested

Lane: As Requested

Span 1

Location (ft)	Percent	Limit State	Units	Capacity	DL + Adj-LL*	LL	Inventory Rating Factor	Inventory Load Rating (Ton)
11.00	10.0	Interaction	KSI	12.00	0.00	2.21	5.428	162.85
22.00	20.0	Interaction	KSI	12.00	0.00	3.82	3.142	94.26
25.50	23.2	Interaction	KSI	16.00	0.00	4.28	3.739	112.17
33.00	30.0	Interaction	KSI	12.00	0.00	3.96	3.034	91.02
44.00	40.0	Interaction	KSI	12.00	0.00	4.42	2.714	81.43
49.50	45.0	Interaction	KSI	12.00	0.00	4.47	2.683	80.48
55.00	50.0	Interaction	KSI	12.00	0.00	4.40	2.725	81.74
66.00	60.0	Interaction	KSI	12.00	0.00	4.42	2.714	81.43
77.00	70.0	Interaction	KSI	12.00	0.00	3.96	3.034	91.02
84.50	76.8	Interaction	KSI	16.00	0.00	4.20	3.805	114.16
88.00	80.0	Interaction	KSI	12.00	0.00	3.82	3.142	94.26
99.00	90.0	Interaction	KSI	12.00	0.00	2.21	5.428	162.85
108.33	98.5	Interaction	KSI	16.00	0.00	0.38	42.524	1275.72

Detailed Rating Results
Girder E - As Inspected
SU4
Axle Load
Impact: As Requested
Lane: As Requested

Span 1

Location (ft)	Percent	Limit State	Units	Capacity	DL + Adj -LL*	LL	Legal Rating Factor	Legal Load Rating (Ton)
0.00	0.0	Flexure	KSI	-36.00	-0.00	-0.00	99.000	2673.00
0.00	**0.0**	**Shear**	**KIPS**	**336.32**	**82.95**	**47.53**	**3.691**	**99.64**
0.00	0.0	Overload	KSI	-36.00	-0.00	-0.00	99.000	2673.00
11.00	10.0	Flexure	KSI	36.00	6.11	2.29	9.414	254.18
11.00	**10.0**	**Shear**	**KIPS**	**542.44**	**66.74**	**42.48**	**8.245**	**222.63**
11.00	10.0	Overload	KSI	36.00	6.11	2.29	9.421	254.37
22.00	**20.0**	**Flexure**	**KSI**	**36.00**	**10.91**	**4.04**	**4.158**	**112.28**

22.00	20.0	Shear	KIPS	542.44	50.54	37.43	9.793	264.41
22.00	20.0	Overload	KSI	36.00	10.91	4.04	4.434	119.71
25.50	**23.2**	**Flexure**	**KSI**	**36.00**	**12.14**	**4.48**	**3.474**	**93.79**
25.50	23.2	Shear	KIPS	542.44	44.91	35.82	10.389	280.51
25.50	23.2	Overload	KSI	36.00	12.14	4.48	3.785	102.19
33.00	**30.0**	**Flexure**	**KSI**	**36.00**	**11.21**	**4.24**	**3.890**	**105.03**
33.00	30.0	Shear	KIPS	542.44	33.61	32.38	11.844	319.79
33.00	30.0	Overload	KSI	36.00	11.21	4.24	4.171	112.62
44.00	**40.0**	**Flexure**	**KSI**	**36.00**	**12.83**	**4.84**	**3.073**	**82.98**
44.00	40.0	Shear	KIPS	542.44	17.04	27.33	14.641	395.30
44.00	40.0	Overload	KSI	36.00	12.83	4.84	3.397	91.71
49.50	**45.0**	**Flexure**	**KSI**	**36.00**	**13.23**	**4.98**	**2.907**	**78.48**
49.50	45.0	Shear	KIPS	542.44	8.29	24.81	16.484	445.07
49.50	45.0	Overload	KSI	36.00	13.23	4.98	3.239	87.46
55.00	**50.0**	**Flexure**	**KSI**	**36.00**	**13.36**	**5.01**	**2.863**	**77.29**
55.00	50.0	Shear	KIPS	542.44	0.00	-22.28	18.725	505.57
55.00	50.0	Overload	KSI	36.00	13.36	5.01	3.199	86.38
66.00	**60.0**	**Flexure**	**KSI**	**36.00**	**12.83**	**4.84**	**3.073**	**82.98**
66.00	60.0	Shear	KIPS	542.44	-17.04	-27.33	14.641	395.30
66.00	60.0	Overload	KSI	36.00	12.83	4.84	3.397	91.71
77.00	**70.0**	**Flexure**	**KSI**	**36.00**	**11.21**	**4.24**	**3.890**	**105.03**
77.00	70.0	Shear	KIPS	542.44	-33.61	-32.38	11.844	319.79
77.00	70.0	Overload	KSI	36.00	11.21	4.24	4.171	112.62
84.50	**76.8**	**Flexure**	**KSI**	**36.00**	**12.14**	**4.48**	**3.474**	**93.79**
84.50	76.8	Shear	KIPS	542.44	-44.91	-35.82	10.389	280.51
84.50	76.8	Overload	KSI	36.00	12.14	4.48	3.785	102.19
88.00	**80.0**	**Flexure**	**KSI**	**36.00**	**10.91**	**4.04**	**4.158**	**112.28**
88.00	80.0	Shear	KIPS	542.44	-50.54	-37.43	9.793	264.41
88.00	80.0	Overload	KSI	36.00	10.91	4.04	4.434	119.71
99.00	90.0	Flexure	KSI	36.00	6.11	2.29	9.414	254.18
99.00	**90.0**	**Shear**	**KIPS**	**542.44**	**-66.74**	**-42.48**	**8.245**	**222.63**
99.00	90.0	Overload	KSI	36.00	6.11	2.29	9.421	254.37
108.33	98.5	Flexure	KSI	36.00	1.02	0.39	69.259	1870.00
108.33	**98.5**	**Shear**	**KIPS**	**320.44**	**-80.49**	**-46.76**	**3.543**	**95.65**
108.33	98.5	Overload	KSI	36.00	1.02	0.39	66.270	1789.28
110.00	100.0	Flexure	KSI	-36.00	-0.00	-0.00	99.000	2673.00
110.00	**100.0**	**Shear**	**KIPS**	**320.44**	**-82.95**	**-47.53**	**3.433**	**92.70**
110.00	100.0	Overload	KSI	-36.00	-0.00	-0.00	99.000	2673.00

Detailed Rating Results
Girder E - As Inspected
SU5
Axle Load

D263

Impact: As Requested
Lane: As Requested

Span 1

Location (ft)	Percent	Limit State	Units	Capacity	DL + Adj -LL*	LL	Legal Rating Factor	Legal Load Rating (Ton)
0.00	0.0	Flexure	KSI	-36.00	-0.00	-0.00	99.000	3069.00
0.00	**0.0**	**Shear**	**KIPS**	**336.32**	**82.95**	**53.78**	**3.261**	**101.10**
0.00	0.0	Overload	KSI	-36.00	-0.00	-0.00	99.000	3069.00
11.00	10.0	Flexure	KSI	36.00	6.11	2.59	8.334	258.34
11.00	**10.0**	**Shear**	**KIPS**	**542.44**	**66.74**	**47.98**	**7.299**	**226.27**
11.00	10.0	Overload	KSI	36.00	6.11	2.59	8.340	258.53
22.00	**20.0**	**Flexure**	**KSI**	**36.00**	**10.91**	**4.56**	**3.689**	**114.37**
22.00	20.0	Shear	KIPS	542.44	50.54	42.19	8.688	269.33
22.00	20.0	Overload	KSI	36.00	10.91	4.56	3.934	121.94
25.50	**23.2**	**Flexure**	**KSI**	**36.00**	**12.14**	**5.05**	**3.084**	**95.62**
25.50	23.2	Shear	KIPS	542.44	44.91	40.34	9.225	285.97
25.50	23.2	Overload	KSI	36.00	12.14	5.05	3.361	104.18
33.00	**30.0**	**Flexure**	**KSI**	**36.00**	**11.21**	**4.79**	**3.444**	**106.76**
33.00	30.0	Shear	KIPS	542.44	33.61	36.39	10.539	326.69
33.00	30.0	Overload	KSI	36.00	11.21	4.79	3.693	114.48
44.00	**40.0**	**Flexure**	**KSI**	**36.00**	**12.83**	**5.46**	**2.726**	**84.50**
44.00	40.0	Shear	KIPS	542.44	17.04	30.60	13.079	405.45
44.00	40.0	Overload	KSI	36.00	12.83	5.46	3.012	93.38
49.50	**45.0**	**Flexure**	**KSI**	**36.00**	**13.23**	**5.60**	**2.585**	**80.12**
49.50	45.0	Shear	KIPS	542.44	8.29	27.70	14.764	457.69
49.50	45.0	Overload	KSI	36.00	13.23	5.60	2.880	89.28
55.00	**50.0**	**Flexure**	**KSI**	**36.00**	**13.36**	**5.62**	**2.553**	**79.13**
55.00	50.0	Shear	KIPS	542.44	0.00	-24.80	16.825	521.58
55.00	50.0	Overload	KSI	36.00	13.36	5.62	2.853	88.44
66.00	**60.0**	**Flexure**	**KSI**	**36.00**	**12.83**	**5.46**	**2.726**	**84.50**
66.00	60.0	Shear	KIPS	542.44	-17.04	-30.60	13.079	405.45
66.00	60.0	Overload	KSI	36.00	12.83	5.46	3.012	93.38
77.00	**70.0**	**Flexure**	**KSI**	**36.00**	**11.21**	**4.79**	**3.444**	**106.76**
77.00	70.0	Shear	KIPS	542.44	-33.61	-36.39	10.539	326.69
77.00	70.0	Overload	KSI	36.00	11.21	4.79	3.693	114.48
84.50	**76.8**	**Flexure**	**KSI**	**36.00**	**12.14**	**5.05**	**3.084**	**95.62**
84.50	76.8	Shear	KIPS	542.44	-44.91	-40.34	9.225	285.97
84.50	76.8	Overload	KSI	36.00	12.14	5.05	3.361	104.18
88.00	**80.0**	**Flexure**	**KSI**	**36.00**	**10.91**	**4.56**	**3.689**	**114.37**

88.00	80.0	Shear	KIPS	542.44	-50.54	-42.19	8.688	269.33
88.00	80.0	Overload	KSI	36.00	10.91	4.56	3.934	121.94
99.00	90.0	Flexure	KSI	36.00	6.11	2.59	8.334	258.34
99.00	**90.0**	**Shear**	**KIPS**	**542.44**	**-66.74**	**-47.98**	**7.299**	**226.27**
99.00	90.0	Overload	KSI	36.00	6.11	2.59	8.340	258.53
108.33	98.5	Flexure	KSI	36.00	1.02	0.44	61.219	1897.78
108.33	**98.5**	**Shear**	**KIPS**	**320.44**	**-80.49**	**-52.90**	**3.131**	**97.07**
108.33	98.5	Overload	KSI	36.00	1.02	0.44	58.576	1815.86
110.00	100.0	Flexure	KSI	-36.00	-0.00	-0.00	99.000	3069.00
110.00	**100.0**	**Shear**	**KIPS**	**320.44**	**-82.95**	**-53.78**	**3.034**	**94.06**
110.00	100.0	Overload	KSI	-36.00	-0.00	-0.00	99.000	3069.00

Detailed Rating Results
Girder E - As Inspected
SU6
Axle Load
Impact: As Requested
Lane: As Requested

Span 1

Location (ft)	Percent	Limit State	Units	Capacity	DL + Adj -LL*	LL	Legal Rating Factor	Legal Load Rating (Ton)
0.00	0.0	Flexure	KSI	-36.00	-0.00	-0.00	99.000	3440.25
0.00	**0.0**	**Shear**	**KIPS**	**336.32**	**82.95**	**58.80**	**2.983**	**103.67**
0.00	0.0	Overload	KSI	-36.00	-0.00	-0.00	99.000	3440.25
11.00	10.0	Flexure	KSI	36.00	6.11	2.82	7.646	265.71
11.00	**10.0**	**Shear**	**KIPS**	**542.44**	**66.74**	**52.30**	**6.697**	**232.72**
11.00	10.0	Overload	KSI	36.00	6.11	2.82	7.652	265.91
22.00	**20.0**	**Flexure**	**KSI**	**36.00**	**10.91**	**5.05**	**3.326**	**115.56**
22.00	20.0	Shear	KIPS	542.44	50.54	45.80	8.003	278.10
22.00	20.0	Overload	KSI	36.00	10.91	5.05	3.546	123.21
25.50	**23.2**	**Flexure**	**KSI**	**36.00**	**12.14**	**5.62**	**2.770**	**96.26**
25.50	23.2	Shear	KIPS	542.44	44.91	43.73	8.510	295.72
25.50	23.2	Overload	KSI	36.00	12.14	5.62	3.018	104.88
33.00	**30.0**	**Flexure**	**KSI**	**36.00**	**11.21**	**5.34**	**3.090**	**107.39**
33.00	30.0	Shear	KIPS	542.44	33.61	39.30	9.758	339.09
33.00	30.0	Overload	KSI	36.00	11.21	5.34	3.314	115.15
44.00	**40.0**	**Flexure**	**KSI**	**36.00**	**12.83**	**6.06**	**2.454**	**85.26**
44.00	40.0	Shear	KIPS	542.44	17.04	32.81	12.198	423.88
44.00	40.0	Overload	KSI	36.00	12.83	6.06	2.712	94.23

49.50	**45.0**	**Flexure**	**KSI**	**36.00**	**13.23**	**6.24**	**2.319**	**80.58**
49.50	45.0	Shear	KIPS	542.44	8.29	29.56	13.836	480.79
49.50	45.0	Overload	KSI	36.00	13.23	6.24	2.584	89.80
55.00	**50.0**	**Flexure**	**KSI**	**36.00**	**13.36**	**6.28**	**2.283**	**79.35**
55.00	50.0	Shear	KIPS	542.44	0.00	-26.31	15.860	551.15
55.00	50.0	Overload	KSI	36.00	13.36	6.28	2.552	88.67
66.00	**60.0**	**Flexure**	**KSI**	**36.00**	**12.83**	**6.06**	**2.454**	**85.26**
66.00	60.0	Shear	KIPS	542.44	-17.04	-32.81	12.198	423.88
66.00	60.0	Overload	KSI	36.00	12.83	6.06	2.712	94.23
77.00	**70.0**	**Flexure**	**KSI**	**36.00**	**11.21**	**5.34**	**3.090**	**107.39**
77.00	70.0	Shear	KIPS	542.44	-33.61	-39.30	9.758	339.09
77.00	70.0	Overload	KSI	36.00	11.21	5.34	3.314	115.15
84.50	**76.8**	**Flexure**	**KSI**	**36.00**	**12.14**	**5.62**	**2.770**	**96.26**
84.50	76.8	Shear	KIPS	542.44	-44.91	-43.73	8.510	295.72
84.50	76.8	Overload	KSI	36.00	12.14	5.62	3.018	104.88
88.00	**80.0**	**Flexure**	**KSI**	**36.00**	**10.91**	**5.05**	**3.326**	**115.56**
88.00	80.0	Shear	KIPS	542.44	-50.54	-45.80	8.003	278.10
88.00	80.0	Overload	KSI	36.00	10.91	5.05	3.546	123.21
99.00	90.0	Flexure	KSI	36.00	6.11	2.82	7.646	265.71
99.00	**90.0**	**Shear**	**KIPS**	**542.44**	**-66.74**	**-52.30**	**6.697**	**232.72**
99.00	90.0	Overload	KSI	36.00	6.11	2.82	7.652	265.91
108.33	98.5	Flexure	KSI	36.00	1.02	0.48	56.021	1946.74
108.33	**98.5**	**Shear**	**KIPS**	**320.44**	**-80.49**	**-57.81**	**2.865**	**99.58**
108.33	98.5	Overload	KSI	36.00	1.02	0.48	53.603	1862.70
110.00	100.0	Flexure	KSI	-36.00	-0.00	-0.00	99.000	3440.25
110.00	**100.0**	**Shear**	**KIPS**	**320.44**	**-82.95**	**-58.80**	**2.775**	**96.44**
110.00	100.0	Overload	KSI	-36.00	-0.00	-0.00	99.000	3440.25

Detailed Rating Results
Girder E - As Inspected
SU7
Axle Load
Impact: As Requested
Lane: As Requested

Span 1

Location (ft)	Percent	Limit State	Units	Capacity	DL + Adj -LL*	LL	Legal Rating Factor	Legal Load Rating (Ton)
0.00	0.0	Flexure	KSI	-36.00	-0.00	-0.00	99.000	3836.25
0.00	**0.0**	**Shear**	**KIPS**	**336.32**	**82.95**	**63.91**	**2.744**	**106.34**

0.00	0.0	Overload	KSI	-36.00	-0.00	-0.00	99.000	3836.25
11.00	10.0	Flexure	KSI	36.00	6.11	3.06	7.057	273.45
11.00	**10.0**	**Shear**	**KIPS**	**542.44**	**66.74**	**56.67**	**6.181**	**239.51**
11.00	10.0	Overload	KSI	36.00	6.11	3.06	7.062	273.65
22.00	**20.0**	**Flexure**	**KSI**	**36.00**	**10.91**	**5.47**	**3.070**	**118.97**
22.00	20.0	Shear	KIPS	542.44	50.54	49.42	7.417	287.39
22.00	20.0	Overload	KSI	36.00	10.91	5.47	3.273	126.85
25.50	**23.2**	**Flexure**	**KSI**	**36.00**	**12.14**	**6.12**	**2.547**	**98.68**
25.50	23.2	Shear	KIPS	542.44	44.91	47.12	7.899	306.09
25.50	23.2	Overload	KSI	36.00	12.14	6.12	2.775	107.52
33.00	**30.0**	**Flexure**	**KSI**	**36.00**	**11.21**	**5.86**	**2.816**	**109.13**
33.00	30.0	Shear	KIPS	542.44	33.61	42.18	9.093	352.37
33.00	30.0	Overload	KSI	36.00	11.21	5.86	3.020	117.02
44.00	**40.0**	**Flexure**	**KSI**	**36.00**	**12.83**	**6.66**	**2.233**	**86.52**
44.00	40.0	Shear	KIPS	542.44	17.04	34.93	11.456	443.92
44.00	40.0	Overload	KSI	36.00	12.83	6.66	2.468	95.62
49.50	**45.0**	**Flexure**	**KSI**	**36.00**	**13.23**	**6.86**	**2.112**	**81.83**
49.50	45.0	Shear	KIPS	542.44	8.29	31.31	13.062	506.15
49.50	45.0	Overload	KSI	36.00	13.23	6.86	2.353	91.19
55.00	**50.0**	**Flexure**	**KSI**	**36.00**	**13.36**	**6.92**	**2.073**	**80.32**
55.00	50.0	Shear	KIPS	542.44	0.00	-27.69	15.072	584.03
55.00	50.0	Overload	KSI	36.00	13.36	6.92	2.317	89.76
66.00	**60.0**	**Flexure**	**KSI**	**36.00**	**12.83**	**6.66**	**2.233**	**86.52**
66.00	60.0	Shear	KIPS	542.44	-17.04	-34.93	11.456	443.92
66.00	60.0	Overload	KSI	36.00	12.83	6.66	2.468	95.62
77.00	**70.0**	**Flexure**	**KSI**	**36.00**	**11.21**	**5.86**	**2.816**	**109.13**
77.00	70.0	Shear	KIPS	542.44	-33.61	-42.18	9.093	352.37
77.00	70.0	Overload	KSI	36.00	11.21	5.86	3.020	117.02
84.50	**76.8**	**Flexure**	**KSI**	**36.00**	**12.14**	**6.12**	**2.547**	**98.68**
84.50	76.8	Shear	KIPS	542.44	-44.91	-47.12	7.899	306.09
84.50	76.8	Overload	KSI	36.00	12.14	6.12	2.775	107.52
88.00	**80.0**	**Flexure**	**KSI**	**36.00**	**10.91**	**5.47**	**3.070**	**118.97**
88.00	80.0	Shear	KIPS	542.44	-50.54	-49.42	7.417	287.39
88.00	80.0	Overload	KSI	36.00	10.91	5.47	3.273	126.85
99.00	90.0	Flexure	KSI	36.00	6.11	3.06	7.057	273.45
99.00	**90.0**	**Shear**	**KIPS**	**542.44**	**-66.74**	**-56.67**	**6.181**	**239.51**
99.00	90.0	Overload	KSI	36.00	6.11	3.06	7.062	273.65
108.33	98.5	Flexure	KSI	36.00	1.02	0.52	51.559	1997.92
108.33	**98.5**	**Shear**	**KIPS**	**320.44**	**-80.49**	**-62.81**	**2.637**	**102.19**
108.33	98.5	Overload	KSI	36.00	1.02	0.52	49.334	1911.68
110.00	100.0	Flexure	KSI	-36.00	-0.00	-0.00	99.000	3836.25
110.00	**100.0**	**Shear**	**KIPS**	**320.44**	**-82.95**	**-63.91**	**2.553**	**98.93**
110.00	100.0	Overload	KSI	-36.00	-0.00	-0.00	99.000	3836.25

Detailed Rating Results
Girder E - As Inspected
Type 3
Axle Load
Impact: As Requested
Lane: As Requested

Span 1

Location (ft)	Percent	Limit State	Units	Capacity	DL + Adj -LL*	LL	Legal Rating Factor	Legal Load Rating (Ton)
0.00	0.0	Flexure	KSI	-36.00	-0.00	-0.00	99.000	2475.00
0.00	**0.0**	**Shear**	**KIPS**	**336.32**	**82.95**	**43.58**	**4.024**	**100.61**
0.00	0.0	Overload	KSI	-36.00	-0.00	-0.00	99.000	2475.00
11.00	10.0	Flexure	KSI	36.00	6.11	2.10	10.278	256.94
11.00	**10.0**	**Shear**	**KIPS**	**542.44**	**66.74**	**38.91**	**9.002**	**225.05**
11.00	10.0	Overload	KSI	36.00	6.11	2.10	10.285	257.13
22.00	**20.0**	**Flexure**	**KSI**	**36.00**	**10.91**	**3.70**	**4.547**	**113.67**
22.00	20.0	Shear	KIPS	542.44	50.54	34.23	10.707	267.67
22.00	20.0	Overload	KSI	36.00	10.91	3.70	4.848	121.19
25.50	**23.2**	**Flexure**	**KSI**	**36.00**	**12.14**	**4.10**	**3.800**	**95.00**
25.50	23.2	Shear	KIPS	542.44	44.91	32.75	11.365	284.13
25.50	23.2	Overload	KSI	36.00	12.14	4.10	4.140	103.51
33.00	**30.0**	**Flexure**	**KSI**	**36.00**	**11.21**	**3.87**	**4.261**	**106.53**
33.00	30.0	Shear	KIPS	542.44	33.61	29.56	12.975	324.37
33.00	30.0	Overload	KSI	36.00	11.21	3.87	4.569	114.24
44.00	**40.0**	**Flexure**	**KSI**	**36.00**	**12.83**	**4.39**	**3.389**	**84.73**
44.00	40.0	Shear	KIPS	542.44	17.04	24.88	16.081	402.02
44.00	40.0	Overload	KSI	36.00	12.83	4.39	3.746	93.64
49.50	**45.0**	**Flexure**	**KSI**	**36.00**	**13.23**	**4.51**	**3.210**	**80.25**
49.50	45.0	Shear	KIPS	542.44	8.29	22.55	18.137	453.42
49.50	45.0	Overload	KSI	36.00	13.23	4.51	3.577	89.43
55.00	**50.0**	**Flexure**	**KSI**	**36.00**	**13.36**	**4.53**	**3.167**	**79.18**
55.00	50.0	Shear	KIPS	542.44	0.00	-20.21	20.646	516.15
55.00	50.0	Overload	KSI	36.00	13.36	4.53	3.540	88.49
66.00	**60.0**	**Flexure**	**KSI**	**36.00**	**12.83**	**4.39**	**3.389**	**84.73**
66.00	60.0	Shear	KIPS	542.44	-17.04	-24.88	16.081	402.02
66.00	60.0	Overload	KSI	36.00	12.83	4.39	3.746	93.64
77.00	**70.0**	**Flexure**	**KSI**	**36.00**	**11.21**	**3.87**	**4.261**	**106.53**
77.00	70.0	Shear	KIPS	542.44	-33.61	-29.56	12.975	324.37

77.00	70.0	Overload	KSI	36.00	11.21	3.87	4.569	114.24
84.50	**76.8**	**Flexure**	**KSI**	**36.00**	**12.14**	**4.10**	**3.800**	**95.00**
84.50	76.8	Shear	KIPS	542.44	-44.91	-32.75	11.365	284.13
84.50	76.8	Overload	KSI	36.00	12.14	4.10	4.140	103.51
88.00	**80.0**	**Flexure**	**KSI**	**36.00**	**10.91**	**3.70**	**4.547**	**113.67**
88.00	80.0	Shear	KIPS	542.44	-50.54	-34.23	10.707	267.67
88.00	80.0	Overload	KSI	36.00	10.91	3.70	4.848	121.19
99.00	90.0	Flexure	KSI	36.00	6.11	2.10	10.278	256.94
99.00	**90.0**	**Shear**	**KIPS**	**542.44**	**-66.74**	**-38.91**	**9.002**	**225.05**
99.00	90.0	Overload	KSI	36.00	6.11	2.10	10.285	257.13
108.33	98.5	Flexure	KSI	36.00	1.02	0.35	75.538	1888.46
108.33	**98.5**	**Shear**	**KIPS**	**320.44**	**-80.49**	**-42.87**	**3.864**	**96.59**
108.33	98.5	Overload	KSI	36.00	1.02	0.35	72.278	1806.94
110.00	100.0	Flexure	KSI	-36.00	-0.00	-0.00	99.000	2475.00
110.00	**100.0**	**Shear**	**KIPS**	**320.44**	**-82.95**	**-43.58**	**3.744**	**93.60**
110.00	100.0	Overload	KSI	-36.00	-0.00	-0.00	99.000	2475.00

Detailed Rating Results
Girder E - As Inspected
Type 3-3
Axle Load
Impact: As Requested
Lane: As Requested

Span 1

Location (ft)	Percent	Limit State	Units	Capacity	DL + Adj -LL*	LL	Legal Rating Factor	Legal Load Rating (Ton)
0.00	0.0	Flexure	KSI	-36.00	-0.00	-0.00	99.000	3960.00
0.00	**0.0**	**Shear**	**KIPS**	**336.32**	**82.95**	**58.54**	**2.996**	**119.85**
0.00	0.0	Overload	KSI	-36.00	-0.00	-0.00	99.000	3960.00
11.00	10.0	Flexure	KSI	36.00	6.11	2.76	7.831	313.26
11.00	**10.0**	**Shear**	**KIPS**	**542.44**	**66.74**	**51.06**	**6.859**	**274.37**
11.00	10.0	Overload	KSI	36.00	6.11	2.76	7.837	313.49
22.00	**20.0**	**Flexure**	**KSI**	**36.00**	**10.91**	**4.74**	**3.544**	**141.75**
22.00	20.0	Shear	KIPS	542.44	50.54	43.58	8.410	336.41
22.00	20.0	Overload	KSI	36.00	10.91	4.74	3.778	151.13
25.50	**23.2**	**Flexure**	**KSI**	**36.00**	**12.14**	**5.24**	**2.972**	**118.88**
25.50	23.2	Shear	KIPS	542.44	44.91	41.20	9.033	361.31
25.50	23.2	Overload	KSI	36.00	12.14	5.24	3.238	129.53
33.00	**30.0**	**Flexure**	**KSI**	**36.00**	**11.21**	**4.88**	**3.383**	**135.31**

33.00	30.0	Shear	KIPS	542.44	33.61	36.10	10.623	424.92
33.00	30.0	Overload	KSI	36.00	11.21	4.88	3.627	145.09
44.00	**40.0**	**Flexure**	**KSI**	**36.00**	**12.83**	**5.50**	**2.704**	**108.14**
44.00	40.0	Shear	KIPS	542.44	17.04	28.62	13.980	559.20
44.00	40.0	Overload	KSI	36.00	12.83	5.50	2.988	119.52
49.50	**45.0**	**Flexure**	**KSI**	**36.00**	**13.23**	**5.69**	**2.545**	**101.80**
49.50	45.0	Shear	KIPS	542.44	8.29	24.88	16.433	657.33
49.50	45.0	Overload	KSI	36.00	13.23	5.69	2.836	113.44
55.00	**50.0**	**Flexure**	**KSI**	**36.00**	**13.36**	**5.71**	**2.511**	**100.45**
55.00	50.0	Shear	KIPS	542.44	0.00	-21.15	19.733	789.33
55.00	50.0	Overload	KSI	36.00	13.36	5.71	2.807	112.26
66.00	**60.0**	**Flexure**	**KSI**	**36.00**	**12.83**	**5.50**	**2.704**	**108.14**
66.00	60.0	Shear	KIPS	542.44	-17.04	-28.62	13.980	559.20
66.00	60.0	Overload	KSI	36.00	12.83	5.50	2.988	119.52
77.00	**70.0**	**Flexure**	**KSI**	**36.00**	**11.21**	**4.88**	**3.383**	**135.31**
77.00	70.0	Shear	KIPS	542.44	-33.61	-36.10	10.623	424.92
77.00	70.0	Overload	KSI	36.00	11.21	4.88	3.627	145.09
84.50	**76.8**	**Flexure**	**KSI**	**36.00**	**12.14**	**5.24**	**2.972**	**118.88**
84.50	76.8	Shear	KIPS	542.44	-44.91	-41.20	9.033	361.31
84.50	76.8	Overload	KSI	36.00	12.14	5.24	3.238	129.53
88.00	**80.0**	**Flexure**	**KSI**	**36.00**	**10.91**	**4.74**	**3.544**	**141.75**
88.00	80.0	Shear	KIPS	542.44	-50.54	-43.58	8.410	336.41
88.00	80.0	Overload	KSI	36.00	10.91	4.74	3.778	151.13
99.00	90.0	Flexure	KSI	36.00	6.11	2.76	7.831	313.26
99.00	**90.0**	**Shear**	**KIPS**	**542.44**	**-66.74**	**-51.06**	**6.859**	**274.37**
99.00	90.0	Overload	KSI	36.00	6.11	2.76	7.837	313.49
108.33	98.5	Flexure	KSI	36.00	1.02	0.47	56.415	2256.62
108.33	**98.5**	**Shear**	**KIPS**	**320.44**	**-80.49**	**-57.41**	**2.886**	**115.43**
108.33	98.5	Overload	KSI	36.00	1.02	0.47	53.980	2159.21
110.00	100.0	Flexure	KSI	-36.00	-0.00	-0.00	99.000	3960.00
110.00	**100.0**	**Shear**	**KIPS**	**320.44**	**-82.95**	**-58.54**	**2.787**	**111.50**
110.00	100.0	Overload	KSI	-36.00	-0.00	-0.00	99.000	3960.00

Detailed Rating Results
Girder E - As Inspected
Type 3S2
Axle Load
Impact: As Requested
Lane: As Requested

Span 1

Location							**Legal Rating**	**Legal**

(ft)	Percent	Limit State	Units	Capacity	DL + Adj -LL*	LL	Factor	Load Rating (Ton)
0.00	0.0	Flexure	KSI	-36.00	-0.00	-0.00	99.000	3564.00
0.00	**0.0**	**Shear**	**KIPS**	**336.32**	**82.95**	**55.92**	**3.136**	**112.91**
0.00	0.0	Overload	KSI	-36.00	-0.00	-0.00	99.000	3564.00
11.00	10.0	Flexure	KSI	36.00	6.11	2.66	8.129	292.65
11.00	**10.0**	**Shear**	**KIPS**	**542.44**	**66.74**	**49.19**	**7.120**	**256.32**
11.00	10.0	Overload	KSI	36.00	6.11	2.66	8.135	292.87
22.00	**20.0**	**Flexure**	**KSI**	**36.00**	**10.91**	**4.58**	**3.666**	**131.96**
22.00	20.0	Shear	KIPS	542.44	50.54	42.46	8.632	310.77
22.00	20.0	Overload	KSI	36.00	10.91	4.58	3.908	140.70
25.50	**23.2**	**Flexure**	**KSI**	**36.00**	**12.14**	**5.09**	**3.057**	**110.05**
25.50	23.2	Shear	KIPS	542.44	44.91	40.32	9.231	332.31
25.50	23.2	Overload	KSI	36.00	12.14	5.09	3.331	119.91
33.00	**30.0**	**Flexure**	**KSI**	**36.00**	**11.21**	**4.85**	**3.401**	**122.45**
33.00	30.0	Shear	KIPS	542.44	33.61	35.73	10.734	386.43
33.00	30.0	Overload	KSI	36.00	11.21	4.85	3.647	131.30
44.00	**40.0**	**Flexure**	**KSI**	**36.00**	**12.83**	**5.48**	**2.717**	**97.80**
44.00	40.0	Shear	KIPS	542.44	17.04	29.00	13.800	496.79
44.00	40.0	Overload	KSI	36.00	12.83	5.48	3.003	108.09
49.50	**45.0**	**Flexure**	**KSI**	**36.00**	**13.23**	**5.60**	**2.587**	**93.13**
49.50	45.0	Shear	KIPS	542.44	8.29	25.63	15.954	574.34
49.50	45.0	Overload	KSI	36.00	13.23	5.60	2.883	103.78
55.00	**50.0**	**Flexure**	**KSI**	**36.00**	**13.36**	**5.57**	**2.575**	**92.69**
55.00	50.0	Shear	KIPS	542.44	0.00	-22.27	18.739	674.60
55.00	50.0	Overload	KSI	36.00	13.36	5.57	2.878	103.59
66.00	**60.0**	**Flexure**	**KSI**	**36.00**	**12.83**	**5.48**	**2.717**	**97.80**
66.00	60.0	Shear	KIPS	542.44	-17.04	-29.00	13.800	496.79
66.00	60.0	Overload	KSI	36.00	12.83	5.48	3.003	108.09
77.00	**70.0**	**Flexure**	**KSI**	**36.00**	**11.21**	**4.85**	**3.401**	**122.45**
77.00	70.0	Shear	KIPS	542.44	-33.61	-35.73	10.734	386.43
77.00	70.0	Overload	KSI	36.00	11.21	4.85	3.647	131.30
84.50	**76.8**	**Flexure**	**KSI**	**36.00**	**12.14**	**5.09**	**3.057**	**110.05**
84.50	76.8	Shear	KIPS	542.44	-44.91	-40.32	9.231	332.31
84.50	76.8	Overload	KSI	36.00	12.14	5.09	3.331	119.91
88.00	**80.0**	**Flexure**	**KSI**	**36.00**	**10.91**	**4.58**	**3.666**	**131.96**
88.00	80.0	Shear	KIPS	542.44	-50.54	-42.46	8.632	310.77
88.00	80.0	Overload	KSI	36.00	10.91	4.58	3.908	140.70
99.00	90.0	Flexure	KSI	36.00	6.11	2.66	8.129	292.65
99.00	**90.0**	**Shear**	**KIPS**	**542.44**	**-66.74**	**-49.19**	**7.120**	**256.32**
99.00	90.0	Overload	KSI	36.00	6.11	2.66	8.135	292.87

108.33	98.5	Flexure	KSI	36.00	1.02	0.45	58.989	2123.59
108.33	**98.5**	**Shear**	**KIPS**	**320.44**	**-80.49**	**-54.90**	**3.017**	**108.62**
108.33	98.5	Overload	KSI	36.00	1.02	0.45	56.442	2031.93
110.00	100.0	Flexure	KSI	-36.00	-0.00	-0.00	99.000	3564.00
110.00	**100.0**	**Shear**	**KIPS**	**320.44**	**-82.95**	**-55.92**	**2.918**	**105.04**
110.00	100.0	Overload	KSI	-36.00	-0.00	-0.00	99.000	3564.00

Detailed Rating Results
Girder E - As Inspected
RI-3
Axle Load
Impact: As Requested
Lane: As Requested

Span 1

Location (ft)	Percent	Limit State	Units	Capacity	DL + Adj -LL*	LL	Permit Rating Factor	Permit Load Rating (Ton)
0.00	0.0	Flexure	KSI	-36.00	-0.00	-0.00	99.000	3762.00
0.00	**0.0**	**Shear**	**KIPS**	**336.32**	**82.95**	**67.25**	**2.866**	**108.90**
0.00	0.0	Overload	KSI	-36.00	-0.00	-0.00	99.000	3762.00
11.00	10.0	Flexure	KSI	36.00	6.11	3.25	7.306	277.62
11.00	**10.0**	**Shear**	**KIPS**	**542.44**	**66.74**	**60.14**	**6.399**	**243.16**
11.00	10.0	Overload	KSI	36.00	6.11	3.25	8.650	328.72
22.00	**20.0**	**Flexure**	**KSI**	**36.00**	**10.91**	**5.73**	**3.225**	**122.54**
22.00	20.0	Shear	KIPS	542.44	50.54	53.03	7.594	288.56
22.00	20.0	Overload	KSI	36.00	10.91	5.73	4.068	154.58
25.50	**23.2**	**Flexure**	**KSI**	**36.00**	**12.14**	**6.35**	**2.693**	**102.33**
25.50	23.2	Shear	KIPS	542.44	44.91	50.77	8.054	306.04
25.50	23.2	Overload	KSI	36.00	12.14	6.35	3.471	131.92
33.00	**30.0**	**Flexure**	**KSI**	**36.00**	**11.21**	**6.01**	**3.013**	**114.50**
33.00	30.0	Shear	KIPS	542.44	33.61	45.93	9.175	348.64
33.00	30.0	Overload	KSI	36.00	11.21	6.01	3.823	145.27
44.00	**40.0**	**Flexure**	**KSI**	**36.00**	**12.83**	**6.80**	**2.403**	**91.31**
44.00	40.0	Shear	KIPS	542.44	17.04	38.82	11.325	430.34
44.00	40.0	Overload	KSI	36.00	12.83	6.80	3.142	119.39
49.50	**45.0**	**Flexure**	**KSI**	**36.00**	**13.23**	**7.02**	**2.267**	**86.16**
49.50	45.0	Shear	KIPS	542.44	8.29	35.27	12.739	484.07
49.50	45.0	Overload	KSI	36.00	13.23	7.02	2.989	113.60
55.00	**50.0**	**Flexure**	**KSI**	**36.00**	**13.36**	**7.08**	**2.228**	**84.66**
55.00	50.0	Shear	KIPS	542.44	0.00	-31.72	14.454	549.24

55.00	50.0	Overload	KSI	36.00	13.36	7.08	2.946	111.94
66.00	**60.0**	**Flexure**	**KSI**	**36.00**	**12.83**	**6.80**	**2.403**	**91.31**
66.00	60.0	Shear	KIPS	542.44	-17.04	-38.82	11.325	430.34
66.00	60.0	Overload	KSI	36.00	12.83	6.80	3.142	119.39
77.00	**70.0**	**Flexure**	**KSI**	**36.00**	**11.21**	**6.01**	**3.013**	**114.50**
77.00	70.0	Shear	KIPS	542.44	-33.61	-45.93	9.175	348.64
77.00	70.0	Overload	KSI	36.00	11.21	6.01	3.823	145.27
84.50	**76.8**	**Flexure**	**KSI**	**36.00**	**12.14**	**6.35**	**2.693**	**102.33**
84.50	76.8	Shear	KIPS	542.44	-44.91	-50.77	8.054	306.04
84.50	76.8	Overload	KSI	36.00	12.14	6.35	3.471	131.92
88.00	**80.0**	**Flexure**	**KSI**	**36.00**	**10.91**	**5.73**	**3.225**	**122.54**
88.00	80.0	Shear	KIPS	542.44	-50.54	-53.03	7.594	288.56
88.00	80.0	Overload	KSI	36.00	10.91	5.73	4.068	154.58
99.00	90.0	Flexure	KSI	36.00	6.11	3.25	7.306	277.62
99.00	**90.0**	**Shear**	**KIPS**	**542.44**	**-66.74**	**-60.14**	**6.399**	**243.16**
99.00	90.0	Overload	KSI	36.00	6.11	3.25	8.650	328.72
108.33	98.5	Flexure	KSI	36.00	1.02	0.55	53.779	2043.59
108.33	**98.5**	**Shear**	**KIPS**	**320.44**	**-80.49**	**-66.17**	**2.751**	**104.53**
108.33	98.5	Overload	KSI	36.00	1.02	0.55	60.882	2313.53
110.00	100.0	Flexure	KSI	-36.00	-0.00	-0.00	99.000	3762.00
110.00	**100.0**	**Shear**	**KIPS**	**320.44**	**-82.95**	**-67.25**	**2.666**	**101.32**
110.00	100.0	Overload	KSI	-36.00	-0.00	-0.00	99.000	3762.00

Detailed Rating Results
Girder E - As Inspected
RI-4
Axle Load
Impact: As Requested
Lane: As Requested

Span 1

Location (ft)	Percent	Limit State	Units	Capacity	DL + Adj -LL*	LL	Permit Rating Factor	Permit Load Rating (Ton)
0.00	0.0	Flexure	KSI	-36.00	-0.00	-0.00	99.000	3712.50
0.00	**0.0**	**Shear**	**KIPS**	**336.32**	**82.95**	**65.38**	**2.948**	**110.54**
0.00	0.0	Overload	KSI	-36.00	-0.00	-0.00	99.000	3712.50
11.00	10.0	Flexure	KSI	36.00	6.11	3.15	7.528	282.29
11.00	**10.0**	**Shear**	**KIPS**	**542.44**	**66.74**	**58.37**	**6.593**	**247.25**
11.00	10.0	Overload	KSI	36.00	6.11	3.15	8.913	334.24
22.00	**20.0**	**Flexure**	**KSI**	**36.00**	**10.91**	**5.55**	**3.330**	**124.88**

22.00	20.0	Shear	KIPS	542.44	50.54	51.36	7.842	294.08
22.00	20.0	Overload	KSI	36.00	10.91	5.55	4.201	157.53
25.50	**23.2**	**Flexure**	**KSI**	**36.00**	**12.14**	**6.15**	**2.783**	**104.37**
25.50	23.2	Shear	KIPS	542.44	44.91	49.12	8.324	312.16
25.50	23.2	Overload	KSI	36.00	12.14	6.15	3.588	134.55
33.00	**30.0**	**Flexure**	**KSI**	**36.00**	**11.21**	**5.85**	**3.097**	**116.15**
33.00	30.0	Shear	KIPS	542.44	33.61	44.34	9.503	356.36
33.00	30.0	Overload	KSI	36.00	11.21	5.85	3.930	147.36
44.00	**40.0**	**Flexure**	**KSI**	**36.00**	**12.83**	**6.68**	**2.445**	**91.68**
44.00	40.0	Shear	KIPS	542.44	17.04	37.33	11.777	441.65
44.00	40.0	Overload	KSI	36.00	12.83	6.68	3.197	119.89
49.50	**45.0**	**Flexure**	**KSI**	**36.00**	**13.23**	**6.87**	**2.315**	**86.80**
49.50	45.0	Shear	KIPS	542.44	8.29	33.83	13.283	498.11
49.50	45.0	Overload	KSI	36.00	13.23	6.87	3.052	114.45
55.00	**50.0**	**Flexure**	**KSI**	**36.00**	**13.36**	**6.91**	**2.282**	**85.58**
55.00	50.0	Shear	KIPS	542.44	0.00	-30.32	15.120	567.02
55.00	50.0	Overload	KSI	36.00	13.36	6.91	3.017	113.15
66.00	**60.0**	**Flexure**	**KSI**	**36.00**	**12.83**	**6.68**	**2.445**	**91.68**
66.00	60.0	Shear	KIPS	542.44	-17.04	-37.33	11.777	441.65
66.00	60.0	Overload	KSI	36.00	12.83	6.68	3.197	119.89
77.00	**70.0**	**Flexure**	**KSI**	**36.00**	**11.21**	**5.85**	**3.097**	**116.15**
77.00	70.0	Shear	KIPS	542.44	-33.61	-44.34	9.503	356.36
77.00	70.0	Overload	KSI	36.00	11.21	5.85	3.930	147.36
84.50	**76.8**	**Flexure**	**KSI**	**36.00**	**12.14**	**6.15**	**2.783**	**104.37**
84.50	76.8	Shear	KIPS	542.44	-44.91	-49.12	8.324	312.16
84.50	76.8	Overload	KSI	36.00	12.14	6.15	3.588	134.55
88.00	**80.0**	**Flexure**	**KSI**	**36.00**	**10.91**	**5.55**	**3.330**	**124.88**
88.00	80.0	Shear	KIPS	542.44	-50.54	-51.36	7.842	294.08
88.00	80.0	Overload	KSI	36.00	10.91	5.55	4.201	157.53
99.00	90.0	Flexure	KSI	36.00	6.11	3.15	7.528	282.29
99.00	**90.0**	**Shear**	**KIPS**	**542.44**	**-66.74**	**-58.37**	**6.593**	**247.25**
99.00	90.0	Overload	KSI	36.00	6.11	3.15	8.913	334.24
108.33	98.5	Flexure	KSI	36.00	1.02	0.53	55.327	2074.76
108.33	**98.5**	**Shear**	**KIPS**	**320.44**	**-80.49**	**-64.31**	**2.830**	**106.12**
108.33	98.5	Overload	KSI	36.00	1.02	0.53	62.635	2348.83
110.00	100.0	Flexure	KSI	-36.00	-0.00	-0.00	99.000	3712.50
110.00	**100.0**	**Shear**	**KIPS**	**320.44**	**-82.95**	**-65.38**	**2.742**	**102.84**
110.00	100.0	Overload	KSI	-36.00	-0.00	-0.00	99.000	3712.50

Detailed Rating Results
Girder E - As Inspected
RI-5
Axle Load

Impact: As Requested
Lane: As Requested

Span 1

Location (ft)	Percent	Limit State	Units	Capacity	DL + Adj -LL*	LL	Permit Rating Factor	Permit Load Rating (Ton)
0.00	0.0	Flexure	KSI	-36.00	-0.00	-0.00	99.000	5187.60
0.00	**0.0**	**Shear**	**KIPS**	**336.32**	**82.95**	**85.74**	**2.248**	**117.77**
0.00	0.0	Overload	KSI	-36.00	-0.00	-0.00	99.000	5187.60
11.00	10.0	Flexure	KSI	36.00	6.11	4.10	5.785	303.15
11.00	**10.0**	**Shear**	**KIPS**	**542.44**	**66.74**	**75.95**	**5.067**	**265.52**
11.00	10.0	Overload	KSI	36.00	6.11	4.10	6.850	358.94
22.00	**20.0**	**Flexure**	**KSI**	**36.00**	**10.91**	**7.14**	**2.585**	**135.47**
22.00	20.0	Shear	KIPS	542.44	50.54	66.15	6.088	319.03
22.00	20.0	Overload	KSI	36.00	10.91	7.14	3.261	170.90
25.50	**23.2**	**Flexure**	**KSI**	**36.00**	**12.14**	**7.95**	**2.154**	**112.84**
25.50	23.2	Shear	KIPS	542.44	44.91	63.03	6.488	339.95
25.50	23.2	Overload	KSI	36.00	12.14	7.95	2.776	145.47
33.00	**30.0**	**Flexure**	**KSI**	**36.00**	**11.21**	**7.54**	**2.402**	**125.88**
33.00	30.0	Shear	KIPS	542.44	33.61	56.35	7.478	391.85
33.00	30.0	Overload	KSI	36.00	11.21	7.54	3.048	159.71
44.00	**40.0**	**Flexure**	**KSI**	**36.00**	**12.83**	**8.58**	**1.905**	**99.84**
44.00	40.0	Shear	KIPS	542.44	17.04	46.55	9.445	494.90
44.00	40.0	Overload	KSI	36.00	12.83	8.58	2.491	130.55
49.50	**45.0**	**Flexure**	**KSI**	**36.00**	**13.23**	**8.81**	**1.806**	**94.66**
49.50	45.0	Shear	KIPS	542.44	8.29	41.65	10.787	565.23
49.50	45.0	Overload	KSI	36.00	13.23	8.81	2.382	124.81
55.00	**50.0**	**Flexure**	**KSI**	**36.00**	**13.36**	**8.82**	**1.787**	**93.64**
55.00	50.0	Shear	KIPS	542.44	0.00	-36.76	12.473	653.60
55.00	50.0	Overload	KSI	36.00	13.36	8.82	2.363	123.82
66.00	**60.0**	**Flexure**	**KSI**	**36.00**	**12.83**	**8.58**	**1.905**	**99.84**
66.00	60.0	Shear	KIPS	542.44	-17.04	-46.55	9.445	494.90
66.00	60.0	Overload	KSI	36.00	12.83	8.58	2.491	130.55
77.00	**70.0**	**Flexure**	**KSI**	**36.00**	**11.21**	**7.54**	**2.402**	**125.88**
77.00	70.0	Shear	KIPS	542.44	-33.61	-56.35	7.478	391.85
77.00	70.0	Overload	KSI	36.00	11.21	7.54	3.048	159.71
84.50	**76.8**	**Flexure**	**KSI**	**36.00**	**12.14**	**7.95**	**2.154**	**112.84**
84.50	76.8	Shear	KIPS	542.44	-44.91	-63.03	6.488	339.95
84.50	76.8	Overload	KSI	36.00	12.14	7.95	2.776	145.47
88.00	**80.0**	**Flexure**	**KSI**	**36.00**	**10.91**	**7.14**	**2.585**	**135.47**

88.00	80.0	Shear	KIPS	542.44	-50.54	-66.15	6.088	319.03
88.00	80.0	Overload	KSI	36.00	10.91	7.14	3.261	170.90
99.00	90.0	Flexure	KSI	36.00	6.11	4.10	5.785	303.15
99.00	**90.0**	**Shear**	**KIPS**	**542.44**	**-66.74**	**-75.95**	**5.067**	**265.52**
99.00	90.0	Overload	KSI	36.00	6.11	4.10	6.850	358.94
108.33	98.5	Flexure	KSI	36.00	1.02	0.69	42.232	2212.96
108.33	**98.5**	**Shear**	**KIPS**	**320.44**	**-80.49**	**-84.26**	**2.160**	**113.19**
108.33	98.5	Overload	KSI	36.00	1.02	0.69	47.811	2505.28
110.00	100.0	Flexure	KSI	-36.00	-0.00	-0.00	99.000	5187.60
110.00	**100.0**	**Shear**	**KIPS**	**320.44**	**-82.95**	**-85.74**	**2.091**	**109.57**
110.00	100.0	Overload	KSI	-36.00	-0.00	-0.00	99.000	5187.60

Detailed Rating Results
Girder E - As Inspected
RI-6
Axle Load
Impact: As Requested
Lane: As Requested

Span 1

Location (ft)	Percent	Limit State	Units	Capacity	DL + Adj -LL*	LL	Permit Rating Factor	Permit Load Rating (Ton)
0.00	0.0	Flexure	KSI	-36.00	-0.00	-0.00	99.000	6435.00
0.00	**0.0**	**Shear**	**KIPS**	**336.32**	**82.95**	**97.27**	**1.901**	**123.56**
0.00	0.0	Overload	KSI	-36.00	-0.00	-0.00	99.000	6435.00
11.00	10.0	Flexure	KSI	36.00	6.11	4.60	4.953	321.94
11.00	**10.0**	**Shear**	**KIPS**	**542.44**	**66.74**	**85.11**	**4.338**	**281.97**
11.00	10.0	Overload	KSI	36.00	6.11	4.60	6.112	397.29
22.00	**20.0**	**Flexure**	**KSI**	**36.00**	**10.91**	**7.90**	**2.243**	**145.82**
22.00	20.0	Shear	KIPS	542.44	50.54	72.96	5.296	344.24
22.00	20.0	Overload	KSI	36.00	10.91	7.90	2.950	191.72
25.50	**23.2**	**Flexure**	**KSI**	**36.00**	**12.14**	**8.75**	**1.877**	**122.00**
25.50	23.2	Shear	KIPS	542.44	44.91	69.09	5.678	369.10
25.50	23.2	Overload	KSI	36.00	12.14	8.75	2.522	163.92
33.00	**30.0**	**Flexure**	**KSI**	**36.00**	**11.21**	**8.18**	**2.125**	**138.11**
33.00	30.0	Shear	KIPS	542.44	33.61	60.81	6.649	432.18
33.00	30.0	Overload	KSI	36.00	11.21	8.18	2.810	182.63
44.00	**40.0**	**Flexure**	**KSI**	**36.00**	**12.83**	**8.95**	**1.752**	**113.87**
44.00	40.0	Shear	KIPS	542.44	17.04	48.65	8.670	563.58
44.00	40.0	Overload	KSI	36.00	12.83	8.95	2.387	155.19

49.50	**45.0**	**Flexure**	**KSI**	**36.00**	**13.23**	**9.02**	**1.691**	**109.93**
49.50	45.0	Shear	KIPS	542.44	8.29	42.58	10.125	658.14
49.50	45.0	Overload	KSI	36.00	13.23	9.02	2.324	151.07
55.00	**50.0**	**Flexure**	**KSI**	**36.00**	**13.36**	**8.83**	**1.712**	**111.29**
55.00	50.0	Shear	KIPS	542.44	0.00	-36.50	12.051	783.33
55.00	50.0	Overload	KSI	36.00	13.36	8.83	2.360	153.38
66.00	**60.0**	**Flexure**	**KSI**	**36.00**	**12.83**	**8.95**	**1.752**	**113.87**
66.00	60.0	Shear	KIPS	542.44	-17.04	-48.65	8.670	563.58
66.00	60.0	Overload	KSI	36.00	12.83	8.95	2.387	155.19
77.00	**70.0**	**Flexure**	**KSI**	**36.00**	**11.21**	**8.18**	**2.125**	**138.11**
77.00	70.0	Shear	KIPS	542.44	-33.61	-60.81	6.649	432.18
77.00	70.0	Overload	KSI	36.00	11.21	8.18	2.810	182.63
84.50	**76.8**	**Flexure**	**KSI**	**36.00**	**12.14**	**8.75**	**1.877**	**122.00**
84.50	76.8	Shear	KIPS	542.44	-44.91	-69.09	5.678	369.10
84.50	76.8	Overload	KSI	36.00	12.14	8.75	2.522	163.92
88.00	**80.0**	**Flexure**	**KSI**	**36.00**	**10.91**	**7.90**	**2.243**	**145.82**
88.00	80.0	Shear	KIPS	542.44	-50.54	-72.96	5.296	344.24
88.00	80.0	Overload	KSI	36.00	10.91	7.90	2.950	191.72
99.00	90.0	Flexure	KSI	36.00	6.11	4.60	4.953	321.94
99.00	**90.0**	**Shear**	**KIPS**	**542.44**	**-66.74**	**-85.11**	**4.338**	**281.97**
99.00	90.0	Overload	KSI	36.00	6.11	4.60	6.112	397.29
108.33	98.5	Flexure	KSI	36.00	1.02	0.79	35.778	2325.58
108.33	**98.5**	**Shear**	**KIPS**	**320.44**	**-80.49**	**-95.42**	**1.830**	**118.95**
108.33	98.5	Overload	KSI	36.00	1.02	0.79	42.216	2744.03
110.00	100.0	Flexure	KSI	-36.00	-0.00	-0.00	99.000	6435.00
110.00	**100.0**	**Shear**	**KIPS**	**320.44**	**-82.95**	**-97.27**	**1.769**	**114.95**
110.00	100.0	Overload	KSI	-36.00	-0.00	-0.00	99.000	6435.00

Detailed Rating Results
Girder E - As Inspected
RIDOT H20 Truck
Axle Load
Impact: As Requested
Lane: As Requested

Span 1

Location (ft)	Percent	Limit State	Units	Capacity	DL + Adj -LL*	LL	Legal Rating Factor	Legal Load Rating (Ton)
0.00	0.0	Flexure	KSI	-36.00	-0.00	-0.00	99.000	1980.00
0.00	**0.0**	**Shear**	**KIPS**	**336.32**	**82.95**	**36.44**	**4.813**	**96.26**

0.00	0.0	Overload	KSI	-36.00	-0.00	-0.00	99.000	1980.00
11.00	10.0	Flexure	KSI	36.00	6.11	1.77	12.228	244.55
11.00	**10.0**	**Shear**	**KIPS**	**542.44**	**66.74**	**32.70**	**10.710**	**214.19**
11.00	10.0	Overload	KSI	36.00	6.11	1.77	12.237	244.73
22.00	**20.0**	**Flexure**	**KSI**	**36.00**	**10.91**	**3.13**	**5.374**	**107.48**
22.00	20.0	Shear	KIPS	542.44	50.54	28.96	12.655	253.10
22.00	20.0	Overload	KSI	36.00	10.91	3.13	5.730	114.59
25.50	**23.2**	**Flexure**	**KSI**	**36.00**	**12.14**	**3.48**	**4.480**	**89.61**
25.50	23.2	Shear	KIPS	542.44	44.91	27.77	13.400	268.00
25.50	23.2	Overload	KSI	36.00	12.14	3.48	4.882	97.63
33.00	**30.0**	**Flexure**	**KSI**	**36.00**	**11.21**	**3.30**	**4.993**	**99.87**
33.00	30.0	Shear	KIPS	542.44	33.61	25.22	15.204	304.08
33.00	30.0	Overload	KSI	36.00	11.21	3.30	5.355	107.09
44.00	**40.0**	**Flexure**	**KSI**	**36.00**	**12.83**	**3.75**	**3.966**	**79.31**
44.00	40.0	Shear	KIPS	542.44	17.04	21.49	18.625	372.50
44.00	40.0	Overload	KSI	36.00	12.83	3.75	4.383	87.65
49.50	**45.0**	**Flexure**	**KSI**	**36.00**	**13.23**	**3.85**	**3.758**	**75.16**
49.50	45.0	Shear	KIPS	542.44	8.29	19.62	20.848	416.96
49.50	45.0	Overload	KSI	36.00	13.23	3.85	4.188	83.76
55.00	**50.0**	**Flexure**	**KSI**	**36.00**	**13.36**	**3.87**	**3.704**	**74.09**
55.00	50.0	Shear	KIPS	542.44	0.00	-17.75	23.513	470.27
55.00	50.0	Overload	KSI	36.00	13.36	3.87	4.140	82.80
66.00	**60.0**	**Flexure**	**KSI**	**36.00**	**12.83**	**3.75**	**3.966**	**79.31**
66.00	60.0	Shear	KIPS	542.44	-17.04	-21.49	18.625	372.50
66.00	60.0	Overload	KSI	36.00	12.83	3.75	4.383	87.65
77.00	**70.0**	**Flexure**	**KSI**	**36.00**	**11.21**	**3.30**	**4.993**	**99.87**
77.00	70.0	Shear	KIPS	542.44	-33.61	-25.22	15.204	304.08
77.00	70.0	Overload	KSI	36.00	11.21	3.30	5.355	107.09
84.50	**76.8**	**Flexure**	**KSI**	**36.00**	**12.14**	**3.48**	**4.480**	**89.61**
84.50	76.8	Shear	KIPS	542.44	-44.91	-27.77	13.400	268.00
84.50	76.8	Overload	KSI	36.00	12.14	3.48	4.882	97.63
88.00	**80.0**	**Flexure**	**KSI**	**36.00**	**10.91**	**3.13**	**5.374**	**107.48**
88.00	80.0	Shear	KIPS	542.44	-50.54	-28.96	12.655	253.10
88.00	80.0	Overload	KSI	36.00	10.91	3.13	5.730	114.59
99.00	90.0	Flexure	KSI	36.00	6.11	1.77	12.228	244.55
99.00	**90.0**	**Shear**	**KIPS**	**542.44**	**-66.74**	**-32.70**	**10.710**	**214.19**
99.00	90.0	Overload	KSI	36.00	6.11	1.77	12.237	244.73
108.33	98.5	Flexure	KSI	36.00	1.02	0.30	90.271	1805.42
108.33	**98.5**	**Shear**	**KIPS**	**320.44**	**-80.49**	**-35.88**	**4.617**	**92.35**
108.33	98.5	Overload	KSI	36.00	1.02	0.30	86.375	1727.49
110.00	100.0	Flexure	KSI	-36.00	-0.00	-0.00	99.000	1980.00
110.00	**100.0**	**Shear**	**KIPS**	**320.44**	**-82.95**	**-36.44**	**4.478**	**89.55**
110.00	100.0	Overload	KSI	-36.00	-0.00	-0.00	99.000	1980.00

Detailed Rating Results
Girder E - As Inspected
RI-OP 1
Axle Load
Impact: As Requested
Lane: As Requested

Span 1

Location (ft)	Percent	Limit State	Units	Capacity	DL + Adj -LL*	LL	Permit Rating Factor	Permit Load Rating (Ton)
0.00	0.0	Flexure	KSI	-36.00	-0.00	-0.00	99.000	5593.50
0.00	**0.0**	**Shear**	**KIPS**	**336.32**	**82.95**	**66.31**	**2.866**	**161.90**
0.00	0.0	Overload	KSI	-36.00	-0.00	-0.00	99.000	5593.50
11.00	10.0	Flexure	KSI	36.00	6.11	2.62	8.916	503.77
11.00	**10.0**	**Shear**	**KIPS**	**542.44**	**66.74**	**58.85**	**6.447**	**364.26**
11.00	10.0	Overload	KSI	36.00	6.11	2.62	10.707	604.97
22.00	**20.0**	**Flexure**	**KSI**	**36.00**	**10.91**	**4.66**	**3.910**	**220.91**
22.00	20.0	Shear	KIPS	542.44	50.54	51.39	7.726	436.53
22.00	20.0	Overload	KSI	36.00	10.91	4.66	5.002	282.64
25.50	**23.2**	**Flexure**	**KSI**	**36.00**	**12.14**	**5.18**	**3.256**	**183.96**
25.50	23.2	Shear	KIPS	542.44	44.91	49.02	8.225	464.70
25.50	23.2	Overload	KSI	36.00	12.14	5.18	4.257	240.53
33.00	**30.0**	**Flexure**	**KSI**	**36.00**	**11.21**	**4.92**	**3.635**	**205.37**
33.00	30.0	Shear	KIPS	542.44	33.61	43.94	9.456	534.29
33.00	30.0	Overload	KSI	36.00	11.21	4.92	4.677	264.26
44.00	**40.0**	**Flexure**	**KSI**	**36.00**	**12.83**	**5.63**	**2.862**	**161.71**
44.00	40.0	Shear	KIPS	542.44	17.04	36.48	11.884	671.45
44.00	40.0	Overload	KSI	36.00	12.83	5.63	3.796	214.46
49.50	**45.0**	**Flexure**	**KSI**	**36.00**	**13.23**	**5.82**	**2.697**	**152.40**
49.50	45.0	Shear	KIPS	542.44	8.29	32.75	13.527	764.29
49.50	45.0	Overload	KSI	36.00	13.23	5.82	3.607	203.79
55.00	**50.0**	**Flexure**	**KSI**	**36.00**	**13.36**	**5.87**	**2.650**	**149.71**
55.00	50.0	Shear	KIPS	542.44	0.00	-29.02	15.576	880.05
55.00	50.0	Overload	KSI	36.00	13.36	5.87	3.553	200.77
66.00	**60.0**	**Flexure**	**KSI**	**36.00**	**12.83**	**5.63**	**2.862**	**161.71**
66.00	60.0	Shear	KIPS	542.44	-17.04	-36.48	11.884	671.45
66.00	60.0	Overload	KSI	36.00	12.83	5.63	3.796	214.46
77.00	**70.0**	**Flexure**	**KSI**	**36.00**	**11.21**	**4.92**	**3.635**	**205.37**
77.00	70.0	Shear	KIPS	542.44	-33.61	-43.94	9.456	534.29

77.00	70.0	Overload	KSI	36.00	11.21	4.92	4.677	264.26
84.50	**76.8**	**Flexure**	**KSI**	**36.00**	**12.14**	**5.18**	**3.256**	**183.96**
84.50	76.8	Shear	KIPS	542.44	-44.91	-49.02	8.225	464.70
84.50	76.8	Overload	KSI	36.00	12.14	5.18	4.257	240.53
88.00	**80.0**	**Flexure**	**KSI**	**36.00**	**10.91**	**4.66**	**3.910**	**220.91**
88.00	80.0	Shear	KIPS	542.44	-50.54	-51.39	7.726	436.53
88.00	80.0	Overload	KSI	36.00	10.91	4.66	5.002	282.64
99.00	90.0	Flexure	KSI	36.00	6.11	2.62	8.916	503.77
99.00	**90.0**	**Shear**	**KIPS**	**542.44**	**-66.74**	**-58.85**	**6.447**	**364.26**
99.00	90.0	Overload	KSI	36.00	6.11	2.62	10.707	604.97
108.33	98.5	Flexure	KSI	36.00	1.02	0.44	65.202	3683.90
108.33	**98.5**	**Shear**	**KIPS**	**320.44**	**-80.49**	**-65.18**	**2.753**	**155.56**
108.33	98.5	Overload	KSI	36.00	1.02	0.44	74.865	4229.85
110.00	100.0	Flexure	KSI	-36.00	-0.00	-0.00	99.000	5593.50
110.00	**100.0**	**Shear**	**KIPS**	**320.44**	**-82.95**	**-66.31**	**2.666**	**150.62**
110.00	100.0	Overload	KSI	-36.00	-0.00	-0.00	99.000	5593.50

Detailed Rating Results
Girder E - As Inspected
RI-OP 2
Axle Load
Impact: As Requested
Lane: As Requested

Span 1

Location (ft)	Percent	Limit State	Units	Capacity	DL + Adj -LL*	LL	Permit Rating Factor	Permit Load Rating (Ton)
0.00	0.0	Flexure	KSI	-36.00	-0.00	-0.00	99.000	7920.00
0.00	**0.0**	**Shear**	**KIPS**	**336.32**	**82.95**	**77.08**	**2.465**	**197.22**
0.00	0.0	Overload	KSI	-36.00	-0.00	-0.00	99.000	7920.00
11.00	10.0	Flexure	KSI	36.00	6.11	2.96	7.889	631.11
11.00	**10.0**	**Shear**	**KIPS**	**542.44**	**66.74**	**66.52**	**5.704**	**456.34**
11.00	10.0	Overload	KSI	36.00	6.11	2.96	9.474	757.89
22.00	**20.0**	**Flexure**	**KSI**	**36.00**	**10.91**	**5.11**	**3.561**	**284.86**
22.00	20.0	Shear	KIPS	542.44	50.54	55.96	7.096	567.69
22.00	20.0	Overload	KSI	36.00	10.91	5.11	4.556	364.46
25.50	**23.2**	**Flexure**	**KSI**	**36.00**	**12.14**	**5.62**	**3.003**	**240.28**
25.50	23.2	Shear	KIPS	542.44	44.91	52.60	7.666	613.24
25.50	23.2	Overload	KSI	36.00	12.14	5.62	3.927	314.16
33.00	**30.0**	**Flexure**	**KSI**	**36.00**	**11.21**	**5.21**	**3.429**	**274.32**

33.00	30.0	Shear	KIPS	542.44	33.61	45.40	9.152	732.16
33.00	30.0	Overload	KSI	36.00	11.21	5.21	4.412	352.99
44.00	**40.0**	**Flexure**	**KSI**	**36.00**	**12.83**	**5.63**	**2.863**	**229.08**
44.00	40.0	Shear	KIPS	542.44	17.04	35.31	12.277	982.13
44.00	40.0	Overload	KSI	36.00	12.83	5.63	3.798	303.81
49.50	**45.0**	**Flexure**	**KSI**	**36.00**	**13.23**	**5.62**	**2.791**	**223.28**
49.50	45.0	Shear	KIPS	542.44	8.29	30.46	14.544	1163.50
49.50	45.0	Overload	KSI	36.00	13.23	5.62	3.732	298.58
55.00	**50.0**	**Flexure**	**KSI**	**36.00**	**13.36**	**5.48**	**2.835**	**226.79**
55.00	50.0	Shear	KIPS	542.44	0.00	-25.79	17.529	1402.31
55.00	50.0	Overload	KSI	36.00	13.36	5.48	3.802	304.13
66.00	**60.0**	**Flexure**	**KSI**	**36.00**	**12.83**	**5.63**	**2.863**	**229.08**
66.00	60.0	Shear	KIPS	542.44	-17.04	-35.31	12.277	982.13
66.00	60.0	Overload	KSI	36.00	12.83	5.63	3.798	303.81
77.00	**70.0**	**Flexure**	**KSI**	**36.00**	**11.21**	**5.21**	**3.429**	**274.32**
77.00	70.0	Shear	KIPS	542.44	-33.61	-45.40	9.152	732.16
77.00	70.0	Overload	KSI	36.00	11.21	5.21	4.412	352.99
84.50	**76.8**	**Flexure**	**KSI**	**36.00**	**12.14**	**5.62**	**3.003**	**240.28**
84.50	76.8	Shear	KIPS	542.44	-44.91	-52.60	7.666	613.24
84.50	76.8	Overload	KSI	36.00	12.14	5.62	3.927	314.16
88.00	**80.0**	**Flexure**	**KSI**	**36.00**	**10.91**	**5.11**	**3.561**	**284.86**
88.00	80.0	Shear	KIPS	542.44	-50.54	-55.96	7.096	567.69
88.00	80.0	Overload	KSI	36.00	10.91	5.11	4.556	364.46
99.00	90.0	Flexure	KSI	36.00	6.11	2.96	7.889	631.11
99.00	**90.0**	**Shear**	**KIPS**	**542.44**	**-66.74**	**-66.52**	**5.704**	**456.34**
99.00	90.0	Overload	KSI	36.00	6.11	2.96	9.474	757.89
108.33	98.5	Flexure	KSI	36.00	1.02	0.51	56.307	4504.57
108.33	**98.5**	**Shear**	**KIPS**	**320.44**	**-80.49**	**-75.47**	**2.378**	**190.22**
108.33	98.5	Overload	KSI	36.00	1.02	0.51	64.652	5172.15
110.00	100.0	Flexure	KSI	-36.00	-0.00	-0.00	99.000	7920.00
110.00	**100.0**	**Shear**	**KIPS**	**320.44**	**-82.95**	**-77.08**	**2.293**	**183.48**
110.00	100.0	Overload	KSI	-36.00	-0.00	-0.00	99.000	7920.00

Detailed Rating Results
Girder E - As Inspected
RI-OP 3
Axle Load
Impact: As Requested
Lane: As Requested

Span 1

Location							Permit Rating	Permit

(ft)	Percent	Limit State	Units	Capacity	DL + Adj -LL*	LL	Factor	Load Rating (Ton)
0.00	0.0	Flexure	KSI	-36.00	-0.00	-0.00	99.000	11187.00
0.00	**0.0**	**Shear**	**KIPS**	**336.32**	**82.95**	**86.06**	**2.208**	**249.48**
0.00	0.0	Overload	KSI	-36.00	-0.00	-0.00	99.000	11187.00
11.00	10.0	Flexure	KSI	36.00	6.11	3.22	7.274	821.98
11.00	**10.0**	**Shear**	**KIPS**	**542.44**	**66.74**	**71.70**	**5.292**	**598.02**
11.00	10.0	Overload	KSI	36.00	6.11	3.22	8.735	987.11
22.00	**20.0**	**Flexure**	**KSI**	**36.00**	**10.91**	**5.43**	**3.352**	**378.80**
22.00	20.0	Shear	KIPS	542.44	50.54	58.76	6.758	763.60
22.00	20.0	Overload	KSI	36.00	10.91	5.43	4.289	484.65
25.50	**23.2**	**Flexure**	**KSI**	**36.00**	**12.14**	**5.97**	**2.828**	**319.51**
25.50	23.2	Shear	KIPS	542.44	44.91	55.23	7.300	824.87
25.50	23.2	Overload	KSI	36.00	12.14	5.97	3.697	417.76
33.00	**30.0**	**Flexure**	**KSI**	**36.00**	**11.21**	**5.54**	**3.228**	**364.75**
33.00	30.0	Shear	KIPS	542.44	33.61	47.67	8.715	984.81
33.00	30.0	Overload	KSI	36.00	11.21	5.54	4.154	469.35
44.00	**40.0**	**Flexure**	**KSI**	**36.00**	**12.83**	**6.13**	**2.627**	**296.91**
44.00	40.0	Shear	KIPS	542.44	17.04	37.69	11.503	1299.83
44.00	40.0	Overload	KSI	36.00	12.83	6.13	3.485	393.76
49.50	**45.0**	**Flexure**	**KSI**	**36.00**	**13.23**	**6.24**	**2.513**	**283.98**
49.50	45.0	Shear	KIPS	542.44	8.29	33.54	13.207	1492.39
49.50	45.0	Overload	KSI	36.00	13.23	6.24	3.361	379.75
55.00	**50.0**	**Flexure**	**KSI**	**36.00**	**13.36**	**6.19**	**2.512**	**283.85**
55.00	50.0	Shear	KIPS	542.44	0.00	-29.58	15.280	1726.59
55.00	50.0	Overload	KSI	36.00	13.36	6.19	3.369	380.66
66.00	**60.0**	**Flexure**	**KSI**	**36.00**	**12.83**	**6.13**	**2.627**	**296.91**
66.00	60.0	Shear	KIPS	542.44	-17.04	-37.69	11.503	1299.83
66.00	60.0	Overload	KSI	36.00	12.83	6.13	3.485	393.76
77.00	**70.0**	**Flexure**	**KSI**	**36.00**	**11.21**	**5.54**	**3.228**	**364.75**
77.00	70.0	Shear	KIPS	542.44	-33.61	-47.67	8.715	984.81
77.00	70.0	Overload	KSI	36.00	11.21	5.54	4.154	469.35
84.50	**76.8**	**Flexure**	**KSI**	**36.00**	**12.14**	**5.97**	**2.828**	**319.51**
84.50	76.8	Shear	KIPS	542.44	-44.91	-55.23	7.300	824.87
84.50	76.8	Overload	KSI	36.00	12.14	5.97	3.697	417.76
88.00	**80.0**	**Flexure**	**KSI**	**36.00**	**10.91**	**5.43**	**3.352**	**378.80**
88.00	80.0	Shear	KIPS	542.44	-50.54	-58.76	6.758	763.60
88.00	80.0	Overload	KSI	36.00	10.91	5.43	4.289	484.65
99.00	90.0	Flexure	KSI	36.00	6.11	3.22	7.274	821.98
99.00	**90.0**	**Shear**	**KIPS**	**542.44**	**-66.74**	**-71.70**	**5.292**	**598.02**
99.00	90.0	Overload	KSI	36.00	6.11	3.22	8.735	987.11

108.33	98.5	Flexure	KSI	36.00	1.02	0.57	50.686	5727.54
108.33	**98.5**	**Shear**	**KIPS**	**320.44**	**-80.49**	**-83.84**	**2.140**	**241.86**
108.33	98.5	Overload	KSI	36.00	1.02	0.57	58.198	6576.36
110.00	100.0	Flexure	KSI	-36.00	-0.00	-0.00	99.000	11187.00
110.00	**100.0**	**Shear**	**KIPS**	**320.44**	**-82.95**	**-86.06**	**2.054**	**232.10**
110.00	100.0	Overload	KSI	-36.00	-0.00	-0.00	99.000	11187.00

Detailed Rating Results
Girder E - As Inspected
RIPTA Bus
Axle Load
Impact: As Requested
Lane: As Requested

Span 1

Location (ft)	Percent	Limit State	Units	Capacity	DL + Adj -LL*	LL	Legal Rating Factor	Legal Load Rating (Ton)
0.00	0.0	Flexure	KSI	-36.00	-0.00	-0.00	99.000	2059.20
0.00	**0.0**	**Shear**	**KIPS**	**336.32**	**82.95**	**36.01**	**4.871**	**101.32**
0.00	0.0	Overload	KSI	-36.00	-0.00	-0.00	99.000	2059.20
11.00	10.0	Flexure	KSI	36.00	6.11	1.73	12.451	258.98
11.00	**10.0**	**Shear**	**KIPS**	**542.44**	**66.74**	**32.12**	**10.905**	**226.83**
11.00	10.0	Overload	KSI	36.00	6.11	1.73	12.460	259.17
22.00	**20.0**	**Flexure**	**KSI**	**36.00**	**10.91**	**3.05**	**5.514**	**114.69**
22.00	20.0	Shear	KIPS	542.44	50.54	28.23	12.985	270.09
22.00	20.0	Overload	KSI	36.00	10.91	3.05	5.879	122.28
25.50	**23.2**	**Flexure**	**KSI**	**36.00**	**12.14**	**3.38**	**4.610**	**95.90**
25.50	23.2	Shear	KIPS	542.44	44.91	26.99	13.789	286.81
25.50	23.2	Overload	KSI	36.00	12.14	3.38	5.023	104.49
33.00	**30.0**	**Flexure**	**KSI**	**36.00**	**11.21**	**3.19**	**5.175**	**107.65**
33.00	30.0	Shear	KIPS	542.44	33.61	24.34	15.758	327.76
33.00	30.0	Overload	KSI	36.00	11.21	3.19	5.550	115.43
44.00	**40.0**	**Flexure**	**KSI**	**36.00**	**12.83**	**3.57**	**4.166**	**86.66**
44.00	40.0	Shear	KIPS	542.44	17.04	20.45	19.568	407.02
44.00	40.0	Overload	KSI	36.00	12.83	3.57	4.605	95.78
49.50	**45.0**	**Flexure**	**KSI**	**36.00**	**13.23**	**3.63**	**3.983**	**82.86**
49.50	45.0	Shear	KIPS	542.44	8.29	18.51	22.099	459.65
49.50	45.0	Overload	KSI	36.00	13.23	3.63	4.439	92.33
55.00	**50.0**	**Flexure**	**KSI**	**36.00**	**13.36**	**3.61**	**3.970**	**82.57**
55.00	50.0	Shear	KIPS	542.44	0.00	-16.56	25.196	524.08

55.00	50.0	Overload	KSI	36.00	13.36	3.61	4.436	92.27
66.00	**60.0**	**Flexure**	**KSI**	**36.00**	**12.83**	**3.57**	**4.166**	**86.66**
66.00	60.0	Shear	KIPS	542.44	-17.04	-20.45	19.568	407.02
66.00	60.0	Overload	KSI	36.00	12.83	3.57	4.605	95.78
77.00	**70.0**	**Flexure**	**KSI**	**36.00**	**11.21**	**3.19**	**5.175**	**107.65**
77.00	70.0	Shear	KIPS	542.44	-33.61	-24.34	15.758	327.76
77.00	70.0	Overload	KSI	36.00	11.21	3.19	5.550	115.43
84.50	**76.8**	**Flexure**	**KSI**	**36.00**	**12.14**	**3.38**	**4.610**	**95.90**
84.50	76.8	Shear	KIPS	542.44	-44.91	-26.99	13.789	286.81
84.50	76.8	Overload	KSI	36.00	12.14	3.38	5.023	104.49
88.00	**80.0**	**Flexure**	**KSI**	**36.00**	**10.91**	**3.05**	**5.514**	**114.69**
88.00	80.0	Shear	KIPS	542.44	-50.54	-28.23	12.985	270.09
88.00	80.0	Overload	KSI	36.00	10.91	3.05	5.879	122.28
99.00	90.0	Flexure	KSI	36.00	6.11	1.73	12.451	258.98
99.00	**90.0**	**Shear**	**KIPS**	**542.44**	**-66.74**	**-32.12**	**10.905**	**226.83**
99.00	90.0	Overload	KSI	36.00	6.11	1.73	12.460	259.17
108.33	98.5	Flexure	KSI	36.00	1.02	0.29	91.444	1902.03
108.33	**98.5**	**Shear**	**KIPS**	**320.44**	**-80.49**	**-35.42**	**4.677**	**97.29**
108.33	98.5	Overload	KSI	36.00	1.02	0.29	87.496	1819.92
110.00	100.0	Flexure	KSI	-36.00	-0.00	-0.00	99.000	2059.20
110.00	**100.0**	**Shear**	**KIPS**	**320.44**	**-82.95**	**-36.01**	**4.532**	**94.26**
110.00	100.0	Overload	KSI	-36.00	-0.00	-0.00	99.000	2059.20

Note:
*Adj-LL is only applicable for Permit load rating.

Bridge Name: Mohegan Bridge
NBI Structure ID:
Bridge ID: 067301

Analyzed By: BrR
Analyze Date: Friday, September 14, 2018 20:39:46
Analysis Engine: AASHTO LRFR Engine Version 6.8.2.3002
Analysis Preference Setting: None

Report By: brr
Report Date: Friday, September 14, 2018 20:40:25

Structure Definition Name: Span 1
Member Name: Girder F
Member Alternative Name: Girder F

Load and Resistance Factor Rating Summary

Live Load		Rating Factor	Girder Summary Controls	Capacity (Ton)	Span	Location (ft)	Percent	Impact	Lane
EV2	Legal	3.946	STRENGTH-I Steel Flexure Stress	113.46	1	55.00	50.0	As Requested	As Requested
EV3	Legal	2.605	STRENGTH-I Steel Flexure Stress	112.00	1	55.00	50.0	As Requested	As Requested
HL-93 (US)	Inventory	1.068	STRENGTH-I Steel Flexure Stress	38.44	1	55.00	50.0	As Requested	As Requested
HL-93 (US)	Operating	1.384	STRENGTH-I Steel Flexure Stress	49.82	1	55.00	50.0	As Requested	As Requested
SU4	Legal	2.863	STRENGTH-I Steel Flexure Stress	77.29	1	55.00	50.0	As Requested	As Requested
SU5	Legal	2.553	STRENGTH-I Steel Flexure Stress	79.13	1	55.00	50.0	As Requested	As Requested
SU6	Legal	2.283	STRENGTH-I Steel Flexure Stress	79.35	1	55.00	50.0	As Requested	As Requested
SU7	Legal	2.073	STRENGTH-I Steel Flexure Stress	80.32	1	55.00	50.0	As Requested	As Requested
Type 3	Legal	3.167	STRENGTH-I Steel Flexure Stress	79.18	1	55.00	50.0	As Requested	As Requested
Type 3-3	Legal	2.511	STRENGTH-I Steel Flexure Stress	100.45	1	55.00	50.0	As Requested	As Requested
Type 3S2	Legal	2.575	STRENGTH-I Steel Flexure Stress	92.69	1	55.00	50.0	As Requested	As Requested
RI-3	Permit	2.228	STRENGTH-II Steel Flexure Stress	84.66	1	55.00	50.0	As Requested	As Requested
RI-4	Permit	2.282	STRENGTH-II Steel Flexure Stress	85.58	1	55.00	50.0	As Requested	As Requested
RI-5	Permit	1.787	STRENGTH-II Steel Flexure Stress	93.64	1	55.00	50.0	As Requested	As Requested

RI-6	Permit	1.691	STRENGTH-II Steel Flexure Stress	109.93	1	49.50	45.0	As Requested	As Requested
RIDOT H20 Truck	Legal	3.704	STRENGTH-I Steel Flexure Stress	74.09	1	55.00	50.0	As Requested	As Requested
RI-OP 1	Permit	2.650	STRENGTH-II Steel Flexure Stress	149.71	1	55.00	50.0	As Requested	As Requested
RI-OP 2	Permit	2.465	STRENGTH-II Steel Shear	197.22	1	110.00	100.0	As Requested	As Requested
RI-OP 3	Permit	2.208	STRENGTH-II Steel Shear	249.48	1	110.00	100.0	As Requested	As Requested
RIPTA Bus	Legal	3.970	STRENGTH-I Steel Flexure Stress	82.57	1	55.00	50.0	As Requested	As Requested

Note:
"N/A" indicates not applicable
"**" indicates not available

Report by Action: ☑ **Flexure** ☑ **Shear** ☑ **Overload** ☑ **Interaction** ☑ **Critical**

Detailed Rating Results
Girder F
EV2
Axle Load
Impact: As Requested
Lane: As Requested

Span 1

Location (ft)	Percent	Limit State	Units	Capacity	DL + Adj -LL*	LL	Legal Rating Factor	Legal Load Rating (Ton)
0.00	0.0	Flexure	KSI	-36.00	-0.00	-0.00	99.000	2846.25
0.00	**0.0**	**Shear**	**KIPS**	**336.32**	**82.95**	**42.95**	**4.084**	**117.42**
0.00	0.0	Overload	KSI	-36.00	-0.00	-0.00	99.000	2846.25
11.00	10.0	Flexure	KSI	36.00	6.11	1.71	12.616	362.72
11.00	**10.0**	**Shear**	**KIPS**	**542.44**	**66.74**	**38.39**	**9.123**	**262.27**
11.00	10.0	Overload	KSI	36.00	6.11	1.71	12.626	362.99
22.00	**20.0**	**Flexure**	**KSI**	**36.00**	**10.91**	**3.02**	**5.571**	**160.18**
22.00	20.0	Shear	KIPS	542.44	50.54	33.84	10.832	311.41
22.00	20.0	Overload	KSI	36.00	10.91	3.02	5.940	170.78
25.50	**23.2**	**Flexure**	**KSI**	**36.00**	**12.14**	**3.35**	**4.654**	**133.79**
25.50	23.2	Shear	KIPS	542.44	44.91	32.39	11.490	330.34
25.50	23.2	Overload	KSI	36.00	12.14	3.35	5.070	145.78
33.00	**30.0**	**Flexure**	**KSI**	**36.00**	**11.21**	**3.17**	**5.210**	**149.78**
33.00	30.0	Shear	KIPS	542.44	33.61	29.29	13.096	376.51
33.00	30.0	Overload	KSI	36.00	11.21	3.17	5.587	160.62
44.00	**40.0**	**Flexure**	**KSI**	**36.00**	**12.83**	**3.56**	**4.173**	**119.97**
44.00	40.0	Shear	KIPS	542.44	17.04	24.73	16.180	465.19
44.00	40.0	Overload	KSI	36.00	12.83	3.56	4.612	132.59
49.50	**45.0**	**Flexure**	**KSI**	**36.00**	**13.23**	**3.64**	**3.976**	**114.32**
49.50	45.0	Shear	KIPS	542.44	8.29	22.45	18.212	523.59
49.50	45.0	Overload	KSI	36.00	13.23	3.64	4.431	127.40
55.00	**50.0**	**Flexure**	**KSI**	**36.00**	**13.36**	**3.64**	**3.946**	**113.46**
55.00	50.0	Shear	KIPS	542.44	0.00	-20.18	20.679	594.54
55.00	50.0	Overload	KSI	36.00	13.36	3.64	4.410	126.79
66.00	**60.0**	**Flexure**	**KSI**	**36.00**	**12.83**	**3.56**	**4.173**	**119.97**
66.00	60.0	Shear	KIPS	542.44	-17.04	-24.73	16.180	465.19
66.00	60.0	Overload	KSI	36.00	12.83	3.56	4.612	132.59

77.00	**70.0**	**Flexure**	**KSI**	**36.00**	**11.21**	**3.17**	**5.210**	**149.78**
77.00	70.0	Shear	KIPS	542.44	-33.61	-29.29	13.096	376.51
77.00	70.0	Overload	KSI	36.00	11.21	3.17	5.587	160.62
84.50	**76.8**	**Flexure**	**KSI**	**36.00**	**12.14**	**3.35**	**4.654**	**133.79**
84.50	76.8	Shear	KIPS	542.44	-44.91	-32.39	11.490	330.34
84.50	76.8	Overload	KSI	36.00	12.14	3.35	5.070	145.78
88.00	**80.0**	**Flexure**	**KSI**	**36.00**	**10.91**	**3.02**	**5.571**	**160.18**
88.00	80.0	Shear	KIPS	542.44	-50.54	-33.84	10.832	311.41
88.00	80.0	Overload	KSI	36.00	10.91	3.02	5.940	170.78
99.00	90.0	Flexure	KSI	36.00	6.11	1.71	12.616	362.72
99.00	**90.0**	**Shear**	**KIPS**	**542.44**	**-66.74**	**-38.39**	**9.123**	**262.27**
99.00	90.0	Overload	KSI	36.00	6.11	1.71	12.626	362.99
110.00	100.0	Flexure	KSI	-36.00	-0.00	-0.00	99.000	2846.25
110.00	**100.0**	**Shear**	**KIPS**	**336.32**	**-82.95**	**-42.95**	**4.084**	**117.42**
110.00	100.0	Overload	KSI	-36.00	-0.00	-0.00	99.000	2846.25

Detailed Rating Results
Girder F
EV3
Axle Load
Impact: As Requested
Lane: As Requested

Span 1

Location (ft)	Percent	Limit State	Units	Capacity	DL + Adj -LL*	LL	Legal Rating Factor	Legal Load Rating (Ton)
0.00	0.0	Flexure	KSI	-36.00	-0.00	-0.00	99.000	4257.00
0.00	**0.0**	**Shear**	**KIPS**	**336.32**	**82.95**	**63.93**	**2.743**	**117.96**
0.00	0.0	Overload	KSI	-36.00	-0.00	-0.00	99.000	4257.00
11.00	10.0	Flexure	KSI	36.00	6.11	2.55	8.479	364.62
11.00	**10.0**	**Shear**	**KIPS**	**542.44**	**66.74**	**57.12**	**6.131**	**263.65**
11.00	10.0	Overload	KSI	36.00	6.11	2.55	8.486	364.89
22.00	**20.0**	**Flexure**	**KSI**	**36.00**	**10.91**	**4.49**	**3.747**	**161.13**
22.00	20.0	Shear	KIPS	542.44	50.54	50.31	7.285	313.26
22.00	20.0	Overload	KSI	36.00	10.91	4.49	3.995	171.80
25.50	**23.2**	**Flexure**	**KSI**	**36.00**	**12.14**	**4.97**	**3.131**	**134.62**
25.50	23.2	Shear	KIPS	542.44	44.91	48.15	7.730	332.40
25.50	23.2	Overload	KSI	36.00	12.14	4.97	3.411	146.68
33.00	**30.0**	**Flexure**	**KSI**	**36.00**	**11.21**	**4.70**	**3.507**	**150.81**
33.00	30.0	Shear	KIPS	542.44	33.61	43.50	8.816	379.10

33.00	30.0	Overload	KSI	36.00	11.21	4.70	3.761	161.72
44.00	**40.0**	**Flexure**	**KSI**	**36.00**	**12.83**	**5.32**	**2.794**	**120.15**
44.00	40.0	Shear	KIPS	542.44	17.04	36.69	10.907	468.98
44.00	40.0	Overload	KSI	36.00	12.83	5.32	3.088	132.79
49.50	**45.0**	**Flexure**	**KSI**	**36.00**	**13.23**	**5.48**	**2.643**	**113.67**
49.50	45.0	Shear	KIPS	542.44	8.29	33.29	12.286	528.30
49.50	45.0	Overload	KSI	36.00	13.23	5.48	2.946	126.67
55.00	**50.0**	**Flexure**	**KSI**	**36.00**	**13.36**	**5.51**	**2.605**	**112.00**
55.00	50.0	Shear	KIPS	542.44	0.00	-29.88	13.965	600.49
55.00	50.0	Overload	KSI	36.00	13.36	5.51	2.911	125.17
66.00	**60.0**	**Flexure**	**KSI**	**36.00**	**12.83**	**5.32**	**2.794**	**120.15**
66.00	60.0	Shear	KIPS	542.44	-17.04	-36.69	10.907	468.98
66.00	60.0	Overload	KSI	36.00	12.83	5.32	3.088	132.79
77.00	**70.0**	**Flexure**	**KSI**	**36.00**	**11.21**	**4.70**	**3.507**	**150.81**
77.00	70.0	Shear	KIPS	542.44	-33.61	-43.50	8.816	379.10
77.00	70.0	Overload	KSI	36.00	11.21	4.70	3.761	161.72
84.50	**76.8**	**Flexure**	**KSI**	**36.00**	**12.14**	**4.97**	**3.131**	**134.62**
84.50	76.8	Shear	KIPS	542.44	-44.91	-48.15	7.730	332.40
84.50	76.8	Overload	KSI	36.00	12.14	4.97	3.411	146.68
88.00	**80.0**	**Flexure**	**KSI**	**36.00**	**10.91**	**4.49**	**3.747**	**161.13**
88.00	80.0	Shear	KIPS	542.44	-50.54	-50.31	7.285	313.26
88.00	80.0	Overload	KSI	36.00	10.91	4.49	3.995	171.80
99.00	90.0	Flexure	KSI	36.00	6.11	2.55	8.479	364.62
99.00	**90.0**	**Shear**	**KIPS**	**542.44**	**-66.74**	**-57.12**	**6.131**	**263.65**
99.00	90.0	Overload	KSI	36.00	6.11	2.55	8.486	364.89
110.00	100.0	Flexure	KSI	-36.00	-0.00	-0.00	99.000	4257.00
110.00	**100.0**	**Shear**	**KIPS**	**336.32**	**-82.95**	**-63.93**	**2.743**	**117.96**
110.00	100.0	Overload	KSI	-36.00	-0.00	-0.00	99.000	4257.00

Detailed Rating Results
Girder F
HL-93 (US)
Truck + Lane
Impact: As Requested
Lane: As Requested

Span 1

Location (ft)	Percent	Limit State	Units	Capacity	DL + Adj-LL*	LL	Inventory Rating Factor	Inventory Load Rating (Ton)	Operating Rating Factor	Operating Load Rating (Ton)

0.00	0.0	Flexure	KSI	-36.00	-0.00	-0.00	99.000	3564.00	99.000	3564.00
0.00	**0.0**	**Shear**	**KIPS**	**336.32**	**82.95**	**95.70**	**1.362**	**49.01**	**1.765**	**63.54**
0.00	0.0	Overload	KSI	-36.00	-0.00	-0.00	99.000	3564.00	99.000	3564.00
11.00	10.0	Flexure	KSI	36.00	6.11	4.62	3.475	125.08	4.504	162.15
11.00	**10.0**	**Shear**	**KIPS**	**542.44**	**66.74**	**83.03**	**3.134**	**112.81**	**4.062**	**146.24**
11.00	10.0	Overload	KSI	36.00	6.11	4.62	4.681	168.51	6.085	219.06
22.00	**20.0**	**Flexure**	**KSI**	**36.00**	**10.91**	**8.13**	**1.536**	**55.28**	**1.991**	**71.66**
22.00	20.0	Shear	KIPS	542.44	50.54	70.90	3.840	138.25	4.978	179.21
22.00	20.0	Overload	KSI	36.00	10.91	8.13	2.204	79.35	2.865	103.15
25.50	**23.2**	**Flexure**	**KSI**	**36.00**	**12.14**	**9.02**	**1.283**	**46.19**	**1.663**	**59.88**
25.50	23.2	Shear	KIPS	542.44	44.91	67.16	4.116	148.19	5.336	192.10
25.50	23.2	Overload	KSI	36.00	12.14	9.02	1.882	67.75	2.447	88.07
33.00	**30.0**	**Flexure**	**KSI**	**36.00**	**11.21**	**8.52**	**1.438**	**51.75**	**1.863**	**67.09**
33.00	30.0	Shear	KIPS	542.44	33.61	59.33	4.802	172.87	6.225	224.09
33.00	30.0	Overload	KSI	36.00	11.21	8.52	2.075	74.70	2.698	97.11
44.00	**40.0**	**Flexure**	**KSI**	**36.00**	**12.83**	**9.67**	**1.142**	**41.12**	**1.481**	**53.30**
44.00	40.0	Shear	KIPS	542.44	17.04	48.31	6.154	221.54	7.977	287.18
44.00	40.0	Overload	KSI	36.00	12.83	9.67	1.699	61.17	2.209	79.53
49.50	**45.0**	**Flexure**	**KSI**	**36.00**	**13.23**	**9.94**	**1.082**	**38.95**	**1.403**	**50.50**
49.50	45.0	Shear	KIPS	542.44	8.29	43.00	7.065	254.34	9.158	329.70
49.50	45.0	Overload	KSI	36.00	13.23	9.94	1.623	58.44	2.110	75.97
55.00	**50.0**	**Flexure**	**KSI**	**36.00**	**13.36**	**9.98**	**1.068**	**38.44**	**1.384**	**49.82**
55.00	50.0	Shear	KIPS	542.44	0.00	-37.83	8.194	294.99	10.622	382.39
55.00	50.0	Overload	KSI	36.00	13.36	9.98	1.606	57.82	2.088	75.17
66.00	**60.0**	**Flexure**	**KSI**	**36.00**	**12.83**	**9.67**	**1.142**	**41.12**	**1.481**	**53.30**
66.00	60.0	Shear	KIPS	542.44	-17.04	-48.31	6.154	221.54	7.977	287.18
66.00	60.0	Overload	KSI	36.00	12.83	9.67	1.699	61.17	2.209	79.53
77.00	**70.0**	**Flexure**	**KSI**	**36.00**	**11.21**	**8.52**	**1.438**	**51.75**	**1.863**	**67.09**
77.00	70.0	Shear	KIPS	542.44	-33.61	-59.33	4.802	172.87	6.225	224.09
77.00	70.0	Overload	KSI	36.00	11.21	8.52	2.075	74.70	2.698	97.11
84.50	**76.8**	**Flexure**	**KSI**	**36.00**	**12.14**	**9.02**	**1.283**	**46.19**	**1.663**	**59.88**
84.50	76.8	Shear	KIPS	542.44	-44.91	-67.16	4.116	148.19	5.336	192.10
84.50	76.8	Overload	KSI	36.00	12.14	9.02	1.882	67.75	2.447	88.07
88.00	**80.0**	**Flexure**	**KSI**	**36.00**	**10.91**	**8.13**	**1.536**	**55.28**	**1.991**	**71.66**
88.00	80.0	Shear	KIPS	542.44	-50.54	-70.90	3.840	138.25	4.978	179.21
88.00	80.0	Overload	KSI	36.00	10.91	8.13	2.204	79.35	2.865	103.15
99.00	90.0	Flexure	KSI	36.00	6.11	4.62	3.475	125.08	4.504	162.15
99.00	**90.0**	**Shear**	**KIPS**	**542.44**	**-66.74**	**-83.03**	**3.134**	**112.81**	**4.062**	**146.24**

99.00	90.0	Overload	KSI	36.00	6.11	4.62	4.681	168.51	6.085	219.06
110.00	100.0	Flexure	KSI	-36.00	-0.00	-0.00	99.000	3564.00	99.000	3564.00
110.00	**100.0**	**Shear**	**KIPS**	**336.32**	**-82.95**	**-95.70**	**1.362**	**49.01**	**1.765**	**63.54**
110.00	100.0	Overload	KSI	-36.00	-0.00	-0.00	99.000	3564.00	99.000	3564.00

Detailed Rating Results
Girder F
HL-93 (US)
Tandem + Lane
Impact: As Requested
Lane: As Requested

Span 1

Location (ft)	Percent	Limit State	Units	Capacity	DL + Adj-LL*	LL	Inventory Rating Factor	Inventory Load Rating (Ton)	Operating Rating Factor	Operating Load Rating (Ton)
0.00	0.0	Flexure	KSI	-36.00	-0.00	-0.00	99.000	3564.00	99.000	3564.00
0.00	**0.0**	**Shear**	**KIPS**	**336.32**	**82.95**	**78.29**	**1.664**	**59.91**	**2.157**	**77.66**
0.00	0.0	Overload	KSI	-36.00	-0.00	-0.00	99.000	3564.00	99.000	3564.00
11.00	10.0	Flexure	KSI	36.00	6.11	3.80	4.222	151.98	5.472	197.01
11.00	**10.0**	**Shear**	**KIPS**	**542.44**	**66.74**	**67.90**	**3.832**	**137.95**	**4.967**	**178.82**
11.00	10.0	Overload	KSI	36.00	6.11	3.80	5.687	204.73	7.393	266.15
22.00	**20.0**	**Flexure**	**KSI**	**36.00**	**10.91**	**6.74**	**1.852**	**66.66**	**2.400**	**86.41**
22.00	20.0	Shear	KIPS	542.44	50.54	58.06	4.690	168.84	6.080	218.87
22.00	20.0	Overload	KSI	36.00	10.91	6.74	2.658	95.67	3.455	124.38
25.50	**23.2**	**Flexure**	**KSI**	**36.00**	**12.14**	**7.50**	**1.543**	**55.53**	**2.000**	**71.99**
25.50	23.2	Shear	KIPS	542.44	44.91	55.04	5.023	180.83	6.512	234.41
25.50	23.2	Overload	KSI	36.00	12.14	7.50	2.263	81.46	2.941	105.89
33.00	**30.0**	**Flexure**	**KSI**	**36.00**	**11.21**	**7.14**	**1.716**	**61.78**	**2.225**	**80.09**
33.00	30.0	Shear	KIPS	542.44	33.61	48.76	5.843	210.34	7.574	272.66
33.00	30.0	Overload	KSI	36.00	11.21	7.14	2.477	89.19	3.221	115.94
44.00	**40.0**	**Flexure**	**KSI**	**36.00**	**12.83**	**8.14**	**1.358**	**48.90**	**1.761**	**63.39**
44.00	40.0	Shear	KIPS	542.44	17.04	40.02	7.429	267.43	9.630	346.67
44.00	40.0	Overload	KSI	36.00	12.83	8.14	2.021	72.75	2.627	94.57
49.50	**45.0**	**Flexure**	**KSI**	**36.00**	**13.23**	**8.37**	**1.284**	**46.24**	**1.665**	**59.94**
49.50	45.0	Shear	KIPS	542.44	8.29	35.85	8.474	305.07	10.985	395.46
49.50	45.0	Overload	KSI	36.00	13.23	8.37	1.927	69.36	2.505	90.17
55.00	**50.0**	**Flexure**	**KSI**	**36.00**	**13.36**	**8.44**	**1.263**	**45.46**	**1.637**	**58.93**
55.00	50.0	Shear	KIPS	542.44	0.00	-31.82	9.742	350.70	12.628	454.62

55.00	50.0	Overload	KSI	36.00	13.36	8.44	1.900	68.38	2.469	88.90
66.00	**60.0**	**Flexure**	**KSI**	**36.00**	**12.83**	**8.14**	**1.358**	**48.90**	**1.761**	**63.39**
66.00	60.0	Shear	KIPS	542.44	-17.04	-40.02	7.429	267.43	9.630	346.67
66.00	60.0	Overload	KSI	36.00	12.83	8.14	2.021	72.75	2.627	94.57
77.00	**70.0**	**Flexure**	**KSI**	**36.00**	**11.21**	**7.14**	**1.716**	**61.78**	**2.225**	**80.09**
77.00	70.0	Shear	KIPS	542.44	-33.61	-48.76	5.843	210.34	7.574	272.66
77.00	70.0	Overload	KSI	36.00	11.21	7.14	2.477	89.19	3.221	115.94
84.50	**76.8**	**Flexure**	**KSI**	**36.00**	**12.14**	**7.50**	**1.543**	**55.53**	**2.000**	**71.99**
84.50	76.8	Shear	KIPS	542.44	-44.91	-55.04	5.023	180.83	6.512	234.41
84.50	76.8	Overload	KSI	36.00	12.14	7.50	2.263	81.46	2.941	105.89
88.00	**80.0**	**Flexure**	**KSI**	**36.00**	**10.91**	**6.74**	**1.852**	**66.66**	**2.400**	**86.41**
88.00	80.0	Shear	KIPS	542.44	-50.54	-58.06	4.690	168.84	6.080	218.87
88.00	80.0	Overload	KSI	36.00	10.91	6.74	2.658	95.67	3.455	124.38
99.00	90.0	Flexure	KSI	36.00	6.11	3.80	4.222	151.98	5.472	197.01
99.00	**90.0**	**Shear**	**KIPS**	**542.44**	**-66.74**	**-67.90**	**3.832**	**137.95**	**4.967**	**178.82**
99.00	90.0	Overload	KSI	36.00	6.11	3.80	5.687	204.73	7.393	266.15
110.00	100.0	Flexure	KSI	-36.00	-0.00	-0.00	99.000	3564.00	99.000	3564.00
110.00	**100.0**	**Shear**	**KIPS**	**336.32**	**-82.95**	**-78.29**	**1.664**	**59.91**	**2.157**	**77.66**
110.00	100.0	Overload	KSI	-36.00	-0.00	-0.00	99.000	3564.00	99.000	3564.00

Detailed Rating Results
Girder F
LRFD Fatigue Truck (US)
Axle Load
Impact: As Requested
Lane: As Requested

Span 1

Location (ft)	Percent	Limit State	Units	Capacity	DL + Adj-LL*	LL	Inventory Rating Factor	Inventory Load Rating (Ton)
11.00	**10.0**	**Interaction**	**KSI**	**12.00**	**0.00**	**2.21**	**5.428**	**162.85**
22.00	**20.0**	**Interaction**	**KSI**	**12.00**	**0.00**	**3.82**	**3.142**	**94.26**
25.50	**23.2**	**Interaction**	**KSI**	**16.00**	**0.00**	**4.28**	**3.739**	**112.17**
33.00	**30.0**	**Interaction**	**KSI**	**12.00**	**0.00**	**3.96**	**3.034**	**91.02**

44.00	**40.0**	**Interaction**	**KSI**	**12.00**	**0.00**	**4.42**	**2.714**	**81.43**
49.50	**45.0**	**Interaction**	**KSI**	**12.00**	**0.00**	**4.47**	**2.683**	**80.48**
55.00	**50.0**	**Interaction**	**KSI**	**12.00**	**0.00**	**4.40**	**2.725**	**81.74**
66.00	**60.0**	**Interaction**	**KSI**	**12.00**	**0.00**	**4.42**	**2.714**	**81.43**
77.00	**70.0**	**Interaction**	**KSI**	**12.00**	**0.00**	**3.96**	**3.034**	**91.02**
84.50	**76.8**	**Interaction**	**KSI**	**16.00**	**0.00**	**4.20**	**3.805**	**114.16**
88.00	**80.0**	**Interaction**	**KSI**	**12.00**	**0.00**	**3.82**	**3.142**	**94.26**
99.00	**90.0**	**Interaction**	**KSI**	**12.00**	**0.00**	**2.21**	**5.428**	**162.85**

Detailed Rating Results
Girder F
SU4
Axle Load
Impact: As Requested
Lane: As Requested

Span 1

Location (ft)	Percent	Limit State	Units	Capacity	DL + Adj -LL*	LL	Legal Rating Factor	Legal Load Rating (Ton)
0.00	0.0	Flexure	KSI	-36.00	-0.00	-0.00	99.000	2673.00
0.00	**0.0**	**Shear**	**KIPS**	**336.32**	**82.95**	**47.53**	**3.691**	**99.64**
0.00	0.0	Overload	KSI	-36.00	-0.00	-0.00	99.000	2673.00
11.00	10.0	Flexure	KSI	36.00	6.11	2.29	9.414	254.18
11.00	**10.0**	**Shear**	**KIPS**	**542.44**	**66.74**	**42.48**	**8.245**	**222.63**
11.00	10.0	Overload	KSI	36.00	6.11	2.29	9.421	254.37
22.00	**20.0**	**Flexure**	**KSI**	**36.00**	**10.91**	**4.04**	**4.158**	**112.28**
22.00	20.0	Shear	KIPS	542.44	50.54	37.43	9.793	264.41
22.00	20.0	Overload	KSI	36.00	10.91	4.04	4.434	119.71
25.50	**23.2**	**Flexure**	**KSI**	**36.00**	**12.14**	**4.48**	**3.474**	**93.79**
25.50	23.2	Shear	KIPS	542.44	44.91	35.82	10.389	280.51
25.50	23.2	Overload	KSI	36.00	12.14	4.48	3.785	102.19
33.00	**30.0**	**Flexure**	**KSI**	**36.00**	**11.21**	**4.24**	**3.890**	**105.03**
33.00	30.0	Shear	KIPS	542.44	33.61	32.38	11.844	319.79
33.00	30.0	Overload	KSI	36.00	11.21	4.24	4.171	112.62
44.00	**40.0**	**Flexure**	**KSI**	**36.00**	**12.83**	**4.84**	**3.073**	**82.98**
44.00	40.0	Shear	KIPS	542.44	17.04	27.33	14.641	395.30
44.00	40.0	Overload	KSI	36.00	12.83	4.84	3.397	91.71
49.50	**45.0**	**Flexure**	**KSI**	**36.00**	**13.23**	**4.98**	**2.907**	**78.48**
49.50	45.0	Shear	KIPS	542.44	8.29	24.81	16.484	445.07
49.50	45.0	Overload	KSI	36.00	13.23	4.98	3.239	87.46

55.00	**50.0**	**Flexure**	**KSI**	**36.00**	**13.36**	**5.01**	**2.863**	**77.29**
55.00	50.0	Shear	KIPS	542.44	0.00	-22.28	18.725	505.57
55.00	50.0	Overload	KSI	36.00	13.36	5.01	3.199	86.38
66.00	**60.0**	**Flexure**	**KSI**	**36.00**	**12.83**	**4.84**	**3.073**	**82.98**
66.00	60.0	Shear	KIPS	542.44	-17.04	-27.33	14.641	395.30
66.00	60.0	Overload	KSI	36.00	12.83	4.84	3.397	91.71
77.00	**70.0**	**Flexure**	**KSI**	**36.00**	**11.21**	**4.24**	**3.890**	**105.03**
77.00	70.0	Shear	KIPS	542.44	-33.61	-32.38	11.844	319.79
77.00	70.0	Overload	KSI	36.00	11.21	4.24	4.171	112.62
84.50	**76.8**	**Flexure**	**KSI**	**36.00**	**12.14**	**4.48**	**3.474**	**93.79**
84.50	76.8	Shear	KIPS	542.44	-44.91	-35.82	10.389	280.51
84.50	76.8	Overload	KSI	36.00	12.14	4.48	3.785	102.19
88.00	**80.0**	**Flexure**	**KSI**	**36.00**	**10.91**	**4.04**	**4.158**	**112.28**
88.00	80.0	Shear	KIPS	542.44	-50.54	-37.43	9.793	264.41
88.00	80.0	Overload	KSI	36.00	10.91	4.04	4.434	119.71
99.00	90.0	Flexure	KSI	36.00	6.11	2.29	9.414	254.18
99.00	**90.0**	**Shear**	**KIPS**	**542.44**	**-66.74**	**-42.48**	**8.245**	**222.63**
99.00	90.0	Overload	KSI	36.00	6.11	2.29	9.421	254.37
110.00	100.0	Flexure	KSI	-36.00	-0.00	-0.00	99.000	2673.00
110.00	**100.0**	**Shear**	**KIPS**	**336.32**	**-82.95**	**-47.53**	**3.691**	**99.64**
110.00	100.0	Overload	KSI	-36.00	-0.00	-0.00	99.000	2673.00

Detailed Rating Results
Girder F
SU5
Axle Load
Impact: As Requested
Lane: As Requested

Span 1

Location (ft)	Percent	Limit State	Units	Capacity	DL + Adj -LL*	LL	Legal Rating Factor	Legal Load Rating (Ton)
0.00	0.0	Flexure	KSI	-36.00	-0.00	-0.00	99.000	3069.00
0.00	**0.0**	**Shear**	**KIPS**	**336.32**	**82.95**	**53.78**	**3.261**	**101.10**
0.00	0.0	Overload	KSI	-36.00	-0.00	-0.00	99.000	3069.00
11.00	10.0	Flexure	KSI	36.00	6.11	2.59	8.334	258.34
11.00	**10.0**	**Shear**	**KIPS**	**542.44**	**66.74**	**47.98**	**7.299**	**226.27**
11.00	10.0	Overload	KSI	36.00	6.11	2.59	8.340	258.53
22.00	**20.0**	**Flexure**	**KSI**	**36.00**	**10.91**	**4.56**	**3.689**	**114.37**
22.00	20.0	Shear	KIPS	542.44	50.54	42.19	8.688	269.33

22.00	20.0	Overload	KSI	36.00	10.91	4.56	3.934	121.94
25.50	**23.2**	**Flexure**	**KSI**	**36.00**	**12.14**	**5.05**	**3.084**	**95.62**
25.50	23.2	Shear	KIPS	542.44	44.91	40.34	9.225	285.97
25.50	23.2	Overload	KSI	36.00	12.14	5.05	3.361	104.18
33.00	**30.0**	**Flexure**	**KSI**	**36.00**	**11.21**	**4.79**	**3.444**	**106.76**
33.00	30.0	Shear	KIPS	542.44	33.61	36.39	10.539	326.69
33.00	30.0	Overload	KSI	36.00	11.21	4.79	3.693	114.48
44.00	**40.0**	**Flexure**	**KSI**	**36.00**	**12.83**	**5.46**	**2.726**	**84.50**
44.00	40.0	Shear	KIPS	542.44	17.04	30.60	13.079	405.45
44.00	40.0	Overload	KSI	36.00	12.83	5.46	3.012	93.38
49.50	**45.0**	**Flexure**	**KSI**	**36.00**	**13.23**	**5.60**	**2.585**	**80.12**
49.50	45.0	Shear	KIPS	542.44	8.29	27.70	14.764	457.69
49.50	45.0	Overload	KSI	36.00	13.23	5.60	2.880	89.28
55.00	**50.0**	**Flexure**	**KSI**	**36.00**	**13.36**	**5.62**	**2.553**	**79.13**
55.00	50.0	Shear	KIPS	542.44	0.00	-24.80	16.825	521.58
55.00	50.0	Overload	KSI	36.00	13.36	5.62	2.853	88.44
66.00	**60.0**	**Flexure**	**KSI**	**36.00**	**12.83**	**5.46**	**2.726**	**84.50**
66.00	60.0	Shear	KIPS	542.44	-17.04	-30.60	13.079	405.45
66.00	60.0	Overload	KSI	36.00	12.83	5.46	3.012	93.38
77.00	**70.0**	**Flexure**	**KSI**	**36.00**	**11.21**	**4.79**	**3.444**	**106.76**
77.00	70.0	Shear	KIPS	542.44	-33.61	-36.39	10.539	326.69
77.00	70.0	Overload	KSI	36.00	11.21	4.79	3.693	114.48
84.50	**76.8**	**Flexure**	**KSI**	**36.00**	**12.14**	**5.05**	**3.084**	**95.62**
84.50	76.8	Shear	KIPS	542.44	-44.91	-40.34	9.225	285.97
84.50	76.8	Overload	KSI	36.00	12.14	5.05	3.361	104.18
88.00	**80.0**	**Flexure**	**KSI**	**36.00**	**10.91**	**4.56**	**3.689**	**114.37**
88.00	80.0	Shear	KIPS	542.44	-50.54	-42.19	8.688	269.33
88.00	80.0	Overload	KSI	36.00	10.91	4.56	3.934	121.94
99.00	90.0	Flexure	KSI	36.00	6.11	2.59	8.334	258.34
99.00	**90.0**	**Shear**	**KIPS**	**542.44**	**-66.74**	**-47.98**	**7.299**	**226.27**
99.00	90.0	Overload	KSI	36.00	6.11	2.59	8.340	258.53
110.00	100.0	Flexure	KSI	-36.00	-0.00	-0.00	99.000	3069.00
110.00	**100.0**	**Shear**	**KIPS**	**336.32**	**-82.95**	**-53.78**	**3.261**	**101.10**
110.00	100.0	Overload	KSI	-36.00	-0.00	-0.00	99.000	3069.00

Detailed Rating Results
Girder F
SU6
Axle Load
Impact: As Requested
Lane: As Requested

Span 1

Location (ft)	Percent	Limit State	Units	Capacity	DL + Adj -LL*	LL	Legal Rating Factor	Legal Load Rating (Ton)
0.00	0.0	Flexure	KSI	-36.00	-0.00	-0.00	99.000	3440.25
0.00	**0.0**	**Shear**	**KIPS**	**336.32**	**82.95**	**58.80**	**2.983**	**103.67**
0.00	0.0	Overload	KSI	-36.00	-0.00	-0.00	99.000	3440.25
11.00	10.0	Flexure	KSI	36.00	6.11	2.82	7.646	265.71
11.00	**10.0**	**Shear**	**KIPS**	**542.44**	**66.74**	**52.30**	**6.697**	**232.72**
11.00	10.0	Overload	KSI	36.00	6.11	2.82	7.652	265.91
22.00	**20.0**	**Flexure**	**KSI**	**36.00**	**10.91**	**5.05**	**3.326**	**115.56**
22.00	20.0	Shear	KIPS	542.44	50.54	45.80	8.003	278.10
22.00	20.0	Overload	KSI	36.00	10.91	5.05	3.546	123.21
25.50	**23.2**	**Flexure**	**KSI**	**36.00**	**12.14**	**5.62**	**2.770**	**96.26**
25.50	23.2	Shear	KIPS	542.44	44.91	43.73	8.510	295.72
25.50	23.2	Overload	KSI	36.00	12.14	5.62	3.018	104.88
33.00	**30.0**	**Flexure**	**KSI**	**36.00**	**11.21**	**5.34**	**3.090**	**107.39**
33.00	30.0	Shear	KIPS	542.44	33.61	39.30	9.758	339.09
33.00	30.0	Overload	KSI	36.00	11.21	5.34	3.314	115.15
44.00	**40.0**	**Flexure**	**KSI**	**36.00**	**12.83**	**6.06**	**2.454**	**85.26**
44.00	40.0	Shear	KIPS	542.44	17.04	32.81	12.198	423.88
44.00	40.0	Overload	KSI	36.00	12.83	6.06	2.712	94.23
49.50	**45.0**	**Flexure**	**KSI**	**36.00**	**13.23**	**6.24**	**2.319**	**80.58**
49.50	45.0	Shear	KIPS	542.44	8.29	29.56	13.836	480.79
49.50	45.0	Overload	KSI	36.00	13.23	6.24	2.584	89.80
55.00	**50.0**	**Flexure**	**KSI**	**36.00**	**13.36**	**6.28**	**2.283**	**79.35**
55.00	50.0	Shear	KIPS	542.44	0.00	-26.31	15.860	551.15
55.00	50.0	Overload	KSI	36.00	13.36	6.28	2.552	88.67
66.00	**60.0**	**Flexure**	**KSI**	**36.00**	**12.83**	**6.06**	**2.454**	**85.26**
66.00	60.0	Shear	KIPS	542.44	-17.04	-32.81	12.198	423.88
66.00	60.0	Overload	KSI	36.00	12.83	6.06	2.712	94.23
77.00	**70.0**	**Flexure**	**KSI**	**36.00**	**11.21**	**5.34**	**3.090**	**107.39**
77.00	70.0	Shear	KIPS	542.44	-33.61	-39.30	9.758	339.09
77.00	70.0	Overload	KSI	36.00	11.21	5.34	3.314	115.15
84.50	**76.8**	**Flexure**	**KSI**	**36.00**	**12.14**	**5.62**	**2.770**	**96.26**
84.50	76.8	Shear	KIPS	542.44	-44.91	-43.73	8.510	295.72
84.50	76.8	Overload	KSI	36.00	12.14	5.62	3.018	104.88
88.00	**80.0**	**Flexure**	**KSI**	**36.00**	**10.91**	**5.05**	**3.326**	**115.56**
88.00	80.0	Shear	KIPS	542.44	-50.54	-45.80	8.003	278.10
88.00	80.0	Overload	KSI	36.00	10.91	5.05	3.546	123.21
99.00	90.0	Flexure	KSI	36.00	6.11	2.82	7.646	265.71
99.00	**90.0**	**Shear**	**KIPS**	**542.44**	**-66.74**	**-52.30**	**6.697**	**232.72**

99.00	90.0	Overload	KSI	36.00	6.11	2.82	7.652	265.91
110.00	100.0	Flexure	KSI	-36.00	-0.00	-0.00	99.000	3440.25
110.00	**100.0**	**Shear**	**KIPS**	**336.32**	**-82.95**	**-58.80**	**2.983**	**103.67**
110.00	100.0	Overload	KSI	-36.00	-0.00	-0.00	99.000	3440.25

Detailed Rating Results
Girder F
SU7
Axle Load
Impact: As Requested
Lane: As Requested

Span 1

Location (ft)	Percent	Limit State	Units	Capacity	DL + Adj -LL*	LL	Legal Rating Factor	Legal Load Rating (Ton)
0.00	0.0	Flexure	KSI	-36.00	-0.00	-0.00	99.000	3836.25
0.00	**0.0**	**Shear**	**KIPS**	**336.32**	**82.95**	**63.91**	**2.744**	**106.34**
0.00	0.0	Overload	KSI	-36.00	-0.00	-0.00	99.000	3836.25
11.00	10.0	Flexure	KSI	36.00	6.11	3.06	7.057	273.45
11.00	**10.0**	**Shear**	**KIPS**	**542.44**	**66.74**	**56.67**	**6.181**	**239.51**
11.00	10.0	Overload	KSI	36.00	6.11	3.06	7.062	273.65
22.00	**20.0**	**Flexure**	**KSI**	**36.00**	**10.91**	**5.47**	**3.070**	**118.97**
22.00	20.0	Shear	KIPS	542.44	50.54	49.42	7.417	287.39
22.00	20.0	Overload	KSI	36.00	10.91	5.47	3.273	126.85
25.50	**23.2**	**Flexure**	**KSI**	**36.00**	**12.14**	**6.12**	**2.547**	**98.68**
25.50	23.2	Shear	KIPS	542.44	44.91	47.12	7.899	306.09
25.50	23.2	Overload	KSI	36.00	12.14	6.12	2.775	107.52
33.00	**30.0**	**Flexure**	**KSI**	**36.00**	**11.21**	**5.86**	**2.816**	**109.13**
33.00	30.0	Shear	KIPS	542.44	33.61	42.18	9.093	352.37
33.00	30.0	Overload	KSI	36.00	11.21	5.86	3.020	117.02
44.00	**40.0**	**Flexure**	**KSI**	**36.00**	**12.83**	**6.66**	**2.233**	**86.52**
44.00	40.0	Shear	KIPS	542.44	17.04	34.93	11.456	443.92
44.00	40.0	Overload	KSI	36.00	12.83	6.66	2.468	95.62
49.50	**45.0**	**Flexure**	**KSI**	**36.00**	**13.23**	**6.86**	**2.112**	**81.83**
49.50	45.0	Shear	KIPS	542.44	8.29	31.31	13.062	506.15
49.50	45.0	Overload	KSI	36.00	13.23	6.86	2.353	91.19
55.00	**50.0**	**Flexure**	**KSI**	**36.00**	**13.36**	**6.92**	**2.073**	**80.32**
55.00	50.0	Shear	KIPS	542.44	0.00	-27.69	15.072	584.03
55.00	50.0	Overload	KSI	36.00	13.36	6.92	2.317	89.76
66.00	**60.0**	**Flexure**	**KSI**	**36.00**	**12.83**	**6.66**	**2.233**	**86.52**

66.00	60.0	Shear	KIPS	542.44	-17.04	-34.93	11.456	443.92
66.00	60.0	Overload	KSI	36.00	12.83	6.66	2.468	95.62
77.00	**70.0**	**Flexure**	**KSI**	**36.00**	**11.21**	**5.86**	**2.816**	**109.13**
77.00	70.0	Shear	KIPS	542.44	-33.61	-42.18	9.093	352.37
77.00	70.0	Overload	KSI	36.00	11.21	5.86	3.020	117.02
84.50	**76.8**	**Flexure**	**KSI**	**36.00**	**12.14**	**6.12**	**2.547**	**98.68**
84.50	76.8	Shear	KIPS	542.44	-44.91	-47.12	7.899	306.09
84.50	76.8	Overload	KSI	36.00	12.14	6.12	2.775	107.52
88.00	**80.0**	**Flexure**	**KSI**	**36.00**	**10.91**	**5.47**	**3.070**	**118.97**
88.00	80.0	Shear	KIPS	542.44	-50.54	-49.42	7.417	287.39
88.00	80.0	Overload	KSI	36.00	10.91	5.47	3.273	126.85
99.00	90.0	Flexure	KSI	36.00	6.11	3.06	7.057	273.45
99.00	**90.0**	**Shear**	**KIPS**	**542.44**	**-66.74**	**-56.67**	**6.181**	**239.51**
99.00	90.0	Overload	KSI	36.00	6.11	3.06	7.062	273.65
110.00	100.0	Flexure	KSI	-36.00	-0.00	-0.00	99.000	3836.25
110.00	**100.0**	**Shear**	**KIPS**	**336.32**	**-82.95**	**-63.91**	**2.744**	**106.34**
110.00	100.0	Overload	KSI	-36.00	-0.00	-0.00	99.000	3836.25

Detailed Rating Results
Girder F
Type 3
Axle Load
Impact: As Requested
Lane: As Requested

Span 1

Location (ft)	Percent	Limit State	Units	Capacity	DL + Adj -LL*	LL	Legal Rating Factor	Legal Load Rating (Ton)
0.00	0.0	Flexure	KSI	-36.00	-0.00	-0.00	99.000	2475.00
0.00	**0.0**	**Shear**	**KIPS**	**336.32**	**82.95**	**43.58**	**4.024**	**100.61**
0.00	0.0	Overload	KSI	-36.00	-0.00	-0.00	99.000	2475.00
11.00	10.0	Flexure	KSI	36.00	6.11	2.10	10.278	256.94
11.00	**10.0**	**Shear**	**KIPS**	**542.44**	**66.74**	**38.91**	**9.002**	**225.05**
11.00	10.0	Overload	KSI	36.00	6.11	2.10	10.285	257.13
22.00	**20.0**	**Flexure**	**KSI**	**36.00**	**10.91**	**3.70**	**4.547**	**113.67**
22.00	20.0	Shear	KIPS	542.44	50.54	34.23	10.707	267.67
22.00	20.0	Overload	KSI	36.00	10.91	3.70	4.848	121.19
25.50	**23.2**	**Flexure**	**KSI**	**36.00**	**12.14**	**4.10**	**3.800**	**95.00**
25.50	23.2	Shear	KIPS	542.44	44.91	32.75	11.365	284.13
25.50	23.2	Overload	KSI	36.00	12.14	4.10	4.140	103.51

33.00	**30.0**	**Flexure**	**KSI**	**36.00**	**11.21**	**3.87**	**4.261**	**106.53**
33.00	30.0	Shear	KIPS	542.44	33.61	29.56	12.975	324.37
33.00	30.0	Overload	KSI	36.00	11.21	3.87	4.569	114.24
44.00	**40.0**	**Flexure**	**KSI**	**36.00**	**12.83**	**4.39**	**3.389**	**84.73**
44.00	40.0	Shear	KIPS	542.44	17.04	24.88	16.081	402.02
44.00	40.0	Overload	KSI	36.00	12.83	4.39	3.746	93.64
49.50	**45.0**	**Flexure**	**KSI**	**36.00**	**13.23**	**4.51**	**3.210**	**80.25**
49.50	45.0	Shear	KIPS	542.44	8.29	22.55	18.137	453.42
49.50	45.0	Overload	KSI	36.00	13.23	4.51	3.577	89.43
55.00	**50.0**	**Flexure**	**KSI**	**36.00**	**13.36**	**4.53**	**3.167**	**79.18**
55.00	50.0	Shear	KIPS	542.44	0.00	-20.21	20.646	516.15
55.00	50.0	Overload	KSI	36.00	13.36	4.53	3.540	88.49
66.00	**60.0**	**Flexure**	**KSI**	**36.00**	**12.83**	**4.39**	**3.389**	**84.73**
66.00	60.0	Shear	KIPS	542.44	-17.04	-24.88	16.081	402.02
66.00	60.0	Overload	KSI	36.00	12.83	4.39	3.746	93.64
77.00	**70.0**	**Flexure**	**KSI**	**36.00**	**11.21**	**3.87**	**4.261**	**106.53**
77.00	70.0	Shear	KIPS	542.44	-33.61	-29.56	12.975	324.37
77.00	70.0	Overload	KSI	36.00	11.21	3.87	4.569	114.24
84.50	**76.8**	**Flexure**	**KSI**	**36.00**	**12.14**	**4.10**	**3.800**	**95.00**
84.50	76.8	Shear	KIPS	542.44	-44.91	-32.75	11.365	284.13
84.50	76.8	Overload	KSI	36.00	12.14	4.10	4.140	103.51
88.00	**80.0**	**Flexure**	**KSI**	**36.00**	**10.91**	**3.70**	**4.547**	**113.67**
88.00	80.0	Shear	KIPS	542.44	-50.54	-34.23	10.707	267.67
88.00	80.0	Overload	KSI	36.00	10.91	3.70	4.848	121.19
99.00	90.0	Flexure	KSI	36.00	6.11	2.10	10.278	256.94
99.00	**90.0**	**Shear**	**KIPS**	**542.44**	**-66.74**	**-38.91**	**9.002**	**225.05**
99.00	90.0	Overload	KSI	36.00	6.11	2.10	10.285	257.13
110.00	100.0	Flexure	KSI	-36.00	-0.00	-0.00	99.000	2475.00
110.00	**100.0**	**Shear**	**KIPS**	**336.32**	**-82.95**	**-43.58**	**4.024**	**100.61**
110.00	100.0	Overload	KSI	-36.00	-0.00	-0.00	99.000	2475.00

Detailed Rating Results
Girder F
Type 3-3
Axle Load
Impact: As Requested
Lane: As Requested

Span 1

Location (ft)	Percent		Units	Capacity		LL	Legal Rating Factor	Legal Load Rating (Ton)

		Limit State			DL + Adj -LL*			
0.00	0.0	Flexure	KSI	-36.00	-0.00	-0.00	99.000	3960.00
0.00	**0.0**	**Shear**	**KIPS**	**336.32**	**82.95**	**58.54**	**2.996**	**119.85**
0.00	0.0	Overload	KSI	-36.00	-0.00	-0.00	99.000	3960.00
11.00	10.0	Flexure	KSI	36.00	6.11	2.76	7.831	313.26
11.00	**10.0**	**Shear**	**KIPS**	**542.44**	**66.74**	**51.06**	**6.859**	**274.37**
11.00	10.0	Overload	KSI	36.00	6.11	2.76	7.837	313.49
22.00	**20.0**	**Flexure**	**KSI**	**36.00**	**10.91**	**4.74**	**3.544**	**141.75**
22.00	20.0	Shear	KIPS	542.44	50.54	43.58	8.410	336.41
22.00	20.0	Overload	KSI	36.00	10.91	4.74	3.778	151.13
25.50	**23.2**	**Flexure**	**KSI**	**36.00**	**12.14**	**5.24**	**2.972**	**118.88**
25.50	23.2	Shear	KIPS	542.44	44.91	41.20	9.033	361.31
25.50	23.2	Overload	KSI	36.00	12.14	5.24	3.238	129.53
33.00	**30.0**	**Flexure**	**KSI**	**36.00**	**11.21**	**4.88**	**3.383**	**135.31**
33.00	30.0	Shear	KIPS	542.44	33.61	36.10	10.623	424.92
33.00	30.0	Overload	KSI	36.00	11.21	4.88	3.627	145.09
44.00	**40.0**	**Flexure**	**KSI**	**36.00**	**12.83**	**5.50**	**2.704**	**108.14**
44.00	40.0	Shear	KIPS	542.44	17.04	28.62	13.980	559.20
44.00	40.0	Overload	KSI	36.00	12.83	5.50	2.988	119.52
49.50	**45.0**	**Flexure**	**KSI**	**36.00**	**13.23**	**5.69**	**2.545**	**101.80**
49.50	45.0	Shear	KIPS	542.44	8.29	24.88	16.433	657.33
49.50	45.0	Overload	KSI	36.00	13.23	5.69	2.836	113.44
55.00	**50.0**	**Flexure**	**KSI**	**36.00**	**13.36**	**5.71**	**2.511**	**100.45**
55.00	50.0	Shear	KIPS	542.44	0.00	-21.15	19.733	789.33
55.00	50.0	Overload	KSI	36.00	13.36	5.71	2.807	112.26
66.00	**60.0**	**Flexure**	**KSI**	**36.00**	**12.83**	**5.50**	**2.704**	**108.14**
66.00	60.0	Shear	KIPS	542.44	-17.04	-28.62	13.980	559.20
66.00	60.0	Overload	KSI	36.00	12.83	5.50	2.988	119.52
77.00	**70.0**	**Flexure**	**KSI**	**36.00**	**11.21**	**4.88**	**3.383**	**135.31**
77.00	70.0	Shear	KIPS	542.44	-33.61	-36.10	10.623	424.92
77.00	70.0	Overload	KSI	36.00	11.21	4.88	3.627	145.09
84.50	**76.8**	**Flexure**	**KSI**	**36.00**	**12.14**	**5.24**	**2.972**	**118.88**
84.50	76.8	Shear	KIPS	542.44	-44.91	-41.20	9.033	361.31
84.50	76.8	Overload	KSI	36.00	12.14	5.24	3.238	129.53
88.00	**80.0**	**Flexure**	**KSI**	**36.00**	**10.91**	**4.74**	**3.544**	**141.75**
88.00	80.0	Shear	KIPS	542.44	-50.54	-43.58	8.410	336.41
88.00	80.0	Overload	KSI	36.00	10.91	4.74	3.778	151.13
99.00	90.0	Flexure	KSI	36.00	6.11	2.76	7.831	313.26
99.00	**90.0**	**Shear**	**KIPS**	**542.44**	**-66.74**	**-51.06**	**6.859**	**274.37**
99.00	90.0	Overload	KSI	36.00	6.11	2.76	7.837	313.49
110.00	100.0	Flexure	KSI	-36.00	-0.00	-0.00	99.000	3960.00
110.00	**100.0**	**Shear**	**KIPS**	**336.32**	**-82.95**	**-58.54**	**2.996**	**119.85**

110.00	100.0	Overload	KSI	-36.00	-0.00	-0.00	99.000	3960.00

Detailed Rating Results
Girder F
Type 3S2
Axle Load
Impact: As Requested
Lane: As Requested

Span 1

Location (ft)	Percent	Limit State	Units	Capacity	DL + Adj -LL*	LL	Legal Rating Factor	Legal Load Rating (Ton)
0.00	0.0	Flexure	KSI	-36.00	-0.00	-0.00	99.000	3564.00
0.00	**0.0**	**Shear**	**KIPS**	**336.32**	**82.95**	**55.92**	**3.136**	**112.91**
0.00	0.0	Overload	KSI	-36.00	-0.00	-0.00	99.000	3564.00
11.00	10.0	Flexure	KSI	36.00	6.11	2.66	8.129	292.65
11.00	**10.0**	**Shear**	**KIPS**	**542.44**	**66.74**	**49.19**	**7.120**	**256.32**
11.00	10.0	Overload	KSI	36.00	6.11	2.66	8.135	292.87
22.00	**20.0**	**Flexure**	**KSI**	**36.00**	**10.91**	**4.58**	**3.666**	**131.96**
22.00	20.0	Shear	KIPS	542.44	50.54	42.46	8.632	310.77
22.00	20.0	Overload	KSI	36.00	10.91	4.58	3.908	140.70
25.50	**23.2**	**Flexure**	**KSI**	**36.00**	**12.14**	**5.09**	**3.057**	**110.05**
25.50	23.2	Shear	KIPS	542.44	44.91	40.32	9.231	332.31
25.50	23.2	Overload	KSI	36.00	12.14	5.09	3.331	119.91
33.00	**30.0**	**Flexure**	**KSI**	**36.00**	**11.21**	**4.85**	**3.401**	**122.45**
33.00	30.0	Shear	KIPS	542.44	33.61	35.73	10.734	386.43
33.00	30.0	Overload	KSI	36.00	11.21	4.85	3.647	131.30
44.00	**40.0**	**Flexure**	**KSI**	**36.00**	**12.83**	**5.48**	**2.717**	**97.80**
44.00	40.0	Shear	KIPS	542.44	17.04	29.00	13.800	496.79
44.00	40.0	Overload	KSI	36.00	12.83	5.48	3.003	108.09
49.50	**45.0**	**Flexure**	**KSI**	**36.00**	**13.23**	**5.60**	**2.587**	**93.13**
49.50	45.0	Shear	KIPS	542.44	8.29	25.63	15.954	574.34
49.50	45.0	Overload	KSI	36.00	13.23	5.60	2.883	103.78
55.00	**50.0**	**Flexure**	**KSI**	**36.00**	**13.36**	**5.57**	**2.575**	**92.69**
55.00	50.0	Shear	KIPS	542.44	0.00	-22.27	18.739	674.60
55.00	50.0	Overload	KSI	36.00	13.36	5.57	2.878	103.59
66.00	**60.0**	**Flexure**	**KSI**	**36.00**	**12.83**	**5.48**	**2.717**	**97.80**
66.00	60.0	Shear	KIPS	542.44	-17.04	-29.00	13.800	496.79
66.00	60.0	Overload	KSI	36.00	12.83	5.48	3.003	108.09
77.00	**70.0**	**Flexure**	**KSI**	**36.00**	**11.21**	**4.85**	**3.401**	**122.45**

77.00	70.0	Shear	KIPS	542.44	-33.61	-35.73	10.734	386.43
77.00	70.0	Overload	KSI	36.00	11.21	4.85	3.647	131.30
84.50	**76.8**	**Flexure**	**KSI**	**36.00**	**12.14**	**5.09**	**3.057**	**110.05**
84.50	76.8	Shear	KIPS	542.44	-44.91	-40.32	9.231	332.31
84.50	76.8	Overload	KSI	36.00	12.14	5.09	3.331	119.91
88.00	**80.0**	**Flexure**	**KSI**	**36.00**	**10.91**	**4.58**	**3.666**	**131.96**
88.00	80.0	Shear	KIPS	542.44	-50.54	-42.46	8.632	310.77
88.00	80.0	Overload	KSI	36.00	10.91	4.58	3.908	140.70
99.00	90.0	Flexure	KSI	36.00	6.11	2.66	8.129	292.65
99.00	**90.0**	**Shear**	**KIPS**	**542.44**	**-66.74**	**-49.19**	**7.120**	**256.32**
99.00	90.0	Overload	KSI	36.00	6.11	2.66	8.135	292.87
110.00	100.0	Flexure	KSI	-36.00	-0.00	-0.00	99.000	3564.00
110.00	**100.0**	**Shear**	**KIPS**	**336.32**	**-82.95**	**-55.92**	**3.136**	**112.91**
110.00	100.0	Overload	KSI	-36.00	-0.00	-0.00	99.000	3564.00

Detailed Rating Results
Girder F
RI-3
Axle Load
Impact: As Requested
Lane: As Requested

Span 1

Location (ft)	Percent	Limit State	Units	Capacity	DL + Adj -LL*	LL	Permit Rating Factor	Permit Load Rating (Ton)
0.00	0.0	Flexure	KSI	-36.00	-0.00	-0.00	99.000	3762.00
0.00	**0.0**	**Shear**	**KIPS**	**336.32**	**82.95**	**67.25**	**2.866**	**108.90**
0.00	0.0	Overload	KSI	-36.00	-0.00	-0.00	99.000	3762.00
11.00	10.0	Flexure	KSI	36.00	6.11	3.25	7.306	277.62
11.00	**10.0**	**Shear**	**KIPS**	**542.44**	**66.74**	**60.14**	**6.399**	**243.16**
11.00	10.0	Overload	KSI	36.00	6.11	3.25	8.650	328.72
22.00	**20.0**	**Flexure**	**KSI**	**36.00**	**10.91**	**5.73**	**3.225**	**122.54**
22.00	20.0	Shear	KIPS	542.44	50.54	53.03	7.594	288.56
22.00	20.0	Overload	KSI	36.00	10.91	5.73	4.068	154.58
25.50	**23.2**	**Flexure**	**KSI**	**36.00**	**12.14**	**6.35**	**2.693**	**102.33**
25.50	23.2	Shear	KIPS	542.44	44.91	50.77	8.054	306.04
25.50	23.2	Overload	KSI	36.00	12.14	6.35	3.471	131.92
33.00	**30.0**	**Flexure**	**KSI**	**36.00**	**11.21**	**6.01**	**3.013**	**114.50**
33.00	30.0	Shear	KIPS	542.44	33.61	45.93	9.175	348.64
33.00	30.0	Overload	KSI	36.00	11.21	6.01	3.823	145.27

44.00	**40.0**	**Flexure**	**KSI**	**36.00**	**12.83**	**6.80**	**2.403**	**91.31**
44.00	40.0	Shear	KIPS	542.44	17.04	38.82	11.325	430.34
44.00	40.0	Overload	KSI	36.00	12.83	6.80	3.142	119.39
49.50	**45.0**	**Flexure**	**KSI**	**36.00**	**13.23**	**7.02**	**2.267**	**86.16**
49.50	45.0	Shear	KIPS	542.44	8.29	35.27	12.739	484.07
49.50	45.0	Overload	KSI	36.00	13.23	7.02	2.989	113.60
55.00	**50.0**	**Flexure**	**KSI**	**36.00**	**13.36**	**7.08**	**2.228**	**84.66**
55.00	50.0	Shear	KIPS	542.44	0.00	-31.72	14.454	549.24
55.00	50.0	Overload	KSI	36.00	13.36	7.08	2.946	111.94
66.00	**60.0**	**Flexure**	**KSI**	**36.00**	**12.83**	**6.80**	**2.403**	**91.31**
66.00	60.0	Shear	KIPS	542.44	-17.04	-38.82	11.325	430.34
66.00	60.0	Overload	KSI	36.00	12.83	6.80	3.142	119.39
77.00	**70.0**	**Flexure**	**KSI**	**36.00**	**11.21**	**6.01**	**3.013**	**114.50**
77.00	70.0	Shear	KIPS	542.44	-33.61	-45.93	9.175	348.64
77.00	70.0	Overload	KSI	36.00	11.21	6.01	3.823	145.27
84.50	**76.8**	**Flexure**	**KSI**	**36.00**	**12.14**	**6.35**	**2.693**	**102.33**
84.50	76.8	Shear	KIPS	542.44	-44.91	-50.77	8.054	306.04
84.50	76.8	Overload	KSI	36.00	12.14	6.35	3.471	131.92
88.00	**80.0**	**Flexure**	**KSI**	**36.00**	**10.91**	**5.73**	**3.225**	**122.54**
88.00	80.0	Shear	KIPS	542.44	-50.54	-53.03	7.594	288.56
88.00	80.0	Overload	KSI	36.00	10.91	5.73	4.068	154.58
99.00	90.0	Flexure	KSI	36.00	6.11	3.25	7.306	277.62
99.00	**90.0**	**Shear**	**KIPS**	**542.44**	**-66.74**	**-60.14**	**6.399**	**243.16**
99.00	90.0	Overload	KSI	36.00	6.11	3.25	8.650	328.72
110.00	100.0	Flexure	KSI	-36.00	-0.00	-0.00	99.000	3762.00
110.00	**100.0**	**Shear**	**KIPS**	**336.32**	**-82.95**	**-67.25**	**2.866**	**108.90**
110.00	100.0	Overload	KSI	-36.00	-0.00	-0.00	99.000	3762.00

Detailed Rating Results
Girder F
RI-4
Axle Load
Impact: As Requested
Lane: As Requested

Span 1

Location (ft)	Percent	Limit State	Units	Capacity	DL + Adj -LL*	LL	Permit Rating Factor	Permit Load Rating (Ton)
0.00	0.0	Flexure	KSI	-36.00	-0.00	-0.00	99.000	3712.50
0.00	**0.0**	**Shear**	**KIPS**	**336.32**	**82.95**	**65.38**	**2.948**	**110.54**

0.00	0.0	Overload	KSI	-36.00	-0.00	-0.00	99.000	3712.50
11.00	10.0	Flexure	KSI	36.00	6.11	3.15	7.528	282.29
11.00	**10.0**	**Shear**	**KIPS**	**542.44**	**66.74**	**58.37**	**6.593**	**247.25**
11.00	10.0	Overload	KSI	36.00	6.11	3.15	8.913	334.24
22.00	**20.0**	**Flexure**	**KSI**	**36.00**	**10.91**	**5.55**	**3.330**	**124.88**
22.00	20.0	Shear	KIPS	542.44	50.54	51.36	7.842	294.08
22.00	20.0	Overload	KSI	36.00	10.91	5.55	4.201	157.53
25.50	**23.2**	**Flexure**	**KSI**	**36.00**	**12.14**	**6.15**	**2.783**	**104.37**
25.50	23.2	Shear	KIPS	542.44	44.91	49.12	8.324	312.16
25.50	23.2	Overload	KSI	36.00	12.14	6.15	3.588	134.55
33.00	**30.0**	**Flexure**	**KSI**	**36.00**	**11.21**	**5.85**	**3.097**	**116.15**
33.00	30.0	Shear	KIPS	542.44	33.61	44.34	9.503	356.36
33.00	30.0	Overload	KSI	36.00	11.21	5.85	3.930	147.36
44.00	**40.0**	**Flexure**	**KSI**	**36.00**	**12.83**	**6.68**	**2.445**	**91.68**
44.00	40.0	Shear	KIPS	542.44	17.04	37.33	11.777	441.65
44.00	40.0	Overload	KSI	36.00	12.83	6.68	3.197	119.89
49.50	**45.0**	**Flexure**	**KSI**	**36.00**	**13.23**	**6.87**	**2.315**	**86.80**
49.50	45.0	Shear	KIPS	542.44	8.29	33.83	13.283	498.11
49.50	45.0	Overload	KSI	36.00	13.23	6.87	3.052	114.45
55.00	**50.0**	**Flexure**	**KSI**	**36.00**	**13.36**	**6.91**	**2.282**	**85.58**
55.00	50.0	Shear	KIPS	542.44	0.00	-30.32	15.120	567.02
55.00	50.0	Overload	KSI	36.00	13.36	6.91	3.017	113.15
66.00	**60.0**	**Flexure**	**KSI**	**36.00**	**12.83**	**6.68**	**2.445**	**91.68**
66.00	60.0	Shear	KIPS	542.44	-17.04	-37.33	11.777	441.65
66.00	60.0	Overload	KSI	36.00	12.83	6.68	3.197	119.89
77.00	**70.0**	**Flexure**	**KSI**	**36.00**	**11.21**	**5.85**	**3.097**	**116.15**
77.00	70.0	Shear	KIPS	542.44	-33.61	-44.34	9.503	356.36
77.00	70.0	Overload	KSI	36.00	11.21	5.85	3.930	147.36
84.50	**76.8**	**Flexure**	**KSI**	**36.00**	**12.14**	**6.15**	**2.783**	**104.37**
84.50	76.8	Shear	KIPS	542.44	-44.91	-49.12	8.324	312.16
84.50	76.8	Overload	KSI	36.00	12.14	6.15	3.588	134.55
88.00	**80.0**	**Flexure**	**KSI**	**36.00**	**10.91**	**5.55**	**3.330**	**124.88**
88.00	80.0	Shear	KIPS	542.44	-50.54	-51.36	7.842	294.08
88.00	80.0	Overload	KSI	36.00	10.91	5.55	4.201	157.53
99.00	90.0	Flexure	KSI	36.00	6.11	3.15	7.528	282.29
99.00	**90.0**	**Shear**	**KIPS**	**542.44**	**-66.74**	**-58.37**	**6.593**	**247.25**
99.00	90.0	Overload	KSI	36.00	6.11	3.15	8.913	334.24
110.00	100.0	Flexure	KSI	-36.00	-0.00	-0.00	99.000	3712.50
110.00	**100.0**	**Shear**	**KIPS**	**336.32**	**-82.95**	**-65.38**	**2.948**	**110.54**
110.00	100.0	Overload	KSI	-36.00	-0.00	-0.00	99.000	3712.50

Detailed Rating Results
Girder F

RI-5
Axle Load
Impact: As Requested
Lane: As Requested

Span 1

Location (ft)	Percent	Limit State	Units	Capacity	DL + Adj -LL*	LL	Permit Rating Factor	Permit Load Rating (Ton)
0.00	0.0	Flexure	KSI	-36.00	-0.00	-0.00	99.000	5187.60
0.00	**0.0**	**Shear**	**KIPS**	**336.32**	**82.95**	**85.74**	**2.248**	**117.77**
0.00	0.0	Overload	KSI	-36.00	-0.00	-0.00	99.000	5187.60
11.00	10.0	Flexure	KSI	36.00	6.11	4.10	5.785	303.15
11.00	**10.0**	**Shear**	**KIPS**	**542.44**	**66.74**	**75.95**	**5.067**	**265.52**
11.00	10.0	Overload	KSI	36.00	6.11	4.10	6.850	358.94
22.00	**20.0**	**Flexure**	**KSI**	**36.00**	**10.91**	**7.14**	**2.585**	**135.47**
22.00	20.0	Shear	KIPS	542.44	50.54	66.15	6.088	319.03
22.00	20.0	Overload	KSI	36.00	10.91	7.14	3.261	170.90
25.50	**23.2**	**Flexure**	**KSI**	**36.00**	**12.14**	**7.95**	**2.154**	**112.84**
25.50	23.2	Shear	KIPS	542.44	44.91	63.03	6.488	339.95
25.50	23.2	Overload	KSI	36.00	12.14	7.95	2.776	145.47
33.00	**30.0**	**Flexure**	**KSI**	**36.00**	**11.21**	**7.54**	**2.402**	**125.88**
33.00	30.0	Shear	KIPS	542.44	33.61	56.35	7.478	391.85
33.00	30.0	Overload	KSI	36.00	11.21	7.54	3.048	159.71
44.00	**40.0**	**Flexure**	**KSI**	**36.00**	**12.83**	**8.58**	**1.905**	**99.84**
44.00	40.0	Shear	KIPS	542.44	17.04	46.55	9.445	494.90
44.00	40.0	Overload	KSI	36.00	12.83	8.58	2.491	130.55
49.50	**45.0**	**Flexure**	**KSI**	**36.00**	**13.23**	**8.81**	**1.806**	**94.66**
49.50	45.0	Shear	KIPS	542.44	8.29	41.65	10.787	565.23
49.50	45.0	Overload	KSI	36.00	13.23	8.81	2.382	124.81
55.00	**50.0**	**Flexure**	**KSI**	**36.00**	**13.36**	**8.82**	**1.787**	**93.64**
55.00	50.0	Shear	KIPS	542.44	0.00	-36.76	12.473	653.60
55.00	50.0	Overload	KSI	36.00	13.36	8.82	2.363	123.82
66.00	**60.0**	**Flexure**	**KSI**	**36.00**	**12.83**	**8.58**	**1.905**	**99.84**
66.00	60.0	Shear	KIPS	542.44	-17.04	-46.55	9.445	494.90
66.00	60.0	Overload	KSI	36.00	12.83	8.58	2.491	130.55
77.00	**70.0**	**Flexure**	**KSI**	**36.00**	**11.21**	**7.54**	**2.402**	**125.88**
77.00	70.0	Shear	KIPS	542.44	-33.61	-56.35	7.478	391.85
77.00	70.0	Overload	KSI	36.00	11.21	7.54	3.048	159.71
84.50	**76.8**	**Flexure**	**KSI**	**36.00**	**12.14**	**7.95**	**2.154**	**112.84**
84.50	76.8	Shear	KIPS	542.44	-44.91	-63.03	6.488	339.95

84.50	76.8	Overload	KSI	36.00	12.14	7.95	2.776	145.47
88.00	**80.0**	**Flexure**	**KSI**	**36.00**	**10.91**	**7.14**	**2.585**	**135.47**
88.00	80.0	Shear	KIPS	542.44	-50.54	-66.15	6.088	319.03
88.00	80.0	Overload	KSI	36.00	10.91	7.14	3.261	170.90
99.00	90.0	Flexure	KSI	36.00	6.11	4.10	5.785	303.15
99.00	**90.0**	**Shear**	**KIPS**	**542.44**	**-66.74**	**-75.95**	**5.067**	**265.52**
99.00	90.0	Overload	KSI	36.00	6.11	4.10	6.850	358.94
110.00	100.0	Flexure	KSI	-36.00	-0.00	-0.00	99.000	5187.60
110.00	**100.0**	**Shear**	**KIPS**	**336.32**	**-82.95**	**-85.74**	**2.248**	**117.77**
110.00	100.0	Overload	KSI	-36.00	-0.00	-0.00	99.000	5187.60

Detailed Rating Results
Girder F
RI-6
Axle Load
Impact: As Requested
Lane: As Requested

Span 1

Location (ft)	Percent	Limit State	Units	Capacity	DL + Adj -LL*	LL	Permit Rating Factor	Permit Load Rating (Ton)
0.00	0.0	Flexure	KSI	-36.00	-0.00	-0.00	99.000	6435.00
0.00	**0.0**	**Shear**	**KIPS**	**336.32**	**82.95**	**97.27**	**1.901**	**123.56**
0.00	0.0	Overload	KSI	-36.00	-0.00	-0.00	99.000	6435.00
11.00	10.0	Flexure	KSI	36.00	6.11	4.60	4.953	321.94
11.00	**10.0**	**Shear**	**KIPS**	**542.44**	**66.74**	**85.11**	**4.338**	**281.97**
11.00	10.0	Overload	KSI	36.00	6.11	4.60	6.112	397.29
22.00	**20.0**	**Flexure**	**KSI**	**36.00**	**10.91**	**7.90**	**2.243**	**145.82**
22.00	20.0	Shear	KIPS	542.44	50.54	72.96	5.296	344.24
22.00	20.0	Overload	KSI	36.00	10.91	7.90	2.950	191.72
25.50	**23.2**	**Flexure**	**KSI**	**36.00**	**12.14**	**8.75**	**1.877**	**122.00**
25.50	23.2	Shear	KIPS	542.44	44.91	69.09	5.678	369.10
25.50	23.2	Overload	KSI	36.00	12.14	8.75	2.522	163.92
33.00	**30.0**	**Flexure**	**KSI**	**36.00**	**11.21**	**8.18**	**2.125**	**138.11**
33.00	30.0	Shear	KIPS	542.44	33.61	60.81	6.649	432.18
33.00	30.0	Overload	KSI	36.00	11.21	8.18	2.810	182.63
44.00	**40.0**	**Flexure**	**KSI**	**36.00**	**12.83**	**8.95**	**1.752**	**113.87**
44.00	40.0	Shear	KIPS	542.44	17.04	48.65	8.670	563.58
44.00	40.0	Overload	KSI	36.00	12.83	8.95	2.387	155.19
49.50	**45.0**	**Flexure**	**KSI**	**36.00**	**13.23**	**9.02**	**1.691**	**109.93**

49.50	45.0	Shear	KIPS	542.44	8.29	42.58	10.125	658.14
49.50	45.0	Overload	KSI	36.00	13.23	9.02	2.324	151.07
55.00	**50.0**	**Flexure**	**KSI**	**36.00**	**13.36**	**8.83**	**1.712**	**111.29**
55.00	50.0	Shear	KIPS	542.44	0.00	-36.50	12.051	783.33
55.00	50.0	Overload	KSI	36.00	13.36	8.83	2.360	153.38
66.00	**60.0**	**Flexure**	**KSI**	**36.00**	**12.83**	**8.95**	**1.752**	**113.87**
66.00	60.0	Shear	KIPS	542.44	-17.04	-48.65	8.670	563.58
66.00	60.0	Overload	KSI	36.00	12.83	8.95	2.387	155.19
77.00	**70.0**	**Flexure**	**KSI**	**36.00**	**11.21**	**8.18**	**2.125**	**138.11**
77.00	70.0	Shear	KIPS	542.44	-33.61	-60.81	6.649	432.18
77.00	70.0	Overload	KSI	36.00	11.21	8.18	2.810	182.63
84.50	**76.8**	**Flexure**	**KSI**	**36.00**	**12.14**	**8.75**	**1.877**	**122.00**
84.50	76.8	Shear	KIPS	542.44	-44.91	-69.09	5.678	369.10
84.50	76.8	Overload	KSI	36.00	12.14	8.75	2.522	163.92
88.00	**80.0**	**Flexure**	**KSI**	**36.00**	**10.91**	**7.90**	**2.243**	**145.82**
88.00	80.0	Shear	KIPS	542.44	-50.54	-72.96	5.296	344.24
88.00	80.0	Overload	KSI	36.00	10.91	7.90	2.950	191.72
99.00	90.0	Flexure	KSI	36.00	6.11	4.60	4.953	321.94
99.00	**90.0**	**Shear**	**KIPS**	**542.44**	**-66.74**	**-85.11**	**4.338**	**281.97**
99.00	90.0	Overload	KSI	36.00	6.11	4.60	6.112	397.29
110.00	100.0	Flexure	KSI	-36.00	-0.00	-0.00	99.000	6435.00
110.00	**100.0**	**Shear**	**KIPS**	**336.32**	**-82.95**	**-97.27**	**1.901**	**123.56**
110.00	100.0	Overload	KSI	-36.00	-0.00	-0.00	99.000	6435.00

Detailed Rating Results
Girder F
RIDOT H20 Truck
Axle Load
Impact: As Requested
Lane: As Requested

Span 1

Location (ft)	Percent	Limit State	Units	Capacity	DL + Adj -LL*	LL	Legal Rating Factor	Legal Load Rating (Ton)
0.00	0.0	Flexure	KSI	-36.00	-0.00	-0.00	99.000	1980.00
0.00	**0.0**	**Shear**	**KIPS**	**336.32**	**82.95**	**36.44**	**4.813**	**96.26**
0.00	0.0	Overload	KSI	-36.00	-0.00	-0.00	99.000	1980.00
11.00	10.0	Flexure	KSI	36.00	6.11	1.77	12.228	244.55
11.00	**10.0**	**Shear**	**KIPS**	**542.44**	**66.74**	**32.70**	**10.710**	**214.19**
11.00	10.0	Overload	KSI	36.00	6.11	1.77	12.237	244.73

22.00	**20.0**	**Flexure**	**KSI**	**36.00**	**10.91**	**3.13**	**5.374**	**107.48**
22.00	20.0	Shear	KIPS	542.44	50.54	28.96	12.655	253.10
22.00	20.0	Overload	KSI	36.00	10.91	3.13	5.730	114.59
25.50	**23.2**	**Flexure**	**KSI**	**36.00**	**12.14**	**3.48**	**4.480**	**89.61**
25.50	23.2	Shear	KIPS	542.44	44.91	27.77	13.400	268.00
25.50	23.2	Overload	KSI	36.00	12.14	3.48	4.882	97.63
33.00	**30.0**	**Flexure**	**KSI**	**36.00**	**11.21**	**3.30**	**4.993**	**99.87**
33.00	30.0	Shear	KIPS	542.44	33.61	25.22	15.204	304.08
33.00	30.0	Overload	KSI	36.00	11.21	3.30	5.355	107.09
44.00	**40.0**	**Flexure**	**KSI**	**36.00**	**12.83**	**3.75**	**3.966**	**79.31**
44.00	40.0	Shear	KIPS	542.44	17.04	21.49	18.625	372.50
44.00	40.0	Overload	KSI	36.00	12.83	3.75	4.383	87.65
49.50	**45.0**	**Flexure**	**KSI**	**36.00**	**13.23**	**3.85**	**3.758**	**75.16**
49.50	45.0	Shear	KIPS	542.44	8.29	19.62	20.848	416.96
49.50	45.0	Overload	KSI	36.00	13.23	3.85	4.188	83.76
55.00	**50.0**	**Flexure**	**KSI**	**36.00**	**13.36**	**3.87**	**3.704**	**74.09**
55.00	50.0	Shear	KIPS	542.44	0.00	-17.75	23.513	470.27
55.00	50.0	Overload	KSI	36.00	13.36	3.87	4.140	82.80
66.00	**60.0**	**Flexure**	**KSI**	**36.00**	**12.83**	**3.75**	**3.966**	**79.31**
66.00	60.0	Shear	KIPS	542.44	-17.04	-21.49	18.625	372.50
66.00	60.0	Overload	KSI	36.00	12.83	3.75	4.383	87.65
77.00	**70.0**	**Flexure**	**KSI**	**36.00**	**11.21**	**3.30**	**4.993**	**99.87**
77.00	70.0	Shear	KIPS	542.44	-33.61	-25.22	15.204	304.08
77.00	70.0	Overload	KSI	36.00	11.21	3.30	5.355	107.09
84.50	**76.8**	**Flexure**	**KSI**	**36.00**	**12.14**	**3.48**	**4.480**	**89.61**
84.50	76.8	Shear	KIPS	542.44	-44.91	-27.77	13.400	268.00
84.50	76.8	Overload	KSI	36.00	12.14	3.48	4.882	97.63
88.00	**80.0**	**Flexure**	**KSI**	**36.00**	**10.91**	**3.13**	**5.374**	**107.48**
88.00	80.0	Shear	KIPS	542.44	-50.54	-28.96	12.655	253.10
88.00	80.0	Overload	KSI	36.00	10.91	3.13	5.730	114.59
99.00	90.0	Flexure	KSI	36.00	6.11	1.77	12.228	244.55
99.00	**90.0**	**Shear**	**KIPS**	**542.44**	**-66.74**	**-32.70**	**10.710**	**214.19**
99.00	90.0	Overload	KSI	36.00	6.11	1.77	12.237	244.73
110.00	100.0	Flexure	KSI	-36.00	-0.00	-0.00	99.000	1980.00
110.00	**100.0**	**Shear**	**KIPS**	**336.32**	**-82.95**	**-36.44**	**4.813**	**96.26**
110.00	100.0	Overload	KSI	-36.00	-0.00	-0.00	99.000	1980.00

Detailed Rating Results
Girder F
RI-OP 1
Axle Load
Impact: As Requested
Lane: As Requested

Span 1

Location (ft)	Percent	Limit State	Units	Capacity	DL + Adj -LL*	LL	Permit Rating Factor	Permit Load Rating (Ton)
0.00	0.0	Flexure	KSI	-36.00	-0.00	-0.00	99.000	5593.50
0.00	**0.0**	**Shear**	**KIPS**	**336.32**	**82.95**	**66.31**	**2.866**	**161.90**
0.00	0.0	Overload	KSI	-36.00	-0.00	-0.00	99.000	5593.50
11.00	10.0	Flexure	KSI	36.00	6.11	2.62	8.916	503.77
11.00	**10.0**	**Shear**	**KIPS**	**542.44**	**66.74**	**58.85**	**6.447**	**364.26**
11.00	10.0	Overload	KSI	36.00	6.11	2.62	10.707	604.97
22.00	**20.0**	**Flexure**	**KSI**	**36.00**	**10.91**	**4.66**	**3.910**	**220.91**
22.00	20.0	Shear	KIPS	542.44	50.54	51.39	7.726	436.53
22.00	20.0	Overload	KSI	36.00	10.91	4.66	5.002	282.64
25.50	**23.2**	**Flexure**	**KSI**	**36.00**	**12.14**	**5.18**	**3.256**	**183.96**
25.50	23.2	Shear	KIPS	542.44	44.91	49.02	8.225	464.70
25.50	23.2	Overload	KSI	36.00	12.14	5.18	4.257	240.53
33.00	**30.0**	**Flexure**	**KSI**	**36.00**	**11.21**	**4.92**	**3.635**	**205.37**
33.00	30.0	Shear	KIPS	542.44	33.61	43.94	9.456	534.29
33.00	30.0	Overload	KSI	36.00	11.21	4.92	4.677	264.26
44.00	**40.0**	**Flexure**	**KSI**	**36.00**	**12.83**	**5.63**	**2.862**	**161.71**
44.00	40.0	Shear	KIPS	542.44	17.04	36.48	11.884	671.45
44.00	40.0	Overload	KSI	36.00	12.83	5.63	3.796	214.46
49.50	**45.0**	**Flexure**	**KSI**	**36.00**	**13.23**	**5.82**	**2.697**	**152.40**
49.50	45.0	Shear	KIPS	542.44	8.29	32.75	13.527	764.29
49.50	45.0	Overload	KSI	36.00	13.23	5.82	3.607	203.79
55.00	**50.0**	**Flexure**	**KSI**	**36.00**	**13.36**	**5.87**	**2.650**	**149.71**
55.00	50.0	Shear	KIPS	542.44	0.00	-29.02	15.576	880.05
55.00	50.0	Overload	KSI	36.00	13.36	5.87	3.553	200.77
66.00	**60.0**	**Flexure**	**KSI**	**36.00**	**12.83**	**5.63**	**2.862**	**161.71**
66.00	60.0	Shear	KIPS	542.44	-17.04	-36.48	11.884	671.45
66.00	60.0	Overload	KSI	36.00	12.83	5.63	3.796	214.46
77.00	**70.0**	**Flexure**	**KSI**	**36.00**	**11.21**	**4.92**	**3.635**	**205.37**
77.00	70.0	Shear	KIPS	542.44	-33.61	-43.94	9.456	534.29
77.00	70.0	Overload	KSI	36.00	11.21	4.92	4.677	264.26
84.50	**76.8**	**Flexure**	**KSI**	**36.00**	**12.14**	**5.18**	**3.256**	**183.96**
84.50	76.8	Shear	KIPS	542.44	-44.91	-49.02	8.225	464.70
84.50	76.8	Overload	KSI	36.00	12.14	5.18	4.257	240.53
88.00	**80.0**	**Flexure**	**KSI**	**36.00**	**10.91**	**4.66**	**3.910**	**220.91**
88.00	80.0	Shear	KIPS	542.44	-50.54	-51.39	7.726	436.53
88.00	80.0	Overload	KSI	36.00	10.91	4.66	5.002	282.64

99.00	90.0	Flexure	KSI	36.00	6.11	2.62	8.916	503.77
99.00	**90.0**	**Shear**	**KIPS**	**542.44**	**-66.74**	**-58.85**	**6.447**	**364.26**
99.00	90.0	Overload	KSI	36.00	6.11	2.62	10.707	604.97
110.00	100.0	Flexure	KSI	-36.00	-0.00	-0.00	99.000	5593.50
110.00	**100.0**	**Shear**	**KIPS**	**336.32**	**-82.95**	**-66.31**	**2.866**	**161.90**
110.00	100.0	Overload	KSI	-36.00	-0.00	-0.00	99.000	5593.50

Detailed Rating Results
Girder F
RI-OP 2
Axle Load
Impact: As Requested
Lane: As Requested

Span 1

Location (ft)	Percent	Limit State	Units	Capacity	DL + Adj -LL*	LL	Permit Rating Factor	Permit Load Rating (Ton)
0.00	0.0	Flexure	KSI	-36.00	-0.00	-0.00	99.000	7920.00
0.00	**0.0**	**Shear**	**KIPS**	**336.32**	**82.95**	**77.08**	**2.465**	**197.22**
0.00	0.0	Overload	KSI	-36.00	-0.00	-0.00	99.000	7920.00
11.00	10.0	Flexure	KSI	36.00	6.11	2.96	7.889	631.11
11.00	**10.0**	**Shear**	**KIPS**	**542.44**	**66.74**	**66.52**	**5.704**	**456.34**
11.00	10.0	Overload	KSI	36.00	6.11	2.96	9.474	757.89
22.00	**20.0**	**Flexure**	**KSI**	**36.00**	**10.91**	**5.11**	**3.561**	**284.86**
22.00	20.0	Shear	KIPS	542.44	50.54	55.96	7.096	567.69
22.00	20.0	Overload	KSI	36.00	10.91	5.11	4.556	364.46
25.50	**23.2**	**Flexure**	**KSI**	**36.00**	**12.14**	**5.62**	**3.003**	**240.28**
25.50	23.2	Shear	KIPS	542.44	44.91	52.60	7.666	613.24
25.50	23.2	Overload	KSI	36.00	12.14	5.62	3.927	314.16
33.00	**30.0**	**Flexure**	**KSI**	**36.00**	**11.21**	**5.21**	**3.429**	**274.32**
33.00	30.0	Shear	KIPS	542.44	33.61	45.40	9.152	732.16
33.00	30.0	Overload	KSI	36.00	11.21	5.21	4.412	352.99
44.00	**40.0**	**Flexure**	**KSI**	**36.00**	**12.83**	**5.63**	**2.863**	**229.08**
44.00	40.0	Shear	KIPS	542.44	17.04	35.31	12.277	982.13
44.00	40.0	Overload	KSI	36.00	12.83	5.63	3.798	303.81
49.50	**45.0**	**Flexure**	**KSI**	**36.00**	**13.23**	**5.62**	**2.791**	**223.28**
49.50	45.0	Shear	KIPS	542.44	8.29	30.46	14.544	1163.50
49.50	45.0	Overload	KSI	36.00	13.23	5.62	3.732	298.58
55.00	**50.0**	**Flexure**	**KSI**	**36.00**	**13.36**	**5.48**	**2.835**	**226.79**
55.00	50.0	Shear	KIPS	542.44	0.00	-25.79	17.529	1402.31

55.00	50.0	Overload	KSI	36.00	13.36	5.48	3.802	304.13
66.00	**60.0**	**Flexure**	**KSI**	**36.00**	**12.83**	**5.63**	**2.863**	**229.08**
66.00	60.0	Shear	KIPS	542.44	-17.04	-35.31	12.277	982.13
66.00	60.0	Overload	KSI	36.00	12.83	5.63	3.798	303.81
77.00	**70.0**	**Flexure**	**KSI**	**36.00**	**11.21**	**5.21**	**3.429**	**274.32**
77.00	70.0	Shear	KIPS	542.44	-33.61	-45.40	9.152	732.16
77.00	70.0	Overload	KSI	36.00	11.21	5.21	4.412	352.99
84.50	**76.8**	**Flexure**	**KSI**	**36.00**	**12.14**	**5.62**	**3.003**	**240.28**
84.50	76.8	Shear	KIPS	542.44	-44.91	-52.60	7.666	613.24
84.50	76.8	Overload	KSI	36.00	12.14	5.62	3.927	314.16
88.00	**80.0**	**Flexure**	**KSI**	**36.00**	**10.91**	**5.11**	**3.561**	**284.86**
88.00	80.0	Shear	KIPS	542.44	-50.54	-55.96	7.096	567.69
88.00	80.0	Overload	KSI	36.00	10.91	5.11	4.556	364.46
99.00	90.0	Flexure	KSI	36.00	6.11	2.96	7.889	631.11
99.00	**90.0**	**Shear**	**KIPS**	**542.44**	**-66.74**	**-66.52**	**5.704**	**456.34**
99.00	90.0	Overload	KSI	36.00	6.11	2.96	9.474	757.89
110.00	100.0	Flexure	KSI	-36.00	-0.00	-0.00	99.000	7920.00
110.00	**100.0**	**Shear**	**KIPS**	**336.32**	**-82.95**	**-77.08**	**2.465**	**197.22**
110.00	100.0	Overload	KSI	-36.00	-0.00	-0.00	99.000	7920.00

Detailed Rating Results
Girder F
RI-OP 3
Axle Load
Impact: As Requested
Lane: As Requested

Span 1

Location (ft)	Percent	Limit State	Units	Capacity	DL + Adj -LL*	LL	Permit Rating Factor	Permit Load Rating (Ton)
0.00	0.0	Flexure	KSI	-36.00	-0.00	-0.00	99.000	11187.00
0.00	**0.0**	**Shear**	**KIPS**	**336.32**	**82.95**	**86.06**	**2.208**	**249.48**
0.00	0.0	Overload	KSI	-36.00	-0.00	-0.00	99.000	11187.00
11.00	10.0	Flexure	KSI	36.00	6.11	3.22	7.274	821.98
11.00	**10.0**	**Shear**	**KIPS**	**542.44**	**66.74**	**71.70**	**5.292**	**598.02**
11.00	10.0	Overload	KSI	36.00	6.11	3.22	8.735	987.11
22.00	**20.0**	**Flexure**	**KSI**	**36.00**	**10.91**	**5.43**	**3.352**	**378.80**
22.00	20.0	Shear	KIPS	542.44	50.54	58.76	6.758	763.60
22.00	20.0	Overload	KSI	36.00	10.91	5.43	4.289	484.65
25.50	**23.2**	**Flexure**	**KSI**	**36.00**	**12.14**	**5.97**	**2.828**	**319.51**

25.50	23.2	Shear	KIPS	542.44	44.91	55.23	7.300	824.87
25.50	23.2	Overload	KSI	36.00	12.14	5.97	3.697	417.76
33.00	**30.0**	**Flexure**	**KSI**	**36.00**	**11.21**	**5.54**	**3.228**	**364.75**
33.00	30.0	Shear	KIPS	542.44	33.61	47.67	8.715	984.81
33.00	30.0	Overload	KSI	36.00	11.21	5.54	4.154	469.35
44.00	**40.0**	**Flexure**	**KSI**	**36.00**	**12.83**	**6.13**	**2.627**	**296.91**
44.00	40.0	Shear	KIPS	542.44	17.04	37.69	11.503	1299.83
44.00	40.0	Overload	KSI	36.00	12.83	6.13	3.485	393.76
49.50	**45.0**	**Flexure**	**KSI**	**36.00**	**13.23**	**6.24**	**2.513**	**283.98**
49.50	45.0	Shear	KIPS	542.44	8.29	33.54	13.207	1492.39
49.50	45.0	Overload	KSI	36.00	13.23	6.24	3.361	379.75
55.00	**50.0**	**Flexure**	**KSI**	**36.00**	**13.36**	**6.19**	**2.512**	**283.85**
55.00	50.0	Shear	KIPS	542.44	0.00	-29.58	15.280	1726.59
55.00	50.0	Overload	KSI	36.00	13.36	6.19	3.369	380.66
66.00	**60.0**	**Flexure**	**KSI**	**36.00**	**12.83**	**6.13**	**2.627**	**296.91**
66.00	60.0	Shear	KIPS	542.44	-17.04	-37.69	11.503	1299.83
66.00	60.0	Overload	KSI	36.00	12.83	6.13	3.485	393.76
77.00	**70.0**	**Flexure**	**KSI**	**36.00**	**11.21**	**5.54**	**3.228**	**364.75**
77.00	70.0	Shear	KIPS	542.44	-33.61	-47.67	8.715	984.81
77.00	70.0	Overload	KSI	36.00	11.21	5.54	4.154	469.35
84.50	**76.8**	**Flexure**	**KSI**	**36.00**	**12.14**	**5.97**	**2.828**	**319.51**
84.50	76.8	Shear	KIPS	542.44	-44.91	-55.23	7.300	824.87
84.50	76.8	Overload	KSI	36.00	12.14	5.97	3.697	417.76
88.00	**80.0**	**Flexure**	**KSI**	**36.00**	**10.91**	**5.43**	**3.352**	**378.80**
88.00	80.0	Shear	KIPS	542.44	-50.54	-58.76	6.758	763.60
88.00	80.0	Overload	KSI	36.00	10.91	5.43	4.289	484.65
99.00	90.0	Flexure	KSI	36.00	6.11	3.22	7.274	821.98
99.00	**90.0**	**Shear**	**KIPS**	**542.44**	**-66.74**	**-71.70**	**5.292**	**598.02**
99.00	90.0	Overload	KSI	36.00	6.11	3.22	8.735	987.11
110.00	100.0	Flexure	KSI	-36.00	-0.00	-0.00	99.000	11187.00
110.00	**100.0**	**Shear**	**KIPS**	**336.32**	**-82.95**	**-86.06**	**2.208**	**249.48**
110.00	100.0	Overload	KSI	-36.00	-0.00	-0.00	99.000	11187.00

Detailed Rating Results
Girder F
RIPTA Bus
Axle Load
Impact: As Requested
Lane: As Requested

Span 1

Location							**Legal Rating**	**Legal**

(ft)	Percent	Limit State	Units	Capacity	DL + Adj -LL*	LL	Factor	Load Rating (Ton)
0.00	0.0	Flexure	KSI	-36.00	-0.00	-0.00	99.000	2059.20
0.00	**0.0**	**Shear**	**KIPS**	**336.32**	**82.95**	**36.01**	**4.871**	**101.32**
0.00	0.0	Overload	KSI	-36.00	-0.00	-0.00	99.000	2059.20
11.00	10.0	Flexure	KSI	36.00	6.11	1.73	12.451	258.98
11.00	**10.0**	**Shear**	**KIPS**	**542.44**	**66.74**	**32.12**	**10.905**	**226.83**
11.00	10.0	Overload	KSI	36.00	6.11	1.73	12.460	259.17
22.00	**20.0**	**Flexure**	**KSI**	**36.00**	**10.91**	**3.05**	**5.514**	**114.69**
22.00	20.0	Shear	KIPS	542.44	50.54	28.23	12.985	270.09
22.00	20.0	Overload	KSI	36.00	10.91	3.05	5.879	122.28
25.50	**23.2**	**Flexure**	**KSI**	**36.00**	**12.14**	**3.38**	**4.610**	**95.90**
25.50	23.2	Shear	KIPS	542.44	44.91	26.99	13.789	286.81
25.50	23.2	Overload	KSI	36.00	12.14	3.38	5.023	104.49
33.00	**30.0**	**Flexure**	**KSI**	**36.00**	**11.21**	**3.19**	**5.175**	**107.65**
33.00	30.0	Shear	KIPS	542.44	33.61	24.34	15.758	327.76
33.00	30.0	Overload	KSI	36.00	11.21	3.19	5.550	115.43
44.00	**40.0**	**Flexure**	**KSI**	**36.00**	**12.83**	**3.57**	**4.166**	**86.66**
44.00	40.0	Shear	KIPS	542.44	17.04	20.45	19.568	407.02
44.00	40.0	Overload	KSI	36.00	12.83	3.57	4.605	95.78
49.50	**45.0**	**Flexure**	**KSI**	**36.00**	**13.23**	**3.63**	**3.983**	**82.86**
49.50	45.0	Shear	KIPS	542.44	8.29	18.51	22.099	459.65
49.50	45.0	Overload	KSI	36.00	13.23	3.63	4.439	92.33
55.00	**50.0**	**Flexure**	**KSI**	**36.00**	**13.36**	**3.61**	**3.970**	**82.57**
55.00	50.0	Shear	KIPS	542.44	0.00	-16.56	25.196	524.08
55.00	50.0	Overload	KSI	36.00	13.36	3.61	4.436	92.27
66.00	**60.0**	**Flexure**	**KSI**	**36.00**	**12.83**	**3.57**	**4.166**	**86.66**
66.00	60.0	Shear	KIPS	542.44	-17.04	-20.45	19.568	407.02
66.00	60.0	Overload	KSI	36.00	12.83	3.57	4.605	95.78
77.00	**70.0**	**Flexure**	**KSI**	**36.00**	**11.21**	**3.19**	**5.175**	**107.65**
77.00	70.0	Shear	KIPS	542.44	-33.61	-24.34	15.758	327.76
77.00	70.0	Overload	KSI	36.00	11.21	3.19	5.550	115.43
84.50	**76.8**	**Flexure**	**KSI**	**36.00**	**12.14**	**3.38**	**4.610**	**95.90**
84.50	76.8	Shear	KIPS	542.44	-44.91	-26.99	13.789	286.81
84.50	76.8	Overload	KSI	36.00	12.14	3.38	5.023	104.49
88.00	**80.0**	**Flexure**	**KSI**	**36.00**	**10.91**	**3.05**	**5.514**	**114.69**
88.00	80.0	Shear	KIPS	542.44	-50.54	-28.23	12.985	270.09
88.00	80.0	Overload	KSI	36.00	10.91	3.05	5.879	122.28
99.00	90.0	Flexure	KSI	36.00	6.11	1.73	12.451	258.98
99.00	**90.0**	**Shear**	**KIPS**	**542.44**	**-66.74**	**-32.12**	**10.905**	**226.83**
99.00	90.0	Overload	KSI	36.00	6.11	1.73	12.460	259.17

110.00	100.0	Flexure	KSI	-36.00	-0.00	-0.00	99.000	2059.20
110.00	**100.0**	**Shear**	**KIPS**	**336.32**	**-82.95**	**-36.01**	**4.871**	**101.32**
110.00	100.0	Overload	KSI	-36.00	-0.00	-0.00	99.000	2059.20

Note:
*Adj-LL is only applicable for Permit load rating.

Bridge Name: Mohegan Bridge
NBI Structure ID:
Bridge ID: 067301

Analyzed By: BrR
Analyze Date: Friday, September 14, 2018 20:41:54
Analysis Engine: AASHTO LRFR Engine Version 6.8.2.3002
Analysis Preference Setting: None

Report By: brr
Report Date: Friday, September 14, 2018 20:42:34

Structure Definition Name: Span 1
Member Name: Girder G
Member Alternative Name: Girder G

Load and Resistance Factor Rating Summary

Live Load		Rating Factor	Girder Summary Controls	Capacity (Ton)	Span	Location (ft)	Percent	Impact	Lane
EV2	Legal	4.335	STRENGTH-I Steel Flexure Stress	124.62	1	55.00	50.0	As Requested	As Requested
EV3	Legal	2.861	STRENGTH-I Steel Flexure Stress	123.02	1	55.00	50.0	As Requested	As Requested
HL-93 (US)	Inventory	1.293	STRENGTH-I Steel Flexure Stress	46.57	1	55.00	50.0	As Requested	As Requested
HL-93 (US)	Operating	1.677	STRENGTH-I Steel Flexure Stress	60.36	1	55.00	50.0	As Requested	As Requested
SU4	Legal	3.468	STRENGTH-I Steel Flexure Stress	93.64	1	55.00	50.0	As Requested	As Requested
SU5	Legal	3.093	STRENGTH-I Steel Flexure Stress	95.87	1	55.00	50.0	As Requested	As Requested
SU6	Legal	2.766	STRENGTH-I Steel Flexure Stress	96.13	1	55.00	50.0	As Requested	As Requested
SU7	Legal	2.511	STRENGTH-I Steel Flexure Stress	97.31	1	55.00	50.0	As Requested	As Requested
Type 3	Legal	3.837	STRENGTH-I Steel Flexure Stress	95.93	1	55.00	50.0	As Requested	As Requested
Type 3-3	Legal	3.043	STRENGTH-I Steel Flexure Stress	121.70	1	55.00	50.0	As Requested	As Requested
Type 3S2	Legal	3.119	STRENGTH-I Steel Flexure Stress	112.30	1	55.00	50.0	As Requested	As Requested
RI-3	Permit	2.699	STRENGTH-II Steel Flexure Stress	102.57	1	55.00	50.0	As Requested	As Requested
RI-4	Permit	2.765	STRENGTH-II Steel Flexure Stress	103.68	1	55.00	50.0	As Requested	As Requested
RI-5	Permit	2.165	STRENGTH-II Steel Flexure Stress	113.45	1	55.00	50.0	As Requested	As Requested

RI-6	Permit	2.044	STRENGTH-II Steel Flexure Stress	132.86	1	49.50	45.0	As Requested	As Requested
RIDOT H20 Truck	Legal	4.488	STRENGTH-I Steel Flexure Stress	89.76	1	55.00	50.0	As Requested	As Requested
RI-OP 1	Permit	2.910	STRENGTH-II Steel Flexure Stress	164.44	1	55.00	50.0	As Requested	As Requested
RI-OP 2	Permit	3.058	STRENGTH-II Steel Flexure Stress	244.65	1	49.50	45.0	As Requested	As Requested
RI-OP 3	Permit	2.754	STRENGTH-II Steel Flexure Stress	311.15	1	49.50	45.0	As Requested	As Requested
RIPTA Bus	Legal	4.809	STRENGTH-I Steel Flexure Stress	100.03	1	55.00	50.0	As Requested	As Requested

Note:
"N/A" indicates not applicable
"**" indicates not available

Report by Action: ☑ Flexure ☑ Shear ☑ Overload ☑ Interaction ☑ Critical

Detailed Rating Results
Girder G
EV2
Axle Load
Impact: As Requested
Lane: As Requested

Span 1

Location (ft)	Percent	Limit State	Units	Capacity	DL + Adj -LL*	LL	Legal Rating Factor	Legal Load Rating (Ton)
0.00	0.0	Flexure	KSI	-36.00	-0.00	-0.00	99.000	2846.25
0.00	**0.0**	**Shear**	**KIPS**	**336.32**	**68.52**	**30.12**	**6.284**	**180.67**
0.00	0.0	Overload	KSI	-36.00	-0.00	-0.00	99.000	2846.25
11.00	10.0	Flexure	KSI	36.00	5.06	1.80	12.569	361.37
11.00	10.0	Shear	KIPS	542.44	55.11	26.93	13.424	385.93
11.00	**10.0**	**Overload**	**KSI**	**36.00**	**5.06**	**1.80**	**12.472**	**358.57**
22.00	**20.0**	**Flexure**	**KSI**	**36.00**	**9.02**	**3.17**	**5.869**	**168.74**
22.00	20.0	Shear	KIPS	542.44	41.69	23.73	15.803	454.35
22.00	20.0	Overload	KSI	36.00	9.02	3.17	6.113	175.74
25.50	**23.2**	**Flexure**	**KSI**	**36.00**	**10.05**	**3.51**	**4.996**	**143.64**
25.50	23.2	Shear	KIPS	542.44	37.19	22.72	16.711	480.44
25.50	23.2	Overload	KSI	36.00	10.05	3.51	5.285	151.95
33.00	**30.0**	**Flexure**	**KSI**	**36.00**	**9.29**	**3.32**	**5.520**	**158.69**
33.00	30.0	Shear	KIPS	542.44	27.80	20.54	18.946	544.70
33.00	30.0	Overload	KSI	36.00	9.29	3.32	5.774	166.00
44.00	**40.0**	**Flexure**	**KSI**	**36.00**	**10.63**	**3.74**	**4.540**	**130.52**
44.00	40.0	Shear	KIPS	542.44	14.01	17.34	23.240	668.15
44.00	40.0	Overload	KSI	36.00	10.63	3.74	4.852	139.48
49.50	**45.0**	**Flexure**	**KSI**	**36.00**	**10.97**	**3.82**	**4.357**	**125.26**
49.50	45.0	Shear	KIPS	542.44	6.89	15.75	26.054	749.05
49.50	45.0	Overload	KSI	36.00	10.97	3.82	4.683	134.63
55.00	**50.0**	**Flexure**	**KSI**	**36.00**	**11.08**	**3.81**	**4.335**	**124.62**
55.00	50.0	Shear	KIPS	542.44	0.00	-14.15	29.487	847.76
55.00	50.0	Overload	KSI	36.00	11.08	3.81	4.668	134.20
66.00	**60.0**	**Flexure**	**KSI**	**36.00**	**10.63**	**3.74**	**4.540**	**130.52**
66.00	60.0	Shear	KIPS	542.44	-14.01	-17.34	23.240	668.15
66.00	60.0	Overload	KSI	36.00	10.63	3.74	4.852	139.48

77.00	**70.0**	**Flexure**	**KSI**	**36.00**	**9.29**	**3.32**	**5.520**	**158.69**
77.00	70.0	Shear	KIPS	542.44	-27.80	-20.54	18.946	544.70
77.00	70.0	Overload	KSI	36.00	9.29	3.32	5.774	166.00
84.50	**76.8**	**Flexure**	**KSI**	**36.00**	**10.05**	**3.51**	**4.996**	**143.64**
84.50	76.8	Shear	KIPS	542.44	-37.19	-22.72	16.711	480.44
84.50	76.8	Overload	KSI	36.00	10.05	3.51	5.285	151.95
88.00	**80.0**	**Flexure**	**KSI**	**36.00**	**9.02**	**3.17**	**5.869**	**168.74**
88.00	80.0	Shear	KIPS	542.44	-41.69	-23.73	15.803	454.35
88.00	80.0	Overload	KSI	36.00	9.02	3.17	6.113	175.74
99.00	90.0	Flexure	KSI	36.00	5.06	1.80	12.569	361.37
99.00	90.0	Shear	KIPS	542.44	-55.11	-26.93	13.424	385.93
99.00	**90.0**	**Overload**	**KSI**	**36.00**	**5.06**	**1.80**	**12.472**	**358.57**
110.00	100.0	Flexure	KSI	-36.00	-0.00	-0.00	99.000	2846.25
110.00	**100.0**	**Shear**	**KIPS**	**336.32**	**-68.52**	**-30.12**	**6.284**	**180.67**
110.00	100.0	Overload	KSI	-36.00	-0.00	-0.00	99.000	2846.25

Detailed Rating Results
Girder G
EV3
Axle Load
Impact: As Requested
Lane: As Requested

Span 1

Location (ft)	Percent	Limit State	Units	Capacity	DL + Adj -LL*	LL	Legal Rating Factor	Legal Load Rating (Ton)
0.00	0.0	Flexure	KSI	-36.00	-0.00	-0.00	99.000	4257.00
0.00	**0.0**	**Shear**	**KIPS**	**336.32**	**68.52**	**44.84**	**4.221**	**181.51**
0.00	0.0	Overload	KSI	-36.00	-0.00	-0.00	99.000	4257.00
11.00	10.0	Flexure	KSI	36.00	5.06	2.67	8.448	363.26
11.00	10.0	Shear	KIPS	542.44	55.11	40.06	9.022	387.95
11.00	**10.0**	**Overload**	**KSI**	**36.00**	**5.06**	**2.67**	**8.383**	**360.45**
22.00	**20.0**	**Flexure**	**KSI**	**36.00**	**9.02**	**4.71**	**3.947**	**169.74**
22.00	20.0	Shear	KIPS	542.44	41.69	35.28	10.629	457.05
22.00	20.0	Overload	KSI	36.00	9.02	4.71	4.111	176.78
25.50	**23.2**	**Flexure**	**KSI**	**36.00**	**10.05**	**5.22**	**3.361**	**144.53**
25.50	23.2	Shear	KIPS	542.44	37.19	33.76	11.243	483.43
25.50	23.2	Overload	KSI	36.00	10.05	5.22	3.556	152.90
33.00	**30.0**	**Flexure**	**KSI**	**36.00**	**9.29**	**4.93**	**3.716**	**159.78**
33.00	30.0	Shear	KIPS	542.44	27.80	30.51	12.755	548.45

33.00	30.0	Overload	KSI	36.00	9.29	4.93	3.887	167.14
44.00	**40.0**	**Flexure**	**KSI**	**36.00**	**10.63**	**5.58**	**3.040**	**130.71**
44.00	40.0	Shear	KIPS	542.44	14.01	25.73	15.665	673.60
44.00	40.0	Overload	KSI	36.00	10.63	5.58	3.249	139.69
49.50	**45.0**	**Flexure**	**KSI**	**36.00**	**10.97**	**5.74**	**2.896**	**124.55**
49.50	45.0	Shear	KIPS	542.44	6.89	23.34	17.576	755.79
49.50	45.0	Overload	KSI	36.00	10.97	5.74	3.113	133.86
55.00	**50.0**	**Flexure**	**KSI**	**36.00**	**11.08**	**5.77**	**2.861**	**123.02**
55.00	50.0	Shear	KIPS	542.44	0.00	-20.95	19.913	856.25
55.00	50.0	Overload	KSI	36.00	11.08	5.77	3.081	132.48
66.00	**60.0**	**Flexure**	**KSI**	**36.00**	**10.63**	**5.58**	**3.040**	**130.71**
66.00	60.0	Shear	KIPS	542.44	-14.01	-25.73	15.665	673.60
66.00	60.0	Overload	KSI	36.00	10.63	5.58	3.249	139.69
77.00	**70.0**	**Flexure**	**KSI**	**36.00**	**9.29**	**4.93**	**3.716**	**159.78**
77.00	70.0	Shear	KIPS	542.44	-27.80	-30.51	12.755	548.45
77.00	70.0	Overload	KSI	36.00	9.29	4.93	3.887	167.14
84.50	**76.8**	**Flexure**	**KSI**	**36.00**	**10.05**	**5.22**	**3.361**	**144.53**
84.50	76.8	Shear	KIPS	542.44	-37.19	-33.76	11.243	483.43
84.50	76.8	Overload	KSI	36.00	10.05	5.22	3.556	152.90
88.00	**80.0**	**Flexure**	**KSI**	**36.00**	**9.02**	**4.71**	**3.947**	**169.74**
88.00	80.0	Shear	KIPS	542.44	-41.69	-35.28	10.629	457.05
88.00	80.0	Overload	KSI	36.00	9.02	4.71	4.111	176.78
99.00	90.0	Flexure	KSI	36.00	5.06	2.67	8.448	363.26
99.00	90.0	Shear	KIPS	542.44	-55.11	-40.06	9.022	387.95
99.00	**90.0**	**Overload**	**KSI**	**36.00**	**5.06**	**2.67**	**8.383**	**360.45**
110.00	100.0	Flexure	KSI	-36.00	-0.00	-0.00	99.000	4257.00
110.00	**100.0**	**Shear**	**KIPS**	**336.32**	**-68.52**	**-44.84**	**4.221**	**181.51**
110.00	100.0	Overload	KSI	-36.00	-0.00	-0.00	99.000	4257.00

Detailed Rating Results
Girder G
HL-93 (US)
Truck + Lane
Impact: As Requested
Lane: As Requested

Span 1

Location (ft)	Percent	Limit State	Units	Capacity	DL + Adj-LL*	LL	Inventory Rating Factor	Inventory Load Rating (Ton)	Operating Rating Factor	Operating Load Rating (Ton)

0.00	0.0	Flexure	KSI	-36.00	-0.00	-0.00	99.000	3564.00	99.000	3564.00
0.00	**0.0**	**Shear**	**KIPS**	**336.32**	**68.52**	**73.70**	**1.908**	**68.68**	**2.473**	**89.03**
0.00	0.0	Overload	KSI	-36.00	-0.00	-0.00	99.000	3564.00	99.000	3564.00
11.00	**10.0**	**Flexure**	**KSI**	**36.00**	**5.06**	**4.39**	**3.818**	**137.46**	**4.950**	**178.19**
11.00	10.0	Shear	KIPS	542.44	55.11	63.94	4.199	151.16	5.443	195.95
11.00	10.0	Overload	KSI	36.00	5.06	4.39	5.100	183.61	6.630	238.69
22.00	**20.0**	**Flexure**	**KSI**	**36.00**	**9.02**	**7.74**	**1.784**	**64.24**	**2.313**	**83.27**
22.00	20.0	Shear	KIPS	542.44	41.69	54.61	5.102	183.67	6.614	238.09
22.00	20.0	Overload	KSI	36.00	9.02	7.74	2.502	90.06	3.252	117.08
25.50	**23.2**	**Flexure**	**KSI**	**36.00**	**10.05**	**8.59**	**1.519**	**54.70**	**1.970**	**70.91**
25.50	23.2	Shear	KIPS	542.44	37.19	51.72	5.452	196.26	7.067	254.41
25.50	23.2	Overload	KSI	36.00	10.05	8.59	2.164	77.89	2.813	101.26
33.00	**30.0**	**Flexure**	**KSI**	**36.00**	**9.29**	**8.10**	**1.680**	**60.48**	**2.178**	**78.40**
33.00	30.0	Shear	KIPS	542.44	27.80	45.69	6.326	227.74	8.200	295.22
33.00	30.0	Overload	KSI	36.00	9.29	8.10	2.366	85.16	3.075	110.71
44.00	**40.0**	**Flexure**	**KSI**	**36.00**	**10.63**	**9.19**	**1.371**	**49.34**	**1.777**	**63.96**
44.00	40.0	Shear	KIPS	542.44	14.01	37.20	8.049	289.76	10.434	375.61
44.00	40.0	Overload	KSI	36.00	10.63	9.19	1.972	70.98	2.563	92.28
49.50	**45.0**	**Flexure**	**KSI**	**36.00**	**10.97**	**9.45**	**1.308**	**47.08**	**1.695**	**61.03**
49.50	45.0	Shear	KIPS	542.44	6.89	33.11	9.204	331.34	11.931	429.51
49.50	45.0	Overload	KSI	36.00	10.97	9.45	1.892	68.12	2.460	88.55
55.00	**50.0**	**Flexure**	**KSI**	**36.00**	**11.08**	**9.49**	**1.293**	**46.57**	**1.677**	**60.36**
55.00	50.0	Shear	KIPS	542.44	0.00	-29.13	10.640	383.03	13.792	496.52
55.00	50.0	Overload	KSI	36.00	11.08	9.49	1.875	67.51	2.438	87.76
66.00	**60.0**	**Flexure**	**KSI**	**36.00**	**10.63**	**9.19**	**1.371**	**49.34**	**1.777**	**63.96**
66.00	60.0	Shear	KIPS	542.44	-14.01	-37.20	8.049	289.76	10.434	375.61
66.00	60.0	Overload	KSI	36.00	10.63	9.19	1.972	70.98	2.563	92.28
77.00	**70.0**	**Flexure**	**KSI**	**36.00**	**9.29**	**8.10**	**1.680**	**60.48**	**2.178**	**78.40**
77.00	70.0	Shear	KIPS	542.44	-27.80	-45.69	6.326	227.74	8.200	295.22
77.00	70.0	Overload	KSI	36.00	9.29	8.10	2.366	85.16	3.075	110.71
84.50	**76.8**	**Flexure**	**KSI**	**36.00**	**10.05**	**8.59**	**1.519**	**54.70**	**1.970**	**70.91**
84.50	76.8	Shear	KIPS	542.44	-37.19	-51.72	5.452	196.26	7.067	254.41
84.50	76.8	Overload	KSI	36.00	10.05	8.59	2.164	77.89	2.813	101.26
88.00	**80.0**	**Flexure**	**KSI**	**36.00**	**9.02**	**7.74**	**1.784**	**64.24**	**2.313**	**83.27**
88.00	80.0	Shear	KIPS	542.44	-41.69	-54.61	5.102	183.67	6.614	238.09
88.00	80.0	Overload	KSI	36.00	9.02	7.74	2.502	90.06	3.252	117.08
99.00	**90.0**	**Flexure**	**KSI**	**36.00**	**5.06**	**4.39**	**3.818**	**137.46**	**4.950**	**178.19**
99.00	90.0	Shear	KIPS	542.44	-55.11	-63.94	4.199	151.16	5.443	195.95

99.00	90.0	Overload	KSI	36.00	5.06	4.39	5.100	183.61	6.630	238.69
110.00	100.0	Flexure	KSI	-36.00	-0.00	-0.00	99.000	3564.00	99.000	3564.00
110.00	**100.0**	**Shear**	**KIPS**	**336.32**	**-68.52**	**-73.70**	**1.908**	**68.68**	**2.473**	**89.03**
110.00	100.0	Overload	KSI	-36.00	-0.00	-0.00	99.000	3564.00	99.000	3564.00

Detailed Rating Results
Girder G
HL-93 (US)
Tandem + Lane
Impact: As Requested
Lane: As Requested

Span 1

Location (ft)	Percent	Limit State	Units	Capacity	DL + Adj-LL*	LL	Inventory Rating Factor	Inventory Load Rating (Ton)	Operating Rating Factor	Operating Load Rating (Ton)
0.00	0.0	Flexure	KSI	-36.00	-0.00	-0.00	99.000	3564.00	99.000	3564.00
0.00	**0.0**	**Shear**	**KIPS**	**336.32**	**68.52**	**60.29**	**2.332**	**83.95**	**3.023**	**108.82**
0.00	0.0	Overload	KSI	-36.00	-0.00	-0.00	99.000	3564.00	99.000	3564.00
11.00	**10.0**	**Flexure**	**KSI**	**36.00**	**5.06**	**3.62**	**4.639**	**167.01**	**6.014**	**216.49**
11.00	10.0	Shear	KIPS	542.44	55.11	52.29	5.134	184.84	6.656	239.61
11.00	10.0	Overload	KSI	36.00	5.06	3.62	6.197	223.08	8.056	290.01
22.00	**20.0**	**Flexure**	**KSI**	**36.00**	**9.02**	**6.42**	**2.151**	**77.45**	**2.789**	**100.40**
22.00	20.0	Shear	KIPS	542.44	41.69	44.71	6.231	224.32	8.077	290.79
22.00	20.0	Overload	KSI	36.00	9.02	6.42	3.016	108.59	3.921	141.17
25.50	**23.2**	**Flexure**	**KSI**	**36.00**	**10.05**	**7.14**	**1.827**	**65.77**	**2.368**	**85.25**
25.50	23.2	Shear	KIPS	542.44	37.19	42.39	6.653	239.49	8.624	310.45
25.50	23.2	Overload	KSI	36.00	10.05	7.14	2.602	93.65	3.382	121.75
33.00	**30.0**	**Flexure**	**KSI**	**36.00**	**9.29**	**6.78**	**2.006**	**72.20**	**2.600**	**93.59**
33.00	30.0	Shear	KIPS	542.44	27.80	37.55	7.697	277.10	9.978	359.21
33.00	30.0	Overload	KSI	36.00	9.29	6.78	2.824	101.67	3.671	132.17
44.00	**40.0**	**Flexure**	**KSI**	**36.00**	**10.63**	**7.73**	**1.630**	**58.68**	**2.113**	**76.06**
44.00	40.0	Shear	KIPS	542.44	14.01	30.82	9.716	349.78	12.595	453.42
44.00	40.0	Overload	KSI	36.00	10.63	7.73	2.345	84.41	3.048	109.74
49.50	**45.0**	**Flexure**	**KSI**	**36.00**	**10.97**	**7.96**	**1.552**	**55.88**	**2.012**	**72.44**
49.50	45.0	Shear	KIPS	542.44	6.89	27.61	11.039	397.42	14.310	515.18
49.50	45.0	Overload	KSI	36.00	10.97	7.96	2.246	80.85	2.920	105.11
55.00	**50.0**	**Flexure**	**KSI**	**36.00**	**11.08**	**8.02**	**1.530**	**55.07**	**1.983**	**71.39**
55.00	50.0	Shear	KIPS	542.44	0.00	-24.50	12.649	455.38	16.397	590.30

55.00	50.0	Overload	KSI	36.00	11.08	8.02	2.218	79.84	2.883	103.79
66.00	**60.0**	**Flexure**	**KSI**	**36.00**	**10.63**	**7.73**	**1.630**	**58.68**	**2.113**	**76.06**
66.00	60.0	Shear	KIPS	542.44	-14.01	-30.82	9.716	349.78	12.595	453.42
66.00	60.0	Overload	KSI	36.00	10.63	7.73	2.345	84.41	3.048	109.74
77.00	**70.0**	**Flexure**	**KSI**	**36.00**	**9.29**	**6.78**	**2.006**	**72.20**	**2.600**	**93.59**
77.00	70.0	Shear	KIPS	542.44	-27.80	-37.55	7.697	277.10	9.978	359.21
77.00	70.0	Overload	KSI	36.00	9.29	6.78	2.824	101.67	3.671	132.17
84.50	**76.8**	**Flexure**	**KSI**	**36.00**	**10.05**	**7.14**	**1.827**	**65.77**	**2.368**	**85.25**
84.50	76.8	Shear	KIPS	542.44	-37.19	-42.39	6.653	239.49	8.624	310.45
84.50	76.8	Overload	KSI	36.00	10.05	7.14	2.602	93.65	3.382	121.75
88.00	**80.0**	**Flexure**	**KSI**	**36.00**	**9.02**	**6.42**	**2.151**	**77.45**	**2.789**	**100.40**
88.00	80.0	Shear	KIPS	542.44	-41.69	-44.71	6.231	224.32	8.077	290.79
88.00	80.0	Overload	KSI	36.00	9.02	6.42	3.016	108.59	3.921	141.17
99.00	**90.0**	**Flexure**	**KSI**	**36.00**	**5.06**	**3.62**	**4.639**	**167.01**	**6.014**	**216.49**
99.00	90.0	Shear	KIPS	542.44	-55.11	-52.29	5.134	184.84	6.656	239.61
99.00	90.0	Overload	KSI	36.00	5.06	3.62	6.197	223.08	8.056	290.01
110.00	100.0	Flexure	KSI	-36.00	-0.00	-0.00	99.000	3564.00	99.000	3564.00
110.00	**100.0**	**Shear**	**KIPS**	**336.32**	**-68.52**	**-60.29**	**2.332**	**83.95**	**3.023**	**108.82**
110.00	100.0	Overload	KSI	-36.00	-0.00	-0.00	99.000	3564.00	99.000	3564.00

Detailed Rating Results
Girder G
LRFD Fatigue Truck (US)
Axle Load
Impact: As Requested
Lane: As Requested

Span 1

Location (ft)	Percent	Limit State	Units	Capacity	DL + Adj-LL*	LL	Inventory Rating Factor	Inventory Load Rating (Ton)
11.00	**10.0**	**Interaction**	**KSI**	**12.00**	**0.00**	**2.32**	**5.179**	**155.38**
22.00	**20.0**	**Interaction**	**KSI**	**12.00**	**0.00**	**4.00**	**2.998**	**89.93**
25.50	**23.2**	**Interaction**	**KSI**	**16.00**	**0.00**	**4.49**	**3.560**	**106.80**
33.00	**30.0**	**Interaction**	**KSI**	**12.00**	**0.00**	**4.13**	**2.904**	**87.11**

44.00	**40.0**	**Interaction**	**KSI**	**12.00**	**0.00**	**4.62**	**2.597**	**77.92**
49.50	**45.0**	**Interaction**	**KSI**	**12.00**	**0.00**	**4.67**	**2.567**	**77.02**
55.00	**50.0**	**Interaction**	**KSI**	**12.00**	**0.00**	**4.60**	**2.608**	**78.23**
66.00	**60.0**	**Interaction**	**KSI**	**12.00**	**0.00**	**4.62**	**2.597**	**77.92**
77.00	**70.0**	**Interaction**	**KSI**	**12.00**	**0.00**	**4.13**	**2.904**	**87.11**
84.50	**76.8**	**Interaction**	**KSI**	**16.00**	**0.00**	**4.41**	**3.631**	**108.92**
88.00	**80.0**	**Interaction**	**KSI**	**12.00**	**0.00**	**4.00**	**2.998**	**89.93**
99.00	**90.0**	**Interaction**	**KSI**	**12.00**	**0.00**	**2.32**	**5.179**	**155.38**

Detailed Rating Results
Girder G
SU4
Axle Load
Impact: As Requested
Lane: As Requested

Span 1

Location (ft)	Percent	Limit State	Units	Capacity	DL + Adj -LL*	LL	Legal Rating Factor	Legal Load Rating (Ton)
0.00	0.0	Flexure	KSI	-36.00	-0.00	-0.00	99.000	2673.00
0.00	**0.0**	**Shear**	**KIPS**	**336.32**	**68.52**	**36.60**	**5.171**	**139.62**
0.00	0.0	Overload	KSI	-36.00	-0.00	-0.00	99.000	2673.00
11.00	10.0	Flexure	KSI	36.00	5.06	2.18	10.345	279.32
11.00	10.0	Shear	KIPS	542.44	55.11	32.71	11.048	298.30
11.00	**10.0**	**Overload**	**KSI**	**36.00**	**5.06**	**2.18**	**10.265**	**277.16**
22.00	**20.0**	**Flexure**	**KSI**	**36.00**	**9.02**	**3.85**	**4.832**	**130.46**
22.00	20.0	Shear	KIPS	542.44	41.69	28.83	13.011	351.29
22.00	20.0	Overload	KSI	36.00	9.02	3.85	5.032	135.88
25.50	**23.2**	**Flexure**	**KSI**	**36.00**	**10.05**	**4.27**	**4.114**	**111.07**
25.50	23.2	Shear	KIPS	542.44	37.19	27.59	13.759	371.50
25.50	23.2	Overload	KSI	36.00	10.05	4.27	4.352	117.50
33.00	**30.0**	**Flexure**	**KSI**	**36.00**	**9.29**	**4.03**	**4.546**	**122.74**
33.00	30.0	Shear	KIPS	542.44	27.80	24.94	15.603	421.29
33.00	30.0	Overload	KSI	36.00	9.29	4.03	4.755	128.39
44.00	**40.0**	**Flexure**	**KSI**	**36.00**	**10.63**	**4.60**	**3.688**	**99.57**
44.00	40.0	Shear	KIPS	542.44	14.01	21.05	19.149	517.02
44.00	40.0	Overload	KSI	36.00	10.63	4.60	3.941	106.41
49.50	**45.0**	**Flexure**	**KSI**	**36.00**	**10.97**	**4.73**	**3.513**	**94.85**
49.50	45.0	Shear	KIPS	542.44	6.89	19.11	21.474	579.80
49.50	45.0	Overload	KSI	36.00	10.97	4.73	3.776	101.95

55.00	**50.0**	**Flexure**	**KSI**	**36.00**	**11.08**	**4.76**	**3.468**	**93.64**
55.00	50.0	Shear	KIPS	542.44	0.00	-17.16	24.313	656.46
55.00	50.0	Overload	KSI	36.00	11.08	4.76	3.735	100.84
66.00	**60.0**	**Flexure**	**KSI**	**36.00**	**10.63**	**4.60**	**3.688**	**99.57**
66.00	60.0	Shear	KIPS	542.44	-14.01	-21.05	19.149	517.02
66.00	60.0	Overload	KSI	36.00	10.63	4.60	3.941	106.41
77.00	**70.0**	**Flexure**	**KSI**	**36.00**	**9.29**	**4.03**	**4.546**	**122.74**
77.00	70.0	Shear	KIPS	542.44	-27.80	-24.94	15.603	421.29
77.00	70.0	Overload	KSI	36.00	9.29	4.03	4.755	128.39
84.50	**76.8**	**Flexure**	**KSI**	**36.00**	**10.05**	**4.27**	**4.114**	**111.07**
84.50	76.8	Shear	KIPS	542.44	-37.19	-27.59	13.759	371.50
84.50	76.8	Overload	KSI	36.00	10.05	4.27	4.352	117.50
88.00	**80.0**	**Flexure**	**KSI**	**36.00**	**9.02**	**3.85**	**4.832**	**130.46**
88.00	80.0	Shear	KIPS	542.44	-41.69	-28.83	13.011	351.29
88.00	80.0	Overload	KSI	36.00	9.02	3.85	5.032	135.88
99.00	90.0	Flexure	KSI	36.00	5.06	2.18	10.345	279.32
99.00	90.0	Shear	KIPS	542.44	-55.11	-32.71	11.048	298.30
99.00	**90.0**	**Overload**	**KSI**	**36.00**	**5.06**	**2.18**	**10.265**	**277.16**
110.00	100.0	Flexure	KSI	-36.00	-0.00	-0.00	99.000	2673.00
110.00	**100.0**	**Shear**	**KIPS**	**336.32**	**-68.52**	**-36.60**	**5.171**	**139.62**
110.00	100.0	Overload	KSI	-36.00	-0.00	-0.00	99.000	2673.00

Detailed Rating Results
Girder G
SU5
Axle Load
Impact: As Requested
Lane: As Requested

Span 1

Location (ft)	Percent	Limit State	Units	Capacity	DL + Adj -LL*	LL	Legal Rating Factor	Legal Load Rating (Ton)
0.00	0.0	Flexure	KSI	-36.00	-0.00	-0.00	99.000	3069.00
0.00	**0.0**	**Shear**	**KIPS**	**336.32**	**68.52**	**41.42**	**4.570**	**141.66**
0.00	0.0	Overload	KSI	-36.00	-0.00	-0.00	99.000	3069.00
11.00	10.0	Flexure	KSI	36.00	5.06	2.47	9.158	283.90
11.00	10.0	Shear	KIPS	542.44	55.11	36.96	9.780	303.19
11.00	**10.0**	**Overload**	**KSI**	**36.00**	**5.06**	**2.47**	**9.087**	**281.70**
22.00	**20.0**	**Flexure**	**KSI**	**36.00**	**9.02**	**4.34**	**4.287**	**132.89**
22.00	20.0	Shear	KIPS	542.44	41.69	32.49	11.543	357.83

22.00	20.0	Overload	KSI	36.00	9.02	4.34	4.465	138.41
25.50	**23.2**	**Flexure**	**KSI**	**36.00**	**10.05**	**4.81**	**3.653**	**113.23**
25.50	23.2	Shear	KIPS	542.44	37.19	31.07	12.217	378.73
25.50	23.2	Overload	KSI	36.00	10.05	4.81	3.864	119.78
33.00	**30.0**	**Flexure**	**KSI**	**36.00**	**9.29**	**4.55**	**4.025**	**124.76**
33.00	30.0	Shear	KIPS	542.44	27.80	28.03	13.884	430.39
33.00	30.0	Overload	KSI	36.00	9.29	4.55	4.210	130.51
44.00	**40.0**	**Flexure**	**KSI**	**36.00**	**10.63**	**5.19**	**3.271**	**101.39**
44.00	40.0	Shear	KIPS	542.44	14.01	23.56	17.106	530.29
44.00	40.0	Overload	KSI	36.00	10.63	5.19	3.495	108.36
49.50	**45.0**	**Flexure**	**KSI**	**36.00**	**10.97**	**5.32**	**3.124**	**96.83**
49.50	45.0	Shear	KIPS	542.44	6.89	21.33	19.234	596.25
49.50	45.0	Overload	KSI	36.00	10.97	5.32	3.357	104.08
55.00	**50.0**	**Flexure**	**KSI**	**36.00**	**11.08**	**5.34**	**3.093**	**95.87**
55.00	50.0	Shear	KIPS	542.44	0.00	-19.10	21.847	677.26
55.00	50.0	Overload	KSI	36.00	11.08	5.34	3.331	103.25
66.00	**60.0**	**Flexure**	**KSI**	**36.00**	**10.63**	**5.19**	**3.271**	**101.39**
66.00	60.0	Shear	KIPS	542.44	-14.01	-23.56	17.106	530.29
66.00	60.0	Overload	KSI	36.00	10.63	5.19	3.495	108.36
77.00	**70.0**	**Flexure**	**KSI**	**36.00**	**9.29**	**4.55**	**4.025**	**124.76**
77.00	70.0	Shear	KIPS	542.44	-27.80	-28.03	13.884	430.39
77.00	70.0	Overload	KSI	36.00	9.29	4.55	4.210	130.51
84.50	**76.8**	**Flexure**	**KSI**	**36.00**	**10.05**	**4.81**	**3.653**	**113.23**
84.50	76.8	Shear	KIPS	542.44	-37.19	-31.07	12.217	378.73
84.50	76.8	Overload	KSI	36.00	10.05	4.81	3.864	119.78
88.00	**80.0**	**Flexure**	**KSI**	**36.00**	**9.02**	**4.34**	**4.287**	**132.89**
88.00	80.0	Shear	KIPS	542.44	-41.69	-32.49	11.543	357.83
88.00	80.0	Overload	KSI	36.00	9.02	4.34	4.465	138.41
99.00	90.0	Flexure	KSI	36.00	5.06	2.47	9.158	283.90
99.00	90.0	Shear	KIPS	542.44	-55.11	-36.96	9.780	303.19
99.00	**90.0**	**Overload**	**KSI**	**36.00**	**5.06**	**2.47**	**9.087**	**281.70**
110.00	100.0	Flexure	KSI	-36.00	-0.00	-0.00	99.000	3069.00
110.00	**100.0**	**Shear**	**KIPS**	**336.32**	**-68.52**	**-41.42**	**4.570**	**141.66**
110.00	100.0	Overload	KSI	-36.00	-0.00	-0.00	99.000	3069.00

Detailed Rating Results
Girder G
SU6
Axle Load
Impact: As Requested
Lane: As Requested

Span 1

Location (ft)	Percent	Limit State	Units	Capacity	DL + Adj -LL*	LL	Legal Rating Factor	Legal Load Rating (Ton)
0.00	0.0	Flexure	KSI	-36.00	-0.00	-0.00	99.000	3440.25
0.00	**0.0**	**Shear**	**KIPS**	**336.32**	**68.52**	**45.28**	**4.180**	**145.25**
0.00	0.0	Overload	KSI	-36.00	-0.00	-0.00	99.000	3440.25
11.00	10.0	Flexure	KSI	36.00	5.06	2.69	8.403	291.99
11.00	10.0	Shear	KIPS	542.44	55.11	40.28	8.974	311.84
11.00	**10.0**	**Overload**	**KSI**	**36.00**	**5.06**	**2.69**	**8.338**	**289.73**
22.00	**20.0**	**Flexure**	**KSI**	**36.00**	**9.02**	**4.81**	**3.864**	**134.28**
22.00	20.0	Shear	KIPS	542.44	41.69	35.27	10.633	369.48
22.00	20.0	Overload	KSI	36.00	9.02	4.81	4.024	139.85
25.50	**23.2**	**Flexure**	**KSI**	**36.00**	**10.05**	**5.35**	**3.280**	**113.99**
25.50	23.2	Shear	KIPS	542.44	37.19	33.68	11.270	391.65
25.50	23.2	Overload	KSI	36.00	10.05	5.35	3.470	120.59
33.00	**30.0**	**Flexure**	**KSI**	**36.00**	**9.29**	**5.07**	**3.611**	**125.49**
33.00	30.0	Shear	KIPS	542.44	27.80	30.27	12.855	446.72
33.00	30.0	Overload	KSI	36.00	9.29	5.07	3.778	131.27
44.00	**40.0**	**Flexure**	**KSI**	**36.00**	**10.63**	**5.76**	**2.944**	**102.31**
44.00	40.0	Shear	KIPS	542.44	14.01	25.27	15.954	554.40
44.00	40.0	Overload	KSI	36.00	10.63	5.76	3.146	109.33
49.50	**45.0**	**Flexure**	**KSI**	**36.00**	**10.97**	**5.93**	**2.802**	**97.39**
49.50	45.0	Shear	KIPS	542.44	6.89	22.76	18.024	626.34
49.50	45.0	Overload	KSI	36.00	10.97	5.93	3.012	104.67
55.00	**50.0**	**Flexure**	**KSI**	**36.00**	**11.08**	**5.97**	**2.766**	**96.13**
55.00	50.0	Shear	KIPS	542.44	0.00	-20.26	20.594	715.65
55.00	50.0	Overload	KSI	36.00	11.08	5.97	2.979	103.52
66.00	**60.0**	**Flexure**	**KSI**	**36.00**	**10.63**	**5.76**	**2.944**	**102.31**
66.00	60.0	Shear	KIPS	542.44	-14.01	-25.27	15.954	554.40
66.00	60.0	Overload	KSI	36.00	10.63	5.76	3.146	109.33
77.00	**70.0**	**Flexure**	**KSI**	**36.00**	**9.29**	**5.07**	**3.611**	**125.49**
77.00	70.0	Shear	KIPS	542.44	-27.80	-30.27	12.855	446.72
77.00	70.0	Overload	KSI	36.00	9.29	5.07	3.778	131.27
84.50	**76.8**	**Flexure**	**KSI**	**36.00**	**10.05**	**5.35**	**3.280**	**113.99**
84.50	76.8	Shear	KIPS	542.44	-37.19	-33.68	11.270	391.65
84.50	76.8	Overload	KSI	36.00	10.05	5.35	3.470	120.59
88.00	**80.0**	**Flexure**	**KSI**	**36.00**	**9.02**	**4.81**	**3.864**	**134.28**
88.00	80.0	Shear	KIPS	542.44	-41.69	-35.27	10.633	369.48
88.00	80.0	Overload	KSI	36.00	9.02	4.81	4.024	139.85
99.00	90.0	Flexure	KSI	36.00	5.06	2.69	8.403	291.99
99.00	90.0	Shear	KIPS	542.44	-55.11	-40.28	8.974	311.84

99.00	**90.0**	**Overload**	**KSI**	**36.00**	**5.06**	**2.69**	**8.338**	**289.73**
110.00	100.0	Flexure	KSI	-36.00	-0.00	-0.00	99.000	3440.25
110.00	**100.0**	**Shear**	**KIPS**	**336.32**	**-68.52**	**-45.28**	**4.180**	**145.25**
110.00	100.0	Overload	KSI	-36.00	-0.00	-0.00	99.000	3440.25

Detailed Rating Results
Girder G
SU7
Axle Load
Impact: As Requested
Lane: As Requested

Span 1

Location (ft)	Percent	Limit State	Units	Capacity	DL + Adj -LL*	LL	Legal Rating Factor	Legal Load Rating (Ton)
0.00	0.0	Flexure	KSI	-36.00	-0.00	-0.00	99.000	3836.25
0.00	**0.0**	**Shear**	**KIPS**	**336.32**	**68.52**	**49.22**	**3.845**	**149.00**
0.00	0.0	Overload	KSI	-36.00	-0.00	-0.00	99.000	3836.25
11.00	10.0	Flexure	KSI	36.00	5.06	2.91	7.755	300.50
11.00	10.0	Shear	KIPS	542.44	55.11	43.64	8.282	320.92
11.00	**10.0**	**Overload**	**KSI**	**36.00**	**5.06**	**2.91**	**7.695**	**298.18**
22.00	**20.0**	**Flexure**	**KSI**	**36.00**	**9.02**	**5.21**	**3.567**	**138.24**
22.00	20.0	Shear	KIPS	542.44	41.69	38.06	9.854	381.83
22.00	20.0	Overload	KSI	36.00	9.02	5.21	3.715	143.97
25.50	**23.2**	**Flexure**	**KSI**	**36.00**	**10.05**	**5.82**	**3.016**	**116.86**
25.50	23.2	Shear	KIPS	542.44	37.19	36.29	10.461	405.38
25.50	23.2	Overload	KSI	36.00	10.05	5.82	3.190	123.62
33.00	**30.0**	**Flexure**	**KSI**	**36.00**	**9.29**	**5.57**	**3.291**	**127.53**
33.00	30.0	Shear	KIPS	542.44	27.80	32.48	11.980	464.21
33.00	30.0	Overload	KSI	36.00	9.29	5.57	3.443	133.40
44.00	**40.0**	**Flexure**	**KSI**	**36.00**	**10.63**	**6.33**	**2.679**	**103.82**
44.00	40.0	Shear	KIPS	542.44	14.01	26.90	14.984	580.61
44.00	40.0	Overload	KSI	36.00	10.63	6.33	2.863	110.95
49.50	**45.0**	**Flexure**	**KSI**	**36.00**	**10.97**	**6.52**	**2.552**	**98.90**
49.50	45.0	Shear	KIPS	542.44	6.89	24.11	17.016	659.38
49.50	45.0	Overload	KSI	36.00	10.97	6.52	2.743	106.30
55.00	**50.0**	**Flexure**	**KSI**	**36.00**	**11.08**	**6.58**	**2.511**	**97.31**
55.00	50.0	Shear	KIPS	542.44	0.00	-21.32	19.570	758.34
55.00	50.0	Overload	KSI	36.00	11.08	6.58	2.704	104.80
66.00	**60.0**	**Flexure**	**KSI**	**36.00**	**10.63**	**6.33**	**2.679**	**103.82**

66.00	60.0	Shear	KIPS	542.44	-14.01	-26.90	14.984	580.61
66.00	60.0	Overload	KSI	36.00	10.63	6.33	2.863	110.95
77.00	**70.0**	**Flexure**	**KSI**	**36.00**	**9.29**	**5.57**	**3.291**	**127.53**
77.00	70.0	Shear	KIPS	542.44	-27.80	-32.48	11.980	464.21
77.00	70.0	Overload	KSI	36.00	9.29	5.57	3.443	133.40
84.50	**76.8**	**Flexure**	**KSI**	**36.00**	**10.05**	**5.82**	**3.016**	**116.86**
84.50	76.8	Shear	KIPS	542.44	-37.19	-36.29	10.461	405.38
84.50	76.8	Overload	KSI	36.00	10.05	5.82	3.190	123.62
88.00	**80.0**	**Flexure**	**KSI**	**36.00**	**9.02**	**5.21**	**3.567**	**138.24**
88.00	80.0	Shear	KIPS	542.44	-41.69	-38.06	9.854	381.83
88.00	80.0	Overload	KSI	36.00	9.02	5.21	3.715	143.97
99.00	90.0	Flexure	KSI	36.00	5.06	2.91	7.755	300.50
99.00	90.0	Shear	KIPS	542.44	-55.11	-43.64	8.282	320.92
99.00	**90.0**	**Overload**	**KSI**	**36.00**	**5.06**	**2.91**	**7.695**	**298.18**
110.00	100.0	Flexure	KSI	-36.00	-0.00	-0.00	99.000	3836.25
110.00	**100.0**	**Shear**	**KIPS**	**336.32**	**-68.52**	**-49.22**	**3.845**	**149.00**
110.00	100.0	Overload	KSI	-36.00	-0.00	-0.00	99.000	3836.25

Detailed Rating Results
Girder G
Type 3
Axle Load
Impact: As Requested
Lane: As Requested

Span 1

Location (ft)	Percent	Limit State	Units	Capacity	DL + Adj -LL*	LL	Legal Rating Factor	Legal Load Rating (Ton)
0.00	0.0	Flexure	KSI	-36.00	-0.00	-0.00	99.000	2475.00
0.00	**0.0**	**Shear**	**KIPS**	**336.32**	**68.52**	**33.56**	**5.639**	**140.97**
0.00	0.0	Overload	KSI	-36.00	-0.00	-0.00	99.000	2475.00
11.00	10.0	Flexure	KSI	36.00	5.06	2.00	11.294	282.36
11.00	10.0	Shear	KIPS	542.44	55.11	29.96	12.062	301.55
11.00	**10.0**	**Overload**	**KSI**	**36.00**	**5.06**	**2.00**	**11.207**	**280.18**
22.00	**20.0**	**Flexure**	**KSI**	**36.00**	**9.02**	**3.52**	**5.283**	**132.07**
22.00	20.0	Shear	KIPS	542.44	41.69	26.36	14.225	355.63
22.00	20.0	Overload	KSI	36.00	9.02	3.52	5.502	137.55
25.50	**23.2**	**Flexure**	**KSI**	**36.00**	**10.05**	**3.90**	**4.500**	**112.50**
25.50	23.2	Shear	KIPS	542.44	37.19	25.22	15.052	376.30
25.50	23.2	Overload	KSI	36.00	10.05	3.90	4.761	119.01

33.00	**30.0**	**Flexure**	**KSI**	**36.00**	**9.29**	**3.68**	**4.980**	**124.49**
33.00	30.0	Shear	KIPS	542.44	27.80	22.76	17.093	427.32
33.00	30.0	Overload	KSI	36.00	9.29	3.68	5.209	130.23
44.00	**40.0**	**Flexure**	**KSI**	**36.00**	**10.63**	**4.17**	**4.067**	**101.67**
44.00	40.0	Shear	KIPS	542.44	14.01	19.16	21.032	525.80
44.00	40.0	Overload	KSI	36.00	10.63	4.17	4.346	108.65
49.50	**45.0**	**Flexure**	**KSI**	**36.00**	**10.97**	**4.29**	**3.880**	**96.99**
49.50	45.0	Shear	KIPS	542.44	6.89	17.36	23.627	590.68
49.50	45.0	Overload	KSI	36.00	10.97	4.29	4.170	104.25
55.00	**50.0**	**Flexure**	**KSI**	**36.00**	**11.08**	**4.30**	**3.837**	**95.93**
55.00	50.0	Shear	KIPS	542.44	0.00	-15.56	26.808	670.20
55.00	50.0	Overload	KSI	36.00	11.08	4.30	4.133	103.31
66.00	**60.0**	**Flexure**	**KSI**	**36.00**	**10.63**	**4.17**	**4.067**	**101.67**
66.00	60.0	Shear	KIPS	542.44	-14.01	-19.16	21.032	525.80
66.00	60.0	Overload	KSI	36.00	10.63	4.17	4.346	108.65
77.00	**70.0**	**Flexure**	**KSI**	**36.00**	**9.29**	**3.68**	**4.980**	**124.49**
77.00	70.0	Shear	KIPS	542.44	-27.80	-22.76	17.093	427.32
77.00	70.0	Overload	KSI	36.00	9.29	3.68	5.209	130.23
84.50	**76.8**	**Flexure**	**KSI**	**36.00**	**10.05**	**3.90**	**4.500**	**112.50**
84.50	76.8	Shear	KIPS	542.44	-37.19	-25.22	15.052	376.30
84.50	76.8	Overload	KSI	36.00	10.05	3.90	4.761	119.01
88.00	**80.0**	**Flexure**	**KSI**	**36.00**	**9.02**	**3.52**	**5.283**	**132.07**
88.00	80.0	Shear	KIPS	542.44	-41.69	-26.36	14.225	355.63
88.00	80.0	Overload	KSI	36.00	9.02	3.52	5.502	137.55
99.00	90.0	Flexure	KSI	36.00	5.06	2.00	11.294	282.36
99.00	90.0	Shear	KIPS	542.44	-55.11	-29.96	12.062	301.55
99.00	**90.0**	**Overload**	**KSI**	**36.00**	**5.06**	**2.00**	**11.207**	**280.18**
110.00	100.0	Flexure	KSI	-36.00	-0.00	-0.00	99.000	2475.00
110.00	**100.0**	**Shear**	**KIPS**	**336.32**	**-68.52**	**-33.56**	**5.639**	**140.97**
110.00	100.0	Overload	KSI	-36.00	-0.00	-0.00	99.000	2475.00

Detailed Rating Results
Girder G
Type 3-3
Axle Load
Impact: As Requested
Lane: As Requested

Span 1

Location (ft)	Percent		Units	Capacity		LL	Legal Rating Factor	Legal Load Rating (Ton)

		Limit State			DL + Adj -LL*			
0.00	0.0	Flexure	KSI	-36.00	-0.00	-0.00	99.000	3960.00
0.00	**0.0**	**Shear**	**KIPS**	**336.32**	**68.52**	**45.08**	**4.198**	**167.92**
0.00	0.0	Overload	KSI	-36.00	-0.00	-0.00	99.000	3960.00
11.00	10.0	Flexure	KSI	36.00	5.06	2.62	8.606	344.25
11.00	10.0	Shear	KIPS	542.44	55.11	39.32	9.191	367.64
11.00	**10.0**	**Overload**	**KSI**	**36.00**	**5.06**	**2.62**	**8.540**	**341.58**
22.00	**20.0**	**Flexure**	**KSI**	**36.00**	**9.02**	**4.52**	**4.118**	**164.70**
22.00	20.0	Shear	KIPS	542.44	41.69	33.56	11.174	446.95
22.00	20.0	Overload	KSI	36.00	9.02	4.52	4.288	171.54
25.50	**23.2**	**Flexure**	**KSI**	**36.00**	**10.05**	**4.99**	**3.520**	**140.78**
25.50	23.2	Shear	KIPS	542.44	37.19	31.73	11.963	478.51
25.50	23.2	Overload	KSI	36.00	10.05	4.99	3.723	148.93
33.00	**30.0**	**Flexure**	**KSI**	**36.00**	**9.29**	**4.63**	**3.953**	**158.12**
33.00	30.0	Shear	KIPS	542.44	27.80	27.80	13.995	559.79
33.00	30.0	Overload	KSI	36.00	9.29	4.63	4.135	165.40
44.00	**40.0**	**Flexure**	**KSI**	**36.00**	**10.63**	**5.23**	**3.244**	**129.77**
44.00	40.0	Shear	KIPS	542.44	14.01	22.04	18.285	731.38
44.00	40.0	Overload	KSI	36.00	10.63	5.23	3.467	138.68
49.50	**45.0**	**Flexure**	**KSI**	**36.00**	**10.97**	**5.41**	**3.076**	**123.03**
49.50	45.0	Shear	KIPS	542.44	6.89	19.16	21.408	856.33
49.50	45.0	Overload	KSI	36.00	10.97	5.41	3.306	132.24
55.00	**50.0**	**Flexure**	**KSI**	**36.00**	**11.08**	**5.43**	**3.043**	**121.70**
55.00	50.0	Shear	KIPS	542.44	0.00	-16.28	25.623	1024.91
55.00	50.0	Overload	KSI	36.00	11.08	5.43	3.277	131.06
66.00	**60.0**	**Flexure**	**KSI**	**36.00**	**10.63**	**5.23**	**3.244**	**129.77**
66.00	60.0	Shear	KIPS	542.44	-14.01	-22.04	18.285	731.38
66.00	60.0	Overload	KSI	36.00	10.63	5.23	3.467	138.68
77.00	**70.0**	**Flexure**	**KSI**	**36.00**	**9.29**	**4.63**	**3.953**	**158.12**
77.00	70.0	Shear	KIPS	542.44	-27.80	-27.80	13.995	559.79
77.00	70.0	Overload	KSI	36.00	9.29	4.63	4.135	165.40
84.50	**76.8**	**Flexure**	**KSI**	**36.00**	**10.05**	**4.99**	**3.520**	**140.78**
84.50	76.8	Shear	KIPS	542.44	-37.19	-31.73	11.963	478.51
84.50	76.8	Overload	KSI	36.00	10.05	4.99	3.723	148.93
88.00	**80.0**	**Flexure**	**KSI**	**36.00**	**9.02**	**4.52**	**4.118**	**164.70**
88.00	80.0	Shear	KIPS	542.44	-41.69	-33.56	11.174	446.95
88.00	80.0	Overload	KSI	36.00	9.02	4.52	4.288	171.54
99.00	90.0	Flexure	KSI	36.00	5.06	2.62	8.606	344.25
99.00	90.0	Shear	KIPS	542.44	-55.11	-39.32	9.191	367.64
99.00	**90.0**	**Overload**	**KSI**	**36.00**	**5.06**	**2.62**	**8.540**	**341.58**
110.00	100.0	Flexure	KSI	-36.00	-0.00	-0.00	99.000	3960.00
110.00	**100.0**	**Shear**	**KIPS**	**336.32**	**-68.52**	**-45.08**	**4.198**	**167.92**

110.00	100.0	Overload	KSI	-36.00	-0.00	-0.00	99.000	3960.00

Detailed Rating Results
Girder G
Type 3S2
Axle Load
Impact: As Requested
Lane: As Requested

Span 1

Location (ft)	Percent	Limit State	Units	Capacity	DL + Adj -LL*	LL	Legal Rating Factor	Legal Load Rating (Ton)
0.00	0.0	Flexure	KSI	-36.00	-0.00	-0.00	99.000	3564.00
0.00	**0.0**	**Shear**	**KIPS**	**336.32**	**68.52**	**43.07**	**4.395**	**158.21**
0.00	0.0	Overload	KSI	-36.00	-0.00	-0.00	99.000	3564.00
11.00	10.0	Flexure	KSI	36.00	5.06	2.53	8.933	321.60
11.00	10.0	Shear	KIPS	542.44	55.11	37.88	9.540	343.45
11.00	**10.0**	**Overload**	**KSI**	**36.00**	**5.06**	**2.53**	**8.864**	**319.11**
22.00	**20.0**	**Flexure**	**KSI**	**36.00**	**9.02**	**4.37**	**4.259**	**153.34**
22.00	20.0	Shear	KIPS	542.44	41.69	32.70	11.469	412.88
22.00	20.0	Overload	KSI	36.00	9.02	4.37	4.436	159.70
25.50	**23.2**	**Flexure**	**KSI**	**36.00**	**10.05**	**4.85**	**3.620**	**130.33**
25.50	23.2	Shear	KIPS	542.44	37.19	31.05	12.225	440.10
25.50	23.2	Overload	KSI	36.00	10.05	4.85	3.830	137.87
33.00	**30.0**	**Flexure**	**KSI**	**36.00**	**9.29**	**4.61**	**3.975**	**143.09**
33.00	30.0	Shear	KIPS	542.44	27.80	27.52	14.141	509.08
33.00	30.0	Overload	KSI	36.00	9.29	4.61	4.158	149.68
44.00	**40.0**	**Flexure**	**KSI**	**36.00**	**10.63**	**5.20**	**3.260**	**117.36**
44.00	40.0	Shear	KIPS	542.44	14.01	22.33	18.049	649.75
44.00	40.0	Overload	KSI	36.00	10.63	5.20	3.484	125.42
49.50	**45.0**	**Flexure**	**KSI**	**36.00**	**10.97**	**5.32**	**3.126**	**112.55**
49.50	45.0	Shear	KIPS	542.44	6.89	19.74	20.784	748.21
49.50	45.0	Overload	KSI	36.00	10.97	5.32	3.360	120.97
55.00	**50.0**	**Flexure**	**KSI**	**36.00**	**11.08**	**5.29**	**3.119**	**112.30**
55.00	50.0	Shear	KIPS	542.44	0.00	-17.15	24.332	875.95
55.00	50.0	Overload	KSI	36.00	11.08	5.29	3.359	120.94
66.00	**60.0**	**Flexure**	**KSI**	**36.00**	**10.63**	**5.20**	**3.260**	**117.36**
66.00	60.0	Shear	KIPS	542.44	-14.01	-22.33	18.049	649.75
66.00	60.0	Overload	KSI	36.00	10.63	5.20	3.484	125.42
77.00	**70.0**	**Flexure**	**KSI**	**36.00**	**9.29**	**4.61**	**3.975**	**143.09**

77.00	70.0	Shear	KIPS	542.44	-27.80	-27.52	14.141	509.08
77.00	70.0	Overload	KSI	36.00	9.29	4.61	4.158	149.68
84.50	**76.8**	**Flexure**	**KSI**	**36.00**	**10.05**	**4.85**	**3.620**	**130.33**
84.50	76.8	Shear	KIPS	542.44	-37.19	-31.05	12.225	440.10
84.50	76.8	Overload	KSI	36.00	10.05	4.85	3.830	137.87
88.00	**80.0**	**Flexure**	**KSI**	**36.00**	**9.02**	**4.37**	**4.259**	**153.34**
88.00	80.0	Shear	KIPS	542.44	-41.69	-32.70	11.469	412.88
88.00	80.0	Overload	KSI	36.00	9.02	4.37	4.436	159.70
99.00	90.0	Flexure	KSI	36.00	5.06	2.53	8.933	321.60
99.00	90.0	Shear	KIPS	542.44	-55.11	-37.88	9.540	343.45
99.00	**90.0**	**Overload**	**KSI**	**36.00**	**5.06**	**2.53**	**8.864**	**319.11**
110.00	100.0	Flexure	KSI	-36.00	-0.00	-0.00	99.000	3564.00
110.00	**100.0**	**Shear**	**KIPS**	**336.32**	**-68.52**	**-43.07**	**4.395**	**158.21**
110.00	100.0	Overload	KSI	-36.00	-0.00	-0.00	99.000	3564.00

Detailed Rating Results
Girder G
RI-3
Axle Load
Impact: As Requested
Lane: As Requested

Span 1

Location (ft)	Percent	Limit State	Units	Capacity	DL + Adj -LL*	LL	Permit Rating Factor	Permit Load Rating (Ton)
0.00	0.0	Flexure	KSI	-36.00	-0.00	-0.00	99.000	3762.00
0.00	**0.0**	**Shear**	**KIPS**	**336.32**	**68.52**	**51.79**	**4.016**	**152.59**
0.00	0.0	Overload	KSI	-36.00	-0.00	-0.00	99.000	3762.00
11.00	**10.0**	**Flexure**	**KSI**	**36.00**	**5.06**	**3.09**	**8.029**	**305.09**
11.00	10.0	Shear	KIPS	542.44	55.11	46.32	8.574	325.82
11.00	10.0	Overload	KSI	36.00	5.06	3.09	9.426	358.17
22.00	**20.0**	**Flexure**	**KSI**	**36.00**	**9.02**	**5.45**	**3.747**	**142.38**
22.00	20.0	Shear	KIPS	542.44	41.69	40.84	10.089	383.38
22.00	20.0	Overload	KSI	36.00	9.02	5.45	4.617	175.45
25.50	**23.2**	**Flexure**	**KSI**	**36.00**	**10.05**	**6.05**	**3.189**	**121.18**
25.50	23.2	Shear	KIPS	542.44	37.19	39.10	10.666	405.32
25.50	23.2	Overload	KSI	36.00	10.05	6.05	3.991	151.67
33.00	**30.0**	**Flexure**	**KSI**	**36.00**	**9.29**	**5.72**	**3.521**	**133.81**
33.00	30.0	Shear	KIPS	542.44	27.80	35.37	12.087	459.30
33.00	30.0	Overload	KSI	36.00	9.29	5.72	4.358	165.61

44.00	**40.0**	**Flexure**	**KSI**	**36.00**	**10.63**	**6.46**	**2.883**	**109.57**
44.00	40.0	Shear	KIPS	542.44	14.01	29.90	14.812	562.85
44.00	40.0	Overload	KSI	36.00	10.63	6.46	3.646	138.54
49.50	**45.0**	**Flexure**	**KSI**	**36.00**	**10.97**	**6.67**	**2.740**	**104.13**
49.50	45.0	Shear	KIPS	542.44	6.89	27.16	16.595	630.62
49.50	45.0	Overload	KSI	36.00	10.97	6.67	3.485	132.42
55.00	**50.0**	**Flexure**	**KSI**	**36.00**	**11.08**	**6.72**	**2.699**	**102.57**
55.00	50.0	Shear	KIPS	542.44	0.00	-24.43	18.768	713.18
55.00	50.0	Overload	KSI	36.00	11.08	6.72	3.439	130.69
66.00	**60.0**	**Flexure**	**KSI**	**36.00**	**10.63**	**6.46**	**2.883**	**109.57**
66.00	60.0	Shear	KIPS	542.44	-14.01	-29.90	14.812	562.85
66.00	60.0	Overload	KSI	36.00	10.63	6.46	3.646	138.54
77.00	**70.0**	**Flexure**	**KSI**	**36.00**	**9.29**	**5.72**	**3.521**	**133.81**
77.00	70.0	Shear	KIPS	542.44	-27.80	-35.37	12.087	459.30
77.00	70.0	Overload	KSI	36.00	9.29	5.72	4.358	165.61
84.50	**76.8**	**Flexure**	**KSI**	**36.00**	**10.05**	**6.05**	**3.189**	**121.18**
84.50	76.8	Shear	KIPS	542.44	-37.19	-39.10	10.666	405.32
84.50	76.8	Overload	KSI	36.00	10.05	6.05	3.991	151.67
88.00	**80.0**	**Flexure**	**KSI**	**36.00**	**9.02**	**5.45**	**3.747**	**142.38**
88.00	80.0	Shear	KIPS	542.44	-41.69	-40.84	10.089	383.38
88.00	80.0	Overload	KSI	36.00	9.02	5.45	4.617	175.45
99.00	**90.0**	**Flexure**	**KSI**	**36.00**	**5.06**	**3.09**	**8.029**	**305.09**
99.00	90.0	Shear	KIPS	542.44	-55.11	-46.32	8.574	325.82
99.00	90.0	Overload	KSI	36.00	5.06	3.09	9.426	358.17
110.00	100.0	Flexure	KSI	-36.00	-0.00	-0.00	99.000	3762.00
110.00	**100.0**	**Shear**	**KIPS**	**336.32**	**-68.52**	**-51.79**	**4.016**	**152.59**
110.00	100.0	Overload	KSI	-36.00	-0.00	-0.00	99.000	3762.00

Detailed Rating Results
Girder G
RI-4
Axle Load
Impact: As Requested
Lane: As Requested

Span 1

Location (ft)	Percent	Limit State	Units	Capacity	DL + Adj -LL*	LL	Permit Rating Factor	Permit Load Rating (Ton)
0.00	0.0	Flexure	KSI	-36.00	-0.00	-0.00	99.000	3712.50
0.00	**0.0**	**Shear**	**KIPS**	**336.32**	**68.52**	**50.35**	**4.130**	**154.88**

0.00	0.0	Overload	KSI	-36.00	-0.00	-0.00	99.000	3712.50
11.00	**10.0**	**Flexure**	**KSI**	**36.00**	**5.06**	**3.00**	**8.272**	**310.21**
11.00	10.0	Shear	KIPS	542.44	55.11	44.95	8.835	331.30
11.00	10.0	Overload	KSI	36.00	5.06	3.00	9.712	364.20
22.00	**20.0**	**Flexure**	**KSI**	**36.00**	**9.02**	**5.28**	**3.869**	**145.10**
22.00	20.0	Shear	KIPS	542.44	41.69	39.55	10.419	390.71
22.00	20.0	Overload	KSI	36.00	9.02	5.28	4.768	178.80
25.50	**23.2**	**Flexure**	**KSI**	**36.00**	**10.05**	**5.85**	**3.296**	**123.60**
25.50	23.2	Shear	KIPS	542.44	37.19	37.83	11.024	413.41
25.50	23.2	Overload	KSI	36.00	10.05	5.85	4.125	154.70
33.00	**30.0**	**Flexure**	**KSI**	**36.00**	**9.29**	**5.56**	**3.620**	**135.73**
33.00	30.0	Shear	KIPS	542.44	27.80	34.15	12.519	469.46
33.00	30.0	Overload	KSI	36.00	9.29	5.56	4.480	167.99
44.00	**40.0**	**Flexure**	**KSI**	**36.00**	**10.63**	**6.35**	**2.934**	**110.02**
44.00	40.0	Shear	KIPS	542.44	14.01	28.75	15.404	577.64
44.00	40.0	Overload	KSI	36.00	10.63	6.35	3.710	139.11
49.50	**45.0**	**Flexure**	**KSI**	**36.00**	**10.97**	**6.53**	**2.797**	**104.90**
49.50	45.0	Shear	KIPS	542.44	6.89	26.05	17.304	648.91
49.50	45.0	Overload	KSI	36.00	10.97	6.53	3.557	133.41
55.00	**50.0**	**Flexure**	**KSI**	**36.00**	**11.08**	**6.56**	**2.765**	**103.68**
55.00	50.0	Shear	KIPS	542.44	0.00	-23.35	19.633	736.25
55.00	50.0	Overload	KSI	36.00	11.08	6.56	3.523	132.11
66.00	**60.0**	**Flexure**	**KSI**	**36.00**	**10.63**	**6.35**	**2.934**	**110.02**
66.00	60.0	Shear	KIPS	542.44	-14.01	-28.75	15.404	577.64
66.00	60.0	Overload	KSI	36.00	10.63	6.35	3.710	139.11
77.00	**70.0**	**Flexure**	**KSI**	**36.00**	**9.29**	**5.56**	**3.620**	**135.73**
77.00	70.0	Shear	KIPS	542.44	-27.80	-34.15	12.519	469.46
77.00	70.0	Overload	KSI	36.00	9.29	5.56	4.480	167.99
84.50	**76.8**	**Flexure**	**KSI**	**36.00**	**10.05**	**5.85**	**3.296**	**123.60**
84.50	76.8	Shear	KIPS	542.44	-37.19	-37.83	11.024	413.41
84.50	76.8	Overload	KSI	36.00	10.05	5.85	4.125	154.70
88.00	**80.0**	**Flexure**	**KSI**	**36.00**	**9.02**	**5.28**	**3.869**	**145.10**
88.00	80.0	Shear	KIPS	542.44	-41.69	-39.55	10.419	390.71
88.00	80.0	Overload	KSI	36.00	9.02	5.28	4.768	178.80
99.00	**90.0**	**Flexure**	**KSI**	**36.00**	**5.06**	**3.00**	**8.272**	**310.21**
99.00	90.0	Shear	KIPS	542.44	-55.11	-44.95	8.835	331.30
99.00	90.0	Overload	KSI	36.00	5.06	3.00	9.712	364.20
110.00	100.0	Flexure	KSI	-36.00	-0.00	-0.00	99.000	3712.50
110.00	**100.0**	**Shear**	**KIPS**	**336.32**	**-68.52**	**-50.35**	**4.130**	**154.88**
110.00	100.0	Overload	KSI	-36.00	-0.00	-0.00	99.000	3712.50

Detailed Rating Results
Girder G

D336

RI-5
Axle Load
Impact: As Requested
Lane: As Requested

Span 1

Location (ft)	Percent	Limit State	Units	Capacity	DL + Adj -LL*	LL	Permit Rating Factor	Permit Load Rating (Ton)
0.00	0.0	Flexure	KSI	-36.00	-0.00	-0.00	99.000	5187.60
0.00	**0.0**	**Shear**	**KIPS**	**336.32**	**68.52**	**66.03**	**3.149**	**165.02**
0.00	0.0	Overload	KSI	-36.00	-0.00	-0.00	99.000	5187.60
11.00	**10.0**	**Flexure**	**KSI**	**36.00**	**5.06**	**3.90**	**6.358**	**333.14**
11.00	10.0	Shear	KIPS	542.44	55.11	58.49	6.790	355.78
11.00	10.0	Overload	KSI	36.00	5.06	3.90	7.464	391.11
22.00	**20.0**	**Flexure**	**KSI**	**36.00**	**9.02**	**6.80**	**3.004**	**157.41**
22.00	20.0	Shear	KIPS	542.44	41.69	50.94	8.089	423.85
22.00	20.0	Overload	KSI	36.00	9.02	6.80	3.702	193.97
25.50	**23.2**	**Flexure**	**KSI**	**36.00**	**10.05**	**7.57**	**2.550**	**133.63**
25.50	23.2	Shear	KIPS	542.44	37.19	48.54	8.592	450.22
25.50	23.2	Overload	KSI	36.00	10.05	7.57	3.192	167.26
33.00	**30.0**	**Flexure**	**KSI**	**36.00**	**9.29**	**7.17**	**2.807**	**147.11**
33.00	30.0	Shear	KIPS	542.44	27.80	43.40	9.852	516.22
33.00	30.0	Overload	KSI	36.00	9.29	7.17	3.475	182.07
44.00	**40.0**	**Flexure**	**KSI**	**36.00**	**10.63**	**8.15**	**2.286**	**119.80**
44.00	40.0	Shear	KIPS	542.44	14.01	35.85	12.353	647.28
44.00	40.0	Overload	KSI	36.00	10.63	8.15	2.891	151.48
49.50	**45.0**	**Flexure**	**KSI**	**36.00**	**10.97**	**8.37**	**2.183**	**114.40**
49.50	45.0	Shear	KIPS	542.44	6.89	32.08	14.052	736.34
49.50	45.0	Overload	KSI	36.00	10.97	8.37	2.776	145.48
55.00	**50.0**	**Flexure**	**KSI**	**36.00**	**11.08**	**8.38**	**2.165**	**113.45**
55.00	50.0	Shear	KIPS	542.44	0.00	-28.31	16.196	848.67
55.00	50.0	Overload	KSI	36.00	11.08	8.38	2.759	144.56
66.00	**60.0**	**Flexure**	**KSI**	**36.00**	**10.63**	**8.15**	**2.286**	**119.80**
66.00	60.0	Shear	KIPS	542.44	-14.01	-35.85	12.353	647.28
66.00	60.0	Overload	KSI	36.00	10.63	8.15	2.891	151.48
77.00	**70.0**	**Flexure**	**KSI**	**36.00**	**9.29**	**7.17**	**2.807**	**147.11**
77.00	70.0	Shear	KIPS	542.44	-27.80	-43.40	9.852	516.22
77.00	70.0	Overload	KSI	36.00	9.29	7.17	3.475	182.07
84.50	**76.8**	**Flexure**	**KSI**	**36.00**	**10.05**	**7.57**	**2.550**	**133.63**
84.50	76.8	Shear	KIPS	542.44	-37.19	-48.54	8.592	450.22

84.50	76.8	Overload	KSI	36.00	10.05	7.57	3.192	167.26
88.00	**80.0**	**Flexure**	**KSI**	**36.00**	**9.02**	**6.80**	**3.004**	**157.41**
88.00	80.0	Shear	KIPS	542.44	-41.69	-50.94	8.089	423.85
88.00	80.0	Overload	KSI	36.00	9.02	6.80	3.702	193.97
99.00	**90.0**	**Flexure**	**KSI**	**36.00**	**5.06**	**3.90**	**6.358**	**333.14**
99.00	90.0	Shear	KIPS	542.44	-55.11	-58.49	6.790	355.78
99.00	90.0	Overload	KSI	36.00	5.06	3.90	7.464	391.11
110.00	100.0	Flexure	KSI	-36.00	-0.00	-0.00	99.000	5187.60
110.00	**100.0**	**Shear**	**KIPS**	**336.32**	**-68.52**	**-66.03**	**3.149**	**165.02**
110.00	100.0	Overload	KSI	-36.00	-0.00	-0.00	99.000	5187.60

Detailed Rating Results
Girder G
RI-6
Axle Load
Impact: As Requested
Lane: As Requested

Span 1

Location (ft)	Percent	Limit State	Units	Capacity	DL + Adj -LL*	LL	Permit Rating Factor	Permit Load Rating (Ton)
0.00	0.0	Flexure	KSI	-36.00	-0.00	-0.00	99.000	6435.00
0.00	**0.0**	**Shear**	**KIPS**	**336.32**	**68.52**	**74.91**	**2.664**	**173.13**
0.00	0.0	Overload	KSI	-36.00	-0.00	-0.00	99.000	6435.00
11.00	**10.0**	**Flexure**	**KSI**	**36.00**	**5.06**	**4.38**	**5.443**	**353.78**
11.00	10.0	Shear	KIPS	542.44	55.11	65.55	5.813	377.82
11.00	10.0	Overload	KSI	36.00	5.06	4.38	6.660	432.90
22.00	**20.0**	**Flexure**	**KSI**	**36.00**	**9.02**	**7.52**	**2.607**	**169.43**
22.00	20.0	Shear	KIPS	542.44	41.69	56.19	7.036	457.36
22.00	20.0	Overload	KSI	36.00	9.02	7.52	3.348	217.61
25.50	**23.2**	**Flexure**	**KSI**	**36.00**	**10.05**	**8.33**	**2.223**	**144.47**
25.50	23.2	Shear	KIPS	542.44	37.19	53.21	7.520	488.82
25.50	23.2	Overload	KSI	36.00	10.05	8.33	2.899	188.47
33.00	**30.0**	**Flexure**	**KSI**	**36.00**	**9.29**	**7.78**	**2.483**	**161.40**
33.00	30.0	Shear	KIPS	542.44	27.80	46.83	8.759	569.36
33.00	30.0	Overload	KSI	36.00	9.29	7.78	3.203	208.20
44.00	**40.0**	**Flexure**	**KSI**	**36.00**	**10.63**	**8.51**	**2.102**	**136.64**
44.00	40.0	Shear	KIPS	542.44	14.01	37.47	11.340	737.11
44.00	40.0	Overload	KSI	36.00	10.63	8.51	2.770	180.07
49.50	**45.0**	**Flexure**	**KSI**	**36.00**	**10.97**	**8.58**	**2.044**	**132.86**

49.50	45.0	Shear	KIPS	542.44	6.89	32.79	13.190	857.37
49.50	45.0	Overload	KSI	36.00	10.97	8.58	2.709	176.09
55.00	**50.0**	**Flexure**	**KSI**	**36.00**	**11.08**	**8.39**	**2.074**	**134.84**
55.00	50.0	Shear	KIPS	542.44	0.00	-28.11	15.648	1017.13
55.00	50.0	Overload	KSI	36.00	11.08	8.39	2.755	179.07
66.00	**60.0**	**Flexure**	**KSI**	**36.00**	**10.63**	**8.51**	**2.102**	**136.64**
66.00	60.0	Shear	KIPS	542.44	-14.01	-37.47	11.340	737.11
66.00	60.0	Overload	KSI	36.00	10.63	8.51	2.770	180.07
77.00	**70.0**	**Flexure**	**KSI**	**36.00**	**9.29**	**7.78**	**2.483**	**161.40**
77.00	70.0	Shear	KIPS	542.44	-27.80	-46.83	8.759	569.36
77.00	70.0	Overload	KSI	36.00	9.29	7.78	3.203	208.20
84.50	**76.8**	**Flexure**	**KSI**	**36.00**	**10.05**	**8.33**	**2.223**	**144.47**
84.50	76.8	Shear	KIPS	542.44	-37.19	-53.21	7.520	488.82
84.50	76.8	Overload	KSI	36.00	10.05	8.33	2.899	188.47
88.00	**80.0**	**Flexure**	**KSI**	**36.00**	**9.02**	**7.52**	**2.607**	**169.43**
88.00	80.0	Shear	KIPS	542.44	-41.69	-56.19	7.036	457.36
88.00	80.0	Overload	KSI	36.00	9.02	7.52	3.348	217.61
99.00	**90.0**	**Flexure**	**KSI**	**36.00**	**5.06**	**4.38**	**5.443**	**353.78**
99.00	90.0	Shear	KIPS	542.44	-55.11	-65.55	5.813	377.82
99.00	90.0	Overload	KSI	36.00	5.06	4.38	6.660	432.90
110.00	100.0	Flexure	KSI	-36.00	-0.00	-0.00	99.000	6435.00
110.00	**100.0**	**Shear**	**KIPS**	**336.32**	**-68.52**	**-74.91**	**2.664**	**173.13**
110.00	100.0	Overload	KSI	-36.00	-0.00	-0.00	99.000	6435.00

Detailed Rating Results
Girder G
RIDOT H20 Truck
Axle Load
Impact: As Requested
Lane: As Requested

Span 1

Location (ft)	Percent	Limit State	Units	Capacity	DL + Adj -LL*	LL	Legal Rating Factor	Legal Load Rating (Ton)
0.00	0.0	Flexure	KSI	-36.00	-0.00	-0.00	99.000	1980.00
0.00	**0.0**	**Shear**	**KIPS**	**336.32**	**68.52**	**28.07**	**6.744**	**134.87**
0.00	0.0	Overload	KSI	-36.00	-0.00	-0.00	99.000	1980.00
11.00	10.0	Flexure	KSI	36.00	5.06	1.68	13.437	268.74
11.00	10.0	Shear	KIPS	542.44	55.11	25.19	14.350	287.00
11.00	**10.0**	**Overload**	**KSI**	**36.00**	**5.06**	**1.68**	**13.333**	**266.66**

22.00	**20.0**	**Flexure**	**KSI**	**36.00**	**9.02**	**2.98**	**6.244**	**124.88**
22.00	20.0	Shear	KIPS	542.44	41.69	22.31	16.813	336.26
22.00	20.0	Overload	KSI	36.00	9.02	2.98	6.503	130.06
25.50	**23.2**	**Flexure**	**KSI**	**36.00**	**10.05**	**3.31**	**5.306**	**106.11**
25.50	23.2	Shear	KIPS	542.44	37.19	21.39	17.746	354.93
25.50	23.2	Overload	KSI	36.00	10.05	3.31	5.613	112.25
33.00	**30.0**	**Flexure**	**KSI**	**36.00**	**9.29**	**3.14**	**5.835**	**116.71**
33.00	30.0	Shear	KIPS	542.44	27.80	19.43	20.030	400.60
33.00	30.0	Overload	KSI	36.00	9.29	3.14	6.104	122.08
44.00	**40.0**	**Flexure**	**KSI**	**36.00**	**10.63**	**3.56**	**4.759**	**95.17**
44.00	40.0	Shear	KIPS	542.44	14.01	16.55	24.360	487.20
44.00	40.0	Overload	KSI	36.00	10.63	3.56	5.085	101.71
49.50	**45.0**	**Flexure**	**KSI**	**36.00**	**10.97**	**3.66**	**4.542**	**90.84**
49.50	45.0	Shear	KIPS	542.44	6.89	15.11	27.159	543.18
49.50	45.0	Overload	KSI	36.00	10.97	3.66	4.882	97.63
55.00	**50.0**	**Flexure**	**KSI**	**36.00**	**11.08**	**3.68**	**4.488**	**89.76**
55.00	50.0	Shear	KIPS	542.44	0.00	-13.67	30.531	610.63
55.00	50.0	Overload	KSI	36.00	11.08	3.68	4.833	96.66
66.00	**60.0**	**Flexure**	**KSI**	**36.00**	**10.63**	**3.56**	**4.759**	**95.17**
66.00	60.0	Shear	KIPS	542.44	-14.01	-16.55	24.360	487.20
66.00	60.0	Overload	KSI	36.00	10.63	3.56	5.085	101.71
77.00	**70.0**	**Flexure**	**KSI**	**36.00**	**9.29**	**3.14**	**5.835**	**116.71**
77.00	70.0	Shear	KIPS	542.44	-27.80	-19.43	20.030	400.60
77.00	70.0	Overload	KSI	36.00	9.29	3.14	6.104	122.08
84.50	**76.8**	**Flexure**	**KSI**	**36.00**	**10.05**	**3.31**	**5.306**	**106.11**
84.50	76.8	Shear	KIPS	542.44	-37.19	-21.39	17.746	354.93
84.50	76.8	Overload	KSI	36.00	10.05	3.31	5.613	112.25
88.00	**80.0**	**Flexure**	**KSI**	**36.00**	**9.02**	**2.98**	**6.244**	**124.88**
88.00	80.0	Shear	KIPS	542.44	-41.69	-22.31	16.813	336.26
88.00	80.0	Overload	KSI	36.00	9.02	2.98	6.503	130.06
99.00	90.0	Flexure	KSI	36.00	5.06	1.68	13.437	268.74
99.00	90.0	Shear	KIPS	542.44	-55.11	-25.19	14.350	287.00
99.00	**90.0**	**Overload**	**KSI**	**36.00**	**5.06**	**1.68**	**13.333**	**266.66**
110.00	100.0	Flexure	KSI	-36.00	-0.00	-0.00	99.000	1980.00
110.00	**100.0**	**Shear**	**KIPS**	**336.32**	**-68.52**	**-28.07**	**6.744**	**134.87**
110.00	100.0	Overload	KSI	-36.00	-0.00	-0.00	99.000	1980.00

Detailed Rating Results
Girder G
RI-OP 1
Axle Load
Impact: As Requested
Lane: As Requested

Span 1

Location (ft)	Percent	Limit State	Units	Capacity	DL + Adj -LL*	LL	Permit Rating Factor	Permit Load Rating (Ton)
0.00	0.0	Flexure	KSI	-36.00	-0.00	-0.00	99.000	5593.50
0.00	**0.0**	**Shear**	**KIPS**	**336.32**	**68.52**	**46.50**	**4.409**	**249.12**
0.00	0.0	Overload	KSI	-36.00	-0.00	-0.00	99.000	5593.50
11.00	**10.0**	**Flexure**	**KSI**	**36.00**	**5.06**	**2.75**	**8.883**	**501.90**
11.00	10.0	Shear	KIPS	542.44	55.11	41.27	9.487	536.00
11.00	10.0	Overload	KSI	36.00	5.06	2.75	10.577	597.62
22.00	**20.0**	**Flexure**	**KSI**	**36.00**	**9.02**	**4.89**	**4.119**	**232.71**
22.00	20.0	Shear	KIPS	542.44	41.69	36.04	11.272	636.90
22.00	20.0	Overload	KSI	36.00	9.02	4.89	5.148	290.84
25.50	**23.2**	**Flexure**	**KSI**	**36.00**	**10.05**	**5.44**	**3.496**	**197.51**
25.50	23.2	Shear	KIPS	542.44	37.19	34.38	11.962	675.84
25.50	23.2	Overload	KSI	36.00	10.05	5.44	4.438	250.72
33.00	**30.0**	**Flexure**	**KSI**	**36.00**	**9.29**	**5.15**	**3.851**	**217.58**
33.00	30.0	Shear	KIPS	542.44	27.80	30.81	13.681	772.96
33.00	30.0	Overload	KSI	36.00	9.29	5.15	4.834	273.12
44.00	**40.0**	**Flexure**	**KSI**	**36.00**	**10.63**	**5.90**	**3.114**	**175.92**
44.00	40.0	Shear	KIPS	542.44	14.01	25.58	17.069	964.39
44.00	40.0	Overload	KSI	36.00	10.63	5.90	3.993	225.60
49.50	**45.0**	**Flexure**	**KSI**	**36.00**	**10.97**	**6.10**	**2.955**	**166.98**
49.50	45.0	Shear	KIPS	542.44	6.89	22.97	19.352	1093.40
49.50	45.0	Overload	KSI	36.00	10.97	6.10	3.812	215.37
55.00	**50.0**	**Flexure**	**KSI**	**36.00**	**11.08**	**6.15**	**2.910**	**164.44**
55.00	50.0	Shear	KIPS	542.44	0.00	-20.35	22.210	1254.89
55.00	50.0	Overload	KSI	36.00	11.08	6.15	3.761	212.50
66.00	**60.0**	**Flexure**	**KSI**	**36.00**	**10.63**	**5.90**	**3.114**	**175.92**
66.00	60.0	Shear	KIPS	542.44	-14.01	-25.58	17.069	964.39
66.00	60.0	Overload	KSI	36.00	10.63	5.90	3.993	225.60
77.00	**70.0**	**Flexure**	**KSI**	**36.00**	**9.29**	**5.15**	**3.851**	**217.58**
77.00	70.0	Shear	KIPS	542.44	-27.80	-30.81	13.681	772.96
77.00	70.0	Overload	KSI	36.00	9.29	5.15	4.834	273.12
84.50	**76.8**	**Flexure**	**KSI**	**36.00**	**10.05**	**5.44**	**3.496**	**197.51**
84.50	76.8	Shear	KIPS	542.44	-37.19	-34.38	11.962	675.84
84.50	76.8	Overload	KSI	36.00	10.05	5.44	4.438	250.72
88.00	**80.0**	**Flexure**	**KSI**	**36.00**	**9.02**	**4.89**	**4.119**	**232.71**
88.00	80.0	Shear	KIPS	542.44	-41.69	-36.04	11.272	636.90
88.00	80.0	Overload	KSI	36.00	9.02	4.89	5.148	290.84

99.00	**90.0**	**Flexure**	**KSI**	**36.00**	**5.06**	**2.75**	**8.883**	**501.90**
99.00	90.0	Shear	KIPS	542.44	-55.11	-41.27	9.487	536.00
99.00	90.0	Overload	KSI	36.00	5.06	2.75	10.577	597.62
110.00	100.0	Flexure	KSI	-36.00	-0.00	-0.00	99.000	5593.50
110.00	**100.0**	**Shear**	**KIPS**	**336.32**	**-68.52**	**-46.50**	**4.409**	**249.12**
110.00	100.0	Overload	KSI	-36.00	-0.00	-0.00	99.000	5593.50

Detailed Rating Results
Girder G
RI-OP 2
Axle Load
Impact: As Requested
Lane: As Requested

Span 1

Location (ft)	Percent	Limit State	Units	Capacity	DL + Adj -LL*	LL	Permit Rating Factor	Permit Load Rating (Ton)
0.00	0.0	Flexure	KSI	-36.00	-0.00	-0.00	99.000	7920.00
0.00	**0.0**	**Shear**	**KIPS**	**336.32**	**68.52**	**54.05**	**3.793**	**303.46**
0.00	0.0	Overload	KSI	-36.00	-0.00	-0.00	99.000	7920.00
11.00	**10.0**	**Flexure**	**KSI**	**36.00**	**5.06**	**3.11**	**7.860**	**628.76**
11.00	10.0	Shear	KIPS	542.44	55.11	46.65	8.394	671.49
11.00	10.0	Overload	KSI	36.00	5.06	3.11	9.358	748.68
22.00	**20.0**	**Flexure**	**KSI**	**36.00**	**9.02**	**5.37**	**3.751**	**300.08**
22.00	20.0	Shear	KIPS	542.44	41.69	39.24	10.353	828.26
22.00	20.0	Overload	KSI	36.00	9.02	5.37	4.688	375.04
25.50	**23.2**	**Flexure**	**KSI**	**36.00**	**10.05**	**5.90**	**3.225**	**257.96**
25.50	23.2	Shear	KIPS	542.44	37.19	36.89	11.148	891.88
25.50	23.2	Overload	KSI	36.00	10.05	5.90	4.093	327.47
33.00	**30.0**	**Flexure**	**KSI**	**36.00**	**9.29**	**5.46**	**3.633**	**290.63**
33.00	30.0	Shear	KIPS	542.44	27.80	31.84	13.240	1059.24
33.00	30.0	Overload	KSI	36.00	9.29	5.46	4.560	364.82
44.00	**40.0**	**Flexure**	**KSI**	**36.00**	**10.63**	**5.90**	**3.115**	**249.21**
44.00	40.0	Shear	KIPS	542.44	14.01	24.76	17.633	1410.63
44.00	40.0	Overload	KSI	36.00	10.63	5.90	3.995	319.59
49.50	**45.0**	**Flexure**	**KSI**	**36.00**	**10.97**	**5.89**	**3.058**	**244.65**
49.50	45.0	Shear	KIPS	542.44	6.89	21.36	20.806	1664.51
49.50	45.0	Overload	KSI	36.00	10.97	5.89	3.944	315.54
55.00	**50.0**	**Flexure**	**KSI**	**36.00**	**11.08**	**5.75**	**3.114**	**249.09**
55.00	50.0	Shear	KIPS	542.44	0.00	-18.09	24.995	1999.60

55.00	50.0	Overload	KSI	36.00	11.08	5.75	4.024	321.91
66.00	**60.0**	**Flexure**	**KSI**	**36.00**	**10.63**	**5.90**	**3.115**	**249.21**
66.00	60.0	Shear	KIPS	542.44	-14.01	-24.76	17.633	1410.63
66.00	60.0	Overload	KSI	36.00	10.63	5.90	3.995	319.59
77.00	**70.0**	**Flexure**	**KSI**	**36.00**	**9.29**	**5.46**	**3.633**	**290.63**
77.00	70.0	Shear	KIPS	542.44	-27.80	-31.84	13.240	1059.24
77.00	70.0	Overload	KSI	36.00	9.29	5.46	4.560	364.82
84.50	**76.8**	**Flexure**	**KSI**	**36.00**	**10.05**	**5.90**	**3.225**	**257.96**
84.50	76.8	Shear	KIPS	542.44	-37.19	-36.89	11.148	891.88
84.50	76.8	Overload	KSI	36.00	10.05	5.90	4.093	327.47
88.00	**80.0**	**Flexure**	**KSI**	**36.00**	**9.02**	**5.37**	**3.751**	**300.08**
88.00	80.0	Shear	KIPS	542.44	-41.69	-39.24	10.353	828.26
88.00	80.0	Overload	KSI	36.00	9.02	5.37	4.688	375.04
99.00	**90.0**	**Flexure**	**KSI**	**36.00**	**5.06**	**3.11**	**7.860**	**628.76**
99.00	90.0	Shear	KIPS	542.44	-55.11	-46.65	8.394	671.49
99.00	90.0	Overload	KSI	36.00	5.06	3.11	9.358	748.68
110.00	100.0	Flexure	KSI	-36.00	-0.00	-0.00	99.000	7920.00
110.00	**100.0**	**Shear**	**KIPS**	**336.32**	**-68.52**	**-54.05**	**3.793**	**303.46**
110.00	100.0	Overload	KSI	-36.00	-0.00	-0.00	99.000	7920.00

Detailed Rating Results
Girder G
RI-OP 3
Axle Load
Impact: As Requested
Lane: As Requested

Span 1

Location (ft)	Percent	Limit State	Units	Capacity	DL + Adj -LL*	LL	Permit Rating Factor	Permit Load Rating (Ton)
0.00	0.0	Flexure	KSI	-36.00	-0.00	-0.00	99.000	11187.00
0.00	**0.0**	**Shear**	**KIPS**	**336.32**	**68.52**	**60.36**	**3.397**	**383.88**
0.00	0.0	Overload	KSI	-36.00	-0.00	-0.00	99.000	11187.00
11.00	**10.0**	**Flexure**	**KSI**	**36.00**	**5.06**	**3.38**	**7.247**	**818.93**
11.00	10.0	Shear	KIPS	542.44	55.11	50.28	7.787	879.96
11.00	10.0	Overload	KSI	36.00	5.06	3.38	8.629	975.11
22.00	**20.0**	**Flexure**	**KSI**	**36.00**	**9.02**	**5.70**	**3.531**	**399.03**
22.00	20.0	Shear	KIPS	542.44	41.69	41.21	9.859	1114.10
22.00	20.0	Overload	KSI	36.00	9.02	5.70	4.413	498.72
25.50	**23.2**	**Flexure**	**KSI**	**36.00**	**10.05**	**6.27**	**3.036**	**343.03**

25.50	23.2	Shear	KIPS	542.44	37.19	38.74	10.616	1199.66
25.50	23.2	Overload	KSI	36.00	10.05	6.27	3.854	435.46
33.00	**30.0**	**Flexure**	**KSI**	**36.00**	**9.29**	**5.80**	**3.420**	**386.43**
33.00	30.0	Shear	KIPS	542.44	27.80	33.43	12.608	1424.75
33.00	30.0	Overload	KSI	36.00	9.29	5.80	4.293	485.08
44.00	**40.0**	**Flexure**	**KSI**	**36.00**	**10.63**	**6.43**	**2.858**	**323.01**
44.00	40.0	Shear	KIPS	542.44	14.01	26.43	16.522	1866.94
44.00	40.0	Overload	KSI	36.00	10.63	6.43	3.666	414.22
49.50	**45.0**	**Flexure**	**KSI**	**36.00**	**10.97**	**6.54**	**2.754**	**311.15**
49.50	45.0	Shear	KIPS	542.44	6.89	23.52	18.894	2135.03
49.50	45.0	Overload	KSI	36.00	10.97	6.54	3.551	401.32
55.00	**50.0**	**Flexure**	**KSI**	**36.00**	**11.08**	**6.49**	**2.759**	**311.77**
55.00	50.0	Shear	KIPS	542.44	0.00	-20.75	21.788	2461.99
55.00	50.0	Overload	KSI	36.00	11.08	6.49	3.566	402.91
66.00	**60.0**	**Flexure**	**KSI**	**36.00**	**10.63**	**6.43**	**2.858**	**323.01**
66.00	60.0	Shear	KIPS	542.44	-14.01	-26.43	16.522	1866.94
66.00	60.0	Overload	KSI	36.00	10.63	6.43	3.666	414.22
77.00	**70.0**	**Flexure**	**KSI**	**36.00**	**9.29**	**5.80**	**3.420**	**386.43**
77.00	70.0	Shear	KIPS	542.44	-27.80	-33.43	12.608	1424.75
77.00	70.0	Overload	KSI	36.00	9.29	5.80	4.293	485.08
84.50	**76.8**	**Flexure**	**KSI**	**36.00**	**10.05**	**6.27**	**3.036**	**343.03**
84.50	76.8	Shear	KIPS	542.44	-37.19	-38.74	10.616	1199.66
84.50	76.8	Overload	KSI	36.00	10.05	6.27	3.854	435.46
88.00	**80.0**	**Flexure**	**KSI**	**36.00**	**9.02**	**5.70**	**3.531**	**399.03**
88.00	80.0	Shear	KIPS	542.44	-41.69	-41.21	9.859	1114.10
88.00	80.0	Overload	KSI	36.00	9.02	5.70	4.413	498.72
99.00	**90.0**	**Flexure**	**KSI**	**36.00**	**5.06**	**3.38**	**7.247**	**818.93**
99.00	90.0	Shear	KIPS	542.44	-55.11	-50.28	7.787	879.96
99.00	90.0	Overload	KSI	36.00	5.06	3.38	8.629	975.11
110.00	100.0	Flexure	KSI	-36.00	-0.00	-0.00	99.000	11187.00
110.00	**100.0**	**Shear**	**KIPS**	**336.32**	**-68.52**	**-60.36**	**3.397**	**383.88**
110.00	100.0	Overload	KSI	-36.00	-0.00	-0.00	99.000	11187.00

Detailed Rating Results
Girder G
RIPTA Bus
Axle Load
Impact: As Requested
Lane: As Requested

Span 1

Location							Legal Rating	Legal

(ft)	Percent	Limit State	Units	Capacity	DL + Adj -LL*	LL	Factor	Load Rating (Ton)
0.00	0.0	Flexure	KSI	-36.00	-0.00	-0.00	99.000	2059.20
0.00	**0.0**	**Shear**	**KIPS**	**336.32**	**68.52**	**27.73**	**6.825**	**141.97**
0.00	0.0	Overload	KSI	-36.00	-0.00	-0.00	99.000	2059.20
11.00	10.0	Flexure	KSI	36.00	5.06	1.65	13.683	284.60
11.00	10.0	Shear	KIPS	542.44	55.11	24.73	14.612	303.94
11.00	**10.0**	**Overload**	**KSI**	**36.00**	**5.06**	**1.65**	**13.577**	**282.40**
22.00	**20.0**	**Flexure**	**KSI**	**36.00**	**9.02**	**2.90**	**6.407**	**133.26**
22.00	20.0	Shear	KIPS	542.44	41.69	21.74	17.252	358.84
22.00	20.0	Overload	KSI	36.00	9.02	2.90	6.673	138.79
25.50	**23.2**	**Flexure**	**KSI**	**36.00**	**10.05**	**3.22**	**5.460**	**113.56**
25.50	23.2	Shear	KIPS	542.44	37.19	20.79	18.262	379.85
25.50	23.2	Overload	KSI	36.00	10.05	3.22	5.776	120.14
33.00	**30.0**	**Flexure**	**KSI**	**36.00**	**9.29**	**3.03**	**6.048**	**125.79**
33.00	30.0	Shear	KIPS	542.44	27.80	18.74	20.759	431.79
33.00	30.0	Overload	KSI	36.00	9.29	3.03	6.326	131.59
44.00	**40.0**	**Flexure**	**KSI**	**36.00**	**10.63**	**3.39**	**5.000**	**103.99**
44.00	40.0	Shear	KIPS	542.44	14.01	15.75	25.594	532.35
44.00	40.0	Overload	KSI	36.00	10.63	3.39	5.343	111.13
49.50	**45.0**	**Flexure**	**KSI**	**36.00**	**10.97**	**3.45**	**4.814**	**100.14**
49.50	45.0	Shear	KIPS	542.44	6.89	14.25	28.789	598.81
49.50	45.0	Overload	KSI	36.00	10.97	3.45	5.174	107.63
55.00	**50.0**	**Flexure**	**KSI**	**36.00**	**11.08**	**3.43**	**4.809**	**100.03**
55.00	50.0	Shear	KIPS	542.44	0.00	-12.75	32.716	680.50
55.00	50.0	Overload	KSI	36.00	11.08	3.43	5.179	107.73
66.00	**60.0**	**Flexure**	**KSI**	**36.00**	**10.63**	**3.39**	**5.000**	**103.99**
66.00	60.0	Shear	KIPS	542.44	-14.01	-15.75	25.594	532.35
66.00	60.0	Overload	KSI	36.00	10.63	3.39	5.343	111.13
77.00	**70.0**	**Flexure**	**KSI**	**36.00**	**9.29**	**3.03**	**6.048**	**125.79**
77.00	70.0	Shear	KIPS	542.44	-27.80	-18.74	20.759	431.79
77.00	70.0	Overload	KSI	36.00	9.29	3.03	6.326	131.59
84.50	**76.8**	**Flexure**	**KSI**	**36.00**	**10.05**	**3.22**	**5.460**	**113.56**
84.50	76.8	Shear	KIPS	542.44	-37.19	-20.79	18.262	379.85
84.50	76.8	Overload	KSI	36.00	10.05	3.22	5.776	120.14
88.00	**80.0**	**Flexure**	**KSI**	**36.00**	**9.02**	**2.90**	**6.407**	**133.26**
88.00	80.0	Shear	KIPS	542.44	-41.69	-21.74	17.252	358.84
88.00	80.0	Overload	KSI	36.00	9.02	2.90	6.673	138.79
99.00	90.0	Flexure	KSI	36.00	5.06	1.65	13.683	284.60
99.00	90.0	Shear	KIPS	542.44	-55.11	-24.73	14.612	303.94
99.00	**90.0**	**Overload**	**KSI**	**36.00**	**5.06**	**1.65**	**13.577**	**282.40**

110.00	100.0	Flexure	KSI	-36.00	-0.00	-0.00	99.000	2059.20
110.00	**100.0**	**Shear**	**KIPS**	**336.32**	**-68.52**	**-27.73**	**6.825**	**141.97**
110.00	100.0	Overload	KSI	-36.00	-0.00	-0.00	99.000	2059.20

Note:
*Adj-LL is only applicable for Permit load rating.

6A Load and Resistance Factor Rating
6A.6 Steel Structures
6A.6.4 Limit States
6A.6.4.2 Legal Load Rating and Permit Load Rating
6A.6.4.2.2 Service Limit State
(AASHTO Manual for Bridge Evaluation, Third Edition - 2017)

Steel Plate - At Location = 49.5000 (ft) - Left Stage 3

Service Limit State Flexure Rating Calculations

INPUT:

Section Type: Composite
Allow Plastic Analysis Control Option: No
Allow Moment Redistribution Control Option: No
Moment Redistribution Qualified: No, redistribution did not occur.

Stage 1 DC Moment = 992.6 (kip-ft)
Stage 1 DW Moment = 0.0 (kip-ft)
Stage 1 DW-WS Moment = 0.0 (kip-ft)
Stage 1 SE Moment = 0.0 (kip-ft)
Stage 2 DC Moment = 384.8 (kip-ft)
Stage 2 DW Moment = 801.1 (kip-ft)
Stage 2 DW-WS Moment = 0.0 (kip-ft)
Stage 2 SE Moment = 0.0 (kip-ft)

Stage 1:

Component	C (in)	S (in^3)	Fy (ksi)
Top Flange	44.746	-1267.82	36.00
Bot Flange	-29.504	1922.83	36.00

Stage 2:

Positive Flexure			Negative Flexure		
Component	C (in)	S (in^3)	Component	C (in)	S (in^3)
Top Flange	35.536	-2432.96	Top Flange	44.746	-1267.82
Bot Flange	-38.714	2233.22	Bot Flange	-29.504	1922.83

Stage 3:

Positive Flexure			Negative Flexure		
Component	C (in)	S (in^3)	Component	C (in)	S (in^3)
Top Flange	24.750	-4901.99	Top Flange	44.746	-1267.82
Bot Flange	-49.500	2450.94	Bot Flange	-29.504	1922.83

Note: If the capacity has been overridden, the Resistance is computed as override phi*override capacity.
Otherwise the Resistance is computed as per the Specification.

Section Type: Composite

fR = 0.95*Rh*Fyf

Component: Top Flange

Load	Load Combo	Limit State	Flexure Type	LL (kip-ft)	Adj. LL (kip-ft)	DC	DW	DW-WS	LL	fDC (ksi)	fDW (ksi)	fDW-WS (ksi)	fLL (ksi)	Adj. fLL (ksi)	Phi	fR (ksi)	----- Override ----- Phi	fR (ksi)	RF	Capacity (Ton)
DesignInv	3	SER-II	pos	1929.2	---	1.00	1.00	1.00	1.30	-11.29	-3.95	0.00	-4.72	---	0.95	-36.00	---	---	3.088	111.15
DesignInv	3	SER-II	pos	0.0	---	1.00	1.00	1.00	1.30	-11.29	-3.95	0.00	0.00	---	0.95	-36.00	---	---	99.000	3564.00
DesignOp	3	SER-II	pos	1929.2	---	1.00	1.00	1.00	1.00	-11.29	-3.95	0.00	-4.72	---	0.95	-36.00	---	---	4.014	144.50
DesignOp	3	SER-II	pos	0.0	---	1.00	1.00	1.00	1.00	-11.29	-3.95	0.00	0.00	---	0.95	-36.00	---	---	99.000	3564.00
DesignInv	4	SER-II	pos	1625.4	---	1.00	1.00	1.00	1.30	-11.29	-3.95	0.00	-3.98	---	0.95	-36.00	---	---	3.665	131.93
DesignInv	4	SER-II	pos	0.0	---	1.00	1.00	1.00	1.30	-11.29	-3.95	0.00	0.00	---	0.95	-36.00	---	---	99.000	3564.00
DesignOp	4	SER-II	pos	1625.4	---	1.00	1.00	1.00	1.00	-11.29	-3.95	0.00	-3.98	---	0.95	-36.00	---	---	4.764	171.51
DesignOp	4	SER-II	pos	0.0	---	1.00	1.00	1.00	1.00	-11.29	-3.95	0.00	0.00	---	0.95	-36.00	---	---	99.000	3564.00
LegalRoutine	10	SER-II	pos	875.4	---	1.00	1.00	1.00	1.30	-11.29	-3.95	0.00	-2.14	---	0.95	-36.00	---	---	6.804	170.11
LegalRoutine	10	SER-II	pos	0.0	---	1.00	1.00	1.00	1.30	-11.29	-3.95	0.00	0.00	---	0.95	-36.00	---	---	99.000	2475.00
LegalRoutine	12	SER-II	pos	1086.3	---	1.00	1.00	1.00	1.30	-11.29	-3.95	0.00	-2.66	---	0.95	-36.00	---	---	5.483	197.39
LegalRoutine	12	SER-II	pos	0.0	---	1.00	1.00	1.00	1.30	-11.29	-3.95	0.00	0.00	---	0.95	-36.00	---	---	99.000	3564.00
LegalRoutine	11	SER-II	pos	1104.2	---	1.00	1.00	1.00	1.30	-11.29	-3.95	0.00	-2.70	---	0.95	-36.00	---	---	5.394	215.78
LegalRoutine	11	SER-II	pos	0.0	---	1.00	1.00	1.00	1.30	-11.29	-3.95	0.00	0.00	---	0.95	-36.00	---	---	99.000	3960.00
LegalSpecial	6	SER-II	pos	966.8	---	1.00	1.00	1.00	1.30	-11.29	-3.95	0.00	-2.37	---	0.95	-36.00	---	---	6.161	166.35
LegalSpecial	6	SER-II	pos	0.0	---	1.00	1.00	1.00	1.30	-11.29	-3.95	0.00	0.00	---	0.95	-36.00	---	---	99.000	2673.00
LegalSpecial	7	SER-II	pos	1087.3	---	1.00	1.00	1.00	1.30	-11.29	-3.95	0.00	-2.66	---	0.95	-36.00	---	---	5.478	169.83
LegalSpecial	7	SER-II	pos	0.0	---	1.00	1.00	1.00	1.30	-11.29	-3.95	0.00	0.00	---	0.95	-36.00	---	---	99.000	3069.00
LegalSpecial	8	SER-II	pos	1211.9	---	1.00	1.00	1.00	1.30	-11.29	-3.95	0.00	-2.97	---	0.95	-36.00	---	---	4.915	170.80
LegalSpecial	8	SER-II	pos	0.0	---	1.00	1.00	1.00	1.30	-11.29	-3.95	0.00	0.00	---	0.95	-36.00	---	---	99.000	3440.25
LegalSpecial	9	SER-II	pos	1330.7	---	1.00	1.00	1.00	1.30	-11.29	-3.95	0.00	-3.26	---	0.95	-36.00	---	---	4.476	173.46
LegalSpecial	9	SER-II	pos	0.0	---	1.00	1.00	1.00	1.30	-11.29	-3.95	0.00	0.00	---	0.95	-36.00	---	---	99.000	3836.25
Permit	14	SER-II	pos	1361.8	---	1.00	1.00	1.00	1.00	-11.29	-3.95	0.00	-3.33	---	0.95	-36.00	---	---	5.686	216.08
Permit	14	SER-II	pos	0.0	---	1.00	1.00	1.00	1.00	-11.29	-3.95	0.00	0.00	---	0.95	-36.00	---	---	99.000	3762.00
Permit	15	SER-II	pos	1333.9	---	1.00	1.00	1.00	1.00	-11.29	-3.95	0.00	-3.27	---	0.95	-36.00	---	---	5.805	217.69
Permit	15	SER-II	pos	0.0	---	1.00	1.00	1.00	1.00	-11.29	-3.95	0.00	0.00	---	0.95	-36.00	---	---	99.000	3712.50
Permit	16	SER-II	pos	1709.2	---	1.00	1.00	1.00	1.00	-11.29	-3.95	0.00	-4.18	---	0.95	-36.00	---	---	4.530	237.39
Permit	16	SER-II	pos	0.0	---	1.00	1.00	1.00	1.00	-11.29	-3.95	0.00	0.00	---	0.95	-36.00	---	---	99.000	5187.60
Permit	17	SER-II	pos	1751.6	---	1.00	1.00	1.00	1.00	-11.29	-3.95	0.00	-4.29	---	0.95	-36.00	---	---	4.421	287.34
Permit	17	SER-II	pos	0.0	---	1.00	1.00	1.00	1.00	-11.29	-3.95	0.00	0.00	---	0.95	-36.00	---	---	99.000	6435.00
PermitSpec	18	SER-II	pos	1244.9	---	1.00	1.00	1.00	1.00	-11.29	-3.95	0.00	-3.05	---	0.95	-36.00	---	---	6.220	351.42
PermitSpec	18	SER-II	pos	0.0	---	1.00	1.00	1.00	1.00	-11.29	-3.95	0.00	0.00	---	0.95	-36.00	---	---	99.000	5593.50
PermitSpec	19	SER-II	pos	1203.1	---	1.00	1.00	1.00	1.00	-11.29	-3.95	0.00	-2.95	---	0.95	-36.00	---	---	6.436	514.88
PermitSpec	19	SER-II	pos	0.0	---	1.00	1.00	1.00	1.00	-11.29	-3.95	0.00	0.00	---	0.95	-36.00	---	---	99.000	7920.00
PermitSpec	20	SER-II	pos	1336.2	---	1.00	1.00	1.00	1.00	-11.29	-3.95	0.00	-3.27	---	0.95	-36.00	---	---	5.795	654.85
PermitSpec	20	SER-II	pos	0.0	---	1.00	1.00	1.00	1.00	-11.29	-3.95	0.00	0.00	---	0.95	-36.00	---	---	99.000	11187.00
LegalRoutine	21	SER-II	pos	705.4	---	1.00	1.00	1.00	1.30	-11.29	-3.95	0.00	-1.73	---	0.95	-36.00	---	---	8.443	175.62
LegalRoutine	21	SER-II	pos	0.0	---	1.00	1.00	1.00	1.30	-11.29	-3.95	0.00	0.00	---	0.95	-36.00	---	---	99.000	2059.20
LegalRoutine	13	SER-II	pos	747.8	---	1.00	1.00	1.00	1.30	-11.29	-3.95	0.00	-1.83	---	0.95	-36.00	---	---	7.966	159.31
LegalRoutine	13	SER-II	pos	0.0	---	1.00	1.00	1.00	1.30	-11.29	-3.95	0.00	0.00	---	0.95	-36.00	---	---	99.000	1980.00
LegalRoutine	1	SER-II	pos	779.5	---	1.00	1.00	1.00	1.30	-11.29	-3.95	0.00	-1.91	---	0.95	-36.00	---	---	7.641	219.69
LegalRoutine	1	SER-II	pos	0.0	---	1.00	1.00	1.00	1.30	-11.29	-3.95	0.00	0.00	---	0.95	-36.00	---	---	99.000	2846.25
LegalRoutine	2	SER-II	pos	1172.6	---	1.00	1.00	1.00	1.30	-11.29	-3.95	0.00	-2.87	---	0.95	-36.00	---	---	5.080	218.43
LegalRoutine	2	SER-II	pos	0.0	---	1.00	1.00	1.00	1.30	-11.29	-3.95	0.00	0.00	---	0.95	-36.00	---	---	99.000	4257.00

Component: Bot Flange

					Adj.									Adj.			----- Override -----			

Load	Load Combo	Limit State	Flexure Type	LL (kip-ft)	LL (kip-ft)	DC	DW	DW-WS	LL	fDC (ksi)	fDW (ksi)	fDW-WS (ksi)	fLL (ksi)	fLL (ksi)	Phi	fR (ksi)	Phi	fR (ksi)	RF	Capacity (Ton)
DesignInv	3	SER-II	pos	1929.2	---	1.00	1.00	1.00	1.30	8.26	4.30	0.00	9.45	---	0.95	36.00	---	---	1.762	63.42
DesignInv	3	SER-II	pos	0.0	---	1.00	1.00	1.00	1.30	8.26	4.30	0.00	0.00	---	0.95	36.00	---	---	99.000	3564.00
DesignOp	3	SER-II	pos	1929.2	---	1.00	1.00	1.00	1.00	8.26	4.30	0.00	9.45	---	0.95	36.00	---	---	2.290	82.45
DesignOp	3	SER-II	pos	0.0	---	1.00	1.00	1.00	1.00	8.26	4.30	0.00	0.00	---	0.95	36.00	---	---	99.000	3564.00
DesignInv	4	SER-II	pos	1625.4	---	1.00	1.00	1.00	1.30	8.26	4.30	0.00	7.96	---	0.95	36.00	---	---	2.091	75.28
DesignInv	4	SER-II	pos	0.0	---	1.00	1.00	1.00	1.30	8.26	4.30	0.00	0.00	---	0.95	36.00	---	---	99.000	3564.00
DesignOp	4	SER-II	pos	1625.4	---	1.00	1.00	1.00	1.00	8.26	4.30	0.00	7.96	---	0.95	36.00	---	---	2.718	97.86
DesignOp	4	SER-II	pos	0.0	---	1.00	1.00	1.00	1.00	8.26	4.30	0.00	0.00	---	0.95	36.00	---	---	99.000	3564.00
LegalRoutine	10	SER-II	pos	875.4	---	1.00	1.00	1.00	1.30	8.26	4.30	0.00	4.29	---	0.95	36.00	---	---	3.883	97.06
LegalRoutine	10	SER-II	pos	0.0	---	1.00	1.00	1.00	1.30	8.26	4.30	0.00	0.00	---	0.95	36.00	---	---	99.000	2475.00
LegalRoutine	12	SER-II	pos	1086.3	---	1.00	1.00	1.00	1.30	8.26	4.30	0.00	5.32	---	0.95	36.00	---	---	3.129	112.63
LegalRoutine	12	SER-II	pos	0.0	---	1.00	1.00	1.00	1.30	8.26	4.30	0.00	0.00	---	0.95	36.00	---	---	99.000	3564.00
LegalRoutine	11	SER-II	pos	1104.2	---	1.00	1.00	1.00	1.30	8.26	4.30	0.00	5.41	---	0.95	36.00	---	---	3.078	123.12
LegalRoutine	11	SER-II	pos	0.0	---	1.00	1.00	1.00	1.30	8.26	4.30	0.00	0.00	---	0.95	36.00	---	---	99.000	3960.00
LegalSpecial	6	SER-II	pos	966.8	---	1.00	1.00	1.00	1.30	8.26	4.30	0.00	4.73	---	0.95	36.00	---	---	3.516	94.92
LegalSpecial	6	SER-II	pos	0.0	---	1.00	1.00	1.00	1.30	8.26	4.30	0.00	0.00	---	0.95	36.00	---	---	99.000	2673.00
LegalSpecial	7	SER-II	pos	1087.3	---	1.00	1.00	1.00	1.30	8.26	4.30	0.00	5.32	---	0.95	36.00	---	---	3.126	96.90
LegalSpecial	7	SER-II	pos	0.0	---	1.00	1.00	1.00	1.30	8.26	4.30	0.00	0.00	---	0.95	36.00	---	---	99.000	3069.00
LegalSpecial	8	SER-II	pos	1211.9	---	1.00	1.00	1.00	1.30	8.26	4.30	0.00	5.93	---	0.95	36.00	---	---	2.805	97.46
LegalSpecial	8	SER-II	pos	0.0	---	1.00	1.00	1.00	1.30	8.26	4.30	0.00	0.00	---	0.95	36.00	---	---	99.000	3440.25
LegalSpecial	9	SER-II	pos	1330.7	---	1.00	1.00	1.00	1.30	8.26	4.30	0.00	6.52	---	0.95	36.00	---	---	2.554	98.97
LegalSpecial	9	SER-II	pos	0.0	---	1.00	1.00	1.00	1.30	8.26	4.30	0.00	0.00	---	0.95	36.00	---	---	99.000	3836.25
Permit	14	SER-II	pos	1361.8	---	1.00	1.00	1.00	1.00	8.26	4.30	0.00	6.67	---	0.95	36.00	---	---	3.245	123.29
Permit	14	SER-II	pos	0.0	---	1.00	1.00	1.00	1.00	8.26	4.30	0.00	0.00	---	0.95	36.00	---	---	99.000	3762.00
Permit	15	SER-II	pos	1333.9	---	1.00	1.00	1.00	1.00	8.26	4.30	0.00	6.53	---	0.95	36.00	---	---	3.312	124.21
Permit	15	SER-II	pos	0.0	---	1.00	1.00	1.00	1.00	8.26	4.30	0.00	0.00	---	0.95	36.00	---	---	99.000	3712.50
Permit	16	SER-II	pos	1709.2	---	1.00	1.00	1.00	1.00	8.26	4.30	0.00	8.37	---	0.95	36.00	---	---	2.585	135.46
Permit	16	SER-II	pos	0.0	---	1.00	1.00	1.00	1.00	8.26	4.30	0.00	0.00	---	0.95	36.00	---	---	99.000	5187.60
Permit	17	SER-II	pos	1751.6	---	1.00	1.00	1.00	1.00	8.26	4.30	0.00	8.58	---	0.95	36.00	---	---	2.522	163.96
Permit	17	SER-II	pos	0.0	---	1.00	1.00	1.00	1.00	8.26	4.30	0.00	0.00	---	0.95	36.00	---	---	99.000	6435.00
PermitSpec	18	SER-II	pos	1244.9	---	1.00	1.00	1.00	1.00	8.26	4.30	0.00	6.10	---	0.95	36.00	---	---	3.549	200.52
PermitSpec	18	SER-II	pos	0.0	---	1.00	1.00	1.00	1.00	8.26	4.30	0.00	0.00	---	0.95	36.00	---	---	99.000	5593.50
PermitSpec	19	SER-II	pos	1203.1	---	1.00	1.00	1.00	1.00	8.26	4.30	0.00	5.89	---	0.95	36.00	---	---	3.672	293.80
PermitSpec	19	SER-II	pos	0.0	---	1.00	1.00	1.00	1.00	8.26	4.30	0.00	0.00	---	0.95	36.00	---	---	99.000	7920.00
PermitSpec	20	SER-II	pos	1336.2	---	1.00	1.00	1.00	1.00	8.26	4.30	0.00	6.54	---	0.95	36.00	---	---	3.307	373.66
PermitSpec	20	SER-II	pos	0.0	---	1.00	1.00	1.00	1.00	8.26	4.30	0.00	0.00	---	0.95	36.00	---	---	99.000	11187.00
LegalRoutine	21	SER-II	pos	705.4	---	1.00	1.00	1.00	1.30	8.26	4.30	0.00	3.45	---	0.95	36.00	---	---	4.818	100.21
LegalRoutine	21	SER-II	pos	0.0	---	1.00	1.00	1.00	1.30	8.26	4.30	0.00	0.00	---	0.95	36.00	---	---	99.000	2059.20
LegalRoutine	13	SER-II	pos	747.8	---	1.00	1.00	1.00	1.30	8.26	4.30	0.00	3.66	---	0.95	36.00	---	---	4.545	90.90
LegalRoutine	13	SER-II	pos	0.0	---	1.00	1.00	1.00	1.30	8.26	4.30	0.00	0.00	---	0.95	36.00	---	---	99.000	1980.00
LegalRoutine	1	SER-II	pos	779.5	---	1.00	1.00	1.00	1.30	8.26	4.30	0.00	3.82	---	0.95	36.00	---	---	4.360	125.36
LegalRoutine	1	SER-II	pos	0.0	---	1.00	1.00	1.00	1.30	8.26	4.30	0.00	0.00	---	0.95	36.00	---	---	99.000	2846.25
LegalRoutine	2	SER-II	pos	1172.6	---	1.00	1.00	1.00	1.30	8.26	4.30	0.00	5.74	---	0.95	36.00	---	---	2.899	124.64
LegalRoutine	2	SER-II	pos	0.0	---	1.00	1.00	1.00	1.30	8.26	4.30	0.00	0.00	---	0.95	36.00	---	---	99.000	4257.00

Load Combination Legend:

Code	Vehicle
3	HL-93 (US) - Truck + Lane
4	HL-93 (US) - Tandem + Lane
10	Type 3 - Legal Truck
12	Type 3S2 - Legal Truck
11	Type 3-3 - Legal Truck
6	SU4 - Legal Truck
7	SU5 - Legal Truck
8	SU6 - Legal Truck
9	SU7 - Legal Truck

```
   21     RIPTA Bus - Legal Truck
   13     H20 - Legal Truck
    1     EV2 - Legal Truck
    2     EV3 - Legal Truck
   14     RI-3 - Permit Truck
   15     RI-4 - Permit Truck
   16     RI-5 - Permit Truck
   17     RI-6 - Permit Truck
   18     RI-OP 1 - Permit Truck
   19     RI-OP 2 - Permit Truck
   20     RI-OP 3 - Permit Truck
    5     LRFD Fatigue Truck (US) - Fatigue Truck



Controlling Rating Factors
--------------------------

    Limit          --------------Design Inv----------------          --------------Design  Op--------------          ---------------Legal Load---------------          --------------Permit Load-------------
    State             Vehicle               RF     Capacity            Vehicle               RF     Capacity            Vehicle               RF     Capacity            Vehicle               RF     Capacity
                                                      (Ton)                                          (Ton)                                          (Ton)                                                   (Ton)
-------------------------------------------------------------------------------------------------------------------------------------------------------------------------------------------------------------------------------------
 SER-II       HL-93 (US) - Truck + Lane      1.76      63.42   HL-93 (US) - Truck + Lane      2.29      82.45                                                                                  RI-6 - Permit Truck      2.52     163.96

-------------------------------------------------------------------------------------------------------------


Steel Plate - At Location = 49.5000 (ft) - Right     Stage 3


Service Limit State Flexure Rating Calculations

INPUT:

Section Type:  Composite
Allow Plastic Analysis Control Option: No
Allow Moment Redistribution Control Option: No
Moment Redistribution Qualified: No, redistribution did not occur.

Stage 1 DC Moment     =   992.6  (kip-ft)
Stage 1 DW Moment     =     0.0  (kip-ft)
Stage 1 DW-WS Moment  =     0.0  (kip-ft)
Stage 1 SE Moment     =     0.0  (kip-ft)
Stage 2 DC Moment     =   384.8  (kip-ft)
Stage 2 DW Moment     =   801.1  (kip-ft)
Stage 2 DW-WS Moment  =     0.0  (kip-ft)
Stage 2 SE Moment     =     0.0  (kip-ft)


Stage 1:

Component        C         S        Fy
                (in)     (in^3)     (ksi)
-----------------------------------------
Top Flange    44.746   -1267.82    36.00
Bot Flange    -29.504   1922.83    36.00


Stage 2:

        Positive Flexure                                Negative Flexure
Component        C         S                     Component        C         S
```

	C (in)	S (in^3)		C (in)	S (in^3)
Top Flange	35.536	-2432.96	Top Flange	44.746	-1267.82
Bot Flange	-38.714	2233.22	Bot Flange	-29.504	1922.83

Stage 3:

Positive Flexure			Negative Flexure		
Component	C (in)	S (in^3)	Component	C (in)	S (in^3)
Top Flange	24.750	-4901.99	Top Flange	44.746	-1267.82
Bot Flange	-49.500	2450.94	Bot Flange	-29.504	1922.83

Note: If the capacity has been overridden, the Resistance is computed as override phi*override capacity.
Otherwise the Resistance is computed as per the Specification.

Section Type: Composite

fR = 0.95*Rh*Fyf

Component: Top Flange

Load	Load Combo	Limit State	Flexure Type	LL (kip-ft)	Adj. LL (kip-ft)	DC	DW	DW-WS	LL	fDC (ksi)	fDW (ksi)	fDW-WS (ksi)	fLL (ksi)	Adj. fLL (ksi)	Phi	fR (ksi)	----- Override ----- Phi	fR (ksi)	RF	Capacity (Ton)
DesignInv	3	SER-II	pos	1929.2	---	1.00	1.00	1.00	1.30	-11.29	-3.95	0.00	-4.72	---	0.95	-36.00	---	---	3.088	111.15
DesignInv	3	SER-II	pos	0.0	---	1.00	1.00	1.00	1.30	-11.29	-3.95	0.00	0.00	---	0.95	-36.00	---	---	99.000	3564.00
DesignOp	3	SER-II	pos	1929.2	---	1.00	1.00	1.00	1.00	-11.29	-3.95	0.00	-4.72	---	0.95	-36.00	---	---	4.014	144.50
DesignOp	3	SER-II	pos	0.0	---	1.00	1.00	1.00	1.00	-11.29	-3.95	0.00	0.00	---	0.95	-36.00	---	---	99.000	3564.00
DesignInv	4	SER-II	pos	1625.4	---	1.00	1.00	1.00	1.30	-11.29	-3.95	0.00	-3.98	---	0.95	-36.00	---	---	3.665	131.93
DesignInv	4	SER-II	pos	0.0	---	1.00	1.00	1.00	1.30	-11.29	-3.95	0.00	0.00	---	0.95	-36.00	---	---	99.000	3564.00
DesignOp	4	SER-II	pos	1625.4	---	1.00	1.00	1.00	1.00	-11.29	-3.95	0.00	-3.98	---	0.95	-36.00	---	---	4.764	171.51
DesignOp	4	SER-II	pos	0.0	---	1.00	1.00	1.00	1.00	-11.29	-3.95	0.00	0.00	---	0.95	-36.00	---	---	99.000	3564.00
LegalRoutine	10	SER-II	pos	875.4	---	1.00	1.00	1.00	1.30	-11.29	-3.95	0.00	-2.14	---	0.95	-36.00	---	---	6.804	170.11
LegalRoutine	10	SER-II	pos	0.0	---	1.00	1.00	1.00	1.30	-11.29	-3.95	0.00	0.00	---	0.95	-36.00	---	---	99.000	2475.00
LegalRoutine	12	SER-II	pos	1086.3	---	1.00	1.00	1.00	1.30	-11.29	-3.95	0.00	-2.66	---	0.95	-36.00	---	---	5.483	197.39
LegalRoutine	12	SER-II	pos	0.0	---	1.00	1.00	1.00	1.30	-11.29	-3.95	0.00	0.00	---	0.95	-36.00	---	---	99.000	3564.00
LegalRoutine	11	SER-II	pos	1104.2	---	1.00	1.00	1.00	1.30	-11.29	-3.95	0.00	-2.70	---	0.95	-36.00	---	---	5.394	215.78
LegalRoutine	11	SER-II	pos	0.0	---	1.00	1.00	1.00	1.30	-11.29	-3.95	0.00	0.00	---	0.95	-36.00	---	---	99.000	3960.00
LegalSpecial	6	SER-II	pos	966.8	---	1.00	1.00	1.00	1.30	-11.29	-3.95	0.00	-2.37	---	0.95	-36.00	---	---	6.161	166.35
LegalSpecial	6	SER-II	pos	0.0	---	1.00	1.00	1.00	1.30	-11.29	-3.95	0.00	0.00	---	0.95	-36.00	---	---	99.000	2673.00
LegalSpecial	7	SER-II	pos	1087.3	---	1.00	1.00	1.00	1.30	-11.29	-3.95	0.00	-2.66	---	0.95	-36.00	---	---	5.478	169.83
LegalSpecial	7	SER-II	pos	0.0	---	1.00	1.00	1.00	1.30	-11.29	-3.95	0.00	0.00	---	0.95	-36.00	---	---	99.000	3069.00
LegalSpecial	8	SER-II	pos	1211.9	---	1.00	1.00	1.00	1.30	-11.29	-3.95	0.00	-2.97	---	0.95	-36.00	---	---	4.915	170.80
LegalSpecial	8	SER-II	pos	0.0	---	1.00	1.00	1.00	1.30	-11.29	-3.95	0.00	0.00	---	0.95	-36.00	---	---	99.000	3440.25
LegalSpecial	9	SER-II	pos	1330.7	---	1.00	1.00	1.00	1.30	-11.29	-3.95	0.00	-3.26	---	0.95	-36.00	---	---	4.476	173.46
LegalSpecial	9	SER-II	pos	0.0	---	1.00	1.00	1.00	1.30	-11.29	-3.95	0.00	0.00	---	0.95	-36.00	---	---	99.000	3836.25
Permit	14	SER-II	pos	1361.8	---	1.00	1.00	1.00	1.00	-11.29	-3.95	0.00	-3.33	---	0.95	-36.00	---	---	5.686	216.08
Permit	14	SER-II	pos	0.0	---	1.00	1.00	1.00	1.00	-11.29	-3.95	0.00	0.00	---	0.95	-36.00	---	---	99.000	3762.00
Permit	15	SER-II	pos	1333.9	---	1.00	1.00	1.00	1.00	-11.29	-3.95	0.00	-3.27	---	0.95	-36.00	---	---	5.805	217.69
Permit	15	SER-II	pos	0.0	---	1.00	1.00	1.00	1.00	-11.29	-3.95	0.00	0.00	---	0.95	-36.00	---	---	99.000	3712.50
Permit	16	SER-II	pos	1709.2	---	1.00	1.00	1.00	1.00	-11.29	-3.95	0.00	-4.18	---	0.95	-36.00	---	---	4.530	237.39
Permit	16	SER-II	pos	0.0	---	1.00	1.00	1.00	1.00	-11.29	-3.95	0.00	0.00	---	0.95	-36.00	---	---	99.000	5187.60
Permit	17	SER-II	pos	1751.6	---	1.00	1.00	1.00	1.00	-11.29	-3.95	0.00	-4.29	---	0.95	-36.00	---	---	4.421	287.34
Permit	17	SER-II	pos	0.0	---	1.00	1.00	1.00	1.00	-11.29	-3.95	0.00	0.00	---	0.95	-36.00	---	---	99.000	6435.00

PermitSpec	18	SER-II	pos	1244.9	---	1.00	1.00	1.00	1.00	-11.29	-3.95	0.00	-3.05	---	0.95	-36.00	---	---	6.220	351.42
PermitSpec	18	SER-II	pos	0.0	---	1.00	1.00	1.00	1.00	-11.29	-3.95	0.00	0.00	---	0.95	-36.00	---	---	99.000	5593.50
PermitSpec	19	SER-II	pos	1203.1	---	1.00	1.00	1.00	1.00	-11.29	-3.95	0.00	-2.95	---	0.95	-36.00	---	---	6.436	514.88
PermitSpec	19	SER-II	pos	0.0	---	1.00	1.00	1.00	1.00	-11.29	-3.95	0.00	0.00	---	0.95	-36.00	---	---	99.000	7920.00
PermitSpec	20	SER-II	pos	1336.2	---	1.00	1.00	1.00	1.00	-11.29	-3.95	0.00	-3.27	---	0.95	-36.00	---	---	5.795	654.85
PermitSpec	20	SER-II	pos	0.0	---	1.00	1.00	1.00	1.00	-11.29	-3.95	0.00	0.00	---	0.95	-36.00	---	---	99.000	11187.00
LegalRoutine	21	SER-II	pos	705.4	---	1.00	1.00	1.00	1.30	-11.29	-3.95	0.00	-1.73	---	0.95	-36.00	---	---	8.443	175.62
LegalRoutine	21	SER-II	pos	0.0	---	1.00	1.00	1.00	1.30	-11.29	-3.95	0.00	0.00	---	0.95	-36.00	---	---	99.000	2059.20
LegalRoutine	13	SER-II	pos	747.8	---	1.00	1.00	1.00	1.30	-11.29	-3.95	0.00	-1.83	---	0.95	-36.00	---	---	7.966	159.31
LegalRoutine	13	SER-II	pos	0.0	---	1.00	1.00	1.00	1.30	-11.29	-3.95	0.00	0.00	---	0.95	-36.00	---	---	99.000	1980.00
LegalRoutine	1	SER-II	pos	779.5	---	1.00	1.00	1.00	1.30	-11.29	-3.95	0.00	-1.91	---	0.95	-36.00	---	---	7.641	219.69
LegalRoutine	1	SER-II	pos	0.0	---	1.00	1.00	1.00	1.30	-11.29	-3.95	0.00	0.00	---	0.95	-36.00	---	---	99.000	2846.25
LegalRoutine	2	SER-II	pos	1172.6	---	1.00	1.00	1.00	1.30	-11.29	-3.95	0.00	-2.87	---	0.95	-36.00	---	---	5.080	218.43
LegalRoutine	2	SER-II	pos	0.0	---	1.00	1.00	1.00	1.30	-11.29	-3.95	0.00	0.00	---	0.95	-36.00	---	---	99.000	4257.00

Component: Bot Flange

Load	Load Combo	Limit State	Flexure Type	LL (kip-ft)	Adj. LL (kip-ft)	DC	DW	DW-WS	LL	fDC (ksi)	fDW (ksi)	fDW-WS (ksi)	fLL (ksi)	Adj. fLL (ksi)	Phi	fR (ksi)	----- Override ----- Phi	fR (ksi)	RF	Capacity (Ton)
DesignInv	3	SER-II	pos	1929.2	---	1.00	1.00	1.00	1.30	8.26	4.30	0.00	9.45	---	0.95	36.00	---	---	1.762	63.42
DesignInv	3	SER-II	pos	0.0	---	1.00	1.00	1.00	1.30	8.26	4.30	0.00	0.00	---	0.95	36.00	---	---	99.000	3564.00
DesignOp	3	SER-II	pos	1929.2	---	1.00	1.00	1.00	1.00	8.26	4.30	0.00	9.45	---	0.95	36.00	---	---	2.290	82.45
DesignOp	3	SER-II	pos	0.0	---	1.00	1.00	1.00	1.00	8.26	4.30	0.00	0.00	---	0.95	36.00	---	---	99.000	3564.00
DesignInv	4	SER-II	pos	1625.4	---	1.00	1.00	1.00	1.30	8.26	4.30	0.00	7.96	---	0.95	36.00	---	---	2.091	75.28
DesignInv	4	SER-II	pos	0.0	---	1.00	1.00	1.00	1.30	8.26	4.30	0.00	0.00	---	0.95	36.00	---	---	99.000	3564.00
DesignOp	4	SER-II	pos	1625.4	---	1.00	1.00	1.00	1.00	8.26	4.30	0.00	7.96	---	0.95	36.00	---	---	2.718	97.86
DesignOp	4	SER-II	pos	0.0	---	1.00	1.00	1.00	1.00	8.26	4.30	0.00	0.00	---	0.95	36.00	---	---	99.000	3564.00
LegalRoutine	10	SER-II	pos	875.4	---	1.00	1.00	1.00	1.30	8.26	4.30	0.00	4.29	---	0.95	36.00	---	---	3.883	97.06
LegalRoutine	10	SER-II	pos	0.0	---	1.00	1.00	1.00	1.30	8.26	4.30	0.00	0.00	---	0.95	36.00	---	---	99.000	2475.00
LegalRoutine	12	SER-II	pos	1086.3	---	1.00	1.00	1.00	1.30	8.26	4.30	0.00	5.32	---	0.95	36.00	---	---	3.129	112.63
LegalRoutine	12	SER-II	pos	0.0	---	1.00	1.00	1.00	1.30	8.26	4.30	0.00	0.00	---	0.95	36.00	---	---	99.000	3564.00
LegalRoutine	11	SER-II	pos	1104.2	---	1.00	1.00	1.00	1.30	8.26	4.30	0.00	5.41	---	0.95	36.00	---	---	3.078	123.12
LegalRoutine	11	SER-II	pos	0.0	---	1.00	1.00	1.00	1.30	8.26	4.30	0.00	0.00	---	0.95	36.00	---	---	99.000	3960.00
LegalSpecial	6	SER-II	pos	966.8	---	1.00	1.00	1.00	1.30	8.26	4.30	0.00	4.73	---	0.95	36.00	---	---	3.516	94.92
LegalSpecial	6	SER-II	pos	0.0	---	1.00	1.00	1.00	1.30	8.26	4.30	0.00	0.00	---	0.95	36.00	---	---	99.000	2673.00
LegalSpecial	7	SER-II	pos	1087.3	---	1.00	1.00	1.00	1.30	8.26	4.30	0.00	5.32	---	0.95	36.00	---	---	3.126	96.90
LegalSpecial	7	SER-II	pos	0.0	---	1.00	1.00	1.00	1.30	8.26	4.30	0.00	0.00	---	0.95	36.00	---	---	99.000	3069.00
LegalSpecial	8	SER-II	pos	1211.9	---	1.00	1.00	1.00	1.30	8.26	4.30	0.00	5.93	---	0.95	36.00	---	---	2.805	97.46
LegalSpecial	8	SER-II	pos	0.0	---	1.00	1.00	1.00	1.30	8.26	4.30	0.00	0.00	---	0.95	36.00	---	---	99.000	3440.25
LegalSpecial	9	SER-II	pos	1330.7	---	1.00	1.00	1.00	1.30	8.26	4.30	0.00	6.52	---	0.95	36.00	---	---	2.554	98.97
LegalSpecial	9	SER-II	pos	0.0	---	1.00	1.00	1.00	1.30	8.26	4.30	0.00	0.00	---	0.95	36.00	---	---	99.000	3836.25
Permit	14	SER-II	pos	1361.8	---	1.00	1.00	1.00	1.00	8.26	4.30	0.00	6.67	---	0.95	36.00	---	---	3.245	123.29
Permit	14	SER-II	pos	0.0	---	1.00	1.00	1.00	1.00	8.26	4.30	0.00	0.00	---	0.95	36.00	---	---	99.000	3762.00
Permit	15	SER-II	pos	1333.9	---	1.00	1.00	1.00	1.00	8.26	4.30	0.00	6.53	---	0.95	36.00	---	---	3.312	124.21
Permit	15	SER-II	pos	0.0	---	1.00	1.00	1.00	1.00	8.26	4.30	0.00	0.00	---	0.95	36.00	---	---	99.000	3712.50
Permit	16	SER-II	pos	1709.2	---	1.00	1.00	1.00	1.00	8.26	4.30	0.00	8.37	---	0.95	36.00	---	---	2.585	135.46
Permit	16	SER-II	pos	0.0	---	1.00	1.00	1.00	1.00	8.26	4.30	0.00	0.00	---	0.95	36.00	---	---	99.000	5187.60
Permit	17	SER-II	pos	1751.6	---	1.00	1.00	1.00	1.00	8.26	4.30	0.00	8.58	---	0.95	36.00	---	---	2.522	163.96
Permit	17	SER-II	pos	0.0	---	1.00	1.00	1.00	1.00	8.26	4.30	0.00	0.00	---	0.95	36.00	---	---	99.000	6435.00
PermitSpec	18	SER-II	pos	1244.9	---	1.00	1.00	1.00	1.00	8.26	4.30	0.00	6.10	---	0.95	36.00	---	---	3.549	200.52
PermitSpec	18	SER-II	pos	0.0	---	1.00	1.00	1.00	1.00	8.26	4.30	0.00	0.00	---	0.95	36.00	---	---	99.000	5593.50
PermitSpec	19	SER-II	pos	1203.1	---	1.00	1.00	1.00	1.00	8.26	4.30	0.00	5.89	---	0.95	36.00	---	---	3.672	293.80
PermitSpec	19	SER-II	pos	0.0	---	1.00	1.00	1.00	1.00	8.26	4.30	0.00	0.00	---	0.95	36.00	---	---	99.000	7920.00
PermitSpec	20	SER-II	pos	1336.2	---	1.00	1.00	1.00	1.00	8.26	4.30	0.00	6.54	---	0.95	36.00	---	---	3.307	373.66
PermitSpec	20	SER-II	pos	0.0	---	1.00	1.00	1.00	1.00	8.26	4.30	0.00	0.00	---	0.95	36.00	---	---	99.000	11187.00
LegalRoutine	21	SER-II	pos	705.4	---	1.00	1.00	1.00	1.30	8.26	4.30	0.00	3.45	---	0.95	36.00	---	---	4.818	100.21
LegalRoutine	21	SER-II	pos	0.0	---	1.00	1.00	1.00	1.30	8.26	4.30	0.00	0.00	---	0.95	36.00	---	---	99.000	2059.20
LegalRoutine	13	SER-II	pos	747.8	---	1.00	1.00	1.00	1.30	8.26	4.30	0.00	3.66	---	0.95	36.00	---	---	4.545	90.90

LegalRoutine	13	SER-II	pos	0.0	---	1.00	1.00	1.00	1.30	8.26	4.30	0.00	0.00	---	0.95	36.00	---	---	99.000	1980.00
LegalRoutine	1	SER-II	pos	779.5	---	1.00	1.00	1.00	1.30	8.26	4.30	0.00	3.82	---	0.95	36.00	---	---	4.360	125.36
LegalRoutine	1	SER-II	pos	0.0	---	1.00	1.00	1.00	1.30	8.26	4.30	0.00	0.00	---	0.95	36.00	---	---	99.000	2846.25
LegalRoutine	2	SER-II	pos	1172.6	---	1.00	1.00	1.00	1.30	8.26	4.30	0.00	5.74	---	0.95	36.00	---	---	2.899	124.64
LegalRoutine	2	SER-II	pos	0.0	---	1.00	1.00	1.00	1.30	8.26	4.30	0.00	0.00	---	0.95	36.00	---	---	99.000	4257.00

Load Combination Legend:

Code	Vehicle
3	HL-93 (US) - Truck + Lane
4	HL-93 (US) - Tandem + Lane
10	Type 3 - Legal Truck
12	Type 3S2 - Legal Truck
11	Type 3-3 - Legal Truck
6	SU4 - Legal Truck
7	SU5 - Legal Truck
8	SU6 - Legal Truck
9	SU7 - Legal Truck
21	RIPTA Bus - Legal Truck
13	H20 - Legal Truck
1	EV2 - Legal Truck
2	EV3 - Legal Truck
14	RI-3 - Permit Truck
15	RI-4 - Permit Truck
16	RI-5 - Permit Truck
17	RI-6 - Permit Truck
18	RI-OP 1 - Permit Truck
19	RI-OP 2 - Permit Truck
20	RI-OP 3 - Permit Truck
5	LRFD Fatigue Truck (US) - Fatigue Truck

Controlling Rating Factors

Limit State	Design Inv Vehicle	RF	Capacity (Ton)	Design Op Vehicle	RF	Capacity (Ton)	Legal Load Vehicle	RF	Capacity (Ton)	Permit Load Vehicle	RF	Capacity (Ton)
SER-II	HL-93 (US) - Truck + Lane	1.76	63.42	HL-93 (US) - Truck + Lane	2.29	82.45				RI-6 - Permit Truck	2.52	163.96

6A Load and Resistance Factor Rating
6A.6 Steel Structures
6A.6.4 Limit States
6A.6.4.2 Legal Load Rating and Permit Load Rating
6A.6.4.2.2 Service Limit State
(AASHTO Manual for Bridge Evaluation, Third Edition - 2017)

Steel Plate - At Location = 55.0000 (ft) - Left Stage 3

Section at Middle of Unbraced Length

Service Limit State Flexure Rating Calculations

INPUT:

Section Type: Composite
Allow Plastic Analysis Control Option: No
Allow Moment Redistribution Control Option: No
Moment Redistribution Qualified: No, redistribution did not occur.

Stage 1 DC Moment = 1002.6 (kip-ft)
Stage 1 DW Moment = 0.0 (kip-ft)
Stage 1 DW-WS Moment = 0.0 (kip-ft)
Stage 1 SE Moment = 0.0 (kip-ft)
Stage 2 DC Moment = 388.7 (kip-ft)
Stage 2 DW Moment = 809.2 (kip-ft)
Stage 2 DW-WS Moment = 0.0 (kip-ft)
Stage 2 SE Moment = 0.0 (kip-ft)

Stage 1:

Component	C (in)	S (in^3)	Fy (ksi)
Top Flange	44.746	-1267.82	36.00
Bot Flange	-29.504	1922.83	36.00

Stage 2:

Positive Flexure			Negative Flexure		
Component	C (in)	S (in^3)	Component	C (in)	S (in^3)
Top Flange	35.536	-2432.96	Top Flange	44.746	-1267.82
Bot Flange	-38.714	2233.22	Bot Flange	-29.504	1922.83

Stage 3:

Positive Flexure			Negative Flexure		
Component	C (in)	S (in^3)	Component	C (in)	S (in^3)
Top Flange	24.750	-4901.99	Top Flange	44.746	-1267.82
Bot Flange	-49.500	2450.94	Bot Flange	-29.504	1922.83

Note: If the capacity has been overridden, the Resistance is computed as override phi*override capacity.
Otherwise the Resistance is computed as per the Specification.

Section Type: Composite

fR = 0.95*Rh*Fyf

Component: Top Flange

Load	Load Combo	Limit State	Flexure Type	LL (kip-ft)	Adj. LL (kip-ft)	DC	DW	DW-WS	LL	fDC (ksi)	fDW (ksi)	fDW-WS (ksi)	fLL (ksi)	Adj. fLL (ksi)	Phi	fR (ksi)	----- Override ----- Phi	fR (ksi)	RF	Capacity (Ton)
DesignInv	3	SER-II	pos	1937.4	---	1.00	1.00	1.00	1.30	-11.41	-3.99	0.00	-4.74	---	0.95	-36.00	---	---	3.050	109.78
DesignInv	3	SER-II	pos	0.0	---	1.00	1.00	1.00	1.30	-11.41	-3.99	0.00	0.00	---	0.95	-36.00	---	---	99.000	3564.00
DesignOp	3	SER-II	pos	1937.4	---	1.00	1.00	1.00	1.00	-11.41	-3.99	0.00	-4.74	---	0.95	-36.00	---	---	3.964	142.72
DesignOp	3	SER-II	pos	0.0	---	1.00	1.00	1.00	1.00	-11.41	-3.99	0.00	0.00	---	0.95	-36.00	---	---	99.000	3564.00
DesignInv	4	SER-II	pos	1638.2	---	1.00	1.00	1.00	1.30	-11.41	-3.99	0.00	-4.01	---	0.95	-36.00	---	---	3.607	129.84
DesignInv	4	SER-II	pos	0.0	---	1.00	1.00	1.00	1.30	-11.41	-3.99	0.00	0.00	---	0.95	-36.00	---	---	99.000	3564.00
DesignOp	4	SER-II	pos	1638.2	---	1.00	1.00	1.00	1.00	-11.41	-3.99	0.00	-4.01	---	0.95	-36.00	---	---	4.689	168.79
DesignOp	4	SER-II	pos	0.0	---	1.00	1.00	1.00	1.00	-11.41	-3.99	0.00	0.00	---	0.95	-36.00	---	---	99.000	3564.00
LegalRoutine	10	SER-II	pos	879.1	---	1.00	1.00	1.00	1.30	-11.41	-3.99	0.00	-2.15	---	0.95	-36.00	---	---	6.721	168.02
LegalRoutine	10	SER-II	pos	0.0	---	1.00	1.00	1.00	1.30	-11.41	-3.99	0.00	0.00	---	0.95	-36.00	---	---	99.000	2475.00
LegalRoutine	12	SER-II	pos	1081.4	---	1.00	1.00	1.00	1.30	-11.41	-3.99	0.00	-2.65	---	0.95	-36.00	---	---	5.463	196.68
LegalRoutine	12	SER-II	pos	0.0	---	1.00	1.00	1.00	1.30	-11.41	-3.99	0.00	0.00	---	0.95	-36.00	---	---	99.000	3564.00
LegalRoutine	11	SER-II	pos	1108.8	---	1.00	1.00	1.00	1.30	-11.41	-3.99	0.00	-2.71	---	0.95	-36.00	---	---	5.329	213.14
LegalRoutine	11	SER-II	pos	0.0	---	1.00	1.00	1.00	1.30	-11.41	-3.99	0.00	0.00	---	0.95	-36.00	---	---	99.000	3960.00
LegalSpecial	6	SER-II	pos	972.7	---	1.00	1.00	1.00	1.30	-11.41	-3.99	0.00	-2.38	---	0.95	-36.00	---	---	6.074	164.00
LegalSpecial	6	SER-II	pos	0.0	---	1.00	1.00	1.00	1.30	-11.41	-3.99	0.00	0.00	---	0.95	-36.00	---	---	99.000	2673.00
LegalSpecial	7	SER-II	pos	1090.8	---	1.00	1.00	1.00	1.30	-11.41	-3.99	0.00	-2.67	---	0.95	-36.00	---	---	5.416	167.91
LegalSpecial	7	SER-II	pos	0.0	---	1.00	1.00	1.00	1.30	-11.41	-3.99	0.00	0.00	---	0.95	-36.00	---	---	99.000	3069.00
LegalSpecial	8	SER-II	pos	1219.5	---	1.00	1.00	1.00	1.30	-11.41	-3.99	0.00	-2.99	---	0.95	-36.00	---	---	4.845	168.36
LegalSpecial	8	SER-II	pos	0.0	---	1.00	1.00	1.00	1.30	-11.41	-3.99	0.00	0.00	---	0.95	-36.00	---	---	99.000	3440.25
LegalSpecial	9	SER-II	pos	1343.3	---	1.00	1.00	1.00	1.30	-11.41	-3.99	0.00	-3.29	---	0.95	-36.00	---	---	4.398	170.43
LegalSpecial	9	SER-II	pos	0.0	---	1.00	1.00	1.00	1.30	-11.41	-3.99	0.00	0.00	---	0.95	-36.00	---	---	99.000	3836.25
Permit	14	SER-II	pos	1373.2	---	1.00	1.00	1.00	1.00	-11.41	-3.99	0.00	-3.36	---	0.95	-36.00	---	---	5.593	212.54
Permit	14	SER-II	pos	0.0	---	1.00	1.00	1.00	1.00	-11.41	-3.99	0.00	0.00	---	0.95	-36.00	---	---	99.000	3762.00
Permit	15	SER-II	pos	1340.6	---	1.00	1.00	1.00	1.00	-11.41	-3.99	0.00	-3.28	---	0.95	-36.00	---	---	5.729	214.84
Permit	15	SER-II	pos	0.0	---	1.00	1.00	1.00	1.00	-11.41	-3.99	0.00	0.00	---	0.95	-36.00	---	---	99.000	3712.50
Permit	16	SER-II	pos	1712.0	---	1.00	1.00	1.00	1.00	-11.41	-3.99	0.00	-4.19	---	0.95	-36.00	---	---	4.486	235.09
Permit	16	SER-II	pos	0.0	---	1.00	1.00	1.00	1.00	-11.41	-3.99	0.00	0.00	---	0.95	-36.00	---	---	99.000	5187.60
Permit	17	SER-II	pos	1714.4	---	1.00	1.00	1.00	1.00	-11.41	-3.99	0.00	-4.20	---	0.95	-36.00	---	---	4.480	291.21
Permit	17	SER-II	pos	0.0	---	1.00	1.00	1.00	1.00	-11.41	-3.99	0.00	0.00	---	0.95	-36.00	---	---	99.000	6435.00
PermitSpec	18	SER-II	pos	1255.7	---	1.00	1.00	1.00	1.00	-11.41	-3.99	0.00	-3.07	---	0.95	-36.00	---	---	6.117	345.59
PermitSpec	18	SER-II	pos	0.0	---	1.00	1.00	1.00	1.00	-11.41	-3.99	0.00	0.00	---	0.95	-36.00	---	---	99.000	5593.50
PermitSpec	19	SER-II	pos	1173.7	---	1.00	1.00	1.00	1.00	-11.41	-3.99	0.00	-2.87	---	0.95	-36.00	---	---	6.544	523.51
PermitSpec	19	SER-II	pos	0.0	---	1.00	1.00	1.00	1.00	-11.41	-3.99	0.00	0.00	---	0.95	-36.00	---	---	99.000	7920.00
PermitSpec	20	SER-II	pos	1324.6	---	1.00	1.00	1.00	1.00	-11.41	-3.99	0.00	-3.24	---	0.95	-36.00	---	---	5.799	655.23
PermitSpec	20	SER-II	pos	0.0	---	1.00	1.00	1.00	1.00	-11.41	-3.99	0.00	0.00	---	0.95	-36.00	---	---	99.000	11187.00
LegalRoutine	21	SER-II	pos	701.5	---	1.00	1.00	1.00	1.30	-11.41	-3.99	0.00	-1.72	---	0.95	-36.00	---	---	8.423	175.19
LegalRoutine	21	SER-II	pos	0.0	---	1.00	1.00	1.00	1.30	-11.41	-3.99	0.00	0.00	---	0.95	-36.00	---	---	99.000	2059.20
LegalRoutine	13	SER-II	pos	751.7	---	1.00	1.00	1.00	1.30	-11.41	-3.99	0.00	-1.84	---	0.95	-36.00	---	---	7.860	157.20
LegalRoutine	13	SER-II	pos	0.0	---	1.00	1.00	1.00	1.30	-11.41	-3.99	0.00	0.00	---	0.95	-36.00	---	---	99.000	1980.00
LegalRoutine	1	SER-II	pos	778.3	---	1.00	1.00	1.00	1.30	-11.41	-3.99	0.00	-1.91	---	0.95	-36.00	---	---	7.591	218.25
LegalRoutine	1	SER-II	pos	0.0	---	1.00	1.00	1.00	1.30	-11.41	-3.99	0.00	0.00	---	0.95	-36.00	---	---	99.000	2846.25
LegalRoutine	2	SER-II	pos	1179.2	---	1.00	1.00	1.00	1.30	-11.41	-3.99	0.00	-2.89	---	0.95	-36.00	---	---	5.011	215.45
LegalRoutine	2	SER-II	pos	0.0	---	1.00	1.00	1.00	1.30	-11.41	-3.99	0.00	0.00	---	0.95	-36.00	---	---	99.000	4257.00

Component: Bot Flange

Load	Load Combo	Limit State	Flexure Type	LL (kip-ft)	Adj. LL (kip-ft)	DC	DW	DW-WS	LL	fDC (ksi)	fDW (ksi)	fDW-WS (ksi)	fLL (ksi)	Adj. fLL (ksi)	Phi	fR (ksi)	----- Override ----- Phi	fR (ksi)	RF	Capacity (Ton)
DesignInv	3	SER-II	pos	1937.4	---	1.00	1.00	1.00	1.30	8.35	4.35	0.00	9.49	---	0.95	36.00	---	---	1.744	62.79
DesignInv	3	SER-II	pos	0.0	---	1.00	1.00	1.00	1.30	8.35	4.35	0.00	0.00	---	0.95	36.00	---	---	99.000	3564.00
DesignOp	3	SER-II	pos	1937.4	---	1.00	1.00	1.00	1.00	8.35	4.35	0.00	9.49	---	0.95	36.00	---	---	2.267	81.62
DesignOp	3	SER-II	pos	0.0	---	1.00	1.00	1.00	1.00	8.35	4.35	0.00	0.00	---	0.95	36.00	---	---	99.000	3564.00
DesignInv	4	SER-II	pos	1638.2	---	1.00	1.00	1.00	1.30	8.35	4.35	0.00	8.02	---	0.95	36.00	---	---	2.063	74.25
DesignInv	4	SER-II	pos	0.0	---	1.00	1.00	1.00	1.30	8.35	4.35	0.00	0.00	---	0.95	36.00	---	---	99.000	3564.00
DesignOp	4	SER-II	pos	1638.2	---	1.00	1.00	1.00	1.00	8.35	4.35	0.00	8.02	---	0.95	36.00	---	---	2.681	96.53

DesignOp	4	SER-II	pos	0.0	---	1.00	1.00	1.00	1.00	8.35	4.35	0.00	0.00	---	0.95	36.00	---	---	99.000	3564.00
LegalRoutine	10	SER-II	pos	879.1	---	1.00	1.00	1.00	1.30	8.35	4.35	0.00	4.30	---	0.95	36.00	---	---	3.844	96.09
LegalRoutine	10	SER-II	pos	0.0	---	1.00	1.00	1.00	1.30	8.35	4.35	0.00	0.00	---	0.95	36.00	---	---	99.000	2475.00
LegalRoutine	12	SER-II	pos	1081.4	---	1.00	1.00	1.00	1.30	8.35	4.35	0.00	5.29	---	0.95	36.00	---	---	3.124	112.48
LegalRoutine	12	SER-II	pos	0.0	---	1.00	1.00	1.00	1.30	8.35	4.35	0.00	0.00	---	0.95	36.00	---	---	99.000	3564.00
LegalRoutine	11	SER-II	pos	1108.8	---	1.00	1.00	1.00	1.30	8.35	4.35	0.00	5.43	---	0.95	36.00	---	---	3.047	121.90
LegalRoutine	11	SER-II	pos	0.0	---	1.00	1.00	1.00	1.30	8.35	4.35	0.00	0.00	---	0.95	36.00	---	---	99.000	3960.00
LegalSpecial	6	SER-II	pos	972.7	---	1.00	1.00	1.00	1.30	8.35	4.35	0.00	4.76	---	0.95	36.00	---	---	3.474	93.79
LegalSpecial	6	SER-II	pos	0.0	---	1.00	1.00	1.00	1.30	8.35	4.35	0.00	0.00	---	0.95	36.00	---	---	99.000	2673.00
LegalSpecial	7	SER-II	pos	1090.8	---	1.00	1.00	1.00	1.30	8.35	4.35	0.00	5.34	---	0.95	36.00	---	---	3.098	96.03
LegalSpecial	7	SER-II	pos	0.0	---	1.00	1.00	1.00	1.30	8.35	4.35	0.00	0.00	---	0.95	36.00	---	---	99.000	3069.00
LegalSpecial	8	SER-II	pos	1219.5	---	1.00	1.00	1.00	1.30	8.35	4.35	0.00	5.97	---	0.95	36.00	---	---	2.771	96.28
LegalSpecial	8	SER-II	pos	0.0	---	1.00	1.00	1.00	1.30	8.35	4.35	0.00	0.00	---	0.95	36.00	---	---	99.000	3440.25
LegalSpecial	9	SER-II	pos	1343.3	---	1.00	1.00	1.00	1.30	8.35	4.35	0.00	6.58	---	0.95	36.00	---	---	2.515	97.47
LegalSpecial	9	SER-II	pos	0.0	---	1.00	1.00	1.00	1.30	8.35	4.35	0.00	0.00	---	0.95	36.00	---	---	99.000	3836.25
Permit	14	SER-II	pos	1373.2	---	1.00	1.00	1.00	1.00	8.35	4.35	0.00	6.72	---	0.95	36.00	---	---	3.199	121.55
Permit	14	SER-II	pos	0.0	---	1.00	1.00	1.00	1.00	8.35	4.35	0.00	0.00	---	0.95	36.00	---	---	99.000	3762.00
Permit	15	SER-II	pos	1340.6	---	1.00	1.00	1.00	1.00	8.35	4.35	0.00	6.56	---	0.95	36.00	---	---	3.276	122.87
Permit	15	SER-II	pos	0.0	---	1.00	1.00	1.00	1.00	8.35	4.35	0.00	0.00	---	0.95	36.00	---	---	99.000	3712.50
Permit	16	SER-II	pos	1712.0	---	1.00	1.00	1.00	1.00	8.35	4.35	0.00	8.38	---	0.95	36.00	---	---	2.566	134.45
Permit	16	SER-II	pos	0.0	---	1.00	1.00	1.00	1.00	8.35	4.35	0.00	0.00	---	0.95	36.00	---	---	99.000	5187.60
Permit	17	SER-II	pos	1714.4	---	1.00	1.00	1.00	1.00	8.35	4.35	0.00	8.39	---	0.95	36.00	---	---	2.562	166.54
Permit	17	SER-II	pos	0.0	---	1.00	1.00	1.00	1.00	8.35	4.35	0.00	0.00	---	0.95	36.00	---	---	99.000	6435.00
PermitSpec	18	SER-II	pos	1255.7	---	1.00	1.00	1.00	1.00	8.35	4.35	0.00	6.15	---	0.95	36.00	---	---	3.498	197.64
PermitSpec	18	SER-II	pos	0.0	---	1.00	1.00	1.00	1.00	8.35	4.35	0.00	0.00	---	0.95	36.00	---	---	99.000	5593.50
PermitSpec	19	SER-II	pos	1173.7	---	1.00	1.00	1.00	1.00	8.35	4.35	0.00	5.75	---	0.95	36.00	---	---	3.742	299.39
PermitSpec	19	SER-II	pos	0.0	---	1.00	1.00	1.00	1.00	8.35	4.35	0.00	0.00	---	0.95	36.00	---	---	99.000	7920.00
PermitSpec	20	SER-II	pos	1324.6	---	1.00	1.00	1.00	1.00	8.35	4.35	0.00	6.49	---	0.95	36.00	---	---	3.316	374.73
PermitSpec	20	SER-II	pos	0.0	---	1.00	1.00	1.00	1.00	8.35	4.35	0.00	0.00	---	0.95	36.00	---	---	99.000	11187.00
LegalRoutine	21	SER-II	pos	701.5	---	1.00	1.00	1.00	1.30	8.35	4.35	0.00	3.43	---	0.95	36.00	---	---	4.817	100.19
LegalRoutine	21	SER-II	pos	0.0	---	1.00	1.00	1.00	1.30	8.35	4.35	0.00	0.00	---	0.95	36.00	---	---	99.000	2059.20
LegalRoutine	13	SER-II	pos	751.7	---	1.00	1.00	1.00	1.30	8.35	4.35	0.00	3.68	---	0.95	36.00	---	---	4.495	89.90
LegalRoutine	13	SER-II	pos	0.0	---	1.00	1.00	1.00	1.30	8.35	4.35	0.00	0.00	---	0.95	36.00	---	---	99.000	1980.00
LegalRoutine	1	SER-II	pos	778.3	---	1.00	1.00	1.00	1.30	8.35	4.35	0.00	3.81	---	0.95	36.00	---	---	4.341	124.82
LegalRoutine	1	SER-II	pos	0.0	---	1.00	1.00	1.00	1.30	8.35	4.35	0.00	0.00	---	0.95	36.00	---	---	99.000	2846.25
LegalRoutine	2	SER-II	pos	1179.2	---	1.00	1.00	1.00	1.30	8.35	4.35	0.00	5.77	---	0.95	36.00	---	---	2.866	123.22
LegalRoutine	2	SER-II	pos	0.0	---	1.00	1.00	1.00	1.30	8.35	4.35	0.00	0.00	---	0.95	36.00	---	---	99.000	4257.00

Load Combination Legend:

Code	Vehicle
3	HL-93 (US) - Truck + Lane
4	HL-93 (US) - Tandem + Lane
10	Type 3 - Legal Truck
12	Type 3S2 - Legal Truck
11	Type 3-3 - Legal Truck
6	SU4 - Legal Truck
7	SU5 - Legal Truck
8	SU6 - Legal Truck
9	SU7 - Legal Truck
21	RIPTA Bus - Legal Truck
13	H20 - Legal Truck
1	EV2 - Legal Truck
2	EV3 - Legal Truck
14	RI-3 - Permit Truck
15	RI-4 - Permit Truck
16	RI-5 - Permit Truck
17	RI-6 - Permit Truck
18	RI-OP 1 - Permit Truck
19	RI-OP 2 - Permit Truck
20	RI-OP 3 - Permit Truck
5	LRFD Fatigue Truck (US) - Fatigue Truck

Controlling Rating Factors

Limit State	Design Inv Vehicle	RF	Capacity (Ton)	Design Op Vehicle	RF	Capacity (Ton)	Legal Load Vehicle	RF	Capacity (Ton)	Permit Load Vehicle	RF	Capacity (Ton)
SER-II	HL-93 (US) - Truck + Lane	1.74	62.79	HL-93 (US) - Truck + Lane	2.27	81.62				RI-6 - Permit Truck	2.56	166.54

Steel Plate - At Location = 55.0000 (ft) - Right Stage 3

Section at Middle of Unbraced Length

Service Limit State Flexure Rating Calculations

INPUT:

Section Type: Composite
Allow Plastic Analysis Control Option: No
Allow Moment Redistribution Control Option: No
Moment Redistribution Qualified: No, redistribution did not occur.

Stage 1 DC Moment = 1002.6 (kip-ft)
Stage 1 DW Moment = 0.0 (kip-ft)
Stage 1 DW-WS Moment = 0.0 (kip-ft)
Stage 1 SE Moment = 0.0 (kip-ft)
Stage 2 DC Moment = 388.7 (kip-ft)
Stage 2 DW Moment = 809.2 (kip-ft)
Stage 2 DW-WS Moment = 0.0 (kip-ft)
Stage 2 SE Moment = 0.0 (kip-ft)

Stage 1:

Component	C (in)	S (in^3)	Fy (ksi)
Top Flange	44.746	-1267.82	36.00
Bot Flange	-29.504	1922.83	36.00

Stage 2:

Positive Flexure Component	C (in)	S (in^3)	Negative Flexure Component	C (in)	S (in^3)
Top Flange	35.536	-2432.96	Top Flange	44.746	-1267.82
Bot Flange	-38.714	2233.22	Bot Flange	-29.504	1922.83

Stage 3:

Positive Flexure Component	C (in)	S (in^3)	Negative Flexure Component	C (in)	S (in^3)
Top Flange	24.750	-4901.99	Top Flange	44.746	-1267.82
Bot Flange	-49.500	2450.94	Bot Flange	-29.504	1922.83

Note: If the capacity has been overridden, the Resistance is computed as override phi*override capacity.
Otherwise the Resistance is computed as per the Specification.

Section Type: Composite

fR = 0.95*Rh*Fyf

Component: Top Flange

Load	Load Combo	Limit State	Flexure Type	LL (kip-ft)	Adj. LL (kip-ft)	DC	DW	DW-WS	LL	fDC (ksi)	fDW (ksi)	fDW-WS (ksi)	fLL (ksi)	Adj. fLL (ksi)	Phi	fR (ksi)	----- Override ----- Phi	fR (ksi)	RF	Capacity (Ton)
DesignInv	3	SER-II	pos	1937.4	---	1.00	1.00	1.00	1.30	-11.41	-3.99	0.00	-4.74	---	0.95	-36.00	---	---	3.050	109.78
DesignInv	3	SER-II	pos	0.0	---	1.00	1.00	1.00	1.30	-11.41	-3.99	0.00	0.00	---	0.95	-36.00	---	---	99.000	3564.00
DesignOp	3	SER-II	pos	1937.4	---	1.00	1.00	1.00	1.00	-11.41	-3.99	0.00	-4.74	---	0.95	-36.00	---	---	3.964	142.72
DesignOp	3	SER-II	pos	0.0	---	1.00	1.00	1.00	1.00	-11.41	-3.99	0.00	0.00	---	0.95	-36.00	---	---	99.000	3564.00
DesignInv	4	SER-II	pos	1638.2	---	1.00	1.00	1.00	1.30	-11.41	-3.99	0.00	-4.01	---	0.95	-36.00	---	---	3.607	129.84
DesignInv	4	SER-II	pos	0.0	---	1.00	1.00	1.00	1.30	-11.41	-3.99	0.00	0.00	---	0.95	-36.00	---	---	99.000	3564.00
DesignOp	4	SER-II	pos	1638.2	---	1.00	1.00	1.00	1.00	-11.41	-3.99	0.00	-4.01	---	0.95	-36.00	---	---	4.689	168.79
DesignOp	4	SER-II	pos	0.0	---	1.00	1.00	1.00	1.00	-11.41	-3.99	0.00	0.00	---	0.95	-36.00	---	---	99.000	3564.00
LegalRoutine	10	SER-II	pos	879.1	---	1.00	1.00	1.00	1.30	-11.41	-3.99	0.00	-2.15	---	0.95	-36.00	---	---	6.721	168.02
LegalRoutine	10	SER-II	pos	0.0	---	1.00	1.00	1.00	1.30	-11.41	-3.99	0.00	0.00	---	0.95	-36.00	---	---	99.000	2475.00
LegalRoutine	12	SER-II	pos	1081.4	---	1.00	1.00	1.00	1.30	-11.41	-3.99	0.00	-2.65	---	0.95	-36.00	---	---	5.463	196.68
LegalRoutine	12	SER-II	pos	0.0	---	1.00	1.00	1.00	1.30	-11.41	-3.99	0.00	0.00	---	0.95	-36.00	---	---	99.000	3564.00
LegalRoutine	11	SER-II	pos	1108.8	---	1.00	1.00	1.00	1.30	-11.41	-3.99	0.00	-2.71	---	0.95	-36.00	---	---	5.329	213.14
LegalRoutine	11	SER-II	pos	0.0	---	1.00	1.00	1.00	1.30	-11.41	-3.99	0.00	0.00	---	0.95	-36.00	---	---	99.000	3960.00
LegalSpecial	6	SER-II	pos	972.7	---	1.00	1.00	1.00	1.30	-11.41	-3.99	0.00	-2.38	---	0.95	-36.00	---	---	6.074	164.00
LegalSpecial	6	SER-II	pos	0.0	---	1.00	1.00	1.00	1.30	-11.41	-3.99	0.00	0.00	---	0.95	-36.00	---	---	99.000	2673.00
LegalSpecial	7	SER-II	pos	1090.8	---	1.00	1.00	1.00	1.30	-11.41	-3.99	0.00	-2.67	---	0.95	-36.00	---	---	5.416	167.91
LegalSpecial	7	SER-II	pos	0.0	---	1.00	1.00	1.00	1.30	-11.41	-3.99	0.00	0.00	---	0.95	-36.00	---	---	99.000	3069.00
LegalSpecial	8	SER-II	pos	1219.5	---	1.00	1.00	1.00	1.30	-11.41	-3.99	0.00	-2.99	---	0.95	-36.00	---	---	4.845	168.36
LegalSpecial	8	SER-II	pos	0.0	---	1.00	1.00	1.00	1.30	-11.41	-3.99	0.00	0.00	---	0.95	-36.00	---	---	99.000	3440.25
LegalSpecial	9	SER-II	pos	1343.3	---	1.00	1.00	1.00	1.30	-11.41	-3.99	0.00	-3.29	---	0.95	-36.00	---	---	4.398	170.43
LegalSpecial	9	SER-II	pos	0.0	---	1.00	1.00	1.00	1.30	-11.41	-3.99	0.00	0.00	---	0.95	-36.00	---	---	99.000	3836.25
Permit	14	SER-II	pos	1373.2	---	1.00	1.00	1.00	1.00	-11.41	-3.99	0.00	-3.36	---	0.95	-36.00	---	---	5.593	212.54
Permit	14	SER-II	pos	0.0	---	1.00	1.00	1.00	1.00	-11.41	-3.99	0.00	0.00	---	0.95	-36.00	---	---	99.000	3762.00
Permit	15	SER-II	pos	1340.6	---	1.00	1.00	1.00	1.00	-11.41	-3.99	0.00	-3.28	---	0.95	-36.00	---	---	5.729	214.84
Permit	15	SER-II	pos	0.0	---	1.00	1.00	1.00	1.00	-11.41	-3.99	0.00	0.00	---	0.95	-36.00	---	---	99.000	3712.50
Permit	16	SER-II	pos	1712.0	---	1.00	1.00	1.00	1.00	-11.41	-3.99	0.00	-4.19	---	0.95	-36.00	---	---	4.486	235.09
Permit	16	SER-II	pos	0.0	---	1.00	1.00	1.00	1.00	-11.41	-3.99	0.00	0.00	---	0.95	-36.00	---	---	99.000	5187.60
Permit	17	SER-II	pos	1714.4	---	1.00	1.00	1.00	1.00	-11.41	-3.99	0.00	-4.20	---	0.95	-36.00	---	---	4.480	291.21
Permit	17	SER-II	pos	0.0	---	1.00	1.00	1.00	1.00	-11.41	-3.99	0.00	0.00	---	0.95	-36.00	---	---	99.000	6435.00
PermitSpec	18	SER-II	pos	1255.7	---	1.00	1.00	1.00	1.00	-11.41	-3.99	0.00	-3.07	---	0.95	-36.00	---	---	6.117	345.59
PermitSpec	18	SER-II	pos	0.0	---	1.00	1.00	1.00	1.00	-11.41	-3.99	0.00	0.00	---	0.95	-36.00	---	---	99.000	5593.50
PermitSpec	19	SER-II	pos	1173.7	---	1.00	1.00	1.00	1.00	-11.41	-3.99	0.00	-2.87	---	0.95	-36.00	---	---	6.544	523.51
PermitSpec	19	SER-II	pos	0.0	---	1.00	1.00	1.00	1.00	-11.41	-3.99	0.00	0.00	---	0.95	-36.00	---	---	99.000	7920.00
PermitSpec	20	SER-II	pos	1324.6	---	1.00	1.00	1.00	1.00	-11.41	-3.99	0.00	-3.24	---	0.95	-36.00	---	---	5.799	655.23
PermitSpec	20	SER-II	pos	0.0	---	1.00	1.00	1.00	1.00	-11.41	-3.99	0.00	0.00	---	0.95	-36.00	---	---	99.000	11187.00
LegalRoutine	21	SER-II	pos	701.5	---	1.00	1.00	1.00	1.30	-11.41	-3.99	0.00	-1.72	---	0.95	-36.00	---	---	8.423	175.19
LegalRoutine	21	SER-II	pos	0.0	---	1.00	1.00	1.00	1.30	-11.41	-3.99	0.00	0.00	---	0.95	-36.00	---	---	99.000	2059.20
LegalRoutine	13	SER-II	pos	751.7	---	1.00	1.00	1.00	1.30	-11.41	-3.99	0.00	-1.84	---	0.95	-36.00	---	---	7.860	157.20
LegalRoutine	13	SER-II	pos	0.0	---	1.00	1.00	1.00	1.30	-11.41	-3.99	0.00	0.00	---	0.95	-36.00	---	---	99.000	1980.00
LegalRoutine	1	SER-II	pos	778.3	---	1.00	1.00	1.00	1.30	-11.41	-3.99	0.00	-1.91	---	0.95	-36.00	---	---	7.591	218.25
LegalRoutine	1	SER-II	pos	0.0	---	1.00	1.00	1.00	1.30	-11.41	-3.99	0.00	0.00	---	0.95	-36.00	---	---	99.000	2846.25
LegalRoutine	2	SER-II	pos	1179.2	---	1.00	1.00	1.00	1.30	-11.41	-3.99	0.00	-2.89	---	0.95	-36.00	---	---	5.011	215.45
LegalRoutine	2	SER-II	pos	0.0	---	1.00	1.00	1.00	1.30	-11.41	-3.99	0.00	0.00	---	0.95	-36.00	---	---	99.000	4257.00

Component: Bot Flange

Load	Load Combo	Limit State	Flexure Type	LL (kip-ft)	Adj. LL (kip-ft)	DC	DW	DW-WS	LL	fDC (ksi)	fDW (ksi)	fDW-WS (ksi)	fLL (ksi)	Adj. fLL (ksi)	Phi	fR (ksi)	----- Override ----- Phi	fR (ksi)	RF	Capacity (Ton)
DesignInv	3	SER-II	pos	1937.4	---	1.00	1.00	1.00	1.30	8.35	4.35	0.00	9.49	---	0.95	36.00	---	---	1.744	62.79
DesignInv	3	SER-II	pos	0.0	---	1.00	1.00	1.00	1.30	8.35	4.35	0.00	0.00	---	0.95	36.00	---	---	99.000	3564.00

DesignOp	3	SER-II	pos	1937.4	---	1.00	1.00	1.00	1.00	8.35	4.35	0.00	9.49	---	0.95	36.00	---	---	2.267	81.62
DesignOp	3	SER-II	pos	0.0	---	1.00	1.00	1.00	1.00	8.35	4.35	0.00	0.00	---	0.95	36.00	---	---	99.000	3564.00
DesignInv	4	SER-II	pos	1638.2	---	1.00	1.00	1.00	1.30	8.35	4.35	0.00	8.02	---	0.95	36.00	---	---	2.063	74.25
DesignInv	4	SER-II	pos	0.0	---	1.00	1.00	1.00	1.30	8.35	4.35	0.00	0.00	---	0.95	36.00	---	---	99.000	3564.00
DesignOp	4	SER-II	pos	1638.2	---	1.00	1.00	1.00	1.00	8.35	4.35	0.00	8.02	---	0.95	36.00	---	---	2.681	96.53
DesignOp	4	SER-II	pos	0.0	---	1.00	1.00	1.00	1.00	8.35	4.35	0.00	0.00	---	0.95	36.00	---	---	99.000	3564.00
LegalRoutine	10	SER-II	pos	879.1	---	1.00	1.00	1.00	1.30	8.35	4.35	0.00	4.30	---	0.95	36.00	---	---	3.844	96.09
LegalRoutine	10	SER-II	pos	0.0	---	1.00	1.00	1.00	1.30	8.35	4.35	0.00	0.00	---	0.95	36.00	---	---	99.000	2475.00
LegalRoutine	12	SER-II	pos	1081.4	---	1.00	1.00	1.00	1.30	8.35	4.35	0.00	5.29	---	0.95	36.00	---	---	3.124	112.48
LegalRoutine	12	SER-II	pos	0.0	---	1.00	1.00	1.00	1.30	8.35	4.35	0.00	0.00	---	0.95	36.00	---	---	99.000	3564.00
LegalRoutine	11	SER-II	pos	1108.8	---	1.00	1.00	1.00	1.30	8.35	4.35	0.00	5.43	---	0.95	36.00	---	---	3.047	121.90
LegalRoutine	11	SER-II	pos	0.0	---	1.00	1.00	1.00	1.30	8.35	4.35	0.00	0.00	---	0.95	36.00	---	---	99.000	3960.00
LegalSpecial	6	SER-II	pos	972.7	---	1.00	1.00	1.00	1.30	8.35	4.35	0.00	4.76	---	0.95	36.00	---	---	3.474	93.79
LegalSpecial	6	SER-II	pos	0.0	---	1.00	1.00	1.00	1.30	8.35	4.35	0.00	0.00	---	0.95	36.00	---	---	99.000	2673.00
LegalSpecial	7	SER-II	pos	1090.8	---	1.00	1.00	1.00	1.30	8.35	4.35	0.00	5.34	---	0.95	36.00	---	---	3.098	96.03
LegalSpecial	7	SER-II	pos	0.0	---	1.00	1.00	1.00	1.30	8.35	4.35	0.00	0.00	---	0.95	36.00	---	---	99.000	3069.00
LegalSpecial	8	SER-II	pos	1219.5	---	1.00	1.00	1.00	1.30	8.35	4.35	0.00	5.97	---	0.95	36.00	---	---	2.771	96.28
LegalSpecial	8	SER-II	pos	0.0	---	1.00	1.00	1.00	1.30	8.35	4.35	0.00	0.00	---	0.95	36.00	---	---	99.000	3440.25
LegalSpecial	9	SER-II	pos	1343.3	---	1.00	1.00	1.00	1.30	8.35	4.35	0.00	6.58	---	0.95	36.00	---	---	2.515	97.47
LegalSpecial	9	SER-II	pos	0.0	---	1.00	1.00	1.00	1.30	8.35	4.35	0.00	0.00	---	0.95	36.00	---	---	99.000	3836.25
Permit	14	SER-II	pos	1373.2	---	1.00	1.00	1.00	1.00	8.35	4.35	0.00	6.72	---	0.95	36.00	---	---	3.199	121.55
Permit	14	SER-II	pos	0.0	---	1.00	1.00	1.00	1.00	8.35	4.35	0.00	0.00	---	0.95	36.00	---	---	99.000	3762.00
Permit	15	SER-II	pos	1340.6	---	1.00	1.00	1.00	1.00	8.35	4.35	0.00	6.56	---	0.95	36.00	---	---	3.276	122.87
Permit	15	SER-II	pos	0.0	---	1.00	1.00	1.00	1.00	8.35	4.35	0.00	0.00	---	0.95	36.00	---	---	99.000	3712.50
Permit	16	SER-II	pos	1712.0	---	1.00	1.00	1.00	1.00	8.35	4.35	0.00	8.38	---	0.95	36.00	---	---	2.566	134.45
Permit	16	SER-II	pos	0.0	---	1.00	1.00	1.00	1.00	8.35	4.35	0.00	0.00	---	0.95	36.00	---	---	99.000	5187.60
Permit	17	SER-II	pos	1714.4	---	1.00	1.00	1.00	1.00	8.35	4.35	0.00	8.39	---	0.95	36.00	---	---	2.562	166.54
Permit	17	SER-II	pos	0.0	---	1.00	1.00	1.00	1.00	8.35	4.35	0.00	0.00	---	0.95	36.00	---	---	99.000	6435.00
PermitSpec	18	SER-II	pos	1255.7	---	1.00	1.00	1.00	1.00	8.35	4.35	0.00	6.15	---	0.95	36.00	---	---	3.498	197.64
PermitSpec	18	SER-II	pos	0.0	---	1.00	1.00	1.00	1.00	8.35	4.35	0.00	0.00	---	0.95	36.00	---	---	99.000	5593.50
PermitSpec	19	SER-II	pos	1173.7	---	1.00	1.00	1.00	1.00	8.35	4.35	0.00	5.75	---	0.95	36.00	---	---	3.742	299.39
PermitSpec	19	SER-II	pos	0.0	---	1.00	1.00	1.00	1.00	8.35	4.35	0.00	0.00	---	0.95	36.00	---	---	99.000	7920.00
PermitSpec	20	SER-II	pos	1324.6	---	1.00	1.00	1.00	1.00	8.35	4.35	0.00	6.49	---	0.95	36.00	---	---	3.316	374.73
PermitSpec	20	SER-II	pos	0.0	---	1.00	1.00	1.00	1.00	8.35	4.35	0.00	0.00	---	0.95	36.00	---	---	99.000	11187.00
LegalRoutine	21	SER-II	pos	701.5	---	1.00	1.00	1.00	1.30	8.35	4.35	0.00	3.43	---	0.95	36.00	---	---	4.817	100.19
LegalRoutine	21	SER-II	pos	0.0	---	1.00	1.00	1.00	1.30	8.35	4.35	0.00	0.00	---	0.95	36.00	---	---	99.000	2059.20
LegalRoutine	13	SER-II	pos	751.7	---	1.00	1.00	1.00	1.30	8.35	4.35	0.00	3.68	---	0.95	36.00	---	---	4.495	89.90
LegalRoutine	13	SER-II	pos	0.0	---	1.00	1.00	1.00	1.30	8.35	4.35	0.00	0.00	---	0.95	36.00	---	---	99.000	1980.00
LegalRoutine	1	SER-II	pos	778.3	---	1.00	1.00	1.00	1.30	8.35	4.35	0.00	3.81	---	0.95	36.00	---	---	4.341	124.82
LegalRoutine	1	SER-II	pos	0.0	---	1.00	1.00	1.00	1.30	8.35	4.35	0.00	0.00	---	0.95	36.00	---	---	99.000	2846.25
LegalRoutine	2	SER-II	pos	1179.2	---	1.00	1.00	1.00	1.30	8.35	4.35	0.00	5.77	---	0.95	36.00	---	---	2.866	123.22
LegalRoutine	2	SER-II	pos	0.0	---	1.00	1.00	1.00	1.30	8.35	4.35	0.00	0.00	---	0.95	36.00	---	---	99.000	4257.00

Load Combination Legend:

Code	Vehicle
3	HL-93 (US) - Truck + Lane
4	HL-93 (US) - Tandem + Lane
10	Type 3 - Legal Truck
12	Type 3S2 - Legal Truck
11	Type 3-3 - Legal Truck
6	SU4 - Legal Truck
7	SU5 - Legal Truck
8	SU6 - Legal Truck
9	SU7 - Legal Truck
21	RIPTA Bus - Legal Truck
13	H20 - Legal Truck
1	EV2 - Legal Truck
2	EV3 - Legal Truck
14	RI-3 - Permit Truck
15	RI-4 - Permit Truck
16	RI-5 - Permit Truck
17	RI-6 - Permit Truck
18	RI-OP 1 - Permit Truck
19	RI-OP 2 - Permit Truck
20	RI-OP 3 - Permit Truck

5 LRFD Fatigue Truck (US) - Fatigue Truck

Controlling Rating Factors

Limit State	Design Inv Vehicle	RF	Capacity (Ton)	Design Op Vehicle	RF	Capacity (Ton)	Legal Load Vehicle	RF	Capacity (Ton)	Permit Load Vehicle	RF	Capacity (Ton)
SER-II	HL-93 (US) - Truck + Lane	1.74	62.79	HL-93 (US) - Truck + Lane	2.27	81.62				RI-6 - Permit Truck	2.56	166.54

Bridge Name: Mohegan Bridge
NBI Structure ID:
Bridge ID: 067301

Analyzed By: BrR
Analyze Date: Friday, September 14, 2018 19:00:07
Analysis Engine: AASHTO LRFR Engine Version 6.8.2.3002
Analysis Preference Setting: None

Report By: brr
Report Date: Friday, September 14, 2018 19:02:12

Structure Definition Name: Span 2
Member Name: Girder A
Member Alternative Name: Girder A - As Inspected

Load and Resistance Factor Rating Summary

Live Load		Rating Factor	Girder Summary Controls	Capacity (Ton)	Span	Location (ft)	Percent	Impact	Lane
EV2	Legal	1.542	STRENGTH-I Steel Shear	44.33	1	0.50	0.5	As Requested	As Requested
EV3	Legal	1.036	STRENGTH-I Steel Shear	44.54	1	0.50	0.5	As Requested	As Requested
HL-93 (US)	Inventory	0.469	STRENGTH-I Steel Shear	16.87	1	0.50	0.5	As Requested	As Requested
HL-93 (US)	Operating	0.608	STRENGTH-I Steel Shear	21.87	1	0.50	0.5	As Requested	As Requested
SU4	Legal	1.269	STRENGTH-I Steel Shear	34.26	1	0.50	0.5	As Requested	As Requested
SU5	Legal	1.121	STRENGTH-I Steel Shear	34.76	1	0.50	0.5	As Requested	As Requested
SU6	Legal	1.026	STRENGTH-I Steel Shear	35.65	1	0.50	0.5	As Requested	As Requested
SU7	Legal	0.944	STRENGTH-I Steel Shear	36.57	1	0.50	0.5	As Requested	As Requested
Type 3	Legal	1.384	STRENGTH-I Steel Shear	34.59	1	0.50	0.5	As Requested	As Requested
Type 3-3	Legal	1.031	STRENGTH-I Steel Shear	41.24	1	0.50	0.5	As Requested	As Requested
Type 3S2	Legal	1.079	STRENGTH-I Steel Shear	38.84	1	0.50	0.5	As Requested	As Requested
RI-3	Permit	0.985	STRENGTH-II Steel Shear	37.44	1	0.50	0.5	As Requested	As Requested
RI-4	Permit	1.013	STRENGTH-II Steel Shear	38.00	1	0.50	0.5	As Requested	As Requested
RI-5	Permit	0.773	STRENGTH-II Steel Shear	40.51	1	0.50	0.5	As Requested	As Requested
RI-6	Permit	0.654	STRENGTH-II Steel Shear	42.52	1	0.50	0.5	As Requested	As Requested
RIDOT H20 Truck	Legal	1.654	STRENGTH-I Steel Shear	33.09	1	0.50	0.5	As Requested	As Requested
RI-OP 1	Permit	1.082	STRENGTH-II Steel Shear	61.14	1	0.50	0.5	As Requested	As Requested
RI-OP 2	Permit	0.932	STRENGTH-II Steel Shear	74.56	1	0.50	0.5	As Requested	As Requested
RI-OP 3	Permit	0.836	STRENGTH-II Steel Shear	94.48	1	0.50	0.5	As Requested	As Requested
RIPTA Bus	Legal	1.675	STRENGTH-I Steel Shear	34.84	1	0.50	0.5	As Requested	As Requested

Report by Action: ☑ **Flexure** ☑ **Shear** ☑ **Overload** ☑ **Interaction** ☑ **Critical**

Detailed Rating Results
Girder A - As Inspected
EV2
Axle Load
Impact: As Requested
Lane: As Requested

Span 1

Location (ft)	Percent	Limit State	Units	Capacity	DL + Adj -LL*	LL	Legal Rating Factor	Legal Load Rating (Ton)
0.00	0.0	Flexure	KSI	-36.00	-0.00	-0.00	99.000	2846.25
0.00	**0.0**	**Shear**	**KIPS**	**303.17**	**79.47**	**30.12**	**5.018**	**144.27**
0.00	0.0	Overload	KSI	-36.00	-0.00	-0.00	99.000	2846.25
0.50	0.5	Flexure	KSI	-35.70	-0.33	-0.04	99.000	2846.25
0.50	**0.5**	**Shear**	**KIPS**	**165.82**	**78.76**	**29.97**	**1.542**	**44.33**
0.50	0.5	Overload	KSI	-36.00	-0.33	-0.04	99.000	2846.25
1.00	0.9	Flexure	KSI	-33.66	-0.70	-0.08	99.000	2846.25
1.00	**0.9**	**Shear**	**KIPS**	**165.82**	**78.05**	**29.83**	**1.574**	**45.25**
1.00	0.9	Overload	KSI	-36.00	-0.70	-0.08	99.000	2846.25
10.84	**9.9**	**Flexure**	**KSI**	**36.00**	**5.73**	**1.78**	**12.252**	**352.23**
10.84	9.9	Shear	KIPS	533.09	64.09	26.97	12.750	366.57
10.84	9.9	Overload	KSI	36.00	5.73	1.78	12.302	353.69
11.00	**10.0**	**Flexure**	**KSI**	**36.00**	**5.79**	**1.80**	**12.101**	**347.91**
11.00	10.0	Shear	KIPS	542.44	63.87	26.93	13.048	375.14
11.00	10.0	Overload	KSI	36.00	5.79	1.80	12.160	349.60
22.00	**20.0**	**Flexure**	**KSI**	**36.00**	**10.32**	**3.17**	**5.397**	**155.17**
22.00	20.0	Shear	KIPS	542.44	48.26	23.73	15.484	445.17
22.00	20.0	Overload	KSI	36.00	10.32	3.17	5.798	166.69
25.50	**23.2**	**Flexure**	**KSI**	**36.00**	**11.49**	**3.51**	**4.523**	**130.02**
25.50	23.2	Shear	KIPS	542.44	43.06	22.72	16.413	471.87
25.50	23.2	Overload	KSI	36.00	11.49	3.51	4.970	142.88
33.00	**30.0**	**Flexure**	**KSI**	**36.00**	**10.65**	**3.32**	**5.047**	**145.11**
33.00	30.0	Shear	KIPS	542.44	32.17	20.54	18.700	537.63
33.00	30.0	Overload	KSI	36.00	10.65	3.32	5.459	156.94
44.00	**40.0**	**Flexure**	**KSI**	**36.00**	**12.19**	**3.74**	**4.060**	**116.73**
44.00	40.0	Shear	KIPS	542.44	16.20	17.34	23.094	663.96
44.00	40.0	Overload	KSI	36.00	12.19	3.74	4.532	130.29

49.50	**45.0**	**Flexure**	**KSI**	**36.00**	**12.57**	**3.82**	**3.873**	**111.35**
49.50	45.0	Shear	KIPS	542.44	7.98	15.75	25.974	746.75
49.50	45.0	Overload	KSI	36.00	12.57	3.82	4.360	125.36
55.00	**50.0**	**Flexure**	**KSI**	**36.00**	**12.69**	**3.81**	**3.845**	**110.54**
55.00	50.0	Shear	KIPS	542.44	0.00	-14.15	29.487	847.76
55.00	50.0	Overload	KSI	36.00	12.69	3.81	4.341	124.82
66.00	**60.0**	**Flexure**	**KSI**	**36.00**	**12.19**	**3.74**	**4.060**	**116.73**
66.00	60.0	Shear	KIPS	542.44	-16.20	-17.34	23.094	663.96
66.00	60.0	Overload	KSI	36.00	12.19	3.74	4.532	130.29
77.00	**70.0**	**Flexure**	**KSI**	**36.00**	**10.65**	**3.32**	**5.047**	**145.11**
77.00	70.0	Shear	KIPS	542.44	-32.17	-20.54	18.700	537.63
77.00	70.0	Overload	KSI	36.00	10.65	3.32	5.459	156.94
84.50	**76.8**	**Flexure**	**KSI**	**36.00**	**11.49**	**3.51**	**4.523**	**130.02**
84.50	76.8	Shear	KIPS	542.44	-43.06	-22.72	16.413	471.87
84.50	76.8	Overload	KSI	36.00	11.49	3.51	4.970	142.88
88.00	**80.0**	**Flexure**	**KSI**	**36.00**	**10.32**	**3.17**	**5.397**	**155.17**
88.00	80.0	Shear	KIPS	542.44	-48.26	-23.73	15.484	445.17
88.00	80.0	Overload	KSI	36.00	10.32	3.17	5.798	166.69
99.00	**90.0**	**Flexure**	**KSI**	**36.00**	**5.79**	**1.80**	**12.101**	**347.91**
99.00	90.0	Shear	KIPS	542.44	-63.87	-26.93	13.048	375.14
99.00	90.0	Overload	KSI	36.00	5.79	1.80	12.160	349.60
107.00	97.3	Flexure	KSI	36.00	1.71	0.53	48.551	1395.84
107.00	**97.3**	**Shear**	**KIPS**	**324.36**	**-75.21**	**-29.25**	**5.875**	**168.91**
107.00	97.3	Overload	KSI	36.00	1.71	0.53	46.783	1345.00
110.00	100.0	Flexure	KSI	-36.00	-0.00	-0.00	99.000	2846.25
110.00	**100.0**	**Shear**	**KIPS**	**324.36**	**-79.47**	**-30.12**	**5.559**	**159.83**
110.00	100.0	Overload	KSI	-36.00	-0.00	-0.00	99.000	2846.25

Detailed Rating Results
Girder A - As Inspected
EV3
Axle Load
Impact: As Requested
Lane: As Requested

Span 1

Location (ft)	Percent	Limit State	Units	Capacity	DL + Adj -LL*	LL	Legal Rating Factor	Legal Load Rating (Ton)
0.00	0.0	Flexure	KSI	-36.00	-0.00	-0.00	99.000	4257.00
0.00	**0.0**	**Shear**	**KIPS**	**303.17**	**79.47**	**44.84**	**3.371**	**144.94**

0.00	0.0	Overload	KSI	-36.00	-0.00	-0.00	99.000	4257.00
0.50	0.5	Flexure	KSI	-36.00	-0.33	-0.06	99.000	4257.00
0.50	**0.5**	**Shear**	**KIPS**	**165.82**	**78.76**	**44.62**	**1.036**	**44.54**
0.50	0.5	Overload	KSI	-36.00	-0.33	-0.06	99.000	4257.00
1.00	0.9	Flexure	KSI	36.00	0.61	0.29	94.383	4058.47
1.00	**0.9**	**Shear**	**KIPS**	**165.82**	**78.05**	**44.40**	**1.057**	**45.47**
1.00	0.9	Overload	KSI	36.00	0.61	0.29	90.100	3874.31
10.84	**9.9**	**Flexure**	**KSI**	**36.00**	**5.73**	**2.65**	**8.234**	**354.08**
10.84	9.9	Shear	KIPS	533.09	64.09	40.13	8.570	368.49
10.84	9.9	Overload	KSI	36.00	5.73	2.65	8.268	355.54
11.00	**10.0**	**Flexure**	**KSI**	**36.00**	**5.79**	**2.67**	**8.133**	**349.74**
11.00	10.0	Shear	KIPS	542.44	63.87	40.06	8.770	377.10
11.00	10.0	Overload	KSI	36.00	5.79	2.67	8.173	351.43
22.00	**20.0**	**Flexure**	**KSI**	**36.00**	**10.32**	**4.71**	**3.630**	**156.09**
22.00	20.0	Shear	KIPS	542.44	48.26	35.28	10.414	447.82
22.00	20.0	Overload	KSI	36.00	10.32	4.71	3.900	167.68
25.50	**23.2**	**Flexure**	**KSI**	**36.00**	**11.49**	**5.22**	**3.043**	**130.83**
25.50	23.2	Shear	KIPS	542.44	43.06	33.76	11.042	474.80
25.50	23.2	Overload	KSI	36.00	11.49	5.22	3.343	143.76
33.00	**30.0**	**Flexure**	**KSI**	**36.00**	**10.65**	**4.93**	**3.398**	**146.11**
33.00	30.0	Shear	KIPS	542.44	32.17	30.51	12.589	541.33
33.00	30.0	Overload	KSI	36.00	10.65	4.93	3.675	158.02
44.00	**40.0**	**Flexure**	**KSI**	**36.00**	**12.19**	**5.58**	**2.719**	**116.91**
44.00	40.0	Shear	KIPS	542.44	16.20	25.73	15.567	669.37
44.00	40.0	Overload	KSI	36.00	12.19	5.58	3.034	130.48
49.50	**45.0**	**Flexure**	**KSI**	**36.00**	**12.57**	**5.74**	**2.575**	**110.71**
49.50	45.0	Shear	KIPS	542.44	7.98	23.34	17.522	753.46
49.50	45.0	Overload	KSI	36.00	12.57	5.74	2.899	124.64
55.00	**50.0**	**Flexure**	**KSI**	**36.00**	**12.69**	**5.77**	**2.538**	**109.12**
55.00	50.0	Shear	KIPS	542.44	0.00	-20.95	19.913	856.25
55.00	50.0	Overload	KSI	36.00	12.69	5.77	2.866	123.22
66.00	**60.0**	**Flexure**	**KSI**	**36.00**	**12.19**	**5.58**	**2.719**	**116.91**
66.00	60.0	Shear	KIPS	542.44	-16.20	-25.73	15.567	669.37
66.00	60.0	Overload	KSI	36.00	12.19	5.58	3.034	130.48
77.00	**70.0**	**Flexure**	**KSI**	**36.00**	**10.65**	**4.93**	**3.398**	**146.11**
77.00	70.0	Shear	KIPS	542.44	-32.17	-30.51	12.589	541.33
77.00	70.0	Overload	KSI	36.00	10.65	4.93	3.675	158.02
84.50	**76.8**	**Flexure**	**KSI**	**36.00**	**11.49**	**5.22**	**3.043**	**130.83**
84.50	76.8	Shear	KIPS	542.44	-43.06	-33.76	11.042	474.80
84.50	76.8	Overload	KSI	36.00	11.49	5.22	3.343	143.76
88.00	**80.0**	**Flexure**	**KSI**	**36.00**	**10.32**	**4.71**	**3.630**	**156.09**
88.00	80.0	Shear	KIPS	542.44	-48.26	-35.28	10.414	447.82
88.00	80.0	Overload	KSI	36.00	10.32	4.71	3.900	167.68

99.00	**90.0**	**Flexure**	**KSI**	**36.00**	**5.79**	**2.67**	**8.133**	**349.74**
99.00	90.0	Shear	KIPS	542.44	-63.87	-40.06	8.770	377.10
99.00	90.0	Overload	KSI	36.00	5.79	2.67	8.173	351.43
107.00	97.3	Flexure	KSI	36.00	1.71	0.80	32.618	1402.57
107.00	**97.3**	**Shear**	**KIPS**	**324.36**	**-75.21**	**-43.53**	**3.947**	**169.73**
107.00	97.3	Overload	KSI	36.00	1.71	0.80	31.430	1351.49
110.00	100.0	Flexure	KSI	-36.00	-0.00	-0.00	99.000	4257.00
110.00	**100.0**	**Shear**	**KIPS**	**324.36**	**-79.47**	**-44.84**	**3.734**	**160.57**
110.00	100.0	Overload	KSI	-36.00	-0.00	-0.00	99.000	4257.00

Detailed Rating Results
Girder A - As Inspected
HL-93 (US)
Truck + Lane
Impact: As Requested
Lane: As Requested

Span 1

Location (ft)	Percent	Limit State	Units	Capacity	DL + Adj-LL*	LL	Inventory Rating Factor	Inventory Load Rating (Ton)	Operating Rating Factor	Operating Load Rating (Ton)
0.00	0.0	Flexure	KSI	-36.00	-0.00	-0.00	99.000	3564.00	99.000	3564.00
0.00	**0.0**	**Shear**	**KIPS**	**303.17**	**79.47**	**73.70**	**1.523**	**54.84**	**1.975**	**71.09**
0.00	0.0	Overload	KSI	-36.00	-0.00	-0.00	99.000	3564.00	99.000	3564.00
0.50	0.5	Flexure	KSI	36.00	0.30	0.24	85.867	3091.20	99.000	3564.00
0.50	**0.5**	**Shear**	**KIPS**	**165.82**	**78.76**	**73.25**	**0.469**	**16.87**	**0.608**	**21.87**
0.50	0.5	Overload	KSI	-36.00	-0.33	-0.10	99.000	3564.00	99.000	3564.00
1.00	0.9	Flexure	KSI	36.00	0.61	0.47	42.655	1535.58	55.294	1990.57
1.00	**0.9**	**Shear**	**KIPS**	**165.82**	**78.05**	**72.80**	**0.479**	**17.25**	**0.621**	**22.36**
1.00	0.9	Overload	KSI	36.00	0.61	0.47	54.815	1973.33	71.259	2565.33
10.84	**9.9**	**Flexure**	**KSI**	**36.00**	**5.73**	**4.35**	**3.722**	**133.98**	**4.824**	**173.68**
10.84	9.9	Shear	KIPS	533.09	64.09	64.08	3.987	143.52	5.168	186.04
10.84	9.9	Overload	KSI	36.00	5.73	4.35	5.031	181.11	6.540	235.44
11.00	**10.0**	**Flexure**	**KSI**	**36.00**	**5.79**	**4.39**	**3.676**	**132.34**	**4.765**	**171.55**
11.00	10.0	Shear	KIPS	542.44	63.87	63.94	4.082	146.94	5.291	190.47
11.00	10.0	Overload	KSI	36.00	5.79	4.39	4.973	179.01	6.464	232.72
22.00	**20.0**	**Flexure**	**KSI**	**36.00**	**10.32**	**7.74**	**1.641**	**59.07**	**2.127**	**76.57**
22.00	20.0	Shear	KIPS	542.44	48.26	54.61	4.999	179.96	6.480	233.28
22.00	20.0	Overload	KSI	36.00	10.32	7.74	2.373	85.43	3.085	111.05
25.50	**23.2**	**Flexure**	**KSI**	**36.00**	**11.49**	**8.59**	**1.375**	**49.51**	**1.783**	**64.19**

25.50	23.2	Shear	KIPS	542.44	43.06	51.72	5.354	192.76	6.941	249.87
25.50	23.2	Overload	KSI	36.00	11.49	8.59	2.035	73.24	2.645	95.22
33.00	**30.0**	**Flexure**	**KSI**	**36.00**	**10.65**	**8.10**	**1.536**	**55.30**	**1.991**	**71.69**
33.00	30.0	Shear	KIPS	542.44	32.17	45.69	6.244	224.78	8.094	291.39
33.00	30.0	Overload	KSI	36.00	10.65	8.10	2.237	80.52	2.908	104.67
44.00	**40.0**	**Flexure**	**KSI**	**36.00**	**12.19**	**9.19**	**1.226**	**44.13**	**1.589**	**57.21**
44.00	40.0	Shear	KIPS	542.44	16.20	37.20	7.998	287.94	10.368	373.26
44.00	40.0	Overload	KSI	36.00	12.19	9.19	1.842	66.30	2.394	86.20
49.50	**45.0**	**Flexure**	**KSI**	**36.00**	**12.57**	**9.45**	**1.162**	**41.85**	**1.507**	**54.25**
49.50	45.0	Shear	KIPS	542.44	7.98	33.11	9.176	330.32	11.894	428.19
49.50	45.0	Overload	KSI	36.00	12.57	9.45	1.762	63.42	2.290	82.45
55.00	**50.0**	**Flexure**	**KSI**	**36.00**	**12.69**	**9.49**	**1.147**	**41.30**	**1.487**	**53.54**
55.00	50.0	Shear	KIPS	542.44	0.00	-29.13	10.640	383.03	13.792	496.52
55.00	50.0	Overload	KSI	36.00	12.69	9.49	1.744	62.79	2.267	81.62
66.00	**60.0**	**Flexure**	**KSI**	**36.00**	**12.19**	**9.19**	**1.226**	**44.13**	**1.589**	**57.21**
66.00	60.0	Shear	KIPS	542.44	-16.20	-37.20	7.998	287.94	10.368	373.26
66.00	60.0	Overload	KSI	36.00	12.19	9.19	1.842	66.30	2.394	86.20
77.00	**70.0**	**Flexure**	**KSI**	**36.00**	**10.65**	**8.10**	**1.536**	**55.30**	**1.991**	**71.69**
77.00	70.0	Shear	KIPS	542.44	-32.17	-45.69	6.244	224.78	8.094	291.39
77.00	70.0	Overload	KSI	36.00	10.65	8.10	2.237	80.52	2.908	104.67
84.50	**76.8**	**Flexure**	**KSI**	**36.00**	**11.49**	**8.59**	**1.375**	**49.51**	**1.783**	**64.19**
84.50	76.8	Shear	KIPS	542.44	-43.06	-51.72	5.354	192.76	6.941	249.87
84.50	76.8	Overload	KSI	36.00	11.49	8.59	2.035	73.24	2.645	95.22
88.00	**80.0**	**Flexure**	**KSI**	**36.00**	**10.32**	**7.74**	**1.641**	**59.07**	**2.127**	**76.57**
88.00	80.0	Shear	KIPS	542.44	-48.26	-54.61	4.999	179.96	6.480	233.28
88.00	80.0	Overload	KSI	36.00	10.32	7.74	2.373	85.43	3.085	111.05
99.00	**90.0**	**Flexure**	**KSI**	**36.00**	**5.79**	**4.39**	**3.676**	**132.34**	**4.765**	**171.55**
99.00	90.0	Shear	KIPS	542.44	-63.87	-63.94	4.082	146.94	5.291	190.47
99.00	90.0	Overload	KSI	36.00	5.79	4.39	4.973	179.01	6.464	232.72
107.00	97.3	Flexure	KSI	36.00	1.71	1.31	14.741	530.69	19.109	687.93
107.00	**97.3**	**Shear**	**KIPS**	**324.36**	**-75.21**	**-71.00**	**1.798**	**64.73**	**2.331**	**83.90**
107.00	97.3	Overload	KSI	36.00	1.71	1.31	19.121	688.37	24.858	894.89
110.00	100.0	Flexure	KSI	-36.00	-0.00	-0.00	99.000	3564.00	99.000	3564.00
110.00	**100.0**	**Shear**	**KIPS**	**324.36**	**-79.47**	**-73.70**	**1.688**	**60.76**	**2.188**	**78.76**
110.00	100.0	Overload	KSI	-36.00	-0.00	-0.00	99.000	3564.00	99.000	3564.00

Detailed Rating Results
Girder A - As Inspected
HL-93 (US)
Tandem + Lane
Impact: As Requested
Lane: As Requested

Span 1

Location (ft)	Percent	Limit State	Units	Capacity	DL + Adj-LL*	LL	Inventory Rating Factor	Inventory Load Rating (Ton)	Operating Rating Factor	Operating Load Rating (Ton)
0.00	0.0	Flexure	KSI	-36.00	-0.00	-0.00	99.000	3564.00	99.000	3564.00
0.00	**0.0**	**Shear**	**KIPS**	**303.17**	**79.47**	**60.29**	**1.862**	**67.04**	**2.414**	**86.90**
0.00	0.0	Overload	KSI	-36.00	-0.00	-0.00	99.000	3564.00	99.000	3564.00
0.50	0.5	Flexure	KSI	-36.00	-0.33	-0.08	99.000	3564.00	99.000	3564.00
0.50	**0.5**	**Shear**	**KIPS**	**165.82**	**78.76**	**59.92**	**0.573**	**20.63**	**0.743**	**26.74**
0.50	0.5	Overload	KSI	-36.00	-0.33	-0.08	99.000	3564.00	99.000	3564.00
1.00	0.9	Flexure	KSI	36.00	0.61	0.39	52.114	1876.09	67.555	2431.96
1.00	**0.9**	**Shear**	**KIPS**	**165.82**	**78.05**	**59.55**	**0.586**	**21.08**	**0.759**	**27.33**
1.00	0.9	Overload	KSI	36.00	0.61	0.39	66.969	2410.90	87.060	3134.17
10.84	**9.9**	**Flexure**	**KSI**	**36.00**	**5.73**	**3.58**	**4.522**	**162.80**	**5.862**	**211.04**
10.84	9.9	Shear	KIPS	533.09	64.09	52.41	4.875	175.50	6.319	227.49
10.84	9.9	Overload	KSI	36.00	5.73	3.58	6.113	220.06	7.947	286.08
11.00	**10.0**	**Flexure**	**KSI**	**36.00**	**5.79**	**3.62**	**4.466**	**160.79**	**5.790**	**208.43**
11.00	10.0	Shear	KIPS	542.44	63.87	52.29	4.991	179.67	6.470	232.91
11.00	10.0	Overload	KSI	36.00	5.79	3.62	6.042	217.50	7.854	282.75
22.00	**20.0**	**Flexure**	**KSI**	**36.00**	**10.32**	**6.42**	**1.978**	**71.22**	**2.565**	**92.33**
22.00	20.0	Shear	KIPS	542.44	48.26	44.71	6.105	219.79	7.914	284.91
22.00	20.0	Overload	KSI	36.00	10.32	6.42	2.861	103.00	3.720	133.90
25.50	**23.2**	**Flexure**	**KSI**	**36.00**	**11.49**	**7.14**	**1.654**	**59.53**	**2.144**	**77.17**
25.50	23.2	Shear	KIPS	542.44	43.06	42.39	6.534	235.22	8.470	304.91
25.50	23.2	Overload	KSI	36.00	11.49	7.14	2.446	88.06	3.180	114.48
33.00	**30.0**	**Flexure**	**KSI**	**36.00**	**10.65**	**6.78**	**1.834**	**66.02**	**2.377**	**85.58**
33.00	30.0	Shear	KIPS	542.44	32.17	37.55	7.597	273.50	9.848	354.54
33.00	30.0	Overload	KSI	36.00	10.65	6.78	2.670	96.12	3.471	124.96
44.00	**40.0**	**Flexure**	**KSI**	**36.00**	**12.19**	**7.73**	**1.458**	**52.48**	**1.890**	**68.03**
44.00	40.0	Shear	KIPS	542.44	16.20	30.82	9.655	347.59	12.516	450.58
44.00	40.0	Overload	KSI	36.00	12.19	7.73	2.190	78.85	2.847	102.51
49.50	**45.0**	**Flexure**	**KSI**	**36.00**	**12.57**	**7.96**	**1.380**	**49.67**	**1.789**	**64.39**
49.50	45.0	Shear	KIPS	542.44	7.98	27.61	11.006	396.20	14.266	513.59
49.50	45.0	Overload	KSI	36.00	12.57	7.96	2.091	75.28	2.718	97.86

55.00	**50.0**	**Flexure**	**KSI**	**36.00**	**12.69**	**8.02**	**1.357**	**48.85**	**1.759**	**63.32**
55.00	50.0	Shear	KIPS	542.44	0.00	-24.50	12.649	455.38	16.397	590.30
55.00	50.0	Overload	KSI	36.00	12.69	8.02	2.063	74.25	2.681	96.53
66.00	**60.0**	**Flexure**	**KSI**	**36.00**	**12.19**	**7.73**	**1.458**	**52.48**	**1.890**	**68.03**
66.00	60.0	Shear	KIPS	542.44	-16.20	-30.82	9.655	347.59	12.516	450.58
66.00	60.0	Overload	KSI	36.00	12.19	7.73	2.190	78.85	2.847	102.51
77.00	**70.0**	**Flexure**	**KSI**	**36.00**	**10.65**	**6.78**	**1.834**	**66.02**	**2.377**	**85.58**
77.00	70.0	Shear	KIPS	542.44	-32.17	-37.55	7.597	273.50	9.848	354.54
77.00	70.0	Overload	KSI	36.00	10.65	6.78	2.670	96.12	3.471	124.96
84.50	**76.8**	**Flexure**	**KSI**	**36.00**	**11.49**	**7.14**	**1.654**	**59.53**	**2.144**	**77.17**
84.50	76.8	Shear	KIPS	542.44	-43.06	-42.39	6.534	235.22	8.470	304.91
84.50	76.8	Overload	KSI	36.00	11.49	7.14	2.446	88.06	3.180	114.48
88.00	**80.0**	**Flexure**	**KSI**	**36.00**	**10.32**	**6.42**	**1.978**	**71.22**	**2.565**	**92.33**
88.00	80.0	Shear	KIPS	542.44	-48.26	-44.71	6.105	219.79	7.914	284.91
88.00	80.0	Overload	KSI	36.00	10.32	6.42	2.861	103.00	3.720	133.90
99.00	**90.0**	**Flexure**	**KSI**	**36.00**	**5.79**	**3.62**	**4.466**	**160.79**	**5.790**	**208.43**
99.00	90.0	Shear	KIPS	542.44	-63.87	-52.29	4.991	179.67	6.470	232.91
99.00	90.0	Overload	KSI	36.00	5.79	3.62	6.042	217.50	7.854	282.75
107.00	97.3	Flexure	KSI	36.00	1.71	1.07	17.992	647.71	23.323	839.62
107.00	**97.3**	**Shear**	**KIPS**	**324.36**	**-75.21**	**-58.07**	**2.198**	**79.14**	**2.850**	**102.58**
107.00	97.3	Overload	KSI	36.00	1.71	1.07	23.338	840.15	30.339	1092.20
110.00	100.0	Flexure	KSI	-36.00	-0.00	-0.00	99.000	3564.00	99.000	3564.00
110.00	**100.0**	**Shear**	**KIPS**	**324.36**	**-79.47**	**-60.29**	**2.063**	**74.26**	**2.674**	**96.27**
110.00	100.0	Overload	KSI	-36.00	-0.00	-0.00	99.000	3564.00	99.000	3564.00

Detailed Rating Results
Girder A - As Inspected
LRFD Fatigue Truck (US)
Axle Load
Impact: As Requested
Lane: As Requested

Span 1

Location	**Inventory Rating**	**Inventory Load Rating**

D369

(ft)	Percent	Limit State	Units	Capacity	DL + Adj-LL*	LL	Factor	(Ton)
0.50	**0.5**	**Interaction**	**KSI**	**16.00**	**0.00**	**0.12**	**99.000**	**2970.00**
1.00	**0.9**	**Interaction**	**KSI**	**16.00**	**0.00**	**0.25**	**63.477**	**1904.31**
10.84	**9.9**	**Interaction**	**KSI**	**16.00**	**0.00**	**2.30**	**6.970**	**209.09**
11.00	**10.0**	**Interaction**	**KSI**	**12.00**	**0.00**	**2.32**	**5.179**	**155.38**
22.00	**20.0**	**Interaction**	**KSI**	**12.00**	**0.00**	**4.00**	**2.998**	**89.93**
25.50	**23.2**	**Interaction**	**KSI**	**16.00**	**0.00**	**4.49**	**3.560**	**106.80**
33.00	**30.0**	**Interaction**	**KSI**	**12.00**	**0.00**	**4.13**	**2.904**	**87.11**
44.00	**40.0**	**Interaction**	**KSI**	**12.00**	**0.00**	**4.62**	**2.597**	**77.92**
49.50	**45.0**	**Interaction**	**KSI**	**12.00**	**0.00**	**4.67**	**2.567**	**77.02**
55.00	**50.0**	**Interaction**	**KSI**	**12.00**	**0.00**	**4.60**	**2.608**	**78.23**
66.00	**60.0**	**Interaction**	**KSI**	**12.00**	**0.00**	**4.62**	**2.597**	**77.92**
77.00	**70.0**	**Interaction**	**KSI**	**12.00**	**0.00**	**4.13**	**2.904**	**87.11**
84.50	**76.8**	**Interaction**	**KSI**	**16.00**	**0.00**	**4.41**	**3.631**	**108.92**
88.00	**80.0**	**Interaction**	**KSI**	**12.00**	**0.00**	**4.00**	**2.998**	**89.93**
99.00	**90.0**	**Interaction**	**KSI**	**12.00**	**0.00**	**2.32**	**5.179**	**155.38**
107.00	**97.3**	**Interaction**	**KSI**	**16.00**	**0.00**	**0.70**	**22.960**	**688.80**

Detailed Rating Results
Girder A - As Inspected
SU4
Axle Load
Impact: As Requested
Lane: As Requested

Span 1

Location (ft)	Percent	Limit State	Units	Capacity	DL + Adj -LL*	LL	Legal Rating Factor	Legal Load Rating (Ton)
0.00	0.0	Flexure	KSI	-36.00	-0.00	-0.00	99.000	2673.00
0.00	**0.0**	**Shear**	**KIPS**	**303.17**	**79.47**	**36.60**	**4.129**	**111.49**
0.00	0.0	Overload	KSI	-36.00	-0.00	-0.00	99.000	2673.00
0.50	0.5	Flexure	KSI	-35.84	-0.33	-0.05	99.000	2673.00
0.50	**0.5**	**Shear**	**KIPS**	**165.82**	**78.76**	**36.42**	**1.269**	**34.26**
0.50	0.5	Overload	KSI	-36.00	-0.33	-0.05	99.000	2673.00
1.00	0.9	Flexure	KSI	-33.85	-0.70	-0.09	99.000	2673.00
1.00	**0.9**	**Shear**	**KIPS**	**165.82**	**78.05**	**36.25**	**1.295**	**34.97**
1.00	0.9	Overload	KSI	-36.00	-0.70	-0.09	99.000	2673.00
10.84	**9.9**	**Flexure**	**KSI**	**36.00**	**5.73**	**2.16**	**10.084**	**272.26**
10.84	9.9	Shear	KIPS	533.09	64.09	32.77	10.494	283.35

10.84	9.9	Overload	KSI	36.00	5.73	2.16	10.125	273.39
11.00	**10.0**	**Flexure**	**KSI**	**36.00**	**5.79**	**2.18**	**9.960**	**268.92**
11.00	10.0	Shear	KIPS	542.44	63.87	32.71	10.739	289.97
11.00	10.0	Overload	KSI	36.00	5.79	2.18	10.008	270.23
22.00	**20.0**	**Flexure**	**KSI**	**36.00**	**10.32**	**3.85**	**4.443**	**119.97**
22.00	20.0	Shear	KIPS	542.44	48.26	28.83	12.748	344.19
22.00	20.0	Overload	KSI	36.00	10.32	3.85	4.773	128.88
25.50	**23.2**	**Flexure**	**KSI**	**36.00**	**11.49**	**4.27**	**3.724**	**100.54**
25.50	23.2	Shear	KIPS	542.44	43.06	27.59	13.514	364.87
25.50	23.2	Overload	KSI	36.00	11.49	4.27	4.092	110.48
33.00	**30.0**	**Flexure**	**KSI**	**36.00**	**10.65**	**4.03**	**4.157**	**112.23**
33.00	30.0	Shear	KIPS	542.44	32.17	24.94	15.401	415.82
33.00	30.0	Overload	KSI	36.00	10.65	4.03	4.496	121.39
44.00	**40.0**	**Flexure**	**KSI**	**36.00**	**12.19**	**4.60**	**3.298**	**89.06**
44.00	40.0	Shear	KIPS	542.44	16.20	21.05	19.029	513.78
44.00	40.0	Overload	KSI	36.00	12.19	4.60	3.681	99.40
49.50	**45.0**	**Flexure**	**KSI**	**36.00**	**12.57**	**4.73**	**3.123**	**84.31**
49.50	45.0	Shear	KIPS	542.44	7.98	19.11	21.408	578.02
49.50	45.0	Overload	KSI	36.00	12.57	4.73	3.516	94.92
55.00	**50.0**	**Flexure**	**KSI**	**36.00**	**12.69**	**4.76**	**3.076**	**83.06**
55.00	50.0	Shear	KIPS	542.44	0.00	-17.16	24.313	656.46
55.00	50.0	Overload	KSI	36.00	12.69	4.76	3.474	93.79
66.00	**60.0**	**Flexure**	**KSI**	**36.00**	**12.19**	**4.60**	**3.298**	**89.06**
66.00	60.0	Shear	KIPS	542.44	-16.20	-21.05	19.029	513.78
66.00	60.0	Overload	KSI	36.00	12.19	4.60	3.681	99.40
77.00	**70.0**	**Flexure**	**KSI**	**36.00**	**10.65**	**4.03**	**4.157**	**112.23**
77.00	70.0	Shear	KIPS	542.44	-32.17	-24.94	15.401	415.82
77.00	70.0	Overload	KSI	36.00	10.65	4.03	4.496	121.39
84.50	**76.8**	**Flexure**	**KSI**	**36.00**	**11.49**	**4.27**	**3.724**	**100.54**
84.50	76.8	Shear	KIPS	542.44	-43.06	-27.59	13.514	364.87
84.50	76.8	Overload	KSI	36.00	11.49	4.27	4.092	110.48
88.00	**80.0**	**Flexure**	**KSI**	**36.00**	**10.32**	**3.85**	**4.443**	**119.97**
88.00	80.0	Shear	KIPS	542.44	-48.26	-28.83	12.748	344.19
88.00	80.0	Overload	KSI	36.00	10.32	3.85	4.773	128.88
99.00	**90.0**	**Flexure**	**KSI**	**36.00**	**5.79**	**2.18**	**9.960**	**268.92**
99.00	90.0	Shear	KIPS	542.44	-63.87	-32.71	10.739	289.97
99.00	90.0	Overload	KSI	36.00	5.79	2.18	10.008	270.23
107.00	97.3	Flexure	KSI	36.00	1.71	0.65	39.954	1078.76
107.00	**97.3**	**Shear**	**KIPS**	**324.36**	**-75.21**	**-35.54**	**4.835**	**130.54**
107.00	97.3	Overload	KSI	36.00	1.71	0.65	38.499	1039.47
110.00	100.0	Flexure	KSI	-36.00	-0.00	-0.00	99.000	2673.00
110.00	**100.0**	**Shear**	**KIPS**	**324.36**	**-79.47**	**-36.60**	**4.575**	**123.51**
110.00	100.0	Overload	KSI	-36.00	-0.00	-0.00	99.000	2673.00

Detailed Rating Results
Girder A - As Inspected
SU5
Axle Load
Impact: As Requested
Lane: As Requested

Span 1

Location (ft)	Percent	Limit State	Units	Capacity	DL + Adj -LL*	LL	Legal Rating Factor	Legal Load Rating (Ton)
0.00	0.0	Flexure	KSI	-36.00	-0.00	-0.00	99.000	3069.00
0.00	**0.0**	**Shear**	**KIPS**	**303.17**	**79.47**	**41.42**	**3.649**	**113.12**
0.00	0.0	Overload	KSI	-36.00	-0.00	-0.00	99.000	3069.00
0.50	0.5	Flexure	KSI	-35.94	-0.33	-0.05	99.000	3069.00
0.50	**0.5**	**Shear**	**KIPS**	**165.82**	**78.76**	**41.22**	**1.121**	**34.76**
0.50	0.5	Overload	KSI	-36.00	-0.33	-0.05	99.000	3069.00
1.00	0.9	Flexure	KSI	-33.97	-0.70	-0.11	99.000	3069.00
1.00	**0.9**	**Shear**	**KIPS**	**165.82**	**78.05**	**41.01**	**1.145**	**35.49**
1.00	0.9	Overload	KSI	36.00	0.61	0.26	97.548	3023.98
10.84	**9.9**	**Flexure**	**KSI**	**36.00**	**5.73**	**2.44**	**8.926**	**276.71**
10.84	9.9	Shear	KIPS	533.09	64.09	37.02	9.290	287.98
10.84	9.9	Overload	KSI	36.00	5.73	2.44	8.963	277.86
11.00	**10.0**	**Flexure**	**KSI**	**36.00**	**5.79**	**2.47**	**8.817**	**273.33**
11.00	10.0	Shear	KIPS	542.44	63.87	36.96	9.507	294.71
11.00	10.0	Overload	KSI	36.00	5.79	2.47	8.860	274.65
22.00	**20.0**	**Flexure**	**KSI**	**36.00**	**10.32**	**4.34**	**3.942**	**122.20**
22.00	20.0	Shear	KIPS	542.44	48.26	32.49	11.310	350.60
22.00	20.0	Overload	KSI	36.00	10.32	4.34	4.235	131.28
25.50	**23.2**	**Flexure**	**KSI**	**36.00**	**11.49**	**4.81**	**3.306**	**102.50**
25.50	23.2	Shear	KIPS	542.44	43.06	31.07	11.999	371.97
25.50	23.2	Overload	KSI	36.00	11.49	4.81	3.633	112.63
33.00	**30.0**	**Flexure**	**KSI**	**36.00**	**10.65**	**4.55**	**3.680**	**114.09**
33.00	30.0	Shear	KIPS	542.44	32.17	28.03	13.703	424.80
33.00	30.0	Overload	KSI	36.00	10.65	4.55	3.980	123.39
44.00	**40.0**	**Flexure**	**KSI**	**36.00**	**12.19**	**5.19**	**2.925**	**90.68**
44.00	40.0	Shear	KIPS	542.44	16.20	23.56	16.999	526.97
44.00	40.0	Overload	KSI	36.00	12.19	5.19	3.265	101.22
49.50	**45.0**	**Flexure**	**KSI**	**36.00**	**12.57**	**5.32**	**2.777**	**86.07**
49.50	45.0	Shear	KIPS	542.44	7.98	21.33	19.175	594.42

49.50	45.0	Overload	KSI	36.00	12.57	5.32	3.126	96.90
55.00	**50.0**	**Flexure**	**KSI**	**36.00**	**12.69**	**5.34**	**2.743**	**85.04**
55.00	50.0	Shear	KIPS	542.44	0.00	-19.10	21.847	677.26
55.00	50.0	Overload	KSI	36.00	12.69	5.34	3.098	96.03
66.00	**60.0**	**Flexure**	**KSI**	**36.00**	**12.19**	**5.19**	**2.925**	**90.68**
66.00	60.0	Shear	KIPS	542.44	-16.20	-23.56	16.999	526.97
66.00	60.0	Overload	KSI	36.00	12.19	5.19	3.265	101.22
77.00	**70.0**	**Flexure**	**KSI**	**36.00**	**10.65**	**4.55**	**3.680**	**114.09**
77.00	70.0	Shear	KIPS	542.44	-32.17	-28.03	13.703	424.80
77.00	70.0	Overload	KSI	36.00	10.65	4.55	3.980	123.39
84.50	**76.8**	**Flexure**	**KSI**	**36.00**	**11.49**	**4.81**	**3.306**	**102.50**
84.50	76.8	Shear	KIPS	542.44	-43.06	-31.07	11.999	371.97
84.50	76.8	Overload	KSI	36.00	11.49	4.81	3.633	112.63
88.00	**80.0**	**Flexure**	**KSI**	**36.00**	**10.32**	**4.34**	**3.942**	**122.20**
88.00	80.0	Shear	KIPS	542.44	-48.26	-32.49	11.310	350.60
88.00	80.0	Overload	KSI	36.00	10.32	4.34	4.235	131.28
99.00	**90.0**	**Flexure**	**KSI**	**36.00**	**5.79**	**2.47**	**8.817**	**273.33**
99.00	90.0	Shear	KIPS	542.44	-63.87	-36.96	9.507	294.71
99.00	90.0	Overload	KSI	36.00	5.79	2.47	8.860	274.65
107.00	97.3	Flexure	KSI	36.00	1.71	0.73	35.322	1094.99
107.00	**97.3**	**Shear**	**KIPS**	**324.36**	**-75.21**	**-40.20**	**4.274**	**132.51**
107.00	97.3	Overload	KSI	36.00	1.71	0.73	34.036	1055.11
110.00	100.0	Flexure	KSI	-36.00	-0.00	-0.00	99.000	3069.00
110.00	**100.0**	**Shear**	**KIPS**	**324.36**	**-79.47**	**-41.42**	**4.043**	**125.32**
110.00	100.0	Overload	KSI	-36.00	-0.00	-0.00	99.000	3069.00

Detailed Rating Results
Girder A - As Inspected
SU6
Axle Load
Impact: As Requested
Lane: As Requested

Span 1

Location (ft)	Percent	Limit State	Units	Capacity	DL + Adj -LL*	LL	Legal Rating Factor	Legal Load Rating (Ton)
0.00	0.0	Flexure	KSI	-36.00	-0.00	-0.00	99.000	3440.25
0.00	**0.0**	**Shear**	**KIPS**	**303.17**	**79.47**	**45.28**	**3.338**	**115.99**
0.00	0.0	Overload	KSI	-36.00	-0.00	-0.00	99.000	3440.25
0.50	0.5	Flexure	KSI	-36.00	-0.33	-0.06	99.000	3440.25

0.50	**0.5**	**Shear**	**KIPS**	**165.82**	**78.76**	**45.05**	**1.026**	**35.65**
0.50	0.5	Overload	KSI	-36.00	-0.33	-0.06	99.000	3440.25
1.00	0.9	Flexure	KSI	36.00	0.61	0.29	93.493	3248.90
1.00	**0.9**	**Shear**	**KIPS**	**165.82**	**78.05**	**44.83**	**1.047**	**36.40**
1.00	0.9	Overload	KSI	36.00	0.61	0.29	89.251	3101.47
10.84	**9.9**	**Flexure**	**KSI**	**36.00**	**5.73**	**2.66**	**8.190**	**284.59**
10.84	9.9	Shear	KIPS	533.09	64.09	40.35	8.523	296.17
10.84	9.9	Overload	KSI	36.00	5.73	2.66	8.223	285.77
11.00	**10.0**	**Flexure**	**KSI**	**36.00**	**5.79**	**2.69**	**8.090**	**281.12**
11.00	10.0	Shear	KIPS	542.44	63.87	40.28	8.723	303.12
11.00	10.0	Overload	KSI	36.00	5.79	2.69	8.129	282.49
22.00	**20.0**	**Flexure**	**KSI**	**36.00**	**10.32**	**4.81**	**3.553**	**123.48**
22.00	20.0	Shear	KIPS	542.44	48.26	35.27	10.418	362.02
22.00	20.0	Overload	KSI	36.00	10.32	4.81	3.817	132.65
25.50	**23.2**	**Flexure**	**KSI**	**36.00**	**11.49**	**5.35**	**2.969**	**103.19**
25.50	23.2	Shear	KIPS	542.44	43.06	33.68	11.069	384.66
25.50	23.2	Overload	KSI	36.00	11.49	5.35	3.263	113.39
33.00	**30.0**	**Flexure**	**KSI**	**36.00**	**10.65**	**5.07**	**3.302**	**114.75**
33.00	30.0	Shear	KIPS	542.44	32.17	30.27	12.688	440.92
33.00	30.0	Overload	KSI	36.00	10.65	5.07	3.572	124.11
44.00	**40.0**	**Flexure**	**KSI**	**36.00**	**12.19**	**5.76**	**2.633**	**91.50**
44.00	40.0	Shear	KIPS	542.44	16.20	25.27	15.854	550.93
44.00	40.0	Overload	KSI	36.00	12.19	5.76	2.939	102.13
49.50	**45.0**	**Flexure**	**KSI**	**36.00**	**12.57**	**5.93**	**2.491**	**86.57**
49.50	45.0	Shear	KIPS	542.44	7.98	22.76	17.969	624.41
49.50	45.0	Overload	KSI	36.00	12.57	5.93	2.805	97.46
55.00	**50.0**	**Flexure**	**KSI**	**36.00**	**12.69**	**5.97**	**2.454**	**85.27**
55.00	50.0	Shear	KIPS	542.44	0.00	-20.26	20.594	715.65
55.00	50.0	Overload	KSI	36.00	12.69	5.97	2.771	96.28
66.00	**60.0**	**Flexure**	**KSI**	**36.00**	**12.19**	**5.76**	**2.633**	**91.50**
66.00	60.0	Shear	KIPS	542.44	-16.20	-25.27	15.854	550.93
66.00	60.0	Overload	KSI	36.00	12.19	5.76	2.939	102.13
77.00	**70.0**	**Flexure**	**KSI**	**36.00**	**10.65**	**5.07**	**3.302**	**114.75**
77.00	70.0	Shear	KIPS	542.44	-32.17	-30.27	12.688	440.92
77.00	70.0	Overload	KSI	36.00	10.65	5.07	3.572	124.11
84.50	**76.8**	**Flexure**	**KSI**	**36.00**	**11.49**	**5.35**	**2.969**	**103.19**
84.50	76.8	Shear	KIPS	542.44	-43.06	-33.68	11.069	384.66
84.50	76.8	Overload	KSI	36.00	11.49	5.35	3.263	113.39
88.00	**80.0**	**Flexure**	**KSI**	**36.00**	**10.32**	**4.81**	**3.553**	**123.48**
88.00	80.0	Shear	KIPS	542.44	-48.26	-35.27	10.418	362.02
88.00	80.0	Overload	KSI	36.00	10.32	4.81	3.817	132.65
99.00	**90.0**	**Flexure**	**KSI**	**36.00**	**5.79**	**2.69**	**8.090**	**281.12**
99.00	90.0	Shear	KIPS	542.44	-63.87	-40.28	8.723	303.12

99.00	90.0	Overload	KSI	36.00	5.79	2.69	8.129	282.49
107.00	97.3	Flexure	KSI	36.00	1.71	0.80	32.335	1123.63
107.00	**97.3**	**Shear**	**KIPS**	**324.36**	**-75.21**	**-43.92**	**3.913**	**135.97**
107.00	97.3	Overload	KSI	36.00	1.71	0.80	31.157	1082.71
110.00	100.0	Flexure	KSI	-36.00	-0.00	-0.00	99.000	3440.25
110.00	**100.0**	**Shear**	**KIPS**	**324.36**	**-79.47**	**-45.28**	**3.698**	**128.50**
110.00	100.0	Overload	KSI	-36.00	-0.00	-0.00	99.000	3440.25

Detailed Rating Results
Girder A - As Inspected
SU7
Axle Load
Impact: As Requested
Lane: As Requested

Span 1

Location (ft)	Percent	Limit State	Units	Capacity	DL + Adj -LL*	LL	Legal Rating Factor	Legal Load Rating (Ton)
0.00	0.0	Flexure	KSI	-36.00	-0.00	-0.00	99.000	3836.25
0.00	**0.0**	**Shear**	**KIPS**	**303.17**	**79.47**	**49.22**	**3.071**	**118.99**
0.00	0.0	Overload	KSI	-36.00	-0.00	-0.00	99.000	3836.25
0.50	0.5	Flexure	KSI	-36.00	-0.33	-0.06	99.000	3836.25
0.50	**0.5**	**Shear**	**KIPS**	**165.82**	**78.76**	**48.97**	**0.944**	**36.57**
0.50	0.5	Overload	KSI	-36.00	-0.33	-0.06	99.000	3836.25
1.00	0.9	Flexure	KSI	36.00	0.61	0.31	86.032	3333.72
1.00	**0.9**	**Shear**	**KIPS**	**165.82**	**78.05**	**48.71**	**0.964**	**37.35**
1.00	0.9	Overload	KSI	36.00	0.61	0.31	82.128	3182.44
10.84	**9.9**	**Flexure**	**KSI**	**36.00**	**5.73**	**2.89**	**7.558**	**292.87**
10.84	9.9	Shear	KIPS	533.09	64.09	43.72	7.866	304.79
10.84	9.9	Overload	KSI	36.00	5.73	2.89	7.589	294.08
11.00	**10.0**	**Flexure**	**KSI**	**36.00**	**5.79**	**2.91**	**7.466**	**289.31**
11.00	10.0	Shear	KIPS	542.44	63.87	43.64	8.050	311.95
11.00	10.0	Overload	KSI	36.00	5.79	2.91	7.502	290.72
22.00	**20.0**	**Flexure**	**KSI**	**36.00**	**10.32**	**5.21**	**3.281**	**127.12**
22.00	20.0	Shear	KIPS	542.44	48.26	38.06	9.655	374.11
22.00	20.0	Overload	KSI	36.00	10.32	5.21	3.524	136.56
25.50	**23.2**	**Flexure**	**KSI**	**36.00**	**11.49**	**5.82**	**2.730**	**105.78**
25.50	23.2	Shear	KIPS	542.44	43.06	36.29	10.275	398.14
25.50	23.2	Overload	KSI	36.00	11.49	5.82	3.000	116.24
33.00	**30.0**	**Flexure**	**KSI**	**36.00**	**10.65**	**5.57**	**3.009**	**116.62**

33.00	30.0	Shear	KIPS	542.44	32.17	32.48	11.824	458.19
33.00	30.0	Overload	KSI	36.00	10.65	5.57	3.255	126.13
44.00	**40.0**	**Flexure**	**KSI**	**36.00**	**12.19**	**6.33**	**2.396**	**92.86**
44.00	40.0	Shear	KIPS	542.44	16.20	26.90	14.890	576.97
44.00	40.0	Overload	KSI	36.00	12.19	6.33	2.675	103.64
49.50	**45.0**	**Flexure**	**KSI**	**36.00**	**12.57**	**6.52**	**2.269**	**87.91**
49.50	45.0	Shear	KIPS	542.44	7.98	24.11	16.964	657.35
49.50	45.0	Overload	KSI	36.00	12.57	6.52	2.554	98.97
55.00	**50.0**	**Flexure**	**KSI**	**36.00**	**12.69**	**6.58**	**2.228**	**86.32**
55.00	50.0	Shear	KIPS	542.44	0.00	-21.32	19.570	758.34
55.00	50.0	Overload	KSI	36.00	12.69	6.58	2.515	97.47
66.00	**60.0**	**Flexure**	**KSI**	**36.00**	**12.19**	**6.33**	**2.396**	**92.86**
66.00	60.0	Shear	KIPS	542.44	-16.20	-26.90	14.890	576.97
66.00	60.0	Overload	KSI	36.00	12.19	6.33	2.675	103.64
77.00	**70.0**	**Flexure**	**KSI**	**36.00**	**10.65**	**5.57**	**3.009**	**116.62**
77.00	70.0	Shear	KIPS	542.44	-32.17	-32.48	11.824	458.19
77.00	70.0	Overload	KSI	36.00	10.65	5.57	3.255	126.13
84.50	**76.8**	**Flexure**	**KSI**	**36.00**	**11.49**	**5.82**	**2.730**	**105.78**
84.50	76.8	Shear	KIPS	542.44	-43.06	-36.29	10.275	398.14
84.50	76.8	Overload	KSI	36.00	11.49	5.82	3.000	116.24
88.00	**80.0**	**Flexure**	**KSI**	**36.00**	**10.32**	**5.21**	**3.281**	**127.12**
88.00	80.0	Shear	KIPS	542.44	-48.26	-38.06	9.655	374.11
88.00	80.0	Overload	KSI	36.00	10.32	5.21	3.524	136.56
99.00	**90.0**	**Flexure**	**KSI**	**36.00**	**5.79**	**2.91**	**7.466**	**289.31**
99.00	90.0	Shear	KIPS	542.44	-63.87	-43.64	8.050	311.95
99.00	90.0	Overload	KSI	36.00	5.79	2.91	7.502	290.72
107.00	97.3	Flexure	KSI	36.00	1.71	0.87	29.770	1153.59
107.00	**97.3**	**Shear**	**KIPS**	**324.36**	**-75.21**	**-47.70**	**3.603**	**139.60**
107.00	97.3	Overload	KSI	36.00	1.71	0.87	28.686	1111.58
110.00	100.0	Flexure	KSI	-36.00	-0.00	-0.00	99.000	3836.25
110.00	**100.0**	**Shear**	**KIPS**	**324.36**	**-79.47**	**-49.22**	**3.402**	**131.82**
110.00	100.0	Overload	KSI	-36.00	-0.00	-0.00	99.000	3836.25

Detailed Rating Results
Girder A - As Inspected
Type 3
Axle Load
Impact: As Requested
Lane: As Requested

Span 1

Location							**Legal Rating**	**Legal**

(ft)	Percent	Limit State	Units	Capacity	DL + Adj -LL*	LL	Factor	Load Rating (Ton)
0.00	0.0	Flexure	KSI	-36.00	-0.00	-0.00	99.000	2475.00
0.00	**0.0**	**Shear**	**KIPS**	**303.17**	**79.47**	**33.56**	**4.503**	**112.57**
0.00	0.0	Overload	KSI	-36.00	-0.00	-0.00	99.000	2475.00
0.50	0.5	Flexure	KSI	-35.77	-0.33	-0.04	99.000	2475.00
0.50	**0.5**	**Shear**	**KIPS**	**165.82**	**78.76**	**33.40**	**1.384**	**34.59**
0.50	0.5	Overload	KSI	-36.00	-0.33	-0.04	99.000	2475.00
1.00	0.9	Flexure	KSI	-33.76	-0.70	-0.09	99.000	2475.00
1.00	**0.9**	**Shear**	**KIPS**	**165.82**	**78.05**	**33.24**	**1.413**	**35.31**
1.00	0.9	Overload	KSI	-36.00	-0.70	-0.09	99.000	2475.00
10.84	**9.9**	**Flexure**	**KSI**	**36.00**	**5.73**	**1.98**	**11.009**	**275.22**
10.84	9.9	Shear	KIPS	533.09	64.09	30.02	11.457	286.42
10.84	9.9	Overload	KSI	36.00	5.73	1.98	11.054	276.36
11.00	**10.0**	**Flexure**	**KSI**	**36.00**	**5.79**	**2.00**	**10.874**	**271.85**
11.00	10.0	Shear	KIPS	542.44	63.87	29.96	11.725	293.12
11.00	10.0	Overload	KSI	36.00	5.79	2.00	10.927	273.17
22.00	**20.0**	**Flexure**	**KSI**	**36.00**	**10.32**	**3.52**	**4.858**	**121.45**
22.00	20.0	Shear	KIPS	542.44	48.26	26.36	13.938	348.44
22.00	20.0	Overload	KSI	36.00	10.32	3.52	5.219	130.47
25.50	**23.2**	**Flexure**	**KSI**	**36.00**	**11.49**	**3.90**	**4.074**	**101.84**
25.50	23.2	Shear	KIPS	542.44	43.06	25.22	14.783	369.58
25.50	23.2	Overload	KSI	36.00	11.49	3.90	4.476	111.91
33.00	**30.0**	**Flexure**	**KSI**	**36.00**	**10.65**	**3.68**	**4.553**	**113.84**
33.00	30.0	Shear	KIPS	542.44	32.17	22.76	16.871	421.78
33.00	30.0	Overload	KSI	36.00	10.65	3.68	4.925	123.12
44.00	**40.0**	**Flexure**	**KSI**	**36.00**	**12.19**	**4.17**	**3.637**	**90.93**
44.00	40.0	Shear	KIPS	542.44	16.20	19.16	20.900	522.51
44.00	40.0	Overload	KSI	36.00	12.19	4.17	4.060	101.49
49.50	**45.0**	**Flexure**	**KSI**	**36.00**	**12.57**	**4.29**	**3.449**	**86.22**
49.50	45.0	Shear	KIPS	542.44	7.98	17.36	23.555	588.86
49.50	45.0	Overload	KSI	36.00	12.57	4.29	3.883	97.06
55.00	**50.0**	**Flexure**	**KSI**	**36.00**	**12.69**	**4.30**	**3.404**	**85.10**
55.00	50.0	Shear	KIPS	542.44	0.00	-15.56	26.808	670.20
55.00	50.0	Overload	KSI	36.00	12.69	4.30	3.844	96.09
66.00	**60.0**	**Flexure**	**KSI**	**36.00**	**12.19**	**4.17**	**3.637**	**90.93**
66.00	60.0	Shear	KIPS	542.44	-16.20	-19.16	20.900	522.51
66.00	60.0	Overload	KSI	36.00	12.19	4.17	4.060	101.49
77.00	**70.0**	**Flexure**	**KSI**	**36.00**	**10.65**	**3.68**	**4.553**	**113.84**
77.00	70.0	Shear	KIPS	542.44	-32.17	-22.76	16.871	421.78
77.00	70.0	Overload	KSI	36.00	10.65	3.68	4.925	123.12

84.50	**76.8**	**Flexure**	**KSI**	**36.00**	**11.49**	**3.90**	**4.074**	**101.84**
84.50	76.8	Shear	KIPS	542.44	-43.06	-25.22	14.783	369.58
84.50	76.8	Overload	KSI	36.00	11.49	3.90	4.476	111.91
88.00	**80.0**	**Flexure**	**KSI**	**36.00**	**10.32**	**3.52**	**4.858**	**121.45**
88.00	80.0	Shear	KIPS	542.44	-48.26	-26.36	13.938	348.44
88.00	80.0	Overload	KSI	36.00	10.32	3.52	5.219	130.47
99.00	**90.0**	**Flexure**	**KSI**	**36.00**	**5.79**	**2.00**	**10.874**	**271.85**
99.00	90.0	Shear	KIPS	542.44	-63.87	-29.96	11.725	293.12
99.00	90.0	Overload	KSI	36.00	5.79	2.00	10.927	273.17
107.00	97.3	Flexure	KSI	36.00	1.71	0.60	43.582	1089.54
107.00	**97.3**	**Shear**	**KIPS**	**324.36**	**-75.21**	**-32.58**	**5.274**	**131.85**
107.00	97.3	Overload	KSI	36.00	1.71	0.60	41.994	1049.86
110.00	100.0	Flexure	KSI	-36.00	-0.00	-0.00	99.000	2475.00
110.00	**100.0**	**Shear**	**KIPS**	**324.36**	**-79.47**	**-33.56**	**4.988**	**124.71**
110.00	100.0	Overload	KSI	-36.00	-0.00	-0.00	99.000	2475.00

Detailed Rating Results
Girder A - As Inspected
Type 3-3
Axle Load
Impact: As Requested
Lane: As Requested

Span 1

Location (ft)	Percent	Limit State	Units	Capacity	DL + Adj -LL*	LL	Legal Rating Factor	Legal Load Rating (Ton)
0.00	0.0	Flexure	KSI	-36.00	-0.00	-0.00	99.000	3960.00
0.00	**0.0**	**Shear**	**KIPS**	**303.17**	**79.47**	**45.08**	**3.352**	**134.09**
0.00	0.0	Overload	KSI	-36.00	-0.00	-0.00	99.000	3960.00
0.50	0.5	Flexure	KSI	-36.00	-0.33	-0.06	99.000	3960.00
0.50	**0.5**	**Shear**	**KIPS**	**165.82**	**78.76**	**44.82**	**1.031**	**41.24**
0.50	0.5	Overload	KSI	-36.00	-0.33	-0.06	99.000	3960.00
1.00	0.9	Flexure	KSI	36.00	0.61	0.29	94.050	3761.98
1.00	**0.9**	**Shear**	**KIPS**	**165.82**	**78.05**	**44.56**	**1.054**	**42.14**
1.00	0.9	Overload	KSI	36.00	0.61	0.29	89.782	3591.27
10.84	**9.9**	**Flexure**	**KSI**	**36.00**	**5.73**	**2.60**	**8.385**	**335.41**
10.84	9.9	Shear	KIPS	533.09	64.09	39.41	8.727	349.06
10.84	9.9	Overload	KSI	36.00	5.73	2.60	8.420	336.80
11.00	**10.0**	**Flexure**	**KSI**	**36.00**	**5.79**	**2.62**	**8.286**	**331.43**
11.00	10.0	Shear	KIPS	542.44	63.87	39.32	8.934	357.36

11.00	10.0	Overload	KSI	36.00	5.79	2.62	8.326	333.04
22.00	**20.0**	**Flexure**	**KSI**	**36.00**	**10.32**	**4.52**	**3.786**	**151.46**
22.00	20.0	Shear	KIPS	542.44	48.26	33.56	10.948	437.92
22.00	20.0	Overload	KSI	36.00	10.32	4.52	4.068	162.71
25.50	**23.2**	**Flexure**	**KSI**	**36.00**	**11.49**	**4.99**	**3.186**	**127.44**
25.50	23.2	Shear	KIPS	542.44	43.06	31.73	11.749	469.97
25.50	23.2	Overload	KSI	36.00	11.49	4.99	3.501	140.04
33.00	**30.0**	**Flexure**	**KSI**	**36.00**	**10.65**	**4.63**	**3.615**	**144.59**
33.00	30.0	Shear	KIPS	542.44	32.17	27.80	13.813	552.52
33.00	30.0	Overload	KSI	36.00	10.65	4.63	3.910	156.38
44.00	**40.0**	**Flexure**	**KSI**	**36.00**	**12.19**	**5.23**	**2.902**	**116.07**
44.00	40.0	Shear	KIPS	542.44	16.20	22.04	18.170	726.80
44.00	40.0	Overload	KSI	36.00	12.19	5.23	3.239	129.54
49.50	**45.0**	**Flexure**	**KSI**	**36.00**	**12.57**	**5.41**	**2.734**	**109.36**
49.50	45.0	Shear	KIPS	542.44	7.98	19.16	21.342	853.69
49.50	45.0	Overload	KSI	36.00	12.57	5.41	3.078	123.12
55.00	**50.0**	**Flexure**	**KSI**	**36.00**	**12.69**	**5.43**	**2.699**	**107.95**
55.00	50.0	Shear	KIPS	542.44	0.00	-16.28	25.623	1024.91
55.00	50.0	Overload	KSI	36.00	12.69	5.43	3.047	121.90
66.00	**60.0**	**Flexure**	**KSI**	**36.00**	**12.19**	**5.23**	**2.902**	**116.07**
66.00	60.0	Shear	KIPS	542.44	-16.20	-22.04	18.170	726.80
66.00	60.0	Overload	KSI	36.00	12.19	5.23	3.239	129.54
77.00	**70.0**	**Flexure**	**KSI**	**36.00**	**10.65**	**4.63**	**3.615**	**144.59**
77.00	70.0	Shear	KIPS	542.44	-32.17	-27.80	13.813	552.52
77.00	70.0	Overload	KSI	36.00	10.65	4.63	3.910	156.38
84.50	**76.8**	**Flexure**	**KSI**	**36.00**	**11.49**	**4.99**	**3.186**	**127.44**
84.50	76.8	Shear	KIPS	542.44	-43.06	-31.73	11.749	469.97
84.50	76.8	Overload	KSI	36.00	11.49	4.99	3.501	140.04
88.00	**80.0**	**Flexure**	**KSI**	**36.00**	**10.32**	**4.52**	**3.786**	**151.46**
88.00	80.0	Shear	KIPS	542.44	-48.26	-33.56	10.948	437.92
88.00	80.0	Overload	KSI	36.00	10.32	4.52	4.068	162.71
99.00	**90.0**	**Flexure**	**KSI**	**36.00**	**5.79**	**2.62**	**8.286**	**331.43**
99.00	90.0	Shear	KIPS	542.44	-63.87	-39.32	8.934	357.36
99.00	90.0	Overload	KSI	36.00	5.79	2.62	8.326	333.04
107.00	97.3	Flexure	KSI	36.00	1.71	0.79	32.634	1305.35
107.00	**97.3**	**Shear**	**KIPS**	**324.36**	**-75.21**	**-43.51**	**3.949**	**157.96**
107.00	97.3	Overload	KSI	36.00	1.71	0.79	31.445	1257.81
110.00	100.0	Flexure	KSI	-36.00	-0.00	-0.00	99.000	3960.00
110.00	**100.0**	**Shear**	**KIPS**	**324.36**	**-79.47**	**-45.08**	**3.714**	**148.55**
110.00	100.0	Overload	KSI	-36.00	-0.00	-0.00	99.000	3960.00

Detailed Rating Results
Girder A - As Inspected

Type 3S2
Axle Load
Impact: As Requested
Lane: As Requested

Span 1

Location (ft)	Percent	Limit State	Units	Capacity	DL + Adj -LL*	LL	Legal Rating Factor	Legal Load Rating (Ton)
0.00	0.0	Flexure	KSI	-36.00	-0.00	-0.00	99.000	3564.00
0.00	**0.0**	**Shear**	**KIPS**	**303.17**	**79.47**	**43.07**	**3.509**	**126.33**
0.00	0.0	Overload	KSI	-36.00	-0.00	-0.00	99.000	3564.00
0.50	0.5	Flexure	KSI	-35.97	-0.33	-0.06	99.000	3564.00
0.50	**0.5**	**Shear**	**KIPS**	**165.82**	**78.76**	**42.83**	**1.079**	**38.84**
0.50	0.5	Overload	KSI	-36.00	-0.33	-0.06	99.000	3564.00
1.00	0.9	Flexure	KSI	36.00	0.61	0.28	98.385	3541.86
1.00	**0.9**	**Shear**	**KIPS**	**165.82**	**78.05**	**42.60**	**1.102**	**39.68**
1.00	0.9	Overload	KSI	36.00	0.61	0.28	93.920	3381.14
10.84	**9.9**	**Flexure**	**KSI**	**36.00**	**5.73**	**2.51**	**8.705**	**313.39**
10.84	9.9	Shear	KIPS	533.09	64.09	37.96	9.060	326.14
10.84	9.9	Overload	KSI	36.00	5.73	2.51	8.741	314.68
11.00	**10.0**	**Flexure**	**KSI**	**36.00**	**5.79**	**2.53**	**8.601**	**309.62**
11.00	10.0	Shear	KIPS	542.44	63.87	37.88	9.274	333.85
11.00	10.0	Overload	KSI	36.00	5.79	2.53	8.642	311.13
22.00	**20.0**	**Flexure**	**KSI**	**36.00**	**10.32**	**4.37**	**3.917**	**141.00**
22.00	20.0	Shear	KIPS	542.44	48.26	32.70	11.237	404.54
22.00	20.0	Overload	KSI	36.00	10.32	4.37	4.208	151.48
25.50	**23.2**	**Flexure**	**KSI**	**36.00**	**11.49**	**4.85**	**3.277**	**117.97**
25.50	23.2	Shear	KIPS	542.44	43.06	31.05	12.007	432.24
25.50	23.2	Overload	KSI	36.00	11.49	4.85	3.601	129.64
33.00	**30.0**	**Flexure**	**KSI**	**36.00**	**10.65**	**4.61**	**3.635**	**130.84**
33.00	30.0	Shear	KIPS	542.44	32.17	27.52	13.958	502.47
33.00	30.0	Overload	KSI	36.00	10.65	4.61	3.931	141.52
44.00	**40.0**	**Flexure**	**KSI**	**36.00**	**12.19**	**5.20**	**2.916**	**104.97**
44.00	40.0	Shear	KIPS	542.44	16.20	22.33	17.936	645.68
44.00	40.0	Overload	KSI	36.00	12.19	5.20	3.254	117.16
49.50	**45.0**	**Flexure**	**KSI**	**36.00**	**12.57**	**5.32**	**2.779**	**100.04**
49.50	45.0	Shear	KIPS	542.44	7.98	19.74	20.720	745.91
49.50	45.0	Overload	KSI	36.00	12.57	5.32	3.129	112.63
55.00	**50.0**	**Flexure**	**KSI**	**36.00**	**12.69**	**5.29**	**2.767**	**99.61**
55.00	50.0	Shear	KIPS	542.44	0.00	-17.15	24.332	875.95

55.00	50.0	Overload	KSI	36.00	12.69	5.29	3.124	112.48
66.00	**60.0**	**Flexure**	**KSI**	**36.00**	**12.19**	**5.20**	**2.916**	**104.97**
66.00	60.0	Shear	KIPS	542.44	-16.20	-22.33	17.936	645.68
66.00	60.0	Overload	KSI	36.00	12.19	5.20	3.254	117.16
77.00	**70.0**	**Flexure**	**KSI**	**36.00**	**10.65**	**4.61**	**3.635**	**130.84**
77.00	70.0	Shear	KIPS	542.44	-32.17	-27.52	13.958	502.47
77.00	70.0	Overload	KSI	36.00	10.65	4.61	3.931	141.52
84.50	**76.8**	**Flexure**	**KSI**	**36.00**	**11.49**	**4.85**	**3.277**	**117.97**
84.50	76.8	Shear	KIPS	542.44	-43.06	-31.05	12.007	432.24
84.50	76.8	Overload	KSI	36.00	11.49	4.85	3.601	129.64
88.00	**80.0**	**Flexure**	**KSI**	**36.00**	**10.32**	**4.37**	**3.917**	**141.00**
88.00	80.0	Shear	KIPS	542.44	-48.26	-32.70	11.237	404.54
88.00	80.0	Overload	KSI	36.00	10.32	4.37	4.208	151.48
99.00	**90.0**	**Flexure**	**KSI**	**36.00**	**5.79**	**2.53**	**8.601**	**309.62**
99.00	90.0	Shear	KIPS	542.44	-63.87	-37.88	9.274	333.85
99.00	90.0	Overload	KSI	36.00	5.79	2.53	8.642	311.13
107.00	97.3	Flexure	KSI	36.00	1.71	0.76	34.090	1227.25
107.00	**97.3**	**Shear**	**KIPS**	**324.36**	**-75.21**	**-41.65**	**4.125**	**148.51**
107.00	97.3	Overload	KSI	36.00	1.71	0.76	32.849	1182.55
110.00	100.0	Flexure	KSI	-36.00	-0.00	-0.00	99.000	3564.00
110.00	**100.0**	**Shear**	**KIPS**	**324.36**	**-79.47**	**-43.07**	**3.888**	**139.96**
110.00	100.0	Overload	KSI	-36.00	-0.00	-0.00	99.000	3564.00

Detailed Rating Results
Girder A - As Inspected
RI-3
Axle Load
Impact: As Requested
Lane: As Requested

Span 1

Location (ft)	Percent	Limit State	Units	Capacity	DL + Adj -LL*	LL	Permit Rating Factor	Permit Load Rating (Ton)
0.00	0.0	Flexure	KSI	-36.00	-0.00	-0.00	99.000	3762.00
0.00	**0.0**	**Shear**	**KIPS**	**303.17**	**79.47**	**51.79**	**3.207**	**121.85**
0.00	0.0	Overload	KSI	-36.00	-0.00	-0.00	99.000	3762.00
0.50	0.5	Flexure	KSI	-36.00	-0.33	-0.07	99.000	3762.00
0.50	**0.5**	**Shear**	**KIPS**	**165.82**	**78.76**	**51.54**	**0.985**	**37.44**
0.50	0.5	Overload	KSI	-36.00	-0.33	-0.07	99.000	3762.00
1.00	0.9	Flexure	KSI	36.00	0.61	0.33	89.778	3411.56

1.00	**0.9**	**Shear**	**KIPS**	**165.82**	**78.05**	**51.29**	**1.006**	**38.22**
1.00	0.9	Overload	KSI	-36.00	-0.70	-0.13	99.000	3762.00
10.84	**9.9**	**Flexure**	**KSI**	**36.00**	**5.73**	**3.06**	**7.826**	**297.38**
10.84	9.9	Shear	KIPS	533.09	64.09	46.40	8.144	309.48
10.84	9.9	Overload	KSI	36.00	5.73	3.06	9.297	353.30
11.00	**10.0**	**Flexure**	**KSI**	**36.00**	**5.79**	**3.09**	**7.730**	**293.73**
11.00	10.0	Shear	KIPS	542.44	63.87	46.32	8.334	316.71
11.00	10.0	Overload	KSI	36.00	5.79	3.09	9.190	349.21
22.00	**20.0**	**Flexure**	**KSI**	**36.00**	**10.32**	**5.45**	**3.445**	**130.93**
22.00	20.0	Shear	KIPS	542.44	48.26	40.84	9.885	375.63
22.00	20.0	Overload	KSI	36.00	10.32	5.45	4.379	166.42
25.50	**23.2**	**Flexure**	**KSI**	**36.00**	**11.49**	**6.05**	**2.887**	**109.69**
25.50	23.2	Shear	KIPS	542.44	43.06	39.10	10.476	398.08
25.50	23.2	Overload	KSI	36.00	11.49	6.05	3.753	142.61
33.00	**30.0**	**Flexure**	**KSI**	**36.00**	**10.65**	**5.72**	**3.220**	**122.36**
33.00	30.0	Shear	KIPS	542.44	32.17	35.37	11.930	453.34
33.00	30.0	Overload	KSI	36.00	10.65	5.72	4.120	156.58
44.00	**40.0**	**Flexure**	**KSI**	**36.00**	**12.19**	**6.46**	**2.579**	**97.99**
44.00	40.0	Shear	KIPS	542.44	16.20	29.90	14.719	559.32
44.00	40.0	Overload	KSI	36.00	12.19	6.46	3.405	129.41
49.50	**45.0**	**Flexure**	**KSI**	**36.00**	**12.57**	**6.67**	**2.436**	**92.56**
49.50	45.0	Shear	KIPS	542.44	7.98	27.16	16.544	628.68
49.50	45.0	Overload	KSI	36.00	12.57	6.67	3.245	123.29
55.00	**50.0**	**Flexure**	**KSI**	**36.00**	**12.69**	**6.72**	**2.394**	**90.98**
55.00	50.0	Shear	KIPS	542.44	0.00	-24.43	18.768	713.18
55.00	50.0	Overload	KSI	36.00	12.69	6.72	3.199	121.55
66.00	**60.0**	**Flexure**	**KSI**	**36.00**	**12.19**	**6.46**	**2.579**	**97.99**
66.00	60.0	Shear	KIPS	542.44	-16.20	-29.90	14.719	559.32
66.00	60.0	Overload	KSI	36.00	12.19	6.46	3.405	129.41
77.00	**70.0**	**Flexure**	**KSI**	**36.00**	**10.65**	**5.72**	**3.220**	**122.36**
77.00	70.0	Shear	KIPS	542.44	-32.17	-35.37	11.930	453.34
77.00	70.0	Overload	KSI	36.00	10.65	5.72	4.120	156.58
84.50	**76.8**	**Flexure**	**KSI**	**36.00**	**11.49**	**6.05**	**2.887**	**109.69**
84.50	76.8	Shear	KIPS	542.44	-43.06	-39.10	10.476	398.08
84.50	76.8	Overload	KSI	36.00	11.49	6.05	3.753	142.61
88.00	**80.0**	**Flexure**	**KSI**	**36.00**	**10.32**	**5.45**	**3.445**	**130.93**
88.00	80.0	Shear	KIPS	542.44	-48.26	-40.84	9.885	375.63
88.00	80.0	Overload	KSI	36.00	10.32	5.45	4.379	166.42
99.00	**90.0**	**Flexure**	**KSI**	**36.00**	**5.79**	**3.09**	**7.730**	**293.73**
99.00	90.0	Shear	KIPS	542.44	-63.87	-46.32	8.334	316.71
99.00	90.0	Overload	KSI	36.00	5.79	3.09	9.190	349.21
107.00	97.3	Flexure	KSI	36.00	1.71	0.92	31.021	1178.81
107.00	**97.3**	**Shear**	**KIPS**	**324.36**	**-75.21**	**-50.30**	**3.754**	**142.65**

107.00	97.3	Overload	KSI	36.00	1.71	0.92	35.367	1343.93
110.00	100.0	Flexure	KSI	-36.00	-0.00	-0.00	99.000	3762.00
110.00	**100.0**	**Shear**	**KIPS**	**324.36**	**-79.47**	**-51.79**	**3.552**	**134.99**
110.00	100.0	Overload	KSI	-36.00	-0.00	-0.00	99.000	3762.00

Detailed Rating Results
Girder A - As Inspected
RI-4
Axle Load
Impact: As Requested
Lane: As Requested

Span 1

Location (ft)	Percent	Limit State	Units	Capacity	DL + Adj -LL*	LL	Permit Rating Factor	Permit Load Rating (Ton)
0.00	0.0	Flexure	KSI	-36.00	-0.00	-0.00	99.000	3712.50
0.00	**0.0**	**Shear**	**KIPS**	**303.17**	**79.47**	**50.35**	**3.298**	**123.68**
0.00	0.0	Overload	KSI	-36.00	-0.00	-0.00	99.000	3712.50
0.50	0.5	Flexure	KSI	-36.00	-0.33	-0.07	99.000	3712.50
0.50	**0.5**	**Shear**	**KIPS**	**165.82**	**78.76**	**50.11**	**1.013**	**38.00**
0.50	0.5	Overload	KSI	-36.00	-0.33	-0.07	99.000	3712.50
1.00	0.9	Flexure	KSI	36.00	0.61	0.32	92.354	3463.27
1.00	**0.9**	**Shear**	**KIPS**	**165.82**	**78.05**	**49.86**	**1.035**	**38.80**
1.00	0.9	Overload	KSI	-36.00	-0.70	-0.13	99.000	3712.50
10.84	**9.9**	**Flexure**	**KSI**	**36.00**	**5.73**	**2.97**	**8.063**	**302.37**
10.84	9.9	Shear	KIPS	533.09	64.09	45.03	8.391	314.68
10.84	9.9	Overload	KSI	36.00	5.73	2.97	9.579	359.23
11.00	**10.0**	**Flexure**	**KSI**	**36.00**	**5.79**	**3.00**	**7.964**	**298.66**
11.00	10.0	Shear	KIPS	542.44	63.87	44.95	8.588	322.03
11.00	10.0	Overload	KSI	36.00	5.79	3.00	9.469	355.09
22.00	**20.0**	**Flexure**	**KSI**	**36.00**	**10.32**	**5.28**	**3.558**	**133.43**
22.00	20.0	Shear	KIPS	542.44	48.26	39.55	10.208	382.81
22.00	20.0	Overload	KSI	36.00	10.32	5.28	4.523	169.60
25.50	**23.2**	**Flexure**	**KSI**	**36.00**	**11.49**	**5.85**	**2.984**	**111.88**
25.50	23.2	Shear	KIPS	542.44	43.06	37.83	10.828	406.03
25.50	23.2	Overload	KSI	36.00	11.49	5.85	3.879	145.46
33.00	**30.0**	**Flexure**	**KSI**	**36.00**	**10.65**	**5.56**	**3.310**	**124.12**
33.00	30.0	Shear	KIPS	542.44	32.17	34.15	12.357	463.37
33.00	30.0	Overload	KSI	36.00	10.65	5.56	4.235	158.83
44.00	**40.0**	**Flexure**	**KSI**	**36.00**	**12.19**	**6.35**	**2.624**	**98.40**

44.00	40.0	Shear	KIPS	542.44	16.20	28.75	15.307	574.02
44.00	40.0	Overload	KSI	36.00	12.19	6.35	3.465	129.94
49.50	**45.0**	**Flexure**	**KSI**	**36.00**	**12.57**	**6.53**	**2.487**	**93.25**
49.50	45.0	Shear	KIPS	542.44	7.98	26.05	17.251	646.91
49.50	45.0	Overload	KSI	36.00	12.57	6.53	3.312	124.21
55.00	**50.0**	**Flexure**	**KSI**	**36.00**	**12.69**	**6.56**	**2.452**	**91.96**
55.00	50.0	Shear	KIPS	542.44	0.00	-23.35	19.633	736.25
55.00	50.0	Overload	KSI	36.00	12.69	6.56	3.276	122.87
66.00	**60.0**	**Flexure**	**KSI**	**36.00**	**12.19**	**6.35**	**2.624**	**98.40**
66.00	60.0	Shear	KIPS	542.44	-16.20	-28.75	15.307	574.02
66.00	60.0	Overload	KSI	36.00	12.19	6.35	3.465	129.94
77.00	**70.0**	**Flexure**	**KSI**	**36.00**	**10.65**	**5.56**	**3.310**	**124.12**
77.00	70.0	Shear	KIPS	542.44	-32.17	-34.15	12.357	463.37
77.00	70.0	Overload	KSI	36.00	10.65	5.56	4.235	158.83
84.50	**76.8**	**Flexure**	**KSI**	**36.00**	**11.49**	**5.85**	**2.984**	**111.88**
84.50	76.8	Shear	KIPS	542.44	-43.06	-37.83	10.828	406.03
84.50	76.8	Overload	KSI	36.00	11.49	5.85	3.879	145.46
88.00	**80.0**	**Flexure**	**KSI**	**36.00**	**10.32**	**5.28**	**3.558**	**133.43**
88.00	80.0	Shear	KIPS	542.44	-48.26	-39.55	10.208	382.81
88.00	80.0	Overload	KSI	36.00	10.32	5.28	4.523	169.60
99.00	**90.0**	**Flexure**	**KSI**	**36.00**	**5.79**	**3.00**	**7.964**	**298.66**
99.00	90.0	Shear	KIPS	542.44	-63.87	-44.95	8.588	322.03
99.00	90.0	Overload	KSI	36.00	5.79	3.00	9.469	355.09
107.00	97.3	Flexure	KSI	36.00	1.71	0.89	31.921	1197.03
107.00	**97.3**	**Shear**	**KIPS**	**324.36**	**-75.21**	**-48.88**	**3.863**	**144.85**
107.00	97.3	Overload	KSI	36.00	1.71	0.89	36.392	1364.71
110.00	100.0	Flexure	KSI	-36.00	-0.00	-0.00	99.000	3712.50
110.00	**100.0**	**Shear**	**KIPS**	**324.36**	**-79.47**	**-50.35**	**3.654**	**137.02**
110.00	100.0	Overload	KSI	-36.00	-0.00	-0.00	99.000	3712.50

Detailed Rating Results
Girder A - As Inspected
RI-5
Axle Load
Impact: As Requested
Lane: As Requested

Span 1

Location (ft)	Percent	Limit State	Units	Capacity	DL + Adj -LL*	LL	Permit Rating Factor	Permit Load Rating (Ton)

0.00	0.0	Flexure	KSI	-36.00	-0.00	-0.00	99.000	5187.60
0.00	**0.0**	**Shear**	**KIPS**	**303.17**	**79.47**	**66.03**	**2.515**	**131.77**
0.00	0.0	Overload	KSI	-36.00	-0.00	-0.00	99.000	5187.60
0.50	0.5	Flexure	KSI	-36.00	-0.33	-0.09	99.000	5187.60
0.50	**0.5**	**Shear**	**KIPS**	**165.82**	**78.76**	**65.69**	**0.773**	**40.51**
0.50	0.5	Overload	KSI	-36.00	-0.33	-0.09	99.000	5187.60
1.00	0.9	Flexure	KSI	36.00	0.61	0.42	70.464	3692.33
1.00	**0.9**	**Shear**	**KIPS**	**165.82**	**78.05**	**65.35**	**0.789**	**41.36**
1.00	0.9	Overload	KSI	36.00	0.61	0.42	79.588	4170.40
10.84	**9.9**	**Flexure**	**KSI**	**36.00**	**5.73**	**3.87**	**6.196**	**324.67**
10.84	9.9	Shear	KIPS	533.09	64.09	58.60	6.448	337.89
10.84	9.9	Overload	KSI	36.00	5.73	3.87	7.361	385.73
11.00	**10.0**	**Flexure**	**KSI**	**36.00**	**5.79**	**3.90**	**6.121**	**320.73**
11.00	10.0	Shear	KIPS	542.44	63.87	58.49	6.600	345.83
11.00	10.0	Overload	KSI	36.00	5.79	3.90	7.277	381.33
22.00	**20.0**	**Flexure**	**KSI**	**36.00**	**10.32**	**6.80**	**2.762**	**144.75**
22.00	20.0	Shear	KIPS	542.44	48.26	50.94	7.925	415.29
22.00	20.0	Overload	KSI	36.00	10.32	6.80	3.511	183.99
25.50	**23.2**	**Flexure**	**KSI**	**36.00**	**11.49**	**7.57**	**2.309**	**120.97**
25.50	23.2	Shear	KIPS	542.44	43.06	48.54	8.439	442.19
25.50	23.2	Overload	KSI	36.00	11.49	7.57	3.001	157.27
33.00	**30.0**	**Flexure**	**KSI**	**36.00**	**10.65**	**7.17**	**2.567**	**134.52**
33.00	30.0	Shear	KIPS	542.44	32.17	43.40	9.724	509.52
33.00	30.0	Overload	KSI	36.00	10.65	7.17	3.285	172.14
44.00	**40.0**	**Flexure**	**KSI**	**36.00**	**12.19**	**8.15**	**2.045**	**107.15**
44.00	40.0	Shear	KIPS	542.44	16.20	35.85	12.275	643.23
44.00	40.0	Overload	KSI	36.00	12.19	8.15	2.700	141.50
49.50	**45.0**	**Flexure**	**KSI**	**36.00**	**12.57**	**8.37**	**1.941**	**101.69**
49.50	45.0	Shear	KIPS	542.44	7.98	32.08	14.009	734.07
49.50	45.0	Overload	KSI	36.00	12.57	8.37	2.585	135.46
55.00	**50.0**	**Flexure**	**KSI**	**36.00**	**12.69**	**8.38**	**1.920**	**100.63**
55.00	50.0	Shear	KIPS	542.44	0.00	-28.31	16.196	848.67
55.00	50.0	Overload	KSI	36.00	12.69	8.38	2.566	134.45
66.00	**60.0**	**Flexure**	**KSI**	**36.00**	**12.19**	**8.15**	**2.045**	**107.15**
66.00	60.0	Shear	KIPS	542.44	-16.20	-35.85	12.275	643.23
66.00	60.0	Overload	KSI	36.00	12.19	8.15	2.700	141.50
77.00	**70.0**	**Flexure**	**KSI**	**36.00**	**10.65**	**7.17**	**2.567**	**134.52**
77.00	70.0	Shear	KIPS	542.44	-32.17	-43.40	9.724	509.52
77.00	70.0	Overload	KSI	36.00	10.65	7.17	3.285	172.14
84.50	**76.8**	**Flexure**	**KSI**	**36.00**	**11.49**	**7.57**	**2.309**	**120.97**
84.50	76.8	Shear	KIPS	542.44	-43.06	-48.54	8.439	442.19
84.50	76.8	Overload	KSI	36.00	11.49	7.57	3.001	157.27
88.00	**80.0**	**Flexure**	**KSI**	**36.00**	**10.32**	**6.80**	**2.762**	**144.75**

88.00	80.0	Shear	KIPS	542.44	-48.26	-50.94	7.925	415.29
88.00	80.0	Overload	KSI	36.00	10.32	6.80	3.511	183.99
99.00	**90.0**	**Flexure**	**KSI**	**36.00**	**5.79**	**3.90**	**6.121**	**320.73**
99.00	90.0	Shear	KIPS	542.44	-63.87	-58.49	6.600	345.83
99.00	90.0	Overload	KSI	36.00	5.79	3.90	7.277	381.33
107.00	97.3	Flexure	KSI	36.00	1.71	1.17	24.387	1277.90
107.00	**97.3**	**Shear**	**KIPS**	**324.36**	**-75.21**	**-63.98**	**2.951**	**154.64**
107.00	97.3	Overload	KSI	36.00	1.71	1.17	27.804	1456.91
110.00	100.0	Flexure	KSI	-36.00	-0.00	-0.00	99.000	5187.60
110.00	**100.0**	**Shear**	**KIPS**	**324.36**	**-79.47**	**-66.03**	**2.786**	**145.98**
110.00	100.0	Overload	KSI	-36.00	-0.00	-0.00	99.000	5187.60

Detailed Rating Results
Girder A - As Inspected
RI-6
Axle Load
Impact: As Requested
Lane: As Requested

Span 1

Location (ft)	Percent	Limit State	Units	Capacity	DL + Adj -LL*	LL	Permit Rating Factor	Permit Load Rating (Ton)
0.00	0.0	Flexure	KSI	-36.00	-0.00	-0.00	99.000	6435.00
0.00	**0.0**	**Shear**	**KIPS**	**303.17**	**79.47**	**74.91**	**2.127**	**138.25**
0.00	0.0	Overload	KSI	-36.00	-0.00	-0.00	99.000	6435.00
0.50	0.5	Flexure	KSI	-36.00	-0.33	-0.10	99.000	6435.00
0.50	**0.5**	**Shear**	**KIPS**	**165.82**	**78.76**	**74.48**	**0.654**	**42.52**
0.50	0.5	Overload	KSI	-36.00	-0.33	-0.10	99.000	6435.00
1.00	0.9	Flexure	KSI	36.00	0.61	0.48	59.656	3877.63
1.00	**0.9**	**Shear**	**KIPS**	**165.82**	**78.05**	**74.06**	**0.668**	**43.44**
1.00	0.9	Overload	KSI	36.00	0.61	0.48	70.227	4564.78
10.84	**9.9**	**Flexure**	**KSI**	**36.00**	**5.73**	**4.34**	**5.303**	**344.72**
10.84	9.9	Shear	KIPS	533.09	64.09	65.69	5.519	358.75
10.84	9.9	Overload	KSI	36.00	5.73	4.34	6.567	426.85
11.00	**10.0**	**Flexure**	**KSI**	**36.00**	**5.79**	**4.38**	**5.240**	**340.61**
11.00	10.0	Shear	KIPS	542.44	63.87	65.55	5.650	367.26
11.00	10.0	Overload	KSI	36.00	5.79	4.38	6.493	422.07
22.00	**20.0**	**Flexure**	**KSI**	**36.00**	**10.32**	**7.52**	**2.397**	**155.81**
22.00	20.0	Shear	KIPS	542.44	48.26	56.19	6.894	448.11
22.00	20.0	Overload	KSI	36.00	10.32	7.52	3.176	206.41

25.50	**23.2**	**Flexure**	**KSI**	**36.00**	**11.49**	**8.33**	**2.012**	**130.78**
25.50	23.2	Shear	KIPS	542.44	43.06	53.21	7.386	480.10
25.50	23.2	Overload	KSI	36.00	11.49	8.33	2.726	177.21
33.00	**30.0**	**Flexure**	**KSI**	**36.00**	**10.65**	**7.78**	**2.271**	**147.58**
33.00	30.0	Shear	KIPS	542.44	32.17	46.83	8.646	561.97
33.00	30.0	Overload	KSI	36.00	10.65	7.78	3.028	196.84
44.00	**40.0**	**Flexure**	**KSI**	**36.00**	**12.19**	**8.51**	**1.880**	**122.21**
44.00	40.0	Shear	KIPS	542.44	16.20	37.47	11.269	732.49
44.00	40.0	Overload	KSI	36.00	12.19	8.51	2.588	168.20
49.50	**45.0**	**Flexure**	**KSI**	**36.00**	**12.57**	**8.58**	**1.817**	**118.10**
49.50	45.0	Shear	KIPS	542.44	7.98	32.79	13.150	854.73
49.50	45.0	Overload	KSI	36.00	12.57	8.58	2.522	163.96
55.00	**50.0**	**Flexure**	**KSI**	**36.00**	**12.69**	**8.39**	**1.840**	**119.60**
55.00	50.0	Shear	KIPS	542.44	0.00	-28.11	15.648	1017.13
55.00	50.0	Overload	KSI	36.00	12.69	8.39	2.562	166.54
66.00	**60.0**	**Flexure**	**KSI**	**36.00**	**12.19**	**8.51**	**1.880**	**122.21**
66.00	60.0	Shear	KIPS	542.44	-16.20	-37.47	11.269	732.49
66.00	60.0	Overload	KSI	36.00	12.19	8.51	2.588	168.20
77.00	**70.0**	**Flexure**	**KSI**	**36.00**	**10.65**	**7.78**	**2.271**	**147.58**
77.00	70.0	Shear	KIPS	542.44	-32.17	-46.83	8.646	561.97
77.00	70.0	Overload	KSI	36.00	10.65	7.78	3.028	196.84
84.50	**76.8**	**Flexure**	**KSI**	**36.00**	**11.49**	**8.33**	**2.012**	**130.78**
84.50	76.8	Shear	KIPS	542.44	-43.06	-53.21	7.386	480.10
84.50	76.8	Overload	KSI	36.00	11.49	8.33	2.726	177.21
88.00	**80.0**	**Flexure**	**KSI**	**36.00**	**10.32**	**7.52**	**2.397**	**155.81**
88.00	80.0	Shear	KIPS	542.44	-48.26	-56.19	6.894	448.11
88.00	80.0	Overload	KSI	36.00	10.32	7.52	3.176	206.41
99.00	**90.0**	**Flexure**	**KSI**	**36.00**	**5.79**	**4.38**	**5.240**	**340.61**
99.00	90.0	Shear	KIPS	542.44	-63.87	-65.55	5.650	367.26
99.00	90.0	Overload	KSI	36.00	5.79	4.38	6.493	422.07
107.00	97.3	Flexure	KSI	36.00	1.71	1.32	20.689	1344.76
107.00	**97.3**	**Shear**	**KIPS**	**324.36**	**-75.21**	**-72.36**	**2.504**	**162.73**
107.00	97.3	Overload	KSI	36.00	1.71	1.32	24.583	1597.92
110.00	100.0	Flexure	KSI	-36.00	-0.00	-0.00	99.000	6435.00
110.00	**100.0**	**Shear**	**KIPS**	**324.36**	**-79.47**	**-74.91**	**2.356**	**153.16**
110.00	100.0	Overload	KSI	-36.00	-0.00	-0.00	99.000	6435.00

Detailed Rating Results
Girder A - As Inspected
RIDOT H20 Truck
Axle Load
Impact: As Requested
Lane: As Requested

Span 1

Location (ft)	Percent	Limit State	Units	Capacity	DL + Adj -LL*	LL	Legal Rating Factor	Legal Load Rating (Ton)
0.00	0.0	Flexure	KSI	-36.00	-0.00	-0.00	99.000	1980.00
0.00	**0.0**	**Shear**	**KIPS**	**303.17**	**79.47**	**28.07**	**5.385**	**107.70**
0.00	0.0	Overload	KSI	-36.00	-0.00	-0.00	99.000	1980.00
0.50	0.5	Flexure	KSI	-35.65	-0.33	-0.04	99.000	1980.00
0.50	**0.5**	**Shear**	**KIPS**	**165.82**	**78.76**	**27.94**	**1.654**	**33.09**
0.50	0.5	Overload	KSI	-36.00	-0.33	-0.04	99.000	1980.00
1.00	0.9	Flexure	KSI	-33.60	-0.70	-0.07	99.000	1980.00
1.00	**0.9**	**Shear**	**KIPS**	**165.82**	**78.05**	**27.80**	**1.689**	**33.77**
1.00	0.9	Overload	KSI	-36.00	-0.70	-0.07	99.000	1980.00
10.84	**9.9**	**Flexure**	**KSI**	**36.00**	**5.73**	**1.67**	**13.098**	**261.96**
10.84	9.9	Shear	KIPS	533.09	64.09	25.23	13.631	272.63
10.84	9.9	Overload	KSI	36.00	5.73	1.67	13.152	263.05
11.00	**10.0**	**Flexure**	**KSI**	**36.00**	**5.79**	**1.68**	**12.937**	**258.73**
11.00	10.0	Shear	KIPS	542.44	63.87	25.19	13.949	278.98
11.00	10.0	Overload	KSI	36.00	5.79	1.68	13.000	259.99
22.00	**20.0**	**Flexure**	**KSI**	**36.00**	**10.32**	**2.98**	**5.742**	**114.84**
22.00	20.0	Shear	KIPS	542.44	48.26	22.31	16.473	329.47
22.00	20.0	Overload	KSI	36.00	10.32	2.98	6.168	123.37
25.50	**23.2**	**Flexure**	**KSI**	**36.00**	**11.49**	**3.31**	**4.803**	**96.06**
25.50	23.2	Shear	KIPS	542.44	43.06	21.39	17.430	348.59
25.50	23.2	Overload	KSI	36.00	11.49	3.31	5.277	105.55
33.00	**30.0**	**Flexure**	**KSI**	**36.00**	**10.65**	**3.14**	**5.336**	**106.72**
33.00	30.0	Shear	KIPS	542.44	32.17	19.43	19.770	395.40
33.00	30.0	Overload	KSI	36.00	10.65	3.14	5.771	115.42
44.00	**40.0**	**Flexure**	**KSI**	**36.00**	**12.19**	**3.56**	**4.256**	**85.12**
44.00	40.0	Shear	KIPS	542.44	16.20	16.55	24.207	484.15
44.00	40.0	Overload	KSI	36.00	12.19	3.56	4.750	95.01
49.50	**45.0**	**Flexure**	**KSI**	**36.00**	**12.57**	**3.66**	**4.037**	**80.74**
49.50	45.0	Shear	KIPS	542.44	7.98	15.11	27.076	541.51
49.50	45.0	Overload	KSI	36.00	12.57	3.66	4.545	90.90
55.00	**50.0**	**Flexure**	**KSI**	**36.00**	**12.69**	**3.68**	**3.981**	**79.62**
55.00	50.0	Shear	KIPS	542.44	0.00	-13.67	30.531	610.63
55.00	50.0	Overload	KSI	36.00	12.69	3.68	4.495	89.90
66.00	**60.0**	**Flexure**	**KSI**	**36.00**	**12.19**	**3.56**	**4.256**	**85.12**
66.00	60.0	Shear	KIPS	542.44	-16.20	-16.55	24.207	484.15
66.00	60.0	Overload	KSI	36.00	12.19	3.56	4.750	95.01

77.00	**70.0**	**Flexure**	**KSI**	**36.00**	**10.65**	**3.14**	**5.336**	**106.72**
77.00	70.0	Shear	KIPS	542.44	-32.17	-19.43	19.770	395.40
77.00	70.0	Overload	KSI	36.00	10.65	3.14	5.771	115.42
84.50	**76.8**	**Flexure**	**KSI**	**36.00**	**11.49**	**3.31**	**4.803**	**96.06**
84.50	76.8	Shear	KIPS	542.44	-43.06	-21.39	17.430	348.59
84.50	76.8	Overload	KSI	36.00	11.49	3.31	5.277	105.55
88.00	**80.0**	**Flexure**	**KSI**	**36.00**	**10.32**	**2.98**	**5.742**	**114.84**
88.00	80.0	Shear	KIPS	542.44	-48.26	-22.31	16.473	329.47
88.00	80.0	Overload	KSI	36.00	10.32	2.98	6.168	123.37
99.00	**90.0**	**Flexure**	**KSI**	**36.00**	**5.79**	**1.68**	**12.937**	**258.73**
99.00	90.0	Shear	KIPS	542.44	-63.87	-25.19	13.949	278.98
99.00	90.0	Overload	KSI	36.00	5.79	1.68	13.000	259.99
107.00	97.3	Flexure	KSI	36.00	1.71	0.50	52.051	1041.03
107.00	**97.3**	**Shear**	**KIPS**	**324.36**	**-75.21**	**-27.28**	**6.299**	**125.98**
107.00	97.3	Overload	KSI	36.00	1.71	0.50	50.156	1003.11
110.00	100.0	Flexure	KSI	-36.00	-0.00	-0.00	99.000	1980.00
110.00	**100.0**	**Shear**	**KIPS**	**324.36**	**-79.47**	**-28.07**	**5.966**	**119.31**
110.00	100.0	Overload	KSI	-36.00	-0.00	-0.00	99.000	1980.00

Detailed Rating Results
Girder A - As Inspected
RI-OP 1
Axle Load
Impact: As Requested
Lane: As Requested

Span 1

Location (ft)	Percent	Limit State	Units	Capacity	DL + Adj -LL*	LL	Permit Rating Factor	Permit Load Rating (Ton)
0.00	0.0	Flexure	KSI	-36.00	-0.00	-0.00	99.000	5593.50
0.00	**0.0**	**Shear**	**KIPS**	**303.17**	**79.47**	**46.50**	**3.521**	**198.93**
0.00	0.0	Overload	KSI	-36.00	-0.00	-0.00	99.000	5593.50
0.50	0.5	Flexure	KSI	-35.96	-0.33	-0.06	99.000	5593.50
0.50	**0.5**	**Shear**	**KIPS**	**165.82**	**78.76**	**46.27**	**1.082**	**61.14**
0.50	0.5	Overload	KSI	-36.00	-0.33	-0.06	99.000	5593.50
1.00	0.9	Flexure	KSI	36.00	0.61	0.30	98.639	5573.12
1.00	**0.9**	**Shear**	**KIPS**	**165.82**	**78.05**	**46.03**	**1.105**	**62.43**
1.00	0.9	Overload	KSI	-36.00	-0.70	-0.12	99.000	5593.50
10.84	**9.9**	**Flexure**	**KSI**	**36.00**	**5.73**	**2.73**	**8.658**	**489.15**
10.84	9.9	Shear	KIPS	533.09	64.09	41.35	9.010	509.07

10.84	9.9	Overload	KSI	36.00	5.73	2.73	10.432	589.41
11.00	**10.0**	**Flexure**	**KSI**	**36.00**	**5.79**	**2.75**	**8.552**	**483.21**
11.00	10.0	Shear	KIPS	542.44	63.87	41.27	9.222	521.02
11.00	10.0	Overload	KSI	36.00	5.79	2.75	10.313	582.67
22.00	**20.0**	**Flexure**	**KSI**	**36.00**	**10.32**	**4.89**	**3.787**	**213.99**
22.00	20.0	Shear	KIPS	542.44	48.26	36.04	11.045	624.03
22.00	20.0	Overload	KSI	36.00	10.32	4.89	4.883	275.87
25.50	**23.2**	**Flexure**	**KSI**	**36.00**	**11.49**	**5.44**	**3.164**	**178.79**
25.50	23.2	Shear	KIPS	542.44	43.06	34.38	11.748	663.78
25.50	23.2	Overload	KSI	36.00	11.49	5.44	4.173	235.75
33.00	**30.0**	**Flexure**	**KSI**	**36.00**	**10.65**	**5.15**	**3.521**	**198.96**
33.00	30.0	Shear	KIPS	542.44	32.17	30.81	13.503	762.93
33.00	30.0	Overload	KSI	36.00	10.65	5.15	4.570	258.22
44.00	**40.0**	**Flexure**	**KSI**	**36.00**	**12.19**	**5.90**	**2.785**	**157.34**
44.00	40.0	Shear	KIPS	542.44	16.20	25.58	16.962	958.35
44.00	40.0	Overload	KSI	36.00	12.19	5.90	3.730	210.74
49.50	**45.0**	**Flexure**	**KSI**	**36.00**	**12.57**	**6.10**	**2.627**	**148.43**
49.50	45.0	Shear	KIPS	542.44	7.98	22.97	19.293	1090.04
49.50	45.0	Overload	KSI	36.00	12.57	6.10	3.549	200.52
55.00	**50.0**	**Flexure**	**KSI**	**36.00**	**12.69**	**6.15**	**2.582**	**145.86**
55.00	50.0	Shear	KIPS	542.44	0.00	-20.35	22.210	1254.89
55.00	50.0	Overload	KSI	36.00	12.69	6.15	3.498	197.64
66.00	**60.0**	**Flexure**	**KSI**	**36.00**	**12.19**	**5.90**	**2.785**	**157.34**
66.00	60.0	Shear	KIPS	542.44	-16.20	-25.58	16.962	958.35
66.00	60.0	Overload	KSI	36.00	12.19	5.90	3.730	210.74
77.00	**70.0**	**Flexure**	**KSI**	**36.00**	**10.65**	**5.15**	**3.521**	**198.96**
77.00	70.0	Shear	KIPS	542.44	-32.17	-30.81	13.503	762.93
77.00	70.0	Overload	KSI	36.00	10.65	5.15	4.570	258.22
84.50	**76.8**	**Flexure**	**KSI**	**36.00**	**11.49**	**5.44**	**3.164**	**178.79**
84.50	76.8	Shear	KIPS	542.44	-43.06	-34.38	11.748	663.78
84.50	76.8	Overload	KSI	36.00	11.49	5.44	4.173	235.75
88.00	**80.0**	**Flexure**	**KSI**	**36.00**	**10.32**	**4.89**	**3.787**	**213.99**
88.00	80.0	Shear	KIPS	542.44	-48.26	-36.04	11.045	624.03
88.00	80.0	Overload	KSI	36.00	10.32	4.89	4.883	275.87
99.00	**90.0**	**Flexure**	**KSI**	**36.00**	**5.79**	**2.75**	**8.552**	**483.21**
99.00	90.0	Shear	KIPS	542.44	-63.87	-41.27	9.222	521.02
99.00	90.0	Overload	KSI	36.00	5.79	2.75	10.313	582.67
107.00	97.3	Flexure	KSI	36.00	1.71	0.82	34.127	1928.18
107.00	**97.3**	**Shear**	**KIPS**	**324.36**	**-75.21**	**-45.08**	**4.130**	**233.33**
107.00	97.3	Overload	KSI	36.00	1.71	0.82	39.461	2229.55
110.00	100.0	Flexure	KSI	-36.00	-0.00	-0.00	99.000	5593.50
110.00	**100.0**	**Shear**	**KIPS**	**324.36**	**-79.47**	**-46.50**	**3.901**	**220.38**
110.00	100.0	Overload	KSI	-36.00	-0.00	-0.00	99.000	5593.50

Detailed Rating Results
Girder A - As Inspected
RI-OP 2
Axle Load
Impact: As Requested
Lane: As Requested

Span 1

Location (ft)	Percent	Limit State	Units	Capacity	DL + Adj -LL*	LL	Permit Rating Factor	Permit Load Rating (Ton)
0.00	0.0	Flexure	KSI	-36.00	-0.00	-0.00	99.000	7920.00
0.00	**0.0**	**Shear**	**KIPS**	**303.17**	**79.47**	**54.05**	**3.029**	**242.32**
0.00	0.0	Overload	KSI	-36.00	-0.00	-0.00	99.000	7920.00
0.50	0.5	Flexure	KSI	-36.00	-0.33	-0.07	99.000	7920.00
0.50	**0.5**	**Shear**	**KIPS**	**165.82**	**78.76**	**53.72**	**0.932**	**74.56**
0.50	0.5	Overload	KSI	-36.00	-0.33	-0.07	99.000	7920.00
1.00	0.9	Flexure	KSI	36.00	0.61	0.34	85.052	6804.17
1.00	**0.9**	**Shear**	**KIPS**	**165.82**	**78.05**	**53.38**	**0.953**	**76.22**
1.00	0.9	Overload	KSI	36.00	0.61	0.34	97.431	7794.49
10.84	**9.9**	**Flexure**	**KSI**	**36.00**	**5.73**	**3.09**	**7.656**	**612.51**
10.84	9.9	Shear	KIPS	533.09	64.09	46.76	7.968	637.45
10.84	9.9	Overload	KSI	36.00	5.73	3.09	9.226	738.05
11.00	**10.0**	**Flexure**	**KSI**	**36.00**	**5.79**	**3.11**	**7.567**	**605.35**
11.00	10.0	Shear	KIPS	542.44	63.87	46.65	8.159	652.72
11.00	10.0	Overload	KSI	36.00	5.79	3.11	9.124	729.95
22.00	**20.0**	**Flexure**	**KSI**	**36.00**	**10.32**	**5.37**	**3.449**	**275.95**
22.00	20.0	Shear	KIPS	542.44	48.26	39.24	10.144	811.53
22.00	20.0	Overload	KSI	36.00	10.32	5.37	4.447	355.73
25.50	**23.2**	**Flexure**	**KSI**	**36.00**	**11.49**	**5.90**	**2.919**	**233.52**
25.50	23.2	Shear	KIPS	542.44	43.06	36.89	10.950	875.96
25.50	23.2	Overload	KSI	36.00	11.49	5.90	3.849	307.92
33.00	**30.0**	**Flexure**	**KSI**	**36.00**	**10.65**	**5.46**	**3.322**	**265.76**
33.00	30.0	Shear	KIPS	542.44	32.17	31.84	13.069	1045.49
33.00	30.0	Overload	KSI	36.00	10.65	5.46	4.312	344.92
44.00	**40.0**	**Flexure**	**KSI**	**36.00**	**12.19**	**5.90**	**2.786**	**222.89**
44.00	40.0	Shear	KIPS	542.44	16.20	24.76	17.522	1401.79
44.00	40.0	Overload	KSI	36.00	12.19	5.90	3.732	298.53
49.50	**45.0**	**Flexure**	**KSI**	**36.00**	**12.57**	**5.89**	**2.718**	**217.47**
49.50	45.0	Shear	KIPS	542.44	7.98	21.36	20.742	1659.38

49.50	45.0	Overload	KSI	36.00	12.57	5.89	3.672	293.80
55.00	**50.0**	**Flexure**	**KSI**	**36.00**	**12.69**	**5.75**	**2.762**	**220.95**
55.00	50.0	Shear	KIPS	542.44	0.00	-18.09	24.995	1999.60
55.00	50.0	Overload	KSI	36.00	12.69	5.75	3.742	299.39
66.00	**60.0**	**Flexure**	**KSI**	**36.00**	**12.19**	**5.90**	**2.786**	**222.89**
66.00	60.0	Shear	KIPS	542.44	-16.20	-24.76	17.522	1401.79
66.00	60.0	Overload	KSI	36.00	12.19	5.90	3.732	298.53
77.00	**70.0**	**Flexure**	**KSI**	**36.00**	**10.65**	**5.46**	**3.322**	**265.76**
77.00	70.0	Shear	KIPS	542.44	-32.17	-31.84	13.069	1045.49
77.00	70.0	Overload	KSI	36.00	10.65	5.46	4.312	344.92
84.50	**76.8**	**Flexure**	**KSI**	**36.00**	**11.49**	**5.90**	**2.919**	**233.52**
84.50	76.8	Shear	KIPS	542.44	-43.06	-36.89	10.950	875.96
84.50	76.8	Overload	KSI	36.00	11.49	5.90	3.849	307.92
88.00	**80.0**	**Flexure**	**KSI**	**36.00**	**10.32**	**5.37**	**3.449**	**275.95**
88.00	80.0	Shear	KIPS	542.44	-48.26	-39.24	10.144	811.53
88.00	80.0	Overload	KSI	36.00	10.32	5.37	4.447	355.73
99.00	**90.0**	**Flexure**	**KSI**	**36.00**	**5.79**	**3.11**	**7.567**	**605.35**
99.00	90.0	Shear	KIPS	542.44	-63.87	-46.65	8.159	652.72
99.00	90.0	Overload	KSI	36.00	5.79	3.11	9.124	729.95
107.00	97.3	Flexure	KSI	36.00	1.71	0.95	29.564	2365.12
107.00	**97.3**	**Shear**	**KIPS**	**324.36**	**-75.21**	**-52.03**	**3.578**	**286.21**
107.00	97.3	Overload	KSI	36.00	1.71	0.95	34.185	2734.78
110.00	100.0	Flexure	KSI	-36.00	-0.00	-0.00	99.000	7920.00
110.00	**100.0**	**Shear**	**KIPS**	**324.36**	**-79.47**	**-54.05**	**3.356**	**268.46**
110.00	100.0	Overload	KSI	-36.00	-0.00	-0.00	99.000	7920.00

Detailed Rating Results
Girder A - As Inspected
RI-OP 3
Axle Load
Impact: As Requested
Lane: As Requested

Span 1

Location (ft)	Percent	Limit State	Units	Capacity	DL + Adj -LL*	LL	Permit Rating Factor	Permit Load Rating (Ton)
0.00	0.0	Flexure	KSI	-36.00	-0.00	-0.00	99.000	11187.00
0.00	**0.0**	**Shear**	**KIPS**	**303.17**	**79.47**	**60.36**	**2.713**	**306.54**
0.00	0.0	Overload	KSI	-36.00	-0.00	-0.00	99.000	11187.00
0.50	0.5	Flexure	KSI	-36.00	-0.33	-0.08	99.000	11187.00

0.50	**0.5**	**Shear**	**KIPS**	**165.82**	**78.76**	**59.88**	**0.836**	**94.48**
0.50	0.5	Overload	KSI	-36.00	-0.33	-0.08	99.000	11187.00
1.00	0.9	Flexure	KSI	36.00	0.61	0.38	76.419	8635.34
1.00	**0.9**	**Shear**	**KIPS**	**165.82**	**78.05**	**59.41**	**0.856**	**96.74**
1.00	0.9	Overload	KSI	36.00	0.61	0.38	87.541	9892.18
10.84	**9.9**	**Flexure**	**KSI**	**36.00**	**5.73**	**3.35**	**7.063**	**798.14**
10.84	9.9	Shear	KIPS	533.09	64.09	50.43	7.388	834.85
10.84	9.9	Overload	KSI	36.00	5.73	3.35	8.511	961.74
11.00	**10.0**	**Flexure**	**KSI**	**36.00**	**5.79**	**3.38**	**6.977**	**788.43**
11.00	10.0	Shear	KIPS	542.44	63.87	50.28	7.570	855.37
11.00	10.0	Overload	KSI	36.00	5.79	3.38	8.413	950.71
22.00	**20.0**	**Flexure**	**KSI**	**36.00**	**10.32**	**5.70**	**3.247**	**366.94**
22.00	20.0	Shear	KIPS	542.44	48.26	41.21	9.660	1091.59
22.00	20.0	Overload	KSI	36.00	10.32	5.70	4.186	473.04
25.50	**23.2**	**Flexure**	**KSI**	**36.00**	**11.49**	**6.27**	**2.748**	**310.52**
25.50	23.2	Shear	KIPS	542.44	43.06	38.74	10.427	1178.25
25.50	23.2	Overload	KSI	36.00	11.49	6.27	3.623	409.45
33.00	**30.0**	**Flexure**	**KSI**	**36.00**	**10.65**	**5.80**	**3.127**	**353.36**
33.00	30.0	Shear	KIPS	542.44	32.17	33.43	12.445	1406.26
33.00	30.0	Overload	KSI	36.00	10.65	5.80	4.059	458.62
44.00	**40.0**	**Flexure**	**KSI**	**36.00**	**12.19**	**6.43**	**2.557**	**288.89**
44.00	40.0	Shear	KIPS	542.44	16.20	26.43	16.418	1855.24
44.00	40.0	Overload	KSI	36.00	12.19	6.43	3.424	386.93
49.50	**45.0**	**Flexure**	**KSI**	**36.00**	**12.57**	**6.54**	**2.448**	**276.58**
49.50	45.0	Shear	KIPS	542.44	7.98	23.52	18.836	2128.46
49.50	45.0	Overload	KSI	36.00	12.57	6.54	3.307	373.66
55.00	**50.0**	**Flexure**	**KSI**	**36.00**	**12.69**	**6.49**	**2.447**	**276.55**
55.00	50.0	Shear	KIPS	542.44	0.00	-20.75	21.788	2461.99
55.00	50.0	Overload	KSI	36.00	12.69	6.49	3.316	374.73
66.00	**60.0**	**Flexure**	**KSI**	**36.00**	**12.19**	**6.43**	**2.557**	**288.89**
66.00	60.0	Shear	KIPS	542.44	-16.20	-26.43	16.418	1855.24
66.00	60.0	Overload	KSI	36.00	12.19	6.43	3.424	386.93
77.00	**70.0**	**Flexure**	**KSI**	**36.00**	**10.65**	**5.80**	**3.127**	**353.36**
77.00	70.0	Shear	KIPS	542.44	-32.17	-33.43	12.445	1406.26
77.00	70.0	Overload	KSI	36.00	10.65	5.80	4.059	458.62
84.50	**76.8**	**Flexure**	**KSI**	**36.00**	**11.49**	**6.27**	**2.748**	**310.52**
84.50	76.8	Shear	KIPS	542.44	-43.06	-38.74	10.427	1178.25
84.50	76.8	Overload	KSI	36.00	11.49	6.27	3.623	409.45
88.00	**80.0**	**Flexure**	**KSI**	**36.00**	**10.32**	**5.70**	**3.247**	**366.94**
88.00	80.0	Shear	KIPS	542.44	-48.26	-41.21	9.660	1091.59
88.00	80.0	Overload	KSI	36.00	10.32	5.70	4.186	473.04
99.00	**90.0**	**Flexure**	**KSI**	**36.00**	**5.79**	**3.38**	**6.977**	**788.43**
99.00	90.0	Shear	KIPS	542.44	-63.87	-50.28	7.570	855.37

99.00	90.0	Overload	KSI	36.00	5.79	3.38	8.413	950.71
107.00	97.3	Flexure	KSI	36.00	1.71	1.05	26.714	3018.71
107.00	**97.3**	**Shear**	**KIPS**	**324.36**	**-75.21**	**-57.59**	**3.233**	**365.30**
107.00	97.3	Overload	KSI	36.00	1.71	1.05	30.890	3490.52
110.00	100.0	Flexure	KSI	-36.00	-0.00	-0.00	99.000	11187.00
110.00	**100.0**	**Shear**	**KIPS**	**324.36**	**-79.47**	**-60.36**	**3.005**	**339.60**
110.00	100.0	Overload	KSI	-36.00	-0.00	-0.00	99.000	11187.00

Detailed Rating Results
Girder A - As Inspected
RIPTA Bus
Axle Load
Impact: As Requested
Lane: As Requested

Span 1

Location (ft)	Percent	Limit State	Units	Capacity	DL + Adj -LL*	LL	Legal Rating Factor	Legal Load Rating (Ton)
0.00	0.0	Flexure	KSI	-36.00	-0.00	-0.00	99.000	2059.20
0.00	**0.0**	**Shear**	**KIPS**	**303.17**	**79.47**	**27.73**	**5.450**	**113.37**
0.00	0.0	Overload	KSI	-36.00	-0.00	-0.00	99.000	2059.20
0.50	0.5	Flexure	KSI	-35.64	-0.33	-0.04	99.000	2059.20
0.50	**0.5**	**Shear**	**KIPS**	**165.82**	**78.76**	**27.59**	**1.675**	**34.84**
0.50	0.5	Overload	KSI	-36.00	-0.33	-0.04	99.000	2059.20
1.00	0.9	Flexure	KSI	-33.59	-0.70	-0.07	99.000	2059.20
1.00	**0.9**	**Shear**	**KIPS**	**165.82**	**78.05**	**27.46**	**1.710**	**35.57**
1.00	0.9	Overload	KSI	-36.00	-0.70	-0.07	99.000	2059.20
10.84	**9.9**	**Flexure**	**KSI**	**36.00**	**5.73**	**1.64**	**13.336**	**277.39**
10.84	9.9	Shear	KIPS	533.09	64.09	24.78	13.879	288.69
10.84	9.9	Overload	KSI	36.00	5.73	1.64	13.391	278.54
11.00	**10.0**	**Flexure**	**KSI**	**36.00**	**5.79**	**1.65**	**13.173**	**274.00**
11.00	10.0	Shear	KIPS	542.44	63.87	24.73	14.204	295.44
11.00	10.0	Overload	KSI	36.00	5.79	1.65	13.237	275.33
22.00	**20.0**	**Flexure**	**KSI**	**36.00**	**10.32**	**2.90**	**5.892**	**122.55**
22.00	20.0	Shear	KIPS	542.44	48.26	21.74	16.903	351.59
22.00	20.0	Overload	KSI	36.00	10.32	2.90	6.329	131.65
25.50	**23.2**	**Flexure**	**KSI**	**36.00**	**11.49**	**3.22**	**4.942**	**102.80**
25.50	23.2	Shear	KIPS	542.44	43.06	20.79	17.936	373.07
25.50	23.2	Overload	KSI	36.00	11.49	3.22	5.431	112.96
33.00	**30.0**	**Flexure**	**KSI**	**36.00**	**10.65**	**3.03**	**5.530**	**115.03**

33.00	30.0	Shear	KIPS	542.44	32.17	18.74	20.490	426.19
33.00	30.0	Overload	KSI	36.00	10.65	3.03	5.981	124.41
44.00	**40.0**	**Flexure**	**KSI**	**36.00**	**12.19**	**3.39**	**4.472**	**93.01**
44.00	40.0	Shear	KIPS	542.44	16.20	15.75	25.433	529.01
44.00	40.0	Overload	KSI	36.00	12.19	3.39	4.991	103.81
49.50	**45.0**	**Flexure**	**KSI**	**36.00**	**12.57**	**3.45**	**4.279**	**89.01**
49.50	45.0	Shear	KIPS	542.44	7.98	14.25	28.700	596.96
49.50	45.0	Overload	KSI	36.00	12.57	3.45	4.818	100.21
55.00	**50.0**	**Flexure**	**KSI**	**36.00**	**12.69**	**3.43**	**4.266**	**88.73**
55.00	50.0	Shear	KIPS	542.44	0.00	-12.75	32.716	680.50
55.00	50.0	Overload	KSI	36.00	12.69	3.43	4.817	100.19
66.00	**60.0**	**Flexure**	**KSI**	**36.00**	**12.19**	**3.39**	**4.472**	**93.01**
66.00	60.0	Shear	KIPS	542.44	-16.20	-15.75	25.433	529.01
66.00	60.0	Overload	KSI	36.00	12.19	3.39	4.991	103.81
77.00	**70.0**	**Flexure**	**KSI**	**36.00**	**10.65**	**3.03**	**5.530**	**115.03**
77.00	70.0	Shear	KIPS	542.44	-32.17	-18.74	20.490	426.19
77.00	70.0	Overload	KSI	36.00	10.65	3.03	5.981	124.41
84.50	**76.8**	**Flexure**	**KSI**	**36.00**	**11.49**	**3.22**	**4.942**	**102.80**
84.50	76.8	Shear	KIPS	542.44	-43.06	-20.79	17.936	373.07
84.50	76.8	Overload	KSI	36.00	11.49	3.22	5.431	112.96
88.00	**80.0**	**Flexure**	**KSI**	**36.00**	**10.32**	**2.90**	**5.892**	**122.55**
88.00	80.0	Shear	KIPS	542.44	-48.26	-21.74	16.903	351.59
88.00	80.0	Overload	KSI	36.00	10.32	2.90	6.329	131.65
99.00	**90.0**	**Flexure**	**KSI**	**36.00**	**5.79**	**1.65**	**13.173**	**274.00**
99.00	90.0	Shear	KIPS	542.44	-63.87	-24.73	14.204	295.44
99.00	90.0	Overload	KSI	36.00	5.79	1.65	13.237	275.33
107.00	97.3	Flexure	KSI	36.00	1.71	0.49	52.763	1097.48
107.00	**97.3**	**Shear**	**KIPS**	**324.36**	**-75.21**	**-26.91**	**6.385**	**132.81**
107.00	97.3	Overload	KSI	36.00	1.71	0.49	50.842	1057.51
110.00	100.0	Flexure	KSI	-36.00	-0.00	-0.00	99.000	2059.20
110.00	**100.0**	**Shear**	**KIPS**	**324.36**	**-79.47**	**-27.73**	**6.038**	**125.59**
110.00	100.0	Overload	KSI	-36.00	-0.00	-0.00	99.000	2059.20

Note:
*Adj-LL is only applicable for Permit load rating.

6A Load and Resistance Factor Rating
6A.6 Steel Structures
6A.6.4 Limit States
6A.6.4.2 Legal Load Rating and Permit Load Rating
6A.6.4.2.2 Service Limit State
(AASHTO Manual for Bridge Evaluation, Third Edition - 2017)

Steel Plate - At Location = 49.5000 (ft) - Left Stage 3

Service Limit State Flexure Rating Calculations

INPUT:

Section Type: Composite
Allow Plastic Analysis Control Option: No
Allow Moment Redistribution Control Option: No
Moment Redistribution Qualified: No, redistribution did not occur.

Stage 1 DC Moment = 1388.0 (kip-ft)
Stage 1 DW Moment = 0.0 (kip-ft)
Stage 1 DW-WS Moment = 0.0 (kip-ft)
Stage 1 SE Moment = 0.0 (kip-ft)
Stage 2 DC Moment = 384.8 (kip-ft)
Stage 2 DW Moment = 801.1 (kip-ft)
Stage 2 DW-WS Moment = 0.0 (kip-ft)
Stage 2 SE Moment = 0.0 (kip-ft)

Stage 1:

Component	C (in)	S (in^3)	Fy (ksi)
Top Flange	44.746	-1267.82	36.00
Bot Flange	-29.504	1922.83	36.00

Stage 2:

Positive Flexure			Negative Flexure		
Component	C (in)	S (in^3)	Component	C (in)	S (in^3)
Top Flange	31.129	-3234.77	Top Flange	44.746	-1267.82
Bot Flange	-43.121	2335.11	Bot Flange	-29.504	1922.83

Stage 3:

Positive Flexure			Negative Flexure		
Component	C (in)	S (in^3)	Component	C (in)	S (in^3)
Top Flange	18.634	-7574.82	Top Flange	44.746	-1267.82
Bot Flange	-55.616	2537.87	Bot Flange	-29.504	1922.83

Note: If the capacity has been overridden, the Resistance is computed as override phi*override capacity.
Otherwise the Resistance is computed as per the Specification.

Section Type: Composite

fR = 0.95*Rh*Fyf

Component: Top Flange

Load	Load Combo	Limit State	Flexure Type	LL (kip-ft)	Adj. LL (kip-ft)	DC	DW	DW-WS	LL	fDC (ksi)	fDW (ksi)	fDW-WS (ksi)	fLL (ksi)	Adj. fLL (ksi)	Phi	fR (ksi)	----- Override ----- Phi	fR (ksi)	RF	Capacity (Ton)
DesignInv	3	SER-II	pos	2102.1	---	1.00	1.00	1.00	1.30	-14.57	-2.97	0.00	-3.33	---	0.95	-36.00	---	---	3.849	138.56
DesignInv	3	SER-II	pos	0.0	---	1.00	1.00	1.00	1.30	-14.57	-2.97	0.00	0.00	---	0.95	-36.00	---	---	99.000	3564.00
DesignOp	3	SER-II	pos	2102.1	---	1.00	1.00	1.00	1.00	-14.57	-2.97	0.00	-3.33	---	0.95	-36.00	---	---	5.004	180.13
DesignOp	3	SER-II	pos	0.0	---	1.00	1.00	1.00	1.00	-14.57	-2.97	0.00	0.00	---	0.95	-36.00	---	---	99.000	3564.00
DesignInv	4	SER-II	pos	1771.0	---	1.00	1.00	1.00	1.30	-14.57	-2.97	0.00	-2.81	---	0.95	-36.00	---	---	4.568	164.46
DesignInv	4	SER-II	pos	0.0	---	1.00	1.00	1.00	1.30	-14.57	-2.97	0.00	0.00	---	0.95	-36.00	---	---	99.000	3564.00
DesignOp	4	SER-II	pos	1771.0	---	1.00	1.00	1.00	1.00	-14.57	-2.97	0.00	-2.81	---	0.95	-36.00	---	---	5.939	213.80
DesignOp	4	SER-II	pos	0.0	---	1.00	1.00	1.00	1.00	-14.57	-2.97	0.00	0.00	---	0.95	-36.00	---	---	99.000	3564.00
LegalRoutine	10	SER-II	pos	953.9	---	1.00	1.00	1.00	1.30	-14.57	-2.97	0.00	-1.51	---	0.95	-36.00	---	---	8.482	212.06
LegalRoutine	10	SER-II	pos	0.0	---	1.00	1.00	1.00	1.30	-14.57	-2.97	0.00	0.00	---	0.95	-36.00	---	---	99.000	2475.00
LegalRoutine	12	SER-II	pos	1183.7	---	1.00	1.00	1.00	1.30	-14.57	-2.97	0.00	-1.88	---	0.95	-36.00	---	---	6.835	246.07
LegalRoutine	12	SER-II	pos	0.0	---	1.00	1.00	1.00	1.30	-14.57	-2.97	0.00	0.00	---	0.95	-36.00	---	---	99.000	3564.00
LegalRoutine	11	SER-II	pos	1203.1	---	1.00	1.00	1.00	1.30	-14.57	-2.97	0.00	-1.91	---	0.95	-36.00	---	---	6.725	268.99
LegalRoutine	11	SER-II	pos	0.0	---	1.00	1.00	1.00	1.30	-14.57	-2.97	0.00	0.00	---	0.95	-36.00	---	---	99.000	3960.00
LegalSpecial	6	SER-II	pos	1053.4	---	1.00	1.00	1.00	1.30	-14.57	-2.97	0.00	-1.67	---	0.95	-36.00	---	---	7.681	207.38
LegalSpecial	6	SER-II	pos	0.0	---	1.00	1.00	1.00	1.30	-14.57	-2.97	0.00	0.00	---	0.95	-36.00	---	---	99.000	2673.00
LegalSpecial	7	SER-II	pos	1184.7	---	1.00	1.00	1.00	1.30	-14.57	-2.97	0.00	-1.88	---	0.95	-36.00	---	---	6.829	211.71
LegalSpecial	7	SER-II	pos	0.0	---	1.00	1.00	1.00	1.30	-14.57	-2.97	0.00	0.00	---	0.95	-36.00	---	---	99.000	3069.00
LegalSpecial	8	SER-II	pos	1320.5	---	1.00	1.00	1.00	1.30	-14.57	-2.97	0.00	-2.09	---	0.95	-36.00	---	---	6.127	212.92
LegalSpecial	8	SER-II	pos	0.0	---	1.00	1.00	1.00	1.30	-14.57	-2.97	0.00	0.00	---	0.95	-36.00	---	---	99.000	3440.25
LegalSpecial	9	SER-II	pos	1449.9	---	1.00	1.00	1.00	1.30	-14.57	-2.97	0.00	-2.30	---	0.95	-36.00	---	---	5.580	216.23
LegalSpecial	9	SER-II	pos	0.0	---	1.00	1.00	1.00	1.30	-14.57	-2.97	0.00	0.00	---	0.95	-36.00	---	---	99.000	3836.25
Permit	14	SER-II	pos	1483.8	---	1.00	1.00	1.00	1.00	-14.57	-2.97	0.00	-2.35	---	0.95	-36.00	---	---	7.088	269.36
Permit	14	SER-II	pos	0.0	---	1.00	1.00	1.00	1.00	-14.57	-2.97	0.00	0.00	---	0.95	-36.00	---	---	99.000	3762.00
Permit	15	SER-II	pos	1453.5	---	1.00	1.00	1.00	1.00	-14.57	-2.97	0.00	-2.30	---	0.95	-36.00	---	---	7.236	271.37
Permit	15	SER-II	pos	0.0	---	1.00	1.00	1.00	1.00	-14.57	-2.97	0.00	0.00	---	0.95	-36.00	---	---	99.000	3712.50
Permit	16	SER-II	pos	1862.4	---	1.00	1.00	1.00	1.00	-14.57	-2.97	0.00	-2.95	---	0.95	-36.00	---	---	5.648	295.93
Permit	16	SER-II	pos	0.0	---	1.00	1.00	1.00	1.00	-14.57	-2.97	0.00	0.00	---	0.95	-36.00	---	---	99.000	5187.60
Permit	17	SER-II	pos	1908.6	---	1.00	1.00	1.00	1.00	-14.57	-2.97	0.00	-3.02	---	0.95	-36.00	---	---	5.511	358.20
Permit	17	SER-II	pos	0.0	---	1.00	1.00	1.00	1.00	-14.57	-2.97	0.00	0.00	---	0.95	-36.00	---	---	99.000	6435.00
PermitSpec	18	SER-II	pos	1229.8	---	1.00	1.00	1.00	1.00	-14.57	-2.97	0.00	-1.95	---	0.95	-36.00	---	---	8.553	483.22
PermitSpec	18	SER-II	pos	0.0	---	1.00	1.00	1.00	1.00	-14.57	-2.97	0.00	0.00	---	0.95	-36.00	---	---	99.000	5593.50
PermitSpec	19	SER-II	pos	1188.5	---	1.00	1.00	1.00	1.00	-14.57	-2.97	0.00	-1.88	---	0.95	-36.00	---	---	8.850	707.99
PermitSpec	19	SER-II	pos	0.0	---	1.00	1.00	1.00	1.00	-14.57	-2.97	0.00	0.00	---	0.95	-36.00	---	---	99.000	7920.00
PermitSpec	20	SER-II	pos	1320.0	---	1.00	1.00	1.00	1.00	-14.57	-2.97	0.00	-2.09	---	0.95	-36.00	---	---	7.969	900.45
PermitSpec	20	SER-II	pos	0.0	---	1.00	1.00	1.00	1.00	-14.57	-2.97	0.00	0.00	---	0.95	-36.00	---	---	99.000	11187.00
LegalRoutine	21	SER-II	pos	768.7	---	1.00	1.00	1.00	1.30	-14.57	-2.97	0.00	-1.22	---	0.95	-36.00	---	---	10.526	218.94
LegalRoutine	21	SER-II	pos	0.0	---	1.00	1.00	1.00	1.30	-14.57	-2.97	0.00	0.00	---	0.95	-36.00	---	---	99.000	2059.20
LegalRoutine	13	SER-II	pos	814.8	---	1.00	1.00	1.00	1.30	-14.57	-2.97	0.00	-1.29	---	0.95	-36.00	---	---	9.930	198.60
LegalRoutine	13	SER-II	pos	0.0	---	1.00	1.00	1.00	1.30	-14.57	-2.97	0.00	0.00	---	0.95	-36.00	---	---	99.000	1980.00
LegalRoutine	1	SER-II	pos	770.0	---	1.00	1.00	1.00	1.30	-14.57	-2.97	0.00	-1.22	---	0.95	-36.00	---	---	10.507	302.08
LegalRoutine	1	SER-II	pos	0.0	---	1.00	1.00	1.00	1.30	-14.57	-2.97	0.00	0.00	---	0.95	-36.00	---	---	99.000	2846.25
LegalRoutine	2	SER-II	pos	1158.3	---	1.00	1.00	1.00	1.30	-14.57	-2.97	0.00	-1.84	---	0.95	-36.00	---	---	6.985	300.35
LegalRoutine	2	SER-II	pos	0.0	---	1.00	1.00	1.00	1.30	-14.57	-2.97	0.00	0.00	---	0.95	-36.00	---	---	99.000	4257.00

Component: Bot Flange

					Adj.									Adj.			----- Override -----			

Load	Load Combo	Limit State	Flexure Type	LL (kip-ft)	LL (kip-ft)	DC	DW	DW-WS	LL	fDC (ksi)	fDW (ksi)	fDW-WS (ksi)	fLL (ksi)	fLL (ksi)	Phi	fR (ksi)	Phi	fR (ksi)	RF	Capacity (Ton)
DesignInv	3	SER-II	pos	2102.1	---	1.00	1.00	1.00	1.30	10.64	4.12	0.00	9.94	---	0.95	36.00	---	---	1.505	54.17
DesignInv	3	SER-II	pos	0.0	---	1.00	1.00	1.00	1.30	10.64	4.12	0.00	0.00	---	0.95	36.00	---	---	99.000	3564.00
DesignOp	3	SER-II	pos	2102.1	---	1.00	1.00	1.00	1.00	10.64	4.12	0.00	9.94	---	0.95	36.00	---	---	1.956	70.42
DesignOp	3	SER-II	pos	0.0	---	1.00	1.00	1.00	1.00	10.64	4.12	0.00	0.00	---	0.95	36.00	---	---	99.000	3564.00
DesignInv	4	SER-II	pos	1771.0	---	1.00	1.00	1.00	1.30	10.64	4.12	0.00	8.37	---	0.95	36.00	---	---	1.786	64.30
DesignInv	4	SER-II	pos	0.0	---	1.00	1.00	1.00	1.30	10.64	4.12	0.00	0.00	---	0.95	36.00	---	---	99.000	3564.00
DesignOp	4	SER-II	pos	1771.0	---	1.00	1.00	1.00	1.00	10.64	4.12	0.00	8.37	---	0.95	36.00	---	---	2.322	83.59
DesignOp	4	SER-II	pos	0.0	---	1.00	1.00	1.00	1.00	10.64	4.12	0.00	0.00	---	0.95	36.00	---	---	99.000	3564.00
LegalRoutine	10	SER-II	pos	953.9	---	1.00	1.00	1.00	1.30	10.64	4.12	0.00	4.51	---	0.95	36.00	---	---	3.316	82.90
LegalRoutine	10	SER-II	pos	0.0	---	1.00	1.00	1.00	1.30	10.64	4.12	0.00	0.00	---	0.95	36.00	---	---	99.000	2475.00
LegalRoutine	12	SER-II	pos	1183.7	---	1.00	1.00	1.00	1.30	10.64	4.12	0.00	5.60	---	0.95	36.00	---	---	2.672	96.20
LegalRoutine	12	SER-II	pos	0.0	---	1.00	1.00	1.00	1.30	10.64	4.12	0.00	0.00	---	0.95	36.00	---	---	99.000	3564.00
LegalRoutine	11	SER-II	pos	1203.1	---	1.00	1.00	1.00	1.30	10.64	4.12	0.00	5.69	---	0.95	36.00	---	---	2.629	105.16
LegalRoutine	11	SER-II	pos	0.0	---	1.00	1.00	1.00	1.30	10.64	4.12	0.00	0.00	---	0.95	36.00	---	---	99.000	3960.00
LegalSpecial	6	SER-II	pos	1053.4	---	1.00	1.00	1.00	1.30	10.64	4.12	0.00	4.98	---	0.95	36.00	---	---	3.003	81.07
LegalSpecial	6	SER-II	pos	0.0	---	1.00	1.00	1.00	1.30	10.64	4.12	0.00	0.00	---	0.95	36.00	---	---	99.000	2673.00
LegalSpecial	7	SER-II	pos	1184.7	---	1.00	1.00	1.00	1.30	10.64	4.12	0.00	5.60	---	0.95	36.00	---	---	2.670	82.77
LegalSpecial	7	SER-II	pos	0.0	---	1.00	1.00	1.00	1.30	10.64	4.12	0.00	0.00	---	0.95	36.00	---	---	99.000	3069.00
LegalSpecial	8	SER-II	pos	1320.5	---	1.00	1.00	1.00	1.30	10.64	4.12	0.00	6.24	---	0.95	36.00	---	---	2.395	83.24
LegalSpecial	8	SER-II	pos	0.0	---	1.00	1.00	1.00	1.30	10.64	4.12	0.00	0.00	---	0.95	36.00	---	---	99.000	3440.25
LegalSpecial	9	SER-II	pos	1449.9	---	1.00	1.00	1.00	1.30	10.64	4.12	0.00	6.86	---	0.95	36.00	---	---	2.182	84.54
LegalSpecial	9	SER-II	pos	0.0	---	1.00	1.00	1.00	1.30	10.64	4.12	0.00	0.00	---	0.95	36.00	---	---	99.000	3836.25
Permit	14	SER-II	pos	1483.8	---	1.00	1.00	1.00	1.00	10.64	4.12	0.00	7.02	---	0.95	36.00	---	---	2.771	105.31
Permit	14	SER-II	pos	0.0	---	1.00	1.00	1.00	1.00	10.64	4.12	0.00	0.00	---	0.95	36.00	---	---	99.000	3762.00
Permit	15	SER-II	pos	1453.5	---	1.00	1.00	1.00	1.00	10.64	4.12	0.00	6.87	---	0.95	36.00	---	---	2.829	106.09
Permit	15	SER-II	pos	0.0	---	1.00	1.00	1.00	1.00	10.64	4.12	0.00	0.00	---	0.95	36.00	---	---	99.000	3712.50
Permit	16	SER-II	pos	1862.4	---	1.00	1.00	1.00	1.00	10.64	4.12	0.00	8.81	---	0.95	36.00	---	---	2.208	115.69
Permit	16	SER-II	pos	0.0	---	1.00	1.00	1.00	1.00	10.64	4.12	0.00	0.00	---	0.95	36.00	---	---	99.000	5187.60
Permit	17	SER-II	pos	1908.6	---	1.00	1.00	1.00	1.00	10.64	4.12	0.00	9.02	---	0.95	36.00	---	---	2.154	140.04
Permit	17	SER-II	pos	0.0	---	1.00	1.00	1.00	1.00	10.64	4.12	0.00	0.00	---	0.95	36.00	---	---	99.000	6435.00
PermitSpec	18	SER-II	pos	1229.8	---	1.00	1.00	1.00	1.00	10.64	4.12	0.00	5.82	---	0.95	36.00	---	---	3.344	188.91
PermitSpec	18	SER-II	pos	0.0	---	1.00	1.00	1.00	1.00	10.64	4.12	0.00	0.00	---	0.95	36.00	---	---	99.000	5593.50
PermitSpec	19	SER-II	pos	1188.5	---	1.00	1.00	1.00	1.00	10.64	4.12	0.00	5.62	---	0.95	36.00	---	---	3.460	276.79
PermitSpec	19	SER-II	pos	0.0	---	1.00	1.00	1.00	1.00	10.64	4.12	0.00	0.00	---	0.95	36.00	---	---	99.000	7920.00
PermitSpec	20	SER-II	pos	1320.0	---	1.00	1.00	1.00	1.00	10.64	4.12	0.00	6.24	---	0.95	36.00	---	---	3.115	352.03
PermitSpec	20	SER-II	pos	0.0	---	1.00	1.00	1.00	1.00	10.64	4.12	0.00	0.00	---	0.95	36.00	---	---	99.000	11187.00
LegalRoutine	21	SER-II	pos	768.7	---	1.00	1.00	1.00	1.30	10.64	4.12	0.00	3.63	---	0.95	36.00	---	---	4.115	85.59
LegalRoutine	21	SER-II	pos	0.0	---	1.00	1.00	1.00	1.30	10.64	4.12	0.00	0.00	---	0.95	36.00	---	---	99.000	2059.20
LegalRoutine	13	SER-II	pos	814.8	---	1.00	1.00	1.00	1.30	10.64	4.12	0.00	3.85	---	0.95	36.00	---	---	3.882	77.64
LegalRoutine	13	SER-II	pos	0.0	---	1.00	1.00	1.00	1.30	10.64	4.12	0.00	0.00	---	0.95	36.00	---	---	99.000	1980.00
LegalRoutine	1	SER-II	pos	770.0	---	1.00	1.00	1.00	1.30	10.64	4.12	0.00	3.64	---	0.95	36.00	---	---	4.108	118.10
LegalRoutine	1	SER-II	pos	0.0	---	1.00	1.00	1.00	1.30	10.64	4.12	0.00	0.00	---	0.95	36.00	---	---	99.000	2846.25
LegalRoutine	2	SER-II	pos	1158.3	---	1.00	1.00	1.00	1.30	10.64	4.12	0.00	5.48	---	0.95	36.00	---	---	2.731	117.42
LegalRoutine	2	SER-II	pos	0.0	---	1.00	1.00	1.00	1.30	10.64	4.12	0.00	0.00	---	0.95	36.00	---	---	99.000	4257.00

Load Combination Legend:

Code	Vehicle
3	HL-93 (US) - Truck + Lane
4	HL-93 (US) - Tandem + Lane
10	Type 3 - Legal Truck
12	Type 3S2 - Legal Truck
11	Type 3-3 - Legal Truck
6	SU4 - Legal Truck
7	SU5 - Legal Truck
8	SU6 - Legal Truck
9	SU7 - Legal Truck

```
   21     RIPTA Bus - Legal Truck
   13     H20 - Legal Truck
    1     EV2 - Legal Truck
    2     EV3 - Legal Truck
   14     RI-3 - Permit Truck
   15     RI-4 - Permit Truck
   16     RI-5 - Permit Truck
   17     RI-6 - Permit Truck
   18     RI-OP 1 - Permit Truck
   19     RI-OP 2 - Permit Truck
   20     RI-OP 3 - Permit Truck
    5     LRFD Fatigue Truck (US) - Fatigue Truck




Controlling Rating Factors
--------------------------

    Limit          --------------Design Inv----------------          --------------Design  Op--------------          ---------------Legal Load---------------          --------------Permit Load-------------
    State             Vehicle               RF     Capacity            Vehicle               RF     Capacity            Vehicle               RF     Capacity            Vehicle               RF     Capacity
                                                     (Ton)                                            (Ton)                                            (Ton)                                            (Ton)
---------------------------------------------------------------------------------------------------------------------------------------------------------------------------------------------------------------
 SER-II       HL-93 (US) - Truck + Lane      1.50      54.17   HL-93 (US) - Truck + Lane      1.96      70.42                                                          RI-6 - Permit Truck      2.15     140.04

-----------------------------------------------------------------------------------------------------


Steel Plate - At Location = 49.5000 (ft) - Right     Stage 3


Service Limit State Flexure Rating Calculations

INPUT:

Section Type:  Composite
Allow Plastic Analysis Control Option: No
Allow Moment Redistribution Control Option: No
Moment Redistribution Qualified: No, redistribution did not occur.

Stage 1 DC Moment     =  1388.0  (kip-ft)
Stage 1 DW Moment     =     0.0  (kip-ft)
Stage 1 DW-WS Moment  =     0.0  (kip-ft)
Stage 1 SE Moment     =     0.0  (kip-ft)
Stage 2 DC Moment     =   384.8  (kip-ft)
Stage 2 DW Moment     =   801.1  (kip-ft)
Stage 2 DW-WS Moment  =     0.0  (kip-ft)
Stage 2 SE Moment     =     0.0  (kip-ft)


Stage 1:

Component        C         S        Fy
               (in)     (in^3)     (ksi)
------------------------------------------
Top Flange    44.746   -1267.82    36.00
Bot Flange    -29.504   1922.83    36.00


Stage 2:

        Positive Flexure                                  Negative Flexure
Component        C         S                      Component        C         S
```

	C (in)	S (in^3)		C (in)	S (in^3)
Top Flange	31.129	-3234.77	Top Flange	44.746	-1267.82
Bot Flange	-43.121	2335.11	Bot Flange	-29.504	1922.83

Stage 3:

Positive Flexure			Negative Flexure		
Component	C (in)	S (in^3)	Component	C (in)	S (in^3)
Top Flange	18.634	-7574.82	Top Flange	44.746	-1267.82
Bot Flange	-55.616	2537.87	Bot Flange	-29.504	1922.83

Note: If the capacity has been overridden, the Resistance is computed as override phi*override capacity.
Otherwise the Resistance is computed as per the Specification.

Section Type: Composite

fR = 0.95*Rh*Fyf

Component: Top Flange

Load	Load Combo	Limit State	Flexure Type	LL (kip-ft)	Adj. LL (kip-ft)	DC	DW	DW-WS	LL	fDC (ksi)	fDW (ksi)	fDW-WS (ksi)	fLL (ksi)	Adj. fLL (ksi)	Phi	fR (ksi)	----- Override ----- Phi	fR (ksi)	RF	Capacity (Ton)
DesignInv	3	SER-II	pos	2102.1	---	1.00	1.00	1.00	1.30	-14.57	-2.97	0.00	-3.33	---	0.95	-36.00	---	---	3.849	138.56
DesignInv	3	SER-II	pos	0.0	---	1.00	1.00	1.00	1.30	-14.57	-2.97	0.00	0.00	---	0.95	-36.00	---	---	99.000	3564.00
DesignOp	3	SER-II	pos	2102.1	---	1.00	1.00	1.00	1.00	-14.57	-2.97	0.00	-3.33	---	0.95	-36.00	---	---	5.004	180.13
DesignOp	3	SER-II	pos	0.0	---	1.00	1.00	1.00	1.00	-14.57	-2.97	0.00	0.00	---	0.95	-36.00	---	---	99.000	3564.00
DesignInv	4	SER-II	pos	1771.0	---	1.00	1.00	1.00	1.30	-14.57	-2.97	0.00	-2.81	---	0.95	-36.00	---	---	4.568	164.46
DesignInv	4	SER-II	pos	0.0	---	1.00	1.00	1.00	1.30	-14.57	-2.97	0.00	0.00	---	0.95	-36.00	---	---	99.000	3564.00
DesignOp	4	SER-II	pos	1771.0	---	1.00	1.00	1.00	1.00	-14.57	-2.97	0.00	-2.81	---	0.95	-36.00	---	---	5.939	213.80
DesignOp	4	SER-II	pos	0.0	---	1.00	1.00	1.00	1.00	-14.57	-2.97	0.00	0.00	---	0.95	-36.00	---	---	99.000	3564.00
LegalRoutine	10	SER-II	pos	953.9	---	1.00	1.00	1.00	1.30	-14.57	-2.97	0.00	-1.51	---	0.95	-36.00	---	---	8.482	212.06
LegalRoutine	10	SER-II	pos	0.0	---	1.00	1.00	1.00	1.30	-14.57	-2.97	0.00	0.00	---	0.95	-36.00	---	---	99.000	2475.00
LegalRoutine	12	SER-II	pos	1183.7	---	1.00	1.00	1.00	1.30	-14.57	-2.97	0.00	-1.88	---	0.95	-36.00	---	---	6.835	246.07
LegalRoutine	12	SER-II	pos	0.0	---	1.00	1.00	1.00	1.30	-14.57	-2.97	0.00	0.00	---	0.95	-36.00	---	---	99.000	3564.00
LegalRoutine	11	SER-II	pos	1203.1	---	1.00	1.00	1.00	1.30	-14.57	-2.97	0.00	-1.91	---	0.95	-36.00	---	---	6.725	268.99
LegalRoutine	11	SER-II	pos	0.0	---	1.00	1.00	1.00	1.30	-14.57	-2.97	0.00	0.00	---	0.95	-36.00	---	---	99.000	3960.00
LegalSpecial	6	SER-II	pos	1053.4	---	1.00	1.00	1.00	1.30	-14.57	-2.97	0.00	-1.67	---	0.95	-36.00	---	---	7.681	207.38
LegalSpecial	6	SER-II	pos	0.0	---	1.00	1.00	1.00	1.30	-14.57	-2.97	0.00	0.00	---	0.95	-36.00	---	---	99.000	2673.00
LegalSpecial	7	SER-II	pos	1184.7	---	1.00	1.00	1.00	1.30	-14.57	-2.97	0.00	-1.88	---	0.95	-36.00	---	---	6.829	211.71
LegalSpecial	7	SER-II	pos	0.0	---	1.00	1.00	1.00	1.30	-14.57	-2.97	0.00	0.00	---	0.95	-36.00	---	---	99.000	3069.00
LegalSpecial	8	SER-II	pos	1320.5	---	1.00	1.00	1.00	1.30	-14.57	-2.97	0.00	-2.09	---	0.95	-36.00	---	---	6.127	212.92
LegalSpecial	8	SER-II	pos	0.0	---	1.00	1.00	1.00	1.30	-14.57	-2.97	0.00	0.00	---	0.95	-36.00	---	---	99.000	3440.25
LegalSpecial	9	SER-II	pos	1449.9	---	1.00	1.00	1.00	1.30	-14.57	-2.97	0.00	-2.30	---	0.95	-36.00	---	---	5.580	216.23
LegalSpecial	9	SER-II	pos	0.0	---	1.00	1.00	1.00	1.30	-14.57	-2.97	0.00	0.00	---	0.95	-36.00	---	---	99.000	3836.25
Permit	14	SER-II	pos	1483.8	---	1.00	1.00	1.00	1.00	-14.57	-2.97	0.00	-2.35	---	0.95	-36.00	---	---	7.088	269.36
Permit	14	SER-II	pos	0.0	---	1.00	1.00	1.00	1.00	-14.57	-2.97	0.00	0.00	---	0.95	-36.00	---	---	99.000	3762.00
Permit	15	SER-II	pos	1453.5	---	1.00	1.00	1.00	1.00	-14.57	-2.97	0.00	-2.30	---	0.95	-36.00	---	---	7.236	271.37
Permit	15	SER-II	pos	0.0	---	1.00	1.00	1.00	1.00	-14.57	-2.97	0.00	0.00	---	0.95	-36.00	---	---	99.000	3712.50
Permit	16	SER-II	pos	1862.4	---	1.00	1.00	1.00	1.00	-14.57	-2.97	0.00	-2.95	---	0.95	-36.00	---	---	5.648	295.93
Permit	16	SER-II	pos	0.0	---	1.00	1.00	1.00	1.00	-14.57	-2.97	0.00	0.00	---	0.95	-36.00	---	---	99.000	5187.60
Permit	17	SER-II	pos	1908.6	---	1.00	1.00	1.00	1.00	-14.57	-2.97	0.00	-3.02	---	0.95	-36.00	---	---	5.511	358.20
Permit	17	SER-II	pos	0.0	---	1.00	1.00	1.00	1.00	-14.57	-2.97	0.00	0.00	---	0.95	-36.00	---	---	99.000	6435.00

PermitSpec	18	SER-II	pos	1229.8	---	1.00	1.00	1.00	1.00	-14.57	-2.97	0.00	-1.95	---	0.95	-36.00	---	---	8.553	483.22
PermitSpec	18	SER-II	pos	0.0	---	1.00	1.00	1.00	1.00	-14.57	-2.97	0.00	0.00	---	0.95	-36.00	---	---	99.000	5593.50
PermitSpec	19	SER-II	pos	1188.5	---	1.00	1.00	1.00	1.00	-14.57	-2.97	0.00	-1.88	---	0.95	-36.00	---	---	8.850	707.99
PermitSpec	19	SER-II	pos	0.0	---	1.00	1.00	1.00	1.00	-14.57	-2.97	0.00	0.00	---	0.95	-36.00	---	---	99.000	7920.00
PermitSpec	20	SER-II	pos	1320.0	---	1.00	1.00	1.00	1.00	-14.57	-2.97	0.00	-2.09	---	0.95	-36.00	---	---	7.969	900.45
PermitSpec	20	SER-II	pos	0.0	---	1.00	1.00	1.00	1.00	-14.57	-2.97	0.00	0.00	---	0.95	-36.00	---	---	99.000	11187.00
LegalRoutine	21	SER-II	pos	768.7	---	1.00	1.00	1.00	1.30	-14.57	-2.97	0.00	-1.22	---	0.95	-36.00	---	---	10.526	218.94
LegalRoutine	21	SER-II	pos	0.0	---	1.00	1.00	1.00	1.30	-14.57	-2.97	0.00	0.00	---	0.95	-36.00	---	---	99.000	2059.20
LegalRoutine	13	SER-II	pos	814.8	---	1.00	1.00	1.00	1.30	-14.57	-2.97	0.00	-1.29	---	0.95	-36.00	---	---	9.930	198.60
LegalRoutine	13	SER-II	pos	0.0	---	1.00	1.00	1.00	1.30	-14.57	-2.97	0.00	0.00	---	0.95	-36.00	---	---	99.000	1980.00
LegalRoutine	1	SER-II	pos	770.0	---	1.00	1.00	1.00	1.30	-14.57	-2.97	0.00	-1.22	---	0.95	-36.00	---	---	10.507	302.08
LegalRoutine	1	SER-II	pos	0.0	---	1.00	1.00	1.00	1.30	-14.57	-2.97	0.00	0.00	---	0.95	-36.00	---	---	99.000	2846.25
LegalRoutine	2	SER-II	pos	1158.3	---	1.00	1.00	1.00	1.30	-14.57	-2.97	0.00	-1.84	---	0.95	-36.00	---	---	6.985	300.35
LegalRoutine	2	SER-II	pos	0.0	---	1.00	1.00	1.00	1.30	-14.57	-2.97	0.00	0.00	---	0.95	-36.00	---	---	99.000	4257.00

Component: Bot Flange

Load	Load Combo	Limit State	Flexure Type	LL (kip-ft)	Adj. LL (kip-ft)	DC	DW	DW-WS	LL	fDC (ksi)	fDW (ksi)	fDW-WS (ksi)	fLL (ksi)	Adj. fLL (ksi)	Phi	fR (ksi)	----- Override ----- Phi	fR (ksi)	RF	Capacity (Ton)
DesignInv	3	SER-II	pos	2102.1	---	1.00	1.00	1.00	1.30	10.64	4.12	0.00	9.94	---	0.95	36.00	---	---	1.505	54.17
DesignInv	3	SER-II	pos	0.0	---	1.00	1.00	1.00	1.30	10.64	4.12	0.00	0.00	---	0.95	36.00	---	---	99.000	3564.00
DesignOp	3	SER-II	pos	2102.1	---	1.00	1.00	1.00	1.00	10.64	4.12	0.00	9.94	---	0.95	36.00	---	---	1.956	70.42
DesignOp	3	SER-II	pos	0.0	---	1.00	1.00	1.00	1.00	10.64	4.12	0.00	0.00	---	0.95	36.00	---	---	99.000	3564.00
DesignInv	4	SER-II	pos	1771.0	---	1.00	1.00	1.00	1.30	10.64	4.12	0.00	8.37	---	0.95	36.00	---	---	1.786	64.30
DesignInv	4	SER-II	pos	0.0	---	1.00	1.00	1.00	1.30	10.64	4.12	0.00	0.00	---	0.95	36.00	---	---	99.000	3564.00
DesignOp	4	SER-II	pos	1771.0	---	1.00	1.00	1.00	1.00	10.64	4.12	0.00	8.37	---	0.95	36.00	---	---	2.322	83.59
DesignOp	4	SER-II	pos	0.0	---	1.00	1.00	1.00	1.00	10.64	4.12	0.00	0.00	---	0.95	36.00	---	---	99.000	3564.00
LegalRoutine	10	SER-II	pos	953.9	---	1.00	1.00	1.00	1.30	10.64	4.12	0.00	4.51	---	0.95	36.00	---	---	3.316	82.90
LegalRoutine	10	SER-II	pos	0.0	---	1.00	1.00	1.00	1.30	10.64	4.12	0.00	0.00	---	0.95	36.00	---	---	99.000	2475.00
LegalRoutine	12	SER-II	pos	1183.7	---	1.00	1.00	1.00	1.30	10.64	4.12	0.00	5.60	---	0.95	36.00	---	---	2.672	96.20
LegalRoutine	12	SER-II	pos	0.0	---	1.00	1.00	1.00	1.30	10.64	4.12	0.00	0.00	---	0.95	36.00	---	---	99.000	3564.00
LegalRoutine	11	SER-II	pos	1203.1	---	1.00	1.00	1.00	1.30	10.64	4.12	0.00	5.69	---	0.95	36.00	---	---	2.629	105.16
LegalRoutine	11	SER-II	pos	0.0	---	1.00	1.00	1.00	1.30	10.64	4.12	0.00	0.00	---	0.95	36.00	---	---	99.000	3960.00
LegalSpecial	6	SER-II	pos	1053.4	---	1.00	1.00	1.00	1.30	10.64	4.12	0.00	4.98	---	0.95	36.00	---	---	3.003	81.07
LegalSpecial	6	SER-II	pos	0.0	---	1.00	1.00	1.00	1.30	10.64	4.12	0.00	0.00	---	0.95	36.00	---	---	99.000	2673.00
LegalSpecial	7	SER-II	pos	1184.7	---	1.00	1.00	1.00	1.30	10.64	4.12	0.00	5.60	---	0.95	36.00	---	---	2.670	82.77
LegalSpecial	7	SER-II	pos	0.0	---	1.00	1.00	1.00	1.30	10.64	4.12	0.00	0.00	---	0.95	36.00	---	---	99.000	3069.00
LegalSpecial	8	SER-II	pos	1320.5	---	1.00	1.00	1.00	1.30	10.64	4.12	0.00	6.24	---	0.95	36.00	---	---	2.395	83.24
LegalSpecial	8	SER-II	pos	0.0	---	1.00	1.00	1.00	1.30	10.64	4.12	0.00	0.00	---	0.95	36.00	---	---	99.000	3440.25
LegalSpecial	9	SER-II	pos	1449.9	---	1.00	1.00	1.00	1.30	10.64	4.12	0.00	6.86	---	0.95	36.00	---	---	2.182	84.54
LegalSpecial	9	SER-II	pos	0.0	---	1.00	1.00	1.00	1.30	10.64	4.12	0.00	0.00	---	0.95	36.00	---	---	99.000	3836.25
Permit	14	SER-II	pos	1483.8	---	1.00	1.00	1.00	1.00	10.64	4.12	0.00	7.02	---	0.95	36.00	---	---	2.771	105.31
Permit	14	SER-II	pos	0.0	---	1.00	1.00	1.00	1.00	10.64	4.12	0.00	0.00	---	0.95	36.00	---	---	99.000	3762.00
Permit	15	SER-II	pos	1453.5	---	1.00	1.00	1.00	1.00	10.64	4.12	0.00	6.87	---	0.95	36.00	---	---	2.829	106.09
Permit	15	SER-II	pos	0.0	---	1.00	1.00	1.00	1.00	10.64	4.12	0.00	0.00	---	0.95	36.00	---	---	99.000	3712.50
Permit	16	SER-II	pos	1862.4	---	1.00	1.00	1.00	1.00	10.64	4.12	0.00	8.81	---	0.95	36.00	---	---	2.208	115.69
Permit	16	SER-II	pos	0.0	---	1.00	1.00	1.00	1.00	10.64	4.12	0.00	0.00	---	0.95	36.00	---	---	99.000	5187.60
Permit	17	SER-II	pos	1908.6	---	1.00	1.00	1.00	1.00	10.64	4.12	0.00	9.02	---	0.95	36.00	---	---	2.154	140.04
Permit	17	SER-II	pos	0.0	---	1.00	1.00	1.00	1.00	10.64	4.12	0.00	0.00	---	0.95	36.00	---	---	99.000	6435.00
PermitSpec	18	SER-II	pos	1229.8	---	1.00	1.00	1.00	1.00	10.64	4.12	0.00	5.82	---	0.95	36.00	---	---	3.344	188.91
PermitSpec	18	SER-II	pos	0.0	---	1.00	1.00	1.00	1.00	10.64	4.12	0.00	0.00	---	0.95	36.00	---	---	99.000	5593.50
PermitSpec	19	SER-II	pos	1188.5	---	1.00	1.00	1.00	1.00	10.64	4.12	0.00	5.62	---	0.95	36.00	---	---	3.460	276.79
PermitSpec	19	SER-II	pos	0.0	---	1.00	1.00	1.00	1.00	10.64	4.12	0.00	0.00	---	0.95	36.00	---	---	99.000	7920.00
PermitSpec	20	SER-II	pos	1320.0	---	1.00	1.00	1.00	1.00	10.64	4.12	0.00	6.24	---	0.95	36.00	---	---	3.115	352.03
PermitSpec	20	SER-II	pos	0.0	---	1.00	1.00	1.00	1.00	10.64	4.12	0.00	0.00	---	0.95	36.00	---	---	99.000	11187.00
LegalRoutine	21	SER-II	pos	768.7	---	1.00	1.00	1.00	1.30	10.64	4.12	0.00	3.63	---	0.95	36.00	---	---	4.115	85.59
LegalRoutine	21	SER-II	pos	0.0	---	1.00	1.00	1.00	1.30	10.64	4.12	0.00	0.00	---	0.95	36.00	---	---	99.000	2059.20
LegalRoutine	13	SER-II	pos	814.8	---	1.00	1.00	1.00	1.30	10.64	4.12	0.00	3.85	---	0.95	36.00	---	---	3.882	77.64

LegalRoutine	13	SER-II	pos	0.0	---	1.00	1.00	1.00	1.30	10.64	4.12	0.00	0.00	---	0.95	36.00	---	---	99.000	1980.00
LegalRoutine	1	SER-II	pos	770.0	---	1.00	1.00	1.00	1.30	10.64	4.12	0.00	3.64	---	0.95	36.00	---	---	4.108	118.10
LegalRoutine	1	SER-II	pos	0.0	---	1.00	1.00	1.00	1.30	10.64	4.12	0.00	0.00	---	0.95	36.00	---	---	99.000	2846.25
LegalRoutine	2	SER-II	pos	1158.3	---	1.00	1.00	1.00	1.30	10.64	4.12	0.00	5.48	---	0.95	36.00	---	---	2.731	117.42
LegalRoutine	2	SER-II	pos	0.0	---	1.00	1.00	1.00	1.30	10.64	4.12	0.00	0.00	---	0.95	36.00	---	---	99.000	4257.00

Load Combination Legend:

Code	Vehicle
3	HL-93 (US) - Truck + Lane
4	HL-93 (US) - Tandem + Lane
10	Type 3 - Legal Truck
12	Type 3S2 - Legal Truck
11	Type 3-3 - Legal Truck
6	SU4 - Legal Truck
7	SU5 - Legal Truck
8	SU6 - Legal Truck
9	SU7 - Legal Truck
21	RIPTA Bus - Legal Truck
13	H20 - Legal Truck
1	EV2 - Legal Truck
2	EV3 - Legal Truck
14	RI-3 - Permit Truck
15	RI-4 - Permit Truck
16	RI-5 - Permit Truck
17	RI-6 - Permit Truck
18	RI-OP 1 - Permit Truck
19	RI-OP 2 - Permit Truck
20	RI-OP 3 - Permit Truck
5	LRFD Fatigue Truck (US) - Fatigue Truck

Controlling Rating Factors

Limit State	Design Inv Vehicle	RF	Capacity (Ton)	Design Op Vehicle	RF	Capacity (Ton)	Legal Load Vehicle	RF	Capacity (Ton)	Permit Load Vehicle	RF	Capacity (Ton)
SER-II	HL-93 (US) - Truck + Lane	1.50	54.17	HL-93 (US) - Truck + Lane	1.96	70.42				RI-6 - Permit Truck	2.15	140.04

```
6A Load and Resistance Factor Rating
6A.6 Steel Structures
6A.6.4 Limit States
6A.6.4.2 Legal Load Rating and Permit Load Rating
6A.6.4.2.2 Service Limit State
(AASHTO Manual for Bridge Evaluation, Third Edition - 2017)

Steel Plate - At Location = 55.0000 (ft) - Left     Stage 3

Section at Middle of Unbraced Length


Service Limit State Flexure Rating Calculations

INPUT:

Section Type:  Composite
Allow Plastic Analysis Control Option: No
Allow Moment Redistribution Control Option: No
Moment Redistribution Qualified: No, redistribution did not occur.

Stage 1 DC Moment     =  1401.9  (kip-ft)
Stage 1 DW Moment     =     0.0  (kip-ft)
Stage 1 DW-WS Moment  =     0.0  (kip-ft)
Stage 1 SE Moment     =     0.0  (kip-ft)
Stage 2 DC Moment     =   388.7  (kip-ft)
Stage 2 DW Moment     =   809.2  (kip-ft)
Stage 2 DW-WS Moment  =     0.0  (kip-ft)
Stage 2 SE Moment     =     0.0  (kip-ft)


Stage 1:

Component        C         S        Fy
               (in)     (in^3)     (ksi)
-----------------------------------------
Top Flange    44.746   -1267.82    36.00
Bot Flange    -29.504   1922.83    36.00


Stage 2:

        Positive Flexure                                Negative Flexure
Component        C         S                     Component        C         S
               (in)     (in^3)                                   (in)     (in^3)
--------------------------------                 --------------------------------
Top Flange    31.129   -3234.77                  Top Flange    44.746   -1267.82
Bot Flange    -43.121   2335.11                  Bot Flange    -29.504   1922.83


Stage 3:

        Positive Flexure                                Negative Flexure
Component        C         S                     Component        C         S
               (in)     (in^3)                                   (in)     (in^3)
--------------------------------                 --------------------------------
Top Flange    18.634   -7574.82                  Top Flange    44.746   -1267.82
Bot Flange    -55.616   2537.87                  Bot Flange    -29.504   1922.83
Note: If the capacity has been overridden, the Resistance is computed as override phi*override capacity.
      Otherwise the Resistance is computed as per the Specification.
```

Section Type: Composite

fR = 0.95*Rh*Fyf

Component: Top Flange

Load	Load Combo	Limit State	Flexure Type	LL (kip-ft)	Adj. LL (kip-ft)	DC	DW	DW-WS	LL	fDC (ksi)	fDW (ksi)	fDW-WS (ksi)	fLL (ksi)	Adj. fLL (ksi)	Phi	fR (ksi)	----- Override ----- Phi	fR (ksi)	RF	Capacity (Ton)
DesignInv	3	SER-II	pos	2111.0	---	1.00	1.00	1.00	1.30	-14.71	-3.00	0.00	-3.34	---	0.95	-36.00	---	---	3.792	136.52
DesignInv	3	SER-II	pos	0.0	---	1.00	1.00	1.00	1.30	-14.71	-3.00	0.00	0.00	---	0.95	-36.00	---	---	99.000	3564.00
DesignOp	3	SER-II	pos	2111.0	---	1.00	1.00	1.00	1.00	-14.71	-3.00	0.00	-3.34	---	0.95	-36.00	---	---	4.930	177.48
DesignOp	3	SER-II	pos	0.0	---	1.00	1.00	1.00	1.00	-14.71	-3.00	0.00	0.00	---	0.95	-36.00	---	---	99.000	3564.00
DesignInv	4	SER-II	pos	1785.0	---	1.00	1.00	1.00	1.30	-14.71	-3.00	0.00	-2.83	---	0.95	-36.00	---	---	4.485	161.46
DesignInv	4	SER-II	pos	0.0	---	1.00	1.00	1.00	1.30	-14.71	-3.00	0.00	0.00	---	0.95	-36.00	---	---	99.000	3564.00
DesignOp	4	SER-II	pos	1785.0	---	1.00	1.00	1.00	1.00	-14.71	-3.00	0.00	-2.83	---	0.95	-36.00	---	---	5.831	209.90
DesignOp	4	SER-II	pos	0.0	---	1.00	1.00	1.00	1.00	-14.71	-3.00	0.00	0.00	---	0.95	-36.00	---	---	99.000	3564.00
LegalRoutine	10	SER-II	pos	957.9	---	1.00	1.00	1.00	1.30	-14.71	-3.00	0.00	-1.52	---	0.95	-36.00	---	---	8.358	208.94
LegalRoutine	10	SER-II	pos	0.0	---	1.00	1.00	1.00	1.30	-14.71	-3.00	0.00	0.00	---	0.95	-36.00	---	---	99.000	2475.00
LegalRoutine	12	SER-II	pos	1178.3	---	1.00	1.00	1.00	1.30	-14.71	-3.00	0.00	-1.87	---	0.95	-36.00	---	---	6.794	244.59
LegalRoutine	12	SER-II	pos	0.0	---	1.00	1.00	1.00	1.30	-14.71	-3.00	0.00	0.00	---	0.95	-36.00	---	---	99.000	3564.00
LegalRoutine	11	SER-II	pos	1208.2	---	1.00	1.00	1.00	1.30	-14.71	-3.00	0.00	-1.91	---	0.95	-36.00	---	---	6.626	265.06
LegalRoutine	11	SER-II	pos	0.0	---	1.00	1.00	1.00	1.30	-14.71	-3.00	0.00	0.00	---	0.95	-36.00	---	---	99.000	3960.00
LegalSpecial	6	SER-II	pos	1059.9	---	1.00	1.00	1.00	1.30	-14.71	-3.00	0.00	-1.68	---	0.95	-36.00	---	---	7.553	203.94
LegalSpecial	6	SER-II	pos	0.0	---	1.00	1.00	1.00	1.30	-14.71	-3.00	0.00	0.00	---	0.95	-36.00	---	---	99.000	2673.00
LegalSpecial	7	SER-II	pos	1188.5	---	1.00	1.00	1.00	1.30	-14.71	-3.00	0.00	-1.88	---	0.95	-36.00	---	---	6.736	208.81
LegalSpecial	7	SER-II	pos	0.0	---	1.00	1.00	1.00	1.30	-14.71	-3.00	0.00	0.00	---	0.95	-36.00	---	---	99.000	3069.00
LegalSpecial	8	SER-II	pos	1328.8	---	1.00	1.00	1.00	1.30	-14.71	-3.00	0.00	-2.11	---	0.95	-36.00	---	---	6.025	209.37
LegalSpecial	8	SER-II	pos	0.0	---	1.00	1.00	1.00	1.30	-14.71	-3.00	0.00	0.00	---	0.95	-36.00	---	---	99.000	3440.25
LegalSpecial	9	SER-II	pos	1463.7	---	1.00	1.00	1.00	1.30	-14.71	-3.00	0.00	-2.32	---	0.95	-36.00	---	---	5.470	211.94
LegalSpecial	9	SER-II	pos	0.0	---	1.00	1.00	1.00	1.30	-14.71	-3.00	0.00	0.00	---	0.95	-36.00	---	---	99.000	3836.25
Permit	14	SER-II	pos	1496.3	---	1.00	1.00	1.00	1.00	-14.71	-3.00	0.00	-2.37	---	0.95	-36.00	---	---	6.955	264.31
Permit	14	SER-II	pos	0.0	---	1.00	1.00	1.00	1.00	-14.71	-3.00	0.00	0.00	---	0.95	-36.00	---	---	99.000	3762.00
Permit	15	SER-II	pos	1460.8	---	1.00	1.00	1.00	1.00	-14.71	-3.00	0.00	-2.31	---	0.95	-36.00	---	---	7.125	267.17
Permit	15	SER-II	pos	0.0	---	1.00	1.00	1.00	1.00	-14.71	-3.00	0.00	0.00	---	0.95	-36.00	---	---	99.000	3712.50
Permit	16	SER-II	pos	1865.4	---	1.00	1.00	1.00	1.00	-14.71	-3.00	0.00	-2.96	---	0.95	-36.00	---	---	5.579	292.35
Permit	16	SER-II	pos	0.0	---	1.00	1.00	1.00	1.00	-14.71	-3.00	0.00	0.00	---	0.95	-36.00	---	---	99.000	5187.60
Permit	17	SER-II	pos	1868.0	---	1.00	1.00	1.00	1.00	-14.71	-3.00	0.00	-2.96	---	0.95	-36.00	---	---	5.571	362.14
Permit	17	SER-II	pos	0.0	---	1.00	1.00	1.00	1.00	-14.71	-3.00	0.00	0.00	---	0.95	-36.00	---	---	99.000	6435.00
PermitSpec	18	SER-II	pos	1240.4	---	1.00	1.00	1.00	1.00	-14.71	-3.00	0.00	-1.97	---	0.95	-36.00	---	---	8.390	474.04
PermitSpec	18	SER-II	pos	0.0	---	1.00	1.00	1.00	1.00	-14.71	-3.00	0.00	0.00	---	0.95	-36.00	---	---	99.000	5593.50
PermitSpec	19	SER-II	pos	1159.5	---	1.00	1.00	1.00	1.00	-14.71	-3.00	0.00	-1.84	---	0.95	-36.00	---	---	8.976	718.09
PermitSpec	19	SER-II	pos	0.0	---	1.00	1.00	1.00	1.00	-14.71	-3.00	0.00	0.00	---	0.95	-36.00	---	---	99.000	7920.00
PermitSpec	20	SER-II	pos	1308.5	---	1.00	1.00	1.00	1.00	-14.71	-3.00	0.00	-2.07	---	0.95	-36.00	---	---	7.954	898.78
PermitSpec	20	SER-II	pos	0.0	---	1.00	1.00	1.00	1.00	-14.71	-3.00	0.00	0.00	---	0.95	-36.00	---	---	99.000	11187.00
LegalRoutine	21	SER-II	pos	764.3	---	1.00	1.00	1.00	1.30	-14.71	-3.00	0.00	-1.21	---	0.95	-36.00	---	---	10.474	217.86
LegalRoutine	21	SER-II	pos	0.0	---	1.00	1.00	1.00	1.30	-14.71	-3.00	0.00	0.00	---	0.95	-36.00	---	---	99.000	2059.20
LegalRoutine	13	SER-II	pos	819.0	---	1.00	1.00	1.00	1.30	-14.71	-3.00	0.00	-1.30	---	0.95	-36.00	---	---	9.775	195.49
LegalRoutine	13	SER-II	pos	0.0	---	1.00	1.00	1.00	1.30	-14.71	-3.00	0.00	0.00	---	0.95	-36.00	---	---	99.000	1980.00
LegalRoutine	1	SER-II	pos	768.8	---	1.00	1.00	1.00	1.30	-14.71	-3.00	0.00	-1.22	---	0.95	-36.00	---	---	10.413	299.37
LegalRoutine	1	SER-II	pos	0.0	---	1.00	1.00	1.00	1.30	-14.71	-3.00	0.00	0.00	---	0.95	-36.00	---	---	99.000	2846.25
LegalRoutine	2	SER-II	pos	1164.8	---	1.00	1.00	1.00	1.30	-14.71	-3.00	0.00	-1.85	---	0.95	-36.00	---	---	6.873	295.54
LegalRoutine	2	SER-II	pos	0.0	---	1.00	1.00	1.00	1.30	-14.71	-3.00	0.00	0.00	---	0.95	-36.00	---	---	99.000	4257.00

Component: Bot Flange

Load	Load Combo	Limit State	Flexure Type	LL (kip-ft)	Adj. LL (kip-ft)	DC	DW	DW-WS	LL	fDC (ksi)	fDW (ksi)	fDW-WS (ksi)	fLL (ksi)	Adj. fLL (ksi)	Phi	fR (ksi)	----- Override ----- Phi	fR (ksi)	RF	Capacity (Ton)
DesignInv	3	SER-II	pos	2111.0	---	1.00	1.00	1.00	1.30	10.75	4.16	0.00	9.98	---	0.95	36.00	---	---	1.487	53.53
DesignInv	3	SER-II	pos	0.0	---	1.00	1.00	1.00	1.30	10.75	4.16	0.00	0.00	---	0.95	36.00	---	---	99.000	3564.00
DesignOp	3	SER-II	pos	2111.0	---	1.00	1.00	1.00	1.00	10.75	4.16	0.00	9.98	---	0.95	36.00	---	---	1.933	69.59
DesignOp	3	SER-II	pos	0.0	---	1.00	1.00	1.00	1.00	10.75	4.16	0.00	0.00	---	0.95	36.00	---	---	99.000	3564.00
DesignInv	4	SER-II	pos	1785.0	---	1.00	1.00	1.00	1.30	10.75	4.16	0.00	8.44	---	0.95	36.00	---	---	1.759	63.31
DesignInv	4	SER-II	pos	0.0	---	1.00	1.00	1.00	1.30	10.75	4.16	0.00	0.00	---	0.95	36.00	---	---	99.000	3564.00
DesignOp	4	SER-II	pos	1785.0	---	1.00	1.00	1.00	1.00	10.75	4.16	0.00	8.44	---	0.95	36.00	---	---	2.286	82.30
DesignOp	4	SER-II	pos	0.0	---	1.00	1.00	1.00	1.00	10.75	4.16	0.00	0.00	---	0.95	36.00	---	---	99.000	3564.00
LegalRoutine	10	SER-II	pos	957.9	---	1.00	1.00	1.00	1.30	10.75	4.16	0.00	4.53	---	0.95	36.00	---	---	3.277	81.93
LegalRoutine	10	SER-II	pos	0.0	---	1.00	1.00	1.00	1.30	10.75	4.16	0.00	0.00	---	0.95	36.00	---	---	99.000	2475.00
LegalRoutine	12	SER-II	pos	1178.3	---	1.00	1.00	1.00	1.30	10.75	4.16	0.00	5.57	---	0.95	36.00	---	---	2.664	95.90
LegalRoutine	12	SER-II	pos	0.0	---	1.00	1.00	1.00	1.30	10.75	4.16	0.00	0.00	---	0.95	36.00	---	---	99.000	3564.00
LegalRoutine	11	SER-II	pos	1208.2	---	1.00	1.00	1.00	1.30	10.75	4.16	0.00	5.71	---	0.95	36.00	---	---	2.598	103.93
LegalRoutine	11	SER-II	pos	0.0	---	1.00	1.00	1.00	1.30	10.75	4.16	0.00	0.00	---	0.95	36.00	---	---	99.000	3960.00
LegalSpecial	6	SER-II	pos	1059.9	---	1.00	1.00	1.00	1.30	10.75	4.16	0.00	5.01	---	0.95	36.00	---	---	2.962	79.97
LegalSpecial	6	SER-II	pos	0.0	---	1.00	1.00	1.00	1.30	10.75	4.16	0.00	0.00	---	0.95	36.00	---	---	99.000	2673.00
LegalSpecial	7	SER-II	pos	1188.5	---	1.00	1.00	1.00	1.30	10.75	4.16	0.00	5.62	---	0.95	36.00	---	---	2.641	81.87
LegalSpecial	7	SER-II	pos	0.0	---	1.00	1.00	1.00	1.30	10.75	4.16	0.00	0.00	---	0.95	36.00	---	---	99.000	3069.00
LegalSpecial	8	SER-II	pos	1328.8	---	1.00	1.00	1.00	1.30	10.75	4.16	0.00	6.28	---	0.95	36.00	---	---	2.362	82.09
LegalSpecial	8	SER-II	pos	0.0	---	1.00	1.00	1.00	1.30	10.75	4.16	0.00	0.00	---	0.95	36.00	---	---	99.000	3440.25
LegalSpecial	9	SER-II	pos	1463.7	---	1.00	1.00	1.00	1.30	10.75	4.16	0.00	6.92	---	0.95	36.00	---	---	2.145	83.10
LegalSpecial	9	SER-II	pos	0.0	---	1.00	1.00	1.00	1.30	10.75	4.16	0.00	0.00	---	0.95	36.00	---	---	99.000	3836.25
Permit	14	SER-II	pos	1496.3	---	1.00	1.00	1.00	1.00	10.75	4.16	0.00	7.08	---	0.95	36.00	---	---	2.727	103.63
Permit	14	SER-II	pos	0.0	---	1.00	1.00	1.00	1.00	10.75	4.16	0.00	0.00	---	0.95	36.00	---	---	99.000	3762.00
Permit	15	SER-II	pos	1460.8	---	1.00	1.00	1.00	1.00	10.75	4.16	0.00	6.91	---	0.95	36.00	---	---	2.794	104.76
Permit	15	SER-II	pos	0.0	---	1.00	1.00	1.00	1.00	10.75	4.16	0.00	0.00	---	0.95	36.00	---	---	99.000	3712.50
Permit	16	SER-II	pos	1865.4	---	1.00	1.00	1.00	1.00	10.75	4.16	0.00	8.82	---	0.95	36.00	---	---	2.188	114.63
Permit	16	SER-II	pos	0.0	---	1.00	1.00	1.00	1.00	10.75	4.16	0.00	0.00	---	0.95	36.00	---	---	99.000	5187.60
Permit	17	SER-II	pos	1868.0	---	1.00	1.00	1.00	1.00	10.75	4.16	0.00	8.83	---	0.95	36.00	---	---	2.185	141.99
Permit	17	SER-II	pos	0.0	---	1.00	1.00	1.00	1.00	10.75	4.16	0.00	0.00	---	0.95	36.00	---	---	99.000	6435.00
PermitSpec	18	SER-II	pos	1240.4	---	1.00	1.00	1.00	1.00	10.75	4.16	0.00	5.87	---	0.95	36.00	---	---	3.290	185.87
PermitSpec	18	SER-II	pos	0.0	---	1.00	1.00	1.00	1.00	10.75	4.16	0.00	0.00	---	0.95	36.00	---	---	99.000	5593.50
PermitSpec	19	SER-II	pos	1159.5	---	1.00	1.00	1.00	1.00	10.75	4.16	0.00	5.48	---	0.95	36.00	---	---	3.520	281.56
PermitSpec	19	SER-II	pos	0.0	---	1.00	1.00	1.00	1.00	10.75	4.16	0.00	0.00	---	0.95	36.00	---	---	99.000	7920.00
PermitSpec	20	SER-II	pos	1308.5	---	1.00	1.00	1.00	1.00	10.75	4.16	0.00	6.19	---	0.95	36.00	---	---	3.119	352.41
PermitSpec	20	SER-II	pos	0.0	---	1.00	1.00	1.00	1.00	10.75	4.16	0.00	0.00	---	0.95	36.00	---	---	99.000	11187.00
LegalRoutine	21	SER-II	pos	764.3	---	1.00	1.00	1.00	1.30	10.75	4.16	0.00	3.61	---	0.95	36.00	---	---	4.107	85.42
LegalRoutine	21	SER-II	pos	0.0	---	1.00	1.00	1.00	1.30	10.75	4.16	0.00	0.00	---	0.95	36.00	---	---	99.000	2059.20
LegalRoutine	13	SER-II	pos	819.0	---	1.00	1.00	1.00	1.30	10.75	4.16	0.00	3.87	---	0.95	36.00	---	---	3.833	76.65
LegalRoutine	13	SER-II	pos	0.0	---	1.00	1.00	1.00	1.30	10.75	4.16	0.00	0.00	---	0.95	36.00	---	---	99.000	1980.00
LegalRoutine	1	SER-II	pos	768.8	---	1.00	1.00	1.00	1.30	10.75	4.16	0.00	3.64	---	0.95	36.00	---	---	4.083	117.38
LegalRoutine	1	SER-II	pos	0.0	---	1.00	1.00	1.00	1.30	10.75	4.16	0.00	0.00	---	0.95	36.00	---	---	99.000	2846.25
LegalRoutine	2	SER-II	pos	1164.8	---	1.00	1.00	1.00	1.30	10.75	4.16	0.00	5.51	---	0.95	36.00	---	---	2.695	115.88
LegalRoutine	2	SER-II	pos	0.0	---	1.00	1.00	1.00	1.30	10.75	4.16	0.00	0.00	---	0.95	36.00	---	---	99.000	4257.00

Load Combination Legend:

Code	Vehicle
3	HL-93 (US) - Truck + Lane
4	HL-93 (US) - Tandem + Lane
10	Type 3 - Legal Truck
12	Type 3S2 - Legal Truck
11	Type 3-3 - Legal Truck
6	SU4 - Legal Truck
7	SU5 - Legal Truck

```
    8     SU6 - Legal Truck
    9     SU7 - Legal Truck
   21     RIPTA Bus - Legal Truck
   13     H20 - Legal Truck
    1     EV2 - Legal Truck
    2     EV3 - Legal Truck
   14     RI-3 - Permit Truck
   15     RI-4 - Permit Truck
   16     RI-5 - Permit Truck
   17     RI-6 - Permit Truck
   18     RI-OP 1 - Permit Truck
   19     RI-OP 2 - Permit Truck
   20     RI-OP 3 - Permit Truck
    5     LRFD Fatigue Truck (US) - Fatigue Truck



Controlling Rating Factors
--------------------------

    Limit          --------------Design Inv----------------          --------------Design  Op--------------          ---------------Legal Load---------------          --------------Permit Load-------------
    State             Vehicle               RF     Capacity            Vehicle               RF     Capacity            Vehicle               RF     Capacity            Vehicle               RF     Capacity
                                                     (Ton)                                            (Ton)                                            (Ton)                                            (Ton)
----------------------------------------------------------------------------------------------------------------------------------------------------------------------------------------------------------------
 SER-II       HL-93 (US) - Truck + Lane      1.49      53.53   HL-93 (US) - Truck + Lane      1.93      69.59                                                          RI-6 - Permit Truck      2.18     141.99

-----------------------------------------------------------------------------------------------------


Steel Plate - At Location = 55.0000 (ft) - Right     Stage 3

Section at Middle of Unbraced Length


Service Limit State Flexure Rating Calculations

INPUT:

Section Type:  Composite
Allow Plastic Analysis Control Option: No
Allow Moment Redistribution Control Option: No
Moment Redistribution Qualified: No, redistribution did not occur.

Stage 1 DC Moment     =  1401.9  (kip-ft)
Stage 1 DW Moment     =     0.0  (kip-ft)
Stage 1 DW-WS Moment  =     0.0  (kip-ft)
Stage 1 SE Moment     =     0.0  (kip-ft)
Stage 2 DC Moment     =   388.7  (kip-ft)
Stage 2 DW Moment     =   809.2  (kip-ft)
Stage 2 DW-WS Moment  =     0.0  (kip-ft)
Stage 2 SE Moment     =     0.0  (kip-ft)


Stage 1:

Component        C         S        Fy
               (in)     (in^3)     (ksi)
------------------------------------------
Top Flange    44.746   -1267.82    36.00
Bot Flange    -29.504   1922.83    36.00
```

Stage 2:

Positive Flexure			Negative Flexure		
Component	C (in)	S (in^3)	Component	C (in)	S (in^3)
Top Flange	31.129	-3234.77	Top Flange	44.746	-1267.82
Bot Flange	-43.121	2335.11	Bot Flange	-29.504	1922.83

Stage 3:

Positive Flexure			Negative Flexure		
Component	C (in)	S (in^3)	Component	C (in)	S (in^3)
Top Flange	18.634	-7574.82	Top Flange	44.746	-1267.82
Bot Flange	-55.616	2537.87	Bot Flange	-29.504	1922.83

Note: If the capacity has been overridden, the Resistance is computed as override phi*override capacity.
Otherwise the Resistance is computed as per the Specification.

Section Type: Composite

fR = 0.95*Rh*Fyf

Component: Top Flange

Load	Load Combo	Limit State	Flexure Type	LL (kip-ft)	Adj. LL (kip-ft)	DC	DW	DW-WS	LL	fDC (ksi)	fDW (ksi)	fDW-WS (ksi)	fLL (ksi)	Adj. fLL (ksi)	Phi	fR (ksi)	----- Override ----- Phi	fR (ksi)	RF	Capacity (Ton)
DesignInv	3	SER-II	pos	2111.0	---	1.00	1.00	1.00	1.30	-14.71	-3.00	0.00	-3.34	---	0.95	-36.00	---	---	3.792	136.52
DesignInv	3	SER-II	pos	0.0	---	1.00	1.00	1.00	1.30	-14.71	-3.00	0.00	0.00	---	0.95	-36.00	---	---	99.000	3564.00
DesignOp	3	SER-II	pos	2111.0	---	1.00	1.00	1.00	1.00	-14.71	-3.00	0.00	-3.34	---	0.95	-36.00	---	---	4.930	177.48
DesignOp	3	SER-II	pos	0.0	---	1.00	1.00	1.00	1.00	-14.71	-3.00	0.00	0.00	---	0.95	-36.00	---	---	99.000	3564.00
DesignInv	4	SER-II	pos	1785.0	---	1.00	1.00	1.00	1.30	-14.71	-3.00	0.00	-2.83	---	0.95	-36.00	---	---	4.485	161.46
DesignInv	4	SER-II	pos	0.0	---	1.00	1.00	1.00	1.30	-14.71	-3.00	0.00	0.00	---	0.95	-36.00	---	---	99.000	3564.00
DesignOp	4	SER-II	pos	1785.0	---	1.00	1.00	1.00	1.00	-14.71	-3.00	0.00	-2.83	---	0.95	-36.00	---	---	5.831	209.90
DesignOp	4	SER-II	pos	0.0	---	1.00	1.00	1.00	1.00	-14.71	-3.00	0.00	0.00	---	0.95	-36.00	---	---	99.000	3564.00
LegalRoutine	10	SER-II	pos	957.9	---	1.00	1.00	1.00	1.30	-14.71	-3.00	0.00	-1.52	---	0.95	-36.00	---	---	8.358	208.94
LegalRoutine	10	SER-II	pos	0.0	---	1.00	1.00	1.00	1.30	-14.71	-3.00	0.00	0.00	---	0.95	-36.00	---	---	99.000	2475.00
LegalRoutine	12	SER-II	pos	1178.3	---	1.00	1.00	1.00	1.30	-14.71	-3.00	0.00	-1.87	---	0.95	-36.00	---	---	6.794	244.59
LegalRoutine	12	SER-II	pos	0.0	---	1.00	1.00	1.00	1.30	-14.71	-3.00	0.00	0.00	---	0.95	-36.00	---	---	99.000	3564.00
LegalRoutine	11	SER-II	pos	1208.2	---	1.00	1.00	1.00	1.30	-14.71	-3.00	0.00	-1.91	---	0.95	-36.00	---	---	6.626	265.06
LegalRoutine	11	SER-II	pos	0.0	---	1.00	1.00	1.00	1.30	-14.71	-3.00	0.00	0.00	---	0.95	-36.00	---	---	99.000	3960.00
LegalSpecial	6	SER-II	pos	1059.9	---	1.00	1.00	1.00	1.30	-14.71	-3.00	0.00	-1.68	---	0.95	-36.00	---	---	7.553	203.94
LegalSpecial	6	SER-II	pos	0.0	---	1.00	1.00	1.00	1.30	-14.71	-3.00	0.00	0.00	---	0.95	-36.00	---	---	99.000	2673.00
LegalSpecial	7	SER-II	pos	1188.5	---	1.00	1.00	1.00	1.30	-14.71	-3.00	0.00	-1.88	---	0.95	-36.00	---	---	6.736	208.81
LegalSpecial	7	SER-II	pos	0.0	---	1.00	1.00	1.00	1.30	-14.71	-3.00	0.00	0.00	---	0.95	-36.00	---	---	99.000	3069.00
LegalSpecial	8	SER-II	pos	1328.8	---	1.00	1.00	1.00	1.30	-14.71	-3.00	0.00	-2.11	---	0.95	-36.00	---	---	6.025	209.37
LegalSpecial	8	SER-II	pos	0.0	---	1.00	1.00	1.00	1.30	-14.71	-3.00	0.00	0.00	---	0.95	-36.00	---	---	99.000	3440.25
LegalSpecial	9	SER-II	pos	1463.7	---	1.00	1.00	1.00	1.30	-14.71	-3.00	0.00	-2.32	---	0.95	-36.00	---	---	5.470	211.94
LegalSpecial	9	SER-II	pos	0.0	---	1.00	1.00	1.00	1.30	-14.71	-3.00	0.00	0.00	---	0.95	-36.00	---	---	99.000	3836.25
Permit	14	SER-II	pos	1496.3	---	1.00	1.00	1.00	1.00	-14.71	-3.00	0.00	-2.37	---	0.95	-36.00	---	---	6.955	264.31
Permit	14	SER-II	pos	0.0	---	1.00	1.00	1.00	1.00	-14.71	-3.00	0.00	0.00	---	0.95	-36.00	---	---	99.000	3762.00
Permit	15	SER-II	pos	1460.8	---	1.00	1.00	1.00	1.00	-14.71	-3.00	0.00	-2.31	---	0.95	-36.00	---	---	7.125	267.17
Permit	15	SER-II	pos	0.0	---	1.00	1.00	1.00	1.00	-14.71	-3.00	0.00	0.00	---	0.95	-36.00	---	---	99.000	3712.50

Permit	16	SER-II	pos	1865.4	---	1.00	1.00	1.00	1.00	-14.71	-3.00	0.00	-2.96	---	0.95	-36.00	---	---	5.579	292.35
Permit	16	SER-II	pos	0.0	---	1.00	1.00	1.00	1.00	-14.71	-3.00	0.00	0.00	---	0.95	-36.00	---	---	99.000	5187.60
Permit	17	SER-II	pos	1868.0	---	1.00	1.00	1.00	1.00	-14.71	-3.00	0.00	-2.96	---	0.95	-36.00	---	---	5.571	362.14
Permit	17	SER-II	pos	0.0	---	1.00	1.00	1.00	1.00	-14.71	-3.00	0.00	0.00	---	0.95	-36.00	---	---	99.000	6435.00
PermitSpec	18	SER-II	pos	1240.4	---	1.00	1.00	1.00	1.00	-14.71	-3.00	0.00	-1.97	---	0.95	-36.00	---	---	8.390	474.04
PermitSpec	18	SER-II	pos	0.0	---	1.00	1.00	1.00	1.00	-14.71	-3.00	0.00	0.00	---	0.95	-36.00	---	---	99.000	5593.50
PermitSpec	19	SER-II	pos	1159.5	---	1.00	1.00	1.00	1.00	-14.71	-3.00	0.00	-1.84	---	0.95	-36.00	---	---	8.976	718.09
PermitSpec	19	SER-II	pos	0.0	---	1.00	1.00	1.00	1.00	-14.71	-3.00	0.00	0.00	---	0.95	-36.00	---	---	99.000	7920.00
PermitSpec	20	SER-II	pos	1308.5	---	1.00	1.00	1.00	1.00	-14.71	-3.00	0.00	-2.07	---	0.95	-36.00	---	---	7.954	898.78
PermitSpec	20	SER-II	pos	0.0	---	1.00	1.00	1.00	1.00	-14.71	-3.00	0.00	0.00	---	0.95	-36.00	---	---	99.000	11187.00
LegalRoutine	21	SER-II	pos	764.3	---	1.00	1.00	1.00	1.30	-14.71	-3.00	0.00	-1.21	---	0.95	-36.00	---	---	10.474	217.86
LegalRoutine	21	SER-II	pos	0.0	---	1.00	1.00	1.00	1.30	-14.71	-3.00	0.00	0.00	---	0.95	-36.00	---	---	99.000	2059.20
LegalRoutine	13	SER-II	pos	819.0	---	1.00	1.00	1.00	1.30	-14.71	-3.00	0.00	-1.30	---	0.95	-36.00	---	---	9.775	195.49
LegalRoutine	13	SER-II	pos	0.0	---	1.00	1.00	1.00	1.30	-14.71	-3.00	0.00	0.00	---	0.95	-36.00	---	---	99.000	1980.00
LegalRoutine	1	SER-II	pos	768.8	---	1.00	1.00	1.00	1.30	-14.71	-3.00	0.00	-1.22	---	0.95	-36.00	---	---	10.413	299.37
LegalRoutine	1	SER-II	pos	0.0	---	1.00	1.00	1.00	1.30	-14.71	-3.00	0.00	0.00	---	0.95	-36.00	---	---	99.000	2846.25
LegalRoutine	2	SER-II	pos	1164.8	---	1.00	1.00	1.00	1.30	-14.71	-3.00	0.00	-1.85	---	0.95	-36.00	---	---	6.873	295.54
LegalRoutine	2	SER-II	pos	0.0	---	1.00	1.00	1.00	1.30	-14.71	-3.00	0.00	0.00	---	0.95	-36.00	---	---	99.000	4257.00

Component: Bot Flange

Load	Load Combo	Limit State	Flexure Type	LL (kip-ft)	Adj. LL (kip-ft)	DC	DW	DW-WS	LL	fDC (ksi)	fDW (ksi)	fDW-WS (ksi)	fLL (ksi)	Adj. fLL (ksi)	Phi	fR (ksi)	----- Override ----- Phi	fR (ksi)	RF	Capacity (Ton)
DesignInv	3	SER-II	pos	2111.0	---	1.00	1.00	1.00	1.30	10.75	4.16	0.00	9.98	---	0.95	36.00	---	---	1.487	53.53
DesignInv	3	SER-II	pos	0.0	---	1.00	1.00	1.00	1.30	10.75	4.16	0.00	0.00	---	0.95	36.00	---	---	99.000	3564.00
DesignOp	3	SER-II	pos	2111.0	---	1.00	1.00	1.00	1.00	10.75	4.16	0.00	9.98	---	0.95	36.00	---	---	1.933	69.59
DesignOp	3	SER-II	pos	0.0	---	1.00	1.00	1.00	1.00	10.75	4.16	0.00	0.00	---	0.95	36.00	---	---	99.000	3564.00
DesignInv	4	SER-II	pos	1785.0	---	1.00	1.00	1.00	1.30	10.75	4.16	0.00	8.44	---	0.95	36.00	---	---	1.759	63.31
DesignInv	4	SER-II	pos	0.0	---	1.00	1.00	1.00	1.30	10.75	4.16	0.00	0.00	---	0.95	36.00	---	---	99.000	3564.00
DesignOp	4	SER-II	pos	1785.0	---	1.00	1.00	1.00	1.00	10.75	4.16	0.00	8.44	---	0.95	36.00	---	---	2.286	82.30
DesignOp	4	SER-II	pos	0.0	---	1.00	1.00	1.00	1.00	10.75	4.16	0.00	0.00	---	0.95	36.00	---	---	99.000	3564.00
LegalRoutine	10	SER-II	pos	957.9	---	1.00	1.00	1.00	1.30	10.75	4.16	0.00	4.53	---	0.95	36.00	---	---	3.277	81.93
LegalRoutine	10	SER-II	pos	0.0	---	1.00	1.00	1.00	1.30	10.75	4.16	0.00	0.00	---	0.95	36.00	---	---	99.000	2475.00
LegalRoutine	12	SER-II	pos	1178.3	---	1.00	1.00	1.00	1.30	10.75	4.16	0.00	5.57	---	0.95	36.00	---	---	2.664	95.90
LegalRoutine	12	SER-II	pos	0.0	---	1.00	1.00	1.00	1.30	10.75	4.16	0.00	0.00	---	0.95	36.00	---	---	99.000	3564.00
LegalRoutine	11	SER-II	pos	1208.2	---	1.00	1.00	1.00	1.30	10.75	4.16	0.00	5.71	---	0.95	36.00	---	---	2.598	103.93
LegalRoutine	11	SER-II	pos	0.0	---	1.00	1.00	1.00	1.30	10.75	4.16	0.00	0.00	---	0.95	36.00	---	---	99.000	3960.00
LegalSpecial	6	SER-II	pos	1059.9	---	1.00	1.00	1.00	1.30	10.75	4.16	0.00	5.01	---	0.95	36.00	---	---	2.962	79.97
LegalSpecial	6	SER-II	pos	0.0	---	1.00	1.00	1.00	1.30	10.75	4.16	0.00	0.00	---	0.95	36.00	---	---	99.000	2673.00
LegalSpecial	7	SER-II	pos	1188.5	---	1.00	1.00	1.00	1.30	10.75	4.16	0.00	5.62	---	0.95	36.00	---	---	2.641	81.87
LegalSpecial	7	SER-II	pos	0.0	---	1.00	1.00	1.00	1.30	10.75	4.16	0.00	0.00	---	0.95	36.00	---	---	99.000	3069.00
LegalSpecial	8	SER-II	pos	1328.8	---	1.00	1.00	1.00	1.30	10.75	4.16	0.00	6.28	---	0.95	36.00	---	---	2.362	82.09
LegalSpecial	8	SER-II	pos	0.0	---	1.00	1.00	1.00	1.30	10.75	4.16	0.00	0.00	---	0.95	36.00	---	---	99.000	3440.25
LegalSpecial	9	SER-II	pos	1463.7	---	1.00	1.00	1.00	1.30	10.75	4.16	0.00	6.92	---	0.95	36.00	---	---	2.145	83.10
LegalSpecial	9	SER-II	pos	0.0	---	1.00	1.00	1.00	1.30	10.75	4.16	0.00	0.00	---	0.95	36.00	---	---	99.000	3836.25
Permit	14	SER-II	pos	1496.3	---	1.00	1.00	1.00	1.00	10.75	4.16	0.00	7.08	---	0.95	36.00	---	---	2.727	103.63
Permit	14	SER-II	pos	0.0	---	1.00	1.00	1.00	1.00	10.75	4.16	0.00	0.00	---	0.95	36.00	---	---	99.000	3762.00
Permit	15	SER-II	pos	1460.8	---	1.00	1.00	1.00	1.00	10.75	4.16	0.00	6.91	---	0.95	36.00	---	---	2.794	104.76
Permit	15	SER-II	pos	0.0	---	1.00	1.00	1.00	1.00	10.75	4.16	0.00	0.00	---	0.95	36.00	---	---	99.000	3712.50
Permit	16	SER-II	pos	1865.4	---	1.00	1.00	1.00	1.00	10.75	4.16	0.00	8.82	---	0.95	36.00	---	---	2.188	114.63
Permit	16	SER-II	pos	0.0	---	1.00	1.00	1.00	1.00	10.75	4.16	0.00	0.00	---	0.95	36.00	---	---	99.000	5187.60
Permit	17	SER-II	pos	1868.0	---	1.00	1.00	1.00	1.00	10.75	4.16	0.00	8.83	---	0.95	36.00	---	---	2.185	141.99
Permit	17	SER-II	pos	0.0	---	1.00	1.00	1.00	1.00	10.75	4.16	0.00	0.00	---	0.95	36.00	---	---	99.000	6435.00
PermitSpec	18	SER-II	pos	1240.4	---	1.00	1.00	1.00	1.00	10.75	4.16	0.00	5.87	---	0.95	36.00	---	---	3.290	185.87
PermitSpec	18	SER-II	pos	0.0	---	1.00	1.00	1.00	1.00	10.75	4.16	0.00	0.00	---	0.95	36.00	---	---	99.000	5593.50
PermitSpec	19	SER-II	pos	1159.5	---	1.00	1.00	1.00	1.00	10.75	4.16	0.00	5.48	---	0.95	36.00	---	---	3.520	281.56
PermitSpec	19	SER-II	pos	0.0	---	1.00	1.00	1.00	1.00	10.75	4.16	0.00	0.00	---	0.95	36.00	---	---	99.000	7920.00
PermitSpec	20	SER-II	pos	1308.5	---	1.00	1.00	1.00	1.00	10.75	4.16	0.00	6.19	---	0.95	36.00	---	---	3.119	352.41

PermitSpec	20	SER-II	pos	0.0	---	1.00	1.00	1.00	1.00	10.75	4.16	0.00	0.00	---	0.95	36.00	---	---	99.000	11187.00
LegalRoutine	21	SER-II	pos	764.3	---	1.00	1.00	1.00	1.30	10.75	4.16	0.00	3.61	---	0.95	36.00	---	---	4.107	85.42
LegalRoutine	21	SER-II	pos	0.0	---	1.00	1.00	1.00	1.30	10.75	4.16	0.00	0.00	---	0.95	36.00	---	---	99.000	2059.20
LegalRoutine	13	SER-II	pos	819.0	---	1.00	1.00	1.00	1.30	10.75	4.16	0.00	3.87	---	0.95	36.00	---	---	3.833	76.65
LegalRoutine	13	SER-II	pos	0.0	---	1.00	1.00	1.00	1.30	10.75	4.16	0.00	0.00	---	0.95	36.00	---	---	99.000	1980.00
LegalRoutine	1	SER-II	pos	768.8	---	1.00	1.00	1.00	1.30	10.75	4.16	0.00	3.64	---	0.95	36.00	---	---	4.083	117.38
LegalRoutine	1	SER-II	pos	0.0	---	1.00	1.00	1.00	1.30	10.75	4.16	0.00	0.00	---	0.95	36.00	---	---	99.000	2846.25
LegalRoutine	2	SER-II	pos	1164.8	---	1.00	1.00	1.00	1.30	10.75	4.16	0.00	5.51	---	0.95	36.00	---	---	2.695	115.88
LegalRoutine	2	SER-II	pos	0.0	---	1.00	1.00	1.00	1.30	10.75	4.16	0.00	0.00	---	0.95	36.00	---	---	99.000	4257.00

Load Combination Legend:

Code	Vehicle
3	HL-93 (US) - Truck + Lane
4	HL-93 (US) - Tandem + Lane
10	Type 3 - Legal Truck
12	Type 3S2 - Legal Truck
11	Type 3-3 - Legal Truck
6	SU4 - Legal Truck
7	SU5 - Legal Truck
8	SU6 - Legal Truck
9	SU7 - Legal Truck
21	RIPTA Bus - Legal Truck
13	H20 - Legal Truck
1	EV2 - Legal Truck
2	EV3 - Legal Truck
14	RI-3 - Permit Truck
15	RI-4 - Permit Truck
16	RI-5 - Permit Truck
17	RI-6 - Permit Truck
18	RI-OP 1 - Permit Truck
19	RI-OP 2 - Permit Truck
20	RI-OP 3 - Permit Truck
5	LRFD Fatigue Truck (US) - Fatigue Truck

Controlling Rating Factors

Limit State	Design Inv Vehicle	RF	Capacity (Ton)	Design Op Vehicle	RF	Capacity (Ton)	Legal Load Vehicle	RF	Capacity (Ton)	Permit Load Vehicle	RF	Capacity (Ton)
SER-II	HL-93 (US) - Truck + Lane	1.49	53.53	HL-93 (US) - Truck + Lane	1.93	69.59				RI-6 - Permit Truck	2.18	141.99

Bridge Name: Mohegan Bridge
NBI Structure ID:
Bridge ID: 067301

Analyzed By: BrR
Analyze Date: Friday, September 14, 2018 19:15:46
Analysis Engine: AASHTO LRFR Engine Version 6.8.2.3002
Analysis Preference Setting: None

Report By: brr
Report Date: Friday, September 14, 2018 19:16:28

Structure Definition Name: Span 2
Member Name: Girder B
Member Alternative Name: Girder B - As Inspected

Load and Resistance Factor Rating Summary

Live Load		Rating Factor	Girder Summary Controls	Capacity (Ton)	Span	Location (ft)	Percent	Impact	Lane
EV2	Legal	3.455	STRENGTH-I Steel Flexure Stress	99.34	1	55.00	50.0	As Requested	As Requested
EV3	Legal	2.281	STRENGTH-I Steel Flexure Stress	98.07	1	55.00	50.0	As Requested	As Requested
HL-93 (US)	Inventory	0.935	STRENGTH-I Steel Flexure Stress	33.65	1	55.00	50.0	As Requested	As Requested
HL-93 (US)	Operating	1.212	STRENGTH-I Steel Flexure Stress	43.63	1	55.00	50.0	As Requested	As Requested
SU4	Legal	2.506	STRENGTH-I Steel Flexure Stress	67.68	1	55.00	50.0	As Requested	As Requested
SU5	Legal	2.235	STRENGTH-I Steel Flexure Stress	69.29	1	55.00	50.0	As Requested	As Requested
SU6	Legal	1.999	STRENGTH-I Steel Flexure Stress	69.47	1	55.00	50.0	As Requested	As Requested
SU7	Legal	1.815	STRENGTH-I Steel Flexure Stress	70.33	1	55.00	50.0	As Requested	As Requested
Type 3	Legal	2.773	STRENGTH-I Steel Flexure Stress	69.33	1	55.00	50.0	As Requested	As Requested
Type 3-3	Legal	2.199	STRENGTH-I Steel Flexure Stress	87.95	1	55.00	50.0	As Requested	As Requested
Type 3S2	Legal	2.255	STRENGTH-I Steel Flexure Stress	81.16	1	55.00	50.0	As Requested	As Requested
RI-3	Permit	1.951	STRENGTH-II Steel Flexure Stress	74.13	1	55.00	50.0	As Requested	As Requested
RI-4	Permit	1.998	STRENGTH-II Steel Flexure Stress	74.93	1	55.00	50.0	As Requested	As Requested
RI-5	Permit	1.565	STRENGTH-II Steel Flexure Stress	81.99	1	55.00	50.0	As Requested	As Requested

RI-6	Permit	1.485	STRENGTH-II Steel Flexure Stress	96.51	1	49.50	45.0	As Requested	As Requested
RIDOT H20 Truck	Legal	3.244	STRENGTH-I Steel Flexure Stress	64.87	1	55.00	50.0	As Requested	As Requested
RI-OP 1	Permit	2.320	STRENGTH-II Steel Flexure Stress	131.09	1	55.00	50.0	As Requested	As Requested
RI-OP 2	Permit	2.201	STRENGTH-II Steel Shear	176.09	1	0.00	0.0	As Requested	As Requested
RI-OP 3	Permit	1.971	STRENGTH-II Steel Shear	222.76	1	0.00	0.0	As Requested	As Requested
RIPTA Bus	Legal	3.476	STRENGTH-I Steel Flexure Stress	72.29	1	55.00	50.0	As Requested	As Requested

Note:
"N/A" indicates not applicable
"**" indicates not available

Report by Action: ☑ **Flexure** ☑ **Shear** ☑ **Overload** ☑ **Interaction** ☑ **Critical**

Detailed Rating Results
Girder B - As Inspected
EV2
Axle Load
Impact: As Requested
Lane: As Requested

Span 1

Location (ft)	Percent	Limit State	Units	Capacity	DL + Adj -LL*	LL	Legal Rating Factor	Legal Load Rating (Ton)
0.00	0.0	Flexure	KSI	-36.00	-0.00	-0.00	99.000	2846.25
0.00	**0.0**	**Shear**	**KIPS**	**328.32**	**93.90**	**42.95**	**3.647**	**104.84**
0.00	0.0	Overload	KSI	-36.00	-0.00	-0.00	99.000	2846.25
0.83	0.8	Flexure	KSI	-36.00	-0.63	-0.04	99.000	2846.25
0.83	**0.8**	**Shear**	**KIPS**	**328.32**	**92.51**	**42.60**	**3.709**	**106.64**
0.83	0.8	Overload	KSI	-36.00	-0.63	-0.04	99.000	2846.25
11.00	10.0	Flexure	KSI	36.00	6.81	1.71	12.149	349.28
11.00	**10.0**	**Shear**	**KIPS**	**542.44**	**75.50**	**38.39**	**8.859**	**254.71**
11.00	10.0	Overload	KSI	36.00	6.81	1.71	12.314	354.03
22.00	**20.0**	**Flexure**	**KSI**	**36.00**	**12.14**	**3.02**	**5.100**	**146.63**
22.00	20.0	Shear	KIPS	542.44	57.10	33.84	10.608	304.97
22.00	20.0	Overload	KSI	36.00	12.14	3.02	5.626	161.75
25.50	**23.2**	**Flexure**	**KSI**	**36.00**	**13.51**	**3.35**	**4.181**	**120.20**
25.50	23.2	Shear	KIPS	542.44	50.78	32.39	11.281	324.33
25.50	23.2	Overload	KSI	36.00	13.51	3.35	4.755	136.71
33.00	**30.0**	**Flexure**	**KSI**	**36.00**	**12.51**	**3.17**	**4.736**	**136.17**
33.00	30.0	Shear	KIPS	542.44	37.99	29.29	12.924	371.55
33.00	30.0	Overload	KSI	36.00	12.51	3.17	5.271	151.54
44.00	**40.0**	**Flexure**	**KSI**	**36.00**	**14.31**	**3.56**	**3.692**	**106.15**
44.00	40.0	Shear	KIPS	542.44	19.23	24.73	16.078	462.25
44.00	40.0	Overload	KSI	36.00	14.31	3.56	4.291	123.38
49.50	**45.0**	**Flexure**	**KSI**	**36.00**	**14.76**	**3.64**	**3.491**	**100.37**
49.50	45.0	Shear	KIPS	542.44	9.38	22.45	18.156	521.98
49.50	45.0	Overload	KSI	36.00	14.76	3.64	4.108	118.10
55.00	**50.0**	**Flexure**	**KSI**	**36.00**	**14.90**	**3.64**	**3.455**	**99.34**
55.00	50.0	Shear	KIPS	542.44	0.00	-20.18	20.679	594.54
55.00	50.0	Overload	KSI	36.00	14.90	3.64	4.083	117.38

66.00	**60.0**	**Flexure**	**KSI**	**36.00**	**14.31**	**3.56**	**3.692**	**106.15**
66.00	60.0	Shear	KIPS	542.44	-19.23	-24.73	16.078	462.25
66.00	60.0	Overload	KSI	36.00	14.31	3.56	4.291	123.38
77.00	**70.0**	**Flexure**	**KSI**	**36.00**	**12.51**	**3.17**	**4.736**	**136.17**
77.00	70.0	Shear	KIPS	542.44	-37.99	-29.29	12.924	371.55
77.00	70.0	Overload	KSI	36.00	12.51	3.17	5.271	151.54
84.50	**76.8**	**Flexure**	**KSI**	**36.00**	**13.51**	**3.35**	**4.181**	**120.20**
84.50	76.8	Shear	KIPS	542.44	-50.78	-32.39	11.281	324.33
84.50	76.8	Overload	KSI	36.00	13.51	3.35	4.755	136.71
88.00	**80.0**	**Flexure**	**KSI**	**36.00**	**12.14**	**3.02**	**5.100**	**146.63**
88.00	80.0	Shear	KIPS	542.44	-57.10	-33.84	10.608	304.97
88.00	80.0	Overload	KSI	36.00	12.14	3.02	5.626	161.75
99.00	90.0	Flexure	KSI	36.00	6.81	1.71	12.149	349.28
99.00	**90.0**	**Shear**	**KIPS**	**542.44**	**-75.50**	**-38.39**	**8.859**	**254.71**
99.00	90.0	Overload	KSI	36.00	6.81	1.71	12.314	354.03
110.00	100.0	Flexure	KSI	-36.00	-0.00	-0.00	99.000	2846.25
110.00	**100.0**	**Shear**	**KIPS**	**336.32**	**-93.90**	**-42.95**	**3.790**	**108.96**
110.00	100.0	Overload	KSI	-36.00	-0.00	-0.00	99.000	2846.25

Detailed Rating Results
Girder B - As Inspected
EV3
Axle Load
Impact: As Requested
Lane: As Requested

Span 1

Location (ft)	Percent	Limit State	Units	Capacity	DL + Adj -LL*	LL	Legal Rating Factor	Legal Load Rating (Ton)
0.00	0.0	Flexure	KSI	-36.00	-0.00	-0.00	99.000	4257.00
0.00	**0.0**	**Shear**	**KIPS**	**328.32**	**93.90**	**63.93**	**2.450**	**105.33**
0.00	0.0	Overload	KSI	-36.00	-0.00	-0.00	99.000	4257.00
0.83	0.8	Flexure	KSI	-36.00	-0.63	-0.06	99.000	4257.00
0.83	**0.8**	**Shear**	**KIPS**	**328.32**	**92.51**	**63.42**	**2.492**	**107.14**
0.83	0.8	Overload	KSI	-36.00	-0.63	-0.06	99.000	4257.00
11.00	10.0	Flexure	KSI	36.00	6.81	2.55	8.165	351.11
11.00	**10.0**	**Shear**	**KIPS**	**542.44**	**75.50**	**57.12**	**5.954**	**256.04**
11.00	10.0	Overload	KSI	36.00	6.81	2.55	8.276	355.88
22.00	**20.0**	**Flexure**	**KSI**	**36.00**	**12.14**	**4.49**	**3.430**	**147.50**
22.00	20.0	Shear	KIPS	542.44	57.10	50.31	7.135	306.79

22.00	20.0	Overload	KSI	36.00	12.14	4.49	3.784	162.71
25.50	**23.2**	**Flexure**	**KSI**	**36.00**	**13.51**	**4.97**	**2.813**	**120.94**
25.50	23.2	Shear	KIPS	542.44	50.78	48.15	7.589	326.35
25.50	23.2	Overload	KSI	36.00	13.51	4.97	3.199	137.56
33.00	**30.0**	**Flexure**	**KSI**	**36.00**	**12.51**	**4.70**	**3.189**	**137.11**
33.00	30.0	Shear	KIPS	542.44	37.99	43.50	8.700	374.11
33.00	30.0	Overload	KSI	36.00	12.51	4.70	3.548	152.58
44.00	**40.0**	**Flexure**	**KSI**	**36.00**	**14.31**	**5.32**	**2.472**	**106.31**
44.00	40.0	Shear	KIPS	542.44	19.23	36.69	10.838	466.02
44.00	40.0	Overload	KSI	36.00	14.31	5.32	2.874	123.56
49.50	**45.0**	**Flexure**	**KSI**	**36.00**	**14.76**	**5.48**	**2.321**	**99.80**
49.50	45.0	Shear	KIPS	542.44	9.38	33.29	12.248	526.67
49.50	45.0	Overload	KSI	36.00	14.76	5.48	2.731	117.42
55.00	**50.0**	**Flexure**	**KSI**	**36.00**	**14.90**	**5.51**	**2.281**	**98.07**
55.00	50.0	Shear	KIPS	542.44	0.00	-29.88	13.965	600.49
55.00	50.0	Overload	KSI	36.00	14.90	5.51	2.695	115.88
66.00	**60.0**	**Flexure**	**KSI**	**36.00**	**14.31**	**5.32**	**2.472**	**106.31**
66.00	60.0	Shear	KIPS	542.44	-19.23	-36.69	10.838	466.02
66.00	60.0	Overload	KSI	36.00	14.31	5.32	2.874	123.56
77.00	**70.0**	**Flexure**	**KSI**	**36.00**	**12.51**	**4.70**	**3.189**	**137.11**
77.00	70.0	Shear	KIPS	542.44	-37.99	-43.50	8.700	374.11
77.00	70.0	Overload	KSI	36.00	12.51	4.70	3.548	152.58
84.50	**76.8**	**Flexure**	**KSI**	**36.00**	**13.51**	**4.97**	**2.813**	**120.94**
84.50	76.8	Shear	KIPS	542.44	-50.78	-48.15	7.589	326.35
84.50	76.8	Overload	KSI	36.00	13.51	4.97	3.199	137.56
88.00	**80.0**	**Flexure**	**KSI**	**36.00**	**12.14**	**4.49**	**3.430**	**147.50**
88.00	80.0	Shear	KIPS	542.44	-57.10	-50.31	7.135	306.79
88.00	80.0	Overload	KSI	36.00	12.14	4.49	3.784	162.71
99.00	90.0	Flexure	KSI	36.00	6.81	2.55	8.165	351.11
99.00	**90.0**	**Shear**	**KIPS**	**542.44**	**-75.50**	**-57.12**	**5.954**	**256.04**
99.00	90.0	Overload	KSI	36.00	6.81	2.55	8.276	355.88
110.00	100.0	Flexure	KSI	-36.00	-0.00	-0.00	99.000	4257.00
110.00	**100.0**	**Shear**	**KIPS**	**336.32**	**-93.90**	**-63.93**	**2.546**	**109.47**
110.00	100.0	Overload	KSI	-36.00	-0.00	-0.00	99.000	4257.00

Detailed Rating Results
Girder B - As Inspected
HL-93 (US)
Truck + Lane
Impact: As Requested
Lane: As Requested

Span 1

Location (ft)	Percent	Limit State	Units	Capacity	DL + Adj-LL*	LL	Inventory Rating Factor	Inventory Load Rating (Ton)	Operating Rating Factor	Operating Load Rating (Ton)
0.00	0.0	Flexure	KSI	-36.00	-0.00	-0.00	99.000	3564.00	99.000	3564.00
0.00	**0.0**	**Shear**	**KIPS**	**328.32**	**93.90**	**95.70**	**1.216**	**43.76**	**1.576**	**56.73**
0.00	0.0	Overload	KSI	-36.00	-0.00	-0.00	99.000	3564.00	99.000	3564.00
0.83	0.8	Flexure	KSI	36.00	0.57	0.39	51.964	1870.69	67.360	2424.97
0.83	**0.8**	**Shear**	**KIPS**	**328.32**	**92.51**	**94.72**	**1.239**	**44.62**	**1.607**	**57.84**
0.83	0.8	Overload	KSI	36.00	0.57	0.39	66.737	2402.54	86.758	3123.30
11.00	10.0	Flexure	KSI	36.00	6.81	4.62	3.346	120.45	4.337	156.14
11.00	**10.0**	**Shear**	**KIPS**	**542.44**	**75.50**	**83.03**	**3.043**	**109.56**	**3.945**	**142.02**
11.00	10.0	Overload	KSI	36.00	6.81	4.62	4.565	164.35	5.935	213.65
22.00	**20.0**	**Flexure**	**KSI**	**36.00**	**12.14**	**8.13**	**1.406**	**50.61**	**1.822**	**65.60**
22.00	20.0	Shear	KIPS	542.44	57.10	70.90	3.761	135.39	4.875	175.50
22.00	20.0	Overload	KSI	36.00	12.14	8.13	2.088	75.15	2.714	97.70
25.50	**23.2**	**Flexure**	**KSI**	**36.00**	**13.51**	**9.02**	**1.153**	**41.50**	**1.494**	**53.79**
25.50	23.2	Shear	KIPS	542.44	50.78	67.16	4.042	145.50	5.239	188.60
25.50	23.2	Overload	KSI	36.00	13.51	9.02	1.765	63.54	2.294	82.60
33.00	**30.0**	**Flexure**	**KSI**	**36.00**	**12.51**	**8.52**	**1.307**	**47.05**	**1.694**	**60.99**
33.00	30.0	Shear	KIPS	542.44	37.99	59.33	4.739	170.59	6.143	221.14
33.00	30.0	Overload	KSI	36.00	12.51	8.52	1.958	70.48	2.545	91.63
44.00	**40.0**	**Flexure**	**KSI**	**36.00**	**14.31**	**9.67**	**1.011**	**36.38**	**1.310**	**47.16**
44.00	40.0	Shear	KIPS	542.44	19.23	48.31	6.115	220.14	7.927	285.37
44.00	40.0	Overload	KSI	36.00	14.31	9.67	1.581	56.92	2.056	74.00
49.50	**45.0**	**Flexure**	**KSI**	**36.00**	**14.76**	**9.94**	**0.950**	**34.20**	**1.232**	**44.33**
49.50	45.0	Shear	KIPS	542.44	9.38	43.00	7.043	253.56	9.130	328.68
49.50	45.0	Overload	KSI	36.00	14.76	9.94	1.505	54.17	1.956	70.42
55.00	**50.0**	**Flexure**	**KSI**	**36.00**	**14.90**	**9.98**	**0.935**	**33.65**	**1.212**	**43.63**
55.00	50.0	Shear	KIPS	542.44	0.00	-37.83	8.194	294.99	10.622	382.39
55.00	50.0	Overload	KSI	36.00	14.90	9.98	1.487	53.53	1.933	69.59
66.00	**60.0**	**Flexure**	**KSI**	**36.00**	**14.31**	**9.67**	**1.011**	**36.38**	**1.310**	**47.16**
66.00	60.0	Shear	KIPS	542.44	-19.23	-48.31	6.115	220.14	7.927	285.37
66.00	60.0	Overload	KSI	36.00	14.31	9.67	1.581	56.92	2.056	74.00
77.00	**70.0**	**Flexure**	**KSI**	**36.00**	**12.51**	**8.52**	**1.307**	**47.05**	**1.694**	**60.99**
77.00	70.0	Shear	KIPS	542.44	-37.99	-59.33	4.739	170.59	6.143	221.14
77.00	70.0	Overload	KSI	36.00	12.51	8.52	1.958	70.48	2.545	91.63
84.50	**76.8**	**Flexure**	**KSI**	**36.00**	**13.51**	**9.02**	**1.153**	**41.50**	**1.494**	**53.79**
84.50	76.8	Shear	KIPS	542.44			4.042	145.50	5.239	188.60

					-50.78	-67.16				
84.50	76.8	Overload	KSI	36.00	13.51	9.02	1.765	63.54	2.294	82.60
88.00	**80.0**	**Flexure**	**KSI**	**36.00**	**12.14**	**8.13**	**1.406**	**50.61**	**1.822**	**65.60**
88.00	80.0	Shear	KIPS	542.44	-57.10	-70.90	3.761	135.39	4.875	175.50
88.00	80.0	Overload	KSI	36.00	12.14	8.13	2.088	75.15	2.714	97.70
99.00	90.0	Flexure	KSI	36.00	6.81	4.62	3.346	120.45	4.337	156.14
99.00	**90.0**	**Shear**	**KIPS**	**542.44**	**-75.50**	**-83.03**	**3.043**	**109.56**	**3.945**	**142.02**
99.00	90.0	Overload	KSI	36.00	6.81	4.62	4.565	164.35	5.935	213.65
110.00	100.0	Flexure	KSI	-36.00	-0.00	-0.00	99.000	3564.00	99.000	3564.00
110.00	**100.0**	**Shear**	**KIPS**	**336.32**	**-93.90**	**-95.70**	**1.263**	**45.49**	**1.638**	**58.96**
110.00	100.0	Overload	KSI	-36.00	-0.00	-0.00	99.000	3564.00	99.000	3564.00

Detailed Rating Results
Girder B - As Inspected
HL-93 (US)
Tandem + Lane
Impact: As Requested
Lane: As Requested

Span 1

Location (ft)	Percent	Limit State	Units	Capacity	DL + Adj-LL*	LL	Inventory Rating Factor	Inventory Load Rating (Ton)	Operating Rating Factor	Operating Load Rating (Ton)
0.00	0.0	Flexure	KSI	-36.00	-0.00	-0.00	99.000	3564.00	99.000	3564.00
0.00	**0.0**	**Shear**	**KIPS**	**328.32**	**93.90**	**78.29**	**1.486**	**53.50**	**1.926**	**69.35**
0.00	0.0	Overload	KSI	-36.00	-0.00	-0.00	99.000	3564.00	99.000	3564.00
0.83	0.8	Flexure	KSI	36.00	0.57	0.32	63.492	2285.69	82.304	2962.94
0.83	**0.8**	**Shear**	**KIPS**	**328.32**	**92.51**	**77.49**	**1.515**	**54.54**	**1.964**	**70.70**
0.83	0.8	Overload	KSI	36.00	0.57	0.32	81.543	2935.53	99.000	3564.00
11.00	10.0	Flexure	KSI	36.00	6.81	3.80	4.065	146.35	5.270	189.71
11.00	**10.0**	**Shear**	**KIPS**	**542.44**	**75.50**	**67.90**	**3.721**	**133.97**	**4.824**	**173.66**
11.00	10.0	Overload	KSI	36.00	6.81	3.80	5.547	199.68	7.211	259.59
22.00	**20.0**	**Flexure**	**KSI**	**36.00**	**12.14**	**6.74**	**1.695**	**61.02**	**2.197**	**79.10**
22.00	20.0	Shear	KIPS	542.44	57.10	58.06	4.593	165.35	5.954	214.34
22.00	20.0	Overload	KSI	36.00	12.14	6.74	2.517	90.61	3.272	117.80
25.50	**23.2**	**Flexure**	**KSI**	**36.00**	**13.51**	**7.50**	**1.386**	**49.89**	**1.797**	**64.68**
25.50	23.2	Shear	KIPS	542.44	50.78	55.04	4.932	177.54	6.393	230.15

25.50	23.2	Overload	KSI	36.00	13.51	7.50	2.122	76.39	2.759	99.31
33.00	**30.0**	**Flexure**	**KSI**	**36.00**	**12.51**	**7.14**	**1.560**	**56.17**	**2.023**	**72.81**
33.00	30.0	Shear	KIPS	542.44	37.99	48.76	5.766	207.57	7.474	269.07
33.00	30.0	Overload	KSI	36.00	12.51	7.14	2.337	84.15	3.039	109.39
44.00	**40.0**	**Flexure**	**KSI**	**36.00**	**14.31**	**8.14**	**1.202**	**43.27**	**1.558**	**56.09**
44.00	40.0	Shear	KIPS	542.44	19.23	40.02	7.382	265.75	9.569	344.49
44.00	40.0	Overload	KSI	36.00	14.31	8.14	1.880	67.69	2.444	88.00
49.50	**45.0**	**Flexure**	**KSI**	**36.00**	**14.76**	**8.37**	**1.128**	**40.59**	**1.462**	**52.62**
49.50	45.0	Shear	KIPS	542.44	9.38	35.85	8.448	304.13	10.951	394.24
49.50	45.0	Overload	KSI	36.00	14.76	8.37	1.786	64.30	2.322	83.59
55.00	**50.0**	**Flexure**	**KSI**	**36.00**	**14.90**	**8.44**	**1.106**	**39.80**	**1.433**	**51.59**
55.00	50.0	Shear	KIPS	542.44	0.00	-31.82	9.742	350.70	12.628	454.62
55.00	50.0	Overload	KSI	36.00	14.90	8.44	1.759	63.31	2.286	82.30
66.00	**60.0**	**Flexure**	**KSI**	**36.00**	**14.31**	**8.14**	**1.202**	**43.27**	**1.558**	**56.09**
66.00	60.0	Shear	KIPS	542.44	-19.23	-40.02	7.382	265.75	9.569	344.49
66.00	60.0	Overload	KSI	36.00	14.31	8.14	1.880	67.69	2.444	88.00
77.00	**70.0**	**Flexure**	**KSI**	**36.00**	**12.51**	**7.14**	**1.560**	**56.17**	**2.023**	**72.81**
77.00	70.0	Shear	KIPS	542.44	-37.99	-48.76	5.766	207.57	7.474	269.07
77.00	70.0	Overload	KSI	36.00	12.51	7.14	2.337	84.15	3.039	109.39
84.50	**76.8**	**Flexure**	**KSI**	**36.00**	**13.51**	**7.50**	**1.386**	**49.89**	**1.797**	**64.68**
84.50	76.8	Shear	KIPS	542.44	-50.78	-55.04	4.932	177.54	6.393	230.15
84.50	76.8	Overload	KSI	36.00	13.51	7.50	2.122	76.39	2.759	99.31
88.00	**80.0**	**Flexure**	**KSI**	**36.00**	**12.14**	**6.74**	**1.695**	**61.02**	**2.197**	**79.10**
88.00	80.0	Shear	KIPS	542.44	-57.10	-58.06	4.593	165.35	5.954	214.34
88.00	80.0	Overload	KSI	36.00	12.14	6.74	2.517	90.61	3.272	117.80
99.00	90.0	Flexure	KSI	36.00	6.81	3.80	4.065	146.35	5.270	189.71
99.00	**90.0**	**Shear**	**KIPS**	**542.44**	**-75.50**	**-67.90**	**3.721**	**133.97**	**4.824**	**173.66**
99.00	90.0	Overload	KSI	36.00	6.81	3.80	5.547	199.68	7.211	259.59
110.00	100.0	Flexure	KSI	-36.00	-0.00	-0.00	99.000	3564.00	99.000	3564.00
110.00	**100.0**	**Shear**	**KIPS**	**336.32**	**-93.90**	**-78.29**	**1.544**	**55.60**	**2.002**	**72.07**
110.00	100.0	Overload	KSI	-36.00	-0.00	-0.00	99.000	3564.00	99.000	3564.00

Detailed Rating Results
Girder B - As Inspected
LRFD Fatigue Truck (US)
Axle Load
Impact: As Requested
Lane: As Requested

Span 1

Location (ft)	Percent	Limit State	Units	Capacity	DL + Adj-LL*	LL	Inventory Rating Factor	Inventory Load Rating (Ton)
0.83	0.8	Interaction	KSI	16.00	0.00	0.19	84.982	2549.47
11.00	10.0	Interaction	KSI	12.00	0.00	2.21	5.428	162.85
22.00	20.0	Interaction	KSI	12.00	0.00	3.82	3.142	94.26
25.50	23.2	Interaction	KSI	16.00	0.00	4.28	3.739	112.17
33.00	30.0	Interaction	KSI	12.00	0.00	3.96	3.034	91.02
44.00	40.0	Interaction	KSI	12.00	0.00	4.42	2.714	81.43
49.50	45.0	Interaction	KSI	12.00	0.00	4.47	2.683	80.48
55.00	50.0	Interaction	KSI	12.00	0.00	4.40	2.725	81.74
66.00	60.0	Interaction	KSI	12.00	0.00	4.42	2.714	81.43
77.00	70.0	Interaction	KSI	12.00	0.00	3.96	3.034	91.02
84.50	76.8	Interaction	KSI	16.00	0.00	4.20	3.805	114.16
88.00	80.0	Interaction	KSI	12.00	0.00	3.82	3.142	94.26
99.00	90.0	Interaction	KSI	12.00	0.00	2.21	5.428	162.85

Detailed Rating Results
Girder B - As Inspected
SU4
Axle Load
Impact: As Requested
Lane: As Requested

Span 1

Location (ft)	Percent	Limit State	Units	Capacity	DL + Adj -LL*	LL	Legal Rating Factor	Legal Load Rating (Ton)
0.00	0.0	Flexure	KSI	-36.00	-0.00	-0.00	99.000	2673.00
0.00	0.0	Shear	KIPS	328.32	93.90	47.53	3.295	88.97
0.00	0.0	Overload	KSI	-36.00	-0.00	-0.00	99.000	2673.00
0.83	0.8	Flexure	KSI	-36.00	-0.63	-0.05	99.000	2673.00
0.83	0.8	Shear	KIPS	328.32	92.51	47.15	3.352	90.50
0.83	0.8	Overload	KSI	-36.00	-0.63	-0.05	99.000	2673.00
11.00	10.0	Flexure	KSI	36.00	6.81	2.29	9.065	244.76
11.00	10.0	Shear	KIPS	542.44	75.50	42.48	8.008	216.20

11.00	10.0	Overload	KSI	36.00	6.81	2.29	9.189	248.09
22.00	**20.0**	**Flexure**	**KSI**	**36.00**	**12.14**	**4.04**	**3.807**	**102.78**
22.00	20.0	Shear	KIPS	542.44	57.10	37.43	9.590	258.94
22.00	20.0	Overload	KSI	36.00	12.14	4.04	4.199	113.38
25.50	**23.2**	**Flexure**	**KSI**	**36.00**	**13.51**	**4.48**	**3.121**	**84.26**
25.50	23.2	Shear	KIPS	542.44	50.78	35.82	10.200	275.40
25.50	23.2	Overload	KSI	36.00	13.51	4.48	3.550	95.84
33.00	**30.0**	**Flexure**	**KSI**	**36.00**	**12.51**	**4.24**	**3.536**	**95.48**
33.00	30.0	Shear	KIPS	542.44	37.99	32.38	11.688	315.58
33.00	30.0	Overload	KSI	36.00	12.51	4.24	3.936	106.26
44.00	**40.0**	**Flexure**	**KSI**	**36.00**	**14.31**	**4.84**	**2.719**	**73.42**
44.00	40.0	Shear	KIPS	542.44	19.23	27.33	14.548	392.80
44.00	40.0	Overload	KSI	36.00	14.31	4.84	3.161	85.33
49.50	**45.0**	**Flexure**	**KSI**	**36.00**	**14.76**	**4.98**	**2.552**	**68.90**
49.50	45.0	Shear	KIPS	542.44	9.38	24.81	16.433	443.69
49.50	45.0	Overload	KSI	36.00	14.76	4.98	3.003	81.07
55.00	**50.0**	**Flexure**	**KSI**	**36.00**	**14.90**	**5.01**	**2.506**	**67.68**
55.00	50.0	Shear	KIPS	542.44	0.00	-22.28	18.725	505.57
55.00	50.0	Overload	KSI	36.00	14.90	5.01	2.962	79.97
66.00	**60.0**	**Flexure**	**KSI**	**36.00**	**14.31**	**4.84**	**2.719**	**73.42**
66.00	60.0	Shear	KIPS	542.44	-19.23	-27.33	14.548	392.80
66.00	60.0	Overload	KSI	36.00	14.31	4.84	3.161	85.33
77.00	**70.0**	**Flexure**	**KSI**	**36.00**	**12.51**	**4.24**	**3.536**	**95.48**
77.00	70.0	Shear	KIPS	542.44	-37.99	-32.38	11.688	315.58
77.00	70.0	Overload	KSI	36.00	12.51	4.24	3.936	106.26
84.50	**76.8**	**Flexure**	**KSI**	**36.00**	**13.51**	**4.48**	**3.121**	**84.26**
84.50	76.8	Shear	KIPS	542.44	-50.78	-35.82	10.200	275.40
84.50	76.8	Overload	KSI	36.00	13.51	4.48	3.550	95.84
88.00	**80.0**	**Flexure**	**KSI**	**36.00**	**12.14**	**4.04**	**3.807**	**102.78**
88.00	80.0	Shear	KIPS	542.44	-57.10	-37.43	9.590	258.94
88.00	80.0	Overload	KSI	36.00	12.14	4.04	4.199	113.38
99.00	90.0	Flexure	KSI	36.00	6.81	2.29	9.065	244.76
99.00	**90.0**	**Shear**	**KIPS**	**542.44**	**-75.50**	**-42.48**	**8.008**	**216.20**
99.00	90.0	Overload	KSI	36.00	6.81	2.29	9.189	248.09
110.00	100.0	Flexure	KSI	-36.00	-0.00	-0.00	99.000	2673.00
110.00	**100.0**	**Shear**	**KIPS**	**336.32**	**-93.90**	**-47.53**	**3.425**	**92.47**
110.00	100.0	Overload	KSI	-36.00	-0.00	-0.00	99.000	2673.00

Detailed Rating Results
Girder B - As Inspected
SU5
Axle Load
Impact: As Requested

Lane: As Requested

Span 1

Location (ft)	Percent	Limit State	Units	Capacity	DL + Adj -LL*	LL	Legal Rating Factor	Legal Load Rating (Ton)
0.00	0.0	Flexure	KSI	-36.00	-0.00	-0.00	99.000	3069.00
0.00	**0.0**	**Shear**	**KIPS**	**328.32**	**93.90**	**53.78**	**2.912**	**90.27**
0.00	0.0	Overload	KSI	-36.00	-0.00	-0.00	99.000	3069.00
0.83	0.8	Flexure	KSI	-36.00	-0.63	-0.06	99.000	3069.00
0.83	**0.8**	**Shear**	**KIPS**	**328.32**	**92.51**	**53.34**	**2.962**	**91.84**
0.83	0.8	Overload	KSI	-36.00	-0.63	-0.06	99.000	3069.00
11.00	10.0	Flexure	KSI	36.00	6.81	2.59	8.025	248.77
11.00	**10.0**	**Shear**	**KIPS**	**542.44**	**75.50**	**47.98**	**7.088**	**219.74**
11.00	10.0	Overload	KSI	36.00	6.81	2.59	8.134	252.15
22.00	**20.0**	**Flexure**	**KSI**	**36.00**	**12.14**	**4.56**	**3.377**	**104.69**
22.00	20.0	Shear	KIPS	542.44	57.10	42.19	8.508	263.76
22.00	20.0	Overload	KSI	36.00	12.14	4.56	3.725	115.49
25.50	**23.2**	**Flexure**	**KSI**	**36.00**	**13.51**	**5.05**	**2.771**	**85.90**
25.50	23.2	Shear	KIPS	542.44	50.78	40.34	9.057	280.77
25.50	23.2	Overload	KSI	36.00	13.51	5.05	3.152	97.71
33.00	**30.0**	**Flexure**	**KSI**	**36.00**	**12.51**	**4.79**	**3.131**	**97.06**
33.00	30.0	Shear	KIPS	542.44	37.99	36.39	10.400	322.39
33.00	30.0	Overload	KSI	36.00	12.51	4.79	3.484	108.01
44.00	**40.0**	**Flexure**	**KSI**	**36.00**	**14.31**	**5.46**	**2.412**	**74.76**
44.00	40.0	Shear	KIPS	542.44	19.23	30.60	12.996	402.89
44.00	40.0	Overload	KSI	36.00	14.31	5.46	2.803	86.89
49.50	**45.0**	**Flexure**	**KSI**	**36.00**	**14.76**	**5.60**	**2.269**	**70.34**
49.50	45.0	Shear	KIPS	542.44	9.38	27.70	14.719	456.28
49.50	45.0	Overload	KSI	36.00	14.76	5.60	2.670	82.77
55.00	**50.0**	**Flexure**	**KSI**	**36.00**	**14.90**	**5.62**	**2.235**	**69.29**
55.00	50.0	Shear	KIPS	542.44	0.00	-24.80	16.825	521.58
55.00	50.0	Overload	KSI	36.00	14.90	5.62	2.641	81.87
66.00	**60.0**	**Flexure**	**KSI**	**36.00**	**14.31**	**5.46**	**2.412**	**74.76**
66.00	60.0	Shear	KIPS	542.44	-19.23	-30.60	12.996	402.89
66.00	60.0	Overload	KSI	36.00	14.31	5.46	2.803	86.89
77.00	**70.0**	**Flexure**	**KSI**	**36.00**	**12.51**	**4.79**	**3.131**	**97.06**
77.00	70.0	Shear	KIPS	542.44	-37.99	-36.39	10.400	322.39
77.00	70.0	Overload	KSI	36.00	12.51	4.79	3.484	108.01
84.50	**76.8**	**Flexure**	**KSI**	**36.00**	**13.51**	**5.05**	**2.771**	**85.90**
84.50	76.8	Shear	KIPS	542.44	-50.78	-40.34	9.057	280.77

84.50	76.8	Overload	KSI	36.00	13.51	5.05	3.152	97.71
88.00	**80.0**	**Flexure**	**KSI**	**36.00**	**12.14**	**4.56**	**3.377**	**104.69**
88.00	80.0	Shear	KIPS	542.44	-57.10	-42.19	8.508	263.76
88.00	80.0	Overload	KSI	36.00	12.14	4.56	3.725	115.49
99.00	90.0	Flexure	KSI	36.00	6.81	2.59	8.025	248.77
99.00	**90.0**	**Shear**	**KIPS**	**542.44**	**-75.50**	**-47.98**	**7.088**	**219.74**
99.00	90.0	Overload	KSI	36.00	6.81	2.59	8.134	252.15
110.00	100.0	Flexure	KSI	-36.00	-0.00	-0.00	99.000	3069.00
110.00	**100.0**	**Shear**	**KIPS**	**336.32**	**-93.90**	**-53.78**	**3.026**	**93.82**
110.00	100.0	Overload	KSI	-36.00	-0.00	-0.00	99.000	3069.00

Detailed Rating Results
Girder B - As Inspected
SU6
Axle Load
Impact: As Requested
Lane: As Requested

Span 1

Location (ft)	Percent	Limit State	Units	Capacity	DL + Adj -LL*	LL	Legal Rating Factor	Legal Load Rating (Ton)
0.00	0.0	Flexure	KSI	-36.00	-0.00	-0.00	99.000	3440.25
0.00	**0.0**	**Shear**	**KIPS**	**328.32**	**93.90**	**58.80**	**2.664**	**92.56**
0.00	0.0	Overload	KSI	-36.00	-0.00	-0.00	99.000	3440.25
0.83	0.8	Flexure	KSI	-36.00	-0.63	-0.07	99.000	3440.25
0.83	**0.8**	**Shear**	**KIPS**	**328.32**	**92.51**	**58.31**	**2.710**	**94.19**
0.83	0.8	Overload	KSI	-36.00	-0.63	-0.07	99.000	3440.25
11.00	10.0	Flexure	KSI	36.00	6.81	2.82	7.363	255.87
11.00	**10.0**	**Shear**	**KIPS**	**542.44**	**75.50**	**52.30**	**6.504**	**226.01**
11.00	10.0	Overload	KSI	36.00	6.81	2.82	7.463	259.34
22.00	**20.0**	**Flexure**	**KSI**	**36.00**	**12.14**	**5.05**	**3.044**	**105.79**
22.00	20.0	Shear	KIPS	542.44	57.10	45.80	7.837	272.35
22.00	20.0	Overload	KSI	36.00	12.14	5.05	3.358	116.70
25.50	**23.2**	**Flexure**	**KSI**	**36.00**	**13.51**	**5.62**	**2.489**	**86.48**
25.50	23.2	Shear	KIPS	542.44	50.78	43.73	8.355	290.34
25.50	23.2	Overload	KSI	36.00	13.51	5.62	2.831	98.36
33.00	**30.0**	**Flexure**	**KSI**	**36.00**	**12.51**	**5.34**	**2.809**	**97.63**
33.00	30.0	Shear	KIPS	542.44	37.99	39.30	9.630	334.63
33.00	30.0	Overload	KSI	36.00	12.51	5.34	3.127	108.65
44.00	**40.0**	**Flexure**	**KSI**	**36.00**	**14.31**	**6.06**	**2.171**	**75.44**

44.00	40.0	Shear	KIPS	542.44	19.23	32.81	12.121	421.21
44.00	40.0	Overload	KSI	36.00	14.31	6.06	2.523	87.68
49.50	**45.0**	**Flexure**	**KSI**	**36.00**	**14.76**	**6.24**	**2.036**	**70.75**
49.50	45.0	Shear	KIPS	542.44	9.38	29.56	13.793	479.30
49.50	45.0	Overload	KSI	36.00	14.76	6.24	2.395	83.24
55.00	**50.0**	**Flexure**	**KSI**	**36.00**	**14.90**	**6.28**	**1.999**	**69.47**
55.00	50.0	Shear	KIPS	542.44	0.00	-26.31	15.860	551.15
55.00	50.0	Overload	KSI	36.00	14.90	6.28	2.362	82.09
66.00	**60.0**	**Flexure**	**KSI**	**36.00**	**14.31**	**6.06**	**2.171**	**75.44**
66.00	60.0	Shear	KIPS	542.44	-19.23	-32.81	12.121	421.21
66.00	60.0	Overload	KSI	36.00	14.31	6.06	2.523	87.68
77.00	**70.0**	**Flexure**	**KSI**	**36.00**	**12.51**	**5.34**	**2.809**	**97.63**
77.00	70.0	Shear	KIPS	542.44	-37.99	-39.30	9.630	334.63
77.00	70.0	Overload	KSI	36.00	12.51	5.34	3.127	108.65
84.50	**76.8**	**Flexure**	**KSI**	**36.00**	**13.51**	**5.62**	**2.489**	**86.48**
84.50	76.8	Shear	KIPS	542.44	-50.78	-43.73	8.355	290.34
84.50	76.8	Overload	KSI	36.00	13.51	5.62	2.831	98.36
88.00	**80.0**	**Flexure**	**KSI**	**36.00**	**12.14**	**5.05**	**3.044**	**105.79**
88.00	80.0	Shear	KIPS	542.44	-57.10	-45.80	7.837	272.35
88.00	80.0	Overload	KSI	36.00	12.14	5.05	3.358	116.70
99.00	90.0	Flexure	KSI	36.00	6.81	2.82	7.363	255.87
99.00	**90.0**	**Shear**	**KIPS**	**542.44**	**-75.50**	**-52.30**	**6.504**	**226.01**
99.00	90.0	Overload	KSI	36.00	6.81	2.82	7.463	259.34
110.00	100.0	Flexure	KSI	-36.00	-0.00	-0.00	99.000	3440.25
110.00	**100.0**	**Shear**	**KIPS**	**336.32**	**-93.90**	**-58.80**	**2.768**	**96.20**
110.00	100.0	Overload	KSI	-36.00	-0.00	-0.00	99.000	3440.25

Detailed Rating Results
Girder B - As Inspected
SU7
Axle Load
Impact: As Requested
Lane: As Requested

Span 1

Location (ft)	Percent	Limit State	Units	Capacity	DL + Adj -LL*	LL	Legal Rating Factor	Legal Load Rating (Ton)
0.00	0.0	Flexure	KSI	-36.00	-0.00	-0.00	99.000	3836.25
0.00	**0.0**	**Shear**	**KIPS**	**328.32**	**93.90**	**63.91**	**2.450**	**94.95**
0.00	0.0	Overload	KSI	-36.00	-0.00	-0.00	99.000	3836.25

0.83	0.8	Flexure	KSI	-36.00	-0.63	-0.07	99.000	3836.25
0.83	**0.8**	**Shear**	**KIPS**	**328.32**	**92.51**	**63.37**	**2.494**	**96.64**
0.83	0.8	Overload	KSI	-36.00	-0.63	-0.07	99.000	3836.25
11.00	10.0	Flexure	KSI	36.00	6.81	3.06	6.795	263.32
11.00	**10.0**	**Shear**	**KIPS**	**542.44**	**75.50**	**56.67**	**6.003**	**232.60**
11.00	10.0	Overload	KSI	36.00	6.81	3.06	6.888	266.90
22.00	**20.0**	**Flexure**	**KSI**	**36.00**	**12.14**	**5.47**	**2.810**	**108.91**
22.00	20.0	Shear	KIPS	542.44	57.10	49.42	7.263	281.45
22.00	20.0	Overload	KSI	36.00	12.14	5.47	3.100	120.14
25.50	**23.2**	**Flexure**	**KSI**	**36.00**	**13.51**	**6.12**	**2.288**	**88.65**
25.50	23.2	Shear	KIPS	542.44	50.78	47.12	7.755	300.52
25.50	23.2	Overload	KSI	36.00	13.51	6.12	2.602	100.83
33.00	**30.0**	**Flexure**	**KSI**	**36.00**	**12.51**	**5.86**	**2.560**	**99.21**
33.00	30.0	Shear	KIPS	542.44	37.99	42.18	8.974	347.73
33.00	30.0	Overload	KSI	36.00	12.51	5.86	2.849	110.41
44.00	**40.0**	**Flexure**	**KSI**	**36.00**	**14.31**	**6.66**	**1.976**	**76.55**
44.00	40.0	Shear	KIPS	542.44	19.23	34.93	11.384	441.12
44.00	40.0	Overload	KSI	36.00	14.31	6.66	2.296	88.98
49.50	**45.0**	**Flexure**	**KSI**	**36.00**	**14.76**	**6.86**	**1.854**	**71.85**
49.50	45.0	Shear	KIPS	542.44	9.38	31.31	13.022	504.59
49.50	45.0	Overload	KSI	36.00	14.76	6.86	2.182	84.54
55.00	**50.0**	**Flexure**	**KSI**	**36.00**	**14.90**	**6.92**	**1.815**	**70.33**
55.00	50.0	Shear	KIPS	542.44	0.00	-27.69	15.072	584.03
55.00	50.0	Overload	KSI	36.00	14.90	6.92	2.145	83.10
66.00	**60.0**	**Flexure**	**KSI**	**36.00**	**14.31**	**6.66**	**1.976**	**76.55**
66.00	60.0	Shear	KIPS	542.44	-19.23	-34.93	11.384	441.12
66.00	60.0	Overload	KSI	36.00	14.31	6.66	2.296	88.98
77.00	**70.0**	**Flexure**	**KSI**	**36.00**	**12.51**	**5.86**	**2.560**	**99.21**
77.00	70.0	Shear	KIPS	542.44	-37.99	-42.18	8.974	347.73
77.00	70.0	Overload	KSI	36.00	12.51	5.86	2.849	110.41
84.50	**76.8**	**Flexure**	**KSI**	**36.00**	**13.51**	**6.12**	**2.288**	**88.65**
84.50	76.8	Shear	KIPS	542.44	-50.78	-47.12	7.755	300.52
84.50	76.8	Overload	KSI	36.00	13.51	6.12	2.602	100.83
88.00	**80.0**	**Flexure**	**KSI**	**36.00**	**12.14**	**5.47**	**2.810**	**108.91**
88.00	80.0	Shear	KIPS	542.44	-57.10	-49.42	7.263	281.45
88.00	80.0	Overload	KSI	36.00	12.14	5.47	3.100	120.14
99.00	90.0	Flexure	KSI	36.00	6.81	3.06	6.795	263.32
99.00	**90.0**	**Shear**	**KIPS**	**542.44**	**-75.50**	**-56.67**	**6.003**	**232.60**
99.00	90.0	Overload	KSI	36.00	6.81	3.06	6.888	266.90
110.00	100.0	Flexure	KSI	-36.00	-0.00	-0.00	99.000	3836.25
110.00	**100.0**	**Shear**	**KIPS**	**336.32**	**-93.90**	**-63.91**	**2.547**	**98.69**
110.00	100.0	Overload	KSI	-36.00	-0.00	-0.00	99.000	3836.25

Detailed Rating Results
Girder B - As Inspected
Type 3
Axle Load
Impact: As Requested
Lane: As Requested

Span 1

Location (ft)	Percent	Limit State	Units	Capacity	DL + Adj -LL*	LL	Legal Rating Factor	Legal Load Rating (Ton)
0.00	0.0	Flexure	KSI	-36.00	-0.00	-0.00	99.000	2475.00
0.00	**0.0**	**Shear**	**KIPS**	**328.32**	**93.90**	**43.58**	**3.593**	**89.83**
0.00	0.0	Overload	KSI	-36.00	-0.00	-0.00	99.000	2475.00
0.83	0.8	Flexure	KSI	-36.00	-0.63	-0.05	99.000	2475.00
0.83	**0.8**	**Shear**	**KIPS**	**328.32**	**92.51**	**43.23**	**3.656**	**91.39**
0.83	0.8	Overload	KSI	-36.00	-0.63	-0.05	99.000	2475.00
11.00	10.0	Flexure	KSI	36.00	6.81	2.10	9.897	247.43
11.00	**10.0**	**Shear**	**KIPS**	**542.44**	**75.50**	**38.91**	**8.742**	**218.55**
11.00	10.0	Overload	KSI	36.00	6.81	2.10	10.032	250.79
22.00	**20.0**	**Flexure**	**KSI**	**36.00**	**12.14**	**3.70**	**4.162**	**104.05**
22.00	20.0	Shear	KIPS	542.44	57.10	34.23	10.486	262.14
22.00	20.0	Overload	KSI	36.00	12.14	3.70	4.591	114.78
25.50	**23.2**	**Flexure**	**KSI**	**36.00**	**13.51**	**4.10**	**3.414**	**85.35**
25.50	23.2	Shear	KIPS	542.44	50.78	32.75	11.158	278.96
25.50	23.2	Overload	KSI	36.00	13.51	4.10	3.883	97.08
33.00	**30.0**	**Flexure**	**KSI**	**36.00**	**12.51**	**3.87**	**3.874**	**96.85**
33.00	30.0	Shear	KIPS	542.44	37.99	29.56	12.804	320.10
33.00	30.0	Overload	KSI	36.00	12.51	3.87	4.311	107.78
44.00	**40.0**	**Flexure**	**KSI**	**36.00**	**14.31**	**4.39**	**2.999**	**74.97**
44.00	40.0	Shear	KIPS	542.44	19.23	24.88	15.979	399.48
44.00	40.0	Overload	KSI	36.00	14.31	4.39	3.485	87.13
49.50	**45.0**	**Flexure**	**KSI**	**36.00**	**14.76**	**4.51**	**2.818**	**70.46**
49.50	45.0	Shear	KIPS	542.44	9.38	22.55	18.081	452.02
49.50	45.0	Overload	KSI	36.00	14.76	4.51	3.316	82.90
55.00	**50.0**	**Flexure**	**KSI**	**36.00**	**14.90**	**4.53**	**2.773**	**69.33**
55.00	50.0	Shear	KIPS	542.44	0.00	-20.21	20.646	516.15
55.00	50.0	Overload	KSI	36.00	14.90	4.53	3.277	81.93
66.00	**60.0**	**Flexure**	**KSI**	**36.00**	**14.31**	**4.39**	**2.999**	**74.97**
66.00	60.0	Shear	KIPS	542.44	-19.23	-24.88	15.979	399.48

66.00	60.0	Overload	KSI	36.00	14.31	4.39	3.485	87.13
77.00	**70.0**	**Flexure**	**KSI**	**36.00**	**12.51**	**3.87**	**3.874**	**96.85**
77.00	70.0	Shear	KIPS	542.44	-37.99	-29.56	12.804	320.10
77.00	70.0	Overload	KSI	36.00	12.51	3.87	4.311	107.78
84.50	**76.8**	**Flexure**	**KSI**	**36.00**	**13.51**	**4.10**	**3.414**	**85.35**
84.50	76.8	Shear	KIPS	542.44	-50.78	-32.75	11.158	278.96
84.50	76.8	Overload	KSI	36.00	13.51	4.10	3.883	97.08
88.00	**80.0**	**Flexure**	**KSI**	**36.00**	**12.14**	**3.70**	**4.162**	**104.05**
88.00	80.0	Shear	KIPS	542.44	-57.10	-34.23	10.486	262.14
88.00	80.0	Overload	KSI	36.00	12.14	3.70	4.591	114.78
99.00	90.0	Flexure	KSI	36.00	6.81	2.10	9.897	247.43
99.00	**90.0**	**Shear**	**KIPS**	**542.44**	**-75.50**	**-38.91**	**8.742**	**218.55**
99.00	90.0	Overload	KSI	36.00	6.81	2.10	10.032	250.79
110.00	100.0	Flexure	KSI	-36.00	-0.00	-0.00	99.000	2475.00
110.00	**100.0**	**Shear**	**KIPS**	**336.32**	**-93.90**	**-43.58**	**3.735**	**93.37**
110.00	100.0	Overload	KSI	-36.00	-0.00	-0.00	99.000	2475.00

Detailed Rating Results
Girder B - As Inspected
Type 3-3
Axle Load
Impact: As Requested
Lane: As Requested

Span 1

Location (ft)	Percent	Limit State	Units	Capacity	DL + Adj -LL*	LL	Legal Rating Factor	Legal Load Rating (Ton)
0.00	0.0	Flexure	KSI	-36.00	-0.00	-0.00	99.000	3960.00
0.00	**0.0**	**Shear**	**KIPS**	**328.32**	**93.90**	**58.54**	**2.675**	**107.01**
0.00	0.0	Overload	KSI	-36.00	-0.00	-0.00	99.000	3960.00
0.83	0.8	Flexure	KSI	-36.00	-0.63	-0.07	99.000	3960.00
0.83	**0.8**	**Shear**	**KIPS**	**328.32**	**92.51**	**57.98**	**2.726**	**109.03**
0.83	0.8	Overload	KSI	-36.00	-0.63	-0.07	99.000	3960.00
11.00	10.0	Flexure	KSI	36.00	6.81	2.76	7.541	301.66
11.00	**10.0**	**Shear**	**KIPS**	**542.44**	**75.50**	**51.06**	**6.661**	**266.46**
11.00	10.0	Overload	KSI	36.00	6.81	2.76	7.644	305.75
22.00	**20.0**	**Flexure**	**KSI**	**36.00**	**12.14**	**4.74**	**3.244**	**129.76**
22.00	20.0	Shear	KIPS	542.44	57.10	43.58	8.236	329.45
22.00	20.0	Overload	KSI	36.00	12.14	4.74	3.578	143.14
25.50	**23.2**	**Flexure**	**KSI**	**36.00**	**13.51**	**5.24**	**2.670**	**106.80**

25.50	23.2	Shear	KIPS	542.44	50.78	41.20	8.868	354.73
25.50	23.2	Overload	KSI	36.00	13.51	5.24	3.037	121.48
33.00	**30.0**	**Flexure**	**KSI**	**36.00**	**12.51**	**4.88**	**3.075**	**123.01**
33.00	30.0	Shear	KIPS	542.44	37.99	36.10	10.483	419.32
33.00	30.0	Overload	KSI	36.00	12.51	4.88	3.422	136.89
44.00	**40.0**	**Flexure**	**KSI**	**36.00**	**14.31**	**5.50**	**2.392**	**95.69**
44.00	40.0	Shear	KIPS	542.44	19.23	28.62	13.892	555.67
44.00	40.0	Overload	KSI	36.00	14.31	5.50	2.780	111.22
49.50	**45.0**	**Flexure**	**KSI**	**36.00**	**14.76**	**5.69**	**2.234**	**89.38**
49.50	45.0	Shear	KIPS	542.44	9.38	24.88	16.383	655.30
49.50	45.0	Overload	KSI	36.00	14.76	5.69	2.629	105.16
55.00	**50.0**	**Flexure**	**KSI**	**36.00**	**14.90**	**5.71**	**2.199**	**87.95**
55.00	50.0	Shear	KIPS	542.44	0.00	-21.15	19.733	789.33
55.00	50.0	Overload	KSI	36.00	14.90	5.71	2.598	103.93
66.00	**60.0**	**Flexure**	**KSI**	**36.00**	**14.31**	**5.50**	**2.392**	**95.69**
66.00	60.0	Shear	KIPS	542.44	-19.23	-28.62	13.892	555.67
66.00	60.0	Overload	KSI	36.00	14.31	5.50	2.780	111.22
77.00	**70.0**	**Flexure**	**KSI**	**36.00**	**12.51**	**4.88**	**3.075**	**123.01**
77.00	70.0	Shear	KIPS	542.44	-37.99	-36.10	10.483	419.32
77.00	70.0	Overload	KSI	36.00	12.51	4.88	3.422	136.89
84.50	**76.8**	**Flexure**	**KSI**	**36.00**	**13.51**	**5.24**	**2.670**	**106.80**
84.50	76.8	Shear	KIPS	542.44	-50.78	-41.20	8.868	354.73
84.50	76.8	Overload	KSI	36.00	13.51	5.24	3.037	121.48
88.00	**80.0**	**Flexure**	**KSI**	**36.00**	**12.14**	**4.74**	**3.244**	**129.76**
88.00	80.0	Shear	KIPS	542.44	-57.10	-43.58	8.236	329.45
88.00	80.0	Overload	KSI	36.00	12.14	4.74	3.578	143.14
99.00	90.0	Flexure	KSI	36.00	6.81	2.76	7.541	301.66
99.00	**90.0**	**Shear**	**KIPS**	**542.44**	**-75.50**	**-51.06**	**6.661**	**266.46**
99.00	90.0	Overload	KSI	36.00	6.81	2.76	7.644	305.75
110.00	100.0	Flexure	KSI	-36.00	-0.00	-0.00	99.000	3960.00
110.00	**100.0**	**Shear**	**KIPS**	**336.32**	**-93.90**	**-58.54**	**2.780**	**111.22**
110.00	100.0	Overload	KSI	-36.00	-0.00	-0.00	99.000	3960.00

Detailed Rating Results
Girder B - As Inspected
Type 3S2
Axle Load
Impact: As Requested
Lane: As Requested

Span 1

Location							**Legal Rating**	**Legal**

(ft)	Percent	Limit State	Units	Capacity	DL + Adj -LL*	LL	Factor	Load Rating (Ton)
0.00	0.0	Flexure	KSI	-36.00	-0.00	-0.00	99.000	3564.00
0.00	**0.0**	**Shear**	**KIPS**	**328.32**	**93.90**	**55.92**	**2.800**	**100.82**
0.00	0.0	Overload	KSI	-36.00	-0.00	-0.00	99.000	3564.00
0.83	0.8	Flexure	KSI	-36.00	-0.63	-0.06	99.000	3564.00
0.83	**0.8**	**Shear**	**KIPS**	**328.32**	**92.51**	**55.42**	**2.852**	**102.66**
0.83	0.8	Overload	KSI	-36.00	-0.63	-0.06	99.000	3564.00
11.00	10.0	Flexure	KSI	36.00	6.81	2.66	7.828	281.81
11.00	**10.0**	**Shear**	**KIPS**	**542.44**	**75.50**	**49.19**	**6.915**	**248.93**
11.00	10.0	Overload	KSI	36.00	6.81	2.66	7.934	285.64
22.00	**20.0**	**Flexure**	**KSI**	**36.00**	**12.14**	**4.58**	**3.356**	**120.80**
22.00	20.0	Shear	KIPS	542.44	57.10	42.46	8.454	304.34
22.00	20.0	Overload	KSI	36.00	12.14	4.58	3.702	133.26
25.50	**23.2**	**Flexure**	**KSI**	**36.00**	**13.51**	**5.09**	**2.746**	**98.87**
25.50	23.2	Shear	KIPS	542.44	50.78	40.32	9.063	326.26
25.50	23.2	Overload	KSI	36.00	13.51	5.09	3.124	112.46
33.00	**30.0**	**Flexure**	**KSI**	**36.00**	**12.51**	**4.85**	**3.092**	**111.32**
33.00	30.0	Shear	KIPS	542.44	37.99	35.73	10.593	381.34
33.00	30.0	Overload	KSI	36.00	12.51	4.85	3.441	123.88
44.00	**40.0**	**Flexure**	**KSI**	**36.00**	**14.31**	**5.48**	**2.404**	**86.54**
44.00	40.0	Shear	KIPS	542.44	19.23	29.00	13.713	493.65
44.00	40.0	Overload	KSI	36.00	14.31	5.48	2.794	100.58
49.50	**45.0**	**Flexure**	**KSI**	**36.00**	**14.76**	**5.60**	**2.271**	**81.76**
49.50	45.0	Shear	KIPS	542.44	9.38	25.63	15.905	572.56
49.50	45.0	Overload	KSI	36.00	14.76	5.60	2.672	96.20
55.00	**50.0**	**Flexure**	**KSI**	**36.00**	**14.90**	**5.57**	**2.255**	**81.16**
55.00	50.0	Shear	KIPS	542.44	0.00	-22.27	18.739	674.60
55.00	50.0	Overload	KSI	36.00	14.90	5.57	2.664	95.90
66.00	**60.0**	**Flexure**	**KSI**	**36.00**	**14.31**	**5.48**	**2.404**	**86.54**
66.00	60.0	Shear	KIPS	542.44	-19.23	-29.00	13.713	493.65
66.00	60.0	Overload	KSI	36.00	14.31	5.48	2.794	100.58
77.00	**70.0**	**Flexure**	**KSI**	**36.00**	**12.51**	**4.85**	**3.092**	**111.32**
77.00	70.0	Shear	KIPS	542.44	-37.99	-35.73	10.593	381.34
77.00	70.0	Overload	KSI	36.00	12.51	4.85	3.441	123.88
84.50	**76.8**	**Flexure**	**KSI**	**36.00**	**13.51**	**5.09**	**2.746**	**98.87**
84.50	76.8	Shear	KIPS	542.44	-50.78	-40.32	9.063	326.26
84.50	76.8	Overload	KSI	36.00	13.51	5.09	3.124	112.46
88.00	**80.0**	**Flexure**	**KSI**	**36.00**	**12.14**	**4.58**	**3.356**	**120.80**
88.00	80.0	Shear	KIPS	542.44	-57.10	-42.46	8.454	304.34
88.00	80.0	Overload	KSI	36.00	12.14	4.58	3.702	133.26

99.00	90.0	Flexure	KSI	36.00	6.81	2.66	7.828	281.81
99.00	**90.0**	**Shear**	**KIPS**	**542.44**	**-75.50**	**-49.19**	**6.915**	**248.93**
99.00	90.0	Overload	KSI	36.00	6.81	2.66	7.934	285.64
110.00	100.0	Flexure	KSI	-36.00	-0.00	-0.00	99.000	3564.00
110.00	**100.0**	**Shear**	**KIPS**	**336.32**	**-93.90**	**-55.92**	**2.911**	**104.78**
110.00	100.0	Overload	KSI	-36.00	-0.00	-0.00	99.000	3564.00

Detailed Rating Results
Girder B - As Inspected
RI-3
Axle Load
Impact: As Requested
Lane: As Requested

Span 1

Location (ft)	Percent	Limit State	Units	Capacity	DL + Adj -LL*	LL	Permit Rating Factor	Permit Load Rating (Ton)
0.00	0.0	Flexure	KSI	-36.00	-0.00	-0.00	99.000	3762.00
0.00	**0.0**	**Shear**	**KIPS**	**328.32**	**93.90**	**67.25**	**2.559**	**97.24**
0.00	0.0	Overload	KSI	-36.00	-0.00	-0.00	99.000	3762.00
0.83	0.8	Flexure	KSI	-36.00	-0.63	-0.08	99.000	3762.00
0.83	**0.8**	**Shear**	**KIPS**	**328.32**	**92.51**	**66.71**	**2.603**	**98.91**
0.83	0.8	Overload	KSI	-36.00	-0.63	-0.08	99.000	3762.00
11.00	10.0	Flexure	KSI	36.00	6.81	3.25	7.035	267.34
11.00	**10.0**	**Shear**	**KIPS**	**542.44**	**75.50**	**60.14**	**6.214**	**236.14**
11.00	10.0	Overload	KSI	36.00	6.81	3.25	8.437	320.61
22.00	**20.0**	**Flexure**	**KSI**	**36.00**	**12.14**	**5.73**	**2.952**	**112.17**
22.00	20.0	Shear	KIPS	542.44	57.10	53.03	7.437	282.60
22.00	20.0	Overload	KSI	36.00	12.14	5.73	3.853	146.40
25.50	**23.2**	**Flexure**	**KSI**	**36.00**	**13.51**	**6.35**	**2.419**	**91.93**
25.50	23.2	Shear	KIPS	542.44	50.78	50.77	7.907	300.47
25.50	23.2	Overload	KSI	36.00	13.51	6.35	3.256	123.72
33.00	**30.0**	**Flexure**	**KSI**	**36.00**	**12.51**	**6.01**	**2.739**	**104.10**
33.00	30.0	Shear	KIPS	542.44	37.99	45.93	9.054	344.05
33.00	30.0	Overload	KSI	36.00	12.51	6.01	3.607	137.06
44.00	**40.0**	**Flexure**	**KSI**	**36.00**	**14.31**	**6.80**	**2.126**	**80.79**
44.00	40.0	Shear	KIPS	542.44	19.23	38.82	11.253	427.63
44.00	40.0	Overload	KSI	36.00	14.31	6.80	2.924	111.10
49.50	**45.0**	**Flexure**	**KSI**	**36.00**	**14.76**	**7.02**	**1.991**	**75.64**
49.50	45.0	Shear	KIPS	542.44	9.38	35.27	12.699	482.58

49.50	45.0	Overload	KSI	36.00	14.76	7.02	2.771	105.31
55.00	**50.0**	**Flexure**	**KSI**	**36.00**	**14.90**	**7.08**	**1.951**	**74.13**
55.00	50.0	Shear	KIPS	542.44	0.00	-31.72	14.454	549.24
55.00	50.0	Overload	KSI	36.00	14.90	7.08	2.727	103.63
66.00	**60.0**	**Flexure**	**KSI**	**36.00**	**14.31**	**6.80**	**2.126**	**80.79**
66.00	60.0	Shear	KIPS	542.44	-19.23	-38.82	11.253	427.63
66.00	60.0	Overload	KSI	36.00	14.31	6.80	2.924	111.10
77.00	**70.0**	**Flexure**	**KSI**	**36.00**	**12.51**	**6.01**	**2.739**	**104.10**
77.00	70.0	Shear	KIPS	542.44	-37.99	-45.93	9.054	344.05
77.00	70.0	Overload	KSI	36.00	12.51	6.01	3.607	137.06
84.50	**76.8**	**Flexure**	**KSI**	**36.00**	**13.51**	**6.35**	**2.419**	**91.93**
84.50	76.8	Shear	KIPS	542.44	-50.78	-50.77	7.907	300.47
84.50	76.8	Overload	KSI	36.00	13.51	6.35	3.256	123.72
88.00	**80.0**	**Flexure**	**KSI**	**36.00**	**12.14**	**5.73**	**2.952**	**112.17**
88.00	80.0	Shear	KIPS	542.44	-57.10	-53.03	7.437	282.60
88.00	80.0	Overload	KSI	36.00	12.14	5.73	3.853	146.40
99.00	90.0	Flexure	KSI	36.00	6.81	3.25	7.035	267.34
99.00	**90.0**	**Shear**	**KIPS**	**542.44**	**-75.50**	**-60.14**	**6.214**	**236.14**
99.00	90.0	Overload	KSI	36.00	6.81	3.25	8.437	320.61
110.00	100.0	Flexure	KSI	-36.00	-0.00	-0.00	99.000	3762.00
110.00	**100.0**	**Shear**	**KIPS**	**336.32**	**-93.90**	**-67.25**	**2.660**	**101.06**
110.00	100.0	Overload	KSI	-36.00	-0.00	-0.00	99.000	3762.00

Detailed Rating Results
Girder B - As Inspected
RI-4
Axle Load
Impact: As Requested
Lane: As Requested

Span 1

Location (ft)	Percent	Limit State	Units	Capacity	DL + Adj -LL*	LL	Permit Rating Factor	Permit Load Rating (Ton)
0.00	0.0	Flexure	KSI	-36.00	-0.00	-0.00	99.000	3712.50
0.00	**0.0**	**Shear**	**KIPS**	**328.32**	**93.90**	**65.38**	**2.632**	**98.70**
0.00	0.0	Overload	KSI	-36.00	-0.00	-0.00	99.000	3712.50
0.83	0.8	Flexure	KSI	-36.00	-0.63	-0.07	99.000	3712.50
0.83	**0.8**	**Shear**	**KIPS**	**328.32**	**92.51**	**64.85**	**2.677**	**100.40**
0.83	0.8	Overload	KSI	-36.00	-0.63	-0.07	99.000	3712.50
11.00	10.0	Flexure	KSI	36.00	6.81	3.15	7.249	271.83

11.00	**10.0**	**Shear**	**KIPS**	**542.44**	**75.50**	**58.37**	**6.403**	**240.11**
11.00	10.0	Overload	KSI	36.00	6.81	3.15	8.693	326.00
22.00	**20.0**	**Flexure**	**KSI**	**36.00**	**12.14**	**5.55**	**3.048**	**114.31**
22.00	20.0	Shear	KIPS	542.44	57.10	51.36	7.680	288.00
22.00	20.0	Overload	KSI	36.00	12.14	5.55	3.979	149.20
25.50	**23.2**	**Flexure**	**KSI**	**36.00**	**13.51**	**6.15**	**2.500**	**93.77**
25.50	23.2	Shear	KIPS	542.44	50.78	49.12	8.173	306.48
25.50	23.2	Overload	KSI	36.00	13.51	6.15	3.365	126.19
33.00	**30.0**	**Flexure**	**KSI**	**36.00**	**12.51**	**5.85**	**2.816**	**105.59**
33.00	30.0	Shear	KIPS	542.44	37.99	44.34	9.378	351.66
33.00	30.0	Overload	KSI	36.00	12.51	5.85	3.708	139.04
44.00	**40.0**	**Flexure**	**KSI**	**36.00**	**14.31**	**6.68**	**2.163**	**81.12**
44.00	40.0	Shear	KIPS	542.44	19.23	37.33	11.703	438.87
44.00	40.0	Overload	KSI	36.00	14.31	6.68	2.975	111.56
49.50	**45.0**	**Flexure**	**KSI**	**36.00**	**14.76**	**6.87**	**2.032**	**76.21**
49.50	45.0	Shear	KIPS	542.44	9.38	33.83	13.242	496.58
49.50	45.0	Overload	KSI	36.00	14.76	6.87	2.829	106.09
55.00	**50.0**	**Flexure**	**KSI**	**36.00**	**14.90**	**6.91**	**1.998**	**74.93**
55.00	50.0	Shear	KIPS	542.44	0.00	-30.32	15.120	567.02
55.00	50.0	Overload	KSI	36.00	14.90	6.91	2.794	104.76
66.00	**60.0**	**Flexure**	**KSI**	**36.00**	**14.31**	**6.68**	**2.163**	**81.12**
66.00	60.0	Shear	KIPS	542.44	-19.23	-37.33	11.703	438.87
66.00	60.0	Overload	KSI	36.00	14.31	6.68	2.975	111.56
77.00	**70.0**	**Flexure**	**KSI**	**36.00**	**12.51**	**5.85**	**2.816**	**105.59**
77.00	70.0	Shear	KIPS	542.44	-37.99	-44.34	9.378	351.66
77.00	70.0	Overload	KSI	36.00	12.51	5.85	3.708	139.04
84.50	**76.8**	**Flexure**	**KSI**	**36.00**	**13.51**	**6.15**	**2.500**	**93.77**
84.50	76.8	Shear	KIPS	542.44	-50.78	-49.12	8.173	306.48
84.50	76.8	Overload	KSI	36.00	13.51	6.15	3.365	126.19
88.00	**80.0**	**Flexure**	**KSI**	**36.00**	**12.14**	**5.55**	**3.048**	**114.31**
88.00	80.0	Shear	KIPS	542.44	-57.10	-51.36	7.680	288.00
88.00	80.0	Overload	KSI	36.00	12.14	5.55	3.979	149.20
99.00	90.0	Flexure	KSI	36.00	6.81	3.15	7.249	271.83
99.00	**90.0**	**Shear**	**KIPS**	**542.44**	**-75.50**	**-58.37**	**6.403**	**240.11**
99.00	90.0	Overload	KSI	36.00	6.81	3.15	8.693	326.00
110.00	100.0	Flexure	KSI	-36.00	-0.00	-0.00	99.000	3712.50
110.00	**100.0**	**Shear**	**KIPS**	**336.32**	**-93.90**	**-65.38**	**2.735**	**102.58**
110.00	100.0	Overload	KSI	-36.00	-0.00	-0.00	99.000	3712.50

Detailed Rating Results
Girder B - As Inspected
RI-5
Axle Load

Impact: As Requested
Lane: As Requested

Span 1

Location (ft)	Percent	Limit State	Units	Capacity	DL + Adj -LL*	LL	Permit Rating Factor	Permit Load Rating (Ton)
0.00	0.0	Flexure	KSI	-36.00	-0.00	-0.00	99.000	5187.60
0.00	**0.0**	**Shear**	**KIPS**	**328.32**	**93.90**	**85.74**	**2.007**	**105.16**
0.00	0.0	Overload	KSI	-36.00	-0.00	-0.00	99.000	5187.60
0.83	0.8	Flexure	KSI	36.00	0.57	0.35	85.831	4497.56
0.83	**0.8**	**Shear**	**KIPS**	**328.32**	**92.51**	**85.00**	**2.043**	**107.03**
0.83	0.8	Overload	KSI	36.00	0.57	0.35	96.887	5076.88
11.00	10.0	Flexure	KSI	36.00	6.81	4.10	5.571	291.92
11.00	**10.0**	**Shear**	**KIPS**	**542.44**	**75.50**	**75.95**	**4.921**	**257.86**
11.00	10.0	Overload	KSI	36.00	6.81	4.10	6.681	350.09
22.00	**20.0**	**Flexure**	**KSI**	**36.00**	**12.14**	**7.14**	**2.367**	**124.01**
22.00	20.0	Shear	KIPS	542.44	57.10	66.15	5.962	312.43
22.00	20.0	Overload	KSI	36.00	12.14	7.14	3.089	161.86
25.50	**23.2**	**Flexure**	**KSI**	**36.00**	**13.51**	**7.95**	**1.935**	**101.38**
25.50	23.2	Shear	KIPS	542.44	50.78	63.03	6.370	333.76
25.50	23.2	Overload	KSI	36.00	13.51	7.95	2.604	136.43
33.00	**30.0**	**Flexure**	**KSI**	**36.00**	**12.51**	**7.54**	**2.184**	**114.44**
33.00	30.0	Shear	KIPS	542.44	37.99	56.35	7.379	386.69
33.00	30.0	Overload	KSI	36.00	12.51	7.54	2.876	150.69
44.00	**40.0**	**Flexure**	**KSI**	**36.00**	**14.31**	**8.58**	**1.686**	**88.34**
44.00	40.0	Shear	KIPS	542.44	19.23	46.55	9.385	491.78
44.00	40.0	Overload	KSI	36.00	14.31	8.58	2.318	121.48
49.50	**45.0**	**Flexure**	**KSI**	**36.00**	**14.76**	**8.81**	**1.586**	**83.11**
49.50	45.0	Shear	KIPS	542.44	9.38	41.65	10.753	563.48
49.50	45.0	Overload	KSI	36.00	14.76	8.81	2.208	115.69
55.00	**50.0**	**Flexure**	**KSI**	**36.00**	**14.90**	**8.82**	**1.565**	**81.99**
55.00	50.0	Shear	KIPS	542.44	0.00	-36.76	12.473	653.60
55.00	50.0	Overload	KSI	36.00	14.90	8.82	2.188	114.63
66.00	**60.0**	**Flexure**	**KSI**	**36.00**	**14.31**	**8.58**	**1.686**	**88.34**
66.00	60.0	Shear	KIPS	542.44	-19.23	-46.55	9.385	491.78
66.00	60.0	Overload	KSI	36.00	14.31	8.58	2.318	121.48
77.00	**70.0**	**Flexure**	**KSI**	**36.00**	**12.51**	**7.54**	**2.184**	**114.44**
77.00	70.0	Shear	KIPS	542.44	-37.99	-56.35	7.379	386.69
77.00	70.0	Overload	KSI	36.00	12.51	7.54	2.876	150.69
84.50	**76.8**	**Flexure**	**KSI**	**36.00**	**13.51**	**7.95**	**1.935**	**101.38**

84.50	76.8	Shear	KIPS	542.44	-50.78	-63.03	6.370	333.76
84.50	76.8	Overload	KSI	36.00	13.51	7.95	2.604	136.43
88.00	**80.0**	**Flexure**	**KSI**	**36.00**	**12.14**	**7.14**	**2.367**	**124.01**
88.00	80.0	Shear	KIPS	542.44	-57.10	-66.15	5.962	312.43
88.00	80.0	Overload	KSI	36.00	12.14	7.14	3.089	161.86
99.00	90.0	Flexure	KSI	36.00	6.81	4.10	5.571	291.92
99.00	**90.0**	**Shear**	**KIPS**	**542.44**	**-75.50**	**-75.95**	**4.921**	**257.86**
99.00	90.0	Overload	KSI	36.00	6.81	4.10	6.681	350.09
110.00	100.0	Flexure	KSI	-36.00	-0.00	-0.00	99.000	5187.60
110.00	**100.0**	**Shear**	**KIPS**	**336.32**	**-93.90**	**-85.74**	**2.086**	**109.29**
110.00	100.0	Overload	KSI	-36.00	-0.00	-0.00	99.000	5187.60

Detailed Rating Results
Girder B - As Inspected
RI-6
Axle Load
Impact: As Requested
Lane: As Requested

Span 1

Location (ft)	Percent	Limit State	Units	Capacity	DL + Adj -LL*	LL	Permit Rating Factor	Permit Load Rating (Ton)
0.00	0.0	Flexure	KSI	-36.00	-0.00	-0.00	99.000	6435.00
0.00	**0.0**	**Shear**	**KIPS**	**328.32**	**93.90**	**97.27**	**1.697**	**110.33**
0.00	0.0	Overload	KSI	-36.00	-0.00	-0.00	99.000	6435.00
0.83	0.8	Flexure	KSI	36.00	0.57	0.39	72.653	4722.47
0.83	**0.8**	**Shear**	**KIPS**	**328.32**	**92.51**	**96.35**	**1.729**	**112.39**
0.83	0.8	Overload	KSI	36.00	0.57	0.39	85.478	5556.04
11.00	10.0	Flexure	KSI	36.00	6.81	4.60	4.769	310.01
11.00	**10.0**	**Shear**	**KIPS**	**542.44**	**75.50**	**85.11**	**4.213**	**273.84**
11.00	10.0	Overload	KSI	36.00	6.81	4.60	5.961	387.49
22.00	**20.0**	**Flexure**	**KSI**	**36.00**	**12.14**	**7.90**	**2.054**	**133.48**
22.00	20.0	Shear	KIPS	542.44	57.10	72.96	5.187	337.12
22.00	20.0	Overload	KSI	36.00	12.14	7.90	2.794	181.58
25.50	**23.2**	**Flexure**	**KSI**	**36.00**	**13.51**	**8.75**	**1.686**	**109.60**
25.50	23.2	Shear	KIPS	542.44	50.78	69.09	5.575	362.38
25.50	23.2	Overload	KSI	36.00	13.51	8.75	2.365	153.73
33.00	**30.0**	**Flexure**	**KSI**	**36.00**	**12.51**	**8.18**	**1.932**	**125.56**
33.00	30.0	Shear	KIPS	542.44	37.99	60.81	6.561	426.49
33.00	30.0	Overload	KSI	36.00	12.51	8.18	2.651	172.31

44.00	**40.0**	**Flexure**	**KSI**	**36.00**	**14.31**	**8.95**	**1.550**	**100.75**
44.00	40.0	Shear	KIPS	542.44	19.23	48.65	8.616	560.02
44.00	40.0	Overload	KSI	36.00	14.31	8.95	2.222	144.40
49.50	**45.0**	**Flexure**	**KSI**	**36.00**	**14.76**	**9.02**	**1.485**	**96.51**
49.50	45.0	Shear	KIPS	542.44	9.38	42.58	10.094	656.10
49.50	45.0	Overload	KSI	36.00	14.76	9.02	2.154	140.04
55.00	**50.0**	**Flexure**	**KSI**	**36.00**	**14.90**	**8.83**	**1.499**	**97.45**
55.00	50.0	Shear	KIPS	542.44	0.00	-36.50	12.051	783.33
55.00	50.0	Overload	KSI	36.00	14.90	8.83	2.185	141.99
66.00	**60.0**	**Flexure**	**KSI**	**36.00**	**14.31**	**8.95**	**1.550**	**100.75**
66.00	60.0	Shear	KIPS	542.44	-19.23	-48.65	8.616	560.02
66.00	60.0	Overload	KSI	36.00	14.31	8.95	2.222	144.40
77.00	**70.0**	**Flexure**	**KSI**	**36.00**	**12.51**	**8.18**	**1.932**	**125.56**
77.00	70.0	Shear	KIPS	542.44	-37.99	-60.81	6.561	426.49
77.00	70.0	Overload	KSI	36.00	12.51	8.18	2.651	172.31
84.50	**76.8**	**Flexure**	**KSI**	**36.00**	**13.51**	**8.75**	**1.686**	**109.60**
84.50	76.8	Shear	KIPS	542.44	-50.78	-69.09	5.575	362.38
84.50	76.8	Overload	KSI	36.00	13.51	8.75	2.365	153.73
88.00	**80.0**	**Flexure**	**KSI**	**36.00**	**12.14**	**7.90**	**2.054**	**133.48**
88.00	80.0	Shear	KIPS	542.44	-57.10	-72.96	5.187	337.12
88.00	80.0	Overload	KSI	36.00	12.14	7.90	2.794	181.58
99.00	90.0	Flexure	KSI	36.00	6.81	4.60	4.769	310.01
99.00	**90.0**	**Shear**	**KIPS**	**542.44**	**-75.50**	**-85.11**	**4.213**	**273.84**
99.00	90.0	Overload	KSI	36.00	6.81	4.60	5.961	387.49
110.00	100.0	Flexure	KSI	-36.00	-0.00	-0.00	99.000	6435.00
110.00	**100.0**	**Shear**	**KIPS**	**336.32**	**-93.90**	**-97.27**	**1.764**	**114.67**
110.00	100.0	Overload	KSI	-36.00	-0.00	-0.00	99.000	6435.00

Detailed Rating Results
Girder B - As Inspected
RIDOT H20 Truck
Axle Load
Impact: As Requested
Lane: As Requested

Span 1

Location (ft)	Percent	Limit State	Units	Capacity	DL + Adj -LL*	LL	Legal Rating Factor	Legal Load Rating (Ton)
0.00	0.0	Flexure	KSI	-36.00	-0.00	-0.00	99.000	1980.00
0.00	**0.0**	**Shear**	**KIPS**	**328.32**	**93.90**	**36.44**	**4.297**	**85.95**

0.00	0.0	Overload	KSI	-36.00	-0.00	-0.00	99.000	1980.00
0.83	0.8	Flexure	KSI	-36.00	-0.63	-0.04	99.000	1980.00
0.83	**0.8**	**Shear**	**KIPS**	**328.32**	**92.51**	**36.16**	**4.370**	**87.40**
0.83	0.8	Overload	KSI	-36.00	-0.63	-0.04	99.000	1980.00
11.00	10.0	Flexure	KSI	36.00	6.81	1.77	11.775	235.49
11.00	**10.0**	**Shear**	**KIPS**	**542.44**	**75.50**	**32.70**	**10.401**	**208.01**
11.00	10.0	Overload	KSI	36.00	6.81	1.77	11.935	238.69
22.00	**20.0**	**Flexure**	**KSI**	**36.00**	**12.14**	**3.13**	**4.919**	**98.38**
22.00	20.0	Shear	KIPS	542.44	57.10	28.96	12.393	247.86
22.00	20.0	Overload	KSI	36.00	12.14	3.13	5.426	108.53
25.50	**23.2**	**Flexure**	**KSI**	**36.00**	**13.51**	**3.48**	**4.025**	**80.50**
25.50	23.2	Shear	KIPS	542.44	50.78	27.77	13.156	263.12
25.50	23.2	Overload	KSI	36.00	13.51	3.48	4.578	91.56
33.00	**30.0**	**Flexure**	**KSI**	**36.00**	**12.51**	**3.30**	**4.540**	**90.79**
33.00	30.0	Shear	KIPS	542.44	37.99	25.22	15.004	300.08
33.00	30.0	Overload	KSI	36.00	12.51	3.30	5.052	101.04
44.00	**40.0**	**Flexure**	**KSI**	**36.00**	**14.31**	**3.75**	**3.509**	**70.18**
44.00	40.0	Shear	KIPS	542.44	19.23	21.49	18.508	370.15
44.00	40.0	Overload	KSI	36.00	14.31	3.75	4.078	81.56
49.50	**45.0**	**Flexure**	**KSI**	**36.00**	**14.76**	**3.85**	**3.299**	**65.99**
49.50	45.0	Shear	KIPS	542.44	9.38	19.62	20.783	415.67
49.50	45.0	Overload	KSI	36.00	14.76	3.85	3.882	77.64
55.00	**50.0**	**Flexure**	**KSI**	**36.00**	**14.90**	**3.87**	**3.244**	**64.87**
55.00	50.0	Shear	KIPS	542.44	0.00	-17.75	23.513	470.27
55.00	50.0	Overload	KSI	36.00	14.90	3.87	3.833	76.65
66.00	**60.0**	**Flexure**	**KSI**	**36.00**	**14.31**	**3.75**	**3.509**	**70.18**
66.00	60.0	Shear	KIPS	542.44	-19.23	-21.49	18.508	370.15
66.00	60.0	Overload	KSI	36.00	14.31	3.75	4.078	81.56
77.00	**70.0**	**Flexure**	**KSI**	**36.00**	**12.51**	**3.30**	**4.540**	**90.79**
77.00	70.0	Shear	KIPS	542.44	-37.99	-25.22	15.004	300.08
77.00	70.0	Overload	KSI	36.00	12.51	3.30	5.052	101.04
84.50	**76.8**	**Flexure**	**KSI**	**36.00**	**13.51**	**3.48**	**4.025**	**80.50**
84.50	76.8	Shear	KIPS	542.44	-50.78	-27.77	13.156	263.12
84.50	76.8	Overload	KSI	36.00	13.51	3.48	4.578	91.56
88.00	**80.0**	**Flexure**	**KSI**	**36.00**	**12.14**	**3.13**	**4.919**	**98.38**
88.00	80.0	Shear	KIPS	542.44	-57.10	-28.96	12.393	247.86
88.00	80.0	Overload	KSI	36.00	12.14	3.13	5.426	108.53
99.00	90.0	Flexure	KSI	36.00	6.81	1.77	11.775	235.49
99.00	**90.0**	**Shear**	**KIPS**	**542.44**	**-75.50**	**-32.70**	**10.401**	**208.01**
99.00	90.0	Overload	KSI	36.00	6.81	1.77	11.935	238.69
110.00	100.0	Flexure	KSI	-36.00	-0.00	-0.00	99.000	1980.00
110.00	**100.0**	**Shear**	**KIPS**	**336.32**	**-93.90**	**-36.44**	**4.466**	**89.33**
110.00	100.0	Overload	KSI	-36.00	-0.00	-0.00	99.000	1980.00

Detailed Rating Results
Girder B - As Inspected
RI-OP 1
Axle Load
Impact: As Requested
Lane: As Requested

Span 1

Location (ft)	Percent	Limit State	Units	Capacity	DL + Adj -LL*	LL	Permit Rating Factor	Permit Load Rating (Ton)
0.00	0.0	Flexure	KSI	-36.00	-0.00	-0.00	99.000	5593.50
0.00	**0.0**	**Shear**	**KIPS**	**328.32**	**93.90**	**66.31**	**2.559**	**144.56**
0.00	0.0	Overload	KSI	-36.00	-0.00	-0.00	99.000	5593.50
0.83	0.8	Flexure	KSI	-36.00	-0.63	-0.06	99.000	5593.50
0.83	**0.8**	**Shear**	**KIPS**	**328.32**	**92.51**	**65.75**	**2.604**	**147.12**
0.83	0.8	Overload	KSI	-36.00	-0.63	-0.06	99.000	5593.50
11.00	10.0	Flexure	KSI	36.00	6.81	2.62	8.586	485.11
11.00	**10.0**	**Shear**	**KIPS**	**542.44**	**75.50**	**58.85**	**6.261**	**353.76**
11.00	10.0	Overload	KSI	36.00	6.81	2.62	10.443	590.04
22.00	**20.0**	**Flexure**	**KSI**	**36.00**	**12.14**	**4.66**	**3.579**	**202.22**
22.00	20.0	Shear	KIPS	542.44	57.10	51.39	7.566	427.50
22.00	20.0	Overload	KSI	36.00	12.14	4.66	4.738	267.69
25.50	**23.2**	**Flexure**	**KSI**	**36.00**	**13.51**	**5.18**	**2.925**	**165.27**
25.50	23.2	Shear	KIPS	542.44	50.78	49.02	8.075	456.24
25.50	23.2	Overload	KSI	36.00	13.51	5.18	3.993	225.58
33.00	**30.0**	**Flexure**	**KSI**	**36.00**	**12.51**	**4.92**	**3.304**	**186.70**
33.00	30.0	Shear	KIPS	542.44	37.99	43.94	9.332	527.25
33.00	30.0	Overload	KSI	36.00	12.51	4.92	4.413	249.33
44.00	**40.0**	**Flexure**	**KSI**	**36.00**	**14.31**	**5.63**	**2.532**	**143.08**
44.00	40.0	Shear	KIPS	542.44	19.23	36.48	11.809	667.21
44.00	40.0	Overload	KSI	36.00	14.31	5.63	3.532	199.56
49.50	**45.0**	**Flexure**	**KSI**	**36.00**	**14.76**	**5.82**	**2.368**	**133.80**
49.50	45.0	Shear	KIPS	542.44	9.38	32.75	13.486	761.93
49.50	45.0	Overload	KSI	36.00	14.76	5.82	3.344	188.91
55.00	**50.0**	**Flexure**	**KSI**	**36.00**	**14.90**	**5.87**	**2.320**	**131.09**
55.00	50.0	Shear	KIPS	542.44	0.00	-29.02	15.576	880.05
55.00	50.0	Overload	KSI	36.00	14.90	5.87	3.290	185.87
66.00	**60.0**	**Flexure**	**KSI**	**36.00**	**14.31**	**5.63**	**2.532**	**143.08**
66.00	60.0	Shear	KIPS	542.44	-19.23	-36.48	11.809	667.21

66.00	60.0	Overload	KSI	36.00	14.31	5.63	3.532	199.56
77.00	**70.0**	**Flexure**	**KSI**	**36.00**	**12.51**	**4.92**	**3.304**	**186.70**
77.00	70.0	Shear	KIPS	542.44	-37.99	-43.94	9.332	527.25
77.00	70.0	Overload	KSI	36.00	12.51	4.92	4.413	249.33
84.50	**76.8**	**Flexure**	**KSI**	**36.00**	**13.51**	**5.18**	**2.925**	**165.27**
84.50	76.8	Shear	KIPS	542.44	-50.78	-49.02	8.075	456.24
84.50	76.8	Overload	KSI	36.00	13.51	5.18	3.993	225.58
88.00	**80.0**	**Flexure**	**KSI**	**36.00**	**12.14**	**4.66**	**3.579**	**202.22**
88.00	80.0	Shear	KIPS	542.44	-57.10	-51.39	7.566	427.50
88.00	80.0	Overload	KSI	36.00	12.14	4.66	4.738	267.69
99.00	90.0	Flexure	KSI	36.00	6.81	2.62	8.586	485.11
99.00	**90.0**	**Shear**	**KIPS**	**542.44**	**-75.50**	**-58.85**	**6.261**	**353.76**
99.00	90.0	Overload	KSI	36.00	6.81	2.62	10.443	590.04
110.00	100.0	Flexure	KSI	-36.00	-0.00	-0.00	99.000	5593.50
110.00	**100.0**	**Shear**	**KIPS**	**336.32**	**-93.90**	**-66.31**	**2.659**	**150.24**
110.00	100.0	Overload	KSI	-36.00	-0.00	-0.00	99.000	5593.50

Detailed Rating Results
Girder B - As Inspected
RI-OP 2
Axle Load
Impact: As Requested
Lane: As Requested

Span 1

Location (ft)	Percent	Limit State	Units	Capacity	DL + Adj -LL*	LL	Permit Rating Factor	Permit Load Rating (Ton)
0.00	0.0	Flexure	KSI	-36.00	-0.00	-0.00	99.000	7920.00
0.00	**0.0**	**Shear**	**KIPS**	**328.32**	**93.90**	**77.08**	**2.201**	**176.09**
0.00	0.0	Overload	KSI	-36.00	-0.00	-0.00	99.000	7920.00
0.83	0.8	Flexure	KSI	-36.00	-0.63	-0.07	99.000	7920.00
0.83	**0.8**	**Shear**	**KIPS**	**328.32**	**92.51**	**76.28**	**2.244**	**179.55**
0.83	0.8	Overload	KSI	-36.00	-0.63	-0.07	99.000	7920.00
11.00	10.0	Flexure	KSI	36.00	6.81	2.96	7.597	607.73
11.00	**10.0**	**Shear**	**KIPS**	**542.44**	**75.50**	**66.52**	**5.540**	**443.18**
11.00	10.0	Overload	KSI	36.00	6.81	2.96	9.240	739.19
22.00	**20.0**	**Flexure**	**KSI**	**36.00**	**12.14**	**5.11**	**3.260**	**260.76**
22.00	20.0	Shear	KIPS	542.44	57.10	55.96	6.949	555.96
22.00	20.0	Overload	KSI	36.00	12.14	5.11	4.315	345.19
25.50	**23.2**	**Flexure**	**KSI**	**36.00**	**13.51**	**5.62**	**2.698**	**215.87**

25.50	23.2	Shear	KIPS	542.44	50.78	52.60	7.526	602.08
25.50	23.2	Overload	KSI	36.00	13.51	5.62	3.683	294.63
33.00	**30.0**	**Flexure**	**KSI**	**36.00**	**12.51**	**5.21**	**3.117**	**249.39**
33.00	30.0	Shear	KIPS	542.44	37.99	45.40	9.032	722.52
33.00	30.0	Overload	KSI	36.00	12.51	5.21	4.163	333.04
44.00	**40.0**	**Flexure**	**KSI**	**36.00**	**14.31**	**5.63**	**2.534**	**202.69**
44.00	40.0	Shear	KIPS	542.44	19.23	35.31	12.199	975.93
44.00	40.0	Overload	KSI	36.00	14.31	5.63	3.534	282.70
49.50	**45.0**	**Flexure**	**KSI**	**36.00**	**14.76**	**5.62**	**2.450**	**196.03**
49.50	45.0	Shear	KIPS	542.44	9.38	30.46	14.499	1159.90
49.50	45.0	Overload	KSI	36.00	14.76	5.62	3.460	276.79
55.00	**50.0**	**Flexure**	**KSI**	**36.00**	**14.90**	**5.48**	**2.482**	**198.57**
55.00	50.0	Shear	KIPS	542.44	0.00	-25.79	17.529	1402.31
55.00	50.0	Overload	KSI	36.00	14.90	5.48	3.520	281.56
66.00	**60.0**	**Flexure**	**KSI**	**36.00**	**14.31**	**5.63**	**2.534**	**202.69**
66.00	60.0	Shear	KIPS	542.44	-19.23	-35.31	12.199	975.93
66.00	60.0	Overload	KSI	36.00	14.31	5.63	3.534	282.70
77.00	**70.0**	**Flexure**	**KSI**	**36.00**	**12.51**	**5.21**	**3.117**	**249.39**
77.00	70.0	Shear	KIPS	542.44	-37.99	-45.40	9.032	722.52
77.00	70.0	Overload	KSI	36.00	12.51	5.21	4.163	333.04
84.50	**76.8**	**Flexure**	**KSI**	**36.00**	**13.51**	**5.62**	**2.698**	**215.87**
84.50	76.8	Shear	KIPS	542.44	-50.78	-52.60	7.526	602.08
84.50	76.8	Overload	KSI	36.00	13.51	5.62	3.683	294.63
88.00	**80.0**	**Flexure**	**KSI**	**36.00**	**12.14**	**5.11**	**3.260**	**260.76**
88.00	80.0	Shear	KIPS	542.44	-57.10	-55.96	6.949	555.96
88.00	80.0	Overload	KSI	36.00	12.14	5.11	4.315	345.19
99.00	90.0	Flexure	KSI	36.00	6.81	2.96	7.597	607.73
99.00	**90.0**	**Shear**	**KIPS**	**542.44**	**-75.50**	**-66.52**	**5.540**	**443.18**
99.00	90.0	Overload	KSI	36.00	6.81	2.96	9.240	739.19
110.00	100.0	Flexure	KSI	-36.00	-0.00	-0.00	99.000	7920.00
110.00	**100.0**	**Shear**	**KIPS**	**336.32**	**-93.90**	**-77.08**	**2.288**	**183.02**
110.00	100.0	Overload	KSI	-36.00	-0.00	-0.00	99.000	7920.00

Detailed Rating Results
Girder B - As Inspected
RI-OP 3
Axle Load
Impact: As Requested
Lane: As Requested

Span 1

Location							**Permit Rating**	**Permit**

(ft)	Percent	Limit State	Units	Capacity	DL + Adj -LL*	LL	Factor	Load Rating (Ton)
0.00	0.0	Flexure	KSI	-36.00	-0.00	-0.00	99.000	11187.00
0.00	**0.0**	**Shear**	**KIPS**	**328.32**	**93.90**	**86.06**	**1.971**	**222.76**
0.00	0.0	Overload	KSI	-36.00	-0.00	-0.00	99.000	11187.00
0.83	0.8	Flexure	KSI	-36.00	-0.63	-0.08	99.000	11187.00
0.83	**0.8**	**Shear**	**KIPS**	**328.32**	**92.51**	**84.94**	**2.016**	**227.76**
0.83	0.8	Overload	KSI	-36.00	-0.63	-0.08	99.000	11187.00
11.00	10.0	Flexure	KSI	36.00	6.81	3.22	7.005	791.54
11.00	**10.0**	**Shear**	**KIPS**	**542.44**	**75.50**	**71.70**	**5.140**	**580.77**
11.00	10.0	Overload	KSI	36.00	6.81	3.22	8.520	962.75
22.00	**20.0**	**Flexure**	**KSI**	**36.00**	**12.14**	**5.43**	**3.069**	**346.76**
22.00	20.0	Shear	KIPS	542.44	57.10	58.76	6.618	747.82
22.00	20.0	Overload	KSI	36.00	12.14	5.43	4.062	459.02
25.50	**23.2**	**Flexure**	**KSI**	**36.00**	**13.51**	**5.97**	**2.540**	**287.05**
25.50	23.2	Shear	KIPS	542.44	50.78	55.23	7.167	809.86
25.50	23.2	Overload	KSI	36.00	13.51	5.97	3.467	391.79
33.00	**30.0**	**Flexure**	**KSI**	**36.00**	**12.51**	**5.54**	**2.934**	**331.59**
33.00	30.0	Shear	KIPS	542.44	37.99	47.67	8.600	971.84
33.00	30.0	Overload	KSI	36.00	12.51	5.54	3.919	442.83
44.00	**40.0**	**Flexure**	**KSI**	**36.00**	**14.31**	**6.13**	**2.325**	**262.71**
44.00	40.0	Shear	KIPS	542.44	19.23	37.69	11.430	1291.63
44.00	40.0	Overload	KSI	36.00	14.31	6.13	3.243	366.40
49.50	**45.0**	**Flexure**	**KSI**	**36.00**	**14.76**	**6.24**	**2.206**	**249.32**
49.50	45.0	Shear	KIPS	542.44	9.38	33.54	13.166	1487.79
49.50	45.0	Overload	KSI	36.00	14.76	6.24	3.115	352.03
55.00	**50.0**	**Flexure**	**KSI**	**36.00**	**14.90**	**6.19**	**2.199**	**248.54**
55.00	50.0	Shear	KIPS	542.44	0.00	-29.58	15.280	1726.59
55.00	50.0	Overload	KSI	36.00	14.90	6.19	3.119	352.41
66.00	**60.0**	**Flexure**	**KSI**	**36.00**	**14.31**	**6.13**	**2.325**	**262.71**
66.00	60.0	Shear	KIPS	542.44	-19.23	-37.69	11.430	1291.63
66.00	60.0	Overload	KSI	36.00	14.31	6.13	3.243	366.40
77.00	**70.0**	**Flexure**	**KSI**	**36.00**	**12.51**	**5.54**	**2.934**	**331.59**
77.00	70.0	Shear	KIPS	542.44	-37.99	-47.67	8.600	971.84
77.00	70.0	Overload	KSI	36.00	12.51	5.54	3.919	442.83
84.50	**76.8**	**Flexure**	**KSI**	**36.00**	**13.51**	**5.97**	**2.540**	**287.05**
84.50	76.8	Shear	KIPS	542.44	-50.78	-55.23	7.167	809.86
84.50	76.8	Overload	KSI	36.00	13.51	5.97	3.467	391.79
88.00	**80.0**	**Flexure**	**KSI**	**36.00**	**12.14**	**5.43**	**3.069**	**346.76**
88.00	80.0	Shear	KIPS	542.44	-57.10	-58.76	6.618	747.82
88.00	80.0	Overload	KSI	36.00	12.14	5.43	4.062	459.02

99.00	90.0	Flexure	KSI	36.00	6.81	3.22	7.005	791.54
99.00	**90.0**	**Shear**	**KIPS**	**542.44**	**-75.50**	**-71.70**	**5.140**	**580.77**
99.00	90.0	Overload	KSI	36.00	6.81	3.22	8.520	962.75
110.00	100.0	Flexure	KSI	-36.00	-0.00	-0.00	99.000	11187.00
110.00	**100.0**	**Shear**	**KIPS**	**336.32**	**-93.90**	**-86.06**	**2.049**	**231.52**
110.00	100.0	Overload	KSI	-36.00	-0.00	-0.00	99.000	11187.00

Detailed Rating Results
Girder B - As Inspected
RIPTA Bus
Axle Load
Impact: As Requested
Lane: As Requested

Span 1

Location (ft)	Percent	Limit State	Units	Capacity	DL + Adj -LL*	LL	Legal Rating Factor	Legal Load Rating (Ton)
0.00	0.0	Flexure	KSI	-36.00	-0.00	-0.00	99.000	2059.20
0.00	**0.0**	**Shear**	**KIPS**	**328.32**	**93.90**	**36.01**	**4.350**	**90.47**
0.00	0.0	Overload	KSI	-36.00	-0.00	-0.00	99.000	2059.20
0.83	0.8	Flexure	KSI	-36.00	-0.63	-0.04	99.000	2059.20
0.83	**0.8**	**Shear**	**KIPS**	**328.32**	**92.51**	**35.71**	**4.425**	**92.04**
0.83	0.8	Overload	KSI	-36.00	-0.63	-0.04	99.000	2059.20
11.00	10.0	Flexure	KSI	36.00	6.81	1.73	11.990	249.39
11.00	**10.0**	**Shear**	**KIPS**	**542.44**	**75.50**	**32.12**	**10.591**	**220.29**
11.00	10.0	Overload	KSI	36.00	6.81	1.73	12.153	252.78
22.00	**20.0**	**Flexure**	**KSI**	**36.00**	**12.14**	**3.05**	**5.048**	**104.99**
22.00	20.0	Shear	KIPS	542.44	57.10	28.23	12.717	264.50
22.00	20.0	Overload	KSI	36.00	12.14	3.05	5.568	115.81
25.50	**23.2**	**Flexure**	**KSI**	**36.00**	**13.51**	**3.38**	**4.142**	**86.15**
25.50	23.2	Shear	KIPS	542.44	50.78	26.99	13.538	281.59
25.50	23.2	Overload	KSI	36.00	13.51	3.38	4.711	97.99
33.00	**30.0**	**Flexure**	**KSI**	**36.00**	**12.51**	**3.19**	**4.705**	**97.86**
33.00	30.0	Shear	KIPS	542.44	37.99	24.34	15.550	323.44
33.00	30.0	Overload	KSI	36.00	12.51	3.19	5.236	108.91
44.00	**40.0**	**Flexure**	**KSI**	**36.00**	**14.31**	**3.57**	**3.687**	**76.68**
44.00	40.0	Shear	KIPS	542.44	19.23	20.45	19.445	404.45
44.00	40.0	Overload	KSI	36.00	14.31	3.57	4.285	89.12
49.50	**45.0**	**Flexure**	**KSI**	**36.00**	**14.76**	**3.63**	**3.497**	**72.74**
49.50	45.0	Shear	KIPS	542.44	9.38	18.51	22.031	458.24

49.50	45.0	Overload	KSI	36.00	14.76	3.63	4.115	85.59
55.00	**50.0**	**Flexure**	**KSI**	**36.00**	**14.90**	**3.61**	**3.476**	**72.29**
55.00	50.0	Shear	KIPS	542.44	0.00	-16.56	25.196	524.08
55.00	50.0	Overload	KSI	36.00	14.90	3.61	4.107	85.42
66.00	**60.0**	**Flexure**	**KSI**	**36.00**	**14.31**	**3.57**	**3.687**	**76.68**
66.00	60.0	Shear	KIPS	542.44	-19.23	-20.45	19.445	404.45
66.00	60.0	Overload	KSI	36.00	14.31	3.57	4.285	89.12
77.00	**70.0**	**Flexure**	**KSI**	**36.00**	**12.51**	**3.19**	**4.705**	**97.86**
77.00	70.0	Shear	KIPS	542.44	-37.99	-24.34	15.550	323.44
77.00	70.0	Overload	KSI	36.00	12.51	3.19	5.236	108.91
84.50	**76.8**	**Flexure**	**KSI**	**36.00**	**13.51**	**3.38**	**4.142**	**86.15**
84.50	76.8	Shear	KIPS	542.44	-50.78	-26.99	13.538	281.59
84.50	76.8	Overload	KSI	36.00	13.51	3.38	4.711	97.99
88.00	**80.0**	**Flexure**	**KSI**	**36.00**	**12.14**	**3.05**	**5.048**	**104.99**
88.00	80.0	Shear	KIPS	542.44	-57.10	-28.23	12.717	264.50
88.00	80.0	Overload	KSI	36.00	12.14	3.05	5.568	115.81
99.00	90.0	Flexure	KSI	36.00	6.81	1.73	11.990	249.39
99.00	**90.0**	**Shear**	**KIPS**	**542.44**	**-75.50**	**-32.12**	**10.591**	**220.29**
99.00	90.0	Overload	KSI	36.00	6.81	1.73	12.153	252.78
110.00	100.0	Flexure	KSI	-36.00	-0.00	-0.00	99.000	2059.20
110.00	**100.0**	**Shear**	**KIPS**	**336.32**	**-93.90**	**-36.01**	**4.521**	**94.03**
110.00	100.0	Overload	KSI	-36.00	-0.00	-0.00	99.000	2059.20

Note:
*Adj-LL is only applicable for Permit load rating.

Bridge Name: Mohegan Bridge
NBI Structure ID:
Bridge ID: 067301

Analyzed By: BrR
Analyze Date: Friday, September 14, 2018 19:21:08
Analysis Engine: AASHTO LRFR Engine Version 6.8.2.3002
Analysis Preference Setting: None

Report By: brr
Report Date: Friday, September 14, 2018 19:22:18

Structure Definition Name: Span 2
Member Name: Girder C
Member Alternative Name: Girder C - As Inspected

Load and Resistance Factor Rating Summary

Live Load		Rating Factor	Girder Summary Controls	Capacity (Ton)	Span	Location (ft)	Percent	Impact	Lane
EV2	Legal	3.799	STRENGTH-I Steel Shear	109.23	1	0.00	0.0	As Requested	As Requested
EV3	Legal	2.552	STRENGTH-I Steel Shear	109.75	1	0.00	0.0	As Requested	As Requested
HL-93 (US)	Inventory	1.068	STRENGTH-I Steel Flexure Stress	38.44	1	55.00	50.0	As Requested	As Requested
HL-93 (US)	Operating	1.384	STRENGTH-I Steel Flexure Stress	49.82	1	55.00	50.0	As Requested	As Requested
SU4	Legal	2.863	STRENGTH-I Steel Flexure Stress	77.29	1	55.00	50.0	As Requested	As Requested
SU5	Legal	2.553	STRENGTH-I Steel Flexure Stress	79.13	1	55.00	50.0	As Requested	As Requested
SU6	Legal	2.283	STRENGTH-I Steel Flexure Stress	79.35	1	55.00	50.0	As Requested	As Requested
SU7	Legal	2.073	STRENGTH-I Steel Flexure Stress	80.32	1	55.00	50.0	As Requested	As Requested
Type 3	Legal	3.167	STRENGTH-I Steel Flexure Stress	79.18	1	55.00	50.0	As Requested	As Requested
Type 3-3	Legal	2.511	STRENGTH-I Steel Flexure Stress	100.45	1	55.00	50.0	As Requested	As Requested
Type 3S2	Legal	2.575	STRENGTH-I Steel Flexure Stress	92.69	1	55.00	50.0	As Requested	As Requested
RI-3	Permit	2.228	STRENGTH-II Steel Flexure Stress	84.66	1	55.00	50.0	As Requested	As Requested
RI-4	Permit	2.282	STRENGTH-II Steel Flexure Stress	85.58	1	55.00	50.0	As Requested	As Requested
RI-5	Permit	1.787	STRENGTH-II Steel Flexure Stress	93.64	1	55.00	50.0	As Requested	As Requested
RI-6	Permit	1.691		109.93	1	49.50	45.0	As Requested	As Requested

			STRENGTH-II Steel Flexure Stress						
RIDOT H20 Truck	Legal	3.704	STRENGTH-I Steel Flexure Stress	74.09	1	55.00	50.0	As Requested	As Requested
RI-OP 1	Permit	2.650	STRENGTH-II Steel Flexure Stress	149.71	1	55.00	50.0	As Requested	As Requested
RI-OP 2	Permit	2.293	STRENGTH-II Steel Shear	183.48	1	0.00	0.0	As Requested	As Requested
RI-OP 3	Permit	2.054	STRENGTH-II Steel Shear	232.10	1	0.00	0.0	As Requested	As Requested
RIPTA Bus	Legal	3.970	STRENGTH-I Steel Flexure Stress	82.57	1	55.00	50.0	As Requested	As Requested

Note:
"N/A" indicates not applicable
"**" indicates not available

Report by Action: ☑ **Flexure** ☑ **Shear** ☑ **Overload** ☑ **Interaction** ☑ **Critical**

Detailed Rating Results
Girder C - As Inspected
EV2
Axle Load
Impact: As Requested
Lane: As Requested

Span 1

Location (ft)	Percent	Limit State	Units	Capacity	DL + Adj -LL*	LL	Legal Rating Factor	Legal Load Rating (Ton)
0.00	0.0	Flexure	KSI	-36.00	-0.00	-0.00	99.000	2846.25
0.00	**0.0**	**Shear**	**KIPS**	**320.44**	**82.95**	**42.95**	**3.799**	**109.23**
0.00	0.0	Overload	KSI	-36.00	-0.00	-0.00	99.000	2846.25
0.83	0.8	Flexure	KSI	-35.86	-0.59	-0.04	99.000	2846.25
0.83	**0.8**	**Shear**	**KIPS**	**320.44**	**81.73**	**42.60**	**3.859**	**110.95**
0.83	0.8	Overload	KSI	-36.00	-0.59	-0.04	99.000	2846.25
11.00	10.0	Flexure	KSI	36.00	6.11	1.71	12.616	362.72
11.00	**10.0**	**Shear**	**KIPS**	**542.44**	**66.74**	**38.39**	**9.123**	**262.27**
11.00	10.0	Overload	KSI	36.00	6.11	1.71	12.626	362.99
22.00	**20.0**	**Flexure**	**KSI**	**36.00**	**10.91**	**3.02**	**5.571**	**160.18**
22.00	20.0	Shear	KIPS	542.44	50.54	33.84	10.832	311.41
22.00	20.0	Overload	KSI	36.00	10.91	3.02	5.940	170.78
25.50	**23.2**	**Flexure**	**KSI**	**36.00**	**12.14**	**3.35**	**4.654**	**133.79**
25.50	23.2	Shear	KIPS	542.44	44.91	32.39	11.490	330.34
25.50	23.2	Overload	KSI	36.00	12.14	3.35	5.070	145.78
33.00	**30.0**	**Flexure**	**KSI**	**36.00**	**11.21**	**3.17**	**5.210**	**149.78**
33.00	30.0	Shear	KIPS	542.44	33.61	29.29	13.096	376.51
33.00	30.0	Overload	KSI	36.00	11.21	3.17	5.587	160.62
44.00	**40.0**	**Flexure**	**KSI**	**36.00**	**12.83**	**3.56**	**4.173**	**119.97**
44.00	40.0	Shear	KIPS	542.44	17.04	24.73	16.180	465.19
44.00	40.0	Overload	KSI	36.00	12.83	3.56	4.612	132.59
49.50	**45.0**	**Flexure**	**KSI**	**36.00**	**13.23**	**3.64**	**3.976**	**114.32**
49.50	45.0	Shear	KIPS	542.44	8.29	22.45	18.212	523.59
49.50	45.0	Overload	KSI	36.00	13.23	3.64	4.431	127.40
55.00	**50.0**	**Flexure**	**KSI**	**36.00**	**13.36**	**3.64**	**3.946**	**113.46**
55.00	50.0	Shear	KIPS	542.44	0.00	-20.18	20.679	594.54
55.00	50.0	Overload	KSI	36.00	13.36	3.64	4.410	126.79

66.00	**60.0**	**Flexure**	**KSI**	**36.00**	**12.83**	**3.56**	**4.173**	**119.97**
66.00	60.0	Shear	KIPS	542.44	-17.04	-24.73	16.180	465.19
66.00	60.0	Overload	KSI	36.00	12.83	3.56	4.612	132.59
77.00	**70.0**	**Flexure**	**KSI**	**36.00**	**11.21**	**3.17**	**5.210**	**149.78**
77.00	70.0	Shear	KIPS	542.44	-33.61	-29.29	13.096	376.51
77.00	70.0	Overload	KSI	36.00	11.21	3.17	5.587	160.62
84.50	**76.8**	**Flexure**	**KSI**	**36.00**	**12.14**	**3.35**	**4.654**	**133.79**
84.50	76.8	Shear	KIPS	542.44	-44.91	-32.39	11.490	330.34
84.50	76.8	Overload	KSI	36.00	12.14	3.35	5.070	145.78
88.00	**80.0**	**Flexure**	**KSI**	**36.00**	**10.91**	**3.02**	**5.571**	**160.18**
88.00	80.0	Shear	KIPS	542.44	-50.54	-33.84	10.832	311.41
88.00	80.0	Overload	KSI	36.00	10.91	3.02	5.940	170.78
99.00	90.0	Flexure	KSI	36.00	6.11	1.71	12.616	362.72
99.00	**90.0**	**Shear**	**KIPS**	**542.44**	**-66.74**	**-38.39**	**9.123**	**262.27**
99.00	90.0	Overload	KSI	36.00	6.11	1.71	12.626	362.99
110.00	100.0	Flexure	KSI	-36.00	-0.00	-0.00	99.000	2846.25
110.00	**100.0**	**Shear**	**KIPS**	**336.32**	**-82.95**	**-42.95**	**4.084**	**117.42**
110.00	100.0	Overload	KSI	-36.00	-0.00	-0.00	99.000	2846.25

Detailed Rating Results
Girder C - As Inspected
EV3
Axle Load
Impact: As Requested
Lane: As Requested

Span 1

Location (ft)	Percent	Limit State	Units	Capacity	DL + Adj -LL*	LL	Legal Rating Factor	Legal Load Rating (Ton)
0.00	0.0	Flexure	KSI	-36.00	-0.00	-0.00	99.000	4257.00
0.00	**0.0**	**Shear**	**KIPS**	**320.44**	**82.95**	**63.93**	**2.552**	**109.75**
0.00	0.0	Overload	KSI	-36.00	-0.00	-0.00	99.000	4257.00
0.83	0.8	Flexure	KSI	-36.00	-0.59	-0.06	99.000	4257.00
0.83	**0.8**	**Shear**	**KIPS**	**320.44**	**81.73**	**63.42**	**2.592**	**111.47**
0.83	0.8	Overload	KSI	-36.00	-0.59	-0.06	99.000	4257.00
11.00	10.0	Flexure	KSI	36.00	6.11	2.55	8.479	364.62
11.00	**10.0**	**Shear**	**KIPS**	**542.44**	**66.74**	**57.12**	**6.131**	**263.65**
11.00	10.0	Overload	KSI	36.00	6.11	2.55	8.486	364.89
22.00	**20.0**	**Flexure**	**KSI**	**36.00**	**10.91**	**4.49**	**3.747**	**161.13**
22.00	20.0	Shear	KIPS	542.44	50.54	50.31	7.285	313.26

22.00	20.0	Overload	KSI	36.00	10.91	4.49	3.995	171.80
25.50	**23.2**	**Flexure**	**KSI**	**36.00**	**12.14**	**4.97**	**3.131**	**134.62**
25.50	23.2	Shear	KIPS	542.44	44.91	48.15	7.730	332.40
25.50	23.2	Overload	KSI	36.00	12.14	4.97	3.411	146.68
33.00	**30.0**	**Flexure**	**KSI**	**36.00**	**11.21**	**4.70**	**3.507**	**150.81**
33.00	30.0	Shear	KIPS	542.44	33.61	43.50	8.816	379.10
33.00	30.0	Overload	KSI	36.00	11.21	4.70	3.761	161.72
44.00	**40.0**	**Flexure**	**KSI**	**36.00**	**12.83**	**5.32**	**2.794**	**120.15**
44.00	40.0	Shear	KIPS	542.44	17.04	36.69	10.907	468.98
44.00	40.0	Overload	KSI	36.00	12.83	5.32	3.088	132.79
49.50	**45.0**	**Flexure**	**KSI**	**36.00**	**13.23**	**5.48**	**2.643**	**113.67**
49.50	45.0	Shear	KIPS	542.44	8.29	33.29	12.286	528.30
49.50	45.0	Overload	KSI	36.00	13.23	5.48	2.946	126.67
55.00	**50.0**	**Flexure**	**KSI**	**36.00**	**13.36**	**5.51**	**2.605**	**112.00**
55.00	50.0	Shear	KIPS	542.44	0.00	-29.88	13.965	600.49
55.00	50.0	Overload	KSI	36.00	13.36	5.51	2.911	125.17
66.00	**60.0**	**Flexure**	**KSI**	**36.00**	**12.83**	**5.32**	**2.794**	**120.15**
66.00	60.0	Shear	KIPS	542.44	-17.04	-36.69	10.907	468.98
66.00	60.0	Overload	KSI	36.00	12.83	5.32	3.088	132.79
77.00	**70.0**	**Flexure**	**KSI**	**36.00**	**11.21**	**4.70**	**3.507**	**150.81**
77.00	70.0	Shear	KIPS	542.44	-33.61	-43.50	8.816	379.10
77.00	70.0	Overload	KSI	36.00	11.21	4.70	3.761	161.72
84.50	**76.8**	**Flexure**	**KSI**	**36.00**	**12.14**	**4.97**	**3.131**	**134.62**
84.50	76.8	Shear	KIPS	542.44	-44.91	-48.15	7.730	332.40
84.50	76.8	Overload	KSI	36.00	12.14	4.97	3.411	146.68
88.00	**80.0**	**Flexure**	**KSI**	**36.00**	**10.91**	**4.49**	**3.747**	**161.13**
88.00	80.0	Shear	KIPS	542.44	-50.54	-50.31	7.285	313.26
88.00	80.0	Overload	KSI	36.00	10.91	4.49	3.995	171.80
99.00	90.0	Flexure	KSI	36.00	6.11	2.55	8.479	364.62
99.00	**90.0**	**Shear**	**KIPS**	**542.44**	**-66.74**	**-57.12**	**6.131**	**263.65**
99.00	90.0	Overload	KSI	36.00	6.11	2.55	8.486	364.89
110.00	100.0	Flexure	KSI	-36.00	-0.00	-0.00	99.000	4257.00
110.00	**100.0**	**Shear**	**KIPS**	**336.32**	**-82.95**	**-63.93**	**2.743**	**117.96**
110.00	100.0	Overload	KSI	-36.00	-0.00	-0.00	99.000	4257.00

Detailed Rating Results
Girder C - As Inspected
HL-93 (US)
Truck + Lane
Impact: As Requested
Lane: As Requested

Span 1

Location (ft)	Percent	Limit State	Units	Capacity	DL + Adj-LL*	LL	Inventory Rating Factor	Inventory Load Rating (Ton)	Operating Rating Factor	Operating Load Rating (Ton)
0.00	0.0	Flexure	KSI	-36.00	-0.00	-0.00	99.000	3564.00	99.000	3564.00
0.00	**0.0**	**Shear**	**KIPS**	**320.44**	**82.95**	**95.70**	**1.267**	**45.60**	**1.642**	**59.11**
0.00	0.0	Overload	KSI	-36.00	-0.00	-0.00	99.000	3564.00	99.000	3564.00
0.83	0.8	Flexure	KSI	36.00	0.51	0.39	51.960	1870.56	67.356	2424.80
0.83	**0.8**	**Shear**	**KIPS**	**320.44**	**81.73**	**94.72**	**1.289**	**46.42**	**1.671**	**60.17**
0.83	0.8	Overload	KSI	36.00	0.51	0.39	66.684	2400.62	86.689	3120.80
11.00	10.0	Flexure	KSI	36.00	6.11	4.62	3.475	125.08	4.504	162.15
11.00	**10.0**	**Shear**	**KIPS**	**542.44**	**66.74**	**83.03**	**3.134**	**112.81**	**4.062**	**146.24**
11.00	10.0	Overload	KSI	36.00	6.11	4.62	4.681	168.51	6.085	219.06
22.00	**20.0**	**Flexure**	**KSI**	**36.00**	**10.91**	**8.13**	**1.536**	**55.28**	**1.991**	**71.66**
22.00	20.0	Shear	KIPS	542.44	50.54	70.90	3.840	138.25	4.978	179.21
22.00	20.0	Overload	KSI	36.00	10.91	8.13	2.204	79.35	2.865	103.15
25.50	**23.2**	**Flexure**	**KSI**	**36.00**	**12.14**	**9.02**	**1.283**	**46.19**	**1.663**	**59.88**
25.50	23.2	Shear	KIPS	542.44	44.91	67.16	4.116	148.19	5.336	192.10
25.50	23.2	Overload	KSI	36.00	12.14	9.02	1.882	67.75	2.447	88.07
33.00	**30.0**	**Flexure**	**KSI**	**36.00**	**11.21**	**8.52**	**1.438**	**51.75**	**1.863**	**67.09**
33.00	30.0	Shear	KIPS	542.44	33.61	59.33	4.802	172.87	6.225	224.09
33.00	30.0	Overload	KSI	36.00	11.21	8.52	2.075	74.70	2.698	97.11
44.00	**40.0**	**Flexure**	**KSI**	**36.00**	**12.83**	**9.67**	**1.142**	**41.12**	**1.481**	**53.30**
44.00	40.0	Shear	KIPS	542.44	17.04	48.31	6.154	221.54	7.977	287.18
44.00	40.0	Overload	KSI	36.00	12.83	9.67	1.699	61.17	2.209	79.53
49.50	**45.0**	**Flexure**	**KSI**	**36.00**	**13.23**	**9.94**	**1.082**	**38.95**	**1.403**	**50.50**
49.50	45.0	Shear	KIPS	542.44	8.29	43.00	7.065	254.34	9.158	329.70
49.50	45.0	Overload	KSI	36.00	13.23	9.94	1.623	58.44	2.110	75.97
55.00	**50.0**	**Flexure**	**KSI**	**36.00**	**13.36**	**9.98**	**1.068**	**38.44**	**1.384**	**49.82**
55.00	50.0	Shear	KIPS	542.44	0.00	-37.83	8.194	294.99	10.622	382.39
55.00	50.0	Overload	KSI	36.00	13.36	9.98	1.606	57.82	2.088	75.17
66.00	**60.0**	**Flexure**	**KSI**	**36.00**	**12.83**	**9.67**	**1.142**	**41.12**	**1.481**	**53.30**
66.00	60.0	Shear	KIPS	542.44	-17.04	-48.31	6.154	221.54	7.977	287.18
66.00	60.0	Overload	KSI	36.00	12.83	9.67	1.699	61.17	2.209	79.53
77.00	**70.0**	**Flexure**	**KSI**	**36.00**	**11.21**	**8.52**	**1.438**	**51.75**	**1.863**	**67.09**
77.00	70.0	Shear	KIPS	542.44	-33.61	-59.33	4.802	172.87	6.225	224.09
77.00	70.0	Overload	KSI	36.00	11.21	8.52	2.075	74.70	2.698	97.11
84.50	**76.8**	**Flexure**	**KSI**	**36.00**	**12.14**	**9.02**	**1.283**	**46.19**	**1.663**	**59.88**
84.50	76.8	Shear	KIPS	542.44			4.116	148.19	5.336	192.10

					-44.91	-67.16				
84.50	76.8	Overload	KSI	36.00	12.14	9.02	1.882	67.75	2.447	88.07
88.00	**80.0**	**Flexure**	**KSI**	**36.00**	**10.91**	**8.13**	**1.536**	**55.28**	**1.991**	**71.66**
88.00	80.0	Shear	KIPS	542.44	-50.54	-70.90	3.840	138.25	4.978	179.21
88.00	80.0	Overload	KSI	36.00	10.91	8.13	2.204	79.35	2.865	103.15
99.00	90.0	Flexure	KSI	36.00	6.11	4.62	3.475	125.08	4.504	162.15
99.00	**90.0**	**Shear**	**KIPS**	**542.44**	**-66.74**	**-83.03**	**3.134**	**112.81**	**4.062**	**146.24**
99.00	90.0	Overload	KSI	36.00	6.11	4.62	4.681	168.51	6.085	219.06
110.00	100.0	Flexure	KSI	-36.00	-0.00	-0.00	99.000	3564.00	99.000	3564.00
110.00	**100.0**	**Shear**	**KIPS**	**336.32**	**-82.95**	**-95.70**	**1.362**	**49.01**	**1.765**	**63.54**
110.00	100.0	Overload	KSI	-36.00	-0.00	-0.00	99.000	3564.00	99.000	3564.00

Detailed Rating Results
Girder C - As Inspected
HL-93 (US)
Tandem + Lane
Impact: As Requested
Lane: As Requested

Span 1

Location (ft)	Percent	Limit State	Units	Capacity	DL + Adj-LL*	LL	Inventory Rating Factor	Inventory Load Rating (Ton)	Operating Rating Factor	Operating Load Rating (Ton)
0.00	0.0	Flexure	KSI	-36.00	-0.00	-0.00	99.000	3564.00	99.000	3564.00
0.00	**0.0**	**Shear**	**KIPS**	**320.44**	**82.95**	**78.29**	**1.548**	**55.74**	**2.007**	**72.25**
0.00	0.0	Overload	KSI	-36.00	-0.00	-0.00	99.000	3564.00	99.000	3564.00
0.83	0.8	Flexure	KSI	36.00	0.51	0.32	63.487	2285.54	82.298	2962.73
0.83	**0.8**	**Shear**	**KIPS**	**320.44**	**81.73**	**77.49**	**1.576**	**56.74**	**2.043**	**73.55**
0.83	0.8	Overload	KSI	36.00	0.51	0.32	81.477	2933.18	99.000	3564.00
11.00	10.0	Flexure	KSI	36.00	6.11	3.80	4.222	151.98	5.472	197.01
11.00	**10.0**	**Shear**	**KIPS**	**542.44**	**66.74**	**67.90**	**3.832**	**137.95**	**4.967**	**178.82**
11.00	10.0	Overload	KSI	36.00	6.11	3.80	5.687	204.73	7.393	266.15
22.00	**20.0**	**Flexure**	**KSI**	**36.00**	**10.91**	**6.74**	**1.852**	**66.66**	**2.400**	**86.41**
22.00	20.0	Shear	KIPS	542.44	50.54	58.06	4.690	168.84	6.080	218.87
22.00	20.0	Overload	KSI	36.00	10.91	6.74	2.658	95.67	3.455	124.38
25.50	**23.2**	**Flexure**	**KSI**	**36.00**	**12.14**	**7.50**	**1.543**	**55.53**	**2.000**	**71.99**
25.50	23.2	Shear	KIPS	542.44	44.91	55.04	5.023	180.83	6.512	234.41

25.50	23.2	Overload	KSI	36.00	12.14	7.50	2.263	81.46	2.941	105.89
33.00	**30.0**	**Flexure**	**KSI**	**36.00**	**11.21**	**7.14**	**1.716**	**61.78**	**2.225**	**80.09**
33.00	30.0	Shear	KIPS	542.44	33.61	48.76	5.843	210.34	7.574	272.66
33.00	30.0	Overload	KSI	36.00	11.21	7.14	2.477	89.19	3.221	115.94
44.00	**40.0**	**Flexure**	**KSI**	**36.00**	**12.83**	**8.14**	**1.358**	**48.90**	**1.761**	**63.39**
44.00	40.0	Shear	KIPS	542.44	17.04	40.02	7.429	267.43	9.630	346.67
44.00	40.0	Overload	KSI	36.00	12.83	8.14	2.021	72.75	2.627	94.57
49.50	**45.0**	**Flexure**	**KSI**	**36.00**	**13.23**	**8.37**	**1.284**	**46.24**	**1.665**	**59.94**
49.50	45.0	Shear	KIPS	542.44	8.29	35.85	8.474	305.07	10.985	395.46
49.50	45.0	Overload	KSI	36.00	13.23	8.37	1.927	69.36	2.505	90.17
55.00	**50.0**	**Flexure**	**KSI**	**36.00**	**13.36**	**8.44**	**1.263**	**45.46**	**1.637**	**58.93**
55.00	50.0	Shear	KIPS	542.44	0.00	-31.82	9.742	350.70	12.628	454.62
55.00	50.0	Overload	KSI	36.00	13.36	8.44	1.900	68.38	2.469	88.90
66.00	**60.0**	**Flexure**	**KSI**	**36.00**	**12.83**	**8.14**	**1.358**	**48.90**	**1.761**	**63.39**
66.00	60.0	Shear	KIPS	542.44	-17.04	-40.02	7.429	267.43	9.630	346.67
66.00	60.0	Overload	KSI	36.00	12.83	8.14	2.021	72.75	2.627	94.57
77.00	**70.0**	**Flexure**	**KSI**	**36.00**	**11.21**	**7.14**	**1.716**	**61.78**	**2.225**	**80.09**
77.00	70.0	Shear	KIPS	542.44	-33.61	-48.76	5.843	210.34	7.574	272.66
77.00	70.0	Overload	KSI	36.00	11.21	7.14	2.477	89.19	3.221	115.94
84.50	**76.8**	**Flexure**	**KSI**	**36.00**	**12.14**	**7.50**	**1.543**	**55.53**	**2.000**	**71.99**
84.50	76.8	Shear	KIPS	542.44	-44.91	-55.04	5.023	180.83	6.512	234.41
84.50	76.8	Overload	KSI	36.00	12.14	7.50	2.263	81.46	2.941	105.89
88.00	**80.0**	**Flexure**	**KSI**	**36.00**	**10.91**	**6.74**	**1.852**	**66.66**	**2.400**	**86.41**
88.00	80.0	Shear	KIPS	542.44	-50.54	-58.06	4.690	168.84	6.080	218.87
88.00	80.0	Overload	KSI	36.00	10.91	6.74	2.658	95.67	3.455	124.38
99.00	90.0	Flexure	KSI	36.00	6.11	3.80	4.222	151.98	5.472	197.01
99.00	**90.0**	**Shear**	**KIPS**	**542.44**	**-66.74**	**-67.90**	**3.832**	**137.95**	**4.967**	**178.82**
99.00	90.0	Overload	KSI	36.00	6.11	3.80	5.687	204.73	7.393	266.15
110.00	100.0	Flexure	KSI	-36.00	-0.00	-0.00	99.000	3564.00	99.000	3564.00
110.00	**100.0**	**Shear**	**KIPS**	**336.32**	**-82.95**	**-78.29**	**1.664**	**59.91**	**2.157**	**77.66**
110.00	100.0	Overload	KSI	-36.00	-0.00	-0.00	99.000	3564.00	99.000	3564.00

Detailed Rating Results
Girder C - As Inspected
LRFD Fatigue Truck (US)
Axle Load
Impact: As Requested
Lane: As Requested

D450

Span 1

Location (ft)	Percent	Limit State	Units	Capacity	DL + Adj-LL*	LL	Inventory Rating Factor	Inventory Load Rating (Ton)
0.83	0.8	Interaction	KSI	16.00	0.00	0.19	84.770	2543.10
11.00	10.0	Interaction	KSI	12.00	0.00	2.21	5.428	162.85
22.00	20.0	Interaction	KSI	12.00	0.00	3.82	3.142	94.26
25.50	23.2	Interaction	KSI	16.00	0.00	4.28	3.739	112.17
33.00	30.0	Interaction	KSI	12.00	0.00	3.96	3.034	91.02
44.00	40.0	Interaction	KSI	12.00	0.00	4.42	2.714	81.43
49.50	45.0	Interaction	KSI	12.00	0.00	4.47	2.683	80.48
55.00	50.0	Interaction	KSI	12.00	0.00	4.40	2.725	81.74
66.00	60.0	Interaction	KSI	12.00	0.00	4.42	2.714	81.43
77.00	70.0	Interaction	KSI	12.00	0.00	3.96	3.034	91.02
84.50	76.8	Interaction	KSI	16.00	0.00	4.20	3.805	114.16
88.00	80.0	Interaction	KSI	12.00	0.00	3.82	3.142	94.26
99.00	90.0	Interaction	KSI	12.00	0.00	2.21	5.428	162.85

Detailed Rating Results
Girder C - As Inspected
SU4
Axle Load
Impact: As Requested
Lane: As Requested

Span 1

Location (ft)	Percent	Limit State	Units	Capacity	DL + Adj -LL*	LL	Legal Rating Factor	Legal Load Rating (Ton)
0.00	0.0	Flexure	KSI	-36.00	-0.00	-0.00	99.000	2673.00
0.00	0.0	Shear	KIPS	320.44	82.95	47.53	3.433	92.70
0.00	0.0	Overload	KSI	-36.00	-0.00	-0.00	99.000	2673.00
0.83	0.8	Flexure	KSI	-36.00	-0.59	-0.05	99.000	2673.00
0.83	0.8	Shear	KIPS	320.44	81.73	47.15	3.487	94.16
0.83	0.8	Overload	KSI	-36.00	-0.59	-0.05	99.000	2673.00
11.00	10.0	Flexure	KSI	36.00	6.11	2.29	9.414	254.18
11.00	10.0	Shear	KIPS	542.44	66.74	42.48	8.245	222.63

11.00	10.0	Overload	KSI	36.00	6.11	2.29	9.421	254.37
22.00	**20.0**	**Flexure**	**KSI**	**36.00**	**10.91**	**4.04**	**4.158**	**112.28**
22.00	20.0	Shear	KIPS	542.44	50.54	37.43	9.793	264.41
22.00	20.0	Overload	KSI	36.00	10.91	4.04	4.434	119.71
25.50	**23.2**	**Flexure**	**KSI**	**36.00**	**12.14**	**4.48**	**3.474**	**93.79**
25.50	23.2	Shear	KIPS	542.44	44.91	35.82	10.389	280.51
25.50	23.2	Overload	KSI	36.00	12.14	4.48	3.785	102.19
33.00	**30.0**	**Flexure**	**KSI**	**36.00**	**11.21**	**4.24**	**3.890**	**105.03**
33.00	30.0	Shear	KIPS	542.44	33.61	32.38	11.844	319.79
33.00	30.0	Overload	KSI	36.00	11.21	4.24	4.171	112.62
44.00	**40.0**	**Flexure**	**KSI**	**36.00**	**12.83**	**4.84**	**3.073**	**82.98**
44.00	40.0	Shear	KIPS	542.44	17.04	27.33	14.641	395.30
44.00	40.0	Overload	KSI	36.00	12.83	4.84	3.397	91.71
49.50	**45.0**	**Flexure**	**KSI**	**36.00**	**13.23**	**4.98**	**2.907**	**78.48**
49.50	45.0	Shear	KIPS	542.44	8.29	24.81	16.484	445.07
49.50	45.0	Overload	KSI	36.00	13.23	4.98	3.239	87.46
55.00	**50.0**	**Flexure**	**KSI**	**36.00**	**13.36**	**5.01**	**2.863**	**77.29**
55.00	50.0	Shear	KIPS	542.44	0.00	-22.28	18.725	505.57
55.00	50.0	Overload	KSI	36.00	13.36	5.01	3.199	86.38
66.00	**60.0**	**Flexure**	**KSI**	**36.00**	**12.83**	**4.84**	**3.073**	**82.98**
66.00	60.0	Shear	KIPS	542.44	-17.04	-27.33	14.641	395.30
66.00	60.0	Overload	KSI	36.00	12.83	4.84	3.397	91.71
77.00	**70.0**	**Flexure**	**KSI**	**36.00**	**11.21**	**4.24**	**3.890**	**105.03**
77.00	70.0	Shear	KIPS	542.44	-33.61	-32.38	11.844	319.79
77.00	70.0	Overload	KSI	36.00	11.21	4.24	4.171	112.62
84.50	**76.8**	**Flexure**	**KSI**	**36.00**	**12.14**	**4.48**	**3.474**	**93.79**
84.50	76.8	Shear	KIPS	542.44	-44.91	-35.82	10.389	280.51
84.50	76.8	Overload	KSI	36.00	12.14	4.48	3.785	102.19
88.00	**80.0**	**Flexure**	**KSI**	**36.00**	**10.91**	**4.04**	**4.158**	**112.28**
88.00	80.0	Shear	KIPS	542.44	-50.54	-37.43	9.793	264.41
88.00	80.0	Overload	KSI	36.00	10.91	4.04	4.434	119.71
99.00	90.0	Flexure	KSI	36.00	6.11	2.29	9.414	254.18
99.00	**90.0**	**Shear**	**KIPS**	**542.44**	**-66.74**	**-42.48**	**8.245**	**222.63**
99.00	90.0	Overload	KSI	36.00	6.11	2.29	9.421	254.37
110.00	100.0	Flexure	KSI	-36.00	-0.00	-0.00	99.000	2673.00
110.00	**100.0**	**Shear**	**KIPS**	**336.32**	**-82.95**	**-47.53**	**3.691**	**99.64**
110.00	100.0	Overload	KSI	-36.00	-0.00	-0.00	99.000	2673.00

Detailed Rating Results
Girder C - As Inspected
SU5
Axle Load
Impact: As Requested

Lane: As Requested

Span 1

Location (ft)	Percent	Limit State	Units	Capacity	DL + Adj -LL*	LL	Legal Rating Factor	Legal Load Rating (Ton)
0.00	0.0	Flexure	KSI	-36.00	-0.00	-0.00	99.000	3069.00
0.00	**0.0**	**Shear**	**KIPS**	**320.44**	**82.95**	**53.78**	**3.034**	**94.06**
0.00	0.0	Overload	KSI	-36.00	-0.00	-0.00	99.000	3069.00
0.83	0.8	Flexure	KSI	-36.00	-0.59	-0.06	99.000	3069.00
0.83	**0.8**	**Shear**	**KIPS**	**320.44**	**81.73**	**53.34**	**3.082**	**95.54**
0.83	0.8	Overload	KSI	-36.00	-0.59	-0.06	99.000	3069.00
11.00	10.0	Flexure	KSI	36.00	6.11	2.59	8.334	258.34
11.00	**10.0**	**Shear**	**KIPS**	**542.44**	**66.74**	**47.98**	**7.299**	**226.27**
11.00	10.0	Overload	KSI	36.00	6.11	2.59	8.340	258.53
22.00	**20.0**	**Flexure**	**KSI**	**36.00**	**10.91**	**4.56**	**3.689**	**114.37**
22.00	20.0	Shear	KIPS	542.44	50.54	42.19	8.688	269.33
22.00	20.0	Overload	KSI	36.00	10.91	4.56	3.934	121.94
25.50	**23.2**	**Flexure**	**KSI**	**36.00**	**12.14**	**5.05**	**3.084**	**95.62**
25.50	23.2	Shear	KIPS	542.44	44.91	40.34	9.225	285.97
25.50	23.2	Overload	KSI	36.00	12.14	5.05	3.361	104.18
33.00	**30.0**	**Flexure**	**KSI**	**36.00**	**11.21**	**4.79**	**3.444**	**106.76**
33.00	30.0	Shear	KIPS	542.44	33.61	36.39	10.539	326.69
33.00	30.0	Overload	KSI	36.00	11.21	4.79	3.693	114.48
44.00	**40.0**	**Flexure**	**KSI**	**36.00**	**12.83**	**5.46**	**2.726**	**84.50**
44.00	40.0	Shear	KIPS	542.44	17.04	30.60	13.079	405.45
44.00	40.0	Overload	KSI	36.00	12.83	5.46	3.012	93.38
49.50	**45.0**	**Flexure**	**KSI**	**36.00**	**13.23**	**5.60**	**2.585**	**80.12**
49.50	45.0	Shear	KIPS	542.44	8.29	27.70	14.764	457.69
49.50	45.0	Overload	KSI	36.00	13.23	5.60	2.880	89.28
55.00	**50.0**	**Flexure**	**KSI**	**36.00**	**13.36**	**5.62**	**2.553**	**79.13**
55.00	50.0	Shear	KIPS	542.44	0.00	-24.80	16.825	521.58
55.00	50.0	Overload	KSI	36.00	13.36	5.62	2.853	88.44
66.00	**60.0**	**Flexure**	**KSI**	**36.00**	**12.83**	**5.46**	**2.726**	**84.50**
66.00	60.0	Shear	KIPS	542.44	-17.04	-30.60	13.079	405.45
66.00	60.0	Overload	KSI	36.00	12.83	5.46	3.012	93.38
77.00	**70.0**	**Flexure**	**KSI**	**36.00**	**11.21**	**4.79**	**3.444**	**106.76**
77.00	70.0	Shear	KIPS	542.44	-33.61	-36.39	10.539	326.69
77.00	70.0	Overload	KSI	36.00	11.21	4.79	3.693	114.48
84.50	**76.8**	**Flexure**	**KSI**	**36.00**	**12.14**	**5.05**	**3.084**	**95.62**
84.50	76.8	Shear	KIPS	542.44	-44.91	-40.34	9.225	285.97

84.50	76.8	Overload	KSI	36.00	12.14	5.05	3.361	104.18
88.00	**80.0**	**Flexure**	**KSI**	**36.00**	**10.91**	**4.56**	**3.689**	**114.37**
88.00	80.0	Shear	KIPS	542.44	-50.54	-42.19	8.688	269.33
88.00	80.0	Overload	KSI	36.00	10.91	4.56	3.934	121.94
99.00	90.0	Flexure	KSI	36.00	6.11	2.59	8.334	258.34
99.00	**90.0**	**Shear**	**KIPS**	**542.44**	**-66.74**	**-47.98**	**7.299**	**226.27**
99.00	90.0	Overload	KSI	36.00	6.11	2.59	8.340	258.53
110.00	100.0	Flexure	KSI	-36.00	-0.00	-0.00	99.000	3069.00
110.00	**100.0**	**Shear**	**KIPS**	**336.32**	**-82.95**	**-53.78**	**3.261**	**101.10**
110.00	100.0	Overload	KSI	-36.00	-0.00	-0.00	99.000	3069.00

Detailed Rating Results
Girder C - As Inspected
SU6
Axle Load
Impact: As Requested
Lane: As Requested

Span 1

Location (ft)	Percent	Limit State	Units	Capacity	DL + Adj -LL*	LL	Legal Rating Factor	Legal Load Rating (Ton)
0.00	0.0	Flexure	KSI	-36.00	-0.00	-0.00	99.000	3440.25
0.00	**0.0**	**Shear**	**KIPS**	**320.44**	**82.95**	**58.80**	**2.775**	**96.44**
0.00	0.0	Overload	KSI	-36.00	-0.00	-0.00	99.000	3440.25
0.83	0.8	Flexure	KSI	-36.00	-0.59	-0.07	99.000	3440.25
0.83	**0.8**	**Shear**	**KIPS**	**320.44**	**81.73**	**58.31**	**2.820**	**97.99**
0.83	0.8	Overload	KSI	-36.00	-0.59	-0.07	99.000	3440.25
11.00	10.0	Flexure	KSI	36.00	6.11	2.82	7.646	265.71
11.00	**10.0**	**Shear**	**KIPS**	**542.44**	**66.74**	**52.30**	**6.697**	**232.72**
11.00	10.0	Overload	KSI	36.00	6.11	2.82	7.652	265.91
22.00	**20.0**	**Flexure**	**KSI**	**36.00**	**10.91**	**5.05**	**3.326**	**115.56**
22.00	20.0	Shear	KIPS	542.44	50.54	45.80	8.003	278.10
22.00	20.0	Overload	KSI	36.00	10.91	5.05	3.546	123.21
25.50	**23.2**	**Flexure**	**KSI**	**36.00**	**12.14**	**5.62**	**2.770**	**96.26**
25.50	23.2	Shear	KIPS	542.44	44.91	43.73	8.510	295.72
25.50	23.2	Overload	KSI	36.00	12.14	5.62	3.018	104.88
33.00	**30.0**	**Flexure**	**KSI**	**36.00**	**11.21**	**5.34**	**3.090**	**107.39**
33.00	30.0	Shear	KIPS	542.44	33.61	39.30	9.758	339.09
33.00	30.0	Overload	KSI	36.00	11.21	5.34	3.314	115.15
44.00	**40.0**	**Flexure**	**KSI**	**36.00**	**12.83**	**6.06**	**2.454**	**85.26**

44.00	40.0	Shear	KIPS	542.44	17.04	32.81	12.198	423.88
44.00	40.0	Overload	KSI	36.00	12.83	6.06	2.712	94.23
49.50	**45.0**	**Flexure**	**KSI**	**36.00**	**13.23**	**6.24**	**2.319**	**80.58**
49.50	45.0	Shear	KIPS	542.44	8.29	29.56	13.836	480.79
49.50	45.0	Overload	KSI	36.00	13.23	6.24	2.584	89.80
55.00	**50.0**	**Flexure**	**KSI**	**36.00**	**13.36**	**6.28**	**2.283**	**79.35**
55.00	50.0	Shear	KIPS	542.44	0.00	-26.31	15.860	551.15
55.00	50.0	Overload	KSI	36.00	13.36	6.28	2.552	88.67
66.00	**60.0**	**Flexure**	**KSI**	**36.00**	**12.83**	**6.06**	**2.454**	**85.26**
66.00	60.0	Shear	KIPS	542.44	-17.04	-32.81	12.198	423.88
66.00	60.0	Overload	KSI	36.00	12.83	6.06	2.712	94.23
77.00	**70.0**	**Flexure**	**KSI**	**36.00**	**11.21**	**5.34**	**3.090**	**107.39**
77.00	70.0	Shear	KIPS	542.44	-33.61	-39.30	9.758	339.09
77.00	70.0	Overload	KSI	36.00	11.21	5.34	3.314	115.15
84.50	**76.8**	**Flexure**	**KSI**	**36.00**	**12.14**	**5.62**	**2.770**	**96.26**
84.50	76.8	Shear	KIPS	542.44	-44.91	-43.73	8.510	295.72
84.50	76.8	Overload	KSI	36.00	12.14	5.62	3.018	104.88
88.00	**80.0**	**Flexure**	**KSI**	**36.00**	**10.91**	**5.05**	**3.326**	**115.56**
88.00	80.0	Shear	KIPS	542.44	-50.54	-45.80	8.003	278.10
88.00	80.0	Overload	KSI	36.00	10.91	5.05	3.546	123.21
99.00	90.0	Flexure	KSI	36.00	6.11	2.82	7.646	265.71
99.00	**90.0**	**Shear**	**KIPS**	**542.44**	**-66.74**	**-52.30**	**6.697**	**232.72**
99.00	90.0	Overload	KSI	36.00	6.11	2.82	7.652	265.91
110.00	100.0	Flexure	KSI	-36.00	-0.00	-0.00	99.000	3440.25
110.00	**100.0**	**Shear**	**KIPS**	**336.32**	**-82.95**	**-58.80**	**2.983**	**103.67**
110.00	100.0	Overload	KSI	-36.00	-0.00	-0.00	99.000	3440.25

Detailed Rating Results
Girder C - As Inspected
SU7
Axle Load
Impact: As Requested
Lane: As Requested

Span 1

Location (ft)	Percent	Limit State	Units	Capacity	DL + Adj -LL*	LL	Legal Rating Factor	Legal Load Rating (Ton)
0.00	0.0	Flexure	KSI	-36.00	-0.00	-0.00	99.000	3836.25
0.00	**0.0**	**Shear**	**KIPS**	**320.44**	**82.95**	**63.91**	**2.553**	**98.93**
0.00	0.0	Overload	KSI	-36.00	-0.00	-0.00	99.000	3836.25

0.83	0.8	Flexure	KSI	-36.00	-0.59	-0.07	99.000	3836.25
0.83	**0.8**	**Shear**	**KIPS**	**320.44**	**81.73**	**63.37**	**2.595**	**100.54**
0.83	0.8	Overload	KSI	-36.00	-0.59	-0.07	99.000	3836.25
11.00	10.0	Flexure	KSI	36.00	6.11	3.06	7.057	273.45
11.00	**10.0**	**Shear**	**KIPS**	**542.44**	**66.74**	**56.67**	**6.181**	**239.51**
11.00	10.0	Overload	KSI	36.00	6.11	3.06	7.062	273.65
22.00	**20.0**	**Flexure**	**KSI**	**36.00**	**10.91**	**5.47**	**3.070**	**118.97**
22.00	20.0	Shear	KIPS	542.44	50.54	49.42	7.417	287.39
22.00	20.0	Overload	KSI	36.00	10.91	5.47	3.273	126.85
25.50	**23.2**	**Flexure**	**KSI**	**36.00**	**12.14**	**6.12**	**2.547**	**98.68**
25.50	23.2	Shear	KIPS	542.44	44.91	47.12	7.899	306.09
25.50	23.2	Overload	KSI	36.00	12.14	6.12	2.775	107.52
33.00	**30.0**	**Flexure**	**KSI**	**36.00**	**11.21**	**5.86**	**2.816**	**109.13**
33.00	30.0	Shear	KIPS	542.44	33.61	42.18	9.093	352.37
33.00	30.0	Overload	KSI	36.00	11.21	5.86	3.020	117.02
44.00	**40.0**	**Flexure**	**KSI**	**36.00**	**12.83**	**6.66**	**2.233**	**86.52**
44.00	40.0	Shear	KIPS	542.44	17.04	34.93	11.456	443.92
44.00	40.0	Overload	KSI	36.00	12.83	6.66	2.468	95.62
49.50	**45.0**	**Flexure**	**KSI**	**36.00**	**13.23**	**6.86**	**2.112**	**81.83**
49.50	45.0	Shear	KIPS	542.44	8.29	31.31	13.062	506.15
49.50	45.0	Overload	KSI	36.00	13.23	6.86	2.353	91.19
55.00	**50.0**	**Flexure**	**KSI**	**36.00**	**13.36**	**6.92**	**2.073**	**80.32**
55.00	50.0	Shear	KIPS	542.44	0.00	-27.69	15.072	584.03
55.00	50.0	Overload	KSI	36.00	13.36	6.92	2.317	89.76
66.00	**60.0**	**Flexure**	**KSI**	**36.00**	**12.83**	**6.66**	**2.233**	**86.52**
66.00	60.0	Shear	KIPS	542.44	-17.04	-34.93	11.456	443.92
66.00	60.0	Overload	KSI	36.00	12.83	6.66	2.468	95.62
77.00	**70.0**	**Flexure**	**KSI**	**36.00**	**11.21**	**5.86**	**2.816**	**109.13**
77.00	70.0	Shear	KIPS	542.44	-33.61	-42.18	9.093	352.37
77.00	70.0	Overload	KSI	36.00	11.21	5.86	3.020	117.02
84.50	**76.8**	**Flexure**	**KSI**	**36.00**	**12.14**	**6.12**	**2.547**	**98.68**
84.50	76.8	Shear	KIPS	542.44	-44.91	-47.12	7.899	306.09
84.50	76.8	Overload	KSI	36.00	12.14	6.12	2.775	107.52
88.00	**80.0**	**Flexure**	**KSI**	**36.00**	**10.91**	**5.47**	**3.070**	**118.97**
88.00	80.0	Shear	KIPS	542.44	-50.54	-49.42	7.417	287.39
88.00	80.0	Overload	KSI	36.00	10.91	5.47	3.273	126.85
99.00	90.0	Flexure	KSI	36.00	6.11	3.06	7.057	273.45
99.00	**90.0**	**Shear**	**KIPS**	**542.44**	**-66.74**	**-56.67**	**6.181**	**239.51**
99.00	90.0	Overload	KSI	36.00	6.11	3.06	7.062	273.65
110.00	100.0	Flexure	KSI	-36.00	-0.00	-0.00	99.000	3836.25
110.00	**100.0**	**Shear**	**KIPS**	**336.32**	**-82.95**	**-63.91**	**2.744**	**106.34**
110.00	100.0	Overload	KSI	-36.00	-0.00	-0.00	99.000	3836.25

Detailed Rating Results
Girder C - As Inspected
Type 3
Axle Load
Impact: As Requested
Lane: As Requested

Span 1

Location (ft)	Percent	Limit State	Units	Capacity	DL + Adj -LL*	LL	Legal Rating Factor	Legal Load Rating (Ton)
0.00	0.0	Flexure	KSI	-36.00	-0.00	-0.00	99.000	2475.00
0.00	**0.0**	**Shear**	**KIPS**	**320.44**	**82.95**	**43.58**	**3.744**	**93.60**
0.00	0.0	Overload	KSI	-36.00	-0.00	-0.00	99.000	2475.00
0.83	0.8	Flexure	KSI	-36.00	-0.59	-0.05	99.000	2475.00
0.83	**0.8**	**Shear**	**KIPS**	**320.44**	**81.73**	**43.23**	**3.803**	**95.08**
0.83	0.8	Overload	KSI	-36.00	-0.59	-0.05	99.000	2475.00
11.00	10.0	Flexure	KSI	36.00	6.11	2.10	10.278	256.94
11.00	**10.0**	**Shear**	**KIPS**	**542.44**	**66.74**	**38.91**	**9.002**	**225.05**
11.00	10.0	Overload	KSI	36.00	6.11	2.10	10.285	257.13
22.00	**20.0**	**Flexure**	**KSI**	**36.00**	**10.91**	**3.70**	**4.547**	**113.67**
22.00	20.0	Shear	KIPS	542.44	50.54	34.23	10.707	267.67
22.00	20.0	Overload	KSI	36.00	10.91	3.70	4.848	121.19
25.50	**23.2**	**Flexure**	**KSI**	**36.00**	**12.14**	**4.10**	**3.800**	**95.00**
25.50	23.2	Shear	KIPS	542.44	44.91	32.75	11.365	284.13
25.50	23.2	Overload	KSI	36.00	12.14	4.10	4.140	103.51
33.00	**30.0**	**Flexure**	**KSI**	**36.00**	**11.21**	**3.87**	**4.261**	**106.53**
33.00	30.0	Shear	KIPS	542.44	33.61	29.56	12.975	324.37
33.00	30.0	Overload	KSI	36.00	11.21	3.87	4.569	114.24
44.00	**40.0**	**Flexure**	**KSI**	**36.00**	**12.83**	**4.39**	**3.389**	**84.73**
44.00	40.0	Shear	KIPS	542.44	17.04	24.88	16.081	402.02
44.00	40.0	Overload	KSI	36.00	12.83	4.39	3.746	93.64
49.50	**45.0**	**Flexure**	**KSI**	**36.00**	**13.23**	**4.51**	**3.210**	**80.25**
49.50	45.0	Shear	KIPS	542.44	8.29	22.55	18.137	453.42
49.50	45.0	Overload	KSI	36.00	13.23	4.51	3.577	89.43
55.00	**50.0**	**Flexure**	**KSI**	**36.00**	**13.36**	**4.53**	**3.167**	**79.18**
55.00	50.0	Shear	KIPS	542.44	0.00	-20.21	20.646	516.15
55.00	50.0	Overload	KSI	36.00	13.36	4.53	3.540	88.49
66.00	**60.0**	**Flexure**	**KSI**	**36.00**	**12.83**	**4.39**	**3.389**	**84.73**
66.00	60.0	Shear	KIPS	542.44	-17.04	-24.88	16.081	402.02

66.00	60.0	Overload	KSI	36.00	12.83	4.39	3.746	93.64
77.00	**70.0**	**Flexure**	**KSI**	**36.00**	**11.21**	**3.87**	**4.261**	**106.53**
77.00	70.0	Shear	KIPS	542.44	-33.61	-29.56	12.975	324.37
77.00	70.0	Overload	KSI	36.00	11.21	3.87	4.569	114.24
84.50	**76.8**	**Flexure**	**KSI**	**36.00**	**12.14**	**4.10**	**3.800**	**95.00**
84.50	76.8	Shear	KIPS	542.44	-44.91	-32.75	11.365	284.13
84.50	76.8	Overload	KSI	36.00	12.14	4.10	4.140	103.51
88.00	**80.0**	**Flexure**	**KSI**	**36.00**	**10.91**	**3.70**	**4.547**	**113.67**
88.00	80.0	Shear	KIPS	542.44	-50.54	-34.23	10.707	267.67
88.00	80.0	Overload	KSI	36.00	10.91	3.70	4.848	121.19
99.00	90.0	Flexure	KSI	36.00	6.11	2.10	10.278	256.94
99.00	**90.0**	**Shear**	**KIPS**	**542.44**	**-66.74**	**-38.91**	**9.002**	**225.05**
99.00	90.0	Overload	KSI	36.00	6.11	2.10	10.285	257.13
110.00	100.0	Flexure	KSI	-36.00	-0.00	-0.00	99.000	2475.00
110.00	**100.0**	**Shear**	**KIPS**	**336.32**	**-82.95**	**-43.58**	**4.024**	**100.61**
110.00	100.0	Overload	KSI	-36.00	-0.00	-0.00	99.000	2475.00

Detailed Rating Results
Girder C - As Inspected
Type 3-3
Axle Load
Impact: As Requested
Lane: As Requested

Span 1

Location (ft)	Percent	Limit State	Units	Capacity	DL + Adj -LL*	LL	Legal Rating Factor	Legal Load Rating (Ton)
0.00	0.0	Flexure	KSI	-36.00	-0.00	-0.00	99.000	3960.00
0.00	**0.0**	**Shear**	**KIPS**	**320.44**	**82.95**	**58.54**	**2.787**	**111.50**
0.00	0.0	Overload	KSI	-36.00	-0.00	-0.00	99.000	3960.00
0.83	0.8	Flexure	KSI	-36.00	-0.59	-0.07	99.000	3960.00
0.83	**0.8**	**Shear**	**KIPS**	**320.44**	**81.73**	**57.98**	**2.836**	**113.43**
0.83	0.8	Overload	KSI	-36.00	-0.59	-0.07	99.000	3960.00
11.00	10.0	Flexure	KSI	36.00	6.11	2.76	7.831	313.26
11.00	**10.0**	**Shear**	**KIPS**	**542.44**	**66.74**	**51.06**	**6.859**	**274.37**
11.00	10.0	Overload	KSI	36.00	6.11	2.76	7.837	313.49
22.00	**20.0**	**Flexure**	**KSI**	**36.00**	**10.91**	**4.74**	**3.544**	**141.75**
22.00	20.0	Shear	KIPS	542.44	50.54	43.58	8.410	336.41
22.00	20.0	Overload	KSI	36.00	10.91	4.74	3.778	151.13
25.50	**23.2**	**Flexure**	**KSI**	**36.00**	**12.14**	**5.24**	**2.972**	**118.88**

25.50	23.2	Shear	KIPS	542.44	44.91	41.20	9.033	361.31
25.50	23.2	Overload	KSI	36.00	12.14	5.24	3.238	129.53
33.00	**30.0**	**Flexure**	**KSI**	**36.00**	**11.21**	**4.88**	**3.383**	**135.31**
33.00	30.0	Shear	KIPS	542.44	33.61	36.10	10.623	424.92
33.00	30.0	Overload	KSI	36.00	11.21	4.88	3.627	145.09
44.00	**40.0**	**Flexure**	**KSI**	**36.00**	**12.83**	**5.50**	**2.704**	**108.14**
44.00	40.0	Shear	KIPS	542.44	17.04	28.62	13.980	559.20
44.00	40.0	Overload	KSI	36.00	12.83	5.50	2.988	119.52
49.50	**45.0**	**Flexure**	**KSI**	**36.00**	**13.23**	**5.69**	**2.545**	**101.80**
49.50	45.0	Shear	KIPS	542.44	8.29	24.88	16.433	657.33
49.50	45.0	Overload	KSI	36.00	13.23	5.69	2.836	113.44
55.00	**50.0**	**Flexure**	**KSI**	**36.00**	**13.36**	**5.71**	**2.511**	**100.45**
55.00	50.0	Shear	KIPS	542.44	0.00	-21.15	19.733	789.33
55.00	50.0	Overload	KSI	36.00	13.36	5.71	2.807	112.26
66.00	**60.0**	**Flexure**	**KSI**	**36.00**	**12.83**	**5.50**	**2.704**	**108.14**
66.00	60.0	Shear	KIPS	542.44	-17.04	-28.62	13.980	559.20
66.00	60.0	Overload	KSI	36.00	12.83	5.50	2.988	119.52
77.00	**70.0**	**Flexure**	**KSI**	**36.00**	**11.21**	**4.88**	**3.383**	**135.31**
77.00	70.0	Shear	KIPS	542.44	-33.61	-36.10	10.623	424.92
77.00	70.0	Overload	KSI	36.00	11.21	4.88	3.627	145.09
84.50	**76.8**	**Flexure**	**KSI**	**36.00**	**12.14**	**5.24**	**2.972**	**118.88**
84.50	76.8	Shear	KIPS	542.44	-44.91	-41.20	9.033	361.31
84.50	76.8	Overload	KSI	36.00	12.14	5.24	3.238	129.53
88.00	**80.0**	**Flexure**	**KSI**	**36.00**	**10.91**	**4.74**	**3.544**	**141.75**
88.00	80.0	Shear	KIPS	542.44	-50.54	-43.58	8.410	336.41
88.00	80.0	Overload	KSI	36.00	10.91	4.74	3.778	151.13
99.00	90.0	Flexure	KSI	36.00	6.11	2.76	7.831	313.26
99.00	**90.0**	**Shear**	**KIPS**	**542.44**	**-66.74**	**-51.06**	**6.859**	**274.37**
99.00	90.0	Overload	KSI	36.00	6.11	2.76	7.837	313.49
110.00	100.0	Flexure	KSI	-36.00	-0.00	-0.00	99.000	3960.00
110.00	**100.0**	**Shear**	**KIPS**	**336.32**	**-82.95**	**-58.54**	**2.996**	**119.85**
110.00	100.0	Overload	KSI	-36.00	-0.00	-0.00	99.000	3960.00

Detailed Rating Results
Girder C - As Inspected
Type 3S2
Axle Load
Impact: As Requested
Lane: As Requested

Span 1

Location							**Legal Rating**	**Legal**

(ft)	Percent	Limit State	Units	Capacity	DL + Adj -LL*	LL	Factor	Load Rating (Ton)
0.00	0.0	Flexure	KSI	-36.00	-0.00	-0.00	99.000	3564.00
0.00	**0.0**	**Shear**	**KIPS**	**320.44**	**82.95**	**55.92**	**2.918**	**105.04**
0.00	0.0	Overload	KSI	-36.00	-0.00	-0.00	99.000	3564.00
0.83	0.8	Flexure	KSI	-36.00	-0.59	-0.06	99.000	3564.00
0.83	**0.8**	**Shear**	**KIPS**	**320.44**	**81.73**	**55.42**	**2.967**	**106.81**
0.83	0.8	Overload	KSI	-36.00	-0.59	-0.06	99.000	3564.00
11.00	10.0	Flexure	KSI	36.00	6.11	2.66	8.129	292.65
11.00	**10.0**	**Shear**	**KIPS**	**542.44**	**66.74**	**49.19**	**7.120**	**256.32**
11.00	10.0	Overload	KSI	36.00	6.11	2.66	8.135	292.87
22.00	**20.0**	**Flexure**	**KSI**	**36.00**	**10.91**	**4.58**	**3.666**	**131.96**
22.00	20.0	Shear	KIPS	542.44	50.54	42.46	8.632	310.77
22.00	20.0	Overload	KSI	36.00	10.91	4.58	3.908	140.70
25.50	**23.2**	**Flexure**	**KSI**	**36.00**	**12.14**	**5.09**	**3.057**	**110.05**
25.50	23.2	Shear	KIPS	542.44	44.91	40.32	9.231	332.31
25.50	23.2	Overload	KSI	36.00	12.14	5.09	3.331	119.91
33.00	**30.0**	**Flexure**	**KSI**	**36.00**	**11.21**	**4.85**	**3.401**	**122.45**
33.00	30.0	Shear	KIPS	542.44	33.61	35.73	10.734	386.43
33.00	30.0	Overload	KSI	36.00	11.21	4.85	3.647	131.30
44.00	**40.0**	**Flexure**	**KSI**	**36.00**	**12.83**	**5.48**	**2.717**	**97.80**
44.00	40.0	Shear	KIPS	542.44	17.04	29.00	13.800	496.79
44.00	40.0	Overload	KSI	36.00	12.83	5.48	3.003	108.09
49.50	**45.0**	**Flexure**	**KSI**	**36.00**	**13.23**	**5.60**	**2.587**	**93.13**
49.50	45.0	Shear	KIPS	542.44	8.29	25.63	15.954	574.34
49.50	45.0	Overload	KSI	36.00	13.23	5.60	2.883	103.78
55.00	**50.0**	**Flexure**	**KSI**	**36.00**	**13.36**	**5.57**	**2.575**	**92.69**
55.00	50.0	Shear	KIPS	542.44	0.00	-22.27	18.739	674.60
55.00	50.0	Overload	KSI	36.00	13.36	5.57	2.878	103.59
66.00	**60.0**	**Flexure**	**KSI**	**36.00**	**12.83**	**5.48**	**2.717**	**97.80**
66.00	60.0	Shear	KIPS	542.44	-17.04	-29.00	13.800	496.79
66.00	60.0	Overload	KSI	36.00	12.83	5.48	3.003	108.09
77.00	**70.0**	**Flexure**	**KSI**	**36.00**	**11.21**	**4.85**	**3.401**	**122.45**
77.00	70.0	Shear	KIPS	542.44	-33.61	-35.73	10.734	386.43
77.00	70.0	Overload	KSI	36.00	11.21	4.85	3.647	131.30
84.50	**76.8**	**Flexure**	**KSI**	**36.00**	**12.14**	**5.09**	**3.057**	**110.05**
84.50	76.8	Shear	KIPS	542.44	-44.91	-40.32	9.231	332.31
84.50	76.8	Overload	KSI	36.00	12.14	5.09	3.331	119.91
88.00	**80.0**	**Flexure**	**KSI**	**36.00**	**10.91**	**4.58**	**3.666**	**131.96**
88.00	80.0	Shear	KIPS	542.44	-50.54	-42.46	8.632	310.77
88.00	80.0	Overload	KSI	36.00	10.91	4.58	3.908	140.70

99.00	90.0	Flexure	KSI	36.00	6.11	2.66	8.129	292.65
99.00	**90.0**	**Shear**	**KIPS**	**542.44**	**-66.74**	**-49.19**	**7.120**	**256.32**
99.00	90.0	Overload	KSI	36.00	6.11	2.66	8.135	292.87
110.00	100.0	Flexure	KSI	-36.00	-0.00	-0.00	99.000	3564.00
110.00	**100.0**	**Shear**	**KIPS**	**336.32**	**-82.95**	**-55.92**	**3.136**	**112.91**
110.00	100.0	Overload	KSI	-36.00	-0.00	-0.00	99.000	3564.00

Detailed Rating Results
Girder C - As Inspected
RI-3
Axle Load
Impact: As Requested
Lane: As Requested

Span 1

Location (ft)	Percent	Limit State	Units	Capacity	DL + Adj -LL*	LL	Permit Rating Factor	Permit Load Rating (Ton)
0.00	0.0	Flexure	KSI	-36.00	-0.00	-0.00	99.000	3762.00
0.00	**0.0**	**Shear**	**KIPS**	**320.44**	**82.95**	**67.25**	**2.666**	**101.32**
0.00	0.0	Overload	KSI	-36.00	-0.00	-0.00	99.000	3762.00
0.83	0.8	Flexure	KSI	-36.00	-0.59	-0.08	99.000	3762.00
0.83	**0.8**	**Shear**	**KIPS**	**320.44**	**81.73**	**66.71**	**2.708**	**102.90**
0.83	0.8	Overload	KSI	-36.00	-0.59	-0.08	99.000	3762.00
11.00	10.0	Flexure	KSI	36.00	6.11	3.25	7.306	277.62
11.00	**10.0**	**Shear**	**KIPS**	**542.44**	**66.74**	**60.14**	**6.399**	**243.16**
11.00	10.0	Overload	KSI	36.00	6.11	3.25	8.650	328.72
22.00	**20.0**	**Flexure**	**KSI**	**36.00**	**10.91**	**5.73**	**3.225**	**122.54**
22.00	20.0	Shear	KIPS	542.44	50.54	53.03	7.594	288.56
22.00	20.0	Overload	KSI	36.00	10.91	5.73	4.068	154.58
25.50	**23.2**	**Flexure**	**KSI**	**36.00**	**12.14**	**6.35**	**2.693**	**102.33**
25.50	23.2	Shear	KIPS	542.44	44.91	50.77	8.054	306.04
25.50	23.2	Overload	KSI	36.00	12.14	6.35	3.471	131.92
33.00	**30.0**	**Flexure**	**KSI**	**36.00**	**11.21**	**6.01**	**3.013**	**114.50**
33.00	30.0	Shear	KIPS	542.44	33.61	45.93	9.175	348.64
33.00	30.0	Overload	KSI	36.00	11.21	6.01	3.823	145.27
44.00	**40.0**	**Flexure**	**KSI**	**36.00**	**12.83**	**6.80**	**2.403**	**91.31**
44.00	40.0	Shear	KIPS	542.44	17.04	38.82	11.325	430.34
44.00	40.0	Overload	KSI	36.00	12.83	6.80	3.142	119.39
49.50	**45.0**	**Flexure**	**KSI**	**36.00**	**13.23**	**7.02**	**2.267**	**86.16**
49.50	45.0	Shear	KIPS	542.44	8.29	35.27	12.739	484.07

49.50	45.0	Overload	KSI	36.00	13.23	7.02	2.989	113.60
55.00	**50.0**	**Flexure**	**KSI**	**36.00**	**13.36**	**7.08**	**2.228**	**84.66**
55.00	50.0	Shear	KIPS	542.44	0.00	-31.72	14.454	549.24
55.00	50.0	Overload	KSI	36.00	13.36	7.08	2.946	111.94
66.00	**60.0**	**Flexure**	**KSI**	**36.00**	**12.83**	**6.80**	**2.403**	**91.31**
66.00	60.0	Shear	KIPS	542.44	-17.04	-38.82	11.325	430.34
66.00	60.0	Overload	KSI	36.00	12.83	6.80	3.142	119.39
77.00	**70.0**	**Flexure**	**KSI**	**36.00**	**11.21**	**6.01**	**3.013**	**114.50**
77.00	70.0	Shear	KIPS	542.44	-33.61	-45.93	9.175	348.64
77.00	70.0	Overload	KSI	36.00	11.21	6.01	3.823	145.27
84.50	**76.8**	**Flexure**	**KSI**	**36.00**	**12.14**	**6.35**	**2.693**	**102.33**
84.50	76.8	Shear	KIPS	542.44	-44.91	-50.77	8.054	306.04
84.50	76.8	Overload	KSI	36.00	12.14	6.35	3.471	131.92
88.00	**80.0**	**Flexure**	**KSI**	**36.00**	**10.91**	**5.73**	**3.225**	**122.54**
88.00	80.0	Shear	KIPS	542.44	-50.54	-53.03	7.594	288.56
88.00	80.0	Overload	KSI	36.00	10.91	5.73	4.068	154.58
99.00	90.0	Flexure	KSI	36.00	6.11	3.25	7.306	277.62
99.00	**90.0**	**Shear**	**KIPS**	**542.44**	**-66.74**	**-60.14**	**6.399**	**243.16**
99.00	90.0	Overload	KSI	36.00	6.11	3.25	8.650	328.72
110.00	100.0	Flexure	KSI	-36.00	-0.00	-0.00	99.000	3762.00
110.00	**100.0**	**Shear**	**KIPS**	**336.32**	**-82.95**	**-67.25**	**2.866**	**108.90**
110.00	100.0	Overload	KSI	-36.00	-0.00	-0.00	99.000	3762.00

Detailed Rating Results
Girder C - As Inspected
RI-4
Axle Load
Impact: As Requested
Lane: As Requested

Span 1

Location (ft)	Percent	Limit State	Units	Capacity	DL + Adj -LL*	LL	Permit Rating Factor	Permit Load Rating (Ton)
0.00	0.0	Flexure	KSI	-36.00	-0.00	-0.00	99.000	3712.50
0.00	**0.0**	**Shear**	**KIPS**	**320.44**	**82.95**	**65.38**	**2.742**	**102.84**
0.00	0.0	Overload	KSI	-36.00	-0.00	-0.00	99.000	3712.50
0.83	0.8	Flexure	KSI	-36.00	-0.59	-0.07	99.000	3712.50
0.83	**0.8**	**Shear**	**KIPS**	**320.44**	**81.73**	**64.85**	**2.786**	**104.46**
0.83	0.8	Overload	KSI	-36.00	-0.59	-0.07	99.000	3712.50
11.00	10.0	Flexure	KSI	36.00	6.11	3.15	7.528	282.29

11.00	**10.0**	**Shear**	**KIPS**	**542.44**	**66.74**	**58.37**	**6.593**	**247.25**
11.00	10.0	Overload	KSI	36.00	6.11	3.15	8.913	334.24
22.00	**20.0**	**Flexure**	**KSI**	**36.00**	**10.91**	**5.55**	**3.330**	**124.88**
22.00	20.0	Shear	KIPS	542.44	50.54	51.36	7.842	294.08
22.00	20.0	Overload	KSI	36.00	10.91	5.55	4.201	157.53
25.50	**23.2**	**Flexure**	**KSI**	**36.00**	**12.14**	**6.15**	**2.783**	**104.37**
25.50	23.2	Shear	KIPS	542.44	44.91	49.12	8.324	312.16
25.50	23.2	Overload	KSI	36.00	12.14	6.15	3.588	134.55
33.00	**30.0**	**Flexure**	**KSI**	**36.00**	**11.21**	**5.85**	**3.097**	**116.15**
33.00	30.0	Shear	KIPS	542.44	33.61	44.34	9.503	356.36
33.00	30.0	Overload	KSI	36.00	11.21	5.85	3.930	147.36
44.00	**40.0**	**Flexure**	**KSI**	**36.00**	**12.83**	**6.68**	**2.445**	**91.68**
44.00	40.0	Shear	KIPS	542.44	17.04	37.33	11.777	441.65
44.00	40.0	Overload	KSI	36.00	12.83	6.68	3.197	119.89
49.50	**45.0**	**Flexure**	**KSI**	**36.00**	**13.23**	**6.87**	**2.315**	**86.80**
49.50	45.0	Shear	KIPS	542.44	8.29	33.83	13.283	498.11
49.50	45.0	Overload	KSI	36.00	13.23	6.87	3.052	114.45
55.00	**50.0**	**Flexure**	**KSI**	**36.00**	**13.36**	**6.91**	**2.282**	**85.58**
55.00	50.0	Shear	KIPS	542.44	0.00	-30.32	15.120	567.02
55.00	50.0	Overload	KSI	36.00	13.36	6.91	3.017	113.15
66.00	**60.0**	**Flexure**	**KSI**	**36.00**	**12.83**	**6.68**	**2.445**	**91.68**
66.00	60.0	Shear	KIPS	542.44	-17.04	-37.33	11.777	441.65
66.00	60.0	Overload	KSI	36.00	12.83	6.68	3.197	119.89
77.00	**70.0**	**Flexure**	**KSI**	**36.00**	**11.21**	**5.85**	**3.097**	**116.15**
77.00	70.0	Shear	KIPS	542.44	-33.61	-44.34	9.503	356.36
77.00	70.0	Overload	KSI	36.00	11.21	5.85	3.930	147.36
84.50	**76.8**	**Flexure**	**KSI**	**36.00**	**12.14**	**6.15**	**2.783**	**104.37**
84.50	76.8	Shear	KIPS	542.44	-44.91	-49.12	8.324	312.16
84.50	76.8	Overload	KSI	36.00	12.14	6.15	3.588	134.55
88.00	**80.0**	**Flexure**	**KSI**	**36.00**	**10.91**	**5.55**	**3.330**	**124.88**
88.00	80.0	Shear	KIPS	542.44	-50.54	-51.36	7.842	294.08
88.00	80.0	Overload	KSI	36.00	10.91	5.55	4.201	157.53
99.00	90.0	Flexure	KSI	36.00	6.11	3.15	7.528	282.29
99.00	**90.0**	**Shear**	**KIPS**	**542.44**	**-66.74**	**-58.37**	**6.593**	**247.25**
99.00	90.0	Overload	KSI	36.00	6.11	3.15	8.913	334.24
110.00	100.0	Flexure	KSI	-36.00	-0.00	-0.00	99.000	3712.50
110.00	**100.0**	**Shear**	**KIPS**	**336.32**	**-82.95**	**-65.38**	**2.948**	**110.54**
110.00	100.0	Overload	KSI	-36.00	-0.00	-0.00	99.000	3712.50

Detailed Rating Results
Girder C - As Inspected
RI-5
Axle Load

D463

Impact: As Requested
Lane: As Requested

Span 1

Location (ft)	Percent	Limit State	Units	Capacity	DL + Adj -LL*	LL	Permit Rating Factor	Permit Load Rating (Ton)
0.00	0.0	Flexure	KSI	-36.00	-0.00	-0.00	99.000	5187.60
0.00	**0.0**	**Shear**	**KIPS**	**320.44**	**82.95**	**85.74**	**2.091**	**109.57**
0.00	0.0	Overload	KSI	-36.00	-0.00	-0.00	99.000	5187.60
0.83	0.8	Flexure	KSI	36.00	0.51	0.35	85.825	4497.24
0.83	**0.8**	**Shear**	**KIPS**	**320.44**	**81.73**	**85.00**	**2.125**	**111.35**
0.83	0.8	Overload	KSI	36.00	0.51	0.35	96.809	5072.81
11.00	10.0	Flexure	KSI	36.00	6.11	4.10	5.785	303.15
11.00	**10.0**	**Shear**	**KIPS**	**542.44**	**66.74**	**75.95**	**5.067**	**265.52**
11.00	10.0	Overload	KSI	36.00	6.11	4.10	6.850	358.94
22.00	**20.0**	**Flexure**	**KSI**	**36.00**	**10.91**	**7.14**	**2.585**	**135.47**
22.00	20.0	Shear	KIPS	542.44	50.54	66.15	6.088	319.03
22.00	20.0	Overload	KSI	36.00	10.91	7.14	3.261	170.90
25.50	**23.2**	**Flexure**	**KSI**	**36.00**	**12.14**	**7.95**	**2.154**	**112.84**
25.50	23.2	Shear	KIPS	542.44	44.91	63.03	6.488	339.95
25.50	23.2	Overload	KSI	36.00	12.14	7.95	2.776	145.47
33.00	**30.0**	**Flexure**	**KSI**	**36.00**	**11.21**	**7.54**	**2.402**	**125.88**
33.00	30.0	Shear	KIPS	542.44	33.61	56.35	7.478	391.85
33.00	30.0	Overload	KSI	36.00	11.21	7.54	3.048	159.71
44.00	**40.0**	**Flexure**	**KSI**	**36.00**	**12.83**	**8.58**	**1.905**	**99.84**
44.00	40.0	Shear	KIPS	542.44	17.04	46.55	9.445	494.90
44.00	40.0	Overload	KSI	36.00	12.83	8.58	2.491	130.55
49.50	**45.0**	**Flexure**	**KSI**	**36.00**	**13.23**	**8.81**	**1.806**	**94.66**
49.50	45.0	Shear	KIPS	542.44	8.29	41.65	10.787	565.23
49.50	45.0	Overload	KSI	36.00	13.23	8.81	2.382	124.81
55.00	**50.0**	**Flexure**	**KSI**	**36.00**	**13.36**	**8.82**	**1.787**	**93.64**
55.00	50.0	Shear	KIPS	542.44	0.00	-36.76	12.473	653.60
55.00	50.0	Overload	KSI	36.00	13.36	8.82	2.363	123.82
66.00	**60.0**	**Flexure**	**KSI**	**36.00**	**12.83**	**8.58**	**1.905**	**99.84**
66.00	60.0	Shear	KIPS	542.44	-17.04	-46.55	9.445	494.90
66.00	60.0	Overload	KSI	36.00	12.83	8.58	2.491	130.55
77.00	**70.0**	**Flexure**	**KSI**	**36.00**	**11.21**	**7.54**	**2.402**	**125.88**
77.00	70.0	Shear	KIPS	542.44	-33.61	-56.35	7.478	391.85
77.00	70.0	Overload	KSI	36.00	11.21	7.54	3.048	159.71
84.50	**76.8**	**Flexure**	**KSI**	**36.00**	**12.14**	**7.95**	**2.154**	**112.84**

84.50	76.8	Shear	KIPS	542.44	-44.91	-63.03	6.488	339.95
84.50	76.8	Overload	KSI	36.00	12.14	7.95	2.776	145.47
88.00	**80.0**	**Flexure**	**KSI**	**36.00**	**10.91**	**7.14**	**2.585**	**135.47**
88.00	80.0	Shear	KIPS	542.44	-50.54	-66.15	6.088	319.03
88.00	80.0	Overload	KSI	36.00	10.91	7.14	3.261	170.90
99.00	90.0	Flexure	KSI	36.00	6.11	4.10	5.785	303.15
99.00	**90.0**	**Shear**	**KIPS**	**542.44**	**-66.74**	**-75.95**	**5.067**	**265.52**
99.00	90.0	Overload	KSI	36.00	6.11	4.10	6.850	358.94
110.00	100.0	Flexure	KSI	-36.00	-0.00	-0.00	99.000	5187.60
110.00	**100.0**	**Shear**	**KIPS**	**336.32**	**-82.95**	**-85.74**	**2.248**	**117.77**
110.00	100.0	Overload	KSI	-36.00	-0.00	-0.00	99.000	5187.60

Detailed Rating Results
Girder C - As Inspected
RI-6
Axle Load
Impact: As Requested
Lane: As Requested

Span 1

Location (ft)	Percent	Limit State	Units	Capacity	DL + Adj -LL*	LL	Permit Rating Factor	Permit Load Rating (Ton)
0.00	0.0	Flexure	KSI	-36.00	-0.00	-0.00	99.000	6435.00
0.00	**0.0**	**Shear**	**KIPS**	**320.44**	**82.95**	**97.27**	**1.769**	**114.95**
0.00	0.0	Overload	KSI	-36.00	-0.00	-0.00	99.000	6435.00
0.83	0.8	Flexure	KSI	36.00	0.51	0.39	72.648	4722.14
0.83	**0.8**	**Shear**	**KIPS**	**320.44**	**81.73**	**96.35**	**1.799**	**116.92**
0.83	0.8	Overload	KSI	36.00	0.51	0.39	85.409	5551.59
11.00	10.0	Flexure	KSI	36.00	6.11	4.60	4.953	321.94
11.00	**10.0**	**Shear**	**KIPS**	**542.44**	**66.74**	**85.11**	**4.338**	**281.97**
11.00	10.0	Overload	KSI	36.00	6.11	4.60	6.112	397.29
22.00	**20.0**	**Flexure**	**KSI**	**36.00**	**10.91**	**7.90**	**2.243**	**145.82**
22.00	20.0	Shear	KIPS	542.44	50.54	72.96	5.296	344.24
22.00	20.0	Overload	KSI	36.00	10.91	7.90	2.950	191.72
25.50	**23.2**	**Flexure**	**KSI**	**36.00**	**12.14**	**8.75**	**1.877**	**122.00**
25.50	23.2	Shear	KIPS	542.44	44.91	69.09	5.678	369.10
25.50	23.2	Overload	KSI	36.00	12.14	8.75	2.522	163.92
33.00	**30.0**	**Flexure**	**KSI**	**36.00**	**11.21**	**8.18**	**2.125**	**138.11**
33.00	30.0	Shear	KIPS	542.44	33.61	60.81	6.649	432.18
33.00	30.0	Overload	KSI	36.00	11.21	8.18	2.810	182.63

44.00	**40.0**	**Flexure**	**KSI**	**36.00**	**12.83**	**8.95**	**1.752**	**113.87**
44.00	40.0	Shear	KIPS	542.44	17.04	48.65	8.670	563.58
44.00	40.0	Overload	KSI	36.00	12.83	8.95	2.387	155.19
49.50	**45.0**	**Flexure**	**KSI**	**36.00**	**13.23**	**9.02**	**1.691**	**109.93**
49.50	45.0	Shear	KIPS	542.44	8.29	42.58	10.125	658.14
49.50	45.0	Overload	KSI	36.00	13.23	9.02	2.324	151.07
55.00	**50.0**	**Flexure**	**KSI**	**36.00**	**13.36**	**8.83**	**1.712**	**111.29**
55.00	50.0	Shear	KIPS	542.44	0.00	-36.50	12.051	783.33
55.00	50.0	Overload	KSI	36.00	13.36	8.83	2.360	153.38
66.00	**60.0**	**Flexure**	**KSI**	**36.00**	**12.83**	**8.95**	**1.752**	**113.87**
66.00	60.0	Shear	KIPS	542.44	-17.04	-48.65	8.670	563.58
66.00	60.0	Overload	KSI	36.00	12.83	8.95	2.387	155.19
77.00	**70.0**	**Flexure**	**KSI**	**36.00**	**11.21**	**8.18**	**2.125**	**138.11**
77.00	70.0	Shear	KIPS	542.44	-33.61	-60.81	6.649	432.18
77.00	70.0	Overload	KSI	36.00	11.21	8.18	2.810	182.63
84.50	**76.8**	**Flexure**	**KSI**	**36.00**	**12.14**	**8.75**	**1.877**	**122.00**
84.50	76.8	Shear	KIPS	542.44	-44.91	-69.09	5.678	369.10
84.50	76.8	Overload	KSI	36.00	12.14	8.75	2.522	163.92
88.00	**80.0**	**Flexure**	**KSI**	**36.00**	**10.91**	**7.90**	**2.243**	**145.82**
88.00	80.0	Shear	KIPS	542.44	-50.54	-72.96	5.296	344.24
88.00	80.0	Overload	KSI	36.00	10.91	7.90	2.950	191.72
99.00	90.0	Flexure	KSI	36.00	6.11	4.60	4.953	321.94
99.00	**90.0**	**Shear**	**KIPS**	**542.44**	**-66.74**	**-85.11**	**4.338**	**281.97**
99.00	90.0	Overload	KSI	36.00	6.11	4.60	6.112	397.29
110.00	100.0	Flexure	KSI	-36.00	-0.00	-0.00	99.000	6435.00
110.00	**100.0**	**Shear**	**KIPS**	**336.32**	**-82.95**	**-97.27**	**1.901**	**123.56**
110.00	100.0	Overload	KSI	-36.00	-0.00	-0.00	99.000	6435.00

Detailed Rating Results
Girder C - As Inspected
RIDOT H20 Truck
Axle Load
Impact: As Requested
Lane: As Requested

Span 1

Location (ft)	Percent	Limit State	Units	Capacity	DL + Adj -LL*	LL	Legal Rating Factor	Legal Load Rating (Ton)
0.00	0.0	Flexure	KSI	-36.00	-0.00	-0.00	99.000	1980.00
0.00	**0.0**	**Shear**	**KIPS**	**320.44**	**82.95**	**36.44**	**4.478**	**89.55**

0.00	0.0	Overload	KSI	-36.00	-0.00	-0.00	99.000	1980.00
0.83	0.8	Flexure	KSI	-35.88	-0.59	-0.04	99.000	1980.00
0.83	**0.8**	**Shear**	**KIPS**	**320.44**	**81.73**	**36.16**	**4.546**	**90.93**
0.83	0.8	Overload	KSI	-36.00	-0.59	-0.04	99.000	1980.00
11.00	10.0	Flexure	KSI	36.00	6.11	1.77	12.228	244.55
11.00	**10.0**	**Shear**	**KIPS**	**542.44**	**66.74**	**32.70**	**10.710**	**214.19**
11.00	10.0	Overload	KSI	36.00	6.11	1.77	12.237	244.73
22.00	**20.0**	**Flexure**	**KSI**	**36.00**	**10.91**	**3.13**	**5.374**	**107.48**
22.00	20.0	Shear	KIPS	542.44	50.54	28.96	12.655	253.10
22.00	20.0	Overload	KSI	36.00	10.91	3.13	5.730	114.59
25.50	**23.2**	**Flexure**	**KSI**	**36.00**	**12.14**	**3.48**	**4.480**	**89.61**
25.50	23.2	Shear	KIPS	542.44	44.91	27.77	13.400	268.00
25.50	23.2	Overload	KSI	36.00	12.14	3.48	4.882	97.63
33.00	**30.0**	**Flexure**	**KSI**	**36.00**	**11.21**	**3.30**	**4.993**	**99.87**
33.00	30.0	Shear	KIPS	542.44	33.61	25.22	15.204	304.08
33.00	30.0	Overload	KSI	36.00	11.21	3.30	5.355	107.09
44.00	**40.0**	**Flexure**	**KSI**	**36.00**	**12.83**	**3.75**	**3.966**	**79.31**
44.00	40.0	Shear	KIPS	542.44	17.04	21.49	18.625	372.50
44.00	40.0	Overload	KSI	36.00	12.83	3.75	4.383	87.65
49.50	**45.0**	**Flexure**	**KSI**	**36.00**	**13.23**	**3.85**	**3.758**	**75.16**
49.50	45.0	Shear	KIPS	542.44	8.29	19.62	20.848	416.96
49.50	45.0	Overload	KSI	36.00	13.23	3.85	4.188	83.76
55.00	**50.0**	**Flexure**	**KSI**	**36.00**	**13.36**	**3.87**	**3.704**	**74.09**
55.00	50.0	Shear	KIPS	542.44	0.00	-17.75	23.513	470.27
55.00	50.0	Overload	KSI	36.00	13.36	3.87	4.140	82.80
66.00	**60.0**	**Flexure**	**KSI**	**36.00**	**12.83**	**3.75**	**3.966**	**79.31**
66.00	60.0	Shear	KIPS	542.44	-17.04	-21.49	18.625	372.50
66.00	60.0	Overload	KSI	36.00	12.83	3.75	4.383	87.65
77.00	**70.0**	**Flexure**	**KSI**	**36.00**	**11.21**	**3.30**	**4.993**	**99.87**
77.00	70.0	Shear	KIPS	542.44	-33.61	-25.22	15.204	304.08
77.00	70.0	Overload	KSI	36.00	11.21	3.30	5.355	107.09
84.50	**76.8**	**Flexure**	**KSI**	**36.00**	**12.14**	**3.48**	**4.480**	**89.61**
84.50	76.8	Shear	KIPS	542.44	-44.91	-27.77	13.400	268.00
84.50	76.8	Overload	KSI	36.00	12.14	3.48	4.882	97.63
88.00	**80.0**	**Flexure**	**KSI**	**36.00**	**10.91**	**3.13**	**5.374**	**107.48**
88.00	80.0	Shear	KIPS	542.44	-50.54	-28.96	12.655	253.10
88.00	80.0	Overload	KSI	36.00	10.91	3.13	5.730	114.59
99.00	90.0	Flexure	KSI	36.00	6.11	1.77	12.228	244.55
99.00	**90.0**	**Shear**	**KIPS**	**542.44**	**-66.74**	**-32.70**	**10.710**	**214.19**
99.00	90.0	Overload	KSI	36.00	6.11	1.77	12.237	244.73
110.00	100.0	Flexure	KSI	-36.00	-0.00	-0.00	99.000	1980.00
110.00	**100.0**	**Shear**	**KIPS**	**336.32**	**-82.95**	**-36.44**	**4.813**	**96.26**
110.00	100.0	Overload	KSI	-36.00	-0.00	-0.00	99.000	1980.00

Detailed Rating Results
Girder C - As Inspected
RI-OP 1
Axle Load
Impact: As Requested
Lane: As Requested

Span 1

Location (ft)	Percent	Limit State	Units	Capacity	DL + Adj -LL*	LL	Permit Rating Factor	Permit Load Rating (Ton)
0.00	0.0	Flexure	KSI	-36.00	-0.00	-0.00	99.000	5593.50
0.00	**0.0**	**Shear**	**KIPS**	**320.44**	**82.95**	**66.31**	**2.666**	**150.62**
0.00	0.0	Overload	KSI	-36.00	-0.00	-0.00	99.000	5593.50
0.83	0.8	Flexure	KSI	-36.00	-0.59	-0.06	99.000	5593.50
0.83	**0.8**	**Shear**	**KIPS**	**320.44**	**81.73**	**65.75**	**2.709**	**153.06**
0.83	0.8	Overload	KSI	-36.00	-0.59	-0.06	99.000	5593.50
11.00	10.0	Flexure	KSI	36.00	6.11	2.62	8.916	503.77
11.00	**10.0**	**Shear**	**KIPS**	**542.44**	**66.74**	**58.85**	**6.447**	**364.26**
11.00	10.0	Overload	KSI	36.00	6.11	2.62	10.707	604.97
22.00	**20.0**	**Flexure**	**KSI**	**36.00**	**10.91**	**4.66**	**3.910**	**220.91**
22.00	20.0	Shear	KIPS	542.44	50.54	51.39	7.726	436.53
22.00	20.0	Overload	KSI	36.00	10.91	4.66	5.002	282.64
25.50	**23.2**	**Flexure**	**KSI**	**36.00**	**12.14**	**5.18**	**3.256**	**183.96**
25.50	23.2	Shear	KIPS	542.44	44.91	49.02	8.225	464.70
25.50	23.2	Overload	KSI	36.00	12.14	5.18	4.257	240.53
33.00	**30.0**	**Flexure**	**KSI**	**36.00**	**11.21**	**4.92**	**3.635**	**205.37**
33.00	30.0	Shear	KIPS	542.44	33.61	43.94	9.456	534.29
33.00	30.0	Overload	KSI	36.00	11.21	4.92	4.677	264.26
44.00	**40.0**	**Flexure**	**KSI**	**36.00**	**12.83**	**5.63**	**2.862**	**161.71**
44.00	40.0	Shear	KIPS	542.44	17.04	36.48	11.884	671.45
44.00	40.0	Overload	KSI	36.00	12.83	5.63	3.796	214.46
49.50	**45.0**	**Flexure**	**KSI**	**36.00**	**13.23**	**5.82**	**2.697**	**152.40**
49.50	45.0	Shear	KIPS	542.44	8.29	32.75	13.527	764.29
49.50	45.0	Overload	KSI	36.00	13.23	5.82	3.607	203.79
55.00	**50.0**	**Flexure**	**KSI**	**36.00**	**13.36**	**5.87**	**2.650**	**149.71**
55.00	50.0	Shear	KIPS	542.44	0.00	-29.02	15.576	880.05
55.00	50.0	Overload	KSI	36.00	13.36	5.87	3.553	200.77
66.00	**60.0**	**Flexure**	**KSI**	**36.00**	**12.83**	**5.63**	**2.862**	**161.71**
66.00	60.0	Shear	KIPS	542.44	-17.04	-36.48	11.884	671.45

66.00	60.0	Overload	KSI	36.00	12.83	5.63	3.796	214.46
77.00	**70.0**	**Flexure**	**KSI**	**36.00**	**11.21**	**4.92**	**3.635**	**205.37**
77.00	70.0	Shear	KIPS	542.44	-33.61	-43.94	9.456	534.29
77.00	70.0	Overload	KSI	36.00	11.21	4.92	4.677	264.26
84.50	**76.8**	**Flexure**	**KSI**	**36.00**	**12.14**	**5.18**	**3.256**	**183.96**
84.50	76.8	Shear	KIPS	542.44	-44.91	-49.02	8.225	464.70
84.50	76.8	Overload	KSI	36.00	12.14	5.18	4.257	240.53
88.00	**80.0**	**Flexure**	**KSI**	**36.00**	**10.91**	**4.66**	**3.910**	**220.91**
88.00	80.0	Shear	KIPS	542.44	-50.54	-51.39	7.726	436.53
88.00	80.0	Overload	KSI	36.00	10.91	4.66	5.002	282.64
99.00	90.0	Flexure	KSI	36.00	6.11	2.62	8.916	503.77
99.00	**90.0**	**Shear**	**KIPS**	**542.44**	**-66.74**	**-58.85**	**6.447**	**364.26**
99.00	90.0	Overload	KSI	36.00	6.11	2.62	10.707	604.97
110.00	100.0	Flexure	KSI	-36.00	-0.00	-0.00	99.000	5593.50
110.00	**100.0**	**Shear**	**KIPS**	**336.32**	**-82.95**	**-66.31**	**2.866**	**161.90**
110.00	100.0	Overload	KSI	-36.00	-0.00	-0.00	99.000	5593.50

Detailed Rating Results
Girder C - As Inspected
RI-OP 2
Axle Load
Impact: As Requested
Lane: As Requested

Span 1

Location (ft)	Percent	Limit State	Units	Capacity	DL + Adj -LL*	LL	Permit Rating Factor	Permit Load Rating (Ton)
0.00	0.0	Flexure	KSI	-36.00	-0.00	-0.00	99.000	7920.00
0.00	**0.0**	**Shear**	**KIPS**	**320.44**	**82.95**	**77.08**	**2.293**	**183.48**
0.00	0.0	Overload	KSI	-36.00	-0.00	-0.00	99.000	7920.00
0.83	0.8	Flexure	KSI	-36.00	-0.59	-0.07	99.000	7920.00
0.83	**0.8**	**Shear**	**KIPS**	**320.44**	**81.73**	**76.28**	**2.335**	**186.79**
0.83	0.8	Overload	KSI	-36.00	-0.59	-0.07	99.000	7920.00
11.00	10.0	Flexure	KSI	36.00	6.11	2.96	7.889	631.11
11.00	**10.0**	**Shear**	**KIPS**	**542.44**	**66.74**	**66.52**	**5.704**	**456.34**
11.00	10.0	Overload	KSI	36.00	6.11	2.96	9.474	757.89
22.00	**20.0**	**Flexure**	**KSI**	**36.00**	**10.91**	**5.11**	**3.561**	**284.86**
22.00	20.0	Shear	KIPS	542.44	50.54	55.96	7.096	567.69
22.00	20.0	Overload	KSI	36.00	10.91	5.11	4.556	364.46
25.50	**23.2**	**Flexure**	**KSI**	**36.00**	**12.14**	**5.62**	**3.003**	**240.28**

25.50	23.2	Shear	KIPS	542.44	44.91	52.60	7.666	613.24
25.50	23.2	Overload	KSI	36.00	12.14	5.62	3.927	314.16
33.00	**30.0**	**Flexure**	**KSI**	**36.00**	**11.21**	**5.21**	**3.429**	**274.32**
33.00	30.0	Shear	KIPS	542.44	33.61	45.40	9.152	732.16
33.00	30.0	Overload	KSI	36.00	11.21	5.21	4.412	352.99
44.00	**40.0**	**Flexure**	**KSI**	**36.00**	**12.83**	**5.63**	**2.863**	**229.08**
44.00	40.0	Shear	KIPS	542.44	17.04	35.31	12.277	982.13
44.00	40.0	Overload	KSI	36.00	12.83	5.63	3.798	303.81
49.50	**45.0**	**Flexure**	**KSI**	**36.00**	**13.23**	**5.62**	**2.791**	**223.28**
49.50	45.0	Shear	KIPS	542.44	8.29	30.46	14.544	1163.50
49.50	45.0	Overload	KSI	36.00	13.23	5.62	3.732	298.58
55.00	**50.0**	**Flexure**	**KSI**	**36.00**	**13.36**	**5.48**	**2.835**	**226.79**
55.00	50.0	Shear	KIPS	542.44	0.00	-25.79	17.529	1402.31
55.00	50.0	Overload	KSI	36.00	13.36	5.48	3.802	304.13
66.00	**60.0**	**Flexure**	**KSI**	**36.00**	**12.83**	**5.63**	**2.863**	**229.08**
66.00	60.0	Shear	KIPS	542.44	-17.04	-35.31	12.277	982.13
66.00	60.0	Overload	KSI	36.00	12.83	5.63	3.798	303.81
77.00	**70.0**	**Flexure**	**KSI**	**36.00**	**11.21**	**5.21**	**3.429**	**274.32**
77.00	70.0	Shear	KIPS	542.44	-33.61	-45.40	9.152	732.16
77.00	70.0	Overload	KSI	36.00	11.21	5.21	4.412	352.99
84.50	**76.8**	**Flexure**	**KSI**	**36.00**	**12.14**	**5.62**	**3.003**	**240.28**
84.50	76.8	Shear	KIPS	542.44	-44.91	-52.60	7.666	613.24
84.50	76.8	Overload	KSI	36.00	12.14	5.62	3.927	314.16
88.00	**80.0**	**Flexure**	**KSI**	**36.00**	**10.91**	**5.11**	**3.561**	**284.86**
88.00	80.0	Shear	KIPS	542.44	-50.54	-55.96	7.096	567.69
88.00	80.0	Overload	KSI	36.00	10.91	5.11	4.556	364.46
99.00	90.0	Flexure	KSI	36.00	6.11	2.96	7.889	631.11
99.00	**90.0**	**Shear**	**KIPS**	**542.44**	**-66.74**	**-66.52**	**5.704**	**456.34**
99.00	90.0	Overload	KSI	36.00	6.11	2.96	9.474	757.89
110.00	100.0	Flexure	KSI	-36.00	-0.00	-0.00	99.000	7920.00
110.00	**100.0**	**Shear**	**KIPS**	**336.32**	**-82.95**	**-77.08**	**2.465**	**197.22**
110.00	100.0	Overload	KSI	-36.00	-0.00	-0.00	99.000	7920.00

Detailed Rating Results
Girder C - As Inspected
RI-OP 3
Axle Load
Impact: As Requested
Lane: As Requested

Span 1

Location							**Permit Rating**	**Permit**

(ft)	Percent	Limit State	Units	Capacity	DL + Adj -LL*	LL	Factor	Load Rating (Ton)
0.00	0.0	Flexure	KSI	-36.00	-0.00	-0.00	99.000	11187.00
0.00	**0.0**	**Shear**	**KIPS**	**320.44**	**82.95**	**86.06**	**2.054**	**232.10**
0.00	0.0	Overload	KSI	-36.00	-0.00	-0.00	99.000	11187.00
0.83	0.8	Flexure	KSI	-36.00	-0.59	-0.08	99.000	11187.00
0.83	**0.8**	**Shear**	**KIPS**	**320.44**	**81.73**	**84.94**	**2.097**	**236.95**
0.83	0.8	Overload	KSI	-36.00	-0.59	-0.08	99.000	11187.00
11.00	10.0	Flexure	KSI	36.00	6.11	3.22	7.274	821.98
11.00	**10.0**	**Shear**	**KIPS**	**542.44**	**66.74**	**71.70**	**5.292**	**598.02**
11.00	10.0	Overload	KSI	36.00	6.11	3.22	8.735	987.11
22.00	**20.0**	**Flexure**	**KSI**	**36.00**	**10.91**	**5.43**	**3.352**	**378.80**
22.00	20.0	Shear	KIPS	542.44	50.54	58.76	6.758	763.60
22.00	20.0	Overload	KSI	36.00	10.91	5.43	4.289	484.65
25.50	**23.2**	**Flexure**	**KSI**	**36.00**	**12.14**	**5.97**	**2.828**	**319.51**
25.50	23.2	Shear	KIPS	542.44	44.91	55.23	7.300	824.87
25.50	23.2	Overload	KSI	36.00	12.14	5.97	3.697	417.76
33.00	**30.0**	**Flexure**	**KSI**	**36.00**	**11.21**	**5.54**	**3.228**	**364.75**
33.00	30.0	Shear	KIPS	542.44	33.61	47.67	8.715	984.81
33.00	30.0	Overload	KSI	36.00	11.21	5.54	4.154	469.35
44.00	**40.0**	**Flexure**	**KSI**	**36.00**	**12.83**	**6.13**	**2.627**	**296.91**
44.00	40.0	Shear	KIPS	542.44	17.04	37.69	11.503	1299.83
44.00	40.0	Overload	KSI	36.00	12.83	6.13	3.485	393.76
49.50	**45.0**	**Flexure**	**KSI**	**36.00**	**13.23**	**6.24**	**2.513**	**283.98**
49.50	45.0	Shear	KIPS	542.44	8.29	33.54	13.207	1492.39
49.50	45.0	Overload	KSI	36.00	13.23	6.24	3.361	379.75
55.00	**50.0**	**Flexure**	**KSI**	**36.00**	**13.36**	**6.19**	**2.512**	**283.85**
55.00	50.0	Shear	KIPS	542.44	0.00	-29.58	15.280	1726.59
55.00	50.0	Overload	KSI	36.00	13.36	6.19	3.369	380.66
66.00	**60.0**	**Flexure**	**KSI**	**36.00**	**12.83**	**6.13**	**2.627**	**296.91**
66.00	60.0	Shear	KIPS	542.44	-17.04	-37.69	11.503	1299.83
66.00	60.0	Overload	KSI	36.00	12.83	6.13	3.485	393.76
77.00	**70.0**	**Flexure**	**KSI**	**36.00**	**11.21**	**5.54**	**3.228**	**364.75**
77.00	70.0	Shear	KIPS	542.44	-33.61	-47.67	8.715	984.81
77.00	70.0	Overload	KSI	36.00	11.21	5.54	4.154	469.35
84.50	**76.8**	**Flexure**	**KSI**	**36.00**	**12.14**	**5.97**	**2.828**	**319.51**
84.50	76.8	Shear	KIPS	542.44	-44.91	-55.23	7.300	824.87
84.50	76.8	Overload	KSI	36.00	12.14	5.97	3.697	417.76
88.00	**80.0**	**Flexure**	**KSI**	**36.00**	**10.91**	**5.43**	**3.352**	**378.80**
88.00	80.0	Shear	KIPS	542.44	-50.54	-58.76	6.758	763.60
88.00	80.0	Overload	KSI	36.00	10.91	5.43	4.289	484.65

99.00	90.0	Flexure	KSI	36.00	6.11	3.22	7.274	821.98
99.00	**90.0**	**Shear**	**KIPS**	**542.44**	**-66.74**	**-71.70**	**5.292**	**598.02**
99.00	90.0	Overload	KSI	36.00	6.11	3.22	8.735	987.11
110.00	100.0	Flexure	KSI	-36.00	-0.00	-0.00	99.000	11187.00
110.00	**100.0**	**Shear**	**KIPS**	**336.32**	**-82.95**	**-86.06**	**2.208**	**249.48**
110.00	100.0	Overload	KSI	-36.00	-0.00	-0.00	99.000	11187.00

Detailed Rating Results
Girder C - As Inspected
RIPTA Bus
Axle Load
Impact: As Requested
Lane: As Requested

Span 1

Location (ft)	Percent	Limit State	Units	Capacity	DL + Adj -LL*	LL	Legal Rating Factor	Legal Load Rating (Ton)
0.00	0.0	Flexure	KSI	-36.00	-0.00	-0.00	99.000	2059.20
0.00	**0.0**	**Shear**	**KIPS**	**320.44**	**82.95**	**36.01**	**4.532**	**94.26**
0.00	0.0	Overload	KSI	-36.00	-0.00	-0.00	99.000	2059.20
0.83	0.8	Flexure	KSI	-35.87	-0.59	-0.04	99.000	2059.20
0.83	**0.8**	**Shear**	**KIPS**	**320.44**	**81.73**	**35.71**	**4.604**	**95.75**
0.83	0.8	Overload	KSI	-36.00	-0.59	-0.04	99.000	2059.20
11.00	10.0	Flexure	KSI	36.00	6.11	1.73	12.451	258.98
11.00	**10.0**	**Shear**	**KIPS**	**542.44**	**66.74**	**32.12**	**10.905**	**226.83**
11.00	10.0	Overload	KSI	36.00	6.11	1.73	12.460	259.17
22.00	**20.0**	**Flexure**	**KSI**	**36.00**	**10.91**	**3.05**	**5.514**	**114.69**
22.00	20.0	Shear	KIPS	542.44	50.54	28.23	12.985	270.09
22.00	20.0	Overload	KSI	36.00	10.91	3.05	5.879	122.28
25.50	**23.2**	**Flexure**	**KSI**	**36.00**	**12.14**	**3.38**	**4.610**	**95.90**
25.50	23.2	Shear	KIPS	542.44	44.91	26.99	13.789	286.81
25.50	23.2	Overload	KSI	36.00	12.14	3.38	5.023	104.49
33.00	**30.0**	**Flexure**	**KSI**	**36.00**	**11.21**	**3.19**	**5.175**	**107.65**
33.00	30.0	Shear	KIPS	542.44	33.61	24.34	15.758	327.76
33.00	30.0	Overload	KSI	36.00	11.21	3.19	5.550	115.43
44.00	**40.0**	**Flexure**	**KSI**	**36.00**	**12.83**	**3.57**	**4.166**	**86.66**
44.00	40.0	Shear	KIPS	542.44	17.04	20.45	19.568	407.02
44.00	40.0	Overload	KSI	36.00	12.83	3.57	4.605	95.78
49.50	**45.0**	**Flexure**	**KSI**	**36.00**	**13.23**	**3.63**	**3.983**	**82.86**
49.50	45.0	Shear	KIPS	542.44	8.29	18.51	22.099	459.65

49.50	45.0	Overload	KSI	36.00	13.23	3.63	4.439	92.33
55.00	**50.0**	**Flexure**	**KSI**	**36.00**	**13.36**	**3.61**	**3.970**	**82.57**
55.00	50.0	Shear	KIPS	542.44	0.00	-16.56	25.196	524.08
55.00	50.0	Overload	KSI	36.00	13.36	3.61	4.436	92.27
66.00	**60.0**	**Flexure**	**KSI**	**36.00**	**12.83**	**3.57**	**4.166**	**86.66**
66.00	60.0	Shear	KIPS	542.44	-17.04	-20.45	19.568	407.02
66.00	60.0	Overload	KSI	36.00	12.83	3.57	4.605	95.78
77.00	**70.0**	**Flexure**	**KSI**	**36.00**	**11.21**	**3.19**	**5.175**	**107.65**
77.00	70.0	Shear	KIPS	542.44	-33.61	-24.34	15.758	327.76
77.00	70.0	Overload	KSI	36.00	11.21	3.19	5.550	115.43
84.50	**76.8**	**Flexure**	**KSI**	**36.00**	**12.14**	**3.38**	**4.610**	**95.90**
84.50	76.8	Shear	KIPS	542.44	-44.91	-26.99	13.789	286.81
84.50	76.8	Overload	KSI	36.00	12.14	3.38	5.023	104.49
88.00	**80.0**	**Flexure**	**KSI**	**36.00**	**10.91**	**3.05**	**5.514**	**114.69**
88.00	80.0	Shear	KIPS	542.44	-50.54	-28.23	12.985	270.09
88.00	80.0	Overload	KSI	36.00	10.91	3.05	5.879	122.28
99.00	90.0	Flexure	KSI	36.00	6.11	1.73	12.451	258.98
99.00	**90.0**	**Shear**	**KIPS**	**542.44**	**-66.74**	**-32.12**	**10.905**	**226.83**
99.00	90.0	Overload	KSI	36.00	6.11	1.73	12.460	259.17
110.00	100.0	Flexure	KSI	-36.00	-0.00	-0.00	99.000	2059.20
110.00	**100.0**	**Shear**	**KIPS**	**336.32**	**-82.95**	**-36.01**	**4.871**	**101.32**
110.00	100.0	Overload	KSI	-36.00	-0.00	-0.00	99.000	2059.20

Note:
*Adj-LL is only applicable for Permit load rating.

Bridge Name: Mohegan Bridge
NBI Structure ID:
Bridge ID: 067301

Analyzed By: BrR
Analyze Date: Friday, September 14, 2018 19:24:01
Analysis Engine: AASHTO LRFR Engine Version 6.8.2.3002
Analysis Preference Setting: None

Report By: brr
Report Date: Friday, September 14, 2018 19:27:00

Structure Definition Name: Span 2
Member Name: Girder D
Member Alternative Name: Girder D - As Inspected

Load and Resistance Factor Rating Summary

Live Load		Rating Factor	Controls	Girder Summary Capacity (Ton)	Span	Location (ft)	Percent	Impact	Lane
EV2	Legal	2.321	STRENGTH-I Steel Shear	66.73	1	0.00	0.0	As Requested	As Requested
EV3	Legal	1.559	STRENGTH-I Steel Shear	67.04	1	0.00	0.0	As Requested	As Requested
HL-93 (US)	Inventory	0.774	STRENGTH-I Steel Shear	27.86	1	0.00	0.0	As Requested	As Requested
HL-93 (US)	Operating	1.003	STRENGTH-I Steel Shear	36.11	1	0.00	0.0	As Requested	As Requested
SU4	Legal	2.097	STRENGTH-I Steel Shear	56.63	1	0.00	0.0	As Requested	As Requested
SU5	Legal	1.854	STRENGTH-I Steel Shear	57.46	1	0.00	0.0	As Requested	As Requested
SU6	Legal	1.695	STRENGTH-I Steel Shear	58.92	1	0.00	0.0	As Requested	As Requested
SU7	Legal	1.560	STRENGTH-I Steel Shear	60.44	1	0.00	0.0	As Requested	As Requested
Type 3	Legal	2.287	STRENGTH-I Steel Shear	57.18	1	0.00	0.0	As Requested	As Requested
Type 3-3	Legal	1.703	STRENGTH-I Steel Shear	68.11	1	0.00	0.0	As Requested	As Requested
Type 3S2	Legal	1.783	STRENGTH-I Steel Shear	64.17	1	0.00	0.0	As Requested	As Requested
RI-3	Permit	1.629	STRENGTH-II Steel Shear	61.89	1	0.00	0.0	As Requested	As Requested
RI-4	Permit	1.675	STRENGTH-II Steel Shear	62.82	1	0.00	0.0	As Requested	As Requested
RI-5	Permit	1.277	STRENGTH-II Steel Shear	66.94	1	0.00	0.0	As Requested	As Requested
RI-6	Permit	1.080	STRENGTH-II Steel Shear	70.23	1	0.00	0.0	As Requested	As Requested
RIDOT H20 Truck	Legal	2.735	STRENGTH-I Steel Shear	54.71	1	0.00	0.0	As Requested	As Requested
RI-OP 1	Permit	1.629	STRENGTH-II Steel Shear	92.02	1	0.00	0.0	As Requested	As Requested
RI-OP 2	Permit	1.401	STRENGTH-II Steel Shear	112.09	1	0.00	0.0	As Requested	As Requested
RI-OP 3	Permit	1.255	STRENGTH-II Steel Shear	141.79	1	0.00	0.0	As Requested	As Requested
RIPTA Bus	Legal	2.769	STRENGTH-I Steel Shear	57.59	1	0.00	0.0	As Requested	As Requested

Report by Action: ☑ **Flexure** ☑ **Shear** ☑ **Overload** ☑ **Interaction** ☑ **Critical**

Detailed Rating Results
Girder D - As Inspected
EV2
Axle Load
Impact: As Requested
Lane: As Requested

Span 1

Location (ft)	Percent	Limit State	Units	Capacity	DL + Adj -LL*	LL	Legal Rating Factor	Legal Load Rating (Ton)
0.00	0.0	Flexure	KSI	-36.00	-0.00	-0.00	99.000	2846.25
0.00	**0.0**	**Shear**	**KIPS**	**237.90**	**82.95**	**42.95**	**2.321**	**66.73**
0.00	0.0	Overload	KSI	-36.00	-0.00	-0.00	99.000	2846.25
0.83	0.8	Flexure	KSI	-34.83	-0.61	-0.04	99.000	2846.25
0.83	**0.8**	**Shear**	**KIPS**	**237.90**	**81.73**	**42.60**	**2.369**	**68.10**
0.83	0.8	Overload	KSI	-36.00	-0.61	-0.04	99.000	2846.25
8.00	7.3	Flexure	KSI	36.00	4.68	1.33	17.350	498.82
8.00	**7.3**	**Shear**	**KIPS**	**466.86**	**71.16**	**39.64**	**7.258**	**208.66**
8.00	7.3	Overload	KSI	36.00	4.68	1.33	17.116	492.08
11.00	10.0	Flexure	KSI	36.00	6.11	1.71	12.616	362.72
11.00	**10.0**	**Shear**	**KIPS**	**542.44**	**66.74**	**38.39**	**9.123**	**262.27**
11.00	10.0	Overload	KSI	36.00	6.11	1.71	12.626	362.99
22.00	**20.0**	**Flexure**	**KSI**	**36.00**	**10.91**	**3.02**	**5.571**	**160.18**
22.00	20.0	Shear	KIPS	542.44	50.54	33.84	10.832	311.41
22.00	20.0	Overload	KSI	36.00	10.91	3.02	5.940	170.78
25.50	**23.2**	**Flexure**	**KSI**	**36.00**	**12.14**	**3.35**	**4.654**	**133.79**
25.50	23.2	Shear	KIPS	542.44	44.91	32.39	11.490	330.34
25.50	23.2	Overload	KSI	36.00	12.14	3.35	5.070	145.78
33.00	**30.0**	**Flexure**	**KSI**	**36.00**	**11.21**	**3.17**	**5.210**	**149.78**
33.00	30.0	Shear	KIPS	542.44	33.61	29.29	13.096	376.51
33.00	30.0	Overload	KSI	36.00	11.21	3.17	5.587	160.62
44.00	**40.0**	**Flexure**	**KSI**	**36.00**	**12.83**	**3.56**	**4.173**	**119.97**
44.00	40.0	Shear	KIPS	542.44	17.04	24.73	16.180	465.19
44.00	40.0	Overload	KSI	36.00	12.83	3.56	4.612	132.59
49.50	**45.0**	**Flexure**	**KSI**	**36.00**	**13.23**	**3.64**	**3.976**	**114.32**
49.50	45.0	Shear	KIPS	542.44	8.29	22.45	18.212	523.59
49.50	45.0	Overload	KSI	36.00	13.23	3.64	4.431	127.40

55.00	**50.0**	**Flexure**	**KSI**	**36.00**	**13.36**	**3.64**	**3.946**	**113.46**
55.00	50.0	Shear	KIPS	542.44	0.00	20.18	20.679	594.54
55.00	50.0	Overload	KSI	36.00	13.36	3.64	4.410	126.79
66.00	**60.0**	**Flexure**	**KSI**	**36.00**	**12.83**	**3.56**	**4.173**	**119.97**
66.00	60.0	Shear	KIPS	542.44	-17.04	-24.73	16.180	465.19
66.00	60.0	Overload	KSI	36.00	12.83	3.56	4.612	132.59
77.00	**70.0**	**Flexure**	**KSI**	**36.00**	**11.21**	**3.17**	**5.210**	**149.78**
77.00	70.0	Shear	KIPS	542.44	-33.61	-29.29	13.096	376.51
77.00	70.0	Overload	KSI	36.00	11.21	3.17	5.587	160.62
84.50	**76.8**	**Flexure**	**KSI**	**36.00**	**12.14**	**3.35**	**4.654**	**133.79**
84.50	76.8	Shear	KIPS	542.44	-44.91	-32.39	11.490	330.34
84.50	76.8	Overload	KSI	36.00	12.14	3.35	5.070	145.78
88.00	**80.0**	**Flexure**	**KSI**	**36.00**	**10.91**	**3.02**	**5.571**	**160.18**
88.00	80.0	Shear	KIPS	542.44	-50.54	-33.84	10.832	311.41
88.00	80.0	Overload	KSI	36.00	10.91	3.02	5.940	170.78
99.00	90.0	Flexure	KSI	36.00	6.11	1.71	12.616	362.72
99.00	**90.0**	**Shear**	**KIPS**	**542.44**	**-66.74**	**-38.39**	**9.123**	**262.27**
99.00	90.0	Overload	KSI	36.00	6.11	1.71	12.626	362.99
110.00	100.0	Flexure	KSI	-36.00	-0.00	-0.00	99.000	2846.25
110.00	**100.0**	**Shear**	**KIPS**	**336.32**	**-82.95**	**-42.95**	**4.084**	**117.42**
110.00	100.0	Overload	KSI	-36.00	-0.00	-0.00	99.000	2846.25

Detailed Rating Results
Girder D - As Inspected
EV3
Axle Load
Impact: As Requested
Lane: As Requested

Span 1

Location (ft)	Percent	Limit State	Units	Capacity	DL + Adj -LL*	LL	Legal Rating Factor	Legal Load Rating (Ton)
0.00	0.0	Flexure	KSI	-36.00	-0.00	-0.00	99.000	4257.00
0.00	**0.0**	**Shear**	**KIPS**	**237.90**	**82.95**	**63.93**	**1.559**	**67.04**
0.00	0.0	Overload	KSI	-36.00	-0.00	-0.00	99.000	4257.00
0.83	0.8	Flexure	KSI	-35.24	-0.61	-0.06	99.000	4257.00
0.83	**0.8**	**Shear**	**KIPS**	**237.90**	**81.73**	**63.42**	**1.591**	**68.42**
0.83	0.8	Overload	KSI	-36.00	-0.61	-0.06	99.000	4257.00
8.00	7.3	Flexure	KSI	36.00	4.68	1.97	11.659	501.35
8.00	**7.3**	**Shear**	**KIPS**	**466.86**	**71.16**	**58.98**	**4.877**	**209.71**

8.00	7.3	Overload	KSI	36.00	4.68	1.97	11.502	494.58
11.00	10.0	Flexure	KSI	36.00	6.11	2.55	8.479	364.62
11.00	**10.0**	**Shear**	**KIPS**	**542.44**	**66.74**	**57.12**	**6.131**	**263.65**
11.00	10.0	Overload	KSI	36.00	6.11	2.55	8.486	364.89
22.00	**20.0**	**Flexure**	**KSI**	**36.00**	**10.91**	**4.49**	**3.747**	**161.13**
22.00	20.0	Shear	KIPS	542.44	50.54	50.31	7.285	313.26
22.00	20.0	Overload	KSI	36.00	10.91	4.49	3.995	171.80
25.50	**23.2**	**Flexure**	**KSI**	**36.00**	**12.14**	**4.97**	**3.131**	**134.62**
25.50	23.2	Shear	KIPS	542.44	44.91	48.15	7.730	332.40
25.50	23.2	Overload	KSI	36.00	12.14	4.97	3.411	146.68
33.00	**30.0**	**Flexure**	**KSI**	**36.00**	**11.21**	**4.70**	**3.507**	**150.81**
33.00	30.0	Shear	KIPS	542.44	33.61	43.50	8.816	379.10
33.00	30.0	Overload	KSI	36.00	11.21	4.70	3.761	161.72
44.00	**40.0**	**Flexure**	**KSI**	**36.00**	**12.83**	**5.32**	**2.794**	**120.15**
44.00	40.0	Shear	KIPS	542.44	17.04	36.69	10.907	468.98
44.00	40.0	Overload	KSI	36.00	12.83	5.32	3.088	132.79
49.50	**45.0**	**Flexure**	**KSI**	**36.00**	**13.23**	**5.48**	**2.643**	**113.67**
49.50	45.0	Shear	KIPS	542.44	8.29	33.29	12.286	528.30
49.50	45.0	Overload	KSI	36.00	13.23	5.48	2.946	126.67
55.00	**50.0**	**Flexure**	**KSI**	**36.00**	**13.36**	**5.51**	**2.605**	**112.00**
55.00	50.0	Shear	KIPS	542.44	0.00	29.88	13.965	600.49
55.00	50.0	Overload	KSI	36.00	13.36	5.51	2.911	125.17
66.00	**60.0**	**Flexure**	**KSI**	**36.00**	**12.83**	**5.32**	**2.794**	**120.15**
66.00	60.0	Shear	KIPS	542.44	-17.04	-36.69	10.907	468.98
66.00	60.0	Overload	KSI	36.00	12.83	5.32	3.088	132.79
77.00	**70.0**	**Flexure**	**KSI**	**36.00**	**11.21**	**4.70**	**3.507**	**150.81**
77.00	70.0	Shear	KIPS	542.44	-33.61	-43.50	8.816	379.10
77.00	70.0	Overload	KSI	36.00	11.21	4.70	3.761	161.72
84.50	**76.8**	**Flexure**	**KSI**	**36.00**	**12.14**	**4.97**	**3.131**	**134.62**
84.50	76.8	Shear	KIPS	542.44	-44.91	-48.15	7.730	332.40
84.50	76.8	Overload	KSI	36.00	12.14	4.97	3.411	146.68
88.00	**80.0**	**Flexure**	**KSI**	**36.00**	**10.91**	**4.49**	**3.747**	**161.13**
88.00	80.0	Shear	KIPS	542.44	-50.54	-50.31	7.285	313.26
88.00	80.0	Overload	KSI	36.00	10.91	4.49	3.995	171.80
99.00	90.0	Flexure	KSI	36.00	6.11	2.55	8.479	364.62
99.00	**90.0**	**Shear**	**KIPS**	**542.44**	**-66.74**	**-57.12**	**6.131**	**263.65**
99.00	90.0	Overload	KSI	36.00	6.11	2.55	8.486	364.89
110.00	100.0	Flexure	KSI	-36.00	-0.00	-0.00	99.000	4257.00
110.00	**100.0**	**Shear**	**KIPS**	**336.32**	**-82.95**	**-63.93**	**2.743**	**117.96**
110.00	100.0	Overload	KSI	-36.00	-0.00	-0.00	99.000	4257.00

Detailed Rating Results
Girder D - As Inspected

HL-93 (US)
Truck + Lane
Impact: As Requested
Lane: As Requested

Span 1

Location (ft)	Percent	Limit State	Units	Capacity	DL + Adj-LL*	LL	Inventory Rating Factor	Inventory Load Rating (Ton)	Operating Rating Factor	Operating Load Rating (Ton)
0.00	0.0	Flexure	KSI	-36.00	-0.00	-0.00	99.000	3564.00	99.000	3564.00
0.00	**0.0**	**Shear**	**KIPS**	**237.90**	**82.95**	**95.70**	**0.774**	**27.86**	**1.003**	**36.11**
0.00	0.0	Overload	KSI	-36.00	-0.00	-0.00	99.000	3564.00	99.000	3564.00
0.83	0.8	Flexure	KSI	36.00	0.52	0.40	50.423	1815.24	65.364	2353.09
0.83	**0.8**	**Shear**	**KIPS**	**237.90**	**81.73**	**94.72**	**0.791**	**28.49**	**1.026**	**36.93**
0.83	0.8	Overload	KSI	36.00	0.52	0.40	64.717	2329.81	84.132	3028.75
8.00	7.3	Flexure	KSI	36.00	4.68	3.58	4.777	171.99	6.193	222.95
8.00	**7.3**	**Shear**	**KIPS**	**466.86**	**71.16**	**86.43**	**2.472**	**89.01**	**3.205**	**115.38**
8.00	7.3	Overload	KSI	36.00	4.68	3.58	6.344	228.39	8.248	296.91
11.00	10.0	Flexure	KSI	36.00	6.11	4.62	3.475	125.08	4.504	162.15
11.00	**10.0**	**Shear**	**KIPS**	**542.44**	**66.74**	**83.03**	**3.134**	**112.81**	**4.062**	**146.24**
11.00	10.0	Overload	KSI	36.00	6.11	4.62	4.681	168.51	6.085	219.06
22.00	**20.0**	**Flexure**	**KSI**	**36.00**	**10.91**	**8.13**	**1.536**	**55.28**	**1.991**	**71.66**
22.00	20.0	Shear	KIPS	542.44	50.54	70.90	3.840	138.25	4.978	179.21
22.00	20.0	Overload	KSI	36.00	10.91	8.13	2.204	79.35	2.865	103.15
25.50	**23.2**	**Flexure**	**KSI**	**36.00**	**12.14**	**9.02**	**1.283**	**46.19**	**1.663**	**59.88**
25.50	23.2	Shear	KIPS	542.44	44.91	67.16	4.116	148.19	5.336	192.10
25.50	23.2	Overload	KSI	36.00	12.14	9.02	1.882	67.75	2.447	88.07
33.00	**30.0**	**Flexure**	**KSI**	**36.00**	**11.21**	**8.52**	**1.438**	**51.75**	**1.863**	**67.09**
33.00	30.0	Shear	KIPS	542.44	33.61	59.33	4.802	172.87	6.225	224.09
33.00	30.0	Overload	KSI	36.00	11.21	8.52	2.075	74.70	2.698	97.11
44.00	**40.0**	**Flexure**	**KSI**	**36.00**	**12.83**	**9.67**	**1.142**	**41.12**	**1.481**	**53.30**
44.00	40.0	Shear	KIPS	542.44	17.04	48.31	6.154	221.54	7.977	287.18
44.00	40.0	Overload	KSI	36.00	12.83	9.67	1.699	61.17	2.209	79.53
49.50	**45.0**	**Flexure**	**KSI**	**36.00**	**13.23**	**9.94**	**1.082**	**38.95**	**1.403**	**50.50**
49.50	45.0	Shear	KIPS	542.44	8.29	43.00	7.065	254.34	9.158	329.70
49.50	45.0	Overload	KSI	36.00	13.23	9.94	1.623	58.44	2.110	75.97
55.00	**50.0**	**Flexure**	**KSI**	**36.00**	**13.36**	**9.98**	**1.068**	**38.44**	**1.384**	**49.82**
55.00	50.0	Shear	KIPS	542.44	0.00	-37.83	8.194	294.99	10.622	382.39
55.00	50.0	Overload	KSI	36.00	13.36	9.98	1.606	57.82	2.088	75.17
66.00	**60.0**	**Flexure**	**KSI**	**36.00**	**12.83**	**9.67**	**1.142**	**41.12**	**1.481**	**53.30**

66.00	60.0	Shear	KIPS	542.44	-17.04	-48.31	6.154	221.54	7.977	287.18
66.00	60.0	Overload	KSI	36.00	12.83	9.67	1.699	61.17	2.209	79.53
77.00	**70.0**	**Flexure**	**KSI**	**36.00**	**11.21**	**8.52**	**1.438**	**51.75**	**1.863**	**67.09**
77.00	70.0	Shear	KIPS	542.44	-33.61	-59.33	4.802	172.87	6.225	224.09
77.00	70.0	Overload	KSI	36.00	11.21	8.52	2.075	74.70	2.698	97.11
84.50	**76.8**	**Flexure**	**KSI**	**36.00**	**12.14**	**9.02**	**1.283**	**46.19**	**1.663**	**59.88**
84.50	76.8	Shear	KIPS	542.44	-44.91	-67.16	4.116	148.19	5.336	192.10
84.50	76.8	Overload	KSI	36.00	12.14	9.02	1.882	67.75	2.447	88.07
88.00	**80.0**	**Flexure**	**KSI**	**36.00**	**10.91**	**8.13**	**1.536**	**55.28**	**1.991**	**71.66**
88.00	80.0	Shear	KIPS	542.44	-50.54	-70.90	3.840	138.25	4.978	179.21
88.00	80.0	Overload	KSI	36.00	10.91	8.13	2.204	79.35	2.865	103.15
99.00	90.0	Flexure	KSI	36.00	6.11	4.62	3.475	125.08	4.504	162.15
99.00	**90.0**	**Shear**	**KIPS**	**542.44**	**-66.74**	**-83.03**	**3.134**	**112.81**	**4.062**	**146.24**
99.00	90.0	Overload	KSI	36.00	6.11	4.62	4.681	168.51	6.085	219.06
110.00	100.0	Flexure	KSI	-36.00	-0.00	-0.00	99.000	3564.00	99.000	3564.00
110.00	**100.0**	**Shear**	**KIPS**	**336.32**	**-82.95**	**-95.70**	**1.362**	**49.01**	**1.765**	**63.54**
110.00	100.0	Overload	KSI	-36.00	-0.00	-0.00	99.000	3564.00	99.000	3564.00

Detailed Rating Results
Girder D - As Inspected
HL-93 (US)
Tandem + Lane
Impact: As Requested
Lane: As Requested

Span 1

Location (ft)	Percent	Limit State	Units	Capacity	DL + Adj-LL*	LL	Inventory Rating Factor	Inventory Load Rating (Ton)	Operating Rating Factor	Operating Load Rating (Ton)
0.00	0.0	Flexure	KSI	-36.00	-0.00	-0.00	99.000	3564.00	99.000	3564.00
0.00	**0.0**	**Shear**	**KIPS**	**237.90**	**82.95**	**78.29**	**0.946**	**34.05**	**1.226**	**44.14**
0.00	0.0	Overload	KSI	-36.00	-0.00	-0.00	99.000	3564.00	99.000	3564.00
0.83	0.8	Flexure	KSI	36.00	0.52	0.33	61.610	2217.95	79.864	2875.12
0.83	**0.8**	**Shear**	**KIPS**	**237.90**	**81.73**	**77.49**	**0.967**	**34.83**	**1.254**	**45.15**
0.83	0.8	Overload	KSI	36.00	0.52	0.33	79.074	2846.67	99.000	3564.00

8.00	7.3	Flexure	KSI	36.00	4.68	2.94	5.815	209.34	7.538	271.36
8.00	**7.3**	**Shear**	**KIPS**	**466.86**	**71.16**	**70.68**	**3.023**	**108.84**	**3.919**	**141.09**
8.00	7.3	Overload	KSI	36.00	4.68	2.94	7.722	277.99	10.039	361.39
11.00	10.0	Flexure	KSI	36.00	6.11	3.80	4.222	151.98	5.472	197.01
11.00	**10.0**	**Shear**	**KIPS**	**542.44**	**66.74**	**67.90**	**3.832**	**137.95**	**4.967**	**178.82**
11.00	10.0	Overload	KSI	36.00	6.11	3.80	5.687	204.73	7.393	266.15
22.00	**20.0**	**Flexure**	**KSI**	**36.00**	**10.91**	**6.74**	**1.852**	**66.66**	**2.400**	**86.41**
22.00	20.0	Shear	KIPS	542.44	50.54	58.06	4.690	168.84	6.080	218.87
22.00	20.0	Overload	KSI	36.00	10.91	6.74	2.658	95.67	3.455	124.38
25.50	**23.2**	**Flexure**	**KSI**	**36.00**	**12.14**	**7.50**	**1.543**	**55.53**	**2.000**	**71.99**
25.50	23.2	Shear	KIPS	542.44	44.91	55.04	5.023	180.83	6.512	234.41
25.50	23.2	Overload	KSI	36.00	12.14	7.50	2.263	81.46	2.941	105.89
33.00	**30.0**	**Flexure**	**KSI**	**36.00**	**11.21**	**7.14**	**1.716**	**61.78**	**2.225**	**80.09**
33.00	30.0	Shear	KIPS	542.44	33.61	48.76	5.843	210.34	7.574	272.66
33.00	30.0	Overload	KSI	36.00	11.21	7.14	2.477	89.19	3.221	115.94
44.00	**40.0**	**Flexure**	**KSI**	**36.00**	**12.83**	**8.14**	**1.358**	**48.90**	**1.761**	**63.39**
44.00	40.0	Shear	KIPS	542.44	17.04	40.02	7.429	267.43	9.630	346.67
44.00	40.0	Overload	KSI	36.00	12.83	8.14	2.021	72.75	2.627	94.57
49.50	**45.0**	**Flexure**	**KSI**	**36.00**	**13.23**	**8.37**	**1.284**	**46.24**	**1.665**	**59.94**
49.50	45.0	Shear	KIPS	542.44	8.29	35.85	8.474	305.07	10.985	395.46
49.50	45.0	Overload	KSI	36.00	13.23	8.37	1.927	69.36	2.505	90.17
55.00	**50.0**	**Flexure**	**KSI**	**36.00**	**13.36**	**8.44**	**1.263**	**45.46**	**1.637**	**58.93**
55.00	50.0	Shear	KIPS	542.44	0.00	31.82	9.742	350.70	12.628	454.62
55.00	50.0	Overload	KSI	36.00	13.36	8.44	1.900	68.38	2.469	88.90
66.00	**60.0**	**Flexure**	**KSI**	**36.00**	**12.83**	**8.14**	**1.358**	**48.90**	**1.761**	**63.39**
66.00	60.0	Shear	KIPS	542.44	-17.04	-40.02	7.429	267.43	9.630	346.67
66.00	60.0	Overload	KSI	36.00	12.83	8.14	2.021	72.75	2.627	94.57
77.00	**70.0**	**Flexure**	**KSI**	**36.00**	**11.21**	**7.14**	**1.716**	**61.78**	**2.225**	**80.09**
77.00	70.0	Shear	KIPS	542.44	-33.61	-48.76	5.843	210.34	7.574	272.66
77.00	70.0	Overload	KSI	36.00	11.21	7.14	2.477	89.19	3.221	115.94
84.50	**76.8**	**Flexure**	**KSI**	**36.00**	**12.14**	**7.50**	**1.543**	**55.53**	**2.000**	**71.99**
84.50	76.8	Shear	KIPS	542.44	-44.91	-55.04	5.023	180.83	6.512	234.41
84.50	76.8	Overload	KSI	36.00	12.14	7.50	2.263	81.46	2.941	105.89
88.00	**80.0**	**Flexure**	**KSI**	**36.00**	**10.91**	**6.74**	**1.852**	**66.66**	**2.400**	**86.41**
88.00	80.0	Shear	KIPS	542.44	-50.54	-58.06	4.690	168.84	6.080	218.87
88.00	80.0	Overload	KSI	36.00	10.91	6.74	2.658	95.67	3.455	124.38
99.00	90.0	Flexure	KSI	36.00	6.11	3.80	4.222	151.98	5.472	197.01
99.00	**90.0**	**Shear**	**KIPS**	**542.44**	**-66.74**	**-67.90**	**3.832**	**137.95**	**4.967**	**178.82**
99.00	90.0	Overload	KSI	36.00	6.11	3.80	5.687	204.73	7.393	266.15

110.00	100.0	Flexure	KSI	-36.00	-0.00	-0.00	99.000	3564.00	99.000	3564.00
110.00	**100.0**	**Shear**	**KIPS**	**336.32**	**-82.95**	**-78.29**	**1.664**	**59.91**	**2.157**	**77.66**
110.00	100.0	Overload	KSI	-36.00	-0.00	-0.00	99.000	3564.00	99.000	3564.00

Detailed Rating Results
Girder D - As Inspected
LRFD Fatigue Truck (US)
Axle Load
Impact: As Requested
Lane: As Requested

Span 1

Location (ft)	Percent	Limit State	Units	Capacity	DL + Adj-LL*	LL	Inventory Rating Factor	Inventory Load Rating (Ton)
0.83	0.8	Interaction	KSI	16.00	0.00	0.19	82.285	2468.55
8.00	7.3	Interaction	KSI	16.00	0.00	1.72	9.292	278.76
11.00	10.0	Interaction	KSI	12.00	0.00	2.21	5.428	162.85
22.00	20.0	Interaction	KSI	12.00	0.00	3.82	3.142	94.26
25.50	23.2	Interaction	KSI	16.00	0.00	4.28	3.739	112.17
33.00	30.0	Interaction	KSI	12.00	0.00	3.96	3.034	91.02
44.00	40.0	Interaction	KSI	12.00	0.00	4.42	2.714	81.43
49.50	45.0	Interaction	KSI	12.00	0.00	4.47	2.683	80.48
55.00	50.0	Interaction	KSI	12.00	0.00	4.40	2.725	81.74
66.00	60.0	Interaction	KSI	12.00	0.00	4.42	2.714	81.43
77.00	70.0	Interaction	KSI	12.00	0.00	3.96	3.034	91.02
84.50	76.8	Interaction	KSI	16.00	0.00	4.20	3.805	114.16
88.00	80.0	Interaction	KSI	12.00	0.00	3.82	3.142	94.26
99.00	90.0	Interaction	KSI	12.00	0.00	2.21	5.428	162.85

Detailed Rating Results
Girder D - As Inspected
SU4
Axle Load
Impact: As Requested
Lane: As Requested

Span 1

Legal **Legal**

Location (ft)	Percent	Limit State	Units	Capacity	DL + Adj -LL*	LL	Rating Factor	Load Rating (Ton)
0.00	0.0	Flexure	KSI	-36.00	-0.00	-0.00	99.000	2673.00
0.00	**0.0**	**Shear**	**KIPS**	**237.90**	**82.95**	**47.53**	**2.097**	**56.63**
0.00	0.0	Overload	KSI	-36.00	-0.00	-0.00	99.000	2673.00
0.83	0.8	Flexure	KSI	-35.13	-0.61	-0.05	99.000	2673.00
0.83	**0.8**	**Shear**	**KIPS**	**237.90**	**81.73**	**47.15**	**2.141**	**57.79**
0.83	0.8	Overload	KSI	-36.00	-0.61	-0.05	99.000	2673.00
8.00	7.3	Flexure	KSI	36.00	4.68	1.78	12.946	349.54
8.00	**7.3**	**Shear**	**KIPS**	**466.86**	**71.16**	**43.85**	**6.559**	**177.10**
8.00	7.3	Overload	KSI	36.00	4.68	1.78	12.771	344.81
11.00	10.0	Flexure	KSI	36.00	6.11	2.29	9.414	254.18
11.00	**10.0**	**Shear**	**KIPS**	**542.44**	**66.74**	**42.48**	**8.245**	**222.63**
11.00	10.0	Overload	KSI	36.00	6.11	2.29	9.421	254.37
22.00	**20.0**	**Flexure**	**KSI**	**36.00**	**10.91**	**4.04**	**4.158**	**112.28**
22.00	20.0	Shear	KIPS	542.44	50.54	37.43	9.793	264.41
22.00	20.0	Overload	KSI	36.00	10.91	4.04	4.434	119.71
25.50	**23.2**	**Flexure**	**KSI**	**36.00**	**12.14**	**4.48**	**3.474**	**93.79**
25.50	23.2	Shear	KIPS	542.44	44.91	35.82	10.389	280.51
25.50	23.2	Overload	KSI	36.00	12.14	4.48	3.785	102.19
33.00	**30.0**	**Flexure**	**KSI**	**36.00**	**11.21**	**4.24**	**3.890**	**105.03**
33.00	30.0	Shear	KIPS	542.44	33.61	32.38	11.844	319.79
33.00	30.0	Overload	KSI	36.00	11.21	4.24	4.171	112.62
44.00	**40.0**	**Flexure**	**KSI**	**36.00**	**12.83**	**4.84**	**3.073**	**82.98**
44.00	40.0	Shear	KIPS	542.44	17.04	27.33	14.641	395.30
44.00	40.0	Overload	KSI	36.00	12.83	4.84	3.397	91.71
49.50	**45.0**	**Flexure**	**KSI**	**36.00**	**13.23**	**4.98**	**2.907**	**78.48**
49.50	45.0	Shear	KIPS	542.44	8.29	24.81	16.484	445.07
49.50	45.0	Overload	KSI	36.00	13.23	4.98	3.239	87.46
55.00	**50.0**	**Flexure**	**KSI**	**36.00**	**13.36**	**5.01**	**2.863**	**77.29**
55.00	50.0	Shear	KIPS	542.44	0.00	22.28	18.725	505.57
55.00	50.0	Overload	KSI	36.00	13.36	5.01	3.199	86.38
66.00	**60.0**	**Flexure**	**KSI**	**36.00**	**12.83**	**4.84**	**3.073**	**82.98**
66.00	60.0	Shear	KIPS	542.44	-17.04	-27.33	14.641	395.30
66.00	60.0	Overload	KSI	36.00	12.83	4.84	3.397	91.71
77.00	**70.0**	**Flexure**	**KSI**	**36.00**	**11.21**	**4.24**	**3.890**	**105.03**
77.00	70.0	Shear	KIPS	542.44	-33.61	-32.38	11.844	319.79
77.00	70.0	Overload	KSI	36.00	11.21	4.24	4.171	112.62
84.50	**76.8**	**Flexure**	**KSI**	**36.00**	**12.14**	**4.48**	**3.474**	**93.79**
84.50	76.8	Shear	KIPS	542.44	-44.91	-35.82	10.389	280.51
84.50	76.8	Overload	KSI	36.00	12.14	4.48	3.785	102.19

88.00	**80.0**	**Flexure**	**KSI**	**36.00**	**10.91**	**4.04**	**4.158**	**112.28**
88.00	80.0	Shear	KIPS	542.44	-50.54	-37.43	9.793	264.41
88.00	80.0	Overload	KSI	36.00	10.91	4.04	4.434	119.71
99.00	90.0	Flexure	KSI	36.00	6.11	2.29	9.414	254.18
99.00	**90.0**	**Shear**	**KIPS**	**542.44**	**-66.74**	**-42.48**	**8.245**	**222.63**
99.00	90.0	Overload	KSI	36.00	6.11	2.29	9.421	254.37
110.00	100.0	Flexure	KSI	-36.00	-0.00	-0.00	99.000	2673.00
110.00	**100.0**	**Shear**	**KIPS**	**336.32**	**-82.95**	**-47.53**	**3.691**	**99.64**
110.00	100.0	Overload	KSI	-36.00	-0.00	-0.00	99.000	2673.00

Detailed Rating Results
Girder D - As Inspected
SU5
Axle Load
Impact: As Requested
Lane: As Requested

Span 1

Location (ft)	Percent	Limit State	Units	Capacity	DL + Adj -LL*	LL	Legal Rating Factor	Legal Load Rating (Ton)
0.00	0.0	Flexure	KSI	-36.00	-0.00	-0.00	99.000	3069.00
0.00	**0.0**	**Shear**	**KIPS**	**237.90**	**82.95**	**53.78**	**1.854**	**57.46**
0.00	0.0	Overload	KSI	-36.00	-0.00	-0.00	99.000	3069.00
0.83	0.8	Flexure	KSI	-35.27	-0.61	-0.06	99.000	3069.00
0.83	**0.8**	**Shear**	**KIPS**	**237.90**	**81.73**	**53.34**	**1.892**	**58.64**
0.83	0.8	Overload	KSI	-36.00	-0.61	-0.06	99.000	3069.00
8.00	7.3	Flexure	KSI	36.00	4.68	2.01	11.454	355.08
8.00	**7.3**	**Shear**	**KIPS**	**466.86**	**71.16**	**49.57**	**5.804**	**179.91**
8.00	7.3	Overload	KSI	36.00	4.68	2.01	11.299	350.28
11.00	10.0	Flexure	KSI	36.00	6.11	2.59	8.334	258.34
11.00	**10.0**	**Shear**	**KIPS**	**542.44**	**66.74**	**47.98**	**7.299**	**226.27**
11.00	10.0	Overload	KSI	36.00	6.11	2.59	8.340	258.53
22.00	**20.0**	**Flexure**	**KSI**	**36.00**	**10.91**	**4.56**	**3.689**	**114.37**
22.00	20.0	Shear	KIPS	542.44	50.54	42.19	8.688	269.33
22.00	20.0	Overload	KSI	36.00	10.91	4.56	3.934	121.94
25.50	**23.2**	**Flexure**	**KSI**	**36.00**	**12.14**	**5.05**	**3.084**	**95.62**
25.50	23.2	Shear	KIPS	542.44	44.91	40.34	9.225	285.97
25.50	23.2	Overload	KSI	36.00	12.14	5.05	3.361	104.18
33.00	**30.0**	**Flexure**	**KSI**	**36.00**	**11.21**	**4.79**	**3.444**	**106.76**
33.00	30.0	Shear	KIPS	542.44	33.61	36.39	10.539	326.69

33.00	30.0	Overload	KSI	36.00	11.21	4.79	3.693	114.48
44.00	**40.0**	**Flexure**	**KSI**	**36.00**	**12.83**	**5.46**	**2.726**	**84.50**
44.00	40.0	Shear	KIPS	542.44	17.04	30.60	13.079	405.45
44.00	40.0	Overload	KSI	36.00	12.83	5.46	3.012	93.38
49.50	**45.0**	**Flexure**	**KSI**	**36.00**	**13.23**	**5.60**	**2.585**	**80.12**
49.50	45.0	Shear	KIPS	542.44	8.29	27.70	14.764	457.69
49.50	45.0	Overload	KSI	36.00	13.23	5.60	2.880	89.28
55.00	**50.0**	**Flexure**	**KSI**	**36.00**	**13.36**	**5.62**	**2.553**	**79.13**
55.00	50.0	Shear	KIPS	542.44	0.00	24.80	16.825	521.58
55.00	50.0	Overload	KSI	36.00	13.36	5.62	2.853	88.44
66.00	**60.0**	**Flexure**	**KSI**	**36.00**	**12.83**	**5.46**	**2.726**	**84.50**
66.00	60.0	Shear	KIPS	542.44	-17.04	-30.60	13.079	405.45
66.00	60.0	Overload	KSI	36.00	12.83	5.46	3.012	93.38
77.00	**70.0**	**Flexure**	**KSI**	**36.00**	**11.21**	**4.79**	**3.444**	**106.76**
77.00	70.0	Shear	KIPS	542.44	-33.61	-36.39	10.539	326.69
77.00	70.0	Overload	KSI	36.00	11.21	4.79	3.693	114.48
84.50	**76.8**	**Flexure**	**KSI**	**36.00**	**12.14**	**5.05**	**3.084**	**95.62**
84.50	76.8	Shear	KIPS	542.44	-44.91	-40.34	9.225	285.97
84.50	76.8	Overload	KSI	36.00	12.14	5.05	3.361	104.18
88.00	**80.0**	**Flexure**	**KSI**	**36.00**	**10.91**	**4.56**	**3.689**	**114.37**
88.00	80.0	Shear	KIPS	542.44	-50.54	-42.19	8.688	269.33
88.00	80.0	Overload	KSI	36.00	10.91	4.56	3.934	121.94
99.00	90.0	Flexure	KSI	36.00	6.11	2.59	8.334	258.34
99.00	**90.0**	**Shear**	**KIPS**	**542.44**	**-66.74**	**-47.98**	**7.299**	**226.27**
99.00	90.0	Overload	KSI	36.00	6.11	2.59	8.340	258.53
110.00	100.0	Flexure	KSI	-36.00	-0.00	-0.00	99.000	3069.00
110.00	**100.0**	**Shear**	**KIPS**	**336.32**	**-82.95**	**-53.78**	**3.261**	**101.10**
110.00	100.0	Overload	KSI	-36.00	-0.00	-0.00	99.000	3069.00

Detailed Rating Results
Girder D - As Inspected
SU6
Axle Load
Impact: As Requested
Lane: As Requested

Span 1

Location (ft)	Percent	Limit State	Units	Capacity	DL + Adj -LL*	LL	Legal Rating Factor	Legal Load Rating (Ton)
0.00	0.0	Flexure	KSI	-36.00	-0.00	-0.00	99.000	3440.25

0.00	**0.0**	**Shear**	**KIPS**	**237.90**	**82.95**	**58.80**	**1.695**	**58.92**
0.00	0.0	Overload	KSI	-36.00	-0.00	-0.00	99.000	3440.25
0.83	0.8	Flexure	KSI	-35.37	-0.61	-0.07	99.000	3440.25
0.83	**0.8**	**Shear**	**KIPS**	**237.90**	**81.73**	**58.31**	**1.731**	**60.15**
0.83	0.8	Overload	KSI	-36.00	-0.61	-0.07	99.000	3440.25
8.00	7.3	Flexure	KSI	36.00	4.68	2.19	10.500	364.87
8.00	**7.3**	**Shear**	**KIPS**	**466.86**	**71.16**	**54.07**	**5.320**	**184.87**
8.00	7.3	Overload	KSI	36.00	4.68	2.19	10.358	359.94
11.00	10.0	Flexure	KSI	36.00	6.11	2.82	7.646	265.71
11.00	**10.0**	**Shear**	**KIPS**	**542.44**	**66.74**	**52.30**	**6.697**	**232.72**
11.00	10.0	Overload	KSI	36.00	6.11	2.82	7.652	265.91
22.00	**20.0**	**Flexure**	**KSI**	**36.00**	**10.91**	**5.05**	**3.326**	**115.56**
22.00	20.0	Shear	KIPS	542.44	50.54	45.80	8.003	278.10
22.00	20.0	Overload	KSI	36.00	10.91	5.05	3.546	123.21
25.50	**23.2**	**Flexure**	**KSI**	**36.00**	**12.14**	**5.62**	**2.770**	**96.26**
25.50	23.2	Shear	KIPS	542.44	44.91	43.73	8.510	295.72
25.50	23.2	Overload	KSI	36.00	12.14	5.62	3.018	104.88
33.00	**30.0**	**Flexure**	**KSI**	**36.00**	**11.21**	**5.34**	**3.090**	**107.39**
33.00	30.0	Shear	KIPS	542.44	33.61	39.30	9.758	339.09
33.00	30.0	Overload	KSI	36.00	11.21	5.34	3.314	115.15
44.00	**40.0**	**Flexure**	**KSI**	**36.00**	**12.83**	**6.06**	**2.454**	**85.26**
44.00	40.0	Shear	KIPS	542.44	17.04	32.81	12.198	423.88
44.00	40.0	Overload	KSI	36.00	12.83	6.06	2.712	94.23
49.50	**45.0**	**Flexure**	**KSI**	**36.00**	**13.23**	**6.24**	**2.319**	**80.58**
49.50	45.0	Shear	KIPS	542.44	8.29	29.56	13.836	480.79
49.50	45.0	Overload	KSI	36.00	13.23	6.24	2.584	89.80
55.00	**50.0**	**Flexure**	**KSI**	**36.00**	**13.36**	**6.28**	**2.283**	**79.35**
55.00	50.0	Shear	KIPS	542.44	0.00	-26.31	15.860	551.15
55.00	50.0	Overload	KSI	36.00	13.36	6.28	2.552	88.67
66.00	**60.0**	**Flexure**	**KSI**	**36.00**	**12.83**	**6.06**	**2.454**	**85.26**
66.00	60.0	Shear	KIPS	542.44	-17.04	-32.81	12.198	423.88
66.00	60.0	Overload	KSI	36.00	12.83	6.06	2.712	94.23
77.00	**70.0**	**Flexure**	**KSI**	**36.00**	**11.21**	**5.34**	**3.090**	**107.39**
77.00	70.0	Shear	KIPS	542.44	-33.61	-39.30	9.758	339.09
77.00	70.0	Overload	KSI	36.00	11.21	5.34	3.314	115.15
84.50	**76.8**	**Flexure**	**KSI**	**36.00**	**12.14**	**5.62**	**2.770**	**96.26**
84.50	76.8	Shear	KIPS	542.44	-44.91	-43.73	8.510	295.72
84.50	76.8	Overload	KSI	36.00	12.14	5.62	3.018	104.88
88.00	**80.0**	**Flexure**	**KSI**	**36.00**	**10.91**	**5.05**	**3.326**	**115.56**
88.00	80.0	Shear	KIPS	542.44	-50.54	-45.80	8.003	278.10
88.00	80.0	Overload	KSI	36.00	10.91	5.05	3.546	123.21
99.00	90.0	Flexure	KSI	36.00	6.11	2.82	7.646	265.71
99.00	**90.0**	**Shear**	**KIPS**	**542.44**	**-66.74**	**-52.30**	**6.697**	**232.72**

99.00	90.0	Overload	KSI	36.00	6.11	2.82	7.652	265.91
110.00	100.0	Flexure	KSI	-36.00	-0.00	-0.00	99.000	3440.25
110.00	**100.0**	**Shear**	**KIPS**	**336.32**	**-82.95**	**-58.80**	**2.983**	**103.67**
110.00	100.0	Overload	KSI	-36.00	-0.00	-0.00	99.000	3440.25

Detailed Rating Results
Girder D - As Inspected
SU7
Axle Load
Impact: As Requested
Lane: As Requested

Span 1

Location (ft)	Percent	Limit State	Units	Capacity	DL + Adj -LL*	LL	Legal Rating Factor	Legal Load Rating (Ton)
0.00	0.0	Flexure	KSI	-36.00	-0.00	-0.00	99.000	3836.25
0.00	**0.0**	**Shear**	**KIPS**	**237.90**	**82.95**	**63.91**	**1.560**	**60.44**
0.00	0.0	Overload	KSI	-36.00	-0.00	-0.00	99.000	3836.25
0.83	0.8	Flexure	KSI	-35.47	-0.61	-0.07	99.000	3836.25
0.83	**0.8**	**Shear**	**KIPS**	**237.90**	**81.73**	**63.37**	**1.593**	**61.71**
0.83	0.8	Overload	KSI	36.00	0.52	0.27	96.953	3756.95
8.00	7.3	Flexure	KSI	36.00	4.68	2.38	9.681	375.15
8.00	**7.3**	**Shear**	**KIPS**	**466.86**	**71.16**	**58.64**	**4.905**	**190.08**
8.00	7.3	Overload	KSI	36.00	4.68	2.38	9.550	370.08
11.00	10.0	Flexure	KSI	36.00	6.11	3.06	7.057	273.45
11.00	**10.0**	**Shear**	**KIPS**	**542.44**	**66.74**	**56.67**	**6.181**	**239.51**
11.00	10.0	Overload	KSI	36.00	6.11	3.06	7.062	273.65
22.00	**20.0**	**Flexure**	**KSI**	**36.00**	**10.91**	**5.47**	**3.070**	**118.97**
22.00	20.0	Shear	KIPS	542.44	50.54	49.42	7.417	287.39
22.00	20.0	Overload	KSI	36.00	10.91	5.47	3.273	126.85
25.50	**23.2**	**Flexure**	**KSI**	**36.00**	**12.14**	**6.12**	**2.547**	**98.68**
25.50	23.2	Shear	KIPS	542.44	44.91	47.12	7.899	306.09
25.50	23.2	Overload	KSI	36.00	12.14	6.12	2.775	107.52
33.00	**30.0**	**Flexure**	**KSI**	**36.00**	**11.21**	**5.86**	**2.816**	**109.13**
33.00	30.0	Shear	KIPS	542.44	33.61	42.18	9.093	352.37
33.00	30.0	Overload	KSI	36.00	11.21	5.86	3.020	117.02
44.00	**40.0**	**Flexure**	**KSI**	**36.00**	**12.83**	**6.66**	**2.233**	**86.52**
44.00	40.0	Shear	KIPS	542.44	17.04	34.93	11.456	443.92
44.00	40.0	Overload	KSI	36.00	12.83	6.66	2.468	95.62
49.50	**45.0**	**Flexure**	**KSI**	**36.00**	**13.23**	**6.86**	**2.112**	**81.83**

49.50	45.0	Shear	KIPS	542.44	8.29	31.31	13.062	506.15
49.50	45.0	Overload	KSI	36.00	13.23	6.86	2.353	91.19
55.00	**50.0**	**Flexure**	**KSI**	**36.00**	**13.36**	**6.92**	**2.073**	**80.32**
55.00	50.0	Shear	KIPS	542.44	0.00	-27.69	15.072	584.03
55.00	50.0	Overload	KSI	36.00	13.36	6.92	2.317	89.76
66.00	**60.0**	**Flexure**	**KSI**	**36.00**	**12.83**	**6.66**	**2.233**	**86.52**
66.00	60.0	Shear	KIPS	542.44	-17.04	-34.93	11.456	443.92
66.00	60.0	Overload	KSI	36.00	12.83	6.66	2.468	95.62
77.00	**70.0**	**Flexure**	**KSI**	**36.00**	**11.21**	**5.86**	**2.816**	**109.13**
77.00	70.0	Shear	KIPS	542.44	-33.61	-42.18	9.093	352.37
77.00	70.0	Overload	KSI	36.00	11.21	5.86	3.020	117.02
84.50	**76.8**	**Flexure**	**KSI**	**36.00**	**12.14**	**6.12**	**2.547**	**98.68**
84.50	76.8	Shear	KIPS	542.44	-44.91	-47.12	7.899	306.09
84.50	76.8	Overload	KSI	36.00	12.14	6.12	2.775	107.52
88.00	**80.0**	**Flexure**	**KSI**	**36.00**	**10.91**	**5.47**	**3.070**	**118.97**
88.00	80.0	Shear	KIPS	542.44	-50.54	-49.42	7.417	287.39
88.00	80.0	Overload	KSI	36.00	10.91	5.47	3.273	126.85
99.00	90.0	Flexure	KSI	36.00	6.11	3.06	7.057	273.45
99.00	**90.0**	**Shear**	**KIPS**	**542.44**	**-66.74**	**-56.67**	**6.181**	**239.51**
99.00	90.0	Overload	KSI	36.00	6.11	3.06	7.062	273.65
110.00	100.0	Flexure	KSI	-36.00	-0.00	-0.00	99.000	3836.25
110.00	**100.0**	**Shear**	**KIPS**	**336.32**	**-82.95**	**-63.91**	**2.744**	**106.34**
110.00	100.0	Overload	KSI	-36.00	-0.00	-0.00	99.000	3836.25

Detailed Rating Results
Girder D - As Inspected
Type 3
Axle Load
Impact: As Requested
Lane: As Requested

Span 1

Location (ft)	Percent	Limit State	Units	Capacity	DL + Adj -LL*	LL	Legal Rating Factor	Legal Load Rating (Ton)
0.00	0.0	Flexure	KSI	-36.00	-0.00	-0.00	99.000	2475.00
0.00	**0.0**	**Shear**	**KIPS**	**237.90**	**82.95**	**43.58**	**2.287**	**57.18**
0.00	0.0	Overload	KSI	-36.00	-0.00	-0.00	99.000	2475.00
0.83	0.8	Flexure	KSI	-35.03	-0.61	-0.05	99.000	2475.00
0.83	**0.8**	**Shear**	**KIPS**	**237.90**	**81.73**	**43.23**	**2.334**	**58.36**
0.83	0.8	Overload	KSI	-36.00	-0.61	-0.05	99.000	2475.00

8.00	7.3	Flexure	KSI	36.00	4.68	1.63	14.129	353.22
8.00	**7.3**	**Shear**	**KIPS**	**466.86**	**71.16**	**40.18**	**7.159**	**178.97**
8.00	7.3	Overload	KSI	36.00	4.68	1.63	13.938	348.44
11.00	10.0	Flexure	KSI	36.00	6.11	2.10	10.278	256.94
11.00	**10.0**	**Shear**	**KIPS**	**542.44**	**66.74**	**38.91**	**9.002**	**225.05**
11.00	10.0	Overload	KSI	36.00	6.11	2.10	10.285	257.13
22.00	**20.0**	**Flexure**	**KSI**	**36.00**	**10.91**	**3.70**	**4.547**	**113.67**
22.00	20.0	Shear	KIPS	542.44	50.54	34.23	10.707	267.67
22.00	20.0	Overload	KSI	36.00	10.91	3.70	4.848	121.19
25.50	**23.2**	**Flexure**	**KSI**	**36.00**	**12.14**	**4.10**	**3.800**	**95.00**
25.50	23.2	Shear	KIPS	542.44	44.91	32.75	11.365	284.13
25.50	23.2	Overload	KSI	36.00	12.14	4.10	4.140	103.51
33.00	**30.0**	**Flexure**	**KSI**	**36.00**	**11.21**	**3.87**	**4.261**	**106.53**
33.00	30.0	Shear	KIPS	542.44	33.61	29.56	12.975	324.37
33.00	30.0	Overload	KSI	36.00	11.21	3.87	4.569	114.24
44.00	**40.0**	**Flexure**	**KSI**	**36.00**	**12.83**	**4.39**	**3.389**	**84.73**
44.00	40.0	Shear	KIPS	542.44	17.04	24.88	16.081	402.02
44.00	40.0	Overload	KSI	36.00	12.83	4.39	3.746	93.64
49.50	**45.0**	**Flexure**	**KSI**	**36.00**	**13.23**	**4.51**	**3.210**	**80.25**
49.50	45.0	Shear	KIPS	542.44	8.29	22.55	18.137	453.42
49.50	45.0	Overload	KSI	36.00	13.23	4.51	3.577	89.43
55.00	**50.0**	**Flexure**	**KSI**	**36.00**	**13.36**	**4.53**	**3.167**	**79.18**
55.00	50.0	Shear	KIPS	542.44	0.00	20.21	20.646	516.15
55.00	50.0	Overload	KSI	36.00	13.36	4.53	3.540	88.49
66.00	**60.0**	**Flexure**	**KSI**	**36.00**	**12.83**	**4.39**	**3.389**	**84.73**
66.00	60.0	Shear	KIPS	542.44	-17.04	-24.88	16.081	402.02
66.00	60.0	Overload	KSI	36.00	12.83	4.39	3.746	93.64
77.00	**70.0**	**Flexure**	**KSI**	**36.00**	**11.21**	**3.87**	**4.261**	**106.53**
77.00	70.0	Shear	KIPS	542.44	-33.61	-29.56	12.975	324.37
77.00	70.0	Overload	KSI	36.00	11.21	3.87	4.569	114.24
84.50	**76.8**	**Flexure**	**KSI**	**36.00**	**12.14**	**4.10**	**3.800**	**95.00**
84.50	76.8	Shear	KIPS	542.44	-44.91	-32.75	11.365	284.13
84.50	76.8	Overload	KSI	36.00	12.14	4.10	4.140	103.51
88.00	**80.0**	**Flexure**	**KSI**	**36.00**	**10.91**	**3.70**	**4.547**	**113.67**
88.00	80.0	Shear	KIPS	542.44	-50.54	-34.23	10.707	267.67
88.00	80.0	Overload	KSI	36.00	10.91	3.70	4.848	121.19
99.00	90.0	Flexure	KSI	36.00	6.11	2.10	10.278	256.94
99.00	**90.0**	**Shear**	**KIPS**	**542.44**	**-66.74**	**-38.91**	**9.002**	**225.05**
99.00	90.0	Overload	KSI	36.00	6.11	2.10	10.285	257.13
110.00	100.0	Flexure	KSI	-36.00	-0.00	-0.00	99.000	2475.00
110.00	**100.0**	**Shear**	**KIPS**	**336.32**	**-82.95**	**-43.58**	**4.024**	**100.61**
110.00	100.0	Overload	KSI	-36.00	-0.00	-0.00	99.000	2475.00

Detailed Rating Results
Girder D - As Inspected
Type 3-3
Axle Load
Impact: As Requested
Lane: As Requested

Span 1

Location (ft)	Percent	Limit State	Units	Capacity	DL + Adj -LL*	LL	Legal Rating Factor	Legal Load Rating (Ton)
0.00	0.0	Flexure	KSI	-36.00	-0.00	-0.00	99.000	3960.00
0.00	**0.0**	**Shear**	**KIPS**	**237.90**	**82.95**	**58.54**	**1.703**	**68.11**
0.00	0.0	Overload	KSI	-36.00	-0.00	-0.00	99.000	3960.00
0.83	0.8	Flexure	KSI	-35.36	-0.61	-0.07	99.000	3960.00
0.83	**0.8**	**Shear**	**KIPS**	**237.90**	**81.73**	**57.98**	**1.741**	**69.62**
0.83	0.8	Overload	KSI	-36.00	-0.61	-0.07	99.000	3960.00
8.00	7.3	Flexure	KSI	36.00	4.68	2.15	10.691	427.66
8.00	**7.3**	**Shear**	**KIPS**	**466.86**	**71.16**	**53.10**	**5.417**	**216.69**
8.00	7.3	Overload	KSI	36.00	4.68	2.15	10.547	421.88
11.00	10.0	Flexure	KSI	36.00	6.11	2.76	7.831	313.26
11.00	**10.0**	**Shear**	**KIPS**	**542.44**	**66.74**	**51.06**	**6.859**	**274.37**
11.00	10.0	Overload	KSI	36.00	6.11	2.76	7.837	313.49
22.00	**20.0**	**Flexure**	**KSI**	**36.00**	**10.91**	**4.74**	**3.544**	**141.75**
22.00	20.0	Shear	KIPS	542.44	50.54	43.58	8.410	336.41
22.00	20.0	Overload	KSI	36.00	10.91	4.74	3.778	151.13
25.50	**23.2**	**Flexure**	**KSI**	**36.00**	**12.14**	**5.24**	**2.972**	**118.88**
25.50	23.2	Shear	KIPS	542.44	44.91	41.20	9.033	361.31
25.50	23.2	Overload	KSI	36.00	12.14	5.24	3.238	129.53
33.00	**30.0**	**Flexure**	**KSI**	**36.00**	**11.21**	**4.88**	**3.383**	**135.31**
33.00	30.0	Shear	KIPS	542.44	33.61	36.10	10.623	424.92
33.00	30.0	Overload	KSI	36.00	11.21	4.88	3.627	145.09
44.00	**40.0**	**Flexure**	**KSI**	**36.00**	**12.83**	**5.50**	**2.704**	**108.14**
44.00	40.0	Shear	KIPS	542.44	17.04	28.62	13.980	559.20
44.00	40.0	Overload	KSI	36.00	12.83	5.50	2.988	119.52
49.50	**45.0**	**Flexure**	**KSI**	**36.00**	**13.23**	**5.69**	**2.545**	**101.80**
49.50	45.0	Shear	KIPS	542.44	8.29	24.88	16.433	657.33
49.50	45.0	Overload	KSI	36.00	13.23	5.69	2.836	113.44
55.00	**50.0**	**Flexure**	**KSI**	**36.00**	**13.36**	**5.71**	**2.511**	**100.45**
55.00	50.0	Shear	KIPS	542.44	0.00	21.15	19.733	789.33

55.00	50.0	Overload	KSI	36.00	13.36	5.71	2.807	112.26
66.00	**60.0**	**Flexure**	**KSI**	**36.00**	**12.83**	**5.50**	**2.704**	**108.14**
66.00	60.0	Shear	KIPS	542.44	-17.04	-28.62	13.980	559.20
66.00	60.0	Overload	KSI	36.00	12.83	5.50	2.988	119.52
77.00	**70.0**	**Flexure**	**KSI**	**36.00**	**11.21**	**4.88**	**3.383**	**135.31**
77.00	70.0	Shear	KIPS	542.44	-33.61	-36.10	10.623	424.92
77.00	70.0	Overload	KSI	36.00	11.21	4.88	3.627	145.09
84.50	**76.8**	**Flexure**	**KSI**	**36.00**	**12.14**	**5.24**	**2.972**	**118.88**
84.50	76.8	Shear	KIPS	542.44	-44.91	-41.20	9.033	361.31
84.50	76.8	Overload	KSI	36.00	12.14	5.24	3.238	129.53
88.00	**80.0**	**Flexure**	**KSI**	**36.00**	**10.91**	**4.74**	**3.544**	**141.75**
88.00	80.0	Shear	KIPS	542.44	-50.54	-43.58	8.410	336.41
88.00	80.0	Overload	KSI	36.00	10.91	4.74	3.778	151.13
99.00	90.0	Flexure	KSI	36.00	6.11	2.76	7.831	313.26
99.00	**90.0**	**Shear**	**KIPS**	**542.44**	**-66.74**	**-51.06**	**6.859**	**274.37**
99.00	90.0	Overload	KSI	36.00	6.11	2.76	7.837	313.49
110.00	100.0	Flexure	KSI	-36.00	-0.00	-0.00	99.000	3960.00
110.00	**100.0**	**Shear**	**KIPS**	**336.32**	**-82.95**	**-58.54**	**2.996**	**119.85**
110.00	100.0	Overload	KSI	-36.00	-0.00	-0.00	99.000	3960.00

Detailed Rating Results
Girder D - As Inspected
Type 3S2
Axle Load
Impact: As Requested
Lane: As Requested

Span 1

Location (ft)	Percent	Limit State	Units	Capacity	DL + Adj -LL*	LL	Legal Rating Factor	Legal Load Rating (Ton)
0.00	0.0	Flexure	KSI	-36.00	-0.00	-0.00	99.000	3564.00
0.00	**0.0**	**Shear**	**KIPS**	**237.90**	**82.95**	**55.92**	**1.783**	**64.17**
0.00	0.0	Overload	KSI	-36.00	-0.00	-0.00	99.000	3564.00
0.83	0.8	Flexure	KSI	-35.31	-0.61	-0.06	99.000	3564.00
0.83	**0.8**	**Shear**	**KIPS**	**237.90**	**81.73**	**55.42**	**1.821**	**65.56**
0.83	0.8	Overload	KSI	-36.00	-0.61	-0.06	99.000	3564.00
8.00	7.3	Flexure	KSI	36.00	4.68	2.07	11.126	400.53
8.00	**7.3**	**Shear**	**KIPS**	**466.86**	**71.16**	**51.03**	**5.637**	**202.94**
8.00	7.3	Overload	KSI	36.00	4.68	2.07	10.976	395.12
11.00	10.0	Flexure	KSI	36.00	6.11	2.66	8.129	292.65

11.00	**10.0**	**Shear**	**KIPS**	**542.44**	**66.74**	**49.19**	**7.120**	**256.32**
11.00	10.0	Overload	KSI	36.00	6.11	2.66	8.135	292.87
22.00	**20.0**	**Flexure**	**KSI**	**36.00**	**10.91**	**4.58**	**3.666**	**131.96**
22.00	20.0	Shear	KIPS	542.44	50.54	42.46	8.632	310.77
22.00	20.0	Overload	KSI	36.00	10.91	4.58	3.908	140.70
25.50	**23.2**	**Flexure**	**KSI**	**36.00**	**12.14**	**5.09**	**3.057**	**110.05**
25.50	23.2	Shear	KIPS	542.44	44.91	40.32	9.231	332.31
25.50	23.2	Overload	KSI	36.00	12.14	5.09	3.331	119.91
33.00	**30.0**	**Flexure**	**KSI**	**36.00**	**11.21**	**4.85**	**3.401**	**122.45**
33.00	30.0	Shear	KIPS	542.44	33.61	35.73	10.734	386.43
33.00	30.0	Overload	KSI	36.00	11.21	4.85	3.647	131.30
44.00	**40.0**	**Flexure**	**KSI**	**36.00**	**12.83**	**5.48**	**2.717**	**97.80**
44.00	40.0	Shear	KIPS	542.44	17.04	29.00	13.800	496.79
44.00	40.0	Overload	KSI	36.00	12.83	5.48	3.003	108.09
49.50	**45.0**	**Flexure**	**KSI**	**36.00**	**13.23**	**5.60**	**2.587**	**93.13**
49.50	45.0	Shear	KIPS	542.44	8.29	25.63	15.954	574.34
49.50	45.0	Overload	KSI	36.00	13.23	5.60	2.883	103.78
55.00	**50.0**	**Flexure**	**KSI**	**36.00**	**13.36**	**5.57**	**2.575**	**92.69**
55.00	50.0	Shear	KIPS	542.44	0.00	-22.27	18.739	674.60
55.00	50.0	Overload	KSI	36.00	13.36	5.57	2.878	103.59
66.00	**60.0**	**Flexure**	**KSI**	**36.00**	**12.83**	**5.48**	**2.717**	**97.80**
66.00	60.0	Shear	KIPS	542.44	-17.04	-29.00	13.800	496.79
66.00	60.0	Overload	KSI	36.00	12.83	5.48	3.003	108.09
77.00	**70.0**	**Flexure**	**KSI**	**36.00**	**11.21**	**4.85**	**3.401**	**122.45**
77.00	70.0	Shear	KIPS	542.44	-33.61	-35.73	10.734	386.43
77.00	70.0	Overload	KSI	36.00	11.21	4.85	3.647	131.30
84.50	**76.8**	**Flexure**	**KSI**	**36.00**	**12.14**	**5.09**	**3.057**	**110.05**
84.50	76.8	Shear	KIPS	542.44	-44.91	-40.32	9.231	332.31
84.50	76.8	Overload	KSI	36.00	12.14	5.09	3.331	119.91
88.00	**80.0**	**Flexure**	**KSI**	**36.00**	**10.91**	**4.58**	**3.666**	**131.96**
88.00	80.0	Shear	KIPS	542.44	-50.54	-42.46	8.632	310.77
88.00	80.0	Overload	KSI	36.00	10.91	4.58	3.908	140.70
99.00	90.0	Flexure	KSI	36.00	6.11	2.66	8.129	292.65
99.00	**90.0**	**Shear**	**KIPS**	**542.44**	**-66.74**	**-49.19**	**7.120**	**256.32**
99.00	90.0	Overload	KSI	36.00	6.11	2.66	8.135	292.87
110.00	100.0	Flexure	KSI	-36.00	-0.00	-0.00	99.000	3564.00
110.00	**100.0**	**Shear**	**KIPS**	**336.32**	**-82.95**	**-55.92**	**3.136**	**112.91**
110.00	100.0	Overload	KSI	-36.00	-0.00	-0.00	99.000	3564.00

Detailed Rating Results
Girder D - As Inspected
RI-3
Axle Load

D492

Impact: As Requested
Lane: As Requested

Span 1

Location (ft)	Percent	Limit State	Units	Capacity	DL + Adj -LL*	LL	Permit Rating Factor	Permit Load Rating (Ton)
0.00	0.0	Flexure	KSI	-36.00	-0.00	-0.00	99.000	3762.00
0.00	**0.0**	**Shear**	**KIPS**	**237.90**	**82.95**	**67.25**	**1.629**	**61.89**
0.00	0.0	Overload	KSI	-36.00	-0.00	-0.00	99.000	3762.00
0.83	0.8	Flexure	KSI	-35.42	-0.61	-0.08	99.000	3762.00
0.83	**0.8**	**Shear**	**KIPS**	**237.90**	**81.73**	**66.71**	**1.662**	**63.16**
0.83	0.8	Overload	KSI	-36.00	-0.61	-0.08	99.000	3762.00
8.00	7.3	Flexure	KSI	36.00	4.68	2.52	10.049	381.84
8.00	**7.3**	**Shear**	**KIPS**	**466.86**	**71.16**	**62.08**	**5.091**	**193.47**
8.00	7.3	Overload	KSI	36.00	4.68	2.52	11.728	445.68
11.00	10.0	Flexure	KSI	36.00	6.11	3.25	7.306	277.62
11.00	**10.0**	**Shear**	**KIPS**	**542.44**	**66.74**	**60.14**	**6.399**	**243.16**
11.00	10.0	Overload	KSI	36.00	6.11	3.25	8.650	328.72
22.00	**20.0**	**Flexure**	**KSI**	**36.00**	**10.91**	**5.73**	**3.225**	**122.54**
22.00	20.0	Shear	KIPS	542.44	50.54	53.03	7.594	288.56
22.00	20.0	Overload	KSI	36.00	10.91	5.73	4.068	154.58
25.50	**23.2**	**Flexure**	**KSI**	**36.00**	**12.14**	**6.35**	**2.693**	**102.33**
25.50	23.2	Shear	KIPS	542.44	44.91	50.77	8.054	306.04
25.50	23.2	Overload	KSI	36.00	12.14	6.35	3.471	131.92
33.00	**30.0**	**Flexure**	**KSI**	**36.00**	**11.21**	**6.01**	**3.013**	**114.50**
33.00	30.0	Shear	KIPS	542.44	33.61	45.93	9.175	348.64
33.00	30.0	Overload	KSI	36.00	11.21	6.01	3.823	145.27
44.00	**40.0**	**Flexure**	**KSI**	**36.00**	**12.83**	**6.80**	**2.403**	**91.31**
44.00	40.0	Shear	KIPS	542.44	17.04	38.82	11.325	430.34
44.00	40.0	Overload	KSI	36.00	12.83	6.80	3.142	119.39
49.50	**45.0**	**Flexure**	**KSI**	**36.00**	**13.23**	**7.02**	**2.267**	**86.16**
49.50	45.0	Shear	KIPS	542.44	8.29	35.27	12.739	484.07
49.50	45.0	Overload	KSI	36.00	13.23	7.02	2.989	113.60
55.00	**50.0**	**Flexure**	**KSI**	**36.00**	**13.36**	**7.08**	**2.228**	**84.66**
55.00	50.0	Shear	KIPS	542.44	0.00	31.72	14.454	549.24
55.00	50.0	Overload	KSI	36.00	13.36	7.08	2.946	111.94
66.00	**60.0**	**Flexure**	**KSI**	**36.00**	**12.83**	**6.80**	**2.403**	**91.31**
66.00	60.0	Shear	KIPS	542.44	-17.04	-38.82	11.325	430.34
66.00	60.0	Overload	KSI	36.00	12.83	6.80	3.142	119.39
77.00	**70.0**	**Flexure**	**KSI**	**36.00**	**11.21**	**6.01**	**3.013**	**114.50**

77.00	70.0	Shear	KIPS	542.44	-33.61	-45.93	9.175	348.64
77.00	70.0	Overload	KSI	36.00	11.21	6.01	3.823	145.27
84.50	**76.8**	**Flexure**	**KSI**	**36.00**	**12.14**	**6.35**	**2.693**	**102.33**
84.50	76.8	Shear	KIPS	542.44	-44.91	-50.77	8.054	306.04
84.50	76.8	Overload	KSI	36.00	12.14	6.35	3.471	131.92
88.00	**80.0**	**Flexure**	**KSI**	**36.00**	**10.91**	**5.73**	**3.225**	**122.54**
88.00	80.0	Shear	KIPS	542.44	-50.54	-53.03	7.594	288.56
88.00	80.0	Overload	KSI	36.00	10.91	5.73	4.068	154.58
99.00	90.0	Flexure	KSI	36.00	6.11	3.25	7.306	277.62
99.00	**90.0**	**Shear**	**KIPS**	**542.44**	**-66.74**	**-60.14**	**6.399**	**243.16**
99.00	90.0	Overload	KSI	36.00	6.11	3.25	8.650	328.72
110.00	100.0	Flexure	KSI	-36.00	-0.00	-0.00	99.000	3762.00
110.00	**100.0**	**Shear**	**KIPS**	**336.32**	**-82.95**	**-67.25**	**2.866**	**108.90**
110.00	100.0	Overload	KSI	-36.00	-0.00	-0.00	99.000	3762.00

Detailed Rating Results
Girder D - As Inspected
RI-4
Axle Load
Impact: As Requested
Lane: As Requested

Span 1

Location (ft)	Percent	Limit State	Units	Capacity	DL + Adj -LL*	LL	Permit Rating Factor	Permit Load Rating (Ton)
0.00	0.0	Flexure	KSI	-36.00	-0.00	-0.00	99.000	3712.50
0.00	**0.0**	**Shear**	**KIPS**	**237.90**	**82.95**	**65.38**	**1.675**	**62.82**
0.00	0.0	Overload	KSI	-36.00	-0.00	-0.00	99.000	3712.50
0.83	0.8	Flexure	KSI	-35.39	-0.61	-0.07	99.000	3712.50
0.83	**0.8**	**Shear**	**KIPS**	**237.90**	**81.73**	**64.85**	**1.710**	**64.12**
0.83	0.8	Overload	KSI	-36.00	-0.61	-0.07	99.000	3712.50
8.00	7.3	Flexure	KSI	36.00	4.68	2.44	10.348	388.06
8.00	**7.3**	**Shear**	**KIPS**	**466.86**	**71.16**	**60.28**	**5.243**	**196.62**
8.00	7.3	Overload	KSI	36.00	4.68	2.44	12.078	452.94
11.00	10.0	Flexure	KSI	36.00	6.11	3.15	7.528	282.29
11.00	**10.0**	**Shear**	**KIPS**	**542.44**	**66.74**	**58.37**	**6.593**	**247.25**
11.00	10.0	Overload	KSI	36.00	6.11	3.15	8.913	334.24
22.00	**20.0**	**Flexure**	**KSI**	**36.00**	**10.91**	**5.55**	**3.330**	**124.88**
22.00	20.0	Shear	KIPS	542.44	50.54	51.36	7.842	294.08
22.00	20.0	Overload	KSI	36.00	10.91	5.55	4.201	157.53

25.50	**23.2**	**Flexure**	**KSI**	**36.00**	**12.14**	**6.15**	**2.783**	**104.37**
25.50	23.2	Shear	KIPS	542.44	44.91	49.12	8.324	312.16
25.50	23.2	Overload	KSI	36.00	12.14	6.15	3.588	134.55
33.00	**30.0**	**Flexure**	**KSI**	**36.00**	**11.21**	**5.85**	**3.097**	**116.15**
33.00	30.0	Shear	KIPS	542.44	33.61	44.34	9.503	356.36
33.00	30.0	Overload	KSI	36.00	11.21	5.85	3.930	147.36
44.00	**40.0**	**Flexure**	**KSI**	**36.00**	**12.83**	**6.68**	**2.445**	**91.68**
44.00	40.0	Shear	KIPS	542.44	17.04	37.33	11.777	441.65
44.00	40.0	Overload	KSI	36.00	12.83	6.68	3.197	119.89
49.50	**45.0**	**Flexure**	**KSI**	**36.00**	**13.23**	**6.87**	**2.315**	**86.80**
49.50	45.0	Shear	KIPS	542.44	8.29	33.83	13.283	498.11
49.50	45.0	Overload	KSI	36.00	13.23	6.87	3.052	114.45
55.00	**50.0**	**Flexure**	**KSI**	**36.00**	**13.36**	**6.91**	**2.282**	**85.58**
55.00	50.0	Shear	KIPS	542.44	0.00	30.32	15.120	567.02
55.00	50.0	Overload	KSI	36.00	13.36	6.91	3.017	113.15
66.00	**60.0**	**Flexure**	**KSI**	**36.00**	**12.83**	**6.68**	**2.445**	**91.68**
66.00	60.0	Shear	KIPS	542.44	-17.04	-37.33	11.777	441.65
66.00	60.0	Overload	KSI	36.00	12.83	6.68	3.197	119.89
77.00	**70.0**	**Flexure**	**KSI**	**36.00**	**11.21**	**5.85**	**3.097**	**116.15**
77.00	70.0	Shear	KIPS	542.44	-33.61	-44.34	9.503	356.36
77.00	70.0	Overload	KSI	36.00	11.21	5.85	3.930	147.36
84.50	**76.8**	**Flexure**	**KSI**	**36.00**	**12.14**	**6.15**	**2.783**	**104.37**
84.50	76.8	Shear	KIPS	542.44	-44.91	-49.12	8.324	312.16
84.50	76.8	Overload	KSI	36.00	12.14	6.15	3.588	134.55
88.00	**80.0**	**Flexure**	**KSI**	**36.00**	**10.91**	**5.55**	**3.330**	**124.88**
88.00	80.0	Shear	KIPS	542.44	-50.54	-51.36	7.842	294.08
88.00	80.0	Overload	KSI	36.00	10.91	5.55	4.201	157.53
99.00	90.0	Flexure	KSI	36.00	6.11	3.15	7.528	282.29
99.00	**90.0**	**Shear**	**KIPS**	**542.44**	**-66.74**	**-58.37**	**6.593**	**247.25**
99.00	90.0	Overload	KSI	36.00	6.11	3.15	8.913	334.24
110.00	100.0	Flexure	KSI	-36.00	-0.00	-0.00	99.000	3712.50
110.00	**100.0**	**Shear**	**KIPS**	**336.32**	**-82.95**	**-65.38**	**2.948**	**110.54**
110.00	100.0	Overload	KSI	-36.00	-0.00	-0.00	99.000	3712.50

Detailed Rating Results
Girder D - As Inspected
RI-5
Axle Load
Impact: As Requested
Lane: As Requested

Span 1

							Permit	**Permit**

Location (ft)	Percent	Limit State	Units	Capacity	DL + Adj -LL*	LL	Rating Factor	Load Rating (Ton)
0.00	0.0	Flexure	KSI	-36.00	-0.00	-0.00	99.000	5187.60
0.00	**0.0**	**Shear**	**KIPS**	**237.90**	**82.95**	**85.74**	**1.277**	**66.94**
0.00	0.0	Overload	KSI	-36.00	-0.00	-0.00	99.000	5187.60
0.83	0.8	Flexure	KSI	36.00	0.52	0.36	83.287	4364.25
0.83	**0.8**	**Shear**	**KIPS**	**237.90**	**81.73**	**85.00**	**1.304**	**68.35**
0.83	0.8	Overload	KSI	36.00	0.52	0.36	93.954	4923.19
8.00	7.3	Flexure	KSI	36.00	4.68	3.19	7.934	415.76
8.00	**7.3**	**Shear**	**KIPS**	**466.86**	**71.16**	**78.62**	**4.020**	**210.66**
8.00	7.3	Overload	KSI	36.00	4.68	3.19	9.261	485.27
11.00	10.0	Flexure	KSI	36.00	6.11	4.10	5.785	303.15
11.00	**10.0**	**Shear**	**KIPS**	**542.44**	**66.74**	**75.95**	**5.067**	**265.52**
11.00	10.0	Overload	KSI	36.00	6.11	4.10	6.850	358.94
22.00	**20.0**	**Flexure**	**KSI**	**36.00**	**10.91**	**7.14**	**2.585**	**135.47**
22.00	20.0	Shear	KIPS	542.44	50.54	66.15	6.088	319.03
22.00	20.0	Overload	KSI	36.00	10.91	7.14	3.261	170.90
25.50	**23.2**	**Flexure**	**KSI**	**36.00**	**12.14**	**7.95**	**2.154**	**112.84**
25.50	23.2	Shear	KIPS	542.44	44.91	63.03	6.488	339.95
25.50	23.2	Overload	KSI	36.00	12.14	7.95	2.776	145.47
33.00	**30.0**	**Flexure**	**KSI**	**36.00**	**11.21**	**7.54**	**2.402**	**125.88**
33.00	30.0	Shear	KIPS	542.44	33.61	56.35	7.478	391.85
33.00	30.0	Overload	KSI	36.00	11.21	7.54	3.048	159.71
44.00	**40.0**	**Flexure**	**KSI**	**36.00**	**12.83**	**8.58**	**1.905**	**99.84**
44.00	40.0	Shear	KIPS	542.44	17.04	46.55	9.445	494.90
44.00	40.0	Overload	KSI	36.00	12.83	8.58	2.491	130.55
49.50	**45.0**	**Flexure**	**KSI**	**36.00**	**13.23**	**8.81**	**1.806**	**94.66**
49.50	45.0	Shear	KIPS	542.44	8.29	41.65	10.787	565.23
49.50	45.0	Overload	KSI	36.00	13.23	8.81	2.382	124.81
55.00	**50.0**	**Flexure**	**KSI**	**36.00**	**13.36**	**8.82**	**1.787**	**93.64**
55.00	50.0	Shear	KIPS	542.44	0.00	36.76	12.473	653.60
55.00	50.0	Overload	KSI	36.00	13.36	8.82	2.363	123.82
66.00	**60.0**	**Flexure**	**KSI**	**36.00**	**12.83**	**8.58**	**1.905**	**99.84**
66.00	60.0	Shear	KIPS	542.44	-17.04	-46.55	9.445	494.90
66.00	60.0	Overload	KSI	36.00	12.83	8.58	2.491	130.55
77.00	**70.0**	**Flexure**	**KSI**	**36.00**	**11.21**	**7.54**	**2.402**	**125.88**
77.00	70.0	Shear	KIPS	542.44	-33.61	-56.35	7.478	391.85
77.00	70.0	Overload	KSI	36.00	11.21	7.54	3.048	159.71
84.50	**76.8**	**Flexure**	**KSI**	**36.00**	**12.14**	**7.95**	**2.154**	**112.84**
84.50	76.8	Shear	KIPS	542.44	-44.91	-63.03	6.488	339.95
84.50	76.8	Overload	KSI	36.00	12.14	7.95	2.776	145.47

88.00	**80.0**	**Flexure**	**KSI**	**36.00**	**10.91**	**7.14**	**2.585**	**135.47**
88.00	80.0	Shear	KIPS	542.44	-50.54	-66.15	6.088	319.03
88.00	80.0	Overload	KSI	36.00	10.91	7.14	3.261	170.90
99.00	90.0	Flexure	KSI	36.00	6.11	4.10	5.785	303.15
99.00	**90.0**	**Shear**	**KIPS**	**542.44**	**-66.74**	**-75.95**	**5.067**	**265.52**
99.00	90.0	Overload	KSI	36.00	6.11	4.10	6.850	358.94
110.00	100.0	Flexure	KSI	-36.00	-0.00	-0.00	99.000	5187.60
110.00	**100.0**	**Shear**	**KIPS**	**336.32**	**-82.95**	**-85.74**	**2.248**	**117.77**
110.00	100.0	Overload	KSI	-36.00	-0.00	-0.00	99.000	5187.60

Detailed Rating Results
Girder D - As Inspected
RI-6
Axle Load
Impact: As Requested
Lane: As Requested

Span 1

Location (ft)	Percent	Limit State	Units	Capacity	DL + Adj -LL*	LL	Permit Rating Factor	Permit Load Rating (Ton)
0.00	0.0	Flexure	KSI	-36.00	-0.00	-0.00	99.000	6435.00
0.00	**0.0**	**Shear**	**KIPS**	**237.90**	**82.95**	**97.27**	**1.080**	**70.23**
0.00	0.0	Overload	KSI	-36.00	-0.00	-0.00	99.000	6435.00
0.83	0.8	Flexure	KSI	36.00	0.52	0.41	70.500	4582.50
0.83	**0.8**	**Shear**	**KIPS**	**237.90**	**81.73**	**96.35**	**1.104**	**71.77**
0.83	0.8	Overload	KSI	36.00	0.52	0.41	82.890	5387.84
8.00	7.3	Flexure	KSI	36.00	4.68	3.59	6.768	439.93
8.00	**7.3**	**Shear**	**KIPS**	**466.86**	**71.16**	**88.43**	**3.429**	**222.90**
8.00	7.3	Overload	KSI	36.00	4.68	3.59	8.233	535.17
11.00	10.0	Flexure	KSI	36.00	6.11	4.60	4.953	321.94
11.00	**10.0**	**Shear**	**KIPS**	**542.44**	**66.74**	**85.11**	**4.338**	**281.97**
11.00	10.0	Overload	KSI	36.00	6.11	4.60	6.112	397.29
22.00	**20.0**	**Flexure**	**KSI**	**36.00**	**10.91**	**7.90**	**2.243**	**145.82**
22.00	20.0	Shear	KIPS	542.44	50.54	72.96	5.296	344.24
22.00	20.0	Overload	KSI	36.00	10.91	7.90	2.950	191.72
25.50	**23.2**	**Flexure**	**KSI**	**36.00**	**12.14**	**8.75**	**1.877**	**122.00**
25.50	23.2	Shear	KIPS	542.44	44.91	69.09	5.678	369.10
25.50	23.2	Overload	KSI	36.00	12.14	8.75	2.522	163.92
33.00	**30.0**	**Flexure**	**KSI**	**36.00**	**11.21**	**8.18**	**2.125**	**138.11**
33.00	30.0	Shear	KIPS	542.44	33.61	60.81	6.649	432.18

33.00	30.0	Overload	KSI	36.00	11.21	8.18	2.810	182.63
44.00	**40.0**	**Flexure**	**KSI**	**36.00**	**12.83**	**8.95**	**1.752**	**113.87**
44.00	40.0	Shear	KIPS	542.44	17.04	48.65	8.670	563.58
44.00	40.0	Overload	KSI	36.00	12.83	8.95	2.387	155.19
49.50	**45.0**	**Flexure**	**KSI**	**36.00**	**13.23**	**9.02**	**1.691**	**109.93**
49.50	45.0	Shear	KIPS	542.44	8.29	42.58	10.125	658.14
49.50	45.0	Overload	KSI	36.00	13.23	9.02	2.324	151.07
55.00	**50.0**	**Flexure**	**KSI**	**36.00**	**13.36**	**8.83**	**1.712**	**111.29**
55.00	50.0	Shear	KIPS	542.44	0.00	-36.50	12.051	783.33
55.00	50.0	Overload	KSI	36.00	13.36	8.83	2.360	153.38
66.00	**60.0**	**Flexure**	**KSI**	**36.00**	**12.83**	**8.95**	**1.752**	**113.87**
66.00	60.0	Shear	KIPS	542.44	-17.04	-48.65	8.670	563.58
66.00	60.0	Overload	KSI	36.00	12.83	8.95	2.387	155.19
77.00	**70.0**	**Flexure**	**KSI**	**36.00**	**11.21**	**8.18**	**2.125**	**138.11**
77.00	70.0	Shear	KIPS	542.44	-33.61	-60.81	6.649	432.18
77.00	70.0	Overload	KSI	36.00	11.21	8.18	2.810	182.63
84.50	**76.8**	**Flexure**	**KSI**	**36.00**	**12.14**	**8.75**	**1.877**	**122.00**
84.50	76.8	Shear	KIPS	542.44	-44.91	-69.09	5.678	369.10
84.50	76.8	Overload	KSI	36.00	12.14	8.75	2.522	163.92
88.00	**80.0**	**Flexure**	**KSI**	**36.00**	**10.91**	**7.90**	**2.243**	**145.82**
88.00	80.0	Shear	KIPS	542.44	-50.54	-72.96	5.296	344.24
88.00	80.0	Overload	KSI	36.00	10.91	7.90	2.950	191.72
99.00	90.0	Flexure	KSI	36.00	6.11	4.60	4.953	321.94
99.00	**90.0**	**Shear**	**KIPS**	**542.44**	**-66.74**	**-85.11**	**4.338**	**281.97**
99.00	90.0	Overload	KSI	36.00	6.11	4.60	6.112	397.29
110.00	100.0	Flexure	KSI	-36.00	-0.00	-0.00	99.000	6435.00
110.00	**100.0**	**Shear**	**KIPS**	**336.32**	**-82.95**	**-97.27**	**1.901**	**123.56**
110.00	100.0	Overload	KSI	-36.00	-0.00	-0.00	99.000	6435.00

Detailed Rating Results
Girder D - As Inspected
RIDOT H20 Truck
Axle Load
Impact: As Requested
Lane: As Requested

Span 1

Location (ft)	Percent	Limit State	Units	Capacity	DL + Adj -LL*	LL	Legal Rating Factor	Legal Load Rating (Ton)
0.00	0.0	Flexure	KSI	-36.00	-0.00	-0.00	99.000	1980.00

0.00	**0.0**	**Shear**	**KIPS**	**237.90**	**82.95**	**36.44**	**2.735**	**54.71**
0.00	0.0	Overload	KSI	-36.00	-0.00	-0.00	99.000	1980.00
0.83	0.8	Flexure	KSI	-34.86	-0.61	-0.04	99.000	1980.00
0.83	**0.8**	**Shear**	**KIPS**	**237.90**	**81.73**	**36.16**	**2.791**	**55.81**
0.83	0.8	Overload	KSI	-36.00	-0.61	-0.04	99.000	1980.00
8.00	7.3	Flexure	KSI	36.00	4.68	1.37	16.835	336.69
8.00	**7.3**	**Shear**	**KIPS**	**466.86**	**71.16**	**33.72**	**8.530**	**170.60**
8.00	7.3	Overload	KSI	36.00	4.68	1.37	16.607	332.14
11.00	10.0	Flexure	KSI	36.00	6.11	1.77	12.228	244.55
11.00	**10.0**	**Shear**	**KIPS**	**542.44**	**66.74**	**32.70**	**10.710**	**214.19**
11.00	10.0	Overload	KSI	36.00	6.11	1.77	12.237	244.73
22.00	**20.0**	**Flexure**	**KSI**	**36.00**	**10.91**	**3.13**	**5.374**	**107.48**
22.00	20.0	Shear	KIPS	542.44	50.54	28.96	12.655	253.10
22.00	20.0	Overload	KSI	36.00	10.91	3.13	5.730	114.59
25.50	**23.2**	**Flexure**	**KSI**	**36.00**	**12.14**	**3.48**	**4.480**	**89.61**
25.50	23.2	Shear	KIPS	542.44	44.91	27.77	13.400	268.00
25.50	23.2	Overload	KSI	36.00	12.14	3.48	4.882	97.63
33.00	**30.0**	**Flexure**	**KSI**	**36.00**	**11.21**	**3.30**	**4.993**	**99.87**
33.00	30.0	Shear	KIPS	542.44	33.61	25.22	15.204	304.08
33.00	30.0	Overload	KSI	36.00	11.21	3.30	5.355	107.09
44.00	**40.0**	**Flexure**	**KSI**	**36.00**	**12.83**	**3.75**	**3.966**	**79.31**
44.00	40.0	Shear	KIPS	542.44	17.04	21.49	18.625	372.50
44.00	40.0	Overload	KSI	36.00	12.83	3.75	4.383	87.65
49.50	**45.0**	**Flexure**	**KSI**	**36.00**	**13.23**	**3.85**	**3.758**	**75.16**
49.50	45.0	Shear	KIPS	542.44	8.29	19.62	20.848	416.96
49.50	45.0	Overload	KSI	36.00	13.23	3.85	4.188	83.76
55.00	**50.0**	**Flexure**	**KSI**	**36.00**	**13.36**	**3.87**	**3.704**	**74.09**
55.00	50.0	Shear	KIPS	542.44	0.00	17.75	23.513	470.27
55.00	50.0	Overload	KSI	36.00	13.36	3.87	4.140	82.80
66.00	**60.0**	**Flexure**	**KSI**	**36.00**	**12.83**	**3.75**	**3.966**	**79.31**
66.00	60.0	Shear	KIPS	542.44	-17.04	-21.49	18.625	372.50
66.00	60.0	Overload	KSI	36.00	12.83	3.75	4.383	87.65
77.00	**70.0**	**Flexure**	**KSI**	**36.00**	**11.21**	**3.30**	**4.993**	**99.87**
77.00	70.0	Shear	KIPS	542.44	-33.61	-25.22	15.204	304.08
77.00	70.0	Overload	KSI	36.00	11.21	3.30	5.355	107.09
84.50	**76.8**	**Flexure**	**KSI**	**36.00**	**12.14**	**3.48**	**4.480**	**89.61**
84.50	76.8	Shear	KIPS	542.44	-44.91	-27.77	13.400	268.00
84.50	76.8	Overload	KSI	36.00	12.14	3.48	4.882	97.63
88.00	**80.0**	**Flexure**	**KSI**	**36.00**	**10.91**	**3.13**	**5.374**	**107.48**
88.00	80.0	Shear	KIPS	542.44	-50.54	-28.96	12.655	253.10
88.00	80.0	Overload	KSI	36.00	10.91	3.13	5.730	114.59
99.00	90.0	Flexure	KSI	36.00	6.11	1.77	12.228	244.55
99.00	**90.0**	**Shear**	**KIPS**	**542.44**	**-66.74**	**-32.70**	**10.710**	**214.19**

99.00	90.0	Overload	KSI	36.00	6.11	1.77	12.237	244.73
110.00	100.0	Flexure	KSI	-36.00	-0.00	-0.00	99.000	1980.00
110.00	**100.0**	**Shear**	**KIPS**	**336.32**	**-82.95**	**-36.44**	**4.813**	**96.26**
110.00	100.0	Overload	KSI	-36.00	-0.00	-0.00	99.000	1980.00

Detailed Rating Results
Girder D - As Inspected
RI-OP 1
Axle Load
Impact: As Requested
Lane: As Requested

Span 1

Location (ft)	Percent	Limit State	Units	Capacity	DL + Adj -LL*	LL	Permit Rating Factor	Permit Load Rating (Ton)
0.00	0.0	Flexure	KSI	-36.00	-0.00	-0.00	99.000	5593.50
0.00	**0.0**	**Shear**	**KIPS**	**237.90**	**82.95**	**66.31**	**1.629**	**92.02**
0.00	0.0	Overload	KSI	-36.00	-0.00	-0.00	99.000	5593.50
0.83	0.8	Flexure	KSI	-35.19	-0.61	-0.06	99.000	5593.50
0.83	**0.8**	**Shear**	**KIPS**	**237.90**	**81.73**	**65.75**	**1.663**	**93.95**
0.83	0.8	Overload	KSI	-36.00	-0.61	-0.06	99.000	5593.50
8.00	7.3	Flexure	KSI	36.00	4.68	2.04	12.236	691.32
8.00	**7.3**	**Shear**	**KIPS**	**466.86**	**71.16**	**60.89**	**5.118**	**289.18**
8.00	7.3	Overload	KSI	36.00	4.68	2.04	14.485	818.38
11.00	10.0	Flexure	KSI	36.00	6.11	2.62	8.916	503.77
11.00	**10.0**	**Shear**	**KIPS**	**542.44**	**66.74**	**58.85**	**6.447**	**364.26**
11.00	10.0	Overload	KSI	36.00	6.11	2.62	10.707	604.97
22.00	**20.0**	**Flexure**	**KSI**	**36.00**	**10.91**	**4.66**	**3.910**	**220.91**
22.00	20.0	Shear	KIPS	542.44	50.54	51.39	7.726	436.53
22.00	20.0	Overload	KSI	36.00	10.91	4.66	5.002	282.64
25.50	**23.2**	**Flexure**	**KSI**	**36.00**	**12.14**	**5.18**	**3.256**	**183.96**
25.50	23.2	Shear	KIPS	542.44	44.91	49.02	8.225	464.70
25.50	23.2	Overload	KSI	36.00	12.14	5.18	4.257	240.53
33.00	**30.0**	**Flexure**	**KSI**	**36.00**	**11.21**	**4.92**	**3.635**	**205.37**
33.00	30.0	Shear	KIPS	542.44	33.61	43.94	9.456	534.29
33.00	30.0	Overload	KSI	36.00	11.21	4.92	4.677	264.26
44.00	**40.0**	**Flexure**	**KSI**	**36.00**	**12.83**	**5.63**	**2.862**	**161.71**
44.00	40.0	Shear	KIPS	542.44	17.04	36.48	11.884	671.45
44.00	40.0	Overload	KSI	36.00	12.83	5.63	3.796	214.46
49.50	**45.0**	**Flexure**	**KSI**	**36.00**	**13.23**	**5.82**	**2.697**	**152.40**

49.50	45.0	Shear	KIPS	542.44	8.29	32.75	13.527	764.29
49.50	45.0	Overload	KSI	36.00	13.23	5.82	3.607	203.79
55.00	**50.0**	**Flexure**	**KSI**	**36.00**	**13.36**	**5.87**	**2.650**	**149.71**
55.00	50.0	Shear	KIPS	542.44	0.00	-29.02	15.576	880.05
55.00	50.0	Overload	KSI	36.00	13.36	5.87	3.553	200.77
66.00	**60.0**	**Flexure**	**KSI**	**36.00**	**12.83**	**5.63**	**2.862**	**161.71**
66.00	60.0	Shear	KIPS	542.44	-17.04	-36.48	11.884	671.45
66.00	60.0	Overload	KSI	36.00	12.83	5.63	3.796	214.46
77.00	**70.0**	**Flexure**	**KSI**	**36.00**	**11.21**	**4.92**	**3.635**	**205.37**
77.00	70.0	Shear	KIPS	542.44	-33.61	-43.94	9.456	534.29
77.00	70.0	Overload	KSI	36.00	11.21	4.92	4.677	264.26
84.50	**76.8**	**Flexure**	**KSI**	**36.00**	**12.14**	**5.18**	**3.256**	**183.96**
84.50	76.8	Shear	KIPS	542.44	-44.91	-49.02	8.225	464.70
84.50	76.8	Overload	KSI	36.00	12.14	5.18	4.257	240.53
88.00	**80.0**	**Flexure**	**KSI**	**36.00**	**10.91**	**4.66**	**3.910**	**220.91**
88.00	80.0	Shear	KIPS	542.44	-50.54	-51.39	7.726	436.53
88.00	80.0	Overload	KSI	36.00	10.91	4.66	5.002	282.64
99.00	90.0	Flexure	KSI	36.00	6.11	2.62	8.916	503.77
99.00	**90.0**	**Shear**	**KIPS**	**542.44**	**-66.74**	**-58.85**	**6.447**	**364.26**
99.00	90.0	Overload	KSI	36.00	6.11	2.62	10.707	604.97
110.00	100.0	Flexure	KSI	-36.00	-0.00	-0.00	99.000	5593.50
110.00	**100.0**	**Shear**	**KIPS**	**336.32**	**-82.95**	**-66.31**	**2.866**	**161.90**
110.00	100.0	Overload	KSI	-36.00	-0.00	-0.00	99.000	5593.50

Detailed Rating Results
Girder D - As Inspected
RI-OP 2
Axle Load
Impact: As Requested
Lane: As Requested

Span 1

Location (ft)	Percent	Limit State	Units	Capacity	DL + Adj -LL*	LL	Permit Rating Factor	Permit Load Rating (Ton)
0.00	0.0	Flexure	KSI	-36.00	-0.00	-0.00	99.000	7920.00
0.00	**0.0**	**Shear**	**KIPS**	**237.90**	**82.95**	**77.08**	**1.401**	**112.09**
0.00	0.0	Overload	KSI	-36.00	-0.00	-0.00	99.000	7920.00
0.83	0.8	Flexure	KSI	-35.37	-0.61	-0.07	99.000	7920.00
0.83	**0.8**	**Shear**	**KIPS**	**237.90**	**81.73**	**76.28**	**1.433**	**114.65**
0.83	0.8	Overload	KSI	-36.00	-0.61	-0.07	99.000	7920.00

8.00	7.3	Flexure	KSI	36.00	4.68	2.32	10.735	858.82
8.00	**7.3**	**Shear**	**KIPS**	**466.86**	**71.16**	**69.40**	**4.490**	**359.24**
8.00	7.3	Overload	KSI	36.00	4.68	2.32	12.708	1016.65
11.00	10.0	Flexure	KSI	36.00	6.11	2.96	7.889	631.11
11.00	**10.0**	**Shear**	**KIPS**	**542.44**	**66.74**	**66.52**	**5.704**	**456.34**
11.00	10.0	Overload	KSI	36.00	6.11	2.96	9.474	757.89
22.00	**20.0**	**Flexure**	**KSI**	**36.00**	**10.91**	**5.11**	**3.561**	**284.86**
22.00	20.0	Shear	KIPS	542.44	50.54	55.96	7.096	567.69
22.00	20.0	Overload	KSI	36.00	10.91	5.11	4.556	364.46
25.50	**23.2**	**Flexure**	**KSI**	**36.00**	**12.14**	**5.62**	**3.003**	**240.28**
25.50	23.2	Shear	KIPS	542.44	44.91	52.60	7.666	613.24
25.50	23.2	Overload	KSI	36.00	12.14	5.62	3.927	314.16
33.00	**30.0**	**Flexure**	**KSI**	**36.00**	**11.21**	**5.21**	**3.429**	**274.32**
33.00	30.0	Shear	KIPS	542.44	33.61	45.40	9.152	732.16
33.00	30.0	Overload	KSI	36.00	11.21	5.21	4.412	352.99
44.00	**40.0**	**Flexure**	**KSI**	**36.00**	**12.83**	**5.63**	**2.863**	**229.08**
44.00	40.0	Shear	KIPS	542.44	17.04	35.31	12.277	982.13
44.00	40.0	Overload	KSI	36.00	12.83	5.63	3.798	303.81
49.50	**45.0**	**Flexure**	**KSI**	**36.00**	**13.23**	**5.62**	**2.791**	**223.28**
49.50	45.0	Shear	KIPS	542.44	8.29	30.46	14.544	1163.50
49.50	45.0	Overload	KSI	36.00	13.23	5.62	3.732	298.58
55.00	**50.0**	**Flexure**	**KSI**	**36.00**	**13.36**	**5.48**	**2.835**	**226.79**
55.00	50.0	Shear	KIPS	542.44	0.00	-25.79	17.529	1402.31
55.00	50.0	Overload	KSI	36.00	13.36	5.48	3.802	304.13
66.00	**60.0**	**Flexure**	**KSI**	**36.00**	**12.83**	**5.63**	**2.863**	**229.08**
66.00	60.0	Shear	KIPS	542.44	-17.04	-35.31	12.277	982.13
66.00	60.0	Overload	KSI	36.00	12.83	5.63	3.798	303.81
77.00	**70.0**	**Flexure**	**KSI**	**36.00**	**11.21**	**5.21**	**3.429**	**274.32**
77.00	70.0	Shear	KIPS	542.44	-33.61	-45.40	9.152	732.16
77.00	70.0	Overload	KSI	36.00	11.21	5.21	4.412	352.99
84.50	**76.8**	**Flexure**	**KSI**	**36.00**	**12.14**	**5.62**	**3.003**	**240.28**
84.50	76.8	Shear	KIPS	542.44	-44.91	-52.60	7.666	613.24
84.50	76.8	Overload	KSI	36.00	12.14	5.62	3.927	314.16
88.00	**80.0**	**Flexure**	**KSI**	**36.00**	**10.91**	**5.11**	**3.561**	**284.86**
88.00	80.0	Shear	KIPS	542.44	-50.54	-55.96	7.096	567.69
88.00	80.0	Overload	KSI	36.00	10.91	5.11	4.556	364.46
99.00	90.0	Flexure	KSI	36.00	6.11	2.96	7.889	631.11
99.00	**90.0**	**Shear**	**KIPS**	**542.44**	**-66.74**	**-66.52**	**5.704**	**456.34**
99.00	90.0	Overload	KSI	36.00	6.11	2.96	9.474	757.89
110.00	100.0	Flexure	KSI	-36.00	-0.00	-0.00	99.000	7920.00
110.00	**100.0**	**Shear**	**KIPS**	**336.32**	**-82.95**	**-77.08**	**2.465**	**197.22**
110.00	100.0	Overload	KSI	-36.00	-0.00	-0.00	99.000	7920.00

Detailed Rating Results
Girder D - As Inspected
RI-OP 3
Axle Load
Impact: As Requested
Lane: As Requested

Span 1

Location (ft)	Percent	Limit State	Units	Capacity	DL + Adj -LL*	LL	Permit Rating Factor	Permit Load Rating (Ton)
0.00	0.0	Flexure	KSI	-36.00	-0.00	-0.00	99.000	11187.00
0.00	**0.0**	**Shear**	**KIPS**	**237.90**	**82.95**	**86.06**	**1.255**	**141.79**
0.00	0.0	Overload	KSI	-36.00	-0.00	-0.00	99.000	11187.00
0.83	0.8	Flexure	KSI	-35.50	-0.61	-0.08	99.000	11187.00
0.83	**0.8**	**Shear**	**KIPS**	**237.90**	**81.73**	**84.94**	**1.287**	**145.44**
0.83	0.8	Overload	KSI	-36.00	-0.61	-0.08	99.000	11187.00
8.00	7.3	Flexure	KSI	36.00	4.68	2.53	9.854	1113.51
8.00	**7.3**	**Shear**	**KIPS**	**466.86**	**71.16**	**75.60**	**4.122**	**465.78**
8.00	7.3	Overload	KSI	36.00	4.68	2.53	11.665	1318.16
11.00	10.0	Flexure	KSI	36.00	6.11	3.22	7.274	821.98
11.00	**10.0**	**Shear**	**KIPS**	**542.44**	**66.74**	**71.70**	**5.292**	**598.02**
11.00	10.0	Overload	KSI	36.00	6.11	3.22	8.735	987.11
22.00	**20.0**	**Flexure**	**KSI**	**36.00**	**10.91**	**5.43**	**3.352**	**378.80**
22.00	20.0	Shear	KIPS	542.44	50.54	58.76	6.758	763.60
22.00	20.0	Overload	KSI	36.00	10.91	5.43	4.289	484.65
25.50	**23.2**	**Flexure**	**KSI**	**36.00**	**12.14**	**5.97**	**2.828**	**319.51**
25.50	23.2	Shear	KIPS	542.44	44.91	55.23	7.300	824.87
25.50	23.2	Overload	KSI	36.00	12.14	5.97	3.697	417.76
33.00	**30.0**	**Flexure**	**KSI**	**36.00**	**11.21**	**5.54**	**3.228**	**364.75**
33.00	30.0	Shear	KIPS	542.44	33.61	47.67	8.715	984.81
33.00	30.0	Overload	KSI	36.00	11.21	5.54	4.154	469.35
44.00	**40.0**	**Flexure**	**KSI**	**36.00**	**12.83**	**6.13**	**2.627**	**296.91**
44.00	40.0	Shear	KIPS	542.44	17.04	37.69	11.503	1299.83
44.00	40.0	Overload	KSI	36.00	12.83	6.13	3.485	393.76
49.50	**45.0**	**Flexure**	**KSI**	**36.00**	**13.23**	**6.24**	**2.513**	**283.98**
49.50	45.0	Shear	KIPS	542.44	8.29	33.54	13.207	1492.39
49.50	45.0	Overload	KSI	36.00	13.23	6.24	3.361	379.75
55.00	**50.0**	**Flexure**	**KSI**	**36.00**	**13.36**	**6.19**	**2.512**	**283.85**
55.00	50.0	Shear	KIPS	542.44	0.00	-29.58	15.280	1726.59

55.00	50.0	Overload	KSI	36.00	13.36	6.19	3.369	380.66
66.00	**60.0**	**Flexure**	**KSI**	**36.00**	**12.83**	**6.13**	**2.627**	**296.91**
66.00	60.0	Shear	KIPS	542.44	-17.04	-37.69	11.503	1299.83
66.00	60.0	Overload	KSI	36.00	12.83	6.13	3.485	393.76
77.00	**70.0**	**Flexure**	**KSI**	**36.00**	**11.21**	**5.54**	**3.228**	**364.75**
77.00	70.0	Shear	KIPS	542.44	-33.61	-47.67	8.715	984.81
77.00	70.0	Overload	KSI	36.00	11.21	5.54	4.154	469.35
84.50	**76.8**	**Flexure**	**KSI**	**36.00**	**12.14**	**5.97**	**2.828**	**319.51**
84.50	76.8	Shear	KIPS	542.44	-44.91	-55.23	7.300	824.87
84.50	76.8	Overload	KSI	36.00	12.14	5.97	3.697	417.76
88.00	**80.0**	**Flexure**	**KSI**	**36.00**	**10.91**	**5.43**	**3.352**	**378.80**
88.00	80.0	Shear	KIPS	542.44	-50.54	-58.76	6.758	763.60
88.00	80.0	Overload	KSI	36.00	10.91	5.43	4.289	484.65
99.00	90.0	Flexure	KSI	36.00	6.11	3.22	7.274	821.98
99.00	**90.0**	**Shear**	**KIPS**	**542.44**	**-66.74**	**-71.70**	**5.292**	**598.02**
99.00	90.0	Overload	KSI	36.00	6.11	3.22	8.735	987.11
110.00	100.0	Flexure	KSI	-36.00	-0.00	-0.00	99.000	11187.00
110.00	**100.0**	**Shear**	**KIPS**	**336.32**	**-82.95**	**-86.06**	**2.208**	**249.48**
110.00	100.0	Overload	KSI	-36.00	-0.00	-0.00	99.000	11187.00

Detailed Rating Results
Girder D - As Inspected
RIPTA Bus
Axle Load
Impact: As Requested
Lane: As Requested

Span 1

Location (ft)	Percent	Limit State	Units	Capacity	DL + Adj -LL*	LL	Legal Rating Factor	Legal Load Rating (Ton)
0.00	0.0	Flexure	KSI	-36.00	-0.00	-0.00	99.000	2059.20
0.00	**0.0**	**Shear**	**KIPS**	**237.90**	**82.95**	**36.01**	**2.769**	**57.59**
0.00	0.0	Overload	KSI	-36.00	-0.00	-0.00	99.000	2059.20
0.83	0.8	Flexure	KSI	-34.85	-0.61	-0.04	99.000	2059.20
0.83	**0.8**	**Shear**	**KIPS**	**237.90**	**81.73**	**35.71**	**2.826**	**58.78**
0.83	0.8	Overload	KSI	-36.00	-0.61	-0.04	99.000	2059.20
8.00	7.3	Flexure	KSI	36.00	4.68	1.35	17.112	355.92
8.00	**7.3**	**Shear**	**KIPS**	**466.86**	**71.16**	**33.18**	**8.670**	**180.34**
8.00	7.3	Overload	KSI	36.00	4.68	1.35	16.881	351.12
11.00	10.0	Flexure	KSI	36.00	6.11	1.73	12.451	258.98

11.00	**10.0**	**Shear**	**KIPS**	**542.44**	**66.74**	**32.12**	**10.905**	**226.83**
11.00	10.0	Overload	KSI	36.00	6.11	1.73	12.460	259.17
22.00	**20.0**	**Flexure**	**KSI**	**36.00**	**10.91**	**3.05**	**5.514**	**114.69**
22.00	20.0	Shear	KIPS	542.44	50.54	28.23	12.985	270.09
22.00	20.0	Overload	KSI	36.00	10.91	3.05	5.879	122.28
25.50	**23.2**	**Flexure**	**KSI**	**36.00**	**12.14**	**3.38**	**4.610**	**95.90**
25.50	23.2	Shear	KIPS	542.44	44.91	26.99	13.789	286.81
25.50	23.2	Overload	KSI	36.00	12.14	3.38	5.023	104.49
33.00	**30.0**	**Flexure**	**KSI**	**36.00**	**11.21**	**3.19**	**5.175**	**107.65**
33.00	30.0	Shear	KIPS	542.44	33.61	24.34	15.758	327.76
33.00	30.0	Overload	KSI	36.00	11.21	3.19	5.550	115.43
44.00	**40.0**	**Flexure**	**KSI**	**36.00**	**12.83**	**3.57**	**4.166**	**86.66**
44.00	40.0	Shear	KIPS	542.44	17.04	20.45	19.568	407.02
44.00	40.0	Overload	KSI	36.00	12.83	3.57	4.605	95.78
49.50	**45.0**	**Flexure**	**KSI**	**36.00**	**13.23**	**3.63**	**3.983**	**82.86**
49.50	45.0	Shear	KIPS	542.44	8.29	18.51	22.099	459.65
49.50	45.0	Overload	KSI	36.00	13.23	3.63	4.439	92.33
55.00	**50.0**	**Flexure**	**KSI**	**36.00**	**13.36**	**3.61**	**3.970**	**82.57**
55.00	50.0	Shear	KIPS	542.44	0.00	16.56	25.196	524.08
55.00	50.0	Overload	KSI	36.00	13.36	3.61	4.436	92.27
66.00	**60.0**	**Flexure**	**KSI**	**36.00**	**12.83**	**3.57**	**4.166**	**86.66**
66.00	60.0	Shear	KIPS	542.44	-17.04	-20.45	19.568	407.02
66.00	60.0	Overload	KSI	36.00	12.83	3.57	4.605	95.78
77.00	**70.0**	**Flexure**	**KSI**	**36.00**	**11.21**	**3.19**	**5.175**	**107.65**
77.00	70.0	Shear	KIPS	542.44	-33.61	-24.34	15.758	327.76
77.00	70.0	Overload	KSI	36.00	11.21	3.19	5.550	115.43
84.50	**76.8**	**Flexure**	**KSI**	**36.00**	**12.14**	**3.38**	**4.610**	**95.90**
84.50	76.8	Shear	KIPS	542.44	-44.91	-26.99	13.789	286.81
84.50	76.8	Overload	KSI	36.00	12.14	3.38	5.023	104.49
88.00	**80.0**	**Flexure**	**KSI**	**36.00**	**10.91**	**3.05**	**5.514**	**114.69**
88.00	80.0	Shear	KIPS	542.44	-50.54	-28.23	12.985	270.09
88.00	80.0	Overload	KSI	36.00	10.91	3.05	5.879	122.28
99.00	90.0	Flexure	KSI	36.00	6.11	1.73	12.451	258.98
99.00	**90.0**	**Shear**	**KIPS**	**542.44**	**-66.74**	**-32.12**	**10.905**	**226.83**
99.00	90.0	Overload	KSI	36.00	6.11	1.73	12.460	259.17
110.00	100.0	Flexure	KSI	-36.00	-0.00	-0.00	99.000	2059.20
110.00	**100.0**	**Shear**	**KIPS**	**336.32**	**-82.95**	**-36.01**	**4.871**	**101.32**
110.00	100.0	Overload	KSI	-36.00	-0.00	-0.00	99.000	2059.20

Note:
*Adj-LL is only applicable for Permit load rating.

Bridge Name: Mohegan Bridge
NBI Structure ID:
Bridge ID: 067301

Analyzed By: BrR
Analyze Date: Friday, September 14, 2018 20:11:14
Analysis Engine: AASHTO LRFR Engine Version 6.8.2.3002
Analysis Preference Setting: None

Report By: brr
Report Date: Friday, September 14, 2018 20:13:20

Structure Definition Name: Span 2
Member Name: Girder E
Member Alternative Name: Girder E - As Inspected

Load and Resistance Factor Rating Summary

Live Load		Rating Factor	Girder Summary Controls	Capacity (Ton)	Span	Location (ft)	Percent	Impact	Lane
EV2	Legal	3.941	STRENGTH-I Steel Shear	113.29	1	0.00	0.0	As Requested	As Requested
EV3	Legal	2.605	STRENGTH-I Steel Flexure Stress	112.00	1	55.00	50.0	As Requested	As Requested
HL-93 (US)	Inventory	1.068	STRENGTH-I Steel Flexure Stress	38.44	1	55.00	50.0	As Requested	As Requested
HL-93 (US)	Operating	1.384	STRENGTH-I Steel Flexure Stress	49.82	1	55.00	50.0	As Requested	As Requested
SU4	Legal	2.863	STRENGTH-I Steel Flexure Stress	77.29	1	55.00	50.0	As Requested	As Requested
SU5	Legal	2.553	STRENGTH-I Steel Flexure Stress	79.13	1	55.00	50.0	As Requested	As Requested
SU6	Legal	2.283	STRENGTH-I Steel Flexure Stress	79.35	1	55.00	50.0	As Requested	As Requested
SU7	Legal	2.073	STRENGTH-I Steel Flexure Stress	80.32	1	55.00	50.0	As Requested	As Requested
Type 3	Legal	3.167	STRENGTH-I Steel Flexure Stress	79.18	1	55.00	50.0	As Requested	As Requested
Type 3-3	Legal	2.511	STRENGTH-I Steel Flexure Stress	100.45	1	55.00	50.0	As Requested	As Requested
Type 3S2	Legal	2.575	STRENGTH-I Steel Flexure Stress	92.69	1	55.00	50.0	As Requested	As Requested
RI-3	Permit	2.228	STRENGTH-II Steel Flexure Stress	84.66	1	55.00	50.0	As Requested	As Requested
RI-4	Permit	2.282	STRENGTH-II Steel Flexure Stress	85.58	1	55.00	50.0	As Requested	As Requested
RI-5	Permit	1.787	STRENGTH-II Steel Flexure Stress	93.64	1	55.00	50.0	As Requested	As Requested
RI-6	Permit	1.691		109.93	1	49.50	45.0		

			STRENGTH-II Steel Flexure Stress					As Requested	As Requested
RIDOT H20 Truck	Legal	3.704	STRENGTH-I Steel Flexure Stress	74.09	1	55.00	50.0	As Requested	As Requested
RI-OP 1	Permit	2.650	STRENGTH-II Steel Flexure Stress	149.71	1	55.00	50.0	As Requested	As Requested
RI-OP 2	Permit	2.379	STRENGTH-II Steel Shear	190.29	1	0.00	0.0	As Requested	As Requested
RI-OP 3	Permit	2.130	STRENGTH-II Steel Shear	240.72	1	0.00	0.0	As Requested	As Requested
RIPTA Bus	Legal	3.970	STRENGTH-I Steel Flexure Stress	82.57	1	55.00	50.0	As Requested	As Requested

Note:
"N/A" indicates not applicable
"**" indicates not available

Report by Action: ☑ **Flexure** ☑ **Shear** ☑ **Overload** ☑ **Interaction** ☑ **Critical**

Detailed Rating Results
Girder E - As Inspected
EV2
Axle Load
Impact: As Requested
Lane: As Requested

Span 1

Location (ft)	Percent	Limit State	Units	Capacity	DL + Adj -LL*	LL	Legal Rating Factor	Legal Load Rating (Ton)
0.00	0.0	Flexure	KSI	-36.00	-0.00	-0.00	99.000	2846.25
0.00	**0.0**	**Shear**	**KIPS**	**328.32**	**82.95**	**42.95**	**3.941**	**113.29**
0.00	0.0	Overload	KSI	-36.00	-0.00	-0.00	99.000	2846.25
0.83	0.8	Flexure	KSI	-35.94	-0.59	-0.04	99.000	2846.25
0.83	**0.8**	**Shear**	**KIPS**	**328.32**	**81.73**	**42.60**	**4.001**	**115.04**
0.83	0.8	Overload	KSI	-36.00	-0.59	-0.04	99.000	2846.25
11.00	10.0	Flexure	KSI	36.00	6.11	1.71	12.616	362.72
11.00	**10.0**	**Shear**	**KIPS**	**542.44**	**66.74**	**38.39**	**9.123**	**262.27**
11.00	10.0	Overload	KSI	36.00	6.11	1.71	12.626	362.99
22.00	**20.0**	**Flexure**	**KSI**	**36.00**	**10.91**	**3.02**	**5.571**	**160.18**
22.00	20.0	Shear	KIPS	542.44	50.54	33.84	10.832	311.41
22.00	20.0	Overload	KSI	36.00	10.91	3.02	5.940	170.78
25.50	**23.2**	**Flexure**	**KSI**	**36.00**	**12.14**	**3.35**	**4.654**	**133.79**
25.50	23.2	Shear	KIPS	542.44	44.91	32.39	11.490	330.34
25.50	23.2	Overload	KSI	36.00	12.14	3.35	5.070	145.78
33.00	**30.0**	**Flexure**	**KSI**	**36.00**	**11.21**	**3.17**	**5.210**	**149.78**
33.00	30.0	Shear	KIPS	542.44	33.61	29.29	13.096	376.51
33.00	30.0	Overload	KSI	36.00	11.21	3.17	5.587	160.62
44.00	**40.0**	**Flexure**	**KSI**	**36.00**	**12.83**	**3.56**	**4.173**	**119.97**
44.00	40.0	Shear	KIPS	542.44	17.04	24.73	16.180	465.19
44.00	40.0	Overload	KSI	36.00	12.83	3.56	4.612	132.59
49.50	**45.0**	**Flexure**	**KSI**	**36.00**	**13.23**	**3.64**	**3.976**	**114.32**
49.50	45.0	Shear	KIPS	542.44	8.29	22.45	18.212	523.59
49.50	45.0	Overload	KSI	36.00	13.23	3.64	4.431	127.40
55.00	**50.0**	**Flexure**	**KSI**	**36.00**	**13.36**	**3.64**	**3.946**	**113.46**
55.00	50.0	Shear	KIPS	542.44	0.00	-20.18	20.679	594.54
55.00	50.0	Overload	KSI	36.00	13.36	3.64	4.410	126.79

66.00	**60.0**	**Flexure**	**KSI**	**36.00**	**12.83**	**3.56**	**4.173**	**119.97**
66.00	60.0	Shear	KIPS	542.44	-17.04	-24.73	16.180	465.19
66.00	60.0	Overload	KSI	36.00	12.83	3.56	4.612	132.59
77.00	**70.0**	**Flexure**	**KSI**	**36.00**	**11.21**	**3.17**	**5.210**	**149.78**
77.00	70.0	Shear	KIPS	542.44	-33.61	-29.29	13.096	376.51
77.00	70.0	Overload	KSI	36.00	11.21	3.17	5.587	160.62
84.50	**76.8**	**Flexure**	**KSI**	**36.00**	**12.14**	**3.35**	**4.654**	**133.79**
84.50	76.8	Shear	KIPS	542.44	-44.91	-32.39	11.490	330.34
84.50	76.8	Overload	KSI	36.00	12.14	3.35	5.070	145.78
88.00	**80.0**	**Flexure**	**KSI**	**36.00**	**10.91**	**3.02**	**5.571**	**160.18**
88.00	80.0	Shear	KIPS	542.44	-50.54	-33.84	10.832	311.41
88.00	80.0	Overload	KSI	36.00	10.91	3.02	5.940	170.78
99.00	90.0	Flexure	KSI	36.00	6.11	1.71	12.616	362.72
99.00	**90.0**	**Shear**	**KIPS**	**542.44**	**-66.74**	**-38.39**	**9.123**	**262.27**
99.00	90.0	Overload	KSI	36.00	6.11	1.71	12.626	362.99
110.00	100.0	Flexure	KSI	-36.00	-0.00	-0.00	99.000	2846.25
110.00	**100.0**	**Shear**	**KIPS**	**336.32**	**-82.95**	**-42.95**	**4.084**	**117.42**
110.00	100.0	Overload	KSI	-36.00	-0.00	-0.00	99.000	2846.25

Detailed Rating Results
Girder E - As Inspected
EV3
Axle Load
Impact: As Requested
Lane: As Requested

Span 1

Location (ft)	Percent	Limit State	Units	Capacity	DL + Adj -LL*	LL	Legal Rating Factor	Legal Load Rating (Ton)
0.00	0.0	Flexure	KSI	-36.00	-0.00	-0.00	99.000	4257.00
0.00	**0.0**	**Shear**	**KIPS**	**328.32**	**82.95**	**63.93**	**2.647**	**113.82**
0.00	0.0	Overload	KSI	-36.00	-0.00	-0.00	99.000	4257.00
0.83	0.8	Flexure	KSI	-36.00	-0.59	-0.06	99.000	4257.00
0.83	**0.8**	**Shear**	**KIPS**	**328.32**	**81.73**	**63.42**	**2.688**	**115.58**
0.83	0.8	Overload	KSI	-36.00	-0.59	-0.06	99.000	4257.00
11.00	10.0	Flexure	KSI	36.00	6.11	2.55	8.479	364.62
11.00	**10.0**	**Shear**	**KIPS**	**542.44**	**66.74**	**57.12**	**6.131**	**263.65**
11.00	10.0	Overload	KSI	36.00	6.11	2.55	8.486	364.89
22.00	**20.0**	**Flexure**	**KSI**	**36.00**	**10.91**	**4.49**	**3.747**	**161.13**
22.00	20.0	Shear	KIPS	542.44	50.54	50.31	7.285	313.26

22.00	20.0	Overload	KSI	36.00	10.91	4.49	3.995	171.80
25.50	**23.2**	**Flexure**	**KSI**	**36.00**	**12.14**	**4.97**	**3.131**	**134.62**
25.50	23.2	Shear	KIPS	542.44	44.91	48.15	7.730	332.40
25.50	23.2	Overload	KSI	36.00	12.14	4.97	3.411	146.68
33.00	**30.0**	**Flexure**	**KSI**	**36.00**	**11.21**	**4.70**	**3.507**	**150.81**
33.00	30.0	Shear	KIPS	542.44	33.61	43.50	8.816	379.10
33.00	30.0	Overload	KSI	36.00	11.21	4.70	3.761	161.72
44.00	**40.0**	**Flexure**	**KSI**	**36.00**	**12.83**	**5.32**	**2.794**	**120.15**
44.00	40.0	Shear	KIPS	542.44	17.04	36.69	10.907	468.98
44.00	40.0	Overload	KSI	36.00	12.83	5.32	3.088	132.79
49.50	**45.0**	**Flexure**	**KSI**	**36.00**	**13.23**	**5.48**	**2.643**	**113.67**
49.50	45.0	Shear	KIPS	542.44	8.29	33.29	12.286	528.30
49.50	45.0	Overload	KSI	36.00	13.23	5.48	2.946	126.67
55.00	**50.0**	**Flexure**	**KSI**	**36.00**	**13.36**	**5.51**	**2.605**	**112.00**
55.00	50.0	Shear	KIPS	542.44	0.00	-29.88	13.965	600.49
55.00	50.0	Overload	KSI	36.00	13.36	5.51	2.911	125.17
66.00	**60.0**	**Flexure**	**KSI**	**36.00**	**12.83**	**5.32**	**2.794**	**120.15**
66.00	60.0	Shear	KIPS	542.44	-17.04	-36.69	10.907	468.98
66.00	60.0	Overload	KSI	36.00	12.83	5.32	3.088	132.79
77.00	**70.0**	**Flexure**	**KSI**	**36.00**	**11.21**	**4.70**	**3.507**	**150.81**
77.00	70.0	Shear	KIPS	542.44	-33.61	-43.50	8.816	379.10
77.00	70.0	Overload	KSI	36.00	11.21	4.70	3.761	161.72
84.50	**76.8**	**Flexure**	**KSI**	**36.00**	**12.14**	**4.97**	**3.131**	**134.62**
84.50	76.8	Shear	KIPS	542.44	-44.91	-48.15	7.730	332.40
84.50	76.8	Overload	KSI	36.00	12.14	4.97	3.411	146.68
88.00	**80.0**	**Flexure**	**KSI**	**36.00**	**10.91**	**4.49**	**3.747**	**161.13**
88.00	80.0	Shear	KIPS	542.44	-50.54	-50.31	7.285	313.26
88.00	80.0	Overload	KSI	36.00	10.91	4.49	3.995	171.80
99.00	90.0	Flexure	KSI	36.00	6.11	2.55	8.479	364.62
99.00	**90.0**	**Shear**	**KIPS**	**542.44**	**-66.74**	**-57.12**	**6.131**	**263.65**
99.00	90.0	Overload	KSI	36.00	6.11	2.55	8.486	364.89
110.00	100.0	Flexure	KSI	-36.00	-0.00	-0.00	99.000	4257.00
110.00	**100.0**	**Shear**	**KIPS**	**336.32**	**-82.95**	**-63.93**	**2.743**	**117.96**
110.00	100.0	Overload	KSI	-36.00	-0.00	-0.00	99.000	4257.00

Detailed Rating Results
Girder E - As Inspected
HL-93 (US)
Truck + Lane
Impact: As Requested
Lane: As Requested

Span 1

D511

Location (ft)	Percent	Limit State	Units	Capacity	DL + Adj-LL*	LL	Inventory Rating Factor	Inventory Load Rating (Ton)	Operating Rating Factor	Operating Load Rating (Ton)
0.00	0.0	Flexure	KSI	-36.00	-0.00	-0.00	99.000	3564.00	99.000	3564.00
0.00	**0.0**	**Shear**	**KIPS**	**328.32**	**82.95**	**95.70**	**1.314**	**47.29**	**1.703**	**61.31**
0.00	0.0	Overload	KSI	-36.00	-0.00	-0.00	99.000	3564.00	99.000	3564.00
0.83	0.8	Flexure	KSI	36.00	0.51	0.39	52.091	1875.29	67.526	2430.93
0.83	**0.8**	**Shear**	**KIPS**	**328.32**	**81.73**	**94.72**	**1.337**	**48.13**	**1.733**	**62.39**
0.83	0.8	Overload	KSI	36.00	0.51	0.39	66.852	2406.67	86.908	3128.67
11.00	10.0	Flexure	KSI	36.00	6.11	4.62	3.475	125.08	4.504	162.15
11.00	**10.0**	**Shear**	**KIPS**	**542.44**	**66.74**	**83.03**	**3.134**	**112.81**	**4.062**	**146.24**
11.00	10.0	Overload	KSI	36.00	6.11	4.62	4.681	168.51	6.085	219.06
22.00	**20.0**	**Flexure**	**KSI**	**36.00**	**10.91**	**8.13**	**1.536**	**55.28**	**1.991**	**71.66**
22.00	20.0	Shear	KIPS	542.44	50.54	70.90	3.840	138.25	4.978	179.21
22.00	20.0	Overload	KSI	36.00	10.91	8.13	2.204	79.35	2.865	103.15
25.50	**23.2**	**Flexure**	**KSI**	**36.00**	**12.14**	**9.02**	**1.283**	**46.19**	**1.663**	**59.88**
25.50	23.2	Shear	KIPS	542.44	44.91	67.16	4.116	148.19	5.336	192.10
25.50	23.2	Overload	KSI	36.00	12.14	9.02	1.882	67.75	2.447	88.07
33.00	**30.0**	**Flexure**	**KSI**	**36.00**	**11.21**	**8.52**	**1.438**	**51.75**	**1.863**	**67.09**
33.00	30.0	Shear	KIPS	542.44	33.61	59.33	4.802	172.87	6.225	224.09
33.00	30.0	Overload	KSI	36.00	11.21	8.52	2.075	74.70	2.698	97.11
44.00	**40.0**	**Flexure**	**KSI**	**36.00**	**12.83**	**9.67**	**1.142**	**41.12**	**1.481**	**53.30**
44.00	40.0	Shear	KIPS	542.44	17.04	48.31	6.154	221.54	7.977	287.18
44.00	40.0	Overload	KSI	36.00	12.83	9.67	1.699	61.17	2.209	79.53
49.50	**45.0**	**Flexure**	**KSI**	**36.00**	**13.23**	**9.94**	**1.082**	**38.95**	**1.403**	**50.50**
49.50	45.0	Shear	KIPS	542.44	8.29	43.00	7.065	254.34	9.158	329.70
49.50	45.0	Overload	KSI	36.00	13.23	9.94	1.623	58.44	2.110	75.97
55.00	**50.0**	**Flexure**	**KSI**	**36.00**	**13.36**	**9.98**	**1.068**	**38.44**	**1.384**	**49.82**
55.00	50.0	Shear	KIPS	542.44	0.00	-37.83	8.194	294.99	10.622	382.39
55.00	50.0	Overload	KSI	36.00	13.36	9.98	1.606	57.82	2.088	75.17
66.00	**60.0**	**Flexure**	**KSI**	**36.00**	**12.83**	**9.67**	**1.142**	**41.12**	**1.481**	**53.30**
66.00	60.0	Shear	KIPS	542.44	-17.04	-48.31	6.154	221.54	7.977	287.18
66.00	60.0	Overload	KSI	36.00	12.83	9.67	1.699	61.17	2.209	79.53
77.00	**70.0**	**Flexure**	**KSI**	**36.00**	**11.21**	**8.52**	**1.438**	**51.75**	**1.863**	**67.09**
77.00	70.0	Shear	KIPS	542.44	-33.61	-59.33	4.802	172.87	6.225	224.09
77.00	70.0	Overload	KSI	36.00	11.21	8.52	2.075	74.70	2.698	97.11
84.50	**76.8**	**Flexure**	**KSI**	**36.00**	**12.14**	**9.02**	**1.283**	**46.19**	**1.663**	**59.88**
84.50	76.8	Shear	KIPS	542.44			4.116	148.19	5.336	192.10

					-44.91	-67.16				
84.50	76.8	Overload	KSI	36.00	12.14	9.02	1.882	67.75	2.447	88.07
88.00	**80.0**	**Flexure**	**KSI**	**36.00**	**10.91**	**8.13**	**1.536**	**55.28**	**1.991**	**71.66**
88.00	80.0	Shear	KIPS	542.44	-50.54	-70.90	3.840	138.25	4.978	179.21
88.00	80.0	Overload	KSI	36.00	10.91	8.13	2.204	79.35	2.865	103.15
99.00	90.0	Flexure	KSI	36.00	6.11	4.62	3.475	125.08	4.504	162.15
99.00	**90.0**	**Shear**	**KIPS**	**542.44**	**-66.74**	**-83.03**	**3.134**	**112.81**	**4.062**	**146.24**
99.00	90.0	Overload	KSI	36.00	6.11	4.62	4.681	168.51	6.085	219.06
110.00	100.0	Flexure	KSI	-36.00	-0.00	-0.00	99.000	3564.00	99.000	3564.00
110.00	**100.0**	**Shear**	**KIPS**	**336.32**	**-82.95**	**-95.70**	**1.362**	**49.01**	**1.765**	**63.54**
110.00	100.0	Overload	KSI	-36.00	-0.00	-0.00	99.000	3564.00	99.000	3564.00

Detailed Rating Results
Girder E - As Inspected
HL-93 (US)
Tandem + Lane
Impact: As Requested
Lane: As Requested

Span 1

Location (ft)	Percent	Limit State	Units	Capacity	DL + Adj-LL*	LL	Inventory Rating Factor	Inventory Load Rating (Ton)	Operating Rating Factor	Operating Load Rating (Ton)
0.00	0.0	Flexure	KSI	-36.00	-0.00	-0.00	99.000	3564.00	99.000	3564.00
0.00	**0.0**	**Shear**	**KIPS**	**328.32**	**82.95**	**78.29**	**1.606**	**57.81**	**2.082**	**74.94**
0.00	0.0	Overload	KSI	-36.00	-0.00	-0.00	99.000	3564.00	99.000	3564.00
0.83	0.8	Flexure	KSI	36.00	0.51	0.32	63.648	2291.31	82.506	2970.22
0.83	**0.8**	**Shear**	**KIPS**	**328.32**	**81.73**	**77.49**	**1.634**	**58.83**	**2.118**	**76.26**
0.83	0.8	Overload	KSI	36.00	0.51	0.32	81.683	2940.58	99.000	3564.00
11.00	10.0	Flexure	KSI	36.00	6.11	3.80	4.222	151.98	5.472	197.01
11.00	**10.0**	**Shear**	**KIPS**	**542.44**	**66.74**	**67.90**	**3.832**	**137.95**	**4.967**	**178.82**
11.00	10.0	Overload	KSI	36.00	6.11	3.80	5.687	204.73	7.393	266.15
22.00	**20.0**	**Flexure**	**KSI**	**36.00**	**10.91**	**6.74**	**1.852**	**66.66**	**2.400**	**86.41**
22.00	20.0	Shear	KIPS	542.44	50.54	58.06	4.690	168.84	6.080	218.87
22.00	20.0	Overload	KSI	36.00	10.91	6.74	2.658	95.67	3.455	124.38
25.50	**23.2**	**Flexure**	**KSI**	**36.00**	**12.14**	**7.50**	**1.543**	**55.53**	**2.000**	**71.99**
25.50	23.2	Shear	KIPS	542.44	44.91	55.04	5.023	180.83	6.512	234.41

25.50	23.2	Overload	KSI	36.00	12.14	7.50	2.263	81.46	2.941	105.89
33.00	**30.0**	**Flexure**	**KSI**	**36.00**	**11.21**	**7.14**	**1.716**	**61.78**	**2.225**	**80.09**
33.00	30.0	Shear	KIPS	542.44	33.61	48.76	5.843	210.34	7.574	272.66
33.00	30.0	Overload	KSI	36.00	11.21	7.14	2.477	89.19	3.221	115.94
44.00	**40.0**	**Flexure**	**KSI**	**36.00**	**12.83**	**8.14**	**1.358**	**48.90**	**1.761**	**63.39**
44.00	40.0	Shear	KIPS	542.44	17.04	40.02	7.429	267.43	9.630	346.67
44.00	40.0	Overload	KSI	36.00	12.83	8.14	2.021	72.75	2.627	94.57
49.50	**45.0**	**Flexure**	**KSI**	**36.00**	**13.23**	**8.37**	**1.284**	**46.24**	**1.665**	**59.94**
49.50	45.0	Shear	KIPS	542.44	8.29	35.85	8.474	305.07	10.985	395.46
49.50	45.0	Overload	KSI	36.00	13.23	8.37	1.927	69.36	2.505	90.17
55.00	**50.0**	**Flexure**	**KSI**	**36.00**	**13.36**	**8.44**	**1.263**	**45.46**	**1.637**	**58.93**
55.00	50.0	Shear	KIPS	542.44	0.00	-31.82	9.742	350.70	12.628	454.62
55.00	50.0	Overload	KSI	36.00	13.36	8.44	1.900	68.38	2.469	88.90
66.00	**60.0**	**Flexure**	**KSI**	**36.00**	**12.83**	**8.14**	**1.358**	**48.90**	**1.761**	**63.39**
66.00	60.0	Shear	KIPS	542.44	-17.04	-40.02	7.429	267.43	9.630	346.67
66.00	60.0	Overload	KSI	36.00	12.83	8.14	2.021	72.75	2.627	94.57
77.00	**70.0**	**Flexure**	**KSI**	**36.00**	**11.21**	**7.14**	**1.716**	**61.78**	**2.225**	**80.09**
77.00	70.0	Shear	KIPS	542.44	-33.61	-48.76	5.843	210.34	7.574	272.66
77.00	70.0	Overload	KSI	36.00	11.21	7.14	2.477	89.19	3.221	115.94
84.50	**76.8**	**Flexure**	**KSI**	**36.00**	**12.14**	**7.50**	**1.543**	**55.53**	**2.000**	**71.99**
84.50	76.8	Shear	KIPS	542.44	-44.91	-55.04	5.023	180.83	6.512	234.41
84.50	76.8	Overload	KSI	36.00	12.14	7.50	2.263	81.46	2.941	105.89
88.00	**80.0**	**Flexure**	**KSI**	**36.00**	**10.91**	**6.74**	**1.852**	**66.66**	**2.400**	**86.41**
88.00	80.0	Shear	KIPS	542.44	-50.54	-58.06	4.690	168.84	6.080	218.87
88.00	80.0	Overload	KSI	36.00	10.91	6.74	2.658	95.67	3.455	124.38
99.00	90.0	Flexure	KSI	36.00	6.11	3.80	4.222	151.98	5.472	197.01
99.00	**90.0**	**Shear**	**KIPS**	**542.44**	**-66.74**	**-67.90**	**3.832**	**137.95**	**4.967**	**178.82**
99.00	90.0	Overload	KSI	36.00	6.11	3.80	5.687	204.73	7.393	266.15
110.00	100.0	Flexure	KSI	-36.00	-0.00	-0.00	99.000	3564.00	99.000	3564.00
110.00	**100.0**	**Shear**	**KIPS**	**336.32**	**-82.95**	**-78.29**	**1.664**	**59.91**	**2.157**	**77.66**
110.00	100.0	Overload	KSI	-36.00	-0.00	-0.00	99.000	3564.00	99.000	3564.00

Detailed Rating Results
Girder E - As Inspected
LRFD Fatigue Truck (US)
Axle Load
Impact: As Requested
Lane: As Requested

Span 1

Location (ft)	Percent	Limit State	Units	Capacity	DL + Adj-LL*	LL	Inventory Rating Factor	Inventory Load Rating (Ton)
0.83	0.8	Interaction	KSI	16.00	0.00	0.19	84.982	2549.47
11.00	10.0	Interaction	KSI	12.00	0.00	2.21	5.428	162.85
22.00	20.0	Interaction	KSI	12.00	0.00	3.82	3.142	94.26
25.50	23.2	Interaction	KSI	16.00	0.00	4.28	3.739	112.17
33.00	30.0	Interaction	KSI	12.00	0.00	3.96	3.034	91.02
44.00	40.0	Interaction	KSI	12.00	0.00	4.42	2.714	81.43
49.50	45.0	Interaction	KSI	12.00	0.00	4.47	2.683	80.48
55.00	50.0	Interaction	KSI	12.00	0.00	4.40	2.725	81.74
66.00	60.0	Interaction	KSI	12.00	0.00	4.42	2.714	81.43
77.00	70.0	Interaction	KSI	12.00	0.00	3.96	3.034	91.02
84.50	76.8	Interaction	KSI	16.00	0.00	4.20	3.805	114.16
88.00	80.0	Interaction	KSI	12.00	0.00	3.82	3.142	94.26
99.00	90.0	Interaction	KSI	12.00	0.00	2.21	5.428	162.85

Detailed Rating Results
Girder E - As Inspected
SU4
Axle Load
Impact: As Requested
Lane: As Requested

Span 1

Location (ft)	Percent	Limit State	Units	Capacity	DL + Adj -LL*	LL	Legal Rating Factor	Legal Load Rating (Ton)
0.00	0.0	Flexure	KSI	-36.00	-0.00	-0.00	99.000	2673.00
0.00	0.0	Shear	KIPS	328.32	82.95	47.53	3.561	96.15
0.00	0.0	Overload	KSI	-36.00	-0.00	-0.00	99.000	2673.00
0.83	0.8	Flexure	KSI	-36.00	-0.59	-0.05	99.000	2673.00
0.83	0.8	Shear	KIPS	328.32	81.73	47.15	3.616	97.63
0.83	0.8	Overload	KSI	-36.00	-0.59	-0.05	99.000	2673.00
11.00	10.0	Flexure	KSI	36.00	6.11	2.29	9.414	254.18
11.00	10.0	Shear	KIPS	542.44	66.74	42.48	8.245	222.63

11.00	10.0	Overload	KSI	36.00	6.11	2.29	9.421	254.37
22.00	**20.0**	**Flexure**	**KSI**	**36.00**	**10.91**	**4.04**	**4.158**	**112.28**
22.00	20.0	Shear	KIPS	542.44	50.54	37.43	9.793	264.41
22.00	20.0	Overload	KSI	36.00	10.91	4.04	4.434	119.71
25.50	**23.2**	**Flexure**	**KSI**	**36.00**	**12.14**	**4.48**	**3.474**	**93.79**
25.50	23.2	Shear	KIPS	542.44	44.91	35.82	10.389	280.51
25.50	23.2	Overload	KSI	36.00	12.14	4.48	3.785	102.19
33.00	**30.0**	**Flexure**	**KSI**	**36.00**	**11.21**	**4.24**	**3.890**	**105.03**
33.00	30.0	Shear	KIPS	542.44	33.61	32.38	11.844	319.79
33.00	30.0	Overload	KSI	36.00	11.21	4.24	4.171	112.62
44.00	**40.0**	**Flexure**	**KSI**	**36.00**	**12.83**	**4.84**	**3.073**	**82.98**
44.00	40.0	Shear	KIPS	542.44	17.04	27.33	14.641	395.30
44.00	40.0	Overload	KSI	36.00	12.83	4.84	3.397	91.71
49.50	**45.0**	**Flexure**	**KSI**	**36.00**	**13.23**	**4.98**	**2.907**	**78.48**
49.50	45.0	Shear	KIPS	542.44	8.29	24.81	16.484	445.07
49.50	45.0	Overload	KSI	36.00	13.23	4.98	3.239	87.46
55.00	**50.0**	**Flexure**	**KSI**	**36.00**	**13.36**	**5.01**	**2.863**	**77.29**
55.00	50.0	Shear	KIPS	542.44	0.00	-22.28	18.725	505.57
55.00	50.0	Overload	KSI	36.00	13.36	5.01	3.199	86.38
66.00	**60.0**	**Flexure**	**KSI**	**36.00**	**12.83**	**4.84**	**3.073**	**82.98**
66.00	60.0	Shear	KIPS	542.44	-17.04	-27.33	14.641	395.30
66.00	60.0	Overload	KSI	36.00	12.83	4.84	3.397	91.71
77.00	**70.0**	**Flexure**	**KSI**	**36.00**	**11.21**	**4.24**	**3.890**	**105.03**
77.00	70.0	Shear	KIPS	542.44	-33.61	-32.38	11.844	319.79
77.00	70.0	Overload	KSI	36.00	11.21	4.24	4.171	112.62
84.50	**76.8**	**Flexure**	**KSI**	**36.00**	**12.14**	**4.48**	**3.474**	**93.79**
84.50	76.8	Shear	KIPS	542.44	-44.91	-35.82	10.389	280.51
84.50	76.8	Overload	KSI	36.00	12.14	4.48	3.785	102.19
88.00	**80.0**	**Flexure**	**KSI**	**36.00**	**10.91**	**4.04**	**4.158**	**112.28**
88.00	80.0	Shear	KIPS	542.44	-50.54	-37.43	9.793	264.41
88.00	80.0	Overload	KSI	36.00	10.91	4.04	4.434	119.71
99.00	90.0	Flexure	KSI	36.00	6.11	2.29	9.414	254.18
99.00	**90.0**	**Shear**	**KIPS**	**542.44**	**-66.74**	**-42.48**	**8.245**	**222.63**
99.00	90.0	Overload	KSI	36.00	6.11	2.29	9.421	254.37
110.00	100.0	Flexure	KSI	-36.00	-0.00	-0.00	99.000	2673.00
110.00	**100.0**	**Shear**	**KIPS**	**336.32**	**-82.95**	**-47.53**	**3.691**	**99.64**
110.00	100.0	Overload	KSI	-36.00	-0.00	-0.00	99.000	2673.00

Detailed Rating Results
Girder E - As Inspected
SU5
Axle Load
Impact: As Requested

Lane: As Requested

Span 1

Location (ft)	Percent	Limit State	Units	Capacity	DL + Adj -LL*	LL	Legal Rating Factor	Legal Load Rating (Ton)
0.00	0.0	Flexure	KSI	-36.00	-0.00	-0.00	99.000	3069.00
0.00	**0.0**	**Shear**	**KIPS**	**328.32**	**82.95**	**53.78**	**3.147**	**97.55**
0.00	0.0	Overload	KSI	-36.00	-0.00	-0.00	99.000	3069.00
0.83	0.8	Flexure	KSI	-36.00	-0.59	-0.06	99.000	3069.00
0.83	**0.8**	**Shear**	**KIPS**	**328.32**	**81.73**	**53.34**	**3.196**	**99.06**
0.83	0.8	Overload	KSI	-36.00	-0.59	-0.06	99.000	3069.00
11.00	10.0	Flexure	KSI	36.00	6.11	2.59	8.334	258.34
11.00	**10.0**	**Shear**	**KIPS**	**542.44**	**66.74**	**47.98**	**7.299**	**226.27**
11.00	10.0	Overload	KSI	36.00	6.11	2.59	8.340	258.53
22.00	**20.0**	**Flexure**	**KSI**	**36.00**	**10.91**	**4.56**	**3.689**	**114.37**
22.00	20.0	Shear	KIPS	542.44	50.54	42.19	8.688	269.33
22.00	20.0	Overload	KSI	36.00	10.91	4.56	3.934	121.94
25.50	**23.2**	**Flexure**	**KSI**	**36.00**	**12.14**	**5.05**	**3.084**	**95.62**
25.50	23.2	Shear	KIPS	542.44	44.91	40.34	9.225	285.97
25.50	23.2	Overload	KSI	36.00	12.14	5.05	3.361	104.18
33.00	**30.0**	**Flexure**	**KSI**	**36.00**	**11.21**	**4.79**	**3.444**	**106.76**
33.00	30.0	Shear	KIPS	542.44	33.61	36.39	10.539	326.69
33.00	30.0	Overload	KSI	36.00	11.21	4.79	3.693	114.48
44.00	**40.0**	**Flexure**	**KSI**	**36.00**	**12.83**	**5.46**	**2.726**	**84.50**
44.00	40.0	Shear	KIPS	542.44	17.04	30.60	13.079	405.45
44.00	40.0	Overload	KSI	36.00	12.83	5.46	3.012	93.38
49.50	**45.0**	**Flexure**	**KSI**	**36.00**	**13.23**	**5.60**	**2.585**	**80.12**
49.50	45.0	Shear	KIPS	542.44	8.29	27.70	14.764	457.69
49.50	45.0	Overload	KSI	36.00	13.23	5.60	2.880	89.28
55.00	**50.0**	**Flexure**	**KSI**	**36.00**	**13.36**	**5.62**	**2.553**	**79.13**
55.00	50.0	Shear	KIPS	542.44	0.00	-24.80	16.825	521.58
55.00	50.0	Overload	KSI	36.00	13.36	5.62	2.853	88.44
66.00	**60.0**	**Flexure**	**KSI**	**36.00**	**12.83**	**5.46**	**2.726**	**84.50**
66.00	60.0	Shear	KIPS	542.44	-17.04	-30.60	13.079	405.45
66.00	60.0	Overload	KSI	36.00	12.83	5.46	3.012	93.38
77.00	**70.0**	**Flexure**	**KSI**	**36.00**	**11.21**	**4.79**	**3.444**	**106.76**
77.00	70.0	Shear	KIPS	542.44	-33.61	-36.39	10.539	326.69
77.00	70.0	Overload	KSI	36.00	11.21	4.79	3.693	114.48
84.50	**76.8**	**Flexure**	**KSI**	**36.00**	**12.14**	**5.05**	**3.084**	**95.62**
84.50	76.8	Shear	KIPS	542.44	-44.91	-40.34	9.225	285.97

84.50	76.8	Overload	KSI	36.00	12.14	5.05	3.361	104.18
88.00	**80.0**	**Flexure**	**KSI**	**36.00**	**10.91**	**4.56**	**3.689**	**114.37**
88.00	80.0	Shear	KIPS	542.44	-50.54	-42.19	8.688	269.33
88.00	80.0	Overload	KSI	36.00	10.91	4.56	3.934	121.94
99.00	90.0	Flexure	KSI	36.00	6.11	2.59	8.334	258.34
99.00	**90.0**	**Shear**	**KIPS**	**542.44**	**-66.74**	**-47.98**	**7.299**	**226.27**
99.00	90.0	Overload	KSI	36.00	6.11	2.59	8.340	258.53
110.00	100.0	Flexure	KSI	-36.00	-0.00	-0.00	99.000	3069.00
110.00	**100.0**	**Shear**	**KIPS**	**336.32**	**-82.95**	**-53.78**	**3.261**	**101.10**
110.00	100.0	Overload	KSI	-36.00	-0.00	-0.00	99.000	3069.00

Detailed Rating Results
Girder E - As Inspected
SU6
Axle Load
Impact: As Requested
Lane: As Requested

Span 1

Location (ft)	Percent	Limit State	Units	Capacity	DL + Adj -LL*	LL	Legal Rating Factor	Legal Load Rating (Ton)
0.00	0.0	Flexure	KSI	-36.00	-0.00	-0.00	99.000	3440.25
0.00	**0.0**	**Shear**	**KIPS**	**328.32**	**82.95**	**58.80**	**2.878**	**100.02**
0.00	0.0	Overload	KSI	-36.00	-0.00	-0.00	99.000	3440.25
0.83	0.8	Flexure	KSI	-36.00	-0.59	-0.07	99.000	3440.25
0.83	**0.8**	**Shear**	**KIPS**	**328.32**	**81.73**	**58.31**	**2.924**	**101.60**
0.83	0.8	Overload	KSI	-36.00	-0.59	-0.07	99.000	3440.25
11.00	10.0	Flexure	KSI	36.00	6.11	2.82	7.646	265.71
11.00	**10.0**	**Shear**	**KIPS**	**542.44**	**66.74**	**52.30**	**6.697**	**232.72**
11.00	10.0	Overload	KSI	36.00	6.11	2.82	7.652	265.91
22.00	**20.0**	**Flexure**	**KSI**	**36.00**	**10.91**	**5.05**	**3.326**	**115.56**
22.00	20.0	Shear	KIPS	542.44	50.54	45.80	8.003	278.10
22.00	20.0	Overload	KSI	36.00	10.91	5.05	3.546	123.21
25.50	**23.2**	**Flexure**	**KSI**	**36.00**	**12.14**	**5.62**	**2.770**	**96.26**
25.50	23.2	Shear	KIPS	542.44	44.91	43.73	8.510	295.72
25.50	23.2	Overload	KSI	36.00	12.14	5.62	3.018	104.88
33.00	**30.0**	**Flexure**	**KSI**	**36.00**	**11.21**	**5.34**	**3.090**	**107.39**
33.00	30.0	Shear	KIPS	542.44	33.61	39.30	9.758	339.09
33.00	30.0	Overload	KSI	36.00	11.21	5.34	3.314	115.15
44.00	**40.0**	**Flexure**	**KSI**	**36.00**	**12.83**	**6.06**	**2.454**	**85.26**

44.00	40.0	Shear	KIPS	542.44	17.04	32.81	12.198	423.88
44.00	40.0	Overload	KSI	36.00	12.83	6.06	2.712	94.23
49.50	**45.0**	**Flexure**	**KSI**	**36.00**	**13.23**	**6.24**	**2.319**	**80.58**
49.50	45.0	Shear	KIPS	542.44	8.29	29.56	13.836	480.79
49.50	45.0	Overload	KSI	36.00	13.23	6.24	2.584	89.80
55.00	**50.0**	**Flexure**	**KSI**	**36.00**	**13.36**	**6.28**	**2.283**	**79.35**
55.00	50.0	Shear	KIPS	542.44	0.00	-26.31	15.860	551.15
55.00	50.0	Overload	KSI	36.00	13.36	6.28	2.552	88.67
66.00	**60.0**	**Flexure**	**KSI**	**36.00**	**12.83**	**6.06**	**2.454**	**85.26**
66.00	60.0	Shear	KIPS	542.44	-17.04	-32.81	12.198	423.88
66.00	60.0	Overload	KSI	36.00	12.83	6.06	2.712	94.23
77.00	**70.0**	**Flexure**	**KSI**	**36.00**	**11.21**	**5.34**	**3.090**	**107.39**
77.00	70.0	Shear	KIPS	542.44	-33.61	-39.30	9.758	339.09
77.00	70.0	Overload	KSI	36.00	11.21	5.34	3.314	115.15
84.50	**76.8**	**Flexure**	**KSI**	**36.00**	**12.14**	**5.62**	**2.770**	**96.26**
84.50	76.8	Shear	KIPS	542.44	-44.91	-43.73	8.510	295.72
84.50	76.8	Overload	KSI	36.00	12.14	5.62	3.018	104.88
88.00	**80.0**	**Flexure**	**KSI**	**36.00**	**10.91**	**5.05**	**3.326**	**115.56**
88.00	80.0	Shear	KIPS	542.44	-50.54	-45.80	8.003	278.10
88.00	80.0	Overload	KSI	36.00	10.91	5.05	3.546	123.21
99.00	90.0	Flexure	KSI	36.00	6.11	2.82	7.646	265.71
99.00	**90.0**	**Shear**	**KIPS**	**542.44**	**-66.74**	**-52.30**	**6.697**	**232.72**
99.00	90.0	Overload	KSI	36.00	6.11	2.82	7.652	265.91
110.00	100.0	Flexure	KSI	-36.00	-0.00	-0.00	99.000	3440.25
110.00	**100.0**	**Shear**	**KIPS**	**336.32**	**-82.95**	**-58.80**	**2.983**	**103.67**
110.00	100.0	Overload	KSI	-36.00	-0.00	-0.00	99.000	3440.25

Detailed Rating Results
Girder E - As Inspected
SU7
Axle Load
Impact: As Requested
Lane: As Requested

Span 1

Location (ft)	Percent	Limit State	Units	Capacity	DL + Adj -LL*	LL	Legal Rating Factor	Legal Load Rating (Ton)
0.00	0.0	Flexure	KSI	-36.00	-0.00	-0.00	99.000	3836.25
0.00	**0.0**	**Shear**	**KIPS**	**328.32**	**82.95**	**63.91**	**2.648**	**102.61**
0.00	0.0	Overload	KSI	-36.00	-0.00	-0.00	99.000	3836.25

0.83	0.8	Flexure	KSI	-36.00	-0.59	-0.07	99.000	3836.25
0.83	**0.8**	**Shear**	**KIPS**	**328.32**	**81.73**	**63.37**	**2.690**	**104.25**
0.83	0.8	Overload	KSI	-36.00	-0.59	-0.07	99.000	3836.25
11.00	10.0	Flexure	KSI	36.00	6.11	3.06	7.057	273.45
11.00	**10.0**	**Shear**	**KIPS**	**542.44**	**66.74**	**56.67**	**6.181**	**239.51**
11.00	10.0	Overload	KSI	36.00	6.11	3.06	7.062	273.65
22.00	**20.0**	**Flexure**	**KSI**	**36.00**	**10.91**	**5.47**	**3.070**	**118.97**
22.00	20.0	Shear	KIPS	542.44	50.54	49.42	7.417	287.39
22.00	20.0	Overload	KSI	36.00	10.91	5.47	3.273	126.85
25.50	**23.2**	**Flexure**	**KSI**	**36.00**	**12.14**	**6.12**	**2.547**	**98.68**
25.50	23.2	Shear	KIPS	542.44	44.91	47.12	7.899	306.09
25.50	23.2	Overload	KSI	36.00	12.14	6.12	2.775	107.52
33.00	**30.0**	**Flexure**	**KSI**	**36.00**	**11.21**	**5.86**	**2.816**	**109.13**
33.00	30.0	Shear	KIPS	542.44	33.61	42.18	9.093	352.37
33.00	30.0	Overload	KSI	36.00	11.21	5.86	3.020	117.02
44.00	**40.0**	**Flexure**	**KSI**	**36.00**	**12.83**	**6.66**	**2.233**	**86.52**
44.00	40.0	Shear	KIPS	542.44	17.04	34.93	11.456	443.92
44.00	40.0	Overload	KSI	36.00	12.83	6.66	2.468	95.62
49.50	**45.0**	**Flexure**	**KSI**	**36.00**	**13.23**	**6.86**	**2.112**	**81.83**
49.50	45.0	Shear	KIPS	542.44	8.29	31.31	13.062	506.15
49.50	45.0	Overload	KSI	36.00	13.23	6.86	2.353	91.19
55.00	**50.0**	**Flexure**	**KSI**	**36.00**	**13.36**	**6.92**	**2.073**	**80.32**
55.00	50.0	Shear	KIPS	542.44	0.00	-27.69	15.072	584.03
55.00	50.0	Overload	KSI	36.00	13.36	6.92	2.317	89.76
66.00	**60.0**	**Flexure**	**KSI**	**36.00**	**12.83**	**6.66**	**2.233**	**86.52**
66.00	60.0	Shear	KIPS	542.44	-17.04	-34.93	11.456	443.92
66.00	60.0	Overload	KSI	36.00	12.83	6.66	2.468	95.62
77.00	**70.0**	**Flexure**	**KSI**	**36.00**	**11.21**	**5.86**	**2.816**	**109.13**
77.00	70.0	Shear	KIPS	542.44	-33.61	-42.18	9.093	352.37
77.00	70.0	Overload	KSI	36.00	11.21	5.86	3.020	117.02
84.50	**76.8**	**Flexure**	**KSI**	**36.00**	**12.14**	**6.12**	**2.547**	**98.68**
84.50	76.8	Shear	KIPS	542.44	-44.91	-47.12	7.899	306.09
84.50	76.8	Overload	KSI	36.00	12.14	6.12	2.775	107.52
88.00	**80.0**	**Flexure**	**KSI**	**36.00**	**10.91**	**5.47**	**3.070**	**118.97**
88.00	80.0	Shear	KIPS	542.44	-50.54	-49.42	7.417	287.39
88.00	80.0	Overload	KSI	36.00	10.91	5.47	3.273	126.85
99.00	90.0	Flexure	KSI	36.00	6.11	3.06	7.057	273.45
99.00	**90.0**	**Shear**	**KIPS**	**542.44**	**-66.74**	**-56.67**	**6.181**	**239.51**
99.00	90.0	Overload	KSI	36.00	6.11	3.06	7.062	273.65
110.00	100.0	Flexure	KSI	-36.00	-0.00	-0.00	99.000	3836.25
110.00	**100.0**	**Shear**	**KIPS**	**336.32**	**-82.95**	**-63.91**	**2.744**	**106.34**
110.00	100.0	Overload	KSI	-36.00	-0.00	-0.00	99.000	3836.25

Detailed Rating Results
Girder E - As Inspected
Type 3
Axle Load
Impact: As Requested
Lane: As Requested

Span 1

Location (ft)	Percent	Limit State	Units	Capacity	DL + Adj -LL*	LL	Legal Rating Factor	Legal Load Rating (Ton)
0.00	0.0	Flexure	KSI	-36.00	-0.00	-0.00	99.000	2475.00
0.00	**0.0**	**Shear**	**KIPS**	**328.32**	**82.95**	**43.58**	**3.883**	**97.08**
0.00	0.0	Overload	KSI	-36.00	-0.00	-0.00	99.000	2475.00
0.83	0.8	Flexure	KSI	-36.00	-0.59	-0.05	99.000	2475.00
0.83	**0.8**	**Shear**	**KIPS**	**328.32**	**81.73**	**43.23**	**3.943**	**98.58**
0.83	0.8	Overload	KSI	-36.00	-0.59	-0.05	99.000	2475.00
11.00	10.0	Flexure	KSI	36.00	6.11	2.10	10.278	256.94
11.00	**10.0**	**Shear**	**KIPS**	**542.44**	**66.74**	**38.91**	**9.002**	**225.05**
11.00	10.0	Overload	KSI	36.00	6.11	2.10	10.285	257.13
22.00	**20.0**	**Flexure**	**KSI**	**36.00**	**10.91**	**3.70**	**4.547**	**113.67**
22.00	20.0	Shear	KIPS	542.44	50.54	34.23	10.707	267.67
22.00	20.0	Overload	KSI	36.00	10.91	3.70	4.848	121.19
25.50	**23.2**	**Flexure**	**KSI**	**36.00**	**12.14**	**4.10**	**3.800**	**95.00**
25.50	23.2	Shear	KIPS	542.44	44.91	32.75	11.365	284.13
25.50	23.2	Overload	KSI	36.00	12.14	4.10	4.140	103.51
33.00	**30.0**	**Flexure**	**KSI**	**36.00**	**11.21**	**3.87**	**4.261**	**106.53**
33.00	30.0	Shear	KIPS	542.44	33.61	29.56	12.975	324.37
33.00	30.0	Overload	KSI	36.00	11.21	3.87	4.569	114.24
44.00	**40.0**	**Flexure**	**KSI**	**36.00**	**12.83**	**4.39**	**3.389**	**84.73**
44.00	40.0	Shear	KIPS	542.44	17.04	24.88	16.081	402.02
44.00	40.0	Overload	KSI	36.00	12.83	4.39	3.746	93.64
49.50	**45.0**	**Flexure**	**KSI**	**36.00**	**13.23**	**4.51**	**3.210**	**80.25**
49.50	45.0	Shear	KIPS	542.44	8.29	22.55	18.137	453.42
49.50	45.0	Overload	KSI	36.00	13.23	4.51	3.577	89.43
55.00	**50.0**	**Flexure**	**KSI**	**36.00**	**13.36**	**4.53**	**3.167**	**79.18**
55.00	50.0	Shear	KIPS	542.44	0.00	-20.21	20.646	516.15
55.00	50.0	Overload	KSI	36.00	13.36	4.53	3.540	88.49
66.00	**60.0**	**Flexure**	**KSI**	**36.00**	**12.83**	**4.39**	**3.389**	**84.73**
66.00	60.0	Shear	KIPS	542.44	-17.04	-24.88	16.081	402.02

66.00	60.0	Overload	KSI	36.00	12.83	4.39	3.746	93.64
77.00	**70.0**	**Flexure**	**KSI**	**36.00**	**11.21**	**3.87**	**4.261**	**106.53**
77.00	70.0	Shear	KIPS	542.44	-33.61	-29.56	12.975	324.37
77.00	70.0	Overload	KSI	36.00	11.21	3.87	4.569	114.24
84.50	**76.8**	**Flexure**	**KSI**	**36.00**	**12.14**	**4.10**	**3.800**	**95.00**
84.50	76.8	Shear	KIPS	542.44	-44.91	-32.75	11.365	284.13
84.50	76.8	Overload	KSI	36.00	12.14	4.10	4.140	103.51
88.00	**80.0**	**Flexure**	**KSI**	**36.00**	**10.91**	**3.70**	**4.547**	**113.67**
88.00	80.0	Shear	KIPS	542.44	-50.54	-34.23	10.707	267.67
88.00	80.0	Overload	KSI	36.00	10.91	3.70	4.848	121.19
99.00	90.0	Flexure	KSI	36.00	6.11	2.10	10.278	256.94
99.00	**90.0**	**Shear**	**KIPS**	**542.44**	**-66.74**	**-38.91**	**9.002**	**225.05**
99.00	90.0	Overload	KSI	36.00	6.11	2.10	10.285	257.13
110.00	100.0	Flexure	KSI	-36.00	-0.00	-0.00	99.000	2475.00
110.00	**100.0**	**Shear**	**KIPS**	**336.32**	**-82.95**	**-43.58**	**4.024**	**100.61**
110.00	100.0	Overload	KSI	-36.00	-0.00	-0.00	99.000	2475.00

Detailed Rating Results
Girder E - As Inspected
Type 3-3
Axle Load
Impact: As Requested
Lane: As Requested

Span 1

Location (ft)	Percent	Limit State	Units	Capacity	DL + Adj -LL*	LL	Legal Rating Factor	Legal Load Rating (Ton)
0.00	0.0	Flexure	KSI	-36.00	-0.00	-0.00	99.000	3960.00
0.00	**0.0**	**Shear**	**KIPS**	**328.32**	**82.95**	**58.54**	**2.891**	**115.64**
0.00	0.0	Overload	KSI	-36.00	-0.00	-0.00	99.000	3960.00
0.83	0.8	Flexure	KSI	-36.00	-0.59	-0.07	99.000	3960.00
0.83	**0.8**	**Shear**	**KIPS**	**328.32**	**81.73**	**57.98**	**2.940**	**117.61**
0.83	0.8	Overload	KSI	-36.00	-0.59	-0.07	99.000	3960.00
11.00	10.0	Flexure	KSI	36.00	6.11	2.76	7.831	313.26
11.00	**10.0**	**Shear**	**KIPS**	**542.44**	**66.74**	**51.06**	**6.859**	**274.37**
11.00	10.0	Overload	KSI	36.00	6.11	2.76	7.837	313.49
22.00	**20.0**	**Flexure**	**KSI**	**36.00**	**10.91**	**4.74**	**3.544**	**141.75**
22.00	20.0	Shear	KIPS	542.44	50.54	43.58	8.410	336.41
22.00	20.0	Overload	KSI	36.00	10.91	4.74	3.778	151.13
25.50	**23.2**	**Flexure**	**KSI**	**36.00**	**12.14**	**5.24**	**2.972**	**118.88**

25.50	23.2	Shear	KIPS	542.44	44.91	41.20	9.033	361.31
25.50	23.2	Overload	KSI	36.00	12.14	5.24	3.238	129.53
33.00	**30.0**	**Flexure**	**KSI**	**36.00**	**11.21**	**4.88**	**3.383**	**135.31**
33.00	30.0	Shear	KIPS	542.44	33.61	36.10	10.623	424.92
33.00	30.0	Overload	KSI	36.00	11.21	4.88	3.627	145.09
44.00	**40.0**	**Flexure**	**KSI**	**36.00**	**12.83**	**5.50**	**2.704**	**108.14**
44.00	40.0	Shear	KIPS	542.44	17.04	28.62	13.980	559.20
44.00	40.0	Overload	KSI	36.00	12.83	5.50	2.988	119.52
49.50	**45.0**	**Flexure**	**KSI**	**36.00**	**13.23**	**5.69**	**2.545**	**101.80**
49.50	45.0	Shear	KIPS	542.44	8.29	24.88	16.433	657.33
49.50	45.0	Overload	KSI	36.00	13.23	5.69	2.836	113.44
55.00	**50.0**	**Flexure**	**KSI**	**36.00**	**13.36**	**5.71**	**2.511**	**100.45**
55.00	50.0	Shear	KIPS	542.44	0.00	-21.15	19.733	789.33
55.00	50.0	Overload	KSI	36.00	13.36	5.71	2.807	112.26
66.00	**60.0**	**Flexure**	**KSI**	**36.00**	**12.83**	**5.50**	**2.704**	**108.14**
66.00	60.0	Shear	KIPS	542.44	-17.04	-28.62	13.980	559.20
66.00	60.0	Overload	KSI	36.00	12.83	5.50	2.988	119.52
77.00	**70.0**	**Flexure**	**KSI**	**36.00**	**11.21**	**4.88**	**3.383**	**135.31**
77.00	70.0	Shear	KIPS	542.44	-33.61	-36.10	10.623	424.92
77.00	70.0	Overload	KSI	36.00	11.21	4.88	3.627	145.09
84.50	**76.8**	**Flexure**	**KSI**	**36.00**	**12.14**	**5.24**	**2.972**	**118.88**
84.50	76.8	Shear	KIPS	542.44	-44.91	-41.20	9.033	361.31
84.50	76.8	Overload	KSI	36.00	12.14	5.24	3.238	129.53
88.00	**80.0**	**Flexure**	**KSI**	**36.00**	**10.91**	**4.74**	**3.544**	**141.75**
88.00	80.0	Shear	KIPS	542.44	-50.54	-43.58	8.410	336.41
88.00	80.0	Overload	KSI	36.00	10.91	4.74	3.778	151.13
99.00	90.0	Flexure	KSI	36.00	6.11	2.76	7.831	313.26
99.00	**90.0**	**Shear**	**KIPS**	**542.44**	**-66.74**	**-51.06**	**6.859**	**274.37**
99.00	90.0	Overload	KSI	36.00	6.11	2.76	7.837	313.49
110.00	100.0	Flexure	KSI	-36.00	-0.00	-0.00	99.000	3960.00
110.00	**100.0**	**Shear**	**KIPS**	**336.32**	**-82.95**	**-58.54**	**2.996**	**119.85**
110.00	100.0	Overload	KSI	-36.00	-0.00	-0.00	99.000	3960.00

Detailed Rating Results
Girder E - As Inspected
Type 3S2
Axle Load
Impact: As Requested
Lane: As Requested

Span 1

Location							**Legal Rating**	**Legal**

(ft)	Percent	Limit State	Units	Capacity	DL + Adj -LL*	LL	Factor	Load Rating (Ton)
0.00	0.0	Flexure	KSI	-36.00	-0.00	-0.00	99.000	3564.00
0.00	**0.0**	**Shear**	**KIPS**	**328.32**	**82.95**	**55.92**	**3.026**	**108.95**
0.00	0.0	Overload	KSI	-36.00	-0.00	-0.00	99.000	3564.00
0.83	0.8	Flexure	KSI	-36.00	-0.59	-0.06	99.000	3564.00
0.83	**0.8**	**Shear**	**KIPS**	**328.32**	**81.73**	**55.42**	**3.076**	**110.74**
0.83	0.8	Overload	KSI	-36.00	-0.59	-0.06	99.000	3564.00
11.00	10.0	Flexure	KSI	36.00	6.11	2.66	8.129	292.65
11.00	**10.0**	**Shear**	**KIPS**	**542.44**	**66.74**	**49.19**	**7.120**	**256.32**
11.00	10.0	Overload	KSI	36.00	6.11	2.66	8.135	292.87
22.00	**20.0**	**Flexure**	**KSI**	**36.00**	**10.91**	**4.58**	**3.666**	**131.96**
22.00	20.0	Shear	KIPS	542.44	50.54	42.46	8.632	310.77
22.00	20.0	Overload	KSI	36.00	10.91	4.58	3.908	140.70
25.50	**23.2**	**Flexure**	**KSI**	**36.00**	**12.14**	**5.09**	**3.057**	**110.05**
25.50	23.2	Shear	KIPS	542.44	44.91	40.32	9.231	332.31
25.50	23.2	Overload	KSI	36.00	12.14	5.09	3.331	119.91
33.00	**30.0**	**Flexure**	**KSI**	**36.00**	**11.21**	**4.85**	**3.401**	**122.45**
33.00	30.0	Shear	KIPS	542.44	33.61	35.73	10.734	386.43
33.00	30.0	Overload	KSI	36.00	11.21	4.85	3.647	131.30
44.00	**40.0**	**Flexure**	**KSI**	**36.00**	**12.83**	**5.48**	**2.717**	**97.80**
44.00	40.0	Shear	KIPS	542.44	17.04	29.00	13.800	496.79
44.00	40.0	Overload	KSI	36.00	12.83	5.48	3.003	108.09
49.50	**45.0**	**Flexure**	**KSI**	**36.00**	**13.23**	**5.60**	**2.587**	**93.13**
49.50	45.0	Shear	KIPS	542.44	8.29	25.63	15.954	574.34
49.50	45.0	Overload	KSI	36.00	13.23	5.60	2.883	103.78
55.00	**50.0**	**Flexure**	**KSI**	**36.00**	**13.36**	**5.57**	**2.575**	**92.69**
55.00	50.0	Shear	KIPS	542.44	0.00	-22.27	18.739	674.60
55.00	50.0	Overload	KSI	36.00	13.36	5.57	2.878	103.59
66.00	**60.0**	**Flexure**	**KSI**	**36.00**	**12.83**	**5.48**	**2.717**	**97.80**
66.00	60.0	Shear	KIPS	542.44	-17.04	-29.00	13.800	496.79
66.00	60.0	Overload	KSI	36.00	12.83	5.48	3.003	108.09
77.00	**70.0**	**Flexure**	**KSI**	**36.00**	**11.21**	**4.85**	**3.401**	**122.45**
77.00	70.0	Shear	KIPS	542.44	-33.61	-35.73	10.734	386.43
77.00	70.0	Overload	KSI	36.00	11.21	4.85	3.647	131.30
84.50	**76.8**	**Flexure**	**KSI**	**36.00**	**12.14**	**5.09**	**3.057**	**110.05**
84.50	76.8	Shear	KIPS	542.44	-44.91	-40.32	9.231	332.31
84.50	76.8	Overload	KSI	36.00	12.14	5.09	3.331	119.91
88.00	**80.0**	**Flexure**	**KSI**	**36.00**	**10.91**	**4.58**	**3.666**	**131.96**
88.00	80.0	Shear	KIPS	542.44	-50.54	-42.46	8.632	310.77
88.00	80.0	Overload	KSI	36.00	10.91	4.58	3.908	140.70

99.00	90.0	Flexure	KSI	36.00	6.11	2.66	8.129	292.65
99.00	**90.0**	**Shear**	**KIPS**	**542.44**	**-66.74**	**-49.19**	**7.120**	**256.32**
99.00	90.0	Overload	KSI	36.00	6.11	2.66	8.135	292.87
110.00	100.0	Flexure	KSI	-36.00	-0.00	-0.00	99.000	3564.00
110.00	**100.0**	**Shear**	**KIPS**	**336.32**	**-82.95**	**-55.92**	**3.136**	**112.91**
110.00	100.0	Overload	KSI	-36.00	-0.00	-0.00	99.000	3564.00

Detailed Rating Results
Girder E - As Inspected
RI-3
Axle Load
Impact: As Requested
Lane: As Requested

Span 1

Location (ft)	Percent	Limit State	Units	Capacity	DL + Adj -LL*	LL	Permit Rating Factor	Permit Load Rating (Ton)
0.00	0.0	Flexure	KSI	-36.00	-0.00	-0.00	99.000	3762.00
0.00	**0.0**	**Shear**	**KIPS**	**328.32**	**82.95**	**67.25**	**2.765**	**105.08**
0.00	0.0	Overload	KSI	-36.00	-0.00	-0.00	99.000	3762.00
0.83	0.8	Flexure	KSI	-36.00	-0.59	-0.08	99.000	3762.00
0.83	**0.8**	**Shear**	**KIPS**	**328.32**	**81.73**	**66.71**	**2.808**	**106.69**
0.83	0.8	Overload	KSI	-36.00	-0.59	-0.08	99.000	3762.00
11.00	10.0	Flexure	KSI	36.00	6.11	3.25	7.306	277.62
11.00	**10.0**	**Shear**	**KIPS**	**542.44**	**66.74**	**60.14**	**6.399**	**243.16**
11.00	10.0	Overload	KSI	36.00	6.11	3.25	8.650	328.72
22.00	**20.0**	**Flexure**	**KSI**	**36.00**	**10.91**	**5.73**	**3.225**	**122.54**
22.00	20.0	Shear	KIPS	542.44	50.54	53.03	7.594	288.56
22.00	20.0	Overload	KSI	36.00	10.91	5.73	4.068	154.58
25.50	**23.2**	**Flexure**	**KSI**	**36.00**	**12.14**	**6.35**	**2.693**	**102.33**
25.50	23.2	Shear	KIPS	542.44	44.91	50.77	8.054	306.04
25.50	23.2	Overload	KSI	36.00	12.14	6.35	3.471	131.92
33.00	**30.0**	**Flexure**	**KSI**	**36.00**	**11.21**	**6.01**	**3.013**	**114.50**
33.00	30.0	Shear	KIPS	542.44	33.61	45.93	9.175	348.64
33.00	30.0	Overload	KSI	36.00	11.21	6.01	3.823	145.27
44.00	**40.0**	**Flexure**	**KSI**	**36.00**	**12.83**	**6.80**	**2.403**	**91.31**
44.00	40.0	Shear	KIPS	542.44	17.04	38.82	11.325	430.34
44.00	40.0	Overload	KSI	36.00	12.83	6.80	3.142	119.39
49.50	**45.0**	**Flexure**	**KSI**	**36.00**	**13.23**	**7.02**	**2.267**	**86.16**
49.50	45.0	Shear	KIPS	542.44	8.29	35.27	12.739	484.07

49.50	45.0	Overload	KSI	36.00	13.23	7.02	2.989	113.60
55.00	**50.0**	**Flexure**	**KSI**	**36.00**	**13.36**	**7.08**	**2.228**	**84.66**
55.00	50.0	Shear	KIPS	542.44	0.00	-31.72	14.454	549.24
55.00	50.0	Overload	KSI	36.00	13.36	7.08	2.946	111.94
66.00	**60.0**	**Flexure**	**KSI**	**36.00**	**12.83**	**6.80**	**2.403**	**91.31**
66.00	60.0	Shear	KIPS	542.44	-17.04	-38.82	11.325	430.34
66.00	60.0	Overload	KSI	36.00	12.83	6.80	3.142	119.39
77.00	**70.0**	**Flexure**	**KSI**	**36.00**	**11.21**	**6.01**	**3.013**	**114.50**
77.00	70.0	Shear	KIPS	542.44	-33.61	-45.93	9.175	348.64
77.00	70.0	Overload	KSI	36.00	11.21	6.01	3.823	145.27
84.50	**76.8**	**Flexure**	**KSI**	**36.00**	**12.14**	**6.35**	**2.693**	**102.33**
84.50	76.8	Shear	KIPS	542.44	-44.91	-50.77	8.054	306.04
84.50	76.8	Overload	KSI	36.00	12.14	6.35	3.471	131.92
88.00	**80.0**	**Flexure**	**KSI**	**36.00**	**10.91**	**5.73**	**3.225**	**122.54**
88.00	80.0	Shear	KIPS	542.44	-50.54	-53.03	7.594	288.56
88.00	80.0	Overload	KSI	36.00	10.91	5.73	4.068	154.58
99.00	90.0	Flexure	KSI	36.00	6.11	3.25	7.306	277.62
99.00	**90.0**	**Shear**	**KIPS**	**542.44**	**-66.74**	**-60.14**	**6.399**	**243.16**
99.00	90.0	Overload	KSI	36.00	6.11	3.25	8.650	328.72
110.00	100.0	Flexure	KSI	-36.00	-0.00	-0.00	99.000	3762.00
110.00	**100.0**	**Shear**	**KIPS**	**336.32**	**-82.95**	**-67.25**	**2.866**	**108.90**
110.00	100.0	Overload	KSI	-36.00	-0.00	-0.00	99.000	3762.00

Detailed Rating Results
Girder E - As Inspected
RI-4
Axle Load
Impact: As Requested
Lane: As Requested

Span 1

Location (ft)	Percent	Limit State	Units	Capacity	DL + Adj -LL*	LL	Permit Rating Factor	Permit Load Rating (Ton)
0.00	0.0	Flexure	KSI	-36.00	-0.00	-0.00	99.000	3712.50
0.00	**0.0**	**Shear**	**KIPS**	**328.32**	**82.95**	**65.38**	**2.844**	**106.66**
0.00	0.0	Overload	KSI	-36.00	-0.00	-0.00	99.000	3712.50
0.83	0.8	Flexure	KSI	-36.00	-0.59	-0.07	99.000	3712.50
0.83	**0.8**	**Shear**	**KIPS**	**328.32**	**81.73**	**64.85**	**2.888**	**108.31**
0.83	0.8	Overload	KSI	-36.00	-0.59	-0.07	99.000	3712.50
11.00	10.0	Flexure	KSI	36.00	6.11	3.15	7.528	282.29

11.00	**10.0**	**Shear**	**KIPS**	**542.44**	**66.74**	**58.37**	**6.593**	**247.25**
11.00	10.0	Overload	KSI	36.00	6.11	3.15	8.913	334.24
22.00	**20.0**	**Flexure**	**KSI**	**36.00**	**10.91**	**5.55**	**3.330**	**124.88**
22.00	20.0	Shear	KIPS	542.44	50.54	51.36	7.842	294.08
22.00	20.0	Overload	KSI	36.00	10.91	5.55	4.201	157.53
25.50	**23.2**	**Flexure**	**KSI**	**36.00**	**12.14**	**6.15**	**2.783**	**104.37**
25.50	23.2	Shear	KIPS	542.44	44.91	49.12	8.324	312.16
25.50	23.2	Overload	KSI	36.00	12.14	6.15	3.588	134.55
33.00	**30.0**	**Flexure**	**KSI**	**36.00**	**11.21**	**5.85**	**3.097**	**116.15**
33.00	30.0	Shear	KIPS	542.44	33.61	44.34	9.503	356.36
33.00	30.0	Overload	KSI	36.00	11.21	5.85	3.930	147.36
44.00	**40.0**	**Flexure**	**KSI**	**36.00**	**12.83**	**6.68**	**2.445**	**91.68**
44.00	40.0	Shear	KIPS	542.44	17.04	37.33	11.777	441.65
44.00	40.0	Overload	KSI	36.00	12.83	6.68	3.197	119.89
49.50	**45.0**	**Flexure**	**KSI**	**36.00**	**13.23**	**6.87**	**2.315**	**86.80**
49.50	45.0	Shear	KIPS	542.44	8.29	33.83	13.283	498.11
49.50	45.0	Overload	KSI	36.00	13.23	6.87	3.052	114.45
55.00	**50.0**	**Flexure**	**KSI**	**36.00**	**13.36**	**6.91**	**2.282**	**85.58**
55.00	50.0	Shear	KIPS	542.44	0.00	-30.32	15.120	567.02
55.00	50.0	Overload	KSI	36.00	13.36	6.91	3.017	113.15
66.00	**60.0**	**Flexure**	**KSI**	**36.00**	**12.83**	**6.68**	**2.445**	**91.68**
66.00	60.0	Shear	KIPS	542.44	-17.04	-37.33	11.777	441.65
66.00	60.0	Overload	KSI	36.00	12.83	6.68	3.197	119.89
77.00	**70.0**	**Flexure**	**KSI**	**36.00**	**11.21**	**5.85**	**3.097**	**116.15**
77.00	70.0	Shear	KIPS	542.44	-33.61	-44.34	9.503	356.36
77.00	70.0	Overload	KSI	36.00	11.21	5.85	3.930	147.36
84.50	**76.8**	**Flexure**	**KSI**	**36.00**	**12.14**	**6.15**	**2.783**	**104.37**
84.50	76.8	Shear	KIPS	542.44	-44.91	-49.12	8.324	312.16
84.50	76.8	Overload	KSI	36.00	12.14	6.15	3.588	134.55
88.00	**80.0**	**Flexure**	**KSI**	**36.00**	**10.91**	**5.55**	**3.330**	**124.88**
88.00	80.0	Shear	KIPS	542.44	-50.54	-51.36	7.842	294.08
88.00	80.0	Overload	KSI	36.00	10.91	5.55	4.201	157.53
99.00	90.0	Flexure	KSI	36.00	6.11	3.15	7.528	282.29
99.00	**90.0**	**Shear**	**KIPS**	**542.44**	**-66.74**	**-58.37**	**6.593**	**247.25**
99.00	90.0	Overload	KSI	36.00	6.11	3.15	8.913	334.24
110.00	100.0	Flexure	KSI	-36.00	-0.00	-0.00	99.000	3712.50
110.00	**100.0**	**Shear**	**KIPS**	**336.32**	**-82.95**	**-65.38**	**2.948**	**110.54**
110.00	100.0	Overload	KSI	-36.00	-0.00	-0.00	99.000	3712.50

Detailed Rating Results
Girder E - As Inspected
RI-5
Axle Load

Impact: As Requested
Lane: As Requested

Span 1

Location (ft)	Percent	Limit State	Units	Capacity	DL + Adj -LL*	LL	Permit Rating Factor	Permit Load Rating (Ton)
0.00	0.0	Flexure	KSI	-36.00	-0.00	-0.00	99.000	5187.60
0.00	**0.0**	**Shear**	**KIPS**	**328.32**	**82.95**	**85.74**	**2.169**	**113.64**
0.00	0.0	Overload	KSI	-36.00	-0.00	-0.00	99.000	5187.60
0.83	0.8	Flexure	KSI	36.00	0.51	0.35	86.042	4508.61
0.83	**0.8**	**Shear**	**KIPS**	**328.32**	**81.73**	**85.00**	**2.203**	**115.46**
0.83	0.8	Overload	KSI	36.00	0.51	0.35	97.053	5085.60
11.00	10.0	Flexure	KSI	36.00	6.11	4.10	5.785	303.15
11.00	**10.0**	**Shear**	**KIPS**	**542.44**	**66.74**	**75.95**	**5.067**	**265.52**
11.00	10.0	Overload	KSI	36.00	6.11	4.10	6.850	358.94
22.00	**20.0**	**Flexure**	**KSI**	**36.00**	**10.91**	**7.14**	**2.585**	**135.47**
22.00	20.0	Shear	KIPS	542.44	50.54	66.15	6.088	319.03
22.00	20.0	Overload	KSI	36.00	10.91	7.14	3.261	170.90
25.50	**23.2**	**Flexure**	**KSI**	**36.00**	**12.14**	**7.95**	**2.154**	**112.84**
25.50	23.2	Shear	KIPS	542.44	44.91	63.03	6.488	339.95
25.50	23.2	Overload	KSI	36.00	12.14	7.95	2.776	145.47
33.00	**30.0**	**Flexure**	**KSI**	**36.00**	**11.21**	**7.54**	**2.402**	**125.88**
33.00	30.0	Shear	KIPS	542.44	33.61	56.35	7.478	391.85
33.00	30.0	Overload	KSI	36.00	11.21	7.54	3.048	159.71
44.00	**40.0**	**Flexure**	**KSI**	**36.00**	**12.83**	**8.58**	**1.905**	**99.84**
44.00	40.0	Shear	KIPS	542.44	17.04	46.55	9.445	494.90
44.00	40.0	Overload	KSI	36.00	12.83	8.58	2.491	130.55
49.50	**45.0**	**Flexure**	**KSI**	**36.00**	**13.23**	**8.81**	**1.806**	**94.66**
49.50	45.0	Shear	KIPS	542.44	8.29	41.65	10.787	565.23
49.50	45.0	Overload	KSI	36.00	13.23	8.81	2.382	124.81
55.00	**50.0**	**Flexure**	**KSI**	**36.00**	**13.36**	**8.82**	**1.787**	**93.64**
55.00	50.0	Shear	KIPS	542.44	0.00	-36.76	12.473	653.60
55.00	50.0	Overload	KSI	36.00	13.36	8.82	2.363	123.82
66.00	**60.0**	**Flexure**	**KSI**	**36.00**	**12.83**	**8.58**	**1.905**	**99.84**
66.00	60.0	Shear	KIPS	542.44	-17.04	-46.55	9.445	494.90
66.00	60.0	Overload	KSI	36.00	12.83	8.58	2.491	130.55
77.00	**70.0**	**Flexure**	**KSI**	**36.00**	**11.21**	**7.54**	**2.402**	**125.88**
77.00	70.0	Shear	KIPS	542.44	-33.61	-56.35	7.478	391.85
77.00	70.0	Overload	KSI	36.00	11.21	7.54	3.048	159.71
84.50	**76.8**	**Flexure**	**KSI**	**36.00**	**12.14**	**7.95**	**2.154**	**112.84**

84.50	76.8	Shear	KIPS	542.44	-44.91	-63.03	6.488	339.95
84.50	76.8	Overload	KSI	36.00	12.14	7.95	2.776	145.47
88.00	**80.0**	**Flexure**	**KSI**	**36.00**	**10.91**	**7.14**	**2.585**	**135.47**
88.00	80.0	Shear	KIPS	542.44	-50.54	-66.15	6.088	319.03
88.00	80.0	Overload	KSI	36.00	10.91	7.14	3.261	170.90
99.00	90.0	Flexure	KSI	36.00	6.11	4.10	5.785	303.15
99.00	**90.0**	**Shear**	**KIPS**	**542.44**	**-66.74**	**-75.95**	**5.067**	**265.52**
99.00	90.0	Overload	KSI	36.00	6.11	4.10	6.850	358.94
110.00	100.0	Flexure	KSI	-36.00	-0.00	-0.00	99.000	5187.60
110.00	**100.0**	**Shear**	**KIPS**	**336.32**	**-82.95**	**-85.74**	**2.248**	**117.77**
110.00	100.0	Overload	KSI	-36.00	-0.00	-0.00	99.000	5187.60

Detailed Rating Results
Girder E - As Inspected
RI-6
Axle Load
Impact: As Requested
Lane: As Requested

Span 1

Location (ft)	Percent	Limit State	Units	Capacity	DL + Adj -LL*	LL	Permit Rating Factor	Permit Load Rating (Ton)
0.00	0.0	Flexure	KSI	-36.00	-0.00	-0.00	99.000	6435.00
0.00	**0.0**	**Shear**	**KIPS**	**328.32**	**82.95**	**97.27**	**1.834**	**119.22**
0.00	0.0	Overload	KSI	-36.00	-0.00	-0.00	99.000	6435.00
0.83	0.8	Flexure	KSI	36.00	0.51	0.39	72.832	4734.08
0.83	**0.8**	**Shear**	**KIPS**	**328.32**	**81.73**	**96.35**	**1.865**	**121.23**
0.83	0.8	Overload	KSI	36.00	0.51	0.39	85.624	5565.59
11.00	10.0	Flexure	KSI	36.00	6.11	4.60	4.953	321.94
11.00	**10.0**	**Shear**	**KIPS**	**542.44**	**66.74**	**85.11**	**4.338**	**281.97**
11.00	10.0	Overload	KSI	36.00	6.11	4.60	6.112	397.29
22.00	**20.0**	**Flexure**	**KSI**	**36.00**	**10.91**	**7.90**	**2.243**	**145.82**
22.00	20.0	Shear	KIPS	542.44	50.54	72.96	5.296	344.24
22.00	20.0	Overload	KSI	36.00	10.91	7.90	2.950	191.72
25.50	**23.2**	**Flexure**	**KSI**	**36.00**	**12.14**	**8.75**	**1.877**	**122.00**
25.50	23.2	Shear	KIPS	542.44	44.91	69.09	5.678	369.10
25.50	23.2	Overload	KSI	36.00	12.14	8.75	2.522	163.92
33.00	**30.0**	**Flexure**	**KSI**	**36.00**	**11.21**	**8.18**	**2.125**	**138.11**
33.00	30.0	Shear	KIPS	542.44	33.61	60.81	6.649	432.18
33.00	30.0	Overload	KSI	36.00	11.21	8.18	2.810	182.63

44.00	**40.0**	**Flexure**	**KSI**	**36.00**	**12.83**	**8.95**	**1.752**	**113.87**
44.00	40.0	Shear	KIPS	542.44	17.04	48.65	8.670	563.58
44.00	40.0	Overload	KSI	36.00	12.83	8.95	2.387	155.19
49.50	**45.0**	**Flexure**	**KSI**	**36.00**	**13.23**	**9.02**	**1.691**	**109.93**
49.50	45.0	Shear	KIPS	542.44	8.29	42.58	10.125	658.14
49.50	45.0	Overload	KSI	36.00	13.23	9.02	2.324	151.07
55.00	**50.0**	**Flexure**	**KSI**	**36.00**	**13.36**	**8.83**	**1.712**	**111.29**
55.00	50.0	Shear	KIPS	542.44	0.00	-36.50	12.051	783.33
55.00	50.0	Overload	KSI	36.00	13.36	8.83	2.360	153.38
66.00	**60.0**	**Flexure**	**KSI**	**36.00**	**12.83**	**8.95**	**1.752**	**113.87**
66.00	60.0	Shear	KIPS	542.44	-17.04	-48.65	8.670	563.58
66.00	60.0	Overload	KSI	36.00	12.83	8.95	2.387	155.19
77.00	**70.0**	**Flexure**	**KSI**	**36.00**	**11.21**	**8.18**	**2.125**	**138.11**
77.00	70.0	Shear	KIPS	542.44	-33.61	-60.81	6.649	432.18
77.00	70.0	Overload	KSI	36.00	11.21	8.18	2.810	182.63
84.50	**76.8**	**Flexure**	**KSI**	**36.00**	**12.14**	**8.75**	**1.877**	**122.00**
84.50	76.8	Shear	KIPS	542.44	-44.91	-69.09	5.678	369.10
84.50	76.8	Overload	KSI	36.00	12.14	8.75	2.522	163.92
88.00	**80.0**	**Flexure**	**KSI**	**36.00**	**10.91**	**7.90**	**2.243**	**145.82**
88.00	80.0	Shear	KIPS	542.44	-50.54	-72.96	5.296	344.24
88.00	80.0	Overload	KSI	36.00	10.91	7.90	2.950	191.72
99.00	90.0	Flexure	KSI	36.00	6.11	4.60	4.953	321.94
99.00	**90.0**	**Shear**	**KIPS**	**542.44**	**-66.74**	**-85.11**	**4.338**	**281.97**
99.00	90.0	Overload	KSI	36.00	6.11	4.60	6.112	397.29
110.00	100.0	Flexure	KSI	-36.00	-0.00	-0.00	99.000	6435.00
110.00	**100.0**	**Shear**	**KIPS**	**336.32**	**-82.95**	**-97.27**	**1.901**	**123.56**
110.00	100.0	Overload	KSI	-36.00	-0.00	-0.00	99.000	6435.00

Detailed Rating Results
Girder E - As Inspected
RIDOT H20 Truck
Axle Load
Impact: As Requested
Lane: As Requested

Span 1

Location (ft)	Percent	Limit State	Units	Capacity	DL + Adj -LL*	LL	Legal Rating Factor	Legal Load Rating (Ton)
0.00	0.0	Flexure	KSI	-36.00	-0.00	-0.00	99.000	1980.00
0.00	**0.0**	**Shear**	**KIPS**	**328.32**	**82.95**	**36.44**	**4.644**	**92.88**

0.00	0.0	Overload	KSI	-36.00	-0.00	-0.00	99.000	1980.00
0.83	0.8	Flexure	KSI	-35.96	-0.59	-0.04	99.000	1980.00
0.83	**0.8**	**Shear**	**KIPS**	**328.32**	**81.73**	**36.16**	**4.714**	**94.28**
0.83	0.8	Overload	KSI	-36.00	-0.59	-0.04	99.000	1980.00
11.00	10.0	Flexure	KSI	36.00	6.11	1.77	12.228	244.55
11.00	**10.0**	**Shear**	**KIPS**	**542.44**	**66.74**	**32.70**	**10.710**	**214.19**
11.00	10.0	Overload	KSI	36.00	6.11	1.77	12.237	244.73
22.00	**20.0**	**Flexure**	**KSI**	**36.00**	**10.91**	**3.13**	**5.374**	**107.48**
22.00	20.0	Shear	KIPS	542.44	50.54	28.96	12.655	253.10
22.00	20.0	Overload	KSI	36.00	10.91	3.13	5.730	114.59
25.50	**23.2**	**Flexure**	**KSI**	**36.00**	**12.14**	**3.48**	**4.480**	**89.61**
25.50	23.2	Shear	KIPS	542.44	44.91	27.77	13.400	268.00
25.50	23.2	Overload	KSI	36.00	12.14	3.48	4.882	97.63
33.00	**30.0**	**Flexure**	**KSI**	**36.00**	**11.21**	**3.30**	**4.993**	**99.87**
33.00	30.0	Shear	KIPS	542.44	33.61	25.22	15.204	304.08
33.00	30.0	Overload	KSI	36.00	11.21	3.30	5.355	107.09
44.00	**40.0**	**Flexure**	**KSI**	**36.00**	**12.83**	**3.75**	**3.966**	**79.31**
44.00	40.0	Shear	KIPS	542.44	17.04	21.49	18.625	372.50
44.00	40.0	Overload	KSI	36.00	12.83	3.75	4.383	87.65
49.50	**45.0**	**Flexure**	**KSI**	**36.00**	**13.23**	**3.85**	**3.758**	**75.16**
49.50	45.0	Shear	KIPS	542.44	8.29	19.62	20.848	416.96
49.50	45.0	Overload	KSI	36.00	13.23	3.85	4.188	83.76
55.00	**50.0**	**Flexure**	**KSI**	**36.00**	**13.36**	**3.87**	**3.704**	**74.09**
55.00	50.0	Shear	KIPS	542.44	0.00	-17.75	23.513	470.27
55.00	50.0	Overload	KSI	36.00	13.36	3.87	4.140	82.80
66.00	**60.0**	**Flexure**	**KSI**	**36.00**	**12.83**	**3.75**	**3.966**	**79.31**
66.00	60.0	Shear	KIPS	542.44	-17.04	-21.49	18.625	372.50
66.00	60.0	Overload	KSI	36.00	12.83	3.75	4.383	87.65
77.00	**70.0**	**Flexure**	**KSI**	**36.00**	**11.21**	**3.30**	**4.993**	**99.87**
77.00	70.0	Shear	KIPS	542.44	-33.61	-25.22	15.204	304.08
77.00	70.0	Overload	KSI	36.00	11.21	3.30	5.355	107.09
84.50	**76.8**	**Flexure**	**KSI**	**36.00**	**12.14**	**3.48**	**4.480**	**89.61**
84.50	76.8	Shear	KIPS	542.44	-44.91	-27.77	13.400	268.00
84.50	76.8	Overload	KSI	36.00	12.14	3.48	4.882	97.63
88.00	**80.0**	**Flexure**	**KSI**	**36.00**	**10.91**	**3.13**	**5.374**	**107.48**
88.00	80.0	Shear	KIPS	542.44	-50.54	-28.96	12.655	253.10
88.00	80.0	Overload	KSI	36.00	10.91	3.13	5.730	114.59
99.00	90.0	Flexure	KSI	36.00	6.11	1.77	12.228	244.55
99.00	**90.0**	**Shear**	**KIPS**	**542.44**	**-66.74**	**-32.70**	**10.710**	**214.19**
99.00	90.0	Overload	KSI	36.00	6.11	1.77	12.237	244.73
110.00	100.0	Flexure	KSI	-36.00	-0.00	-0.00	99.000	1980.00
110.00	**100.0**	**Shear**	**KIPS**	**336.32**	**-82.95**	**-36.44**	**4.813**	**96.26**
110.00	100.0	Overload	KSI	-36.00	-0.00	-0.00	99.000	1980.00

Detailed Rating Results
Girder E - As Inspected
RI-OP 1
Axle Load
Impact: As Requested
Lane: As Requested

Span 1

Location (ft)	Percent	Limit State	Units	Capacity	DL + Adj -LL*	LL	Permit Rating Factor	Permit Load Rating (Ton)
0.00	0.0	Flexure	KSI	-36.00	-0.00	-0.00	99.000	5593.50
0.00	**0.0**	**Shear**	**KIPS**	**328.32**	**82.95**	**66.31**	**2.765**	**156.22**
0.00	0.0	Overload	KSI	-36.00	-0.00	-0.00	99.000	5593.50
0.83	0.8	Flexure	KSI	-36.00	-0.59	-0.06	99.000	5593.50
0.83	**0.8**	**Shear**	**KIPS**	**328.32**	**81.73**	**65.75**	**2.809**	**158.70**
0.83	0.8	Overload	KSI	-36.00	-0.59	-0.06	99.000	5593.50
11.00	10.0	Flexure	KSI	36.00	6.11	2.62	8.916	503.77
11.00	**10.0**	**Shear**	**KIPS**	**542.44**	**66.74**	**58.85**	**6.447**	**364.26**
11.00	10.0	Overload	KSI	36.00	6.11	2.62	10.707	604.97
22.00	**20.0**	**Flexure**	**KSI**	**36.00**	**10.91**	**4.66**	**3.910**	**220.91**
22.00	20.0	Shear	KIPS	542.44	50.54	51.39	7.726	436.53
22.00	20.0	Overload	KSI	36.00	10.91	4.66	5.002	282.64
25.50	**23.2**	**Flexure**	**KSI**	**36.00**	**12.14**	**5.18**	**3.256**	**183.96**
25.50	23.2	Shear	KIPS	542.44	44.91	49.02	8.225	464.70
25.50	23.2	Overload	KSI	36.00	12.14	5.18	4.257	240.53
33.00	**30.0**	**Flexure**	**KSI**	**36.00**	**11.21**	**4.92**	**3.635**	**205.37**
33.00	30.0	Shear	KIPS	542.44	33.61	43.94	9.456	534.29
33.00	30.0	Overload	KSI	36.00	11.21	4.92	4.677	264.26
44.00	**40.0**	**Flexure**	**KSI**	**36.00**	**12.83**	**5.63**	**2.862**	**161.71**
44.00	40.0	Shear	KIPS	542.44	17.04	36.48	11.884	671.45
44.00	40.0	Overload	KSI	36.00	12.83	5.63	3.796	214.46
49.50	**45.0**	**Flexure**	**KSI**	**36.00**	**13.23**	**5.82**	**2.697**	**152.40**
49.50	45.0	Shear	KIPS	542.44	8.29	32.75	13.527	764.29
49.50	45.0	Overload	KSI	36.00	13.23	5.82	3.607	203.79
55.00	**50.0**	**Flexure**	**KSI**	**36.00**	**13.36**	**5.87**	**2.650**	**149.71**
55.00	50.0	Shear	KIPS	542.44	0.00	-29.02	15.576	880.05
55.00	50.0	Overload	KSI	36.00	13.36	5.87	3.553	200.77
66.00	**60.0**	**Flexure**	**KSI**	**36.00**	**12.83**	**5.63**	**2.862**	**161.71**
66.00	60.0	Shear	KIPS	542.44	-17.04	-36.48	11.884	671.45

66.00	60.0	Overload	KSI	36.00	12.83	5.63	3.796	214.46
77.00	**70.0**	**Flexure**	**KSI**	**36.00**	**11.21**	**4.92**	**3.635**	**205.37**
77.00	70.0	Shear	KIPS	542.44	-33.61	-43.94	9.456	534.29
77.00	70.0	Overload	KSI	36.00	11.21	4.92	4.677	264.26
84.50	**76.8**	**Flexure**	**KSI**	**36.00**	**12.14**	**5.18**	**3.256**	**183.96**
84.50	76.8	Shear	KIPS	542.44	-44.91	-49.02	8.225	464.70
84.50	76.8	Overload	KSI	36.00	12.14	5.18	4.257	240.53
88.00	**80.0**	**Flexure**	**KSI**	**36.00**	**10.91**	**4.66**	**3.910**	**220.91**
88.00	80.0	Shear	KIPS	542.44	-50.54	-51.39	7.726	436.53
88.00	80.0	Overload	KSI	36.00	10.91	4.66	5.002	282.64
99.00	90.0	Flexure	KSI	36.00	6.11	2.62	8.916	503.77
99.00	**90.0**	**Shear**	**KIPS**	**542.44**	**-66.74**	**-58.85**	**6.447**	**364.26**
99.00	90.0	Overload	KSI	36.00	6.11	2.62	10.707	604.97
110.00	100.0	Flexure	KSI	-36.00	-0.00	-0.00	99.000	5593.50
110.00	**100.0**	**Shear**	**KIPS**	**336.32**	**-82.95**	**-66.31**	**2.866**	**161.90**
110.00	100.0	Overload	KSI	-36.00	-0.00	-0.00	99.000	5593.50

Detailed Rating Results
Girder E - As Inspected
RI-OP 2
Axle Load
Impact: As Requested
Lane: As Requested

Span 1

Location (ft)	Percent	Limit State	Units	Capacity	DL + Adj -LL*	LL	Permit Rating Factor	Permit Load Rating (Ton)
0.00	0.0	Flexure	KSI	-36.00	-0.00	-0.00	99.000	7920.00
0.00	**0.0**	**Shear**	**KIPS**	**328.32**	**82.95**	**77.08**	**2.379**	**190.29**
0.00	0.0	Overload	KSI	-36.00	-0.00	-0.00	99.000	7920.00
0.83	0.8	Flexure	KSI	-36.00	-0.59	-0.07	99.000	7920.00
0.83	**0.8**	**Shear**	**KIPS**	**328.32**	**81.73**	**76.28**	**2.421**	**193.68**
0.83	0.8	Overload	KSI	-36.00	-0.59	-0.07	99.000	7920.00
11.00	10.0	Flexure	KSI	36.00	6.11	2.96	7.889	631.11
11.00	**10.0**	**Shear**	**KIPS**	**542.44**	**66.74**	**66.52**	**5.704**	**456.34**
11.00	10.0	Overload	KSI	36.00	6.11	2.96	9.474	757.89
22.00	**20.0**	**Flexure**	**KSI**	**36.00**	**10.91**	**5.11**	**3.561**	**284.86**
22.00	20.0	Shear	KIPS	542.44	50.54	55.96	7.096	567.69
22.00	20.0	Overload	KSI	36.00	10.91	5.11	4.556	364.46
25.50	**23.2**	**Flexure**	**KSI**	**36.00**	**12.14**	**5.62**	**3.003**	**240.28**

25.50	23.2	Shear	KIPS	542.44	44.91	52.60	7.666	613.24
25.50	23.2	Overload	KSI	36.00	12.14	5.62	3.927	314.16
33.00	**30.0**	**Flexure**	**KSI**	**36.00**	**11.21**	**5.21**	**3.429**	**274.32**
33.00	30.0	Shear	KIPS	542.44	33.61	45.40	9.152	732.16
33.00	30.0	Overload	KSI	36.00	11.21	5.21	4.412	352.99
44.00	**40.0**	**Flexure**	**KSI**	**36.00**	**12.83**	**5.63**	**2.863**	**229.08**
44.00	40.0	Shear	KIPS	542.44	17.04	35.31	12.277	982.13
44.00	40.0	Overload	KSI	36.00	12.83	5.63	3.798	303.81
49.50	**45.0**	**Flexure**	**KSI**	**36.00**	**13.23**	**5.62**	**2.791**	**223.28**
49.50	45.0	Shear	KIPS	542.44	8.29	30.46	14.544	1163.50
49.50	45.0	Overload	KSI	36.00	13.23	5.62	3.732	298.58
55.00	**50.0**	**Flexure**	**KSI**	**36.00**	**13.36**	**5.48**	**2.835**	**226.79**
55.00	50.0	Shear	KIPS	542.44	0.00	-25.79	17.529	1402.31
55.00	50.0	Overload	KSI	36.00	13.36	5.48	3.802	304.13
66.00	**60.0**	**Flexure**	**KSI**	**36.00**	**12.83**	**5.63**	**2.863**	**229.08**
66.00	60.0	Shear	KIPS	542.44	-17.04	-35.31	12.277	982.13
66.00	60.0	Overload	KSI	36.00	12.83	5.63	3.798	303.81
77.00	**70.0**	**Flexure**	**KSI**	**36.00**	**11.21**	**5.21**	**3.429**	**274.32**
77.00	70.0	Shear	KIPS	542.44	-33.61	-45.40	9.152	732.16
77.00	70.0	Overload	KSI	36.00	11.21	5.21	4.412	352.99
84.50	**76.8**	**Flexure**	**KSI**	**36.00**	**12.14**	**5.62**	**3.003**	**240.28**
84.50	76.8	Shear	KIPS	542.44	-44.91	-52.60	7.666	613.24
84.50	76.8	Overload	KSI	36.00	12.14	5.62	3.927	314.16
88.00	**80.0**	**Flexure**	**KSI**	**36.00**	**10.91**	**5.11**	**3.561**	**284.86**
88.00	80.0	Shear	KIPS	542.44	-50.54	-55.96	7.096	567.69
88.00	80.0	Overload	KSI	36.00	10.91	5.11	4.556	364.46
99.00	90.0	Flexure	KSI	36.00	6.11	2.96	7.889	631.11
99.00	**90.0**	**Shear**	**KIPS**	**542.44**	**-66.74**	**-66.52**	**5.704**	**456.34**
99.00	90.0	Overload	KSI	36.00	6.11	2.96	9.474	757.89
110.00	100.0	Flexure	KSI	-36.00	-0.00	-0.00	99.000	7920.00
110.00	**100.0**	**Shear**	**KIPS**	**336.32**	**-82.95**	**-77.08**	**2.465**	**197.22**
110.00	100.0	Overload	KSI	-36.00	-0.00	-0.00	99.000	7920.00

Detailed Rating Results
Girder E - As Inspected
RI-OP 3
Axle Load
Impact: As Requested
Lane: As Requested

Span 1

Location							**Permit Rating**	**Permit**

(ft)	Percent	Limit State	Units	Capacity	DL + Adj -LL*	LL	Factor	Load Rating (Ton)
0.00	0.0	Flexure	KSI	-36.00	-0.00	-0.00	99.000	11187.00
0.00	**0.0**	**Shear**	**KIPS**	**328.32**	**82.95**	**86.06**	**2.130**	**240.72**
0.00	0.0	Overload	KSI	-36.00	-0.00	-0.00	99.000	11187.00
0.83	0.8	Flexure	KSI	-36.00	-0.59	-0.08	99.000	11187.00
0.83	**0.8**	**Shear**	**KIPS**	**328.32**	**81.73**	**84.94**	**2.174**	**245.68**
0.83	0.8	Overload	KSI	-36.00	-0.59	-0.08	99.000	11187.00
11.00	10.0	Flexure	KSI	36.00	6.11	3.22	7.274	821.98
11.00	**10.0**	**Shear**	**KIPS**	**542.44**	**66.74**	**71.70**	**5.292**	**598.02**
11.00	10.0	Overload	KSI	36.00	6.11	3.22	8.735	987.11
22.00	**20.0**	**Flexure**	**KSI**	**36.00**	**10.91**	**5.43**	**3.352**	**378.80**
22.00	20.0	Shear	KIPS	542.44	50.54	58.76	6.758	763.60
22.00	20.0	Overload	KSI	36.00	10.91	5.43	4.289	484.65
25.50	**23.2**	**Flexure**	**KSI**	**36.00**	**12.14**	**5.97**	**2.828**	**319.51**
25.50	23.2	Shear	KIPS	542.44	44.91	55.23	7.300	824.87
25.50	23.2	Overload	KSI	36.00	12.14	5.97	3.697	417.76
33.00	**30.0**	**Flexure**	**KSI**	**36.00**	**11.21**	**5.54**	**3.228**	**364.75**
33.00	30.0	Shear	KIPS	542.44	33.61	47.67	8.715	984.81
33.00	30.0	Overload	KSI	36.00	11.21	5.54	4.154	469.35
44.00	**40.0**	**Flexure**	**KSI**	**36.00**	**12.83**	**6.13**	**2.627**	**296.91**
44.00	40.0	Shear	KIPS	542.44	17.04	37.69	11.503	1299.83
44.00	40.0	Overload	KSI	36.00	12.83	6.13	3.485	393.76
49.50	**45.0**	**Flexure**	**KSI**	**36.00**	**13.23**	**6.24**	**2.513**	**283.98**
49.50	45.0	Shear	KIPS	542.44	8.29	33.54	13.207	1492.39
49.50	45.0	Overload	KSI	36.00	13.23	6.24	3.361	379.75
55.00	**50.0**	**Flexure**	**KSI**	**36.00**	**13.36**	**6.19**	**2.512**	**283.85**
55.00	50.0	Shear	KIPS	542.44	0.00	-29.58	15.280	1726.59
55.00	50.0	Overload	KSI	36.00	13.36	6.19	3.369	380.66
66.00	**60.0**	**Flexure**	**KSI**	**36.00**	**12.83**	**6.13**	**2.627**	**296.91**
66.00	60.0	Shear	KIPS	542.44	-17.04	-37.69	11.503	1299.83
66.00	60.0	Overload	KSI	36.00	12.83	6.13	3.485	393.76
77.00	**70.0**	**Flexure**	**KSI**	**36.00**	**11.21**	**5.54**	**3.228**	**364.75**
77.00	70.0	Shear	KIPS	542.44	-33.61	-47.67	8.715	984.81
77.00	70.0	Overload	KSI	36.00	11.21	5.54	4.154	469.35
84.50	**76.8**	**Flexure**	**KSI**	**36.00**	**12.14**	**5.97**	**2.828**	**319.51**
84.50	76.8	Shear	KIPS	542.44	-44.91	-55.23	7.300	824.87
84.50	76.8	Overload	KSI	36.00	12.14	5.97	3.697	417.76
88.00	**80.0**	**Flexure**	**KSI**	**36.00**	**10.91**	**5.43**	**3.352**	**378.80**
88.00	80.0	Shear	KIPS	542.44	-50.54	-58.76	6.758	763.60
88.00	80.0	Overload	KSI	36.00	10.91	5.43	4.289	484.65

99.00	90.0	Flexure	KSI	36.00	6.11	3.22	7.274	821.98
99.00	**90.0**	**Shear**	**KIPS**	**542.44**	**-66.74**	**-71.70**	**5.292**	**598.02**
99.00	90.0	Overload	KSI	36.00	6.11	3.22	8.735	987.11
110.00	100.0	Flexure	KSI	-36.00	-0.00	-0.00	99.000	11187.00
110.00	**100.0**	**Shear**	**KIPS**	**336.32**	**-82.95**	**-86.06**	**2.208**	**249.48**
110.00	100.0	Overload	KSI	-36.00	-0.00	-0.00	99.000	11187.00

Detailed Rating Results
Girder E - As Inspected
RIPTA Bus
Axle Load
Impact: As Requested
Lane: As Requested

Span 1

Location (ft)	Percent	Limit State	Units	Capacity	DL + Adj -LL*	LL	Legal Rating Factor	Legal Load Rating (Ton)
0.00	0.0	Flexure	KSI	-36.00	-0.00	-0.00	99.000	2059.20
0.00	**0.0**	**Shear**	**KIPS**	**328.32**	**82.95**	**36.01**	**4.700**	**97.77**
0.00	0.0	Overload	KSI	-36.00	-0.00	-0.00	99.000	2059.20
0.83	0.8	Flexure	KSI	-35.95	-0.59	-0.04	99.000	2059.20
0.83	**0.8**	**Shear**	**KIPS**	**328.32**	**81.73**	**35.71**	**4.773**	**99.28**
0.83	0.8	Overload	KSI	-36.00	-0.59	-0.04	99.000	2059.20
11.00	10.0	Flexure	KSI	36.00	6.11	1.73	12.451	258.98
11.00	**10.0**	**Shear**	**KIPS**	**542.44**	**66.74**	**32.12**	**10.905**	**226.83**
11.00	10.0	Overload	KSI	36.00	6.11	1.73	12.460	259.17
22.00	**20.0**	**Flexure**	**KSI**	**36.00**	**10.91**	**3.05**	**5.514**	**114.69**
22.00	20.0	Shear	KIPS	542.44	50.54	28.23	12.985	270.09
22.00	20.0	Overload	KSI	36.00	10.91	3.05	5.879	122.28
25.50	**23.2**	**Flexure**	**KSI**	**36.00**	**12.14**	**3.38**	**4.610**	**95.90**
25.50	23.2	Shear	KIPS	542.44	44.91	26.99	13.789	286.81
25.50	23.2	Overload	KSI	36.00	12.14	3.38	5.023	104.49
33.00	**30.0**	**Flexure**	**KSI**	**36.00**	**11.21**	**3.19**	**5.175**	**107.65**
33.00	30.0	Shear	KIPS	542.44	33.61	24.34	15.758	327.76
33.00	30.0	Overload	KSI	36.00	11.21	3.19	5.550	115.43
44.00	**40.0**	**Flexure**	**KSI**	**36.00**	**12.83**	**3.57**	**4.166**	**86.66**
44.00	40.0	Shear	KIPS	542.44	17.04	20.45	19.568	407.02
44.00	40.0	Overload	KSI	36.00	12.83	3.57	4.605	95.78
49.50	**45.0**	**Flexure**	**KSI**	**36.00**	**13.23**	**3.63**	**3.983**	**82.86**
49.50	45.0	Shear	KIPS	542.44	8.29	18.51	22.099	459.65

49.50	45.0	Overload	KSI	36.00	13.23	3.63	4.439	92.33
55.00	**50.0**	**Flexure**	**KSI**	**36.00**	**13.36**	**3.61**	**3.970**	**82.57**
55.00	50.0	Shear	KIPS	542.44	0.00	-16.56	25.196	524.08
55.00	50.0	Overload	KSI	36.00	13.36	3.61	4.436	92.27
66.00	**60.0**	**Flexure**	**KSI**	**36.00**	**12.83**	**3.57**	**4.166**	**86.66**
66.00	60.0	Shear	KIPS	542.44	-17.04	-20.45	19.568	407.02
66.00	60.0	Overload	KSI	36.00	12.83	3.57	4.605	95.78
77.00	**70.0**	**Flexure**	**KSI**	**36.00**	**11.21**	**3.19**	**5.175**	**107.65**
77.00	70.0	Shear	KIPS	542.44	-33.61	-24.34	15.758	327.76
77.00	70.0	Overload	KSI	36.00	11.21	3.19	5.550	115.43
84.50	**76.8**	**Flexure**	**KSI**	**36.00**	**12.14**	**3.38**	**4.610**	**95.90**
84.50	76.8	Shear	KIPS	542.44	-44.91	-26.99	13.789	286.81
84.50	76.8	Overload	KSI	36.00	12.14	3.38	5.023	104.49
88.00	**80.0**	**Flexure**	**KSI**	**36.00**	**10.91**	**3.05**	**5.514**	**114.69**
88.00	80.0	Shear	KIPS	542.44	-50.54	-28.23	12.985	270.09
88.00	80.0	Overload	KSI	36.00	10.91	3.05	5.879	122.28
99.00	90.0	Flexure	KSI	36.00	6.11	1.73	12.451	258.98
99.00	**90.0**	**Shear**	**KIPS**	**542.44**	**-66.74**	**-32.12**	**10.905**	**226.83**
99.00	90.0	Overload	KSI	36.00	6.11	1.73	12.460	259.17
110.00	100.0	Flexure	KSI	-36.00	-0.00	-0.00	99.000	2059.20
110.00	**100.0**	**Shear**	**KIPS**	**336.32**	**-82.95**	**-36.01**	**4.871**	**101.32**
110.00	100.0	Overload	KSI	-36.00	-0.00	-0.00	99.000	2059.20

Note:
*Adj-LL is only applicable for Permit load rating.

Bridge Name: Mohegan Bridge
NBI Structure ID:
Bridge ID: 067301

Analyzed By: BrR
Analyze Date: Friday, September 14, 2018 20:15:32
Analysis Engine: AASHTO LRFR Engine Version 6.8.2.3002
Analysis Preference Setting: None

Report By: brr
Report Date: Friday, September 14, 2018 20:16:11

Structure Definition Name: Span 2
Member Name: Girder F
Member Alternative Name: Girder F - As Inspected

Load and Resistance Factor Rating Summary

Live Load		Rating Factor	Girder Summary Controls	Capacity (Ton)	Span	Location (ft)	Percent	Impact	Lane
EV2	Legal	2.510	STRENGTH-I Steel Shear	72.17	1	0.00	0.0	As Requested	As Requested
EV3	Legal	1.686	STRENGTH-I Steel Shear	72.51	1	0.00	0.0	As Requested	As Requested
HL-93 (US)	Inventory	0.837	STRENGTH-I Steel Shear	30.13	1	0.00	0.0	As Requested	As Requested
HL-93 (US)	Operating	1.085	STRENGTH-I Steel Shear	39.05	1	0.00	0.0	As Requested	As Requested
SU4	Legal	2.268	STRENGTH-I Steel Shear	61.25	1	0.00	0.0	As Requested	As Requested
SU5	Legal	2.005	STRENGTH-I Steel Shear	62.14	1	0.00	0.0	As Requested	As Requested
SU6	Legal	1.834	STRENGTH-I Steel Shear	63.72	1	0.00	0.0	As Requested	As Requested
SU7	Legal	1.687	STRENGTH-I Steel Shear	65.37	1	0.00	0.0	As Requested	As Requested
Type 3	Legal	2.474	STRENGTH-I Steel Shear	61.84	1	0.00	0.0	As Requested	As Requested
Type 3-3	Legal	1.842	STRENGTH-I Steel Shear	73.67	1	0.00	0.0	As Requested	As Requested
Type 3S2	Legal	1.928	STRENGTH-I Steel Shear	69.40	1	0.00	0.0	As Requested	As Requested
RI-3	Permit	1.762	STRENGTH-II Steel Shear	66.94	1	0.00	0.0	As Requested	As Requested
RI-4	Permit	1.812	STRENGTH-II Steel Shear	67.95	1	0.00	0.0	As Requested	As Requested
RI-5	Permit	1.382	STRENGTH-II Steel Shear	72.39	1	0.00	0.0	As Requested	As Requested
RI-6	Permit	1.168	STRENGTH-II Steel Shear	75.95	1	0.00	0.0	As Requested	As Requested
RIDOT H20 Truck	Legal	2.958	STRENGTH-I Steel Shear	59.17	1	0.00	0.0	As Requested	As Requested
RI-OP 1	Permit	1.761	STRENGTH-II Steel Shear	99.52	1	0.00	0.0	As Requested	As Requested
RI-OP 2	Permit	1.515	STRENGTH-II Steel Shear	121.23	1	0.00	0.0	As Requested	As Requested
RI-OP 3	Permit	1.357	STRENGTH-II Steel Shear	153.35	1	0.00	0.0	As Requested	As Requested
RIPTA Bus	Legal	2.994	STRENGTH-I Steel Shear	62.28	1	0.00	0.0	As Requested	As Requested

Report by Action: ☑ **Flexure** ☑ **Shear** ☑ **Overload** ☑ **Interaction** ☑ **Critical**

Detailed Rating Results
Girder F - As Inspected
EV2
Axle Load
Impact: As Requested
Lane: As Requested

Span 1

Location (ft)	Percent	Limit State	Units	Capacity	DL + Adj -LL*	LL	Legal Rating Factor	Legal Load Rating (Ton)
0.00	0.0	Flexure	KSI	-36.00	-0.00	-0.00	99.000	2846.25
0.00	**0.0**	**Shear**	**KIPS**	**248.46**	**82.95**	**42.95**	**2.510**	**72.17**
0.00	0.0	Overload	KSI	-36.00	-0.00	-0.00	99.000	2846.25
0.50	0.5	Flexure	KSI	-34.98	-0.37	-0.02	99.000	2846.25
0.50	**0.5**	**Shear**	**KIPS**	**248.46**	**82.21**	**42.74**	**2.540**	**73.02**
0.50	0.5	Overload	KSI	-36.00	-0.37	-0.02	99.000	2846.25
5.33	4.8	Flexure	KSI	36.00	3.16	0.89	27.470	789.77
5.33	**4.8**	**Shear**	**KIPS**	**290.18**	**75.10**	**40.74**	**3.628**	**104.30**
5.33	4.8	Overload	KSI	36.00	3.16	0.89	26.731	768.52
11.00	10.0	Flexure	KSI	36.00	6.11	1.71	12.616	362.72
11.00	**10.0**	**Shear**	**KIPS**	**542.44**	**66.74**	**38.39**	**9.123**	**262.27**
11.00	10.0	Overload	KSI	36.00	6.11	1.71	12.626	362.99
22.00	**20.0**	**Flexure**	**KSI**	**36.00**	**10.91**	**3.02**	**5.571**	**160.18**
22.00	20.0	Shear	KIPS	542.44	50.54	33.84	10.832	311.41
22.00	20.0	Overload	KSI	36.00	10.91	3.02	5.940	170.78
25.50	**23.2**	**Flexure**	**KSI**	**36.00**	**12.14**	**3.35**	**4.654**	**133.79**
25.50	23.2	Shear	KIPS	542.44	44.91	32.39	11.490	330.34
25.50	23.2	Overload	KSI	36.00	12.14	3.35	5.070	145.78
33.00	**30.0**	**Flexure**	**KSI**	**36.00**	**11.21**	**3.17**	**5.210**	**149.78**
33.00	30.0	Shear	KIPS	542.44	33.61	29.29	13.096	376.51
33.00	30.0	Overload	KSI	36.00	11.21	3.17	5.587	160.62
44.00	**40.0**	**Flexure**	**KSI**	**36.00**	**12.83**	**3.56**	**4.173**	**119.97**
44.00	40.0	Shear	KIPS	542.44	17.04	24.73	16.180	465.19
44.00	40.0	Overload	KSI	36.00	12.83	3.56	4.612	132.59
49.50	**45.0**	**Flexure**	**KSI**	**36.00**	**13.23**	**3.64**	**3.976**	**114.32**
49.50	45.0	Shear	KIPS	542.44	8.29	22.45	18.212	523.59
49.50	45.0	Overload	KSI	36.00	13.23	3.64	4.431	127.40

55.00	**50.0**	**Flexure**	**KSI**	**36.00**	**13.36**	**3.64**	**3.946**	**113.46**
55.00	50.0	Shear	KIPS	542.44	0.00	-20.18	20.679	594.54
55.00	50.0	Overload	KSI	36.00	13.36	3.64	4.410	126.79
66.00	**60.0**	**Flexure**	**KSI**	**36.00**	**12.83**	**3.56**	**4.173**	**119.97**
66.00	60.0	Shear	KIPS	542.44	-17.04	-24.73	16.180	465.19
66.00	60.0	Overload	KSI	36.00	12.83	3.56	4.612	132.59
77.00	**70.0**	**Flexure**	**KSI**	**36.00**	**11.21**	**3.17**	**5.210**	**149.78**
77.00	70.0	Shear	KIPS	542.44	-33.61	-29.29	13.096	376.51
77.00	70.0	Overload	KSI	36.00	11.21	3.17	5.587	160.62
84.50	**76.8**	**Flexure**	**KSI**	**36.00**	**12.14**	**3.35**	**4.654**	**133.79**
84.50	76.8	Shear	KIPS	542.44	-44.91	-32.39	11.490	330.34
84.50	76.8	Overload	KSI	36.00	12.14	3.35	5.070	145.78
88.00	**80.0**	**Flexure**	**KSI**	**36.00**	**10.91**	**3.02**	**5.571**	**160.18**
88.00	80.0	Shear	KIPS	542.44	-50.54	-33.84	10.832	311.41
88.00	80.0	Overload	KSI	36.00	10.91	3.02	5.940	170.78
99.00	90.0	Flexure	KSI	36.00	6.11	1.71	12.616	362.72
99.00	**90.0**	**Shear**	**KIPS**	**542.44**	**-66.74**	**-38.39**	**9.123**	**262.27**
99.00	90.0	Overload	KSI	36.00	6.11	1.71	12.626	362.99
110.00	100.0	Flexure	KSI	-36.00	-0.00	-0.00	99.000	2846.25
110.00	**100.0**	**Shear**	**KIPS**	**336.32**	**-82.95**	**-42.95**	**4.084**	**117.42**
110.00	100.0	Overload	KSI	-36.00	-0.00	-0.00	99.000	2846.25

Detailed Rating Results
Girder F - As Inspected
EV3
Axle Load
Impact: As Requested
Lane: As Requested

Span 1

Location (ft)	Percent	Limit State	Units	Capacity	DL + Adj -LL*	LL	Legal Rating Factor	Legal Load Rating (Ton)
0.00	0.0	Flexure	KSI	-36.00	-0.00	-0.00	99.000	4257.00
0.00	**0.0**	**Shear**	**KIPS**	**248.46**	**82.95**	**63.93**	**1.686**	**72.51**
0.00	0.0	Overload	KSI	-36.00	-0.00	-0.00	99.000	4257.00
0.50	0.5	Flexure	KSI	-35.39	-0.37	-0.04	99.000	4257.00
0.50	**0.5**	**Shear**	**KIPS**	**248.46**	**82.21**	**63.63**	**1.706**	**73.36**
0.50	0.5	Overload	KSI	-36.00	-0.37	-0.04	99.000	4257.00
5.33	4.8	Flexure	KSI	36.00	3.16	1.33	18.457	793.67
5.33	**4.8**	**Shear**	**KIPS**	**290.18**	**75.10**	**60.63**	**2.438**	**104.81**

5.33	4.8	Overload	KSI	36.00	3.16	1.33	17.961	772.32
11.00	10.0	Flexure	KSI	36.00	6.11	2.55	8.479	364.62
11.00	**10.0**	**Shear**	**KIPS**	**542.44**	**66.74**	**57.12**	**6.131**	**263.65**
11.00	10.0	Overload	KSI	36.00	6.11	2.55	8.486	364.89
22.00	**20.0**	**Flexure**	**KSI**	**36.00**	**10.91**	**4.49**	**3.747**	**161.13**
22.00	20.0	Shear	KIPS	542.44	50.54	50.31	7.285	313.26
22.00	20.0	Overload	KSI	36.00	10.91	4.49	3.995	171.80
25.50	**23.2**	**Flexure**	**KSI**	**36.00**	**12.14**	**4.97**	**3.131**	**134.62**
25.50	23.2	Shear	KIPS	542.44	44.91	48.15	7.730	332.40
25.50	23.2	Overload	KSI	36.00	12.14	4.97	3.411	146.68
33.00	**30.0**	**Flexure**	**KSI**	**36.00**	**11.21**	**4.70**	**3.507**	**150.81**
33.00	30.0	Shear	KIPS	542.44	33.61	43.50	8.816	379.10
33.00	30.0	Overload	KSI	36.00	11.21	4.70	3.761	161.72
44.00	**40.0**	**Flexure**	**KSI**	**36.00**	**12.83**	**5.32**	**2.794**	**120.15**
44.00	40.0	Shear	KIPS	542.44	17.04	36.69	10.907	468.98
44.00	40.0	Overload	KSI	36.00	12.83	5.32	3.088	132.79
49.50	**45.0**	**Flexure**	**KSI**	**36.00**	**13.23**	**5.48**	**2.643**	**113.67**
49.50	45.0	Shear	KIPS	542.44	8.29	33.29	12.286	528.30
49.50	45.0	Overload	KSI	36.00	13.23	5.48	2.946	126.67
55.00	**50.0**	**Flexure**	**KSI**	**36.00**	**13.36**	**5.51**	**2.605**	**112.00**
55.00	50.0	Shear	KIPS	542.44	0.00	-29.88	13.965	600.49
55.00	50.0	Overload	KSI	36.00	13.36	5.51	2.911	125.17
66.00	**60.0**	**Flexure**	**KSI**	**36.00**	**12.83**	**5.32**	**2.794**	**120.15**
66.00	60.0	Shear	KIPS	542.44	-17.04	-36.69	10.907	468.98
66.00	60.0	Overload	KSI	36.00	12.83	5.32	3.088	132.79
77.00	**70.0**	**Flexure**	**KSI**	**36.00**	**11.21**	**4.70**	**3.507**	**150.81**
77.00	70.0	Shear	KIPS	542.44	-33.61	-43.50	8.816	379.10
77.00	70.0	Overload	KSI	36.00	11.21	4.70	3.761	161.72
84.50	**76.8**	**Flexure**	**KSI**	**36.00**	**12.14**	**4.97**	**3.131**	**134.62**
84.50	76.8	Shear	KIPS	542.44	-44.91	-48.15	7.730	332.40
84.50	76.8	Overload	KSI	36.00	12.14	4.97	3.411	146.68
88.00	**80.0**	**Flexure**	**KSI**	**36.00**	**10.91**	**4.49**	**3.747**	**161.13**
88.00	80.0	Shear	KIPS	542.44	-50.54	-50.31	7.285	313.26
88.00	80.0	Overload	KSI	36.00	10.91	4.49	3.995	171.80
99.00	90.0	Flexure	KSI	36.00	6.11	2.55	8.479	364.62
99.00	**90.0**	**Shear**	**KIPS**	**542.44**	**-66.74**	**-57.12**	**6.131**	**263.65**
99.00	90.0	Overload	KSI	36.00	6.11	2.55	8.486	364.89
110.00	100.0	Flexure	KSI	-36.00	-0.00	-0.00	99.000	4257.00
110.00	**100.0**	**Shear**	**KIPS**	**336.32**	**-82.95**	**-63.93**	**2.743**	**117.96**
110.00	100.0	Overload	KSI	-36.00	-0.00	-0.00	99.000	4257.00

Detailed Rating Results
Girder F - As Inspected

HL-93 (US)
Truck + Lane
Impact: As Requested
Lane: As Requested

Span 1

Location (ft)	Percent	Limit State	Units	Capacity	DL + Adj-LL*	LL	Inventory Rating Factor	Inventory Load Rating (Ton)	Operating Rating Factor	Operating Load Rating (Ton)
0.00	0.0	Flexure	KSI	-36.00	-0.00	-0.00	99.000	3564.00	99.000	3564.00
0.00	**0.0**	**Shear**	**KIPS**	**248.46**	**82.95**	**95.70**	**0.837**	**30.13**	**1.085**	**39.05**
0.00	0.0	Overload	KSI	-36.00	-0.00	-0.00	99.000	3564.00	99.000	3564.00
0.50	0.5	Flexure	KSI	36.00	0.31	0.24	84.423	3039.23	99.000	3564.00
0.50	**0.5**	**Shear**	**KIPS**	**248.46**	**82.21**	**95.11**	**0.848**	**30.52**	**1.099**	**39.57**
0.50	0.5	Overload	KSI	-36.00	-0.37	-0.07	99.000	3564.00	99.000	3564.00
5.33	4.8	Flexure	KSI	36.00	3.16	2.41	7.563	272.26	9.803	352.93
5.33	**4.8**	**Shear**	**KIPS**	**290.18**	**75.10**	**89.49**	**1.227**	**44.17**	**1.590**	**57.25**
5.33	4.8	Overload	KSI	36.00	3.16	2.41	9.907	356.64	12.879	463.63
11.00	10.0	Flexure	KSI	36.00	6.11	4.62	3.475	125.08	4.504	162.15
11.00	**10.0**	**Shear**	**KIPS**	**542.44**	**66.74**	**83.03**	**3.134**	**112.81**	**4.062**	**146.24**
11.00	10.0	Overload	KSI	36.00	6.11	4.62	4.681	168.51	6.085	219.06
22.00	**20.0**	**Flexure**	**KSI**	**36.00**	**10.91**	**8.13**	**1.536**	**55.28**	**1.991**	**71.66**
22.00	20.0	Shear	KIPS	542.44	50.54	70.90	3.840	138.25	4.978	179.21
22.00	20.0	Overload	KSI	36.00	10.91	8.13	2.204	79.35	2.865	103.15
25.50	**23.2**	**Flexure**	**KSI**	**36.00**	**12.14**	**9.02**	**1.283**	**46.19**	**1.663**	**59.88**
25.50	23.2	Shear	KIPS	542.44	44.91	67.16	4.116	148.19	5.336	192.10
25.50	23.2	Overload	KSI	36.00	12.14	9.02	1.882	67.75	2.447	88.07
33.00	**30.0**	**Flexure**	**KSI**	**36.00**	**11.21**	**8.52**	**1.438**	**51.75**	**1.863**	**67.09**
33.00	30.0	Shear	KIPS	542.44	33.61	59.33	4.802	172.87	6.225	224.09
33.00	30.0	Overload	KSI	36.00	11.21	8.52	2.075	74.70	2.698	97.11
44.00	**40.0**	**Flexure**	**KSI**	**36.00**	**12.83**	**9.67**	**1.142**	**41.12**	**1.481**	**53.30**
44.00	40.0	Shear	KIPS	542.44	17.04	48.31	6.154	221.54	7.977	287.18
44.00	40.0	Overload	KSI	36.00	12.83	9.67	1.699	61.17	2.209	79.53
49.50	**45.0**	**Flexure**	**KSI**	**36.00**	**13.23**	**9.94**	**1.082**	**38.95**	**1.403**	**50.50**
49.50	45.0	Shear	KIPS	542.44	8.29	43.00	7.065	254.34	9.158	329.70
49.50	45.0	Overload	KSI	36.00	13.23	9.94	1.623	58.44	2.110	75.97
55.00	**50.0**	**Flexure**	**KSI**	**36.00**	**13.36**	**9.98**	**1.068**	**38.44**	**1.384**	**49.82**
55.00	50.0	Shear	KIPS	542.44	0.00	-37.83	8.194	294.99	10.622	382.39
55.00	50.0	Overload	KSI	36.00	13.36	9.98	1.606	57.82	2.088	75.17
66.00	**60.0**	**Flexure**	**KSI**	**36.00**	**12.83**	**9.67**	**1.142**	**41.12**	**1.481**	**53.30**

66.00	60.0	Shear	KIPS	542.44	-17.04	-48.31	6.154	221.54	7.977	287.18
66.00	60.0	Overload	KSI	36.00	12.83	9.67	1.699	61.17	2.209	79.53
77.00	**70.0**	**Flexure**	**KSI**	**36.00**	**11.21**	**8.52**	**1.438**	**51.75**	**1.863**	**67.09**
77.00	70.0	Shear	KIPS	542.44	-33.61	-59.33	4.802	172.87	6.225	224.09
77.00	70.0	Overload	KSI	36.00	11.21	8.52	2.075	74.70	2.698	97.11
84.50	**76.8**	**Flexure**	**KSI**	**36.00**	**12.14**	**9.02**	**1.283**	**46.19**	**1.663**	**59.88**
84.50	76.8	Shear	KIPS	542.44	-44.91	-67.16	4.116	148.19	5.336	192.10
84.50	76.8	Overload	KSI	36.00	12.14	9.02	1.882	67.75	2.447	88.07
88.00	**80.0**	**Flexure**	**KSI**	**36.00**	**10.91**	**8.13**	**1.536**	**55.28**	**1.991**	**71.66**
88.00	80.0	Shear	KIPS	542.44	-50.54	-70.90	3.840	138.25	4.978	179.21
88.00	80.0	Overload	KSI	36.00	10.91	8.13	2.204	79.35	2.865	103.15
99.00	90.0	Flexure	KSI	36.00	6.11	4.62	3.475	125.08	4.504	162.15
99.00	**90.0**	**Shear**	**KIPS**	**542.44**	**-66.74**	**-83.03**	**3.134**	**112.81**	**4.062**	**146.24**
99.00	90.0	Overload	KSI	36.00	6.11	4.62	4.681	168.51	6.085	219.06
110.00	100.0	Flexure	KSI	-36.00	-0.00	-0.00	99.000	3564.00	99.000	3564.00
110.00	**100.0**	**Shear**	**KIPS**	**336.32**	**-82.95**	**-95.70**	**1.362**	**49.01**	**1.765**	**63.54**
110.00	100.0	Overload	KSI	-36.00	-0.00	-0.00	99.000	3564.00	99.000	3564.00

Detailed Rating Results
Girder F - As Inspected
HL-93 (US)
Tandem + Lane
Impact: As Requested
Lane: As Requested

Span 1

Location (ft)	Percent	Limit State	Units	Capacity	DL + Adj-LL*	LL	Inventory Rating Factor	Inventory Load Rating (Ton)	Operating Rating Factor	Operating Load Rating (Ton)
0.00	0.0	Flexure	KSI	-36.00	-0.00	-0.00	99.000	3564.00	99.000	3564.00
0.00	**0.0**	**Shear**	**KIPS**	**248.46**	**82.95**	**78.29**	**1.023**	**36.83**	**1.326**	**47.74**
0.00	0.0	Overload	KSI	-36.00	-0.00	-0.00	99.000	3564.00	99.000	3564.00
0.50	0.5	Flexure	KSI	-36.00	-0.37	-0.05	99.000	3564.00	99.000	3564.00
0.50	**0.5**	**Shear**	**KIPS**	**248.46**	**82.21**	**77.81**	**1.036**	**37.31**	**1.343**	**48.37**
0.50	0.5	Overload	KSI	-36.00	-0.37	-0.05	99.000	3564.00	99.000	3564.00

5.33	4.8	Flexure	KSI	36.00	3.16	1.98	9.219	331.88	11.950	430.21
5.33	**4.8**	**Shear**	**KIPS**	**290.18**	**75.10**	**73.19**	**1.500**	**54.01**	**1.945**	**70.01**
5.33	4.8	Overload	KSI	36.00	3.16	1.98	12.076	434.74	15.699	565.16
11.00	10.0	Flexure	KSI	36.00	6.11	3.80	4.222	151.98	5.472	197.01
11.00	**10.0**	**Shear**	**KIPS**	**542.44**	**66.74**	**67.90**	**3.832**	**137.95**	**4.967**	**178.82**
11.00	10.0	Overload	KSI	36.00	6.11	3.80	5.687	204.73	7.393	266.15
22.00	**20.0**	**Flexure**	**KSI**	**36.00**	**10.91**	**6.74**	**1.852**	**66.66**	**2.400**	**86.41**
22.00	20.0	Shear	KIPS	542.44	50.54	58.06	4.690	168.84	6.080	218.87
22.00	20.0	Overload	KSI	36.00	10.91	6.74	2.658	95.67	3.455	124.38
25.50	**23.2**	**Flexure**	**KSI**	**36.00**	**12.14**	**7.50**	**1.543**	**55.53**	**2.000**	**71.99**
25.50	23.2	Shear	KIPS	542.44	44.91	55.04	5.023	180.83	6.512	234.41
25.50	23.2	Overload	KSI	36.00	12.14	7.50	2.263	81.46	2.941	105.89
33.00	**30.0**	**Flexure**	**KSI**	**36.00**	**11.21**	**7.14**	**1.716**	**61.78**	**2.225**	**80.09**
33.00	30.0	Shear	KIPS	542.44	33.61	48.76	5.843	210.34	7.574	272.66
33.00	30.0	Overload	KSI	36.00	11.21	7.14	2.477	89.19	3.221	115.94
44.00	**40.0**	**Flexure**	**KSI**	**36.00**	**12.83**	**8.14**	**1.358**	**48.90**	**1.761**	**63.39**
44.00	40.0	Shear	KIPS	542.44	17.04	40.02	7.429	267.43	9.630	346.67
44.00	40.0	Overload	KSI	36.00	12.83	8.14	2.021	72.75	2.627	94.57
49.50	**45.0**	**Flexure**	**KSI**	**36.00**	**13.23**	**8.37**	**1.284**	**46.24**	**1.665**	**59.94**
49.50	45.0	Shear	KIPS	542.44	8.29	35.85	8.474	305.07	10.985	395.46
49.50	45.0	Overload	KSI	36.00	13.23	8.37	1.927	69.36	2.505	90.17
55.00	**50.0**	**Flexure**	**KSI**	**36.00**	**13.36**	**8.44**	**1.263**	**45.46**	**1.637**	**58.93**
55.00	50.0	Shear	KIPS	542.44	0.00	-31.82	9.742	350.70	12.628	454.62
55.00	50.0	Overload	KSI	36.00	13.36	8.44	1.900	68.38	2.469	88.90
66.00	**60.0**	**Flexure**	**KSI**	**36.00**	**12.83**	**8.14**	**1.358**	**48.90**	**1.761**	**63.39**
66.00	60.0	Shear	KIPS	542.44	-17.04	-40.02	7.429	267.43	9.630	346.67
66.00	60.0	Overload	KSI	36.00	12.83	8.14	2.021	72.75	2.627	94.57
77.00	**70.0**	**Flexure**	**KSI**	**36.00**	**11.21**	**7.14**	**1.716**	**61.78**	**2.225**	**80.09**
77.00	70.0	Shear	KIPS	542.44	-33.61	-48.76	5.843	210.34	7.574	272.66
77.00	70.0	Overload	KSI	36.00	11.21	7.14	2.477	89.19	3.221	115.94
84.50	**76.8**	**Flexure**	**KSI**	**36.00**	**12.14**	**7.50**	**1.543**	**55.53**	**2.000**	**71.99**
84.50	76.8	Shear	KIPS	542.44	-44.91	-55.04	5.023	180.83	6.512	234.41
84.50	76.8	Overload	KSI	36.00	12.14	7.50	2.263	81.46	2.941	105.89
88.00	**80.0**	**Flexure**	**KSI**	**36.00**	**10.91**	**6.74**	**1.852**	**66.66**	**2.400**	**86.41**
88.00	80.0	Shear	KIPS	542.44	-50.54	-58.06	4.690	168.84	6.080	218.87
88.00	80.0	Overload	KSI	36.00	10.91	6.74	2.658	95.67	3.455	124.38
99.00	90.0	Flexure	KSI	36.00	6.11	3.80	4.222	151.98	5.472	197.01
99.00	**90.0**	**Shear**	**KIPS**	**542.44**	**-66.74**	**-67.90**	**3.832**	**137.95**	**4.967**	**178.82**

99.00	90.0	Overload	KSI	36.00	6.11	3.80	5.687	204.73	7.393	266.15
110.00	100.0	Flexure	KSI	-36.00	-0.00	-0.00	99.000	3564.00	99.000	3564.00
110.00	**100.0**	**Shear**	**KIPS**	**336.32**	**-82.95**	**-78.29**	**1.664**	**59.91**	**2.157**	**77.66**
110.00	100.0	Overload	KSI	-36.00	-0.00	-0.00	99.000	3564.00	99.000	3564.00

Detailed Rating Results
Girder F - As Inspected
LRFD Fatigue Truck (US)
Axle Load
Impact: As Requested
Lane: As Requested

Span 1

Location (ft)	Percent	Limit State	Units	Capacity	DL + Adj-LL*	LL	Inventory Rating Factor	Inventory Load Rating (Ton)
0.50	0.5	Interaction	KSI	16.00	0.00	0.12	99.000	2970.00
5.33	4.8	Interaction	KSI	16.00	0.00	1.16	13.748	412.45
11.00	10.0	Interaction	KSI	12.00	0.00	2.21	5.428	162.85
22.00	20.0	Interaction	KSI	12.00	0.00	3.82	3.142	94.26
25.50	23.2	Interaction	KSI	16.00	0.00	4.28	3.739	112.17
33.00	30.0	Interaction	KSI	12.00	0.00	3.96	3.034	91.02
44.00	40.0	Interaction	KSI	12.00	0.00	4.42	2.714	81.43
49.50	45.0	Interaction	KSI	12.00	0.00	4.47	2.683	80.48
55.00	50.0	Interaction	KSI	12.00	0.00	4.40	2.725	81.74
66.00	60.0	Interaction	KSI	12.00	0.00	4.42	2.714	81.43
77.00	70.0	Interaction	KSI	12.00	0.00	3.96	3.034	91.02
84.50	76.8	Interaction	KSI	16.00	0.00	4.20	3.805	114.16
88.00	80.0	Interaction	KSI	12.00	0.00	3.82	3.142	94.26
99.00	90.0	Interaction	KSI	12.00	0.00	2.21	5.428	162.85

Detailed Rating Results
Girder F - As Inspected
SU4
Axle Load
Impact: As Requested
Lane: As Requested

Span 1

Location (ft)	Percent	Limit State	Units	Capacity	DL + Adj -LL*	LL	Legal Rating Factor	Legal Load Rating (Ton)
0.00	0.0	Flexure	KSI	-36.00	-0.00	-0.00	99.000	2673.00
0.00	**0.0**	**Shear**	**KIPS**	**248.46**	**82.95**	**47.53**	**2.268**	**61.25**
0.00	0.0	Overload	KSI	-36.00	-0.00	-0.00	99.000	2673.00
0.50	0.5	Flexure	KSI	-35.27	-0.37	-0.03	99.000	2673.00
0.50	**0.5**	**Shear**	**KIPS**	**248.46**	**82.21**	**47.30**	**2.295**	**61.97**
0.50	0.5	Overload	KSI	-36.00	-0.37	-0.03	99.000	2673.00
5.33	4.8	Flexure	KSI	36.00	3.16	1.20	20.495	553.38
5.33	**4.8**	**Shear**	**KIPS**	**290.18**	**75.10**	**45.08**	**3.279**	**88.52**
5.33	4.8	Overload	KSI	36.00	3.16	1.20	19.944	538.49
11.00	10.0	Flexure	KSI	36.00	6.11	2.29	9.414	254.18
11.00	**10.0**	**Shear**	**KIPS**	**542.44**	**66.74**	**42.48**	**8.245**	**222.63**
11.00	10.0	Overload	KSI	36.00	6.11	2.29	9.421	254.37
22.00	**20.0**	**Flexure**	**KSI**	**36.00**	**10.91**	**4.04**	**4.158**	**112.28**
22.00	20.0	Shear	KIPS	542.44	50.54	37.43	9.793	264.41
22.00	20.0	Overload	KSI	36.00	10.91	4.04	4.434	119.71
25.50	**23.2**	**Flexure**	**KSI**	**36.00**	**12.14**	**4.48**	**3.474**	**93.79**
25.50	23.2	Shear	KIPS	542.44	44.91	35.82	10.389	280.51
25.50	23.2	Overload	KSI	36.00	12.14	4.48	3.785	102.19
33.00	**30.0**	**Flexure**	**KSI**	**36.00**	**11.21**	**4.24**	**3.890**	**105.03**
33.00	30.0	Shear	KIPS	542.44	33.61	32.38	11.844	319.79
33.00	30.0	Overload	KSI	36.00	11.21	4.24	4.171	112.62
44.00	**40.0**	**Flexure**	**KSI**	**36.00**	**12.83**	**4.84**	**3.073**	**82.98**
44.00	40.0	Shear	KIPS	542.44	17.04	27.33	14.641	395.30
44.00	40.0	Overload	KSI	36.00	12.83	4.84	3.397	91.71
49.50	**45.0**	**Flexure**	**KSI**	**36.00**	**13.23**	**4.98**	**2.907**	**78.48**
49.50	45.0	Shear	KIPS	542.44	8.29	24.81	16.484	445.07
49.50	45.0	Overload	KSI	36.00	13.23	4.98	3.239	87.46
55.00	**50.0**	**Flexure**	**KSI**	**36.00**	**13.36**	**5.01**	**2.863**	**77.29**
55.00	50.0	Shear	KIPS	542.44	0.00	-22.28	18.725	505.57
55.00	50.0	Overload	KSI	36.00	13.36	5.01	3.199	86.38
66.00	**60.0**	**Flexure**	**KSI**	**36.00**	**12.83**	**4.84**	**3.073**	**82.98**
66.00	60.0	Shear	KIPS	542.44	-17.04	-27.33	14.641	395.30
66.00	60.0	Overload	KSI	36.00	12.83	4.84	3.397	91.71
77.00	**70.0**	**Flexure**	**KSI**	**36.00**	**11.21**	**4.24**	**3.890**	**105.03**
77.00	70.0	Shear	KIPS	542.44	-33.61	-32.38	11.844	319.79
77.00	70.0	Overload	KSI	36.00	11.21	4.24	4.171	112.62
84.50	**76.8**	**Flexure**	**KSI**	**36.00**	**12.14**	**4.48**	**3.474**	**93.79**
84.50	76.8	Shear	KIPS	542.44	-44.91	-35.82	10.389	280.51

84.50	76.8	Overload	KSI	36.00	12.14	4.48	3.785	102.19
88.00	**80.0**	**Flexure**	**KSI**	**36.00**	**10.91**	**4.04**	**4.158**	**112.28**
88.00	80.0	Shear	KIPS	542.44	-50.54	-37.43	9.793	264.41
88.00	80.0	Overload	KSI	36.00	10.91	4.04	4.434	119.71
99.00	90.0	Flexure	KSI	36.00	6.11	2.29	9.414	254.18
99.00	**90.0**	**Shear**	**KIPS**	**542.44**	**-66.74**	**-42.48**	**8.245**	**222.63**
99.00	90.0	Overload	KSI	36.00	6.11	2.29	9.421	254.37
110.00	100.0	Flexure	KSI	-36.00	-0.00	-0.00	99.000	2673.00
110.00	**100.0**	**Shear**	**KIPS**	**336.32**	**-82.95**	**-47.53**	**3.691**	**99.64**
110.00	100.0	Overload	KSI	-36.00	-0.00	-0.00	99.000	2673.00

Detailed Rating Results
Girder F - As Inspected
SU5
Axle Load
Impact: As Requested
Lane: As Requested

Span 1

Location (ft)	Percent	Limit State	Units	Capacity	DL + Adj -LL*	LL	Legal Rating Factor	Legal Load Rating (Ton)
0.00	0.0	Flexure	KSI	-36.00	-0.00	-0.00	99.000	3069.00
0.00	**0.0**	**Shear**	**KIPS**	**248.46**	**82.95**	**53.78**	**2.005**	**62.14**
0.00	0.0	Overload	KSI	-36.00	-0.00	-0.00	99.000	3069.00
0.50	0.5	Flexure	KSI	-35.41	-0.37	-0.04	99.000	3069.00
0.50	**0.5**	**Shear**	**KIPS**	**248.46**	**82.21**	**53.52**	**2.028**	**62.88**
0.50	0.5	Overload	KSI	-36.00	-0.37	-0.04	99.000	3069.00
5.33	4.8	Flexure	KSI	36.00	3.16	1.35	18.126	561.91
5.33	**4.8**	**Shear**	**KIPS**	**290.18**	**75.10**	**50.97**	**2.900**	**89.89**
5.33	4.8	Overload	KSI	36.00	3.16	1.35	17.638	546.79
11.00	10.0	Flexure	KSI	36.00	6.11	2.59	8.334	258.34
11.00	**10.0**	**Shear**	**KIPS**	**542.44**	**66.74**	**47.98**	**7.299**	**226.27**
11.00	10.0	Overload	KSI	36.00	6.11	2.59	8.340	258.53
22.00	**20.0**	**Flexure**	**KSI**	**36.00**	**10.91**	**4.56**	**3.689**	**114.37**
22.00	20.0	Shear	KIPS	542.44	50.54	42.19	8.688	269.33
22.00	20.0	Overload	KSI	36.00	10.91	4.56	3.934	121.94
25.50	**23.2**	**Flexure**	**KSI**	**36.00**	**12.14**	**5.05**	**3.084**	**95.62**
25.50	23.2	Shear	KIPS	542.44	44.91	40.34	9.225	285.97
25.50	23.2	Overload	KSI	36.00	12.14	5.05	3.361	104.18
33.00	**30.0**	**Flexure**	**KSI**	**36.00**	**11.21**	**4.79**	**3.444**	**106.76**

33.00	30.0	Shear	KIPS	542.44	33.61	36.39	10.539	326.69
33.00	30.0	Overload	KSI	36.00	11.21	4.79	3.693	114.48
44.00	**40.0**	**Flexure**	**KSI**	**36.00**	**12.83**	**5.46**	**2.726**	**84.50**
44.00	40.0	Shear	KIPS	542.44	17.04	30.60	13.079	405.45
44.00	40.0	Overload	KSI	36.00	12.83	5.46	3.012	93.38
49.50	**45.0**	**Flexure**	**KSI**	**36.00**	**13.23**	**5.60**	**2.585**	**80.12**
49.50	45.0	Shear	KIPS	542.44	8.29	27.70	14.764	457.69
49.50	45.0	Overload	KSI	36.00	13.23	5.60	2.880	89.28
55.00	**50.0**	**Flexure**	**KSI**	**36.00**	**13.36**	**5.62**	**2.553**	**79.13**
55.00	50.0	Shear	KIPS	542.44	0.00	-24.80	16.825	521.58
55.00	50.0	Overload	KSI	36.00	13.36	5.62	2.853	88.44
66.00	**60.0**	**Flexure**	**KSI**	**36.00**	**12.83**	**5.46**	**2.726**	**84.50**
66.00	60.0	Shear	KIPS	542.44	-17.04	-30.60	13.079	405.45
66.00	60.0	Overload	KSI	36.00	12.83	5.46	3.012	93.38
77.00	**70.0**	**Flexure**	**KSI**	**36.00**	**11.21**	**4.79**	**3.444**	**106.76**
77.00	70.0	Shear	KIPS	542.44	-33.61	-36.39	10.539	326.69
77.00	70.0	Overload	KSI	36.00	11.21	4.79	3.693	114.48
84.50	**76.8**	**Flexure**	**KSI**	**36.00**	**12.14**	**5.05**	**3.084**	**95.62**
84.50	76.8	Shear	KIPS	542.44	-44.91	-40.34	9.225	285.97
84.50	76.8	Overload	KSI	36.00	12.14	5.05	3.361	104.18
88.00	**80.0**	**Flexure**	**KSI**	**36.00**	**10.91**	**4.56**	**3.689**	**114.37**
88.00	80.0	Shear	KIPS	542.44	-50.54	-42.19	8.688	269.33
88.00	80.0	Overload	KSI	36.00	10.91	4.56	3.934	121.94
99.00	90.0	Flexure	KSI	36.00	6.11	2.59	8.334	258.34
99.00	**90.0**	**Shear**	**KIPS**	**542.44**	**-66.74**	**-47.98**	**7.299**	**226.27**
99.00	90.0	Overload	KSI	36.00	6.11	2.59	8.340	258.53
110.00	100.0	Flexure	KSI	-36.00	-0.00	-0.00	99.000	3069.00
110.00	**100.0**	**Shear**	**KIPS**	**336.32**	**-82.95**	**-53.78**	**3.261**	**101.10**
110.00	100.0	Overload	KSI	-36.00	-0.00	-0.00	99.000	3069.00

Detailed Rating Results
Girder F - As Inspected
SU6
Axle Load
Impact: As Requested
Lane: As Requested

Span 1

Location (ft)	Percent	Limit State	Units	Capacity	DL + Adj -LL*	LL	Legal Rating Factor	Legal Load Rating (Ton)

0.00	0.0	Flexure	KSI	-36.00	-0.00	-0.00	99.000	3440.25
0.00	**0.0**	**Shear**	**KIPS**	**248.46**	**82.95**	**58.80**	**1.834**	**63.72**
0.00	0.0	Overload	KSI	-36.00	-0.00	-0.00	99.000	3440.25
0.50	0.5	Flexure	KSI	-35.51	-0.37	-0.04	99.000	3440.25
0.50	**0.5**	**Shear**	**KIPS**	**248.46**	**82.21**	**58.50**	**1.856**	**64.48**
0.50	0.5	Overload	KSI	-36.00	-0.37	-0.04	99.000	3440.25
5.33	4.8	Flexure	KSI	36.00	3.16	1.48	16.603	576.97
5.33	**4.8**	**Shear**	**KIPS**	**290.18**	**75.10**	**55.65**	**2.656**	**92.30**
5.33	4.8	Overload	KSI	36.00	3.16	1.48	16.157	561.45
11.00	10.0	Flexure	KSI	36.00	6.11	2.82	7.646	265.71
11.00	**10.0**	**Shear**	**KIPS**	**542.44**	**66.74**	**52.30**	**6.697**	**232.72**
11.00	10.0	Overload	KSI	36.00	6.11	2.82	7.652	265.91
22.00	**20.0**	**Flexure**	**KSI**	**36.00**	**10.91**	**5.05**	**3.326**	**115.56**
22.00	20.0	Shear	KIPS	542.44	50.54	45.80	8.003	278.10
22.00	20.0	Overload	KSI	36.00	10.91	5.05	3.546	123.21
25.50	**23.2**	**Flexure**	**KSI**	**36.00**	**12.14**	**5.62**	**2.770**	**96.26**
25.50	23.2	Shear	KIPS	542.44	44.91	43.73	8.510	295.72
25.50	23.2	Overload	KSI	36.00	12.14	5.62	3.018	104.88
33.00	**30.0**	**Flexure**	**KSI**	**36.00**	**11.21**	**5.34**	**3.090**	**107.39**
33.00	30.0	Shear	KIPS	542.44	33.61	39.30	9.758	339.09
33.00	30.0	Overload	KSI	36.00	11.21	5.34	3.314	115.15
44.00	**40.0**	**Flexure**	**KSI**	**36.00**	**12.83**	**6.06**	**2.454**	**85.26**
44.00	40.0	Shear	KIPS	542.44	17.04	32.81	12.198	423.88
44.00	40.0	Overload	KSI	36.00	12.83	6.06	2.712	94.23
49.50	**45.0**	**Flexure**	**KSI**	**36.00**	**13.23**	**6.24**	**2.319**	**80.58**
49.50	45.0	Shear	KIPS	542.44	8.29	29.56	13.836	480.79
49.50	45.0	Overload	KSI	36.00	13.23	6.24	2.584	89.80
55.00	**50.0**	**Flexure**	**KSI**	**36.00**	**13.36**	**6.28**	**2.283**	**79.35**
55.00	50.0	Shear	KIPS	542.44	0.00	-26.31	15.860	551.15
55.00	50.0	Overload	KSI	36.00	13.36	6.28	2.552	88.67
66.00	**60.0**	**Flexure**	**KSI**	**36.00**	**12.83**	**6.06**	**2.454**	**85.26**
66.00	60.0	Shear	KIPS	542.44	-17.04	-32.81	12.198	423.88
66.00	60.0	Overload	KSI	36.00	12.83	6.06	2.712	94.23
77.00	**70.0**	**Flexure**	**KSI**	**36.00**	**11.21**	**5.34**	**3.090**	**107.39**
77.00	70.0	Shear	KIPS	542.44	-33.61	-39.30	9.758	339.09
77.00	70.0	Overload	KSI	36.00	11.21	5.34	3.314	115.15
84.50	**76.8**	**Flexure**	**KSI**	**36.00**	**12.14**	**5.62**	**2.770**	**96.26**
84.50	76.8	Shear	KIPS	542.44	-44.91	-43.73	8.510	295.72
84.50	76.8	Overload	KSI	36.00	12.14	5.62	3.018	104.88
88.00	**80.0**	**Flexure**	**KSI**	**36.00**	**10.91**	**5.05**	**3.326**	**115.56**
88.00	80.0	Shear	KIPS	542.44	-50.54	-45.80	8.003	278.10
88.00	80.0	Overload	KSI	36.00	10.91	5.05	3.546	123.21
99.00	90.0	Flexure	KSI	36.00	6.11	2.82	7.646	265.71

99.00	**90.0**	**Shear**	**KIPS**	**542.44**	**-66.74**	**-52.30**	**6.697**	**232.72**
99.00	90.0	Overload	KSI	36.00	6.11	2.82	7.652	265.91
110.00	100.0	Flexure	KSI	-36.00	-0.00	-0.00	99.000	3440.25
110.00	**100.0**	**Shear**	**KIPS**	**336.32**	**-82.95**	**-58.80**	**2.983**	**103.67**
110.00	100.0	Overload	KSI	-36.00	-0.00	-0.00	99.000	3440.25

Detailed Rating Results
Girder F - As Inspected
SU7
Axle Load
Impact: As Requested
Lane: As Requested

Span 1

Location (ft)	Percent	Limit State	Units	Capacity	DL + Adj -LL*	LL	Legal Rating Factor	Legal Load Rating (Ton)
0.00	0.0	Flexure	KSI	-36.00	-0.00	-0.00	99.000	3836.25
0.00	**0.0**	**Shear**	**KIPS**	**248.46**	**82.95**	**63.91**	**1.687**	**65.37**
0.00	0.0	Overload	KSI	-36.00	-0.00	-0.00	99.000	3836.25
0.50	0.5	Flexure	KSI	-35.61	-0.37	-0.04	99.000	3836.25
0.50	**0.5**	**Shear**	**KIPS**	**248.46**	**82.21**	**63.58**	**1.707**	**66.16**
0.50	0.5	Overload	KSI	-36.00	-0.37	-0.04	99.000	3836.25
5.33	4.8	Flexure	KSI	36.00	3.16	1.60	15.297	592.74
5.33	**4.8**	**Shear**	**KIPS**	**290.18**	**75.10**	**60.40**	**2.447**	**94.82**
5.33	4.8	Overload	KSI	36.00	3.16	1.60	14.885	576.80
11.00	10.0	Flexure	KSI	36.00	6.11	3.06	7.057	273.45
11.00	**10.0**	**Shear**	**KIPS**	**542.44**	**66.74**	**56.67**	**6.181**	**239.51**
11.00	10.0	Overload	KSI	36.00	6.11	3.06	7.062	273.65
22.00	**20.0**	**Flexure**	**KSI**	**36.00**	**10.91**	**5.47**	**3.070**	**118.97**
22.00	20.0	Shear	KIPS	542.44	50.54	49.42	7.417	287.39
22.00	20.0	Overload	KSI	36.00	10.91	5.47	3.273	126.85
25.50	**23.2**	**Flexure**	**KSI**	**36.00**	**12.14**	**6.12**	**2.547**	**98.68**
25.50	23.2	Shear	KIPS	542.44	44.91	47.12	7.899	306.09
25.50	23.2	Overload	KSI	36.00	12.14	6.12	2.775	107.52
33.00	**30.0**	**Flexure**	**KSI**	**36.00**	**11.21**	**5.86**	**2.816**	**109.13**
33.00	30.0	Shear	KIPS	542.44	33.61	42.18	9.093	352.37
33.00	30.0	Overload	KSI	36.00	11.21	5.86	3.020	117.02
44.00	**40.0**	**Flexure**	**KSI**	**36.00**	**12.83**	**6.66**	**2.233**	**86.52**
44.00	40.0	Shear	KIPS	542.44	17.04	34.93	11.456	443.92
44.00	40.0	Overload	KSI	36.00	12.83	6.66	2.468	95.62

49.50	**45.0**	**Flexure**	**KSI**	**36.00**	**13.23**	**6.86**	**2.112**	**81.83**
49.50	45.0	Shear	KIPS	542.44	8.29	31.31	13.062	506.15
49.50	45.0	Overload	KSI	36.00	13.23	6.86	2.353	91.19
55.00	**50.0**	**Flexure**	**KSI**	**36.00**	**13.36**	**6.92**	**2.073**	**80.32**
55.00	50.0	Shear	KIPS	542.44	0.00	-27.69	15.072	584.03
55.00	50.0	Overload	KSI	36.00	13.36	6.92	2.317	89.76
66.00	**60.0**	**Flexure**	**KSI**	**36.00**	**12.83**	**6.66**	**2.233**	**86.52**
66.00	60.0	Shear	KIPS	542.44	-17.04	-34.93	11.456	443.92
66.00	60.0	Overload	KSI	36.00	12.83	6.66	2.468	95.62
77.00	**70.0**	**Flexure**	**KSI**	**36.00**	**11.21**	**5.86**	**2.816**	**109.13**
77.00	70.0	Shear	KIPS	542.44	-33.61	-42.18	9.093	352.37
77.00	70.0	Overload	KSI	36.00	11.21	5.86	3.020	117.02
84.50	**76.8**	**Flexure**	**KSI**	**36.00**	**12.14**	**6.12**	**2.547**	**98.68**
84.50	76.8	Shear	KIPS	542.44	-44.91	-47.12	7.899	306.09
84.50	76.8	Overload	KSI	36.00	12.14	6.12	2.775	107.52
88.00	**80.0**	**Flexure**	**KSI**	**36.00**	**10.91**	**5.47**	**3.070**	**118.97**
88.00	80.0	Shear	KIPS	542.44	-50.54	-49.42	7.417	287.39
88.00	80.0	Overload	KSI	36.00	10.91	5.47	3.273	126.85
99.00	90.0	Flexure	KSI	36.00	6.11	3.06	7.057	273.45
99.00	**90.0**	**Shear**	**KIPS**	**542.44**	**-66.74**	**-56.67**	**6.181**	**239.51**
99.00	90.0	Overload	KSI	36.00	6.11	3.06	7.062	273.65
110.00	100.0	Flexure	KSI	-36.00	-0.00	-0.00	99.000	3836.25
110.00	**100.0**	**Shear**	**KIPS**	**336.32**	**-82.95**	**-63.91**	**2.744**	**106.34**
110.00	100.0	Overload	KSI	-36.00	-0.00	-0.00	99.000	3836.25

Detailed Rating Results
Girder F - As Inspected
Type 3
Axle Load
Impact: As Requested
Lane: As Requested

Span 1

Location (ft)	Percent	Limit State	Units	Capacity	DL + Adj -LL*	LL	Legal Rating Factor	Legal Load Rating (Ton)
0.00	0.0	Flexure	KSI	-36.00	-0.00	-0.00	99.000	2475.00
0.00	**0.0**	**Shear**	**KIPS**	**248.46**	**82.95**	**43.58**	**2.474**	**61.84**
0.00	0.0	Overload	KSI	-36.00	-0.00	-0.00	99.000	2475.00
0.50	0.5	Flexure	KSI	-35.18	-0.37	-0.03	99.000	2475.00
0.50	**0.5**	**Shear**	**KIPS**	**248.46**	**82.21**	**43.37**	**2.503**	**62.57**

0.50	0.5	Overload	KSI	-36.00	-0.37	-0.03	99.000	2475.00
5.33	4.8	Flexure	KSI	36.00	3.16	1.10	22.362	559.04
5.33	**4.8**	**Shear**	**KIPS**	**290.18**	**75.10**	**41.32**	**3.577**	**89.43**
5.33	4.8	Overload	KSI	36.00	3.16	1.10	21.760	544.01
11.00	10.0	Flexure	KSI	36.00	6.11	2.10	10.278	256.94
11.00	**10.0**	**Shear**	**KIPS**	**542.44**	**66.74**	**38.91**	**9.002**	**225.05**
11.00	10.0	Overload	KSI	36.00	6.11	2.10	10.285	257.13
22.00	**20.0**	**Flexure**	**KSI**	**36.00**	**10.91**	**3.70**	**4.547**	**113.67**
22.00	20.0	Shear	KIPS	542.44	50.54	34.23	10.707	267.67
22.00	20.0	Overload	KSI	36.00	10.91	3.70	4.848	121.19
25.50	**23.2**	**Flexure**	**KSI**	**36.00**	**12.14**	**4.10**	**3.800**	**95.00**
25.50	23.2	Shear	KIPS	542.44	44.91	32.75	11.365	284.13
25.50	23.2	Overload	KSI	36.00	12.14	4.10	4.140	103.51
33.00	**30.0**	**Flexure**	**KSI**	**36.00**	**11.21**	**3.87**	**4.261**	**106.53**
33.00	30.0	Shear	KIPS	542.44	33.61	29.56	12.975	324.37
33.00	30.0	Overload	KSI	36.00	11.21	3.87	4.569	114.24
44.00	**40.0**	**Flexure**	**KSI**	**36.00**	**12.83**	**4.39**	**3.389**	**84.73**
44.00	40.0	Shear	KIPS	542.44	17.04	24.88	16.081	402.02
44.00	40.0	Overload	KSI	36.00	12.83	4.39	3.746	93.64
49.50	**45.0**	**Flexure**	**KSI**	**36.00**	**13.23**	**4.51**	**3.210**	**80.25**
49.50	45.0	Shear	KIPS	542.44	8.29	22.55	18.137	453.42
49.50	45.0	Overload	KSI	36.00	13.23	4.51	3.577	89.43
55.00	**50.0**	**Flexure**	**KSI**	**36.00**	**13.36**	**4.53**	**3.167**	**79.18**
55.00	50.0	Shear	KIPS	542.44	0.00	-20.21	20.646	516.15
55.00	50.0	Overload	KSI	36.00	13.36	4.53	3.540	88.49
66.00	**60.0**	**Flexure**	**KSI**	**36.00**	**12.83**	**4.39**	**3.389**	**84.73**
66.00	60.0	Shear	KIPS	542.44	-17.04	-24.88	16.081	402.02
66.00	60.0	Overload	KSI	36.00	12.83	4.39	3.746	93.64
77.00	**70.0**	**Flexure**	**KSI**	**36.00**	**11.21**	**3.87**	**4.261**	**106.53**
77.00	70.0	Shear	KIPS	542.44	-33.61	-29.56	12.975	324.37
77.00	70.0	Overload	KSI	36.00	11.21	3.87	4.569	114.24
84.50	**76.8**	**Flexure**	**KSI**	**36.00**	**12.14**	**4.10**	**3.800**	**95.00**
84.50	76.8	Shear	KIPS	542.44	-44.91	-32.75	11.365	284.13
84.50	76.8	Overload	KSI	36.00	12.14	4.10	4.140	103.51
88.00	**80.0**	**Flexure**	**KSI**	**36.00**	**10.91**	**3.70**	**4.547**	**113.67**
88.00	80.0	Shear	KIPS	542.44	-50.54	-34.23	10.707	267.67
88.00	80.0	Overload	KSI	36.00	10.91	3.70	4.848	121.19
99.00	90.0	Flexure	KSI	36.00	6.11	2.10	10.278	256.94
99.00	**90.0**	**Shear**	**KIPS**	**542.44**	**-66.74**	**-38.91**	**9.002**	**225.05**
99.00	90.0	Overload	KSI	36.00	6.11	2.10	10.285	257.13
110.00	100.0	Flexure	KSI	-36.00	-0.00	-0.00	99.000	2475.00
110.00	**100.0**	**Shear**	**KIPS**	**336.32**	**-82.95**	**-43.58**	**4.024**	**100.61**
110.00	100.0	Overload	KSI	-36.00	-0.00	-0.00	99.000	2475.00

Detailed Rating Results
Girder F - As Inspected
Type 3-3
Axle Load
Impact: As Requested
Lane: As Requested

Span 1

Location (ft)	Percent	Limit State	Units	Capacity	DL + Adj -LL*	LL	Legal Rating Factor	Legal Load Rating (Ton)
0.00	0.0	Flexure	KSI	-36.00	-0.00	-0.00	99.000	3960.00
0.00	**0.0**	**Shear**	**KIPS**	**248.46**	**82.95**	**58.54**	**1.842**	**73.67**
0.00	0.0	Overload	KSI	-36.00	-0.00	-0.00	99.000	3960.00
0.50	0.5	Flexure	KSI	-35.51	-0.37	-0.04	99.000	3960.00
0.50	**0.5**	**Shear**	**KIPS**	**248.46**	**82.21**	**58.20**	**1.865**	**74.61**
0.50	0.5	Overload	KSI	-36.00	-0.37	-0.04	99.000	3960.00
5.33	4.8	Flexure	KSI	36.00	3.16	1.46	16.824	672.97
5.33	**4.8**	**Shear**	**KIPS**	**290.18**	**75.10**	**54.92**	**2.691**	**107.65**
5.33	4.8	Overload	KSI	36.00	3.16	1.46	16.372	654.87
11.00	10.0	Flexure	KSI	36.00	6.11	2.76	7.831	313.26
11.00	**10.0**	**Shear**	**KIPS**	**542.44**	**66.74**	**51.06**	**6.859**	**274.37**
11.00	10.0	Overload	KSI	36.00	6.11	2.76	7.837	313.49
22.00	**20.0**	**Flexure**	**KSI**	**36.00**	**10.91**	**4.74**	**3.544**	**141.75**
22.00	20.0	Shear	KIPS	542.44	50.54	43.58	8.410	336.41
22.00	20.0	Overload	KSI	36.00	10.91	4.74	3.778	151.13
25.50	**23.2**	**Flexure**	**KSI**	**36.00**	**12.14**	**5.24**	**2.972**	**118.88**
25.50	23.2	Shear	KIPS	542.44	44.91	41.20	9.033	361.31
25.50	23.2	Overload	KSI	36.00	12.14	5.24	3.238	129.53
33.00	**30.0**	**Flexure**	**KSI**	**36.00**	**11.21**	**4.88**	**3.383**	**135.31**
33.00	30.0	Shear	KIPS	542.44	33.61	36.10	10.623	424.92
33.00	30.0	Overload	KSI	36.00	11.21	4.88	3.627	145.09
44.00	**40.0**	**Flexure**	**KSI**	**36.00**	**12.83**	**5.50**	**2.704**	**108.14**
44.00	40.0	Shear	KIPS	542.44	17.04	28.62	13.980	559.20
44.00	40.0	Overload	KSI	36.00	12.83	5.50	2.988	119.52
49.50	**45.0**	**Flexure**	**KSI**	**36.00**	**13.23**	**5.69**	**2.545**	**101.80**
49.50	45.0	Shear	KIPS	542.44	8.29	24.88	16.433	657.33
49.50	45.0	Overload	KSI	36.00	13.23	5.69	2.836	113.44
55.00	**50.0**	**Flexure**	**KSI**	**36.00**	**13.36**	**5.71**	**2.511**	**100.45**
55.00	50.0	Shear	KIPS	542.44	0.00	-21.15	19.733	789.33

55.00	50.0	Overload	KSI	36.00	13.36	5.71	2.807	112.26
66.00	**60.0**	**Flexure**	**KSI**	**36.00**	**12.83**	**5.50**	**2.704**	**108.14**
66.00	60.0	Shear	KIPS	542.44	-17.04	-28.62	13.980	559.20
66.00	60.0	Overload	KSI	36.00	12.83	5.50	2.988	119.52
77.00	**70.0**	**Flexure**	**KSI**	**36.00**	**11.21**	**4.88**	**3.383**	**135.31**
77.00	70.0	Shear	KIPS	542.44	-33.61	-36.10	10.623	424.92
77.00	70.0	Overload	KSI	36.00	11.21	4.88	3.627	145.09
84.50	**76.8**	**Flexure**	**KSI**	**36.00**	**12.14**	**5.24**	**2.972**	**118.88**
84.50	76.8	Shear	KIPS	542.44	-44.91	-41.20	9.033	361.31
84.50	76.8	Overload	KSI	36.00	12.14	5.24	3.238	129.53
88.00	**80.0**	**Flexure**	**KSI**	**36.00**	**10.91**	**4.74**	**3.544**	**141.75**
88.00	80.0	Shear	KIPS	542.44	-50.54	-43.58	8.410	336.41
88.00	80.0	Overload	KSI	36.00	10.91	4.74	3.778	151.13
99.00	90.0	Flexure	KSI	36.00	6.11	2.76	7.831	313.26
99.00	**90.0**	**Shear**	**KIPS**	**542.44**	**-66.74**	**-51.06**	**6.859**	**274.37**
99.00	90.0	Overload	KSI	36.00	6.11	2.76	7.837	313.49
110.00	100.0	Flexure	KSI	-36.00	-0.00	-0.00	99.000	3960.00
110.00	**100.0**	**Shear**	**KIPS**	**336.32**	**-82.95**	**-58.54**	**2.996**	**119.85**
110.00	100.0	Overload	KSI	-36.00	-0.00	-0.00	99.000	3960.00

Detailed Rating Results
Girder F - As Inspected
Type 3S2
Axle Load
Impact: As Requested
Lane: As Requested

Span 1

Location (ft)	Percent	Limit State	Units	Capacity	DL + Adj -LL*	LL	Legal Rating Factor	Legal Load Rating (Ton)
0.00	0.0	Flexure	KSI	-36.00	-0.00	-0.00	99.000	3564.00
0.00	**0.0**	**Shear**	**KIPS**	**248.46**	**82.95**	**55.92**	**1.928**	**69.40**
0.00	0.0	Overload	KSI	-36.00	-0.00	-0.00	99.000	3564.00
0.50	0.5	Flexure	KSI	-35.45	-0.37	-0.04	99.000	3564.00
0.50	**0.5**	**Shear**	**KIPS**	**248.46**	**82.21**	**55.62**	**1.952**	**70.26**
0.50	0.5	Overload	KSI	-36.00	-0.37	-0.04	99.000	3564.00
5.33	4.8	Flexure	KSI	36.00	3.16	1.40	17.545	631.61
5.33	**4.8**	**Shear**	**KIPS**	**290.18**	**75.10**	**52.66**	**2.807**	**101.04**
5.33	4.8	Overload	KSI	36.00	3.16	1.40	17.073	614.62
11.00	10.0	Flexure	KSI	36.00	6.11	2.66	8.129	292.65

11.00	**10.0**	**Shear**	**KIPS**	**542.44**	**66.74**	**49.19**	**7.120**	**256.32**
11.00	10.0	Overload	KSI	36.00	6.11	2.66	8.135	292.87
22.00	**20.0**	**Flexure**	**KSI**	**36.00**	**10.91**	**4.58**	**3.666**	**131.96**
22.00	20.0	Shear	KIPS	542.44	50.54	42.46	8.632	310.77
22.00	20.0	Overload	KSI	36.00	10.91	4.58	3.908	140.70
25.50	**23.2**	**Flexure**	**KSI**	**36.00**	**12.14**	**5.09**	**3.057**	**110.05**
25.50	23.2	Shear	KIPS	542.44	44.91	40.32	9.231	332.31
25.50	23.2	Overload	KSI	36.00	12.14	5.09	3.331	119.91
33.00	**30.0**	**Flexure**	**KSI**	**36.00**	**11.21**	**4.85**	**3.401**	**122.45**
33.00	30.0	Shear	KIPS	542.44	33.61	35.73	10.734	386.43
33.00	30.0	Overload	KSI	36.00	11.21	4.85	3.647	131.30
44.00	**40.0**	**Flexure**	**KSI**	**36.00**	**12.83**	**5.48**	**2.717**	**97.80**
44.00	40.0	Shear	KIPS	542.44	17.04	29.00	13.800	496.79
44.00	40.0	Overload	KSI	36.00	12.83	5.48	3.003	108.09
49.50	**45.0**	**Flexure**	**KSI**	**36.00**	**13.23**	**5.60**	**2.587**	**93.13**
49.50	45.0	Shear	KIPS	542.44	8.29	25.63	15.954	574.34
49.50	45.0	Overload	KSI	36.00	13.23	5.60	2.883	103.78
55.00	**50.0**	**Flexure**	**KSI**	**36.00**	**13.36**	**5.57**	**2.575**	**92.69**
55.00	50.0	Shear	KIPS	542.44	0.00	-22.27	18.739	674.60
55.00	50.0	Overload	KSI	36.00	13.36	5.57	2.878	103.59
66.00	**60.0**	**Flexure**	**KSI**	**36.00**	**12.83**	**5.48**	**2.717**	**97.80**
66.00	60.0	Shear	KIPS	542.44	-17.04	-29.00	13.800	496.79
66.00	60.0	Overload	KSI	36.00	12.83	5.48	3.003	108.09
77.00	**70.0**	**Flexure**	**KSI**	**36.00**	**11.21**	**4.85**	**3.401**	**122.45**
77.00	70.0	Shear	KIPS	542.44	-33.61	-35.73	10.734	386.43
77.00	70.0	Overload	KSI	36.00	11.21	4.85	3.647	131.30
84.50	**76.8**	**Flexure**	**KSI**	**36.00**	**12.14**	**5.09**	**3.057**	**110.05**
84.50	76.8	Shear	KIPS	542.44	-44.91	-40.32	9.231	332.31
84.50	76.8	Overload	KSI	36.00	12.14	5.09	3.331	119.91
88.00	**80.0**	**Flexure**	**KSI**	**36.00**	**10.91**	**4.58**	**3.666**	**131.96**
88.00	80.0	Shear	KIPS	542.44	-50.54	-42.46	8.632	310.77
88.00	80.0	Overload	KSI	36.00	10.91	4.58	3.908	140.70
99.00	90.0	Flexure	KSI	36.00	6.11	2.66	8.129	292.65
99.00	**90.0**	**Shear**	**KIPS**	**542.44**	**-66.74**	**-49.19**	**7.120**	**256.32**
99.00	90.0	Overload	KSI	36.00	6.11	2.66	8.135	292.87
110.00	100.0	Flexure	KSI	-36.00	-0.00	-0.00	99.000	3564.00
110.00	**100.0**	**Shear**	**KIPS**	**336.32**	**-82.95**	**-55.92**	**3.136**	**112.91**
110.00	100.0	Overload	KSI	-36.00	-0.00	-0.00	99.000	3564.00

Detailed Rating Results
Girder F - As Inspected
RI-3
Axle Load

Impact: As Requested
Lane: As Requested

Span 1

Location (ft)	Percent	Limit State	Units	Capacity	DL + Adj -LL*	LL	Permit Rating Factor	Permit Load Rating (Ton)
0.00	0.0	Flexure	KSI	-36.00	-0.00	-0.00	99.000	3762.00
0.00	**0.0**	**Shear**	**KIPS**	**248.46**	**82.95**	**67.25**	**1.762**	**66.94**
0.00	0.0	Overload	KSI	-36.00	-0.00	-0.00	99.000	3762.00
0.50	0.5	Flexure	KSI	-35.56	-0.37	-0.05	99.000	3762.00
0.50	**0.5**	**Shear**	**KIPS**	**248.46**	**82.21**	**66.92**	**1.782**	**67.73**
0.50	0.5	Overload	KSI	-36.00	-0.37	-0.05	99.000	3762.00
5.33	4.8	Flexure	KSI	36.00	3.16	1.69	15.911	604.62
5.33	**4.8**	**Shear**	**KIPS**	**290.18**	**75.10**	**63.80**	**2.545**	**96.72**
5.33	4.8	Overload	KSI	36.00	3.16	1.69	18.319	696.13
11.00	10.0	Flexure	KSI	36.00	6.11	3.25	7.306	277.62
11.00	**10.0**	**Shear**	**KIPS**	**542.44**	**66.74**	**60.14**	**6.399**	**243.16**
11.00	10.0	Overload	KSI	36.00	6.11	3.25	8.650	328.72
22.00	**20.0**	**Flexure**	**KSI**	**36.00**	**10.91**	**5.73**	**3.225**	**122.54**
22.00	20.0	Shear	KIPS	542.44	50.54	53.03	7.594	288.56
22.00	20.0	Overload	KSI	36.00	10.91	5.73	4.068	154.58
25.50	**23.2**	**Flexure**	**KSI**	**36.00**	**12.14**	**6.35**	**2.693**	**102.33**
25.50	23.2	Shear	KIPS	542.44	44.91	50.77	8.054	306.04
25.50	23.2	Overload	KSI	36.00	12.14	6.35	3.471	131.92
33.00	**30.0**	**Flexure**	**KSI**	**36.00**	**11.21**	**6.01**	**3.013**	**114.50**
33.00	30.0	Shear	KIPS	542.44	33.61	45.93	9.175	348.64
33.00	30.0	Overload	KSI	36.00	11.21	6.01	3.823	145.27
44.00	**40.0**	**Flexure**	**KSI**	**36.00**	**12.83**	**6.80**	**2.403**	**91.31**
44.00	40.0	Shear	KIPS	542.44	17.04	38.82	11.325	430.34
44.00	40.0	Overload	KSI	36.00	12.83	6.80	3.142	119.39
49.50	**45.0**	**Flexure**	**KSI**	**36.00**	**13.23**	**7.02**	**2.267**	**86.16**
49.50	45.0	Shear	KIPS	542.44	8.29	35.27	12.739	484.07
49.50	45.0	Overload	KSI	36.00	13.23	7.02	2.989	113.60
55.00	**50.0**	**Flexure**	**KSI**	**36.00**	**13.36**	**7.08**	**2.228**	**84.66**
55.00	50.0	Shear	KIPS	542.44	0.00	-31.72	14.454	549.24
55.00	50.0	Overload	KSI	36.00	13.36	7.08	2.946	111.94
66.00	**60.0**	**Flexure**	**KSI**	**36.00**	**12.83**	**6.80**	**2.403**	**91.31**
66.00	60.0	Shear	KIPS	542.44	-17.04	-38.82	11.325	430.34
66.00	60.0	Overload	KSI	36.00	12.83	6.80	3.142	119.39
77.00	**70.0**	**Flexure**	**KSI**	**36.00**	**11.21**	**6.01**	**3.013**	**114.50**

77.00	70.0	Shear	KIPS	542.44	-33.61	-45.93	9.175	348.64
77.00	70.0	Overload	KSI	36.00	11.21	6.01	3.823	145.27
84.50	**76.8**	**Flexure**	**KSI**	**36.00**	**12.14**	**6.35**	**2.693**	**102.33**
84.50	76.8	Shear	KIPS	542.44	-44.91	-50.77	8.054	306.04
84.50	76.8	Overload	KSI	36.00	12.14	6.35	3.471	131.92
88.00	**80.0**	**Flexure**	**KSI**	**36.00**	**10.91**	**5.73**	**3.225**	**122.54**
88.00	80.0	Shear	KIPS	542.44	-50.54	-53.03	7.594	288.56
88.00	80.0	Overload	KSI	36.00	10.91	5.73	4.068	154.58
99.00	90.0	Flexure	KSI	36.00	6.11	3.25	7.306	277.62
99.00	**90.0**	**Shear**	**KIPS**	**542.44**	**-66.74**	**-60.14**	**6.399**	**243.16**
99.00	90.0	Overload	KSI	36.00	6.11	3.25	8.650	328.72
110.00	100.0	Flexure	KSI	-36.00	-0.00	-0.00	99.000	3762.00
110.00	**100.0**	**Shear**	**KIPS**	**336.32**	**-82.95**	**-67.25**	**2.866**	**108.90**
110.00	100.0	Overload	KSI	-36.00	-0.00	-0.00	99.000	3762.00

Detailed Rating Results
Girder F - As Inspected
RI-4
Axle Load
Impact: As Requested
Lane: As Requested

Span 1

Location (ft)	Percent	Limit State	Units	Capacity	DL + Adj -LL*	LL	Permit Rating Factor	Permit Load Rating (Ton)
0.00	0.0	Flexure	KSI	-36.00	-0.00	-0.00	99.000	3712.50
0.00	**0.0**	**Shear**	**KIPS**	**248.46**	**82.95**	**65.38**	**1.812**	**67.95**
0.00	0.0	Overload	KSI	-36.00	-0.00	-0.00	99.000	3712.50
0.50	0.5	Flexure	KSI	-35.53	-0.37	-0.04	99.000	3712.50
0.50	**0.5**	**Shear**	**KIPS**	**248.46**	**82.21**	**65.06**	**1.833**	**68.75**
0.50	0.5	Overload	KSI	-36.00	-0.37	-0.04	99.000	3712.50
5.33	4.8	Flexure	KSI	36.00	3.16	1.65	16.379	614.20
5.33	**4.8**	**Shear**	**KIPS**	**290.18**	**75.10**	**61.98**	**2.620**	**98.25**
5.33	4.8	Overload	KSI	36.00	3.16	1.65	18.857	707.15
11.00	10.0	Flexure	KSI	36.00	6.11	3.15	7.528	282.29
11.00	**10.0**	**Shear**	**KIPS**	**542.44**	**66.74**	**58.37**	**6.593**	**247.25**
11.00	10.0	Overload	KSI	36.00	6.11	3.15	8.913	334.24
22.00	**20.0**	**Flexure**	**KSI**	**36.00**	**10.91**	**5.55**	**3.330**	**124.88**
22.00	20.0	Shear	KIPS	542.44	50.54	51.36	7.842	294.08
22.00	20.0	Overload	KSI	36.00	10.91	5.55	4.201	157.53

25.50	**23.2**	**Flexure**	**KSI**	**36.00**	**12.14**	**6.15**	**2.783**	**104.37**
25.50	23.2	Shear	KIPS	542.44	44.91	49.12	8.324	312.16
25.50	23.2	Overload	KSI	36.00	12.14	6.15	3.588	134.55
33.00	**30.0**	**Flexure**	**KSI**	**36.00**	**11.21**	**5.85**	**3.097**	**116.15**
33.00	30.0	Shear	KIPS	542.44	33.61	44.34	9.503	356.36
33.00	30.0	Overload	KSI	36.00	11.21	5.85	3.930	147.36
44.00	**40.0**	**Flexure**	**KSI**	**36.00**	**12.83**	**6.68**	**2.445**	**91.68**
44.00	40.0	Shear	KIPS	542.44	17.04	37.33	11.777	441.65
44.00	40.0	Overload	KSI	36.00	12.83	6.68	3.197	119.89
49.50	**45.0**	**Flexure**	**KSI**	**36.00**	**13.23**	**6.87**	**2.315**	**86.80**
49.50	45.0	Shear	KIPS	542.44	8.29	33.83	13.283	498.11
49.50	45.0	Overload	KSI	36.00	13.23	6.87	3.052	114.45
55.00	**50.0**	**Flexure**	**KSI**	**36.00**	**13.36**	**6.91**	**2.282**	**85.58**
55.00	50.0	Shear	KIPS	542.44	0.00	-30.32	15.120	567.02
55.00	50.0	Overload	KSI	36.00	13.36	6.91	3.017	113.15
66.00	**60.0**	**Flexure**	**KSI**	**36.00**	**12.83**	**6.68**	**2.445**	**91.68**
66.00	60.0	Shear	KIPS	542.44	-17.04	-37.33	11.777	441.65
66.00	60.0	Overload	KSI	36.00	12.83	6.68	3.197	119.89
77.00	**70.0**	**Flexure**	**KSI**	**36.00**	**11.21**	**5.85**	**3.097**	**116.15**
77.00	70.0	Shear	KIPS	542.44	-33.61	-44.34	9.503	356.36
77.00	70.0	Overload	KSI	36.00	11.21	5.85	3.930	147.36
84.50	**76.8**	**Flexure**	**KSI**	**36.00**	**12.14**	**6.15**	**2.783**	**104.37**
84.50	76.8	Shear	KIPS	542.44	-44.91	-49.12	8.324	312.16
84.50	76.8	Overload	KSI	36.00	12.14	6.15	3.588	134.55
88.00	**80.0**	**Flexure**	**KSI**	**36.00**	**10.91**	**5.55**	**3.330**	**124.88**
88.00	80.0	Shear	KIPS	542.44	-50.54	-51.36	7.842	294.08
88.00	80.0	Overload	KSI	36.00	10.91	5.55	4.201	157.53
99.00	90.0	Flexure	KSI	36.00	6.11	3.15	7.528	282.29
99.00	**90.0**	**Shear**	**KIPS**	**542.44**	**-66.74**	**-58.37**	**6.593**	**247.25**
99.00	90.0	Overload	KSI	36.00	6.11	3.15	8.913	334.24
110.00	100.0	Flexure	KSI	-36.00	-0.00	-0.00	99.000	3712.50
110.00	**100.0**	**Shear**	**KIPS**	**336.32**	**-82.95**	**-65.38**	**2.948**	**110.54**
110.00	100.0	Overload	KSI	-36.00	-0.00	-0.00	99.000	3712.50

Detailed Rating Results
Girder F - As Inspected
RI-5
Axle Load
Impact: As Requested
Lane: As Requested

Span 1

							Permit	**Permit**

Location (ft)	Percent	Limit State	Units	Capacity	DL + Adj -LL*	LL	Rating Factor	Load Rating (Ton)
0.00	0.0	Flexure	KSI	-36.00	-0.00	-0.00	99.000	5187.60
0.00	**0.0**	**Shear**	**KIPS**	**248.46**	**82.95**	**85.74**	**1.382**	**72.39**
0.00	0.0	Overload	KSI	-36.00	-0.00	-0.00	99.000	5187.60
0.50	0.5	Flexure	KSI	-35.87	-0.37	-0.06	99.000	5187.60
0.50	**0.5**	**Shear**	**KIPS**	**248.46**	**82.21**	**85.30**	**1.398**	**73.27**
0.50	0.5	Overload	KSI	-36.00	-0.37	-0.06	99.000	5187.60
5.33	4.8	Flexure	KSI	36.00	3.16	2.15	12.533	656.75
5.33	**4.8**	**Shear**	**KIPS**	**290.18**	**75.10**	**81.00**	**2.005**	**105.06**
5.33	4.8	Overload	KSI	36.00	3.16	2.15	14.430	756.15
11.00	10.0	Flexure	KSI	36.00	6.11	4.10	5.785	303.15
11.00	**10.0**	**Shear**	**KIPS**	**542.44**	**66.74**	**75.95**	**5.067**	**265.52**
11.00	10.0	Overload	KSI	36.00	6.11	4.10	6.850	358.94
22.00	**20.0**	**Flexure**	**KSI**	**36.00**	**10.91**	**7.14**	**2.585**	**135.47**
22.00	20.0	Shear	KIPS	542.44	50.54	66.15	6.088	319.03
22.00	20.0	Overload	KSI	36.00	10.91	7.14	3.261	170.90
25.50	**23.2**	**Flexure**	**KSI**	**36.00**	**12.14**	**7.95**	**2.154**	**112.84**
25.50	23.2	Shear	KIPS	542.44	44.91	63.03	6.488	339.95
25.50	23.2	Overload	KSI	36.00	12.14	7.95	2.776	145.47
33.00	**30.0**	**Flexure**	**KSI**	**36.00**	**11.21**	**7.54**	**2.402**	**125.88**
33.00	30.0	Shear	KIPS	542.44	33.61	56.35	7.478	391.85
33.00	30.0	Overload	KSI	36.00	11.21	7.54	3.048	159.71
44.00	**40.0**	**Flexure**	**KSI**	**36.00**	**12.83**	**8.58**	**1.905**	**99.84**
44.00	40.0	Shear	KIPS	542.44	17.04	46.55	9.445	494.90
44.00	40.0	Overload	KSI	36.00	12.83	8.58	2.491	130.55
49.50	**45.0**	**Flexure**	**KSI**	**36.00**	**13.23**	**8.81**	**1.806**	**94.66**
49.50	45.0	Shear	KIPS	542.44	8.29	41.65	10.787	565.23
49.50	45.0	Overload	KSI	36.00	13.23	8.81	2.382	124.81
55.00	**50.0**	**Flexure**	**KSI**	**36.00**	**13.36**	**8.82**	**1.787**	**93.64**
55.00	50.0	Shear	KIPS	542.44	0.00	-36.76	12.473	653.60
55.00	50.0	Overload	KSI	36.00	13.36	8.82	2.363	123.82
66.00	**60.0**	**Flexure**	**KSI**	**36.00**	**12.83**	**8.58**	**1.905**	**99.84**
66.00	60.0	Shear	KIPS	542.44	-17.04	-46.55	9.445	494.90
66.00	60.0	Overload	KSI	36.00	12.83	8.58	2.491	130.55
77.00	**70.0**	**Flexure**	**KSI**	**36.00**	**11.21**	**7.54**	**2.402**	**125.88**
77.00	70.0	Shear	KIPS	542.44	-33.61	-56.35	7.478	391.85
77.00	70.0	Overload	KSI	36.00	11.21	7.54	3.048	159.71
84.50	**76.8**	**Flexure**	**KSI**	**36.00**	**12.14**	**7.95**	**2.154**	**112.84**
84.50	76.8	Shear	KIPS	542.44	-44.91	-63.03	6.488	339.95
84.50	76.8	Overload	KSI	36.00	12.14	7.95	2.776	145.47

88.00	**80.0**	**Flexure**	**KSI**	**36.00**	**10.91**	**7.14**	**2.585**	**135.47**
88.00	80.0	Shear	KIPS	542.44	-50.54	-66.15	6.088	319.03
88.00	80.0	Overload	KSI	36.00	10.91	7.14	3.261	170.90
99.00	90.0	Flexure	KSI	36.00	6.11	4.10	5.785	303.15
99.00	**90.0**	**Shear**	**KIPS**	**542.44**	**-66.74**	**-75.95**	**5.067**	**265.52**
99.00	90.0	Overload	KSI	36.00	6.11	4.10	6.850	358.94
110.00	100.0	Flexure	KSI	-36.00	-0.00	-0.00	99.000	5187.60
110.00	**100.0**	**Shear**	**KIPS**	**336.32**	**-82.95**	**-85.74**	**2.248**	**117.77**
110.00	100.0	Overload	KSI	-36.00	-0.00	-0.00	99.000	5187.60

Detailed Rating Results
Girder F - As Inspected
RI-6
Axle Load
Impact: As Requested
Lane: As Requested

Span 1

Location (ft)	Percent	Limit State	Units	Capacity	DL + Adj -LL*	LL	Permit Rating Factor	Permit Load Rating (Ton)
0.00	0.0	Flexure	KSI	-36.00	-0.00	-0.00	99.000	6435.00
0.00	**0.0**	**Shear**	**KIPS**	**248.46**	**82.95**	**97.27**	**1.168**	**75.95**
0.00	0.0	Overload	KSI	-36.00	-0.00	-0.00	99.000	6435.00
0.50	0.5	Flexure	KSI	-36.00	-0.37	-0.07	99.000	6435.00
0.50	**0.5**	**Shear**	**KIPS**	**248.46**	**82.21**	**96.72**	**1.183**	**76.91**
0.50	0.5	Overload	KSI	-36.00	-0.37	-0.07	99.000	6435.00
5.33	4.8	Flexure	KSI	36.00	3.16	2.43	10.659	692.83
5.33	**4.8**	**Shear**	**KIPS**	**290.18**	**75.10**	**91.38**	**1.705**	**110.83**
5.33	4.8	Overload	KSI	36.00	3.16	2.43	12.791	831.39
11.00	10.0	Flexure	KSI	36.00	6.11	4.60	4.953	321.94
11.00	**10.0**	**Shear**	**KIPS**	**542.44**	**66.74**	**85.11**	**4.338**	**281.97**
11.00	10.0	Overload	KSI	36.00	6.11	4.60	6.112	397.29
22.00	**20.0**	**Flexure**	**KSI**	**36.00**	**10.91**	**7.90**	**2.243**	**145.82**
22.00	20.0	Shear	KIPS	542.44	50.54	72.96	5.296	344.24
22.00	20.0	Overload	KSI	36.00	10.91	7.90	2.950	191.72
25.50	**23.2**	**Flexure**	**KSI**	**36.00**	**12.14**	**8.75**	**1.877**	**122.00**
25.50	23.2	Shear	KIPS	542.44	44.91	69.09	5.678	369.10
25.50	23.2	Overload	KSI	36.00	12.14	8.75	2.522	163.92
33.00	**30.0**	**Flexure**	**KSI**	**36.00**	**11.21**	**8.18**	**2.125**	**138.11**
33.00	30.0	Shear	KIPS	542.44	33.61	60.81	6.649	432.18

33.00	30.0	Overload	KSI	36.00	11.21	8.18	2.810	182.63
44.00	**40.0**	**Flexure**	**KSI**	**36.00**	**12.83**	**8.95**	**1.752**	**113.87**
44.00	40.0	Shear	KIPS	542.44	17.04	48.65	8.670	563.58
44.00	40.0	Overload	KSI	36.00	12.83	8.95	2.387	155.19
49.50	**45.0**	**Flexure**	**KSI**	**36.00**	**13.23**	**9.02**	**1.691**	**109.93**
49.50	45.0	Shear	KIPS	542.44	8.29	42.58	10.125	658.14
49.50	45.0	Overload	KSI	36.00	13.23	9.02	2.324	151.07
55.00	**50.0**	**Flexure**	**KSI**	**36.00**	**13.36**	**8.83**	**1.712**	**111.29**
55.00	50.0	Shear	KIPS	542.44	0.00	-36.50	12.051	783.33
55.00	50.0	Overload	KSI	36.00	13.36	8.83	2.360	153.38
66.00	**60.0**	**Flexure**	**KSI**	**36.00**	**12.83**	**8.95**	**1.752**	**113.87**
66.00	60.0	Shear	KIPS	542.44	-17.04	-48.65	8.670	563.58
66.00	60.0	Overload	KSI	36.00	12.83	8.95	2.387	155.19
77.00	**70.0**	**Flexure**	**KSI**	**36.00**	**11.21**	**8.18**	**2.125**	**138.11**
77.00	70.0	Shear	KIPS	542.44	-33.61	-60.81	6.649	432.18
77.00	70.0	Overload	KSI	36.00	11.21	8.18	2.810	182.63
84.50	**76.8**	**Flexure**	**KSI**	**36.00**	**12.14**	**8.75**	**1.877**	**122.00**
84.50	76.8	Shear	KIPS	542.44	-44.91	-69.09	5.678	369.10
84.50	76.8	Overload	KSI	36.00	12.14	8.75	2.522	163.92
88.00	**80.0**	**Flexure**	**KSI**	**36.00**	**10.91**	**7.90**	**2.243**	**145.82**
88.00	80.0	Shear	KIPS	542.44	-50.54	-72.96	5.296	344.24
88.00	80.0	Overload	KSI	36.00	10.91	7.90	2.950	191.72
99.00	90.0	Flexure	KSI	36.00	6.11	4.60	4.953	321.94
99.00	**90.0**	**Shear**	**KIPS**	**542.44**	**-66.74**	**-85.11**	**4.338**	**281.97**
99.00	90.0	Overload	KSI	36.00	6.11	4.60	6.112	397.29
110.00	100.0	Flexure	KSI	-36.00	-0.00	-0.00	99.000	6435.00
110.00	**100.0**	**Shear**	**KIPS**	**336.32**	**-82.95**	**-97.27**	**1.901**	**123.56**
110.00	100.0	Overload	KSI	-36.00	-0.00	-0.00	99.000	6435.00

Detailed Rating Results
Girder F - As Inspected
RIDOT H20 Truck
Axle Load
Impact: As Requested
Lane: As Requested

Span 1

Location (ft)	Percent	Limit State	Units	Capacity	DL + Adj -LL*	LL	Legal Rating Factor	Legal Load Rating (Ton)
0.00	0.0	Flexure	KSI	-36.00	-0.00	-0.00	99.000	1980.00

0.00	**0.0**	**Shear**	**KIPS**	**248.46**	**82.95**	**36.44**	**2.958**	**59.17**
0.00	0.0	Overload	KSI	-36.00	-0.00	-0.00	99.000	1980.00
0.50	0.5	Flexure	KSI	-35.01	-0.37	-0.02	99.000	1980.00
0.50	**0.5**	**Shear**	**KIPS**	**248.46**	**82.21**	**36.27**	**2.993**	**59.85**
0.50	0.5	Overload	KSI	-36.00	-0.37	-0.02	99.000	1980.00
5.33	4.8	Flexure	KSI	36.00	3.16	0.92	26.679	533.58
5.33	**4.8**	**Shear**	**KIPS**	**290.18**	**75.10**	**34.63**	**4.268**	**85.35**
5.33	4.8	Overload	KSI	36.00	3.16	0.92	25.961	519.23
11.00	10.0	Flexure	KSI	36.00	6.11	1.77	12.228	244.55
11.00	**10.0**	**Shear**	**KIPS**	**542.44**	**66.74**	**32.70**	**10.710**	**214.19**
11.00	10.0	Overload	KSI	36.00	6.11	1.77	12.237	244.73
22.00	**20.0**	**Flexure**	**KSI**	**36.00**	**10.91**	**3.13**	**5.374**	**107.48**
22.00	20.0	Shear	KIPS	542.44	50.54	28.96	12.655	253.10
22.00	20.0	Overload	KSI	36.00	10.91	3.13	5.730	114.59
25.50	**23.2**	**Flexure**	**KSI**	**36.00**	**12.14**	**3.48**	**4.480**	**89.61**
25.50	23.2	Shear	KIPS	542.44	44.91	27.77	13.400	268.00
25.50	23.2	Overload	KSI	36.00	12.14	3.48	4.882	97.63
33.00	**30.0**	**Flexure**	**KSI**	**36.00**	**11.21**	**3.30**	**4.993**	**99.87**
33.00	30.0	Shear	KIPS	542.44	33.61	25.22	15.204	304.08
33.00	30.0	Overload	KSI	36.00	11.21	3.30	5.355	107.09
44.00	**40.0**	**Flexure**	**KSI**	**36.00**	**12.83**	**3.75**	**3.966**	**79.31**
44.00	40.0	Shear	KIPS	542.44	17.04	21.49	18.625	372.50
44.00	40.0	Overload	KSI	36.00	12.83	3.75	4.383	87.65
49.50	**45.0**	**Flexure**	**KSI**	**36.00**	**13.23**	**3.85**	**3.758**	**75.16**
49.50	45.0	Shear	KIPS	542.44	8.29	19.62	20.848	416.96
49.50	45.0	Overload	KSI	36.00	13.23	3.85	4.188	83.76
55.00	**50.0**	**Flexure**	**KSI**	**36.00**	**13.36**	**3.87**	**3.704**	**74.09**
55.00	50.0	Shear	KIPS	542.44	0.00	-17.75	23.513	470.27
55.00	50.0	Overload	KSI	36.00	13.36	3.87	4.140	82.80
66.00	**60.0**	**Flexure**	**KSI**	**36.00**	**12.83**	**3.75**	**3.966**	**79.31**
66.00	60.0	Shear	KIPS	542.44	-17.04	-21.49	18.625	372.50
66.00	60.0	Overload	KSI	36.00	12.83	3.75	4.383	87.65
77.00	**70.0**	**Flexure**	**KSI**	**36.00**	**11.21**	**3.30**	**4.993**	**99.87**
77.00	70.0	Shear	KIPS	542.44	-33.61	-25.22	15.204	304.08
77.00	70.0	Overload	KSI	36.00	11.21	3.30	5.355	107.09
84.50	**76.8**	**Flexure**	**KSI**	**36.00**	**12.14**	**3.48**	**4.480**	**89.61**
84.50	76.8	Shear	KIPS	542.44	-44.91	-27.77	13.400	268.00
84.50	76.8	Overload	KSI	36.00	12.14	3.48	4.882	97.63
88.00	**80.0**	**Flexure**	**KSI**	**36.00**	**10.91**	**3.13**	**5.374**	**107.48**
88.00	80.0	Shear	KIPS	542.44	-50.54	-28.96	12.655	253.10
88.00	80.0	Overload	KSI	36.00	10.91	3.13	5.730	114.59
99.00	90.0	Flexure	KSI	36.00	6.11	1.77	12.228	244.55
99.00	**90.0**	**Shear**	**KIPS**	**542.44**	**-66.74**	**-32.70**	**10.710**	**214.19**

99.00	90.0	Overload	KSI	36.00	6.11	1.77	12.237	244.73
110.00	100.0	Flexure	KSI	-36.00	-0.00	-0.00	99.000	1980.00
110.00	**100.0**	**Shear**	**KIPS**	**336.32**	**-82.95**	**-36.44**	**4.813**	**96.26**
110.00	100.0	Overload	KSI	-36.00	-0.00	-0.00	99.000	1980.00

Detailed Rating Results
Girder F - As Inspected
RI-OP 1
Axle Load
Impact: As Requested
Lane: As Requested

Span 1

Location (ft)	Percent	Limit State	Units	Capacity	DL + Adj -LL*	LL	Permit Rating Factor	Permit Load Rating (Ton)
0.00	0.0	Flexure	KSI	-36.00	-0.00	-0.00	99.000	5593.50
0.00	**0.0**	**Shear**	**KIPS**	**248.46**	**82.95**	**66.31**	**1.761**	**99.52**
0.00	0.0	Overload	KSI	-36.00	-0.00	-0.00	99.000	5593.50
0.50	0.5	Flexure	KSI	-35.34	-0.37	-0.04	99.000	5593.50
0.50	**0.5**	**Shear**	**KIPS**	**248.46**	**82.21**	**65.97**	**1.783**	**100.72**
0.50	0.5	Overload	KSI	-36.00	-0.37	-0.04	99.000	5593.50
5.33	4.8	Flexure	KSI	36.00	3.16	1.37	19.338	1092.59
5.33	**4.8**	**Shear**	**KIPS**	**290.18**	**75.10**	**62.70**	**2.554**	**144.29**
5.33	4.8	Overload	KSI	36.00	3.16	1.37	22.581	1275.84
11.00	10.0	Flexure	KSI	36.00	6.11	2.62	8.916	503.77
11.00	**10.0**	**Shear**	**KIPS**	**542.44**	**66.74**	**58.85**	**6.447**	**364.26**
11.00	10.0	Overload	KSI	36.00	6.11	2.62	10.707	604.97
22.00	**20.0**	**Flexure**	**KSI**	**36.00**	**10.91**	**4.66**	**3.910**	**220.91**
22.00	20.0	Shear	KIPS	542.44	50.54	51.39	7.726	436.53
22.00	20.0	Overload	KSI	36.00	10.91	4.66	5.002	282.64
25.50	**23.2**	**Flexure**	**KSI**	**36.00**	**12.14**	**5.18**	**3.256**	**183.96**
25.50	23.2	Shear	KIPS	542.44	44.91	49.02	8.225	464.70
25.50	23.2	Overload	KSI	36.00	12.14	5.18	4.257	240.53
33.00	**30.0**	**Flexure**	**KSI**	**36.00**	**11.21**	**4.92**	**3.635**	**205.37**
33.00	30.0	Shear	KIPS	542.44	33.61	43.94	9.456	534.29
33.00	30.0	Overload	KSI	36.00	11.21	4.92	4.677	264.26
44.00	**40.0**	**Flexure**	**KSI**	**36.00**	**12.83**	**5.63**	**2.862**	**161.71**
44.00	40.0	Shear	KIPS	542.44	17.04	36.48	11.884	671.45
44.00	40.0	Overload	KSI	36.00	12.83	5.63	3.796	214.46
49.50	**45.0**	**Flexure**	**KSI**	**36.00**	**13.23**	**5.82**	**2.697**	**152.40**

49.50	45.0	Shear	KIPS	542.44	8.29	32.75	13.527	764.29
49.50	45.0	Overload	KSI	36.00	13.23	5.82	3.607	203.79
55.00	**50.0**	**Flexure**	**KSI**	**36.00**	**13.36**	**5.87**	**2.650**	**149.71**
55.00	50.0	Shear	KIPS	542.44	0.00	-29.02	15.576	880.05
55.00	50.0	Overload	KSI	36.00	13.36	5.87	3.553	200.77
66.00	**60.0**	**Flexure**	**KSI**	**36.00**	**12.83**	**5.63**	**2.862**	**161.71**
66.00	60.0	Shear	KIPS	542.44	-17.04	-36.48	11.884	671.45
66.00	60.0	Overload	KSI	36.00	12.83	5.63	3.796	214.46
77.00	**70.0**	**Flexure**	**KSI**	**36.00**	**11.21**	**4.92**	**3.635**	**205.37**
77.00	70.0	Shear	KIPS	542.44	-33.61	-43.94	9.456	534.29
77.00	70.0	Overload	KSI	36.00	11.21	4.92	4.677	264.26
84.50	**76.8**	**Flexure**	**KSI**	**36.00**	**12.14**	**5.18**	**3.256**	**183.96**
84.50	76.8	Shear	KIPS	542.44	-44.91	-49.02	8.225	464.70
84.50	76.8	Overload	KSI	36.00	12.14	5.18	4.257	240.53
88.00	**80.0**	**Flexure**	**KSI**	**36.00**	**10.91**	**4.66**	**3.910**	**220.91**
88.00	80.0	Shear	KIPS	542.44	-50.54	-51.39	7.726	436.53
88.00	80.0	Overload	KSI	36.00	10.91	4.66	5.002	282.64
99.00	90.0	Flexure	KSI	36.00	6.11	2.62	8.916	503.77
99.00	**90.0**	**Shear**	**KIPS**	**542.44**	**-66.74**	**-58.85**	**6.447**	**364.26**
99.00	90.0	Overload	KSI	36.00	6.11	2.62	10.707	604.97
110.00	100.0	Flexure	KSI	-36.00	-0.00	-0.00	99.000	5593.50
110.00	**100.0**	**Shear**	**KIPS**	**336.32**	**-82.95**	**-66.31**	**2.866**	**161.90**
110.00	100.0	Overload	KSI	-36.00	-0.00	-0.00	99.000	5593.50

Detailed Rating Results
Girder F - As Inspected
RI-OP 2
Axle Load
Impact: As Requested
Lane: As Requested

Span 1

Location (ft)	Percent	Limit State	Units	Capacity	DL + Adj -LL*	LL	Permit Rating Factor	Permit Load Rating (Ton)
0.00	0.0	Flexure	KSI	-36.00	-0.00	-0.00	99.000	7920.00
0.00	**0.0**	**Shear**	**KIPS**	**248.46**	**82.95**	**77.08**	**1.515**	**121.23**
0.00	0.0	Overload	KSI	-36.00	-0.00	-0.00	99.000	7920.00
0.50	0.5	Flexure	KSI	-35.51	-0.37	-0.04	99.000	7920.00
0.50	**0.5**	**Shear**	**KIPS**	**248.46**	**82.21**	**76.60**	**1.535**	**122.82**
0.50	0.5	Overload	KSI	-36.00	-0.37	-0.04	99.000	7920.00

5.33	4.8	Flexure	KSI	36.00	3.16	1.58	16.848	1347.87
5.33	**4.8**	**Shear**	**KIPS**	**290.18**	**75.10**	**71.96**	**2.225**	**178.00**
5.33	4.8	Overload	KSI	36.00	3.16	1.58	19.674	1573.94
11.00	10.0	Flexure	KSI	36.00	6.11	2.96	7.889	631.11
11.00	**10.0**	**Shear**	**KIPS**	**542.44**	**66.74**	**66.52**	**5.704**	**456.34**
11.00	10.0	Overload	KSI	36.00	6.11	2.96	9.474	757.89
22.00	**20.0**	**Flexure**	**KSI**	**36.00**	**10.91**	**5.11**	**3.561**	**284.86**
22.00	20.0	Shear	KIPS	542.44	50.54	55.96	7.096	567.69
22.00	20.0	Overload	KSI	36.00	10.91	5.11	4.556	364.46
25.50	**23.2**	**Flexure**	**KSI**	**36.00**	**12.14**	**5.62**	**3.003**	**240.28**
25.50	23.2	Shear	KIPS	542.44	44.91	52.60	7.666	613.24
25.50	23.2	Overload	KSI	36.00	12.14	5.62	3.927	314.16
33.00	**30.0**	**Flexure**	**KSI**	**36.00**	**11.21**	**5.21**	**3.429**	**274.32**
33.00	30.0	Shear	KIPS	542.44	33.61	45.40	9.152	732.16
33.00	30.0	Overload	KSI	36.00	11.21	5.21	4.412	352.99
44.00	**40.0**	**Flexure**	**KSI**	**36.00**	**12.83**	**5.63**	**2.863**	**229.08**
44.00	40.0	Shear	KIPS	542.44	17.04	35.31	12.277	982.13
44.00	40.0	Overload	KSI	36.00	12.83	5.63	3.798	303.81
49.50	**45.0**	**Flexure**	**KSI**	**36.00**	**13.23**	**5.62**	**2.791**	**223.28**
49.50	45.0	Shear	KIPS	542.44	8.29	30.46	14.544	1163.50
49.50	45.0	Overload	KSI	36.00	13.23	5.62	3.732	298.58
55.00	**50.0**	**Flexure**	**KSI**	**36.00**	**13.36**	**5.48**	**2.835**	**226.79**
55.00	50.0	Shear	KIPS	542.44	0.00	-25.79	17.529	1402.31
55.00	50.0	Overload	KSI	36.00	13.36	5.48	3.802	304.13
66.00	**60.0**	**Flexure**	**KSI**	**36.00**	**12.83**	**5.63**	**2.863**	**229.08**
66.00	60.0	Shear	KIPS	542.44	-17.04	-35.31	12.277	982.13
66.00	60.0	Overload	KSI	36.00	12.83	5.63	3.798	303.81
77.00	**70.0**	**Flexure**	**KSI**	**36.00**	**11.21**	**5.21**	**3.429**	**274.32**
77.00	70.0	Shear	KIPS	542.44	-33.61	-45.40	9.152	732.16
77.00	70.0	Overload	KSI	36.00	11.21	5.21	4.412	352.99
84.50	**76.8**	**Flexure**	**KSI**	**36.00**	**12.14**	**5.62**	**3.003**	**240.28**
84.50	76.8	Shear	KIPS	542.44	-44.91	-52.60	7.666	613.24
84.50	76.8	Overload	KSI	36.00	12.14	5.62	3.927	314.16
88.00	**80.0**	**Flexure**	**KSI**	**36.00**	**10.91**	**5.11**	**3.561**	**284.86**
88.00	80.0	Shear	KIPS	542.44	-50.54	-55.96	7.096	567.69
88.00	80.0	Overload	KSI	36.00	10.91	5.11	4.556	364.46
99.00	90.0	Flexure	KSI	36.00	6.11	2.96	7.889	631.11
99.00	**90.0**	**Shear**	**KIPS**	**542.44**	**-66.74**	**-66.52**	**5.704**	**456.34**
99.00	90.0	Overload	KSI	36.00	6.11	2.96	9.474	757.89
110.00	100.0	Flexure	KSI	-36.00	-0.00	-0.00	99.000	7920.00
110.00	**100.0**	**Shear**	**KIPS**	**336.32**	**-82.95**	**-77.08**	**2.465**	**197.22**
110.00	100.0	Overload	KSI	-36.00	-0.00	-0.00	99.000	7920.00

Detailed Rating Results
Girder F - As Inspected
RI-OP 3
Axle Load
Impact: As Requested
Lane: As Requested

Span 1

Location (ft)	Percent	Limit State	Units	Capacity	DL + Adj -LL*	LL	Permit Rating Factor	Permit Load Rating (Ton)
0.00	0.0	Flexure	KSI	-36.00	-0.00	-0.00	99.000	11187.00
0.00	**0.0**	**Shear**	**KIPS**	**248.46**	**82.95**	**86.06**	**1.357**	**153.35**
0.00	0.0	Overload	KSI	-36.00	-0.00	-0.00	99.000	11187.00
0.50	0.5	Flexure	KSI	-35.64	-0.37	-0.05	99.000	11187.00
0.50	**0.5**	**Shear**	**KIPS**	**248.46**	**82.21**	**85.39**	**1.377**	**155.63**
0.50	0.5	Overload	KSI	-36.00	-0.37	-0.05	99.000	11187.00
5.33	4.8	Flexure	KSI	36.00	3.16	1.73	15.332	1732.49
5.33	**4.8**	**Shear**	**KIPS**	**290.18**	**75.10**	**79.08**	**2.025**	**228.80**
5.33	4.8	Overload	KSI	36.00	3.16	1.73	17.903	2023.07
11.00	10.0	Flexure	KSI	36.00	6.11	3.22	7.274	821.98
11.00	**10.0**	**Shear**	**KIPS**	**542.44**	**66.74**	**71.70**	**5.292**	**598.02**
11.00	10.0	Overload	KSI	36.00	6.11	3.22	8.735	987.11
22.00	**20.0**	**Flexure**	**KSI**	**36.00**	**10.91**	**5.43**	**3.352**	**378.80**
22.00	20.0	Shear	KIPS	542.44	50.54	58.76	6.758	763.60
22.00	20.0	Overload	KSI	36.00	10.91	5.43	4.289	484.65
25.50	**23.2**	**Flexure**	**KSI**	**36.00**	**12.14**	**5.97**	**2.828**	**319.51**
25.50	23.2	Shear	KIPS	542.44	44.91	55.23	7.300	824.87
25.50	23.2	Overload	KSI	36.00	12.14	5.97	3.697	417.76
33.00	**30.0**	**Flexure**	**KSI**	**36.00**	**11.21**	**5.54**	**3.228**	**364.75**
33.00	30.0	Shear	KIPS	542.44	33.61	47.67	8.715	984.81
33.00	30.0	Overload	KSI	36.00	11.21	5.54	4.154	469.35
44.00	**40.0**	**Flexure**	**KSI**	**36.00**	**12.83**	**6.13**	**2.627**	**296.91**
44.00	40.0	Shear	KIPS	542.44	17.04	37.69	11.503	1299.83
44.00	40.0	Overload	KSI	36.00	12.83	6.13	3.485	393.76
49.50	**45.0**	**Flexure**	**KSI**	**36.00**	**13.23**	**6.24**	**2.513**	**283.98**
49.50	45.0	Shear	KIPS	542.44	8.29	33.54	13.207	1492.39
49.50	45.0	Overload	KSI	36.00	13.23	6.24	3.361	379.75
55.00	**50.0**	**Flexure**	**KSI**	**36.00**	**13.36**	**6.19**	**2.512**	**283.85**
55.00	50.0	Shear	KIPS	542.44	0.00	-29.58	15.280	1726.59

55.00	50.0	Overload	KSI	36.00	13.36	6.19	3.369	380.66
66.00	**60.0**	**Flexure**	**KSI**	**36.00**	**12.83**	**6.13**	**2.627**	**296.91**
66.00	60.0	Shear	KIPS	542.44	-17.04	-37.69	11.503	1299.83
66.00	60.0	Overload	KSI	36.00	12.83	6.13	3.485	393.76
77.00	**70.0**	**Flexure**	**KSI**	**36.00**	**11.21**	**5.54**	**3.228**	**364.75**
77.00	70.0	Shear	KIPS	542.44	-33.61	-47.67	8.715	984.81
77.00	70.0	Overload	KSI	36.00	11.21	5.54	4.154	469.35
84.50	**76.8**	**Flexure**	**KSI**	**36.00**	**12.14**	**5.97**	**2.828**	**319.51**
84.50	76.8	Shear	KIPS	542.44	-44.91	-55.23	7.300	824.87
84.50	76.8	Overload	KSI	36.00	12.14	5.97	3.697	417.76
88.00	**80.0**	**Flexure**	**KSI**	**36.00**	**10.91**	**5.43**	**3.352**	**378.80**
88.00	80.0	Shear	KIPS	542.44	-50.54	-58.76	6.758	763.60
88.00	80.0	Overload	KSI	36.00	10.91	5.43	4.289	484.65
99.00	90.0	Flexure	KSI	36.00	6.11	3.22	7.274	821.98
99.00	**90.0**	**Shear**	**KIPS**	**542.44**	**-66.74**	**-71.70**	**5.292**	**598.02**
99.00	90.0	Overload	KSI	36.00	6.11	3.22	8.735	987.11
110.00	100.0	Flexure	KSI	-36.00	-0.00	-0.00	99.000	11187.00
110.00	**100.0**	**Shear**	**KIPS**	**336.32**	**-82.95**	**-86.06**	**2.208**	**249.48**
110.00	100.0	Overload	KSI	-36.00	-0.00	-0.00	99.000	11187.00

Detailed Rating Results
Girder F - As Inspected
RIPTA Bus
Axle Load
Impact: As Requested
Lane: As Requested

Span 1

Location (ft)	Percent	Limit State	Units	Capacity	DL + Adj -LL*	LL	Legal Rating Factor	Legal Load Rating (Ton)
0.00	0.0	Flexure	KSI	-36.00	-0.00	-0.00	99.000	2059.20
0.00	**0.0**	**Shear**	**KIPS**	**248.46**	**82.95**	**36.01**	**2.994**	**62.28**
0.00	0.0	Overload	KSI	-36.00	-0.00	-0.00	99.000	2059.20
0.50	0.5	Flexure	KSI	-35.00	-0.37	-0.02	99.000	2059.20
0.50	**0.5**	**Shear**	**KIPS**	**248.46**	**82.21**	**35.83**	**3.030**	**63.02**
0.50	0.5	Overload	KSI	-36.00	-0.37	-0.02	99.000	2059.20
5.33	4.8	Flexure	KSI	36.00	3.16	0.91	27.078	563.21
5.33	**4.8**	**Shear**	**KIPS**	**290.18**	**75.10**	**34.12**	**4.331**	**90.09**
5.33	4.8	Overload	KSI	36.00	3.16	0.91	26.349	548.06
11.00	10.0	Flexure	KSI	36.00	6.11	1.73	12.451	258.98

11.00	**10.0**	**Shear**	**KIPS**	**542.44**	**66.74**	**32.12**	**10.905**	**226.83**
11.00	10.0	Overload	KSI	36.00	6.11	1.73	12.460	259.17
22.00	**20.0**	**Flexure**	**KSI**	**36.00**	**10.91**	**3.05**	**5.514**	**114.69**
22.00	20.0	Shear	KIPS	542.44	50.54	28.23	12.985	270.09
22.00	20.0	Overload	KSI	36.00	10.91	3.05	5.879	122.28
25.50	**23.2**	**Flexure**	**KSI**	**36.00**	**12.14**	**3.38**	**4.610**	**95.90**
25.50	23.2	Shear	KIPS	542.44	44.91	26.99	13.789	286.81
25.50	23.2	Overload	KSI	36.00	12.14	3.38	5.023	104.49
33.00	**30.0**	**Flexure**	**KSI**	**36.00**	**11.21**	**3.19**	**5.175**	**107.65**
33.00	30.0	Shear	KIPS	542.44	33.61	24.34	15.758	327.76
33.00	30.0	Overload	KSI	36.00	11.21	3.19	5.550	115.43
44.00	**40.0**	**Flexure**	**KSI**	**36.00**	**12.83**	**3.57**	**4.166**	**86.66**
44.00	40.0	Shear	KIPS	542.44	17.04	20.45	19.568	407.02
44.00	40.0	Overload	KSI	36.00	12.83	3.57	4.605	95.78
49.50	**45.0**	**Flexure**	**KSI**	**36.00**	**13.23**	**3.63**	**3.983**	**82.86**
49.50	45.0	Shear	KIPS	542.44	8.29	18.51	22.099	459.65
49.50	45.0	Overload	KSI	36.00	13.23	3.63	4.439	92.33
55.00	**50.0**	**Flexure**	**KSI**	**36.00**	**13.36**	**3.61**	**3.970**	**82.57**
55.00	50.0	Shear	KIPS	542.44	0.00	-16.56	25.196	524.08
55.00	50.0	Overload	KSI	36.00	13.36	3.61	4.436	92.27
66.00	**60.0**	**Flexure**	**KSI**	**36.00**	**12.83**	**3.57**	**4.166**	**86.66**
66.00	60.0	Shear	KIPS	542.44	-17.04	-20.45	19.568	407.02
66.00	60.0	Overload	KSI	36.00	12.83	3.57	4.605	95.78
77.00	**70.0**	**Flexure**	**KSI**	**36.00**	**11.21**	**3.19**	**5.175**	**107.65**
77.00	70.0	Shear	KIPS	542.44	-33.61	-24.34	15.758	327.76
77.00	70.0	Overload	KSI	36.00	11.21	3.19	5.550	115.43
84.50	**76.8**	**Flexure**	**KSI**	**36.00**	**12.14**	**3.38**	**4.610**	**95.90**
84.50	76.8	Shear	KIPS	542.44	-44.91	-26.99	13.789	286.81
84.50	76.8	Overload	KSI	36.00	12.14	3.38	5.023	104.49
88.00	**80.0**	**Flexure**	**KSI**	**36.00**	**10.91**	**3.05**	**5.514**	**114.69**
88.00	80.0	Shear	KIPS	542.44	-50.54	-28.23	12.985	270.09
88.00	80.0	Overload	KSI	36.00	10.91	3.05	5.879	122.28
99.00	90.0	Flexure	KSI	36.00	6.11	1.73	12.451	258.98
99.00	**90.0**	**Shear**	**KIPS**	**542.44**	**-66.74**	**-32.12**	**10.905**	**226.83**
99.00	90.0	Overload	KSI	36.00	6.11	1.73	12.460	259.17
110.00	100.0	Flexure	KSI	-36.00	-0.00	-0.00	99.000	2059.20
110.00	**100.0**	**Shear**	**KIPS**	**336.32**	**-82.95**	**-36.01**	**4.871**	**101.32**
110.00	100.0	Overload	KSI	-36.00	-0.00	-0.00	99.000	2059.20

Note:
*Adj-LL is only applicable for Permit load rating.

Bridge Name: Mohegan Bridge
NBI Structure ID:
Bridge ID: 067301

Analyzed By: BrR
Analyze Date: Friday, September 14, 2018 20:17:56
Analysis Engine: AASHTO LRFR Engine Version 6.8.2.3002
Analysis Preference Setting: None

Report By: brr
Report Date: Friday, September 14, 2018 20:19:02

Structure Definition Name: Span 2
Member Name: Girder G
Member Alternative Name: Girder G - As Inspected

Load and Resistance Factor Rating Summary

Live Load		Rating Factor	Girder Summary Controls	Capacity (Ton)	Span	Location (ft)	Percent	Impact	Lane
EV2	Legal	3.330	STRENGTH-I Steel Shear	95.74	1	0.25	0.2	As Requested	As Requested
EV3	Legal	2.237	STRENGTH-I Steel Shear	96.19	1	0.25	0.2	As Requested	As Requested
HL-93 (US)	Inventory	1.012	STRENGTH-I Steel Shear	36.42	1	0.25	0.2	As Requested	As Requested
HL-93 (US)	Operating	1.311	STRENGTH-I Steel Shear	47.21	1	0.25	0.2	As Requested	As Requested
SU4	Legal	2.740	STRENGTH-I Steel Shear	73.99	1	0.25	0.2	As Requested	As Requested
SU5	Legal	2.422	STRENGTH-I Steel Shear	75.07	1	0.25	0.2	As Requested	As Requested
SU6	Legal	2.215	STRENGTH-I Steel Shear	76.98	1	0.25	0.2	As Requested	As Requested
SU7	Legal	2.038	STRENGTH-I Steel Shear	78.97	1	0.25	0.2	As Requested	As Requested
Type 3	Legal	2.988	STRENGTH-I Steel Shear	74.71	1	0.25	0.2	As Requested	As Requested
Type 3-3	Legal	2.226	STRENGTH-I Steel Shear	89.03	1	0.25	0.2	As Requested	As Requested
Type 3S2	Legal	2.330	STRENGTH-I Steel Shear	83.86	1	0.25	0.2	As Requested	As Requested
RI-3	Permit	2.128	STRENGTH-II Steel Shear	80.86	1	0.25	0.2	As Requested	As Requested
RI-4	Permit	2.189	STRENGTH-II Steel Shear	82.08	1	0.25	0.2	As Requested	As Requested
RI-5	Permit	1.669	STRENGTH-II Steel Shear	87.46	1	0.25	0.2	As Requested	As Requested
RI-6	Permit	1.412	STRENGTH-II Steel Shear	91.79	1	0.25	0.2	As Requested	As Requested
RIDOT H20 Truck	Legal	3.573	STRENGTH-I Steel Shear	71.47	1	0.25	0.2	As Requested	As Requested
RI-OP 1	Permit	2.337	STRENGTH-II Steel Shear	132.03	1	0.25	0.2	As Requested	As Requested
RI-OP 2	Permit	2.012	STRENGTH-II Steel Shear	160.92	1	0.25	0.2	As Requested	As Requested
RI-OP 3	Permit	1.803	STRENGTH-II Steel Shear	203.74	1	0.25	0.2	As Requested	As Requested
RIPTA Bus	Legal	3.617	STRENGTH-I Steel Shear	75.24	1	0.25	0.2	As Requested	As Requested

Report by Action: ☑ Flexure ☑ Shear ☑ Overload ☑ Interaction ☑ Critical

Detailed Rating Results
Girder G - As Inspected
EV2
Axle Load
Impact: As Requested
Lane: As Requested

Span 1

Location (ft)	Percent	Limit State	Units	Capacity	DL + Adj -LL*	LL	Legal Rating Factor	Legal Load Rating (Ton)
0.00	0.0	Flexure	KSI	-36.00	-0.00	-0.00	99.000	2846.25
0.00	**0.0**	**Shear**	**KIPS**	**222.23**	**68.52**	**30.12**	**3.370**	**96.89**
0.00	0.0	Overload	KSI	-36.00	-0.00	-0.00	99.000	2846.25
0.25	0.2	Flexure	KSI	-35.63	-0.16	-0.02	99.000	2846.25
0.25	**0.2**	**Shear**	**KIPS**	**219.95**	**68.22**	**30.05**	**3.330**	**95.74**
0.25	0.2	Overload	KSI	-36.00	-0.16	-0.02	99.000	2846.25
0.75	0.7	Flexure	KSI	-35.60	-0.49	-0.06	99.000	2846.25
0.75	**0.7**	**Shear**	**KIPS**	**219.95**	**67.61**	**29.90**	**3.367**	**96.80**
0.75	0.7	Overload	KSI	-36.00	-0.49	-0.06	99.000	2846.25
0.83	0.8	Flexure	KSI	-35.63	-0.54	-0.07	99.000	2846.25
0.83	**0.8**	**Shear**	**KIPS**	**222.23**	**67.51**	**29.88**	**3.432**	**98.66**
0.83	0.8	Overload	KSI	-36.00	-0.54	-0.07	99.000	2846.25
4.50	4.1	Flexure	KSI	36.00	2.83	1.01	24.562	706.16
4.50	**4.1**	**Shear**	**KIPS**	**249.29**	**63.04**	**28.81**	**4.439**	**127.61**
4.50	4.1	Overload	KSI	36.00	2.83	1.01	23.863	686.05
10.00	**9.1**	**Flexure**	**KSI**	**36.00**	**5.81**	**2.05**	**10.669**	**306.72**
10.00	9.1	Shear	KIPS	459.33	56.33	27.22	10.886	312.96
10.00	9.1	Overload	KSI	36.00	5.81	2.05	10.670	306.76
11.00	10.0	Flexure	KSI	36.00	5.06	1.80	12.569	361.37
11.00	10.0	Shear	KIPS	542.44	55.11	26.93	13.424	385.93
11.00	**10.0**	**Overload**	**KSI**	**36.00**	**5.06**	**1.80**	**12.472**	**358.57**
22.00	**20.0**	**Flexure**	**KSI**	**36.00**	**9.02**	**3.17**	**5.869**	**168.74**
22.00	20.0	Shear	KIPS	542.44	41.69	23.73	15.803	454.35
22.00	20.0	Overload	KSI	36.00	9.02	3.17	6.113	175.74
25.50	**23.2**	**Flexure**	**KSI**	**36.00**	**10.05**	**3.51**	**4.996**	**143.64**
25.50	23.2	Shear	KIPS	542.44	37.19	22.72	16.711	480.44
25.50	23.2	Overload	KSI	36.00	10.05	3.51	5.285	151.95

33.00	**30.0**	**Flexure**	**KSI**	**36.00**	**9.29**	**3.32**	**5.520**	**158.69**
33.00	30.0	Shear	KIPS	542.44	27.80	20.54	18.946	544.70
33.00	30.0	Overload	KSI	36.00	9.29	3.32	5.774	166.00
44.00	**40.0**	**Flexure**	**KSI**	**36.00**	**10.63**	**3.74**	**4.540**	**130.52**
44.00	40.0	Shear	KIPS	542.44	14.01	17.34	23.240	668.15
44.00	40.0	Overload	KSI	36.00	10.63	3.74	4.852	139.48
49.50	**45.0**	**Flexure**	**KSI**	**36.00**	**10.97**	**3.82**	**4.357**	**125.26**
49.50	45.0	Shear	KIPS	542.44	6.89	15.75	26.054	749.05
49.50	45.0	Overload	KSI	36.00	10.97	3.82	4.683	134.63
55.00	**50.0**	**Flexure**	**KSI**	**36.00**	**11.08**	**3.81**	**4.335**	**124.62**
55.00	50.0	Shear	KIPS	542.44	0.00	14.15	29.487	847.76
55.00	50.0	Overload	KSI	36.00	11.08	3.81	4.668	134.20
66.00	**60.0**	**Flexure**	**KSI**	**36.00**	**10.63**	**3.74**	**4.540**	**130.52**
66.00	60.0	Shear	KIPS	542.44	-14.01	-17.34	23.240	668.15
66.00	60.0	Overload	KSI	36.00	10.63	3.74	4.852	139.48
77.00	**70.0**	**Flexure**	**KSI**	**36.00**	**9.29**	**3.32**	**5.520**	**158.69**
77.00	70.0	Shear	KIPS	542.44	-27.80	-20.54	18.946	544.70
77.00	70.0	Overload	KSI	36.00	9.29	3.32	5.774	166.00
84.50	**76.8**	**Flexure**	**KSI**	**36.00**	**10.05**	**3.51**	**4.996**	**143.64**
84.50	76.8	Shear	KIPS	542.44	-37.19	-22.72	16.711	480.44
84.50	76.8	Overload	KSI	36.00	10.05	3.51	5.285	151.95
88.00	**80.0**	**Flexure**	**KSI**	**36.00**	**9.02**	**3.17**	**5.869**	**168.74**
88.00	80.0	Shear	KIPS	542.44	-41.69	-23.73	15.803	454.35
88.00	80.0	Overload	KSI	36.00	9.02	3.17	6.113	175.74
99.00	90.0	Flexure	KSI	36.00	5.06	1.80	12.569	361.37
99.00	90.0	Shear	KIPS	542.44	-55.11	-26.93	13.424	385.93
99.00	**90.0**	**Overload**	**KSI**	**36.00**	**5.06**	**1.80**	**12.472**	**358.57**
110.00	100.0	Flexure	KSI	-36.00	-0.00	-0.00	99.000	2846.25
110.00	**100.0**	**Shear**	**KIPS**	**336.32**	**-68.52**	**-30.12**	**6.284**	**180.67**
110.00	100.0	Overload	KSI	-36.00	-0.00	-0.00	99.000	2846.25

Detailed Rating Results
Girder G - As Inspected
EV3
Axle Load
Impact: As Requested
Lane: As Requested

Span 1

Location (ft)	Percent		Units	Capacity		LL	Legal Rating Factor	Legal Load Rating (Ton)

		Limit State			DL + Adj -LL*			
0.00	0.0	Flexure	KSI	-36.00	-0.00	-0.00	99.000	4257.00
0.00	**0.0**	**Shear**	**KIPS**	**222.23**	**68.52**	**44.84**	**2.264**	**97.35**
0.00	0.0	Overload	KSI	-36.00	-0.00	-0.00	99.000	4257.00
0.25	0.2	Flexure	KSI	-35.98	-0.16	-0.03	99.000	4257.00
0.25	**0.2**	**Shear**	**KIPS**	**219.95**	**68.22**	**44.73**	**2.237**	**96.19**
0.25	0.2	Overload	KSI	-36.00	-0.16	-0.03	99.000	4257.00
0.75	0.7	Flexure	KSI	-35.96	-0.49	-0.09	99.000	4257.00
0.75	**0.7**	**Shear**	**KIPS**	**219.95**	**67.61**	**44.51**	**2.262**	**97.26**
0.75	0.7	Overload	KSI	36.00	0.49	0.26	98.147	4220.33
0.83	0.8	Flexure	KSI	36.00	0.55	0.29	93.024	4000.04
0.83	**0.8**	**Shear**	**KIPS**	**222.23**	**67.51**	**44.48**	**2.305**	**99.13**
0.83	0.8	Overload	KSI	36.00	0.55	0.29	88.726	3815.22
4.50	4.1	Flexure	KSI	36.00	2.83	1.50	16.503	709.62
4.50	**4.1**	**Shear**	**KIPS**	**249.29**	**63.04**	**42.88**	**2.982**	**128.23**
4.50	4.1	Overload	KSI	36.00	2.83	1.50	16.033	689.41
10.00	**9.1**	**Flexure**	**KSI**	**36.00**	**5.81**	**3.05**	**7.170**	**308.31**
10.00	9.1	Shear	KIPS	459.33	56.33	40.50	7.316	314.58
10.00	9.1	Overload	KSI	36.00	5.81	3.05	7.171	308.35
11.00	10.0	Flexure	KSI	36.00	5.06	2.67	8.448	363.26
11.00	10.0	Shear	KIPS	542.44	55.11	40.06	9.022	387.95
11.00	**10.0**	**Overload**	**KSI**	**36.00**	**5.06**	**2.67**	**8.383**	**360.45**
22.00	**20.0**	**Flexure**	**KSI**	**36.00**	**9.02**	**4.71**	**3.947**	**169.74**
22.00	20.0	Shear	KIPS	542.44	41.69	35.28	10.629	457.05
22.00	20.0	Overload	KSI	36.00	9.02	4.71	4.111	176.78
25.50	**23.2**	**Flexure**	**KSI**	**36.00**	**10.05**	**5.22**	**3.361**	**144.53**
25.50	23.2	Shear	KIPS	542.44	37.19	33.76	11.243	483.43
25.50	23.2	Overload	KSI	36.00	10.05	5.22	3.556	152.90
33.00	**30.0**	**Flexure**	**KSI**	**36.00**	**9.29**	**4.93**	**3.716**	**159.78**
33.00	30.0	Shear	KIPS	542.44	27.80	30.51	12.755	548.45
33.00	30.0	Overload	KSI	36.00	9.29	4.93	3.887	167.14
44.00	**40.0**	**Flexure**	**KSI**	**36.00**	**10.63**	**5.58**	**3.040**	**130.71**
44.00	40.0	Shear	KIPS	542.44	14.01	25.73	15.665	673.60
44.00	40.0	Overload	KSI	36.00	10.63	5.58	3.249	139.69
49.50	**45.0**	**Flexure**	**KSI**	**36.00**	**10.97**	**5.74**	**2.896**	**124.55**
49.50	45.0	Shear	KIPS	542.44	6.89	23.34	17.576	755.79
49.50	45.0	Overload	KSI	36.00	10.97	5.74	3.113	133.86
55.00	**50.0**	**Flexure**	**KSI**	**36.00**	**11.08**	**5.77**	**2.861**	**123.02**
55.00	50.0	Shear	KIPS	542.44	0.00	20.95	19.913	856.25
55.00	50.0	Overload	KSI	36.00	11.08	5.77	3.081	132.48
66.00	**60.0**	**Flexure**	**KSI**	**36.00**	**10.63**	**5.58**	**3.040**	**130.71**
66.00	60.0	Shear	KIPS	542.44	-14.01	-25.73	15.665	673.60

66.00	60.0	Overload	KSI	36.00	10.63	5.58	3.249	139.69
77.00	**70.0**	**Flexure**	**KSI**	**36.00**	**9.29**	**4.93**	**3.716**	**159.78**
77.00	70.0	Shear	KIPS	542.44	-27.80	-30.51	12.755	548.45
77.00	70.0	Overload	KSI	36.00	9.29	4.93	3.887	167.14
84.50	**76.8**	**Flexure**	**KSI**	**36.00**	**10.05**	**5.22**	**3.361**	**144.53**
84.50	76.8	Shear	KIPS	542.44	-37.19	-33.76	11.243	483.43
84.50	76.8	Overload	KSI	36.00	10.05	5.22	3.556	152.90
88.00	**80.0**	**Flexure**	**KSI**	**36.00**	**9.02**	**4.71**	**3.947**	**169.74**
88.00	80.0	Shear	KIPS	542.44	-41.69	-35.28	10.629	457.05
88.00	80.0	Overload	KSI	36.00	9.02	4.71	4.111	176.78
99.00	90.0	Flexure	KSI	36.00	5.06	2.67	8.448	363.26
99.00	90.0	Shear	KIPS	542.44	-55.11	-40.06	9.022	387.95
99.00	**90.0**	**Overload**	**KSI**	**36.00**	**5.06**	**2.67**	**8.383**	**360.45**
110.00	100.0	Flexure	KSI	-36.00	-0.00	-0.00	99.000	4257.00
110.00	**100.0**	**Shear**	**KIPS**	**336.32**	**-68.52**	**-44.84**	**4.221**	**181.51**
110.00	100.0	Overload	KSI	-36.00	-0.00	-0.00	99.000	4257.00

Detailed Rating Results
Girder G - As Inspected
HL-93 (US)
Truck + Lane
Impact: As Requested
Lane: As Requested

Span 1

Location (ft)	Percent	Limit State	Units	Capacity	DL + Adj-LL*	LL	Inventory Rating Factor	Inventory Load Rating (Ton)	Operating Rating Factor	Operating Load Rating (Ton)
0.00	0.0	Flexure	KSI	-36.00	-0.00	-0.00	99.000	3564.00	99.000	3564.00
0.00	**0.0**	**Shear**	**KIPS**	**222.23**	**68.52**	**73.70**	**1.023**	**36.83**	**1.326**	**47.75**
0.00	0.0	Overload	KSI	-36.00	-0.00	-0.00	99.000	3564.00	99.000	3564.00
0.25	0.2	Flexure	KSI	-36.00	-0.16	-0.05	99.000	3564.00	99.000	3564.00
0.25	**0.2**	**Shear**	**KIPS**	**219.95**	**68.22**	**73.47**	**1.012**	**36.42**	**1.311**	**47.21**
0.25	0.2	Overload	KSI	-36.00	-0.16	-0.05	99.000	3564.00	99.000	3564.00
0.75	0.7	Flexure	KSI	36.00	0.49	0.43	46.523	1674.82	60.307	2171.06
0.75	**0.7**	**Shear**	**KIPS**	**219.95**	**67.61**	**73.02**	**1.024**	**36.87**	**1.328**	**47.79**
0.75	0.7	Overload	KSI	36.00	0.49	0.43	59.710	2149.57	77.623	2794.44
0.83	0.8	Flexure	KSI	36.00	0.55	0.48	42.041	1513.47	54.497	1961.91
0.83	**0.8**	**Shear**	**KIPS**	**222.23**	**67.51**	**72.95**	**1.044**	**37.59**	**1.353**	**48.73**
0.83	0.8	Overload	KSI	36.00	0.55	0.48	53.979	1943.23	70.172	2526.20

4.50	4.1	Flexure	KSI	36.00	2.83	2.47	7.458	268.50	9.668	348.06
4.50	**4.1**	**Shear**	**KIPS**	**249.29**	**63.04**	**69.66**	**1.364**	**49.10**	**1.768**	**63.64**
4.50	4.1	Overload	KSI	36.00	2.83	2.47	9.754	351.15	12.681	456.50
10.00	**9.1**	**Flexure**	**KSI**	**36.00**	**5.81**	**5.01**	**3.241**	**116.66**	**4.201**	**151.23**
10.00	9.1	Shear	KIPS	459.33	56.33	64.81	3.396	122.24	4.402	158.46
10.00	9.1	Overload	KSI	36.00	5.81	5.01	4.363	157.07	5.672	204.18
11.00	**10.0**	**Flexure**	**KSI**	**36.00**	**5.06**	**4.39**	**3.818**	**137.46**	**4.950**	**178.19**
11.00	10.0	Shear	KIPS	542.44	55.11	63.94	4.199	151.16	5.443	195.95
11.00	10.0	Overload	KSI	36.00	5.06	4.39	5.100	183.61	6.630	238.69
22.00	**20.0**	**Flexure**	**KSI**	**36.00**	**9.02**	**7.74**	**1.784**	**64.24**	**2.313**	**83.27**
22.00	20.0	Shear	KIPS	542.44	41.69	54.61	5.102	183.67	6.614	238.09
22.00	20.0	Overload	KSI	36.00	9.02	7.74	2.502	90.06	3.252	117.08
25.50	**23.2**	**Flexure**	**KSI**	**36.00**	**10.05**	**8.59**	**1.519**	**54.70**	**1.970**	**70.91**
25.50	23.2	Shear	KIPS	542.44	37.19	51.72	5.452	196.26	7.067	254.41
25.50	23.2	Overload	KSI	36.00	10.05	8.59	2.164	77.89	2.813	101.26
33.00	**30.0**	**Flexure**	**KSI**	**36.00**	**9.29**	**8.10**	**1.680**	**60.48**	**2.178**	**78.40**
33.00	30.0	Shear	KIPS	542.44	27.80	45.69	6.326	227.74	8.200	295.22
33.00	30.0	Overload	KSI	36.00	9.29	8.10	2.366	85.16	3.075	110.71
44.00	**40.0**	**Flexure**	**KSI**	**36.00**	**10.63**	**9.19**	**1.371**	**49.34**	**1.777**	**63.96**
44.00	40.0	Shear	KIPS	542.44	14.01	37.20	8.049	289.76	10.434	375.61
44.00	40.0	Overload	KSI	36.00	10.63	9.19	1.972	70.98	2.563	92.28
49.50	**45.0**	**Flexure**	**KSI**	**36.00**	**10.97**	**9.45**	**1.308**	**47.08**	**1.695**	**61.03**
49.50	45.0	Shear	KIPS	542.44	6.89	33.11	9.204	331.34	11.931	429.51
49.50	45.0	Overload	KSI	36.00	10.97	9.45	1.892	68.12	2.460	88.55
55.00	**50.0**	**Flexure**	**KSI**	**36.00**	**11.08**	**9.49**	**1.293**	**46.57**	**1.677**	**60.36**
55.00	50.0	Shear	KIPS	542.44	0.00	29.13	10.640	383.03	13.792	496.52
55.00	50.0	Overload	KSI	36.00	11.08	9.49	1.875	67.51	2.438	87.76
66.00	**60.0**	**Flexure**	**KSI**	**36.00**	**10.63**	**9.19**	**1.371**	**49.34**	**1.777**	**63.96**
66.00	60.0	Shear	KIPS	542.44	-14.01	-37.20	8.049	289.76	10.434	375.61
66.00	60.0	Overload	KSI	36.00	10.63	9.19	1.972	70.98	2.563	92.28
77.00	**70.0**	**Flexure**	**KSI**	**36.00**	**9.29**	**8.10**	**1.680**	**60.48**	**2.178**	**78.40**
77.00	70.0	Shear	KIPS	542.44	-27.80	-45.69	6.326	227.74	8.200	295.22
77.00	70.0	Overload	KSI	36.00	9.29	8.10	2.366	85.16	3.075	110.71
84.50	**76.8**	**Flexure**	**KSI**	**36.00**	**10.05**	**8.59**	**1.519**	**54.70**	**1.970**	**70.91**
84.50	76.8	Shear	KIPS	542.44	-37.19	-51.72	5.452	196.26	7.067	254.41
84.50	76.8	Overload	KSI	36.00	10.05	8.59	2.164	77.89	2.813	101.26
88.00	**80.0**	**Flexure**	**KSI**	**36.00**	**9.02**	**7.74**	**1.784**	**64.24**	**2.313**	**83.27**
88.00	80.0	Shear	KIPS	542.44	-41.69	-54.61	5.102	183.67	6.614	238.09
88.00	80.0	Overload	KSI	36.00	9.02	7.74	2.502	90.06	3.252	117.08
99.00	**90.0**	**Flexure**	**KSI**	**36.00**	**5.06**	**4.39**	**3.818**	**137.46**	**4.950**	**178.19**

99.00	90.0	Shear	KIPS	542.44	-55.11	-63.94	4.199	151.16	5.443	195.95
99.00	90.0	Overload	KSI	36.00	5.06	4.39	5.100	183.61	6.630	238.69
110.00	100.0	Flexure	KSI	-36.00	-0.00	-0.00	99.000	3564.00	99.000	3564.00
110.00	**100.0**	**Shear**	**KIPS**	**336.32**	**-68.52**	**-73.70**	**1.908**	**68.68**	**2.473**	**89.03**
110.00	100.0	Overload	KSI	-36.00	-0.00	-0.00	99.000	3564.00	99.000	3564.00

Detailed Rating Results
Girder G - As Inspected
HL-93 (US)
Tandem + Lane
Impact: As Requested
Lane: As Requested

Span 1

Location (ft)	Percent	Limit State	Units	Capacity	DL + Adj-LL*	LL	Inventory Rating Factor	Inventory Load Rating (Ton)	Operating Rating Factor	Operating Load Rating (Ton)
0.00	0.0	Flexure	KSI	-36.00	-0.00	-0.00	99.000	3564.00	99.000	3564.00
0.00	**0.0**	**Shear**	**KIPS**	**222.23**	**68.52**	**60.29**	**1.251**	**45.02**	**1.621**	**58.36**
0.00	0.0	Overload	KSI	-36.00	-0.00	-0.00	99.000	3564.00	99.000	3564.00
0.25	0.2	Flexure	KSI	-36.00	-0.16	-0.04	99.000	3564.00	99.000	3564.00
0.25	**0.2**	**Shear**	**KIPS**	**219.95**	**68.22**	**60.11**	**1.237**	**44.52**	**1.603**	**57.71**
0.25	0.2	Overload	KSI	-36.00	-0.16	-0.04	99.000	3564.00	99.000	3564.00
0.75	0.7	Flexure	KSI	36.00	0.49	0.36	56.846	2046.45	73.689	2652.81
0.75	**0.7**	**Shear**	**KIPS**	**219.95**	**67.61**	**59.74**	**1.252**	**45.07**	**1.623**	**58.43**
0.75	0.7	Overload	KSI	36.00	0.49	0.36	72.960	2626.55	94.848	3414.51
0.83	0.8	Flexure	KSI	36.00	0.55	0.39	51.367	1849.23	66.587	2397.15
0.83	**0.8**	**Shear**	**KIPS**	**222.23**	**67.51**	**59.68**	**1.276**	**45.95**	**1.655**	**59.56**
0.83	0.8	Overload	KSI	36.00	0.55	0.39	65.954	2374.33	85.740	3086.63
4.50	4.1	Flexure	KSI	36.00	2.83	2.03	9.096	327.45	11.791	424.47
4.50	**4.1**	**Shear**	**KIPS**	**249.29**	**63.04**	**56.97**	**1.668**	**60.03**	**2.162**	**77.82**
4.50	4.1	Overload	KSI	36.00	2.83	2.03	11.896	428.24	15.464	556.71
10.00	**9.1**	**Flexure**	**KSI**	**36.00**	**5.81**	**4.12**	**3.940**	**141.83**	**5.107**	**183.86**
10.00	9.1	Shear	KIPS	459.33	56.33	53.00	4.152	149.48	5.383	193.77
10.00	9.1	Overload	KSI	36.00	5.81	4.12	5.304	190.95	6.895	248.23
11.00	**10.0**	**Flexure**	**KSI**	**36.00**	**5.06**	**3.62**	**4.639**	**167.01**	**6.014**	**216.49**
11.00	10.0	Shear	KIPS	542.44	55.11	52.29	5.134	184.84	6.656	239.61
11.00	10.0	Overload	KSI	36.00	5.06	3.62	6.197	223.08	8.056	290.01
22.00	**20.0**	**Flexure**	**KSI**	**36.00**	**9.02**	**6.42**	**2.151**	**77.45**	**2.789**	**100.40**

22.00	20.0	Shear	KIPS	542.44	41.69	44.71	6.231	224.32	8.077	290.79
22.00	20.0	Overload	KSI	36.00	9.02	6.42	3.016	108.59	3.921	141.17
25.50	**23.2**	**Flexure**	**KSI**	**36.00**	**10.05**	**7.14**	**1.827**	**65.77**	**2.368**	**85.25**
25.50	23.2	Shear	KIPS	542.44	37.19	42.39	6.653	239.49	8.624	310.45
25.50	23.2	Overload	KSI	36.00	10.05	7.14	2.602	93.65	3.382	121.75
33.00	**30.0**	**Flexure**	**KSI**	**36.00**	**9.29**	**6.78**	**2.006**	**72.20**	**2.600**	**93.59**
33.00	30.0	Shear	KIPS	542.44	27.80	37.55	7.697	277.10	9.978	359.21
33.00	30.0	Overload	KSI	36.00	9.29	6.78	2.824	101.67	3.671	132.17
44.00	**40.0**	**Flexure**	**KSI**	**36.00**	**10.63**	**7.73**	**1.630**	**58.68**	**2.113**	**76.06**
44.00	40.0	Shear	KIPS	542.44	14.01	30.82	9.716	349.78	12.595	453.42
44.00	40.0	Overload	KSI	36.00	10.63	7.73	2.345	84.41	3.048	109.74
49.50	**45.0**	**Flexure**	**KSI**	**36.00**	**10.97**	**7.96**	**1.552**	**55.88**	**2.012**	**72.44**
49.50	45.0	Shear	KIPS	542.44	6.89	27.61	11.039	397.42	14.310	515.18
49.50	45.0	Overload	KSI	36.00	10.97	7.96	2.246	80.85	2.920	105.11
55.00	**50.0**	**Flexure**	**KSI**	**36.00**	**11.08**	**8.02**	**1.530**	**55.07**	**1.983**	**71.39**
55.00	50.0	Shear	KIPS	542.44	0.00	24.50	12.649	455.38	16.397	590.30
55.00	50.0	Overload	KSI	36.00	11.08	8.02	2.218	79.84	2.883	103.79
66.00	**60.0**	**Flexure**	**KSI**	**36.00**	**10.63**	**7.73**	**1.630**	**58.68**	**2.113**	**76.06**
66.00	60.0	Shear	KIPS	542.44	-14.01	-30.82	9.716	349.78	12.595	453.42
66.00	60.0	Overload	KSI	36.00	10.63	7.73	2.345	84.41	3.048	109.74
77.00	**70.0**	**Flexure**	**KSI**	**36.00**	**9.29**	**6.78**	**2.006**	**72.20**	**2.600**	**93.59**
77.00	70.0	Shear	KIPS	542.44	-27.80	-37.55	7.697	277.10	9.978	359.21
77.00	70.0	Overload	KSI	36.00	9.29	6.78	2.824	101.67	3.671	132.17
84.50	**76.8**	**Flexure**	**KSI**	**36.00**	**10.05**	**7.14**	**1.827**	**65.77**	**2.368**	**85.25**
84.50	76.8	Shear	KIPS	542.44	-37.19	-42.39	6.653	239.49	8.624	310.45
84.50	76.8	Overload	KSI	36.00	10.05	7.14	2.602	93.65	3.382	121.75
88.00	**80.0**	**Flexure**	**KSI**	**36.00**	**9.02**	**6.42**	**2.151**	**77.45**	**2.789**	**100.40**
88.00	80.0	Shear	KIPS	542.44	-41.69	-44.71	6.231	224.32	8.077	290.79
88.00	80.0	Overload	KSI	36.00	9.02	6.42	3.016	108.59	3.921	141.17
99.00	**90.0**	**Flexure**	**KSI**	**36.00**	**5.06**	**3.62**	**4.639**	**167.01**	**6.014**	**216.49**
99.00	90.0	Shear	KIPS	542.44	-55.11	-52.29	5.134	184.84	6.656	239.61
99.00	90.0	Overload	KSI	36.00	5.06	3.62	6.197	223.08	8.056	290.01
110.00	100.0	Flexure	KSI	-36.00	-0.00	-0.00	99.000	3564.00	99.000	3564.00
110.00	**100.0**	**Shear**	**KIPS**	**336.32**	**-68.52**	**-60.29**	**2.332**	**83.95**	**3.023**	**108.82**
110.00	100.0	Overload	KSI	-36.00	-0.00	-0.00	99.000	3564.00	99.000	3564.00

Detailed Rating Results
Girder G - As Inspected

D578

LRFD Fatigue Truck (US)
Axle Load
Impact: As Requested
Lane: As Requested

Span 1

Location (ft)	Percent	Limit State	Units	Capacity	DL + Adj-LL*	LL	Inventory Rating Factor	Inventory Load Rating (Ton)
0.25	0.2	Interaction	KSI	16.00	0.00	0.08	99.000	2970.00
0.75	0.7	Interaction	KSI	16.00	0.00	0.23	68.444	2053.32
0.83	0.8	Interaction	KSI	16.00	0.00	0.26	61.976	1859.27
4.50	4.1	Interaction	KSI	16.00	0.00	1.33	12.073	362.19
10.00	9.1	Interaction	KSI	16.00	0.00	2.66	6.013	180.38
11.00	10.0	Interaction	KSI	12.00	0.00	2.32	5.179	155.38
22.00	20.0	Interaction	KSI	12.00	0.00	4.00	2.998	89.93
25.50	23.2	Interaction	KSI	16.00	0.00	4.49	3.560	106.80
33.00	30.0	Interaction	KSI	12.00	0.00	4.13	2.904	87.11
44.00	40.0	Interaction	KSI	12.00	0.00	4.62	2.597	77.92
49.50	45.0	Interaction	KSI	12.00	0.00	4.67	2.567	77.02
55.00	50.0	Interaction	KSI	12.00	0.00	4.60	2.608	78.23
66.00	60.0	Interaction	KSI	12.00	0.00	4.62	2.597	77.92
77.00	70.0	Interaction	KSI	12.00	0.00	4.13	2.904	87.11
84.50	76.8	Interaction	KSI	16.00	0.00	4.41	3.631	108.92
88.00	80.0	Interaction	KSI	12.00	0.00	4.00	2.998	89.93
99.00	90.0	Interaction	KSI	12.00	0.00	2.32	5.179	155.38

Detailed Rating Results
Girder G - As Inspected
SU4
Axle Load
Impact: As Requested
Lane: As Requested

Span 1

Location (ft)	Percent	Limit State	Units	Capacity	DL + Adj -LL*	LL	Legal Rating Factor	Legal Load Rating (Ton)
0.00	0.0	Flexure	KSI	-36.00	-0.00	-0.00	99.000	2673.00

0.00	**0.0**	**Shear**	**KIPS**	**222.23**	**68.52**	**36.60**	**2.773**	**74.88**
0.00	0.0	Overload	KSI	-36.00	-0.00	-0.00	99.000	2673.00
0.25	0.2	Flexure	KSI	-35.80	-0.16	-0.02	99.000	2673.00
0.25	**0.2**	**Shear**	**KIPS**	**219.95**	**68.22**	**36.51**	**2.740**	**73.99**
0.25	0.2	Overload	KSI	-36.00	-0.16	-0.02	99.000	2673.00
0.75	0.7	Flexure	KSI	-35.77	-0.49	-0.07	99.000	2673.00
0.75	**0.7**	**Shear**	**KIPS**	**219.95**	**67.61**	**36.34**	**2.771**	**74.81**
0.75	0.7	Overload	KSI	-36.00	-0.49	-0.07	99.000	2673.00
0.83	0.8	Flexure	KSI	-35.80	-0.54	-0.08	99.000	2673.00
0.83	**0.8**	**Shear**	**KIPS**	**222.23**	**67.51**	**36.31**	**2.824**	**76.25**
0.83	0.8	Overload	KSI	-36.00	-0.54	-0.08	99.000	2673.00
4.50	4.1	Flexure	KSI	36.00	2.83	1.23	20.213	545.76
4.50	**4.1**	**Shear**	**KIPS**	**249.29**	**63.04**	**35.01**	**3.653**	**98.62**
4.50	4.1	Overload	KSI	36.00	2.83	1.23	19.638	530.22
10.00	**9.1**	**Flexure**	**KSI**	**36.00**	**5.81**	**2.49**	**8.781**	**237.08**
10.00	9.1	Shear	KIPS	459.33	56.33	33.07	8.959	241.90
10.00	9.1	Overload	KSI	36.00	5.81	2.49	8.782	237.11
11.00	10.0	Flexure	KSI	36.00	5.06	2.18	10.345	279.32
11.00	10.0	Shear	KIPS	542.44	55.11	32.71	11.048	298.30
11.00	**10.0**	**Overload**	**KSI**	**36.00**	**5.06**	**2.18**	**10.265**	**277.16**
22.00	**20.0**	**Flexure**	**KSI**	**36.00**	**9.02**	**3.85**	**4.832**	**130.46**
22.00	20.0	Shear	KIPS	542.44	41.69	28.83	13.011	351.29
22.00	20.0	Overload	KSI	36.00	9.02	3.85	5.032	135.88
25.50	**23.2**	**Flexure**	**KSI**	**36.00**	**10.05**	**4.27**	**4.114**	**111.07**
25.50	23.2	Shear	KIPS	542.44	37.19	27.59	13.759	371.50
25.50	23.2	Overload	KSI	36.00	10.05	4.27	4.352	117.50
33.00	**30.0**	**Flexure**	**KSI**	**36.00**	**9.29**	**4.03**	**4.546**	**122.74**
33.00	30.0	Shear	KIPS	542.44	27.80	24.94	15.603	421.29
33.00	30.0	Overload	KSI	36.00	9.29	4.03	4.755	128.39
44.00	**40.0**	**Flexure**	**KSI**	**36.00**	**10.63**	**4.60**	**3.688**	**99.57**
44.00	40.0	Shear	KIPS	542.44	14.01	21.05	19.149	517.02
44.00	40.0	Overload	KSI	36.00	10.63	4.60	3.941	106.41
49.50	**45.0**	**Flexure**	**KSI**	**36.00**	**10.97**	**4.73**	**3.513**	**94.85**
49.50	45.0	Shear	KIPS	542.44	6.89	19.11	21.474	579.80
49.50	45.0	Overload	KSI	36.00	10.97	4.73	3.776	101.95
55.00	**50.0**	**Flexure**	**KSI**	**36.00**	**11.08**	**4.76**	**3.468**	**93.64**
55.00	50.0	Shear	KIPS	542.44	0.00	17.16	24.313	656.46
55.00	50.0	Overload	KSI	36.00	11.08	4.76	3.735	100.84
66.00	**60.0**	**Flexure**	**KSI**	**36.00**	**10.63**	**4.60**	**3.688**	**99.57**
66.00	60.0	Shear	KIPS	542.44	-14.01	-21.05	19.149	517.02
66.00	60.0	Overload	KSI	36.00	10.63	4.60	3.941	106.41
77.00	**70.0**	**Flexure**	**KSI**	**36.00**	**9.29**	**4.03**	**4.546**	**122.74**
77.00	70.0	Shear	KIPS	542.44	-27.80	-24.94	15.603	421.29

77.00	70.0	Overload	KSI	36.00	9.29	4.03	4.755	128.39
84.50	**76.8**	**Flexure**	**KSI**	**36.00**	**10.05**	**4.27**	**4.114**	**111.07**
84.50	76.8	Shear	KIPS	542.44	-37.19	-27.59	13.759	371.50
84.50	76.8	Overload	KSI	36.00	10.05	4.27	4.352	117.50
88.00	**80.0**	**Flexure**	**KSI**	**36.00**	**9.02**	**3.85**	**4.832**	**130.46**
88.00	80.0	Shear	KIPS	542.44	-41.69	-28.83	13.011	351.29
88.00	80.0	Overload	KSI	36.00	9.02	3.85	5.032	135.88
99.00	90.0	Flexure	KSI	36.00	5.06	2.18	10.345	279.32
99.00	90.0	Shear	KIPS	542.44	-55.11	-32.71	11.048	298.30
99.00	**90.0**	**Overload**	**KSI**	**36.00**	**5.06**	**2.18**	**10.265**	**277.16**
110.00	100.0	Flexure	KSI	-36.00	-0.00	-0.00	99.000	2673.00
110.00	**100.0**	**Shear**	**KIPS**	**336.32**	**-68.52**	**-36.60**	**5.171**	**139.62**
110.00	100.0	Overload	KSI	-36.00	-0.00	-0.00	99.000	2673.00

Detailed Rating Results
Girder G - As Inspected
SU5
Axle Load
Impact: As Requested
Lane: As Requested

Span 1

Location (ft)	Percent	Limit State	Units	Capacity	DL + Adj -LL*	LL	Legal Rating Factor	Legal Load Rating (Ton)
0.00	0.0	Flexure	KSI	-36.00	-0.00	-0.00	99.000	3069.00
0.00	**0.0**	**Shear**	**KIPS**	**222.23**	**68.52**	**41.42**	**2.451**	**75.97**
0.00	0.0	Overload	KSI	-36.00	-0.00	-0.00	99.000	3069.00
0.25	0.2	Flexure	KSI	-35.91	-0.16	-0.03	99.000	3069.00
0.25	**0.2**	**Shear**	**KIPS**	**219.95**	**68.22**	**41.32**	**2.422**	**75.07**
0.25	0.2	Overload	KSI	-36.00	-0.16	-0.03	99.000	3069.00
0.75	0.7	Flexure	KSI	-35.88	-0.49	-0.08	99.000	3069.00
0.75	**0.7**	**Shear**	**KIPS**	**219.95**	**67.61**	**41.11**	**2.449**	**75.91**
0.75	0.7	Overload	KSI	-36.00	-0.49	-0.08	99.000	3069.00
0.83	0.8	Flexure	KSI	-35.91	-0.54	-0.09	99.000	3069.00
0.83	**0.8**	**Shear**	**KIPS**	**222.23**	**67.51**	**41.08**	**2.496**	**77.37**
0.83	0.8	Overload	KSI	36.00	0.55	0.27	96.058	2977.81
4.50	4.1	Flexure	KSI	36.00	2.83	1.39	17.874	554.10
4.50	**4.1**	**Shear**	**KIPS**	**249.29**	**63.04**	**39.59**	**3.230**	**100.13**
4.50	4.1	Overload	KSI	36.00	2.83	1.39	17.365	538.33
10.00	**9.1**	**Flexure**	**KSI**	**36.00**	**5.81**	**2.81**	**7.772**	**240.92**

10.00	9.1	Shear	KIPS	459.33	56.33	37.36	7.930	245.82
10.00	9.1	Overload	KSI	36.00	5.81	2.81	7.772	240.95
11.00	10.0	Flexure	KSI	36.00	5.06	2.47	9.158	283.90
11.00	10.0	Shear	KIPS	542.44	55.11	36.96	9.780	303.19
11.00	**10.0**	**Overload**	**KSI**	**36.00**	**5.06**	**2.47**	**9.087**	**281.70**
22.00	**20.0**	**Flexure**	**KSI**	**36.00**	**9.02**	**4.34**	**4.287**	**132.89**
22.00	20.0	Shear	KIPS	542.44	41.69	32.49	11.543	357.83
22.00	20.0	Overload	KSI	36.00	9.02	4.34	4.465	138.41
25.50	**23.2**	**Flexure**	**KSI**	**36.00**	**10.05**	**4.81**	**3.653**	**113.23**
25.50	23.2	Shear	KIPS	542.44	37.19	31.07	12.217	378.73
25.50	23.2	Overload	KSI	36.00	10.05	4.81	3.864	119.78
33.00	**30.0**	**Flexure**	**KSI**	**36.00**	**9.29**	**4.55**	**4.025**	**124.76**
33.00	30.0	Shear	KIPS	542.44	27.80	28.03	13.884	430.39
33.00	30.0	Overload	KSI	36.00	9.29	4.55	4.210	130.51
44.00	**40.0**	**Flexure**	**KSI**	**36.00**	**10.63**	**5.19**	**3.271**	**101.39**
44.00	40.0	Shear	KIPS	542.44	14.01	23.56	17.106	530.29
44.00	40.0	Overload	KSI	36.00	10.63	5.19	3.495	108.36
49.50	**45.0**	**Flexure**	**KSI**	**36.00**	**10.97**	**5.32**	**3.124**	**96.83**
49.50	45.0	Shear	KIPS	542.44	6.89	21.33	19.234	596.25
49.50	45.0	Overload	KSI	36.00	10.97	5.32	3.357	104.08
55.00	**50.0**	**Flexure**	**KSI**	**36.00**	**11.08**	**5.34**	**3.093**	**95.87**
55.00	50.0	Shear	KIPS	542.44	0.00	19.10	21.847	677.26
55.00	50.0	Overload	KSI	36.00	11.08	5.34	3.331	103.25
66.00	**60.0**	**Flexure**	**KSI**	**36.00**	**10.63**	**5.19**	**3.271**	**101.39**
66.00	60.0	Shear	KIPS	542.44	-14.01	-23.56	17.106	530.29
66.00	60.0	Overload	KSI	36.00	10.63	5.19	3.495	108.36
77.00	**70.0**	**Flexure**	**KSI**	**36.00**	**9.29**	**4.55**	**4.025**	**124.76**
77.00	70.0	Shear	KIPS	542.44	-27.80	-28.03	13.884	430.39
77.00	70.0	Overload	KSI	36.00	9.29	4.55	4.210	130.51
84.50	**76.8**	**Flexure**	**KSI**	**36.00**	**10.05**	**4.81**	**3.653**	**113.23**
84.50	76.8	Shear	KIPS	542.44	-37.19	-31.07	12.217	378.73
84.50	76.8	Overload	KSI	36.00	10.05	4.81	3.864	119.78
88.00	**80.0**	**Flexure**	**KSI**	**36.00**	**9.02**	**4.34**	**4.287**	**132.89**
88.00	80.0	Shear	KIPS	542.44	-41.69	-32.49	11.543	357.83
88.00	80.0	Overload	KSI	36.00	9.02	4.34	4.465	138.41
99.00	90.0	Flexure	KSI	36.00	5.06	2.47	9.158	283.90
99.00	90.0	Shear	KIPS	542.44	-55.11	-36.96	9.780	303.19
99.00	**90.0**	**Overload**	**KSI**	**36.00**	**5.06**	**2.47**	**9.087**	**281.70**
110.00	100.0	Flexure	KSI	-36.00	-0.00	-0.00	99.000	3069.00
110.00	**100.0**	**Shear**	**KIPS**	**336.32**	**-68.52**	**-41.42**	**4.570**	**141.66**
110.00	100.0	Overload	KSI	-36.00	-0.00	-0.00	99.000	3069.00

Detailed Rating Results
Girder G - As Inspected
SU6
Axle Load
Impact: As Requested
Lane: As Requested

Span 1

Location (ft)	Percent	Limit State	Units	Capacity	DL + Adj -LL*	LL	Legal Rating Factor	Legal Load Rating (Ton)
0.00	0.0	Flexure	KSI	-36.00	-0.00	-0.00	99.000	3440.25
0.00	**0.0**	**Shear**	**KIPS**	**222.23**	**68.52**	**45.28**	**2.242**	**77.90**
0.00	0.0	Overload	KSI	-36.00	-0.00	-0.00	99.000	3440.25
0.25	0.2	Flexure	KSI	-35.99	-0.16	-0.03	99.000	3440.25
0.25	**0.2**	**Shear**	**KIPS**	**219.95**	**68.22**	**45.17**	**2.215**	**76.98**
0.25	0.2	Overload	KSI	-36.00	-0.16	-0.03	99.000	3440.25
0.75	0.7	Flexure	KSI	-35.96	-0.49	-0.09	99.000	3440.25
0.75	**0.7**	**Shear**	**KIPS**	**219.95**	**67.61**	**44.94**	**2.240**	**77.85**
0.75	0.7	Overload	KSI	36.00	0.49	0.27	97.213	3378.16
0.83	0.8	Flexure	KSI	36.00	0.55	0.29	92.141	3201.92
0.83	**0.8**	**Shear**	**KIPS**	**222.23**	**67.51**	**44.90**	**2.283**	**79.35**
0.83	0.8	Overload	KSI	36.00	0.55	0.29	87.884	3053.98
4.50	4.1	Flexure	KSI	36.00	2.83	1.52	16.369	568.83
4.50	**4.1**	**Shear**	**KIPS**	**249.29**	**63.04**	**43.23**	**2.958**	**102.79**
4.50	4.1	Overload	KSI	36.00	2.83	1.52	15.903	552.63
10.00	**9.1**	**Flexure**	**KSI**	**36.00**	**5.81**	**3.06**	**7.128**	**247.71**
10.00	9.1	Shear	KIPS	459.33	56.33	40.73	7.273	252.75
10.00	9.1	Overload	KSI	36.00	5.81	3.06	7.129	247.74
11.00	10.0	Flexure	KSI	36.00	5.06	2.69	8.403	291.99
11.00	10.0	Shear	KIPS	542.44	55.11	40.28	8.974	311.84
11.00	**10.0**	**Overload**	**KSI**	**36.00**	**5.06**	**2.69**	**8.338**	**289.73**
22.00	**20.0**	**Flexure**	**KSI**	**36.00**	**9.02**	**4.81**	**3.864**	**134.28**
22.00	20.0	Shear	KIPS	542.44	41.69	35.27	10.633	369.48
22.00	20.0	Overload	KSI	36.00	9.02	4.81	4.024	139.85
25.50	**23.2**	**Flexure**	**KSI**	**36.00**	**10.05**	**5.35**	**3.280**	**113.99**
25.50	23.2	Shear	KIPS	542.44	37.19	33.68	11.270	391.65
25.50	23.2	Overload	KSI	36.00	10.05	5.35	3.470	120.59
33.00	**30.0**	**Flexure**	**KSI**	**36.00**	**9.29**	**5.07**	**3.611**	**125.49**
33.00	30.0	Shear	KIPS	542.44	27.80	30.27	12.855	446.72
33.00	30.0	Overload	KSI	36.00	9.29	5.07	3.778	131.27
44.00	**40.0**	**Flexure**	**KSI**	**36.00**	**10.63**	**5.76**	**2.944**	**102.31**

44.00	40.0	Shear	KIPS	542.44	14.01	25.27	15.954	554.40
44.00	40.0	Overload	KSI	36.00	10.63	5.76	3.146	109.33
49.50	**45.0**	**Flexure**	**KSI**	**36.00**	**10.97**	**5.93**	**2.802**	**97.39**
49.50	45.0	Shear	KIPS	542.44	6.89	22.76	18.024	626.34
49.50	45.0	Overload	KSI	36.00	10.97	5.93	3.012	104.67
55.00	**50.0**	**Flexure**	**KSI**	**36.00**	**11.08**	**5.97**	**2.766**	**96.13**
55.00	50.0	Shear	KIPS	542.44	0.00	20.26	20.594	715.65
55.00	50.0	Overload	KSI	36.00	11.08	5.97	2.979	103.52
66.00	**60.0**	**Flexure**	**KSI**	**36.00**	**10.63**	**5.76**	**2.944**	**102.31**
66.00	60.0	Shear	KIPS	542.44	-14.01	-25.27	15.954	554.40
66.00	60.0	Overload	KSI	36.00	10.63	5.76	3.146	109.33
77.00	**70.0**	**Flexure**	**KSI**	**36.00**	**9.29**	**5.07**	**3.611**	**125.49**
77.00	70.0	Shear	KIPS	542.44	-27.80	-30.27	12.855	446.72
77.00	70.0	Overload	KSI	36.00	9.29	5.07	3.778	131.27
84.50	**76.8**	**Flexure**	**KSI**	**36.00**	**10.05**	**5.35**	**3.280**	**113.99**
84.50	76.8	Shear	KIPS	542.44	-37.19	-33.68	11.270	391.65
84.50	76.8	Overload	KSI	36.00	10.05	5.35	3.470	120.59
88.00	**80.0**	**Flexure**	**KSI**	**36.00**	**9.02**	**4.81**	**3.864**	**134.28**
88.00	80.0	Shear	KIPS	542.44	-41.69	-35.27	10.633	369.48
88.00	80.0	Overload	KSI	36.00	9.02	4.81	4.024	139.85
99.00	90.0	Flexure	KSI	36.00	5.06	2.69	8.403	291.99
99.00	90.0	Shear	KIPS	542.44	-55.11	-40.28	8.974	311.84
99.00	**90.0**	**Overload**	**KSI**	**36.00**	**5.06**	**2.69**	**8.338**	**289.73**
110.00	100.0	Flexure	KSI	-36.00	-0.00	-0.00	99.000	3440.25
110.00	**100.0**	**Shear**	**KIPS**	**336.32**	**-68.52**	**-45.28**	**4.180**	**145.25**
110.00	100.0	Overload	KSI	-36.00	-0.00	-0.00	99.000	3440.25

Detailed Rating Results
Girder G - As Inspected
SU7
Axle Load
Impact: As Requested
Lane: As Requested

Span 1

Location (ft)	Percent	Limit State	Units	Capacity	DL + Adj -LL*	LL	Legal Rating Factor	Legal Load Rating (Ton)
0.00	0.0	Flexure	KSI	-36.00	-0.00	-0.00	99.000	3836.25
0.00	**0.0**	**Shear**	**KIPS**	**222.23**	**68.52**	**49.22**	**2.062**	**79.91**
0.00	0.0	Overload	KSI	-36.00	-0.00	-0.00	99.000	3836.25

0.25	0.2	Flexure	KSI	-36.00	-0.16	-0.03	99.000	3836.25
0.25	**0.2**	**Shear**	**KIPS**	**219.95**	**68.22**	**49.09**	**2.038**	**78.97**
0.25	0.2	Overload	KSI	-36.00	-0.16	-0.03	99.000	3836.25
0.75	0.7	Flexure	KSI	36.00	0.49	0.29	93.818	3635.43
0.75	**0.7**	**Shear**	**KIPS**	**219.95**	**67.61**	**48.84**	**2.061**	**79.87**
0.75	0.7	Overload	KSI	36.00	0.49	0.29	89.449	3466.13
0.83	0.8	Flexure	KSI	36.00	0.55	0.32	84.784	3285.37
0.83	**0.8**	**Shear**	**KIPS**	**222.23**	**67.51**	**48.80**	**2.101**	**81.42**
0.83	0.8	Overload	KSI	36.00	0.55	0.32	80.866	3133.57
4.50	4.1	Flexure	KSI	36.00	2.83	1.65	15.077	584.24
4.50	**4.1**	**Shear**	**KIPS**	**249.29**	**63.04**	**46.94**	**2.725**	**105.58**
4.50	4.1	Overload	KSI	36.00	2.83	1.65	14.648	567.60
10.00	**9.1**	**Flexure**	**KSI**	**36.00**	**5.81**	**3.32**	**6.577**	**254.85**
10.00	9.1	Shear	KIPS	459.33	56.33	44.15	6.711	260.03
10.00	9.1	Overload	KSI	36.00	5.81	3.32	6.578	254.88
11.00	10.0	Flexure	KSI	36.00	5.06	2.91	7.755	300.50
11.00	10.0	Shear	KIPS	542.44	55.11	43.64	8.282	320.92
11.00	**10.0**	**Overload**	**KSI**	**36.00**	**5.06**	**2.91**	**7.695**	**298.18**
22.00	**20.0**	**Flexure**	**KSI**	**36.00**	**9.02**	**5.21**	**3.567**	**138.24**
22.00	20.0	Shear	KIPS	542.44	41.69	38.06	9.854	381.83
22.00	20.0	Overload	KSI	36.00	9.02	5.21	3.715	143.97
25.50	**23.2**	**Flexure**	**KSI**	**36.00**	**10.05**	**5.82**	**3.016**	**116.86**
25.50	23.2	Shear	KIPS	542.44	37.19	36.29	10.461	405.38
25.50	23.2	Overload	KSI	36.00	10.05	5.82	3.190	123.62
33.00	**30.0**	**Flexure**	**KSI**	**36.00**	**9.29**	**5.57**	**3.291**	**127.53**
33.00	30.0	Shear	KIPS	542.44	27.80	32.48	11.980	464.21
33.00	30.0	Overload	KSI	36.00	9.29	5.57	3.443	133.40
44.00	**40.0**	**Flexure**	**KSI**	**36.00**	**10.63**	**6.33**	**2.679**	**103.82**
44.00	40.0	Shear	KIPS	542.44	14.01	26.90	14.984	580.61
44.00	40.0	Overload	KSI	36.00	10.63	6.33	2.863	110.95
49.50	**45.0**	**Flexure**	**KSI**	**36.00**	**10.97**	**6.52**	**2.552**	**98.90**
49.50	45.0	Shear	KIPS	542.44	6.89	24.11	17.016	659.38
49.50	45.0	Overload	KSI	36.00	10.97	6.52	2.743	106.30
55.00	**50.0**	**Flexure**	**KSI**	**36.00**	**11.08**	**6.58**	**2.511**	**97.31**
55.00	50.0	Shear	KIPS	542.44	0.00	21.32	19.570	758.34
55.00	50.0	Overload	KSI	36.00	11.08	6.58	2.704	104.80
66.00	**60.0**	**Flexure**	**KSI**	**36.00**	**10.63**	**6.33**	**2.679**	**103.82**
66.00	60.0	Shear	KIPS	542.44	-14.01	-26.90	14.984	580.61
66.00	60.0	Overload	KSI	36.00	10.63	6.33	2.863	110.95
77.00	**70.0**	**Flexure**	**KSI**	**36.00**	**9.29**	**5.57**	**3.291**	**127.53**
77.00	70.0	Shear	KIPS	542.44	-27.80	-32.48	11.980	464.21
77.00	70.0	Overload	KSI	36.00	9.29	5.57	3.443	133.40
84.50	**76.8**	**Flexure**	**KSI**	**36.00**	**10.05**	**5.82**	**3.016**	**116.86**

84.50	76.8	Shear	KIPS	542.44	-37.19	-36.29	10.461	405.38
84.50	76.8	Overload	KSI	36.00	10.05	5.82	3.190	123.62
88.00	**80.0**	**Flexure**	**KSI**	**36.00**	**9.02**	**5.21**	**3.567**	**138.24**
88.00	80.0	Shear	KIPS	542.44	-41.69	-38.06	9.854	381.83
88.00	80.0	Overload	KSI	36.00	9.02	5.21	3.715	143.97
99.00	90.0	Flexure	KSI	36.00	5.06	2.91	7.755	300.50
99.00	90.0	Shear	KIPS	542.44	-55.11	-43.64	8.282	320.92
99.00	**90.0**	**Overload**	**KSI**	**36.00**	**5.06**	**2.91**	**7.695**	**298.18**
110.00	100.0	Flexure	KSI	-36.00	-0.00	-0.00	99.000	3836.25
110.00	**100.0**	**Shear**	**KIPS**	**336.32**	**-68.52**	**-49.22**	**3.845**	**149.00**
110.00	100.0	Overload	KSI	-36.00	-0.00	-0.00	99.000	3836.25

Detailed Rating Results
Girder G - As Inspected
Type 3
Axle Load
Impact: As Requested
Lane: As Requested

Span 1

Location (ft)	Percent	Limit State	Units	Capacity	DL + Adj -LL*	LL	Legal Rating Factor	Legal Load Rating (Ton)
0.00	0.0	Flexure	KSI	-36.00	-0.00	-0.00	99.000	2475.00
0.00	**0.0**	**Shear**	**KIPS**	**222.23**	**68.52**	**33.56**	**3.024**	**75.61**
0.00	0.0	Overload	KSI	-36.00	-0.00	-0.00	99.000	2475.00
0.25	0.2	Flexure	KSI	-35.72	-0.16	-0.02	99.000	2475.00
0.25	**0.2**	**Shear**	**KIPS**	**219.95**	**68.22**	**33.48**	**2.988**	**74.71**
0.25	0.2	Overload	KSI	-36.00	-0.16	-0.02	99.000	2475.00
0.75	0.7	Flexure	KSI	-35.69	-0.49	-0.07	99.000	2475.00
0.75	**0.7**	**Shear**	**KIPS**	**219.95**	**67.61**	**33.32**	**3.022**	**75.54**
0.75	0.7	Overload	KSI	-36.00	-0.49	-0.07	99.000	2475.00
0.83	0.8	Flexure	KSI	-35.72	-0.54	-0.07	99.000	2475.00
0.83	**0.8**	**Shear**	**KIPS**	**222.23**	**67.51**	**33.29**	**3.080**	**76.99**
0.83	0.8	Overload	KSI	-36.00	-0.54	-0.07	99.000	2475.00
4.50	4.1	Flexure	KSI	36.00	2.83	1.13	22.052	551.30
4.50	**4.1**	**Shear**	**KIPS**	**249.29**	**63.04**	**32.09**	**3.985**	**99.62**
4.50	4.1	Overload	KSI	36.00	2.83	1.13	21.424	535.61
10.00	**9.1**	**Flexure**	**KSI**	**36.00**	**5.81**	**2.28**	**9.585**	**239.63**
10.00	9.1	Shear	KIPS	459.33	56.33	30.29	9.780	244.50
10.00	9.1	Overload	KSI	36.00	5.81	2.28	9.586	239.66

11.00	10.0	Flexure	KSI	36.00	5.06	2.00	11.294	282.36
11.00	10.0	Shear	KIPS	542.44	55.11	29.96	12.062	301.55
11.00	**10.0**	**Overload**	**KSI**	**36.00**	**5.06**	**2.00**	**11.207**	**280.18**
22.00	**20.0**	**Flexure**	**KSI**	**36.00**	**9.02**	**3.52**	**5.283**	**132.07**
22.00	20.0	Shear	KIPS	542.44	41.69	26.36	14.225	355.63
22.00	20.0	Overload	KSI	36.00	9.02	3.52	5.502	137.55
25.50	**23.2**	**Flexure**	**KSI**	**36.00**	**10.05**	**3.90**	**4.500**	**112.50**
25.50	23.2	Shear	KIPS	542.44	37.19	25.22	15.052	376.30
25.50	23.2	Overload	KSI	36.00	10.05	3.90	4.761	119.01
33.00	**30.0**	**Flexure**	**KSI**	**36.00**	**9.29**	**3.68**	**4.980**	**124.49**
33.00	30.0	Shear	KIPS	542.44	27.80	22.76	17.093	427.32
33.00	30.0	Overload	KSI	36.00	9.29	3.68	5.209	130.23
44.00	**40.0**	**Flexure**	**KSI**	**36.00**	**10.63**	**4.17**	**4.067**	**101.67**
44.00	40.0	Shear	KIPS	542.44	14.01	19.16	21.032	525.80
44.00	40.0	Overload	KSI	36.00	10.63	4.17	4.346	108.65
49.50	**45.0**	**Flexure**	**KSI**	**36.00**	**10.97**	**4.29**	**3.880**	**96.99**
49.50	45.0	Shear	KIPS	542.44	6.89	17.36	23.627	590.68
49.50	45.0	Overload	KSI	36.00	10.97	4.29	4.170	104.25
55.00	**50.0**	**Flexure**	**KSI**	**36.00**	**11.08**	**4.30**	**3.837**	**95.93**
55.00	50.0	Shear	KIPS	542.44	0.00	15.56	26.808	670.20
55.00	50.0	Overload	KSI	36.00	11.08	4.30	4.133	103.31
66.00	**60.0**	**Flexure**	**KSI**	**36.00**	**10.63**	**4.17**	**4.067**	**101.67**
66.00	60.0	Shear	KIPS	542.44	-14.01	-19.16	21.032	525.80
66.00	60.0	Overload	KSI	36.00	10.63	4.17	4.346	108.65
77.00	**70.0**	**Flexure**	**KSI**	**36.00**	**9.29**	**3.68**	**4.980**	**124.49**
77.00	70.0	Shear	KIPS	542.44	-27.80	-22.76	17.093	427.32
77.00	70.0	Overload	KSI	36.00	9.29	3.68	5.209	130.23
84.50	**76.8**	**Flexure**	**KSI**	**36.00**	**10.05**	**3.90**	**4.500**	**112.50**
84.50	76.8	Shear	KIPS	542.44	-37.19	-25.22	15.052	376.30
84.50	76.8	Overload	KSI	36.00	10.05	3.90	4.761	119.01
88.00	**80.0**	**Flexure**	**KSI**	**36.00**	**9.02**	**3.52**	**5.283**	**132.07**
88.00	80.0	Shear	KIPS	542.44	-41.69	-26.36	14.225	355.63
88.00	80.0	Overload	KSI	36.00	9.02	3.52	5.502	137.55
99.00	90.0	Flexure	KSI	36.00	5.06	2.00	11.294	282.36
99.00	90.0	Shear	KIPS	542.44	-55.11	-29.96	12.062	301.55
99.00	**90.0**	**Overload**	**KSI**	**36.00**	**5.06**	**2.00**	**11.207**	**280.18**
110.00	100.0	Flexure	KSI	-36.00	-0.00	-0.00	99.000	2475.00
110.00	**100.0**	**Shear**	**KIPS**	**336.32**	**-68.52**	**-33.56**	**5.639**	**140.97**
110.00	100.0	Overload	KSI	-36.00	-0.00	-0.00	99.000	2475.00

Detailed Rating Results
Girder G - As Inspected
Type 3-3

Axle Load
Impact: As Requested
Lane: As Requested

Span 1

Location (ft)	Percent	Limit State	Units	Capacity	DL + Adj -LL*	LL	Legal Rating Factor	Legal Load Rating (Ton)
0.00	0.0	Flexure	KSI	-36.00	-0.00	-0.00	99.000	3960.00
0.00	**0.0**	**Shear**	**KIPS**	**222.23**	**68.52**	**45.08**	**2.251**	**90.06**
0.00	0.0	Overload	KSI	-36.00	-0.00	-0.00	99.000	3960.00
0.25	0.2	Flexure	KSI	-35.99	-0.16	-0.03	99.000	3960.00
0.25	**0.2**	**Shear**	**KIPS**	**219.95**	**68.22**	**44.95**	**2.226**	**89.03**
0.25	0.2	Overload	KSI	-36.00	-0.16	-0.03	99.000	3960.00
0.75	0.7	Flexure	KSI	-35.96	-0.49	-0.09	99.000	3960.00
0.75	**0.7**	**Shear**	**KIPS**	**219.95**	**67.61**	**44.69**	**2.253**	**90.11**
0.75	0.7	Overload	KSI	36.00	0.49	0.27	97.752	3910.10
0.83	0.8	Flexure	KSI	36.00	0.55	0.29	92.664	3706.58
0.83	**0.8**	**Shear**	**KIPS**	**222.23**	**67.51**	**44.65**	**2.296**	**91.86**
0.83	0.8	Overload	KSI	36.00	0.55	0.29	88.383	3535.32
4.50	4.1	Flexure	KSI	36.00	2.83	1.50	16.563	662.51
4.50	**4.1**	**Shear**	**KIPS**	**249.29**	**63.04**	**42.73**	**2.993**	**119.72**
4.50	4.1	Overload	KSI	36.00	2.83	1.50	16.091	643.65
10.00	**9.1**	**Flexure**	**KSI**	**36.00**	**5.81**	**3.00**	**7.287**	**291.46**
10.00	9.1	Shear	KIPS	459.33	56.33	39.85	7.435	297.39
10.00	9.1	Overload	KSI	36.00	5.81	3.00	7.287	291.49
11.00	10.0	Flexure	KSI	36.00	5.06	2.62	8.606	344.25
11.00	10.0	Shear	KIPS	542.44	55.11	39.32	9.191	367.64
11.00	**10.0**	**Overload**	**KSI**	**36.00**	**5.06**	**2.62**	**8.540**	**341.58**
22.00	**20.0**	**Flexure**	**KSI**	**36.00**	**9.02**	**4.52**	**4.118**	**164.70**
22.00	20.0	Shear	KIPS	542.44	41.69	33.56	11.174	446.95
22.00	20.0	Overload	KSI	36.00	9.02	4.52	4.288	171.54
25.50	**23.2**	**Flexure**	**KSI**	**36.00**	**10.05**	**4.99**	**3.520**	**140.78**
25.50	23.2	Shear	KIPS	542.44	37.19	31.73	11.963	478.51
25.50	23.2	Overload	KSI	36.00	10.05	4.99	3.723	148.93
33.00	**30.0**	**Flexure**	**KSI**	**36.00**	**9.29**	**4.63**	**3.953**	**158.12**
33.00	30.0	Shear	KIPS	542.44	27.80	27.80	13.995	559.79
33.00	30.0	Overload	KSI	36.00	9.29	4.63	4.135	165.40
44.00	**40.0**	**Flexure**	**KSI**	**36.00**	**10.63**	**5.23**	**3.244**	**129.77**
44.00	40.0	Shear	KIPS	542.44	14.01	22.04	18.285	731.38
44.00	40.0	Overload	KSI	36.00	10.63	5.23	3.467	138.68

49.50	**45.0**	**Flexure**	**KSI**	**36.00**	**10.97**	**5.41**	**3.076**	**123.03**
49.50	45.0	Shear	KIPS	542.44	6.89	19.16	21.408	856.33
49.50	45.0	Overload	KSI	36.00	10.97	5.41	3.306	132.24
55.00	**50.0**	**Flexure**	**KSI**	**36.00**	**11.08**	**5.43**	**3.043**	**121.70**
55.00	50.0	Shear	KIPS	542.44	0.00	16.28	25.623	1024.91
55.00	50.0	Overload	KSI	36.00	11.08	5.43	3.277	131.06
66.00	**60.0**	**Flexure**	**KSI**	**36.00**	**10.63**	**5.23**	**3.244**	**129.77**
66.00	60.0	Shear	KIPS	542.44	-14.01	-22.04	18.285	731.38
66.00	60.0	Overload	KSI	36.00	10.63	5.23	3.467	138.68
77.00	**70.0**	**Flexure**	**KSI**	**36.00**	**9.29**	**4.63**	**3.953**	**158.12**
77.00	70.0	Shear	KIPS	542.44	-27.80	-27.80	13.995	559.79
77.00	70.0	Overload	KSI	36.00	9.29	4.63	4.135	165.40
84.50	**76.8**	**Flexure**	**KSI**	**36.00**	**10.05**	**4.99**	**3.520**	**140.78**
84.50	76.8	Shear	KIPS	542.44	-37.19	-31.73	11.963	478.51
84.50	76.8	Overload	KSI	36.00	10.05	4.99	3.723	148.93
88.00	**80.0**	**Flexure**	**KSI**	**36.00**	**9.02**	**4.52**	**4.118**	**164.70**
88.00	80.0	Shear	KIPS	542.44	-41.69	-33.56	11.174	446.95
88.00	80.0	Overload	KSI	36.00	9.02	4.52	4.288	171.54
99.00	90.0	Flexure	KSI	36.00	5.06	2.62	8.606	344.25
99.00	90.0	Shear	KIPS	542.44	-55.11	-39.32	9.191	367.64
99.00	**90.0**	**Overload**	**KSI**	**36.00**	**5.06**	**2.62**	**8.540**	**341.58**
110.00	100.0	Flexure	KSI	-36.00	-0.00	-0.00	99.000	3960.00
110.00	**100.0**	**Shear**	**KIPS**	**336.32**	**-68.52**	**-45.08**	**4.198**	**167.92**
110.00	100.0	Overload	KSI	-36.00	-0.00	-0.00	99.000	3960.00

Detailed Rating Results
Girder G - As Inspected
Type 3S2
Axle Load
Impact: As Requested
Lane: As Requested

Span 1

Location (ft)	Percent	Limit State	Units	Capacity	DL + Adj -LL*	LL	Legal Rating Factor	Legal Load Rating (Ton)
0.00	0.0	Flexure	KSI	-36.00	-0.00	-0.00	99.000	3564.00
0.00	**0.0**	**Shear**	**KIPS**	**222.23**	**68.52**	**43.07**	**2.357**	**84.85**
0.00	0.0	Overload	KSI	-36.00	-0.00	-0.00	99.000	3564.00
0.25	0.2	Flexure	KSI	-35.95	-0.16	-0.03	99.000	3564.00
0.25	**0.2**	**Shear**	**KIPS**	**219.95**	**68.22**	**42.95**	**2.330**	**83.86**

0.25	0.2	Overload	KSI	-36.00	-0.16	-0.03	99.000	3564.00
0.75	0.7	Flexure	KSI	-35.92	-0.49	-0.09	99.000	3564.00
0.75	**0.7**	**Shear**	**KIPS**	**219.95**	**67.61**	**42.71**	**2.357**	**84.85**
0.75	0.7	Overload	KSI	-36.00	-0.49	-0.09	99.000	3564.00
0.83	0.8	Flexure	KSI	36.00	0.55	0.28	96.947	3490.10
0.83	**0.8**	**Shear**	**KIPS**	**222.23**	**67.51**	**42.68**	**2.403**	**86.49**
0.83	0.8	Overload	KSI	36.00	0.55	0.28	92.468	3328.85
4.50	4.1	Flexure	KSI	36.00	2.83	1.44	17.283	622.18
4.50	**4.1**	**Shear**	**KIPS**	**249.29**	**63.04**	**40.95**	**3.123**	**112.43**
4.50	4.1	Overload	KSI	36.00	2.83	1.44	16.791	604.47
10.00	**9.1**	**Flexure**	**KSI**	**36.00**	**5.81**	**2.88**	**7.570**	**272.52**
10.00	9.1	Shear	KIPS	459.33	56.33	38.36	7.724	278.06
10.00	9.1	Overload	KSI	36.00	5.81	2.88	7.571	272.55
11.00	10.0	Flexure	KSI	36.00	5.06	2.53	8.933	321.60
11.00	10.0	Shear	KIPS	542.44	55.11	37.88	9.540	343.45
11.00	**10.0**	**Overload**	**KSI**	**36.00**	**5.06**	**2.53**	**8.864**	**319.11**
22.00	**20.0**	**Flexure**	**KSI**	**36.00**	**9.02**	**4.37**	**4.259**	**153.34**
22.00	20.0	Shear	KIPS	542.44	41.69	32.70	11.469	412.88
22.00	20.0	Overload	KSI	36.00	9.02	4.37	4.436	159.70
25.50	**23.2**	**Flexure**	**KSI**	**36.00**	**10.05**	**4.85**	**3.620**	**130.33**
25.50	23.2	Shear	KIPS	542.44	37.19	31.05	12.225	440.10
25.50	23.2	Overload	KSI	36.00	10.05	4.85	3.830	137.87
33.00	**30.0**	**Flexure**	**KSI**	**36.00**	**9.29**	**4.61**	**3.975**	**143.09**
33.00	30.0	Shear	KIPS	542.44	27.80	27.52	14.141	509.08
33.00	30.0	Overload	KSI	36.00	9.29	4.61	4.158	149.68
44.00	**40.0**	**Flexure**	**KSI**	**36.00**	**10.63**	**5.20**	**3.260**	**117.36**
44.00	40.0	Shear	KIPS	542.44	14.01	22.33	18.049	649.75
44.00	40.0	Overload	KSI	36.00	10.63	5.20	3.484	125.42
49.50	**45.0**	**Flexure**	**KSI**	**36.00**	**10.97**	**5.32**	**3.126**	**112.55**
49.50	45.0	Shear	KIPS	542.44	6.89	19.74	20.784	748.21
49.50	45.0	Overload	KSI	36.00	10.97	5.32	3.360	120.97
55.00	**50.0**	**Flexure**	**KSI**	**36.00**	**11.08**	**5.29**	**3.119**	**112.30**
55.00	50.0	Shear	KIPS	542.44	0.00	17.15	24.332	875.95
55.00	50.0	Overload	KSI	36.00	11.08	5.29	3.359	120.94
66.00	**60.0**	**Flexure**	**KSI**	**36.00**	**10.63**	**5.20**	**3.260**	**117.36**
66.00	60.0	Shear	KIPS	542.44	-14.01	-22.33	18.049	649.75
66.00	60.0	Overload	KSI	36.00	10.63	5.20	3.484	125.42
77.00	**70.0**	**Flexure**	**KSI**	**36.00**	**9.29**	**4.61**	**3.975**	**143.09**
77.00	70.0	Shear	KIPS	542.44	-27.80	-27.52	14.141	509.08
77.00	70.0	Overload	KSI	36.00	9.29	4.61	4.158	149.68
84.50	**76.8**	**Flexure**	**KSI**	**36.00**	**10.05**	**4.85**	**3.620**	**130.33**
84.50	76.8	Shear	KIPS	542.44	-37.19	-31.05	12.225	440.10
84.50	76.8	Overload	KSI	36.00	10.05	4.85	3.830	137.87

88.00	**80.0**	**Flexure**	**KSI**	**36.00**	**9.02**	**4.37**	**4.259**	**153.34**
88.00	80.0	Shear	KIPS	542.44	-41.69	-32.70	11.469	412.88
88.00	80.0	Overload	KSI	36.00	9.02	4.37	4.436	159.70
99.00	90.0	Flexure	KSI	36.00	5.06	2.53	8.933	321.60
99.00	90.0	Shear	KIPS	542.44	-55.11	-37.88	9.540	343.45
99.00	**90.0**	**Overload**	**KSI**	**36.00**	**5.06**	**2.53**	**8.864**	**319.11**
110.00	100.0	Flexure	KSI	-36.00	-0.00	-0.00	99.000	3564.00
110.00	**100.0**	**Shear**	**KIPS**	**336.32**	**-68.52**	**-43.07**	**4.395**	**158.21**
110.00	100.0	Overload	KSI	-36.00	-0.00	-0.00	99.000	3564.00

Detailed Rating Results
Girder G - As Inspected
RI-3
Axle Load
Impact: As Requested
Lane: As Requested

Span 1

Location (ft)	Percent	Limit State	Units	Capacity	DL + Adj -LL*	LL	Permit Rating Factor	Permit Load Rating (Ton)
0.00	0.0	Flexure	KSI	-36.00	-0.00	-0.00	99.000	3762.00
0.00	**0.0**	**Shear**	**KIPS**	**222.23**	**68.52**	**51.79**	**2.154**	**81.84**
0.00	0.0	Overload	KSI	-36.00	-0.00	-0.00	99.000	3762.00
0.25	0.2	Flexure	KSI	-36.00	-0.16	-0.03	99.000	3762.00
0.25	**0.2**	**Shear**	**KIPS**	**219.95**	**68.22**	**51.66**	**2.128**	**80.86**
0.25	0.2	Overload	KSI	-36.00	-0.16	-0.03	99.000	3762.00
0.75	0.7	Flexure	KSI	36.00	0.49	0.31	97.920	3720.98
0.75	**0.7**	**Shear**	**KIPS**	**219.95**	**67.61**	**51.41**	**2.151**	**81.75**
0.75	0.7	Overload	KSI	-36.00	-0.49	-0.10	99.000	3762.00
0.83	0.8	Flexure	KSI	36.00	0.55	0.34	88.486	3362.48
0.83	**0.8**	**Shear**	**KIPS**	**222.23**	**67.51**	**51.38**	**2.193**	**83.33**
0.83	0.8	Overload	KSI	-36.00	-0.54	-0.11	99.000	3762.00
4.50	4.1	Flexure	KSI	36.00	2.83	1.74	15.693	596.33
4.50	**4.1**	**Shear**	**KIPS**	**249.29**	**63.04**	**49.55**	**2.836**	**107.76**
4.50	4.1	Overload	KSI	36.00	2.83	1.74	18.039	685.47
10.00	**9.1**	**Flexure**	**KSI**	**36.00**	**5.81**	**3.52**	**6.815**	**258.96**
10.00	9.1	Shear	KIPS	459.33	56.33	46.81	6.953	264.23
10.00	9.1	Overload	KSI	36.00	5.81	3.52	8.064	306.43
11.00	**10.0**	**Flexure**	**KSI**	**36.00**	**5.06**	**3.09**	**8.029**	**305.09**
11.00	10.0	Shear	KIPS	542.44	55.11	46.32	8.574	325.82

11.00	10.0	Overload	KSI	36.00	5.06	3.09	9.426	358.17
22.00	**20.0**	**Flexure**	**KSI**	**36.00**	**9.02**	**5.45**	**3.747**	**142.38**
22.00	20.0	Shear	KIPS	542.44	41.69	40.84	10.089	383.38
22.00	20.0	Overload	KSI	36.00	9.02	5.45	4.617	175.45
25.50	**23.2**	**Flexure**	**KSI**	**36.00**	**10.05**	**6.05**	**3.189**	**121.18**
25.50	23.2	Shear	KIPS	542.44	37.19	39.10	10.666	405.32
25.50	23.2	Overload	KSI	36.00	10.05	6.05	3.991	151.67
33.00	**30.0**	**Flexure**	**KSI**	**36.00**	**9.29**	**5.72**	**3.521**	**133.81**
33.00	30.0	Shear	KIPS	542.44	27.80	35.37	12.087	459.30
33.00	30.0	Overload	KSI	36.00	9.29	5.72	4.358	165.61
44.00	**40.0**	**Flexure**	**KSI**	**36.00**	**10.63**	**6.46**	**2.883**	**109.57**
44.00	40.0	Shear	KIPS	542.44	14.01	29.90	14.812	562.85
44.00	40.0	Overload	KSI	36.00	10.63	6.46	3.646	138.54
49.50	**45.0**	**Flexure**	**KSI**	**36.00**	**10.97**	**6.67**	**2.740**	**104.13**
49.50	45.0	Shear	KIPS	542.44	6.89	27.16	16.595	630.62
49.50	45.0	Overload	KSI	36.00	10.97	6.67	3.485	132.42
55.00	**50.0**	**Flexure**	**KSI**	**36.00**	**11.08**	**6.72**	**2.699**	**102.57**
55.00	50.0	Shear	KIPS	542.44	0.00	24.43	18.768	713.18
55.00	50.0	Overload	KSI	36.00	11.08	6.72	3.439	130.69
66.00	**60.0**	**Flexure**	**KSI**	**36.00**	**10.63**	**6.46**	**2.883**	**109.57**
66.00	60.0	Shear	KIPS	542.44	-14.01	-29.90	14.812	562.85
66.00	60.0	Overload	KSI	36.00	10.63	6.46	3.646	138.54
77.00	**70.0**	**Flexure**	**KSI**	**36.00**	**9.29**	**5.72**	**3.521**	**133.81**
77.00	70.0	Shear	KIPS	542.44	-27.80	-35.37	12.087	459.30
77.00	70.0	Overload	KSI	36.00	9.29	5.72	4.358	165.61
84.50	**76.8**	**Flexure**	**KSI**	**36.00**	**10.05**	**6.05**	**3.189**	**121.18**
84.50	76.8	Shear	KIPS	542.44	-37.19	-39.10	10.666	405.32
84.50	76.8	Overload	KSI	36.00	10.05	6.05	3.991	151.67
88.00	**80.0**	**Flexure**	**KSI**	**36.00**	**9.02**	**5.45**	**3.747**	**142.38**
88.00	80.0	Shear	KIPS	542.44	-41.69	-40.84	10.089	383.38
88.00	80.0	Overload	KSI	36.00	9.02	5.45	4.617	175.45
99.00	**90.0**	**Flexure**	**KSI**	**36.00**	**5.06**	**3.09**	**8.029**	**305.09**
99.00	90.0	Shear	KIPS	542.44	-55.11	-46.32	8.574	325.82
99.00	90.0	Overload	KSI	36.00	5.06	3.09	9.426	358.17
110.00	100.0	Flexure	KSI	-36.00	-0.00	-0.00	99.000	3762.00
110.00	**100.0**	**Shear**	**KIPS**	**336.32**	**-68.52**	**-51.79**	**4.016**	**152.59**
110.00	100.0	Overload	KSI	-36.00	-0.00	-0.00	99.000	3762.00

Detailed Rating Results
Girder G - As Inspected
RI-4
Axle Load
Impact: As Requested

Lane: As Requested

Span 1

Location (ft)	Percent	Limit State	Units	Capacity	DL + Adj -LL*	LL	Permit Rating Factor	Permit Load Rating (Ton)
0.00	0.0	Flexure	KSI	-36.00	-0.00	-0.00	99.000	3712.50
0.00	**0.0**	**Shear**	**KIPS**	**222.23**	**68.52**	**50.35**	**2.215**	**83.06**
0.00	0.0	Overload	KSI	-36.00	-0.00	-0.00	99.000	3712.50
0.25	0.2	Flexure	KSI	-36.00	-0.16	-0.03	99.000	3712.50
0.25	**0.2**	**Shear**	**KIPS**	**219.95**	**68.22**	**50.23**	**2.189**	**82.08**
0.25	0.2	Overload	KSI	-36.00	-0.16	-0.03	99.000	3712.50
0.75	0.7	Flexure	KSI	-35.98	-0.49	-0.10	99.000	3712.50
0.75	**0.7**	**Shear**	**KIPS**	**219.95**	**67.61**	**49.98**	**2.213**	**82.99**
0.75	0.7	Overload	KSI	-36.00	-0.49	-0.10	99.000	3712.50
0.83	0.8	Flexure	KSI	36.00	0.55	0.33	91.023	3413.36
0.83	**0.8**	**Shear**	**KIPS**	**222.23**	**67.51**	**49.94**	**2.256**	**84.59**
0.83	0.8	Overload	KSI	-36.00	-0.54	-0.11	99.000	3712.50
4.50	4.1	Flexure	KSI	36.00	2.83	1.69	16.152	605.69
4.50	**4.1**	**Shear**	**KIPS**	**249.29**	**63.04**	**48.14**	**2.919**	**109.45**
4.50	4.1	Overload	KSI	36.00	2.83	1.69	18.566	696.23
10.00	**9.1**	**Flexure**	**KSI**	**36.00**	**5.81**	**3.42**	**7.021**	**263.27**
10.00	9.1	Shear	KIPS	459.33	56.33	45.44	7.163	268.62
10.00	9.1	Overload	KSI	36.00	5.81	3.42	8.307	311.53
11.00	**10.0**	**Flexure**	**KSI**	**36.00**	**5.06**	**3.00**	**8.272**	**310.21**
11.00	10.0	Shear	KIPS	542.44	55.11	44.95	8.835	331.30
11.00	10.0	Overload	KSI	36.00	5.06	3.00	9.712	364.20
22.00	**20.0**	**Flexure**	**KSI**	**36.00**	**9.02**	**5.28**	**3.869**	**145.10**
22.00	20.0	Shear	KIPS	542.44	41.69	39.55	10.419	390.71
22.00	20.0	Overload	KSI	36.00	9.02	5.28	4.768	178.80
25.50	**23.2**	**Flexure**	**KSI**	**36.00**	**10.05**	**5.85**	**3.296**	**123.60**
25.50	23.2	Shear	KIPS	542.44	37.19	37.83	11.024	413.41
25.50	23.2	Overload	KSI	36.00	10.05	5.85	4.125	154.70
33.00	**30.0**	**Flexure**	**KSI**	**36.00**	**9.29**	**5.56**	**3.620**	**135.73**
33.00	30.0	Shear	KIPS	542.44	27.80	34.15	12.519	469.46
33.00	30.0	Overload	KSI	36.00	9.29	5.56	4.480	167.99
44.00	**40.0**	**Flexure**	**KSI**	**36.00**	**10.63**	**6.35**	**2.934**	**110.02**
44.00	40.0	Shear	KIPS	542.44	14.01	28.75	15.404	577.64
44.00	40.0	Overload	KSI	36.00	10.63	6.35	3.710	139.11
49.50	**45.0**	**Flexure**	**KSI**	**36.00**	**10.97**	**6.53**	**2.797**	**104.90**
49.50	45.0	Shear	KIPS	542.44	6.89	26.05	17.304	648.91

49.50	45.0	Overload	KSI	36.00	10.97	6.53	3.557	133.41
55.00	**50.0**	**Flexure**	**KSI**	**36.00**	**11.08**	**6.56**	**2.765**	**103.68**
55.00	50.0	Shear	KIPS	542.44	0.00	23.35	19.633	736.25
55.00	50.0	Overload	KSI	36.00	11.08	6.56	3.523	132.11
66.00	**60.0**	**Flexure**	**KSI**	**36.00**	**10.63**	**6.35**	**2.934**	**110.02**
66.00	60.0	Shear	KIPS	542.44	-14.01	-28.75	15.404	577.64
66.00	60.0	Overload	KSI	36.00	10.63	6.35	3.710	139.11
77.00	**70.0**	**Flexure**	**KSI**	**36.00**	**9.29**	**5.56**	**3.620**	**135.73**
77.00	70.0	Shear	KIPS	542.44	-27.80	-34.15	12.519	469.46
77.00	70.0	Overload	KSI	36.00	9.29	5.56	4.480	167.99
84.50	**76.8**	**Flexure**	**KSI**	**36.00**	**10.05**	**5.85**	**3.296**	**123.60**
84.50	76.8	Shear	KIPS	542.44	-37.19	-37.83	11.024	413.41
84.50	76.8	Overload	KSI	36.00	10.05	5.85	4.125	154.70
88.00	**80.0**	**Flexure**	**KSI**	**36.00**	**9.02**	**5.28**	**3.869**	**145.10**
88.00	80.0	Shear	KIPS	542.44	-41.69	-39.55	10.419	390.71
88.00	80.0	Overload	KSI	36.00	9.02	5.28	4.768	178.80
99.00	**90.0**	**Flexure**	**KSI**	**36.00**	**5.06**	**3.00**	**8.272**	**310.21**
99.00	90.0	Shear	KIPS	542.44	-55.11	-44.95	8.835	331.30
99.00	90.0	Overload	KSI	36.00	5.06	3.00	9.712	364.20
110.00	100.0	Flexure	KSI	-36.00	-0.00	-0.00	99.000	3712.50
110.00	**100.0**	**Shear**	**KIPS**	**336.32**	**-68.52**	**-50.35**	**4.130**	**154.88**
110.00	100.0	Overload	KSI	-36.00	-0.00	-0.00	99.000	3712.50

Detailed Rating Results
Girder G - As Inspected
RI-5
Axle Load
Impact: As Requested
Lane: As Requested

Span 1

Location (ft)	Percent	Limit State	Units	Capacity	DL + Adj -LL*	LL	Permit Rating Factor	Permit Load Rating (Ton)
0.00	0.0	Flexure	KSI	-36.00	-0.00	-0.00	99.000	5187.60
0.00	**0.0**	**Shear**	**KIPS**	**222.23**	**68.52**	**66.03**	**1.689**	**88.50**
0.00	0.0	Overload	KSI	-36.00	-0.00	-0.00	99.000	5187.60
0.25	0.2	Flexure	KSI	-36.00	-0.16	-0.04	99.000	5187.60
0.25	**0.2**	**Shear**	**KIPS**	**219.95**	**68.22**	**65.86**	**1.669**	**87.46**
0.25	0.2	Overload	KSI	-36.00	-0.16	-0.04	99.000	5187.60
0.75	0.7	Flexure	KSI	36.00	0.49	0.39	76.840	4026.41

0.75	**0.7**	**Shear**	**KIPS**	**219.95**	**67.61**	**65.52**	**1.688**	**88.47**
0.75	0.7	Overload	KSI	36.00	0.49	0.39	86.681	4542.06
0.83	0.8	Flexure	KSI	36.00	0.55	0.43	69.441	3638.72
0.83	**0.8**	**Shear**	**KIPS**	**222.23**	**67.51**	**65.47**	**1.721**	**90.17**
0.83	0.8	Overload	KSI	36.00	0.55	0.43	78.365	4106.30
4.50	4.1	Flexure	KSI	36.00	2.83	2.21	12.353	647.28
4.50	**4.1**	**Shear**	**KIPS**	**249.29**	**63.04**	**62.95**	**2.232**	**116.97**
4.50	4.1	Overload	KSI	36.00	2.83	2.21	14.199	744.03
10.00	**9.1**	**Flexure**	**KSI**	**36.00**	**5.81**	**4.45**	**5.391**	**282.50**
10.00	9.1	Shear	KIPS	459.33	56.33	59.18	5.501	288.24
10.00	9.1	Overload	KSI	36.00	5.81	4.45	6.379	334.28
11.00	**10.0**	**Flexure**	**KSI**	**36.00**	**5.06**	**3.90**	**6.358**	**333.14**
11.00	10.0	Shear	KIPS	542.44	55.11	58.49	6.790	355.78
11.00	10.0	Overload	KSI	36.00	5.06	3.90	7.464	391.11
22.00	**20.0**	**Flexure**	**KSI**	**36.00**	**9.02**	**6.80**	**3.004**	**157.41**
22.00	20.0	Shear	KIPS	542.44	41.69	50.94	8.089	423.85
22.00	20.0	Overload	KSI	36.00	9.02	6.80	3.702	193.97
25.50	**23.2**	**Flexure**	**KSI**	**36.00**	**10.05**	**7.57**	**2.550**	**133.63**
25.50	23.2	Shear	KIPS	542.44	37.19	48.54	8.592	450.22
25.50	23.2	Overload	KSI	36.00	10.05	7.57	3.192	167.26
33.00	**30.0**	**Flexure**	**KSI**	**36.00**	**9.29**	**7.17**	**2.807**	**147.11**
33.00	30.0	Shear	KIPS	542.44	27.80	43.40	9.852	516.22
33.00	30.0	Overload	KSI	36.00	9.29	7.17	3.475	182.07
44.00	**40.0**	**Flexure**	**KSI**	**36.00**	**10.63**	**8.15**	**2.286**	**119.80**
44.00	40.0	Shear	KIPS	542.44	14.01	35.85	12.353	647.28
44.00	40.0	Overload	KSI	36.00	10.63	8.15	2.891	151.48
49.50	**45.0**	**Flexure**	**KSI**	**36.00**	**10.97**	**8.37**	**2.183**	**114.40**
49.50	45.0	Shear	KIPS	542.44	6.89	32.08	14.052	736.34
49.50	45.0	Overload	KSI	36.00	10.97	8.37	2.776	145.48
55.00	**50.0**	**Flexure**	**KSI**	**36.00**	**11.08**	**8.38**	**2.165**	**113.45**
55.00	50.0	Shear	KIPS	542.44	0.00	28.31	16.196	848.67
55.00	50.0	Overload	KSI	36.00	11.08	8.38	2.759	144.56
66.00	**60.0**	**Flexure**	**KSI**	**36.00**	**10.63**	**8.15**	**2.286**	**119.80**
66.00	60.0	Shear	KIPS	542.44	-14.01	-35.85	12.353	647.28
66.00	60.0	Overload	KSI	36.00	10.63	8.15	2.891	151.48
77.00	**70.0**	**Flexure**	**KSI**	**36.00**	**9.29**	**7.17**	**2.807**	**147.11**
77.00	70.0	Shear	KIPS	542.44	-27.80	-43.40	9.852	516.22
77.00	70.0	Overload	KSI	36.00	9.29	7.17	3.475	182.07
84.50	**76.8**	**Flexure**	**KSI**	**36.00**	**10.05**	**7.57**	**2.550**	**133.63**
84.50	76.8	Shear	KIPS	542.44	-37.19	-48.54	8.592	450.22
84.50	76.8	Overload	KSI	36.00	10.05	7.57	3.192	167.26
88.00	**80.0**	**Flexure**	**KSI**	**36.00**	**9.02**	**6.80**	**3.004**	**157.41**
88.00	80.0	Shear	KIPS	542.44	-41.69	-50.94	8.089	423.85

88.00	80.0	Overload	KSI	36.00	9.02	6.80	3.702	193.97
99.00	**90.0**	**Flexure**	**KSI**	**36.00**	**5.06**	**3.90**	**6.358**	**333.14**
99.00	90.0	Shear	KIPS	542.44	-55.11	-58.49	6.790	355.78
99.00	90.0	Overload	KSI	36.00	5.06	3.90	7.464	391.11
110.00	100.0	Flexure	KSI	-36.00	-0.00	-0.00	99.000	5187.60
110.00	**100.0**	**Shear**	**KIPS**	**336.32**	**-68.52**	**-66.03**	**3.149**	**165.02**
110.00	100.0	Overload	KSI	-36.00	-0.00	-0.00	99.000	5187.60

Detailed Rating Results
Girder G - As Inspected
RI-6
Axle Load
Impact: As Requested
Lane: As Requested

Span 1

Location (ft)	Percent	Limit State	Units	Capacity	DL + Adj -LL*	LL	Permit Rating Factor	Permit Load Rating (Ton)
0.00	0.0	Flexure	KSI	-36.00	-0.00	-0.00	99.000	6435.00
0.00	**0.0**	**Shear**	**KIPS**	**222.23**	**68.52**	**74.91**	**1.428**	**92.85**
0.00	0.0	Overload	KSI	-36.00	-0.00	-0.00	99.000	6435.00
0.25	0.2	Flexure	KSI	-36.00	-0.16	-0.05	99.000	6435.00
0.25	**0.2**	**Shear**	**KIPS**	**219.95**	**68.22**	**74.70**	**1.412**	**91.79**
0.25	0.2	Overload	KSI	-36.00	-0.16	-0.05	99.000	6435.00
0.75	0.7	Flexure	KSI	36.00	0.49	0.44	65.037	4227.43
0.75	**0.7**	**Shear**	**KIPS**	**219.95**	**67.61**	**74.27**	**1.429**	**92.88**
0.75	0.7	Overload	KSI	36.00	0.49	0.44	76.467	4970.35
0.83	0.8	Flexure	KSI	36.00	0.55	0.49	58.780	3820.69
0.83	**0.8**	**Shear**	**KIPS**	**222.23**	**67.51**	**74.20**	**1.457**	**94.68**
0.83	0.8	Overload	KSI	36.00	0.55	0.49	69.136	4493.86
4.50	4.1	Flexure	KSI	36.00	2.83	2.49	10.496	682.23
4.50	**4.1**	**Shear**	**KIPS**	**249.29**	**63.04**	**71.08**	**1.897**	**123.28**
4.50	4.1	Overload	KSI	36.00	2.83	2.49	12.574	817.34
10.00	**9.1**	**Flexure**	**KSI**	**36.00**	**5.81**	**4.99**	**4.610**	**299.63**
10.00	9.1	Shear	KIPS	459.33	56.33	66.40	4.703	305.73
10.00	9.1	Overload	KSI	36.00	5.81	4.99	5.685	369.54
11.00	**10.0**	**Flexure**	**KSI**	**36.00**	**5.06**	**4.38**	**5.443**	**353.78**
11.00	10.0	Shear	KIPS	542.44	55.11	65.55	5.813	377.82
11.00	10.0	Overload	KSI	36.00	5.06	4.38	6.660	432.90
22.00	**20.0**	**Flexure**	**KSI**	**36.00**	**9.02**	**7.52**	**2.607**	**169.43**

22.00	20.0	Shear	KIPS	542.44	41.69	56.19	7.036	457.36
22.00	20.0	Overload	KSI	36.00	9.02	7.52	3.348	217.61
25.50	**23.2**	**Flexure**	**KSI**	**36.00**	**10.05**	**8.33**	**2.223**	**144.47**
25.50	23.2	Shear	KIPS	542.44	37.19	53.21	7.520	488.82
25.50	23.2	Overload	KSI	36.00	10.05	8.33	2.899	188.47
33.00	**30.0**	**Flexure**	**KSI**	**36.00**	**9.29**	**7.78**	**2.483**	**161.40**
33.00	30.0	Shear	KIPS	542.44	27.80	46.83	8.759	569.36
33.00	30.0	Overload	KSI	36.00	9.29	7.78	3.203	208.20
44.00	**40.0**	**Flexure**	**KSI**	**36.00**	**10.63**	**8.51**	**2.102**	**136.64**
44.00	40.0	Shear	KIPS	542.44	14.01	37.47	11.340	737.11
44.00	40.0	Overload	KSI	36.00	10.63	8.51	2.770	180.07
49.50	**45.0**	**Flexure**	**KSI**	**36.00**	**10.97**	**8.58**	**2.044**	**132.86**
49.50	45.0	Shear	KIPS	542.44	6.89	32.79	13.190	857.37
49.50	45.0	Overload	KSI	36.00	10.97	8.58	2.709	176.09
55.00	**50.0**	**Flexure**	**KSI**	**36.00**	**11.08**	**8.39**	**2.074**	**134.84**
55.00	50.0	Shear	KIPS	542.44	0.00	28.11	15.648	1017.13
55.00	50.0	Overload	KSI	36.00	11.08	8.39	2.755	179.07
66.00	**60.0**	**Flexure**	**KSI**	**36.00**	**10.63**	**8.51**	**2.102**	**136.64**
66.00	60.0	Shear	KIPS	542.44	-14.01	-37.47	11.340	737.11
66.00	60.0	Overload	KSI	36.00	10.63	8.51	2.770	180.07
77.00	**70.0**	**Flexure**	**KSI**	**36.00**	**9.29**	**7.78**	**2.483**	**161.40**
77.00	70.0	Shear	KIPS	542.44	-27.80	-46.83	8.759	569.36
77.00	70.0	Overload	KSI	36.00	9.29	7.78	3.203	208.20
84.50	**76.8**	**Flexure**	**KSI**	**36.00**	**10.05**	**8.33**	**2.223**	**144.47**
84.50	76.8	Shear	KIPS	542.44	-37.19	-53.21	7.520	488.82
84.50	76.8	Overload	KSI	36.00	10.05	8.33	2.899	188.47
88.00	**80.0**	**Flexure**	**KSI**	**36.00**	**9.02**	**7.52**	**2.607**	**169.43**
88.00	80.0	Shear	KIPS	542.44	-41.69	-56.19	7.036	457.36
88.00	80.0	Overload	KSI	36.00	9.02	7.52	3.348	217.61
99.00	**90.0**	**Flexure**	**KSI**	**36.00**	**5.06**	**4.38**	**5.443**	**353.78**
99.00	90.0	Shear	KIPS	542.44	-55.11	-65.55	5.813	377.82
99.00	90.0	Overload	KSI	36.00	5.06	4.38	6.660	432.90
110.00	100.0	Flexure	KSI	-36.00	-0.00	-0.00	99.000	6435.00
110.00	**100.0**	**Shear**	**KIPS**	**336.32**	**-68.52**	**-74.91**	**2.664**	**173.13**
110.00	100.0	Overload	KSI	-36.00	-0.00	-0.00	99.000	6435.00

Detailed Rating Results
Girder G - As Inspected
RIDOT H20 Truck
Axle Load
Impact: As Requested
Lane: As Requested

Span 1

D597

Location (ft)	Percent	Limit State	Units	Capacity	DL + Adj -LL*	LL	Legal Rating Factor	Legal Load Rating (Ton)
0.00	0.0	Flexure	KSI	-36.00	-0.00	-0.00	99.000	1980.00
0.00	**0.0**	**Shear**	**KIPS**	**222.23**	**68.52**	**28.07**	**3.617**	**72.33**
0.00	0.0	Overload	KSI	-36.00	-0.00	-0.00	99.000	1980.00
0.25	0.2	Flexure	KSI	-35.58	-0.16	-0.02	99.000	1980.00
0.25	**0.2**	**Shear**	**KIPS**	**219.95**	**68.22**	**28.00**	**3.573**	**71.47**
0.25	0.2	Overload	KSI	-36.00	-0.16	-0.02	99.000	1980.00
0.75	0.7	Flexure	KSI	-35.55	-0.49	-0.06	99.000	1980.00
0.75	**0.7**	**Shear**	**KIPS**	**219.95**	**67.61**	**27.87**	**3.612**	**72.25**
0.75	0.7	Overload	KSI	-36.00	-0.49	-0.06	99.000	1980.00
0.83	0.8	Flexure	KSI	-35.58	-0.54	-0.06	99.000	1980.00
0.83	**0.8**	**Shear**	**KIPS**	**222.23**	**67.51**	**27.85**	**3.682**	**73.64**
0.83	0.8	Overload	KSI	-36.00	-0.54	-0.06	99.000	1980.00
4.50	4.1	Flexure	KSI	36.00	2.83	0.94	26.320	526.40
4.50	**4.1**	**Shear**	**KIPS**	**249.29**	**63.04**	**26.89**	**4.756**	**95.12**
4.50	4.1	Overload	KSI	36.00	2.83	0.94	25.570	511.41
10.00	**9.1**	**Flexure**	**KSI**	**36.00**	**5.81**	**1.91**	**11.410**	**228.19**
10.00	9.1	Shear	KIPS	459.33	56.33	25.45	11.642	232.83
10.00	9.1	Overload	KSI	36.00	5.81	1.91	11.411	228.22
11.00	10.0	Flexure	KSI	36.00	5.06	1.68	13.437	268.74
11.00	10.0	Shear	KIPS	542.44	55.11	25.19	14.350	287.00
11.00	**10.0**	**Overload**	**KSI**	**36.00**	**5.06**	**1.68**	**13.333**	**266.66**
22.00	**20.0**	**Flexure**	**KSI**	**36.00**	**9.02**	**2.98**	**6.244**	**124.88**
22.00	20.0	Shear	KIPS	542.44	41.69	22.31	16.813	336.26
22.00	20.0	Overload	KSI	36.00	9.02	2.98	6.503	130.06
25.50	**23.2**	**Flexure**	**KSI**	**36.00**	**10.05**	**3.31**	**5.306**	**106.11**
25.50	23.2	Shear	KIPS	542.44	37.19	21.39	17.746	354.93
25.50	23.2	Overload	KSI	36.00	10.05	3.31	5.613	112.25
33.00	**30.0**	**Flexure**	**KSI**	**36.00**	**9.29**	**3.14**	**5.835**	**116.71**
33.00	30.0	Shear	KIPS	542.44	27.80	19.43	20.030	400.60
33.00	30.0	Overload	KSI	36.00	9.29	3.14	6.104	122.08
44.00	**40.0**	**Flexure**	**KSI**	**36.00**	**10.63**	**3.56**	**4.759**	**95.17**
44.00	40.0	Shear	KIPS	542.44	14.01	16.55	24.360	487.20
44.00	40.0	Overload	KSI	36.00	10.63	3.56	5.085	101.71
49.50	**45.0**	**Flexure**	**KSI**	**36.00**	**10.97**	**3.66**	**4.542**	**90.84**
49.50	45.0	Shear	KIPS	542.44	6.89	15.11	27.159	543.18
49.50	45.0	Overload	KSI	36.00	10.97	3.66	4.882	97.63
55.00	**50.0**	**Flexure**	**KSI**	**36.00**	**11.08**	**3.68**	**4.488**	**89.76**

55.00	50.0	Shear	KIPS	542.44	0.00	13.67	30.531	610.63
55.00	50.0	Overload	KSI	36.00	11.08	3.68	4.833	96.66
66.00	**60.0**	**Flexure**	**KSI**	**36.00**	**10.63**	**3.56**	**4.759**	**95.17**
66.00	60.0	Shear	KIPS	542.44	-14.01	-16.55	24.360	487.20
66.00	60.0	Overload	KSI	36.00	10.63	3.56	5.085	101.71
77.00	**70.0**	**Flexure**	**KSI**	**36.00**	**9.29**	**3.14**	**5.835**	**116.71**
77.00	70.0	Shear	KIPS	542.44	-27.80	-19.43	20.030	400.60
77.00	70.0	Overload	KSI	36.00	9.29	3.14	6.104	122.08
84.50	**76.8**	**Flexure**	**KSI**	**36.00**	**10.05**	**3.31**	**5.306**	**106.11**
84.50	76.8	Shear	KIPS	542.44	-37.19	-21.39	17.746	354.93
84.50	76.8	Overload	KSI	36.00	10.05	3.31	5.613	112.25
88.00	**80.0**	**Flexure**	**KSI**	**36.00**	**9.02**	**2.98**	**6.244**	**124.88**
88.00	80.0	Shear	KIPS	542.44	-41.69	-22.31	16.813	336.26
88.00	80.0	Overload	KSI	36.00	9.02	2.98	6.503	130.06
99.00	90.0	Flexure	KSI	36.00	5.06	1.68	13.437	268.74
99.00	90.0	Shear	KIPS	542.44	-55.11	-25.19	14.350	287.00
99.00	**90.0**	**Overload**	**KSI**	**36.00**	**5.06**	**1.68**	**13.333**	**266.66**
110.00	100.0	Flexure	KSI	-36.00	-0.00	-0.00	99.000	1980.00
110.00	**100.0**	**Shear**	**KIPS**	**336.32**	**-68.52**	**-28.07**	**6.744**	**134.87**
110.00	100.0	Overload	KSI	-36.00	-0.00	-0.00	99.000	1980.00

Detailed Rating Results
Girder G - As Inspected
RI-OP 1
Axle Load
Impact: As Requested
Lane: As Requested

Span 1

Location (ft)	Percent	Limit State	Units	Capacity	DL + Adj -LL*	LL	Permit Rating Factor	Permit Load Rating (Ton)
0.00	0.0	Flexure	KSI	-36.00	-0.00	-0.00	99.000	5593.50
0.00	**0.0**	**Shear**	**KIPS**	**222.23**	**68.52**	**46.50**	**2.365**	**133.60**
0.00	0.0	Overload	KSI	-36.00	-0.00	-0.00	99.000	5593.50
0.25	0.2	Flexure	KSI	-35.94	-0.16	-0.03	99.000	5593.50
0.25	**0.2**	**Shear**	**KIPS**	**219.95**	**68.22**	**46.38**	**2.337**	**132.03**
0.25	0.2	Overload	KSI	-36.00	-0.16	-0.03	99.000	5593.50
0.75	0.7	Flexure	KSI	-35.91	-0.49	-0.09	99.000	5593.50
0.75	**0.7**	**Shear**	**KIPS**	**219.95**	**67.61**	**46.15**	**2.363**	**133.53**
0.75	0.7	Overload	KSI	-36.00	-0.49	-0.09	99.000	5593.50

0.83	0.8	Flexure	KSI	36.00	0.55	0.30	97.210	5492.36
0.83	**0.8**	**Shear**	**KIPS**	**222.23**	**67.51**	**46.11**	**2.409**	**136.11**
0.83	0.8	Overload	KSI	-36.00	-0.54	-0.10	99.000	5593.50
4.50	4.1	Flexure	KSI	36.00	2.83	1.56	17.281	976.40
4.50	**4.1**	**Shear**	**KIPS**	**249.29**	**63.04**	**44.36**	**3.123**	**176.44**
4.50	4.1	Overload	KSI	36.00	2.83	1.56	20.147	1138.32
10.00	**9.1**	**Flexure**	**KSI**	**36.00**	**5.81**	**3.14**	**7.534**	**425.69**
10.00	9.1	Shear	KIPS	459.33	56.33	41.75	7.688	434.35
10.00	9.1	Overload	KSI	36.00	5.81	3.14	9.042	510.89
11.00	**10.0**	**Flexure**	**KSI**	**36.00**	**5.06**	**2.75**	**8.883**	**501.90**
11.00	10.0	Shear	KIPS	542.44	55.11	41.27	9.487	536.00
11.00	10.0	Overload	KSI	36.00	5.06	2.75	10.577	597.62
22.00	**20.0**	**Flexure**	**KSI**	**36.00**	**9.02**	**4.89**	**4.119**	**232.71**
22.00	20.0	Shear	KIPS	542.44	41.69	36.04	11.272	636.90
22.00	20.0	Overload	KSI	36.00	9.02	4.89	5.148	290.84
25.50	**23.2**	**Flexure**	**KSI**	**36.00**	**10.05**	**5.44**	**3.496**	**197.51**
25.50	23.2	Shear	KIPS	542.44	37.19	34.38	11.962	675.84
25.50	23.2	Overload	KSI	36.00	10.05	5.44	4.438	250.72
33.00	**30.0**	**Flexure**	**KSI**	**36.00**	**9.29**	**5.15**	**3.851**	**217.58**
33.00	30.0	Shear	KIPS	542.44	27.80	30.81	13.681	772.96
33.00	30.0	Overload	KSI	36.00	9.29	5.15	4.834	273.12
44.00	**40.0**	**Flexure**	**KSI**	**36.00**	**10.63**	**5.90**	**3.114**	**175.92**
44.00	40.0	Shear	KIPS	542.44	14.01	25.58	17.069	964.39
44.00	40.0	Overload	KSI	36.00	10.63	5.90	3.993	225.60
49.50	**45.0**	**Flexure**	**KSI**	**36.00**	**10.97**	**6.10**	**2.955**	**166.98**
49.50	45.0	Shear	KIPS	542.44	6.89	22.97	19.352	1093.40
49.50	45.0	Overload	KSI	36.00	10.97	6.10	3.812	215.37
55.00	**50.0**	**Flexure**	**KSI**	**36.00**	**11.08**	**6.15**	**2.910**	**164.44**
55.00	50.0	Shear	KIPS	542.44	0.00	20.35	22.210	1254.89
55.00	50.0	Overload	KSI	36.00	11.08	6.15	3.761	212.50
66.00	**60.0**	**Flexure**	**KSI**	**36.00**	**10.63**	**5.90**	**3.114**	**175.92**
66.00	60.0	Shear	KIPS	542.44	-14.01	-25.58	17.069	964.39
66.00	60.0	Overload	KSI	36.00	10.63	5.90	3.993	225.60
77.00	**70.0**	**Flexure**	**KSI**	**36.00**	**9.29**	**5.15**	**3.851**	**217.58**
77.00	70.0	Shear	KIPS	542.44	-27.80	-30.81	13.681	772.96
77.00	70.0	Overload	KSI	36.00	9.29	5.15	4.834	273.12
84.50	**76.8**	**Flexure**	**KSI**	**36.00**	**10.05**	**5.44**	**3.496**	**197.51**
84.50	76.8	Shear	KIPS	542.44	-37.19	-34.38	11.962	675.84
84.50	76.8	Overload	KSI	36.00	10.05	5.44	4.438	250.72
88.00	**80.0**	**Flexure**	**KSI**	**36.00**	**9.02**	**4.89**	**4.119**	**232.71**
88.00	80.0	Shear	KIPS	542.44	-41.69	-36.04	11.272	636.90
88.00	80.0	Overload	KSI	36.00	9.02	4.89	5.148	290.84
99.00	**90.0**	**Flexure**	**KSI**	**36.00**	**5.06**	**2.75**	**8.883**	**501.90**

99.00	90.0	Shear	KIPS	542.44	-55.11	-41.27	9.487	536.00
99.00	90.0	Overload	KSI	36.00	5.06	2.75	10.577	597.62
110.00	100.0	Flexure	KSI	-36.00	-0.00	-0.00	99.000	5593.50
110.00	**100.0**	**Shear**	**KIPS**	**336.32**	**-68.52**	**-46.50**	**4.409**	**249.12**
110.00	100.0	Overload	KSI	-36.00	-0.00	-0.00	99.000	5593.50

Detailed Rating Results
Girder G - As Inspected
RI-OP 2
Axle Load
Impact: As Requested
Lane: As Requested

Span 1

Location (ft)	Percent	Limit State	Units	Capacity	DL + Adj -LL*	LL	Permit Rating Factor	Permit Load Rating (Ton)
0.00	0.0	Flexure	KSI	-36.00	-0.00	-0.00	99.000	7920.00
0.00	**0.0**	**Shear**	**KIPS**	**222.23**	**68.52**	**54.05**	**2.034**	**162.75**
0.00	0.0	Overload	KSI	-36.00	-0.00	-0.00	99.000	7920.00
0.25	0.2	Flexure	KSI	-36.00	-0.16	-0.04	99.000	7920.00
0.25	**0.2**	**Shear**	**KIPS**	**219.95**	**68.22**	**53.89**	**2.012**	**160.92**
0.25	0.2	Overload	KSI	-36.00	-0.16	-0.04	99.000	7920.00
0.75	0.7	Flexure	KSI	36.00	0.49	0.32	92.699	7415.89
0.75	**0.7**	**Shear**	**KIPS**	**219.95**	**67.61**	**53.55**	**2.037**	**162.94**
0.75	0.7	Overload	KSI	-36.00	-0.49	-0.11	99.000	7920.00
0.83	0.8	Flexure	KSI	36.00	0.55	0.35	83.787	6702.97
0.83	**0.8**	**Shear**	**KIPS**	**222.23**	**67.51**	**53.50**	**2.076**	**166.11**
0.83	0.8	Overload	KSI	36.00	0.55	0.35	95.899	7671.93
4.50	4.1	Flexure	KSI	36.00	2.83	1.79	15.025	1202.04
4.50	**4.1**	**Shear**	**KIPS**	**249.29**	**63.04**	**51.02**	**2.715**	**217.22**
4.50	4.1	Overload	KSI	36.00	2.83	1.79	17.517	1401.37
10.00	**9.1**	**Flexure**	**KSI**	**36.00**	**5.81**	**3.56**	**6.647**	**531.76**
10.00	9.1	Shear	KIPS	459.33	56.33	47.32	6.782	542.58
10.00	9.1	Overload	KSI	36.00	5.81	3.56	7.977	638.19
11.00	**10.0**	**Flexure**	**KSI**	**36.00**	**5.06**	**3.11**	**7.860**	**628.76**
11.00	10.0	Shear	KIPS	542.44	55.11	46.65	8.394	671.49
11.00	10.0	Overload	KSI	36.00	5.06	3.11	9.358	748.68
22.00	**20.0**	**Flexure**	**KSI**	**36.00**	**9.02**	**5.37**	**3.751**	**300.08**
22.00	20.0	Shear	KIPS	542.44	41.69	39.24	10.353	828.26
22.00	20.0	Overload	KSI	36.00	9.02	5.37	4.688	375.04

25.50	**23.2**	**Flexure**	**KSI**	**36.00**	**10.05**	**5.90**	**3.225**	**257.96**
25.50	23.2	Shear	KIPS	542.44	37.19	36.89	11.148	891.88
25.50	23.2	Overload	KSI	36.00	10.05	5.90	4.093	327.47
33.00	**30.0**	**Flexure**	**KSI**	**36.00**	**9.29**	**5.46**	**3.633**	**290.63**
33.00	30.0	Shear	KIPS	542.44	27.80	31.84	13.240	1059.24
33.00	30.0	Overload	KSI	36.00	9.29	5.46	4.560	364.82
44.00	**40.0**	**Flexure**	**KSI**	**36.00**	**10.63**	**5.90**	**3.115**	**249.21**
44.00	40.0	Shear	KIPS	542.44	14.01	24.76	17.633	1410.63
44.00	40.0	Overload	KSI	36.00	10.63	5.90	3.995	319.59
49.50	**45.0**	**Flexure**	**KSI**	**36.00**	**10.97**	**5.89**	**3.058**	**244.65**
49.50	45.0	Shear	KIPS	542.44	6.89	21.36	20.806	1664.51
49.50	45.0	Overload	KSI	36.00	10.97	5.89	3.944	315.54
55.00	**50.0**	**Flexure**	**KSI**	**36.00**	**11.08**	**5.75**	**3.114**	**249.09**
55.00	50.0	Shear	KIPS	542.44	0.00	18.09	24.995	1999.60
55.00	50.0	Overload	KSI	36.00	11.08	5.75	4.024	321.91
66.00	**60.0**	**Flexure**	**KSI**	**36.00**	**10.63**	**5.90**	**3.115**	**249.21**
66.00	60.0	Shear	KIPS	542.44	-14.01	-24.76	17.633	1410.63
66.00	60.0	Overload	KSI	36.00	10.63	5.90	3.995	319.59
77.00	**70.0**	**Flexure**	**KSI**	**36.00**	**9.29**	**5.46**	**3.633**	**290.63**
77.00	70.0	Shear	KIPS	542.44	-27.80	-31.84	13.240	1059.24
77.00	70.0	Overload	KSI	36.00	9.29	5.46	4.560	364.82
84.50	**76.8**	**Flexure**	**KSI**	**36.00**	**10.05**	**5.90**	**3.225**	**257.96**
84.50	76.8	Shear	KIPS	542.44	-37.19	-36.89	11.148	891.88
84.50	76.8	Overload	KSI	36.00	10.05	5.90	4.093	327.47
88.00	**80.0**	**Flexure**	**KSI**	**36.00**	**9.02**	**5.37**	**3.751**	**300.08**
88.00	80.0	Shear	KIPS	542.44	-41.69	-39.24	10.353	828.26
88.00	80.0	Overload	KSI	36.00	9.02	5.37	4.688	375.04
99.00	**90.0**	**Flexure**	**KSI**	**36.00**	**5.06**	**3.11**	**7.860**	**628.76**
99.00	90.0	Shear	KIPS	542.44	-55.11	-46.65	8.394	671.49
99.00	90.0	Overload	KSI	36.00	5.06	3.11	9.358	748.68
110.00	100.0	Flexure	KSI	-36.00	-0.00	-0.00	99.000	7920.00
110.00	**100.0**	**Shear**	**KIPS**	**336.32**	**-68.52**	**-54.05**	**3.793**	**303.46**
110.00	100.0	Overload	KSI	-36.00	-0.00	-0.00	99.000	7920.00

Detailed Rating Results
Girder G - As Inspected
RI-OP 3
Axle Load
Impact: As Requested
Lane: As Requested

Span 1

							Permit	**Permit**

Location (ft)	Percent	Limit State	Units	Capacity	DL + Adj -LL*	LL	Rating Factor	Load Rating (Ton)
0.00	0.0	Flexure	KSI	-36.00	-0.00	-0.00	99.000	11187.00
0.00	**0.0**	**Shear**	**KIPS**	**222.23**	**68.52**	**60.36**	**1.822**	**205.88**
0.00	0.0	Overload	KSI	-36.00	-0.00	-0.00	99.000	11187.00
0.25	0.2	Flexure	KSI	-36.00	-0.16	-0.04	99.000	11187.00
0.25	**0.2**	**Shear**	**KIPS**	**219.95**	**68.22**	**60.12**	**1.803**	**203.74**
0.25	0.2	Overload	KSI	-36.00	-0.16	-0.04	99.000	11187.00
0.75	0.7	Flexure	KSI	36.00	0.49	0.35	83.227	9404.64
0.75	**0.7**	**Shear**	**KIPS**	**219.95**	**67.61**	**59.64**	**1.829**	**206.63**
0.75	0.7	Overload	KSI	36.00	0.49	0.35	95.221	10760.00
0.83	0.8	Flexure	KSI	36.00	0.55	0.39	75.246	8502.83
0.83	**0.8**	**Shear**	**KIPS**	**222.23**	**67.51**	**59.57**	**1.865**	**210.72**
0.83	0.8	Overload	KSI	36.00	0.55	0.39	86.124	9731.97
4.50	4.1	Flexure	KSI	36.00	2.83	1.97	13.638	1541.09
4.50	**4.1**	**Shear**	**KIPS**	**249.29**	**63.04**	**56.22**	**2.464**	**278.49**
4.50	4.1	Overload	KSI	36.00	2.83	1.97	15.900	1796.65
10.00	**9.1**	**Flexure**	**KSI**	**36.00**	**5.81**	**3.85**	**6.144**	**694.31**
10.00	9.1	Shear	KIPS	459.33	56.33	51.19	6.269	708.43
10.00	9.1	Overload	KSI	36.00	5.81	3.85	7.374	833.26
11.00	**10.0**	**Flexure**	**KSI**	**36.00**	**5.06**	**3.38**	**7.247**	**818.93**
11.00	10.0	Shear	KIPS	542.44	55.11	50.28	7.787	879.96
11.00	10.0	Overload	KSI	36.00	5.06	3.38	8.629	975.11
22.00	**20.0**	**Flexure**	**KSI**	**36.00**	**9.02**	**5.70**	**3.531**	**399.03**
22.00	20.0	Shear	KIPS	542.44	41.69	41.21	9.859	1114.10
22.00	20.0	Overload	KSI	36.00	9.02	5.70	4.413	498.72
25.50	**23.2**	**Flexure**	**KSI**	**36.00**	**10.05**	**6.27**	**3.036**	**343.03**
25.50	23.2	Shear	KIPS	542.44	37.19	38.74	10.616	1199.66
25.50	23.2	Overload	KSI	36.00	10.05	6.27	3.854	435.46
33.00	**30.0**	**Flexure**	**KSI**	**36.00**	**9.29**	**5.80**	**3.420**	**386.43**
33.00	30.0	Shear	KIPS	542.44	27.80	33.43	12.608	1424.75
33.00	30.0	Overload	KSI	36.00	9.29	5.80	4.293	485.08
44.00	**40.0**	**Flexure**	**KSI**	**36.00**	**10.63**	**6.43**	**2.858**	**323.01**
44.00	40.0	Shear	KIPS	542.44	14.01	26.43	16.522	1866.94
44.00	40.0	Overload	KSI	36.00	10.63	6.43	3.666	414.22
49.50	**45.0**	**Flexure**	**KSI**	**36.00**	**10.97**	**6.54**	**2.754**	**311.15**
49.50	45.0	Shear	KIPS	542.44	6.89	23.52	18.894	2135.03
49.50	45.0	Overload	KSI	36.00	10.97	6.54	3.551	401.32
55.00	**50.0**	**Flexure**	**KSI**	**36.00**	**11.08**	**6.49**	**2.759**	**311.77**
55.00	50.0	Shear	KIPS	542.44	0.00	20.75	21.788	2461.99
55.00	50.0	Overload	KSI	36.00	11.08	6.49	3.566	402.91

66.00	**60.0**	**Flexure**	**KSI**	**36.00**	**10.63**	**6.43**	**2.858**	**323.01**
66.00	60.0	Shear	KIPS	542.44	-14.01	-26.43	16.522	1866.94
66.00	60.0	Overload	KSI	36.00	10.63	6.43	3.666	414.22
77.00	**70.0**	**Flexure**	**KSI**	**36.00**	**9.29**	**5.80**	**3.420**	**386.43**
77.00	70.0	Shear	KIPS	542.44	-27.80	-33.43	12.608	1424.75
77.00	70.0	Overload	KSI	36.00	9.29	5.80	4.293	485.08
84.50	**76.8**	**Flexure**	**KSI**	**36.00**	**10.05**	**6.27**	**3.036**	**343.03**
84.50	76.8	Shear	KIPS	542.44	-37.19	-38.74	10.616	1199.66
84.50	76.8	Overload	KSI	36.00	10.05	6.27	3.854	435.46
88.00	**80.0**	**Flexure**	**KSI**	**36.00**	**9.02**	**5.70**	**3.531**	**399.03**
88.00	80.0	Shear	KIPS	542.44	-41.69	-41.21	9.859	1114.10
88.00	80.0	Overload	KSI	36.00	9.02	5.70	4.413	498.72
99.00	**90.0**	**Flexure**	**KSI**	**36.00**	**5.06**	**3.38**	**7.247**	**818.93**
99.00	90.0	Shear	KIPS	542.44	-55.11	-50.28	7.787	879.96
99.00	90.0	Overload	KSI	36.00	5.06	3.38	8.629	975.11
110.00	100.0	Flexure	KSI	-36.00	-0.00	-0.00	99.000	11187.00
110.00	**100.0**	**Shear**	**KIPS**	**336.32**	**-68.52**	**-60.36**	**3.397**	**383.88**
110.00	100.0	Overload	KSI	-36.00	-0.00	-0.00	99.000	11187.00

Detailed Rating Results
Girder G - As Inspected
RIPTA Bus
Axle Load
Impact: As Requested
Lane: As Requested

Span 1

Location (ft)	Percent	Limit State	Units	Capacity	DL + Adj -LL*	LL	Legal Rating Factor	Legal Load Rating (Ton)
0.00	0.0	Flexure	KSI	-36.00	-0.00	-0.00	99.000	2059.20
0.00	**0.0**	**Shear**	**KIPS**	**222.23**	**68.52**	**27.73**	**3.661**	**76.14**
0.00	0.0	Overload	KSI	-36.00	-0.00	-0.00	99.000	2059.20
0.25	0.2	Flexure	KSI	-35.57	-0.16	-0.02	99.000	2059.20
0.25	**0.2**	**Shear**	**KIPS**	**219.95**	**68.22**	**27.66**	**3.617**	**75.24**
0.25	0.2	Overload	KSI	-36.00	-0.16	-0.02	99.000	2059.20
0.75	0.7	Flexure	KSI	-35.54	-0.49	-0.05	99.000	2059.20
0.75	**0.7**	**Shear**	**KIPS**	**219.95**	**67.61**	**27.53**	**3.658**	**76.08**
0.75	0.7	Overload	KSI	-36.00	-0.49	-0.05	99.000	2059.20
0.83	0.8	Flexure	KSI	-35.57	-0.54	-0.06	99.000	2059.20
0.83	**0.8**	**Shear**	**KIPS**	**222.23**	**67.51**	**27.50**	**3.728**	**77.54**

0.83	0.8	Overload	KSI	-36.00	-0.54	-0.06	99.000	2059.20
4.50	4.1	Flexure	KSI	36.00	2.83	0.93	26.701	555.38
4.50	**4.1**	**Shear**	**KIPS**	**249.29**	**63.04**	**26.50**	**4.825**	**100.36**
4.50	4.1	Overload	KSI	36.00	2.83	0.93	25.941	539.57
10.00	**9.1**	**Flexure**	**KSI**	**36.00**	**5.81**	**1.88**	**11.611**	**241.51**
10.00	9.1	Shear	KIPS	459.33	56.33	25.01	11.847	246.42
10.00	9.1	Overload	KSI	36.00	5.81	1.88	11.612	241.54
11.00	10.0	Flexure	KSI	36.00	5.06	1.65	13.683	284.60
11.00	10.0	Shear	KIPS	542.44	55.11	24.73	14.612	303.94
11.00	**10.0**	**Overload**	**KSI**	**36.00**	**5.06**	**1.65**	**13.577**	**282.40**
22.00	**20.0**	**Flexure**	**KSI**	**36.00**	**9.02**	**2.90**	**6.407**	**133.26**
22.00	20.0	Shear	KIPS	542.44	41.69	21.74	17.252	358.84
22.00	20.0	Overload	KSI	36.00	9.02	2.90	6.673	138.79
25.50	**23.2**	**Flexure**	**KSI**	**36.00**	**10.05**	**3.22**	**5.460**	**113.56**
25.50	23.2	Shear	KIPS	542.44	37.19	20.79	18.262	379.85
25.50	23.2	Overload	KSI	36.00	10.05	3.22	5.776	120.14
33.00	**30.0**	**Flexure**	**KSI**	**36.00**	**9.29**	**3.03**	**6.048**	**125.79**
33.00	30.0	Shear	KIPS	542.44	27.80	18.74	20.759	431.79
33.00	30.0	Overload	KSI	36.00	9.29	3.03	6.326	131.59
44.00	**40.0**	**Flexure**	**KSI**	**36.00**	**10.63**	**3.39**	**5.000**	**103.99**
44.00	40.0	Shear	KIPS	542.44	14.01	15.75	25.594	532.35
44.00	40.0	Overload	KSI	36.00	10.63	3.39	5.343	111.13
49.50	**45.0**	**Flexure**	**KSI**	**36.00**	**10.97**	**3.45**	**4.814**	**100.14**
49.50	45.0	Shear	KIPS	542.44	6.89	14.25	28.789	598.81
49.50	45.0	Overload	KSI	36.00	10.97	3.45	5.174	107.63
55.00	**50.0**	**Flexure**	**KSI**	**36.00**	**11.08**	**3.43**	**4.809**	**100.03**
55.00	50.0	Shear	KIPS	542.44	0.00	12.75	32.716	680.50
55.00	50.0	Overload	KSI	36.00	11.08	3.43	5.179	107.73
66.00	**60.0**	**Flexure**	**KSI**	**36.00**	**10.63**	**3.39**	**5.000**	**103.99**
66.00	60.0	Shear	KIPS	542.44	-14.01	-15.75	25.594	532.35
66.00	60.0	Overload	KSI	36.00	10.63	3.39	5.343	111.13
77.00	**70.0**	**Flexure**	**KSI**	**36.00**	**9.29**	**3.03**	**6.048**	**125.79**
77.00	70.0	Shear	KIPS	542.44	-27.80	-18.74	20.759	431.79
77.00	70.0	Overload	KSI	36.00	9.29	3.03	6.326	131.59
84.50	**76.8**	**Flexure**	**KSI**	**36.00**	**10.05**	**3.22**	**5.460**	**113.56**
84.50	76.8	Shear	KIPS	542.44	-37.19	-20.79	18.262	379.85
84.50	76.8	Overload	KSI	36.00	10.05	3.22	5.776	120.14
88.00	**80.0**	**Flexure**	**KSI**	**36.00**	**9.02**	**2.90**	**6.407**	**133.26**
88.00	80.0	Shear	KIPS	542.44	-41.69	-21.74	17.252	358.84
88.00	80.0	Overload	KSI	36.00	9.02	2.90	6.673	138.79
99.00	90.0	Flexure	KSI	36.00	5.06	1.65	13.683	284.60
99.00	90.0	Shear	KIPS	542.44	-55.11	-24.73	14.612	303.94
99.00	**90.0**	**Overload**	**KSI**	**36.00**	**5.06**	**1.65**	**13.577**	**282.40**

110.00	100.0	Flexure	KSI	-36.00	-0.00	-0.00	99.000	2059.20
110.00	**100.0**	**Shear**	**KIPS**	**336.32**	**-68.52**	**-27.73**	**6.825**	**141.97**
110.00	100.0	Overload	KSI	-36.00	-0.00	-0.00	99.000	2059.20

Note:
*Adj-LL is only applicable for Permit load rating.

Bridge Name: Mohegan Bridge
NBI Structure ID:
Bridge ID: 067301

Analyzed By: BrR
Analyze Date: Tuesday, September 18, 2018 07:30:02
Analysis Engine: AASHTO LRFR Engine Version 6.8.2.3002
Analysis Preference Setting: None

Report By: brr
Report Date: Tuesday, September 18, 2018 07:31:02

Structure Definition Name: Span 2
Member Name: Girder A
Member Alternative Name: Girder A - As Inspected

Reactions
Live Load EV2
Impact = 19.998 %

Support	DC Load (kip)	DW Load (kip)	+(LL+I) (kip)	Controlling Live Load	-(LL+I) (kip)	Controlling Live Load
1	50.04	29.43	30.12	Axle Load	0.00	Axle Load
2	50.04	29.43	30.12	Axle Load	0.00	Axle Load

Note:
Impact and distribution factors included in above live load reactions.

This output is used to get DC and DW reactions only, for pier cap rating.
DC and DW reactions are the same for all vehicle loads.

Bridge Name: Mohegan Bridge
NBI Structure ID:
Bridge ID: 067301

Analyzed By: BrR
Analyze Date: Tuesday, September 18, 2018 08:45:53
Analysis Engine: AASHTO LRFR Engine Version 6.8.2.3002
Analysis Preference Setting: None

Report By: brr
Report Date: Tuesday, September 18, 2018 08:48:30

Structure Definition Name: Span 2
Member Name: Girder G
Member Alternative Name: Girder G - As Inspected

Reactions
Live Load EV2
Impact = 19.998 %

Support	DC Load (kip)	DW Load (kip)	+(LL+I) (kip)	Controlling Live Load	-(LL+I) (kip)	Controlling Live Load
1	50.04	18.48	30.12	Axle Load	0.00	Axle Load
2	50.04	18.48	30.12	Axle Load	0.00	Axle Load

Note:
Impact and distribution factors included in above live load reactions.

This output is used to get DC and DW reactions only, for pier cap rating.
DC and DW reactions are the same for all vehicle loads.

Bridge Name: Mohegan Bridge
NBI Structure ID:
Bridge ID: 067301

Analyzed By: BrR
Analyze Date: Tuesday, September 18, 2018 08:01:37
Analysis Engine: AASHTO LRFR Engine Version 6.8.2.3002
Analysis Preference Setting: None

Report By: brr
Report Date: Tuesday, September 18, 2018 08:02:23

Structure Definition Name: Span 2
Member Name: Girder B
Member Alternative Name: Girder B - As Inspected

Reactions
Live Load EV2
Impact = 19.998 %

Support	DC Load (kip)	DW Load (kip)	+(LL+I) (kip)	Controlling Live Load	-(LL+I) (kip)	Controlling Live Load
1	64.47	29.43	42.95	Axle Load	0.00	Axle Load
2	64.47	29.43	42.95	Axle Load	0.00	Axle Load

Note:
Impact and distribution factors included in above live load reactions.

This output is used to get DC and DW reactions only, for pier cap rating.
DC and DW reactions are the same for all vehicle loads.

Bridge Name: Mohegan Bridge
NBI Structure ID:
Bridge ID: 067301

Analyzed By: BrR
Analyze Date: Tuesday, September 18, 2018 08:43:55
Analysis Engine: AASHTO LRFR Engine Version 6.8.2.3002
Analysis Preference Setting: None

Report By: brr
Report Date: Tuesday, September 18, 2018 08:44:38

Structure Definition Name: Span 2
Member Name: Girder C
Member Alternative Name: Girder C - As Inspected

Reactions
Live Load EV2
Impact = 19.998 %

Support	DC Load (kip)	DW Load (kip)	+(LL+I) (kip)	Controlling Live Load	-(LL+I) (kip)	Controlling Live Load
1	64.47	18.48	42.95	Axle Load	0.00	Axle Load
2	64.47	18.48	42.95	Axle Load	0.00	Axle Load

Note:
Impact and distribution factors included in above live load reactions.

This output is used to get DC and DW reactions only, for pier cap rating. DC and DW reactions are the same for all vehicle loads, and interior girders C through F have the same reactions.

License #2010*1TRBF78UHKN6THE

CSiBridge Analysis and Design Report

Prepared by
AECOM

Model Name: Pier Cap reactions.bdb

20 September 2018

Contents

List of Figures

List of Tables

1. Model geometry

This section provides model geometry information, including items such as the layout line and lane definitions.

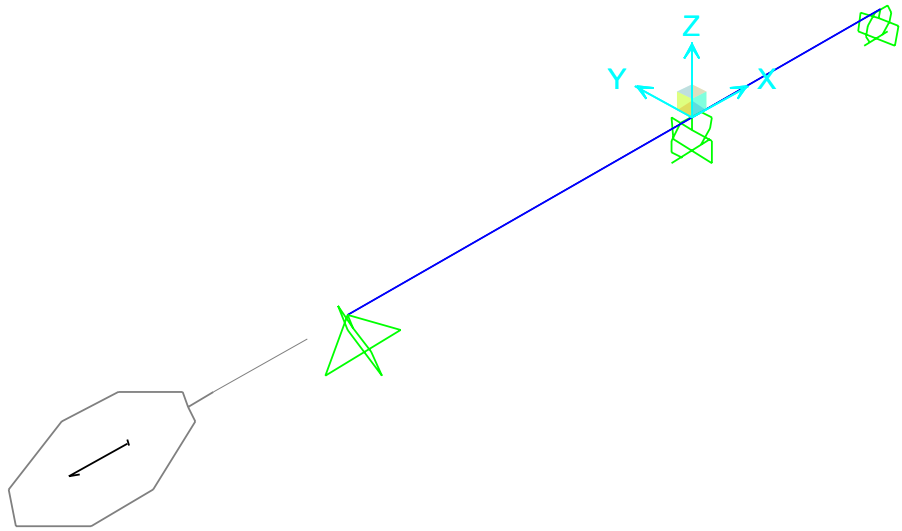

Figure 1: Finite element model

1.1. Layout Line

Table 1: Bridge Layout Line 2 - Horizontal Layout Data, Part 1 of 2

Table 1: Bridge Layout Line 2 - Horizontal Layout Data, Part 1 of 2

LayoutLine	SegType	Station	Radius	Bearing	CoordSys	X
		ft	ft			ft
BLL1	Initial Station and Bearing	-110.		N900000E	GLOBAL	-110.
BLL1	Straight at Previous Bearing to End	110.			GLOBAL	110.

Table 1: Bridge Layout Line 2 - Horizontal Layout Data, Part 2 of 2

Table 1: Bridge Layout Line 2 - Horizontal Layout Data, Part 2 of 2

LayoutLine	Y	GlobalX	GlobalY
	ft	ft	ft
BLL1	0.	-110.	0.
BLL1	0.	110.	0.

Table 2: Bridge Layout Line 3 - Vertical Layout Data

Table 2: Bridge Layout Line 3 - Vertical Layout Data

LayoutLine	SegType	Station	Grade	CoordSys	Z	GlobalZ
		ft	Percent		ft	ft
BLL1	Initial Station, Elevation Z and Grade	-110.	0.	GLOBAL	0.	0.

Table 2: Bridge Layout Line 3 - Vertical Layout Data

LayoutLine	SegType	Station	Grade	CoordSys	Z	GlobalZ
		ft	Percent		ft	ft
BLL1	Constant at Previous Grade to End	110.	0.	GLOBAL	0.	0.

1.2. Lanes

Table 3: Lane Definition Data, Part 1 of 3

Table 3: Lane Definition Data, Part 1 of 3

Lane	LaneFrom	LayoutLine	Station	Width	Offset	Radius	LoadGroup	DiscAlong
			ft	ft	ft	ft		ft
LANE1	Layout Line	BLL1	-110.	0.	0.	0.	Default	10.
LANE1	Layout Line	BLL1	110.	0.	0.	0.	Default	

Table 3: Lane Definition Data, Part 2 of 3

Table 3: Lane Definition Data, Part 2 of 3

Lane	DiscAcross	DiscSpan	DiscSpanFac	DiscLane	DiscLaneFac	LeftType	RightType	Color
	ft							
LANE1	10.	Yes	4.	Yes	10.	Interior	Interior	Yellow
LANE1								

Table 3: Lane Definition Data, Part 3 of 3

Table 3: Lane Definition Data, Part 3 of 3

Lane	Notes
LANE1	
LANE1	

2. Material properties

This section provides material property information for materials used in the model.

Table 4: Material Properties 02 - Basic Mechanical Properties

Table 4: Material Properties 02 - Basic Mechanical Properties

Material	UnitWeight	UnitMass	E1	G12	U12	A1
	Kip/ft3	Kip-s2/ft4	Kip/ft2	Kip/ft2		1/F
4000Psi	1.5000E-01	4.6621E-03	519119.5	216299.79	0.2	5.5000E-06
A709Gr50	4.9000E-01	1.5230E-02	4176000.	1606153.85	0.3	6.5000E-06

Table 5: Material Properties 03a - Steel Data

Table 5: Material Properties 03a - Steel Data

Material	Fy	Fu	FinalSlope
	Kip/ft2	Kip/ft2	
A709Gr50	7200.	9360.	-0.1

Table 6: Material Properties 03b - Concrete Data

Table 6: Material Properties 03b - Concrete Data

Material	Fc	eFc	FinalSlope
	Kip/ft2	Kip/ft2	
4000Psi	576.	576.	-0.1

3. Section properties

This section provides section property information for objects used in the model.

3.1. Frames

Table 7: Frame Section Properties 01 - General, Part 1 of 4

Table 7: Frame Section Properties 01 - General, Part 1 of 4

SectionName	Material	Shape	t3	t2	tf	tw	t2b	tfb
			ft	ft	ft	ft	ft	ft
FSEC1	A709Gr50	I/Wide Flange	1.	0.41667	0.03167	0.02083	0.41667	0.03167

Table 7: Frame Section Properties 01 - General, Part 2 of 4

Table 7: Frame Section Properties 01 - General, Part 2 of 4

SectionName	Area	TorsConst	I33	I22	I23	AS2	AS3
	ft2	ft4	ft4	ft4	ft4	ft2	ft2
FSEC1	0.0459	0.000011	0.007615	0.000382	0.	0.0208	0.022

Table 7: Frame Section Properties 01 - General, Part 3 of 4

Table 7: Frame Section Properties 01 - General, Part 3 of 4

SectionName	S33	S22	Z33	Z22	R33	R22
	ft3	ft3	ft3	ft3	ft	ft
FSEC1	0.01523	0.001836	0.017346	0.00285	0.4073	0.09128

Table 7: Frame Section Properties 01 - General, Part 4 of 4

Table 7: Frame Section Properties 01 - General, Part 4 of 4

SectionName	AMod	A2Mod	A3Mod	JMod	I2Mod	I3Mod	MMod	WMod
FSEC1	1.	1.	1.	1.	1.	1.	1.	1.

4. Loading

This section provides loading information as applied to the model.

4.1. Load patterns

Table 8: Load Pattern Definitions

Table 8: Load Pattern Definitions

LoadPat	DesignType	SelfWtMult	AutoLoad
DEAD	Dead	1.	

4.2. Vehicles

Table 9: Vehicles 2 - General Vehicles 1 - General, Part 1 of 5

Table 9: Vehicles 2 - General Vehicles 1 - General, Part 1 of 5

VehName	FromLibrary	LibraryName	FltAxleFac	AxleFac	UnifFac	SupportMom	IntSupport
AML	Yes	AASHTO.xml	1.	1.	1.	Yes	Yes
HSn-44	Yes	AASHTO.xml	1.	20.	1.	Yes	Yes
HSn-44L	Yes	AASHTO.xml	20.	1.	20.	Yes	Yes
Hn-44	Yes	AASHTO.xml	1.	20.	1.	Yes	Yes
Hn-44L	Yes	AASHTO.xml	20.	1.	20.	Yes	Yes
HL-93M	Yes	AASHTO.xml	1.	1.33	1.	Yes	Yes
HL-93K	Yes	AASHTO.xml	1.	1.33	1.	Yes	Yes
HL-93S	Yes	AASHTO.xml	1.	1.33	1.	Yes	Yes
HL-93LB	Yes	AASHTO.xml	1.	1.33	1.	Yes	Yes
HL-93F	Yes	AASHTO.xml	1.	1.15	1.	Yes	Yes
Lane Type > 200ft	Yes	AASHTO.xml	1.	1.	1.	Yes	Yes
Lane-Type Legal	Yes	AASHTO.xml	1.	1.	1.	Yes	Yes
Type 3-3 Unit	Yes	AASHTO.xml	1.	1.	1.	Yes	Yes
Type 3S2 Unit	Yes	AASHTO.xml	1.	1.	1.	Yes	Yes
Type 3 Unit	Yes	AASHTO.xml	1.	1.	1.	Yes	Yes
COOPERE80	Yes	AREMA.xml	1.	1.	1.	Yes	Yes
P5	Yes	Caltrans.xml	1.	1.	1.	Yes	Yes
P7	Yes	Caltrans.xml	1.	1.	1.	Yes	Yes
P9	Yes	Caltrans.xml	1.	1.	1.	Yes	Yes
P9-F	Yes	Caltrans.xml	1.	1.15	1.	Yes	Yes
P11	Yes	Caltrans.xml	1.	1.	1.	Yes	Yes
P13	Yes	Caltrans.xml	1.	1.	1.	Yes	Yes
P15	Yes	Caltrans.xml	1.	1.25	1.	Yes	Yes
MHE	Yes	Caltrans.xml	1.	1.	1.	Yes	Yes
PHL-93 Truck	Yes	PennDOT.xml	1.	1.	1.	Yes	Yes
PHL-93 Tandem	Yes	PennDOT.xml	1.	1.	1.	Yes	Yes
PHL-93 90% Truck Neg React	Yes	PennDOT.xml	1.	1.	1.	No	Yes

Table 9: Vehicles 2 - General Vehicles 1 - General, Part 1 of 5

VehName	FromLibrary	LibraryName	FltAxleFac	AxleFac	UnifFac	SupportMom	IntSupport
PHL-93 Truck Neg	Yes	PennDOT.xml	1.	1.	1.	Yes	No
PHL-93 Tandem Neg	Yes	PennDOT.xml	1.	1.	1.	Yes	Yes
PHL-93 Truck No IM	Yes	PennDOT.xml	1.	1.	1.	Yes	Yes
PHL-93 Truck Neg No IM	Yes	PennDOT.xml	1.	1.	1.	Yes	No
PHL-93 Tandem No IM	Yes	PennDOT.xml	1.	1.	1.	Yes	Yes
PHL-93 90% Truck Neg React No IM	Yes	PennDOT.xml	1.	1.	1.	No	Yes
PHL-93 Tandem Neg No IM	Yes	PennDOT.xml	1.	1.	1.	Yes	Yes
P-82	Yes	PennDOT.xml	1.	1.	1.	Yes	Yes
ML-80	Yes	PennDOT.xml	1.	1.	1.	Yes	Yes
TK527 All Lift	Yes	PennDOT.xml	1.	1.	1.	Yes	Yes
TK527 No Lift	Yes	PennDOT.xml	1.	1.	1.	Yes	Yes
P-Deflection	Yes	PennDOT.xml	1.	1.	1.	Yes	Yes
P-Deflection 25%+Lane	Yes	PennDOT.xml	1.	1.	1.	Yes	Yes
P-Fatigue	Yes	PennDOT.xml	1.	1.	1.	Yes	Yes
HL-93-TRUCK	No	User Defined	1.	1.	1.	Yes	Yes
HL-93-TANDEM	No	User Defined	1.	1.	1.	Yes	Yes
H20	No	User Defined	1.	1.	1.	Yes	Yes
TYPE 3	No	User Defined	1.	1.	1.	Yes	Yes
TYPE 3S2	No	User Defined	1.	1.	1.	Yes	Yes
TYPE 3-3	No	User Defined	1.	1.	1.	Yes	Yes
RI-3	No	User Defined	1.	1.	1.	Yes	Yes
RI-4	No	User Defined	1.	1.	1.	Yes	Yes
RI-OP1	No	User Defined	1.	1.	1.	Yes	Yes
RI-6	No	User Defined	1.	1.	1.	Yes	Yes
RI-OP2	No	User Defined	1.	1.	1.	Yes	Yes
RI-OP3	No	User Defined	1.	1.	1.	Yes	Yes
RI-5	No	User Defined	1.	1.	1.	Yes	Yes
SU4	No	User Defined	1.	1.	1.	Yes	Yes
SU5	No	User Defined	1.	1.	1.	Yes	Yes
SU6	No	User Defined	1.	1.	1.	Yes	Yes
SU7	No	User Defined	1.	1.	1.	Yes	Yes
EV2	No	User Defined	1.	1.	1.	Yes	Yes
EV3	No	User Defined	1.	1.	1.	Yes	Yes
RIPTA	No	User Defined	1.	1.	1.	Yes	Yes
LTLLM	No	User Defined	1.	1.	1.	Yes	Yes
HL-93-NEG	No	User Defined	1.	1.	1.	Yes	Yes

Table 9: Vehicles 2 - General Vehicles 1 - General, Part 2 of 5

Table 9: Vehicles 2 - General Vehicles 1 - General, Part 2 of 5

VehName	OtherResp	AxleMom	AxleMType	AxleMWidth	AxleMDbl	AxleOther	AxleOType
		Kip		ft		Kip	
AML	Yes	0.		1.	No	0.	
HSn-44	Yes	0.		1.	No	0.	
HSn-44L	Yes	0.9	Fixed Width Line	10.	Yes	1.3	Fixed Width Line
Hn-44	Yes	0.		1.	No	0.	
Hn-44L	Yes	0.9	Fixed Width Line	10.	Yes	1.3	Fixed Width Line
HL-93M	Yes	0.		1.	No	0.	
HL-93K	Yes	0.		1.	No	0.	
HL-93S	No	0.		1.	No	0.	
HL-93LB	No	0.		1.	No	0.	
HL-93F	Yes	0.		1.	No	0.	
Lane Type > 200ft	Yes	0.		1.	No	0.	
Lane-Type Legal	No	0.		1.	No	0.	
Type 3-3 Unit	Yes	0.		1.	No	0.	
Type 3S2 Unit	Yes	0.		1.	No	0.	
Type 3 Unit	Yes	0.		1.	No	0.	
COOPERE80	Yes	0.		1.	No	0.	
P5	Yes	0.		1.	No	0.	
P7	Yes	0.		1.	No	0.	
P9	Yes	0.		1.	No	0.	
P9-F	Yes	0.		1.	No	0.	
P11	Yes	0.		1.	No	0.	
P13	Yes	0.		1.	No	0.	
P15	Yes	0.		1.	No	0.	
MHE	Yes	0.		1.	No	0.	
PHL-93 Truck	Yes	0.		1.	No	0.	
PHL-93 Tandem	Yes	0.		1.	No	0.	
PHL-93 90% Truck Neg React	No	0.		1.	No	0.	
PHL-93 Truck Neg	No	0.		1.	No	0.	
PHL-93 Tandem Neg	No	0.		1.	No	0.	
PHL-93 Truck No IM	Yes	0.		1.	No	0.	
PHL-93 Truck Neg No IM	No	0.		1.	No	0.	
PHL-93 Tandem No IM	Yes	0.		1.	No	0.	
PHL-93 90% Truck Neg React No IM	No	0.		1.	No	0.	
PHL-93 Tandem Neg No IM	No	0.		1.	No	0.	
P-82	Yes	0.		1.	No	0.	
ML-80	Yes	0.		1.	No	0.	
TK527 All Lift	Yes	0.		1.	No	0.	
TK527 No Lift	Yes	0.		1.	No	0.	
P-Deflection	Yes	0.		1.	No	0.	
P-Deflection 25%+Lane	Yes	0.		1.	No	0.	
P-Fatigue	Yes	0.		1.	No	0.	
HL-93-TRUCK	Yes	0.	One Point		No	0.	One Point
HL-93-TANDEM	Yes	0.	One Point		No	0.	One Point
H20	Yes	0.	One Point		No	0.	One Point
TYPE 3	Yes	0.	One Point		No	0.	One Point
TYPE 3S2	Yes	0.	One Point		No	0.	One Point

Table 9: Vehicles 2 - General Vehicles 1 - General, Part 2 of 5

VehName	OtherResp	AxleMom	AxleMType	AxleMWidth	AxleMDbl	AxleOther	AxleOType
		Kip		ft		Kip	
TYPE 3-3	Yes	0.	One Point		No	0.	One Point
RI-3	Yes	0.	One Point		No	0.	One Point
RI-4	Yes	0.	One Point		No	0.	One Point
RI-OP1	Yes	0.	One Point		No	0.	One Point
RI-6	Yes	0.	One Point		No	0.	One Point
RI-OP2	Yes	0.	One Point		No	0.	One Point
RI-OP3	Yes	0.	One Point		No	0.	One Point
RI-5	Yes	0.	One Point		No	0.	One Point
SU4	Yes	0.	One Point		No	0.	One Point
SU5	Yes	0.	One Point		No	0.	One Point
SU6	Yes	0.	One Point		No	0.	One Point
SU7	Yes	0.	One Point		No	0.	One Point
EV2	Yes	0.	One Point		No	0.	One Point
EV3	Yes	0.	One Point		No	0.	One Point
RIPTA	Yes	0.	One Point		No	0.	One Point
LTLLM	Yes	0.		1.	No	0.	
HL-93-NEG	Yes	0.	One Point		No	0.	One Point

Table 9: Vehicles 2 - General Vehicles 1 - General, Part 3 of 5

Table 9: Vehicles 2 - General Vehicles 1 - General, Part 3 of 5

VehName	AxleOWidth	LEffAxle	LEffUnif	ForStraddle	StraddleFac	NumInter	MinExtDist
	ft						ft
AML	1.	None	None	No		0	1.
HSn-44	1.	None	None	No		0	1.
HSn-44L	10.	None	None	No		0	1.
Hn-44	1.	None	None	No		0	1.
Hn-44L	10.	None	None	No		0	1.
HL-93M	1.	None	None	No		0	1.
HL-93K	1.	None	None	No		0	1.
HL-93S	1.	None	None	No		0	1.
HL-93LB	1.	None	None	No		0	1.
HL-93F	1.	None	None	No		0	1.
Lane Type > 200ft	1.	None	None	No		0	1.
Lane-Type Legal	1.	None	None	No		0	1.
Type 3-3 Unit	1.	None	None	No		0	1.
Type 3S2 Unit	1.	None	None	No		0	1.
Type 3 Unit	1.	None	None	No		0	1.
COOPERE80	1.	None	None	No		0	0.
P5	1.	None	None	No		0	1.
P7	1.	None	None	No		0	1.
P9	1.	None	None	No		0	1.
P9-F	1.	None	None	No		0	1.
P11	1.	None	None	No		0	1.
P13	1.	None	None	No		0	1.
P15	1.	None	None	No		0	1.
MHE	1.	None	None	No		0	0.
PHL-93 Truck	1.	None	None	No		0	1.
PHL-93 Tandem	1.	None	None	No		0	1.
PHL-93 90% Truck Neg React	1.	None	None	No		0	1.
PHL-93 Truck Neg	1.	None	None	No		0	1.
PHL-93 Tandem Neg	1.	None	None	No		0	1.
PHL-93 Truck No IM	1.	None	None	No		0	1.

Table 9: Vehicles 2 - General Vehicles 1 - General, Part 3 of 5

VehName	AxleOWidth	LEffAxle	LEffUnif	ForStraddle	StraddleFac	NumInter	MinExtDist
	ft						ft
PHL-93 Truck Neg No IM	1.	None	None	No		0	1.
PHL-93 Tandem No IM	1.	None	None	No		0	1.
PHL-93 90% Truck Neg React No IM	1.	None	None	No		0	1.
PHL-93 Tandem Neg No IM	1.	None	None	No		0	1.
P-82	1.	None	None	No		0	1.
ML-80	1.	None	None	No		0	1.
TK527 All Lift	1.	None	None	No		0	1.
TK527 No Lift	1.	None	None	No		0	1.
P-Deflection	1.	None	None	No		0	1.
P-Deflection 25%+Lane	1.	None	None	No		0	1.
P-Fatigue	1.	None	None	No		0	1.
HL-93-TRUCK		User	None	No		4	2.
HL-93-TANDEM		User	None	No		3	2.
H20		User	None	No		2	2.
TYPE 3		User	None	No		3	2.
TYPE 3S2		User	None	No		5	2.
TYPE 3-3		User	None	No		6	2.
RI-3		User	None	No		3	2.
RI-4		User	None	No		4	2.
RI-OP1		User	None	No		5	2.
RI-6		User	None	No		6	2.
RI-OP2		User	None	No		8	2.
RI-OP3		User	None	No		13	2.
RI-5		User	None	No		5	2.
SU4		User	None	No		4	2.
SU5		User	None	No		5	2.
SU6		User	None	No		6	2.
SU7		User	None	No		7	2.
EV2		User	None	No		2	2.
EV3		User	None	No		3	2.
RIPTA		User	None	No		2	2.
LTLLM	1.	User	None	No		13	2.
HL-93-NEG		User	None	No		7	2.

Table 9: Vehicles 2 - General Vehicles 1 - General, Part 4 of 5

Table 9: Vehicles 2 - General Vehicles 1 - General, Part 4 of 5

VehName	MinIntDist	StayInLane	CGHTAxle	CGHTUnif	Notes	AdjustSuper
	ft		ft	ft		
AML	2.	No	0.	0.		No
HSn-44	2.	No	0.	0.		No
HSn-44L	2.	No	0.	0.		No
Hn-44	2.	No	0.	0.		No
Hn-44L	2.	No	0.	0.		No
HL-93M	2.	No	0.	0.		No
HL-93K	2.	No	0.	0.		No
HL-93S	2.	No	0.	0.		No
HL-93LB	2.	No	0.	0.		No
HL-93F	2.	No	0.	0.		No

Table 9: Vehicles 2 - General Vehicles 1 - General, Part 4 of 5

VehName	MinIntDist	StayInLane	CGHTAxle	CGHTUnif	Notes	AdjustSuper
	ft		ft	ft		
Lane Type > 200ft	2.	No	0.	0.		No
Lane-Type Legal	2.	No	0.	0.		No
Type 3-3 Unit	2.	No	0.	0.		No
Type 3S2 Unit	2.	No	0.	0.		No
Type 3 Unit	2.	No	0.	0.		No
COOPERE80	0.	No	0.	0.		No
P5	2.	No	0.	0.		No
P7	2.	No	0.	0.		No
P9	2.	No	0.	0.		No
P9-F	2.	No	0.	0.		No
P11	2.	No	0.	0.		No
P13	2.	No	0.	0.		No
P15	2.	No	0.	0.		No
MHE	0.	No	0.	0.		No
PHL-93 Truck	2.	No	0.	0.		No
PHL-93 Tandem	2.	No	0.	0.		No
PHL-93 90% Truck Neg React	2.	No	0.	0.		No
PHL-93 Truck Neg	2.	No	0.	0.		No
PHL-93 Tandem Neg	2.	No	0.	0.		No
PHL-93 Truck No IM	2.	No	0.	0.		No
PHL-93 Truck Neg No IM	2.	No	0.	0.		No
PHL-93 Tandem No IM	2.	No	0.	0.		No
PHL-93 90% Truck Neg React No IM	2.	No	0.	0.		No
PHL-93 Tandem Neg No IM	2.	No	0.	0.		No
P-82	2.	No	0.	0.		No
ML-80	2.	No	0.	0.		No
TK527 All Lift	2.	No	0.	0.		No
TK527 No Lift	2.	No	0.	0.		No
P-Deflection	2.	No	0.	0.		No
P-Deflection 25%+Lane	2.	No	0.	0.		No
P-Fatigue	2.	No	0.	0.		No
HL-93-TRUCK	2.	No	0.	0.		No
HL-93-TANDEM	2.	No	0.	0.		No
H20	2.	No	0.	0.		No
TYPE 3	2.	No	0.	0.		No
TYPE 3S2	2.	No	0.	0.		No
TYPE 3-3	2.	No	0.	0.		No
RI-3	2.	No	0.	0.		No
RI-4	2.	No	0.	0.		No
RI-OP1	2.	No	0.	0.		No
RI-6	2.	No	0.	0.		No
RI-OP2	2.	No	0.	0.		No
RI-OP3	2.	No	0.	0.		No
RI-5	2.	No	0.	0.		No
SU4	2.	No	0.	0.		No
SU5	2.	No	0.	0.		No
SU6	2.	No	0.	0.		No
SU7	2.	No	0.	0.		No
EV2	2.	No	0.	0.		No

Table 9: Vehicles 2 - General Vehicles 1 - General, Part 4 of 5

VehName	MinIntDist	StayInLane	CGHTAxle	CGHTUnif	Notes	AdjustSuper
	ft		ft	ft		
EV3	2.	No	0.	0.		No
RIPTA	2.	No	0.	0.		No
LTLLM	2.	No	0.	0.		No
HL-93-NEG	2.	No	0.	0.		No

Table 9: Vehicles 2 - General Vehicles 1 - General, Part 5 of 5

Table 9: Vehicles 2 - General Vehicles 1 - General, Part 5 of 5

VehName	IgnoreVert	Centrifugal	Braking	NosingForce	DesignType
				Kip	
AML	No	No	No	0.	Vehicle Live
HSn-44	No	No	No	0.	Vehicle Live
HSn-44L	No	No	No	0.	Vehicle Live
Hn-44	No	No	No	0.	Vehicle Live
Hn-44L	No	No	No	0.	Vehicle Live
HL-93M	No	No	No	0.	Vehicle Live
HL-93K	No	No	No	0.	Vehicle Live
HL-93S	No	No	No	0.	Vehicle Live
HL-93LB	No	No	No	0.	Vehicle Live
HL-93F	No	No	No	0.	Vehicle Fatigue
Lane Type > 200ft	No	No	No	0.	Vehicle Live
Lane-Type Legal	No	No	No	0.	Vehicle Live
Type 3-3 Unit	No	No	No	0.	Vehicle Live
Type 3S2 Unit	No	No	No	0.	Vehicle Live
Type 3 Unit	No	No	No	0.	Vehicle Live
COOPERE80	No	No	No	0.	Vehicle Live
P5	No	No	No	0.	Permit Veh Live
P7	No	No	No	0.	Permit Veh Live
P9	No	No	No	0.	Permit Veh Live
P9-F	No	No	No	0.	Permit Veh Fatigue
P11	No	No	No	0.	Permit Veh Live
P13	No	No	No	0.	Permit Veh Live
P15	No	No	No	0.	Permit Veh Live
MHE	No	No	No	0.	Vehicle Live
PHL-93 Truck	No	No	No	0.	Vehicle Live
PHL-93 Tandem	No	No	No	0.	Vehicle Live
PHL-93 90% Truck Neg React	No	No	No	0.	Vehicle Live
PHL-93 Truck Neg	No	No	No	0.	Vehicle Live
PHL-93 Tandem Neg	No	No	No	0.	Vehicle Live
PHL-93 Truck No IM	No	No	No	0.	Vehicle Live
PHL-93 Truck Neg No IM	No	No	No	0.	Vehicle Live
PHL-93 Tandem No IM	No	No	No	0.	Vehicle Live
PHL-93 90% Truck Neg React No IM	No	No	No	0.	Vehicle Live
PHL-93 Tandem Neg No IM	No	No	No	0.	Vehicle Live
P-82	No	No	No	0.	Permit Veh Live
ML-80	No	No	No	0.	Permit Veh Live
TK527 All Lift	No	No	No	0.	Permit Veh Live
TK527 No Lift	No	No	No	0.	Permit Veh Live

Table 9: Vehicles 2 - General Vehicles 1 - General, Part 5 of 5

VehName	IgnoreVert	Centrifugal	Braking	NosingForce Kip	DesignType
P-Deflection	No	No	No	0.	Vehicle Deflection
P-Deflection 25%+Lane	No	No	No	0.	Vehicle Deflection
P-Fatigue	No	No	No	0.	Vehicle Fatigue
HL-93-TRUCK	No	No	No	0.	Vehicle Live
HL-93-TANDEM	No	No	No	0.	Vehicle Live
H20	No	No	No	0.	Vehicle Live
TYPE 3	No	No	No	0.	Vehicle Live
TYPE 3S2	No	No	No	0.	Vehicle Live
TYPE 3-3	No	No	No	0.	Vehicle Live
RI-3	No	No	No	0.	Vehicle Live
RI-4	No	No	No	0.	Vehicle Live
RI-OP1	No	No	No	0.	Vehicle Live
RI-6	No	No	No	0.	Vehicle Live
RI-OP2	No	No	No	0.	Vehicle Live
RI-OP3	No	No	No	0.	Vehicle Live
RI-5	No	No	No	0.	Vehicle Live
SU4	No	No	No	0.	Vehicle Live
SU5	No	No	No	0.	Vehicle Live
SU6	No	No	No	0.	Vehicle Live
SU7	No	No	No	0.	Vehicle Live
EV2	No	No	No	0.	Vehicle Live
EV3	No	No	No	0.	Vehicle Live
RIPTA	No	No	No	0.	Vehicle Live
LTLLM	No	No	No	0.	Vehicle Live
HL-93-NEG	No	No	No	0.	Vehicle Live

Table 10: Vehicles 3 - General Vehicles 2 - Loads, Part 1 of 2

Table 10: Vehicles 3 - General Vehicles 2 - Loads, Part 1 of 2

VehName	LoadType	UnifLoad Kip/ft	UnifType	UnifWidth ft	AxleLoad Kip	AxleType	AxleWidth ft	MinDist ft
HL-93-TRUCK	Leading Load	0.64	Fixed Width	10.	8.	Two Points	6.	
HL-93-TRUCK	Fixed Length	0.64	Fixed Width	10.	32.	Two Points	6.	14.
HL-93-TRUCK	Variable Length	0.64	Fixed Width	10.	32.	Two Points	6.	14.
HL-93-TRUCK	Trailing Load	0.64	Fixed Width	10.				
HL-93-TANDEM	Leading Load	0.64	Fixed Width	10.	25.	Two Points	6.	
HL-93-TANDEM	Fixed Length	0.64	Fixed Width	10.	25.	Two Points	6.	4.
HL-93-TANDEM	Trailing Load	0.64	Fixed Width	10.				
H20	Leading Load	0.	Fixed Width	10.	8.	Two Points	6.	
H20	Fixed Length	0.	Fixed Width	10.	32.	Two Points	6.	14.
TYPE 3	Leading Load	0.	Fixed Width	10.	16.	Two Points	6.	
TYPE 3	Fixed Length	0.	Fixed Width	10.	17.	Two Points	6.	15.
TYPE 3	Fixed Length	0.	Fixed Width	10.	17.	Two Points	6.	4.

Table 10: Vehicles 3 - General Vehicles 2 - Loads, Part 1 of 2

VehName	LoadType	UnifLoad	UnifType	UnifWidth	AxleLoad	AxleType	AxleWidth	MinDist
		Kip/ft		ft	Kip		ft	ft
TYPE 3S2	Leading Load	0.	Fixed Width	10.	10.	Two Points	6.	
TYPE 3S2	Fixed Length	0.	Fixed Width	10.	15.5	Two Points	6.	11.
TYPE 3S2	Fixed Length	0.	Fixed Width	10.	15.5	Two Points	6.	4.
TYPE 3S2	Fixed Length	0.	Fixed Width	10.	15.5	Two Points	6.	22.
TYPE 3S2	Fixed Length	0.	Fixed Width	10.	15.5	Two Points	6.	4.
TYPE 3-3	Leading Load	0.	Fixed Width	10.	12.	Two Points	6.	
TYPE 3-3	Fixed Length	0.	Fixed Width	10.	12.	Two Points	6.	15.
TYPE 3-3	Fixed Length	0.	Fixed Width	10.	12.	Two Points	6.	4.
TYPE 3-3	Fixed Length	0.	Fixed Width	10.	16.	Two Points	6.	15.
TYPE 3-3	Fixed Length	0.	Fixed Width	10.	14.	Two Points	6.	16.
TYPE 3-3	Fixed Length	0.	Fixed Width	10.	14.	Two Points	6.	4.
RI-3	Leading Load	0.	Fixed Width	10.	18.	Two Points	6.	
RI-3	Fixed Length	0.	Fixed Width	10.	29.	Two Points	6.	12.9167
RI-3	Fixed Length	0.	Fixed Width	10.	29.	Two Points	6.	4.5833
RI-4	Leading Load	0.	Fixed Width	10.	18.1	Two Points	6.	
RI-4	Fixed Length	0.	Fixed Width	10.	17.3	Two Points	6.	8.6667
RI-4	Fixed Length	0.	Fixed Width	10.	19.8	Two Points	6.	4.4167
RI-4	Fixed Length	0.	Fixed Width	10.	19.8	Two Points	6.	4.4167
RI-OP1	Leading Load	0.	Fixed Width	10.	13.	Two Points	6.	
RI-OP1	Fixed Length	0.	Fixed Width	10.	25.	Two Points	6.	5.3333
RI-OP1	Fixed Length	0.	Fixed Width	10.	25.	Two Points	6.	6.5
RI-OP1	Fixed Length	0.	Fixed Width	10.	25.	Two Points	6.	5.3333
RI-OP1	Fixed Length	0.	Fixed Width	10.	25.	Two Points	6.	8.25
RI-6	Leading Load	0.	Fixed Width	10.	12.	Two Points	6.	
RI-6	Fixed Length	0.	Fixed Width	10.	18.	Two Points	6.	8.25
RI-6	Fixed Length	0.	Fixed Width	10.	25.	Two Points	6.	4.25
RI-6	Fixed Length	0.	Fixed Width	10.	25.	Two Points	6.	33.5
RI-6	Fixed Length	0.	Fixed Width	10.	25.	Two Points	6.	4.5
RI-6	Fixed Length	0.	Fixed Width	10.	25.	Two Points	6.	4.5
RI-OP2	Leading Load	0.	Fixed Width	10.	13.	Two Points	6.	
RI-OP2	Fixed Length	0.	Fixed Width	10.	21.	Two Points	6.	15.6667
RI-OP2	Fixed Length	0.	Fixed Width	10.	21.	Two Points	6.	4.3333
RI-OP2	Fixed Length	0.	Fixed Width	10.	21.	Two Points	6.	4.4167
RI-OP2	Fixed Length	0.	Fixed Width	10.	21.	Two Points	6.	35.
RI-OP2	Fixed Length	0.	Fixed Width	10.	21.	Two Points	6.	4.25
RI-OP2	Fixed Length	0.	Fixed Width	10.	21.	Two Points	6.	4.25
RI-OP2	Fixed Length	0.	Fixed Width	10.	21.	Two Points	6.	4.25
RI-OP3	Leading Load	0.	Fixed Width	10.	9.	Two Points	6.	
RI-OP3	Fixed Length	0.	Fixed Width	10.	15.	Two Points	6.	11.75
RI-OP3	Fixed Length	0.	Fixed Width	10.	17.	Two Points	6.	4.25
RI-OP3	Fixed Length	0.	Fixed Width	10.	17.	Two Points	6.	4.5
RI-OP3	Fixed Length	0.	Fixed Width	10.	17.	Two Points	6.	15.
RI-OP3	Fixed Length	0.	Fixed Width	10.	17.	Two Points	6.	4.
RI-OP3	Fixed Length	0.	Fixed Width	10.	14.	Two Points	6.	5.5833
RI-OP3	Fixed Length	0.	Fixed Width	10.	20.	Two Points	6.	36.
RI-OP3	Fixed Length	0.	Fixed Width	10.	20.	Two Points	6.	4.3333
RI-OP3	Fixed Length	0.	Fixed Width	10.	20.	Two Points	6.	4.3333
RI-OP3	Fixed Length	0.	Fixed Width	10.	20.	Two Points	6.	10.5

Table 10: Vehicles 3 - General Vehicles 2 - Loads, Part 1 of 2

VehName	LoadType	UnifLoad	UnifType	UnifWidth	AxleLoad	AxleType	AxleWidth	MinDist
		Kip/ft		ft	Kip		ft	ft
RI-OP3	Fixed Length	0.	Fixed Width	10.	20.	Two Points	6.	4.3333
RI-OP3	Fixed Length	0.	Fixed Width	10.	20.	Two Points	6.	4.3333
RI-5	Leading Load	0.	Fixed Width	10.	12.	Two Points	6.	
RI-5	Fixed Length	0.	Fixed Width	10.	23.2	Two Points	6.	8.
RI-5	Fixed Length	0.	Fixed Width	10.	23.2	Two Points	6.	4.5
RI-5	Fixed Length	0.	Fixed Width	10.	23.2	Two Points	6.	14.
RI-5	Fixed Length	0.	Fixed Width	10.	23.2	Two Points	6.	4.5
SU4	Leading Load	0.	Fixed Width	10.	12.	Two Points	6.	
SU4	Fixed Length	0.	Fixed Width	10.	8.	Two Points	6.	10.
SU4	Fixed Length	0.	Fixed Width	10.	17.	Two Points	6.	4.
SU4	Fixed Length	0.	Fixed Width	10.	17.	Two Points	6.	4.
SU5	Leading Load	0.	Fixed Width	10.	12.	Two Points	6.	
SU5	Fixed Length	0.	Fixed Width	10.	8.	Two Points	6.	10.
SU5	Fixed Length	0.	Fixed Width	10.	8.	Two Points	6.	4.
SU5	Fixed Length	0.	Fixed Width	10.	17.	Two Points	6.	4.
SU5	Fixed Length	0.	Fixed Width	10.	17.	Two Points	6.	4.
SU6	Leading Load	0.	Fixed Width	10.	11.5	Two Points	6.	
SU6	Fixed Length	0.	Fixed Width	10.	8.	Two Points	6.	10.
SU6	Fixed Length	0.	Fixed Width	10.	8.	Two Points	6.	4.
SU6	Fixed Length	0.	Fixed Width	10.	17.	Two Points	6.	4.
SU6	Fixed Length	0.	Fixed Width	10.	17.	Two Points	6.	4.
SU6	Fixed Length	0.	Fixed Width	10.	8.	Two Points	6.	4.
SU7	Leading Load	0.	Fixed Width	10.	11.5	Two Points	6.	
SU7	Fixed Length	0.	Fixed Width	10.	8.	Two Points	6.	10.
SU7	Fixed Length	0.	Fixed Width	10.	8.	Two Points	6.	4.
SU7	Fixed Length	0.	Fixed Width	10.	17.	Two Points	6.	4.
SU7	Fixed Length	0.	Fixed Width	10.	17.	Two Points	6.	4.
SU7	Fixed Length	0.	Fixed Width	10.	8.	Two Points	6.	4.
SU7	Fixed Length	0.	Fixed Width	10.	8.	Two Points	6.	4.
EV2	Leading Load	0.	Fixed Width	10.	24.	Two Points	6.	
EV2	Fixed Length	0.	Fixed Width	10.	33.5	Two Points	6.	15.
EV3	Leading Load	0.	Fixed Width	10.	24.	Two Points	6.	
EV3	Fixed Length	0.	Fixed Width	10.	31.	Two Points	6.	15.
EV3	Fixed Length	0.	Fixed Width	10.	31.	Two Points	6.	4.
RIPTA	Leading Load	0.	Fixed Width	10.	14.6	Two Points	6.	
RIPTA	Fixed Length	0.	Fixed Width	10.	27.	Two Points	6.	23.25
LTLLM	Leading Load	0.2	Fixed Width	10.	9.	Two Points	6.	
LTLLM	Fixed Length	0.2	Fixed Width	10.	9.	Two Points	6.	15.
LTLLM	Fixed Length	0.2	Fixed Width	10.	9.	Two Points	6.	4.
LTLLM	Fixed Length	0.2	Fixed Width	10.	12.	Two Points	6.	15.
LTLLM	Fixed Length	0.2	Fixed Width	10.	10.5	Two Points	6.	16.
LTLLM	Fixed Length	0.2	Fixed Width	10.	10.5	Two Points	6.	4.
LTLLM	Fixed Length	0.2	Fixed Width	10.	9.	Two Points	6.	30.
LTLLM	Fixed Length	0.2	Fixed Width	10.	9.	Two Points	6.	15.
LTLLM	Fixed Length	0.2	Fixed Width	10.	9.	Two Points	6.	4.
LTLLM	Fixed Length	0.2	Fixed Width	10.	12.	Two Points	6.	15.
LTLLM	Fixed Length	0.2	Fixed Width	10.	10.5	Two Points	6.	16.

Table 10: Vehicles 3 - General Vehicles 2 - Loads, Part 1 of 2

VehName	LoadType	UnifLoad	UnifType	UnifWidth	AxleLoad	AxleType	AxleWidth	MinDist
		Kip/ft		ft	Kip		ft	ft
LTLLM	Fixed Length	0.2	Fixed Width	10.	10.5	Two Points	6.	4.
LTLLM	Trailing Load	0.2	Fixed Width	10.				
HL-93-NEG	Leading Load	0.576	Fixed Width	10.	7.2	Two Points	6.	
HL-93-NEG	Fixed Length	0.576	Fixed Width	10.	28.8	Two Points	6.	14.
HL-93-NEG	Fixed Length	0.576	Fixed Width	10.	28.8	Two Points	6.	14.
HL-93-NEG	Fixed Length	0.576	Fixed Width	10.	7.2	Two Points	6.	50.
HL-93-NEG	Fixed Length	0.576	Fixed Width	10.	28.8	Two Points	6.	14.
HL-93-NEG	Fixed Length	0.576	Fixed Width	10.	28.8	Two Points	6.	14.
HL-93-NEG	Trailing Load	0.576	Fixed Width	10.				

Table 10: Vehicles 3 - General Vehicles 2 - Loads, Part 2 of 2

Table 10: Vehicles 3 - General Vehicles 2 - Loads, Part 2 of 2

VehName	MaxDist
	ft
HL-93-TRUCK	
HL-93-TRUCK	
HL-93-TRUCK	30.
HL-93-TRUCK	
HL-93-TANDEM	
HL-93-TANDEM	
HL-93-TANDEM	
H20	
H20	
TYPE 3	
TYPE 3	
TYPE 3	
TYPE 3S2	
TYPE 3S2	
TYPE 3S2	
TYPE 3S2	
TYPE 3S2	
TYPE 3-3	
TYPE 3-3	
TYPE 3-3	
TYPE 3-3	
TYPE 3-3	
TYPE 3-3	
RI-3	
RI-3	
RI-3	
RI-4	
RI-4	
RI-4	
RI-4	

Table 10: Vehicles 3 - General Vehicles 2 - Loads, Part 2 of 2

VehName	MaxDist
	ft
RI-OP1	
RI-OP1	
RI-OP1	
RI-OP1	
RI-OP1	
RI-6	
RI-6	
RI-6	
RI-6	
RI-6	
RI-6	
RI-OP2	
RI-OP2	
RI-OP2	
RI-OP2	
RI-OP2	
RI-OP2	
RI-OP2	
RI-OP2	
RI-OP3	
RI-OP3	
RI-OP3	
RI-OP3	
RI-OP3	
RI-OP3	
RI-OP3	
RI-OP3	
RI-OP3	
RI-OP3	
RI-OP3	
RI-OP3	
RI-5	
RI-5	
RI-5	
RI-5	
RI-5	
SU4	
SU4	
SU4	
SU4	
SU5	
SU5	
SU5	
SU5	
SU5	
SU6	
SU6	
SU6	
SU6	
SU6	
SU6	
SU7	

Table 10: Vehicles 3 - General Vehicles 2 - Loads, Part 2 of 2

VehName	MaxDist ft
SU7	
SU7	
SU7	
SU7	
SU7	
SU7	
EV2	
EV2	
EV3	
EV3	
EV3	
RIPTA	
RIPTA	
LTLLM	
LTLLM	
LTLLM	
LTLLM	
LTLLM	
LTLLM	
LTLLM	
LTLLM	
LTLLM	
LTLLM	
LTLLM	
LTLLM	
LTLLM	
HL-93-NEG	
HL-93-NEG	
HL-93-NEG	
HL-93-NEG	
HL-93-NEG	
HL-93-NEG	
HL-93-NEG	

Table 11: Vehicles 4 - Vehicle Classes

Table 11: Vehicles 4 - Vehicle Classes

VehClass	VehName	ScaleFactor
AML	AML	1.
HSn-44	HSn-44	1.
HSn-44L	HSn-44L	1.
Hn-44	Hn-44	1.
Hn-44L	Hn-44L	1.
HL-93M	HL-93M	1.
HL-93K	HL-93K	1.
HL-93S	HL-93S	1.
HL-93LB	HL-93LB	1.
HL-93F	HL-93F	1.
Lane Type > 200ft	Lane Type > 200ft	1.
Lane-Type Legal	Lane-Type Legal	1.

Table 11: Vehicles 4 - Vehicle Classes

VehClass	VehName	ScaleFactor
Type 3-3 Unit	Type 3-3 Unit	1.
Type 3S2 Unit	Type 3S2 Unit	1.
Type 3 Unit	Type 3 Unit	1.
COOPERE80	COOPERE80	1.
P5	P5	1.
P7	P7	1.
P9	P9	1.
P9-F	P9-F	1.
P11	P11	1.
P13	P13	1.
P15	P15	1.
MHE	MHE	1.
PHL-93 Truck	PHL-93 Truck	1.
PHL-93 Tandem	PHL-93 Tandem	1.
PHL-93 90% Truck Neg React	PHL-93 90% Truck Neg React	1.
PHL-93 Truck Neg	PHL-93 Truck Neg	1.
PHL-93 Tandem Neg	PHL-93 Tandem Neg	1.
PHL-93 Truck No IM	PHL-93 Truck No IM	1.
PHL-93 Truck Neg No IM	PHL-93 Truck Neg No IM	1.
PHL-93 Tandem No IM	PHL-93 Tandem No IM	1.
PHL-93 90% Truck Neg React No IM	PHL-93 90% Truck Neg React No IM	1.
PHL-93 Tandem Neg No IM	PHL-93 Tandem Neg No IM	1.
P-82	P-82	1.
ML-80	ML-80	1.
TK527 All Lift	TK527 All Lift	1.
TK527 No Lift	TK527 No Lift	1.
P-Deflection	P-Deflection	1.
P-Deflection 25%+Lane	P-Deflection 25%+Lane	1.
P-Fatigue	P-Fatigue	1.
HL-93-TRUCK	HL-93-TRUCK	1.
HL-93-TANDEM	HL-93-TANDEM	1.
H20	H20	1.
TYPE 3	TYPE 3	1.
TYPE 3S2	TYPE 3S2	1.
TYPE 3-3	TYPE 3-3	1.
RI-3	RI-3	1.
RI-4	RI-4	1.
RI-OP1	RI-OP1	1.
RI-6	RI-6	1.
RI-OP2	RI-OP2	1.
RI-OP3	RI-OP3	1.
RI-5	RI-5	1.
SU4	SU4	1.
SU5	SU5	1.
SU6	SU6	1.
SU7	SU7	1.
EV2	EV2	1.
EV3	EV3	1.
RIPTA	RIPTA	1.

Table 11: Vehicles 4 - Vehicle Classes

VehClass	VehName	ScaleFactor
HL-93	HL-93-TANDEM	1.
HL-93	HL-93-TRUCK	1.
LTLLM	LTLLM	1.
HL-93-NEG	HL-93-NEG	1.

5. Load cases

This section provides load case information.

5.1. Definitions

Table 12: Load Case Definitions, Part 1 of 2

Table 12: Load Case Definitions, Part 1 of 2

Case	Type	MLFactVert	InitialCond	MLFactBrake	ModalCase	MLFactCentr
HL-93	LinMoving	1.	Zero	0.		0.
HL-93 NEG	LinMoving	1.	Zero	0.		0.
H20	LinMoving	1.	Zero	0.		0.
TYPE 3	LinMoving	1.	Zero	0.		0.
TYPE 3S2	LinMoving	1.	Zero	0.		0.
TYPE 3-3	LinMoving	1.	Zero	0.		0.
LTLLM	LinMoving	1.	Zero	0.		0.
SU4	LinMoving	1.	Zero	0.		0.
SU5	LinMoving	1.	Zero	0.		0.
SU6	LinMoving	1.	Zero	0.		0.
SU7	LinMoving	1.	Zero	0.		0.
EV2	LinMoving	1.	Zero	0.		0.
EV3	LinMoving	1.	Zero	0.		0.
RI-3	LinMoving	1.	Zero	0.		0.
RI-4	LinMoving	1.	Zero	0.		0.
RI-5	LinMoving	1.	Zero	0.		0.
RI-6	LinMoving	1.	Zero	0.		0.
RI-OP1	LinMoving	1.	Zero	0.		0.
RI-OP2	LinMoving	1.	Zero	0.		0.
RI-OP3	LinMoving	1.	Zero	0.		0.
RIPTA	LinMoving	1.	Zero	0.		0.

Table 12: Load Case Definitions, Part 2 of 2

Table 12: Load Case Definitions, Part 2 of 2

Case	BaseCase	DesActOpt	MassSource	DesignAct
HL-93		Prog Det		Short-Term Composite
HL-93 NEG		Prog Det		Short-Term Composite
H20		Prog Det		Short-Term Composite

Table 12: Load Case Definitions, Part 2 of 2

Case	BaseCase	DesActOpt	MassSource	DesignAct
TYPE 3		Prog Det		Short-Term Composite
TYPE 3S2		Prog Det		Short-Term Composite
TYPE 3-3		Prog Det		Short-Term Composite
LTLLM		Prog Det		Short-Term Composite
SU4		Prog Det		Short-Term Composite
SU5		Prog Det		Short-Term Composite
SU6		Prog Det		Short-Term Composite
SU7		Prog Det		Short-Term Composite
EV2		Prog Det		Short-Term Composite
EV3		Prog Det		Short-Term Composite
RI-3		Prog Det		Short-Term Composite
RI-4		Prog Det		Short-Term Composite
RI-5		Prog Det		Short-Term Composite
RI-6		Prog Det		Short-Term Composite
RI-OP1		Prog Det		Short-Term Composite
RI-OP2		Prog Det		Short-Term Composite
RI-OP3		Prog Det		Short-Term Composite
RIPTA		Prog Det		Short-Term Composite

5.2. Response spectrum case load assignments

Table 13: Function - Response Spectrum - User

Table 13: Function - Response Spectrum - User

Name	Period	Accel	FuncDamp
	Sec		
UNIFRS	0.	1.	0.05
UNIFRS	1.	1.	

6. Structure results

This section provides structure results, including items such as structural periods and base reactions.

6.1. Base reactions

7. Joint results

This section provides joint results, including items such as displacements and reactions.

8. Material take-off

This section provides a material take-off.

Table 14: Material List 2 - By Section Property

Table 14: Material List 2 - By Section Property

Section	ObjectType	NumPieces	TotalLength	TotalWeight
			ft	Kip
FSEC1	Frame	2	220.	4.948

```
****************************************************
*                                                  *
*           STAAD.Pro V8i SELECTseries6            *
*           Version  20.07.11.45                   *
*           Proprietary Program of                 *
*           Bentley Systems, Inc.                  *
*           Date=    SEP 20, 2018                  *
*           Time=     8:39: 7                      *
*                                                  *
*      USER ID:                                    *
****************************************************
```

```
     1. STAAD PLANE
INPUT FILE: \\USPRV1FP001\Data_usprv1fp001\Data1\Projects\60330198 2014 RIDOT Bridge Inspections\500-D.. .STD
     2. START JOB INFORMATION
     3. ENGINEER DATE 11-SEP-18
     4. END JOB INFORMATION
     5. INPUT WIDTH 79
     6. UNIT FEET KIP
     7. JOINT COORDINATES
     8. 1 -24.5 0 0; 2 -23.5 0 0; 3 -22.5 0 0; 4 -21.5 0 0; 5 -20.5 0 0; 6 -19.5 0 0
     9. 7 -19 0 0; 8 -18.5 0 0; 9 -17.5 0 0; 10 -16.5 0 0; 11 -15.5 0 0; 12 -15 0 0
    10. 13 -14.5 0 0; 14 -13.5 0 0; 15 -12.5 0 0; 16 -11.5 0 0; 17 -10.5 0 0
    11. 18 -9.5 0 0; 19 -8.5 0 0; 20 -7.5 0 0; 21 -6.5 0 0; 22 -5.5 0 0; 23 -4.5 0 0
    12. 24 -3.5 0 0; 25 -2.5 0 0; 26 -1.5 0 0; 27 -0.5 0 0; 28 0 0 0; 29 0.5 0 0
    13. 30 1.5 0 0; 31 2.5 0 0; 32 3.5 0 0; 33 4.5 0 0; 34 5.5 0 0; 35 6.5 0 0
    14. 36 7.5 0 0; 37 8.5 0 0; 38 9.5 0 0; 39 10.5 0 0; 40 11.5 0 0; 41 12.5 0 0
    15. 42 13.5 0 0; 43 14.5 0 0; 44 15 0 0; 45 15.5 0 0; 46 16.5 0 0; 47 17.5 0 0
    16. 48 18.5 0 0; 49 19 0 0; 50 19.5 0 0; 51 20.5 0 0; 52 21.5 0 0; 53 22.5 0 0
    17. 54 23.5 0 0; 55 24.5 0 0
    18. MEMBER INCIDENCES
    19. 1 1 2; 2 2 3; 3 3 4; 4 4 5; 5 5 6; 6 6 7; 7 7 8; 8 8 9; 9 9 10; 10 10 11
    20. 11 11 12; 12 12 13; 13 13 14; 14 14 15; 15 15 16; 16 16 17; 17 17 18; 18 18 19
    21. 19 19 20; 20 20 21; 21 21 22; 22 22 23; 23 23 24; 24 24 25; 25 25 26; 26 26 27
    22. 27 27 28; 28 28 29; 29 29 30; 30 30 31; 31 31 32; 32 32 33; 33 33 34; 34 34 35
    23. 35 35 36; 36 36 37; 37 37 38; 38 38 39; 39 39 40; 40 40 41; 41 41 42; 42 42 43
    24. 43 43 44; 44 44 45; 45 45 46; 46 46 47; 47 47 48; 48 48 49; 49 49 50; 50 50 51
    25. 51 51 52; 52 52 53; 53 53 54; 54 54 55
    26. DEFINE MATERIAL START
    27. ISOTROPIC CONCRETE
    28. E 453600
    29. POISSON 0.17
    30. DENSITY 0.145
    31. ALPHA 5E-006
    32. DAMP 0.05
    33. TYPE CONCRETE
    34. STRENGTH FCU 576
    35. END DEFINE MATERIAL
    36. MEMBER PROPERTY AMERICAN
    37. 1 TO 54 PRIS YD 4.5 ZD 4
    38. CONSTANTS
```

```
39. MATERIAL CONCRETE ALL
40. SUPPORTS
41. 7 9 26 28 30 47 49 51 FIXED BUT FX FZ
42. 5 FIXED
43. LOAD 1 LOADTYPE DEAD  TITLE PIER CAP SELF WEIGHT
44. SELFWEIGHT Y -1
45. MEMBER LOAD
46. 1 TO 54 UNI GY -0.225
47. LOAD 2 LOADTYPE DEAD  TITLE DC
48. JOINT LOAD
49. 3 53 FY -100.1
50. 12 20 28 36 44 FY -128.9
51. LOAD 3 LOADTYPE DEAD  TITLE DW
52. JOINT LOAD
53. 3 12 FY -58.9
54. 20 28 36 44 53 FY -37
55. LOAD 4 LOADTYPE LIVE  TITLE HL-93 CASE 1
56. JOINT LOAD
57. 12 20 FY -142
58. 3 28 FY -40
59. LOAD 5 LOADTYPE LIVE  TITLE H20 CASE 1
60. JOINT LOAD
61. 12 20 FY -37
62. 3 28 FY -11
63. LOAD 6 LOADTYPE LIVE  TITLE TYPE 3 CASE 1
64. JOINT LOAD
65. 12 20 FY -46
66. 3 28 FY -13
67. LOAD 7 LOADTYPE LIVE  TITLE TYPE 3S2 CASE 1
68. JOINT LOAD
69. 12 20 FY -65
70. 3 28 FY -19
71. LOAD 8 LOADTYPE LIVE  TITLE TYPE 3-3 CASE 1
72. JOINT LOAD
73. 12 20 FY -72
74. 3 28 FY -20
75. LOAD 9 LOADTYPE LIVE  TITLE SU4 CASE 1
76. JOINT LOAD
77. 12 20 FY -50
78. 3 28 FY -14
79. LOAD 10 LOADTYPE LIVE  TITLE SU5 CASE 1
80. JOINT LOAD
81. 12 20 FY -57
82. 3 28 FY -16
83. LOAD 11 LOADTYPE LIVE  TITLE SU6 CASE 1
84. JOINT LOAD
85. 12 20 FY -64
86. 3 28 FY -18
87. LOAD 12 LOADTYPE LIVE  TITLE SU7 CASE 1
88. JOINT LOAD
89. 12 20 FY -72
90. 3 28 FY -20
91. LOAD 13 LOADTYPE LIVE  TITLE RI-3 CASE 1
92. JOINT LOAD
93. 12 20 FY -71
94. 3 28 FY -20
```

```
 95. LOAD 14 LOADTYPE LIVE  TITLE RI-4 CASE 1
 96. JOINT LOAD
 97. 12 20 FY -70
 98. 3 28 FY -20
 99. LOAD 15 LOADTYPE LIVE  TITLE RI-5 CASE 1
100. JOINT LOAD
101. 12 20 FY -96
102. 3 28 FY -27
103. LOAD 16 LOADTYPE LIVE  TITLE RI-6 CASE 1
104. JOINT LOAD
105. 12 20 FY -115
106. 3 28 FY -33
107. LOAD 17 LOADTYPE LIVE  TITLE RI-OP1 CASE 1
108. JOINT LOAD
109. 12 20 FY -105
110. 3 28 FY -30
111. LOAD 18 LOADTYPE LIVE  TITLE RI-OP2 CASE 1
112. JOINT LOAD
113. 12 20 FY -138
114. 3 28 FY -39
115. LOAD 19 LOADTYPE LIVE  TITLE RI-OP3 CASE 1
116. JOINT LOAD
117. 12 20 FY -180
118. 3 28 FY -51
119. LOAD 20 LOADTYPE LIVE  TITLE EV2 CASE 1
120. JOINT LOAD
121. 12 20 FY -53
122. 3 28 FY -15
123. LOAD 21 LOADTYPE LIVE  TITLE EV3 CASE 1
124. JOINT LOAD
125. 12 20 FY -80
126. 3 28 FY -23
127. LOAD 22 LOADTYPE LIVE  TITLE RIPTA CASE 1
128. JOINT LOAD
129. 12 20 FY -38
130. 3 28 FY -11
131. LOAD 23 LOADTYPE LIVE  TITLE HL-93 TRAIN CASE 1
132. JOINT LOAD
133. 12 20 FY -172
134. 3 28 FY -49
135. LOAD 24 LOADTYPE LIVE  TITLE LTLLM CASE 1
136. JOINT LOAD
137. 12 20 FY -109
138. 3 28 FY -31
139. LOAD 25 LOADTYPE LIVE  TITLE HL-93 CASE 2
140. JOINT LOAD
141. 20 FY -120
142. 28 FY -62
143. LOAD 26 LOADTYPE LIVE  TITLE H20 CASE 2
144. JOINT LOAD
145. 20 FY -32
146. 28 FY -16
147. LOAD 27 LOADTYPE LIVE  TITLE TYPE 3 CASE 2
148. JOINT LOAD
149. 20 FY -39
150. 28 FY -20
```

```
151. LOAD 28 LOADTYPE LIVE  TITLE TYPE 3S2 CASE 2
152. JOINT LOAD
153. 20 FY -55
154. 28 FY -29
155. LOAD 29 LOADTYPE LIVE  TITLE TYPE 3-3 CASE 2
156. JOINT LOAD
157. 20 FY -61
158. 28 FY -31
159. LOAD 30 LOADTYPE LIVE  TITLE SU4 CASE 2
160. JOINT LOAD
161. 20 FY -42
162. 28 FY -22
163. LOAD 31 LOADTYPE LIVE  TITLE SU5 CASE 2
164. JOINT LOAD
165. 20 FY -49
166. 28 FY -25
167. LOAD 32 LOADTYPE LIVE  TITLE SU6 CASE 2
168. JOINT LOAD
169. 20 FY -54
170. 28 FY -28
171. LOAD 33 LOADTYPE LIVE  TITLE SU7 CASE 2
172. JOINT LOAD
173. 20 FY -61
174. 28 FY -31
175. LOAD 34 LOADTYPE LIVE  TITLE RI-3 CASE 2
176. JOINT LOAD
177. 20 FY -60
178. 28 FY -31
179. LOAD 35 LOADTYPE LIVE  TITLE RI-4 CASE 2
180. JOINT LOAD
181. 20 FY -59
182. 28 FY -30
183. LOAD 36 LOADTYPE LIVE  TITLE RI-5 CASE 2
184. JOINT LOAD
185. 20 FY -82
186. 28 FY -42
187. LOAD 37 LOADTYPE LIVE  TITLE RI-6 CASE 2
188. JOINT LOAD
189. 20 FY -97
190. 28 FY -50
191. LOAD 38 LOADTYPE LIVE  TITLE RI-OP1 CASE 2
192. JOINT LOAD
193. 20 FY -89
194. 28 FY -46
195. LOAD 39 LOADTYPE LIVE  TITLE RI-OP2 CASE 2
196. JOINT LOAD
197. 20 FY -117
198. 28 FY -60
199. LOAD 40 LOADTYPE LIVE  TITLE RI-OP3 CASE 2
200. JOINT LOAD
201. 20 FY -153
202. 28 FY -79
203. LOAD 41 LOADTYPE LIVE  TITLE EV2 CASE 2
204. JOINT LOAD
205. 20 FY -45
206. 28 FY -23
```

```
207. LOAD 42 LOADTYPE LIVE  TITLE EV3 CASE 2
208. JOINT LOAD
209. 20 FY -67
210. 28 FY -35
211. LOAD 43 LOADTYPE LIVE  TITLE RIPTA CASE 2
212. JOINT LOAD
213. 20 FY -32
214. 28 FY -17
215. LOAD 44 LOADTYPE LIVE  TITLE HL-93 TRAIN CASE 2
216. JOINT LOAD
217. 20 FY -146
218. 28 FY -75
219. LOAD 45 LOADTYPE LIVE  TITLE LTLLM CASE 2
220. JOINT LOAD
221. 20 FY -92
222. 28 FY -48
223. LOAD 46 LOADTYPE LIVE  TITLE HL-93 CASE 3
224. JOINT LOAD
225. 20 36 FY -142
226. 12 44 FY -40
227. LOAD 47 LOADTYPE LIVE  TITLE H20 CASE 3
228. JOINT LOAD
229. 20 36 FY -37
230. 12 44 FY -11
231. LOAD 48 LOADTYPE LIVE  TITLE TYPE 3 CASE 3
232. JOINT LOAD
233. 20 36 FY -46
234. 12 44 FY -13
235. LOAD 49 LOADTYPE LIVE  TITLE TYPE 3S2 CASE 3
236. JOINT LOAD
237. 20 36 FY -65
238. 12 44 FY -19
239. LOAD 50 LOADTYPE LIVE  TITLE TYPE 3-3 CASE 3
240. JOINT LOAD
241. 20 36 FY -72
242. 12 44 FY -20
243. LOAD 51 LOADTYPE LIVE  TITLE SU4 CASE 3
244. JOINT LOAD
245. 20 36 FY -50
246. 12 44 FY -14
247. LOAD 52 LOADTYPE LIVE  TITLE SU5 CASE 3
248. JOINT LOAD
249. 20 36 FY -57
250. 12 44 FY -16
251. LOAD 53 LOADTYPE LIVE  TITLE SU6 CASE 3
252. JOINT LOAD
253. 20 36 FY -64
254. 12 44 FY -18
255. LOAD 54 LOADTYPE LIVE  TITLE SU7 CASE 3
256. JOINT LOAD
257. 20 36 FY -72
258. 12 44 FY -20
259. LOAD 55 LOADTYPE LIVE  TITLE RI-3 CASE 3
260. JOINT LOAD
261. 20 36 FY -71
262. 12 44 FY -20
```

```
263. LOAD 56 LOADTYPE LIVE  TITLE RI-4 CASE 3
264. JOINT LOAD
265. 20 36 FY -70
266. 12 44 FY -20
267. LOAD 57 LOADTYPE LIVE  TITLE RI-5 CASE 3
268. JOINT LOAD
269. 20 36 FY -96
270. 12 44 FY -27
271. LOAD 58 LOADTYPE LIVE  TITLE RI-6 CASE 3
272. JOINT LOAD
273. 20 36 FY -115
274. 12 44 FY -33
275. LOAD 59 LOADTYPE LIVE  TITLE RI-OP1 CASE 3
276. JOINT LOAD
277. 20 36 FY -105
278. 12 44 FY -30
279. LOAD 60 LOADTYPE LIVE  TITLE RI-OP2 CASE 3
280. JOINT LOAD
281. 20 36 FY -138
282. 12 44 FY -39
283. LOAD 61 LOADTYPE LIVE  TITLE RI-OP3 CASE 3
284. JOINT LOAD
285. 20 36 FY -180
286. 12 44 FY -51
287. LOAD 62 LOADTYPE LIVE  TITLE EV2 CASE 3
288. JOINT LOAD
289. 20 36 FY -53
290. 12 44 FY -15
291. LOAD 63 LOADTYPE LIVE  TITLE EV3 CASE 3
292. JOINT LOAD
293. 20 36 FY -80
294. 12 44 FY -23
295. LOAD 64 LOADTYPE LIVE  TITLE RIPTA CASE 3
296. JOINT LOAD
297. 20 36 FY -38
298. 12 44 FY -11
299. LOAD 65 LOADTYPE LIVE  TITLE HL-93 TRAIN CASE 3
300. JOINT LOAD
301. 20 36 FY -172
302. 12 44 FY -49
303. LOAD 66 LOADTYPE LIVE  TITLE LTLLM CASE 3
304. JOINT LOAD
305. 20 36 FY -109
306. 12 44 FY -31
307. PERFORM ANALYSIS
```

```
        P R O B L E M   S T A T I S T I C S
        -----------------------------------

  NUMBER OF JOINTS         55  NUMBER OF MEMBERS      54
  NUMBER OF PLATES          0  NUMBER OF SOLIDS        0
  NUMBER OF SURFACES        0  NUMBER OF SUPPORTS      9


       SOLVER USED IS THE OUT-OF-CORE BASIC SOLVER

  ORIGINAL/FINAL BAND-WIDTH=     1/     1/      6 DOF
TOTAL      PRIMARY LOAD CASES =    66, TOTAL DEGREES OF FREEDOM =     146
TOTAL LOAD COMBINATION  CASES =     0  SO FAR.
  SIZE OF STIFFNESS MATRIX =        1 DOUBLE  KILO-WORDS
  REQRD/AVAIL. DISK SPACE  =     12.4/      0.0 MB



308. PRINT MEMBER FORCES
```

MEMBER END FORCES STRUCTURE TYPE = PLANE

ALL UNITS ARE -- KIP FEET (LOCAL)

MEMBER	LOAD	JT	AXIAL	SHEAR-Y	SHEAR-Z	TORSION	MOM-Y	MOM-Z
1	1	1	0.00	0.00	0.00	0.00	0.00	0.00
		2	0.00	2.83	0.00	0.00	0.00	-1.42
	2	1	0.00	0.00	0.00	0.00	0.00	0.00
		2	0.00	-0.00	0.00	0.00	0.00	0.00
	3	1	0.00	-0.00	0.00	0.00	0.00	-0.00
		2	0.00	0.00	0.00	0.00	0.00	-0.00
	4	1	0.00	-0.00	0.00	0.00	0.00	-0.00
		2	0.00	0.00	0.00	0.00	0.00	-0.00
	5	1	0.00	-0.00	0.00	0.00	0.00	-0.00
		2	0.00	0.00	0.00	0.00	0.00	-0.00
	6	1	0.00	0.00	0.00	0.00	0.00	0.00
		2	0.00	-0.00	0.00	0.00	0.00	0.00
	7	1	0.00	0.00	0.00	0.00	0.00	0.00
		2	0.00	-0.00	0.00	0.00	0.00	0.00
	8	1	0.00	-0.00	0.00	0.00	0.00	-0.00
		2	0.00	0.00	0.00	0.00	0.00	-0.00
	9	1	0.00	-0.00	0.00	0.00	0.00	0.00
		2	0.00	0.00	0.00	0.00	0.00	0.00
	10	1	0.00	0.00	0.00	0.00	0.00	0.00
		2	0.00	-0.00	0.00	0.00	0.00	0.00
	11	1	0.00	0.00	0.00	0.00	0.00	0.00
		2	0.00	-0.00	0.00	0.00	0.00	0.00
	12	1	0.00	-0.00	0.00	0.00	0.00	-0.00
		2	0.00	0.00	0.00	0.00	0.00	-0.00
	13	1	0.00	-0.00	0.00	0.00	0.00	-0.00
		2	0.00	0.00	0.00	0.00	0.00	-0.00
	14	1	0.00	-0.00	0.00	0.00	0.00	-0.00
		2	0.00	0.00	0.00	0.00	0.00	-0.00
	15	1	0.00	0.00	0.00	0.00	0.00	0.00
		2	0.00	-0.00	0.00	0.00	0.00	0.00
	16	1	0.00	-0.00	0.00	0.00	0.00	0.00
		2	0.00	0.00	0.00	0.00	0.00	0.00
	17	1	0.00	0.00	0.00	0.00	0.00	0.00
		2	0.00	-0.00	0.00	0.00	0.00	0.00
	18	1	0.00	0.00	0.00	0.00	0.00	0.00
		2	0.00	-0.00	0.00	0.00	0.00	0.00
	19	1	0.00	-0.00	0.00	0.00	0.00	0.00
		2	0.00	0.00	0.00	0.00	0.00	0.00
	20	1	0.00	0.00	0.00	0.00	0.00	0.00
		2	0.00	-0.00	0.00	0.00	0.00	0.00
	21	1	0.00	0.00	0.00	0.00	0.00	0.00
		2	0.00	-0.00	0.00	0.00	0.00	0.00

MEMBER END FORCES STRUCTURE TYPE = PLANE

ALL UNITS ARE -- KIP FEET (LOCAL)

MEMBER	LOAD	JT	AXIAL	SHEAR-Y	SHEAR-Z	TORSION	MOM-Y	MOM-Z
	22	1	0.00	-0.00	0.00	0.00	0.00	-0.00
		2	0.00	0.00	0.00	0.00	0.00	-0.00
	23	1	0.00	-0.00	0.00	0.00	0.00	-0.00
		2	0.00	0.00	0.00	0.00	0.00	-0.00
	24	1	0.00	0.00	0.00	0.00	0.00	-0.00
		2	0.00	-0.00	0.00	0.00	0.00	0.00
	25	1	0.00	0.00	0.00	0.00	0.00	0.00
		2	0.00	0.00	0.00	0.00	0.00	0.00
	26	1	0.00	0.00	0.00	0.00	0.00	0.00
		2	0.00	0.00	0.00	0.00	0.00	0.00
	27	1	0.00	0.00	0.00	0.00	0.00	0.00
		2	0.00	0.00	0.00	0.00	0.00	0.00
	28	1	0.00	0.00	0.00	0.00	0.00	0.00
		2	0.00	0.00	0.00	0.00	0.00	0.00
	29	1	0.00	0.00	0.00	0.00	0.00	0.00
		2	0.00	0.00	0.00	0.00	0.00	0.00
	30	1	0.00	0.00	0.00	0.00	0.00	0.00
		2	0.00	0.00	0.00	0.00	0.00	0.00
	31	1	0.00	0.00	0.00	0.00	0.00	0.00
		2	0.00	0.00	0.00	0.00	0.00	0.00
	32	1	0.00	0.00	0.00	0.00	0.00	0.00
		2	0.00	0.00	0.00	0.00	0.00	0.00
	33	1	0.00	0.00	0.00	0.00	0.00	0.00
		2	0.00	0.00	0.00	0.00	0.00	0.00
	34	1	0.00	0.00	0.00	0.00	0.00	0.00
		2	0.00	0.00	0.00	0.00	0.00	0.00
	35	1	0.00	0.00	0.00	0.00	0.00	0.00
		2	0.00	0.00	0.00	0.00	0.00	0.00
	36	1	0.00	0.00	0.00	0.00	0.00	0.00
		2	0.00	0.00	0.00	0.00	0.00	0.00
	37	1	0.00	0.00	0.00	0.00	0.00	0.00
		2	0.00	0.00	0.00	0.00	0.00	0.00
	38	1	0.00	0.00	0.00	0.00	0.00	0.00
		2	0.00	0.00	0.00	0.00	0.00	0.00
	39	1	0.00	0.00	0.00	0.00	0.00	0.00
		2	0.00	0.00	0.00	0.00	0.00	0.00
	40	1	0.00	0.00	0.00	0.00	0.00	0.00
		2	0.00	0.00	0.00	0.00	0.00	0.00
	41	1	0.00	0.00	0.00	0.00	0.00	0.00
		2	0.00	0.00	0.00	0.00	0.00	0.00
	42	1	0.00	0.00	0.00	0.00	0.00	0.00
		2	0.00	0.00	0.00	0.00	0.00	0.00
	43	1	0.00	0.00	0.00	0.00	0.00	0.00
		2	0.00	0.00	0.00	0.00	0.00	0.00
	44	1	0.00	0.00	0.00	0.00	0.00	0.00
		2	0.00	0.00	0.00	0.00	0.00	0.00

MEMBER END FORCES STRUCTURE TYPE = PLANE

ALL UNITS ARE -- KIP FEET (LOCAL)

MEMBER	LOAD	JT	AXIAL	SHEAR-Y	SHEAR-Z	TORSION	MOM-Y	MOM-Z
	45	1	0.00	0.00	0.00	0.00	0.00	0.00
		2	0.00	0.00	0.00	0.00	0.00	0.00
	46	1	0.00	0.00	0.00	0.00	0.00	0.00
		2	0.00	0.00	0.00	0.00	0.00	0.00
	47	1	0.00	0.00	0.00	0.00	0.00	0.00
		2	0.00	0.00	0.00	0.00	0.00	0.00
	48	1	0.00	0.00	0.00	0.00	0.00	0.00
		2	0.00	0.00	0.00	0.00	0.00	0.00
	49	1	0.00	0.00	0.00	0.00	0.00	0.00
		2	0.00	0.00	0.00	0.00	0.00	0.00
	50	1	0.00	0.00	0.00	0.00	0.00	0.00
		2	0.00	0.00	0.00	0.00	0.00	0.00
	51	1	0.00	0.00	0.00	0.00	0.00	0.00
		2	0.00	0.00	0.00	0.00	0.00	0.00
	52	1	0.00	0.00	0.00	0.00	0.00	0.00
		2	0.00	0.00	0.00	0.00	0.00	0.00
	53	1	0.00	0.00	0.00	0.00	0.00	0.00
		2	0.00	0.00	0.00	0.00	0.00	0.00
	54	1	0.00	0.00	0.00	0.00	0.00	0.00
		2	0.00	0.00	0.00	0.00	0.00	0.00
	55	1	0.00	0.00	0.00	0.00	0.00	0.00
		2	0.00	0.00	0.00	0.00	0.00	0.00
	56	1	0.00	0.00	0.00	0.00	0.00	0.00
		2	0.00	0.00	0.00	0.00	0.00	0.00
	57	1	0.00	0.00	0.00	0.00	0.00	0.00
		2	0.00	0.00	0.00	0.00	0.00	0.00
	58	1	0.00	0.00	0.00	0.00	0.00	0.00
		2	0.00	0.00	0.00	0.00	0.00	0.00
	59	1	0.00	0.00	0.00	0.00	0.00	0.00
		2	0.00	0.00	0.00	0.00	0.00	0.00
	60	1	0.00	0.00	0.00	0.00	0.00	0.00
		2	0.00	0.00	0.00	0.00	0.00	0.00
	61	1	0.00	0.00	0.00	0.00	0.00	0.00
		2	0.00	0.00	0.00	0.00	0.00	0.00
	62	1	0.00	0.00	0.00	0.00	0.00	0.00
		2	0.00	0.00	0.00	0.00	0.00	0.00
	63	1	0.00	0.00	0.00	0.00	0.00	0.00
		2	0.00	0.00	0.00	0.00	0.00	0.00
	64	1	0.00	0.00	0.00	0.00	0.00	0.00
		2	0.00	0.00	0.00	0.00	0.00	0.00
	65	1	0.00	0.00	0.00	0.00	0.00	0.00
		2	0.00	0.00	0.00	0.00	0.00	0.00
	66	1	0.00	0.00	0.00	0.00	0.00	0.00
		2	0.00	0.00	0.00	0.00	0.00	0.00
2	1	2	0.00	-2.83	0.00	0.00	0.00	1.42
		3	0.00	5.67	0.00	0.00	0.00	-5.67

MEMBER END FORCES STRUCTURE TYPE = PLANE

ALL UNITS ARE -- KIP FEET (LOCAL)

MEMBER	LOAD	JT	AXIAL	SHEAR-Y	SHEAR-Z	TORSION	MOM-Y	MOM-Z
	2	2	0.00	-0.00	0.00	0.00	0.00	0.00
		3	0.00	0.00	0.00	0.00	0.00	0.00
	3	2	0.00	-0.00	0.00	0.00	0.00	0.00
		3	0.00	0.00	0.00	0.00	0.00	-0.00
	4	2	0.00	0.00	0.00	0.00	0.00	0.00
		3	0.00	-0.00	0.00	0.00	0.00	0.00
	5	2	0.00	0.00	0.00	0.00	0.00	-0.00
		3	0.00	-0.00	0.00	0.00	0.00	-0.00
	6	2	0.00	0.00	0.00	0.00	0.00	0.00
		3	0.00	-0.00	0.00	0.00	0.00	0.00
	7	2	0.00	-0.00	0.00	0.00	0.00	0.00
		3	0.00	0.00	0.00	0.00	0.00	0.00
	8	2	0.00	0.00	0.00	0.00	0.00	0.00
		3	0.00	-0.00	0.00	0.00	0.00	0.00
	9	2	0.00	0.00	0.00	0.00	0.00	-0.00
		3	0.00	0.00	0.00	0.00	0.00	0.00
	10	2	0.00	0.00	0.00	0.00	0.00	0.00
		3	0.00	-0.00	0.00	0.00	0.00	0.00
	11	2	0.00	0.00	0.00	0.00	0.00	-0.00
		3	0.00	-0.00	0.00	0.00	0.00	-0.00
	12	2	0.00	0.00	0.00	0.00	0.00	0.00
		3	0.00	-0.00	0.00	0.00	0.00	0.00
	13	2	0.00	0.00	0.00	0.00	0.00	0.00
		3	0.00	-0.00	0.00	0.00	0.00	0.00
	14	2	0.00	0.00	0.00	0.00	0.00	0.00
		3	0.00	-0.00	0.00	0.00	0.00	0.00
	15	2	0.00	0.00	0.00	0.00	0.00	0.00
		3	0.00	-0.00	0.00	0.00	0.00	0.00
	16	2	0.00	-0.00	0.00	0.00	0.00	0.00
		3	0.00	0.00	0.00	0.00	0.00	-0.00
	17	2	0.00	-0.00	0.00	0.00	0.00	0.00
		3	0.00	0.00	0.00	0.00	0.00	0.00
	18	2	0.00	0.00	0.00	0.00	0.00	0.00
		3	0.00	-0.00	0.00	0.00	0.00	0.00
	19	2	0.00	0.00	0.00	0.00	0.00	0.00
		3	0.00	-0.00	0.00	0.00	0.00	0.00
	20	2	0.00	-0.00	0.00	0.00	0.00	0.00
		3	0.00	0.00	0.00	0.00	0.00	0.00
	21	2	0.00	-0.00	0.00	0.00	0.00	0.00
		3	0.00	0.00	0.00	0.00	0.00	0.00
	22	2	0.00	0.00	0.00	0.00	0.00	-0.00
		3	0.00	-0.00	0.00	0.00	0.00	-0.00
	23	2	0.00	-0.00	0.00	0.00	0.00	0.00
		3	0.00	0.00	0.00	0.00	0.00	0.00
	24	2	0.00	-0.00	0.00	0.00	0.00	-0.00
		3	0.00	0.00	0.00	0.00	0.00	-0.00

MEMBER END FORCES STRUCTURE TYPE = PLANE

ALL UNITS ARE -- KIP FEET (LOCAL)

MEMBER	LOAD	JT	AXIAL	SHEAR-Y	SHEAR-Z	TORSION	MOM-Y	MOM-Z
	25	2	0.00	0.00	0.00	0.00	0.00	0.00
		3	0.00	0.00	0.00	0.00	0.00	0.00
	26	2	0.00	0.00	0.00	0.00	0.00	0.00
		3	0.00	0.00	0.00	0.00	0.00	0.00
	27	2	0.00	0.00	0.00	0.00	0.00	0.00
		3	0.00	0.00	0.00	0.00	0.00	0.00
	28	2	0.00	0.00	0.00	0.00	0.00	0.00
		3	0.00	0.00	0.00	0.00	0.00	0.00
	29	2	0.00	0.00	0.00	0.00	0.00	0.00
		3	0.00	0.00	0.00	0.00	0.00	0.00
	30	2	0.00	0.00	0.00	0.00	0.00	0.00
		3	0.00	0.00	0.00	0.00	0.00	0.00
	31	2	0.00	0.00	0.00	0.00	0.00	0.00
		3	0.00	0.00	0.00	0.00	0.00	0.00
	32	2	0.00	0.00	0.00	0.00	0.00	0.00
		3	0.00	0.00	0.00	0.00	0.00	0.00
	33	2	0.00	0.00	0.00	0.00	0.00	0.00
		3	0.00	0.00	0.00	0.00	0.00	0.00
	34	2	0.00	0.00	0.00	0.00	0.00	0.00
		3	0.00	0.00	0.00	0.00	0.00	0.00
	35	2	0.00	0.00	0.00	0.00	0.00	0.00
		3	0.00	0.00	0.00	0.00	0.00	0.00
	36	2	0.00	0.00	0.00	0.00	0.00	0.00
		3	0.00	0.00	0.00	0.00	0.00	0.00
	37	2	0.00	0.00	0.00	0.00	0.00	0.00
		3	0.00	0.00	0.00	0.00	0.00	0.00
	38	2	0.00	0.00	0.00	0.00	0.00	0.00
		3	0.00	0.00	0.00	0.00	0.00	0.00
	39	2	0.00	0.00	0.00	0.00	0.00	0.00
		3	0.00	0.00	0.00	0.00	0.00	0.00
	40	2	0.00	0.00	0.00	0.00	0.00	0.00
		3	0.00	0.00	0.00	0.00	0.00	0.00
	41	2	0.00	0.00	0.00	0.00	0.00	0.00
		3	0.00	0.00	0.00	0.00	0.00	0.00
	42	2	0.00	0.00	0.00	0.00	0.00	0.00
		3	0.00	0.00	0.00	0.00	0.00	0.00
	43	2	0.00	0.00	0.00	0.00	0.00	0.00
		3	0.00	0.00	0.00	0.00	0.00	0.00
	44	2	0.00	0.00	0.00	0.00	0.00	0.00
		3	0.00	0.00	0.00	0.00	0.00	0.00
	45	2	0.00	0.00	0.00	0.00	0.00	0.00
		3	0.00	0.00	0.00	0.00	0.00	0.00
	46	2	0.00	0.00	0.00	0.00	0.00	0.00
		3	0.00	0.00	0.00	0.00	0.00	0.00
	47	2	0.00	0.00	0.00	0.00	0.00	0.00
		3	0.00	0.00	0.00	0.00	0.00	0.00

MEMBER END FORCES STRUCTURE TYPE = PLANE

ALL UNITS ARE -- KIP FEET (LOCAL)

MEMBER	LOAD	JT	AXIAL	SHEAR-Y	SHEAR-Z	TORSION	MOM-Y	MOM-Z
	48	2	0.00	0.00	0.00	0.00	0.00	0.00
		3	0.00	0.00	0.00	0.00	0.00	0.00
	49	2	0.00	0.00	0.00	0.00	0.00	0.00
		3	0.00	0.00	0.00	0.00	0.00	0.00
	50	2	0.00	0.00	0.00	0.00	0.00	0.00
		3	0.00	0.00	0.00	0.00	0.00	0.00
	51	2	0.00	0.00	0.00	0.00	0.00	0.00
		3	0.00	0.00	0.00	0.00	0.00	0.00
	52	2	0.00	0.00	0.00	0.00	0.00	0.00
		3	0.00	0.00	0.00	0.00	0.00	0.00
	53	2	0.00	0.00	0.00	0.00	0.00	0.00
		3	0.00	0.00	0.00	0.00	0.00	0.00
	54	2	0.00	0.00	0.00	0.00	0.00	0.00
		3	0.00	0.00	0.00	0.00	0.00	0.00
	55	2	0.00	0.00	0.00	0.00	0.00	0.00
		3	0.00	0.00	0.00	0.00	0.00	0.00
	56	2	0.00	0.00	0.00	0.00	0.00	0.00
		3	0.00	0.00	0.00	0.00	0.00	0.00
	57	2	0.00	0.00	0.00	0.00	0.00	0.00
		3	0.00	0.00	0.00	0.00	0.00	0.00
	58	2	0.00	0.00	0.00	0.00	0.00	0.00
		3	0.00	0.00	0.00	0.00	0.00	0.00
	59	2	0.00	0.00	0.00	0.00	0.00	0.00
		3	0.00	0.00	0.00	0.00	0.00	0.00
	60	2	0.00	0.00	0.00	0.00	0.00	0.00
		3	0.00	0.00	0.00	0.00	0.00	0.00
	61	2	0.00	0.00	0.00	0.00	0.00	0.00
		3	0.00	0.00	0.00	0.00	0.00	0.00
	62	2	0.00	0.00	0.00	0.00	0.00	0.00
		3	0.00	0.00	0.00	0.00	0.00	0.00
	63	2	0.00	0.00	0.00	0.00	0.00	0.00
		3	0.00	0.00	0.00	0.00	0.00	0.00
	64	2	0.00	0.00	0.00	0.00	0.00	0.00
		3	0.00	0.00	0.00	0.00	0.00	0.00
	65	2	0.00	0.00	0.00	0.00	0.00	0.00
		3	0.00	0.00	0.00	0.00	0.00	0.00
	66	2	0.00	0.00	0.00	0.00	0.00	0.00
		3	0.00	0.00	0.00	0.00	0.00	0.00
3	1	3	0.00	-5.67	0.00	0.00	0.00	5.67
		4	0.00	8.50	0.00	0.00	0.00	-12.76
	2	3	0.00	-100.10	0.00	0.00	0.00	-0.00
		4	0.00	100.10	0.00	0.00	0.00	-100.10
	3	3	0.00	-58.90	0.00	0.00	0.00	0.00
		4	0.00	58.90	0.00	0.00	0.00	-58.90

MEMBER END FORCES STRUCTURE TYPE = PLANE

ALL UNITS ARE -- KIP FEET (LOCAL)

MEMBER	LOAD	JT	AXIAL	SHEAR-Y	SHEAR-Z	TORSION	MOM-Y	MOM-Z
	4	3	0.00	-40.00	0.00	0.00	0.00	-0.00
		4	0.00	40.00	0.00	0.00	0.00	-40.00
	5	3	0.00	-11.00	0.00	0.00	0.00	0.00
		4	0.00	11.00	0.00	0.00	0.00	-11.00
	6	3	0.00	-13.00	0.00	0.00	0.00	0.00
		4	0.00	13.00	0.00	0.00	0.00	-13.00
	7	3	0.00	-19.00	0.00	0.00	0.00	0.00
		4	0.00	19.00	0.00	0.00	0.00	-19.00
	8	3	0.00	-20.00	0.00	0.00	0.00	-0.00
		4	0.00	20.00	0.00	0.00	0.00	-20.00
	9	3	0.00	-14.00	0.00	0.00	0.00	-0.00
		4	0.00	14.00	0.00	0.00	0.00	-14.00
	10	3	0.00	-16.00	0.00	0.00	0.00	0.00
		4	0.00	16.00	0.00	0.00	0.00	-16.00
	11	3	0.00	-18.00	0.00	0.00	0.00	-0.00
		4	0.00	18.00	0.00	0.00	0.00	-18.00
	12	3	0.00	-20.00	0.00	0.00	0.00	-0.00
		4	0.00	20.00	0.00	0.00	0.00	-20.00
	13	3	0.00	-20.00	0.00	0.00	0.00	-0.00
		4	0.00	20.00	0.00	0.00	0.00	-20.00
	14	3	0.00	-20.00	0.00	0.00	0.00	-0.00
		4	0.00	20.00	0.00	0.00	0.00	-20.00
	15	3	0.00	-27.00	0.00	0.00	0.00	0.00
		4	0.00	27.00	0.00	0.00	0.00	-27.00
	16	3	0.00	-33.00	0.00	0.00	0.00	0.00
		4	0.00	33.00	0.00	0.00	0.00	-33.00
	17	3	0.00	-30.00	0.00	0.00	0.00	0.00
		4	0.00	30.00	0.00	0.00	0.00	-30.00
	18	3	0.00	-39.00	0.00	0.00	0.00	-0.00
		4	0.00	39.00	0.00	0.00	0.00	-39.00
	19	3	0.00	-51.00	0.00	0.00	0.00	0.00
		4	0.00	51.00	0.00	0.00	0.00	-51.00
	20	3	0.00	-15.00	0.00	0.00	0.00	0.00
		4	0.00	15.00	0.00	0.00	0.00	-15.00
	21	3	0.00	-23.00	0.00	0.00	0.00	-0.00
		4	0.00	23.00	0.00	0.00	0.00	-23.00
	22	3	0.00	-11.00	0.00	0.00	0.00	0.00
		4	0.00	11.00	0.00	0.00	0.00	-11.00
	23	3	0.00	-49.00	0.00	0.00	0.00	0.00
		4	0.00	49.00	0.00	0.00	0.00	-49.00
	24	3	0.00	-31.00	0.00	0.00	0.00	0.00
		4	0.00	31.00	0.00	0.00	0.00	-31.00
	25	3	0.00	0.00	0.00	0.00	0.00	0.00
		4	0.00	0.00	0.00	0.00	0.00	0.00
	26	3	0.00	0.00	0.00	0.00	0.00	0.00
		4	0.00	0.00	0.00	0.00	0.00	0.00

MEMBER END FORCES STRUCTURE TYPE = PLANE

ALL UNITS ARE -- KIP FEET (LOCAL)

MEMBER	LOAD	JT	AXIAL	SHEAR-Y	SHEAR-Z	TORSION	MOM-Y	MOM-Z
	27	3	0.00	0.00	0.00	0.00	0.00	0.00
		4	0.00	0.00	0.00	0.00	0.00	0.00
	28	3	0.00	0.00	0.00	0.00	0.00	0.00
		4	0.00	0.00	0.00	0.00	0.00	0.00
	29	3	0.00	0.00	0.00	0.00	0.00	0.00
		4	0.00	0.00	0.00	0.00	0.00	0.00
	30	3	0.00	0.00	0.00	0.00	0.00	0.00
		4	0.00	0.00	0.00	0.00	0.00	0.00
	31	3	0.00	0.00	0.00	0.00	0.00	0.00
		4	0.00	0.00	0.00	0.00	0.00	0.00
	32	3	0.00	0.00	0.00	0.00	0.00	0.00
		4	0.00	0.00	0.00	0.00	0.00	0.00
	33	3	0.00	0.00	0.00	0.00	0.00	0.00
		4	0.00	0.00	0.00	0.00	0.00	0.00
	34	3	0.00	0.00	0.00	0.00	0.00	0.00
		4	0.00	0.00	0.00	0.00	0.00	0.00
	35	3	0.00	0.00	0.00	0.00	0.00	0.00
		4	0.00	0.00	0.00	0.00	0.00	0.00
	36	3	0.00	0.00	0.00	0.00	0.00	0.00
		4	0.00	0.00	0.00	0.00	0.00	0.00
	37	3	0.00	0.00	0.00	0.00	0.00	0.00
		4	0.00	0.00	0.00	0.00	0.00	0.00
	38	3	0.00	0.00	0.00	0.00	0.00	0.00
		4	0.00	0.00	0.00	0.00	0.00	0.00
	39	3	0.00	0.00	0.00	0.00	0.00	0.00
		4	0.00	0.00	0.00	0.00	0.00	0.00
	40	3	0.00	0.00	0.00	0.00	0.00	0.00
		4	0.00	0.00	0.00	0.00	0.00	0.00
	41	3	0.00	0.00	0.00	0.00	0.00	0.00
		4	0.00	0.00	0.00	0.00	0.00	0.00
	42	3	0.00	0.00	0.00	0.00	0.00	0.00
		4	0.00	0.00	0.00	0.00	0.00	0.00
	43	3	0.00	0.00	0.00	0.00	0.00	0.00
		4	0.00	0.00	0.00	0.00	0.00	0.00
	44	3	0.00	0.00	0.00	0.00	0.00	0.00
		4	0.00	0.00	0.00	0.00	0.00	0.00
	45	3	0.00	0.00	0.00	0.00	0.00	0.00
		4	0.00	0.00	0.00	0.00	0.00	0.00
	46	3	0.00	0.00	0.00	0.00	0.00	0.00
		4	0.00	0.00	0.00	0.00	0.00	0.00
	47	3	0.00	0.00	0.00	0.00	0.00	0.00
		4	0.00	0.00	0.00	0.00	0.00	0.00
	48	3	0.00	0.00	0.00	0.00	0.00	0.00
		4	0.00	0.00	0.00	0.00	0.00	0.00
	49	3	0.00	0.00	0.00	0.00	0.00	0.00
		4	0.00	0.00	0.00	0.00	0.00	0.00

MEMBER END FORCES STRUCTURE TYPE = PLANE

ALL UNITS ARE -- KIP FEET (LOCAL)

MEMBER	LOAD	JT	AXIAL	SHEAR-Y	SHEAR-Z	TORSION	MOM-Y	MOM-Z
	50	3	0.00	0.00	0.00	0.00	0.00	0.00
		4	0.00	0.00	0.00	0.00	0.00	0.00
	51	3	0.00	0.00	0.00	0.00	0.00	0.00
		4	0.00	0.00	0.00	0.00	0.00	0.00
	52	3	0.00	0.00	0.00	0.00	0.00	0.00
		4	0.00	0.00	0.00	0.00	0.00	0.00
	53	3	0.00	0.00	0.00	0.00	0.00	0.00
		4	0.00	0.00	0.00	0.00	0.00	0.00
	54	3	0.00	0.00	0.00	0.00	0.00	0.00
		4	0.00	0.00	0.00	0.00	0.00	0.00
	55	3	0.00	0.00	0.00	0.00	0.00	0.00
		4	0.00	0.00	0.00	0.00	0.00	0.00
	56	3	0.00	0.00	0.00	0.00	0.00	0.00
		4	0.00	0.00	0.00	0.00	0.00	0.00
	57	3	0.00	0.00	0.00	0.00	0.00	0.00
		4	0.00	0.00	0.00	0.00	0.00	0.00
	58	3	0.00	0.00	0.00	0.00	0.00	0.00
		4	0.00	0.00	0.00	0.00	0.00	0.00
	59	3	0.00	0.00	0.00	0.00	0.00	0.00
		4	0.00	0.00	0.00	0.00	0.00	0.00
	60	3	0.00	0.00	0.00	0.00	0.00	0.00
		4	0.00	0.00	0.00	0.00	0.00	0.00
	61	3	0.00	0.00	0.00	0.00	0.00	0.00
		4	0.00	0.00	0.00	0.00	0.00	0.00
	62	3	0.00	0.00	0.00	0.00	0.00	0.00
		4	0.00	0.00	0.00	0.00	0.00	0.00
	63	3	0.00	0.00	0.00	0.00	0.00	0.00
		4	0.00	0.00	0.00	0.00	0.00	0.00
	64	3	0.00	0.00	0.00	0.00	0.00	0.00
		4	0.00	0.00	0.00	0.00	0.00	0.00
	65	3	0.00	0.00	0.00	0.00	0.00	0.00
		4	0.00	0.00	0.00	0.00	0.00	0.00
	66	3	0.00	0.00	0.00	0.00	0.00	0.00
		4	0.00	0.00	0.00	0.00	0.00	0.00
4	1	4	0.00	-8.50	0.00	0.00	0.00	12.76
		5	0.00	11.34	0.00	0.00	0.00	-22.68
	2	4	0.00	-100.10	0.00	0.00	0.00	100.10
		5	0.00	100.10	0.00	0.00	0.00	-200.20
	3	4	0.00	-58.90	0.00	0.00	0.00	58.90
		5	0.00	58.90	0.00	0.00	0.00	-117.80
	4	4	0.00	-40.00	0.00	0.00	0.00	40.00
		5	0.00	40.00	0.00	0.00	0.00	-80.00
	5	4	0.00	-11.00	0.00	0.00	0.00	11.00
		5	0.00	11.00	0.00	0.00	0.00	-22.00

MEMBER END FORCES STRUCTURE TYPE = PLANE

ALL UNITS ARE -- KIP FEET (LOCAL)

MEMBER	LOAD	JT	AXIAL	SHEAR-Y	SHEAR-Z	TORSION	MOM-Y	MOM-Z
	6	4	0.00	-13.00	0.00	0.00	0.00	13.00
		5	0.00	13.00	0.00	0.00	0.00	-26.00
	7	4	0.00	-19.00	0.00	0.00	0.00	19.00
		5	0.00	19.00	0.00	0.00	0.00	-38.00
	8	4	0.00	-20.00	0.00	0.00	0.00	20.00
		5	0.00	20.00	0.00	0.00	0.00	-40.00
	9	4	0.00	-14.00	0.00	0.00	0.00	14.00
		5	0.00	14.00	0.00	0.00	0.00	-28.00
	10	4	0.00	-16.00	0.00	0.00	0.00	16.00
		5	0.00	16.00	0.00	0.00	0.00	-32.00
	11	4	0.00	-18.00	0.00	0.00	0.00	18.00
		5	0.00	18.00	0.00	0.00	0.00	-36.00
	12	4	0.00	-20.00	0.00	0.00	0.00	20.00
		5	0.00	20.00	0.00	0.00	0.00	-40.00
	13	4	0.00	-20.00	0.00	0.00	0.00	20.00
		5	0.00	20.00	0.00	0.00	0.00	-40.00
	14	4	0.00	-20.00	0.00	0.00	0.00	20.00
		5	0.00	20.00	0.00	0.00	0.00	-40.00
	15	4	0.00	-27.00	0.00	0.00	0.00	27.00
		5	0.00	27.00	0.00	0.00	0.00	-54.00
	16	4	0.00	-33.00	0.00	0.00	0.00	33.00
		5	0.00	33.00	0.00	0.00	0.00	-66.00
	17	4	0.00	-30.00	0.00	0.00	0.00	30.00
		5	0.00	30.00	0.00	0.00	0.00	-60.00
	18	4	0.00	-39.00	0.00	0.00	0.00	39.00
		5	0.00	39.00	0.00	0.00	0.00	-78.00
	19	4	0.00	-51.00	0.00	0.00	0.00	51.00
		5	0.00	51.00	0.00	0.00	0.00	-102.00
	20	4	0.00	-15.00	0.00	0.00	0.00	15.00
		5	0.00	15.00	0.00	0.00	0.00	-30.00
	21	4	0.00	-23.00	0.00	0.00	0.00	23.00
		5	0.00	23.00	0.00	0.00	0.00	-46.00
	22	4	0.00	-11.00	0.00	0.00	0.00	11.00
		5	0.00	11.00	0.00	0.00	0.00	-22.00
	23	4	0.00	-49.00	0.00	0.00	0.00	49.00
		5	0.00	49.00	0.00	0.00	0.00	-98.00
	24	4	0.00	-31.00	0.00	0.00	0.00	31.00
		5	0.00	31.00	0.00	0.00	0.00	-62.00
	25	4	0.00	0.00	0.00	0.00	0.00	0.00
		5	0.00	0.00	0.00	0.00	0.00	0.00
	26	4	0.00	0.00	0.00	0.00	0.00	0.00
		5	0.00	0.00	0.00	0.00	0.00	0.00
	27	4	0.00	0.00	0.00	0.00	0.00	0.00
		5	0.00	0.00	0.00	0.00	0.00	0.00
	28	4	0.00	0.00	0.00	0.00	0.00	0.00
		5	0.00	0.00	0.00	0.00	0.00	0.00

MEMBER END FORCES STRUCTURE TYPE = PLANE

ALL UNITS ARE -- KIP FEET (LOCAL)

MEMBER	LOAD	JT	AXIAL	SHEAR-Y	SHEAR-Z	TORSION	MOM-Y	MOM-Z
	29	4	0.00	0.00	0.00	0.00	0.00	0.00
		5	0.00	0.00	0.00	0.00	0.00	0.00
	30	4	0.00	0.00	0.00	0.00	0.00	0.00
		5	0.00	0.00	0.00	0.00	0.00	0.00
	31	4	0.00	0.00	0.00	0.00	0.00	0.00
		5	0.00	0.00	0.00	0.00	0.00	0.00
	32	4	0.00	0.00	0.00	0.00	0.00	0.00
		5	0.00	0.00	0.00	0.00	0.00	0.00
	33	4	0.00	0.00	0.00	0.00	0.00	0.00
		5	0.00	0.00	0.00	0.00	0.00	0.00
	34	4	0.00	0.00	0.00	0.00	0.00	0.00
		5	0.00	0.00	0.00	0.00	0.00	0.00
	35	4	0.00	0.00	0.00	0.00	0.00	0.00
		5	0.00	0.00	0.00	0.00	0.00	0.00
	36	4	0.00	0.00	0.00	0.00	0.00	0.00
		5	0.00	0.00	0.00	0.00	0.00	0.00
	37	4	0.00	0.00	0.00	0.00	0.00	0.00
		5	0.00	0.00	0.00	0.00	0.00	0.00
	38	4	0.00	0.00	0.00	0.00	0.00	0.00
		5	0.00	0.00	0.00	0.00	0.00	0.00
	39	4	0.00	0.00	0.00	0.00	0.00	0.00
		5	0.00	0.00	0.00	0.00	0.00	0.00
	40	4	0.00	0.00	0.00	0.00	0.00	0.00
		5	0.00	0.00	0.00	0.00	0.00	0.00
	41	4	0.00	0.00	0.00	0.00	0.00	0.00
		5	0.00	0.00	0.00	0.00	0.00	0.00
	42	4	0.00	0.00	0.00	0.00	0.00	0.00
		5	0.00	0.00	0.00	0.00	0.00	0.00
	43	4	0.00	0.00	0.00	0.00	0.00	0.00
		5	0.00	0.00	0.00	0.00	0.00	0.00
	44	4	0.00	0.00	0.00	0.00	0.00	0.00
		5	0.00	0.00	0.00	0.00	0.00	0.00
	45	4	0.00	0.00	0.00	0.00	0.00	0.00
		5	0.00	0.00	0.00	0.00	0.00	0.00
	46	4	0.00	0.00	0.00	0.00	0.00	0.00
		5	0.00	0.00	0.00	0.00	0.00	0.00
	47	4	0.00	0.00	0.00	0.00	0.00	0.00
		5	0.00	0.00	0.00	0.00	0.00	0.00
	48	4	0.00	0.00	0.00	0.00	0.00	0.00
		5	0.00	0.00	0.00	0.00	0.00	0.00
	49	4	0.00	0.00	0.00	0.00	0.00	0.00
		5	0.00	0.00	0.00	0.00	0.00	0.00
	50	4	0.00	0.00	0.00	0.00	0.00	0.00
		5	0.00	0.00	0.00	0.00	0.00	0.00
	51	4	0.00	0.00	0.00	0.00	0.00	0.00
		5	0.00	0.00	0.00	0.00	0.00	0.00

MEMBER END FORCES STRUCTURE TYPE = PLANE

ALL UNITS ARE -- KIP FEET (LOCAL)

MEMBER	LOAD	JT	AXIAL	SHEAR-Y	SHEAR-Z	TORSION	MOM-Y	MOM-Z
	52	4	0.00	0.00	0.00	0.00	0.00	0.00
		5	0.00	0.00	0.00	0.00	0.00	0.00
	53	4	0.00	0.00	0.00	0.00	0.00	0.00
		5	0.00	0.00	0.00	0.00	0.00	0.00
	54	4	0.00	0.00	0.00	0.00	0.00	0.00
		5	0.00	0.00	0.00	0.00	0.00	0.00
	55	4	0.00	0.00	0.00	0.00	0.00	0.00
		5	0.00	0.00	0.00	0.00	0.00	0.00
	56	4	0.00	0.00	0.00	0.00	0.00	0.00
		5	0.00	0.00	0.00	0.00	0.00	0.00
	57	4	0.00	0.00	0.00	0.00	0.00	0.00
		5	0.00	0.00	0.00	0.00	0.00	0.00
	58	4	0.00	0.00	0.00	0.00	0.00	0.00
		5	0.00	0.00	0.00	0.00	0.00	0.00
	59	4	0.00	0.00	0.00	0.00	0.00	0.00
		5	0.00	0.00	0.00	0.00	0.00	0.00
	60	4	0.00	0.00	0.00	0.00	0.00	0.00
		5	0.00	0.00	0.00	0.00	0.00	0.00
	61	4	0.00	0.00	0.00	0.00	0.00	0.00
		5	0.00	0.00	0.00	0.00	0.00	0.00
	62	4	0.00	0.00	0.00	0.00	0.00	0.00
		5	0.00	0.00	0.00	0.00	0.00	0.00
	63	4	0.00	0.00	0.00	0.00	0.00	0.00
		5	0.00	0.00	0.00	0.00	0.00	0.00
	64	4	0.00	0.00	0.00	0.00	0.00	0.00
		5	0.00	0.00	0.00	0.00	0.00	0.00
	65	4	0.00	0.00	0.00	0.00	0.00	0.00
		5	0.00	0.00	0.00	0.00	0.00	0.00
	66	4	0.00	0.00	0.00	0.00	0.00	0.00
		5	0.00	0.00	0.00	0.00	0.00	0.00
5	1	5	0.00	2.13	0.00	0.00	0.00	0.53
		6	0.00	0.71	0.00	0.00	0.00	0.18
	2	5	0.00	0.00	0.00	0.00	0.00	0.00
		6	0.00	0.00	0.00	0.00	0.00	0.00
	3	5	0.00	0.00	0.00	0.00	0.00	0.00
		6	0.00	0.00	0.00	0.00	0.00	0.00
	4	5	0.00	0.00	0.00	0.00	0.00	0.00
		6	0.00	0.00	0.00	0.00	0.00	0.00
	5	5	0.00	0.00	0.00	0.00	0.00	0.00
		6	0.00	0.00	0.00	0.00	0.00	0.00
	6	5	0.00	0.00	0.00	0.00	0.00	0.00
		6	0.00	0.00	0.00	0.00	0.00	0.00
	7	5	0.00	0.00	0.00	0.00	0.00	0.00
		6	0.00	0.00	0.00	0.00	0.00	0.00

MEMBER END FORCES STRUCTURE TYPE = PLANE

ALL UNITS ARE -- KIP FEET (LOCAL)

MEMBER	LOAD	JT	AXIAL	SHEAR-Y	SHEAR-Z	TORSION	MOM-Y	MOM-Z
	8	5	0.00	0.00	0.00	0.00	0.00	0.00
		6	0.00	0.00	0.00	0.00	0.00	0.00
	9	5	0.00	0.00	0.00	0.00	0.00	0.00
		6	0.00	0.00	0.00	0.00	0.00	0.00
	10	5	0.00	0.00	0.00	0.00	0.00	0.00
		6	0.00	0.00	0.00	0.00	0.00	0.00
	11	5	0.00	0.00	0.00	0.00	0.00	0.00
		6	0.00	0.00	0.00	0.00	0.00	0.00
	12	5	0.00	0.00	0.00	0.00	0.00	0.00
		6	0.00	0.00	0.00	0.00	0.00	0.00
	13	5	0.00	0.00	0.00	0.00	0.00	0.00
		6	0.00	0.00	0.00	0.00	0.00	0.00
	14	5	0.00	0.00	0.00	0.00	0.00	0.00
		6	0.00	0.00	0.00	0.00	0.00	0.00
	15	5	0.00	0.00	0.00	0.00	0.00	0.00
		6	0.00	0.00	0.00	0.00	0.00	0.00
	16	5	0.00	0.00	0.00	0.00	0.00	0.00
		6	0.00	0.00	0.00	0.00	0.00	0.00
	17	5	0.00	0.00	0.00	0.00	0.00	0.00
		6	0.00	0.00	0.00	0.00	0.00	0.00
	18	5	0.00	0.00	0.00	0.00	0.00	0.00
		6	0.00	0.00	0.00	0.00	0.00	0.00
	19	5	0.00	0.00	0.00	0.00	0.00	0.00
		6	0.00	0.00	0.00	0.00	0.00	0.00
	20	5	0.00	0.00	0.00	0.00	0.00	0.00
		6	0.00	0.00	0.00	0.00	0.00	0.00
	21	5	0.00	0.00	0.00	0.00	0.00	0.00
		6	0.00	0.00	0.00	0.00	0.00	0.00
	22	5	0.00	0.00	0.00	0.00	0.00	0.00
		6	0.00	0.00	0.00	0.00	0.00	0.00
	23	5	0.00	0.00	0.00	0.00	0.00	0.00
		6	0.00	0.00	0.00	0.00	0.00	0.00
	24	5	0.00	0.00	0.00	0.00	0.00	0.00
		6	0.00	0.00	0.00	0.00	0.00	0.00
	25	5	0.00	0.00	0.00	0.00	0.00	0.00
		6	0.00	0.00	0.00	0.00	0.00	0.00
	26	5	0.00	0.00	0.00	0.00	0.00	0.00
		6	0.00	0.00	0.00	0.00	0.00	0.00
	27	5	0.00	0.00	0.00	0.00	0.00	0.00
		6	0.00	0.00	0.00	0.00	0.00	0.00
	28	5	0.00	0.00	0.00	0.00	0.00	0.00
		6	0.00	0.00	0.00	0.00	0.00	0.00
	29	5	0.00	0.00	0.00	0.00	0.00	0.00
		6	0.00	0.00	0.00	0.00	0.00	0.00
	30	5	0.00	0.00	0.00	0.00	0.00	0.00
		6	0.00	0.00	0.00	0.00	0.00	0.00

MEMBER END FORCES STRUCTURE TYPE = PLANE

ALL UNITS ARE -- KIP FEET (LOCAL)

MEMBER	LOAD	JT	AXIAL	SHEAR-Y	SHEAR-Z	TORSION	MOM-Y	MOM-Z
	31	5	0.00	0.00	0.00	0.00	0.00	0.00
		6	0.00	0.00	0.00	0.00	0.00	0.00
	32	5	0.00	0.00	0.00	0.00	0.00	0.00
		6	0.00	0.00	0.00	0.00	0.00	0.00
	33	5	0.00	0.00	0.00	0.00	0.00	0.00
		6	0.00	0.00	0.00	0.00	0.00	0.00
	34	5	0.00	0.00	0.00	0.00	0.00	0.00
		6	0.00	0.00	0.00	0.00	0.00	0.00
	35	5	0.00	0.00	0.00	0.00	0.00	0.00
		6	0.00	0.00	0.00	0.00	0.00	0.00
	36	5	0.00	0.00	0.00	0.00	0.00	0.00
		6	0.00	0.00	0.00	0.00	0.00	0.00
	37	5	0.00	0.00	0.00	0.00	0.00	0.00
		6	0.00	0.00	0.00	0.00	0.00	0.00
	38	5	0.00	0.00	0.00	0.00	0.00	0.00
		6	0.00	0.00	0.00	0.00	0.00	0.00
	39	5	0.00	0.00	0.00	0.00	0.00	0.00
		6	0.00	0.00	0.00	0.00	0.00	0.00
	40	5	0.00	0.00	0.00	0.00	0.00	0.00
		6	0.00	0.00	0.00	0.00	0.00	0.00
	41	5	0.00	0.00	0.00	0.00	0.00	0.00
		6	0.00	0.00	0.00	0.00	0.00	0.00
	42	5	0.00	0.00	0.00	0.00	0.00	0.00
		6	0.00	0.00	0.00	0.00	0.00	0.00
	43	5	0.00	0.00	0.00	0.00	0.00	0.00
		6	0.00	0.00	0.00	0.00	0.00	0.00
	44	5	0.00	0.00	0.00	0.00	0.00	0.00
		6	0.00	0.00	0.00	0.00	0.00	0.00
	45	5	0.00	0.00	0.00	0.00	0.00	0.00
		6	0.00	0.00	0.00	0.00	0.00	0.00
	46	5	0.00	0.00	0.00	0.00	0.00	0.00
		6	0.00	0.00	0.00	0.00	0.00	0.00
	47	5	0.00	0.00	0.00	0.00	0.00	0.00
		6	0.00	0.00	0.00	0.00	0.00	0.00
	48	5	0.00	0.00	0.00	0.00	0.00	0.00
		6	0.00	0.00	0.00	0.00	0.00	0.00
	49	5	0.00	0.00	0.00	0.00	0.00	0.00
		6	0.00	0.00	0.00	0.00	0.00	0.00
	50	5	0.00	0.00	0.00	0.00	0.00	0.00
		6	0.00	0.00	0.00	0.00	0.00	0.00
	51	5	0.00	0.00	0.00	0.00	0.00	0.00
		6	0.00	0.00	0.00	0.00	0.00	0.00
	52	5	0.00	0.00	0.00	0.00	0.00	0.00
		6	0.00	0.00	0.00	0.00	0.00	0.00
	53	5	0.00	0.00	0.00	0.00	0.00	0.00
		6	0.00	0.00	0.00	0.00	0.00	0.00

MEMBER END FORCES STRUCTURE TYPE = PLANE

ALL UNITS ARE -- KIP FEET (LOCAL)

MEMBER	LOAD	JT	AXIAL	SHEAR-Y	SHEAR-Z	TORSION	MOM-Y	MOM-Z
	54	5	0.00	0.00	0.00	0.00	0.00	0.00
		6	0.00	0.00	0.00	0.00	0.00	0.00
	55	5	0.00	0.00	0.00	0.00	0.00	0.00
		6	0.00	0.00	0.00	0.00	0.00	0.00
	56	5	0.00	0.00	0.00	0.00	0.00	0.00
		6	0.00	0.00	0.00	0.00	0.00	0.00
	57	5	0.00	0.00	0.00	0.00	0.00	0.00
		6	0.00	0.00	0.00	0.00	0.00	0.00
	58	5	0.00	0.00	0.00	0.00	0.00	0.00
		6	0.00	0.00	0.00	0.00	0.00	0.00
	59	5	0.00	0.00	0.00	0.00	0.00	0.00
		6	0.00	0.00	0.00	0.00	0.00	0.00
	60	5	0.00	0.00	0.00	0.00	0.00	0.00
		6	0.00	0.00	0.00	0.00	0.00	0.00
	61	5	0.00	0.00	0.00	0.00	0.00	0.00
		6	0.00	0.00	0.00	0.00	0.00	0.00
	62	5	0.00	0.00	0.00	0.00	0.00	0.00
		6	0.00	0.00	0.00	0.00	0.00	0.00
	63	5	0.00	0.00	0.00	0.00	0.00	0.00
		6	0.00	0.00	0.00	0.00	0.00	0.00
	64	5	0.00	0.00	0.00	0.00	0.00	0.00
		6	0.00	0.00	0.00	0.00	0.00	0.00
	65	5	0.00	0.00	0.00	0.00	0.00	0.00
		6	0.00	0.00	0.00	0.00	0.00	0.00
	66	5	0.00	0.00	0.00	0.00	0.00	0.00
		6	0.00	0.00	0.00	0.00	0.00	0.00
6	1	6	0.00	-0.71	0.00	0.00	0.00	-0.18
		7	0.00	2.13	0.00	0.00	0.00	-0.53
	2	6	0.00	0.00	0.00	0.00	0.00	0.00
		7	0.00	0.00	0.00	0.00	0.00	0.00
	3	6	0.00	0.00	0.00	0.00	0.00	0.00
		7	0.00	0.00	0.00	0.00	0.00	0.00
	4	6	0.00	0.00	0.00	0.00	0.00	0.00
		7	0.00	0.00	0.00	0.00	0.00	0.00
	5	6	0.00	0.00	0.00	0.00	0.00	0.00
		7	0.00	0.00	0.00	0.00	0.00	0.00
	6	6	0.00	0.00	0.00	0.00	0.00	0.00
		7	0.00	0.00	0.00	0.00	0.00	0.00
	7	6	0.00	0.00	0.00	0.00	0.00	0.00
		7	0.00	0.00	0.00	0.00	0.00	0.00
	8	6	0.00	0.00	0.00	0.00	0.00	0.00
		7	0.00	0.00	0.00	0.00	0.00	0.00
	9	6	0.00	0.00	0.00	0.00	0.00	0.00
		7	0.00	0.00	0.00	0.00	0.00	0.00

MEMBER END FORCES STRUCTURE TYPE = PLANE

ALL UNITS ARE -- KIP FEET (LOCAL)

MEMBER	LOAD	JT	AXIAL	SHEAR-Y	SHEAR-Z	TORSION	MOM-Y	MOM-Z
	10	6	0.00	0.00	0.00	0.00	0.00	0.00
		7	0.00	0.00	0.00	0.00	0.00	0.00
	11	6	0.00	0.00	0.00	0.00	0.00	0.00
		7	0.00	0.00	0.00	0.00	0.00	0.00
	12	6	0.00	0.00	0.00	0.00	0.00	0.00
		7	0.00	0.00	0.00	0.00	0.00	0.00
	13	6	0.00	0.00	0.00	0.00	0.00	0.00
		7	0.00	0.00	0.00	0.00	0.00	0.00
	14	6	0.00	0.00	0.00	0.00	0.00	0.00
		7	0.00	0.00	0.00	0.00	0.00	0.00
	15	6	0.00	0.00	0.00	0.00	0.00	0.00
		7	0.00	0.00	0.00	0.00	0.00	0.00
	16	6	0.00	0.00	0.00	0.00	0.00	0.00
		7	0.00	0.00	0.00	0.00	0.00	0.00
	17	6	0.00	0.00	0.00	0.00	0.00	0.00
		7	0.00	0.00	0.00	0.00	0.00	0.00
	18	6	0.00	0.00	0.00	0.00	0.00	0.00
		7	0.00	0.00	0.00	0.00	0.00	0.00
	19	6	0.00	0.00	0.00	0.00	0.00	0.00
		7	0.00	0.00	0.00	0.00	0.00	0.00
	20	6	0.00	0.00	0.00	0.00	0.00	0.00
		7	0.00	0.00	0.00	0.00	0.00	0.00
	21	6	0.00	0.00	0.00	0.00	0.00	0.00
		7	0.00	0.00	0.00	0.00	0.00	0.00
	22	6	0.00	0.00	0.00	0.00	0.00	0.00
		7	0.00	0.00	0.00	0.00	0.00	0.00
	23	6	0.00	0.00	0.00	0.00	0.00	0.00
		7	0.00	0.00	0.00	0.00	0.00	0.00
	24	6	0.00	0.00	0.00	0.00	0.00	0.00
		7	0.00	0.00	0.00	0.00	0.00	0.00
	25	6	0.00	0.00	0.00	0.00	0.00	0.00
		7	0.00	0.00	0.00	0.00	0.00	0.00
	26	6	0.00	0.00	0.00	0.00	0.00	0.00
		7	0.00	0.00	0.00	0.00	0.00	0.00
	27	6	0.00	0.00	0.00	0.00	0.00	0.00
		7	0.00	0.00	0.00	0.00	0.00	0.00
	28	6	0.00	0.00	0.00	0.00	0.00	0.00
		7	0.00	0.00	0.00	0.00	0.00	0.00
	29	6	0.00	0.00	0.00	0.00	0.00	0.00
		7	0.00	0.00	0.00	0.00	0.00	0.00
	30	6	0.00	0.00	0.00	0.00	0.00	0.00
		7	0.00	0.00	0.00	0.00	0.00	0.00
	31	6	0.00	0.00	0.00	0.00	0.00	0.00
		7	0.00	0.00	0.00	0.00	0.00	0.00
	32	6	0.00	0.00	0.00	0.00	0.00	0.00
		7	0.00	0.00	0.00	0.00	0.00	0.00

MEMBER END FORCES STRUCTURE TYPE = PLANE

ALL UNITS ARE -- KIP FEET (LOCAL)

MEMBER	LOAD	JT	AXIAL	SHEAR-Y	SHEAR-Z	TORSION	MOM-Y	MOM-Z
	33	6	0.00	0.00	0.00	0.00	0.00	0.00
		7	0.00	0.00	0.00	0.00	0.00	0.00
	34	6	0.00	0.00	0.00	0.00	0.00	0.00
		7	0.00	0.00	0.00	0.00	0.00	0.00
	35	6	0.00	0.00	0.00	0.00	0.00	0.00
		7	0.00	0.00	0.00	0.00	0.00	0.00
	36	6	0.00	0.00	0.00	0.00	0.00	0.00
		7	0.00	0.00	0.00	0.00	0.00	0.00
	37	6	0.00	0.00	0.00	0.00	0.00	0.00
		7	0.00	0.00	0.00	0.00	0.00	0.00
	38	6	0.00	0.00	0.00	0.00	0.00	0.00
		7	0.00	0.00	0.00	0.00	0.00	0.00
	39	6	0.00	0.00	0.00	0.00	0.00	0.00
		7	0.00	0.00	0.00	0.00	0.00	0.00
	40	6	0.00	0.00	0.00	0.00	0.00	0.00
		7	0.00	0.00	0.00	0.00	0.00	0.00
	41	6	0.00	0.00	0.00	0.00	0.00	0.00
		7	0.00	0.00	0.00	0.00	0.00	0.00
	42	6	0.00	0.00	0.00	0.00	0.00	0.00
		7	0.00	0.00	0.00	0.00	0.00	0.00
	43	6	0.00	0.00	0.00	0.00	0.00	0.00
		7	0.00	0.00	0.00	0.00	0.00	0.00
	44	6	0.00	0.00	0.00	0.00	0.00	0.00
		7	0.00	0.00	0.00	0.00	0.00	0.00
	45	6	0.00	0.00	0.00	0.00	0.00	0.00
		7	0.00	0.00	0.00	0.00	0.00	0.00
	46	6	0.00	0.00	0.00	0.00	0.00	0.00
		7	0.00	0.00	0.00	0.00	0.00	0.00
	47	6	0.00	0.00	0.00	0.00	0.00	0.00
		7	0.00	0.00	0.00	0.00	0.00	0.00
	48	6	0.00	0.00	0.00	0.00	0.00	0.00
		7	0.00	0.00	0.00	0.00	0.00	0.00
	49	6	0.00	0.00	0.00	0.00	0.00	0.00
		7	0.00	0.00	0.00	0.00	0.00	0.00
	50	6	0.00	0.00	0.00	0.00	0.00	0.00
		7	0.00	0.00	0.00	0.00	0.00	0.00
	51	6	0.00	0.00	0.00	0.00	0.00	0.00
		7	0.00	0.00	0.00	0.00	0.00	0.00
	52	6	0.00	0.00	0.00	0.00	0.00	0.00
		7	0.00	0.00	0.00	0.00	0.00	0.00
	53	6	0.00	0.00	0.00	0.00	0.00	0.00
		7	0.00	0.00	0.00	0.00	0.00	0.00
	54	6	0.00	0.00	0.00	0.00	0.00	0.00
		7	0.00	0.00	0.00	0.00	0.00	0.00
	55	6	0.00	0.00	0.00	0.00	0.00	0.00
		7	0.00	0.00	0.00	0.00	0.00	0.00

MEMBER END FORCES STRUCTURE TYPE = PLANE

ALL UNITS ARE -- KIP FEET (LOCAL)

MEMBER	LOAD	JT	AXIAL	SHEAR-Y	SHEAR-Z	TORSION	MOM-Y	MOM-Z
	56	6	0.00	0.00	0.00	0.00	0.00	0.00
		7	0.00	0.00	0.00	0.00	0.00	0.00
	57	6	0.00	0.00	0.00	0.00	0.00	0.00
		7	0.00	0.00	0.00	0.00	0.00	0.00
	58	6	0.00	0.00	0.00	0.00	0.00	0.00
		7	0.00	0.00	0.00	0.00	0.00	0.00
	59	6	0.00	0.00	0.00	0.00	0.00	0.00
		7	0.00	0.00	0.00	0.00	0.00	0.00
	60	6	0.00	0.00	0.00	0.00	0.00	0.00
		7	0.00	0.00	0.00	0.00	0.00	0.00
	61	6	0.00	0.00	0.00	0.00	0.00	0.00
		7	0.00	0.00	0.00	0.00	0.00	0.00
	62	6	0.00	0.00	0.00	0.00	0.00	0.00
		7	0.00	0.00	0.00	0.00	0.00	0.00
	63	6	0.00	0.00	0.00	0.00	0.00	0.00
		7	0.00	0.00	0.00	0.00	0.00	0.00
	64	6	0.00	0.00	0.00	0.00	0.00	0.00
		7	0.00	0.00	0.00	0.00	0.00	0.00
	65	6	0.00	0.00	0.00	0.00	0.00	0.00
		7	0.00	0.00	0.00	0.00	0.00	0.00
	66	6	0.00	0.00	0.00	0.00	0.00	0.00
		7	0.00	0.00	0.00	0.00	0.00	0.00
7	1	7	0.00	2.13	0.00	0.00	0.00	0.53
		8	0.00	-0.71	0.00	0.00	0.00	0.18
	2	7	0.00	0.00	0.00	0.00	0.00	0.00
		8	0.00	0.00	0.00	0.00	0.00	0.00
	3	7	0.00	0.00	0.00	0.00	0.00	0.00
		8	0.00	0.00	0.00	0.00	0.00	0.00
	4	7	0.00	0.00	0.00	0.00	0.00	0.00
		8	0.00	0.00	0.00	0.00	0.00	0.00
	5	7	0.00	0.00	0.00	0.00	0.00	0.00
		8	0.00	0.00	0.00	0.00	0.00	0.00
	6	7	0.00	0.00	0.00	0.00	0.00	0.00
		8	0.00	0.00	0.00	0.00	0.00	0.00
	7	7	0.00	0.00	0.00	0.00	0.00	0.00
		8	0.00	0.00	0.00	0.00	0.00	0.00
	8	7	0.00	0.00	0.00	0.00	0.00	0.00
		8	0.00	0.00	0.00	0.00	0.00	0.00
	9	7	0.00	0.00	0.00	0.00	0.00	0.00
		8	0.00	0.00	0.00	0.00	0.00	0.00
	10	7	0.00	0.00	0.00	0.00	0.00	0.00
		8	0.00	0.00	0.00	0.00	0.00	0.00
	11	7	0.00	0.00	0.00	0.00	0.00	0.00
		8	0.00	0.00	0.00	0.00	0.00	0.00

MEMBER END FORCES STRUCTURE TYPE = PLANE

ALL UNITS ARE -- KIP FEET (LOCAL)

MEMBER	LOAD	JT	AXIAL	SHEAR-Y	SHEAR-Z	TORSION	MOM-Y	MOM-Z
	12	7	0.00	0.00	0.00	0.00	0.00	0.00
		8	0.00	0.00	0.00	0.00	0.00	0.00
	13	7	0.00	0.00	0.00	0.00	0.00	0.00
		8	0.00	0.00	0.00	0.00	0.00	0.00
	14	7	0.00	0.00	0.00	0.00	0.00	0.00
		8	0.00	0.00	0.00	0.00	0.00	0.00
	15	7	0.00	0.00	0.00	0.00	0.00	0.00
		8	0.00	0.00	0.00	0.00	0.00	0.00
	16	7	0.00	0.00	0.00	0.00	0.00	0.00
		8	0.00	0.00	0.00	0.00	0.00	0.00
	17	7	0.00	0.00	0.00	0.00	0.00	0.00
		8	0.00	0.00	0.00	0.00	0.00	0.00
	18	7	0.00	0.00	0.00	0.00	0.00	0.00
		8	0.00	0.00	0.00	0.00	0.00	0.00
	19	7	0.00	0.00	0.00	0.00	0.00	0.00
		8	0.00	0.00	0.00	0.00	0.00	0.00
	20	7	0.00	0.00	0.00	0.00	0.00	0.00
		8	0.00	0.00	0.00	0.00	0.00	0.00
	21	7	0.00	0.00	0.00	0.00	0.00	0.00
		8	0.00	0.00	0.00	0.00	0.00	0.00
	22	7	0.00	0.00	0.00	0.00	0.00	0.00
		8	0.00	0.00	0.00	0.00	0.00	0.00
	23	7	0.00	0.00	0.00	0.00	0.00	0.00
		8	0.00	0.00	0.00	0.00	0.00	0.00
	24	7	0.00	0.00	0.00	0.00	0.00	0.00
		8	0.00	0.00	0.00	0.00	0.00	0.00
	25	7	0.00	0.00	0.00	0.00	0.00	0.00
		8	0.00	0.00	0.00	0.00	0.00	0.00
	26	7	0.00	0.00	0.00	0.00	0.00	0.00
		8	0.00	0.00	0.00	0.00	0.00	0.00
	27	7	0.00	0.00	0.00	0.00	0.00	0.00
		8	0.00	0.00	0.00	0.00	0.00	0.00
	28	7	0.00	0.00	0.00	0.00	0.00	0.00
		8	0.00	0.00	0.00	0.00	0.00	0.00
	29	7	0.00	0.00	0.00	0.00	0.00	0.00
		8	0.00	0.00	0.00	0.00	0.00	0.00
	30	7	0.00	0.00	0.00	0.00	0.00	0.00
		8	0.00	0.00	0.00	0.00	0.00	0.00
	31	7	0.00	0.00	0.00	0.00	0.00	0.00
		8	0.00	0.00	0.00	0.00	0.00	0.00
	32	7	0.00	0.00	0.00	0.00	0.00	0.00
		8	0.00	0.00	0.00	0.00	0.00	0.00
	33	7	0.00	0.00	0.00	0.00	0.00	0.00
		8	0.00	0.00	0.00	0.00	0.00	0.00
	34	7	0.00	0.00	0.00	0.00	0.00	0.00
		8	0.00	0.00	0.00	0.00	0.00	0.00

MEMBER END FORCES STRUCTURE TYPE = PLANE

ALL UNITS ARE -- KIP FEET (LOCAL)

MEMBER	LOAD	JT	AXIAL	SHEAR-Y	SHEAR-Z	TORSION	MOM-Y	MOM-Z
	35	7	0.00	0.00	0.00	0.00	0.00	0.00
		8	0.00	0.00	0.00	0.00	0.00	0.00
	36	7	0.00	0.00	0.00	0.00	0.00	0.00
		8	0.00	0.00	0.00	0.00	0.00	0.00
	37	7	0.00	0.00	0.00	0.00	0.00	0.00
		8	0.00	0.00	0.00	0.00	0.00	0.00
	38	7	0.00	0.00	0.00	0.00	0.00	0.00
		8	0.00	0.00	0.00	0.00	0.00	0.00
	39	7	0.00	0.00	0.00	0.00	0.00	0.00
		8	0.00	0.00	0.00	0.00	0.00	0.00
	40	7	0.00	0.00	0.00	0.00	0.00	0.00
		8	0.00	0.00	0.00	0.00	0.00	0.00
	41	7	0.00	0.00	0.00	0.00	0.00	0.00
		8	0.00	0.00	0.00	0.00	0.00	0.00
	42	7	0.00	0.00	0.00	0.00	0.00	0.00
		8	0.00	0.00	0.00	0.00	0.00	0.00
	43	7	0.00	0.00	0.00	0.00	0.00	0.00
		8	0.00	0.00	0.00	0.00	0.00	0.00
	44	7	0.00	0.00	0.00	0.00	0.00	0.00
		8	0.00	0.00	0.00	0.00	0.00	0.00
	45	7	0.00	0.00	0.00	0.00	0.00	0.00
		8	0.00	0.00	0.00	0.00	0.00	0.00
	46	7	0.00	0.00	0.00	0.00	0.00	0.00
		8	0.00	0.00	0.00	0.00	0.00	0.00
	47	7	0.00	0.00	0.00	0.00	0.00	0.00
		8	0.00	0.00	0.00	0.00	0.00	0.00
	48	7	0.00	0.00	0.00	0.00	0.00	0.00
		8	0.00	0.00	0.00	0.00	0.00	0.00
	49	7	0.00	0.00	0.00	0.00	0.00	0.00
		8	0.00	0.00	0.00	0.00	0.00	0.00
	50	7	0.00	0.00	0.00	0.00	0.00	0.00
		8	0.00	0.00	0.00	0.00	0.00	0.00
	51	7	0.00	0.00	0.00	0.00	0.00	0.00
		8	0.00	0.00	0.00	0.00	0.00	0.00
	52	7	0.00	0.00	0.00	0.00	0.00	0.00
		8	0.00	0.00	0.00	0.00	0.00	0.00
	53	7	0.00	0.00	0.00	0.00	0.00	0.00
		8	0.00	0.00	0.00	0.00	0.00	0.00
	54	7	0.00	0.00	0.00	0.00	0.00	0.00
		8	0.00	0.00	0.00	0.00	0.00	0.00
	55	7	0.00	0.00	0.00	0.00	0.00	0.00
		8	0.00	0.00	0.00	0.00	0.00	0.00
	56	7	0.00	0.00	0.00	0.00	0.00	0.00
		8	0.00	0.00	0.00	0.00	0.00	0.00
	57	7	0.00	0.00	0.00	0.00	0.00	0.00
		8	0.00	0.00	0.00	0.00	0.00	0.00

MEMBER END FORCES STRUCTURE TYPE = PLANE

ALL UNITS ARE -- KIP FEET (LOCAL)

MEMBER	LOAD	JT	AXIAL	SHEAR-Y	SHEAR-Z	TORSION	MOM-Y	MOM-Z
	58	7	0.00	0.00	0.00	0.00	0.00	0.00
		8	0.00	0.00	0.00	0.00	0.00	0.00
	59	7	0.00	0.00	0.00	0.00	0.00	0.00
		8	0.00	0.00	0.00	0.00	0.00	0.00
	60	7	0.00	0.00	0.00	0.00	0.00	0.00
		8	0.00	0.00	0.00	0.00	0.00	0.00
	61	7	0.00	0.00	0.00	0.00	0.00	0.00
		8	0.00	0.00	0.00	0.00	0.00	0.00
	62	7	0.00	0.00	0.00	0.00	0.00	0.00
		8	0.00	0.00	0.00	0.00	0.00	0.00
	63	7	0.00	0.00	0.00	0.00	0.00	0.00
		8	0.00	0.00	0.00	0.00	0.00	0.00
	64	7	0.00	0.00	0.00	0.00	0.00	0.00
		8	0.00	0.00	0.00	0.00	0.00	0.00
	65	7	0.00	0.00	0.00	0.00	0.00	0.00
		8	0.00	0.00	0.00	0.00	0.00	0.00
	66	7	0.00	0.00	0.00	0.00	0.00	0.00
		8	0.00	0.00	0.00	0.00	0.00	0.00
8	1	8	0.00	0.71	0.00	0.00	0.00	-0.18
		9	0.00	2.13	0.00	0.00	0.00	-0.53
	2	8	0.00	0.00	0.00	0.00	0.00	0.00
		9	0.00	0.00	0.00	0.00	0.00	0.00
	3	8	0.00	0.00	0.00	0.00	0.00	0.00
		9	0.00	0.00	0.00	0.00	0.00	0.00
	4	8	0.00	0.00	0.00	0.00	0.00	0.00
		9	0.00	0.00	0.00	0.00	0.00	0.00
	5	8	0.00	0.00	0.00	0.00	0.00	0.00
		9	0.00	0.00	0.00	0.00	0.00	0.00
	6	8	0.00	0.00	0.00	0.00	0.00	0.00
		9	0.00	0.00	0.00	0.00	0.00	0.00
	7	8	0.00	0.00	0.00	0.00	0.00	0.00
		9	0.00	0.00	0.00	0.00	0.00	0.00
	8	8	0.00	0.00	0.00	0.00	0.00	0.00
		9	0.00	0.00	0.00	0.00	0.00	0.00
	9	8	0.00	0.00	0.00	0.00	0.00	0.00
		9	0.00	0.00	0.00	0.00	0.00	0.00
	10	8	0.00	0.00	0.00	0.00	0.00	0.00
		9	0.00	0.00	0.00	0.00	0.00	0.00
	11	8	0.00	0.00	0.00	0.00	0.00	0.00
		9	0.00	0.00	0.00	0.00	0.00	0.00
	12	8	0.00	0.00	0.00	0.00	0.00	0.00
		9	0.00	0.00	0.00	0.00	0.00	0.00
	13	8	0.00	0.00	0.00	0.00	0.00	0.00
		9	0.00	0.00	0.00	0.00	0.00	0.00

MEMBER END FORCES STRUCTURE TYPE = PLANE

ALL UNITS ARE -- KIP FEET (LOCAL)

MEMBER	LOAD	JT	AXIAL	SHEAR-Y	SHEAR-Z	TORSION	MOM-Y	MOM-Z
	14	8	0.00	0.00	0.00	0.00	0.00	0.00
		9	0.00	0.00	0.00	0.00	0.00	0.00
	15	8	0.00	0.00	0.00	0.00	0.00	0.00
		9	0.00	0.00	0.00	0.00	0.00	0.00
	16	8	0.00	0.00	0.00	0.00	0.00	0.00
		9	0.00	0.00	0.00	0.00	0.00	0.00
	17	8	0.00	0.00	0.00	0.00	0.00	0.00
		9	0.00	0.00	0.00	0.00	0.00	0.00
	18	8	0.00	0.00	0.00	0.00	0.00	0.00
		9	0.00	0.00	0.00	0.00	0.00	0.00
	19	8	0.00	0.00	0.00	0.00	0.00	0.00
		9	0.00	0.00	0.00	0.00	0.00	0.00
	20	8	0.00	0.00	0.00	0.00	0.00	0.00
		9	0.00	0.00	0.00	0.00	0.00	0.00
	21	8	0.00	0.00	0.00	0.00	0.00	0.00
		9	0.00	0.00	0.00	0.00	0.00	0.00
	22	8	0.00	0.00	0.00	0.00	0.00	0.00
		9	0.00	0.00	0.00	0.00	0.00	0.00
	23	8	0.00	0.00	0.00	0.00	0.00	0.00
		9	0.00	0.00	0.00	0.00	0.00	0.00
	24	8	0.00	0.00	0.00	0.00	0.00	0.00
		9	0.00	0.00	0.00	0.00	0.00	0.00
	25	8	0.00	0.00	0.00	0.00	0.00	0.00
		9	0.00	0.00	0.00	0.00	0.00	0.00
	26	8	0.00	0.00	0.00	0.00	0.00	0.00
		9	0.00	0.00	0.00	0.00	0.00	0.00
	27	8	0.00	0.00	0.00	0.00	0.00	0.00
		9	0.00	0.00	0.00	0.00	0.00	0.00
	28	8	0.00	0.00	0.00	0.00	0.00	0.00
		9	0.00	0.00	0.00	0.00	0.00	0.00
	29	8	0.00	0.00	0.00	0.00	0.00	0.00
		9	0.00	0.00	0.00	0.00	0.00	0.00
	30	8	0.00	0.00	0.00	0.00	0.00	0.00
		9	0.00	0.00	0.00	0.00	0.00	0.00
	31	8	0.00	0.00	0.00	0.00	0.00	0.00
		9	0.00	0.00	0.00	0.00	0.00	0.00
	32	8	0.00	0.00	0.00	0.00	0.00	0.00
		9	0.00	0.00	0.00	0.00	0.00	0.00
	33	8	0.00	0.00	0.00	0.00	0.00	0.00
		9	0.00	0.00	0.00	0.00	0.00	0.00
	34	8	0.00	0.00	0.00	0.00	0.00	0.00
		9	0.00	0.00	0.00	0.00	0.00	0.00
	35	8	0.00	0.00	0.00	0.00	0.00	0.00
		9	0.00	0.00	0.00	0.00	0.00	0.00
	36	8	0.00	0.00	0.00	0.00	0.00	0.00
		9	0.00	0.00	0.00	0.00	0.00	0.00

MEMBER END FORCES STRUCTURE TYPE = PLANE

ALL UNITS ARE -- KIP FEET (LOCAL)

MEMBER	LOAD	JT	AXIAL	SHEAR-Y	SHEAR-Z	TORSION	MOM-Y	MOM-Z
	37	8	0.00	0.00	0.00	0.00	0.00	0.00
		9	0.00	0.00	0.00	0.00	0.00	0.00
	38	8	0.00	0.00	0.00	0.00	0.00	0.00
		9	0.00	0.00	0.00	0.00	0.00	0.00
	39	8	0.00	0.00	0.00	0.00	0.00	0.00
		9	0.00	0.00	0.00	0.00	0.00	0.00
	40	8	0.00	0.00	0.00	0.00	0.00	0.00
		9	0.00	0.00	0.00	0.00	0.00	0.00
	41	8	0.00	0.00	0.00	0.00	0.00	0.00
		9	0.00	0.00	0.00	0.00	0.00	0.00
	42	8	0.00	0.00	0.00	0.00	0.00	0.00
		9	0.00	0.00	0.00	0.00	0.00	0.00
	43	8	0.00	0.00	0.00	0.00	0.00	0.00
		9	0.00	0.00	0.00	0.00	0.00	0.00
	44	8	0.00	0.00	0.00	0.00	0.00	0.00
		9	0.00	0.00	0.00	0.00	0.00	0.00
	45	8	0.00	0.00	0.00	0.00	0.00	0.00
		9	0.00	0.00	0.00	0.00	0.00	0.00
	46	8	0.00	0.00	0.00	0.00	0.00	0.00
		9	0.00	0.00	0.00	0.00	0.00	0.00
	47	8	0.00	0.00	0.00	0.00	0.00	0.00
		9	0.00	0.00	0.00	0.00	0.00	0.00
	48	8	0.00	0.00	0.00	0.00	0.00	0.00
		9	0.00	0.00	0.00	0.00	0.00	0.00
	49	8	0.00	0.00	0.00	0.00	0.00	0.00
		9	0.00	0.00	0.00	0.00	0.00	0.00
	50	8	0.00	0.00	0.00	0.00	0.00	0.00
		9	0.00	0.00	0.00	0.00	0.00	0.00
	51	8	0.00	0.00	0.00	0.00	0.00	0.00
		9	0.00	0.00	0.00	0.00	0.00	0.00
	52	8	0.00	0.00	0.00	0.00	0.00	0.00
		9	0.00	0.00	0.00	0.00	0.00	0.00
	53	8	0.00	0.00	0.00	0.00	0.00	0.00
		9	0.00	0.00	0.00	0.00	0.00	0.00
	54	8	0.00	0.00	0.00	0.00	0.00	0.00
		9	0.00	0.00	0.00	0.00	0.00	0.00
	55	8	0.00	0.00	0.00	0.00	0.00	0.00
		9	0.00	0.00	0.00	0.00	0.00	0.00
	56	8	0.00	0.00	0.00	0.00	0.00	0.00
		9	0.00	0.00	0.00	0.00	0.00	0.00
	57	8	0.00	0.00	0.00	0.00	0.00	0.00
		9	0.00	0.00	0.00	0.00	0.00	0.00
	58	8	0.00	0.00	0.00	0.00	0.00	0.00
		9	0.00	0.00	0.00	0.00	0.00	0.00
	59	8	0.00	0.00	0.00	0.00	0.00	0.00
		9	0.00	0.00	0.00	0.00	0.00	0.00

MEMBER END FORCES STRUCTURE TYPE = PLANE

ALL UNITS ARE -- KIP FEET (LOCAL)

MEMBER	LOAD	JT	AXIAL	SHEAR-Y	SHEAR-Z	TORSION	MOM-Y	MOM-Z
	60	8	0.00	0.00	0.00	0.00	0.00	0.00
		9	0.00	0.00	0.00	0.00	0.00	0.00
	61	8	0.00	0.00	0.00	0.00	0.00	0.00
		9	0.00	0.00	0.00	0.00	0.00	0.00
	62	8	0.00	0.00	0.00	0.00	0.00	0.00
		9	0.00	0.00	0.00	0.00	0.00	0.00
	63	8	0.00	0.00	0.00	0.00	0.00	0.00
		9	0.00	0.00	0.00	0.00	0.00	0.00
	64	8	0.00	0.00	0.00	0.00	0.00	0.00
		9	0.00	0.00	0.00	0.00	0.00	0.00
	65	8	0.00	0.00	0.00	0.00	0.00	0.00
		9	0.00	0.00	0.00	0.00	0.00	0.00
	66	8	0.00	0.00	0.00	0.00	0.00	0.00
		9	0.00	0.00	0.00	0.00	0.00	0.00
9	1	9	0.00	22.68	0.00	0.00	0.00	60.48
		10	0.00	-19.84	0.00	0.00	0.00	-39.22
	2	9	0.00	160.49	0.00	0.00	0.00	404.77
		10	0.00	-160.49	0.00	0.00	0.00	-244.28
	3	9	0.00	66.18	0.00	0.00	0.00	152.32
		10	0.00	-66.18	0.00	0.00	0.00	-86.15
	4	9	0.00	176.80	0.00	0.00	0.00	445.91
		10	0.00	-176.80	0.00	0.00	0.00	-269.11
	5	9	0.00	46.07	0.00	0.00	0.00	116.19
		10	0.00	-46.07	0.00	0.00	0.00	-70.12
	6	9	0.00	57.27	0.00	0.00	0.00	144.45
		10	0.00	-57.27	0.00	0.00	0.00	-87.18
	7	9	0.00	80.93	0.00	0.00	0.00	204.11
		10	0.00	-80.93	0.00	0.00	0.00	-123.18
	8	9	0.00	89.64	0.00	0.00	0.00	226.09
		10	0.00	-89.64	0.00	0.00	0.00	-136.45
	9	9	0.00	62.25	0.00	0.00	0.00	157.01
		10	0.00	-62.25	0.00	0.00	0.00	-94.76
	10	9	0.00	70.97	0.00	0.00	0.00	178.99
		10	0.00	-70.97	0.00	0.00	0.00	-108.02
	11	9	0.00	79.68	0.00	0.00	0.00	200.97
		10	0.00	-79.68	0.00	0.00	0.00	-121.29
	12	9	0.00	89.64	0.00	0.00	0.00	226.09
		10	0.00	-89.64	0.00	0.00	0.00	-136.45
	13	9	0.00	88.40	0.00	0.00	0.00	222.95
		10	0.00	-88.40	0.00	0.00	0.00	-134.55
	14	9	0.00	87.15	0.00	0.00	0.00	219.81
		10	0.00	-87.15	0.00	0.00	0.00	-132.66
	15	9	0.00	119.53	0.00	0.00	0.00	301.46
		10	0.00	-119.53	0.00	0.00	0.00	-181.93

MEMBER END FORCES STRUCTURE TYPE = PLANE

ALL UNITS ARE -- KIP FEET (LOCAL)

MEMBER	LOAD	JT	AXIAL	SHEAR-Y	SHEAR-Z	TORSION	MOM-Y	MOM-Z
	16	9	0.00	143.18	0.00	0.00	0.00	361.12
		10	0.00	-143.18	0.00	0.00	0.00	-217.94
	17	9	0.00	130.73	0.00	0.00	0.00	329.72
		10	0.00	-130.73	0.00	0.00	0.00	-198.99
	18	9	0.00	171.82	0.00	0.00	0.00	433.35
		10	0.00	-171.82	0.00	0.00	0.00	-261.53
	19	9	0.00	224.11	0.00	0.00	0.00	565.24
		10	0.00	-224.11	0.00	0.00	0.00	-341.12
	20	9	0.00	65.99	0.00	0.00	0.00	166.43
		10	0.00	-65.99	0.00	0.00	0.00	-100.44
	21	9	0.00	99.61	0.00	0.00	0.00	251.22
		10	0.00	-99.61	0.00	0.00	0.00	-151.61
	22	9	0.00	47.31	0.00	0.00	0.00	119.33
		10	0.00	-47.31	0.00	0.00	0.00	-72.01
	23	9	0.00	214.15	0.00	0.00	0.00	540.11
		10	0.00	-214.15	0.00	0.00	0.00	-325.96
	24	9	0.00	135.71	0.00	0.00	0.00	342.28
		10	0.00	-135.71	0.00	0.00	0.00	-206.57
	25	9	0.00	39.23	0.00	0.00	0.00	178.81
		10	0.00	-39.23	0.00	0.00	0.00	-139.58
	26	9	0.00	10.46	0.00	0.00	0.00	47.68
		10	0.00	-10.46	0.00	0.00	0.00	-37.22
	27	9	0.00	12.75	0.00	0.00	0.00	58.11
		10	0.00	-12.75	0.00	0.00	0.00	-45.36
	28	9	0.00	17.98	0.00	0.00	0.00	81.95
		10	0.00	-17.98	0.00	0.00	0.00	-63.98
	29	9	0.00	19.94	0.00	0.00	0.00	90.89
		10	0.00	-19.94	0.00	0.00	0.00	-70.95
	30	9	0.00	13.73	0.00	0.00	0.00	62.58
		10	0.00	-13.73	0.00	0.00	0.00	-48.85
	31	9	0.00	16.02	0.00	0.00	0.00	73.01
		10	0.00	-16.02	0.00	0.00	0.00	-57.00
	32	9	0.00	17.65	0.00	0.00	0.00	80.46
		10	0.00	-17.65	0.00	0.00	0.00	-62.81
	33	9	0.00	19.94	0.00	0.00	0.00	90.89
		10	0.00	-19.94	0.00	0.00	0.00	-70.95
	34	9	0.00	19.61	0.00	0.00	0.00	89.40
		10	0.00	-19.61	0.00	0.00	0.00	-69.79
	35	9	0.00	19.29	0.00	0.00	0.00	87.91
		10	0.00	-19.29	0.00	0.00	0.00	-68.63
	36	9	0.00	26.80	0.00	0.00	0.00	122.19
		10	0.00	-26.80	0.00	0.00	0.00	-95.38
	37	9	0.00	31.71	0.00	0.00	0.00	144.54
		10	0.00	-31.71	0.00	0.00	0.00	-112.83
	38	9	0.00	29.09	0.00	0.00	0.00	132.62
		10	0.00	-29.09	0.00	0.00	0.00	-103.52

MEMBER END FORCES STRUCTURE TYPE = PLANE

ALL UNITS ARE -- KIP FEET (LOCAL)

MEMBER	LOAD	JT	AXIAL	SHEAR-Y	SHEAR-Z	TORSION	MOM-Y	MOM-Z
	39	9	0.00	38.25	0.00	0.00	0.00	174.34
		10	0.00	-38.25	0.00	0.00	0.00	-136.09
	40	9	0.00	50.01	0.00	0.00	0.00	227.98
		10	0.00	-50.01	0.00	0.00	0.00	-177.97
	41	9	0.00	14.71	0.00	0.00	0.00	67.05
		10	0.00	-14.71	0.00	0.00	0.00	-52.34
	42	9	0.00	21.90	0.00	0.00	0.00	99.83
		10	0.00	-21.90	0.00	0.00	0.00	-77.93
	43	9	0.00	10.46	0.00	0.00	0.00	47.68
		10	0.00	-10.46	0.00	0.00	0.00	-37.22
	44	9	0.00	47.73	0.00	0.00	0.00	217.55
		10	0.00	-47.73	0.00	0.00	0.00	-169.83
	45	9	0.00	30.07	0.00	0.00	0.00	137.09
		10	0.00	-30.07	0.00	0.00	0.00	-107.01
	46	9	0.00	83.14	0.00	0.00	0.00	277.60
		10	0.00	-83.14	0.00	0.00	0.00	-194.45
	47	9	0.00	22.19	0.00	0.00	0.00	73.28
		10	0.00	-22.19	0.00	0.00	0.00	-51.09
	48	9	0.00	26.97	0.00	0.00	0.00	89.99
		10	0.00	-26.97	0.00	0.00	0.00	-63.02
	49	9	0.00	38.69	0.00	0.00	0.00	128.21
		10	0.00	-38.69	0.00	0.00	0.00	-89.51
	50	9	0.00	41.90	0.00	0.00	0.00	140.29
		10	0.00	-41.90	0.00	0.00	0.00	-98.39
	51	9	0.00	29.20	0.00	0.00	0.00	97.61
		10	0.00	-29.20	0.00	0.00	0.00	-68.41
	52	9	0.00	33.32	0.00	0.00	0.00	111.34
		10	0.00	-33.32	0.00	0.00	0.00	-78.01
	53	9	0.00	37.45	0.00	0.00	0.00	125.07
		10	0.00	-37.45	0.00	0.00	0.00	-87.62
	54	9	0.00	41.90	0.00	0.00	0.00	140.29
		10	0.00	-41.90	0.00	0.00	0.00	-98.39
	55	9	0.00	41.57	0.00	0.00	0.00	138.80
		10	0.00	-41.57	0.00	0.00	0.00	-97.23
	56	9	0.00	41.25	0.00	0.00	0.00	137.31
		10	0.00	-41.25	0.00	0.00	0.00	-96.06
	57	9	0.00	56.17	0.00	0.00	0.00	187.60
		10	0.00	-56.17	0.00	0.00	0.00	-131.43
	58	9	0.00	67.89	0.00	0.00	0.00	225.81
		10	0.00	-67.89	0.00	0.00	0.00	-157.92
	59	9	0.00	61.87	0.00	0.00	0.00	205.96
		10	0.00	-61.87	0.00	0.00	0.00	-144.09
	60	9	0.00	80.92	0.00	0.00	0.00	269.98
		10	0.00	-80.92	0.00	0.00	0.00	-189.07
	61	9	0.00	105.67	0.00	0.00	0.00	352.37
		10	0.00	-105.67	0.00	0.00	0.00	-246.70

MEMBER END FORCES STRUCTURE TYPE = PLANE

ALL UNITS ARE -- KIP FEET (LOCAL)

MEMBER	LOAD	JT	AXIAL	SHEAR-Y	SHEAR-Z	TORSION	MOM-Y	MOM-Z
	62	9	0.00	31.10	0.00	0.00	0.00	103.73
		10	0.00	-31.10	0.00	0.00	0.00	-72.63
	63	9	0.00	47.27	0.00	0.00	0.00	157.16
		10	0.00	-47.27	0.00	0.00	0.00	-109.89
	64	9	0.00	22.52	0.00	0.00	0.00	74.77
		10	0.00	-22.52	0.00	0.00	0.00	-52.25
	65	9	0.00	101.21	0.00	0.00	0.00	337.15
		10	0.00	-101.21	0.00	0.00	0.00	-235.93
	66	9	0.00	64.09	0.00	0.00	0.00	213.57
		10	0.00	-64.09	0.00	0.00	0.00	-149.48
10	1	10	0.00	19.84	0.00	0.00	0.00	39.22
		11	0.00	-17.01	0.00	0.00	0.00	-20.79
	2	10	0.00	160.49	0.00	0.00	0.00	244.28
		11	0.00	-160.49	0.00	0.00	0.00	-83.79
	3	10	0.00	66.18	0.00	0.00	0.00	86.15
		11	0.00	-66.18	0.00	0.00	0.00	-19.97
	4	10	0.00	176.80	0.00	0.00	0.00	269.11
		11	0.00	-176.80	0.00	0.00	0.00	-92.31
	5	10	0.00	46.07	0.00	0.00	0.00	70.12
		11	0.00	-46.07	0.00	0.00	0.00	-24.05
	6	10	0.00	57.27	0.00	0.00	0.00	87.18
		11	0.00	-57.27	0.00	0.00	0.00	-29.90
	7	10	0.00	80.93	0.00	0.00	0.00	123.18
		11	0.00	-80.93	0.00	0.00	0.00	-42.25
	8	10	0.00	89.64	0.00	0.00	0.00	136.45
		11	0.00	-89.64	0.00	0.00	0.00	-46.80
	9	10	0.00	62.25	0.00	0.00	0.00	94.76
		11	0.00	-62.25	0.00	0.00	0.00	-32.50
	10	10	0.00	70.97	0.00	0.00	0.00	108.02
		11	0.00	-70.97	0.00	0.00	0.00	-37.05
	11	10	0.00	79.68	0.00	0.00	0.00	121.29
		11	0.00	-79.68	0.00	0.00	0.00	-41.60
	12	10	0.00	89.64	0.00	0.00	0.00	136.45
		11	0.00	-89.64	0.00	0.00	0.00	-46.80
	13	10	0.00	88.40	0.00	0.00	0.00	134.55
		11	0.00	-88.40	0.00	0.00	0.00	-46.15
	14	10	0.00	87.15	0.00	0.00	0.00	132.66
		11	0.00	-87.15	0.00	0.00	0.00	-45.50
	15	10	0.00	119.53	0.00	0.00	0.00	181.93
		11	0.00	-119.53	0.00	0.00	0.00	-62.41
	16	10	0.00	143.18	0.00	0.00	0.00	217.94
		11	0.00	-143.18	0.00	0.00	0.00	-74.76
	17	10	0.00	130.73	0.00	0.00	0.00	198.99
		11	0.00	-130.73	0.00	0.00	0.00	-68.26

MEMBER END FORCES STRUCTURE TYPE = PLANE

ALL UNITS ARE -- KIP FEET (LOCAL)

MEMBER	LOAD	JT	AXIAL	SHEAR-Y	SHEAR-Z	TORSION	MOM-Y	MOM-Z
	18	10	0.00	171.82	0.00	0.00	0.00	261.53
		11	0.00	-171.82	0.00	0.00	0.00	-89.71
	19	10	0.00	224.11	0.00	0.00	0.00	341.12
		11	0.00	-224.11	0.00	0.00	0.00	-117.01
	20	10	0.00	65.99	0.00	0.00	0.00	100.44
		11	0.00	-65.99	0.00	0.00	0.00	-34.45
	21	10	0.00	99.61	0.00	0.00	0.00	151.61
		11	0.00	-99.61	0.00	0.00	0.00	-52.01
	22	10	0.00	47.31	0.00	0.00	0.00	72.01
		11	0.00	-47.31	0.00	0.00	0.00	-24.70
	23	10	0.00	214.15	0.00	0.00	0.00	325.96
		11	0.00	-214.15	0.00	0.00	0.00	-111.81
	24	10	0.00	135.71	0.00	0.00	0.00	206.57
		11	0.00	-135.71	0.00	0.00	0.00	-70.86
	25	10	0.00	39.23	0.00	0.00	0.00	139.58
		11	0.00	-39.23	0.00	0.00	0.00	-100.36
	26	10	0.00	10.46	0.00	0.00	0.00	37.22
		11	0.00	-10.46	0.00	0.00	0.00	-26.76
	27	10	0.00	12.75	0.00	0.00	0.00	45.36
		11	0.00	-12.75	0.00	0.00	0.00	-32.62
	28	10	0.00	17.98	0.00	0.00	0.00	63.98
		11	0.00	-17.98	0.00	0.00	0.00	-46.00
	29	10	0.00	19.94	0.00	0.00	0.00	70.95
		11	0.00	-19.94	0.00	0.00	0.00	-51.01
	30	10	0.00	13.73	0.00	0.00	0.00	48.85
		11	0.00	-13.73	0.00	0.00	0.00	-35.12
	31	10	0.00	16.02	0.00	0.00	0.00	57.00
		11	0.00	-16.02	0.00	0.00	0.00	-40.98
	32	10	0.00	17.65	0.00	0.00	0.00	62.81
		11	0.00	-17.65	0.00	0.00	0.00	-45.16
	33	10	0.00	19.94	0.00	0.00	0.00	70.95
		11	0.00	-19.94	0.00	0.00	0.00	-51.01
	34	10	0.00	19.61	0.00	0.00	0.00	69.79
		11	0.00	-19.61	0.00	0.00	0.00	-50.18
	35	10	0.00	19.29	0.00	0.00	0.00	68.63
		11	0.00	-19.29	0.00	0.00	0.00	-49.34
	36	10	0.00	26.80	0.00	0.00	0.00	95.38
		11	0.00	-26.80	0.00	0.00	0.00	-68.58
	37	10	0.00	31.71	0.00	0.00	0.00	112.83
		11	0.00	-31.71	0.00	0.00	0.00	-81.12
	38	10	0.00	29.09	0.00	0.00	0.00	103.52
		11	0.00	-29.09	0.00	0.00	0.00	-74.43
	39	10	0.00	38.25	0.00	0.00	0.00	136.09
		11	0.00	-38.25	0.00	0.00	0.00	-97.85
	40	10	0.00	50.01	0.00	0.00	0.00	177.97
		11	0.00	-50.01	0.00	0.00	0.00	-127.95

MEMBER END FORCES STRUCTURE TYPE = PLANE

ALL UNITS ARE -- KIP FEET (LOCAL)

MEMBER	LOAD	JT	AXIAL	SHEAR-Y	SHEAR-Z	TORSION	MOM-Y	MOM-Z
	41	10	0.00	14.71	0.00	0.00	0.00	52.34
		11	0.00	-14.71	0.00	0.00	0.00	-37.63
	42	10	0.00	21.90	0.00	0.00	0.00	77.93
		11	0.00	-21.90	0.00	0.00	0.00	-56.03
	43	10	0.00	10.46	0.00	0.00	0.00	37.22
		11	0.00	-10.46	0.00	0.00	0.00	-26.76
	44	10	0.00	47.73	0.00	0.00	0.00	169.83
		11	0.00	-47.73	0.00	0.00	0.00	-122.10
	45	10	0.00	30.07	0.00	0.00	0.00	107.01
		11	0.00	-30.07	0.00	0.00	0.00	-76.94
	46	10	0.00	83.14	0.00	0.00	0.00	194.45
		11	0.00	-83.14	0.00	0.00	0.00	-111.31
	47	10	0.00	22.19	0.00	0.00	0.00	51.09
		11	0.00	-22.19	0.00	0.00	0.00	-28.89
	48	10	0.00	26.97	0.00	0.00	0.00	63.02
		11	0.00	-26.97	0.00	0.00	0.00	-36.05
	49	10	0.00	38.69	0.00	0.00	0.00	89.51
		11	0.00	-38.69	0.00	0.00	0.00	-50.82
	50	10	0.00	41.90	0.00	0.00	0.00	98.39
		11	0.00	-41.90	0.00	0.00	0.00	-56.49
	51	10	0.00	29.20	0.00	0.00	0.00	68.41
		11	0.00	-29.20	0.00	0.00	0.00	-39.21
	52	10	0.00	33.32	0.00	0.00	0.00	78.01
		11	0.00	-33.32	0.00	0.00	0.00	-44.69
	53	10	0.00	37.45	0.00	0.00	0.00	87.62
		11	0.00	-37.45	0.00	0.00	0.00	-50.17
	54	10	0.00	41.90	0.00	0.00	0.00	98.39
		11	0.00	-41.90	0.00	0.00	0.00	-56.49
	55	10	0.00	41.57	0.00	0.00	0.00	97.23
		11	0.00	-41.57	0.00	0.00	0.00	-55.65
	56	10	0.00	41.25	0.00	0.00	0.00	96.06
		11	0.00	-41.25	0.00	0.00	0.00	-54.82
	57	10	0.00	56.17	0.00	0.00	0.00	131.43
		11	0.00	-56.17	0.00	0.00	0.00	-75.26
	58	10	0.00	67.89	0.00	0.00	0.00	157.92
		11	0.00	-67.89	0.00	0.00	0.00	-90.03
	59	10	0.00	61.87	0.00	0.00	0.00	144.09
		11	0.00	-61.87	0.00	0.00	0.00	-82.22
	60	10	0.00	80.92	0.00	0.00	0.00	189.07
		11	0.00	-80.92	0.00	0.00	0.00	-108.15
	61	10	0.00	105.67	0.00	0.00	0.00	246.70
		11	0.00	-105.67	0.00	0.00	0.00	-141.04
	62	10	0.00	31.10	0.00	0.00	0.00	72.63
		11	0.00	-31.10	0.00	0.00	0.00	-41.53
	63	10	0.00	47.27	0.00	0.00	0.00	109.89
		11	0.00	-47.27	0.00	0.00	0.00	-62.62

MEMBER END FORCES STRUCTURE TYPE = PLANE

ALL UNITS ARE -- KIP FEET (LOCAL)

MEMBER	LOAD	JT	AXIAL	SHEAR-Y	SHEAR-Z	TORSION	MOM-Y	MOM-Z
	64	10	0.00	22.52	0.00	0.00	0.00	52.25
		11	0.00	-22.52	0.00	0.00	0.00	-29.73
	65	10	0.00	101.21	0.00	0.00	0.00	235.93
		11	0.00	-101.21	0.00	0.00	0.00	-134.72
	66	10	0.00	64.09	0.00	0.00	0.00	149.48
		11	0.00	-64.09	0.00	0.00	0.00	-85.38
11	1	11	0.00	17.01	0.00	0.00	0.00	20.79
		12	0.00	-15.59	0.00	0.00	0.00	-12.64
	2	11	0.00	160.49	0.00	0.00	0.00	83.79
		12	0.00	-160.49	0.00	0.00	0.00	-3.55
	3	11	0.00	66.18	0.00	0.00	0.00	19.97
		12	0.00	-66.18	0.00	0.00	0.00	13.11
	4	11	0.00	176.80	0.00	0.00	0.00	92.31
		12	0.00	-176.80	0.00	0.00	0.00	-3.91
	5	11	0.00	46.07	0.00	0.00	0.00	24.05
		12	0.00	-46.07	0.00	0.00	0.00	-1.02
	6	11	0.00	57.27	0.00	0.00	0.00	29.90
		12	0.00	-57.27	0.00	0.00	0.00	-1.27
	7	11	0.00	80.93	0.00	0.00	0.00	42.25
		12	0.00	-80.93	0.00	0.00	0.00	-1.79
	8	11	0.00	89.64	0.00	0.00	0.00	46.80
		12	0.00	-89.64	0.00	0.00	0.00	-1.98
	9	11	0.00	62.25	0.00	0.00	0.00	32.50
		12	0.00	-62.25	0.00	0.00	0.00	-1.38
	10	11	0.00	70.97	0.00	0.00	0.00	37.05
		12	0.00	-70.97	0.00	0.00	0.00	-1.57
	11	11	0.00	79.68	0.00	0.00	0.00	41.60
		12	0.00	-79.68	0.00	0.00	0.00	-1.76
	12	11	0.00	89.64	0.00	0.00	0.00	46.80
		12	0.00	-89.64	0.00	0.00	0.00	-1.98
	13	11	0.00	88.40	0.00	0.00	0.00	46.15
		12	0.00	-88.40	0.00	0.00	0.00	-1.96
	14	11	0.00	87.15	0.00	0.00	0.00	45.50
		12	0.00	-87.15	0.00	0.00	0.00	-1.93
	15	11	0.00	119.53	0.00	0.00	0.00	62.41
		12	0.00	-119.53	0.00	0.00	0.00	-2.64
	16	11	0.00	143.18	0.00	0.00	0.00	74.76
		12	0.00	-143.18	0.00	0.00	0.00	-3.17
	17	11	0.00	130.73	0.00	0.00	0.00	68.26
		12	0.00	-130.73	0.00	0.00	0.00	-2.89
	18	11	0.00	171.82	0.00	0.00	0.00	89.71
		12	0.00	-171.82	0.00	0.00	0.00	-3.80
	19	11	0.00	224.11	0.00	0.00	0.00	117.01
		12	0.00	-224.11	0.00	0.00	0.00	-4.96

MEMBER END FORCES STRUCTURE TYPE = PLANE

ALL UNITS ARE -- KIP FEET (LOCAL)

MEMBER	LOAD	JT	AXIAL	SHEAR-Y	SHEAR-Z	TORSION	MOM-Y	MOM-Z
	20	11	0.00	65.99	0.00	0.00	0.00	34.45
		12	0.00	-65.99	0.00	0.00	0.00	-1.46
	21	11	0.00	99.61	0.00	0.00	0.00	52.01
		12	0.00	-99.61	0.00	0.00	0.00	-2.20
	22	11	0.00	47.31	0.00	0.00	0.00	24.70
		12	0.00	-47.31	0.00	0.00	0.00	-1.05
	23	11	0.00	214.15	0.00	0.00	0.00	111.81
		12	0.00	-214.15	0.00	0.00	0.00	-4.74
	24	11	0.00	135.71	0.00	0.00	0.00	70.86
		12	0.00	-135.71	0.00	0.00	0.00	-3.00
	25	11	0.00	39.23	0.00	0.00	0.00	100.36
		12	0.00	-39.23	0.00	0.00	0.00	-80.74
	26	11	0.00	10.46	0.00	0.00	0.00	26.76
		12	0.00	-10.46	0.00	0.00	0.00	-21.53
	27	11	0.00	12.75	0.00	0.00	0.00	32.62
		12	0.00	-12.75	0.00	0.00	0.00	-26.24
	28	11	0.00	17.98	0.00	0.00	0.00	46.00
		12	0.00	-17.98	0.00	0.00	0.00	-37.01
	29	11	0.00	19.94	0.00	0.00	0.00	51.01
		12	0.00	-19.94	0.00	0.00	0.00	-41.04
	30	11	0.00	13.73	0.00	0.00	0.00	35.12
		12	0.00	-13.73	0.00	0.00	0.00	-28.26
	31	11	0.00	16.02	0.00	0.00	0.00	40.98
		12	0.00	-16.02	0.00	0.00	0.00	-32.97
	32	11	0.00	17.65	0.00	0.00	0.00	45.16
		12	0.00	-17.65	0.00	0.00	0.00	-36.33
	33	11	0.00	19.94	0.00	0.00	0.00	51.01
		12	0.00	-19.94	0.00	0.00	0.00	-41.04
	34	11	0.00	19.61	0.00	0.00	0.00	50.18
		12	0.00	-19.61	0.00	0.00	0.00	-40.37
	35	11	0.00	19.29	0.00	0.00	0.00	49.34
		12	0.00	-19.29	0.00	0.00	0.00	-39.70
	36	11	0.00	26.80	0.00	0.00	0.00	68.58
		12	0.00	-26.80	0.00	0.00	0.00	-55.17
	37	11	0.00	31.71	0.00	0.00	0.00	81.12
		12	0.00	-31.71	0.00	0.00	0.00	-65.27
	38	11	0.00	29.09	0.00	0.00	0.00	74.43
		12	0.00	-29.09	0.00	0.00	0.00	-59.88
	39	11	0.00	38.25	0.00	0.00	0.00	97.85
		12	0.00	-38.25	0.00	0.00	0.00	-78.72
	40	11	0.00	50.01	0.00	0.00	0.00	127.95
		12	0.00	-50.01	0.00	0.00	0.00	-102.95
	41	11	0.00	14.71	0.00	0.00	0.00	37.63
		12	0.00	-14.71	0.00	0.00	0.00	-30.28
	42	11	0.00	21.90	0.00	0.00	0.00	56.03
		12	0.00	-21.90	0.00	0.00	0.00	-45.08

MEMBER END FORCES STRUCTURE TYPE = PLANE

ALL UNITS ARE -- KIP FEET (LOCAL)

MEMBER	LOAD	JT	AXIAL	SHEAR-Y	SHEAR-Z	TORSION	MOM-Y	MOM-Z
	43	11	0.00	10.46	0.00	0.00	0.00	26.76
		12	0.00	-10.46	0.00	0.00	0.00	-21.53
	44	11	0.00	47.73	0.00	0.00	0.00	122.10
		12	0.00	-47.73	0.00	0.00	0.00	-98.24
	45	11	0.00	30.07	0.00	0.00	0.00	76.94
		12	0.00	-30.07	0.00	0.00	0.00	-61.90
	46	11	0.00	83.14	0.00	0.00	0.00	111.31
		12	0.00	-83.14	0.00	0.00	0.00	-69.73
	47	11	0.00	22.19	0.00	0.00	0.00	28.89
		12	0.00	-22.19	0.00	0.00	0.00	-17.80
	48	11	0.00	26.97	0.00	0.00	0.00	36.05
		12	0.00	-26.97	0.00	0.00	0.00	-22.56
	49	11	0.00	38.69	0.00	0.00	0.00	50.82
		12	0.00	-38.69	0.00	0.00	0.00	-31.47
	50	11	0.00	41.90	0.00	0.00	0.00	56.49
		12	0.00	-41.90	0.00	0.00	0.00	-35.54
	51	11	0.00	29.20	0.00	0.00	0.00	39.21
		12	0.00	-29.20	0.00	0.00	0.00	-24.61
	52	11	0.00	33.32	0.00	0.00	0.00	44.69
		12	0.00	-33.32	0.00	0.00	0.00	-28.03
	53	11	0.00	37.45	0.00	0.00	0.00	50.17
		12	0.00	-37.45	0.00	0.00	0.00	-31.45
	54	11	0.00	41.90	0.00	0.00	0.00	56.49
		12	0.00	-41.90	0.00	0.00	0.00	-35.54
	55	11	0.00	41.57	0.00	0.00	0.00	55.65
		12	0.00	-41.57	0.00	0.00	0.00	-34.87
	56	11	0.00	41.25	0.00	0.00	0.00	54.82
		12	0.00	-41.25	0.00	0.00	0.00	-34.19
	57	11	0.00	56.17	0.00	0.00	0.00	75.26
		12	0.00	-56.17	0.00	0.00	0.00	-47.17
	58	11	0.00	67.89	0.00	0.00	0.00	90.03
		12	0.00	-67.89	0.00	0.00	0.00	-56.08
	59	11	0.00	61.87	0.00	0.00	0.00	82.22
		12	0.00	-61.87	0.00	0.00	0.00	-51.29
	60	11	0.00	80.92	0.00	0.00	0.00	108.15
		12	0.00	-80.92	0.00	0.00	0.00	-67.69
	61	11	0.00	105.67	0.00	0.00	0.00	141.04
		12	0.00	-105.67	0.00	0.00	0.00	-88.20
	62	11	0.00	31.10	0.00	0.00	0.00	41.53
		12	0.00	-31.10	0.00	0.00	0.00	-25.98
	63	11	0.00	47.27	0.00	0.00	0.00	62.62
		12	0.00	-47.27	0.00	0.00	0.00	-38.99
	64	11	0.00	22.52	0.00	0.00	0.00	29.73
		12	0.00	-22.52	0.00	0.00	0.00	-18.47
	65	11	0.00	101.21	0.00	0.00	0.00	134.72
		12	0.00	-101.21	0.00	0.00	0.00	-84.11

MEMBER END FORCES STRUCTURE TYPE = PLANE

ALL UNITS ARE -- KIP FEET (LOCAL)

MEMBER	LOAD	JT	AXIAL	SHEAR-Y	SHEAR-Z	TORSION	MOM-Y	MOM-Z
	66	11	0.00	64.09	0.00	0.00	0.00	85.38
		12	0.00	-64.09	0.00	0.00	0.00	-53.34
12	1	12	0.00	15.59	0.00	0.00	0.00	12.64
		13	0.00	-14.17	0.00	0.00	0.00	-5.20
	2	12	0.00	31.59	0.00	0.00	0.00	3.55
		13	0.00	-31.59	0.00	0.00	0.00	12.24
	3	12	0.00	7.28	0.00	0.00	0.00	-13.11
		13	0.00	-7.28	0.00	0.00	0.00	16.75
	4	12	0.00	34.80	0.00	0.00	0.00	3.91
		13	0.00	-34.80	0.00	0.00	0.00	13.49
	5	12	0.00	9.07	0.00	0.00	0.00	1.02
		13	0.00	-9.07	0.00	0.00	0.00	3.51
	6	12	0.00	11.27	0.00	0.00	0.00	1.27
		13	0.00	-11.27	0.00	0.00	0.00	4.37
	7	12	0.00	15.93	0.00	0.00	0.00	1.79
		13	0.00	-15.93	0.00	0.00	0.00	6.17
	8	12	0.00	17.64	0.00	0.00	0.00	1.98
		13	0.00	-17.64	0.00	0.00	0.00	6.84
	9	12	0.00	12.25	0.00	0.00	0.00	1.38
		13	0.00	-12.25	0.00	0.00	0.00	4.75
	10	12	0.00	13.97	0.00	0.00	0.00	1.57
		13	0.00	-13.97	0.00	0.00	0.00	5.41
	11	12	0.00	15.68	0.00	0.00	0.00	1.76
		13	0.00	-15.68	0.00	0.00	0.00	6.08
	12	12	0.00	17.64	0.00	0.00	0.00	1.98
		13	0.00	-17.64	0.00	0.00	0.00	6.84
	13	12	0.00	17.40	0.00	0.00	0.00	1.96
		13	0.00	-17.40	0.00	0.00	0.00	6.74
	14	12	0.00	17.15	0.00	0.00	0.00	1.93
		13	0.00	-17.15	0.00	0.00	0.00	6.65
	15	12	0.00	23.53	0.00	0.00	0.00	2.64
		13	0.00	-23.53	0.00	0.00	0.00	9.12
	16	12	0.00	28.18	0.00	0.00	0.00	3.17
		13	0.00	-28.18	0.00	0.00	0.00	10.92
	17	12	0.00	25.73	0.00	0.00	0.00	2.89
		13	0.00	-25.73	0.00	0.00	0.00	9.97
	18	12	0.00	33.82	0.00	0.00	0.00	3.80
		13	0.00	-33.82	0.00	0.00	0.00	13.11
	19	12	0.00	44.11	0.00	0.00	0.00	4.96
		13	0.00	-44.11	0.00	0.00	0.00	17.10
	20	12	0.00	12.99	0.00	0.00	0.00	1.46
		13	0.00	-12.99	0.00	0.00	0.00	5.03
	21	12	0.00	19.61	0.00	0.00	0.00	2.20
		13	0.00	-19.61	0.00	0.00	0.00	7.60

MEMBER END FORCES STRUCTURE TYPE = PLANE

ALL UNITS ARE -- KIP FEET (LOCAL)

MEMBER	LOAD	JT	AXIAL	SHEAR-Y	SHEAR-Z	TORSION	MOM-Y	MOM-Z
	22	12	0.00	9.31	0.00	0.00	0.00	1.05
		13	0.00	-9.31	0.00	0.00	0.00	3.61
	23	12	0.00	42.15	0.00	0.00	0.00	4.74
		13	0.00	-42.15	0.00	0.00	0.00	16.34
	24	12	0.00	26.71	0.00	0.00	0.00	3.00
		13	0.00	-26.71	0.00	0.00	0.00	10.35
	25	12	0.00	39.23	0.00	0.00	0.00	80.74
		13	0.00	-39.23	0.00	0.00	0.00	-61.13
	26	12	0.00	10.46	0.00	0.00	0.00	21.53
		13	0.00	-10.46	0.00	0.00	0.00	-16.30
	27	12	0.00	12.75	0.00	0.00	0.00	26.24
		13	0.00	-12.75	0.00	0.00	0.00	-19.87
	28	12	0.00	17.98	0.00	0.00	0.00	37.01
		13	0.00	-17.98	0.00	0.00	0.00	-28.02
	29	12	0.00	19.94	0.00	0.00	0.00	41.04
		13	0.00	-19.94	0.00	0.00	0.00	-31.07
	30	12	0.00	13.73	0.00	0.00	0.00	28.26
		13	0.00	-13.73	0.00	0.00	0.00	-21.40
	31	12	0.00	16.02	0.00	0.00	0.00	32.97
		13	0.00	-16.02	0.00	0.00	0.00	-24.96
	32	12	0.00	17.65	0.00	0.00	0.00	36.33
		13	0.00	-17.65	0.00	0.00	0.00	-27.51
	33	12	0.00	19.94	0.00	0.00	0.00	41.04
		13	0.00	-19.94	0.00	0.00	0.00	-31.07
	34	12	0.00	19.61	0.00	0.00	0.00	40.37
		13	0.00	-19.61	0.00	0.00	0.00	-30.57
	35	12	0.00	19.29	0.00	0.00	0.00	39.70
		13	0.00	-19.29	0.00	0.00	0.00	-30.06
	36	12	0.00	26.80	0.00	0.00	0.00	55.17
		13	0.00	-26.80	0.00	0.00	0.00	-41.77
	37	12	0.00	31.71	0.00	0.00	0.00	65.27
		13	0.00	-31.71	0.00	0.00	0.00	-49.41
	38	12	0.00	29.09	0.00	0.00	0.00	59.88
		13	0.00	-29.09	0.00	0.00	0.00	-45.34
	39	12	0.00	38.25	0.00	0.00	0.00	78.72
		13	0.00	-38.25	0.00	0.00	0.00	-59.60
	40	12	0.00	50.01	0.00	0.00	0.00	102.95
		13	0.00	-50.01	0.00	0.00	0.00	-77.94
	41	12	0.00	14.71	0.00	0.00	0.00	30.28
		13	0.00	-14.71	0.00	0.00	0.00	-22.92
	42	12	0.00	21.90	0.00	0.00	0.00	45.08
		13	0.00	-21.90	0.00	0.00	0.00	-34.13
	43	12	0.00	10.46	0.00	0.00	0.00	21.53
		13	0.00	-10.46	0.00	0.00	0.00	-16.30
	44	12	0.00	47.73	0.00	0.00	0.00	98.24
		13	0.00	-47.73	0.00	0.00	0.00	-74.38

MEMBER END FORCES STRUCTURE TYPE = PLANE

ALL UNITS ARE -- KIP FEET (LOCAL)

MEMBER	LOAD	JT	AXIAL	SHEAR-Y	SHEAR-Z	TORSION	MOM-Y	MOM-Z
	45	12	0.00	30.07	0.00	0.00	0.00	61.90
		13	0.00	-30.07	0.00	0.00	0.00	-46.87
	46	12	0.00	43.14	0.00	0.00	0.00	69.73
		13	0.00	-43.14	0.00	0.00	0.00	-48.16
	47	12	0.00	11.19	0.00	0.00	0.00	17.80
		13	0.00	-11.19	0.00	0.00	0.00	-12.20
	48	12	0.00	13.97	0.00	0.00	0.00	22.56
		13	0.00	-13.97	0.00	0.00	0.00	-15.58
	49	12	0.00	19.69	0.00	0.00	0.00	31.47
		13	0.00	-19.69	0.00	0.00	0.00	-21.63
	50	12	0.00	21.90	0.00	0.00	0.00	35.54
		13	0.00	-21.90	0.00	0.00	0.00	-24.59
	51	12	0.00	15.20	0.00	0.00	0.00	24.61
		13	0.00	-15.20	0.00	0.00	0.00	-17.01
	52	12	0.00	17.32	0.00	0.00	0.00	28.03
		13	0.00	-17.32	0.00	0.00	0.00	-19.37
	53	12	0.00	19.45	0.00	0.00	0.00	31.45
		13	0.00	-19.45	0.00	0.00	0.00	-21.72
	54	12	0.00	21.90	0.00	0.00	0.00	35.54
		13	0.00	-21.90	0.00	0.00	0.00	-24.59
	55	12	0.00	21.57	0.00	0.00	0.00	34.87
		13	0.00	-21.57	0.00	0.00	0.00	-24.08
	56	12	0.00	21.25	0.00	0.00	0.00	34.19
		13	0.00	-21.25	0.00	0.00	0.00	-23.57
	57	12	0.00	29.17	0.00	0.00	0.00	47.17
		13	0.00	-29.17	0.00	0.00	0.00	-32.59
	58	12	0.00	34.89	0.00	0.00	0.00	56.08
		13	0.00	-34.89	0.00	0.00	0.00	-38.64
	59	12	0.00	31.87	0.00	0.00	0.00	51.29
		13	0.00	-31.87	0.00	0.00	0.00	-35.36
	60	12	0.00	41.92	0.00	0.00	0.00	67.69
		13	0.00	-41.92	0.00	0.00	0.00	-46.73
	61	12	0.00	54.67	0.00	0.00	0.00	88.20
		13	0.00	-54.67	0.00	0.00	0.00	-60.87
	62	12	0.00	16.10	0.00	0.00	0.00	25.98
		13	0.00	-16.10	0.00	0.00	0.00	-17.93
	63	12	0.00	24.27	0.00	0.00	0.00	38.99
		13	0.00	-24.27	0.00	0.00	0.00	-26.85
	64	12	0.00	11.52	0.00	0.00	0.00	18.47
		13	0.00	-11.52	0.00	0.00	0.00	-12.71
	65	12	0.00	52.21	0.00	0.00	0.00	84.11
		13	0.00	-52.21	0.00	0.00	0.00	-58.00
	66	12	0.00	33.09	0.00	0.00	0.00	53.34
		13	0.00	-33.09	0.00	0.00	0.00	-36.79
13	1	13	0.00	14.17	0.00	0.00	0.00	5.20
		14	0.00	-11.34	0.00	0.00	0.00	7.56

MEMBER END FORCES STRUCTURE TYPE = PLANE

ALL UNITS ARE -- KIP FEET (LOCAL)

MEMBER	LOAD	JT	AXIAL	SHEAR-Y	SHEAR-Z	TORSION	MOM-Y	MOM-Z
	2	13	0.00	31.59	0.00	0.00	0.00	-12.24
		14	0.00	-31.59	0.00	0.00	0.00	43.83
	3	13	0.00	7.28	0.00	0.00	0.00	-16.75
		14	0.00	-7.28	0.00	0.00	0.00	24.03
	4	13	0.00	34.80	0.00	0.00	0.00	-13.49
		14	0.00	-34.80	0.00	0.00	0.00	48.29
	5	13	0.00	9.07	0.00	0.00	0.00	-3.51
		14	0.00	-9.07	0.00	0.00	0.00	12.58
	6	13	0.00	11.27	0.00	0.00	0.00	-4.37
		14	0.00	-11.27	0.00	0.00	0.00	15.64
	7	13	0.00	15.93	0.00	0.00	0.00	-6.17
		14	0.00	-15.93	0.00	0.00	0.00	22.10
	8	13	0.00	17.64	0.00	0.00	0.00	-6.84
		14	0.00	-17.64	0.00	0.00	0.00	24.48
	9	13	0.00	12.25	0.00	0.00	0.00	-4.75
		14	0.00	-12.25	0.00	0.00	0.00	17.00
	10	13	0.00	13.97	0.00	0.00	0.00	-5.41
		14	0.00	-13.97	0.00	0.00	0.00	19.38
	11	13	0.00	15.68	0.00	0.00	0.00	-6.08
		14	0.00	-15.68	0.00	0.00	0.00	21.76
	12	13	0.00	17.64	0.00	0.00	0.00	-6.84
		14	0.00	-17.64	0.00	0.00	0.00	24.48
	13	13	0.00	17.40	0.00	0.00	0.00	-6.74
		14	0.00	-17.40	0.00	0.00	0.00	24.14
	14	13	0.00	17.15	0.00	0.00	0.00	-6.65
		14	0.00	-17.15	0.00	0.00	0.00	23.80
	15	13	0.00	23.53	0.00	0.00	0.00	-9.12
		14	0.00	-23.53	0.00	0.00	0.00	32.65
	16	13	0.00	28.18	0.00	0.00	0.00	-10.92
		14	0.00	-28.18	0.00	0.00	0.00	39.11
	17	13	0.00	25.73	0.00	0.00	0.00	-9.97
		14	0.00	-25.73	0.00	0.00	0.00	35.71
	18	13	0.00	33.82	0.00	0.00	0.00	-13.11
		14	0.00	-33.82	0.00	0.00	0.00	46.93
	19	13	0.00	44.11	0.00	0.00	0.00	-17.10
		14	0.00	-44.11	0.00	0.00	0.00	61.21
	20	13	0.00	12.99	0.00	0.00	0.00	-5.03
		14	0.00	-12.99	0.00	0.00	0.00	18.02
	21	13	0.00	19.61	0.00	0.00	0.00	-7.60
		14	0.00	-19.61	0.00	0.00	0.00	27.20
	22	13	0.00	9.31	0.00	0.00	0.00	-3.61
		14	0.00	-9.31	0.00	0.00	0.00	12.92
	23	13	0.00	42.15	0.00	0.00	0.00	-16.34
		14	0.00	-42.15	0.00	0.00	0.00	58.49
	24	13	0.00	26.71	0.00	0.00	0.00	-10.35
		14	0.00	-26.71	0.00	0.00	0.00	37.07

MEMBER END FORCES STRUCTURE TYPE = PLANE

ALL UNITS ARE -- KIP FEET (LOCAL)

MEMBER	LOAD	JT	AXIAL	SHEAR-Y	SHEAR-Z	TORSION	MOM-Y	MOM-Z
	25	13	0.00	39.23	0.00	0.00	0.00	61.13
		14	0.00	-39.23	0.00	0.00	0.00	-21.90
	26	13	0.00	10.46	0.00	0.00	0.00	16.30
		14	0.00	-10.46	0.00	0.00	0.00	-5.84
	27	13	0.00	12.75	0.00	0.00	0.00	19.87
		14	0.00	-12.75	0.00	0.00	0.00	-7.12
	28	13	0.00	17.98	0.00	0.00	0.00	28.02
		14	0.00	-17.98	0.00	0.00	0.00	-10.04
	29	13	0.00	19.94	0.00	0.00	0.00	31.07
		14	0.00	-19.94	0.00	0.00	0.00	-11.13
	30	13	0.00	13.73	0.00	0.00	0.00	21.40
		14	0.00	-13.73	0.00	0.00	0.00	-7.67
	31	13	0.00	16.02	0.00	0.00	0.00	24.96
		14	0.00	-16.02	0.00	0.00	0.00	-8.94
	32	13	0.00	17.65	0.00	0.00	0.00	27.51
		14	0.00	-17.65	0.00	0.00	0.00	-9.86
	33	13	0.00	19.94	0.00	0.00	0.00	31.07
		14	0.00	-19.94	0.00	0.00	0.00	-11.13
	34	13	0.00	19.61	0.00	0.00	0.00	30.57
		14	0.00	-19.61	0.00	0.00	0.00	-10.95
	35	13	0.00	19.29	0.00	0.00	0.00	30.06
		14	0.00	-19.29	0.00	0.00	0.00	-10.77
	36	13	0.00	26.80	0.00	0.00	0.00	41.77
		14	0.00	-26.80	0.00	0.00	0.00	-14.97
	37	13	0.00	31.71	0.00	0.00	0.00	49.41
		14	0.00	-31.71	0.00	0.00	0.00	-17.71
	38	13	0.00	29.09	0.00	0.00	0.00	45.34
		14	0.00	-29.09	0.00	0.00	0.00	-16.25
	39	13	0.00	38.25	0.00	0.00	0.00	59.60
		14	0.00	-38.25	0.00	0.00	0.00	-21.36
	40	13	0.00	50.01	0.00	0.00	0.00	77.94
		14	0.00	-50.01	0.00	0.00	0.00	-27.93
	41	13	0.00	14.71	0.00	0.00	0.00	22.92
		14	0.00	-14.71	0.00	0.00	0.00	-8.21
	42	13	0.00	21.90	0.00	0.00	0.00	34.13
		14	0.00	-21.90	0.00	0.00	0.00	-12.23
	43	13	0.00	10.46	0.00	0.00	0.00	16.30
		14	0.00	-10.46	0.00	0.00	0.00	-5.84
	44	13	0.00	47.73	0.00	0.00	0.00	74.38
		14	0.00	-47.73	0.00	0.00	0.00	-26.65
	45	13	0.00	30.07	0.00	0.00	0.00	46.87
		14	0.00	-30.07	0.00	0.00	0.00	-16.79
	46	13	0.00	43.14	0.00	0.00	0.00	48.16
		14	0.00	-43.14	0.00	0.00	0.00	-5.02
	47	13	0.00	11.19	0.00	0.00	0.00	12.20
		14	0.00	-11.19	0.00	0.00	0.00	-1.01

MEMBER END FORCES STRUCTURE TYPE = PLANE

ALL UNITS ARE -- KIP FEET (LOCAL)

MEMBER	LOAD	JT	AXIAL	SHEAR-Y	SHEAR-Z	TORSION	MOM-Y	MOM-Z
	48	13	0.00	13.97	0.00	0.00	0.00	15.58
		14	0.00	-13.97	0.00	0.00	0.00	-1.60
	49	13	0.00	19.69	0.00	0.00	0.00	21.63
		14	0.00	-19.69	0.00	0.00	0.00	-1.94
	50	13	0.00	21.90	0.00	0.00	0.00	24.59
		14	0.00	-21.90	0.00	0.00	0.00	-2.69
	51	13	0.00	15.20	0.00	0.00	0.00	17.01
		14	0.00	-15.20	0.00	0.00	0.00	-1.81
	52	13	0.00	17.32	0.00	0.00	0.00	19.37
		14	0.00	-17.32	0.00	0.00	0.00	-2.04
	53	13	0.00	19.45	0.00	0.00	0.00	21.72
		14	0.00	-19.45	0.00	0.00	0.00	-2.28
	54	13	0.00	21.90	0.00	0.00	0.00	24.59
		14	0.00	-21.90	0.00	0.00	0.00	-2.69
	55	13	0.00	21.57	0.00	0.00	0.00	24.08
		14	0.00	-21.57	0.00	0.00	0.00	-2.51
	56	13	0.00	21.25	0.00	0.00	0.00	23.57
		14	0.00	-21.25	0.00	0.00	0.00	-2.33
	57	13	0.00	29.17	0.00	0.00	0.00	32.59
		14	0.00	-29.17	0.00	0.00	0.00	-3.41
	58	13	0.00	34.89	0.00	0.00	0.00	38.64
		14	0.00	-34.89	0.00	0.00	0.00	-3.75
	59	13	0.00	31.87	0.00	0.00	0.00	35.36
		14	0.00	-31.87	0.00	0.00	0.00	-3.49
	60	13	0.00	41.92	0.00	0.00	0.00	46.73
		14	0.00	-41.92	0.00	0.00	0.00	-4.81
	61	13	0.00	54.67	0.00	0.00	0.00	60.87
		14	0.00	-54.67	0.00	0.00	0.00	-6.20
	62	13	0.00	16.10	0.00	0.00	0.00	17.93
		14	0.00	-16.10	0.00	0.00	0.00	-1.84
	63	13	0.00	24.27	0.00	0.00	0.00	26.85
		14	0.00	-24.27	0.00	0.00	0.00	-2.58
	64	13	0.00	11.52	0.00	0.00	0.00	12.71
		14	0.00	-11.52	0.00	0.00	0.00	-1.19
	65	13	0.00	52.21	0.00	0.00	0.00	58.00
		14	0.00	-52.21	0.00	0.00	0.00	-5.79
	66	13	0.00	33.09	0.00	0.00	0.00	36.79
		14	0.00	-33.09	0.00	0.00	0.00	-3.70
14	1	14	0.00	11.34	0.00	0.00	0.00	-7.56
		15	0.00	-8.50	0.00	0.00	0.00	17.48
	2	14	0.00	31.59	0.00	0.00	0.00	-43.83
		15	0.00	-31.59	0.00	0.00	0.00	75.42
	3	14	0.00	7.28	0.00	0.00	0.00	-24.03
		15	0.00	-7.28	0.00	0.00	0.00	31.30

MEMBER END FORCES STRUCTURE TYPE = PLANE

ALL UNITS ARE -- KIP FEET (LOCAL)

MEMBER	LOAD	JT	AXIAL	SHEAR-Y	SHEAR-Z	TORSION	MOM-Y	MOM-Z
	4	14	0.00	34.80	0.00	0.00	0.00	-48.29
		15	0.00	-34.80	0.00	0.00	0.00	83.09
	5	14	0.00	9.07	0.00	0.00	0.00	-12.58
		15	0.00	-9.07	0.00	0.00	0.00	21.65
	6	14	0.00	11.27	0.00	0.00	0.00	-15.64
		15	0.00	-11.27	0.00	0.00	0.00	26.92
	7	14	0.00	15.93	0.00	0.00	0.00	-22.10
		15	0.00	-15.93	0.00	0.00	0.00	38.03
	8	14	0.00	17.64	0.00	0.00	0.00	-24.48
		15	0.00	-17.64	0.00	0.00	0.00	42.13
	9	14	0.00	12.25	0.00	0.00	0.00	-17.00
		15	0.00	-12.25	0.00	0.00	0.00	29.26
	10	14	0.00	13.97	0.00	0.00	0.00	-19.38
		15	0.00	-13.97	0.00	0.00	0.00	33.35
	11	14	0.00	15.68	0.00	0.00	0.00	-21.76
		15	0.00	-15.68	0.00	0.00	0.00	37.45
	12	14	0.00	17.64	0.00	0.00	0.00	-24.48
		15	0.00	-17.64	0.00	0.00	0.00	42.13
	13	14	0.00	17.40	0.00	0.00	0.00	-24.14
		15	0.00	-17.40	0.00	0.00	0.00	41.54
	14	14	0.00	17.15	0.00	0.00	0.00	-23.80
		15	0.00	-17.15	0.00	0.00	0.00	40.96
	15	14	0.00	23.53	0.00	0.00	0.00	-32.65
		15	0.00	-23.53	0.00	0.00	0.00	56.17
	16	14	0.00	28.18	0.00	0.00	0.00	-39.11
		15	0.00	-28.18	0.00	0.00	0.00	67.29
	17	14	0.00	25.73	0.00	0.00	0.00	-35.71
		15	0.00	-25.73	0.00	0.00	0.00	61.44
	18	14	0.00	33.82	0.00	0.00	0.00	-46.93
		15	0.00	-33.82	0.00	0.00	0.00	80.75
	19	14	0.00	44.11	0.00	0.00	0.00	-61.21
		15	0.00	-44.11	0.00	0.00	0.00	105.32
	20	14	0.00	12.99	0.00	0.00	0.00	-18.02
		15	0.00	-12.99	0.00	0.00	0.00	31.01
	21	14	0.00	19.61	0.00	0.00	0.00	-27.20
		15	0.00	-19.61	0.00	0.00	0.00	46.81
	22	14	0.00	9.31	0.00	0.00	0.00	-12.92
		15	0.00	-9.31	0.00	0.00	0.00	22.23
	23	14	0.00	42.15	0.00	0.00	0.00	-58.49
		15	0.00	-42.15	0.00	0.00	0.00	100.64
	24	14	0.00	26.71	0.00	0.00	0.00	-37.07
		15	0.00	-26.71	0.00	0.00	0.00	63.78
	25	14	0.00	39.23	0.00	0.00	0.00	21.90
		15	0.00	-39.23	0.00	0.00	0.00	17.32
	26	14	0.00	10.46	0.00	0.00	0.00	5.84
		15	0.00	-10.46	0.00	0.00	0.00	4.62

MEMBER END FORCES STRUCTURE TYPE = PLANE

ALL UNITS ARE -- KIP FEET (LOCAL)

MEMBER	LOAD	JT	AXIAL	SHEAR-Y	SHEAR-Z	TORSION	MOM-Y	MOM-Z
	27	14	0.00	12.75	0.00	0.00	0.00	7.12
		15	0.00	-12.75	0.00	0.00	0.00	5.63
	28	14	0.00	17.98	0.00	0.00	0.00	10.04
		15	0.00	-17.98	0.00	0.00	0.00	7.94
	29	14	0.00	19.94	0.00	0.00	0.00	11.13
		15	0.00	-19.94	0.00	0.00	0.00	8.81
	30	14	0.00	13.73	0.00	0.00	0.00	7.67
		15	0.00	-13.73	0.00	0.00	0.00	6.06
	31	14	0.00	16.02	0.00	0.00	0.00	8.94
		15	0.00	-16.02	0.00	0.00	0.00	7.07
	32	14	0.00	17.65	0.00	0.00	0.00	9.86
		15	0.00	-17.65	0.00	0.00	0.00	7.79
	33	14	0.00	19.94	0.00	0.00	0.00	11.13
		15	0.00	-19.94	0.00	0.00	0.00	8.81
	34	14	0.00	19.61	0.00	0.00	0.00	10.95
		15	0.00	-19.61	0.00	0.00	0.00	8.66
	35	14	0.00	19.29	0.00	0.00	0.00	10.77
		15	0.00	-19.29	0.00	0.00	0.00	8.52
	36	14	0.00	26.80	0.00	0.00	0.00	14.97
		15	0.00	-26.80	0.00	0.00	0.00	11.84
	37	14	0.00	31.71	0.00	0.00	0.00	17.71
		15	0.00	-31.71	0.00	0.00	0.00	14.00
	38	14	0.00	29.09	0.00	0.00	0.00	16.25
		15	0.00	-29.09	0.00	0.00	0.00	12.85
	39	14	0.00	38.25	0.00	0.00	0.00	21.36
		15	0.00	-38.25	0.00	0.00	0.00	16.89
	40	14	0.00	50.01	0.00	0.00	0.00	27.93
		15	0.00	-50.01	0.00	0.00	0.00	22.09
	41	14	0.00	14.71	0.00	0.00	0.00	8.21
		15	0.00	-14.71	0.00	0.00	0.00	6.50
	42	14	0.00	21.90	0.00	0.00	0.00	12.23
		15	0.00	-21.90	0.00	0.00	0.00	9.67
	43	14	0.00	10.46	0.00	0.00	0.00	5.84
		15	0.00	-10.46	0.00	0.00	0.00	4.62
	44	14	0.00	47.73	0.00	0.00	0.00	26.65
		15	0.00	-47.73	0.00	0.00	0.00	21.07
	45	14	0.00	30.07	0.00	0.00	0.00	16.79
		15	0.00	-30.07	0.00	0.00	0.00	13.28
	46	14	0.00	43.14	0.00	0.00	0.00	5.02
		15	0.00	-43.14	0.00	0.00	0.00	38.13
	47	14	0.00	11.19	0.00	0.00	0.00	1.01
		15	0.00	-11.19	0.00	0.00	0.00	10.19
	48	14	0.00	13.97	0.00	0.00	0.00	1.60
		15	0.00	-13.97	0.00	0.00	0.00	12.37
	49	14	0.00	19.69	0.00	0.00	0.00	1.94
		15	0.00	-19.69	0.00	0.00	0.00	17.76

MEMBER END FORCES STRUCTURE TYPE = PLANE

ALL UNITS ARE -- KIP FEET (LOCAL)

MEMBER	LOAD	JT	AXIAL	SHEAR-Y	SHEAR-Z	TORSION	MOM-Y	MOM-Z
	50	14	0.00	21.90	0.00	0.00	0.00	2.69
		15	0.00	-21.90	0.00	0.00	0.00	19.21
	51	14	0.00	15.20	0.00	0.00	0.00	1.81
		15	0.00	-15.20	0.00	0.00	0.00	13.39
	52	14	0.00	17.32	0.00	0.00	0.00	2.04
		15	0.00	-17.32	0.00	0.00	0.00	15.28
	53	14	0.00	19.45	0.00	0.00	0.00	2.28
		15	0.00	-19.45	0.00	0.00	0.00	17.17
	54	14	0.00	21.90	0.00	0.00	0.00	2.69
		15	0.00	-21.90	0.00	0.00	0.00	19.21
	55	14	0.00	21.57	0.00	0.00	0.00	2.51
		15	0.00	-21.57	0.00	0.00	0.00	19.06
	56	14	0.00	21.25	0.00	0.00	0.00	2.33
		15	0.00	-21.25	0.00	0.00	0.00	18.92
	57	14	0.00	29.17	0.00	0.00	0.00	3.41
		15	0.00	-29.17	0.00	0.00	0.00	25.76
	58	14	0.00	34.89	0.00	0.00	0.00	3.75
		15	0.00	-34.89	0.00	0.00	0.00	31.15
	59	14	0.00	31.87	0.00	0.00	0.00	3.49
		15	0.00	-31.87	0.00	0.00	0.00	28.38
	60	14	0.00	41.92	0.00	0.00	0.00	4.81
		15	0.00	-41.92	0.00	0.00	0.00	37.11
	61	14	0.00	54.67	0.00	0.00	0.00	6.20
		15	0.00	-54.67	0.00	0.00	0.00	48.46
	62	14	0.00	16.10	0.00	0.00	0.00	1.84
		15	0.00	-16.10	0.00	0.00	0.00	14.26
	63	14	0.00	24.27	0.00	0.00	0.00	2.58
		15	0.00	-24.27	0.00	0.00	0.00	21.69
	64	14	0.00	11.52	0.00	0.00	0.00	1.19
		15	0.00	-11.52	0.00	0.00	0.00	10.33
	65	14	0.00	52.21	0.00	0.00	0.00	5.79
		15	0.00	-52.21	0.00	0.00	0.00	46.43
	66	14	0.00	33.09	0.00	0.00	0.00	3.70
		15	0.00	-33.09	0.00	0.00	0.00	29.40
15	1	15	0.00	8.50	0.00	0.00	0.00	-17.48
		16	0.00	-5.67	0.00	0.00	0.00	24.57
	2	15	0.00	31.59	0.00	0.00	0.00	-75.42
		16	0.00	-31.59	0.00	0.00	0.00	107.01
	3	15	0.00	7.28	0.00	0.00	0.00	-31.30
		16	0.00	-7.28	0.00	0.00	0.00	38.58
	4	15	0.00	34.80	0.00	0.00	0.00	-83.09
		16	0.00	-34.80	0.00	0.00	0.00	117.89
	5	15	0.00	9.07	0.00	0.00	0.00	-21.65
		16	0.00	-9.07	0.00	0.00	0.00	30.72

MEMBER END FORCES STRUCTURE TYPE = PLANE

ALL UNITS ARE -- KIP FEET (LOCAL)

MEMBER	LOAD	JT	AXIAL	SHEAR-Y	SHEAR-Z	TORSION	MOM-Y	MOM-Z
	6	15	0.00	11.27	0.00	0.00	0.00	-26.92
		16	0.00	-11.27	0.00	0.00	0.00	38.19
	7	15	0.00	15.93	0.00	0.00	0.00	-38.03
		16	0.00	-15.93	0.00	0.00	0.00	53.96
	8	15	0.00	17.64	0.00	0.00	0.00	-42.13
		16	0.00	-17.64	0.00	0.00	0.00	59.77
	9	15	0.00	12.25	0.00	0.00	0.00	-29.26
		16	0.00	-12.25	0.00	0.00	0.00	41.51
	10	15	0.00	13.97	0.00	0.00	0.00	-33.35
		16	0.00	-13.97	0.00	0.00	0.00	47.32
	11	15	0.00	15.68	0.00	0.00	0.00	-37.45
		16	0.00	-15.68	0.00	0.00	0.00	53.13
	12	15	0.00	17.64	0.00	0.00	0.00	-42.13
		16	0.00	-17.64	0.00	0.00	0.00	59.77
	13	15	0.00	17.40	0.00	0.00	0.00	-41.54
		16	0.00	-17.40	0.00	0.00	0.00	58.94
	14	15	0.00	17.15	0.00	0.00	0.00	-40.96
		16	0.00	-17.15	0.00	0.00	0.00	58.11
	15	15	0.00	23.53	0.00	0.00	0.00	-56.17
		16	0.00	-23.53	0.00	0.00	0.00	79.70
	16	15	0.00	28.18	0.00	0.00	0.00	-67.29
		16	0.00	-28.18	0.00	0.00	0.00	95.47
	17	15	0.00	25.73	0.00	0.00	0.00	-61.44
		16	0.00	-25.73	0.00	0.00	0.00	87.17
	18	15	0.00	33.82	0.00	0.00	0.00	-80.75
		16	0.00	-33.82	0.00	0.00	0.00	114.57
	19	15	0.00	44.11	0.00	0.00	0.00	-105.32
		16	0.00	-44.11	0.00	0.00	0.00	149.43
	20	15	0.00	12.99	0.00	0.00	0.00	-31.01
		16	0.00	-12.99	0.00	0.00	0.00	44.00
	21	15	0.00	19.61	0.00	0.00	0.00	-46.81
		16	0.00	-19.61	0.00	0.00	0.00	66.41
	22	15	0.00	9.31	0.00	0.00	0.00	-22.23
		16	0.00	-9.31	0.00	0.00	0.00	31.55
	23	15	0.00	42.15	0.00	0.00	0.00	-100.64
		16	0.00	-42.15	0.00	0.00	0.00	142.79
	24	15	0.00	26.71	0.00	0.00	0.00	-63.78
		16	0.00	-26.71	0.00	0.00	0.00	90.49
	25	15	0.00	39.23	0.00	0.00	0.00	-17.32
		16	0.00	-39.23	0.00	0.00	0.00	56.55
	26	15	0.00	10.46	0.00	0.00	0.00	-4.62
		16	0.00	-10.46	0.00	0.00	0.00	15.08
	27	15	0.00	12.75	0.00	0.00	0.00	-5.63
		16	0.00	-12.75	0.00	0.00	0.00	18.38
	28	15	0.00	17.98	0.00	0.00	0.00	-7.94
		16	0.00	-17.98	0.00	0.00	0.00	25.92

MEMBER END FORCES STRUCTURE TYPE = PLANE

ALL UNITS ARE -- KIP FEET (LOCAL)

MEMBER	LOAD	JT	AXIAL	SHEAR-Y	SHEAR-Z	TORSION	MOM-Y	MOM-Z
	29	15	0.00	19.94	0.00	0.00	0.00	-8.81
		16	0.00	-19.94	0.00	0.00	0.00	28.75
	30	15	0.00	13.73	0.00	0.00	0.00	-6.06
		16	0.00	-13.73	0.00	0.00	0.00	19.79
	31	15	0.00	16.02	0.00	0.00	0.00	-7.07
		16	0.00	-16.02	0.00	0.00	0.00	23.09
	32	15	0.00	17.65	0.00	0.00	0.00	-7.79
		16	0.00	-17.65	0.00	0.00	0.00	25.45
	33	15	0.00	19.94	0.00	0.00	0.00	-8.81
		16	0.00	-19.94	0.00	0.00	0.00	28.75
	34	15	0.00	19.61	0.00	0.00	0.00	-8.66
		16	0.00	-19.61	0.00	0.00	0.00	28.27
	35	15	0.00	19.29	0.00	0.00	0.00	-8.52
		16	0.00	-19.29	0.00	0.00	0.00	27.80
	36	15	0.00	26.80	0.00	0.00	0.00	-11.84
		16	0.00	-26.80	0.00	0.00	0.00	38.64
	37	15	0.00	31.71	0.00	0.00	0.00	-14.00
		16	0.00	-31.71	0.00	0.00	0.00	45.71
	38	15	0.00	29.09	0.00	0.00	0.00	-12.85
		16	0.00	-29.09	0.00	0.00	0.00	41.94
	39	15	0.00	38.25	0.00	0.00	0.00	-16.89
		16	0.00	-38.25	0.00	0.00	0.00	55.13
	40	15	0.00	50.01	0.00	0.00	0.00	-22.09
		16	0.00	-50.01	0.00	0.00	0.00	72.10
	41	15	0.00	14.71	0.00	0.00	0.00	-6.50
		16	0.00	-14.71	0.00	0.00	0.00	21.21
	42	15	0.00	21.90	0.00	0.00	0.00	-9.67
		16	0.00	-21.90	0.00	0.00	0.00	31.57
	43	15	0.00	10.46	0.00	0.00	0.00	-4.62
		16	0.00	-10.46	0.00	0.00	0.00	15.08
	44	15	0.00	47.73	0.00	0.00	0.00	-21.07
		16	0.00	-47.73	0.00	0.00	0.00	68.80
	45	15	0.00	30.07	0.00	0.00	0.00	-13.28
		16	0.00	-30.07	0.00	0.00	0.00	43.35
	46	15	0.00	43.14	0.00	0.00	0.00	-38.13
		16	0.00	-43.14	0.00	0.00	0.00	81.27
	47	15	0.00	11.19	0.00	0.00	0.00	-10.19
		16	0.00	-11.19	0.00	0.00	0.00	21.38
	48	15	0.00	13.97	0.00	0.00	0.00	-12.37
		16	0.00	-13.97	0.00	0.00	0.00	26.34
	49	15	0.00	19.69	0.00	0.00	0.00	-17.76
		16	0.00	-19.69	0.00	0.00	0.00	37.45
	50	15	0.00	21.90	0.00	0.00	0.00	-19.21
		16	0.00	-21.90	0.00	0.00	0.00	41.11
	51	15	0.00	15.20	0.00	0.00	0.00	-13.39
		16	0.00	-15.20	0.00	0.00	0.00	28.59

MEMBER END FORCES STRUCTURE TYPE = PLANE

ALL UNITS ARE -- KIP FEET (LOCAL)

MEMBER	LOAD	JT	AXIAL	SHEAR-Y	SHEAR-Z	TORSION	MOM-Y	MOM-Z
	52	15	0.00	17.32	0.00	0.00	0.00	-15.28
		16	0.00	-17.32	0.00	0.00	0.00	32.60
	53	15	0.00	19.45	0.00	0.00	0.00	-17.17
		16	0.00	-19.45	0.00	0.00	0.00	36.62
	54	15	0.00	21.90	0.00	0.00	0.00	-19.21
		16	0.00	-21.90	0.00	0.00	0.00	41.11
	55	15	0.00	21.57	0.00	0.00	0.00	-19.06
		16	0.00	-21.57	0.00	0.00	0.00	40.64
	56	15	0.00	21.25	0.00	0.00	0.00	-18.92
		16	0.00	-21.25	0.00	0.00	0.00	40.17
	57	15	0.00	29.17	0.00	0.00	0.00	-25.76
		16	0.00	-29.17	0.00	0.00	0.00	54.93
	58	15	0.00	34.89	0.00	0.00	0.00	-31.15
		16	0.00	-34.89	0.00	0.00	0.00	66.04
	59	15	0.00	31.87	0.00	0.00	0.00	-28.38
		16	0.00	-31.87	0.00	0.00	0.00	60.25
	60	15	0.00	41.92	0.00	0.00	0.00	-37.11
		16	0.00	-41.92	0.00	0.00	0.00	79.03
	61	15	0.00	54.67	0.00	0.00	0.00	-48.46
		16	0.00	-54.67	0.00	0.00	0.00	103.13
	62	15	0.00	16.10	0.00	0.00	0.00	-14.26
		16	0.00	-16.10	0.00	0.00	0.00	30.36
	63	15	0.00	24.27	0.00	0.00	0.00	-21.69
		16	0.00	-24.27	0.00	0.00	0.00	45.95
	64	15	0.00	11.52	0.00	0.00	0.00	-10.33
		16	0.00	-11.52	0.00	0.00	0.00	21.86
	65	15	0.00	52.21	0.00	0.00	0.00	-46.43
		16	0.00	-52.21	0.00	0.00	0.00	98.64
	66	15	0.00	33.09	0.00	0.00	0.00	-29.40
		16	0.00	-33.09	0.00	0.00	0.00	62.49
16	1	16	0.00	5.67	0.00	0.00	0.00	-24.57
		17	0.00	-2.83	0.00	0.00	0.00	28.82
	2	16	0.00	31.59	0.00	0.00	0.00	-107.01
		17	0.00	-31.59	0.00	0.00	0.00	138.60
	3	16	0.00	7.28	0.00	0.00	0.00	-38.58
		17	0.00	-7.28	0.00	0.00	0.00	45.85
	4	16	0.00	34.80	0.00	0.00	0.00	-117.89
		17	0.00	-34.80	0.00	0.00	0.00	152.69
	5	16	0.00	9.07	0.00	0.00	0.00	-30.72
		17	0.00	-9.07	0.00	0.00	0.00	39.78
	6	16	0.00	11.27	0.00	0.00	0.00	-38.19
		17	0.00	-11.27	0.00	0.00	0.00	49.46
	7	16	0.00	15.93	0.00	0.00	0.00	-53.96
		17	0.00	-15.93	0.00	0.00	0.00	69.89

MEMBER END FORCES STRUCTURE TYPE = PLANE

ALL UNITS ARE -- KIP FEET (LOCAL)

MEMBER	LOAD	JT	AXIAL	SHEAR-Y	SHEAR-Z	TORSION	MOM-Y	MOM-Z
	8	16	0.00	17.64	0.00	0.00	0.00	-59.77
		17	0.00	-17.64	0.00	0.00	0.00	77.42
	9	16	0.00	12.25	0.00	0.00	0.00	-41.51
		17	0.00	-12.25	0.00	0.00	0.00	53.76
	10	16	0.00	13.97	0.00	0.00	0.00	-47.32
		17	0.00	-13.97	0.00	0.00	0.00	61.29
	11	16	0.00	15.68	0.00	0.00	0.00	-53.13
		17	0.00	-15.68	0.00	0.00	0.00	68.82
	12	16	0.00	17.64	0.00	0.00	0.00	-59.77
		17	0.00	-17.64	0.00	0.00	0.00	77.42
	13	16	0.00	17.40	0.00	0.00	0.00	-58.94
		17	0.00	-17.40	0.00	0.00	0.00	76.34
	14	16	0.00	17.15	0.00	0.00	0.00	-58.11
		17	0.00	-17.15	0.00	0.00	0.00	75.27
	15	16	0.00	23.53	0.00	0.00	0.00	-79.70
		17	0.00	-23.53	0.00	0.00	0.00	103.22
	16	16	0.00	28.18	0.00	0.00	0.00	-95.47
		17	0.00	-28.18	0.00	0.00	0.00	123.65
	17	16	0.00	25.73	0.00	0.00	0.00	-87.17
		17	0.00	-25.73	0.00	0.00	0.00	112.90
	18	16	0.00	33.82	0.00	0.00	0.00	-114.57
		17	0.00	-33.82	0.00	0.00	0.00	148.38
	19	16	0.00	44.11	0.00	0.00	0.00	-149.43
		17	0.00	-44.11	0.00	0.00	0.00	193.54
	20	16	0.00	12.99	0.00	0.00	0.00	-44.00
		17	0.00	-12.99	0.00	0.00	0.00	56.99
	21	16	0.00	19.61	0.00	0.00	0.00	-66.41
		17	0.00	-19.61	0.00	0.00	0.00	86.02
	22	16	0.00	9.31	0.00	0.00	0.00	-31.55
		17	0.00	-9.31	0.00	0.00	0.00	40.86
	23	16	0.00	42.15	0.00	0.00	0.00	-142.79
		17	0.00	-42.15	0.00	0.00	0.00	184.94
	24	16	0.00	26.71	0.00	0.00	0.00	-90.49
		17	0.00	-26.71	0.00	0.00	0.00	117.20
	25	16	0.00	39.23	0.00	0.00	0.00	-56.55
		17	0.00	-39.23	0.00	0.00	0.00	95.77
	26	16	0.00	10.46	0.00	0.00	0.00	-15.08
		17	0.00	-10.46	0.00	0.00	0.00	25.54
	27	16	0.00	12.75	0.00	0.00	0.00	-18.38
		17	0.00	-12.75	0.00	0.00	0.00	31.13
	28	16	0.00	17.98	0.00	0.00	0.00	-25.92
		17	0.00	-17.98	0.00	0.00	0.00	43.90
	29	16	0.00	19.94	0.00	0.00	0.00	-28.75
		17	0.00	-19.94	0.00	0.00	0.00	48.69
	30	16	0.00	13.73	0.00	0.00	0.00	-19.79
		17	0.00	-13.73	0.00	0.00	0.00	33.52

MEMBER END FORCES STRUCTURE TYPE = PLANE

ALL UNITS ARE -- KIP FEET (LOCAL)

MEMBER	LOAD	JT	AXIAL	SHEAR-Y	SHEAR-Z	TORSION	MOM-Y	MOM-Z
	31	16	0.00	16.02	0.00	0.00	0.00	-23.09
		17	0.00	-16.02	0.00	0.00	0.00	39.11
	32	16	0.00	17.65	0.00	0.00	0.00	-25.45
		17	0.00	-17.65	0.00	0.00	0.00	43.10
	33	16	0.00	19.94	0.00	0.00	0.00	-28.75
		17	0.00	-19.94	0.00	0.00	0.00	48.69
	34	16	0.00	19.61	0.00	0.00	0.00	-28.27
		17	0.00	-19.61	0.00	0.00	0.00	47.89
	35	16	0.00	19.29	0.00	0.00	0.00	-27.80
		17	0.00	-19.29	0.00	0.00	0.00	47.09
	36	16	0.00	26.80	0.00	0.00	0.00	-38.64
		17	0.00	-26.80	0.00	0.00	0.00	65.45
	37	16	0.00	31.71	0.00	0.00	0.00	-45.71
		17	0.00	-31.71	0.00	0.00	0.00	77.42
	38	16	0.00	29.09	0.00	0.00	0.00	-41.94
		17	0.00	-29.09	0.00	0.00	0.00	71.03
	39	16	0.00	38.25	0.00	0.00	0.00	-55.13
		17	0.00	-38.25	0.00	0.00	0.00	93.38
	40	16	0.00	50.01	0.00	0.00	0.00	-72.10
		17	0.00	-50.01	0.00	0.00	0.00	122.11
	41	16	0.00	14.71	0.00	0.00	0.00	-21.21
		17	0.00	-14.71	0.00	0.00	0.00	35.92
	42	16	0.00	21.90	0.00	0.00	0.00	-31.57
		17	0.00	-21.90	0.00	0.00	0.00	53.47
	43	16	0.00	10.46	0.00	0.00	0.00	-15.08
		17	0.00	-10.46	0.00	0.00	0.00	25.54
	44	16	0.00	47.73	0.00	0.00	0.00	-68.80
		17	0.00	-47.73	0.00	0.00	0.00	116.52
	45	16	0.00	30.07	0.00	0.00	0.00	-43.35
		17	0.00	-30.07	0.00	0.00	0.00	73.43
	46	16	0.00	43.14	0.00	0.00	0.00	-81.27
		17	0.00	-43.14	0.00	0.00	0.00	124.42
	47	16	0.00	11.19	0.00	0.00	0.00	-21.38
		17	0.00	-11.19	0.00	0.00	0.00	32.58
	48	16	0.00	13.97	0.00	0.00	0.00	-26.34
		17	0.00	-13.97	0.00	0.00	0.00	40.32
	49	16	0.00	19.69	0.00	0.00	0.00	-37.45
		17	0.00	-19.69	0.00	0.00	0.00	57.14
	50	16	0.00	21.90	0.00	0.00	0.00	-41.11
		17	0.00	-21.90	0.00	0.00	0.00	63.01
	51	16	0.00	15.20	0.00	0.00	0.00	-28.59
		17	0.00	-15.20	0.00	0.00	0.00	43.79
	52	16	0.00	17.32	0.00	0.00	0.00	-32.60
		17	0.00	-17.32	0.00	0.00	0.00	49.93
	53	16	0.00	19.45	0.00	0.00	0.00	-36.62
		17	0.00	-19.45	0.00	0.00	0.00	56.07

MEMBER END FORCES STRUCTURE TYPE = PLANE

ALL UNITS ARE -- KIP FEET (LOCAL)

MEMBER	LOAD	JT	AXIAL	SHEAR-Y	SHEAR-Z	TORSION	MOM-Y	MOM-Z
	54	16	0.00	21.90	0.00	0.00	0.00	-41.11
		17	0.00	-21.90	0.00	0.00	0.00	63.01
	55	16	0.00	21.57	0.00	0.00	0.00	-40.64
		17	0.00	-21.57	0.00	0.00	0.00	62.21
	56	16	0.00	21.25	0.00	0.00	0.00	-40.17
		17	0.00	-21.25	0.00	0.00	0.00	61.41
	57	16	0.00	29.17	0.00	0.00	0.00	-54.93
		17	0.00	-29.17	0.00	0.00	0.00	84.10
	58	16	0.00	34.89	0.00	0.00	0.00	-66.04
		17	0.00	-34.89	0.00	0.00	0.00	100.93
	59	16	0.00	31.87	0.00	0.00	0.00	-60.25
		17	0.00	-31.87	0.00	0.00	0.00	92.12
	60	16	0.00	41.92	0.00	0.00	0.00	-79.03
		17	0.00	-41.92	0.00	0.00	0.00	120.95
	61	16	0.00	54.67	0.00	0.00	0.00	-103.13
		17	0.00	-54.67	0.00	0.00	0.00	157.79
	62	16	0.00	16.10	0.00	0.00	0.00	-30.36
		17	0.00	-16.10	0.00	0.00	0.00	46.46
	63	16	0.00	24.27	0.00	0.00	0.00	-45.95
		17	0.00	-24.27	0.00	0.00	0.00	70.22
	64	16	0.00	11.52	0.00	0.00	0.00	-21.86
		17	0.00	-11.52	0.00	0.00	0.00	33.38
	65	16	0.00	52.21	0.00	0.00	0.00	-98.64
		17	0.00	-52.21	0.00	0.00	0.00	150.86
	66	16	0.00	33.09	0.00	0.00	0.00	-62.49
		17	0.00	-33.09	0.00	0.00	0.00	95.59
17	1	17	0.00	2.83	0.00	0.00	0.00	-28.82
		18	0.00	-0.00	0.00	0.00	0.00	30.24
	2	17	0.00	31.59	0.00	0.00	0.00	-138.60
		18	0.00	-31.59	0.00	0.00	0.00	170.19
	3	17	0.00	7.28	0.00	0.00	0.00	-45.85
		18	0.00	-7.28	0.00	0.00	0.00	53.13
	4	17	0.00	34.80	0.00	0.00	0.00	-152.69
		18	0.00	-34.80	0.00	0.00	0.00	187.48
	5	17	0.00	9.07	0.00	0.00	0.00	-39.78
		18	0.00	-9.07	0.00	0.00	0.00	48.85
	6	17	0.00	11.27	0.00	0.00	0.00	-49.46
		18	0.00	-11.27	0.00	0.00	0.00	60.73
	7	17	0.00	15.93	0.00	0.00	0.00	-69.89
		18	0.00	-15.93	0.00	0.00	0.00	85.82
	8	17	0.00	17.64	0.00	0.00	0.00	-77.42
		18	0.00	-17.64	0.00	0.00	0.00	95.06
	9	17	0.00	12.25	0.00	0.00	0.00	-53.76
		18	0.00	-12.25	0.00	0.00	0.00	66.02

MEMBER END FORCES STRUCTURE TYPE = PLANE

ALL UNITS ARE -- KIP FEET (LOCAL)

MEMBER	LOAD	JT	AXIAL	SHEAR-Y	SHEAR-Z	TORSION	MOM-Y	MOM-Z
	10	17	0.00	13.97	0.00	0.00	0.00	-61.29
		18	0.00	-13.97	0.00	0.00	0.00	75.26
	11	17	0.00	15.68	0.00	0.00	0.00	-68.82
		18	0.00	-15.68	0.00	0.00	0.00	84.50
	12	17	0.00	17.64	0.00	0.00	0.00	-77.42
		18	0.00	-17.64	0.00	0.00	0.00	95.06
	13	17	0.00	17.40	0.00	0.00	0.00	-76.34
		18	0.00	-17.40	0.00	0.00	0.00	93.74
	14	17	0.00	17.15	0.00	0.00	0.00	-75.27
		18	0.00	-17.15	0.00	0.00	0.00	92.42
	15	17	0.00	23.53	0.00	0.00	0.00	-103.22
		18	0.00	-23.53	0.00	0.00	0.00	126.75
	16	17	0.00	28.18	0.00	0.00	0.00	-123.65
		18	0.00	-28.18	0.00	0.00	0.00	151.84
	17	17	0.00	25.73	0.00	0.00	0.00	-112.90
		18	0.00	-25.73	0.00	0.00	0.00	138.63
	18	17	0.00	33.82	0.00	0.00	0.00	-148.38
		18	0.00	-33.82	0.00	0.00	0.00	182.20
	19	17	0.00	44.11	0.00	0.00	0.00	-193.54
		18	0.00	-44.11	0.00	0.00	0.00	237.66
	20	17	0.00	12.99	0.00	0.00	0.00	-56.99
		18	0.00	-12.99	0.00	0.00	0.00	69.98
	21	17	0.00	19.61	0.00	0.00	0.00	-86.02
		18	0.00	-19.61	0.00	0.00	0.00	105.62
	22	17	0.00	9.31	0.00	0.00	0.00	-40.86
		18	0.00	-9.31	0.00	0.00	0.00	50.17
	23	17	0.00	42.15	0.00	0.00	0.00	-184.94
		18	0.00	-42.15	0.00	0.00	0.00	227.09
	24	17	0.00	26.71	0.00	0.00	0.00	-117.20
		18	0.00	-26.71	0.00	0.00	0.00	143.91
	25	17	0.00	39.23	0.00	0.00	0.00	-95.77
		18	0.00	-39.23	0.00	0.00	0.00	135.00
	26	17	0.00	10.46	0.00	0.00	0.00	-25.54
		18	0.00	-10.46	0.00	0.00	0.00	36.00
	27	17	0.00	12.75	0.00	0.00	0.00	-31.13
		18	0.00	-12.75	0.00	0.00	0.00	43.88
	28	17	0.00	17.98	0.00	0.00	0.00	-43.90
		18	0.00	-17.98	0.00	0.00	0.00	61.88
	29	17	0.00	19.94	0.00	0.00	0.00	-48.69
		18	0.00	-19.94	0.00	0.00	0.00	68.62
	30	17	0.00	13.73	0.00	0.00	0.00	-33.52
		18	0.00	-13.73	0.00	0.00	0.00	47.25
	31	17	0.00	16.02	0.00	0.00	0.00	-39.11
		18	0.00	-16.02	0.00	0.00	0.00	55.12
	32	17	0.00	17.65	0.00	0.00	0.00	-43.10
		18	0.00	-17.65	0.00	0.00	0.00	60.75

MEMBER END FORCES STRUCTURE TYPE = PLANE

ALL UNITS ARE -- KIP FEET (LOCAL)

MEMBER	LOAD	JT	AXIAL	SHEAR-Y	SHEAR-Z	TORSION	MOM-Y	MOM-Z
	33	17	0.00	19.94	0.00	0.00	0.00	-48.69
		18	0.00	-19.94	0.00	0.00	0.00	68.62
	34	17	0.00	19.61	0.00	0.00	0.00	-47.89
		18	0.00	-19.61	0.00	0.00	0.00	67.50
	35	17	0.00	19.29	0.00	0.00	0.00	-47.09
		18	0.00	-19.29	0.00	0.00	0.00	66.38
	36	17	0.00	26.80	0.00	0.00	0.00	-65.45
		18	0.00	-26.80	0.00	0.00	0.00	92.25
	37	17	0.00	31.71	0.00	0.00	0.00	-77.42
		18	0.00	-31.71	0.00	0.00	0.00	109.12
	38	17	0.00	29.09	0.00	0.00	0.00	-71.03
		18	0.00	-29.09	0.00	0.00	0.00	100.12
	39	17	0.00	38.25	0.00	0.00	0.00	-93.38
		18	0.00	-38.25	0.00	0.00	0.00	131.62
	40	17	0.00	50.01	0.00	0.00	0.00	-122.11
		18	0.00	-50.01	0.00	0.00	0.00	172.12
	41	17	0.00	14.71	0.00	0.00	0.00	-35.92
		18	0.00	-14.71	0.00	0.00	0.00	50.62
	42	17	0.00	21.90	0.00	0.00	0.00	-53.47
		18	0.00	-21.90	0.00	0.00	0.00	75.38
	43	17	0.00	10.46	0.00	0.00	0.00	-25.54
		18	0.00	-10.46	0.00	0.00	0.00	36.00
	44	17	0.00	47.73	0.00	0.00	0.00	-116.52
		18	0.00	-47.73	0.00	0.00	0.00	164.25
	45	17	0.00	30.07	0.00	0.00	0.00	-73.43
		18	0.00	-30.07	0.00	0.00	0.00	103.50
	46	17	0.00	43.14	0.00	0.00	0.00	-124.42
		18	0.00	-43.14	0.00	0.00	0.00	167.56
	47	17	0.00	11.19	0.00	0.00	0.00	-32.58
		18	0.00	-11.19	0.00	0.00	0.00	43.77
	48	17	0.00	13.97	0.00	0.00	0.00	-40.32
		18	0.00	-13.97	0.00	0.00	0.00	54.29
	49	17	0.00	19.69	0.00	0.00	0.00	-57.14
		18	0.00	-19.69	0.00	0.00	0.00	76.84
	50	17	0.00	21.90	0.00	0.00	0.00	-63.01
		18	0.00	-21.90	0.00	0.00	0.00	84.91
	51	17	0.00	15.20	0.00	0.00	0.00	-43.79
		18	0.00	-15.20	0.00	0.00	0.00	58.98
	52	17	0.00	17.32	0.00	0.00	0.00	-49.93
		18	0.00	-17.32	0.00	0.00	0.00	67.25
	53	17	0.00	19.45	0.00	0.00	0.00	-56.07
		18	0.00	-19.45	0.00	0.00	0.00	75.52
	54	17	0.00	21.90	0.00	0.00	0.00	-63.01
		18	0.00	-21.90	0.00	0.00	0.00	84.91
	55	17	0.00	21.57	0.00	0.00	0.00	-62.21
		18	0.00	-21.57	0.00	0.00	0.00	83.78

MEMBER END FORCES STRUCTURE TYPE = PLANE

ALL UNITS ARE -- KIP FEET (LOCAL)

MEMBER	LOAD	JT	AXIAL	SHEAR-Y	SHEAR-Z	TORSION	MOM-Y	MOM-Z
	56	17	0.00	21.25	0.00	0.00	0.00	-61.41
		18	0.00	-21.25	0.00	0.00	0.00	82.66
	57	17	0.00	29.17	0.00	0.00	0.00	-84.10
		18	0.00	-29.17	0.00	0.00	0.00	113.27
	58	17	0.00	34.89	0.00	0.00	0.00	-100.93
		18	0.00	-34.89	0.00	0.00	0.00	135.82
	59	17	0.00	31.87	0.00	0.00	0.00	-92.12
		18	0.00	-31.87	0.00	0.00	0.00	123.98
	60	17	0.00	41.92	0.00	0.00	0.00	-120.95
		18	0.00	-41.92	0.00	0.00	0.00	162.87
	61	17	0.00	54.67	0.00	0.00	0.00	-157.79
		18	0.00	-54.67	0.00	0.00	0.00	212.46
	62	17	0.00	16.10	0.00	0.00	0.00	-46.46
		18	0.00	-16.10	0.00	0.00	0.00	62.55
	63	17	0.00	24.27	0.00	0.00	0.00	-70.22
		18	0.00	-24.27	0.00	0.00	0.00	94.49
	64	17	0.00	11.52	0.00	0.00	0.00	-33.38
		18	0.00	-11.52	0.00	0.00	0.00	44.90
	65	17	0.00	52.21	0.00	0.00	0.00	-150.86
		18	0.00	-52.21	0.00	0.00	0.00	203.07
	66	17	0.00	33.09	0.00	0.00	0.00	-95.59
		18	0.00	-33.09	0.00	0.00	0.00	128.68
18	1	18	0.00	-0.00	0.00	0.00	0.00	-30.24
		19	0.00	2.83	0.00	0.00	0.00	28.82
	2	18	0.00	31.59	0.00	0.00	0.00	-170.19
		19	0.00	-31.59	0.00	0.00	0.00	201.78
	3	18	0.00	7.28	0.00	0.00	0.00	-53.13
		19	0.00	-7.28	0.00	0.00	0.00	60.40
	4	18	0.00	34.80	0.00	0.00	0.00	-187.48
		19	0.00	-34.80	0.00	0.00	0.00	222.28
	5	18	0.00	9.07	0.00	0.00	0.00	-48.85
		19	0.00	-9.07	0.00	0.00	0.00	57.92
	6	18	0.00	11.27	0.00	0.00	0.00	-60.73
		19	0.00	-11.27	0.00	0.00	0.00	72.01
	7	18	0.00	15.93	0.00	0.00	0.00	-85.82
		19	0.00	-15.93	0.00	0.00	0.00	101.75
	8	18	0.00	17.64	0.00	0.00	0.00	-95.06
		19	0.00	-17.64	0.00	0.00	0.00	112.71
	9	18	0.00	12.25	0.00	0.00	0.00	-66.02
		19	0.00	-12.25	0.00	0.00	0.00	78.27
	10	18	0.00	13.97	0.00	0.00	0.00	-75.26
		19	0.00	-13.97	0.00	0.00	0.00	89.23
	11	18	0.00	15.68	0.00	0.00	0.00	-84.50
		19	0.00	-15.68	0.00	0.00	0.00	100.18

MEMBER END FORCES STRUCTURE TYPE = PLANE

ALL UNITS ARE -- KIP FEET (LOCAL)

MEMBER	LOAD	JT	AXIAL	SHEAR-Y	SHEAR-Z	TORSION	MOM-Y	MOM-Z
	12	18	0.00	17.64	0.00	0.00	0.00	-95.06
		19	0.00	-17.64	0.00	0.00	0.00	112.71
	13	18	0.00	17.40	0.00	0.00	0.00	-93.74
		19	0.00	-17.40	0.00	0.00	0.00	111.14
	14	18	0.00	17.15	0.00	0.00	0.00	-92.42
		19	0.00	-17.15	0.00	0.00	0.00	109.58
	15	18	0.00	23.53	0.00	0.00	0.00	-126.75
		19	0.00	-23.53	0.00	0.00	0.00	150.28
	16	18	0.00	28.18	0.00	0.00	0.00	-151.84
		19	0.00	-28.18	0.00	0.00	0.00	180.02
	17	18	0.00	25.73	0.00	0.00	0.00	-138.63
		19	0.00	-25.73	0.00	0.00	0.00	164.36
	18	18	0.00	33.82	0.00	0.00	0.00	-182.20
		19	0.00	-33.82	0.00	0.00	0.00	216.02
	19	18	0.00	44.11	0.00	0.00	0.00	-237.66
		19	0.00	-44.11	0.00	0.00	0.00	281.77
	20	18	0.00	12.99	0.00	0.00	0.00	-69.98
		19	0.00	-12.99	0.00	0.00	0.00	82.96
	21	18	0.00	19.61	0.00	0.00	0.00	-105.62
		19	0.00	-19.61	0.00	0.00	0.00	125.23
	22	18	0.00	9.31	0.00	0.00	0.00	-50.17
		19	0.00	-9.31	0.00	0.00	0.00	59.48
	23	18	0.00	42.15	0.00	0.00	0.00	-227.09
		19	0.00	-42.15	0.00	0.00	0.00	269.24
	24	18	0.00	26.71	0.00	0.00	0.00	-143.91
		19	0.00	-26.71	0.00	0.00	0.00	170.63
	25	18	0.00	39.23	0.00	0.00	0.00	-135.00
		19	0.00	-39.23	0.00	0.00	0.00	174.23
	26	18	0.00	10.46	0.00	0.00	0.00	-36.00
		19	0.00	-10.46	0.00	0.00	0.00	46.46
	27	18	0.00	12.75	0.00	0.00	0.00	-43.88
		19	0.00	-12.75	0.00	0.00	0.00	56.62
	28	18	0.00	17.98	0.00	0.00	0.00	-61.88
		19	0.00	-17.98	0.00	0.00	0.00	79.85
	29	18	0.00	19.94	0.00	0.00	0.00	-68.62
		19	0.00	-19.94	0.00	0.00	0.00	88.56
	30	18	0.00	13.73	0.00	0.00	0.00	-47.25
		19	0.00	-13.73	0.00	0.00	0.00	60.98
	31	18	0.00	16.02	0.00	0.00	0.00	-55.12
		19	0.00	-16.02	0.00	0.00	0.00	71.14
	32	18	0.00	17.65	0.00	0.00	0.00	-60.75
		19	0.00	-17.65	0.00	0.00	0.00	78.40
	33	18	0.00	19.94	0.00	0.00	0.00	-68.62
		19	0.00	-19.94	0.00	0.00	0.00	88.56
	34	18	0.00	19.61	0.00	0.00	0.00	-67.50
		19	0.00	-19.61	0.00	0.00	0.00	87.11

MEMBER END FORCES STRUCTURE TYPE = PLANE

ALL UNITS ARE -- KIP FEET (LOCAL)

MEMBER	LOAD	JT	AXIAL	SHEAR-Y	SHEAR-Z	TORSION	MOM-Y	MOM-Z
	35	18	0.00	19.29	0.00	0.00	0.00	-66.38
		19	0.00	-19.29	0.00	0.00	0.00	85.66
	36	18	0.00	26.80	0.00	0.00	0.00	-92.25
		19	0.00	-26.80	0.00	0.00	0.00	119.05
	37	18	0.00	31.71	0.00	0.00	0.00	-109.12
		19	0.00	-31.71	0.00	0.00	0.00	140.83
	38	18	0.00	29.09	0.00	0.00	0.00	-100.12
		19	0.00	-29.09	0.00	0.00	0.00	129.22
	39	18	0.00	38.25	0.00	0.00	0.00	-131.62
		19	0.00	-38.25	0.00	0.00	0.00	169.87
	40	18	0.00	50.01	0.00	0.00	0.00	-172.12
		19	0.00	-50.01	0.00	0.00	0.00	222.14
	41	18	0.00	14.71	0.00	0.00	0.00	-50.62
		19	0.00	-14.71	0.00	0.00	0.00	65.33
	42	18	0.00	21.90	0.00	0.00	0.00	-75.38
		19	0.00	-21.90	0.00	0.00	0.00	97.28
	43	18	0.00	10.46	0.00	0.00	0.00	-36.00
		19	0.00	-10.46	0.00	0.00	0.00	46.46
	44	18	0.00	47.73	0.00	0.00	0.00	-164.25
		19	0.00	-47.73	0.00	0.00	0.00	211.98
	45	18	0.00	30.07	0.00	0.00	0.00	-103.50
		19	0.00	-30.07	0.00	0.00	0.00	133.57
	46	18	0.00	43.14	0.00	0.00	0.00	-167.56
		19	0.00	-43.14	0.00	0.00	0.00	210.71
	47	18	0.00	11.19	0.00	0.00	0.00	-43.77
		19	0.00	-11.19	0.00	0.00	0.00	54.97
	48	18	0.00	13.97	0.00	0.00	0.00	-54.29
		19	0.00	-13.97	0.00	0.00	0.00	68.26
	49	18	0.00	19.69	0.00	0.00	0.00	-76.84
		19	0.00	-19.69	0.00	0.00	0.00	96.53
	50	18	0.00	21.90	0.00	0.00	0.00	-84.91
		19	0.00	-21.90	0.00	0.00	0.00	106.81
	51	18	0.00	15.20	0.00	0.00	0.00	-58.98
		19	0.00	-15.20	0.00	0.00	0.00	74.18
	52	18	0.00	17.32	0.00	0.00	0.00	-67.25
		19	0.00	-17.32	0.00	0.00	0.00	84.57
	53	18	0.00	19.45	0.00	0.00	0.00	-75.52
		19	0.00	-19.45	0.00	0.00	0.00	94.96
	54	18	0.00	21.90	0.00	0.00	0.00	-84.91
		19	0.00	-21.90	0.00	0.00	0.00	106.81
	55	18	0.00	21.57	0.00	0.00	0.00	-83.78
		19	0.00	-21.57	0.00	0.00	0.00	105.35
	56	18	0.00	21.25	0.00	0.00	0.00	-82.66
		19	0.00	-21.25	0.00	0.00	0.00	103.90
	57	18	0.00	29.17	0.00	0.00	0.00	-113.27
		19	0.00	-29.17	0.00	0.00	0.00	142.45

MEMBER END FORCES STRUCTURE TYPE = PLANE

ALL UNITS ARE -- KIP FEET (LOCAL)

MEMBER	LOAD	JT	AXIAL	SHEAR-Y	SHEAR-Z	TORSION	MOM-Y	MOM-Z
	58	18	0.00	34.89	0.00	0.00	0.00	-135.82
		19	0.00	-34.89	0.00	0.00	0.00	170.71
	59	18	0.00	31.87	0.00	0.00	0.00	-123.98
		19	0.00	-31.87	0.00	0.00	0.00	155.85
	60	18	0.00	41.92	0.00	0.00	0.00	-162.87
		19	0.00	-41.92	0.00	0.00	0.00	204.79
	61	18	0.00	54.67	0.00	0.00	0.00	-212.46
		19	0.00	-54.67	0.00	0.00	0.00	267.13
	62	18	0.00	16.10	0.00	0.00	0.00	-62.55
		19	0.00	-16.10	0.00	0.00	0.00	78.65
	63	18	0.00	24.27	0.00	0.00	0.00	-94.49
		19	0.00	-24.27	0.00	0.00	0.00	118.76
	64	18	0.00	11.52	0.00	0.00	0.00	-44.90
		19	0.00	-11.52	0.00	0.00	0.00	56.42
	65	18	0.00	52.21	0.00	0.00	0.00	-203.07
		19	0.00	-52.21	0.00	0.00	0.00	255.29
	66	18	0.00	33.09	0.00	0.00	0.00	-128.68
		19	0.00	-33.09	0.00	0.00	0.00	161.77
19	1	19	0.00	-2.83	0.00	0.00	0.00	-28.82
		20	0.00	5.67	0.00	0.00	0.00	24.57
	2	19	0.00	31.59	0.00	0.00	0.00	-201.78
		20	0.00	-31.59	0.00	0.00	0.00	233.37
	3	19	0.00	7.28	0.00	0.00	0.00	-60.40
		20	0.00	-7.28	0.00	0.00	0.00	67.68
	4	19	0.00	34.80	0.00	0.00	0.00	-222.28
		20	0.00	-34.80	0.00	0.00	0.00	257.08
	5	19	0.00	9.07	0.00	0.00	0.00	-57.92
		20	0.00	-9.07	0.00	0.00	0.00	66.99
	6	19	0.00	11.27	0.00	0.00	0.00	-72.01
		20	0.00	-11.27	0.00	0.00	0.00	83.28
	7	19	0.00	15.93	0.00	0.00	0.00	-101.75
		20	0.00	-15.93	0.00	0.00	0.00	117.68
	8	19	0.00	17.64	0.00	0.00	0.00	-112.71
		20	0.00	-17.64	0.00	0.00	0.00	130.35
	9	19	0.00	12.25	0.00	0.00	0.00	-78.27
		20	0.00	-12.25	0.00	0.00	0.00	90.52
	10	19	0.00	13.97	0.00	0.00	0.00	-89.23
		20	0.00	-13.97	0.00	0.00	0.00	103.20
	11	19	0.00	15.68	0.00	0.00	0.00	-100.18
		20	0.00	-15.68	0.00	0.00	0.00	115.87
	12	19	0.00	17.64	0.00	0.00	0.00	-112.71
		20	0.00	-17.64	0.00	0.00	0.00	130.35
	13	19	0.00	17.40	0.00	0.00	0.00	-111.14
		20	0.00	-17.40	0.00	0.00	0.00	128.54

MEMBER END FORCES STRUCTURE TYPE = PLANE

ALL UNITS ARE -- KIP FEET (LOCAL)

MEMBER	LOAD	JT	AXIAL	SHEAR-Y	SHEAR-Z	TORSION	MOM-Y	MOM-Z
	14	19	0.00	17.15	0.00	0.00	0.00	-109.58
		20	0.00	-17.15	0.00	0.00	0.00	126.73
	15	19	0.00	23.53	0.00	0.00	0.00	-150.28
		20	0.00	-23.53	0.00	0.00	0.00	173.80
	16	19	0.00	28.18	0.00	0.00	0.00	-180.02
		20	0.00	-28.18	0.00	0.00	0.00	208.20
	17	19	0.00	25.73	0.00	0.00	0.00	-164.36
		20	0.00	-25.73	0.00	0.00	0.00	190.10
	18	19	0.00	33.82	0.00	0.00	0.00	-216.02
		20	0.00	-33.82	0.00	0.00	0.00	249.84
	19	19	0.00	44.11	0.00	0.00	0.00	-281.77
		20	0.00	-44.11	0.00	0.00	0.00	325.88
	20	19	0.00	12.99	0.00	0.00	0.00	-82.96
		20	0.00	-12.99	0.00	0.00	0.00	95.95
	21	19	0.00	19.61	0.00	0.00	0.00	-125.23
		20	0.00	-19.61	0.00	0.00	0.00	144.84
	22	19	0.00	9.31	0.00	0.00	0.00	-59.48
		20	0.00	-9.31	0.00	0.00	0.00	68.80
	23	19	0.00	42.15	0.00	0.00	0.00	-269.24
		20	0.00	-42.15	0.00	0.00	0.00	311.40
	24	19	0.00	26.71	0.00	0.00	0.00	-170.63
		20	0.00	-26.71	0.00	0.00	0.00	197.34
	25	19	0.00	39.23	0.00	0.00	0.00	-174.23
		20	0.00	-39.23	0.00	0.00	0.00	213.45
	26	19	0.00	10.46	0.00	0.00	0.00	-46.46
		20	0.00	-10.46	0.00	0.00	0.00	56.92
	27	19	0.00	12.75	0.00	0.00	0.00	-56.62
		20	0.00	-12.75	0.00	0.00	0.00	69.37
	28	19	0.00	17.98	0.00	0.00	0.00	-79.85
		20	0.00	-17.98	0.00	0.00	0.00	97.83
	29	19	0.00	19.94	0.00	0.00	0.00	-88.56
		20	0.00	-19.94	0.00	0.00	0.00	108.50
	30	19	0.00	13.73	0.00	0.00	0.00	-60.98
		20	0.00	-13.73	0.00	0.00	0.00	74.71
	31	19	0.00	16.02	0.00	0.00	0.00	-71.14
		20	0.00	-16.02	0.00	0.00	0.00	87.16
	32	19	0.00	17.65	0.00	0.00	0.00	-78.40
		20	0.00	-17.65	0.00	0.00	0.00	96.05
	33	19	0.00	19.94	0.00	0.00	0.00	-88.56
		20	0.00	-19.94	0.00	0.00	0.00	108.50
	34	19	0.00	19.61	0.00	0.00	0.00	-87.11
		20	0.00	-19.61	0.00	0.00	0.00	106.73
	35	19	0.00	19.29	0.00	0.00	0.00	-85.66
		20	0.00	-19.29	0.00	0.00	0.00	104.95
	36	19	0.00	26.80	0.00	0.00	0.00	-119.05
		20	0.00	-26.80	0.00	0.00	0.00	145.86

MEMBER END FORCES STRUCTURE TYPE = PLANE

ALL UNITS ARE -- KIP FEET (LOCAL)

MEMBER	LOAD	JT	AXIAL	SHEAR-Y	SHEAR-Z	TORSION	MOM-Y	MOM-Z
	37	19	0.00	31.71	0.00	0.00	0.00	-140.83
		20	0.00	-31.71	0.00	0.00	0.00	172.54
	38	19	0.00	29.09	0.00	0.00	0.00	-129.22
		20	0.00	-29.09	0.00	0.00	0.00	158.31
	39	19	0.00	38.25	0.00	0.00	0.00	-169.87
		20	0.00	-38.25	0.00	0.00	0.00	208.12
	40	19	0.00	50.01	0.00	0.00	0.00	-222.14
		20	0.00	-50.01	0.00	0.00	0.00	272.15
	41	19	0.00	14.71	0.00	0.00	0.00	-65.33
		20	0.00	-14.71	0.00	0.00	0.00	80.04
	42	19	0.00	21.90	0.00	0.00	0.00	-97.28
		20	0.00	-21.90	0.00	0.00	0.00	119.18
	43	19	0.00	10.46	0.00	0.00	0.00	-46.46
		20	0.00	-10.46	0.00	0.00	0.00	56.92
	44	19	0.00	47.73	0.00	0.00	0.00	-211.98
		20	0.00	-47.73	0.00	0.00	0.00	259.70
	45	19	0.00	30.07	0.00	0.00	0.00	-133.57
		20	0.00	-30.07	0.00	0.00	0.00	163.65
	46	19	0.00	43.14	0.00	0.00	0.00	-210.71
		20	0.00	-43.14	0.00	0.00	0.00	253.85
	47	19	0.00	11.19	0.00	0.00	0.00	-54.97
		20	0.00	-11.19	0.00	0.00	0.00	66.16
	48	19	0.00	13.97	0.00	0.00	0.00	-68.26
		20	0.00	-13.97	0.00	0.00	0.00	82.24
	49	19	0.00	19.69	0.00	0.00	0.00	-96.53
		20	0.00	-19.69	0.00	0.00	0.00	116.22
	50	19	0.00	21.90	0.00	0.00	0.00	-106.81
		20	0.00	-21.90	0.00	0.00	0.00	128.70
	51	19	0.00	15.20	0.00	0.00	0.00	-74.18
		20	0.00	-15.20	0.00	0.00	0.00	89.38
	52	19	0.00	17.32	0.00	0.00	0.00	-84.57
		20	0.00	-17.32	0.00	0.00	0.00	101.90
	53	19	0.00	19.45	0.00	0.00	0.00	-94.96
		20	0.00	-19.45	0.00	0.00	0.00	114.41
	54	19	0.00	21.90	0.00	0.00	0.00	-106.81
		20	0.00	-21.90	0.00	0.00	0.00	128.70
	55	19	0.00	21.57	0.00	0.00	0.00	-105.35
		20	0.00	-21.57	0.00	0.00	0.00	126.93
	56	19	0.00	21.25	0.00	0.00	0.00	-103.90
		20	0.00	-21.25	0.00	0.00	0.00	125.15
	57	19	0.00	29.17	0.00	0.00	0.00	-142.45
		20	0.00	-29.17	0.00	0.00	0.00	171.62
	58	19	0.00	34.89	0.00	0.00	0.00	-170.71
		20	0.00	-34.89	0.00	0.00	0.00	205.60
	59	19	0.00	31.87	0.00	0.00	0.00	-155.85
		20	0.00	-31.87	0.00	0.00	0.00	187.72

MEMBER END FORCES STRUCTURE TYPE = PLANE

ALL UNITS ARE -- KIP FEET (LOCAL)

MEMBER	LOAD	JT	AXIAL	SHEAR-Y	SHEAR-Z	TORSION	MOM-Y	MOM-Z
	60	19	0.00	41.92	0.00	0.00	0.00	-204.79
		20	0.00	-41.92	0.00	0.00	0.00	246.71
	61	19	0.00	54.67	0.00	0.00	0.00	-267.13
		20	0.00	-54.67	0.00	0.00	0.00	321.79
	62	19	0.00	16.10	0.00	0.00	0.00	-78.65
		20	0.00	-16.10	0.00	0.00	0.00	94.75
	63	19	0.00	24.27	0.00	0.00	0.00	-118.76
		20	0.00	-24.27	0.00	0.00	0.00	143.03
	64	19	0.00	11.52	0.00	0.00	0.00	-56.42
		20	0.00	-11.52	0.00	0.00	0.00	67.94
	65	19	0.00	52.21	0.00	0.00	0.00	-255.29
		20	0.00	-52.21	0.00	0.00	0.00	307.50
	66	19	0.00	33.09	0.00	0.00	0.00	-161.77
		20	0.00	-33.09	0.00	0.00	0.00	194.87
20	1	20	0.00	-5.67	0.00	0.00	0.00	-24.57
		21	0.00	8.50	0.00	0.00	0.00	17.48
	2	20	0.00	-97.31	0.00	0.00	0.00	-233.37
		21	0.00	97.31	0.00	0.00	0.00	136.05
	3	20	0.00	-29.72	0.00	0.00	0.00	-67.68
		21	0.00	29.72	0.00	0.00	0.00	37.96
	4	20	0.00	-107.20	0.00	0.00	0.00	-257.08
		21	0.00	107.20	0.00	0.00	0.00	149.88
	5	20	0.00	-27.93	0.00	0.00	0.00	-66.99
		21	0.00	27.93	0.00	0.00	0.00	39.05
	6	20	0.00	-34.73	0.00	0.00	0.00	-83.28
		21	0.00	34.73	0.00	0.00	0.00	48.55
	7	20	0.00	-49.07	0.00	0.00	0.00	-117.68
		21	0.00	49.07	0.00	0.00	0.00	68.61
	8	20	0.00	-54.36	0.00	0.00	0.00	-130.35
		21	0.00	54.36	0.00	0.00	0.00	76.00
	9	20	0.00	-37.75	0.00	0.00	0.00	-90.52
		21	0.00	37.75	0.00	0.00	0.00	52.78
	10	20	0.00	-43.03	0.00	0.00	0.00	-103.20
		21	0.00	43.03	0.00	0.00	0.00	60.16
	11	20	0.00	-48.32	0.00	0.00	0.00	-115.87
		21	0.00	48.32	0.00	0.00	0.00	67.55
	12	20	0.00	-54.36	0.00	0.00	0.00	-130.35
		21	0.00	54.36	0.00	0.00	0.00	76.00
	13	20	0.00	-53.60	0.00	0.00	0.00	-128.54
		21	0.00	53.60	0.00	0.00	0.00	74.94
	14	20	0.00	-52.85	0.00	0.00	0.00	-126.73
		21	0.00	52.85	0.00	0.00	0.00	73.89
	15	20	0.00	-72.47	0.00	0.00	0.00	-173.80
		21	0.00	72.47	0.00	0.00	0.00	101.33

MEMBER END FORCES STRUCTURE TYPE = PLANE

ALL UNITS ARE -- KIP FEET (LOCAL)

MEMBER	LOAD	JT	AXIAL	SHEAR-Y	SHEAR-Z	TORSION	MOM-Y	MOM-Z
	16	20	0.00	-86.82	0.00	0.00	0.00	-208.20
		21	0.00	86.82	0.00	0.00	0.00	121.38
	17	20	0.00	-79.27	0.00	0.00	0.00	-190.10
		21	0.00	79.27	0.00	0.00	0.00	110.83
	18	20	0.00	-104.18	0.00	0.00	0.00	-249.84
		21	0.00	104.18	0.00	0.00	0.00	145.66
	19	20	0.00	-135.89	0.00	0.00	0.00	-325.88
		21	0.00	135.89	0.00	0.00	0.00	189.99
	20	20	0.00	-40.01	0.00	0.00	0.00	-95.95
		21	0.00	40.01	0.00	0.00	0.00	55.94
	21	20	0.00	-60.39	0.00	0.00	0.00	-144.84
		21	0.00	60.39	0.00	0.00	0.00	84.44
	22	20	0.00	-28.69	0.00	0.00	0.00	-68.80
		21	0.00	28.69	0.00	0.00	0.00	40.11
	23	20	0.00	-129.85	0.00	0.00	0.00	-311.40
		21	0.00	129.85	0.00	0.00	0.00	181.55
	24	20	0.00	-82.29	0.00	0.00	0.00	-197.34
		21	0.00	82.29	0.00	0.00	0.00	115.05
	25	20	0.00	-80.77	0.00	0.00	0.00	-213.45
		21	0.00	80.77	0.00	0.00	0.00	132.68
	26	20	0.00	-21.54	0.00	0.00	0.00	-56.92
		21	0.00	21.54	0.00	0.00	0.00	35.38
	27	20	0.00	-26.25	0.00	0.00	0.00	-69.37
		21	0.00	26.25	0.00	0.00	0.00	43.12
	28	20	0.00	-37.02	0.00	0.00	0.00	-97.83
		21	0.00	37.02	0.00	0.00	0.00	60.81
	29	20	0.00	-41.06	0.00	0.00	0.00	-108.50
		21	0.00	41.06	0.00	0.00	0.00	67.44
	30	20	0.00	-28.27	0.00	0.00	0.00	-74.71
		21	0.00	28.27	0.00	0.00	0.00	46.44
	31	20	0.00	-32.98	0.00	0.00	0.00	-87.16
		21	0.00	32.98	0.00	0.00	0.00	54.18
	32	20	0.00	-36.35	0.00	0.00	0.00	-96.05
		21	0.00	36.35	0.00	0.00	0.00	59.71
	33	20	0.00	-41.06	0.00	0.00	0.00	-108.50
		21	0.00	41.06	0.00	0.00	0.00	67.44
	34	20	0.00	-40.39	0.00	0.00	0.00	-106.73
		21	0.00	40.39	0.00	0.00	0.00	66.34
	35	20	0.00	-39.71	0.00	0.00	0.00	-104.95
		21	0.00	39.71	0.00	0.00	0.00	65.23
	36	20	0.00	-55.20	0.00	0.00	0.00	-145.86
		21	0.00	55.20	0.00	0.00	0.00	90.66
	37	20	0.00	-65.29	0.00	0.00	0.00	-172.54
		21	0.00	65.29	0.00	0.00	0.00	107.25
	38	20	0.00	-59.91	0.00	0.00	0.00	-158.31
		21	0.00	59.91	0.00	0.00	0.00	98.40

MEMBER END FORCES STRUCTURE TYPE = PLANE

ALL UNITS ARE -- KIP FEET (LOCAL)

MEMBER	LOAD	JT	AXIAL	SHEAR-Y	SHEAR-Z	TORSION	MOM-Y	MOM-Z
	39	20	0.00	-78.75	0.00	0.00	0.00	-208.12
		21	0.00	78.75	0.00	0.00	0.00	129.36
	40	20	0.00	-102.99	0.00	0.00	0.00	-272.15
		21	0.00	102.99	0.00	0.00	0.00	169.16
	41	20	0.00	-30.29	0.00	0.00	0.00	-80.04
		21	0.00	30.29	0.00	0.00	0.00	49.75
	42	20	0.00	-45.10	0.00	0.00	0.00	-119.18
		21	0.00	45.10	0.00	0.00	0.00	74.08
	43	20	0.00	-21.54	0.00	0.00	0.00	-56.92
		21	0.00	21.54	0.00	0.00	0.00	35.38
	44	20	0.00	-98.27	0.00	0.00	0.00	-259.70
		21	0.00	98.27	0.00	0.00	0.00	161.43
	45	20	0.00	-61.93	0.00	0.00	0.00	-163.65
		21	0.00	61.93	0.00	0.00	0.00	101.72
	46	20	0.00	-98.86	0.00	0.00	0.00	-253.85
		21	0.00	98.86	0.00	0.00	0.00	155.00
	47	20	0.00	-25.81	0.00	0.00	0.00	-66.16
		21	0.00	25.81	0.00	0.00	0.00	40.36
	48	20	0.00	-32.03	0.00	0.00	0.00	-82.24
		21	0.00	32.03	0.00	0.00	0.00	50.21
	49	20	0.00	-45.31	0.00	0.00	0.00	-116.22
		21	0.00	45.31	0.00	0.00	0.00	70.91
	50	20	0.00	-50.10	0.00	0.00	0.00	-128.70
		21	0.00	50.10	0.00	0.00	0.00	78.60
	51	20	0.00	-34.80	0.00	0.00	0.00	-89.38
		21	0.00	34.80	0.00	0.00	0.00	54.58
	52	20	0.00	-39.68	0.00	0.00	0.00	-101.90
		21	0.00	39.68	0.00	0.00	0.00	62.22
	53	20	0.00	-44.55	0.00	0.00	0.00	-114.41
		21	0.00	44.55	0.00	0.00	0.00	69.86
	54	20	0.00	-50.10	0.00	0.00	0.00	-128.70
		21	0.00	50.10	0.00	0.00	0.00	78.60
	55	20	0.00	-49.43	0.00	0.00	0.00	-126.93
		21	0.00	49.43	0.00	0.00	0.00	77.50
	56	20	0.00	-48.75	0.00	0.00	0.00	-125.15
		21	0.00	48.75	0.00	0.00	0.00	76.39
	57	20	0.00	-66.83	0.00	0.00	0.00	-171.62
		21	0.00	66.83	0.00	0.00	0.00	104.79
	58	20	0.00	-80.11	0.00	0.00	0.00	-205.60
		21	0.00	80.11	0.00	0.00	0.00	125.50
	59	20	0.00	-73.13	0.00	0.00	0.00	-187.72
		21	0.00	73.13	0.00	0.00	0.00	114.59
	60	20	0.00	-96.08	0.00	0.00	0.00	-246.71
		21	0.00	96.08	0.00	0.00	0.00	150.62
	61	20	0.00	-125.33	0.00	0.00	0.00	-321.79
		21	0.00	125.33	0.00	0.00	0.00	196.46

MEMBER END FORCES STRUCTURE TYPE = PLANE

ALL UNITS ARE -- KIP FEET (LOCAL)

MEMBER	LOAD	JT	AXIAL	SHEAR-Y	SHEAR-Z	TORSION	MOM-Y	MOM-Z
	62	20	0.00	-36.90	0.00	0.00	0.00	-94.75
		21	0.00	36.90	0.00	0.00	0.00	57.85
	63	20	0.00	-55.73	0.00	0.00	0.00	-143.03
		21	0.00	55.73	0.00	0.00	0.00	87.30
	64	20	0.00	-26.48	0.00	0.00	0.00	-67.94
		21	0.00	26.48	0.00	0.00	0.00	41.46
	65	20	0.00	-119.79	0.00	0.00	0.00	-307.50
		21	0.00	119.79	0.00	0.00	0.00	187.71
	66	20	0.00	-75.91	0.00	0.00	0.00	-194.87
		21	0.00	75.91	0.00	0.00	0.00	118.96
21	1	21	0.00	-8.50	0.00	0.00	0.00	-17.48
		22	0.00	11.34	0.00	0.00	0.00	7.56
	2	21	0.00	-97.31	0.00	0.00	0.00	-136.05
		22	0.00	97.31	0.00	0.00	0.00	38.74
	3	21	0.00	-29.72	0.00	0.00	0.00	-37.96
		22	0.00	29.72	0.00	0.00	0.00	8.23
	4	21	0.00	-107.20	0.00	0.00	0.00	-149.88
		22	0.00	107.20	0.00	0.00	0.00	42.68
	5	21	0.00	-27.93	0.00	0.00	0.00	-39.05
		22	0.00	27.93	0.00	0.00	0.00	11.12
	6	21	0.00	-34.73	0.00	0.00	0.00	-48.55
		22	0.00	34.73	0.00	0.00	0.00	13.83
	7	21	0.00	-49.07	0.00	0.00	0.00	-68.61
		22	0.00	49.07	0.00	0.00	0.00	19.54
	8	21	0.00	-54.36	0.00	0.00	0.00	-76.00
		22	0.00	54.36	0.00	0.00	0.00	21.64
	9	21	0.00	-37.75	0.00	0.00	0.00	-52.78
		22	0.00	37.75	0.00	0.00	0.00	15.03
	10	21	0.00	-43.03	0.00	0.00	0.00	-60.16
		22	0.00	43.03	0.00	0.00	0.00	17.13
	11	21	0.00	-48.32	0.00	0.00	0.00	-67.55
		22	0.00	48.32	0.00	0.00	0.00	19.24
	12	21	0.00	-54.36	0.00	0.00	0.00	-76.00
		22	0.00	54.36	0.00	0.00	0.00	21.64
	13	21	0.00	-53.60	0.00	0.00	0.00	-74.94
		22	0.00	53.60	0.00	0.00	0.00	21.34
	14	21	0.00	-52.85	0.00	0.00	0.00	-73.89
		22	0.00	52.85	0.00	0.00	0.00	21.04
	15	21	0.00	-72.47	0.00	0.00	0.00	-101.33
		22	0.00	72.47	0.00	0.00	0.00	28.85
	16	21	0.00	-86.82	0.00	0.00	0.00	-121.38
		22	0.00	86.82	0.00	0.00	0.00	34.57
	17	21	0.00	-79.27	0.00	0.00	0.00	-110.83
		22	0.00	79.27	0.00	0.00	0.00	31.56

MEMBER END FORCES STRUCTURE TYPE = PLANE

ALL UNITS ARE -- KIP FEET (LOCAL)

MEMBER	LOAD	JT	AXIAL	SHEAR-Y	SHEAR-Z	TORSION	MOM-Y	MOM-Z
	18	21	0.00	-104.18	0.00	0.00	0.00	-145.66
		22	0.00	104.18	0.00	0.00	0.00	41.48
	19	21	0.00	-135.89	0.00	0.00	0.00	-189.99
		22	0.00	135.89	0.00	0.00	0.00	54.10
	20	21	0.00	-40.01	0.00	0.00	0.00	-55.94
		22	0.00	40.01	0.00	0.00	0.00	15.93
	21	21	0.00	-60.39	0.00	0.00	0.00	-84.44
		22	0.00	60.39	0.00	0.00	0.00	24.05
	22	21	0.00	-28.69	0.00	0.00	0.00	-40.11
		22	0.00	28.69	0.00	0.00	0.00	11.42
	23	21	0.00	-129.85	0.00	0.00	0.00	-181.55
		22	0.00	129.85	0.00	0.00	0.00	51.70
	24	21	0.00	-82.29	0.00	0.00	0.00	-115.05
		22	0.00	82.29	0.00	0.00	0.00	32.76
	25	21	0.00	-80.77	0.00	0.00	0.00	-132.68
		22	0.00	80.77	0.00	0.00	0.00	51.90
	26	21	0.00	-21.54	0.00	0.00	0.00	-35.38
		22	0.00	21.54	0.00	0.00	0.00	13.84
	27	21	0.00	-26.25	0.00	0.00	0.00	-43.12
		22	0.00	26.25	0.00	0.00	0.00	16.87
	28	21	0.00	-37.02	0.00	0.00	0.00	-60.81
		22	0.00	37.02	0.00	0.00	0.00	23.79
	29	21	0.00	-41.06	0.00	0.00	0.00	-67.44
		22	0.00	41.06	0.00	0.00	0.00	26.38
	30	21	0.00	-28.27	0.00	0.00	0.00	-46.44
		22	0.00	28.27	0.00	0.00	0.00	18.17
	31	21	0.00	-32.98	0.00	0.00	0.00	-54.18
		22	0.00	32.98	0.00	0.00	0.00	21.19
	32	21	0.00	-36.35	0.00	0.00	0.00	-59.71
		22	0.00	36.35	0.00	0.00	0.00	23.36
	33	21	0.00	-41.06	0.00	0.00	0.00	-67.44
		22	0.00	41.06	0.00	0.00	0.00	26.38
	34	21	0.00	-40.39	0.00	0.00	0.00	-66.34
		22	0.00	40.39	0.00	0.00	0.00	25.95
	35	21	0.00	-39.71	0.00	0.00	0.00	-65.23
		22	0.00	39.71	0.00	0.00	0.00	25.52
	36	21	0.00	-55.20	0.00	0.00	0.00	-90.66
		22	0.00	55.20	0.00	0.00	0.00	35.47
	37	21	0.00	-65.29	0.00	0.00	0.00	-107.25
		22	0.00	65.29	0.00	0.00	0.00	41.96
	38	21	0.00	-59.91	0.00	0.00	0.00	-98.40
		22	0.00	59.91	0.00	0.00	0.00	38.50
	39	21	0.00	-78.75	0.00	0.00	0.00	-129.36
		22	0.00	78.75	0.00	0.00	0.00	50.61
	40	21	0.00	-102.99	0.00	0.00	0.00	-169.16
		22	0.00	102.99	0.00	0.00	0.00	66.18

MEMBER END FORCES STRUCTURE TYPE = PLANE

ALL UNITS ARE -- KIP FEET (LOCAL)

MEMBER	LOAD	JT	AXIAL	SHEAR-Y	SHEAR-Z	TORSION	MOM-Y	MOM-Z
	41	21	0.00	-30.29	0.00	0.00	0.00	-49.75
		22	0.00	30.29	0.00	0.00	0.00	19.46
	42	21	0.00	-45.10	0.00	0.00	0.00	-74.08
		22	0.00	45.10	0.00	0.00	0.00	28.98
	43	21	0.00	-21.54	0.00	0.00	0.00	-35.38
		22	0.00	21.54	0.00	0.00	0.00	13.84
	44	21	0.00	-98.27	0.00	0.00	0.00	-161.43
		22	0.00	98.27	0.00	0.00	0.00	63.15
	45	21	0.00	-61.93	0.00	0.00	0.00	-101.72
		22	0.00	61.93	0.00	0.00	0.00	39.79
	46	21	0.00	-98.86	0.00	0.00	0.00	-155.00
		22	0.00	98.86	0.00	0.00	0.00	56.14
	47	21	0.00	-25.81	0.00	0.00	0.00	-40.36
		22	0.00	25.81	0.00	0.00	0.00	14.55
	48	21	0.00	-32.03	0.00	0.00	0.00	-50.21
		22	0.00	32.03	0.00	0.00	0.00	18.18
	49	21	0.00	-45.31	0.00	0.00	0.00	-70.91
		22	0.00	45.31	0.00	0.00	0.00	25.61
	50	21	0.00	-50.10	0.00	0.00	0.00	-78.60
		22	0.00	50.10	0.00	0.00	0.00	28.50
	51	21	0.00	-34.80	0.00	0.00	0.00	-54.58
		22	0.00	34.80	0.00	0.00	0.00	19.78
	52	21	0.00	-39.68	0.00	0.00	0.00	-62.22
		22	0.00	39.68	0.00	0.00	0.00	22.54
	53	21	0.00	-44.55	0.00	0.00	0.00	-69.86
		22	0.00	44.55	0.00	0.00	0.00	25.31
	54	21	0.00	-50.10	0.00	0.00	0.00	-78.60
		22	0.00	50.10	0.00	0.00	0.00	28.50
	55	21	0.00	-49.43	0.00	0.00	0.00	-77.50
		22	0.00	49.43	0.00	0.00	0.00	28.07
	56	21	0.00	-48.75	0.00	0.00	0.00	-76.39
		22	0.00	48.75	0.00	0.00	0.00	27.64
	57	21	0.00	-66.83	0.00	0.00	0.00	-104.79
		22	0.00	66.83	0.00	0.00	0.00	37.96
	58	21	0.00	-80.11	0.00	0.00	0.00	-125.50
		22	0.00	80.11	0.00	0.00	0.00	45.39
	59	21	0.00	-73.13	0.00	0.00	0.00	-114.59
		22	0.00	73.13	0.00	0.00	0.00	41.46
	60	21	0.00	-96.08	0.00	0.00	0.00	-150.62
		22	0.00	96.08	0.00	0.00	0.00	54.54
	61	21	0.00	-125.33	0.00	0.00	0.00	-196.46
		22	0.00	125.33	0.00	0.00	0.00	71.13
	62	21	0.00	-36.90	0.00	0.00	0.00	-57.85
		22	0.00	36.90	0.00	0.00	0.00	20.94
	63	21	0.00	-55.73	0.00	0.00	0.00	-87.30
		22	0.00	55.73	0.00	0.00	0.00	31.57

MEMBER END FORCES STRUCTURE TYPE = PLANE

ALL UNITS ARE -- KIP FEET (LOCAL)

MEMBER	LOAD	JT	AXIAL	SHEAR-Y	SHEAR-Z	TORSION	MOM-Y	MOM-Z
	64	21	0.00	-26.48	0.00	0.00	0.00	-41.46
		22	0.00	26.48	0.00	0.00	0.00	14.98
	65	21	0.00	-119.79	0.00	0.00	0.00	-187.71
		22	0.00	119.79	0.00	0.00	0.00	67.93
	66	21	0.00	-75.91	0.00	0.00	0.00	-118.96
		22	0.00	75.91	0.00	0.00	0.00	43.06
22	1	22	0.00	-11.34	0.00	0.00	0.00	-7.56
		23	0.00	14.17	0.00	0.00	0.00	-5.20
	2	22	0.00	-97.31	0.00	0.00	0.00	-38.74
		23	0.00	97.31	0.00	0.00	0.00	-58.57
	3	22	0.00	-29.72	0.00	0.00	0.00	-8.23
		23	0.00	29.72	0.00	0.00	0.00	-21.49
	4	22	0.00	-107.20	0.00	0.00	0.00	-42.68
		23	0.00	107.20	0.00	0.00	0.00	-64.52
	5	22	0.00	-27.93	0.00	0.00	0.00	-11.12
		23	0.00	27.93	0.00	0.00	0.00	-16.81
	6	22	0.00	-34.73	0.00	0.00	0.00	-13.83
		23	0.00	34.73	0.00	0.00	0.00	-20.90
	7	22	0.00	-49.07	0.00	0.00	0.00	-19.54
		23	0.00	49.07	0.00	0.00	0.00	-29.53
	8	22	0.00	-54.36	0.00	0.00	0.00	-21.64
		23	0.00	54.36	0.00	0.00	0.00	-32.71
	9	22	0.00	-37.75	0.00	0.00	0.00	-15.03
		23	0.00	37.75	0.00	0.00	0.00	-22.72
	10	22	0.00	-43.03	0.00	0.00	0.00	-17.13
		23	0.00	43.03	0.00	0.00	0.00	-25.90
	11	22	0.00	-48.32	0.00	0.00	0.00	-19.24
		23	0.00	48.32	0.00	0.00	0.00	-29.08
	12	22	0.00	-54.36	0.00	0.00	0.00	-21.64
		23	0.00	54.36	0.00	0.00	0.00	-32.71
	13	22	0.00	-53.60	0.00	0.00	0.00	-21.34
		23	0.00	53.60	0.00	0.00	0.00	-32.26
	14	22	0.00	-52.85	0.00	0.00	0.00	-21.04
		23	0.00	52.85	0.00	0.00	0.00	-31.81
	15	22	0.00	-72.47	0.00	0.00	0.00	-28.85
		23	0.00	72.47	0.00	0.00	0.00	-43.62
	16	22	0.00	-86.82	0.00	0.00	0.00	-34.57
		23	0.00	86.82	0.00	0.00	0.00	-52.25
	17	22	0.00	-79.27	0.00	0.00	0.00	-31.56
		23	0.00	79.27	0.00	0.00	0.00	-47.71
	18	22	0.00	-104.18	0.00	0.00	0.00	-41.48
		23	0.00	104.18	0.00	0.00	0.00	-62.70
	19	22	0.00	-135.89	0.00	0.00	0.00	-54.10
		23	0.00	135.89	0.00	0.00	0.00	-81.79

MEMBER END FORCES STRUCTURE TYPE = PLANE

ALL UNITS ARE -- KIP FEET (LOCAL)

MEMBER	LOAD	JT	AXIAL	SHEAR-Y	SHEAR-Z	TORSION	MOM-Y	MOM-Z
	20	22	0.00	-40.01	0.00	0.00	0.00	-15.93
		23	0.00	40.01	0.00	0.00	0.00	-24.08
	21	22	0.00	-60.39	0.00	0.00	0.00	-24.05
		23	0.00	60.39	0.00	0.00	0.00	-36.35
	22	22	0.00	-28.69	0.00	0.00	0.00	-11.42
		23	0.00	28.69	0.00	0.00	0.00	-17.27
	23	22	0.00	-129.85	0.00	0.00	0.00	-51.70
		23	0.00	129.85	0.00	0.00	0.00	-78.15
	24	22	0.00	-82.29	0.00	0.00	0.00	-32.76
		23	0.00	82.29	0.00	0.00	0.00	-49.53
	25	22	0.00	-80.77	0.00	0.00	0.00	-51.90
		23	0.00	80.77	0.00	0.00	0.00	-28.87
	26	22	0.00	-21.54	0.00	0.00	0.00	-13.84
		23	0.00	21.54	0.00	0.00	0.00	-7.70
	27	22	0.00	-26.25	0.00	0.00	0.00	-16.87
		23	0.00	26.25	0.00	0.00	0.00	-9.38
	28	22	0.00	-37.02	0.00	0.00	0.00	-23.79
		23	0.00	37.02	0.00	0.00	0.00	-13.23
	29	22	0.00	-41.06	0.00	0.00	0.00	-26.38
		23	0.00	41.06	0.00	0.00	0.00	-14.68
	30	22	0.00	-28.27	0.00	0.00	0.00	-18.17
		23	0.00	28.27	0.00	0.00	0.00	-10.10
	31	22	0.00	-32.98	0.00	0.00	0.00	-21.19
		23	0.00	32.98	0.00	0.00	0.00	-11.79
	32	22	0.00	-36.35	0.00	0.00	0.00	-23.36
		23	0.00	36.35	0.00	0.00	0.00	-12.99
	33	22	0.00	-41.06	0.00	0.00	0.00	-26.38
		23	0.00	41.06	0.00	0.00	0.00	-14.68
	34	22	0.00	-40.39	0.00	0.00	0.00	-25.95
		23	0.00	40.39	0.00	0.00	0.00	-14.43
	35	22	0.00	-39.71	0.00	0.00	0.00	-25.52
		23	0.00	39.71	0.00	0.00	0.00	-14.19
	36	22	0.00	-55.20	0.00	0.00	0.00	-35.47
		23	0.00	55.20	0.00	0.00	0.00	-19.73
	37	22	0.00	-65.29	0.00	0.00	0.00	-41.96
		23	0.00	65.29	0.00	0.00	0.00	-23.34
	38	22	0.00	-59.91	0.00	0.00	0.00	-38.50
		23	0.00	59.91	0.00	0.00	0.00	-21.41
	39	22	0.00	-78.75	0.00	0.00	0.00	-50.61
		23	0.00	78.75	0.00	0.00	0.00	-28.15
	40	22	0.00	-102.99	0.00	0.00	0.00	-66.18
		23	0.00	102.99	0.00	0.00	0.00	-36.81
	41	22	0.00	-30.29	0.00	0.00	0.00	-19.46
		23	0.00	30.29	0.00	0.00	0.00	-10.83
	42	22	0.00	-45.10	0.00	0.00	0.00	-28.98
		23	0.00	45.10	0.00	0.00	0.00	-16.12

MEMBER END FORCES STRUCTURE TYPE = PLANE

ALL UNITS ARE -- KIP FEET (LOCAL)

MEMBER	LOAD	JT	AXIAL	SHEAR-Y	SHEAR-Z	TORSION	MOM-Y	MOM-Z
	43	22	0.00	-21.54	0.00	0.00	0.00	-13.84
		23	0.00	21.54	0.00	0.00	0.00	-7.70
	44	22	0.00	-98.27	0.00	0.00	0.00	-63.15
		23	0.00	98.27	0.00	0.00	0.00	-35.12
	45	22	0.00	-61.93	0.00	0.00	0.00	-39.79
		23	0.00	61.93	0.00	0.00	0.00	-22.13
	46	22	0.00	-98.86	0.00	0.00	0.00	-56.14
		23	0.00	98.86	0.00	0.00	0.00	-42.71
	47	22	0.00	-25.81	0.00	0.00	0.00	-14.55
		23	0.00	25.81	0.00	0.00	0.00	-11.25
	48	22	0.00	-32.03	0.00	0.00	0.00	-18.18
		23	0.00	32.03	0.00	0.00	0.00	-13.85
	49	22	0.00	-45.31	0.00	0.00	0.00	-25.61
		23	0.00	45.31	0.00	0.00	0.00	-19.70
	50	22	0.00	-50.10	0.00	0.00	0.00	-28.50
		23	0.00	50.10	0.00	0.00	0.00	-21.60
	51	22	0.00	-34.80	0.00	0.00	0.00	-19.78
		23	0.00	34.80	0.00	0.00	0.00	-15.02
	52	22	0.00	-39.68	0.00	0.00	0.00	-22.54
		23	0.00	39.68	0.00	0.00	0.00	-17.13
	53	22	0.00	-44.55	0.00	0.00	0.00	-25.31
		23	0.00	44.55	0.00	0.00	0.00	-19.25
	54	22	0.00	-50.10	0.00	0.00	0.00	-28.50
		23	0.00	50.10	0.00	0.00	0.00	-21.60
	55	22	0.00	-49.43	0.00	0.00	0.00	-28.07
		23	0.00	49.43	0.00	0.00	0.00	-21.36
	56	22	0.00	-48.75	0.00	0.00	0.00	-27.64
		23	0.00	48.75	0.00	0.00	0.00	-21.12
	57	22	0.00	-66.83	0.00	0.00	0.00	-37.96
		23	0.00	66.83	0.00	0.00	0.00	-28.87
	58	22	0.00	-80.11	0.00	0.00	0.00	-45.39
		23	0.00	80.11	0.00	0.00	0.00	-34.72
	59	22	0.00	-73.13	0.00	0.00	0.00	-41.46
		23	0.00	73.13	0.00	0.00	0.00	-31.67
	60	22	0.00	-96.08	0.00	0.00	0.00	-54.54
		23	0.00	96.08	0.00	0.00	0.00	-41.54
	61	22	0.00	-125.33	0.00	0.00	0.00	-71.13
		23	0.00	125.33	0.00	0.00	0.00	-54.21
	62	22	0.00	-36.90	0.00	0.00	0.00	-20.94
		23	0.00	36.90	0.00	0.00	0.00	-15.96
	63	22	0.00	-55.73	0.00	0.00	0.00	-31.57
		23	0.00	55.73	0.00	0.00	0.00	-24.16
	64	22	0.00	-26.48	0.00	0.00	0.00	-14.98
		23	0.00	26.48	0.00	0.00	0.00	-11.49
	65	22	0.00	-119.79	0.00	0.00	0.00	-67.93
		23	0.00	119.79	0.00	0.00	0.00	-51.86

MEMBER END FORCES STRUCTURE TYPE = PLANE

ALL UNITS ARE -- KIP FEET (LOCAL)

MEMBER	LOAD	JT	AXIAL	SHEAR-Y	SHEAR-Z	TORSION	MOM-Y	MOM-Z
	66	22	0.00	-75.91	0.00	0.00	0.00	-43.06
		23	0.00	75.91	0.00	0.00	0.00	-32.85
23	1	23	0.00	-14.17	0.00	0.00	0.00	5.20
		24	0.00	17.01	0.00	0.00	0.00	-20.79
	2	23	0.00	-97.31	0.00	0.00	0.00	58.57
		24	0.00	97.31	0.00	0.00	0.00	-155.88
	3	23	0.00	-29.72	0.00	0.00	0.00	21.49
		24	0.00	29.72	0.00	0.00	0.00	-51.22
	4	23	0.00	-107.20	0.00	0.00	0.00	64.52
		24	0.00	107.20	0.00	0.00	0.00	-171.72
	5	23	0.00	-27.93	0.00	0.00	0.00	16.81
		24	0.00	27.93	0.00	0.00	0.00	-44.74
	6	23	0.00	-34.73	0.00	0.00	0.00	20.90
		24	0.00	34.73	0.00	0.00	0.00	-55.63
	7	23	0.00	-49.07	0.00	0.00	0.00	29.53
		24	0.00	49.07	0.00	0.00	0.00	-78.60
	8	23	0.00	-54.36	0.00	0.00	0.00	32.71
		24	0.00	54.36	0.00	0.00	0.00	-87.07
	9	23	0.00	-37.75	0.00	0.00	0.00	22.72
		24	0.00	37.75	0.00	0.00	0.00	-60.47
	10	23	0.00	-43.03	0.00	0.00	0.00	25.90
		24	0.00	43.03	0.00	0.00	0.00	-68.93
	11	23	0.00	-48.32	0.00	0.00	0.00	29.08
		24	0.00	48.32	0.00	0.00	0.00	-77.40
	12	23	0.00	-54.36	0.00	0.00	0.00	32.71
		24	0.00	54.36	0.00	0.00	0.00	-87.07
	13	23	0.00	-53.60	0.00	0.00	0.00	32.26
		24	0.00	53.60	0.00	0.00	0.00	-85.86
	14	23	0.00	-52.85	0.00	0.00	0.00	31.81
		24	0.00	52.85	0.00	0.00	0.00	-84.65
	15	23	0.00	-72.47	0.00	0.00	0.00	43.62
		24	0.00	72.47	0.00	0.00	0.00	-116.09
	16	23	0.00	-86.82	0.00	0.00	0.00	52.25
		24	0.00	86.82	0.00	0.00	0.00	-139.07
	17	23	0.00	-79.27	0.00	0.00	0.00	47.71
		24	0.00	79.27	0.00	0.00	0.00	-126.98
	18	23	0.00	-104.18	0.00	0.00	0.00	62.70
		24	0.00	104.18	0.00	0.00	0.00	-166.88
	19	23	0.00	-135.89	0.00	0.00	0.00	81.79
		24	0.00	135.89	0.00	0.00	0.00	-217.68
	20	23	0.00	-40.01	0.00	0.00	0.00	24.08
		24	0.00	40.01	0.00	0.00	0.00	-64.09
	21	23	0.00	-60.39	0.00	0.00	0.00	36.35
		24	0.00	60.39	0.00	0.00	0.00	-96.74

MEMBER END FORCES STRUCTURE TYPE = PLANE

ALL UNITS ARE -- KIP FEET (LOCAL)

MEMBER	LOAD	JT	AXIAL	SHEAR-Y	SHEAR-Z	TORSION	MOM-Y	MOM-Z
	22	23	0.00	-28.69	0.00	0.00	0.00	17.27
		24	0.00	28.69	0.00	0.00	0.00	-45.95
	23	23	0.00	-129.85	0.00	0.00	0.00	78.15
		24	0.00	129.85	0.00	0.00	0.00	-208.00
	24	23	0.00	-82.29	0.00	0.00	0.00	49.53
		24	0.00	82.29	0.00	0.00	0.00	-131.81
	25	23	0.00	-80.77	0.00	0.00	0.00	28.87
		24	0.00	80.77	0.00	0.00	0.00	-109.64
	26	23	0.00	-21.54	0.00	0.00	0.00	7.70
		24	0.00	21.54	0.00	0.00	0.00	-29.24
	27	23	0.00	-26.25	0.00	0.00	0.00	9.38
		24	0.00	26.25	0.00	0.00	0.00	-35.63
	28	23	0.00	-37.02	0.00	0.00	0.00	13.23
		24	0.00	37.02	0.00	0.00	0.00	-50.25
	29	23	0.00	-41.06	0.00	0.00	0.00	14.68
		24	0.00	41.06	0.00	0.00	0.00	-55.74
	30	23	0.00	-28.27	0.00	0.00	0.00	10.10
		24	0.00	28.27	0.00	0.00	0.00	-38.38
	31	23	0.00	-32.98	0.00	0.00	0.00	11.79
		24	0.00	32.98	0.00	0.00	0.00	-44.77
	32	23	0.00	-36.35	0.00	0.00	0.00	12.99
		24	0.00	36.35	0.00	0.00	0.00	-49.34
	33	23	0.00	-41.06	0.00	0.00	0.00	14.68
		24	0.00	41.06	0.00	0.00	0.00	-55.74
	34	23	0.00	-40.39	0.00	0.00	0.00	14.43
		24	0.00	40.39	0.00	0.00	0.00	-54.82
	35	23	0.00	-39.71	0.00	0.00	0.00	14.19
		24	0.00	39.71	0.00	0.00	0.00	-53.91
	36	23	0.00	-55.20	0.00	0.00	0.00	19.73
		24	0.00	55.20	0.00	0.00	0.00	-74.92
	37	23	0.00	-65.29	0.00	0.00	0.00	23.34
		24	0.00	65.29	0.00	0.00	0.00	-88.63
	38	23	0.00	-59.91	0.00	0.00	0.00	21.41
		24	0.00	59.91	0.00	0.00	0.00	-81.32
	39	23	0.00	-78.75	0.00	0.00	0.00	28.15
		24	0.00	78.75	0.00	0.00	0.00	-106.90
	40	23	0.00	-102.99	0.00	0.00	0.00	36.81
		24	0.00	102.99	0.00	0.00	0.00	-139.80
	41	23	0.00	-30.29	0.00	0.00	0.00	10.83
		24	0.00	30.29	0.00	0.00	0.00	-41.12
	42	23	0.00	-45.10	0.00	0.00	0.00	16.12
		24	0.00	45.10	0.00	0.00	0.00	-61.22
	43	23	0.00	-21.54	0.00	0.00	0.00	7.70
		24	0.00	21.54	0.00	0.00	0.00	-29.24
	44	23	0.00	-98.27	0.00	0.00	0.00	35.12
		24	0.00	98.27	0.00	0.00	0.00	-133.40

MEMBER END FORCES STRUCTURE TYPE = PLANE

ALL UNITS ARE -- KIP FEET (LOCAL)

MEMBER	LOAD	JT	AXIAL	SHEAR-Y	SHEAR-Z	TORSION	MOM-Y	MOM-Z
	45	23	0.00	-61.93	0.00	0.00	0.00	22.13
		24	0.00	61.93	0.00	0.00	0.00	-84.06
	46	23	0.00	-98.86	0.00	0.00	0.00	42.71
		24	0.00	98.86	0.00	0.00	0.00	-141.57
	47	23	0.00	-25.81	0.00	0.00	0.00	11.25
		24	0.00	25.81	0.00	0.00	0.00	-37.06
	48	23	0.00	-32.03	0.00	0.00	0.00	13.85
		24	0.00	32.03	0.00	0.00	0.00	-45.87
	49	23	0.00	-45.31	0.00	0.00	0.00	19.70
		24	0.00	45.31	0.00	0.00	0.00	-65.01
	50	23	0.00	-50.10	0.00	0.00	0.00	21.60
		24	0.00	50.10	0.00	0.00	0.00	-71.70
	51	23	0.00	-34.80	0.00	0.00	0.00	15.02
		24	0.00	34.80	0.00	0.00	0.00	-49.82
	52	23	0.00	-39.68	0.00	0.00	0.00	17.13
		24	0.00	39.68	0.00	0.00	0.00	-56.81
	53	23	0.00	-44.55	0.00	0.00	0.00	19.25
		24	0.00	44.55	0.00	0.00	0.00	-63.80
	54	23	0.00	-50.10	0.00	0.00	0.00	21.60
		24	0.00	50.10	0.00	0.00	0.00	-71.70
	55	23	0.00	-49.43	0.00	0.00	0.00	21.36
		24	0.00	49.43	0.00	0.00	0.00	-70.78
	56	23	0.00	-48.75	0.00	0.00	0.00	21.12
		24	0.00	48.75	0.00	0.00	0.00	-69.87
	57	23	0.00	-66.83	0.00	0.00	0.00	28.87
		24	0.00	66.83	0.00	0.00	0.00	-95.70
	58	23	0.00	-80.11	0.00	0.00	0.00	34.72
		24	0.00	80.11	0.00	0.00	0.00	-114.83
	59	23	0.00	-73.13	0.00	0.00	0.00	31.67
		24	0.00	73.13	0.00	0.00	0.00	-104.81
	60	23	0.00	-96.08	0.00	0.00	0.00	41.54
		24	0.00	96.08	0.00	0.00	0.00	-137.62
	61	23	0.00	-125.33	0.00	0.00	0.00	54.21
		24	0.00	125.33	0.00	0.00	0.00	-179.54
	62	23	0.00	-36.90	0.00	0.00	0.00	15.96
		24	0.00	36.90	0.00	0.00	0.00	-52.86
	63	23	0.00	-55.73	0.00	0.00	0.00	24.16
		24	0.00	55.73	0.00	0.00	0.00	-79.89
	64	23	0.00	-26.48	0.00	0.00	0.00	11.49
		24	0.00	26.48	0.00	0.00	0.00	-37.97
	65	23	0.00	-119.79	0.00	0.00	0.00	51.86
		24	0.00	119.79	0.00	0.00	0.00	-171.64
	66	23	0.00	-75.91	0.00	0.00	0.00	32.85
		24	0.00	75.91	0.00	0.00	0.00	-108.76
24	1	24	0.00	-17.01	0.00	0.00	0.00	20.79
		25	0.00	19.84	0.00	0.00	0.00	-39.22

MEMBER END FORCES STRUCTURE TYPE = PLANE

ALL UNITS ARE -- KIP FEET (LOCAL)

MEMBER	LOAD	JT	AXIAL	SHEAR-Y	SHEAR-Z	TORSION	MOM-Y	MOM-Z
	2	24	0.00	-97.31	0.00	0.00	0.00	155.88
		25	0.00	97.31	0.00	0.00	0.00	-253.19
	3	24	0.00	-29.72	0.00	0.00	0.00	51.22
		25	0.00	29.72	0.00	0.00	0.00	-80.94
	4	24	0.00	-107.20	0.00	0.00	0.00	171.72
		25	0.00	107.20	0.00	0.00	0.00	-278.92
	5	24	0.00	-27.93	0.00	0.00	0.00	44.74
		25	0.00	27.93	0.00	0.00	0.00	-72.68
	6	24	0.00	-34.73	0.00	0.00	0.00	55.63
		25	0.00	34.73	0.00	0.00	0.00	-90.36
	7	24	0.00	-49.07	0.00	0.00	0.00	78.60
		25	0.00	49.07	0.00	0.00	0.00	-127.68
	8	24	0.00	-54.36	0.00	0.00	0.00	87.07
		25	0.00	54.36	0.00	0.00	0.00	-141.43
	9	24	0.00	-37.75	0.00	0.00	0.00	60.47
		25	0.00	37.75	0.00	0.00	0.00	-98.21
	10	24	0.00	-43.03	0.00	0.00	0.00	68.93
		25	0.00	43.03	0.00	0.00	0.00	-111.96
	11	24	0.00	-48.32	0.00	0.00	0.00	77.40
		25	0.00	48.32	0.00	0.00	0.00	-125.71
	12	24	0.00	-54.36	0.00	0.00	0.00	87.07
		25	0.00	54.36	0.00	0.00	0.00	-141.43
	13	24	0.00	-53.60	0.00	0.00	0.00	85.86
		25	0.00	53.60	0.00	0.00	0.00	-139.46
	14	24	0.00	-52.85	0.00	0.00	0.00	84.65
		25	0.00	52.85	0.00	0.00	0.00	-137.50
	15	24	0.00	-72.47	0.00	0.00	0.00	116.09
		25	0.00	72.47	0.00	0.00	0.00	-188.57
	16	24	0.00	-86.82	0.00	0.00	0.00	139.07
		25	0.00	86.82	0.00	0.00	0.00	-225.89
	17	24	0.00	-79.27	0.00	0.00	0.00	126.98
		25	0.00	79.27	0.00	0.00	0.00	-206.25
	18	24	0.00	-104.18	0.00	0.00	0.00	166.88
		25	0.00	104.18	0.00	0.00	0.00	-271.07
	19	24	0.00	-135.89	0.00	0.00	0.00	217.68
		25	0.00	135.89	0.00	0.00	0.00	-353.56
	20	24	0.00	-40.01	0.00	0.00	0.00	64.09
		25	0.00	40.01	0.00	0.00	0.00	-104.10
	21	24	0.00	-60.39	0.00	0.00	0.00	96.74
		25	0.00	60.39	0.00	0.00	0.00	-157.14
	22	24	0.00	-28.69	0.00	0.00	0.00	45.95
		25	0.00	28.69	0.00	0.00	0.00	-74.64
	23	24	0.00	-129.85	0.00	0.00	0.00	208.00
		25	0.00	129.85	0.00	0.00	0.00	-337.85
	24	24	0.00	-82.29	0.00	0.00	0.00	131.81
		25	0.00	82.29	0.00	0.00	0.00	-214.10

MEMBER END FORCES STRUCTURE TYPE = PLANE

ALL UNITS ARE -- KIP FEET (LOCAL)

MEMBER	LOAD	JT	AXIAL	SHEAR-Y	SHEAR-Z	TORSION	MOM-Y	MOM-Z
	25	24	0.00	-80.77	0.00	0.00	0.00	109.64
		25	0.00	80.77	0.00	0.00	0.00	-190.42
	26	24	0.00	-21.54	0.00	0.00	0.00	29.24
		25	0.00	21.54	0.00	0.00	0.00	-50.78
	27	24	0.00	-26.25	0.00	0.00	0.00	35.63
		25	0.00	26.25	0.00	0.00	0.00	-61.89
	28	24	0.00	-37.02	0.00	0.00	0.00	50.25
		25	0.00	37.02	0.00	0.00	0.00	-87.27
	29	24	0.00	-41.06	0.00	0.00	0.00	55.74
		25	0.00	41.06	0.00	0.00	0.00	-96.80
	30	24	0.00	-28.27	0.00	0.00	0.00	38.38
		25	0.00	28.27	0.00	0.00	0.00	-66.65
	31	24	0.00	-32.98	0.00	0.00	0.00	44.77
		25	0.00	32.98	0.00	0.00	0.00	-77.75
	32	24	0.00	-36.35	0.00	0.00	0.00	49.34
		25	0.00	36.35	0.00	0.00	0.00	-85.69
	33	24	0.00	-41.06	0.00	0.00	0.00	55.74
		25	0.00	41.06	0.00	0.00	0.00	-96.80
	34	24	0.00	-40.39	0.00	0.00	0.00	54.82
		25	0.00	40.39	0.00	0.00	0.00	-95.21
	35	24	0.00	-39.71	0.00	0.00	0.00	53.91
		25	0.00	39.71	0.00	0.00	0.00	-93.62
	36	24	0.00	-55.20	0.00	0.00	0.00	74.92
		25	0.00	55.20	0.00	0.00	0.00	-130.12
	37	24	0.00	-65.29	0.00	0.00	0.00	88.63
		25	0.00	65.29	0.00	0.00	0.00	-153.92
	38	24	0.00	-59.91	0.00	0.00	0.00	81.32
		25	0.00	59.91	0.00	0.00	0.00	-141.23
	39	24	0.00	-78.75	0.00	0.00	0.00	106.90
		25	0.00	78.75	0.00	0.00	0.00	-185.66
	40	24	0.00	-102.99	0.00	0.00	0.00	139.80
		25	0.00	102.99	0.00	0.00	0.00	-242.78
	41	24	0.00	-30.29	0.00	0.00	0.00	41.12
		25	0.00	30.29	0.00	0.00	0.00	-71.41
	42	24	0.00	-45.10	0.00	0.00	0.00	61.22
		25	0.00	45.10	0.00	0.00	0.00	-106.32
	43	24	0.00	-21.54	0.00	0.00	0.00	29.24
		25	0.00	21.54	0.00	0.00	0.00	-50.78
	44	24	0.00	-98.27	0.00	0.00	0.00	133.40
		25	0.00	98.27	0.00	0.00	0.00	-231.67
	45	24	0.00	-61.93	0.00	0.00	0.00	84.06
		25	0.00	61.93	0.00	0.00	0.00	-145.99
	46	24	0.00	-98.86	0.00	0.00	0.00	141.57
		25	0.00	98.86	0.00	0.00	0.00	-240.42
	47	24	0.00	-25.81	0.00	0.00	0.00	37.06
		25	0.00	25.81	0.00	0.00	0.00	-62.86

MEMBER END FORCES STRUCTURE TYPE = PLANE

ALL UNITS ARE -- KIP FEET (LOCAL)

MEMBER	LOAD	JT	AXIAL	SHEAR-Y	SHEAR-Z	TORSION	MOM-Y	MOM-Z
	48	24	0.00	-32.03	0.00	0.00	0.00	45.87
		25	0.00	32.03	0.00	0.00	0.00	-77.90
	49	24	0.00	-45.31	0.00	0.00	0.00	65.01
		25	0.00	45.31	0.00	0.00	0.00	-110.31
	50	24	0.00	-50.10	0.00	0.00	0.00	71.70
		25	0.00	50.10	0.00	0.00	0.00	-121.80
	51	24	0.00	-34.80	0.00	0.00	0.00	49.82
		25	0.00	34.80	0.00	0.00	0.00	-84.62
	52	24	0.00	-39.68	0.00	0.00	0.00	56.81
		25	0.00	39.68	0.00	0.00	0.00	-96.49
	53	24	0.00	-44.55	0.00	0.00	0.00	63.80
		25	0.00	44.55	0.00	0.00	0.00	-108.35
	54	24	0.00	-50.10	0.00	0.00	0.00	71.70
		25	0.00	50.10	0.00	0.00	0.00	-121.80
	55	24	0.00	-49.43	0.00	0.00	0.00	70.78
		25	0.00	49.43	0.00	0.00	0.00	-120.21
	56	24	0.00	-48.75	0.00	0.00	0.00	69.87
		25	0.00	48.75	0.00	0.00	0.00	-118.63
	57	24	0.00	-66.83	0.00	0.00	0.00	95.70
		25	0.00	66.83	0.00	0.00	0.00	-162.52
	58	24	0.00	-80.11	0.00	0.00	0.00	114.83
		25	0.00	80.11	0.00	0.00	0.00	-194.94
	59	24	0.00	-73.13	0.00	0.00	0.00	104.81
		25	0.00	73.13	0.00	0.00	0.00	-177.94
	60	24	0.00	-96.08	0.00	0.00	0.00	137.62
		25	0.00	96.08	0.00	0.00	0.00	-233.70
	61	24	0.00	-125.33	0.00	0.00	0.00	179.54
		25	0.00	125.33	0.00	0.00	0.00	-304.88
	62	24	0.00	-36.90	0.00	0.00	0.00	52.86
		25	0.00	36.90	0.00	0.00	0.00	-89.76
	63	24	0.00	-55.73	0.00	0.00	0.00	79.89
		25	0.00	55.73	0.00	0.00	0.00	-135.63
	64	24	0.00	-26.48	0.00	0.00	0.00	37.97
		25	0.00	26.48	0.00	0.00	0.00	-64.45
	65	24	0.00	-119.79	0.00	0.00	0.00	171.64
		25	0.00	119.79	0.00	0.00	0.00	-291.43
	66	24	0.00	-75.91	0.00	0.00	0.00	108.76
		25	0.00	75.91	0.00	0.00	0.00	-184.66
25	1	25	0.00	-19.84	0.00	0.00	0.00	39.22
		26	0.00	22.68	0.00	0.00	0.00	-60.48
	2	25	0.00	-97.31	0.00	0.00	0.00	253.19
		26	0.00	97.31	0.00	0.00	0.00	-350.50
	3	25	0.00	-29.72	0.00	0.00	0.00	80.94
		26	0.00	29.72	0.00	0.00	0.00	-110.67

MEMBER END FORCES STRUCTURE TYPE = PLANE

ALL UNITS ARE -- KIP FEET (LOCAL)

MEMBER	LOAD	JT	AXIAL	SHEAR-Y	SHEAR-Z	TORSION	MOM-Y	MOM-Z
	4	25	0.00	-107.20	0.00	0.00	0.00	278.92
		26	0.00	107.20	0.00	0.00	0.00	-386.12
	5	25	0.00	-27.93	0.00	0.00	0.00	72.68
		26	0.00	27.93	0.00	0.00	0.00	-100.61
	6	25	0.00	-34.73	0.00	0.00	0.00	90.36
		26	0.00	34.73	0.00	0.00	0.00	-125.08
	7	25	0.00	-49.07	0.00	0.00	0.00	127.68
		26	0.00	49.07	0.00	0.00	0.00	-176.75
	8	25	0.00	-54.36	0.00	0.00	0.00	141.43
		26	0.00	54.36	0.00	0.00	0.00	-195.78
	9	25	0.00	-37.75	0.00	0.00	0.00	98.21
		26	0.00	37.75	0.00	0.00	0.00	-135.96
	10	25	0.00	-43.03	0.00	0.00	0.00	111.96
		26	0.00	43.03	0.00	0.00	0.00	-154.99
	11	25	0.00	-48.32	0.00	0.00	0.00	125.71
		26	0.00	48.32	0.00	0.00	0.00	-174.03
	12	25	0.00	-54.36	0.00	0.00	0.00	141.43
		26	0.00	54.36	0.00	0.00	0.00	-195.78
	13	25	0.00	-53.60	0.00	0.00	0.00	139.46
		26	0.00	53.60	0.00	0.00	0.00	-193.06
	14	25	0.00	-52.85	0.00	0.00	0.00	137.50
		26	0.00	52.85	0.00	0.00	0.00	-190.34
	15	25	0.00	-72.47	0.00	0.00	0.00	188.57
		26	0.00	72.47	0.00	0.00	0.00	-261.04
	16	25	0.00	-86.82	0.00	0.00	0.00	225.89
		26	0.00	86.82	0.00	0.00	0.00	-312.71
	17	25	0.00	-79.27	0.00	0.00	0.00	206.25
		26	0.00	79.27	0.00	0.00	0.00	-285.51
	18	25	0.00	-104.18	0.00	0.00	0.00	271.07
		26	0.00	104.18	0.00	0.00	0.00	-375.25
	19	25	0.00	-135.89	0.00	0.00	0.00	353.56
		26	0.00	135.89	0.00	0.00	0.00	-489.45
	20	25	0.00	-40.01	0.00	0.00	0.00	104.10
		26	0.00	40.01	0.00	0.00	0.00	-144.12
	21	25	0.00	-60.39	0.00	0.00	0.00	157.14
		26	0.00	60.39	0.00	0.00	0.00	-217.53
	22	25	0.00	-28.69	0.00	0.00	0.00	74.64
		26	0.00	28.69	0.00	0.00	0.00	-103.33
	23	25	0.00	-129.85	0.00	0.00	0.00	337.85
		26	0.00	129.85	0.00	0.00	0.00	-467.70
	24	25	0.00	-82.29	0.00	0.00	0.00	214.10
		26	0.00	82.29	0.00	0.00	0.00	-296.39
	25	25	0.00	-80.77	0.00	0.00	0.00	190.42
		26	0.00	80.77	0.00	0.00	0.00	-271.19
	26	25	0.00	-21.54	0.00	0.00	0.00	50.78
		26	0.00	21.54	0.00	0.00	0.00	-72.32

MEMBER END FORCES STRUCTURE TYPE = PLANE

ALL UNITS ARE -- KIP FEET (LOCAL)

MEMBER	LOAD	JT	AXIAL	SHEAR-Y	SHEAR-Z	TORSION	MOM-Y	MOM-Z
	27	25	0.00	-26.25	0.00	0.00	0.00	61.89
		26	0.00	26.25	0.00	0.00	0.00	-88.14
	28	25	0.00	-37.02	0.00	0.00	0.00	87.27
		26	0.00	37.02	0.00	0.00	0.00	-124.30
	29	25	0.00	-41.06	0.00	0.00	0.00	96.80
		26	0.00	41.06	0.00	0.00	0.00	-137.86
	30	25	0.00	-28.27	0.00	0.00	0.00	66.65
		26	0.00	28.27	0.00	0.00	0.00	-94.92
	31	25	0.00	-32.98	0.00	0.00	0.00	77.75
		26	0.00	32.98	0.00	0.00	0.00	-110.74
	32	25	0.00	-36.35	0.00	0.00	0.00	85.69
		26	0.00	36.35	0.00	0.00	0.00	-122.04
	33	25	0.00	-41.06	0.00	0.00	0.00	96.80
		26	0.00	41.06	0.00	0.00	0.00	-137.86
	34	25	0.00	-40.39	0.00	0.00	0.00	95.21
		26	0.00	40.39	0.00	0.00	0.00	-135.60
	35	25	0.00	-39.71	0.00	0.00	0.00	93.62
		26	0.00	39.71	0.00	0.00	0.00	-133.34
	36	25	0.00	-55.20	0.00	0.00	0.00	130.12
		26	0.00	55.20	0.00	0.00	0.00	-185.31
	37	25	0.00	-65.29	0.00	0.00	0.00	153.92
		26	0.00	65.29	0.00	0.00	0.00	-219.21
	38	25	0.00	-59.91	0.00	0.00	0.00	141.23
		26	0.00	59.91	0.00	0.00	0.00	-201.13
	39	25	0.00	-78.75	0.00	0.00	0.00	185.66
		26	0.00	78.75	0.00	0.00	0.00	-264.41
	40	25	0.00	-102.99	0.00	0.00	0.00	242.78
		26	0.00	102.99	0.00	0.00	0.00	-345.77
	41	25	0.00	-30.29	0.00	0.00	0.00	71.41
		26	0.00	30.29	0.00	0.00	0.00	-101.70
	42	25	0.00	-45.10	0.00	0.00	0.00	106.32
		26	0.00	45.10	0.00	0.00	0.00	-151.42
	43	25	0.00	-21.54	0.00	0.00	0.00	50.78
		26	0.00	21.54	0.00	0.00	0.00	-72.32
	44	25	0.00	-98.27	0.00	0.00	0.00	231.67
		26	0.00	98.27	0.00	0.00	0.00	-329.95
	45	25	0.00	-61.93	0.00	0.00	0.00	145.99
		26	0.00	61.93	0.00	0.00	0.00	-207.91
	46	25	0.00	-98.86	0.00	0.00	0.00	240.42
		26	0.00	98.86	0.00	0.00	0.00	-339.28
	47	25	0.00	-25.81	0.00	0.00	0.00	62.86
		26	0.00	25.81	0.00	0.00	0.00	-88.67
	48	25	0.00	-32.03	0.00	0.00	0.00	77.90
		26	0.00	32.03	0.00	0.00	0.00	-109.93
	49	25	0.00	-45.31	0.00	0.00	0.00	110.31
		26	0.00	45.31	0.00	0.00	0.00	-155.62

MEMBER END FORCES STRUCTURE TYPE = PLANE

ALL UNITS ARE -- KIP FEET (LOCAL)

MEMBER	LOAD	JT	AXIAL	SHEAR-Y	SHEAR-Z	TORSION	MOM-Y	MOM-Z
	50	25	0.00	-50.10	0.00	0.00	0.00	121.80
		26	0.00	50.10	0.00	0.00	0.00	-171.90
	51	25	0.00	-34.80	0.00	0.00	0.00	84.62
		26	0.00	34.80	0.00	0.00	0.00	-119.43
	52	25	0.00	-39.68	0.00	0.00	0.00	96.49
		26	0.00	39.68	0.00	0.00	0.00	-136.16
	53	25	0.00	-44.55	0.00	0.00	0.00	108.35
		26	0.00	44.55	0.00	0.00	0.00	-152.90
	54	25	0.00	-50.10	0.00	0.00	0.00	121.80
		26	0.00	50.10	0.00	0.00	0.00	-171.90
	55	25	0.00	-49.43	0.00	0.00	0.00	120.21
		26	0.00	49.43	0.00	0.00	0.00	-169.64
	56	25	0.00	-48.75	0.00	0.00	0.00	118.63
		26	0.00	48.75	0.00	0.00	0.00	-167.38
	57	25	0.00	-66.83	0.00	0.00	0.00	162.52
		26	0.00	66.83	0.00	0.00	0.00	-229.35
	58	25	0.00	-80.11	0.00	0.00	0.00	194.94
		26	0.00	80.11	0.00	0.00	0.00	-275.05
	59	25	0.00	-73.13	0.00	0.00	0.00	177.94
		26	0.00	73.13	0.00	0.00	0.00	-251.07
	60	25	0.00	-96.08	0.00	0.00	0.00	233.70
		26	0.00	96.08	0.00	0.00	0.00	-329.78
	61	25	0.00	-125.33	0.00	0.00	0.00	304.88
		26	0.00	125.33	0.00	0.00	0.00	-430.21
	62	25	0.00	-36.90	0.00	0.00	0.00	89.76
		26	0.00	36.90	0.00	0.00	0.00	-126.66
	63	25	0.00	-55.73	0.00	0.00	0.00	135.63
		26	0.00	55.73	0.00	0.00	0.00	-191.36
	64	25	0.00	-26.48	0.00	0.00	0.00	64.45
		26	0.00	26.48	0.00	0.00	0.00	-90.93
	65	25	0.00	-119.79	0.00	0.00	0.00	291.43
		26	0.00	119.79	0.00	0.00	0.00	-411.21
	66	25	0.00	-75.91	0.00	0.00	0.00	184.66
		26	0.00	75.91	0.00	0.00	0.00	-260.57
26	1	26	0.00	2.13	0.00	0.00	0.00	0.53
		27	0.00	0.71	0.00	0.00	0.00	0.18
	2	26	0.00	0.00	0.00	0.00	0.00	0.00
		27	0.00	0.00	0.00	0.00	0.00	0.00
	3	26	0.00	0.00	0.00	0.00	0.00	0.00
		27	0.00	0.00	0.00	0.00	0.00	0.00
	4	26	0.00	0.00	0.00	0.00	0.00	0.00
		27	0.00	0.00	0.00	0.00	0.00	0.00
	5	26	0.00	0.00	0.00	0.00	0.00	0.00
		27	0.00	0.00	0.00	0.00	0.00	0.00

MEMBER END FORCES STRUCTURE TYPE = PLANE

ALL UNITS ARE -- KIP FEET (LOCAL)

MEMBER	LOAD	JT	AXIAL	SHEAR-Y	SHEAR-Z	TORSION	MOM-Y	MOM-Z
	6	26	0.00	0.00	0.00	0.00	0.00	0.00
		27	0.00	0.00	0.00	0.00	0.00	0.00
	7	26	0.00	0.00	0.00	0.00	0.00	0.00
		27	0.00	0.00	0.00	0.00	0.00	0.00
	8	26	0.00	0.00	0.00	0.00	0.00	0.00
		27	0.00	0.00	0.00	0.00	0.00	0.00
	9	26	0.00	0.00	0.00	0.00	0.00	0.00
		27	0.00	0.00	0.00	0.00	0.00	0.00
	10	26	0.00	0.00	0.00	0.00	0.00	0.00
		27	0.00	0.00	0.00	0.00	0.00	0.00
	11	26	0.00	0.00	0.00	0.00	0.00	0.00
		27	0.00	0.00	0.00	0.00	0.00	0.00
	12	26	0.00	0.00	0.00	0.00	0.00	0.00
		27	0.00	0.00	0.00	0.00	0.00	0.00
	13	26	0.00	0.00	0.00	0.00	0.00	0.00
		27	0.00	0.00	0.00	0.00	0.00	0.00
	14	26	0.00	0.00	0.00	0.00	0.00	0.00
		27	0.00	0.00	0.00	0.00	0.00	0.00
	15	26	0.00	0.00	0.00	0.00	0.00	0.00
		27	0.00	0.00	0.00	0.00	0.00	0.00
	16	26	0.00	0.00	0.00	0.00	0.00	0.00
		27	0.00	0.00	0.00	0.00	0.00	0.00
	17	26	0.00	0.00	0.00	0.00	0.00	0.00
		27	0.00	0.00	0.00	0.00	0.00	0.00
	18	26	0.00	0.00	0.00	0.00	0.00	0.00
		27	0.00	0.00	0.00	0.00	0.00	0.00
	19	26	0.00	0.00	0.00	0.00	0.00	0.00
		27	0.00	0.00	0.00	0.00	0.00	0.00
	20	26	0.00	0.00	0.00	0.00	0.00	0.00
		27	0.00	0.00	0.00	0.00	0.00	0.00
	21	26	0.00	0.00	0.00	0.00	0.00	0.00
		27	0.00	0.00	0.00	0.00	0.00	0.00
	22	26	0.00	0.00	0.00	0.00	0.00	0.00
		27	0.00	0.00	0.00	0.00	0.00	0.00
	23	26	0.00	0.00	0.00	0.00	0.00	0.00
		27	0.00	0.00	0.00	0.00	0.00	0.00
	24	26	0.00	0.00	0.00	0.00	0.00	0.00
		27	0.00	0.00	0.00	0.00	0.00	0.00
	25	26	0.00	0.00	0.00	0.00	0.00	0.00
		27	0.00	0.00	0.00	0.00	0.00	0.00
	26	26	0.00	0.00	0.00	0.00	0.00	0.00
		27	0.00	0.00	0.00	0.00	0.00	0.00
	27	26	0.00	0.00	0.00	0.00	0.00	0.00
		27	0.00	0.00	0.00	0.00	0.00	0.00
	28	26	0.00	0.00	0.00	0.00	0.00	0.00
		27	0.00	0.00	0.00	0.00	0.00	0.00

MEMBER END FORCES STRUCTURE TYPE = PLANE

ALL UNITS ARE -- KIP FEET (LOCAL)

MEMBER	LOAD	JT	AXIAL	SHEAR-Y	SHEAR-Z	TORSION	MOM-Y	MOM-Z
	29	26	0.00	0.00	0.00	0.00	0.00	0.00
		27	0.00	0.00	0.00	0.00	0.00	0.00
	30	26	0.00	0.00	0.00	0.00	0.00	0.00
		27	0.00	0.00	0.00	0.00	0.00	0.00
	31	26	0.00	0.00	0.00	0.00	0.00	0.00
		27	0.00	0.00	0.00	0.00	0.00	0.00
	32	26	0.00	0.00	0.00	0.00	0.00	0.00
		27	0.00	0.00	0.00	0.00	0.00	0.00
	33	26	0.00	0.00	0.00	0.00	0.00	0.00
		27	0.00	0.00	0.00	0.00	0.00	0.00
	34	26	0.00	0.00	0.00	0.00	0.00	0.00
		27	0.00	0.00	0.00	0.00	0.00	0.00
	35	26	0.00	0.00	0.00	0.00	0.00	0.00
		27	0.00	0.00	0.00	0.00	0.00	0.00
	36	26	0.00	0.00	0.00	0.00	0.00	0.00
		27	0.00	0.00	0.00	0.00	0.00	0.00
	37	26	0.00	0.00	0.00	0.00	0.00	0.00
		27	0.00	0.00	0.00	0.00	0.00	0.00
	38	26	0.00	0.00	0.00	0.00	0.00	0.00
		27	0.00	0.00	0.00	0.00	0.00	0.00
	39	26	0.00	0.00	0.00	0.00	0.00	0.00
		27	0.00	0.00	0.00	0.00	0.00	0.00
	40	26	0.00	0.00	0.00	0.00	0.00	0.00
		27	0.00	0.00	0.00	0.00	0.00	0.00
	41	26	0.00	0.00	0.00	0.00	0.00	0.00
		27	0.00	0.00	0.00	0.00	0.00	0.00
	42	26	0.00	0.00	0.00	0.00	0.00	0.00
		27	0.00	0.00	0.00	0.00	0.00	0.00
	43	26	0.00	0.00	0.00	0.00	0.00	0.00
		27	0.00	0.00	0.00	0.00	0.00	0.00
	44	26	0.00	0.00	0.00	0.00	0.00	0.00
		27	0.00	0.00	0.00	0.00	0.00	0.00
	45	26	0.00	0.00	0.00	0.00	0.00	0.00
		27	0.00	0.00	0.00	0.00	0.00	0.00
	46	26	0.00	0.00	0.00	0.00	0.00	0.00
		27	0.00	0.00	0.00	0.00	0.00	0.00
	47	26	0.00	0.00	0.00	0.00	0.00	0.00
		27	0.00	0.00	0.00	0.00	0.00	0.00
	48	26	0.00	0.00	0.00	0.00	0.00	0.00
		27	0.00	0.00	0.00	0.00	0.00	0.00
	49	26	0.00	0.00	0.00	0.00	0.00	0.00
		27	0.00	0.00	0.00	0.00	0.00	0.00
	50	26	0.00	0.00	0.00	0.00	0.00	0.00
		27	0.00	0.00	0.00	0.00	0.00	0.00
	51	26	0.00	0.00	0.00	0.00	0.00	0.00
		27	0.00	0.00	0.00	0.00	0.00	0.00

MEMBER END FORCES STRUCTURE TYPE = PLANE

ALL UNITS ARE -- KIP FEET (LOCAL)

MEMBER	LOAD	JT	AXIAL	SHEAR-Y	SHEAR-Z	TORSION	MOM-Y	MOM-Z
	52	26	0.00	0.00	0.00	0.00	0.00	0.00
		27	0.00	0.00	0.00	0.00	0.00	0.00
	53	26	0.00	0.00	0.00	0.00	0.00	0.00
		27	0.00	0.00	0.00	0.00	0.00	0.00
	54	26	0.00	0.00	0.00	0.00	0.00	0.00
		27	0.00	0.00	0.00	0.00	0.00	0.00
	55	26	0.00	0.00	0.00	0.00	0.00	0.00
		27	0.00	0.00	0.00	0.00	0.00	0.00
	56	26	0.00	0.00	0.00	0.00	0.00	0.00
		27	0.00	0.00	0.00	0.00	0.00	0.00
	57	26	0.00	0.00	0.00	0.00	0.00	0.00
		27	0.00	0.00	0.00	0.00	0.00	0.00
	58	26	0.00	0.00	0.00	0.00	0.00	0.00
		27	0.00	0.00	0.00	0.00	0.00	0.00
	59	26	0.00	0.00	0.00	0.00	0.00	0.00
		27	0.00	0.00	0.00	0.00	0.00	0.00
	60	26	0.00	0.00	0.00	0.00	0.00	0.00
		27	0.00	0.00	0.00	0.00	0.00	0.00
	61	26	0.00	0.00	0.00	0.00	0.00	0.00
		27	0.00	0.00	0.00	0.00	0.00	0.00
	62	26	0.00	0.00	0.00	0.00	0.00	0.00
		27	0.00	0.00	0.00	0.00	0.00	0.00
	63	26	0.00	0.00	0.00	0.00	0.00	0.00
		27	0.00	0.00	0.00	0.00	0.00	0.00
	64	26	0.00	0.00	0.00	0.00	0.00	0.00
		27	0.00	0.00	0.00	0.00	0.00	0.00
	65	26	0.00	0.00	0.00	0.00	0.00	0.00
		27	0.00	0.00	0.00	0.00	0.00	0.00
	66	26	0.00	0.00	0.00	0.00	0.00	0.00
		27	0.00	0.00	0.00	0.00	0.00	0.00
27	1	27	0.00	-0.71	0.00	0.00	0.00	-0.18
		28	0.00	2.13	0.00	0.00	0.00	-0.53
	2	27	0.00	0.00	0.00	0.00	0.00	0.00
		28	0.00	0.00	0.00	0.00	0.00	0.00
	3	27	0.00	0.00	0.00	0.00	0.00	0.00
		28	0.00	0.00	0.00	0.00	0.00	0.00
	4	27	0.00	0.00	0.00	0.00	0.00	0.00
		28	0.00	0.00	0.00	0.00	0.00	0.00
	5	27	0.00	0.00	0.00	0.00	0.00	0.00
		28	0.00	0.00	0.00	0.00	0.00	0.00
	6	27	0.00	0.00	0.00	0.00	0.00	0.00
		28	0.00	0.00	0.00	0.00	0.00	0.00
	7	27	0.00	0.00	0.00	0.00	0.00	0.00
		28	0.00	0.00	0.00	0.00	0.00	0.00

MEMBER END FORCES STRUCTURE TYPE = PLANE

ALL UNITS ARE -- KIP FEET (LOCAL)

MEMBER	LOAD	JT	AXIAL	SHEAR-Y	SHEAR-Z	TORSION	MOM-Y	MOM-Z
	8	27	0.00	0.00	0.00	0.00	0.00	0.00
		28	0.00	0.00	0.00	0.00	0.00	0.00
	9	27	0.00	0.00	0.00	0.00	0.00	0.00
		28	0.00	0.00	0.00	0.00	0.00	0.00
	10	27	0.00	0.00	0.00	0.00	0.00	0.00
		28	0.00	0.00	0.00	0.00	0.00	0.00
	11	27	0.00	0.00	0.00	0.00	0.00	0.00
		28	0.00	0.00	0.00	0.00	0.00	0.00
	12	27	0.00	0.00	0.00	0.00	0.00	0.00
		28	0.00	0.00	0.00	0.00	0.00	0.00
	13	27	0.00	0.00	0.00	0.00	0.00	0.00
		28	0.00	0.00	0.00	0.00	0.00	0.00
	14	27	0.00	0.00	0.00	0.00	0.00	0.00
		28	0.00	0.00	0.00	0.00	0.00	0.00
	15	27	0.00	0.00	0.00	0.00	0.00	0.00
		28	0.00	0.00	0.00	0.00	0.00	0.00
	16	27	0.00	0.00	0.00	0.00	0.00	0.00
		28	0.00	0.00	0.00	0.00	0.00	0.00
	17	27	0.00	0.00	0.00	0.00	0.00	0.00
		28	0.00	0.00	0.00	0.00	0.00	0.00
	18	27	0.00	0.00	0.00	0.00	0.00	0.00
		28	0.00	0.00	0.00	0.00	0.00	0.00
	19	27	0.00	0.00	0.00	0.00	0.00	0.00
		28	0.00	0.00	0.00	0.00	0.00	0.00
	20	27	0.00	0.00	0.00	0.00	0.00	0.00
		28	0.00	0.00	0.00	0.00	0.00	0.00
	21	27	0.00	0.00	0.00	0.00	0.00	0.00
		28	0.00	0.00	0.00	0.00	0.00	0.00
	22	27	0.00	0.00	0.00	0.00	0.00	0.00
		28	0.00	0.00	0.00	0.00	0.00	0.00
	23	27	0.00	0.00	0.00	0.00	0.00	0.00
		28	0.00	0.00	0.00	0.00	0.00	0.00
	24	27	0.00	0.00	0.00	0.00	0.00	0.00
		28	0.00	0.00	0.00	0.00	0.00	0.00
	25	27	0.00	0.00	0.00	0.00	0.00	0.00
		28	0.00	0.00	0.00	0.00	0.00	0.00
	26	27	0.00	0.00	0.00	0.00	0.00	0.00
		28	0.00	0.00	0.00	0.00	0.00	0.00
	27	27	0.00	0.00	0.00	0.00	0.00	0.00
		28	0.00	0.00	0.00	0.00	0.00	0.00
	28	27	0.00	0.00	0.00	0.00	0.00	0.00
		28	0.00	0.00	0.00	0.00	0.00	0.00
	29	27	0.00	0.00	0.00	0.00	0.00	0.00
		28	0.00	0.00	0.00	0.00	0.00	0.00
	30	27	0.00	0.00	0.00	0.00	0.00	0.00
		28	0.00	0.00	0.00	0.00	0.00	0.00

MEMBER END FORCES STRUCTURE TYPE = PLANE

ALL UNITS ARE -- KIP FEET (LOCAL)

MEMBER	LOAD	JT	AXIAL	SHEAR-Y	SHEAR-Z	TORSION	MOM-Y	MOM-Z
	31	27	0.00	0.00	0.00	0.00	0.00	0.00
		28	0.00	0.00	0.00	0.00	0.00	0.00
	32	27	0.00	0.00	0.00	0.00	0.00	0.00
		28	0.00	0.00	0.00	0.00	0.00	0.00
	33	27	0.00	0.00	0.00	0.00	0.00	0.00
		28	0.00	0.00	0.00	0.00	0.00	0.00
	34	27	0.00	0.00	0.00	0.00	0.00	0.00
		28	0.00	0.00	0.00	0.00	0.00	0.00
	35	27	0.00	0.00	0.00	0.00	0.00	0.00
		28	0.00	0.00	0.00	0.00	0.00	0.00
	36	27	0.00	0.00	0.00	0.00	0.00	0.00
		28	0.00	0.00	0.00	0.00	0.00	0.00
	37	27	0.00	0.00	0.00	0.00	0.00	0.00
		28	0.00	0.00	0.00	0.00	0.00	0.00
	38	27	0.00	0.00	0.00	0.00	0.00	0.00
		28	0.00	0.00	0.00	0.00	0.00	0.00
	39	27	0.00	0.00	0.00	0.00	0.00	0.00
		28	0.00	0.00	0.00	0.00	0.00	0.00
	40	27	0.00	0.00	0.00	0.00	0.00	0.00
		28	0.00	0.00	0.00	0.00	0.00	0.00
	41	27	0.00	0.00	0.00	0.00	0.00	0.00
		28	0.00	0.00	0.00	0.00	0.00	0.00
	42	27	0.00	0.00	0.00	0.00	0.00	0.00
		28	0.00	0.00	0.00	0.00	0.00	0.00
	43	27	0.00	0.00	0.00	0.00	0.00	0.00
		28	0.00	0.00	0.00	0.00	0.00	0.00
	44	27	0.00	0.00	0.00	0.00	0.00	0.00
		28	0.00	0.00	0.00	0.00	0.00	0.00
	45	27	0.00	0.00	0.00	0.00	0.00	0.00
		28	0.00	0.00	0.00	0.00	0.00	0.00
	46	27	0.00	0.00	0.00	0.00	0.00	0.00
		28	0.00	0.00	0.00	0.00	0.00	0.00
	47	27	0.00	0.00	0.00	0.00	0.00	0.00
		28	0.00	0.00	0.00	0.00	0.00	0.00
	48	27	0.00	0.00	0.00	0.00	0.00	0.00
		28	0.00	0.00	0.00	0.00	0.00	0.00
	49	27	0.00	0.00	0.00	0.00	0.00	0.00
		28	0.00	0.00	0.00	0.00	0.00	0.00
	50	27	0.00	0.00	0.00	0.00	0.00	0.00
		28	0.00	0.00	0.00	0.00	0.00	0.00
	51	27	0.00	0.00	0.00	0.00	0.00	0.00
		28	0.00	0.00	0.00	0.00	0.00	0.00
	52	27	0.00	0.00	0.00	0.00	0.00	0.00
		28	0.00	0.00	0.00	0.00	0.00	0.00
	53	27	0.00	0.00	0.00	0.00	0.00	0.00
		28	0.00	0.00	0.00	0.00	0.00	0.00

MEMBER END FORCES STRUCTURE TYPE = PLANE

ALL UNITS ARE -- KIP FEET (LOCAL)

MEMBER	LOAD	JT	AXIAL	SHEAR-Y	SHEAR-Z	TORSION	MOM-Y	MOM-Z
	54	27	0.00	0.00	0.00	0.00	0.00	0.00
		28	0.00	0.00	0.00	0.00	0.00	0.00
	55	27	0.00	0.00	0.00	0.00	0.00	0.00
		28	0.00	0.00	0.00	0.00	0.00	0.00
	56	27	0.00	0.00	0.00	0.00	0.00	0.00
		28	0.00	0.00	0.00	0.00	0.00	0.00
	57	27	0.00	0.00	0.00	0.00	0.00	0.00
		28	0.00	0.00	0.00	0.00	0.00	0.00
	58	27	0.00	0.00	0.00	0.00	0.00	0.00
		28	0.00	0.00	0.00	0.00	0.00	0.00
	59	27	0.00	0.00	0.00	0.00	0.00	0.00
		28	0.00	0.00	0.00	0.00	0.00	0.00
	60	27	0.00	0.00	0.00	0.00	0.00	0.00
		28	0.00	0.00	0.00	0.00	0.00	0.00
	61	27	0.00	0.00	0.00	0.00	0.00	0.00
		28	0.00	0.00	0.00	0.00	0.00	0.00
	62	27	0.00	0.00	0.00	0.00	0.00	0.00
		28	0.00	0.00	0.00	0.00	0.00	0.00
	63	27	0.00	0.00	0.00	0.00	0.00	0.00
		28	0.00	0.00	0.00	0.00	0.00	0.00
	64	27	0.00	0.00	0.00	0.00	0.00	0.00
		28	0.00	0.00	0.00	0.00	0.00	0.00
	65	27	0.00	0.00	0.00	0.00	0.00	0.00
		28	0.00	0.00	0.00	0.00	0.00	0.00
	66	27	0.00	0.00	0.00	0.00	0.00	0.00
		28	0.00	0.00	0.00	0.00	0.00	0.00
28	1	28	0.00	2.13	0.00	0.00	0.00	0.53
		29	0.00	-0.71	0.00	0.00	0.00	0.18
	2	28	0.00	0.00	0.00	0.00	0.00	0.00
		29	0.00	0.00	0.00	0.00	0.00	0.00
	3	28	0.00	0.00	0.00	0.00	0.00	0.00
		29	0.00	0.00	0.00	0.00	0.00	0.00
	4	28	0.00	0.00	0.00	0.00	0.00	0.00
		29	0.00	0.00	0.00	0.00	0.00	0.00
	5	28	0.00	0.00	0.00	0.00	0.00	0.00
		29	0.00	0.00	0.00	0.00	0.00	0.00
	6	28	0.00	0.00	0.00	0.00	0.00	0.00
		29	0.00	0.00	0.00	0.00	0.00	0.00
	7	28	0.00	0.00	0.00	0.00	0.00	0.00
		29	0.00	0.00	0.00	0.00	0.00	0.00
	8	28	0.00	0.00	0.00	0.00	0.00	0.00
		29	0.00	0.00	0.00	0.00	0.00	0.00
	9	28	0.00	0.00	0.00	0.00	0.00	0.00
		29	0.00	0.00	0.00	0.00	0.00	0.00

MEMBER END FORCES STRUCTURE TYPE = PLANE

ALL UNITS ARE -- KIP FEET (LOCAL)

MEMBER	LOAD	JT	AXIAL	SHEAR-Y	SHEAR-Z	TORSION	MOM-Y	MOM-Z
	10	28	0.00	0.00	0.00	0.00	0.00	0.00
		29	0.00	0.00	0.00	0.00	0.00	0.00
	11	28	0.00	0.00	0.00	0.00	0.00	0.00
		29	0.00	0.00	0.00	0.00	0.00	0.00
	12	28	0.00	0.00	0.00	0.00	0.00	0.00
		29	0.00	0.00	0.00	0.00	0.00	0.00
	13	28	0.00	0.00	0.00	0.00	0.00	0.00
		29	0.00	0.00	0.00	0.00	0.00	0.00
	14	28	0.00	0.00	0.00	0.00	0.00	0.00
		29	0.00	0.00	0.00	0.00	0.00	0.00
	15	28	0.00	0.00	0.00	0.00	0.00	0.00
		29	0.00	0.00	0.00	0.00	0.00	0.00
	16	28	0.00	0.00	0.00	0.00	0.00	0.00
		29	0.00	0.00	0.00	0.00	0.00	0.00
	17	28	0.00	0.00	0.00	0.00	0.00	0.00
		29	0.00	0.00	0.00	0.00	0.00	0.00
	18	28	0.00	0.00	0.00	0.00	0.00	0.00
		29	0.00	0.00	0.00	0.00	0.00	0.00
	19	28	0.00	0.00	0.00	0.00	0.00	0.00
		29	0.00	0.00	0.00	0.00	0.00	0.00
	20	28	0.00	0.00	0.00	0.00	0.00	0.00
		29	0.00	0.00	0.00	0.00	0.00	0.00
	21	28	0.00	0.00	0.00	0.00	0.00	0.00
		29	0.00	0.00	0.00	0.00	0.00	0.00
	22	28	0.00	0.00	0.00	0.00	0.00	0.00
		29	0.00	0.00	0.00	0.00	0.00	0.00
	23	28	0.00	0.00	0.00	0.00	0.00	0.00
		29	0.00	0.00	0.00	0.00	0.00	0.00
	24	28	0.00	0.00	0.00	0.00	0.00	0.00
		29	0.00	0.00	0.00	0.00	0.00	0.00
	25	28	0.00	0.00	0.00	0.00	0.00	0.00
		29	0.00	0.00	0.00	0.00	0.00	0.00
	26	28	0.00	0.00	0.00	0.00	0.00	0.00
		29	0.00	0.00	0.00	0.00	0.00	0.00
	27	28	0.00	0.00	0.00	0.00	0.00	0.00
		29	0.00	0.00	0.00	0.00	0.00	0.00
	28	28	0.00	0.00	0.00	0.00	0.00	0.00
		29	0.00	0.00	0.00	0.00	0.00	0.00
	29	28	0.00	0.00	0.00	0.00	0.00	0.00
		29	0.00	0.00	0.00	0.00	0.00	0.00
	30	28	0.00	0.00	0.00	0.00	0.00	0.00
		29	0.00	0.00	0.00	0.00	0.00	0.00
	31	28	0.00	0.00	0.00	0.00	0.00	0.00
		29	0.00	0.00	0.00	0.00	0.00	0.00
	32	28	0.00	0.00	0.00	0.00	0.00	0.00
		29	0.00	0.00	0.00	0.00	0.00	0.00

MEMBER END FORCES STRUCTURE TYPE = PLANE

ALL UNITS ARE -- KIP FEET (LOCAL)

MEMBER	LOAD	JT	AXIAL	SHEAR-Y	SHEAR-Z	TORSION	MOM-Y	MOM-Z
	33	28	0.00	0.00	0.00	0.00	0.00	0.00
		29	0.00	0.00	0.00	0.00	0.00	0.00
	34	28	0.00	0.00	0.00	0.00	0.00	0.00
		29	0.00	0.00	0.00	0.00	0.00	0.00
	35	28	0.00	0.00	0.00	0.00	0.00	0.00
		29	0.00	0.00	0.00	0.00	0.00	0.00
	36	28	0.00	0.00	0.00	0.00	0.00	0.00
		29	0.00	0.00	0.00	0.00	0.00	0.00
	37	28	0.00	0.00	0.00	0.00	0.00	0.00
		29	0.00	0.00	0.00	0.00	0.00	0.00
	38	28	0.00	0.00	0.00	0.00	0.00	0.00
		29	0.00	0.00	0.00	0.00	0.00	0.00
	39	28	0.00	0.00	0.00	0.00	0.00	0.00
		29	0.00	0.00	0.00	0.00	0.00	0.00
	40	28	0.00	0.00	0.00	0.00	0.00	0.00
		29	0.00	0.00	0.00	0.00	0.00	0.00
	41	28	0.00	0.00	0.00	0.00	0.00	0.00
		29	0.00	0.00	0.00	0.00	0.00	0.00
	42	28	0.00	0.00	0.00	0.00	0.00	0.00
		29	0.00	0.00	0.00	0.00	0.00	0.00
	43	28	0.00	0.00	0.00	0.00	0.00	0.00
		29	0.00	0.00	0.00	0.00	0.00	0.00
	44	28	0.00	0.00	0.00	0.00	0.00	0.00
		29	0.00	0.00	0.00	0.00	0.00	0.00
	45	28	0.00	0.00	0.00	0.00	0.00	0.00
		29	0.00	0.00	0.00	0.00	0.00	0.00
	46	28	0.00	0.00	0.00	0.00	0.00	0.00
		29	0.00	0.00	0.00	0.00	0.00	0.00
	47	28	0.00	0.00	0.00	0.00	0.00	0.00
		29	0.00	0.00	0.00	0.00	0.00	0.00
	48	28	0.00	0.00	0.00	0.00	0.00	0.00
		29	0.00	0.00	0.00	0.00	0.00	0.00
	49	28	0.00	0.00	0.00	0.00	0.00	0.00
		29	0.00	0.00	0.00	0.00	0.00	0.00
	50	28	0.00	0.00	0.00	0.00	0.00	0.00
		29	0.00	0.00	0.00	0.00	0.00	0.00
	51	28	0.00	0.00	0.00	0.00	0.00	0.00
		29	0.00	0.00	0.00	0.00	0.00	0.00
	52	28	0.00	0.00	0.00	0.00	0.00	0.00
		29	0.00	0.00	0.00	0.00	0.00	0.00
	53	28	0.00	0.00	0.00	0.00	0.00	0.00
		29	0.00	0.00	0.00	0.00	0.00	0.00
	54	28	0.00	0.00	0.00	0.00	0.00	0.00
		29	0.00	0.00	0.00	0.00	0.00	0.00
	55	28	0.00	0.00	0.00	0.00	0.00	0.00
		29	0.00	0.00	0.00	0.00	0.00	0.00

MEMBER END FORCES STRUCTURE TYPE = PLANE

ALL UNITS ARE -- KIP FEET (LOCAL)

MEMBER	LOAD	JT	AXIAL	SHEAR-Y	SHEAR-Z	TORSION	MOM-Y	MOM-Z
	56	28	0.00	0.00	0.00	0.00	0.00	0.00
		29	0.00	0.00	0.00	0.00	0.00	0.00
	57	28	0.00	0.00	0.00	0.00	0.00	0.00
		29	0.00	0.00	0.00	0.00	0.00	0.00
	58	28	0.00	0.00	0.00	0.00	0.00	0.00
		29	0.00	0.00	0.00	0.00	0.00	0.00
	59	28	0.00	0.00	0.00	0.00	0.00	0.00
		29	0.00	0.00	0.00	0.00	0.00	0.00
	60	28	0.00	0.00	0.00	0.00	0.00	0.00
		29	0.00	0.00	0.00	0.00	0.00	0.00
	61	28	0.00	0.00	0.00	0.00	0.00	0.00
		29	0.00	0.00	0.00	0.00	0.00	0.00
	62	28	0.00	0.00	0.00	0.00	0.00	0.00
		29	0.00	0.00	0.00	0.00	0.00	0.00
	63	28	0.00	0.00	0.00	0.00	0.00	0.00
		29	0.00	0.00	0.00	0.00	0.00	0.00
	64	28	0.00	0.00	0.00	0.00	0.00	0.00
		29	0.00	0.00	0.00	0.00	0.00	0.00
	65	28	0.00	0.00	0.00	0.00	0.00	0.00
		29	0.00	0.00	0.00	0.00	0.00	0.00
	66	28	0.00	0.00	0.00	0.00	0.00	0.00
		29	0.00	0.00	0.00	0.00	0.00	0.00
29	1	29	0.00	0.71	0.00	0.00	0.00	-0.18
		30	0.00	2.13	0.00	0.00	0.00	-0.53
	2	29	0.00	0.00	0.00	0.00	0.00	0.00
		30	0.00	0.00	0.00	0.00	0.00	0.00
	3	29	0.00	0.00	0.00	0.00	0.00	0.00
		30	0.00	0.00	0.00	0.00	0.00	0.00
	4	29	0.00	0.00	0.00	0.00	0.00	0.00
		30	0.00	0.00	0.00	0.00	0.00	0.00
	5	29	0.00	0.00	0.00	0.00	0.00	0.00
		30	0.00	0.00	0.00	0.00	0.00	0.00
	6	29	0.00	0.00	0.00	0.00	0.00	0.00
		30	0.00	0.00	0.00	0.00	0.00	0.00
	7	29	0.00	0.00	0.00	0.00	0.00	0.00
		30	0.00	0.00	0.00	0.00	0.00	0.00
	8	29	0.00	0.00	0.00	0.00	0.00	0.00
		30	0.00	0.00	0.00	0.00	0.00	0.00
	9	29	0.00	0.00	0.00	0.00	0.00	0.00
		30	0.00	0.00	0.00	0.00	0.00	0.00
	10	29	0.00	0.00	0.00	0.00	0.00	0.00
		30	0.00	0.00	0.00	0.00	0.00	0.00
	11	29	0.00	0.00	0.00	0.00	0.00	0.00
		30	0.00	0.00	0.00	0.00	0.00	0.00

MEMBER END FORCES STRUCTURE TYPE = PLANE

ALL UNITS ARE -- KIP FEET (LOCAL)

MEMBER	LOAD	JT	AXIAL	SHEAR-Y	SHEAR-Z	TORSION	MOM-Y	MOM-Z
	12	29	0.00	0.00	0.00	0.00	0.00	0.00
		30	0.00	0.00	0.00	0.00	0.00	0.00
	13	29	0.00	0.00	0.00	0.00	0.00	0.00
		30	0.00	0.00	0.00	0.00	0.00	0.00
	14	29	0.00	0.00	0.00	0.00	0.00	0.00
		30	0.00	0.00	0.00	0.00	0.00	0.00
	15	29	0.00	0.00	0.00	0.00	0.00	0.00
		30	0.00	0.00	0.00	0.00	0.00	0.00
	16	29	0.00	0.00	0.00	0.00	0.00	0.00
		30	0.00	0.00	0.00	0.00	0.00	0.00
	17	29	0.00	0.00	0.00	0.00	0.00	0.00
		30	0.00	0.00	0.00	0.00	0.00	0.00
	18	29	0.00	0.00	0.00	0.00	0.00	0.00
		30	0.00	0.00	0.00	0.00	0.00	0.00
	19	29	0.00	0.00	0.00	0.00	0.00	0.00
		30	0.00	0.00	0.00	0.00	0.00	0.00
	20	29	0.00	0.00	0.00	0.00	0.00	0.00
		30	0.00	0.00	0.00	0.00	0.00	0.00
	21	29	0.00	0.00	0.00	0.00	0.00	0.00
		30	0.00	0.00	0.00	0.00	0.00	0.00
	22	29	0.00	0.00	0.00	0.00	0.00	0.00
		30	0.00	0.00	0.00	0.00	0.00	0.00
	23	29	0.00	0.00	0.00	0.00	0.00	0.00
		30	0.00	0.00	0.00	0.00	0.00	0.00
	24	29	0.00	0.00	0.00	0.00	0.00	0.00
		30	0.00	0.00	0.00	0.00	0.00	0.00
	25	29	0.00	0.00	0.00	0.00	0.00	0.00
		30	0.00	0.00	0.00	0.00	0.00	0.00
	26	29	0.00	0.00	0.00	0.00	0.00	0.00
		30	0.00	0.00	0.00	0.00	0.00	0.00
	27	29	0.00	0.00	0.00	0.00	0.00	0.00
		30	0.00	0.00	0.00	0.00	0.00	0.00
	28	29	0.00	0.00	0.00	0.00	0.00	0.00
		30	0.00	0.00	0.00	0.00	0.00	0.00
	29	29	0.00	0.00	0.00	0.00	0.00	0.00
		30	0.00	0.00	0.00	0.00	0.00	0.00
	30	29	0.00	0.00	0.00	0.00	0.00	0.00
		30	0.00	0.00	0.00	0.00	0.00	0.00
	31	29	0.00	0.00	0.00	0.00	0.00	0.00
		30	0.00	0.00	0.00	0.00	0.00	0.00
	32	29	0.00	0.00	0.00	0.00	0.00	0.00
		30	0.00	0.00	0.00	0.00	0.00	0.00
	33	29	0.00	0.00	0.00	0.00	0.00	0.00
		30	0.00	0.00	0.00	0.00	0.00	0.00
	34	29	0.00	0.00	0.00	0.00	0.00	0.00
		30	0.00	0.00	0.00	0.00	0.00	0.00

MEMBER END FORCES STRUCTURE TYPE = PLANE

ALL UNITS ARE -- KIP FEET (LOCAL)

MEMBER	LOAD	JT	AXIAL	SHEAR-Y	SHEAR-Z	TORSION	MOM-Y	MOM-Z
	35	29	0.00	0.00	0.00	0.00	0.00	0.00
		30	0.00	0.00	0.00	0.00	0.00	0.00
	36	29	0.00	0.00	0.00	0.00	0.00	0.00
		30	0.00	0.00	0.00	0.00	0.00	0.00
	37	29	0.00	0.00	0.00	0.00	0.00	0.00
		30	0.00	0.00	0.00	0.00	0.00	0.00
	38	29	0.00	0.00	0.00	0.00	0.00	0.00
		30	0.00	0.00	0.00	0.00	0.00	0.00
	39	29	0.00	0.00	0.00	0.00	0.00	0.00
		30	0.00	0.00	0.00	0.00	0.00	0.00
	40	29	0.00	0.00	0.00	0.00	0.00	0.00
		30	0.00	0.00	0.00	0.00	0.00	0.00
	41	29	0.00	0.00	0.00	0.00	0.00	0.00
		30	0.00	0.00	0.00	0.00	0.00	0.00
	42	29	0.00	0.00	0.00	0.00	0.00	0.00
		30	0.00	0.00	0.00	0.00	0.00	0.00
	43	29	0.00	0.00	0.00	0.00	0.00	0.00
		30	0.00	0.00	0.00	0.00	0.00	0.00
	44	29	0.00	0.00	0.00	0.00	0.00	0.00
		30	0.00	0.00	0.00	0.00	0.00	0.00
	45	29	0.00	0.00	0.00	0.00	0.00	0.00
		30	0.00	0.00	0.00	0.00	0.00	0.00
	46	29	0.00	0.00	0.00	0.00	0.00	0.00
		30	0.00	0.00	0.00	0.00	0.00	0.00
	47	29	0.00	0.00	0.00	0.00	0.00	0.00
		30	0.00	0.00	0.00	0.00	0.00	0.00
	48	29	0.00	0.00	0.00	0.00	0.00	0.00
		30	0.00	0.00	0.00	0.00	0.00	0.00
	49	29	0.00	0.00	0.00	0.00	0.00	0.00
		30	0.00	0.00	0.00	0.00	0.00	0.00
	50	29	0.00	0.00	0.00	0.00	0.00	0.00
		30	0.00	0.00	0.00	0.00	0.00	0.00
	51	29	0.00	0.00	0.00	0.00	0.00	0.00
		30	0.00	0.00	0.00	0.00	0.00	0.00
	52	29	0.00	0.00	0.00	0.00	0.00	0.00
		30	0.00	0.00	0.00	0.00	0.00	0.00
	53	29	0.00	0.00	0.00	0.00	0.00	0.00
		30	0.00	0.00	0.00	0.00	0.00	0.00
	54	29	0.00	0.00	0.00	0.00	0.00	0.00
		30	0.00	0.00	0.00	0.00	0.00	0.00
	55	29	0.00	0.00	0.00	0.00	0.00	0.00
		30	0.00	0.00	0.00	0.00	0.00	0.00
	56	29	0.00	0.00	0.00	0.00	0.00	0.00
		30	0.00	0.00	0.00	0.00	0.00	0.00
	57	29	0.00	0.00	0.00	0.00	0.00	0.00
		30	0.00	0.00	0.00	0.00	0.00	0.00

MEMBER END FORCES STRUCTURE TYPE = PLANE

ALL UNITS ARE -- KIP FEET (LOCAL)

MEMBER	LOAD	JT	AXIAL	SHEAR-Y	SHEAR-Z	TORSION	MOM-Y	MOM-Z
	58	29	0.00	0.00	0.00	0.00	0.00	0.00
		30	0.00	0.00	0.00	0.00	0.00	0.00
	59	29	0.00	0.00	0.00	0.00	0.00	0.00
		30	0.00	0.00	0.00	0.00	0.00	0.00
	60	29	0.00	0.00	0.00	0.00	0.00	0.00
		30	0.00	0.00	0.00	0.00	0.00	0.00
	61	29	0.00	0.00	0.00	0.00	0.00	0.00
		30	0.00	0.00	0.00	0.00	0.00	0.00
	62	29	0.00	0.00	0.00	0.00	0.00	0.00
		30	0.00	0.00	0.00	0.00	0.00	0.00
	63	29	0.00	0.00	0.00	0.00	0.00	0.00
		30	0.00	0.00	0.00	0.00	0.00	0.00
	64	29	0.00	0.00	0.00	0.00	0.00	0.00
		30	0.00	0.00	0.00	0.00	0.00	0.00
	65	29	0.00	0.00	0.00	0.00	0.00	0.00
		30	0.00	0.00	0.00	0.00	0.00	0.00
	66	29	0.00	0.00	0.00	0.00	0.00	0.00
		30	0.00	0.00	0.00	0.00	0.00	0.00
30	1	30	0.00	22.68	0.00	0.00	0.00	60.48
		31	0.00	-19.84	0.00	0.00	0.00	-39.22
	2	30	0.00	97.31	0.00	0.00	0.00	350.50
		31	0.00	-97.31	0.00	0.00	0.00	-253.19
	3	30	0.00	27.93	0.00	0.00	0.00	100.61
		31	0.00	-27.93	0.00	0.00	0.00	-72.68
	4	30	0.00	0.00	0.00	0.00	0.00	0.00
		31	0.00	0.00	0.00	0.00	0.00	0.00
	5	30	0.00	0.00	0.00	0.00	0.00	0.00
		31	0.00	0.00	0.00	0.00	0.00	0.00
	6	30	0.00	0.00	0.00	0.00	0.00	0.00
		31	0.00	0.00	0.00	0.00	0.00	0.00
	7	30	0.00	0.00	0.00	0.00	0.00	0.00
		31	0.00	0.00	0.00	0.00	0.00	0.00
	8	30	0.00	0.00	0.00	0.00	0.00	0.00
		31	0.00	0.00	0.00	0.00	0.00	0.00
	9	30	0.00	0.00	0.00	0.00	0.00	0.00
		31	0.00	0.00	0.00	0.00	0.00	0.00
	10	30	0.00	0.00	0.00	0.00	0.00	0.00
		31	0.00	0.00	0.00	0.00	0.00	0.00
	11	30	0.00	0.00	0.00	0.00	0.00	0.00
		31	0.00	0.00	0.00	0.00	0.00	0.00
	12	30	0.00	0.00	0.00	0.00	0.00	0.00
		31	0.00	0.00	0.00	0.00	0.00	0.00
	13	30	0.00	0.00	0.00	0.00	0.00	0.00
		31	0.00	0.00	0.00	0.00	0.00	0.00

MEMBER END FORCES STRUCTURE TYPE = PLANE

ALL UNITS ARE -- KIP FEET (LOCAL)

MEMBER	LOAD	JT	AXIAL	SHEAR-Y	SHEAR-Z	TORSION	MOM-Y	MOM-Z
	14	30	0.00	0.00	0.00	0.00	0.00	0.00
		31	0.00	0.00	0.00	0.00	0.00	0.00
	15	30	0.00	0.00	0.00	0.00	0.00	0.00
		31	0.00	0.00	0.00	0.00	0.00	0.00
	16	30	0.00	0.00	0.00	0.00	0.00	0.00
		31	0.00	0.00	0.00	0.00	0.00	0.00
	17	30	0.00	0.00	0.00	0.00	0.00	0.00
		31	0.00	0.00	0.00	0.00	0.00	0.00
	18	30	0.00	0.00	0.00	0.00	0.00	0.00
		31	0.00	0.00	0.00	0.00	0.00	0.00
	19	30	0.00	0.00	0.00	0.00	0.00	0.00
		31	0.00	0.00	0.00	0.00	0.00	0.00
	20	30	0.00	0.00	0.00	0.00	0.00	0.00
		31	0.00	0.00	0.00	0.00	0.00	0.00
	21	30	0.00	0.00	0.00	0.00	0.00	0.00
		31	0.00	0.00	0.00	0.00	0.00	0.00
	22	30	0.00	0.00	0.00	0.00	0.00	0.00
		31	0.00	0.00	0.00	0.00	0.00	0.00
	23	30	0.00	0.00	0.00	0.00	0.00	0.00
		31	0.00	0.00	0.00	0.00	0.00	0.00
	24	30	0.00	0.00	0.00	0.00	0.00	0.00
		31	0.00	0.00	0.00	0.00	0.00	0.00
	25	30	0.00	0.00	0.00	0.00	0.00	0.00
		31	0.00	0.00	0.00	0.00	0.00	0.00
	26	30	0.00	0.00	0.00	0.00	0.00	0.00
		31	0.00	0.00	0.00	0.00	0.00	0.00
	27	30	0.00	0.00	0.00	0.00	0.00	0.00
		31	0.00	0.00	0.00	0.00	0.00	0.00
	28	30	0.00	0.00	0.00	0.00	0.00	0.00
		31	0.00	0.00	0.00	0.00	0.00	0.00
	29	30	0.00	0.00	0.00	0.00	0.00	0.00
		31	0.00	0.00	0.00	0.00	0.00	0.00
	30	30	0.00	0.00	0.00	0.00	0.00	0.00
		31	0.00	0.00	0.00	0.00	0.00	0.00
	31	30	0.00	0.00	0.00	0.00	0.00	0.00
		31	0.00	0.00	0.00	0.00	0.00	0.00
	32	30	0.00	0.00	0.00	0.00	0.00	0.00
		31	0.00	0.00	0.00	0.00	0.00	0.00
	33	30	0.00	0.00	0.00	0.00	0.00	0.00
		31	0.00	0.00	0.00	0.00	0.00	0.00
	34	30	0.00	0.00	0.00	0.00	0.00	0.00
		31	0.00	0.00	0.00	0.00	0.00	0.00
	35	30	0.00	0.00	0.00	0.00	0.00	0.00
		31	0.00	0.00	0.00	0.00	0.00	0.00
	36	30	0.00	0.00	0.00	0.00	0.00	0.00
		31	0.00	0.00	0.00	0.00	0.00	0.00

MEMBER END FORCES STRUCTURE TYPE = PLANE

ALL UNITS ARE -- KIP FEET (LOCAL)

MEMBER	LOAD	JT	AXIAL	SHEAR-Y	SHEAR-Z	TORSION	MOM-Y	MOM-Z
	37	30	0.00	0.00	0.00	0.00	0.00	0.00
		31	0.00	0.00	0.00	0.00	0.00	0.00
	38	30	0.00	0.00	0.00	0.00	0.00	0.00
		31	0.00	0.00	0.00	0.00	0.00	0.00
	39	30	0.00	0.00	0.00	0.00	0.00	0.00
		31	0.00	0.00	0.00	0.00	0.00	0.00
	40	30	0.00	0.00	0.00	0.00	0.00	0.00
		31	0.00	0.00	0.00	0.00	0.00	0.00
	41	30	0.00	0.00	0.00	0.00	0.00	0.00
		31	0.00	0.00	0.00	0.00	0.00	0.00
	42	30	0.00	0.00	0.00	0.00	0.00	0.00
		31	0.00	0.00	0.00	0.00	0.00	0.00
	43	30	0.00	0.00	0.00	0.00	0.00	0.00
		31	0.00	0.00	0.00	0.00	0.00	0.00
	44	30	0.00	0.00	0.00	0.00	0.00	0.00
		31	0.00	0.00	0.00	0.00	0.00	0.00
	45	30	0.00	0.00	0.00	0.00	0.00	0.00
		31	0.00	0.00	0.00	0.00	0.00	0.00
	46	30	0.00	98.86	0.00	0.00	0.00	339.28
		31	0.00	-98.86	0.00	0.00	0.00	-240.42
	47	30	0.00	25.81	0.00	0.00	0.00	88.67
		31	0.00	-25.81	0.00	0.00	0.00	-62.86
	48	30	0.00	32.03	0.00	0.00	0.00	109.93
		31	0.00	-32.03	0.00	0.00	0.00	-77.90
	49	30	0.00	45.31	0.00	0.00	0.00	155.62
		31	0.00	-45.31	0.00	0.00	0.00	-110.31
	50	30	0.00	50.10	0.00	0.00	0.00	171.90
		31	0.00	-50.10	0.00	0.00	0.00	-121.80
	51	30	0.00	34.80	0.00	0.00	0.00	119.43
		31	0.00	-34.80	0.00	0.00	0.00	-84.62
	52	30	0.00	39.68	0.00	0.00	0.00	136.16
		31	0.00	-39.68	0.00	0.00	0.00	-96.49
	53	30	0.00	44.55	0.00	0.00	0.00	152.90
		31	0.00	-44.55	0.00	0.00	0.00	-108.35
	54	30	0.00	50.10	0.00	0.00	0.00	171.90
		31	0.00	-50.10	0.00	0.00	0.00	-121.80
	55	30	0.00	49.43	0.00	0.00	0.00	169.64
		31	0.00	-49.43	0.00	0.00	0.00	-120.21
	56	30	0.00	48.75	0.00	0.00	0.00	167.38
		31	0.00	-48.75	0.00	0.00	0.00	-118.63
	57	30	0.00	66.83	0.00	0.00	0.00	229.35
		31	0.00	-66.83	0.00	0.00	0.00	-162.52
	58	30	0.00	80.11	0.00	0.00	0.00	275.05
		31	0.00	-80.11	0.00	0.00	0.00	-194.94
	59	30	0.00	73.13	0.00	0.00	0.00	251.07
		31	0.00	-73.13	0.00	0.00	0.00	-177.94

MEMBER END FORCES STRUCTURE TYPE = PLANE

ALL UNITS ARE -- KIP FEET (LOCAL)

MEMBER	LOAD	JT	AXIAL	SHEAR-Y	SHEAR-Z	TORSION	MOM-Y	MOM-Z
	60	30	0.00	96.08	0.00	0.00	0.00	329.78
		31	0.00	-96.08	0.00	0.00	0.00	-233.70
	61	30	0.00	125.33	0.00	0.00	0.00	430.21
		31	0.00	-125.33	0.00	0.00	0.00	-304.88
	62	30	0.00	36.90	0.00	0.00	0.00	126.66
		31	0.00	-36.90	0.00	0.00	0.00	-89.76
	63	30	0.00	55.73	0.00	0.00	0.00	191.36
		31	0.00	-55.73	0.00	0.00	0.00	-135.63
	64	30	0.00	26.48	0.00	0.00	0.00	90.93
		31	0.00	-26.48	0.00	0.00	0.00	-64.45
	65	30	0.00	119.79	0.00	0.00	0.00	411.21
		31	0.00	-119.79	0.00	0.00	0.00	-291.43
	66	30	0.00	75.91	0.00	0.00	0.00	260.57
		31	0.00	-75.91	0.00	0.00	0.00	-184.66
31	1	31	0.00	19.84	0.00	0.00	0.00	39.22
		32	0.00	-17.01	0.00	0.00	0.00	-20.79
	2	31	0.00	97.31	0.00	0.00	0.00	253.19
		32	0.00	-97.31	0.00	0.00	0.00	-155.88
	3	31	0.00	27.93	0.00	0.00	0.00	72.68
		32	0.00	-27.93	0.00	0.00	0.00	-44.74
	4	31	0.00	0.00	0.00	0.00	0.00	0.00
		32	0.00	0.00	0.00	0.00	0.00	0.00
	5	31	0.00	0.00	0.00	0.00	0.00	0.00
		32	0.00	0.00	0.00	0.00	0.00	0.00
	6	31	0.00	0.00	0.00	0.00	0.00	0.00
		32	0.00	0.00	0.00	0.00	0.00	0.00
	7	31	0.00	0.00	0.00	0.00	0.00	0.00
		32	0.00	0.00	0.00	0.00	0.00	0.00
	8	31	0.00	0.00	0.00	0.00	0.00	0.00
		32	0.00	0.00	0.00	0.00	0.00	0.00
	9	31	0.00	0.00	0.00	0.00	0.00	0.00
		32	0.00	0.00	0.00	0.00	0.00	0.00
	10	31	0.00	0.00	0.00	0.00	0.00	0.00
		32	0.00	0.00	0.00	0.00	0.00	0.00
	11	31	0.00	0.00	0.00	0.00	0.00	0.00
		32	0.00	0.00	0.00	0.00	0.00	0.00
	12	31	0.00	0.00	0.00	0.00	0.00	0.00
		32	0.00	0.00	0.00	0.00	0.00	0.00
	13	31	0.00	0.00	0.00	0.00	0.00	0.00
		32	0.00	0.00	0.00	0.00	0.00	0.00
	14	31	0.00	0.00	0.00	0.00	0.00	0.00
		32	0.00	0.00	0.00	0.00	0.00	0.00
	15	31	0.00	0.00	0.00	0.00	0.00	0.00
		32	0.00	0.00	0.00	0.00	0.00	0.00

MEMBER END FORCES STRUCTURE TYPE = PLANE

ALL UNITS ARE -- KIP FEET (LOCAL)

MEMBER	LOAD	JT	AXIAL	SHEAR-Y	SHEAR-Z	TORSION	MOM-Y	MOM-Z
	16	31	0.00	0.00	0.00	0.00	0.00	0.00
		32	0.00	0.00	0.00	0.00	0.00	0.00
	17	31	0.00	0.00	0.00	0.00	0.00	0.00
		32	0.00	0.00	0.00	0.00	0.00	0.00
	18	31	0.00	0.00	0.00	0.00	0.00	0.00
		32	0.00	0.00	0.00	0.00	0.00	0.00
	19	31	0.00	0.00	0.00	0.00	0.00	0.00
		32	0.00	0.00	0.00	0.00	0.00	0.00
	20	31	0.00	0.00	0.00	0.00	0.00	0.00
		32	0.00	0.00	0.00	0.00	0.00	0.00
	21	31	0.00	0.00	0.00	0.00	0.00	0.00
		32	0.00	0.00	0.00	0.00	0.00	0.00
	22	31	0.00	0.00	0.00	0.00	0.00	0.00
		32	0.00	0.00	0.00	0.00	0.00	0.00
	23	31	0.00	0.00	0.00	0.00	0.00	0.00
		32	0.00	0.00	0.00	0.00	0.00	0.00
	24	31	0.00	0.00	0.00	0.00	0.00	0.00
		32	0.00	0.00	0.00	0.00	0.00	0.00
	25	31	0.00	0.00	0.00	0.00	0.00	0.00
		32	0.00	0.00	0.00	0.00	0.00	0.00
	26	31	0.00	0.00	0.00	0.00	0.00	0.00
		32	0.00	0.00	0.00	0.00	0.00	0.00
	27	31	0.00	0.00	0.00	0.00	0.00	0.00
		32	0.00	0.00	0.00	0.00	0.00	0.00
	28	31	0.00	0.00	0.00	0.00	0.00	0.00
		32	0.00	0.00	0.00	0.00	0.00	0.00
	29	31	0.00	0.00	0.00	0.00	0.00	0.00
		32	0.00	0.00	0.00	0.00	0.00	0.00
	30	31	0.00	0.00	0.00	0.00	0.00	0.00
		32	0.00	0.00	0.00	0.00	0.00	0.00
	31	31	0.00	0.00	0.00	0.00	0.00	0.00
		32	0.00	0.00	0.00	0.00	0.00	0.00
	32	31	0.00	0.00	0.00	0.00	0.00	0.00
		32	0.00	0.00	0.00	0.00	0.00	0.00
	33	31	0.00	0.00	0.00	0.00	0.00	0.00
		32	0.00	0.00	0.00	0.00	0.00	0.00
	34	31	0.00	0.00	0.00	0.00	0.00	0.00
		32	0.00	0.00	0.00	0.00	0.00	0.00
	35	31	0.00	0.00	0.00	0.00	0.00	0.00
		32	0.00	0.00	0.00	0.00	0.00	0.00
	36	31	0.00	0.00	0.00	0.00	0.00	0.00
		32	0.00	0.00	0.00	0.00	0.00	0.00
	37	31	0.00	0.00	0.00	0.00	0.00	0.00
		32	0.00	0.00	0.00	0.00	0.00	0.00
	38	31	0.00	0.00	0.00	0.00	0.00	0.00
		32	0.00	0.00	0.00	0.00	0.00	0.00

MEMBER END FORCES STRUCTURE TYPE = PLANE

ALL UNITS ARE -- KIP FEET (LOCAL)

MEMBER	LOAD	JT	AXIAL	SHEAR-Y	SHEAR-Z	TORSION	MOM-Y	MOM-Z
	39	31	0.00	0.00	0.00	0.00	0.00	0.00
		32	0.00	0.00	0.00	0.00	0.00	0.00
	40	31	0.00	0.00	0.00	0.00	0.00	0.00
		32	0.00	0.00	0.00	0.00	0.00	0.00
	41	31	0.00	0.00	0.00	0.00	0.00	0.00
		32	0.00	0.00	0.00	0.00	0.00	0.00
	42	31	0.00	0.00	0.00	0.00	0.00	0.00
		32	0.00	0.00	0.00	0.00	0.00	0.00
	43	31	0.00	0.00	0.00	0.00	0.00	0.00
		32	0.00	0.00	0.00	0.00	0.00	0.00
	44	31	0.00	0.00	0.00	0.00	0.00	0.00
		32	0.00	0.00	0.00	0.00	0.00	0.00
	45	31	0.00	0.00	0.00	0.00	0.00	0.00
		32	0.00	0.00	0.00	0.00	0.00	0.00
	46	31	0.00	98.86	0.00	0.00	0.00	240.42
		32	0.00	-98.86	0.00	0.00	0.00	-141.57
	47	31	0.00	25.81	0.00	0.00	0.00	62.86
		32	0.00	-25.81	0.00	0.00	0.00	-37.06
	48	31	0.00	32.03	0.00	0.00	0.00	77.90
		32	0.00	-32.03	0.00	0.00	0.00	-45.87
	49	31	0.00	45.31	0.00	0.00	0.00	110.31
		32	0.00	-45.31	0.00	0.00	0.00	-65.01
	50	31	0.00	50.10	0.00	0.00	0.00	121.80
		32	0.00	-50.10	0.00	0.00	0.00	-71.70
	51	31	0.00	34.80	0.00	0.00	0.00	84.62
		32	0.00	-34.80	0.00	0.00	0.00	-49.82
	52	31	0.00	39.68	0.00	0.00	0.00	96.49
		32	0.00	-39.68	0.00	0.00	0.00	-56.81
	53	31	0.00	44.55	0.00	0.00	0.00	108.35
		32	0.00	-44.55	0.00	0.00	0.00	-63.80
	54	31	0.00	50.10	0.00	0.00	0.00	121.80
		32	0.00	-50.10	0.00	0.00	0.00	-71.70
	55	31	0.00	49.43	0.00	0.00	0.00	120.21
		32	0.00	-49.43	0.00	0.00	0.00	-70.78
	56	31	0.00	48.75	0.00	0.00	0.00	118.63
		32	0.00	-48.75	0.00	0.00	0.00	-69.87
	57	31	0.00	66.83	0.00	0.00	0.00	162.52
		32	0.00	-66.83	0.00	0.00	0.00	-95.70
	58	31	0.00	80.11	0.00	0.00	0.00	194.94
		32	0.00	-80.11	0.00	0.00	0.00	-114.83
	59	31	0.00	73.13	0.00	0.00	0.00	177.94
		32	0.00	-73.13	0.00	0.00	0.00	-104.81
	60	31	0.00	96.08	0.00	0.00	0.00	233.70
		32	0.00	-96.08	0.00	0.00	0.00	-137.62
	61	31	0.00	125.33	0.00	0.00	0.00	304.88
		32	0.00	-125.33	0.00	0.00	0.00	-179.54

MEMBER END FORCES STRUCTURE TYPE = PLANE

ALL UNITS ARE -- KIP FEET (LOCAL)

MEMBER	LOAD	JT	AXIAL	SHEAR-Y	SHEAR-Z	TORSION	MOM-Y	MOM-Z
	62	31	0.00	36.90	0.00	0.00	0.00	89.76
		32	0.00	-36.90	0.00	0.00	0.00	-52.86
	63	31	0.00	55.73	0.00	0.00	0.00	135.63
		32	0.00	-55.73	0.00	0.00	0.00	-79.89
	64	31	0.00	26.48	0.00	0.00	0.00	64.45
		32	0.00	-26.48	0.00	0.00	0.00	-37.97
	65	31	0.00	119.79	0.00	0.00	0.00	291.43
		32	0.00	-119.79	0.00	0.00	0.00	-171.64
	66	31	0.00	75.91	0.00	0.00	0.00	184.66
		32	0.00	-75.91	0.00	0.00	0.00	-108.76
32	1	32	0.00	17.01	0.00	0.00	0.00	20.79
		33	0.00	-14.17	0.00	0.00	0.00	-5.20
	2	32	0.00	97.31	0.00	0.00	0.00	155.88
		33	0.00	-97.31	0.00	0.00	0.00	-58.57
	3	32	0.00	27.93	0.00	0.00	0.00	44.74
		33	0.00	-27.93	0.00	0.00	0.00	-16.81
	4	32	0.00	0.00	0.00	0.00	0.00	0.00
		33	0.00	0.00	0.00	0.00	0.00	0.00
	5	32	0.00	0.00	0.00	0.00	0.00	0.00
		33	0.00	0.00	0.00	0.00	0.00	0.00
	6	32	0.00	0.00	0.00	0.00	0.00	0.00
		33	0.00	0.00	0.00	0.00	0.00	0.00
	7	32	0.00	0.00	0.00	0.00	0.00	0.00
		33	0.00	0.00	0.00	0.00	0.00	0.00
	8	32	0.00	0.00	0.00	0.00	0.00	0.00
		33	0.00	0.00	0.00	0.00	0.00	0.00
	9	32	0.00	0.00	0.00	0.00	0.00	0.00
		33	0.00	0.00	0.00	0.00	0.00	0.00
	10	32	0.00	0.00	0.00	0.00	0.00	0.00
		33	0.00	0.00	0.00	0.00	0.00	0.00
	11	32	0.00	0.00	0.00	0.00	0.00	0.00
		33	0.00	0.00	0.00	0.00	0.00	0.00
	12	32	0.00	0.00	0.00	0.00	0.00	0.00
		33	0.00	0.00	0.00	0.00	0.00	0.00
	13	32	0.00	0.00	0.00	0.00	0.00	0.00
		33	0.00	0.00	0.00	0.00	0.00	0.00
	14	32	0.00	0.00	0.00	0.00	0.00	0.00
		33	0.00	0.00	0.00	0.00	0.00	0.00
	15	32	0.00	0.00	0.00	0.00	0.00	0.00
		33	0.00	0.00	0.00	0.00	0.00	0.00
	16	32	0.00	0.00	0.00	0.00	0.00	0.00
		33	0.00	0.00	0.00	0.00	0.00	0.00
	17	32	0.00	0.00	0.00	0.00	0.00	0.00
		33	0.00	0.00	0.00	0.00	0.00	0.00

MEMBER END FORCES STRUCTURE TYPE = PLANE

ALL UNITS ARE -- KIP FEET (LOCAL)

MEMBER	LOAD	JT	AXIAL	SHEAR-Y	SHEAR-Z	TORSION	MOM-Y	MOM-Z
	18	32	0.00	0.00	0.00	0.00	0.00	0.00
		33	0.00	0.00	0.00	0.00	0.00	0.00
	19	32	0.00	0.00	0.00	0.00	0.00	0.00
		33	0.00	0.00	0.00	0.00	0.00	0.00
	20	32	0.00	0.00	0.00	0.00	0.00	0.00
		33	0.00	0.00	0.00	0.00	0.00	0.00
	21	32	0.00	0.00	0.00	0.00	0.00	0.00
		33	0.00	0.00	0.00	0.00	0.00	0.00
	22	32	0.00	0.00	0.00	0.00	0.00	0.00
		33	0.00	0.00	0.00	0.00	0.00	0.00
	23	32	0.00	0.00	0.00	0.00	0.00	0.00
		33	0.00	0.00	0.00	0.00	0.00	0.00
	24	32	0.00	0.00	0.00	0.00	0.00	0.00
		33	0.00	0.00	0.00	0.00	0.00	0.00
	25	32	0.00	0.00	0.00	0.00	0.00	0.00
		33	0.00	0.00	0.00	0.00	0.00	0.00
	26	32	0.00	0.00	0.00	0.00	0.00	0.00
		33	0.00	0.00	0.00	0.00	0.00	0.00
	27	32	0.00	0.00	0.00	0.00	0.00	0.00
		33	0.00	0.00	0.00	0.00	0.00	0.00
	28	32	0.00	0.00	0.00	0.00	0.00	0.00
		33	0.00	0.00	0.00	0.00	0.00	0.00
	29	32	0.00	0.00	0.00	0.00	0.00	0.00
		33	0.00	0.00	0.00	0.00	0.00	0.00
	30	32	0.00	0.00	0.00	0.00	0.00	0.00
		33	0.00	0.00	0.00	0.00	0.00	0.00
	31	32	0.00	0.00	0.00	0.00	0.00	0.00
		33	0.00	0.00	0.00	0.00	0.00	0.00
	32	32	0.00	0.00	0.00	0.00	0.00	0.00
		33	0.00	0.00	0.00	0.00	0.00	0.00
	33	32	0.00	0.00	0.00	0.00	0.00	0.00
		33	0.00	0.00	0.00	0.00	0.00	0.00
	34	32	0.00	0.00	0.00	0.00	0.00	0.00
		33	0.00	0.00	0.00	0.00	0.00	0.00
	35	32	0.00	0.00	0.00	0.00	0.00	0.00
		33	0.00	0.00	0.00	0.00	0.00	0.00
	36	32	0.00	0.00	0.00	0.00	0.00	0.00
		33	0.00	0.00	0.00	0.00	0.00	0.00
	37	32	0.00	0.00	0.00	0.00	0.00	0.00
		33	0.00	0.00	0.00	0.00	0.00	0.00
	38	32	0.00	0.00	0.00	0.00	0.00	0.00
		33	0.00	0.00	0.00	0.00	0.00	0.00
	39	32	0.00	0.00	0.00	0.00	0.00	0.00
		33	0.00	0.00	0.00	0.00	0.00	0.00
	40	32	0.00	0.00	0.00	0.00	0.00	0.00
		33	0.00	0.00	0.00	0.00	0.00	0.00

MEMBER END FORCES STRUCTURE TYPE = PLANE

ALL UNITS ARE -- KIP FEET (LOCAL)

MEMBER	LOAD	JT	AXIAL	SHEAR-Y	SHEAR-Z	TORSION	MOM-Y	MOM-Z
	41	32	0.00	0.00	0.00	0.00	0.00	0.00
		33	0.00	0.00	0.00	0.00	0.00	0.00
	42	32	0.00	0.00	0.00	0.00	0.00	0.00
		33	0.00	0.00	0.00	0.00	0.00	0.00
	43	32	0.00	0.00	0.00	0.00	0.00	0.00
		33	0.00	0.00	0.00	0.00	0.00	0.00
	44	32	0.00	0.00	0.00	0.00	0.00	0.00
		33	0.00	0.00	0.00	0.00	0.00	0.00
	45	32	0.00	0.00	0.00	0.00	0.00	0.00
		33	0.00	0.00	0.00	0.00	0.00	0.00
	46	32	0.00	98.86	0.00	0.00	0.00	141.57
		33	0.00	-98.86	0.00	0.00	0.00	-42.71
	47	32	0.00	25.81	0.00	0.00	0.00	37.06
		33	0.00	-25.81	0.00	0.00	0.00	-11.25
	48	32	0.00	32.03	0.00	0.00	0.00	45.87
		33	0.00	-32.03	0.00	0.00	0.00	-13.85
	49	32	0.00	45.31	0.00	0.00	0.00	65.01
		33	0.00	-45.31	0.00	0.00	0.00	-19.70
	50	32	0.00	50.10	0.00	0.00	0.00	71.70
		33	0.00	-50.10	0.00	0.00	0.00	-21.60
	51	32	0.00	34.80	0.00	0.00	0.00	49.82
		33	0.00	-34.80	0.00	0.00	0.00	-15.02
	52	32	0.00	39.68	0.00	0.00	0.00	56.81
		33	0.00	-39.68	0.00	0.00	0.00	-17.13
	53	32	0.00	44.55	0.00	0.00	0.00	63.80
		33	0.00	-44.55	0.00	0.00	0.00	-19.25
	54	32	0.00	50.10	0.00	0.00	0.00	71.70
		33	0.00	-50.10	0.00	0.00	0.00	-21.60
	55	32	0.00	49.43	0.00	0.00	0.00	70.78
		33	0.00	-49.43	0.00	0.00	0.00	-21.36
	56	32	0.00	48.75	0.00	0.00	0.00	69.87
		33	0.00	-48.75	0.00	0.00	0.00	-21.12
	57	32	0.00	66.83	0.00	0.00	0.00	95.70
		33	0.00	-66.83	0.00	0.00	0.00	-28.87
	58	32	0.00	80.11	0.00	0.00	0.00	114.83
		33	0.00	-80.11	0.00	0.00	0.00	-34.72
	59	32	0.00	73.13	0.00	0.00	0.00	104.81
		33	0.00	-73.13	0.00	0.00	0.00	-31.67
	60	32	0.00	96.08	0.00	0.00	0.00	137.62
		33	0.00	-96.08	0.00	0.00	0.00	-41.54
	61	32	0.00	125.33	0.00	0.00	0.00	179.54
		33	0.00	-125.33	0.00	0.00	0.00	-54.21
	62	32	0.00	36.90	0.00	0.00	0.00	52.86
		33	0.00	-36.90	0.00	0.00	0.00	-15.96
	63	32	0.00	55.73	0.00	0.00	0.00	79.89
		33	0.00	-55.73	0.00	0.00	0.00	-24.16

MEMBER END FORCES STRUCTURE TYPE = PLANE

ALL UNITS ARE -- KIP FEET (LOCAL)

MEMBER	LOAD	JT	AXIAL	SHEAR-Y	SHEAR-Z	TORSION	MOM-Y	MOM-Z
	64	32	0.00	26.48	0.00	0.00	0.00	37.97
		33	0.00	-26.48	0.00	0.00	0.00	-11.49
	65	32	0.00	119.79	0.00	0.00	0.00	171.64
		33	0.00	-119.79	0.00	0.00	0.00	-51.86
	66	32	0.00	75.91	0.00	0.00	0.00	108.76
		33	0.00	-75.91	0.00	0.00	0.00	-32.85
33	1	33	0.00	14.17	0.00	0.00	0.00	5.20
		34	0.00	-11.34	0.00	0.00	0.00	7.56
	2	33	0.00	97.31	0.00	0.00	0.00	58.57
		34	0.00	-97.31	0.00	0.00	0.00	38.74
	3	33	0.00	27.93	0.00	0.00	0.00	16.81
		34	0.00	-27.93	0.00	0.00	0.00	11.12
	4	33	0.00	0.00	0.00	0.00	0.00	0.00
		34	0.00	0.00	0.00	0.00	0.00	0.00
	5	33	0.00	0.00	0.00	0.00	0.00	0.00
		34	0.00	0.00	0.00	0.00	0.00	0.00
	6	33	0.00	0.00	0.00	0.00	0.00	0.00
		34	0.00	0.00	0.00	0.00	0.00	0.00
	7	33	0.00	0.00	0.00	0.00	0.00	0.00
		34	0.00	0.00	0.00	0.00	0.00	0.00
	8	33	0.00	0.00	0.00	0.00	0.00	0.00
		34	0.00	0.00	0.00	0.00	0.00	0.00
	9	33	0.00	0.00	0.00	0.00	0.00	0.00
		34	0.00	0.00	0.00	0.00	0.00	0.00
	10	33	0.00	0.00	0.00	0.00	0.00	0.00
		34	0.00	0.00	0.00	0.00	0.00	0.00
	11	33	0.00	0.00	0.00	0.00	0.00	0.00
		34	0.00	0.00	0.00	0.00	0.00	0.00
	12	33	0.00	0.00	0.00	0.00	0.00	0.00
		34	0.00	0.00	0.00	0.00	0.00	0.00
	13	33	0.00	0.00	0.00	0.00	0.00	0.00
		34	0.00	0.00	0.00	0.00	0.00	0.00
	14	33	0.00	0.00	0.00	0.00	0.00	0.00
		34	0.00	0.00	0.00	0.00	0.00	0.00
	15	33	0.00	0.00	0.00	0.00	0.00	0.00
		34	0.00	0.00	0.00	0.00	0.00	0.00
	16	33	0.00	0.00	0.00	0.00	0.00	0.00
		34	0.00	0.00	0.00	0.00	0.00	0.00
	17	33	0.00	0.00	0.00	0.00	0.00	0.00
		34	0.00	0.00	0.00	0.00	0.00	0.00
	18	33	0.00	0.00	0.00	0.00	0.00	0.00
		34	0.00	0.00	0.00	0.00	0.00	0.00
	19	33	0.00	0.00	0.00	0.00	0.00	0.00
		34	0.00	0.00	0.00	0.00	0.00	0.00

MEMBER END FORCES STRUCTURE TYPE = PLANE

ALL UNITS ARE -- KIP FEET (LOCAL)

MEMBER	LOAD	JT	AXIAL	SHEAR-Y	SHEAR-Z	TORSION	MOM-Y	MOM-Z
	20	33	0.00	0.00	0.00	0.00	0.00	0.00
		34	0.00	0.00	0.00	0.00	0.00	0.00
	21	33	0.00	0.00	0.00	0.00	0.00	0.00
		34	0.00	0.00	0.00	0.00	0.00	0.00
	22	33	0.00	0.00	0.00	0.00	0.00	0.00
		34	0.00	0.00	0.00	0.00	0.00	0.00
	23	33	0.00	0.00	0.00	0.00	0.00	0.00
		34	0.00	0.00	0.00	0.00	0.00	0.00
	24	33	0.00	0.00	0.00	0.00	0.00	0.00
		34	0.00	0.00	0.00	0.00	0.00	0.00
	25	33	0.00	0.00	0.00	0.00	0.00	0.00
		34	0.00	0.00	0.00	0.00	0.00	0.00
	26	33	0.00	0.00	0.00	0.00	0.00	0.00
		34	0.00	0.00	0.00	0.00	0.00	0.00
	27	33	0.00	0.00	0.00	0.00	0.00	0.00
		34	0.00	0.00	0.00	0.00	0.00	0.00
	28	33	0.00	0.00	0.00	0.00	0.00	0.00
		34	0.00	0.00	0.00	0.00	0.00	0.00
	29	33	0.00	0.00	0.00	0.00	0.00	0.00
		34	0.00	0.00	0.00	0.00	0.00	0.00
	30	33	0.00	0.00	0.00	0.00	0.00	0.00
		34	0.00	0.00	0.00	0.00	0.00	0.00
	31	33	0.00	0.00	0.00	0.00	0.00	0.00
		34	0.00	0.00	0.00	0.00	0.00	0.00
	32	33	0.00	0.00	0.00	0.00	0.00	0.00
		34	0.00	0.00	0.00	0.00	0.00	0.00
	33	33	0.00	0.00	0.00	0.00	0.00	0.00
		34	0.00	0.00	0.00	0.00	0.00	0.00
	34	33	0.00	0.00	0.00	0.00	0.00	0.00
		34	0.00	0.00	0.00	0.00	0.00	0.00
	35	33	0.00	0.00	0.00	0.00	0.00	0.00
		34	0.00	0.00	0.00	0.00	0.00	0.00
	36	33	0.00	0.00	0.00	0.00	0.00	0.00
		34	0.00	0.00	0.00	0.00	0.00	0.00
	37	33	0.00	0.00	0.00	0.00	0.00	0.00
		34	0.00	0.00	0.00	0.00	0.00	0.00
	38	33	0.00	0.00	0.00	0.00	0.00	0.00
		34	0.00	0.00	0.00	0.00	0.00	0.00
	39	33	0.00	0.00	0.00	0.00	0.00	0.00
		34	0.00	0.00	0.00	0.00	0.00	0.00
	40	33	0.00	0.00	0.00	0.00	0.00	0.00
		34	0.00	0.00	0.00	0.00	0.00	0.00
	41	33	0.00	0.00	0.00	0.00	0.00	0.00
		34	0.00	0.00	0.00	0.00	0.00	0.00
	42	33	0.00	0.00	0.00	0.00	0.00	0.00
		34	0.00	0.00	0.00	0.00	0.00	0.00

MEMBER END FORCES STRUCTURE TYPE = PLANE

ALL UNITS ARE -- KIP FEET (LOCAL)

MEMBER	LOAD	JT	AXIAL	SHEAR-Y	SHEAR-Z	TORSION	MOM-Y	MOM-Z
	43	33	0.00	0.00	0.00	0.00	0.00	0.00
		34	0.00	0.00	0.00	0.00	0.00	0.00
	44	33	0.00	0.00	0.00	0.00	0.00	0.00
		34	0.00	0.00	0.00	0.00	0.00	0.00
	45	33	0.00	0.00	0.00	0.00	0.00	0.00
		34	0.00	0.00	0.00	0.00	0.00	0.00
	46	33	0.00	98.86	0.00	0.00	0.00	42.71
		34	0.00	-98.86	0.00	0.00	0.00	56.14
	47	33	0.00	25.81	0.00	0.00	0.00	11.25
		34	0.00	-25.81	0.00	0.00	0.00	14.55
	48	33	0.00	32.03	0.00	0.00	0.00	13.85
		34	0.00	-32.03	0.00	0.00	0.00	18.18
	49	33	0.00	45.31	0.00	0.00	0.00	19.70
		34	0.00	-45.31	0.00	0.00	0.00	25.61
	50	33	0.00	50.10	0.00	0.00	0.00	21.60
		34	0.00	-50.10	0.00	0.00	0.00	28.50
	51	33	0.00	34.80	0.00	0.00	0.00	15.02
		34	0.00	-34.80	0.00	0.00	0.00	19.78
	52	33	0.00	39.68	0.00	0.00	0.00	17.13
		34	0.00	-39.68	0.00	0.00	0.00	22.54
	53	33	0.00	44.55	0.00	0.00	0.00	19.25
		34	0.00	-44.55	0.00	0.00	0.00	25.31
	54	33	0.00	50.10	0.00	0.00	0.00	21.60
		34	0.00	-50.10	0.00	0.00	0.00	28.50
	55	33	0.00	49.43	0.00	0.00	0.00	21.36
		34	0.00	-49.43	0.00	0.00	0.00	28.07
	56	33	0.00	48.75	0.00	0.00	0.00	21.12
		34	0.00	-48.75	0.00	0.00	0.00	27.64
	57	33	0.00	66.83	0.00	0.00	0.00	28.87
		34	0.00	-66.83	0.00	0.00	0.00	37.96
	58	33	0.00	80.11	0.00	0.00	0.00	34.72
		34	0.00	-80.11	0.00	0.00	0.00	45.39
	59	33	0.00	73.13	0.00	0.00	0.00	31.67
		34	0.00	-73.13	0.00	0.00	0.00	41.46
	60	33	0.00	96.08	0.00	0.00	0.00	41.54
		34	0.00	-96.08	0.00	0.00	0.00	54.54
	61	33	0.00	125.33	0.00	0.00	0.00	54.21
		34	0.00	-125.33	0.00	0.00	0.00	71.13
	62	33	0.00	36.90	0.00	0.00	0.00	15.96
		34	0.00	-36.90	0.00	0.00	0.00	20.94
	63	33	0.00	55.73	0.00	0.00	0.00	24.16
		34	0.00	-55.73	0.00	0.00	0.00	31.57
	64	33	0.00	26.48	0.00	0.00	0.00	11.49
		34	0.00	-26.48	0.00	0.00	0.00	14.98
	65	33	0.00	119.79	0.00	0.00	0.00	51.86
		34	0.00	-119.79	0.00	0.00	0.00	67.93

MEMBER END FORCES STRUCTURE TYPE = PLANE

ALL UNITS ARE -- KIP FEET (LOCAL)

MEMBER	LOAD	JT	AXIAL	SHEAR-Y	SHEAR-Z	TORSION	MOM-Y	MOM-Z
	66	33	0.00	75.91	0.00	0.00	0.00	32.85
		34	0.00	-75.91	0.00	0.00	0.00	43.06
34	1	34	0.00	11.34	0.00	0.00	0.00	-7.56
		35	0.00	-8.50	0.00	0.00	0.00	17.48
	2	34	0.00	97.31	0.00	0.00	0.00	-38.74
		35	0.00	-97.31	0.00	0.00	0.00	136.05
	3	34	0.00	27.93	0.00	0.00	0.00	-11.12
		35	0.00	-27.93	0.00	0.00	0.00	39.05
	4	34	0.00	0.00	0.00	0.00	0.00	0.00
		35	0.00	0.00	0.00	0.00	0.00	0.00
	5	34	0.00	0.00	0.00	0.00	0.00	0.00
		35	0.00	0.00	0.00	0.00	0.00	0.00
	6	34	0.00	0.00	0.00	0.00	0.00	0.00
		35	0.00	0.00	0.00	0.00	0.00	0.00
	7	34	0.00	0.00	0.00	0.00	0.00	0.00
		35	0.00	0.00	0.00	0.00	0.00	0.00
	8	34	0.00	0.00	0.00	0.00	0.00	0.00
		35	0.00	0.00	0.00	0.00	0.00	0.00
	9	34	0.00	0.00	0.00	0.00	0.00	0.00
		35	0.00	0.00	0.00	0.00	0.00	0.00
	10	34	0.00	0.00	0.00	0.00	0.00	0.00
		35	0.00	0.00	0.00	0.00	0.00	0.00
	11	34	0.00	0.00	0.00	0.00	0.00	0.00
		35	0.00	0.00	0.00	0.00	0.00	0.00
	12	34	0.00	0.00	0.00	0.00	0.00	0.00
		35	0.00	0.00	0.00	0.00	0.00	0.00
	13	34	0.00	0.00	0.00	0.00	0.00	0.00
		35	0.00	0.00	0.00	0.00	0.00	0.00
	14	34	0.00	0.00	0.00	0.00	0.00	0.00
		35	0.00	0.00	0.00	0.00	0.00	0.00
	15	34	0.00	0.00	0.00	0.00	0.00	0.00
		35	0.00	0.00	0.00	0.00	0.00	0.00
	16	34	0.00	0.00	0.00	0.00	0.00	0.00
		35	0.00	0.00	0.00	0.00	0.00	0.00
	17	34	0.00	0.00	0.00	0.00	0.00	0.00
		35	0.00	0.00	0.00	0.00	0.00	0.00
	18	34	0.00	0.00	0.00	0.00	0.00	0.00
		35	0.00	0.00	0.00	0.00	0.00	0.00
	19	34	0.00	0.00	0.00	0.00	0.00	0.00
		35	0.00	0.00	0.00	0.00	0.00	0.00
	20	34	0.00	0.00	0.00	0.00	0.00	0.00
		35	0.00	0.00	0.00	0.00	0.00	0.00
	21	34	0.00	0.00	0.00	0.00	0.00	0.00
		35	0.00	0.00	0.00	0.00	0.00	0.00

MEMBER END FORCES STRUCTURE TYPE = PLANE

ALL UNITS ARE -- KIP FEET (LOCAL)

MEMBER	LOAD	JT	AXIAL	SHEAR-Y	SHEAR-Z	TORSION	MOM-Y	MOM-Z
	22	34	0.00	0.00	0.00	0.00	0.00	0.00
		35	0.00	0.00	0.00	0.00	0.00	0.00
	23	34	0.00	0.00	0.00	0.00	0.00	0.00
		35	0.00	0.00	0.00	0.00	0.00	0.00
	24	34	0.00	0.00	0.00	0.00	0.00	0.00
		35	0.00	0.00	0.00	0.00	0.00	0.00
	25	34	0.00	0.00	0.00	0.00	0.00	0.00
		35	0.00	0.00	0.00	0.00	0.00	0.00
	26	34	0.00	0.00	0.00	0.00	0.00	0.00
		35	0.00	0.00	0.00	0.00	0.00	0.00
	27	34	0.00	0.00	0.00	0.00	0.00	0.00
		35	0.00	0.00	0.00	0.00	0.00	0.00
	28	34	0.00	0.00	0.00	0.00	0.00	0.00
		35	0.00	0.00	0.00	0.00	0.00	0.00
	29	34	0.00	0.00	0.00	0.00	0.00	0.00
		35	0.00	0.00	0.00	0.00	0.00	0.00
	30	34	0.00	0.00	0.00	0.00	0.00	0.00
		35	0.00	0.00	0.00	0.00	0.00	0.00
	31	34	0.00	0.00	0.00	0.00	0.00	0.00
		35	0.00	0.00	0.00	0.00	0.00	0.00
	32	34	0.00	0.00	0.00	0.00	0.00	0.00
		35	0.00	0.00	0.00	0.00	0.00	0.00
	33	34	0.00	0.00	0.00	0.00	0.00	0.00
		35	0.00	0.00	0.00	0.00	0.00	0.00
	34	34	0.00	0.00	0.00	0.00	0.00	0.00
		35	0.00	0.00	0.00	0.00	0.00	0.00
	35	34	0.00	0.00	0.00	0.00	0.00	0.00
		35	0.00	0.00	0.00	0.00	0.00	0.00
	36	34	0.00	0.00	0.00	0.00	0.00	0.00
		35	0.00	0.00	0.00	0.00	0.00	0.00
	37	34	0.00	0.00	0.00	0.00	0.00	0.00
		35	0.00	0.00	0.00	0.00	0.00	0.00
	38	34	0.00	0.00	0.00	0.00	0.00	0.00
		35	0.00	0.00	0.00	0.00	0.00	0.00
	39	34	0.00	0.00	0.00	0.00	0.00	0.00
		35	0.00	0.00	0.00	0.00	0.00	0.00
	40	34	0.00	0.00	0.00	0.00	0.00	0.00
		35	0.00	0.00	0.00	0.00	0.00	0.00
	41	34	0.00	0.00	0.00	0.00	0.00	0.00
		35	0.00	0.00	0.00	0.00	0.00	0.00
	42	34	0.00	0.00	0.00	0.00	0.00	0.00
		35	0.00	0.00	0.00	0.00	0.00	0.00
	43	34	0.00	0.00	0.00	0.00	0.00	0.00
		35	0.00	0.00	0.00	0.00	0.00	0.00
	44	34	0.00	0.00	0.00	0.00	0.00	0.00
		35	0.00	0.00	0.00	0.00	0.00	0.00

MEMBER END FORCES STRUCTURE TYPE = PLANE

ALL UNITS ARE -- KIP FEET (LOCAL)

MEMBER	LOAD	JT	AXIAL	SHEAR-Y	SHEAR-Z	TORSION	MOM-Y	MOM-Z
	45	34	0.00	0.00	0.00	0.00	0.00	0.00
		35	0.00	0.00	0.00	0.00	0.00	0.00
	46	34	0.00	98.86	0.00	0.00	0.00	-56.14
		35	0.00	-98.86	0.00	0.00	0.00	155.00
	47	34	0.00	25.81	0.00	0.00	0.00	-14.55
		35	0.00	-25.81	0.00	0.00	0.00	40.36
	48	34	0.00	32.03	0.00	0.00	0.00	-18.18
		35	0.00	-32.03	0.00	0.00	0.00	50.21
	49	34	0.00	45.31	0.00	0.00	0.00	-25.61
		35	0.00	-45.31	0.00	0.00	0.00	70.91
	50	34	0.00	50.10	0.00	0.00	0.00	-28.50
		35	0.00	-50.10	0.00	0.00	0.00	78.60
	51	34	0.00	34.80	0.00	0.00	0.00	-19.78
		35	0.00	-34.80	0.00	0.00	0.00	54.58
	52	34	0.00	39.68	0.00	0.00	0.00	-22.54
		35	0.00	-39.68	0.00	0.00	0.00	62.22
	53	34	0.00	44.55	0.00	0.00	0.00	-25.31
		35	0.00	-44.55	0.00	0.00	0.00	69.86
	54	34	0.00	50.10	0.00	0.00	0.00	-28.50
		35	0.00	-50.10	0.00	0.00	0.00	78.60
	55	34	0.00	49.43	0.00	0.00	0.00	-28.07
		35	0.00	-49.43	0.00	0.00	0.00	77.50
	56	34	0.00	48.75	0.00	0.00	0.00	-27.64
		35	0.00	-48.75	0.00	0.00	0.00	76.39
	57	34	0.00	66.83	0.00	0.00	0.00	-37.96
		35	0.00	-66.83	0.00	0.00	0.00	104.79
	58	34	0.00	80.11	0.00	0.00	0.00	-45.39
		35	0.00	-80.11	0.00	0.00	0.00	125.50
	59	34	0.00	73.13	0.00	0.00	0.00	-41.46
		35	0.00	-73.13	0.00	0.00	0.00	114.59
	60	34	0.00	96.08	0.00	0.00	0.00	-54.54
		35	0.00	-96.08	0.00	0.00	0.00	150.62
	61	34	0.00	125.33	0.00	0.00	0.00	-71.13
		35	0.00	-125.33	0.00	0.00	0.00	196.46
	62	34	0.00	36.90	0.00	0.00	0.00	-20.94
		35	0.00	-36.90	0.00	0.00	0.00	57.85
	63	34	0.00	55.73	0.00	0.00	0.00	-31.57
		35	0.00	-55.73	0.00	0.00	0.00	87.30
	64	34	0.00	26.48	0.00	0.00	0.00	-14.98
		35	0.00	-26.48	0.00	0.00	0.00	41.46
	65	34	0.00	119.79	0.00	0.00	0.00	-67.93
		35	0.00	-119.79	0.00	0.00	0.00	187.71
	66	34	0.00	75.91	0.00	0.00	0.00	-43.06
		35	0.00	-75.91	0.00	0.00	0.00	118.96
35	1	35	0.00	8.50	0.00	0.00	0.00	-17.48
		36	0.00	-5.67	0.00	0.00	0.00	24.57

MEMBER END FORCES STRUCTURE TYPE = PLANE

ALL UNITS ARE -- KIP FEET (LOCAL)

MEMBER	LOAD	JT	AXIAL	SHEAR-Y	SHEAR-Z	TORSION	MOM-Y	MOM-Z
	2	35	0.00	97.31	0.00	0.00	0.00	-136.05
		36	0.00	-97.31	0.00	0.00	0.00	233.37
	3	35	0.00	27.93	0.00	0.00	0.00	-39.05
		36	0.00	-27.93	0.00	0.00	0.00	66.99
	4	35	0.00	0.00	0.00	0.00	0.00	0.00
		36	0.00	0.00	0.00	0.00	0.00	0.00
	5	35	0.00	0.00	0.00	0.00	0.00	0.00
		36	0.00	0.00	0.00	0.00	0.00	0.00
	6	35	0.00	0.00	0.00	0.00	0.00	0.00
		36	0.00	0.00	0.00	0.00	0.00	0.00
	7	35	0.00	0.00	0.00	0.00	0.00	0.00
		36	0.00	0.00	0.00	0.00	0.00	0.00
	8	35	0.00	0.00	0.00	0.00	0.00	0.00
		36	0.00	0.00	0.00	0.00	0.00	0.00
	9	35	0.00	0.00	0.00	0.00	0.00	0.00
		36	0.00	0.00	0.00	0.00	0.00	0.00
	10	35	0.00	0.00	0.00	0.00	0.00	0.00
		36	0.00	0.00	0.00	0.00	0.00	0.00
	11	35	0.00	0.00	0.00	0.00	0.00	0.00
		36	0.00	0.00	0.00	0.00	0.00	0.00
	12	35	0.00	0.00	0.00	0.00	0.00	0.00
		36	0.00	0.00	0.00	0.00	0.00	0.00
	13	35	0.00	0.00	0.00	0.00	0.00	0.00
		36	0.00	0.00	0.00	0.00	0.00	0.00
	14	35	0.00	0.00	0.00	0.00	0.00	0.00
		36	0.00	0.00	0.00	0.00	0.00	0.00
	15	35	0.00	0.00	0.00	0.00	0.00	0.00
		36	0.00	0.00	0.00	0.00	0.00	0.00
	16	35	0.00	0.00	0.00	0.00	0.00	0.00
		36	0.00	0.00	0.00	0.00	0.00	0.00
	17	35	0.00	0.00	0.00	0.00	0.00	0.00
		36	0.00	0.00	0.00	0.00	0.00	0.00
	18	35	0.00	0.00	0.00	0.00	0.00	0.00
		36	0.00	0.00	0.00	0.00	0.00	0.00
	19	35	0.00	0.00	0.00	0.00	0.00	0.00
		36	0.00	0.00	0.00	0.00	0.00	0.00
	20	35	0.00	0.00	0.00	0.00	0.00	0.00
		36	0.00	0.00	0.00	0.00	0.00	0.00
	21	35	0.00	0.00	0.00	0.00	0.00	0.00
		36	0.00	0.00	0.00	0.00	0.00	0.00
	22	35	0.00	0.00	0.00	0.00	0.00	0.00
		36	0.00	0.00	0.00	0.00	0.00	0.00
	23	35	0.00	0.00	0.00	0.00	0.00	0.00
		36	0.00	0.00	0.00	0.00	0.00	0.00
	24	35	0.00	0.00	0.00	0.00	0.00	0.00
		36	0.00	0.00	0.00	0.00	0.00	0.00

MEMBER END FORCES STRUCTURE TYPE = PLANE

ALL UNITS ARE -- KIP FEET (LOCAL)

MEMBER	LOAD	JT	AXIAL	SHEAR-Y	SHEAR-Z	TORSION	MOM-Y	MOM-Z
	25	35	0.00	0.00	0.00	0.00	0.00	0.00
		36	0.00	0.00	0.00	0.00	0.00	0.00
	26	35	0.00	0.00	0.00	0.00	0.00	0.00
		36	0.00	0.00	0.00	0.00	0.00	0.00
	27	35	0.00	0.00	0.00	0.00	0.00	0.00
		36	0.00	0.00	0.00	0.00	0.00	0.00
	28	35	0.00	0.00	0.00	0.00	0.00	0.00
		36	0.00	0.00	0.00	0.00	0.00	0.00
	29	35	0.00	0.00	0.00	0.00	0.00	0.00
		36	0.00	0.00	0.00	0.00	0.00	0.00
	30	35	0.00	0.00	0.00	0.00	0.00	0.00
		36	0.00	0.00	0.00	0.00	0.00	0.00
	31	35	0.00	0.00	0.00	0.00	0.00	0.00
		36	0.00	0.00	0.00	0.00	0.00	0.00
	32	35	0.00	0.00	0.00	0.00	0.00	0.00
		36	0.00	0.00	0.00	0.00	0.00	0.00
	33	35	0.00	0.00	0.00	0.00	0.00	0.00
		36	0.00	0.00	0.00	0.00	0.00	0.00
	34	35	0.00	0.00	0.00	0.00	0.00	0.00
		36	0.00	0.00	0.00	0.00	0.00	0.00
	35	35	0.00	0.00	0.00	0.00	0.00	0.00
		36	0.00	0.00	0.00	0.00	0.00	0.00
	36	35	0.00	0.00	0.00	0.00	0.00	0.00
		36	0.00	0.00	0.00	0.00	0.00	0.00
	37	35	0.00	0.00	0.00	0.00	0.00	0.00
		36	0.00	0.00	0.00	0.00	0.00	0.00
	38	35	0.00	0.00	0.00	0.00	0.00	0.00
		36	0.00	0.00	0.00	0.00	0.00	0.00
	39	35	0.00	0.00	0.00	0.00	0.00	0.00
		36	0.00	0.00	0.00	0.00	0.00	0.00
	40	35	0.00	0.00	0.00	0.00	0.00	0.00
		36	0.00	0.00	0.00	0.00	0.00	0.00
	41	35	0.00	0.00	0.00	0.00	0.00	0.00
		36	0.00	0.00	0.00	0.00	0.00	0.00
	42	35	0.00	0.00	0.00	0.00	0.00	0.00
		36	0.00	0.00	0.00	0.00	0.00	0.00
	43	35	0.00	0.00	0.00	0.00	0.00	0.00
		36	0.00	0.00	0.00	0.00	0.00	0.00
	44	35	0.00	0.00	0.00	0.00	0.00	0.00
		36	0.00	0.00	0.00	0.00	0.00	0.00
	45	35	0.00	0.00	0.00	0.00	0.00	0.00
		36	0.00	0.00	0.00	0.00	0.00	0.00
	46	35	0.00	98.86	0.00	0.00	0.00	-155.00
		36	0.00	-98.86	0.00	0.00	0.00	253.85
	47	35	0.00	25.81	0.00	0.00	0.00	-40.36
		36	0.00	-25.81	0.00	0.00	0.00	66.16

MEMBER END FORCES STRUCTURE TYPE = PLANE

ALL UNITS ARE -- KIP FEET (LOCAL)

MEMBER	LOAD	JT	AXIAL	SHEAR-Y	SHEAR-Z	TORSION	MOM-Y	MOM-Z
	48	35	0.00	32.03	0.00	0.00	0.00	-50.21
		36	0.00	-32.03	0.00	0.00	0.00	82.24
	49	35	0.00	45.31	0.00	0.00	0.00	-70.91
		36	0.00	-45.31	0.00	0.00	0.00	116.22
	50	35	0.00	50.10	0.00	0.00	0.00	-78.60
		36	0.00	-50.10	0.00	0.00	0.00	128.70
	51	35	0.00	34.80	0.00	0.00	0.00	-54.58
		36	0.00	-34.80	0.00	0.00	0.00	89.38
	52	35	0.00	39.68	0.00	0.00	0.00	-62.22
		36	0.00	-39.68	0.00	0.00	0.00	101.90
	53	35	0.00	44.55	0.00	0.00	0.00	-69.86
		36	0.00	-44.55	0.00	0.00	0.00	114.41
	54	35	0.00	50.10	0.00	0.00	0.00	-78.60
		36	0.00	-50.10	0.00	0.00	0.00	128.70
	55	35	0.00	49.43	0.00	0.00	0.00	-77.50
		36	0.00	-49.43	0.00	0.00	0.00	126.93
	56	35	0.00	48.75	0.00	0.00	0.00	-76.39
		36	0.00	-48.75	0.00	0.00	0.00	125.15
	57	35	0.00	66.83	0.00	0.00	0.00	-104.79
		36	0.00	-66.83	0.00	0.00	0.00	171.62
	58	35	0.00	80.11	0.00	0.00	0.00	-125.50
		36	0.00	-80.11	0.00	0.00	0.00	205.60
	59	35	0.00	73.13	0.00	0.00	0.00	-114.59
		36	0.00	-73.13	0.00	0.00	0.00	187.72
	60	35	0.00	96.08	0.00	0.00	0.00	-150.62
		36	0.00	-96.08	0.00	0.00	0.00	246.71
	61	35	0.00	125.33	0.00	0.00	0.00	-196.46
		36	0.00	-125.33	0.00	0.00	0.00	321.79
	62	35	0.00	36.90	0.00	0.00	0.00	-57.85
		36	0.00	-36.90	0.00	0.00	0.00	94.75
	63	35	0.00	55.73	0.00	0.00	0.00	-87.30
		36	0.00	-55.73	0.00	0.00	0.00	143.03
	64	35	0.00	26.48	0.00	0.00	0.00	-41.46
		36	0.00	-26.48	0.00	0.00	0.00	67.94
	65	35	0.00	119.79	0.00	0.00	0.00	-187.71
		36	0.00	-119.79	0.00	0.00	0.00	307.50
	66	35	0.00	75.91	0.00	0.00	0.00	-118.96
		36	0.00	-75.91	0.00	0.00	0.00	194.87
36	1	36	0.00	5.67	0.00	0.00	0.00	-24.57
		37	0.00	-2.83	0.00	0.00	0.00	28.82
	2	36	0.00	-31.59	0.00	0.00	0.00	-233.37
		37	0.00	31.59	0.00	0.00	0.00	201.78
	3	36	0.00	-9.07	0.00	0.00	0.00	-66.99
		37	0.00	9.07	0.00	0.00	0.00	57.92

MEMBER END FORCES STRUCTURE TYPE = PLANE

ALL UNITS ARE -- KIP FEET (LOCAL)

MEMBER	LOAD	JT	AXIAL	SHEAR-Y	SHEAR-Z	TORSION	MOM-Y	MOM-Z
	4	36	0.00	0.00	0.00	0.00	0.00	0.00
		37	0.00	0.00	0.00	0.00	0.00	0.00
	5	36	0.00	0.00	0.00	0.00	0.00	0.00
		37	0.00	0.00	0.00	0.00	0.00	0.00
	6	36	0.00	0.00	0.00	0.00	0.00	0.00
		37	0.00	0.00	0.00	0.00	0.00	0.00
	7	36	0.00	0.00	0.00	0.00	0.00	0.00
		37	0.00	0.00	0.00	0.00	0.00	0.00
	8	36	0.00	0.00	0.00	0.00	0.00	0.00
		37	0.00	0.00	0.00	0.00	0.00	0.00
	9	36	0.00	0.00	0.00	0.00	0.00	0.00
		37	0.00	0.00	0.00	0.00	0.00	0.00
	10	36	0.00	0.00	0.00	0.00	0.00	0.00
		37	0.00	0.00	0.00	0.00	0.00	0.00
	11	36	0.00	0.00	0.00	0.00	0.00	0.00
		37	0.00	0.00	0.00	0.00	0.00	0.00
	12	36	0.00	0.00	0.00	0.00	0.00	0.00
		37	0.00	0.00	0.00	0.00	0.00	0.00
	13	36	0.00	0.00	0.00	0.00	0.00	0.00
		37	0.00	0.00	0.00	0.00	0.00	0.00
	14	36	0.00	0.00	0.00	0.00	0.00	0.00
		37	0.00	0.00	0.00	0.00	0.00	0.00
	15	36	0.00	0.00	0.00	0.00	0.00	0.00
		37	0.00	0.00	0.00	0.00	0.00	0.00
	16	36	0.00	0.00	0.00	0.00	0.00	0.00
		37	0.00	0.00	0.00	0.00	0.00	0.00
	17	36	0.00	0.00	0.00	0.00	0.00	0.00
		37	0.00	0.00	0.00	0.00	0.00	0.00
	18	36	0.00	0.00	0.00	0.00	0.00	0.00
		37	0.00	0.00	0.00	0.00	0.00	0.00
	19	36	0.00	0.00	0.00	0.00	0.00	0.00
		37	0.00	0.00	0.00	0.00	0.00	0.00
	20	36	0.00	0.00	0.00	0.00	0.00	0.00
		37	0.00	0.00	0.00	0.00	0.00	0.00
	21	36	0.00	0.00	0.00	0.00	0.00	0.00
		37	0.00	0.00	0.00	0.00	0.00	0.00
	22	36	0.00	0.00	0.00	0.00	0.00	0.00
		37	0.00	0.00	0.00	0.00	0.00	0.00
	23	36	0.00	0.00	0.00	0.00	0.00	0.00
		37	0.00	0.00	0.00	0.00	0.00	0.00
	24	36	0.00	0.00	0.00	0.00	0.00	0.00
		37	0.00	0.00	0.00	0.00	0.00	0.00
	25	36	0.00	0.00	0.00	0.00	0.00	0.00
		37	0.00	0.00	0.00	0.00	0.00	0.00
	26	36	0.00	0.00	0.00	0.00	0.00	0.00
		37	0.00	0.00	0.00	0.00	0.00	0.00

MEMBER END FORCES STRUCTURE TYPE = PLANE

ALL UNITS ARE -- KIP FEET (LOCAL)

MEMBER	LOAD	JT	AXIAL	SHEAR-Y	SHEAR-Z	TORSION	MOM-Y	MOM-Z
	27	36	0.00	0.00	0.00	0.00	0.00	0.00
		37	0.00	0.00	0.00	0.00	0.00	0.00
	28	36	0.00	0.00	0.00	0.00	0.00	0.00
		37	0.00	0.00	0.00	0.00	0.00	0.00
	29	36	0.00	0.00	0.00	0.00	0.00	0.00
		37	0.00	0.00	0.00	0.00	0.00	0.00
	30	36	0.00	0.00	0.00	0.00	0.00	0.00
		37	0.00	0.00	0.00	0.00	0.00	0.00
	31	36	0.00	0.00	0.00	0.00	0.00	0.00
		37	0.00	0.00	0.00	0.00	0.00	0.00
	32	36	0.00	0.00	0.00	0.00	0.00	0.00
		37	0.00	0.00	0.00	0.00	0.00	0.00
	33	36	0.00	0.00	0.00	0.00	0.00	0.00
		37	0.00	0.00	0.00	0.00	0.00	0.00
	34	36	0.00	0.00	0.00	0.00	0.00	0.00
		37	0.00	0.00	0.00	0.00	0.00	0.00
	35	36	0.00	0.00	0.00	0.00	0.00	0.00
		37	0.00	0.00	0.00	0.00	0.00	0.00
	36	36	0.00	0.00	0.00	0.00	0.00	0.00
		37	0.00	0.00	0.00	0.00	0.00	0.00
	37	36	0.00	0.00	0.00	0.00	0.00	0.00
		37	0.00	0.00	0.00	0.00	0.00	0.00
	38	36	0.00	0.00	0.00	0.00	0.00	0.00
		37	0.00	0.00	0.00	0.00	0.00	0.00
	39	36	0.00	0.00	0.00	0.00	0.00	0.00
		37	0.00	0.00	0.00	0.00	0.00	0.00
	40	36	0.00	0.00	0.00	0.00	0.00	0.00
		37	0.00	0.00	0.00	0.00	0.00	0.00
	41	36	0.00	0.00	0.00	0.00	0.00	0.00
		37	0.00	0.00	0.00	0.00	0.00	0.00
	42	36	0.00	0.00	0.00	0.00	0.00	0.00
		37	0.00	0.00	0.00	0.00	0.00	0.00
	43	36	0.00	0.00	0.00	0.00	0.00	0.00
		37	0.00	0.00	0.00	0.00	0.00	0.00
	44	36	0.00	0.00	0.00	0.00	0.00	0.00
		37	0.00	0.00	0.00	0.00	0.00	0.00
	45	36	0.00	0.00	0.00	0.00	0.00	0.00
		37	0.00	0.00	0.00	0.00	0.00	0.00
	46	36	0.00	-43.14	0.00	0.00	0.00	-253.85
		37	0.00	43.14	0.00	0.00	0.00	210.71
	47	36	0.00	-11.19	0.00	0.00	0.00	-66.16
		37	0.00	11.19	0.00	0.00	0.00	54.97
	48	36	0.00	-13.97	0.00	0.00	0.00	-82.24
		37	0.00	13.97	0.00	0.00	0.00	68.26
	49	36	0.00	-19.69	0.00	0.00	0.00	-116.22
		37	0.00	19.69	0.00	0.00	0.00	96.53

MEMBER END FORCES STRUCTURE TYPE = PLANE

ALL UNITS ARE -- KIP FEET (LOCAL)

MEMBER	LOAD	JT	AXIAL	SHEAR-Y	SHEAR-Z	TORSION	MOM-Y	MOM-Z
	50	36	0.00	-21.90	0.00	0.00	0.00	-128.70
		37	0.00	21.90	0.00	0.00	0.00	106.81
	51	36	0.00	-15.20	0.00	0.00	0.00	-89.38
		37	0.00	15.20	0.00	0.00	0.00	74.18
	52	36	0.00	-17.32	0.00	0.00	0.00	-101.90
		37	0.00	17.32	0.00	0.00	0.00	84.57
	53	36	0.00	-19.45	0.00	0.00	0.00	-114.41
		37	0.00	19.45	0.00	0.00	0.00	94.96
	54	36	0.00	-21.90	0.00	0.00	0.00	-128.70
		37	0.00	21.90	0.00	0.00	0.00	106.81
	55	36	0.00	-21.57	0.00	0.00	0.00	-126.93
		37	0.00	21.57	0.00	0.00	0.00	105.35
	56	36	0.00	-21.25	0.00	0.00	0.00	-125.15
		37	0.00	21.25	0.00	0.00	0.00	103.90
	57	36	0.00	-29.17	0.00	0.00	0.00	-171.62
		37	0.00	29.17	0.00	0.00	0.00	142.45
	58	36	0.00	-34.89	0.00	0.00	0.00	-205.60
		37	0.00	34.89	0.00	0.00	0.00	170.71
	59	36	0.00	-31.87	0.00	0.00	0.00	-187.72
		37	0.00	31.87	0.00	0.00	0.00	155.85
	60	36	0.00	-41.92	0.00	0.00	0.00	-246.71
		37	0.00	41.92	0.00	0.00	0.00	204.79
	61	36	0.00	-54.67	0.00	0.00	0.00	-321.79
		37	0.00	54.67	0.00	0.00	0.00	267.13
	62	36	0.00	-16.10	0.00	0.00	0.00	-94.75
		37	0.00	16.10	0.00	0.00	0.00	78.65
	63	36	0.00	-24.27	0.00	0.00	0.00	-143.03
		37	0.00	24.27	0.00	0.00	0.00	118.76
	64	36	0.00	-11.52	0.00	0.00	0.00	-67.94
		37	0.00	11.52	0.00	0.00	0.00	56.42
	65	36	0.00	-52.21	0.00	0.00	0.00	-307.50
		37	0.00	52.21	0.00	0.00	0.00	255.29
	66	36	0.00	-33.09	0.00	0.00	0.00	-194.87
		37	0.00	33.09	0.00	0.00	0.00	161.77
37	1	37	0.00	2.83	0.00	0.00	0.00	-28.82
		38	0.00	-0.00	0.00	0.00	0.00	30.24
	2	37	0.00	-31.59	0.00	0.00	0.00	-201.78
		38	0.00	31.59	0.00	0.00	0.00	170.19
	3	37	0.00	-9.07	0.00	0.00	0.00	-57.92
		38	0.00	9.07	0.00	0.00	0.00	48.85
	4	37	0.00	0.00	0.00	0.00	0.00	0.00
		38	0.00	0.00	0.00	0.00	0.00	0.00
	5	37	0.00	0.00	0.00	0.00	0.00	0.00
		38	0.00	0.00	0.00	0.00	0.00	0.00

MEMBER END FORCES STRUCTURE TYPE = PLANE

ALL UNITS ARE -- KIP FEET (LOCAL)

MEMBER	LOAD	JT	AXIAL	SHEAR-Y	SHEAR-Z	TORSION	MOM-Y	MOM-Z
	6	37	0.00	0.00	0.00	0.00	0.00	0.00
		38	0.00	0.00	0.00	0.00	0.00	0.00
	7	37	0.00	0.00	0.00	0.00	0.00	0.00
		38	0.00	0.00	0.00	0.00	0.00	0.00
	8	37	0.00	0.00	0.00	0.00	0.00	0.00
		38	0.00	0.00	0.00	0.00	0.00	0.00
	9	37	0.00	0.00	0.00	0.00	0.00	0.00
		38	0.00	0.00	0.00	0.00	0.00	0.00
	10	37	0.00	0.00	0.00	0.00	0.00	0.00
		38	0.00	0.00	0.00	0.00	0.00	0.00
	11	37	0.00	0.00	0.00	0.00	0.00	0.00
		38	0.00	0.00	0.00	0.00	0.00	0.00
	12	37	0.00	0.00	0.00	0.00	0.00	0.00
		38	0.00	0.00	0.00	0.00	0.00	0.00
	13	37	0.00	0.00	0.00	0.00	0.00	0.00
		38	0.00	0.00	0.00	0.00	0.00	0.00
	14	37	0.00	0.00	0.00	0.00	0.00	0.00
		38	0.00	0.00	0.00	0.00	0.00	0.00
	15	37	0.00	0.00	0.00	0.00	0.00	0.00
		38	0.00	0.00	0.00	0.00	0.00	0.00
	16	37	0.00	0.00	0.00	0.00	0.00	0.00
		38	0.00	0.00	0.00	0.00	0.00	0.00
	17	37	0.00	0.00	0.00	0.00	0.00	0.00
		38	0.00	0.00	0.00	0.00	0.00	0.00
	18	37	0.00	0.00	0.00	0.00	0.00	0.00
		38	0.00	0.00	0.00	0.00	0.00	0.00
	19	37	0.00	0.00	0.00	0.00	0.00	0.00
		38	0.00	0.00	0.00	0.00	0.00	0.00
	20	37	0.00	0.00	0.00	0.00	0.00	0.00
		38	0.00	0.00	0.00	0.00	0.00	0.00
	21	37	0.00	0.00	0.00	0.00	0.00	0.00
		38	0.00	0.00	0.00	0.00	0.00	0.00
	22	37	0.00	0.00	0.00	0.00	0.00	0.00
		38	0.00	0.00	0.00	0.00	0.00	0.00
	23	37	0.00	0.00	0.00	0.00	0.00	0.00
		38	0.00	0.00	0.00	0.00	0.00	0.00
	24	37	0.00	0.00	0.00	0.00	0.00	0.00
		38	0.00	0.00	0.00	0.00	0.00	0.00
	25	37	0.00	0.00	0.00	0.00	0.00	0.00
		38	0.00	0.00	0.00	0.00	0.00	0.00
	26	37	0.00	0.00	0.00	0.00	0.00	0.00
		38	0.00	0.00	0.00	0.00	0.00	0.00
	27	37	0.00	0.00	0.00	0.00	0.00	0.00
		38	0.00	0.00	0.00	0.00	0.00	0.00
	28	37	0.00	0.00	0.00	0.00	0.00	0.00
		38	0.00	0.00	0.00	0.00	0.00	0.00

MEMBER END FORCES STRUCTURE TYPE = PLANE

ALL UNITS ARE -- KIP FEET (LOCAL)

MEMBER	LOAD	JT	AXIAL	SHEAR-Y	SHEAR-Z	TORSION	MOM-Y	MOM-Z
	29	37	0.00	0.00	0.00	0.00	0.00	0.00
		38	0.00	0.00	0.00	0.00	0.00	0.00
	30	37	0.00	0.00	0.00	0.00	0.00	0.00
		38	0.00	0.00	0.00	0.00	0.00	0.00
	31	37	0.00	0.00	0.00	0.00	0.00	0.00
		38	0.00	0.00	0.00	0.00	0.00	0.00
	32	37	0.00	0.00	0.00	0.00	0.00	0.00
		38	0.00	0.00	0.00	0.00	0.00	0.00
	33	37	0.00	0.00	0.00	0.00	0.00	0.00
		38	0.00	0.00	0.00	0.00	0.00	0.00
	34	37	0.00	0.00	0.00	0.00	0.00	0.00
		38	0.00	0.00	0.00	0.00	0.00	0.00
	35	37	0.00	0.00	0.00	0.00	0.00	0.00
		38	0.00	0.00	0.00	0.00	0.00	0.00
	36	37	0.00	0.00	0.00	0.00	0.00	0.00
		38	0.00	0.00	0.00	0.00	0.00	0.00
	37	37	0.00	0.00	0.00	0.00	0.00	0.00
		38	0.00	0.00	0.00	0.00	0.00	0.00
	38	37	0.00	0.00	0.00	0.00	0.00	0.00
		38	0.00	0.00	0.00	0.00	0.00	0.00
	39	37	0.00	0.00	0.00	0.00	0.00	0.00
		38	0.00	0.00	0.00	0.00	0.00	0.00
	40	37	0.00	0.00	0.00	0.00	0.00	0.00
		38	0.00	0.00	0.00	0.00	0.00	0.00
	41	37	0.00	0.00	0.00	0.00	0.00	0.00
		38	0.00	0.00	0.00	0.00	0.00	0.00
	42	37	0.00	0.00	0.00	0.00	0.00	0.00
		38	0.00	0.00	0.00	0.00	0.00	0.00
	43	37	0.00	0.00	0.00	0.00	0.00	0.00
		38	0.00	0.00	0.00	0.00	0.00	0.00
	44	37	0.00	0.00	0.00	0.00	0.00	0.00
		38	0.00	0.00	0.00	0.00	0.00	0.00
	45	37	0.00	0.00	0.00	0.00	0.00	0.00
		38	0.00	0.00	0.00	0.00	0.00	0.00
	46	37	0.00	-43.14	0.00	0.00	0.00	-210.71
		38	0.00	43.14	0.00	0.00	0.00	167.56
	47	37	0.00	-11.19	0.00	0.00	0.00	-54.97
		38	0.00	11.19	0.00	0.00	0.00	43.77
	48	37	0.00	-13.97	0.00	0.00	0.00	-68.26
		38	0.00	13.97	0.00	0.00	0.00	54.29
	49	37	0.00	-19.69	0.00	0.00	0.00	-96.53
		38	0.00	19.69	0.00	0.00	0.00	76.84
	50	37	0.00	-21.90	0.00	0.00	0.00	-106.81
		38	0.00	21.90	0.00	0.00	0.00	84.91
	51	37	0.00	-15.20	0.00	0.00	0.00	-74.18
		38	0.00	15.20	0.00	0.00	0.00	58.98

MEMBER END FORCES STRUCTURE TYPE = PLANE

ALL UNITS ARE -- KIP FEET (LOCAL)

MEMBER	LOAD	JT	AXIAL	SHEAR-Y	SHEAR-Z	TORSION	MOM-Y	MOM-Z
	52	37	0.00	-17.32	0.00	0.00	0.00	-84.57
		38	0.00	17.32	0.00	0.00	0.00	67.25
	53	37	0.00	-19.45	0.00	0.00	0.00	-94.96
		38	0.00	19.45	0.00	0.00	0.00	75.52
	54	37	0.00	-21.90	0.00	0.00	0.00	-106.81
		38	0.00	21.90	0.00	0.00	0.00	84.91
	55	37	0.00	-21.57	0.00	0.00	0.00	-105.35
		38	0.00	21.57	0.00	0.00	0.00	83.78
	56	37	0.00	-21.25	0.00	0.00	0.00	-103.90
		38	0.00	21.25	0.00	0.00	0.00	82.66
	57	37	0.00	-29.17	0.00	0.00	0.00	-142.45
		38	0.00	29.17	0.00	0.00	0.00	113.27
	58	37	0.00	-34.89	0.00	0.00	0.00	-170.71
		38	0.00	34.89	0.00	0.00	0.00	135.82
	59	37	0.00	-31.87	0.00	0.00	0.00	-155.85
		38	0.00	31.87	0.00	0.00	0.00	123.98
	60	37	0.00	-41.92	0.00	0.00	0.00	-204.79
		38	0.00	41.92	0.00	0.00	0.00	162.87
	61	37	0.00	-54.67	0.00	0.00	0.00	-267.13
		38	0.00	54.67	0.00	0.00	0.00	212.46
	62	37	0.00	-16.10	0.00	0.00	0.00	-78.65
		38	0.00	16.10	0.00	0.00	0.00	62.55
	63	37	0.00	-24.27	0.00	0.00	0.00	-118.76
		38	0.00	24.27	0.00	0.00	0.00	94.49
	64	37	0.00	-11.52	0.00	0.00	0.00	-56.42
		38	0.00	11.52	0.00	0.00	0.00	44.90
	65	37	0.00	-52.21	0.00	0.00	0.00	-255.29
		38	0.00	52.21	0.00	0.00	0.00	203.07
	66	37	0.00	-33.09	0.00	0.00	0.00	-161.77
		38	0.00	33.09	0.00	0.00	0.00	128.68
38	1	38	0.00	-0.00	0.00	0.00	0.00	-30.24
		39	0.00	2.83	0.00	0.00	0.00	28.82
	2	38	0.00	-31.59	0.00	0.00	0.00	-170.19
		39	0.00	31.59	0.00	0.00	0.00	138.60
	3	38	0.00	-9.07	0.00	0.00	0.00	-48.85
		39	0.00	9.07	0.00	0.00	0.00	39.78
	4	38	0.00	0.00	0.00	0.00	0.00	0.00
		39	0.00	0.00	0.00	0.00	0.00	0.00
	5	38	0.00	0.00	0.00	0.00	0.00	0.00
		39	0.00	0.00	0.00	0.00	0.00	0.00
	6	38	0.00	0.00	0.00	0.00	0.00	0.00
		39	0.00	0.00	0.00	0.00	0.00	0.00
	7	38	0.00	0.00	0.00	0.00	0.00	0.00
		39	0.00	0.00	0.00	0.00	0.00	0.00

MEMBER END FORCES STRUCTURE TYPE = PLANE

ALL UNITS ARE -- KIP FEET (LOCAL)

MEMBER	LOAD	JT	AXIAL	SHEAR-Y	SHEAR-Z	TORSION	MOM-Y	MOM-Z
	8	38	0.00	0.00	0.00	0.00	0.00	0.00
		39	0.00	0.00	0.00	0.00	0.00	0.00
	9	38	0.00	0.00	0.00	0.00	0.00	0.00
		39	0.00	0.00	0.00	0.00	0.00	0.00
	10	38	0.00	0.00	0.00	0.00	0.00	0.00
		39	0.00	0.00	0.00	0.00	0.00	0.00
	11	38	0.00	0.00	0.00	0.00	0.00	0.00
		39	0.00	0.00	0.00	0.00	0.00	0.00
	12	38	0.00	0.00	0.00	0.00	0.00	0.00
		39	0.00	0.00	0.00	0.00	0.00	0.00
	13	38	0.00	0.00	0.00	0.00	0.00	0.00
		39	0.00	0.00	0.00	0.00	0.00	0.00
	14	38	0.00	0.00	0.00	0.00	0.00	0.00
		39	0.00	0.00	0.00	0.00	0.00	0.00
	15	38	0.00	0.00	0.00	0.00	0.00	0.00
		39	0.00	0.00	0.00	0.00	0.00	0.00
	16	38	0.00	0.00	0.00	0.00	0.00	0.00
		39	0.00	0.00	0.00	0.00	0.00	0.00
	17	38	0.00	0.00	0.00	0.00	0.00	0.00
		39	0.00	0.00	0.00	0.00	0.00	0.00
	18	38	0.00	0.00	0.00	0.00	0.00	0.00
		39	0.00	0.00	0.00	0.00	0.00	0.00
	19	38	0.00	0.00	0.00	0.00	0.00	0.00
		39	0.00	0.00	0.00	0.00	0.00	0.00
	20	38	0.00	0.00	0.00	0.00	0.00	0.00
		39	0.00	0.00	0.00	0.00	0.00	0.00
	21	38	0.00	0.00	0.00	0.00	0.00	0.00
		39	0.00	0.00	0.00	0.00	0.00	0.00
	22	38	0.00	0.00	0.00	0.00	0.00	0.00
		39	0.00	0.00	0.00	0.00	0.00	0.00
	23	38	0.00	0.00	0.00	0.00	0.00	0.00
		39	0.00	0.00	0.00	0.00	0.00	0.00
	24	38	0.00	0.00	0.00	0.00	0.00	0.00
		39	0.00	0.00	0.00	0.00	0.00	0.00
	25	38	0.00	0.00	0.00	0.00	0.00	0.00
		39	0.00	0.00	0.00	0.00	0.00	0.00
	26	38	0.00	0.00	0.00	0.00	0.00	0.00
		39	0.00	0.00	0.00	0.00	0.00	0.00
	27	38	0.00	0.00	0.00	0.00	0.00	0.00
		39	0.00	0.00	0.00	0.00	0.00	0.00
	28	38	0.00	0.00	0.00	0.00	0.00	0.00
		39	0.00	0.00	0.00	0.00	0.00	0.00
	29	38	0.00	0.00	0.00	0.00	0.00	0.00
		39	0.00	0.00	0.00	0.00	0.00	0.00
	30	38	0.00	0.00	0.00	0.00	0.00	0.00
		39	0.00	0.00	0.00	0.00	0.00	0.00

MEMBER END FORCES STRUCTURE TYPE = PLANE

ALL UNITS ARE -- KIP FEET (LOCAL)

MEMBER	LOAD	JT	AXIAL	SHEAR-Y	SHEAR-Z	TORSION	MOM-Y	MOM-Z
	31	38	0.00	0.00	0.00	0.00	0.00	0.00
		39	0.00	0.00	0.00	0.00	0.00	0.00
	32	38	0.00	0.00	0.00	0.00	0.00	0.00
		39	0.00	0.00	0.00	0.00	0.00	0.00
	33	38	0.00	0.00	0.00	0.00	0.00	0.00
		39	0.00	0.00	0.00	0.00	0.00	0.00
	34	38	0.00	0.00	0.00	0.00	0.00	0.00
		39	0.00	0.00	0.00	0.00	0.00	0.00
	35	38	0.00	0.00	0.00	0.00	0.00	0.00
		39	0.00	0.00	0.00	0.00	0.00	0.00
	36	38	0.00	0.00	0.00	0.00	0.00	0.00
		39	0.00	0.00	0.00	0.00	0.00	0.00
	37	38	0.00	0.00	0.00	0.00	0.00	0.00
		39	0.00	0.00	0.00	0.00	0.00	0.00
	38	38	0.00	0.00	0.00	0.00	0.00	0.00
		39	0.00	0.00	0.00	0.00	0.00	0.00
	39	38	0.00	0.00	0.00	0.00	0.00	0.00
		39	0.00	0.00	0.00	0.00	0.00	0.00
	40	38	0.00	0.00	0.00	0.00	0.00	0.00
		39	0.00	0.00	0.00	0.00	0.00	0.00
	41	38	0.00	0.00	0.00	0.00	0.00	0.00
		39	0.00	0.00	0.00	0.00	0.00	0.00
	42	38	0.00	0.00	0.00	0.00	0.00	0.00
		39	0.00	0.00	0.00	0.00	0.00	0.00
	43	38	0.00	0.00	0.00	0.00	0.00	0.00
		39	0.00	0.00	0.00	0.00	0.00	0.00
	44	38	0.00	0.00	0.00	0.00	0.00	0.00
		39	0.00	0.00	0.00	0.00	0.00	0.00
	45	38	0.00	0.00	0.00	0.00	0.00	0.00
		39	0.00	0.00	0.00	0.00	0.00	0.00
	46	38	0.00	-43.14	0.00	0.00	0.00	-167.56
		39	0.00	43.14	0.00	0.00	0.00	124.42
	47	38	0.00	-11.19	0.00	0.00	0.00	-43.77
		39	0.00	11.19	0.00	0.00	0.00	32.58
	48	38	0.00	-13.97	0.00	0.00	0.00	-54.29
		39	0.00	13.97	0.00	0.00	0.00	40.32
	49	38	0.00	-19.69	0.00	0.00	0.00	-76.84
		39	0.00	19.69	0.00	0.00	0.00	57.14
	50	38	0.00	-21.90	0.00	0.00	0.00	-84.91
		39	0.00	21.90	0.00	0.00	0.00	63.01
	51	38	0.00	-15.20	0.00	0.00	0.00	-58.98
		39	0.00	15.20	0.00	0.00	0.00	43.79
	52	38	0.00	-17.32	0.00	0.00	0.00	-67.25
		39	0.00	17.32	0.00	0.00	0.00	49.93
	53	38	0.00	-19.45	0.00	0.00	0.00	-75.52
		39	0.00	19.45	0.00	0.00	0.00	56.07

MEMBER END FORCES STRUCTURE TYPE = PLANE

ALL UNITS ARE -- KIP FEET (LOCAL)

MEMBER	LOAD	JT	AXIAL	SHEAR-Y	SHEAR-Z	TORSION	MOM-Y	MOM-Z
	54	38	0.00	-21.90	0.00	0.00	0.00	-84.91
		39	0.00	21.90	0.00	0.00	0.00	63.01
	55	38	0.00	-21.57	0.00	0.00	0.00	-83.78
		39	0.00	21.57	0.00	0.00	0.00	62.21
	56	38	0.00	-21.25	0.00	0.00	0.00	-82.66
		39	0.00	21.25	0.00	0.00	0.00	61.41
	57	38	0.00	-29.17	0.00	0.00	0.00	-113.27
		39	0.00	29.17	0.00	0.00	0.00	84.10
	58	38	0.00	-34.89	0.00	0.00	0.00	-135.82
		39	0.00	34.89	0.00	0.00	0.00	100.93
	59	38	0.00	-31.87	0.00	0.00	0.00	-123.98
		39	0.00	31.87	0.00	0.00	0.00	92.12
	60	38	0.00	-41.92	0.00	0.00	0.00	-162.87
		39	0.00	41.92	0.00	0.00	0.00	120.95
	61	38	0.00	-54.67	0.00	0.00	0.00	-212.46
		39	0.00	54.67	0.00	0.00	0.00	157.79
	62	38	0.00	-16.10	0.00	0.00	0.00	-62.55
		39	0.00	16.10	0.00	0.00	0.00	46.46
	63	38	0.00	-24.27	0.00	0.00	0.00	-94.49
		39	0.00	24.27	0.00	0.00	0.00	70.22
	64	38	0.00	-11.52	0.00	0.00	0.00	-44.90
		39	0.00	11.52	0.00	0.00	0.00	33.38
	65	38	0.00	-52.21	0.00	0.00	0.00	-203.07
		39	0.00	52.21	0.00	0.00	0.00	150.86
	66	38	0.00	-33.09	0.00	0.00	0.00	-128.68
		39	0.00	33.09	0.00	0.00	0.00	95.59
39	1	39	0.00	-2.83	0.00	0.00	0.00	-28.82
		40	0.00	5.67	0.00	0.00	0.00	24.57
	2	39	0.00	-31.59	0.00	0.00	0.00	-138.60
		40	0.00	31.59	0.00	0.00	0.00	107.01
	3	39	0.00	-9.07	0.00	0.00	0.00	-39.78
		40	0.00	9.07	0.00	0.00	0.00	30.72
	4	39	0.00	0.00	0.00	0.00	0.00	0.00
		40	0.00	0.00	0.00	0.00	0.00	0.00
	5	39	0.00	0.00	0.00	0.00	0.00	0.00
		40	0.00	0.00	0.00	0.00	0.00	0.00
	6	39	0.00	0.00	0.00	0.00	0.00	0.00
		40	0.00	0.00	0.00	0.00	0.00	0.00
	7	39	0.00	0.00	0.00	0.00	0.00	0.00
		40	0.00	0.00	0.00	0.00	0.00	0.00
	8	39	0.00	0.00	0.00	0.00	0.00	0.00
		40	0.00	0.00	0.00	0.00	0.00	0.00
	9	39	0.00	0.00	0.00	0.00	0.00	0.00
		40	0.00	0.00	0.00	0.00	0.00	0.00

MEMBER END FORCES STRUCTURE TYPE = PLANE

ALL UNITS ARE -- KIP FEET (LOCAL)

MEMBER	LOAD	JT	AXIAL	SHEAR-Y	SHEAR-Z	TORSION	MOM-Y	MOM-Z
	10	39	0.00	0.00	0.00	0.00	0.00	0.00
		40	0.00	0.00	0.00	0.00	0.00	0.00
	11	39	0.00	0.00	0.00	0.00	0.00	0.00
		40	0.00	0.00	0.00	0.00	0.00	0.00
	12	39	0.00	0.00	0.00	0.00	0.00	0.00
		40	0.00	0.00	0.00	0.00	0.00	0.00
	13	39	0.00	0.00	0.00	0.00	0.00	0.00
		40	0.00	0.00	0.00	0.00	0.00	0.00
	14	39	0.00	0.00	0.00	0.00	0.00	0.00
		40	0.00	0.00	0.00	0.00	0.00	0.00
	15	39	0.00	0.00	0.00	0.00	0.00	0.00
		40	0.00	0.00	0.00	0.00	0.00	0.00
	16	39	0.00	0.00	0.00	0.00	0.00	0.00
		40	0.00	0.00	0.00	0.00	0.00	0.00
	17	39	0.00	0.00	0.00	0.00	0.00	0.00
		40	0.00	0.00	0.00	0.00	0.00	0.00
	18	39	0.00	0.00	0.00	0.00	0.00	0.00
		40	0.00	0.00	0.00	0.00	0.00	0.00
	19	39	0.00	0.00	0.00	0.00	0.00	0.00
		40	0.00	0.00	0.00	0.00	0.00	0.00
	20	39	0.00	0.00	0.00	0.00	0.00	0.00
		40	0.00	0.00	0.00	0.00	0.00	0.00
	21	39	0.00	0.00	0.00	0.00	0.00	0.00
		40	0.00	0.00	0.00	0.00	0.00	0.00
	22	39	0.00	0.00	0.00	0.00	0.00	0.00
		40	0.00	0.00	0.00	0.00	0.00	0.00
	23	39	0.00	0.00	0.00	0.00	0.00	0.00
		40	0.00	0.00	0.00	0.00	0.00	0.00
	24	39	0.00	0.00	0.00	0.00	0.00	0.00
		40	0.00	0.00	0.00	0.00	0.00	0.00
	25	39	0.00	0.00	0.00	0.00	0.00	0.00
		40	0.00	0.00	0.00	0.00	0.00	0.00
	26	39	0.00	0.00	0.00	0.00	0.00	0.00
		40	0.00	0.00	0.00	0.00	0.00	0.00
	27	39	0.00	0.00	0.00	0.00	0.00	0.00
		40	0.00	0.00	0.00	0.00	0.00	0.00
	28	39	0.00	0.00	0.00	0.00	0.00	0.00
		40	0.00	0.00	0.00	0.00	0.00	0.00
	29	39	0.00	0.00	0.00	0.00	0.00	0.00
		40	0.00	0.00	0.00	0.00	0.00	0.00
	30	39	0.00	0.00	0.00	0.00	0.00	0.00
		40	0.00	0.00	0.00	0.00	0.00	0.00
	31	39	0.00	0.00	0.00	0.00	0.00	0.00
		40	0.00	0.00	0.00	0.00	0.00	0.00
	32	39	0.00	0.00	0.00	0.00	0.00	0.00
		40	0.00	0.00	0.00	0.00	0.00	0.00

MEMBER END FORCES STRUCTURE TYPE = PLANE

ALL UNITS ARE -- KIP FEET (LOCAL)

MEMBER	LOAD	JT	AXIAL	SHEAR-Y	SHEAR-Z	TORSION	MOM-Y	MOM-Z
	33	39	0.00	0.00	0.00	0.00	0.00	0.00
		40	0.00	0.00	0.00	0.00	0.00	0.00
	34	39	0.00	0.00	0.00	0.00	0.00	0.00
		40	0.00	0.00	0.00	0.00	0.00	0.00
	35	39	0.00	0.00	0.00	0.00	0.00	0.00
		40	0.00	0.00	0.00	0.00	0.00	0.00
	36	39	0.00	0.00	0.00	0.00	0.00	0.00
		40	0.00	0.00	0.00	0.00	0.00	0.00
	37	39	0.00	0.00	0.00	0.00	0.00	0.00
		40	0.00	0.00	0.00	0.00	0.00	0.00
	38	39	0.00	0.00	0.00	0.00	0.00	0.00
		40	0.00	0.00	0.00	0.00	0.00	0.00
	39	39	0.00	0.00	0.00	0.00	0.00	0.00
		40	0.00	0.00	0.00	0.00	0.00	0.00
	40	39	0.00	0.00	0.00	0.00	0.00	0.00
		40	0.00	0.00	0.00	0.00	0.00	0.00
	41	39	0.00	0.00	0.00	0.00	0.00	0.00
		40	0.00	0.00	0.00	0.00	0.00	0.00
	42	39	0.00	0.00	0.00	0.00	0.00	0.00
		40	0.00	0.00	0.00	0.00	0.00	0.00
	43	39	0.00	0.00	0.00	0.00	0.00	0.00
		40	0.00	0.00	0.00	0.00	0.00	0.00
	44	39	0.00	0.00	0.00	0.00	0.00	0.00
		40	0.00	0.00	0.00	0.00	0.00	0.00
	45	39	0.00	0.00	0.00	0.00	0.00	0.00
		40	0.00	0.00	0.00	0.00	0.00	0.00
	46	39	0.00	-43.14	0.00	0.00	0.00	-124.42
		40	0.00	43.14	0.00	0.00	0.00	81.27
	47	39	0.00	-11.19	0.00	0.00	0.00	-32.58
		40	0.00	11.19	0.00	0.00	0.00	21.38
	48	39	0.00	-13.97	0.00	0.00	0.00	-40.32
		40	0.00	13.97	0.00	0.00	0.00	26.34
	49	39	0.00	-19.69	0.00	0.00	0.00	-57.14
		40	0.00	19.69	0.00	0.00	0.00	37.45
	50	39	0.00	-21.90	0.00	0.00	0.00	-63.01
		40	0.00	21.90	0.00	0.00	0.00	41.11
	51	39	0.00	-15.20	0.00	0.00	0.00	-43.79
		40	0.00	15.20	0.00	0.00	0.00	28.59
	52	39	0.00	-17.32	0.00	0.00	0.00	-49.93
		40	0.00	17.32	0.00	0.00	0.00	32.60
	53	39	0.00	-19.45	0.00	0.00	0.00	-56.07
		40	0.00	19.45	0.00	0.00	0.00	36.62
	54	39	0.00	-21.90	0.00	0.00	0.00	-63.01
		40	0.00	21.90	0.00	0.00	0.00	41.11
	55	39	0.00	-21.57	0.00	0.00	0.00	-62.21
		40	0.00	21.57	0.00	0.00	0.00	40.64

MEMBER END FORCES STRUCTURE TYPE = PLANE

ALL UNITS ARE -- KIP FEET (LOCAL)

MEMBER	LOAD	JT	AXIAL	SHEAR-Y	SHEAR-Z	TORSION	MOM-Y	MOM-Z
	56	39	0.00	-21.25	0.00	0.00	0.00	-61.41
		40	0.00	21.25	0.00	0.00	0.00	40.17
	57	39	0.00	-29.17	0.00	0.00	0.00	-84.10
		40	0.00	29.17	0.00	0.00	0.00	54.93
	58	39	0.00	-34.89	0.00	0.00	0.00	-100.93
		40	0.00	34.89	0.00	0.00	0.00	66.04
	59	39	0.00	-31.87	0.00	0.00	0.00	-92.12
		40	0.00	31.87	0.00	0.00	0.00	60.25
	60	39	0.00	-41.92	0.00	0.00	0.00	-120.95
		40	0.00	41.92	0.00	0.00	0.00	79.03
	61	39	0.00	-54.67	0.00	0.00	0.00	-157.79
		40	0.00	54.67	0.00	0.00	0.00	103.13
	62	39	0.00	-16.10	0.00	0.00	0.00	-46.46
		40	0.00	16.10	0.00	0.00	0.00	30.36
	63	39	0.00	-24.27	0.00	0.00	0.00	-70.22
		40	0.00	24.27	0.00	0.00	0.00	45.95
	64	39	0.00	-11.52	0.00	0.00	0.00	-33.38
		40	0.00	11.52	0.00	0.00	0.00	21.86
	65	39	0.00	-52.21	0.00	0.00	0.00	-150.86
		40	0.00	52.21	0.00	0.00	0.00	98.64
	66	39	0.00	-33.09	0.00	0.00	0.00	-95.59
		40	0.00	33.09	0.00	0.00	0.00	62.49
40	1	40	0.00	-5.67	0.00	0.00	0.00	-24.57
		41	0.00	8.50	0.00	0.00	0.00	17.48
	2	40	0.00	-31.59	0.00	0.00	0.00	-107.01
		41	0.00	31.59	0.00	0.00	0.00	75.42
	3	40	0.00	-9.07	0.00	0.00	0.00	-30.72
		41	0.00	9.07	0.00	0.00	0.00	21.65
	4	40	0.00	0.00	0.00	0.00	0.00	0.00
		41	0.00	0.00	0.00	0.00	0.00	0.00
	5	40	0.00	0.00	0.00	0.00	0.00	0.00
		41	0.00	0.00	0.00	0.00	0.00	0.00
	6	40	0.00	0.00	0.00	0.00	0.00	0.00
		41	0.00	0.00	0.00	0.00	0.00	0.00
	7	40	0.00	0.00	0.00	0.00	0.00	0.00
		41	0.00	0.00	0.00	0.00	0.00	0.00
	8	40	0.00	0.00	0.00	0.00	0.00	0.00
		41	0.00	0.00	0.00	0.00	0.00	0.00
	9	40	0.00	0.00	0.00	0.00	0.00	0.00
		41	0.00	0.00	0.00	0.00	0.00	0.00
	10	40	0.00	0.00	0.00	0.00	0.00	0.00
		41	0.00	0.00	0.00	0.00	0.00	0.00
	11	40	0.00	0.00	0.00	0.00	0.00	0.00
		41	0.00	0.00	0.00	0.00	0.00	0.00

MEMBER END FORCES STRUCTURE TYPE = PLANE

ALL UNITS ARE -- KIP FEET (LOCAL)

MEMBER	LOAD	JT	AXIAL	SHEAR-Y	SHEAR-Z	TORSION	MOM-Y	MOM-Z
	12	40	0.00	0.00	0.00	0.00	0.00	0.00
		41	0.00	0.00	0.00	0.00	0.00	0.00
	13	40	0.00	0.00	0.00	0.00	0.00	0.00
		41	0.00	0.00	0.00	0.00	0.00	0.00
	14	40	0.00	0.00	0.00	0.00	0.00	0.00
		41	0.00	0.00	0.00	0.00	0.00	0.00
	15	40	0.00	0.00	0.00	0.00	0.00	0.00
		41	0.00	0.00	0.00	0.00	0.00	0.00
	16	40	0.00	0.00	0.00	0.00	0.00	0.00
		41	0.00	0.00	0.00	0.00	0.00	0.00
	17	40	0.00	0.00	0.00	0.00	0.00	0.00
		41	0.00	0.00	0.00	0.00	0.00	0.00
	18	40	0.00	0.00	0.00	0.00	0.00	0.00
		41	0.00	0.00	0.00	0.00	0.00	0.00
	19	40	0.00	0.00	0.00	0.00	0.00	0.00
		41	0.00	0.00	0.00	0.00	0.00	0.00
	20	40	0.00	0.00	0.00	0.00	0.00	0.00
		41	0.00	0.00	0.00	0.00	0.00	0.00
	21	40	0.00	0.00	0.00	0.00	0.00	0.00
		41	0.00	0.00	0.00	0.00	0.00	0.00
	22	40	0.00	0.00	0.00	0.00	0.00	0.00
		41	0.00	0.00	0.00	0.00	0.00	0.00
	23	40	0.00	0.00	0.00	0.00	0.00	0.00
		41	0.00	0.00	0.00	0.00	0.00	0.00
	24	40	0.00	0.00	0.00	0.00	0.00	0.00
		41	0.00	0.00	0.00	0.00	0.00	0.00
	25	40	0.00	0.00	0.00	0.00	0.00	0.00
		41	0.00	0.00	0.00	0.00	0.00	0.00
	26	40	0.00	0.00	0.00	0.00	0.00	0.00
		41	0.00	0.00	0.00	0.00	0.00	0.00
	27	40	0.00	0.00	0.00	0.00	0.00	0.00
		41	0.00	0.00	0.00	0.00	0.00	0.00
	28	40	0.00	0.00	0.00	0.00	0.00	0.00
		41	0.00	0.00	0.00	0.00	0.00	0.00
	29	40	0.00	0.00	0.00	0.00	0.00	0.00
		41	0.00	0.00	0.00	0.00	0.00	0.00
	30	40	0.00	0.00	0.00	0.00	0.00	0.00
		41	0.00	0.00	0.00	0.00	0.00	0.00
	31	40	0.00	0.00	0.00	0.00	0.00	0.00
		41	0.00	0.00	0.00	0.00	0.00	0.00
	32	40	0.00	0.00	0.00	0.00	0.00	0.00
		41	0.00	0.00	0.00	0.00	0.00	0.00
	33	40	0.00	0.00	0.00	0.00	0.00	0.00
		41	0.00	0.00	0.00	0.00	0.00	0.00
	34	40	0.00	0.00	0.00	0.00	0.00	0.00
		41	0.00	0.00	0.00	0.00	0.00	0.00

MEMBER END FORCES STRUCTURE TYPE = PLANE

ALL UNITS ARE -- KIP FEET (LOCAL)

MEMBER	LOAD	JT	AXIAL	SHEAR-Y	SHEAR-Z	TORSION	MOM-Y	MOM-Z
	35	40	0.00	0.00	0.00	0.00	0.00	0.00
		41	0.00	0.00	0.00	0.00	0.00	0.00
	36	40	0.00	0.00	0.00	0.00	0.00	0.00
		41	0.00	0.00	0.00	0.00	0.00	0.00
	37	40	0.00	0.00	0.00	0.00	0.00	0.00
		41	0.00	0.00	0.00	0.00	0.00	0.00
	38	40	0.00	0.00	0.00	0.00	0.00	0.00
		41	0.00	0.00	0.00	0.00	0.00	0.00
	39	40	0.00	0.00	0.00	0.00	0.00	0.00
		41	0.00	0.00	0.00	0.00	0.00	0.00
	40	40	0.00	0.00	0.00	0.00	0.00	0.00
		41	0.00	0.00	0.00	0.00	0.00	0.00
	41	40	0.00	0.00	0.00	0.00	0.00	0.00
		41	0.00	0.00	0.00	0.00	0.00	0.00
	42	40	0.00	0.00	0.00	0.00	0.00	0.00
		41	0.00	0.00	0.00	0.00	0.00	0.00
	43	40	0.00	0.00	0.00	0.00	0.00	0.00
		41	0.00	0.00	0.00	0.00	0.00	0.00
	44	40	0.00	0.00	0.00	0.00	0.00	0.00
		41	0.00	0.00	0.00	0.00	0.00	0.00
	45	40	0.00	0.00	0.00	0.00	0.00	0.00
		41	0.00	0.00	0.00	0.00	0.00	0.00
	46	40	0.00	-43.14	0.00	0.00	0.00	-81.27
		41	0.00	43.14	0.00	0.00	0.00	38.13
	47	40	0.00	-11.19	0.00	0.00	0.00	-21.38
		41	0.00	11.19	0.00	0.00	0.00	10.19
	48	40	0.00	-13.97	0.00	0.00	0.00	-26.34
		41	0.00	13.97	0.00	0.00	0.00	12.37
	49	40	0.00	-19.69	0.00	0.00	0.00	-37.45
		41	0.00	19.69	0.00	0.00	0.00	17.76
	50	40	0.00	-21.90	0.00	0.00	0.00	-41.11
		41	0.00	21.90	0.00	0.00	0.00	19.21
	51	40	0.00	-15.20	0.00	0.00	0.00	-28.59
		41	0.00	15.20	0.00	0.00	0.00	13.39
	52	40	0.00	-17.32	0.00	0.00	0.00	-32.60
		41	0.00	17.32	0.00	0.00	0.00	15.28
	53	40	0.00	-19.45	0.00	0.00	0.00	-36.62
		41	0.00	19.45	0.00	0.00	0.00	17.17
	54	40	0.00	-21.90	0.00	0.00	0.00	-41.11
		41	0.00	21.90	0.00	0.00	0.00	19.21
	55	40	0.00	-21.57	0.00	0.00	0.00	-40.64
		41	0.00	21.57	0.00	0.00	0.00	19.06
	56	40	0.00	-21.25	0.00	0.00	0.00	-40.17
		41	0.00	21.25	0.00	0.00	0.00	18.92
	57	40	0.00	-29.17	0.00	0.00	0.00	-54.93
		41	0.00	29.17	0.00	0.00	0.00	25.76

MEMBER END FORCES STRUCTURE TYPE = PLANE

ALL UNITS ARE -- KIP FEET (LOCAL)

MEMBER	LOAD	JT	AXIAL	SHEAR-Y	SHEAR-Z	TORSION	MOM-Y	MOM-Z
	58	40	0.00	-34.89	0.00	0.00	0.00	-66.04
		41	0.00	34.89	0.00	0.00	0.00	31.15
	59	40	0.00	-31.87	0.00	0.00	0.00	-60.25
		41	0.00	31.87	0.00	0.00	0.00	28.38
	60	40	0.00	-41.92	0.00	0.00	0.00	-79.03
		41	0.00	41.92	0.00	0.00	0.00	37.11
	61	40	0.00	-54.67	0.00	0.00	0.00	-103.13
		41	0.00	54.67	0.00	0.00	0.00	48.46
	62	40	0.00	-16.10	0.00	0.00	0.00	-30.36
		41	0.00	16.10	0.00	0.00	0.00	14.26
	63	40	0.00	-24.27	0.00	0.00	0.00	-45.95
		41	0.00	24.27	0.00	0.00	0.00	21.69
	64	40	0.00	-11.52	0.00	0.00	0.00	-21.86
		41	0.00	11.52	0.00	0.00	0.00	10.33
	65	40	0.00	-52.21	0.00	0.00	0.00	-98.64
		41	0.00	52.21	0.00	0.00	0.00	46.43
	66	40	0.00	-33.09	0.00	0.00	0.00	-62.49
		41	0.00	33.09	0.00	0.00	0.00	29.40
41	1	41	0.00	-8.50	0.00	0.00	0.00	-17.48
		42	0.00	11.34	0.00	0.00	0.00	7.56
	2	41	0.00	-31.59	0.00	0.00	0.00	-75.42
		42	0.00	31.59	0.00	0.00	0.00	43.83
	3	41	0.00	-9.07	0.00	0.00	0.00	-21.65
		42	0.00	9.07	0.00	0.00	0.00	12.58
	4	41	0.00	0.00	0.00	0.00	0.00	0.00
		42	0.00	0.00	0.00	0.00	0.00	0.00
	5	41	0.00	0.00	0.00	0.00	0.00	0.00
		42	0.00	0.00	0.00	0.00	0.00	0.00
	6	41	0.00	0.00	0.00	0.00	0.00	0.00
		42	0.00	0.00	0.00	0.00	0.00	0.00
	7	41	0.00	0.00	0.00	0.00	0.00	0.00
		42	0.00	0.00	0.00	0.00	0.00	0.00
	8	41	0.00	0.00	0.00	0.00	0.00	0.00
		42	0.00	0.00	0.00	0.00	0.00	0.00
	9	41	0.00	0.00	0.00	0.00	0.00	0.00
		42	0.00	0.00	0.00	0.00	0.00	0.00
	10	41	0.00	0.00	0.00	0.00	0.00	0.00
		42	0.00	0.00	0.00	0.00	0.00	0.00
	11	41	0.00	0.00	0.00	0.00	0.00	0.00
		42	0.00	0.00	0.00	0.00	0.00	0.00
	12	41	0.00	0.00	0.00	0.00	0.00	0.00
		42	0.00	0.00	0.00	0.00	0.00	0.00
	13	41	0.00	0.00	0.00	0.00	0.00	0.00
		42	0.00	0.00	0.00	0.00	0.00	0.00

MEMBER END FORCES STRUCTURE TYPE = PLANE

ALL UNITS ARE -- KIP FEET (LOCAL)

MEMBER	LOAD	JT	AXIAL	SHEAR-Y	SHEAR-Z	TORSION	MOM-Y	MOM-Z
	14	41	0.00	0.00	0.00	0.00	0.00	0.00
		42	0.00	0.00	0.00	0.00	0.00	0.00
	15	41	0.00	0.00	0.00	0.00	0.00	0.00
		42	0.00	0.00	0.00	0.00	0.00	0.00
	16	41	0.00	0.00	0.00	0.00	0.00	0.00
		42	0.00	0.00	0.00	0.00	0.00	0.00
	17	41	0.00	0.00	0.00	0.00	0.00	0.00
		42	0.00	0.00	0.00	0.00	0.00	0.00
	18	41	0.00	0.00	0.00	0.00	0.00	0.00
		42	0.00	0.00	0.00	0.00	0.00	0.00
	19	41	0.00	0.00	0.00	0.00	0.00	0.00
		42	0.00	0.00	0.00	0.00	0.00	0.00
	20	41	0.00	0.00	0.00	0.00	0.00	0.00
		42	0.00	0.00	0.00	0.00	0.00	0.00
	21	41	0.00	0.00	0.00	0.00	0.00	0.00
		42	0.00	0.00	0.00	0.00	0.00	0.00
	22	41	0.00	0.00	0.00	0.00	0.00	0.00
		42	0.00	0.00	0.00	0.00	0.00	0.00
	23	41	0.00	0.00	0.00	0.00	0.00	0.00
		42	0.00	0.00	0.00	0.00	0.00	0.00
	24	41	0.00	0.00	0.00	0.00	0.00	0.00
		42	0.00	0.00	0.00	0.00	0.00	0.00
	25	41	0.00	0.00	0.00	0.00	0.00	0.00
		42	0.00	0.00	0.00	0.00	0.00	0.00
	26	41	0.00	0.00	0.00	0.00	0.00	0.00
		42	0.00	0.00	0.00	0.00	0.00	0.00
	27	41	0.00	0.00	0.00	0.00	0.00	0.00
		42	0.00	0.00	0.00	0.00	0.00	0.00
	28	41	0.00	0.00	0.00	0.00	0.00	0.00
		42	0.00	0.00	0.00	0.00	0.00	0.00
	29	41	0.00	0.00	0.00	0.00	0.00	0.00
		42	0.00	0.00	0.00	0.00	0.00	0.00
	30	41	0.00	0.00	0.00	0.00	0.00	0.00
		42	0.00	0.00	0.00	0.00	0.00	0.00
	31	41	0.00	0.00	0.00	0.00	0.00	0.00
		42	0.00	0.00	0.00	0.00	0.00	0.00
	32	41	0.00	0.00	0.00	0.00	0.00	0.00
		42	0.00	0.00	0.00	0.00	0.00	0.00
	33	41	0.00	0.00	0.00	0.00	0.00	0.00
		42	0.00	0.00	0.00	0.00	0.00	0.00
	34	41	0.00	0.00	0.00	0.00	0.00	0.00
		42	0.00	0.00	0.00	0.00	0.00	0.00
	35	41	0.00	0.00	0.00	0.00	0.00	0.00
		42	0.00	0.00	0.00	0.00	0.00	0.00
	36	41	0.00	0.00	0.00	0.00	0.00	0.00
		42	0.00	0.00	0.00	0.00	0.00	0.00

MEMBER END FORCES STRUCTURE TYPE = PLANE

ALL UNITS ARE -- KIP FEET (LOCAL)

MEMBER	LOAD	JT	AXIAL	SHEAR-Y	SHEAR-Z	TORSION	MOM-Y	MOM-Z
	37	41	0.00	0.00	0.00	0.00	0.00	0.00
		42	0.00	0.00	0.00	0.00	0.00	0.00
	38	41	0.00	0.00	0.00	0.00	0.00	0.00
		42	0.00	0.00	0.00	0.00	0.00	0.00
	39	41	0.00	0.00	0.00	0.00	0.00	0.00
		42	0.00	0.00	0.00	0.00	0.00	0.00
	40	41	0.00	0.00	0.00	0.00	0.00	0.00
		42	0.00	0.00	0.00	0.00	0.00	0.00
	41	41	0.00	0.00	0.00	0.00	0.00	0.00
		42	0.00	0.00	0.00	0.00	0.00	0.00
	42	41	0.00	0.00	0.00	0.00	0.00	0.00
		42	0.00	0.00	0.00	0.00	0.00	0.00
	43	41	0.00	0.00	0.00	0.00	0.00	0.00
		42	0.00	0.00	0.00	0.00	0.00	0.00
	44	41	0.00	0.00	0.00	0.00	0.00	0.00
		42	0.00	0.00	0.00	0.00	0.00	0.00
	45	41	0.00	0.00	0.00	0.00	0.00	0.00
		42	0.00	0.00	0.00	0.00	0.00	0.00
	46	41	0.00	-43.14	0.00	0.00	0.00	-38.13
		42	0.00	43.14	0.00	0.00	0.00	-5.02
	47	41	0.00	-11.19	0.00	0.00	0.00	-10.19
		42	0.00	11.19	0.00	0.00	0.00	-1.01
	48	41	0.00	-13.97	0.00	0.00	0.00	-12.37
		42	0.00	13.97	0.00	0.00	0.00	-1.60
	49	41	0.00	-19.69	0.00	0.00	0.00	-17.76
		42	0.00	19.69	0.00	0.00	0.00	-1.94
	50	41	0.00	-21.90	0.00	0.00	0.00	-19.21
		42	0.00	21.90	0.00	0.00	0.00	-2.69
	51	41	0.00	-15.20	0.00	0.00	0.00	-13.39
		42	0.00	15.20	0.00	0.00	0.00	-1.81
	52	41	0.00	-17.32	0.00	0.00	0.00	-15.28
		42	0.00	17.32	0.00	0.00	0.00	-2.04
	53	41	0.00	-19.45	0.00	0.00	0.00	-17.17
		42	0.00	19.45	0.00	0.00	0.00	-2.28
	54	41	0.00	-21.90	0.00	0.00	0.00	-19.21
		42	0.00	21.90	0.00	0.00	0.00	-2.69
	55	41	0.00	-21.57	0.00	0.00	0.00	-19.06
		42	0.00	21.57	0.00	0.00	0.00	-2.51
	56	41	0.00	-21.25	0.00	0.00	0.00	-18.92
		42	0.00	21.25	0.00	0.00	0.00	-2.33
	57	41	0.00	-29.17	0.00	0.00	0.00	-25.76
		42	0.00	29.17	0.00	0.00	0.00	-3.41
	58	41	0.00	-34.89	0.00	0.00	0.00	-31.15
		42	0.00	34.89	0.00	0.00	0.00	-3.75
	59	41	0.00	-31.87	0.00	0.00	0.00	-28.38
		42	0.00	31.87	0.00	0.00	0.00	-3.49

MEMBER END FORCES STRUCTURE TYPE = PLANE

ALL UNITS ARE -- KIP FEET (LOCAL)

MEMBER	LOAD	JT	AXIAL	SHEAR-Y	SHEAR-Z	TORSION	MOM-Y	MOM-Z
	60	41	0.00	-41.92	0.00	0.00	0.00	-37.11
		42	0.00	41.92	0.00	0.00	0.00	-4.81
	61	41	0.00	-54.67	0.00	0.00	0.00	-48.46
		42	0.00	54.67	0.00	0.00	0.00	-6.20
	62	41	0.00	-16.10	0.00	0.00	0.00	-14.26
		42	0.00	16.10	0.00	0.00	0.00	-1.84
	63	41	0.00	-24.27	0.00	0.00	0.00	-21.69
		42	0.00	24.27	0.00	0.00	0.00	-2.58
	64	41	0.00	-11.52	0.00	0.00	0.00	-10.33
		42	0.00	11.52	0.00	0.00	0.00	-1.19
	65	41	0.00	-52.21	0.00	0.00	0.00	-46.43
		42	0.00	52.21	0.00	0.00	0.00	-5.79
	66	41	0.00	-33.09	0.00	0.00	0.00	-29.40
		42	0.00	33.09	0.00	0.00	0.00	-3.70
42	1	42	0.00	-11.34	0.00	0.00	0.00	-7.56
		43	0.00	14.17	0.00	0.00	0.00	-5.20
	2	42	0.00	-31.59	0.00	0.00	0.00	-43.83
		43	0.00	31.59	0.00	0.00	0.00	12.24
	3	42	0.00	-9.07	0.00	0.00	0.00	-12.58
		43	0.00	9.07	0.00	0.00	0.00	3.51
	4	42	0.00	0.00	0.00	0.00	0.00	0.00
		43	0.00	0.00	0.00	0.00	0.00	0.00
	5	42	0.00	0.00	0.00	0.00	0.00	0.00
		43	0.00	0.00	0.00	0.00	0.00	0.00
	6	42	0.00	0.00	0.00	0.00	0.00	0.00
		43	0.00	0.00	0.00	0.00	0.00	0.00
	7	42	0.00	0.00	0.00	0.00	0.00	0.00
		43	0.00	0.00	0.00	0.00	0.00	0.00
	8	42	0.00	0.00	0.00	0.00	0.00	0.00
		43	0.00	0.00	0.00	0.00	0.00	0.00
	9	42	0.00	0.00	0.00	0.00	0.00	0.00
		43	0.00	0.00	0.00	0.00	0.00	0.00
	10	42	0.00	0.00	0.00	0.00	0.00	0.00
		43	0.00	0.00	0.00	0.00	0.00	0.00
	11	42	0.00	0.00	0.00	0.00	0.00	0.00
		43	0.00	0.00	0.00	0.00	0.00	0.00
	12	42	0.00	0.00	0.00	0.00	0.00	0.00
		43	0.00	0.00	0.00	0.00	0.00	0.00
	13	42	0.00	0.00	0.00	0.00	0.00	0.00
		43	0.00	0.00	0.00	0.00	0.00	0.00
	14	42	0.00	0.00	0.00	0.00	0.00	0.00
		43	0.00	0.00	0.00	0.00	0.00	0.00
	15	42	0.00	0.00	0.00	0.00	0.00	0.00
		43	0.00	0.00	0.00	0.00	0.00	0.00

MEMBER END FORCES STRUCTURE TYPE = PLANE

ALL UNITS ARE -- KIP FEET (LOCAL)

MEMBER	LOAD	JT	AXIAL	SHEAR-Y	SHEAR-Z	TORSION	MOM-Y	MOM-Z
	16	42	0.00	0.00	0.00	0.00	0.00	0.00
		43	0.00	0.00	0.00	0.00	0.00	0.00
	17	42	0.00	0.00	0.00	0.00	0.00	0.00
		43	0.00	0.00	0.00	0.00	0.00	0.00
	18	42	0.00	0.00	0.00	0.00	0.00	0.00
		43	0.00	0.00	0.00	0.00	0.00	0.00
	19	42	0.00	0.00	0.00	0.00	0.00	0.00
		43	0.00	0.00	0.00	0.00	0.00	0.00
	20	42	0.00	0.00	0.00	0.00	0.00	0.00
		43	0.00	0.00	0.00	0.00	0.00	0.00
	21	42	0.00	0.00	0.00	0.00	0.00	0.00
		43	0.00	0.00	0.00	0.00	0.00	0.00
	22	42	0.00	0.00	0.00	0.00	0.00	0.00
		43	0.00	0.00	0.00	0.00	0.00	0.00
	23	42	0.00	0.00	0.00	0.00	0.00	0.00
		43	0.00	0.00	0.00	0.00	0.00	0.00
	24	42	0.00	0.00	0.00	0.00	0.00	0.00
		43	0.00	0.00	0.00	0.00	0.00	0.00
	25	42	0.00	0.00	0.00	0.00	0.00	0.00
		43	0.00	0.00	0.00	0.00	0.00	0.00
	26	42	0.00	0.00	0.00	0.00	0.00	0.00
		43	0.00	0.00	0.00	0.00	0.00	0.00
	27	42	0.00	0.00	0.00	0.00	0.00	0.00
		43	0.00	0.00	0.00	0.00	0.00	0.00
	28	42	0.00	0.00	0.00	0.00	0.00	0.00
		43	0.00	0.00	0.00	0.00	0.00	0.00
	29	42	0.00	0.00	0.00	0.00	0.00	0.00
		43	0.00	0.00	0.00	0.00	0.00	0.00
	30	42	0.00	0.00	0.00	0.00	0.00	0.00
		43	0.00	0.00	0.00	0.00	0.00	0.00
	31	42	0.00	0.00	0.00	0.00	0.00	0.00
		43	0.00	0.00	0.00	0.00	0.00	0.00
	32	42	0.00	0.00	0.00	0.00	0.00	0.00
		43	0.00	0.00	0.00	0.00	0.00	0.00
	33	42	0.00	0.00	0.00	0.00	0.00	0.00
		43	0.00	0.00	0.00	0.00	0.00	0.00
	34	42	0.00	0.00	0.00	0.00	0.00	0.00
		43	0.00	0.00	0.00	0.00	0.00	0.00
	35	42	0.00	0.00	0.00	0.00	0.00	0.00
		43	0.00	0.00	0.00	0.00	0.00	0.00
	36	42	0.00	0.00	0.00	0.00	0.00	0.00
		43	0.00	0.00	0.00	0.00	0.00	0.00
	37	42	0.00	0.00	0.00	0.00	0.00	0.00
		43	0.00	0.00	0.00	0.00	0.00	0.00
	38	42	0.00	0.00	0.00	0.00	0.00	0.00
		43	0.00	0.00	0.00	0.00	0.00	0.00

MEMBER END FORCES STRUCTURE TYPE = PLANE

ALL UNITS ARE -- KIP FEET (LOCAL)

MEMBER	LOAD	JT	AXIAL	SHEAR-Y	SHEAR-Z	TORSION	MOM-Y	MOM-Z
	39	42	0.00	0.00	0.00	0.00	0.00	0.00
		43	0.00	0.00	0.00	0.00	0.00	0.00
	40	42	0.00	0.00	0.00	0.00	0.00	0.00
		43	0.00	0.00	0.00	0.00	0.00	0.00
	41	42	0.00	0.00	0.00	0.00	0.00	0.00
		43	0.00	0.00	0.00	0.00	0.00	0.00
	42	42	0.00	0.00	0.00	0.00	0.00	0.00
		43	0.00	0.00	0.00	0.00	0.00	0.00
	43	42	0.00	0.00	0.00	0.00	0.00	0.00
		43	0.00	0.00	0.00	0.00	0.00	0.00
	44	42	0.00	0.00	0.00	0.00	0.00	0.00
		43	0.00	0.00	0.00	0.00	0.00	0.00
	45	42	0.00	0.00	0.00	0.00	0.00	0.00
		43	0.00	0.00	0.00	0.00	0.00	0.00
	46	42	0.00	-43.14	0.00	0.00	0.00	5.02
		43	0.00	43.14	0.00	0.00	0.00	-48.16
	47	42	0.00	-11.19	0.00	0.00	0.00	1.01
		43	0.00	11.19	0.00	0.00	0.00	-12.20
	48	42	0.00	-13.97	0.00	0.00	0.00	1.60
		43	0.00	13.97	0.00	0.00	0.00	-15.58
	49	42	0.00	-19.69	0.00	0.00	0.00	1.94
		43	0.00	19.69	0.00	0.00	0.00	-21.63
	50	42	0.00	-21.90	0.00	0.00	0.00	2.69
		43	0.00	21.90	0.00	0.00	0.00	-24.59
	51	42	0.00	-15.20	0.00	0.00	0.00	1.81
		43	0.00	15.20	0.00	0.00	0.00	-17.01
	52	42	0.00	-17.32	0.00	0.00	0.00	2.04
		43	0.00	17.32	0.00	0.00	0.00	-19.37
	53	42	0.00	-19.45	0.00	0.00	0.00	2.28
		43	0.00	19.45	0.00	0.00	0.00	-21.72
	54	42	0.00	-21.90	0.00	0.00	0.00	2.69
		43	0.00	21.90	0.00	0.00	0.00	-24.59
	55	42	0.00	-21.57	0.00	0.00	0.00	2.51
		43	0.00	21.57	0.00	0.00	0.00	-24.08
	56	42	0.00	-21.25	0.00	0.00	0.00	2.33
		43	0.00	21.25	0.00	0.00	0.00	-23.57
	57	42	0.00	-29.17	0.00	0.00	0.00	3.41
		43	0.00	29.17	0.00	0.00	0.00	-32.59
	58	42	0.00	-34.89	0.00	0.00	0.00	3.75
		43	0.00	34.89	0.00	0.00	0.00	-38.64
	59	42	0.00	-31.87	0.00	0.00	0.00	3.49
		43	0.00	31.87	0.00	0.00	0.00	-35.36
	60	42	0.00	-41.92	0.00	0.00	0.00	4.81
		43	0.00	41.92	0.00	0.00	0.00	-46.73
	61	42	0.00	-54.67	0.00	0.00	0.00	6.20
		43	0.00	54.67	0.00	0.00	0.00	-60.87

MEMBER END FORCES STRUCTURE TYPE = PLANE

ALL UNITS ARE -- KIP FEET (LOCAL)

MEMBER	LOAD	JT	AXIAL	SHEAR-Y	SHEAR-Z	TORSION	MOM-Y	MOM-Z
	62	42	0.00	-16.10	0.00	0.00	0.00	1.84
		43	0.00	16.10	0.00	0.00	0.00	-17.93
	63	42	0.00	-24.27	0.00	0.00	0.00	2.58
		43	0.00	24.27	0.00	0.00	0.00	-26.85
	64	42	0.00	-11.52	0.00	0.00	0.00	1.19
		43	0.00	11.52	0.00	0.00	0.00	-12.71
	65	42	0.00	-52.21	0.00	0.00	0.00	5.79
		43	0.00	52.21	0.00	0.00	0.00	-58.00
	66	42	0.00	-33.09	0.00	0.00	0.00	3.70
		43	0.00	33.09	0.00	0.00	0.00	-36.79
43	1	43	0.00	-14.17	0.00	0.00	0.00	5.20
		44	0.00	15.59	0.00	0.00	0.00	-12.64
	2	43	0.00	-31.59	0.00	0.00	0.00	-12.24
		44	0.00	31.59	0.00	0.00	0.00	-3.55
	3	43	0.00	-9.07	0.00	0.00	0.00	-3.51
		44	0.00	9.07	0.00	0.00	0.00	-1.02
	4	43	0.00	0.00	0.00	0.00	0.00	0.00
		44	0.00	0.00	0.00	0.00	0.00	0.00
	5	43	0.00	0.00	0.00	0.00	0.00	0.00
		44	0.00	0.00	0.00	0.00	0.00	0.00
	6	43	0.00	0.00	0.00	0.00	0.00	0.00
		44	0.00	0.00	0.00	0.00	0.00	0.00
	7	43	0.00	0.00	0.00	0.00	0.00	0.00
		44	0.00	0.00	0.00	0.00	0.00	0.00
	8	43	0.00	0.00	0.00	0.00	0.00	0.00
		44	0.00	0.00	0.00	0.00	0.00	0.00
	9	43	0.00	0.00	0.00	0.00	0.00	0.00
		44	0.00	0.00	0.00	0.00	0.00	0.00
	10	43	0.00	0.00	0.00	0.00	0.00	0.00
		44	0.00	0.00	0.00	0.00	0.00	0.00
	11	43	0.00	0.00	0.00	0.00	0.00	0.00
		44	0.00	0.00	0.00	0.00	0.00	0.00
	12	43	0.00	0.00	0.00	0.00	0.00	0.00
		44	0.00	0.00	0.00	0.00	0.00	0.00
	13	43	0.00	0.00	0.00	0.00	0.00	0.00
		44	0.00	0.00	0.00	0.00	0.00	0.00
	14	43	0.00	0.00	0.00	0.00	0.00	0.00
		44	0.00	0.00	0.00	0.00	0.00	0.00
	15	43	0.00	0.00	0.00	0.00	0.00	0.00
		44	0.00	0.00	0.00	0.00	0.00	0.00
	16	43	0.00	0.00	0.00	0.00	0.00	0.00
		44	0.00	0.00	0.00	0.00	0.00	0.00
	17	43	0.00	0.00	0.00	0.00	0.00	0.00
		44	0.00	0.00	0.00	0.00	0.00	0.00

MEMBER END FORCES STRUCTURE TYPE = PLANE

ALL UNITS ARE -- KIP FEET (LOCAL)

MEMBER	LOAD	JT	AXIAL	SHEAR-Y	SHEAR-Z	TORSION	MOM-Y	MOM-Z
	18	43	0.00	0.00	0.00	0.00	0.00	0.00
		44	0.00	0.00	0.00	0.00	0.00	0.00
	19	43	0.00	0.00	0.00	0.00	0.00	0.00
		44	0.00	0.00	0.00	0.00	0.00	0.00
	20	43	0.00	0.00	0.00	0.00	0.00	0.00
		44	0.00	0.00	0.00	0.00	0.00	0.00
	21	43	0.00	0.00	0.00	0.00	0.00	0.00
		44	0.00	0.00	0.00	0.00	0.00	0.00
	22	43	0.00	0.00	0.00	0.00	0.00	0.00
		44	0.00	0.00	0.00	0.00	0.00	0.00
	23	43	0.00	0.00	0.00	0.00	0.00	0.00
		44	0.00	0.00	0.00	0.00	0.00	0.00
	24	43	0.00	0.00	0.00	0.00	0.00	0.00
		44	0.00	0.00	0.00	0.00	0.00	0.00
	25	43	0.00	0.00	0.00	0.00	0.00	0.00
		44	0.00	0.00	0.00	0.00	0.00	0.00
	26	43	0.00	0.00	0.00	0.00	0.00	0.00
		44	0.00	0.00	0.00	0.00	0.00	0.00
	27	43	0.00	0.00	0.00	0.00	0.00	0.00
		44	0.00	0.00	0.00	0.00	0.00	0.00
	28	43	0.00	0.00	0.00	0.00	0.00	0.00
		44	0.00	0.00	0.00	0.00	0.00	0.00
	29	43	0.00	0.00	0.00	0.00	0.00	0.00
		44	0.00	0.00	0.00	0.00	0.00	0.00
	30	43	0.00	0.00	0.00	0.00	0.00	0.00
		44	0.00	0.00	0.00	0.00	0.00	0.00
	31	43	0.00	0.00	0.00	0.00	0.00	0.00
		44	0.00	0.00	0.00	0.00	0.00	0.00
	32	43	0.00	0.00	0.00	0.00	0.00	0.00
		44	0.00	0.00	0.00	0.00	0.00	0.00
	33	43	0.00	0.00	0.00	0.00	0.00	0.00
		44	0.00	0.00	0.00	0.00	0.00	0.00
	34	43	0.00	0.00	0.00	0.00	0.00	0.00
		44	0.00	0.00	0.00	0.00	0.00	0.00
	35	43	0.00	0.00	0.00	0.00	0.00	0.00
		44	0.00	0.00	0.00	0.00	0.00	0.00
	36	43	0.00	0.00	0.00	0.00	0.00	0.00
		44	0.00	0.00	0.00	0.00	0.00	0.00
	37	43	0.00	0.00	0.00	0.00	0.00	0.00
		44	0.00	0.00	0.00	0.00	0.00	0.00
	38	43	0.00	0.00	0.00	0.00	0.00	0.00
		44	0.00	0.00	0.00	0.00	0.00	0.00
	39	43	0.00	0.00	0.00	0.00	0.00	0.00
		44	0.00	0.00	0.00	0.00	0.00	0.00
	40	43	0.00	0.00	0.00	0.00	0.00	0.00
		44	0.00	0.00	0.00	0.00	0.00	0.00

MEMBER END FORCES STRUCTURE TYPE = PLANE

ALL UNITS ARE -- KIP FEET (LOCAL)

MEMBER	LOAD	JT	AXIAL	SHEAR-Y	SHEAR-Z	TORSION	MOM-Y	MOM-Z
	41	43	0.00	0.00	0.00	0.00	0.00	0.00
		44	0.00	0.00	0.00	0.00	0.00	0.00
	42	43	0.00	0.00	0.00	0.00	0.00	0.00
		44	0.00	0.00	0.00	0.00	0.00	0.00
	43	43	0.00	0.00	0.00	0.00	0.00	0.00
		44	0.00	0.00	0.00	0.00	0.00	0.00
	44	43	0.00	0.00	0.00	0.00	0.00	0.00
		44	0.00	0.00	0.00	0.00	0.00	0.00
	45	43	0.00	0.00	0.00	0.00	0.00	0.00
		44	0.00	0.00	0.00	0.00	0.00	0.00
	46	43	0.00	-43.14	0.00	0.00	0.00	48.16
		44	0.00	43.14	0.00	0.00	0.00	-69.73
	47	43	0.00	-11.19	0.00	0.00	0.00	12.20
		44	0.00	11.19	0.00	0.00	0.00	-17.80
	48	43	0.00	-13.97	0.00	0.00	0.00	15.58
		44	0.00	13.97	0.00	0.00	0.00	-22.56
	49	43	0.00	-19.69	0.00	0.00	0.00	21.63
		44	0.00	19.69	0.00	0.00	0.00	-31.47
	50	43	0.00	-21.90	0.00	0.00	0.00	24.59
		44	0.00	21.90	0.00	0.00	0.00	-35.54
	51	43	0.00	-15.20	0.00	0.00	0.00	17.01
		44	0.00	15.20	0.00	0.00	0.00	-24.61
	52	43	0.00	-17.32	0.00	0.00	0.00	19.37
		44	0.00	17.32	0.00	0.00	0.00	-28.03
	53	43	0.00	-19.45	0.00	0.00	0.00	21.72
		44	0.00	19.45	0.00	0.00	0.00	-31.45
	54	43	0.00	-21.90	0.00	0.00	0.00	24.59
		44	0.00	21.90	0.00	0.00	0.00	-35.54
	55	43	0.00	-21.57	0.00	0.00	0.00	24.08
		44	0.00	21.57	0.00	0.00	0.00	-34.87
	56	43	0.00	-21.25	0.00	0.00	0.00	23.57
		44	0.00	21.25	0.00	0.00	0.00	-34.19
	57	43	0.00	-29.17	0.00	0.00	0.00	32.59
		44	0.00	29.17	0.00	0.00	0.00	-47.17
	58	43	0.00	-34.89	0.00	0.00	0.00	38.64
		44	0.00	34.89	0.00	0.00	0.00	-56.08
	59	43	0.00	-31.87	0.00	0.00	0.00	35.36
		44	0.00	31.87	0.00	0.00	0.00	-51.29
	60	43	0.00	-41.92	0.00	0.00	0.00	46.73
		44	0.00	41.92	0.00	0.00	0.00	-67.69
	61	43	0.00	-54.67	0.00	0.00	0.00	60.87
		44	0.00	54.67	0.00	0.00	0.00	-88.20
	62	43	0.00	-16.10	0.00	0.00	0.00	17.93
		44	0.00	16.10	0.00	0.00	0.00	-25.98
	63	43	0.00	-24.27	0.00	0.00	0.00	26.85
		44	0.00	24.27	0.00	0.00	0.00	-38.99

MEMBER END FORCES STRUCTURE TYPE = PLANE

ALL UNITS ARE -- KIP FEET (LOCAL)

MEMBER	LOAD	JT	AXIAL	SHEAR-Y	SHEAR-Z	TORSION	MOM-Y	MOM-Z
	64	43	0.00	-11.52	0.00	0.00	0.00	12.71
		44	0.00	11.52	0.00	0.00	0.00	-18.47
	65	43	0.00	-52.21	0.00	0.00	0.00	58.00
		44	0.00	52.21	0.00	0.00	0.00	-84.11
	66	43	0.00	-33.09	0.00	0.00	0.00	36.79
		44	0.00	33.09	0.00	0.00	0.00	-53.34
44	1	44	0.00	-15.59	0.00	0.00	0.00	12.64
		45	0.00	17.01	0.00	0.00	0.00	-20.79
	2	44	0.00	-160.49	0.00	0.00	0.00	3.55
		45	0.00	160.49	0.00	0.00	0.00	-83.79
	3	44	0.00	-46.07	0.00	0.00	0.00	1.02
		45	0.00	46.07	0.00	0.00	0.00	-24.05
	4	44	0.00	0.00	0.00	0.00	0.00	0.00
		45	0.00	0.00	0.00	0.00	0.00	0.00
	5	44	0.00	0.00	0.00	0.00	0.00	0.00
		45	0.00	0.00	0.00	0.00	0.00	0.00
	6	44	0.00	0.00	0.00	0.00	0.00	0.00
		45	0.00	0.00	0.00	0.00	0.00	0.00
	7	44	0.00	0.00	0.00	0.00	0.00	0.00
		45	0.00	0.00	0.00	0.00	0.00	0.00
	8	44	0.00	0.00	0.00	0.00	0.00	0.00
		45	0.00	0.00	0.00	0.00	0.00	0.00
	9	44	0.00	0.00	0.00	0.00	0.00	0.00
		45	0.00	0.00	0.00	0.00	0.00	0.00
	10	44	0.00	0.00	0.00	0.00	0.00	0.00
		45	0.00	0.00	0.00	0.00	0.00	0.00
	11	44	0.00	0.00	0.00	0.00	0.00	0.00
		45	0.00	0.00	0.00	0.00	0.00	0.00
	12	44	0.00	0.00	0.00	0.00	0.00	0.00
		45	0.00	0.00	0.00	0.00	0.00	0.00
	13	44	0.00	0.00	0.00	0.00	0.00	0.00
		45	0.00	0.00	0.00	0.00	0.00	0.00
	14	44	0.00	0.00	0.00	0.00	0.00	0.00
		45	0.00	0.00	0.00	0.00	0.00	0.00
	15	44	0.00	0.00	0.00	0.00	0.00	0.00
		45	0.00	0.00	0.00	0.00	0.00	0.00
	16	44	0.00	0.00	0.00	0.00	0.00	0.00
		45	0.00	0.00	0.00	0.00	0.00	0.00
	17	44	0.00	0.00	0.00	0.00	0.00	0.00
		45	0.00	0.00	0.00	0.00	0.00	0.00
	18	44	0.00	0.00	0.00	0.00	0.00	0.00
		45	0.00	0.00	0.00	0.00	0.00	0.00
	19	44	0.00	0.00	0.00	0.00	0.00	0.00
		45	0.00	0.00	0.00	0.00	0.00	0.00

MEMBER END FORCES STRUCTURE TYPE = PLANE

ALL UNITS ARE -- KIP FEET (LOCAL)

MEMBER	LOAD	JT	AXIAL	SHEAR-Y	SHEAR-Z	TORSION	MOM-Y	MOM-Z
	20	44	0.00	0.00	0.00	0.00	0.00	0.00
		45	0.00	0.00	0.00	0.00	0.00	0.00
	21	44	0.00	0.00	0.00	0.00	0.00	0.00
		45	0.00	0.00	0.00	0.00	0.00	0.00
	22	44	0.00	0.00	0.00	0.00	0.00	0.00
		45	0.00	0.00	0.00	0.00	0.00	0.00
	23	44	0.00	0.00	0.00	0.00	0.00	0.00
		45	0.00	0.00	0.00	0.00	0.00	0.00
	24	44	0.00	0.00	0.00	0.00	0.00	0.00
		45	0.00	0.00	0.00	0.00	0.00	0.00
	25	44	0.00	0.00	0.00	0.00	0.00	0.00
		45	0.00	0.00	0.00	0.00	0.00	0.00
	26	44	0.00	0.00	0.00	0.00	0.00	0.00
		45	0.00	0.00	0.00	0.00	0.00	0.00
	27	44	0.00	0.00	0.00	0.00	0.00	0.00
		45	0.00	0.00	0.00	0.00	0.00	0.00
	28	44	0.00	0.00	0.00	0.00	0.00	0.00
		45	0.00	0.00	0.00	0.00	0.00	0.00
	29	44	0.00	0.00	0.00	0.00	0.00	0.00
		45	0.00	0.00	0.00	0.00	0.00	0.00
	30	44	0.00	0.00	0.00	0.00	0.00	0.00
		45	0.00	0.00	0.00	0.00	0.00	0.00
	31	44	0.00	0.00	0.00	0.00	0.00	0.00
		45	0.00	0.00	0.00	0.00	0.00	0.00
	32	44	0.00	0.00	0.00	0.00	0.00	0.00
		45	0.00	0.00	0.00	0.00	0.00	0.00
	33	44	0.00	0.00	0.00	0.00	0.00	0.00
		45	0.00	0.00	0.00	0.00	0.00	0.00
	34	44	0.00	0.00	0.00	0.00	0.00	0.00
		45	0.00	0.00	0.00	0.00	0.00	0.00
	35	44	0.00	0.00	0.00	0.00	0.00	0.00
		45	0.00	0.00	0.00	0.00	0.00	0.00
	36	44	0.00	0.00	0.00	0.00	0.00	0.00
		45	0.00	0.00	0.00	0.00	0.00	0.00
	37	44	0.00	0.00	0.00	0.00	0.00	0.00
		45	0.00	0.00	0.00	0.00	0.00	0.00
	38	44	0.00	0.00	0.00	0.00	0.00	0.00
		45	0.00	0.00	0.00	0.00	0.00	0.00
	39	44	0.00	0.00	0.00	0.00	0.00	0.00
		45	0.00	0.00	0.00	0.00	0.00	0.00
	40	44	0.00	0.00	0.00	0.00	0.00	0.00
		45	0.00	0.00	0.00	0.00	0.00	0.00
	41	44	0.00	0.00	0.00	0.00	0.00	0.00
		45	0.00	0.00	0.00	0.00	0.00	0.00
	42	44	0.00	0.00	0.00	0.00	0.00	0.00
		45	0.00	0.00	0.00	0.00	0.00	0.00

MEMBER END FORCES STRUCTURE TYPE = PLANE

ALL UNITS ARE -- KIP FEET (LOCAL)

MEMBER	LOAD	JT	AXIAL	SHEAR-Y	SHEAR-Z	TORSION	MOM-Y	MOM-Z
	43	44	0.00	0.00	0.00	0.00	0.00	0.00
		45	0.00	0.00	0.00	0.00	0.00	0.00
	44	44	0.00	0.00	0.00	0.00	0.00	0.00
		45	0.00	0.00	0.00	0.00	0.00	0.00
	45	44	0.00	0.00	0.00	0.00	0.00	0.00
		45	0.00	0.00	0.00	0.00	0.00	0.00
	46	44	0.00	-83.14	0.00	0.00	0.00	69.73
		45	0.00	83.14	0.00	0.00	0.00	-111.31
	47	44	0.00	-22.19	0.00	0.00	0.00	17.80
		45	0.00	22.19	0.00	0.00	0.00	-28.89
	48	44	0.00	-26.97	0.00	0.00	0.00	22.56
		45	0.00	26.97	0.00	0.00	0.00	-36.05
	49	44	0.00	-38.69	0.00	0.00	0.00	31.47
		45	0.00	38.69	0.00	0.00	0.00	-50.82
	50	44	0.00	-41.90	0.00	0.00	0.00	35.54
		45	0.00	41.90	0.00	0.00	0.00	-56.49
	51	44	0.00	-29.20	0.00	0.00	0.00	24.61
		45	0.00	29.20	0.00	0.00	0.00	-39.21
	52	44	0.00	-33.32	0.00	0.00	0.00	28.03
		45	0.00	33.32	0.00	0.00	0.00	-44.69
	53	44	0.00	-37.45	0.00	0.00	0.00	31.45
		45	0.00	37.45	0.00	0.00	0.00	-50.17
	54	44	0.00	-41.90	0.00	0.00	0.00	35.54
		45	0.00	41.90	0.00	0.00	0.00	-56.49
	55	44	0.00	-41.57	0.00	0.00	0.00	34.87
		45	0.00	41.57	0.00	0.00	0.00	-55.65
	56	44	0.00	-41.25	0.00	0.00	0.00	34.19
		45	0.00	41.25	0.00	0.00	0.00	-54.82
	57	44	0.00	-56.17	0.00	0.00	0.00	47.17
		45	0.00	56.17	0.00	0.00	0.00	-75.26
	58	44	0.00	-67.89	0.00	0.00	0.00	56.08
		45	0.00	67.89	0.00	0.00	0.00	-90.03
	59	44	0.00	-61.87	0.00	0.00	0.00	51.29
		45	0.00	61.87	0.00	0.00	0.00	-82.22
	60	44	0.00	-80.92	0.00	0.00	0.00	67.69
		45	0.00	80.92	0.00	0.00	0.00	-108.15
	61	44	0.00	-105.67	0.00	0.00	0.00	88.20
		45	0.00	105.67	0.00	0.00	0.00	-141.04
	62	44	0.00	-31.10	0.00	0.00	0.00	25.98
		45	0.00	31.10	0.00	0.00	0.00	-41.53
	63	44	0.00	-47.27	0.00	0.00	0.00	38.99
		45	0.00	47.27	0.00	0.00	0.00	-62.62
	64	44	0.00	-22.52	0.00	0.00	0.00	18.47
		45	0.00	22.52	0.00	0.00	0.00	-29.73
	65	44	0.00	-101.21	0.00	0.00	0.00	84.11
		45	0.00	101.21	0.00	0.00	0.00	-134.72

MEMBER END FORCES STRUCTURE TYPE = PLANE

ALL UNITS ARE -- KIP FEET (LOCAL)

MEMBER	LOAD	JT	AXIAL	SHEAR-Y	SHEAR-Z	TORSION	MOM-Y	MOM-Z
	66	44	0.00	-64.09	0.00	0.00	0.00	53.34
		45	0.00	64.09	0.00	0.00	0.00	-85.38
45	1	45	0.00	-17.01	0.00	0.00	0.00	20.79
		46	0.00	19.84	0.00	0.00	0.00	-39.22
	2	45	0.00	-160.49	0.00	0.00	0.00	83.79
		46	0.00	160.49	0.00	0.00	0.00	-244.28
	3	45	0.00	-46.07	0.00	0.00	0.00	24.05
		46	0.00	46.07	0.00	0.00	0.00	-70.12
	4	45	0.00	0.00	0.00	0.00	0.00	0.00
		46	0.00	0.00	0.00	0.00	0.00	0.00
	5	45	0.00	0.00	0.00	0.00	0.00	0.00
		46	0.00	0.00	0.00	0.00	0.00	0.00
	6	45	0.00	0.00	0.00	0.00	0.00	0.00
		46	0.00	0.00	0.00	0.00	0.00	0.00
	7	45	0.00	0.00	0.00	0.00	0.00	0.00
		46	0.00	0.00	0.00	0.00	0.00	0.00
	8	45	0.00	0.00	0.00	0.00	0.00	0.00
		46	0.00	0.00	0.00	0.00	0.00	0.00
	9	45	0.00	0.00	0.00	0.00	0.00	0.00
		46	0.00	0.00	0.00	0.00	0.00	0.00
	10	45	0.00	0.00	0.00	0.00	0.00	0.00
		46	0.00	0.00	0.00	0.00	0.00	0.00
	11	45	0.00	0.00	0.00	0.00	0.00	0.00
		46	0.00	0.00	0.00	0.00	0.00	0.00
	12	45	0.00	0.00	0.00	0.00	0.00	0.00
		46	0.00	0.00	0.00	0.00	0.00	0.00
	13	45	0.00	0.00	0.00	0.00	0.00	0.00
		46	0.00	0.00	0.00	0.00	0.00	0.00
	14	45	0.00	0.00	0.00	0.00	0.00	0.00
		46	0.00	0.00	0.00	0.00	0.00	0.00
	15	45	0.00	0.00	0.00	0.00	0.00	0.00
		46	0.00	0.00	0.00	0.00	0.00	0.00
	16	45	0.00	0.00	0.00	0.00	0.00	0.00
		46	0.00	0.00	0.00	0.00	0.00	0.00
	17	45	0.00	0.00	0.00	0.00	0.00	0.00
		46	0.00	0.00	0.00	0.00	0.00	0.00
	18	45	0.00	0.00	0.00	0.00	0.00	0.00
		46	0.00	0.00	0.00	0.00	0.00	0.00
	19	45	0.00	0.00	0.00	0.00	0.00	0.00
		46	0.00	0.00	0.00	0.00	0.00	0.00
	20	45	0.00	0.00	0.00	0.00	0.00	0.00
		46	0.00	0.00	0.00	0.00	0.00	0.00
	21	45	0.00	0.00	0.00	0.00	0.00	0.00
		46	0.00	0.00	0.00	0.00	0.00	0.00

MEMBER END FORCES STRUCTURE TYPE = PLANE

ALL UNITS ARE -- KIP FEET (LOCAL)

MEMBER	LOAD	JT	AXIAL	SHEAR-Y	SHEAR-Z	TORSION	MOM-Y	MOM-Z
	22	45	0.00	0.00	0.00	0.00	0.00	0.00
		46	0.00	0.00	0.00	0.00	0.00	0.00
	23	45	0.00	0.00	0.00	0.00	0.00	0.00
		46	0.00	0.00	0.00	0.00	0.00	0.00
	24	45	0.00	0.00	0.00	0.00	0.00	0.00
		46	0.00	0.00	0.00	0.00	0.00	0.00
	25	45	0.00	0.00	0.00	0.00	0.00	0.00
		46	0.00	0.00	0.00	0.00	0.00	0.00
	26	45	0.00	0.00	0.00	0.00	0.00	0.00
		46	0.00	0.00	0.00	0.00	0.00	0.00
	27	45	0.00	0.00	0.00	0.00	0.00	0.00
		46	0.00	0.00	0.00	0.00	0.00	0.00
	28	45	0.00	0.00	0.00	0.00	0.00	0.00
		46	0.00	0.00	0.00	0.00	0.00	0.00
	29	45	0.00	0.00	0.00	0.00	0.00	0.00
		46	0.00	0.00	0.00	0.00	0.00	0.00
	30	45	0.00	0.00	0.00	0.00	0.00	0.00
		46	0.00	0.00	0.00	0.00	0.00	0.00
	31	45	0.00	0.00	0.00	0.00	0.00	0.00
		46	0.00	0.00	0.00	0.00	0.00	0.00
	32	45	0.00	0.00	0.00	0.00	0.00	0.00
		46	0.00	0.00	0.00	0.00	0.00	0.00
	33	45	0.00	0.00	0.00	0.00	0.00	0.00
		46	0.00	0.00	0.00	0.00	0.00	0.00
	34	45	0.00	0.00	0.00	0.00	0.00	0.00
		46	0.00	0.00	0.00	0.00	0.00	0.00
	35	45	0.00	0.00	0.00	0.00	0.00	0.00
		46	0.00	0.00	0.00	0.00	0.00	0.00
	36	45	0.00	0.00	0.00	0.00	0.00	0.00
		46	0.00	0.00	0.00	0.00	0.00	0.00
	37	45	0.00	0.00	0.00	0.00	0.00	0.00
		46	0.00	0.00	0.00	0.00	0.00	0.00
	38	45	0.00	0.00	0.00	0.00	0.00	0.00
		46	0.00	0.00	0.00	0.00	0.00	0.00
	39	45	0.00	0.00	0.00	0.00	0.00	0.00
		46	0.00	0.00	0.00	0.00	0.00	0.00
	40	45	0.00	0.00	0.00	0.00	0.00	0.00
		46	0.00	0.00	0.00	0.00	0.00	0.00
	41	45	0.00	0.00	0.00	0.00	0.00	0.00
		46	0.00	0.00	0.00	0.00	0.00	0.00
	42	45	0.00	0.00	0.00	0.00	0.00	0.00
		46	0.00	0.00	0.00	0.00	0.00	0.00
	43	45	0.00	0.00	0.00	0.00	0.00	0.00
		46	0.00	0.00	0.00	0.00	0.00	0.00
	44	45	0.00	0.00	0.00	0.00	0.00	0.00
		46	0.00	0.00	0.00	0.00	0.00	0.00

MEMBER END FORCES STRUCTURE TYPE = PLANE

ALL UNITS ARE -- KIP FEET (LOCAL)

MEMBER	LOAD	JT	AXIAL	SHEAR-Y	SHEAR-Z	TORSION	MOM-Y	MOM-Z
	45	45	0.00	0.00	0.00	0.00	0.00	0.00
		46	0.00	0.00	0.00	0.00	0.00	0.00
	46	45	0.00	-83.14	0.00	0.00	0.00	111.31
		46	0.00	83.14	0.00	0.00	0.00	-194.45
	47	45	0.00	-22.19	0.00	0.00	0.00	28.89
		46	0.00	22.19	0.00	0.00	0.00	-51.09
	48	45	0.00	-26.97	0.00	0.00	0.00	36.05
		46	0.00	26.97	0.00	0.00	0.00	-63.02
	49	45	0.00	-38.69	0.00	0.00	0.00	50.82
		46	0.00	38.69	0.00	0.00	0.00	-89.51
	50	45	0.00	-41.90	0.00	0.00	0.00	56.49
		46	0.00	41.90	0.00	0.00	0.00	-98.39
	51	45	0.00	-29.20	0.00	0.00	0.00	39.21
		46	0.00	29.20	0.00	0.00	0.00	-68.41
	52	45	0.00	-33.32	0.00	0.00	0.00	44.69
		46	0.00	33.32	0.00	0.00	0.00	-78.01
	53	45	0.00	-37.45	0.00	0.00	0.00	50.17
		46	0.00	37.45	0.00	0.00	0.00	-87.62
	54	45	0.00	-41.90	0.00	0.00	0.00	56.49
		46	0.00	41.90	0.00	0.00	0.00	-98.39
	55	45	0.00	-41.57	0.00	0.00	0.00	55.65
		46	0.00	41.57	0.00	0.00	0.00	-97.23
	56	45	0.00	-41.25	0.00	0.00	0.00	54.82
		46	0.00	41.25	0.00	0.00	0.00	-96.06
	57	45	0.00	-56.17	0.00	0.00	0.00	75.26
		46	0.00	56.17	0.00	0.00	0.00	-131.43
	58	45	0.00	-67.89	0.00	0.00	0.00	90.03
		46	0.00	67.89	0.00	0.00	0.00	-157.92
	59	45	0.00	-61.87	0.00	0.00	0.00	82.22
		46	0.00	61.87	0.00	0.00	0.00	-144.09
	60	45	0.00	-80.92	0.00	0.00	0.00	108.15
		46	0.00	80.92	0.00	0.00	0.00	-189.07
	61	45	0.00	-105.67	0.00	0.00	0.00	141.04
		46	0.00	105.67	0.00	0.00	0.00	-246.70
	62	45	0.00	-31.10	0.00	0.00	0.00	41.53
		46	0.00	31.10	0.00	0.00	0.00	-72.63
	63	45	0.00	-47.27	0.00	0.00	0.00	62.62
		46	0.00	47.27	0.00	0.00	0.00	-109.89
	64	45	0.00	-22.52	0.00	0.00	0.00	29.73
		46	0.00	22.52	0.00	0.00	0.00	-52.25
	65	45	0.00	-101.21	0.00	0.00	0.00	134.72
		46	0.00	101.21	0.00	0.00	0.00	-235.93
	66	45	0.00	-64.09	0.00	0.00	0.00	85.38
		46	0.00	64.09	0.00	0.00	0.00	-149.48
46	1	46	0.00	-19.84	0.00	0.00	0.00	39.22
		47	0.00	22.68	0.00	0.00	0.00	-60.48

MEMBER END FORCES STRUCTURE TYPE = PLANE

ALL UNITS ARE -- KIP FEET (LOCAL)

MEMBER	LOAD	JT	AXIAL	SHEAR-Y	SHEAR-Z	TORSION	MOM-Y	MOM-Z
	2	46	0.00	-160.49	0.00	0.00	0.00	244.28
		47	0.00	160.49	0.00	0.00	0.00	-404.77
	3	46	0.00	-46.07	0.00	0.00	0.00	70.12
		47	0.00	46.07	0.00	0.00	0.00	-116.19
	4	46	0.00	0.00	0.00	0.00	0.00	0.00
		47	0.00	0.00	0.00	0.00	0.00	0.00
	5	46	0.00	0.00	0.00	0.00	0.00	0.00
		47	0.00	0.00	0.00	0.00	0.00	0.00
	6	46	0.00	0.00	0.00	0.00	0.00	0.00
		47	0.00	0.00	0.00	0.00	0.00	0.00
	7	46	0.00	0.00	0.00	0.00	0.00	0.00
		47	0.00	0.00	0.00	0.00	0.00	0.00
	8	46	0.00	0.00	0.00	0.00	0.00	0.00
		47	0.00	0.00	0.00	0.00	0.00	0.00
	9	46	0.00	0.00	0.00	0.00	0.00	0.00
		47	0.00	0.00	0.00	0.00	0.00	0.00
	10	46	0.00	0.00	0.00	0.00	0.00	0.00
		47	0.00	0.00	0.00	0.00	0.00	0.00
	11	46	0.00	0.00	0.00	0.00	0.00	0.00
		47	0.00	0.00	0.00	0.00	0.00	0.00
	12	46	0.00	0.00	0.00	0.00	0.00	0.00
		47	0.00	0.00	0.00	0.00	0.00	0.00
	13	46	0.00	0.00	0.00	0.00	0.00	0.00
		47	0.00	0.00	0.00	0.00	0.00	0.00
	14	46	0.00	0.00	0.00	0.00	0.00	0.00
		47	0.00	0.00	0.00	0.00	0.00	0.00
	15	46	0.00	0.00	0.00	0.00	0.00	0.00
		47	0.00	0.00	0.00	0.00	0.00	0.00
	16	46	0.00	0.00	0.00	0.00	0.00	0.00
		47	0.00	0.00	0.00	0.00	0.00	0.00
	17	46	0.00	0.00	0.00	0.00	0.00	0.00
		47	0.00	0.00	0.00	0.00	0.00	0.00
	18	46	0.00	0.00	0.00	0.00	0.00	0.00
		47	0.00	0.00	0.00	0.00	0.00	0.00
	19	46	0.00	0.00	0.00	0.00	0.00	0.00
		47	0.00	0.00	0.00	0.00	0.00	0.00
	20	46	0.00	0.00	0.00	0.00	0.00	0.00
		47	0.00	0.00	0.00	0.00	0.00	0.00
	21	46	0.00	0.00	0.00	0.00	0.00	0.00
		47	0.00	0.00	0.00	0.00	0.00	0.00
	22	46	0.00	0.00	0.00	0.00	0.00	0.00
		47	0.00	0.00	0.00	0.00	0.00	0.00
	23	46	0.00	0.00	0.00	0.00	0.00	0.00
		47	0.00	0.00	0.00	0.00	0.00	0.00
	24	46	0.00	0.00	0.00	0.00	0.00	0.00
		47	0.00	0.00	0.00	0.00	0.00	0.00

MEMBER END FORCES STRUCTURE TYPE = PLANE

ALL UNITS ARE -- KIP FEET (LOCAL)

MEMBER	LOAD	JT	AXIAL	SHEAR-Y	SHEAR-Z	TORSION	MOM-Y	MOM-Z
	25	46	0.00	0.00	0.00	0.00	0.00	0.00
		47	0.00	0.00	0.00	0.00	0.00	0.00
	26	46	0.00	0.00	0.00	0.00	0.00	0.00
		47	0.00	0.00	0.00	0.00	0.00	0.00
	27	46	0.00	0.00	0.00	0.00	0.00	0.00
		47	0.00	0.00	0.00	0.00	0.00	0.00
	28	46	0.00	0.00	0.00	0.00	0.00	0.00
		47	0.00	0.00	0.00	0.00	0.00	0.00
	29	46	0.00	0.00	0.00	0.00	0.00	0.00
		47	0.00	0.00	0.00	0.00	0.00	0.00
	30	46	0.00	0.00	0.00	0.00	0.00	0.00
		47	0.00	0.00	0.00	0.00	0.00	0.00
	31	46	0.00	0.00	0.00	0.00	0.00	0.00
		47	0.00	0.00	0.00	0.00	0.00	0.00
	32	46	0.00	0.00	0.00	0.00	0.00	0.00
		47	0.00	0.00	0.00	0.00	0.00	0.00
	33	46	0.00	0.00	0.00	0.00	0.00	0.00
		47	0.00	0.00	0.00	0.00	0.00	0.00
	34	46	0.00	0.00	0.00	0.00	0.00	0.00
		47	0.00	0.00	0.00	0.00	0.00	0.00
	35	46	0.00	0.00	0.00	0.00	0.00	0.00
		47	0.00	0.00	0.00	0.00	0.00	0.00
	36	46	0.00	0.00	0.00	0.00	0.00	0.00
		47	0.00	0.00	0.00	0.00	0.00	0.00
	37	46	0.00	0.00	0.00	0.00	0.00	0.00
		47	0.00	0.00	0.00	0.00	0.00	0.00
	38	46	0.00	0.00	0.00	0.00	0.00	0.00
		47	0.00	0.00	0.00	0.00	0.00	0.00
	39	46	0.00	0.00	0.00	0.00	0.00	0.00
		47	0.00	0.00	0.00	0.00	0.00	0.00
	40	46	0.00	0.00	0.00	0.00	0.00	0.00
		47	0.00	0.00	0.00	0.00	0.00	0.00
	41	46	0.00	0.00	0.00	0.00	0.00	0.00
		47	0.00	0.00	0.00	0.00	0.00	0.00
	42	46	0.00	0.00	0.00	0.00	0.00	0.00
		47	0.00	0.00	0.00	0.00	0.00	0.00
	43	46	0.00	0.00	0.00	0.00	0.00	0.00
		47	0.00	0.00	0.00	0.00	0.00	0.00
	44	46	0.00	0.00	0.00	0.00	0.00	0.00
		47	0.00	0.00	0.00	0.00	0.00	0.00
	45	46	0.00	0.00	0.00	0.00	0.00	0.00
		47	0.00	0.00	0.00	0.00	0.00	0.00
	46	46	0.00	-83.14	0.00	0.00	0.00	194.45
		47	0.00	83.14	0.00	0.00	0.00	-277.60
	47	46	0.00	-22.19	0.00	0.00	0.00	51.09
		47	0.00	22.19	0.00	0.00	0.00	-73.28

MEMBER END FORCES STRUCTURE TYPE = PLANE

ALL UNITS ARE -- KIP FEET (LOCAL)

MEMBER	LOAD	JT	AXIAL	SHEAR-Y	SHEAR-Z	TORSION	MOM-Y	MOM-Z
	48	46	0.00	-26.97	0.00	0.00	0.00	63.02
		47	0.00	26.97	0.00	0.00	0.00	-89.99
	49	46	0.00	-38.69	0.00	0.00	0.00	89.51
		47	0.00	38.69	0.00	0.00	0.00	-128.21
	50	46	0.00	-41.90	0.00	0.00	0.00	98.39
		47	0.00	41.90	0.00	0.00	0.00	-140.29
	51	46	0.00	-29.20	0.00	0.00	0.00	68.41
		47	0.00	29.20	0.00	0.00	0.00	-97.61
	52	46	0.00	-33.32	0.00	0.00	0.00	78.01
		47	0.00	33.32	0.00	0.00	0.00	-111.34
	53	46	0.00	-37.45	0.00	0.00	0.00	87.62
		47	0.00	37.45	0.00	0.00	0.00	-125.07
	54	46	0.00	-41.90	0.00	0.00	0.00	98.39
		47	0.00	41.90	0.00	0.00	0.00	-140.29
	55	46	0.00	-41.57	0.00	0.00	0.00	97.23
		47	0.00	41.57	0.00	0.00	0.00	-138.80
	56	46	0.00	-41.25	0.00	0.00	0.00	96.06
		47	0.00	41.25	0.00	0.00	0.00	-137.31
	57	46	0.00	-56.17	0.00	0.00	0.00	131.43
		47	0.00	56.17	0.00	0.00	0.00	-187.60
	58	46	0.00	-67.89	0.00	0.00	0.00	157.92
		47	0.00	67.89	0.00	0.00	0.00	-225.81
	59	46	0.00	-61.87	0.00	0.00	0.00	144.09
		47	0.00	61.87	0.00	0.00	0.00	-205.96
	60	46	0.00	-80.92	0.00	0.00	0.00	189.07
		47	0.00	80.92	0.00	0.00	0.00	-269.98
	61	46	0.00	-105.67	0.00	0.00	0.00	246.70
		47	0.00	105.67	0.00	0.00	0.00	-352.37
	62	46	0.00	-31.10	0.00	0.00	0.00	72.63
		47	0.00	31.10	0.00	0.00	0.00	-103.73
	63	46	0.00	-47.27	0.00	0.00	0.00	109.89
		47	0.00	47.27	0.00	0.00	0.00	-157.16
	64	46	0.00	-22.52	0.00	0.00	0.00	52.25
		47	0.00	22.52	0.00	0.00	0.00	-74.77
	65	46	0.00	-101.21	0.00	0.00	0.00	235.93
		47	0.00	101.21	0.00	0.00	0.00	-337.15
	66	46	0.00	-64.09	0.00	0.00	0.00	149.48
		47	0.00	64.09	0.00	0.00	0.00	-213.57
47	1	47	0.00	2.13	0.00	0.00	0.00	0.53
		48	0.00	0.71	0.00	0.00	0.00	0.18
	2	47	0.00	0.00	0.00	0.00	0.00	0.00
		48	0.00	0.00	0.00	0.00	0.00	0.00
	3	47	0.00	0.00	0.00	0.00	0.00	0.00
		48	0.00	0.00	0.00	0.00	0.00	0.00

MEMBER END FORCES STRUCTURE TYPE = PLANE

ALL UNITS ARE -- KIP FEET (LOCAL)

MEMBER	LOAD	JT	AXIAL	SHEAR-Y	SHEAR-Z	TORSION	MOM-Y	MOM-Z
	4	47	0.00	0.00	0.00	0.00	0.00	0.00
		48	0.00	0.00	0.00	0.00	0.00	0.00
	5	47	0.00	0.00	0.00	0.00	0.00	0.00
		48	0.00	0.00	0.00	0.00	0.00	0.00
	6	47	0.00	0.00	0.00	0.00	0.00	0.00
		48	0.00	0.00	0.00	0.00	0.00	0.00
	7	47	0.00	0.00	0.00	0.00	0.00	0.00
		48	0.00	0.00	0.00	0.00	0.00	0.00
	8	47	0.00	0.00	0.00	0.00	0.00	0.00
		48	0.00	0.00	0.00	0.00	0.00	0.00
	9	47	0.00	0.00	0.00	0.00	0.00	0.00
		48	0.00	0.00	0.00	0.00	0.00	0.00
	10	47	0.00	0.00	0.00	0.00	0.00	0.00
		48	0.00	0.00	0.00	0.00	0.00	0.00
	11	47	0.00	0.00	0.00	0.00	0.00	0.00
		48	0.00	0.00	0.00	0.00	0.00	0.00
	12	47	0.00	0.00	0.00	0.00	0.00	0.00
		48	0.00	0.00	0.00	0.00	0.00	0.00
	13	47	0.00	0.00	0.00	0.00	0.00	0.00
		48	0.00	0.00	0.00	0.00	0.00	0.00
	14	47	0.00	0.00	0.00	0.00	0.00	0.00
		48	0.00	0.00	0.00	0.00	0.00	0.00
	15	47	0.00	0.00	0.00	0.00	0.00	0.00
		48	0.00	0.00	0.00	0.00	0.00	0.00
	16	47	0.00	0.00	0.00	0.00	0.00	0.00
		48	0.00	0.00	0.00	0.00	0.00	0.00
	17	47	0.00	0.00	0.00	0.00	0.00	0.00
		48	0.00	0.00	0.00	0.00	0.00	0.00
	18	47	0.00	0.00	0.00	0.00	0.00	0.00
		48	0.00	0.00	0.00	0.00	0.00	0.00
	19	47	0.00	0.00	0.00	0.00	0.00	0.00
		48	0.00	0.00	0.00	0.00	0.00	0.00
	20	47	0.00	0.00	0.00	0.00	0.00	0.00
		48	0.00	0.00	0.00	0.00	0.00	0.00
	21	47	0.00	0.00	0.00	0.00	0.00	0.00
		48	0.00	0.00	0.00	0.00	0.00	0.00
	22	47	0.00	0.00	0.00	0.00	0.00	0.00
		48	0.00	0.00	0.00	0.00	0.00	0.00
	23	47	0.00	0.00	0.00	0.00	0.00	0.00
		48	0.00	0.00	0.00	0.00	0.00	0.00
	24	47	0.00	0.00	0.00	0.00	0.00	0.00
		48	0.00	0.00	0.00	0.00	0.00	0.00
	25	47	0.00	0.00	0.00	0.00	0.00	0.00
		48	0.00	0.00	0.00	0.00	0.00	0.00
	26	47	0.00	0.00	0.00	0.00	0.00	0.00
		48	0.00	0.00	0.00	0.00	0.00	0.00

MEMBER END FORCES STRUCTURE TYPE = PLANE

ALL UNITS ARE -- KIP FEET (LOCAL)

MEMBER	LOAD	JT	AXIAL	SHEAR-Y	SHEAR-Z	TORSION	MOM-Y	MOM-Z
	27	47	0.00	0.00	0.00	0.00	0.00	0.00
		48	0.00	0.00	0.00	0.00	0.00	0.00
	28	47	0.00	0.00	0.00	0.00	0.00	0.00
		48	0.00	0.00	0.00	0.00	0.00	0.00
	29	47	0.00	0.00	0.00	0.00	0.00	0.00
		48	0.00	0.00	0.00	0.00	0.00	0.00
	30	47	0.00	0.00	0.00	0.00	0.00	0.00
		48	0.00	0.00	0.00	0.00	0.00	0.00
	31	47	0.00	0.00	0.00	0.00	0.00	0.00
		48	0.00	0.00	0.00	0.00	0.00	0.00
	32	47	0.00	0.00	0.00	0.00	0.00	0.00
		48	0.00	0.00	0.00	0.00	0.00	0.00
	33	47	0.00	0.00	0.00	0.00	0.00	0.00
		48	0.00	0.00	0.00	0.00	0.00	0.00
	34	47	0.00	0.00	0.00	0.00	0.00	0.00
		48	0.00	0.00	0.00	0.00	0.00	0.00
	35	47	0.00	0.00	0.00	0.00	0.00	0.00
		48	0.00	0.00	0.00	0.00	0.00	0.00
	36	47	0.00	0.00	0.00	0.00	0.00	0.00
		48	0.00	0.00	0.00	0.00	0.00	0.00
	37	47	0.00	0.00	0.00	0.00	0.00	0.00
		48	0.00	0.00	0.00	0.00	0.00	0.00
	38	47	0.00	0.00	0.00	0.00	0.00	0.00
		48	0.00	0.00	0.00	0.00	0.00	0.00
	39	47	0.00	0.00	0.00	0.00	0.00	0.00
		48	0.00	0.00	0.00	0.00	0.00	0.00
	40	47	0.00	0.00	0.00	0.00	0.00	0.00
		48	0.00	0.00	0.00	0.00	0.00	0.00
	41	47	0.00	0.00	0.00	0.00	0.00	0.00
		48	0.00	0.00	0.00	0.00	0.00	0.00
	42	47	0.00	0.00	0.00	0.00	0.00	0.00
		48	0.00	0.00	0.00	0.00	0.00	0.00
	43	47	0.00	0.00	0.00	0.00	0.00	0.00
		48	0.00	0.00	0.00	0.00	0.00	0.00
	44	47	0.00	0.00	0.00	0.00	0.00	0.00
		48	0.00	0.00	0.00	0.00	0.00	0.00
	45	47	0.00	0.00	0.00	0.00	0.00	0.00
		48	0.00	0.00	0.00	0.00	0.00	0.00
	46	47	0.00	0.00	0.00	0.00	0.00	0.00
		48	0.00	0.00	0.00	0.00	0.00	0.00
	47	47	0.00	0.00	0.00	0.00	0.00	0.00
		48	0.00	0.00	0.00	0.00	0.00	0.00
	48	47	0.00	0.00	0.00	0.00	0.00	0.00
		48	0.00	0.00	0.00	0.00	0.00	0.00
	49	47	0.00	0.00	0.00	0.00	0.00	0.00
		48	0.00	0.00	0.00	0.00	0.00	0.00

MEMBER END FORCES STRUCTURE TYPE = PLANE

ALL UNITS ARE -- KIP FEET (LOCAL)

MEMBER	LOAD	JT	AXIAL	SHEAR-Y	SHEAR-Z	TORSION	MOM-Y	MOM-Z
	50	47	0.00	0.00	0.00	0.00	0.00	0.00
		48	0.00	0.00	0.00	0.00	0.00	0.00
	51	47	0.00	0.00	0.00	0.00	0.00	0.00
		48	0.00	0.00	0.00	0.00	0.00	0.00
	52	47	0.00	0.00	0.00	0.00	0.00	0.00
		48	0.00	0.00	0.00	0.00	0.00	0.00
	53	47	0.00	0.00	0.00	0.00	0.00	0.00
		48	0.00	0.00	0.00	0.00	0.00	0.00
	54	47	0.00	0.00	0.00	0.00	0.00	0.00
		48	0.00	0.00	0.00	0.00	0.00	0.00
	55	47	0.00	0.00	0.00	0.00	0.00	0.00
		48	0.00	0.00	0.00	0.00	0.00	0.00
	56	47	0.00	0.00	0.00	0.00	0.00	0.00
		48	0.00	0.00	0.00	0.00	0.00	0.00
	57	47	0.00	0.00	0.00	0.00	0.00	0.00
		48	0.00	0.00	0.00	0.00	0.00	0.00
	58	47	0.00	0.00	0.00	0.00	0.00	0.00
		48	0.00	0.00	0.00	0.00	0.00	0.00
	59	47	0.00	0.00	0.00	0.00	0.00	0.00
		48	0.00	0.00	0.00	0.00	0.00	0.00
	60	47	0.00	0.00	0.00	0.00	0.00	0.00
		48	0.00	0.00	0.00	0.00	0.00	0.00
	61	47	0.00	0.00	0.00	0.00	0.00	0.00
		48	0.00	0.00	0.00	0.00	0.00	0.00
	62	47	0.00	0.00	0.00	0.00	0.00	0.00
		48	0.00	0.00	0.00	0.00	0.00	0.00
	63	47	0.00	0.00	0.00	0.00	0.00	0.00
		48	0.00	0.00	0.00	0.00	0.00	0.00
	64	47	0.00	0.00	0.00	0.00	0.00	0.00
		48	0.00	0.00	0.00	0.00	0.00	0.00
	65	47	0.00	0.00	0.00	0.00	0.00	0.00
		48	0.00	0.00	0.00	0.00	0.00	0.00
	66	47	0.00	0.00	0.00	0.00	0.00	0.00
		48	0.00	0.00	0.00	0.00	0.00	0.00
48	1	48	0.00	-0.71	0.00	0.00	0.00	-0.18
		49	0.00	2.13	0.00	0.00	0.00	-0.53
	2	48	0.00	0.00	0.00	0.00	0.00	0.00
		49	0.00	0.00	0.00	0.00	0.00	0.00
	3	48	0.00	0.00	0.00	0.00	0.00	0.00
		49	0.00	0.00	0.00	0.00	0.00	0.00
	4	48	0.00	0.00	0.00	0.00	0.00	0.00
		49	0.00	0.00	0.00	0.00	0.00	0.00
	5	48	0.00	0.00	0.00	0.00	0.00	0.00
		49	0.00	0.00	0.00	0.00	0.00	0.00

MEMBER END FORCES STRUCTURE TYPE = PLANE

ALL UNITS ARE -- KIP FEET (LOCAL)

MEMBER	LOAD	JT	AXIAL	SHEAR-Y	SHEAR-Z	TORSION	MOM-Y	MOM-Z
	6	48	0.00	0.00	0.00	0.00	0.00	0.00
		49	0.00	0.00	0.00	0.00	0.00	0.00
	7	48	0.00	0.00	0.00	0.00	0.00	0.00
		49	0.00	0.00	0.00	0.00	0.00	0.00
	8	48	0.00	0.00	0.00	0.00	0.00	0.00
		49	0.00	0.00	0.00	0.00	0.00	0.00
	9	48	0.00	0.00	0.00	0.00	0.00	0.00
		49	0.00	0.00	0.00	0.00	0.00	0.00
	10	48	0.00	0.00	0.00	0.00	0.00	0.00
		49	0.00	0.00	0.00	0.00	0.00	0.00
	11	48	0.00	0.00	0.00	0.00	0.00	0.00
		49	0.00	0.00	0.00	0.00	0.00	0.00
	12	48	0.00	0.00	0.00	0.00	0.00	0.00
		49	0.00	0.00	0.00	0.00	0.00	0.00
	13	48	0.00	0.00	0.00	0.00	0.00	0.00
		49	0.00	0.00	0.00	0.00	0.00	0.00
	14	48	0.00	0.00	0.00	0.00	0.00	0.00
		49	0.00	0.00	0.00	0.00	0.00	0.00
	15	48	0.00	0.00	0.00	0.00	0.00	0.00
		49	0.00	0.00	0.00	0.00	0.00	0.00
	16	48	0.00	0.00	0.00	0.00	0.00	0.00
		49	0.00	0.00	0.00	0.00	0.00	0.00
	17	48	0.00	0.00	0.00	0.00	0.00	0.00
		49	0.00	0.00	0.00	0.00	0.00	0.00
	18	48	0.00	0.00	0.00	0.00	0.00	0.00
		49	0.00	0.00	0.00	0.00	0.00	0.00
	19	48	0.00	0.00	0.00	0.00	0.00	0.00
		49	0.00	0.00	0.00	0.00	0.00	0.00
	20	48	0.00	0.00	0.00	0.00	0.00	0.00
		49	0.00	0.00	0.00	0.00	0.00	0.00
	21	48	0.00	0.00	0.00	0.00	0.00	0.00
		49	0.00	0.00	0.00	0.00	0.00	0.00
	22	48	0.00	0.00	0.00	0.00	0.00	0.00
		49	0.00	0.00	0.00	0.00	0.00	0.00
	23	48	0.00	0.00	0.00	0.00	0.00	0.00
		49	0.00	0.00	0.00	0.00	0.00	0.00
	24	48	0.00	0.00	0.00	0.00	0.00	0.00
		49	0.00	0.00	0.00	0.00	0.00	0.00
	25	48	0.00	0.00	0.00	0.00	0.00	0.00
		49	0.00	0.00	0.00	0.00	0.00	0.00
	26	48	0.00	0.00	0.00	0.00	0.00	0.00
		49	0.00	0.00	0.00	0.00	0.00	0.00
	27	48	0.00	0.00	0.00	0.00	0.00	0.00
		49	0.00	0.00	0.00	0.00	0.00	0.00
	28	48	0.00	0.00	0.00	0.00	0.00	0.00
		49	0.00	0.00	0.00	0.00	0.00	0.00

MEMBER END FORCES STRUCTURE TYPE = PLANE

ALL UNITS ARE -- KIP FEET (LOCAL)

MEMBER	LOAD	JT	AXIAL	SHEAR-Y	SHEAR-Z	TORSION	MOM-Y	MOM-Z
	29	48	0.00	0.00	0.00	0.00	0.00	0.00
		49	0.00	0.00	0.00	0.00	0.00	0.00
	30	48	0.00	0.00	0.00	0.00	0.00	0.00
		49	0.00	0.00	0.00	0.00	0.00	0.00
	31	48	0.00	0.00	0.00	0.00	0.00	0.00
		49	0.00	0.00	0.00	0.00	0.00	0.00
	32	48	0.00	0.00	0.00	0.00	0.00	0.00
		49	0.00	0.00	0.00	0.00	0.00	0.00
	33	48	0.00	0.00	0.00	0.00	0.00	0.00
		49	0.00	0.00	0.00	0.00	0.00	0.00
	34	48	0.00	0.00	0.00	0.00	0.00	0.00
		49	0.00	0.00	0.00	0.00	0.00	0.00
	35	48	0.00	0.00	0.00	0.00	0.00	0.00
		49	0.00	0.00	0.00	0.00	0.00	0.00
	36	48	0.00	0.00	0.00	0.00	0.00	0.00
		49	0.00	0.00	0.00	0.00	0.00	0.00
	37	48	0.00	0.00	0.00	0.00	0.00	0.00
		49	0.00	0.00	0.00	0.00	0.00	0.00
	38	48	0.00	0.00	0.00	0.00	0.00	0.00
		49	0.00	0.00	0.00	0.00	0.00	0.00
	39	48	0.00	0.00	0.00	0.00	0.00	0.00
		49	0.00	0.00	0.00	0.00	0.00	0.00
	40	48	0.00	0.00	0.00	0.00	0.00	0.00
		49	0.00	0.00	0.00	0.00	0.00	0.00
	41	48	0.00	0.00	0.00	0.00	0.00	0.00
		49	0.00	0.00	0.00	0.00	0.00	0.00
	42	48	0.00	0.00	0.00	0.00	0.00	0.00
		49	0.00	0.00	0.00	0.00	0.00	0.00
	43	48	0.00	0.00	0.00	0.00	0.00	0.00
		49	0.00	0.00	0.00	0.00	0.00	0.00
	44	48	0.00	0.00	0.00	0.00	0.00	0.00
		49	0.00	0.00	0.00	0.00	0.00	0.00
	45	48	0.00	0.00	0.00	0.00	0.00	0.00
		49	0.00	0.00	0.00	0.00	0.00	0.00
	46	48	0.00	0.00	0.00	0.00	0.00	0.00
		49	0.00	0.00	0.00	0.00	0.00	0.00
	47	48	0.00	0.00	0.00	0.00	0.00	0.00
		49	0.00	0.00	0.00	0.00	0.00	0.00
	48	48	0.00	0.00	0.00	0.00	0.00	0.00
		49	0.00	0.00	0.00	0.00	0.00	0.00
	49	48	0.00	0.00	0.00	0.00	0.00	0.00
		49	0.00	0.00	0.00	0.00	0.00	0.00
	50	48	0.00	0.00	0.00	0.00	0.00	0.00
		49	0.00	0.00	0.00	0.00	0.00	0.00
	51	48	0.00	0.00	0.00	0.00	0.00	0.00
		49	0.00	0.00	0.00	0.00	0.00	0.00

MEMBER END FORCES STRUCTURE TYPE = PLANE

ALL UNITS ARE -- KIP FEET (LOCAL)

MEMBER	LOAD	JT	AXIAL	SHEAR-Y	SHEAR-Z	TORSION	MOM-Y	MOM-Z
	52	48	0.00	0.00	0.00	0.00	0.00	0.00
		49	0.00	0.00	0.00	0.00	0.00	0.00
	53	48	0.00	0.00	0.00	0.00	0.00	0.00
		49	0.00	0.00	0.00	0.00	0.00	0.00
	54	48	0.00	0.00	0.00	0.00	0.00	0.00
		49	0.00	0.00	0.00	0.00	0.00	0.00
	55	48	0.00	0.00	0.00	0.00	0.00	0.00
		49	0.00	0.00	0.00	0.00	0.00	0.00
	56	48	0.00	0.00	0.00	0.00	0.00	0.00
		49	0.00	0.00	0.00	0.00	0.00	0.00
	57	48	0.00	0.00	0.00	0.00	0.00	0.00
		49	0.00	0.00	0.00	0.00	0.00	0.00
	58	48	0.00	0.00	0.00	0.00	0.00	0.00
		49	0.00	0.00	0.00	0.00	0.00	0.00
	59	48	0.00	0.00	0.00	0.00	0.00	0.00
		49	0.00	0.00	0.00	0.00	0.00	0.00
	60	48	0.00	0.00	0.00	0.00	0.00	0.00
		49	0.00	0.00	0.00	0.00	0.00	0.00
	61	48	0.00	0.00	0.00	0.00	0.00	0.00
		49	0.00	0.00	0.00	0.00	0.00	0.00
	62	48	0.00	0.00	0.00	0.00	0.00	0.00
		49	0.00	0.00	0.00	0.00	0.00	0.00
	63	48	0.00	0.00	0.00	0.00	0.00	0.00
		49	0.00	0.00	0.00	0.00	0.00	0.00
	64	48	0.00	0.00	0.00	0.00	0.00	0.00
		49	0.00	0.00	0.00	0.00	0.00	0.00
	65	48	0.00	0.00	0.00	0.00	0.00	0.00
		49	0.00	0.00	0.00	0.00	0.00	0.00
	66	48	0.00	0.00	0.00	0.00	0.00	0.00
		49	0.00	0.00	0.00	0.00	0.00	0.00
49	1	49	0.00	2.13	0.00	0.00	0.00	0.53
		50	0.00	-0.71	0.00	0.00	0.00	0.18
	2	49	0.00	0.00	0.00	0.00	0.00	0.00
		50	0.00	0.00	0.00	0.00	0.00	0.00
	3	49	0.00	0.00	0.00	0.00	0.00	0.00
		50	0.00	0.00	0.00	0.00	0.00	0.00
	4	49	0.00	0.00	0.00	0.00	0.00	0.00
		50	0.00	0.00	0.00	0.00	0.00	0.00
	5	49	0.00	0.00	0.00	0.00	0.00	0.00
		50	0.00	0.00	0.00	0.00	0.00	0.00
	6	49	0.00	0.00	0.00	0.00	0.00	0.00
		50	0.00	0.00	0.00	0.00	0.00	0.00
	7	49	0.00	0.00	0.00	0.00	0.00	0.00
		50	0.00	0.00	0.00	0.00	0.00	0.00

MEMBER END FORCES STRUCTURE TYPE = PLANE

ALL UNITS ARE -- KIP FEET (LOCAL)

MEMBER	LOAD	JT	AXIAL	SHEAR-Y	SHEAR-Z	TORSION	MOM-Y	MOM-Z
	8	49	0.00	0.00	0.00	0.00	0.00	0.00
		50	0.00	0.00	0.00	0.00	0.00	0.00
	9	49	0.00	0.00	0.00	0.00	0.00	0.00
		50	0.00	0.00	0.00	0.00	0.00	0.00
	10	49	0.00	0.00	0.00	0.00	0.00	0.00
		50	0.00	0.00	0.00	0.00	0.00	0.00
	11	49	0.00	0.00	0.00	0.00	0.00	0.00
		50	0.00	0.00	0.00	0.00	0.00	0.00
	12	49	0.00	0.00	0.00	0.00	0.00	0.00
		50	0.00	0.00	0.00	0.00	0.00	0.00
	13	49	0.00	0.00	0.00	0.00	0.00	0.00
		50	0.00	0.00	0.00	0.00	0.00	0.00
	14	49	0.00	0.00	0.00	0.00	0.00	0.00
		50	0.00	0.00	0.00	0.00	0.00	0.00
	15	49	0.00	0.00	0.00	0.00	0.00	0.00
		50	0.00	0.00	0.00	0.00	0.00	0.00
	16	49	0.00	0.00	0.00	0.00	0.00	0.00
		50	0.00	0.00	0.00	0.00	0.00	0.00
	17	49	0.00	0.00	0.00	0.00	0.00	0.00
		50	0.00	0.00	0.00	0.00	0.00	0.00
	18	49	0.00	0.00	0.00	0.00	0.00	0.00
		50	0.00	0.00	0.00	0.00	0.00	0.00
	19	49	0.00	0.00	0.00	0.00	0.00	0.00
		50	0.00	0.00	0.00	0.00	0.00	0.00
	20	49	0.00	0.00	0.00	0.00	0.00	0.00
		50	0.00	0.00	0.00	0.00	0.00	0.00
	21	49	0.00	0.00	0.00	0.00	0.00	0.00
		50	0.00	0.00	0.00	0.00	0.00	0.00
	22	49	0.00	0.00	0.00	0.00	0.00	0.00
		50	0.00	0.00	0.00	0.00	0.00	0.00
	23	49	0.00	0.00	0.00	0.00	0.00	0.00
		50	0.00	0.00	0.00	0.00	0.00	0.00
	24	49	0.00	0.00	0.00	0.00	0.00	0.00
		50	0.00	0.00	0.00	0.00	0.00	0.00
	25	49	0.00	0.00	0.00	0.00	0.00	0.00
		50	0.00	0.00	0.00	0.00	0.00	0.00
	26	49	0.00	0.00	0.00	0.00	0.00	0.00
		50	0.00	0.00	0.00	0.00	0.00	0.00
	27	49	0.00	0.00	0.00	0.00	0.00	0.00
		50	0.00	0.00	0.00	0.00	0.00	0.00
	28	49	0.00	0.00	0.00	0.00	0.00	0.00
		50	0.00	0.00	0.00	0.00	0.00	0.00
	29	49	0.00	0.00	0.00	0.00	0.00	0.00
		50	0.00	0.00	0.00	0.00	0.00	0.00
	30	49	0.00	0.00	0.00	0.00	0.00	0.00
		50	0.00	0.00	0.00	0.00	0.00	0.00

MEMBER END FORCES STRUCTURE TYPE = PLANE

ALL UNITS ARE -- KIP FEET (LOCAL)

MEMBER	LOAD	JT	AXIAL	SHEAR-Y	SHEAR-Z	TORSION	MOM-Y	MOM-Z
	31	49	0.00	0.00	0.00	0.00	0.00	0.00
		50	0.00	0.00	0.00	0.00	0.00	0.00
	32	49	0.00	0.00	0.00	0.00	0.00	0.00
		50	0.00	0.00	0.00	0.00	0.00	0.00
	33	49	0.00	0.00	0.00	0.00	0.00	0.00
		50	0.00	0.00	0.00	0.00	0.00	0.00
	34	49	0.00	0.00	0.00	0.00	0.00	0.00
		50	0.00	0.00	0.00	0.00	0.00	0.00
	35	49	0.00	0.00	0.00	0.00	0.00	0.00
		50	0.00	0.00	0.00	0.00	0.00	0.00
	36	49	0.00	0.00	0.00	0.00	0.00	0.00
		50	0.00	0.00	0.00	0.00	0.00	0.00
	37	49	0.00	0.00	0.00	0.00	0.00	0.00
		50	0.00	0.00	0.00	0.00	0.00	0.00
	38	49	0.00	0.00	0.00	0.00	0.00	0.00
		50	0.00	0.00	0.00	0.00	0.00	0.00
	39	49	0.00	0.00	0.00	0.00	0.00	0.00
		50	0.00	0.00	0.00	0.00	0.00	0.00
	40	49	0.00	0.00	0.00	0.00	0.00	0.00
		50	0.00	0.00	0.00	0.00	0.00	0.00
	41	49	0.00	0.00	0.00	0.00	0.00	0.00
		50	0.00	0.00	0.00	0.00	0.00	0.00
	42	49	0.00	0.00	0.00	0.00	0.00	0.00
		50	0.00	0.00	0.00	0.00	0.00	0.00
	43	49	0.00	0.00	0.00	0.00	0.00	0.00
		50	0.00	0.00	0.00	0.00	0.00	0.00
	44	49	0.00	0.00	0.00	0.00	0.00	0.00
		50	0.00	0.00	0.00	0.00	0.00	0.00
	45	49	0.00	0.00	0.00	0.00	0.00	0.00
		50	0.00	0.00	0.00	0.00	0.00	0.00
	46	49	0.00	0.00	0.00	0.00	0.00	0.00
		50	0.00	0.00	0.00	0.00	0.00	0.00
	47	49	0.00	0.00	0.00	0.00	0.00	0.00
		50	0.00	0.00	0.00	0.00	0.00	0.00
	48	49	0.00	0.00	0.00	0.00	0.00	0.00
		50	0.00	0.00	0.00	0.00	0.00	0.00
	49	49	0.00	0.00	0.00	0.00	0.00	0.00
		50	0.00	0.00	0.00	0.00	0.00	0.00
	50	49	0.00	0.00	0.00	0.00	0.00	0.00
		50	0.00	0.00	0.00	0.00	0.00	0.00
	51	49	0.00	0.00	0.00	0.00	0.00	0.00
		50	0.00	0.00	0.00	0.00	0.00	0.00
	52	49	0.00	0.00	0.00	0.00	0.00	0.00
		50	0.00	0.00	0.00	0.00	0.00	0.00
	53	49	0.00	0.00	0.00	0.00	0.00	0.00
		50	0.00	0.00	0.00	0.00	0.00	0.00

MEMBER END FORCES STRUCTURE TYPE = PLANE

ALL UNITS ARE -- KIP FEET (LOCAL)

MEMBER	LOAD	JT	AXIAL	SHEAR-Y	SHEAR-Z	TORSION	MOM-Y	MOM-Z
	54	49	0.00	0.00	0.00	0.00	0.00	0.00
		50	0.00	0.00	0.00	0.00	0.00	0.00
	55	49	0.00	0.00	0.00	0.00	0.00	0.00
		50	0.00	0.00	0.00	0.00	0.00	0.00
	56	49	0.00	0.00	0.00	0.00	0.00	0.00
		50	0.00	0.00	0.00	0.00	0.00	0.00
	57	49	0.00	0.00	0.00	0.00	0.00	0.00
		50	0.00	0.00	0.00	0.00	0.00	0.00
	58	49	0.00	0.00	0.00	0.00	0.00	0.00
		50	0.00	0.00	0.00	0.00	0.00	0.00
	59	49	0.00	0.00	0.00	0.00	0.00	0.00
		50	0.00	0.00	0.00	0.00	0.00	0.00
	60	49	0.00	0.00	0.00	0.00	0.00	0.00
		50	0.00	0.00	0.00	0.00	0.00	0.00
	61	49	0.00	0.00	0.00	0.00	0.00	0.00
		50	0.00	0.00	0.00	0.00	0.00	0.00
	62	49	0.00	0.00	0.00	0.00	0.00	0.00
		50	0.00	0.00	0.00	0.00	0.00	0.00
	63	49	0.00	0.00	0.00	0.00	0.00	0.00
		50	0.00	0.00	0.00	0.00	0.00	0.00
	64	49	0.00	0.00	0.00	0.00	0.00	0.00
		50	0.00	0.00	0.00	0.00	0.00	0.00
	65	49	0.00	0.00	0.00	0.00	0.00	0.00
		50	0.00	0.00	0.00	0.00	0.00	0.00
	66	49	0.00	0.00	0.00	0.00	0.00	0.00
		50	0.00	0.00	0.00	0.00	0.00	0.00
50	1	50	0.00	0.71	0.00	0.00	0.00	-0.18
		51	0.00	2.13	0.00	0.00	0.00	-0.53
	2	50	0.00	0.00	0.00	0.00	0.00	0.00
		51	0.00	0.00	0.00	0.00	0.00	0.00
	3	50	0.00	0.00	0.00	0.00	0.00	0.00
		51	0.00	0.00	0.00	0.00	0.00	0.00
	4	50	0.00	0.00	0.00	0.00	0.00	0.00
		51	0.00	0.00	0.00	0.00	0.00	0.00
	5	50	0.00	0.00	0.00	0.00	0.00	0.00
		51	0.00	0.00	0.00	0.00	0.00	0.00
	6	50	0.00	0.00	0.00	0.00	0.00	0.00
		51	0.00	0.00	0.00	0.00	0.00	0.00
	7	50	0.00	0.00	0.00	0.00	0.00	0.00
		51	0.00	0.00	0.00	0.00	0.00	0.00
	8	50	0.00	0.00	0.00	0.00	0.00	0.00
		51	0.00	0.00	0.00	0.00	0.00	0.00
	9	50	0.00	0.00	0.00	0.00	0.00	0.00
		51	0.00	0.00	0.00	0.00	0.00	0.00

MEMBER END FORCES STRUCTURE TYPE = PLANE

ALL UNITS ARE -- KIP FEET (LOCAL)

MEMBER	LOAD	JT	AXIAL	SHEAR-Y	SHEAR-Z	TORSION	MOM-Y	MOM-Z
	10	50	0.00	0.00	0.00	0.00	0.00	0.00
		51	0.00	0.00	0.00	0.00	0.00	0.00
	11	50	0.00	0.00	0.00	0.00	0.00	0.00
		51	0.00	0.00	0.00	0.00	0.00	0.00
	12	50	0.00	0.00	0.00	0.00	0.00	0.00
		51	0.00	0.00	0.00	0.00	0.00	0.00
	13	50	0.00	0.00	0.00	0.00	0.00	0.00
		51	0.00	0.00	0.00	0.00	0.00	0.00
	14	50	0.00	0.00	0.00	0.00	0.00	0.00
		51	0.00	0.00	0.00	0.00	0.00	0.00
	15	50	0.00	0.00	0.00	0.00	0.00	0.00
		51	0.00	0.00	0.00	0.00	0.00	0.00
	16	50	0.00	0.00	0.00	0.00	0.00	0.00
		51	0.00	0.00	0.00	0.00	0.00	0.00
	17	50	0.00	0.00	0.00	0.00	0.00	0.00
		51	0.00	0.00	0.00	0.00	0.00	0.00
	18	50	0.00	0.00	0.00	0.00	0.00	0.00
		51	0.00	0.00	0.00	0.00	0.00	0.00
	19	50	0.00	0.00	0.00	0.00	0.00	0.00
		51	0.00	0.00	0.00	0.00	0.00	0.00
	20	50	0.00	0.00	0.00	0.00	0.00	0.00
		51	0.00	0.00	0.00	0.00	0.00	0.00
	21	50	0.00	0.00	0.00	0.00	0.00	0.00
		51	0.00	0.00	0.00	0.00	0.00	0.00
	22	50	0.00	0.00	0.00	0.00	0.00	0.00
		51	0.00	0.00	0.00	0.00	0.00	0.00
	23	50	0.00	0.00	0.00	0.00	0.00	0.00
		51	0.00	0.00	0.00	0.00	0.00	0.00
	24	50	0.00	0.00	0.00	0.00	0.00	0.00
		51	0.00	0.00	0.00	0.00	0.00	0.00
	25	50	0.00	0.00	0.00	0.00	0.00	0.00
		51	0.00	0.00	0.00	0.00	0.00	0.00
	26	50	0.00	0.00	0.00	0.00	0.00	0.00
		51	0.00	0.00	0.00	0.00	0.00	0.00
	27	50	0.00	0.00	0.00	0.00	0.00	0.00
		51	0.00	0.00	0.00	0.00	0.00	0.00
	28	50	0.00	0.00	0.00	0.00	0.00	0.00
		51	0.00	0.00	0.00	0.00	0.00	0.00
	29	50	0.00	0.00	0.00	0.00	0.00	0.00
		51	0.00	0.00	0.00	0.00	0.00	0.00
	30	50	0.00	0.00	0.00	0.00	0.00	0.00
		51	0.00	0.00	0.00	0.00	0.00	0.00
	31	50	0.00	0.00	0.00	0.00	0.00	0.00
		51	0.00	0.00	0.00	0.00	0.00	0.00
	32	50	0.00	0.00	0.00	0.00	0.00	0.00
		51	0.00	0.00	0.00	0.00	0.00	0.00

MEMBER END FORCES STRUCTURE TYPE = PLANE

ALL UNITS ARE -- KIP FEET (LOCAL)

MEMBER	LOAD	JT	AXIAL	SHEAR-Y	SHEAR-Z	TORSION	MOM-Y	MOM-Z
	33	50	0.00	0.00	0.00	0.00	0.00	0.00
		51	0.00	0.00	0.00	0.00	0.00	0.00
	34	50	0.00	0.00	0.00	0.00	0.00	0.00
		51	0.00	0.00	0.00	0.00	0.00	0.00
	35	50	0.00	0.00	0.00	0.00	0.00	0.00
		51	0.00	0.00	0.00	0.00	0.00	0.00
	36	50	0.00	0.00	0.00	0.00	0.00	0.00
		51	0.00	0.00	0.00	0.00	0.00	0.00
	37	50	0.00	0.00	0.00	0.00	0.00	0.00
		51	0.00	0.00	0.00	0.00	0.00	0.00
	38	50	0.00	0.00	0.00	0.00	0.00	0.00
		51	0.00	0.00	0.00	0.00	0.00	0.00
	39	50	0.00	0.00	0.00	0.00	0.00	0.00
		51	0.00	0.00	0.00	0.00	0.00	0.00
	40	50	0.00	0.00	0.00	0.00	0.00	0.00
		51	0.00	0.00	0.00	0.00	0.00	0.00
	41	50	0.00	0.00	0.00	0.00	0.00	0.00
		51	0.00	0.00	0.00	0.00	0.00	0.00
	42	50	0.00	0.00	0.00	0.00	0.00	0.00
		51	0.00	0.00	0.00	0.00	0.00	0.00
	43	50	0.00	0.00	0.00	0.00	0.00	0.00
		51	0.00	0.00	0.00	0.00	0.00	0.00
	44	50	0.00	0.00	0.00	0.00	0.00	0.00
		51	0.00	0.00	0.00	0.00	0.00	0.00
	45	50	0.00	0.00	0.00	0.00	0.00	0.00
		51	0.00	0.00	0.00	0.00	0.00	0.00
	46	50	0.00	0.00	0.00	0.00	0.00	0.00
		51	0.00	0.00	0.00	0.00	0.00	0.00
	47	50	0.00	0.00	0.00	0.00	0.00	0.00
		51	0.00	0.00	0.00	0.00	0.00	0.00
	48	50	0.00	0.00	0.00	0.00	0.00	0.00
		51	0.00	0.00	0.00	0.00	0.00	0.00
	49	50	0.00	0.00	0.00	0.00	0.00	0.00
		51	0.00	0.00	0.00	0.00	0.00	0.00
	50	50	0.00	0.00	0.00	0.00	0.00	0.00
		51	0.00	0.00	0.00	0.00	0.00	0.00
	51	50	0.00	0.00	0.00	0.00	0.00	0.00
		51	0.00	0.00	0.00	0.00	0.00	0.00
	52	50	0.00	0.00	0.00	0.00	0.00	0.00
		51	0.00	0.00	0.00	0.00	0.00	0.00
	53	50	0.00	0.00	0.00	0.00	0.00	0.00
		51	0.00	0.00	0.00	0.00	0.00	0.00
	54	50	0.00	0.00	0.00	0.00	0.00	0.00
		51	0.00	0.00	0.00	0.00	0.00	0.00
	55	50	0.00	0.00	0.00	0.00	0.00	0.00
		51	0.00	0.00	0.00	0.00	0.00	0.00

MEMBER END FORCES STRUCTURE TYPE = PLANE

ALL UNITS ARE -- KIP FEET (LOCAL)

MEMBER	LOAD	JT	AXIAL	SHEAR-Y	SHEAR-Z	TORSION	MOM-Y	MOM-Z
	56	50	0.00	0.00	0.00	0.00	0.00	0.00
		51	0.00	0.00	0.00	0.00	0.00	0.00
	57	50	0.00	0.00	0.00	0.00	0.00	0.00
		51	0.00	0.00	0.00	0.00	0.00	0.00
	58	50	0.00	0.00	0.00	0.00	0.00	0.00
		51	0.00	0.00	0.00	0.00	0.00	0.00
	59	50	0.00	0.00	0.00	0.00	0.00	0.00
		51	0.00	0.00	0.00	0.00	0.00	0.00
	60	50	0.00	0.00	0.00	0.00	0.00	0.00
		51	0.00	0.00	0.00	0.00	0.00	0.00
	61	50	0.00	0.00	0.00	0.00	0.00	0.00
		51	0.00	0.00	0.00	0.00	0.00	0.00
	62	50	0.00	0.00	0.00	0.00	0.00	0.00
		51	0.00	0.00	0.00	0.00	0.00	0.00
	63	50	0.00	0.00	0.00	0.00	0.00	0.00
		51	0.00	0.00	0.00	0.00	0.00	0.00
	64	50	0.00	0.00	0.00	0.00	0.00	0.00
		51	0.00	0.00	0.00	0.00	0.00	0.00
	65	50	0.00	0.00	0.00	0.00	0.00	0.00
		51	0.00	0.00	0.00	0.00	0.00	0.00
	66	50	0.00	0.00	0.00	0.00	0.00	0.00
		51	0.00	0.00	0.00	0.00	0.00	0.00
51	1	51	0.00	11.34	0.00	0.00	0.00	22.68
		52	0.00	-8.50	0.00	0.00	0.00	-12.76
	2	51	0.00	100.10	0.00	0.00	0.00	200.20
		52	0.00	-100.10	0.00	0.00	0.00	-100.10
	3	51	0.00	37.00	0.00	0.00	0.00	74.00
		52	0.00	-37.00	0.00	0.00	0.00	-37.00
	4	51	0.00	0.00	0.00	0.00	0.00	0.00
		52	0.00	0.00	0.00	0.00	0.00	0.00
	5	51	0.00	0.00	0.00	0.00	0.00	0.00
		52	0.00	0.00	0.00	0.00	0.00	0.00
	6	51	0.00	0.00	0.00	0.00	0.00	0.00
		52	0.00	0.00	0.00	0.00	0.00	0.00
	7	51	0.00	0.00	0.00	0.00	0.00	0.00
		52	0.00	0.00	0.00	0.00	0.00	0.00
	8	51	0.00	0.00	0.00	0.00	0.00	0.00
		52	0.00	0.00	0.00	0.00	0.00	0.00
	9	51	0.00	0.00	0.00	0.00	0.00	0.00
		52	0.00	0.00	0.00	0.00	0.00	0.00
	10	51	0.00	0.00	0.00	0.00	0.00	0.00
		52	0.00	0.00	0.00	0.00	0.00	0.00
	11	51	0.00	0.00	0.00	0.00	0.00	0.00
		52	0.00	0.00	0.00	0.00	0.00	0.00

MEMBER END FORCES STRUCTURE TYPE = PLANE

ALL UNITS ARE -- KIP FEET (LOCAL)

MEMBER	LOAD	JT	AXIAL	SHEAR-Y	SHEAR-Z	TORSION	MOM-Y	MOM-Z
	12	51	0.00	0.00	0.00	0.00	0.00	0.00
		52	0.00	0.00	0.00	0.00	0.00	0.00
	13	51	0.00	0.00	0.00	0.00	0.00	0.00
		52	0.00	0.00	0.00	0.00	0.00	0.00
	14	51	0.00	0.00	0.00	0.00	0.00	0.00
		52	0.00	0.00	0.00	0.00	0.00	0.00
	15	51	0.00	0.00	0.00	0.00	0.00	0.00
		52	0.00	0.00	0.00	0.00	0.00	0.00
	16	51	0.00	0.00	0.00	0.00	0.00	0.00
		52	0.00	0.00	0.00	0.00	0.00	0.00
	17	51	0.00	0.00	0.00	0.00	0.00	0.00
		52	0.00	0.00	0.00	0.00	0.00	0.00
	18	51	0.00	0.00	0.00	0.00	0.00	0.00
		52	0.00	0.00	0.00	0.00	0.00	0.00
	19	51	0.00	0.00	0.00	0.00	0.00	0.00
		52	0.00	0.00	0.00	0.00	0.00	0.00
	20	51	0.00	0.00	0.00	0.00	0.00	0.00
		52	0.00	0.00	0.00	0.00	0.00	0.00
	21	51	0.00	0.00	0.00	0.00	0.00	0.00
		52	0.00	0.00	0.00	0.00	0.00	0.00
	22	51	0.00	0.00	0.00	0.00	0.00	0.00
		52	0.00	0.00	0.00	0.00	0.00	0.00
	23	51	0.00	0.00	0.00	0.00	0.00	0.00
		52	0.00	0.00	0.00	0.00	0.00	0.00
	24	51	0.00	0.00	0.00	0.00	0.00	0.00
		52	0.00	0.00	0.00	0.00	0.00	0.00
	25	51	0.00	0.00	0.00	0.00	0.00	0.00
		52	0.00	0.00	0.00	0.00	0.00	0.00
	26	51	0.00	0.00	0.00	0.00	0.00	0.00
		52	0.00	0.00	0.00	0.00	0.00	0.00
	27	51	0.00	0.00	0.00	0.00	0.00	0.00
		52	0.00	0.00	0.00	0.00	0.00	0.00
	28	51	0.00	0.00	0.00	0.00	0.00	0.00
		52	0.00	0.00	0.00	0.00	0.00	0.00
	29	51	0.00	0.00	0.00	0.00	0.00	0.00
		52	0.00	0.00	0.00	0.00	0.00	0.00
	30	51	0.00	0.00	0.00	0.00	0.00	0.00
		52	0.00	0.00	0.00	0.00	0.00	0.00
	31	51	0.00	0.00	0.00	0.00	0.00	0.00
		52	0.00	0.00	0.00	0.00	0.00	0.00
	32	51	0.00	0.00	0.00	0.00	0.00	0.00
		52	0.00	0.00	0.00	0.00	0.00	0.00
	33	51	0.00	0.00	0.00	0.00	0.00	0.00
		52	0.00	0.00	0.00	0.00	0.00	0.00
	34	51	0.00	0.00	0.00	0.00	0.00	0.00
		52	0.00	0.00	0.00	0.00	0.00	0.00

MEMBER END FORCES STRUCTURE TYPE = PLANE

ALL UNITS ARE -- KIP FEET (LOCAL)

MEMBER	LOAD	JT	AXIAL	SHEAR-Y	SHEAR-Z	TORSION	MOM-Y	MOM-Z
	35	51	0.00	0.00	0.00	0.00	0.00	0.00
		52	0.00	0.00	0.00	0.00	0.00	0.00
	36	51	0.00	0.00	0.00	0.00	0.00	0.00
		52	0.00	0.00	0.00	0.00	0.00	0.00
	37	51	0.00	0.00	0.00	0.00	0.00	0.00
		52	0.00	0.00	0.00	0.00	0.00	0.00
	38	51	0.00	0.00	0.00	0.00	0.00	0.00
		52	0.00	0.00	0.00	0.00	0.00	0.00
	39	51	0.00	0.00	0.00	0.00	0.00	0.00
		52	0.00	0.00	0.00	0.00	0.00	0.00
	40	51	0.00	0.00	0.00	0.00	0.00	0.00
		52	0.00	0.00	0.00	0.00	0.00	0.00
	41	51	0.00	0.00	0.00	0.00	0.00	0.00
		52	0.00	0.00	0.00	0.00	0.00	0.00
	42	51	0.00	0.00	0.00	0.00	0.00	0.00
		52	0.00	0.00	0.00	0.00	0.00	0.00
	43	51	0.00	0.00	0.00	0.00	0.00	0.00
		52	0.00	0.00	0.00	0.00	0.00	0.00
	44	51	0.00	0.00	0.00	0.00	0.00	0.00
		52	0.00	0.00	0.00	0.00	0.00	0.00
	45	51	0.00	0.00	0.00	0.00	0.00	0.00
		52	0.00	0.00	0.00	0.00	0.00	0.00
	46	51	0.00	0.00	0.00	0.00	0.00	0.00
		52	0.00	0.00	0.00	0.00	0.00	0.00
	47	51	0.00	0.00	0.00	0.00	0.00	0.00
		52	0.00	0.00	0.00	0.00	0.00	0.00
	48	51	0.00	0.00	0.00	0.00	0.00	0.00
		52	0.00	0.00	0.00	0.00	0.00	0.00
	49	51	0.00	0.00	0.00	0.00	0.00	0.00
		52	0.00	0.00	0.00	0.00	0.00	0.00
	50	51	0.00	0.00	0.00	0.00	0.00	0.00
		52	0.00	0.00	0.00	0.00	0.00	0.00
	51	51	0.00	0.00	0.00	0.00	0.00	0.00
		52	0.00	0.00	0.00	0.00	0.00	0.00
	52	51	0.00	0.00	0.00	0.00	0.00	0.00
		52	0.00	0.00	0.00	0.00	0.00	0.00
	53	51	0.00	0.00	0.00	0.00	0.00	0.00
		52	0.00	0.00	0.00	0.00	0.00	0.00
	54	51	0.00	0.00	0.00	0.00	0.00	0.00
		52	0.00	0.00	0.00	0.00	0.00	0.00
	55	51	0.00	0.00	0.00	0.00	0.00	0.00
		52	0.00	0.00	0.00	0.00	0.00	0.00
	56	51	0.00	0.00	0.00	0.00	0.00	0.00
		52	0.00	0.00	0.00	0.00	0.00	0.00
	57	51	0.00	0.00	0.00	0.00	0.00	0.00
		52	0.00	0.00	0.00	0.00	0.00	0.00

MEMBER END FORCES STRUCTURE TYPE = PLANE

ALL UNITS ARE -- KIP FEET (LOCAL)

MEMBER	LOAD	JT	AXIAL	SHEAR-Y	SHEAR-Z	TORSION	MOM-Y	MOM-Z
	58	51	0.00	0.00	0.00	0.00	0.00	0.00
		52	0.00	0.00	0.00	0.00	0.00	0.00
	59	51	0.00	0.00	0.00	0.00	0.00	0.00
		52	0.00	0.00	0.00	0.00	0.00	0.00
	60	51	0.00	0.00	0.00	0.00	0.00	0.00
		52	0.00	0.00	0.00	0.00	0.00	0.00
	61	51	0.00	0.00	0.00	0.00	0.00	0.00
		52	0.00	0.00	0.00	0.00	0.00	0.00
	62	51	0.00	0.00	0.00	0.00	0.00	0.00
		52	0.00	0.00	0.00	0.00	0.00	0.00
	63	51	0.00	0.00	0.00	0.00	0.00	0.00
		52	0.00	0.00	0.00	0.00	0.00	0.00
	64	51	0.00	0.00	0.00	0.00	0.00	0.00
		52	0.00	0.00	0.00	0.00	0.00	0.00
	65	51	0.00	0.00	0.00	0.00	0.00	0.00
		52	0.00	0.00	0.00	0.00	0.00	0.00
	66	51	0.00	0.00	0.00	0.00	0.00	0.00
		52	0.00	0.00	0.00	0.00	0.00	0.00
52	1	52	0.00	8.50	0.00	0.00	0.00	12.76
		53	0.00	-5.67	0.00	0.00	0.00	-5.67
	2	52	0.00	100.10	0.00	0.00	0.00	100.10
		53	0.00	-100.10	0.00	0.00	0.00	-0.00
	3	52	0.00	37.00	0.00	0.00	0.00	37.00
		53	0.00	-37.00	0.00	0.00	0.00	0.00
	4	52	0.00	0.00	0.00	0.00	0.00	0.00
		53	0.00	0.00	0.00	0.00	0.00	0.00
	5	52	0.00	0.00	0.00	0.00	0.00	0.00
		53	0.00	0.00	0.00	0.00	0.00	0.00
	6	52	0.00	0.00	0.00	0.00	0.00	0.00
		53	0.00	0.00	0.00	0.00	0.00	0.00
	7	52	0.00	0.00	0.00	0.00	0.00	0.00
		53	0.00	0.00	0.00	0.00	0.00	0.00
	8	52	0.00	0.00	0.00	0.00	0.00	0.00
		53	0.00	0.00	0.00	0.00	0.00	0.00
	9	52	0.00	0.00	0.00	0.00	0.00	0.00
		53	0.00	0.00	0.00	0.00	0.00	0.00
	10	52	0.00	0.00	0.00	0.00	0.00	0.00
		53	0.00	0.00	0.00	0.00	0.00	0.00
	11	52	0.00	0.00	0.00	0.00	0.00	0.00
		53	0.00	0.00	0.00	0.00	0.00	0.00
	12	52	0.00	0.00	0.00	0.00	0.00	0.00
		53	0.00	0.00	0.00	0.00	0.00	0.00
	13	52	0.00	0.00	0.00	0.00	0.00	0.00
		53	0.00	0.00	0.00	0.00	0.00	0.00

MEMBER END FORCES STRUCTURE TYPE = PLANE

ALL UNITS ARE -- KIP FEET (LOCAL)

MEMBER	LOAD	JT	AXIAL	SHEAR-Y	SHEAR-Z	TORSION	MOM-Y	MOM-Z
	14	52	0.00	0.00	0.00	0.00	0.00	0.00
		53	0.00	0.00	0.00	0.00	0.00	0.00
	15	52	0.00	0.00	0.00	0.00	0.00	0.00
		53	0.00	0.00	0.00	0.00	0.00	0.00
	16	52	0.00	0.00	0.00	0.00	0.00	0.00
		53	0.00	0.00	0.00	0.00	0.00	0.00
	17	52	0.00	0.00	0.00	0.00	0.00	0.00
		53	0.00	0.00	0.00	0.00	0.00	0.00
	18	52	0.00	0.00	0.00	0.00	0.00	0.00
		53	0.00	0.00	0.00	0.00	0.00	0.00
	19	52	0.00	0.00	0.00	0.00	0.00	0.00
		53	0.00	0.00	0.00	0.00	0.00	0.00
	20	52	0.00	0.00	0.00	0.00	0.00	0.00
		53	0.00	0.00	0.00	0.00	0.00	0.00
	21	52	0.00	0.00	0.00	0.00	0.00	0.00
		53	0.00	0.00	0.00	0.00	0.00	0.00
	22	52	0.00	0.00	0.00	0.00	0.00	0.00
		53	0.00	0.00	0.00	0.00	0.00	0.00
	23	52	0.00	0.00	0.00	0.00	0.00	0.00
		53	0.00	0.00	0.00	0.00	0.00	0.00
	24	52	0.00	0.00	0.00	0.00	0.00	0.00
		53	0.00	0.00	0.00	0.00	0.00	0.00
	25	52	0.00	0.00	0.00	0.00	0.00	0.00
		53	0.00	0.00	0.00	0.00	0.00	0.00
	26	52	0.00	0.00	0.00	0.00	0.00	0.00
		53	0.00	0.00	0.00	0.00	0.00	0.00
	27	52	0.00	0.00	0.00	0.00	0.00	0.00
		53	0.00	0.00	0.00	0.00	0.00	0.00
	28	52	0.00	0.00	0.00	0.00	0.00	0.00
		53	0.00	0.00	0.00	0.00	0.00	0.00
	29	52	0.00	0.00	0.00	0.00	0.00	0.00
		53	0.00	0.00	0.00	0.00	0.00	0.00
	30	52	0.00	0.00	0.00	0.00	0.00	0.00
		53	0.00	0.00	0.00	0.00	0.00	0.00
	31	52	0.00	0.00	0.00	0.00	0.00	0.00
		53	0.00	0.00	0.00	0.00	0.00	0.00
	32	52	0.00	0.00	0.00	0.00	0.00	0.00
		53	0.00	0.00	0.00	0.00	0.00	0.00
	33	52	0.00	0.00	0.00	0.00	0.00	0.00
		53	0.00	0.00	0.00	0.00	0.00	0.00
	34	52	0.00	0.00	0.00	0.00	0.00	0.00
		53	0.00	0.00	0.00	0.00	0.00	0.00
	35	52	0.00	0.00	0.00	0.00	0.00	0.00
		53	0.00	0.00	0.00	0.00	0.00	0.00
	36	52	0.00	0.00	0.00	0.00	0.00	0.00
		53	0.00	0.00	0.00	0.00	0.00	0.00

MEMBER END FORCES STRUCTURE TYPE = PLANE

ALL UNITS ARE -- KIP FEET (LOCAL)

MEMBER	LOAD	JT	AXIAL	SHEAR-Y	SHEAR-Z	TORSION	MOM-Y	MOM-Z
	37	52	0.00	0.00	0.00	0.00	0.00	0.00
		53	0.00	0.00	0.00	0.00	0.00	0.00
	38	52	0.00	0.00	0.00	0.00	0.00	0.00
		53	0.00	0.00	0.00	0.00	0.00	0.00
	39	52	0.00	0.00	0.00	0.00	0.00	0.00
		53	0.00	0.00	0.00	0.00	0.00	0.00
	40	52	0.00	0.00	0.00	0.00	0.00	0.00
		53	0.00	0.00	0.00	0.00	0.00	0.00
	41	52	0.00	0.00	0.00	0.00	0.00	0.00
		53	0.00	0.00	0.00	0.00	0.00	0.00
	42	52	0.00	0.00	0.00	0.00	0.00	0.00
		53	0.00	0.00	0.00	0.00	0.00	0.00
	43	52	0.00	0.00	0.00	0.00	0.00	0.00
		53	0.00	0.00	0.00	0.00	0.00	0.00
	44	52	0.00	0.00	0.00	0.00	0.00	0.00
		53	0.00	0.00	0.00	0.00	0.00	0.00
	45	52	0.00	0.00	0.00	0.00	0.00	0.00
		53	0.00	0.00	0.00	0.00	0.00	0.00
	46	52	0.00	0.00	0.00	0.00	0.00	0.00
		53	0.00	0.00	0.00	0.00	0.00	0.00
	47	52	0.00	0.00	0.00	0.00	0.00	0.00
		53	0.00	0.00	0.00	0.00	0.00	0.00
	48	52	0.00	0.00	0.00	0.00	0.00	0.00
		53	0.00	0.00	0.00	0.00	0.00	0.00
	49	52	0.00	0.00	0.00	0.00	0.00	0.00
		53	0.00	0.00	0.00	0.00	0.00	0.00
	50	52	0.00	0.00	0.00	0.00	0.00	0.00
		53	0.00	0.00	0.00	0.00	0.00	0.00
	51	52	0.00	0.00	0.00	0.00	0.00	0.00
		53	0.00	0.00	0.00	0.00	0.00	0.00
	52	52	0.00	0.00	0.00	0.00	0.00	0.00
		53	0.00	0.00	0.00	0.00	0.00	0.00
	53	52	0.00	0.00	0.00	0.00	0.00	0.00
		53	0.00	0.00	0.00	0.00	0.00	0.00
	54	52	0.00	0.00	0.00	0.00	0.00	0.00
		53	0.00	0.00	0.00	0.00	0.00	0.00
	55	52	0.00	0.00	0.00	0.00	0.00	0.00
		53	0.00	0.00	0.00	0.00	0.00	0.00
	56	52	0.00	0.00	0.00	0.00	0.00	0.00
		53	0.00	0.00	0.00	0.00	0.00	0.00
	57	52	0.00	0.00	0.00	0.00	0.00	0.00
		53	0.00	0.00	0.00	0.00	0.00	0.00
	58	52	0.00	0.00	0.00	0.00	0.00	0.00
		53	0.00	0.00	0.00	0.00	0.00	0.00
	59	52	0.00	0.00	0.00	0.00	0.00	0.00
		53	0.00	0.00	0.00	0.00	0.00	0.00

MEMBER END FORCES STRUCTURE TYPE = PLANE

ALL UNITS ARE -- KIP FEET (LOCAL)

MEMBER	LOAD	JT	AXIAL	SHEAR-Y	SHEAR-Z	TORSION	MOM-Y	MOM-Z
	60	52	0.00	0.00	0.00	0.00	0.00	0.00
		53	0.00	0.00	0.00	0.00	0.00	0.00
	61	52	0.00	0.00	0.00	0.00	0.00	0.00
		53	0.00	0.00	0.00	0.00	0.00	0.00
	62	52	0.00	0.00	0.00	0.00	0.00	0.00
		53	0.00	0.00	0.00	0.00	0.00	0.00
	63	52	0.00	0.00	0.00	0.00	0.00	0.00
		53	0.00	0.00	0.00	0.00	0.00	0.00
	64	52	0.00	0.00	0.00	0.00	0.00	0.00
		53	0.00	0.00	0.00	0.00	0.00	0.00
	65	52	0.00	0.00	0.00	0.00	0.00	0.00
		53	0.00	0.00	0.00	0.00	0.00	0.00
	66	52	0.00	0.00	0.00	0.00	0.00	0.00
		53	0.00	0.00	0.00	0.00	0.00	0.00
53	1	53	0.00	5.67	0.00	0.00	0.00	5.67
		54	0.00	-2.83	0.00	0.00	0.00	-1.42
	2	53	0.00	0.00	0.00	0.00	0.00	-0.00
		54	0.00	-0.00	0.00	0.00	0.00	0.00
	3	53	0.00	0.00	0.00	0.00	0.00	-0.00
		54	0.00	-0.00	0.00	0.00	0.00	0.00
	4	53	0.00	0.00	0.00	0.00	0.00	0.00
		54	0.00	0.00	0.00	0.00	0.00	0.00
	5	53	0.00	0.00	0.00	0.00	0.00	0.00
		54	0.00	0.00	0.00	0.00	0.00	0.00
	6	53	0.00	0.00	0.00	0.00	0.00	0.00
		54	0.00	0.00	0.00	0.00	0.00	0.00
	7	53	0.00	0.00	0.00	0.00	0.00	0.00
		54	0.00	0.00	0.00	0.00	0.00	0.00
	8	53	0.00	0.00	0.00	0.00	0.00	0.00
		54	0.00	0.00	0.00	0.00	0.00	0.00
	9	53	0.00	0.00	0.00	0.00	0.00	0.00
		54	0.00	0.00	0.00	0.00	0.00	0.00
	10	53	0.00	0.00	0.00	0.00	0.00	0.00
		54	0.00	0.00	0.00	0.00	0.00	0.00
	11	53	0.00	0.00	0.00	0.00	0.00	0.00
		54	0.00	0.00	0.00	0.00	0.00	0.00
	12	53	0.00	0.00	0.00	0.00	0.00	0.00
		54	0.00	0.00	0.00	0.00	0.00	0.00
	13	53	0.00	0.00	0.00	0.00	0.00	0.00
		54	0.00	0.00	0.00	0.00	0.00	0.00
	14	53	0.00	0.00	0.00	0.00	0.00	0.00
		54	0.00	0.00	0.00	0.00	0.00	0.00
	15	53	0.00	0.00	0.00	0.00	0.00	0.00
		54	0.00	0.00	0.00	0.00	0.00	0.00

MEMBER END FORCES STRUCTURE TYPE = PLANE

ALL UNITS ARE -- KIP FEET (LOCAL)

MEMBER	LOAD	JT	AXIAL	SHEAR-Y	SHEAR-Z	TORSION	MOM-Y	MOM-Z
	16	53	0.00	0.00	0.00	0.00	0.00	0.00
		54	0.00	0.00	0.00	0.00	0.00	0.00
	17	53	0.00	0.00	0.00	0.00	0.00	0.00
		54	0.00	0.00	0.00	0.00	0.00	0.00
	18	53	0.00	0.00	0.00	0.00	0.00	0.00
		54	0.00	0.00	0.00	0.00	0.00	0.00
	19	53	0.00	0.00	0.00	0.00	0.00	0.00
		54	0.00	0.00	0.00	0.00	0.00	0.00
	20	53	0.00	0.00	0.00	0.00	0.00	0.00
		54	0.00	0.00	0.00	0.00	0.00	0.00
	21	53	0.00	0.00	0.00	0.00	0.00	0.00
		54	0.00	0.00	0.00	0.00	0.00	0.00
	22	53	0.00	0.00	0.00	0.00	0.00	0.00
		54	0.00	0.00	0.00	0.00	0.00	0.00
	23	53	0.00	0.00	0.00	0.00	0.00	0.00
		54	0.00	0.00	0.00	0.00	0.00	0.00
	24	53	0.00	0.00	0.00	0.00	0.00	0.00
		54	0.00	0.00	0.00	0.00	0.00	0.00
	25	53	0.00	0.00	0.00	0.00	0.00	0.00
		54	0.00	0.00	0.00	0.00	0.00	0.00
	26	53	0.00	0.00	0.00	0.00	0.00	0.00
		54	0.00	0.00	0.00	0.00	0.00	0.00
	27	53	0.00	0.00	0.00	0.00	0.00	0.00
		54	0.00	0.00	0.00	0.00	0.00	0.00
	28	53	0.00	0.00	0.00	0.00	0.00	0.00
		54	0.00	0.00	0.00	0.00	0.00	0.00
	29	53	0.00	0.00	0.00	0.00	0.00	0.00
		54	0.00	0.00	0.00	0.00	0.00	0.00
	30	53	0.00	0.00	0.00	0.00	0.00	0.00
		54	0.00	0.00	0.00	0.00	0.00	0.00
	31	53	0.00	0.00	0.00	0.00	0.00	0.00
		54	0.00	0.00	0.00	0.00	0.00	0.00
	32	53	0.00	0.00	0.00	0.00	0.00	0.00
		54	0.00	0.00	0.00	0.00	0.00	0.00
	33	53	0.00	0.00	0.00	0.00	0.00	0.00
		54	0.00	0.00	0.00	0.00	0.00	0.00
	34	53	0.00	0.00	0.00	0.00	0.00	0.00
		54	0.00	0.00	0.00	0.00	0.00	0.00
	35	53	0.00	0.00	0.00	0.00	0.00	0.00
		54	0.00	0.00	0.00	0.00	0.00	0.00
	36	53	0.00	0.00	0.00	0.00	0.00	0.00
		54	0.00	0.00	0.00	0.00	0.00	0.00
	37	53	0.00	0.00	0.00	0.00	0.00	0.00
		54	0.00	0.00	0.00	0.00	0.00	0.00
	38	53	0.00	0.00	0.00	0.00	0.00	0.00
		54	0.00	0.00	0.00	0.00	0.00	0.00

MEMBER END FORCES STRUCTURE TYPE = PLANE

ALL UNITS ARE -- KIP FEET (LOCAL)

MEMBER	LOAD	JT	AXIAL	SHEAR-Y	SHEAR-Z	TORSION	MOM-Y	MOM-Z
	39	53	0.00	0.00	0.00	0.00	0.00	0.00
		54	0.00	0.00	0.00	0.00	0.00	0.00
	40	53	0.00	0.00	0.00	0.00	0.00	0.00
		54	0.00	0.00	0.00	0.00	0.00	0.00
	41	53	0.00	0.00	0.00	0.00	0.00	0.00
		54	0.00	0.00	0.00	0.00	0.00	0.00
	42	53	0.00	0.00	0.00	0.00	0.00	0.00
		54	0.00	0.00	0.00	0.00	0.00	0.00
	43	53	0.00	0.00	0.00	0.00	0.00	0.00
		54	0.00	0.00	0.00	0.00	0.00	0.00
	44	53	0.00	0.00	0.00	0.00	0.00	0.00
		54	0.00	0.00	0.00	0.00	0.00	0.00
	45	53	0.00	0.00	0.00	0.00	0.00	0.00
		54	0.00	0.00	0.00	0.00	0.00	0.00
	46	53	0.00	0.00	0.00	0.00	0.00	0.00
		54	0.00	0.00	0.00	0.00	0.00	0.00
	47	53	0.00	0.00	0.00	0.00	0.00	0.00
		54	0.00	0.00	0.00	0.00	0.00	0.00
	48	53	0.00	0.00	0.00	0.00	0.00	0.00
		54	0.00	0.00	0.00	0.00	0.00	0.00
	49	53	0.00	0.00	0.00	0.00	0.00	0.00
		54	0.00	0.00	0.00	0.00	0.00	0.00
	50	53	0.00	0.00	0.00	0.00	0.00	0.00
		54	0.00	0.00	0.00	0.00	0.00	0.00
	51	53	0.00	0.00	0.00	0.00	0.00	0.00
		54	0.00	0.00	0.00	0.00	0.00	0.00
	52	53	0.00	0.00	0.00	0.00	0.00	0.00
		54	0.00	0.00	0.00	0.00	0.00	0.00
	53	53	0.00	0.00	0.00	0.00	0.00	0.00
		54	0.00	0.00	0.00	0.00	0.00	0.00
	54	53	0.00	0.00	0.00	0.00	0.00	0.00
		54	0.00	0.00	0.00	0.00	0.00	0.00
	55	53	0.00	0.00	0.00	0.00	0.00	0.00
		54	0.00	0.00	0.00	0.00	0.00	0.00
	56	53	0.00	0.00	0.00	0.00	0.00	0.00
		54	0.00	0.00	0.00	0.00	0.00	0.00
	57	53	0.00	0.00	0.00	0.00	0.00	0.00
		54	0.00	0.00	0.00	0.00	0.00	0.00
	58	53	0.00	0.00	0.00	0.00	0.00	0.00
		54	0.00	0.00	0.00	0.00	0.00	0.00
	59	53	0.00	0.00	0.00	0.00	0.00	0.00
		54	0.00	0.00	0.00	0.00	0.00	0.00
	60	53	0.00	0.00	0.00	0.00	0.00	0.00
		54	0.00	0.00	0.00	0.00	0.00	0.00
	61	53	0.00	0.00	0.00	0.00	0.00	0.00
		54	0.00	0.00	0.00	0.00	0.00	0.00

MEMBER END FORCES STRUCTURE TYPE = PLANE

ALL UNITS ARE -- KIP FEET (LOCAL)

MEMBER	LOAD	JT	AXIAL	SHEAR-Y	SHEAR-Z	TORSION	MOM-Y	MOM-Z
	62	53	0.00	0.00	0.00	0.00	0.00	0.00
		54	0.00	0.00	0.00	0.00	0.00	0.00
	63	53	0.00	0.00	0.00	0.00	0.00	0.00
		54	0.00	0.00	0.00	0.00	0.00	0.00
	64	53	0.00	0.00	0.00	0.00	0.00	0.00
		54	0.00	0.00	0.00	0.00	0.00	0.00
	65	53	0.00	0.00	0.00	0.00	0.00	0.00
		54	0.00	0.00	0.00	0.00	0.00	0.00
	66	53	0.00	0.00	0.00	0.00	0.00	0.00
		54	0.00	0.00	0.00	0.00	0.00	0.00
54	1	54	0.00	2.83	0.00	0.00	0.00	1.42
		55	0.00	-0.00	0.00	0.00	0.00	0.00
	2	54	0.00	-0.00	0.00	0.00	0.00	-0.00
		55	0.00	0.00	0.00	0.00	0.00	0.00
	3	54	0.00	0.00	0.00	0.00	0.00	0.00
		55	0.00	-0.00	0.00	0.00	0.00	0.00
	4	54	0.00	0.00	0.00	0.00	0.00	0.00
		55	0.00	0.00	0.00	0.00	0.00	0.00
	5	54	0.00	0.00	0.00	0.00	0.00	0.00
		55	0.00	0.00	0.00	0.00	0.00	0.00
	6	54	0.00	0.00	0.00	0.00	0.00	0.00
		55	0.00	0.00	0.00	0.00	0.00	0.00
	7	54	0.00	0.00	0.00	0.00	0.00	0.00
		55	0.00	0.00	0.00	0.00	0.00	0.00
	8	54	0.00	0.00	0.00	0.00	0.00	0.00
		55	0.00	0.00	0.00	0.00	0.00	0.00
	9	54	0.00	0.00	0.00	0.00	0.00	0.00
		55	0.00	0.00	0.00	0.00	0.00	0.00
	10	54	0.00	0.00	0.00	0.00	0.00	0.00
		55	0.00	0.00	0.00	0.00	0.00	0.00
	11	54	0.00	0.00	0.00	0.00	0.00	0.00
		55	0.00	0.00	0.00	0.00	0.00	0.00
	12	54	0.00	0.00	0.00	0.00	0.00	0.00
		55	0.00	0.00	0.00	0.00	0.00	0.00
	13	54	0.00	0.00	0.00	0.00	0.00	0.00
		55	0.00	0.00	0.00	0.00	0.00	0.00
	14	54	0.00	0.00	0.00	0.00	0.00	0.00
		55	0.00	0.00	0.00	0.00	0.00	0.00
	15	54	0.00	0.00	0.00	0.00	0.00	0.00
		55	0.00	0.00	0.00	0.00	0.00	0.00
	16	54	0.00	0.00	0.00	0.00	0.00	0.00
		55	0.00	0.00	0.00	0.00	0.00	0.00
	17	54	0.00	0.00	0.00	0.00	0.00	0.00
		55	0.00	0.00	0.00	0.00	0.00	0.00

MEMBER END FORCES STRUCTURE TYPE = PLANE

ALL UNITS ARE -- KIP FEET (LOCAL)

MEMBER	LOAD	JT	AXIAL	SHEAR-Y	SHEAR-Z	TORSION	MOM-Y	MOM-Z
	18	54	0.00	0.00	0.00	0.00	0.00	0.00
		55	0.00	0.00	0.00	0.00	0.00	0.00
	19	54	0.00	0.00	0.00	0.00	0.00	0.00
		55	0.00	0.00	0.00	0.00	0.00	0.00
	20	54	0.00	0.00	0.00	0.00	0.00	0.00
		55	0.00	0.00	0.00	0.00	0.00	0.00
	21	54	0.00	0.00	0.00	0.00	0.00	0.00
		55	0.00	0.00	0.00	0.00	0.00	0.00
	22	54	0.00	0.00	0.00	0.00	0.00	0.00
		55	0.00	0.00	0.00	0.00	0.00	0.00
	23	54	0.00	0.00	0.00	0.00	0.00	0.00
		55	0.00	0.00	0.00	0.00	0.00	0.00
	24	54	0.00	0.00	0.00	0.00	0.00	0.00
		55	0.00	0.00	0.00	0.00	0.00	0.00
	25	54	0.00	0.00	0.00	0.00	0.00	0.00
		55	0.00	0.00	0.00	0.00	0.00	0.00
	26	54	0.00	0.00	0.00	0.00	0.00	0.00
		55	0.00	0.00	0.00	0.00	0.00	0.00
	27	54	0.00	0.00	0.00	0.00	0.00	0.00
		55	0.00	0.00	0.00	0.00	0.00	0.00
	28	54	0.00	0.00	0.00	0.00	0.00	0.00
		55	0.00	0.00	0.00	0.00	0.00	0.00
	29	54	0.00	0.00	0.00	0.00	0.00	0.00
		55	0.00	0.00	0.00	0.00	0.00	0.00
	30	54	0.00	0.00	0.00	0.00	0.00	0.00
		55	0.00	0.00	0.00	0.00	0.00	0.00
	31	54	0.00	0.00	0.00	0.00	0.00	0.00
		55	0.00	0.00	0.00	0.00	0.00	0.00
	32	54	0.00	0.00	0.00	0.00	0.00	0.00
		55	0.00	0.00	0.00	0.00	0.00	0.00
	33	54	0.00	0.00	0.00	0.00	0.00	0.00
		55	0.00	0.00	0.00	0.00	0.00	0.00
	34	54	0.00	0.00	0.00	0.00	0.00	0.00
		55	0.00	0.00	0.00	0.00	0.00	0.00
	35	54	0.00	0.00	0.00	0.00	0.00	0.00
		55	0.00	0.00	0.00	0.00	0.00	0.00
	36	54	0.00	0.00	0.00	0.00	0.00	0.00
		55	0.00	0.00	0.00	0.00	0.00	0.00
	37	54	0.00	0.00	0.00	0.00	0.00	0.00
		55	0.00	0.00	0.00	0.00	0.00	0.00
	38	54	0.00	0.00	0.00	0.00	0.00	0.00
		55	0.00	0.00	0.00	0.00	0.00	0.00
	39	54	0.00	0.00	0.00	0.00	0.00	0.00
		55	0.00	0.00	0.00	0.00	0.00	0.00
	40	54	0.00	0.00	0.00	0.00	0.00	0.00
		55	0.00	0.00	0.00	0.00	0.00	0.00

MEMBER END FORCES STRUCTURE TYPE = PLANE

ALL UNITS ARE -- KIP FEET (LOCAL)

MEMBER	LOAD	JT	AXIAL	SHEAR-Y	SHEAR-Z	TORSION	MOM-Y	MOM-Z
	41	54	0.00	0.00	0.00	0.00	0.00	0.00
		55	0.00	0.00	0.00	0.00	0.00	0.00
	42	54	0.00	0.00	0.00	0.00	0.00	0.00
		55	0.00	0.00	0.00	0.00	0.00	0.00
	43	54	0.00	0.00	0.00	0.00	0.00	0.00
		55	0.00	0.00	0.00	0.00	0.00	0.00
	44	54	0.00	0.00	0.00	0.00	0.00	0.00
		55	0.00	0.00	0.00	0.00	0.00	0.00
	45	54	0.00	0.00	0.00	0.00	0.00	0.00
		55	0.00	0.00	0.00	0.00	0.00	0.00
	46	54	0.00	0.00	0.00	0.00	0.00	0.00
		55	0.00	0.00	0.00	0.00	0.00	0.00
	47	54	0.00	0.00	0.00	0.00	0.00	0.00
		55	0.00	0.00	0.00	0.00	0.00	0.00
	48	54	0.00	0.00	0.00	0.00	0.00	0.00
		55	0.00	0.00	0.00	0.00	0.00	0.00
	49	54	0.00	0.00	0.00	0.00	0.00	0.00
		55	0.00	0.00	0.00	0.00	0.00	0.00
	50	54	0.00	0.00	0.00	0.00	0.00	0.00
		55	0.00	0.00	0.00	0.00	0.00	0.00
	51	54	0.00	0.00	0.00	0.00	0.00	0.00
		55	0.00	0.00	0.00	0.00	0.00	0.00
	52	54	0.00	0.00	0.00	0.00	0.00	0.00
		55	0.00	0.00	0.00	0.00	0.00	0.00
	53	54	0.00	0.00	0.00	0.00	0.00	0.00
		55	0.00	0.00	0.00	0.00	0.00	0.00
	54	54	0.00	0.00	0.00	0.00	0.00	0.00
		55	0.00	0.00	0.00	0.00	0.00	0.00
	55	54	0.00	0.00	0.00	0.00	0.00	0.00
		55	0.00	0.00	0.00	0.00	0.00	0.00
	56	54	0.00	0.00	0.00	0.00	0.00	0.00
		55	0.00	0.00	0.00	0.00	0.00	0.00
	57	54	0.00	0.00	0.00	0.00	0.00	0.00
		55	0.00	0.00	0.00	0.00	0.00	0.00
	58	54	0.00	0.00	0.00	0.00	0.00	0.00
		55	0.00	0.00	0.00	0.00	0.00	0.00
	59	54	0.00	0.00	0.00	0.00	0.00	0.00
		55	0.00	0.00	0.00	0.00	0.00	0.00
	60	54	0.00	0.00	0.00	0.00	0.00	0.00
		55	0.00	0.00	0.00	0.00	0.00	0.00
	61	54	0.00	0.00	0.00	0.00	0.00	0.00
		55	0.00	0.00	0.00	0.00	0.00	0.00
	62	54	0.00	0.00	0.00	0.00	0.00	0.00
		55	0.00	0.00	0.00	0.00	0.00	0.00
	63	54	0.00	0.00	0.00	0.00	0.00	0.00
		55	0.00	0.00	0.00	0.00	0.00	0.00

MEMBER END FORCES STRUCTURE TYPE = PLANE

ALL UNITS ARE -- KIP FEET (LOCAL)

MEMBER	LOAD	JT	AXIAL	SHEAR-Y	SHEAR-Z	TORSION	MOM-Y	MOM-Z
	64	54	0.00	0.00	0.00	0.00	0.00	0.00
		55	0.00	0.00	0.00	0.00	0.00	0.00
	65	54	0.00	0.00	0.00	0.00	0.00	0.00
		55	0.00	0.00	0.00	0.00	0.00	0.00
	66	54	0.00	0.00	0.00	0.00	0.00	0.00
		55	0.00	0.00	0.00	0.00	0.00	0.00

********** END OF LATEST ANALYSIS RESULT **********

309. FINISH

********** END OF THE STAAD.Pro RUN **********

**** DATE= SEP 20,2018 TIME= 8:40:36 ****

```
*************************************************************
*   For technical assistance on STAAD.Pro, please visit    *
*   http://selectservices.bentley.com/en-US/               *
*                                                          *
*   Details about additional assistance from               *
*   Bentley and Partners can be found at program menu      *
*   Help->Technical Support                                *
*                                                          *
*      Copyright (c) 1997-2015 Bentley Systems, Inc.
*                http://www.bentley.com                    *
*************************************************************
```

AECOM

September 13th, 2018
David J. Cluley, P.E.
Administrator/Chief Civil Engineer
Bridge Inspection Section
RIDOT Maintenance Headquarters
360 Lincoln Avenue, 1st Floor
Warwick, Rhode Island, 02888

Subject: Statewide Bridge Inspection
Contract No. MPA 359
Assignment No. 46
Engineering Firm Project No. 60330198

Dear Mr. Cluley:

AECOM is pleased to submit the Routine and Special Inspection Report for the following bridge:

Bridge No. 067301:	RI 102 Bronco Highway over Branch River, Burrillville
Date Inspection Completed:	08/02/18
Date Submitted:	09/13/18
Previously Inspected:	08/04/17 Special Inspection 08/04/16 Routine Inspection

Very truly yours,

Engineering Firm

CC:

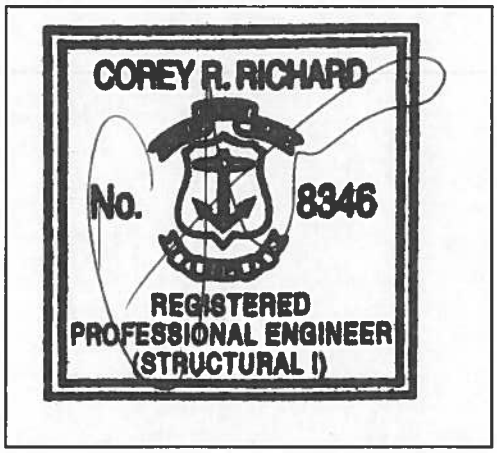

P.E. Stamp

Rhode Island Department of Transportation

Bridge Inspection Report

Structure Inventory and Appraisal Sheet (English Units)

Name: Mohegan | Agency ID: 067301 | Inspec Date: 08/02/2018 | Inspected By: AECOM

IDENTIFICATION

	Route On Structure		44 Rhode Island
Rte. Signing Prefix 5B:	3 State Hwy		RI 102 BRONCO HWY
Level of Service 5C:	1 Mainline	Place Code 4:	Burrillville
Route Number 5D:	00102	SHD District 2:	District 1
Directional Suffix 5E:	0 N/A (NBI)	Feature Intersected 6:	BRANCH RIVER
Border Bridge Code 98:	Not Applicable (P)	County Code 3:	Providence
Border Bridge Number 99:			0.1 Mi S of JCT RI 7
Mile Post 11:	41.743 mi	Latitude 16:	41° 58' 54"
Struc Num 8:	000000000006730	Longitude 17:	071° 37' 03"
% Responsibility:			

INSPECTION

Inspection Date 90:	8/2/2018	Frequency 91:	24 months	Next Inspection:	8/2/2020
FC Inspection Date 93A:	NA	FC Frequency 92A:		Next FC Inspection:	NA
UW Inspection Date 93B:	NA	UW Frequency 92B:		Next UW Inspection:	NA
SI Date 93C:	8/2/2018	SI Frequency 92C:	12 months	Next SI:	8/2/2019
Element Insp. Date:	8/2/2018	Element Frequency:	24 months	Next Elem. Insp.:	8/2/2020

CONDITION

Deck 58: 6 Satisfactory	Super 59: 4 Poor	Sub 60: 4 Poor
Culvert 62: N N/A (NBI)	Channel/Channel Protection 61: 6 Bank Slumping	

CONDITION Poor

SD/FO: SD

SUFF RATE: 33.7

LOAD RATING AND POSTING

Inventory Rating Method 65:	8 LRFR (HL93)
Inventory Rating 66:	MS 7.2
Design Load 31:	5 MS 18 (HS 20)
Posting Status 41:	P Posted for load
Operating Rating Method 63:	8 LRFR (HL93)
Operating Rating 64:	MS11.3
Posting 70:	5 At/Above Legal Loads

GEOMETRIC DATA

Length Max Span 48:	110.00 ft	Structure Length 49:	226.00
Width Curb to Curb 51:	29.00 ft	Curb/Sdwlk Width L 50A:	2.00
Approach Roadway width (w/ shoulders) 32:	44.00 ft	Curb/Sidewalk Width R 50B:	2.00 ft
		Width Out to Out 52:	47.50 ft
Deck Area:	10,735.00ft²	Median 33:	0 No median
Skew 34:	0.00°	Structure Flared 35:	0 No flare
Vertical Clearance 10:	99.99 ft	Horizontal Clearance 47:	44.00 ft

Minimum Vertical Clearance Over Bridge 53:	99.99 ft
Minimum Vertical Underclearance Reference 54A:	N Feature not hwy or RR
Minimum Vertical Underclearance 54B:	0.00 ft
Minimum Lateral Underclearance Reference R 55A:	N Feature not hwy or RR
Minimum Lateral Underclearance R 55:	0.00 ft
Minimum Lateral Underclearance L 56:	0.00 ft

Rhode Island Department of Transportation

Bridge Inspection Report

Structure Inventory and Appraisal Sheet (English Units)

AGE AND SERVICE

Year Built	27:	1966	ADT	29:	13,939
Type of Service on	42A:	1 Highway	Year Reconstructed	106:	
Type of Service under	42B:	5 Waterway	Detour Length	19:	0.3 mi
Lanes on	28A:	2	Truck ADT	109:	1%
Lanes under	28B:	0	Year of ADT	30:	2014

STRUCTURE TYPE AND MATERIALS

Number of Approach Spans	46:	0	Number of Spans Main Unit	45:	2
Wearing Surface	108A:	6 Bituminous	Main Span Material Design	43A:	3 Steel
Membrane	108B:	9 Other	Main Span Material Design	43B:	02 Stringer/Girder
Deck protection	108C:	None	Deck Type	107:	1 Concrete-Cast-ir

APPRAISAL

Bridge Rail	36A:	0 Substandard	Approach Rail	36C:	0 Substandard
Transition	36B:	0 Substandard	Approach Rail Ends	36D:	0 Substandard
Str Evaluation	67:	4 Minimum Tolerable	Deck Geometry	68:	4 Tolerable
Waterway Adequacy	71:	8 Equal Desirable	Approach Alignment	72:	6 Equal Min Criteria
Scour Critical	113:	8 Stable Above Footing			
Underclearance, Vertical and Horizontal	69:	N Not applicable (NBI)			

CLASSIFICATION

Defense Highway	100:	0 Not a STRAHNET hwy	Parallel Structure	101:	No || bridge exists
Direction of Traffic	102:	2 2-way traffic	Temporary Structure	103:	Not Applicable (P)
Highway System	104:	3 On free road	NBIS Length	112:	Long Enough
Defense Hwy	110:	1 On the NHS	Functional Class	26:	14 Urban Other Princ
Toll Facility	20:	0 Not a STRAHNET hwy	Historical Significance	37:	5 Not eligible for NRHP
Owner	22:	State Highway Agency	Custodian	21:	State Highway Agency

PROPOSED IMPROVEMENTS

Bridge Cost	94:	$626,000	Type of Work	75:	35 Rehabilitate-gen.
Roadway Cost	95:	$62,600	Length of Improvement	76:	226.05
Total Cost	96:	$939,000	Future ADT	114:	16,727
Year of Cost Estimate	97:	2007	Year of Future ADT	115:	2036

NAVIGATION DATA

Navigation Control	38:	Permit Not Required	Horizontal Clearance	40:	0.0 ft
Vertical Clearance	39:	0.0 ft			
Pier Protection	111:	Not Applicable (P)	Lift Bridge Vertical Clearance	116:	

Rhode Island Department of Transportation

Bridge Inspection Report

Structure Inventory and Appraisal Sheet (English Units)

ELEMENT CONDITION STATE DATA

Str Unit	Elm/Env	Description	Total Qty	% in 1	Qty. St. 1	% in 2	Qty. St. 2	% in 3	Qty. St. 3	% in 4	Qty. St. 4
0	**12/3**	**Re Concrete Deck**	**10,735.00**	**98%**	**10,554.00**	**0%**	**0.00**	**2%**	**181.00**	**0%**	**0.00**
	510/3	Wearing Surfaces	9,944.00	100%	9,898.00	0%	2.00	0%	44.00	0%	0.00
	3210/3	*Del/Spall/Patch/Pot(Wear Surf)*	*2.00*	*0%*	*0.00*	*100%*	*2.00*	*0%*	*0.00*	*0%*	*0.00*
	3220/3	*Crack (Wearing Surface)*	*44.00*	*0%*	*0.00*	*0%*	*0.00*	*100%*	*44.00*	*0%*	*0.00*
	1080/3	Delamination/Spall/Patched Area	11.00	0%	0.00	0%	0.00	100%	11.00	0%	0.00
	1090/3	Exposed Rebar	30.00	0%	0.00	0%	0.00	100%	30.00	0%	0.00
	1120/3	Efflorescence/Rust Staining	25.00	0%	0.00	0%	0.00	100%	25.00	0%	0.00
	1130/3	Cracking (RC and Other)	110.00	0%	0.00	0%	0.00	100%	110.00	0%	0.00
0	**107/3**	**Steel Opn Girder/Beam**	**1,582.00**	**85%**	**1,350.00**	**11%**	**173.00**	**3%**	**55.00**	**0%**	**4.00**
	515/3	Steel Protective Coating	26,280.00	96%	25,260.00	0%	0.00	1%	325.00	3%	695.00
	3420/3	*Peel/Bub/Crack(Stl Protect Coat)*	*1,020.00*	*0%*	*0.00*	*0%*	*0.00*	*32%*	*325.00*	*68%*	*695.00*
	1000/3	Corrosion	232.00	0%	0.00	75%	173.00	24%	55.00	2%	4.00
	8368/3	Graffiti	482.00	100%	482.00	0%	0.00	0%	0.00	0%	0.00
0	**205/3**	**Re Conc Column**	**3.00**	**0%**	**0.00**	**33%**	**1.00**	**67%**	**2.00**	**0%**	**0.00**
	1080/3	Delamination/Spall/Patched Area	1.00	0%	0.00	100%	1.00	0%	0.00	0%	0.00
	1090/3	Exposed Rebar	1.00	0%	0.00	0%	0.00	100%	1.00	0%	0.00
	1130/3	Cracking (RC and Other)	1.00	0%	0.00	0%	0.00	100%	1.00	0%	0.00
	8368/3	Graffiti	180.00	100%	180.00	0%	0.00	0%	0.00	0%	0.00
0	**210/3**	**Re Conc Pier Wall**	**46.00**	**57%**	**26.00**	**0%**	**0.00**	**43%**	**20.00**	**0%**	**0.00**
	1130/3	Cracking (RC and Other)	20.00	0%	0.00	0%	0.00	100%	20.00	0%	0.00
	8368/3	Graffiti	426.00	100%	426.00	0%	0.00	0%	0.00	0%	0.00
0	**215/3**	**Re Conc Abutment**	**146.00**	**19%**	**28.00**	**43%**	**63.00**	**38%**	**55.00**	**0%**	**0.00**
	1080/3	Delamination/Spall/Patched Area	35.00	0%	0.00	43%	15.00	57%	20.00	0%	0.00
	1090/3	Exposed Rebar	10.00	0%	0.00	0%	0.00	100%	10.00	0%	0.00
	1120/3	Efflorescence/Rust Staining	10.00	0%	0.00	0%	0.00	100%	10.00	0%	0.00
	1130/3	Cracking (RC and Other)	15.00	0%	0.00	0%	0.00	100%	15.00	0%	0.00
	8368/3	Graffiti	756.00	100%	756.00	0%	0.00	0%	0.00	0%	0.00
0	**234/3**	**Re Conc Pier Cap**	**49.00**	**0%**	**0.00**	**0%**	**0.00**	**31%**	**15.00**	**69%**	**34.00**
	1080/3	Delamination/Spall/Patched Area	23.00	0%	0.00	0%	0.00	39%	9.00	61%	14.00
	1090/3	Exposed Rebar	20.00	0%	0.00	0%	0.00	0%	0.00	100%	20.00
	1120/3	Efflorescence/Rust Staining	5.00	0%	0.00	0%	0.00	100%	5.00	0%	0.00
	1130/3	Cracking (RC and Other)	1.00	0%	0.00	0%	0.00	100%	1.00	0%	0.00
0	**301/3**	**Pourable Joint Seal**	**49.00**	**67%**	**33.00**	**33%**	**16.00**	**0%**	**0.00**	**0%**	**0.00**
	2320/3	Seal Adhesion	16.00	0%	0.00	100%	16.00	0%	0.00	0%	0.00
0	**302/3**	**Compressn Joint Seal**	**49.00**	**6%**	**3.00**	**0%**	**0.00**	**76%**	**37.00**	**18%**	**9.00**
	2350/3	Debris Impaction	37.00	0%	0.00	0%	0.00	100%	37.00	0%	0.00
	2360/3	Adjacent Deck or Header	12.00	25%	3.00	0%	0.00	0%	0.00	75%	9.00
0	**311/3**	**Moveable Bearing**	**14.00**	**0%**	**0.00**	**71%**	**10.00**	**14%**	**2.00**	**14%**	**2.00**
	515/3	Steel Protective Coating	14.00	29%	4.00	0%	0.00	0%	0.00	71%	10.00
	3420/3	*Peel/Bub/Crack(Stl Protect Coat)*	*10.00*	*0%*	*0.00*	*0%*	*0.00*	*0%*	*0.00*	*100%*	*10.00*
	1000/3	Corrosion	7.00	0%	0.00	86%	6.00	14%	1.00	0%	0.00
	1020/3	Connection	4.00	0%	0.00	100%	4.00	0%	0.00	0%	0.00
	2220/3	Alignment	3.00	0%	0.00	0%	0.00	33%	1.00	67%	2.00
0	**313/3**	**Fixed Bearing**	**14.00**	**0%**	**0.00**	**93%**	**13.00**	**7%**	**1.00**	**0%**	**0.00**
	515/3	Steel Protective Coating	14.00	0%	0.00	0%	0.00	14%	2.00	86%	12.00
	3420/3	*Peel/Bub/Crack(Stl Protect Coat)*	*14.00*	*0%*	*0.00*	*0%*	*0.00*	*14%*	*2.00*	*86%*	*12.00*
	1000/3	Corrosion	9.00	0%	0.00	100%	9.00	0%	0.00	0%	0.00
	1020/3	Connection	5.00	0%	0.00	80%	4.00	20%	1.00	0%	0.00
0	**321/3**	**Re Conc Approach Slab**	**880.00**	**100%**	**880.00**	**0%**	**0.00**	**0%**	**0.00**	**0%**	**0.00**
	510/3	Wearing Surfaces	880.00	68%	594.00	0%	0.00	33%	286.00	0%	0.00
	3220/3	*Crack (Wearing Surface)*	*286.00*	*0%*	*0.00*	*0%*	*0.00*	*100%*	*286.00*	*0%*	*0.00*
0	**8214/3**	**R/C Wingwall**	**54.00**	**50%**	**27.00**	**50%**	**27.00**	**0%**	**0.00**	**0%**	**0.00**
	1120/3	Efflorescence/Rust Staining	27.00	100%	27.00	0%	0.00	0%	0.00	0%	0.00
	1130/3	Cracking (RC and Other)	27.00	0%	0.00	100%	27.00	0%	0.00	0%	0.00
	8368/3	Graffiti	120.00	100%	120.00	0%	0.00	0%	0.00	0%	0.00
0	**8218/3**	**Backwall, All Types**	**98.00**	**0%**	**0.00**	**63%**	**62.00**	**36%**	**35.00**	**1%**	**1.00**

	1080/3	Delamination/Spall/Patched Area	17.00	0%	0.00	0%	0.00	100%	17.00	0%	0.00
	1090/3	Exposed Rebar	8.00	0%	0.00	0%	0.00	88%	7.00	13%	1.00
	1120/3	Efflorescence/Rust Staining	30.00	0%	0.00	100%	30.00	0%	0.00	0%	0.00
	1130/3	Cracking (RC and Other)	31.00	0%	0.00	100%	31.00	0%	0.00	0%	0.00
	1180/3	Abrasion	1.00	0%	0.00	100%	1.00	0%	0.00	0%	0.00
0	**8305/3**	**Asphaltic Joint Material**	**49.00**	**100%**	**49.00**	**0%**	**0.00**	**0%**	**0.00**	**0%**	**0.00**
0	**8335/3**	**Guardrail, Vehicular**	**848.00**	**81%**	**684.00**	**17%**	**140.00**	**3%**	**24.00**	**0%**	**0.00**
	515/3	Steel Protective Coating	848.00	90%	763.00	10%	85.00	0%	0.00	0%	0.00
	1000/3	Corrosion	85.00	0%	0.00	100%	85.00	0%	0.00	0%	0.00
	7000/3	Damage	78.00	0%	0.00	69%	54.00	31%	24.00	0%	0.00
0	**8336/3**	**Conc Bridge Parapet**	**448.00**	**82%**	**368.00**	**9%**	**40.00**	**9%**	**40.00**	**0%**	**0.00**
	1120/3	Efflorescence/Rust Staining	40.00	0%	0.00	0%	0.00	100%	40.00	0%	0.00
	1130/3	Cracking (RC and Other)	40.00	0%	0.00	100%	40.00	0%	0.00	0%	0.00
0	**8370/3**	**Steel Diaphragms**	**72.00**	**64%**	**46.00**	**11%**	**8.00**	**25%**	**18.00**	**0%**	**0.00**
	515/3	Steel Protective Coating	864.00	71%	612.00	0%	0.00	0%	0.00	29%	252.00
	3420/3	*Peel/Bub/Crack(Stl Protect Coat)*	*252.00*	*0%*	*0.00*	*0%*	*0.00*	*0%*	*0.00*	*100%*	*252.00*
	1000/3	Corrosion	24.00	0%	0.00	25%	6.00	75%	18.00	0%	0.00
	8368/3	Graffiti	54.00	100%	54.00	0%	0.00	0%	0.00	0%	0.00
	8375/3	Loose or Missing Bolts defect	2.00	0%	0.00	100%	2.00	0%	0.00	0%	0.00
0	**8398/1**	**Curb/sidewalks - Con**	**448.00**	**88%**	**394.00**	**12%**	**54.00**	**0%**	**0.00**	**0%**	**0.00**
	1180/1	Abrasion	54.00	0%	0.00	100%	54.00	0%	0.00	0%	0.00

Rhode Island Department of Transportation

Bridge Inspection Report

Structure Inventory and Appraisal Sheet (English Units)

STRUCTURE UNIT: 0

ELEM NBR	ELEMENT NAME	ENV	INSP. DATE	QUANTITY	UNITS	QTY CS 1	QTY CS 2	QTY CS 3	QTY CS 4
12	**Re Concrete Deck**	**3**	**08/02/2018**	**10,735.00**	**sq.ft**	**10,554.00**	**0.00**	**181.00**	**0.00**

There is a reinforced concrete deck overlaid with a bituminous wearing surface throughout the bridge (see photos 5 -8).

510	Wearing Surfaces	3	08/02/2018	9,944.00	sq.ft	9,898.00	2.00	44.00	0.00

There is a bituminous wearing surface throughout the bridge.

There is typically light vegetation growth along the curbs with light debris and sand accumulation throughout the bridge (see photo 13).

3210	*Del/Spall/Patch/Pot(Wear Surf)*	*3*	*08/02/2018*	*2.00*	*sq.ft*	*0.00*	*2.00*	*0.00*	*0.00*

There is a 2'-0" long x up to 10" wide x 4" deep spall filled with sand/debris at the pier deck joint on the east shoulder (see photo 14).

There is a 2'-0" long x 1'-0" wide x 1" deep spall at midpsan of span 2 near the east shoulder (see photo 10).

3220	*Crack (Wearing Surface)*	*3*	*08/02/2018*	*44.00*	*sq.ft*	*0.00*	*0.00*	*44.00*	*0.00*

Up to 1/4" wide sealed and unsealed cracks throughout (see photos 7 & 8).

There is a full width x up to 1/4" wide transverse crack over the pier where the deck joint has been paved over(see photo 12).

1080	Delamination/Spall/Patched Area	3	08/02/2018	11.00	sq.ft	0.00	0.00	11.00	0.00

The underside of the reinforced concrete deck contains the following spalls and delaminations:

SPAN #1:
- There are concrete patched areas in bay 'B' - 'C' at south abutment #1.
- West overhang at pier: 10" wide x 4" long x 4" deep spall.
- East overhang at south abutment #1: 2'-0" long x 1'-0" high x 4" deep haunch spall.
- East overhang at midspan: 6" long x 1'-0" wide x 1" deep spall with exposed rebar.
- Bay 'A' between diaphragm 2-4: two (2) 5'-0" long x 1'-0" long delaminations with minor spalls (see photo 23).
- Bay 'A' between pier and diaphragm: 3'-0" long x 2'-0" wide delamination.
- Bay 'A' at pier: 2'-5" long x 2'-0" wide delamination and adjacent 10" long x 18" wide spall around drain hole. (see photo 22).

ABOVE THE PIER & BEYOND BEARING:
- There are up to 4'-0" wide x 6" long x 7" deep spalls with exposed rebars in bay 'B', 'E' and 'F' (see photo 26).
- There are up to full width x up to 6" long X 1'-0" wide spalls with exposed rebars in bay 'C' and 'D' (see photo 24).

SPAN #2:
- Bay 'F' at pier: two (2) 3'-0" wide x 16" long delamination and 1'-0" wide x 8" long delamination (see photo 27).

1090	Exposed Rebar	3	08/02/2018	30.00	sq.ft	0.00	0.00	30.00	0.00

See Defect 1080 - Delamination/Spall/Patched area for comments associated with exposed rebar.

1120	Efflorescence/Rust Staining	3	08/02/2018	25.00	sq.ft	0.00	0.00	25.00	0.00

The underside of deck typically exhibits isolatted scattered rust staining in bay 'A' through 'F' at both abutments and at the pier in span 1 and 2 (see photo 25).

1130	Cracking (RC and Other)	3	08/02/2018	110.00	sq.ft	0.00	0.00	110.00	0.00

There are scattered up to full length hairline transverse cracks, some with rust staining in bay 'D' and 'F' at pier 1 span 1 (see photo 25) and bay 'B' - 'D' at pier 1 span 2.

There are scattered hairline mapcracking with rust staining throughout bay 'E' in span 2.

ELEM NBR	ELEMENT NAME	ENV	INSP. DATE	QUANTITY	UNITS	QTY CS 1	QTY CS 2	QTY CS 3	QTY CS 4
107	**Steel Opn Girder/Beam**	**3**	**08/02/2018**	**1,582.00**	**ft**	**1,350.00**	**173.00**	**55.00**	**4.00**

There are seven (7) welded steel plate girders labeled girder 'A' through 'G' from west to east (see photos 6).

The girder ends have areas of up to 100% loss. See attached document "Element 107 - Corrosion.pdf" for conditions and locations.

515	Steel Protective Coating	3	08/02/2018	26,280.00	sq.ft	25,260.00	0.00	325.00	695.00

The steel girders have a painted steel protective coating.

3420	*Peel/Bub/Crack(Stl Protect Coat)*	*3*	*08/02/2018*	*1,020.00*	*sq.ft*	*0.00*	*0.00*	*325.00*	*695.00*

There is typically areas of heavy peeling paint of the girder ends at pier in both span 1 and 2 (see photos 28-37).

1000	Corrosion	3	08/02/2018	232.00	ft	0.00	173.00	55.00	4.00

Girder ends exhibits typical peeling paint with scattered section loss to lower webs in front of bearing stiffeners and isolated loss to the webs beyond stiffeners and bottom flanges (see photos 28-37).

See attached document "Element 107 - Corrosion.pdf" for locations and conditions.

8368	Graffiti	3	08/02/2018	482.00	ft	482.00	0.00	0.00	0.00

There are typically heavy areas of graffiti of the girder ends and diaphragms at north abutment #2 (see photos 33 & 46) . There are also scattered isolated areas of light graffiti of griders 'B' and 'C' at midspan.

ELEM NBR	ELEMENT NAME	ENV	INSP. DATE	QUANTITY	UNITS	QTY CS 1	QTY CS 2	QTY CS 3	QTY CS 4
205	**Re Conc Column**	**3**	**08/02/2018**	**3.00**	**each**	**0.00**	**1.00**	**2.00**	**0.00**

There are three (3) reinforced concrete columns labeled column "A" through "C" from west to east (see photos 49 & 54).

See attached documents "Pier #1 North Face.pdf and Pier #1 South Face.pdf" for locations and conditions.

1080	Delamination/Spall/Patched Area	3	08/02/2018	1.00	each	0.00	1.00	0.00	0.00

The columns have up to full circumference delaminations and up to 6'-0" high x 4'-0" wide x 3-1/2" deep spalls at the top of the columns (see photos 49-55).

See attached documents " Pier #1 North Face and Pier #1 South Face" for locations and conditions.

1090	Exposed Rebar	3	08/02/2018	1.00	each	0.00	0.00	1.00	0.00

See Defect 1080 - Delaminations/Spalls/Patched Area for comments.

1130	Cracking (RC and Other)	3	08/02/2018	1.00	each	0.00	0.00	1.00	0.00

There are up to 3/16" wide x full height cracks in the columns and scattered hairline mapcracking on columns 'A' and 'C '.

See attached documents "Pier #1 South Face.pdf and Pier #1 North Face.pdf" for locations and conditions.

8368	Graffiti	3	08/02/2018	180.00	each	180.00	0.00	0.00	0.00

All the columns have areas of moderate graffiti (see photos 54).

See attached documents "Pier #1 North Face.pdf and Pier #1 South Face.pdf" for locations and conditions.

ELEM NBR	ELEMENT NAME	ENV	INSP. DATE	QUANTITY	UNITS	QTY CS 1	QTY CS 2	QTY CS 3	QTY CS 4
210	**Re Conc Pier Wall**	**3**	**08/02/2018**	**46.00**	**ft**	**26.00**	**0.00**	**20.00**	**0.00**

There is a reinforced concrete pier wall in the river channel that supports the three (3) concrete columns (see photos 49 & 54).

See attached documents "Pier #1 North Face.pdf and Pier #1 South Face.pdf" for locations and conditions.

1130	Cracking (RC and Other)	3	08/02/2018	20.00	ft	0.00	0.00	20.00	0.00

The pier wall have scattered mapcracking areas up to 4'-0" high x 15'-0" long x up to 1/8" wide. There are two (2) 1/16 " wide x full height vertical cracks that continues across the topside between columns 'A' and 'B' (see photo 53).

See attached documents "Pier #1 North Face.pdf and Pier #1 South Face.pdf" for locations and conditions.

8368	Graffiti	3	08/02/2018	426.00	ft	426.00	0.00	0.00	0.00

Both faces of the pier wall have areas of moderate graffiti (see photos 49 & 54).

See attached documents "Pier #1 North Face.pdf and Pier #1 South Face.pdf" for locations and conditions.

ELEM NBR	ELEMENT NAME	ENV	INSP. DATE	QUANTITY	UNITS	QTY CS 1	QTY CS 2	QTY CS 3	QTY CS 4
215	**Re Conc Abutment**	**3**	**08/02/2018**	**146.00**	**ft**	**28.00**	**63.00**	**55.00**	**0.00**

There are reinforced concrete abutments at both ends of the bridge labeled south abutment #1 and north abutment #2 (see photos 42 & 45).

The bridge seat at south abutment #1 has up to 20" high build-up of construction debris (see photos 43 & 44).

See attached documents "South Abutment #1.pdf and North Abutment #2.pdf" for locations and conditions.

1080	Delamination/Spall/Patched Area	3	08/02/2018	35.00	ft	0.00	15.00	20.00	0.00

The south abutment #1 has up to 8'-0" high x up to 20" wide x up to 2" deep spalls, some with exposed rebar and full height x up to 54" wide delaminations (see photo 43).

The north abutment #2 has up to 15" wide x up to 15" high x up to 2-1/2" deep spalls and up to 51" wide x 36" high delaminations (see photo 45).

See attached documents "South Abutment #1.pdf and North Abutment #2.pdf" for locations and conditions.

1090	Exposed Rebar	3	08/02/2018	10.00	ft	0.00	0.00	10.00	0.00

The south abutment #1 has spalls with exposed rebar up to 2'-0" in diameter x 3" deep (see photo 42).

See attached documents "South Abutment #1.pdf and North Abutment #2.pdf" for locations and conditions.

1120	Efflorescence/Rust Staining	3	08/02/2018	10.00	ft	0.00	0.00	10.00	0.00

The abutments exhibits areas of hairline vertical and mapcracks with and without efflorescence and rust stains (see photos 42 & 45).

See attached documents "South Abutment #1.pdf and North Abutment #2.pdf" for locations and conditions.

1130	Cracking (RC and Other)	3	08/02/2018	15.00	ft	0.00	0.00	15.00	0.00

See Defect 1120 - Efflorescence /Rust Staining for comments.

8368	Graffiti	3	08/02/2018	756.00	ft	756.00	0.00	0.00	0.00

The south abutment #1 has an area of moderate graffiti (see photo 42).
The North Abutment # 2 has an area of moderate-heavy graffiti (see photos 45 & 46).

See attached documents "South Abutment #1.pdf and North Abutment #2.pdf" for locations and conditions.

ELEM NBR	ELEMENT NAME	ENV	INSP. DATE	QUANTITY	UNITS	QTY CS 1	QTY CS 2	QTY CS 3	QTY CS 4
234	Re Conc Pier Cap	3	08/02/2018	49.00	ft	0.00	0.00	15.00	34.00

Pier 1 has a reinforced concrete pier cap; the north face has significantly greater deterioration than the south face (see photos 49 & 54).

See attached documents "Pier #1 North Face.pdf and Pier #1 South Face.pdf" for locations and conditions.

1080	Delamination/Spall/Patched Area	3	08/02/2018	23.00	ft	0.00	0.00	9.00	14.00

The pier cap has up to 20'-0" long x up to 40" high x up to 12" deep spalls with exposed/debonded rebar and broken stirrups and up to full width delaminations on the underside (see photos 49-51).

See attached documents "Pier #1 North Face.pdf and Pier #1 South Face.pdf" for locations and conditions.

1090	Exposed Rebar	3	08/02/2018	20.00	ft	0.00	0.00	0.00	20.00

See Defect 1080 - Delamination/Spall/Patched Area for comments

1120	Efflorescence/Rust Staining	3	08/02/2018	5.00	ft	0.00	0.00	5.00	0.00

The pier cap has hairline vertical, horizontal and mapcracking up to 8'-0" wide x full height, some with efflorescence and rust stains throughout (see photos 49-51, 54 & 55).

See attached documents "Pier #1 North Face.pdf and Pier #1 South Face.pdf" for locations and conditions.

1130	Cracking (RC and Other)	3	08/02/2018	1.00	ft	0.00	0.00	1.00	0.00

See Defect 1120 - Efflorescence and Rust Staining for comments.

ELEM NBR	ELEMENT NAME	ENV	INSP. DATE	QUANTITY	UNITS	QTY CS 1	QTY CS 2	QTY CS 3	QTY CS 4
301	Pourable Joint Seal	3	08/02/2018	49.00	ft	33.00	16.00	0.00	0.00

There is a pourable deck joint seal at the pier deck joint (see photos 12-14). The pourable deck joint seal has been paved over in the travel lanes, has light vegetation growth and light accumulation of sand/debris along the curb line (see photo 13).

2320	Seal Adhesion	3	08/02/2018	16.00	ft	0.00	16.00	0.00	0.00

There is a full width x up to 1/4" wide transverse crack over the pier deck joint where the seal has been paved over (see photos 12 & 14). There is a 4'-0" wide x 1'-0" long x 1" deep depression with failed adhesion filled with sand/debris at the west curb (see photo 13).

ELEM NBR	ELEMENT NAME	ENV	INSP. DATE	QUANTITY	UNITS	QTY CS 1	QTY CS 2	QTY CS 3	QTY CS 4
302	Compressn Joint Seal	3	08/02/2018	49.00	ft	3.00	0.00	37.00	9.00

There is a compression joint seal at north abutment #2 (see photo 15).

2350	Debris Impaction	3	08/02/2018	37.00	ft	0.00	0.00	37.00	0.00

The north deck joint has light-moderate accumlation of sand/debris (see photos 15 & 16).

2360	Adjacent Deck or Header	3	08/02/2018	12.00	ft	3.00	0.00	0.00	9.00

There is a 1'-6" long x 6" wide x 2" deep spall and a 7'-6" wide x 3" deep spall undermining the joint armor (see photos 15 & 16).

ELEM NBR	ELEMENT NAME	ENV	INSP. DATE	QUANTITY	UNITS	QTY CS 1	QTY CS 2	QTY CS 3	QTY CS 4
311	**Moveable Bearing**	**3**	**08/02/2018**	**14.00**	**each**	**0.00**	**10.00**	**2.00**	**2.00**

There are fourteen (14) moveable bearings lableded bearing 'A' through 'G' at south abutment #1 and north abutment #2.

The south abutment #1 bearings typically exhibit 1/2" expansion at 90's degrees fahrenheit.

The north abutment #2 bearing 'A' is expanded 1/4" (see photo 32) and bearing 'B' is expanded 1" north at 90's degrees Fahrenheit. Bearings 'B' through 'F' at south abutment #1 are covered in heavy construction debris (see photo 44).

515	Steel Protective Coating	3	08/02/2018	14.00	sq.ft	4.00	0.00	0.00	10.00

The moveable bearings have a painted steel protective coating.

3420	*Peel/Bub/Crack(Stl Protect Coat)*	*3*	*08/02/2018*	*10.00*	*sq.ft*	*0.00*	*0.00*	*0.00*	*10.00*

The bearings at both abutment typically exhibits up to 100% loss of the painted steel protective coating (see photos 28, 32 & 33).

1000	Corrosion	3	08/02/2018	7.00	each	0.00	6.00	1.00	0.00

The bearings at both abutments exhibit heavy rust throughout.

SOUTH ABUTMENT #1:

- Bearing "A" has complete loss of the East keeper plate.
- Bearing "G" has complete loss of the East keeper plate

NORTH ABUTMENT #2:

- Bearing "B" has pack rust throughout up to 1/4".

1020	Connection	3	08/02/2018	4.00	each	0.00	4.00	0.00	0.00

SOUTH ABUTMENT #1: The previously noted comments below were unable to be verified, bearings 'B' through 'F' are covered in heavy construction debris (see photo 44).

- Bearing 'A' is missing the east anchor bolt.
- Bearing 'F' is missing the east anchor bolt.

NORTH ABUTMENT #2:

- Bearing 'C' is missing the East anchor bolt nut.
- Bearing 'D' is missing the East anchor bolt nut.
- Bearing 'F' is missing the East anchor bolt nut.
- Bearing 'G' is missing both the East and West anchor bolt nuts.

2220	Alignment	3	08/02/2018	3.00	each	0.00	0.00	1.00	2.00

SOUTH ABUTMENT #1:

The previously noted comments below were unable to be verified, bearings 'B' through 'F' are covered in heavy construction debris.

- Bearing A is shifted 1" to the East. There is also up to 5/8" gap between the sole plate and the masonry plate on the East side.
- Bearing F exhibits out of plane movement with 4" expansion on the East side and 1/2" expansion on the West side.
- Bearing G is shifted 1-1/2" to the West and is in contact with the West anchor bolt.

ELEM NBR	ELEMENT NAME	ENV	INSP. DATE	QUANTITY	UNITS	QTY CS 1	QTY CS 2	QTY CS 3	QTY CS 4
313	**Fixed Bearing**	**3**	**08/02/2018**	**14.00**	**each**	**0.00**	**13.00**	**1.00**	**0.00**

There are fourteen (14) fixed bearings lableded bearing 'A' through 'G' at pier 1 in span 1 and 2 (see photo 41).

515	Steel Protective Coating	3	08/02/2018	14.00	sq.ft	0.00	0.00	2.00	12.00

The fixed bearings have a steel painted protective system.

3420	*Peel/Bub/Crack(Stl Protect Coat)*	*3*	*08/02/2018*	*14.00*	*sq.ft*	*0.00*	*0.00*	*2.00*	*12.00*

There is typically up to 100% failure of the painted steel protective coating throughout (see photo 41).

1000	Corrosion	3	08/02/2018	9.00	each	0.00	9.00	0.00	0.00

There is typically heavy rust of the fixed bearings and up to 1/8" section loss to the anchor bolt nuts and bearing assemblies throughout (see photo 41).

1020	Connection	3	08/02/2018	5.00	each	0.00	4.00	1.00	0.00

There is typically up to 1/4" thick of pack rust between bearing plates (see photo 41).

- Bearing "B" in Span 1 has the East anchor bolt nut backed off 1".
- Bearing "G" in Span 1 is missing the West anchor bolt (see photo 41).
- Bearings A, F, and G in Span 2 are missing one (1) anchor bolt nut.

ELEM NBR	ELEMENT NAME	ENV	INSP. DATE	QUANTITY	UNITS	QTY CS 1	QTY CS 2	QTY CS 3	QTY CS 4
321	**Re Conc Approach Slab**	**3**	**08/02/2018**	**880.00**	**sq.ft**	**880.00**	**0.00**	**0.00**	**0.00**

The reinforced concrete approach slabs labeled south and north approach roadway have a bituminous concrete overlay (see photos 17 & 18). Both approaches typically have light-moderate accumulations of sand/debris and light vegetation growth along the curblines.

There are minor areas of depression in both north and south the travel lanes (see photos 17 & 18).

510	Wearing Surfaces	3	08/02/2018	880.00	sq.ft	594.00	0.00	286.00	0.00

The south and north approaches have a bituminous wearing surface.

3220	*Crack (Wearing Surface)*	*3*	*08/02/2018*	*286.00*	*sq.ft*	*0.00*	*0.00*	*286.00*	*0.00*

There are up to 1/2" wide cracks and hairline mapcracking in the south and north approach roadways (see photo 17).

ELEM NBR	ELEMENT NAME	ENV	INSP. DATE	QUANTITY	UNITS	QTY CS 1	QTY CS 2	QTY CS 3	QTY CS 4
8214	**R/C Wingwall**	**3**	**08/02/2018**	**54.00**	**(LF)**	**27.00**	**27.00**	**0.00**	**0.00**

There are four (4) reinforced concrete wingwalls at each corner of the bridge (see photos 56-59).

1120	Efflorescence/Rust Staining	3	08/02/2018	27.00	(LF)	27.00	0.00	0.00	0.00

See Defect 1130 - Cracking (RC and Other).

1130	Cracking (RC and Other)	3	08/02/2018	27.00	(LF)	0.00	27.00	0.00	0.00

The wingwalls typically exhibits mapcracking with moderate efflorescence throughout (see photos 56-59).

8368	Graffiti	3	08/02/2018	120.00	(LF)	120.00	0.00	0.00	0.00

There are up to 6'-0" high x up to 15'-0" wide area of light-moderate graffiti on the wingwalls (see photos 56-59).

ELEM NBR	ELEMENT NAME	ENV	INSP. DATE	QUANTITY	UNITS	QTY CS 1	QTY CS 2	QTY CS 3	QTY CS 4
8218	**Backwall, All Types**	**3**	**08/02/2018**	**98.00**	**(LF)**	**0.00**	**62.00**	**35.00**	**1.00**

There are reinforced backwalls at south abutment #1 and north abutment #2 (see photos 42 & 45).

See attached documents "South Abutment #1.pdf and North Abutment #2.pdf" for locations and conditions.

1080	Delamination/Spall/Patched Area	3	08/02/2018	17.00	(LF)	0.00	0.00	17.00	0.00

The reinforced concrete backwalls have spalls up to 8'-0" long x 2'-0" high x up to 6" deep, some with exposed rebar and up to 7'-0" long x up to full height delaminations (see photos 47 & 59).

See attached documents "South Abutment #1.pdf and North Abutment #2.pdf" for locations and conditions.

1090	Exposed Rebar	3	08/02/2018	8.00	(LF)	0.00	0.00	7.00	1.00

See Defect 1080 - Delaminations/Spall/Patched Area for additional comments.

1120	Efflorescence/Rust Staining	3	08/02/2018	30.00	(LF)	0.00	30.00	0.00	0.00

There are hairline vertical, horizontal and map cracks, some with efflorescence throughout the reinforced concrete backwalls (see photo 48).

See attached documents "South Abutment #1.pdf and North Abutment #2.pdf" for locations and conditions.

1130	Cracking (RC and Other)	3	08/02/2018	31.00	(LF)	0.00	31.00	0.00	0.00

See Defect 1130 - Cracking (RC and Other) for comments.

1180	Abrasion	3	08/02/2018	1.00	(LF)	0.00	1.00	0.00	0.00

At the south abutment #1 backwall under the east overhang there is a 2'-3" high x 1'-2" long area of moderate scaling.

See attached documents "South Abutment #1.pdf" for locations and conditions.

ELEM NBR	ELEMENT NAME	ENV	INSP. DATE	QUANTITY	UNITS	QTY CS 1	QTY CS 2	QTY CS 3	QTY CS 4
8305	**Asphaltic Joint Material**	**3**	**08/02/2018**	**49.00**	**(LF)**	**49.00**	**0.00**	**0.00**	**0.00**

There is a new asphaltic joint plug over the south deck joint at south abutment #1 (see photo 11).

ELEM NBR	ELEMENT NAME	ENV	INSP. DATE	QUANTITY	UNITS	QTY CS 1	QTY CS 2	QTY CS 3	QTY CS 4
8335	**Guardrail, Vehicular**	**3**	**08/02/2018**	**848.00**	**(LF)**	**684.00**	**140.00**	**24.00**	**0.00**

There are steel vehicular guardrails at all corners and continuous over the bridge (see photos 1, 2, 19-21)

515	Steel Protective Coating	3	08/02/2018	848.00	sq.ft	763.00	85.00	0.00	0.00

The steel guardrails exhibit scattered areas of light surface rust.

1000	Corrosion	3	08/02/2018	85.00	(LF)	0.00	85.00	0.00	0.00

The guardrail exhibits scattered areas of light rust.

7000	Damage	3	08/02/2018	78.00	(LF)	0.00	54.00	24.00	0.00

- The southeast approach guardrail exhibits a 12'-6" long area of moderate collision damage 100'-0" from the bridge.
- The northeast approach guardrail exhibits a 12'-0" long area of moderate collision damage 45'-0" from the bridge.
- The northwest approach guardrail exhibits a 25'-0" area of light collision damage 37'-0" from the bridge.

- The west guardrail on the bridge exhibits two (2) areas of 6'-0" long impact damage in span 1 (see photo 21) and a 12'-0" long section of moderate collision damage in Span 1 and an area of moderate collision damage 2'-0" long in Span 2.

- The East guardrail on the bridge exhibits an area of 6'-0" long light collision damage in span 2 near north abutment #2.

ELEM NBR	ELEMENT NAME	ENV	INSP. DATE	QUANTITY	UNITS	QTY CS 1	QTY CS 2	QTY CS 3	QTY CS 4
8336	**Conc Bridge Parapet**	**3**	**08/02/2018**	**448.00**	**(LF)**	**368.00**	**40.00**	**40.00**	**0.00**

There are concrete bridge parapets over the west and east side of the bridge (see photos 19-21).

1120	Efflorescence/Rust Staining	3	08/02/2018	40.00	(LF)	0.00	0.00	40.00	0.00

The parapets along the west and east fascia exhibit vertical and horizontal cracks up to 1/16" wide with rust and efflorescence and hairline map cracks (see photos 20 & 21).

The end block at each corner exhibits wide spread map cracking with efflorescence and rust bleeding (Photo 1).

1130	Cracking (RC and Other)	3	08/02/2018	40.00	(LF)	0.00	40.00	0.00	0.00

The parapets along the west and east fascia exhibit vertical and horizontal cracks up to 1/16" wide with rust and efflorescence and hairline map cracks (see photos 20 & 21).

ELEM NBR	ELEMENT NAME	ENV	INSP. DATE	QUANTITY	UNITS	QTY CS 1	QTY CS 2	QTY CS 3	QTY CS 4
8370	**Steel Diaphragms**	**3**	**08/02/2018**	**72.00**	**(EA)**	**46.00**	**8.00**	**18.00**	**0.00**

There are end diaphragms at both abutments and at the pier. There are four (4) intermediate diaphragms in each bay between girder 'A' through 'G' (see photos 5 & 6).

515	Steel Protective Coating	3	08/02/2018	864.00	sq.ft	612.00	0.00	0.00	252.00

The steel diaphragms have a painted steel protective coating.

3420	*Peel/Bub/Crack(Stl Protect Coat)*	*3*	*08/02/2018*	*252.00*	*sq.ft*	*0.00*	*0.00*	*0.00*	*252.00*

There are typically areas of scattered isolated peeling paint and light-moderate rust of the intermediate diaphragms throughout in both span 1 and 2 (see photo 39).

There is typically up to 100% loss to the protective coating of the end diaphgrams at the pier in both span 1 and 2 (see photos 33-35, 37 & 38).

1000	Corrosion	3	08/02/2018	24.00	(EA)	0.00	6.00	18.00	0.00

There are up to 100% loss to the horizontal and diagonal members, heavy rust and peeling paint of the end diaphragms at the pier in both span 1 and 2 (see photos 33-35).

SOUTH ABUTMENT #1:
- Bay 'F'

PIER 1 (SPAN 1):
- Bay 'A' and 'D'

PIER 1 (SPAN 2):
- Bay 'A' (see photo 37).
- Bay 'C' through 'E' (see photo 34 & 35)
- Bay 'F' (see photo 38).

NORTH ABUTMENT #2:
- BAY 'A' (see photo 33).

8368	Graffiti	3	08/02/2018	54.00	(EA)	54.00	0.00	0.00	0.00

There are numerous areas of heavy graffiti of the end diaphragms at north abutment #2 (see photo 45).

8375	Loose or Missing Bolts defect	3	08/02/2018	2.00	(EA)	0.00	2.00	0.00	0.00

There are missing connection bolt(s) at the following locations:

- Girder 'A' at pier 1 in span 2 (see photo 31 & 37).
- Girder 'G' at pier 1 in span 2 (see photo 38).

ELEM NBR	ELEMENT NAME	ENV	INSP. DATE	QUANTITY	UNITS	QTY CS 1	QTY CS 2	QTY CS 3	QTY CS 4
8398	**Curb/sidewalks - Con**	**1**	**08/02/2018**	**448.00**	**ft**	**394.00**	**54.00**	**0.00**	**0.00**

There is a reinforced concrete safety walk between the vehicular guardrails and the concrete bridge parapets (see photo 19, 20 & 21). The granite curbs exhibit scrapes and rust stains throughout.

The deck joint seals at the east safety walk are dislodged at pier and north abutment #2 (see photo 19).

The average of both west and east curb reveal is 7.5".

1180	Abrasion	1	08/02/2018	54.00	ft	0.00	54.00	0.00	0.00

There is a 10'-0" long x full width x 1" deep scale/abrasion of the east safety walk at pier 1 in span 2 (see photo 19).

There is a 6'-0" long x 1'-6" wide area of scale of the south approach west safety walk in span 1. Also, there is an 18'-0" long x 1'-6" wide area of scale near the midpsan of the safety walk in span 1.

BRIDGE NOTES

EQUIPMENT USED: 60-foot snooper truck.

TRAFFIC CONTROL: Crash truck.

POLICE DETAIL NEEDED: Yes.

DEFLECTION AND VIBRATION: Light to moderate vibration was noted during live load conditions.

UTILITIES: There are 10in and 12in diameter insulated utilities pipes in bay 'A' with scattered light rust in the insulation (see photo 40). There is a missing nut on the utility support at bay 'A' in span 1 at south abutment #1.

CHANNEL NOTES: There is a spillway on the west side of the bridge and the channel mainly flows in span 1. There are abandoned dam structures in span 2 . The channel in Span 1 consists of rocks and gravel. There is a tree debris upstream and light overhang tree growth downstream (see photos 60-61).

VEGETATION: All corners of the bridge are heavily vegetated with overhanging trees (see photo 9).

EMBANKMENT EROSION: The northwest channel is lined with concrete and has been slightly undermined.

INSPECTION NOTES

ROUTINE AND SPECIAL INSPECTION

AECOM
Team Leader: Timothy Franciosa, PE
Team Member: Minh Pham
Date: 8/02/2018
Weather: 90s, Clear

ORIENTATION: The Branch River flows from east to west. The bridge is logged from south to north and west to east.

SCOPE: The scope is the routine inspection and special inspection of the substructure elements.

NBI RATINGS: The overall condition of the bridge is 4-Poor. Item 59 - Superstructure has been downgraded from 5 (fair) to 4 (poor) due to deteriorated conditions of the girder ends. Item 58 - Deck: 6 (satisfactory), Item 60 - Substructure: 4 (poor) and Item 61 - Channel: 6 (Bank Slumping) have not changed since the previous inspection.

SCHEDULE NOTES

Rhode Island Department of Transportation

Bridge Inspection Report

Structure Inventory and Appraisal Sheet (English Units)

Equipment

Aerial Lift	☐
Boat	☐
Underbridgeinspvel	☑
Scaffolding	☐
BoesemansChair	☐
Waders	☐
Rail Mount Elliot	☐
Crash Truck	☑
Air Monitor	☐
Ladder	☐
Bucket Truck	☐
Rigging	☐
Floats	☐
Climbing	☐
Rail Mount Bucket Truck	☐
Light Tower	☐

Poison Ivy	☑
Heavy Vegetation	☑
Hurricane Evac Route ?	☐

Cones	Yes
Traffic Setup Req	Yes
Police Req	Yes
Night Insp Req	No
Signs	Yes

Speed Limit	
Prep Time	4
Crew SIize	2
Under Insp Vehicle Time	1
Traffic Control Time	1
Mile Post	41.74
Crew Days	1
Time Report Time	46
Bucket Truck Time	

Site Access Notes

Avg Curb Reveal North/East	7.50
Avg Curb Reveal South/West	7.50
Posted Weight Limit	
Posting Sign ?	☐
Post Signs Legible	-1
Post Sign Rec	-1
Adv Min Vert Clear Sign	-1
Min Ver tClear Signs Leg	-1
Min Vert Clear Post Vales	
Min Vert Clear Sign Rec	-1
Old Rating and Postings	
RR Mile Post	
US DOT/AAR No.	

Telephone	☐
Sewer	☐
Cable	☐
Oil	☐
Fire Alarm	☐
OH Lines Present	☑
Water	☑
Gas	☐
Electric	☐
Fiber Optic	☐

Rhode Island Department of Transportation

Bridge Inspection Report

Structure Inventory and Appraisal Sheet (English Units)

Work Candidates

Assigned to Agency

Status	Priority	Action	Date Proposed	Notes
Unknown	High	Joints-Replace	07/25/2015	[AI Engineers] - The deck joint over south abutment #1 is open and water can freely flow throughout the joint. Replace the whole joint Total 30 LF.
Unknown	High	Substructure Patch spalls	07/25/2015	[AI Engineers] - Both abutment stems, pier cap, columns and backwalls exhibit hollow areas, extensive spalls with exposed corroded rebars throughout. Repair the delaminated concrete [VHB, for TranSystems] - Both abutment stems have been patched and repaired under the flascia girders. Patching and/or repair of the pier cap, columns and backwalls still remains.

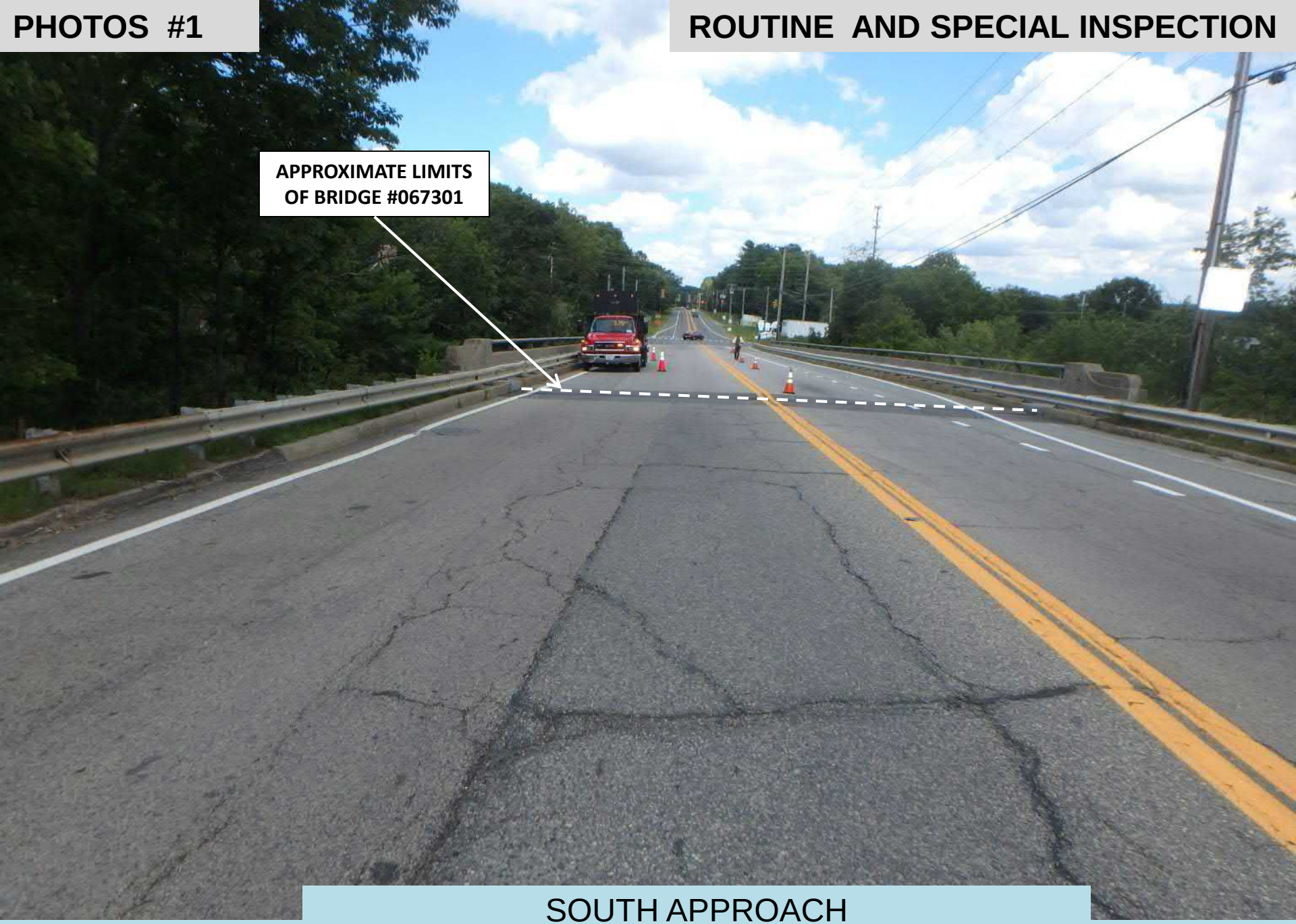

SOUTH APPROACH
(LOOKING NORTH)

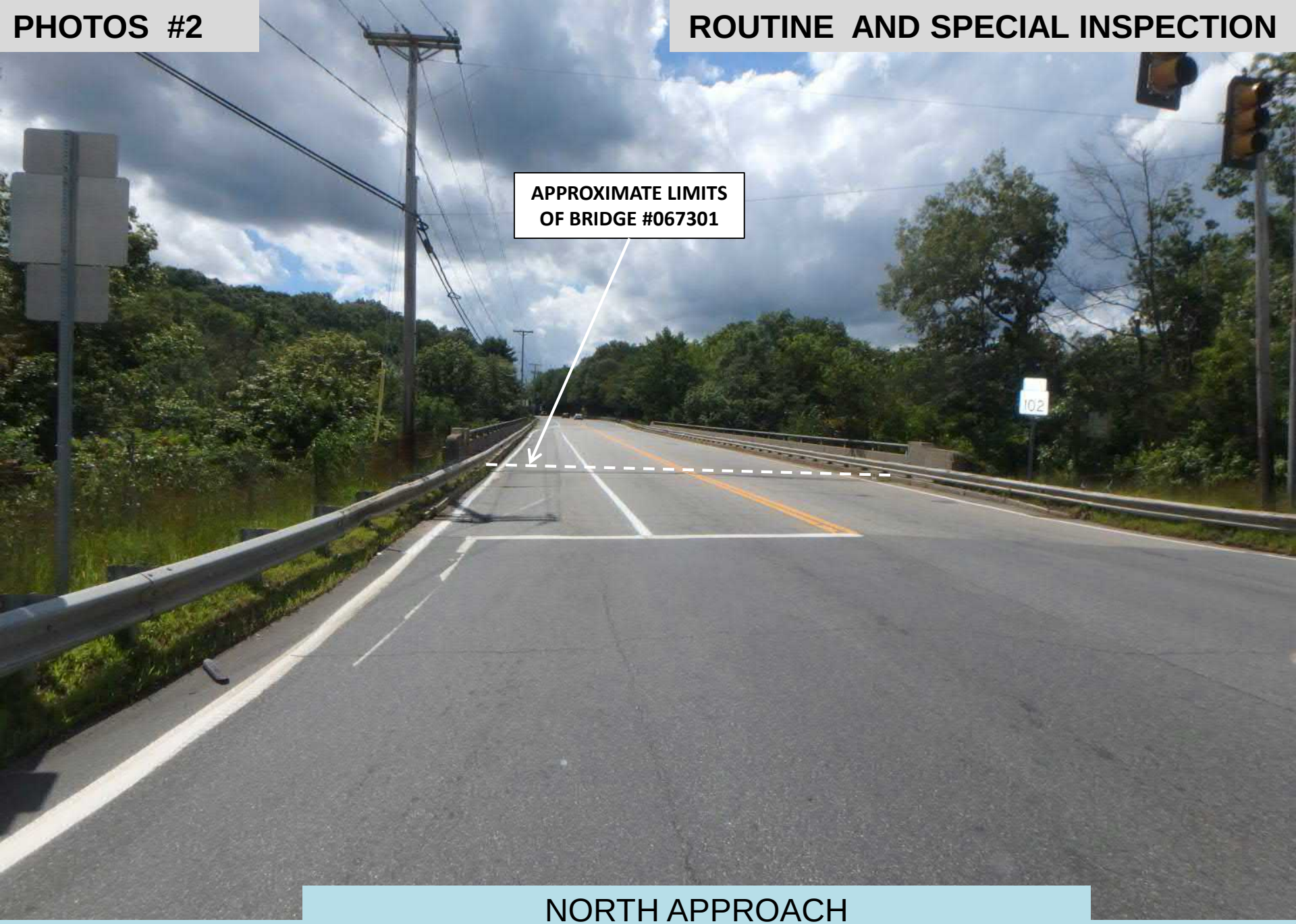

NORTH APPROACH
(LOOKING SOUTH)

EAST ELEVATION
(LOOKING SOUTH)

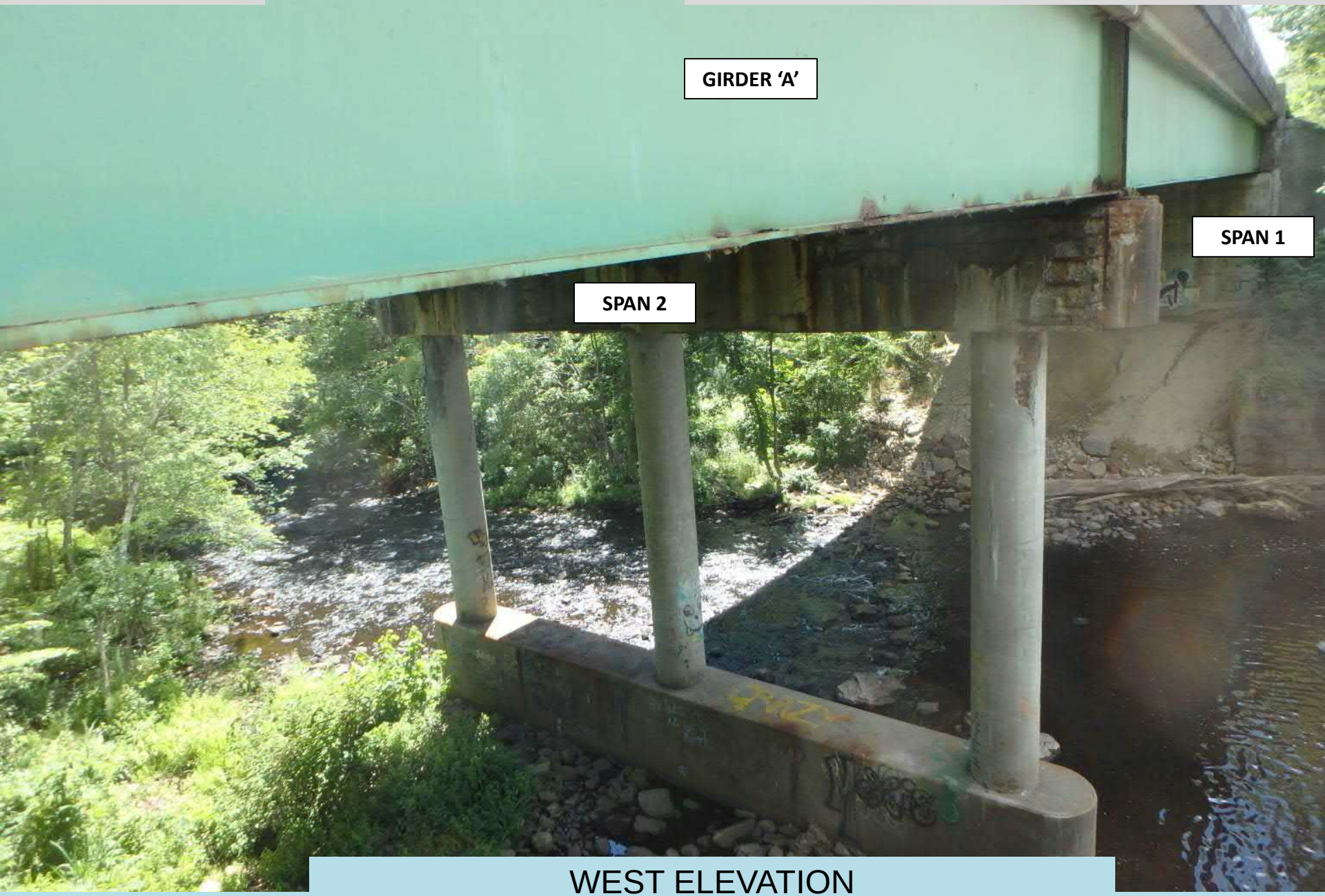

WEST ELEVATION
(LOOKING SOUTH)

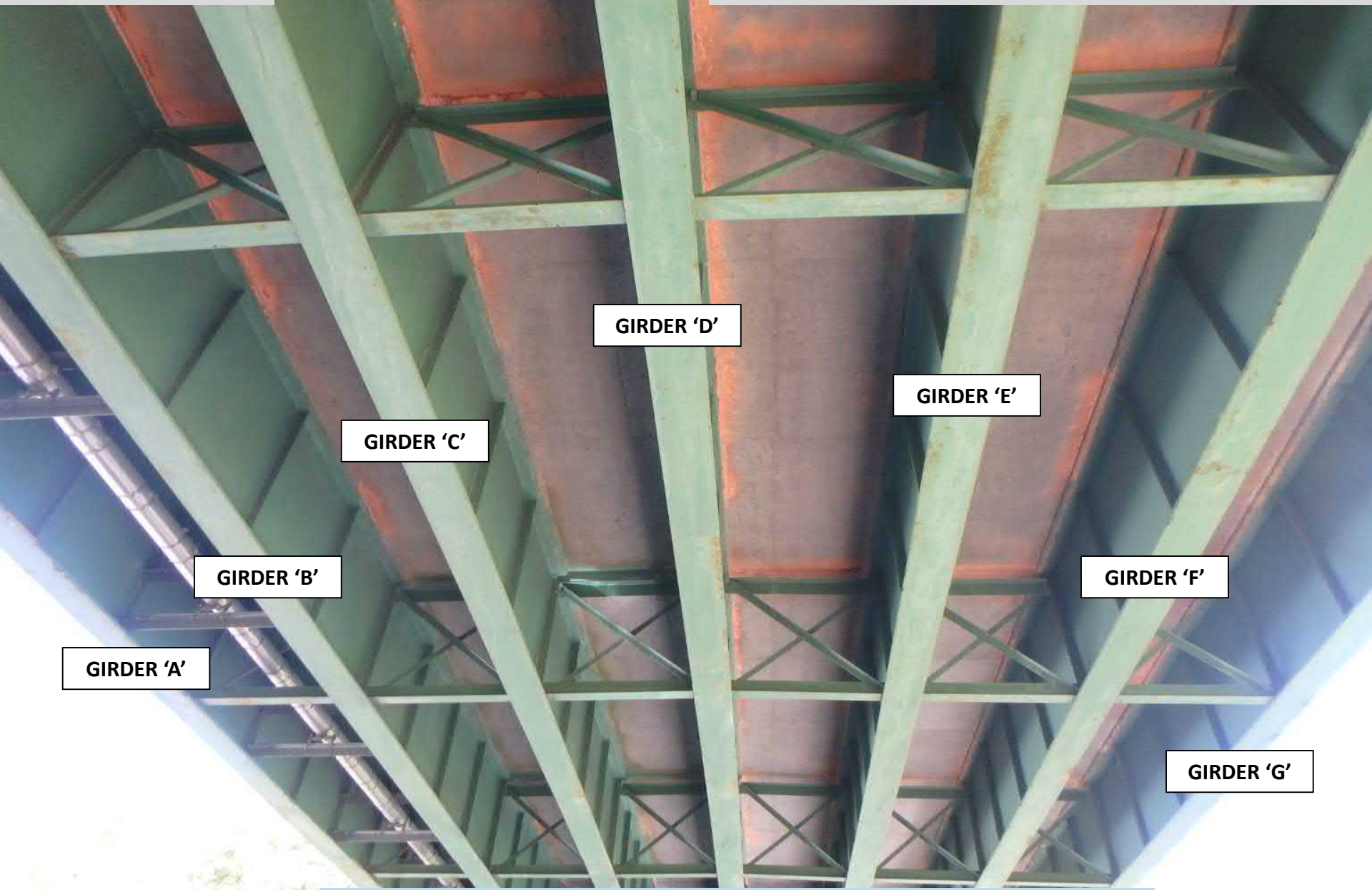

GENERAL UNDERSIDE – SPAN 1
(LOOKING NORTH)

GENERAL UNDERSIDE – SPAN 2
(LOOKING SOUTH)

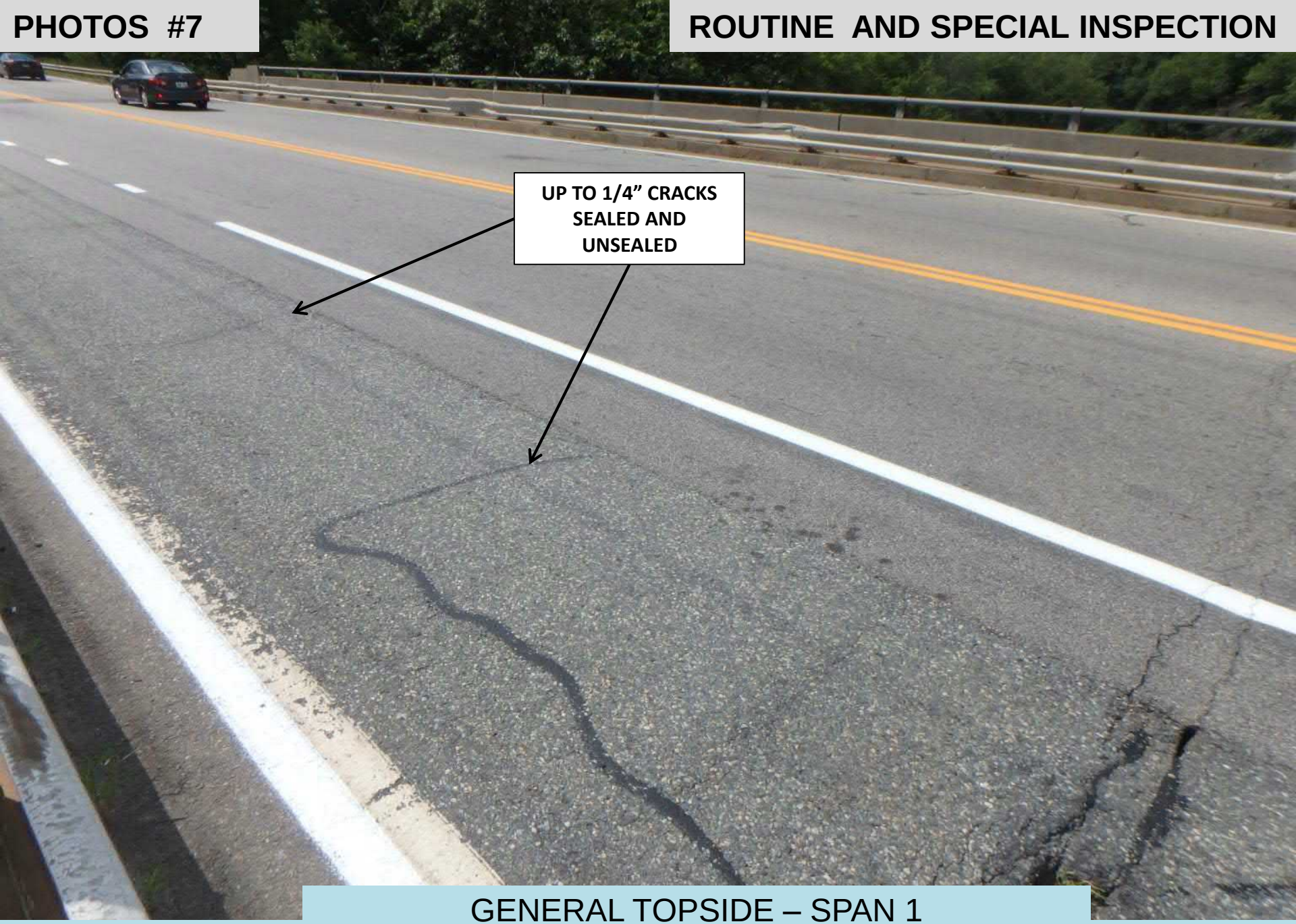

GENERAL TOPSIDE – SPAN 1
(LOOKING SOUTHWEST)

GENERAL TOPSIDE – SPAN 2
(LOOKING NORTHWEST)

MIDPSAN OF SPAN 2
AT GIRDER 'A' (LOOKING NORTH)

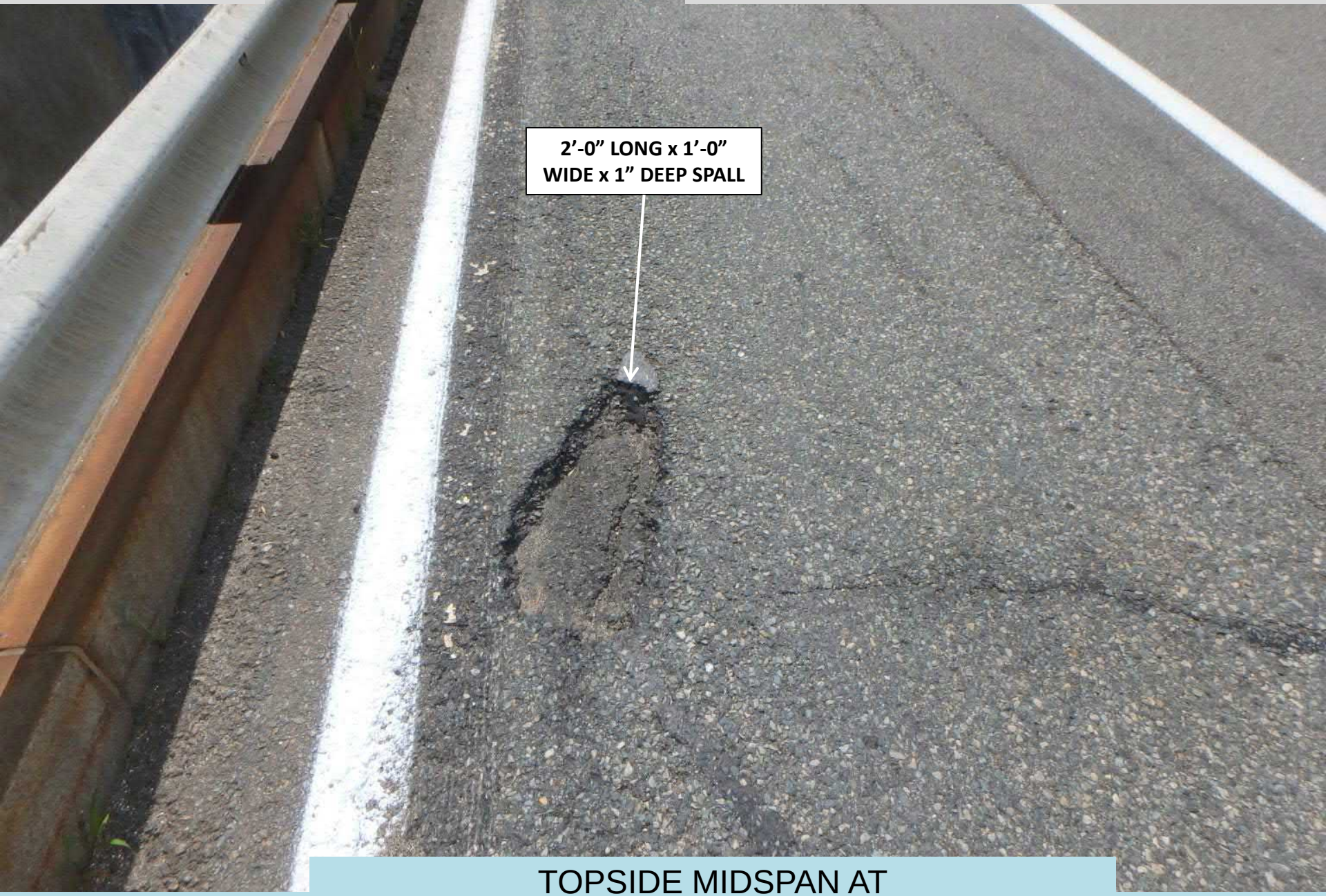

TOPSIDE MIDSPAN AT
EAST SHOULDER IN SPAN 2 (LOOKING SOUTH)

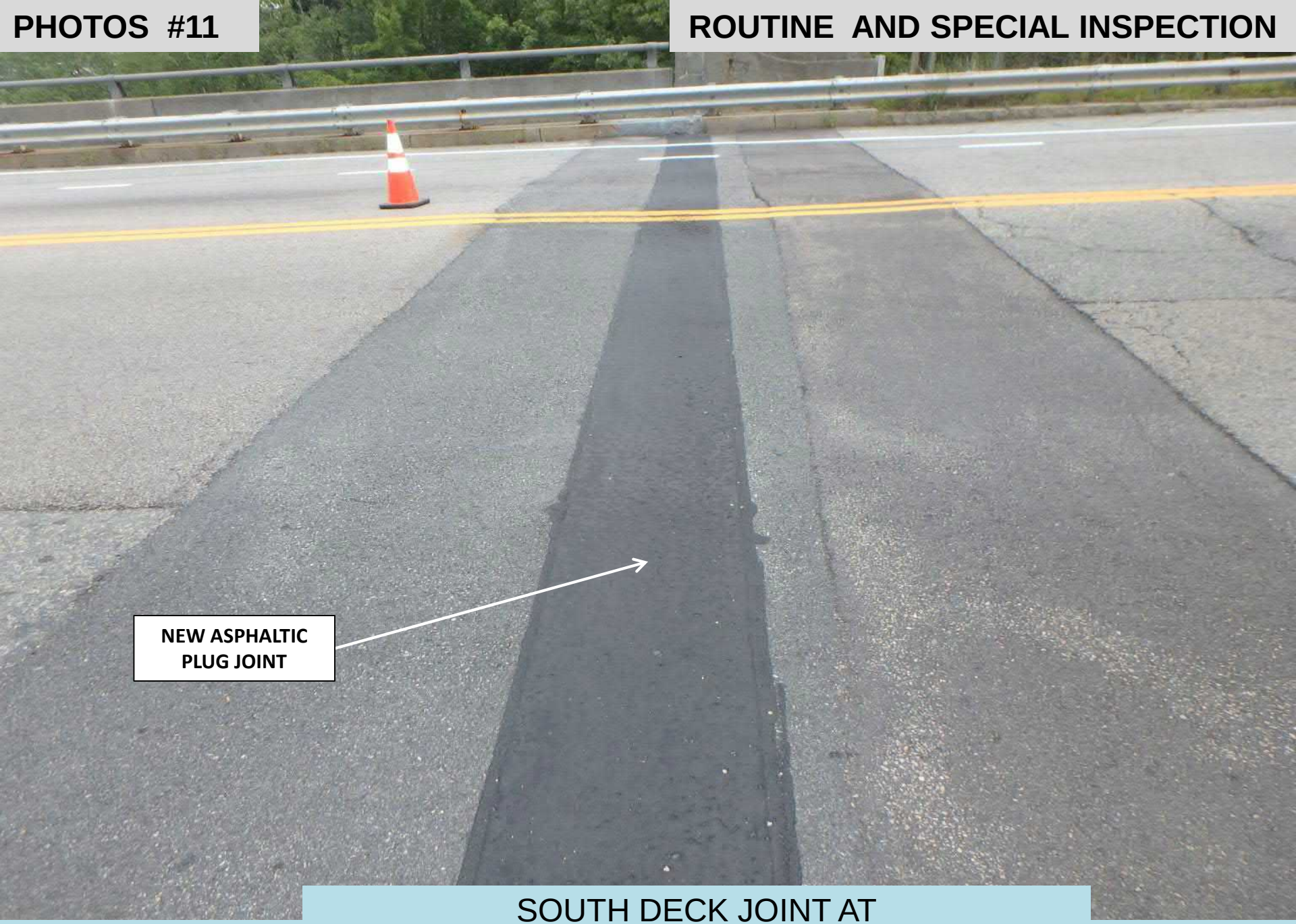

SOUTH DECK JOINT AT
SOUTH ABUTMENT#1 (LOOKING EAST)

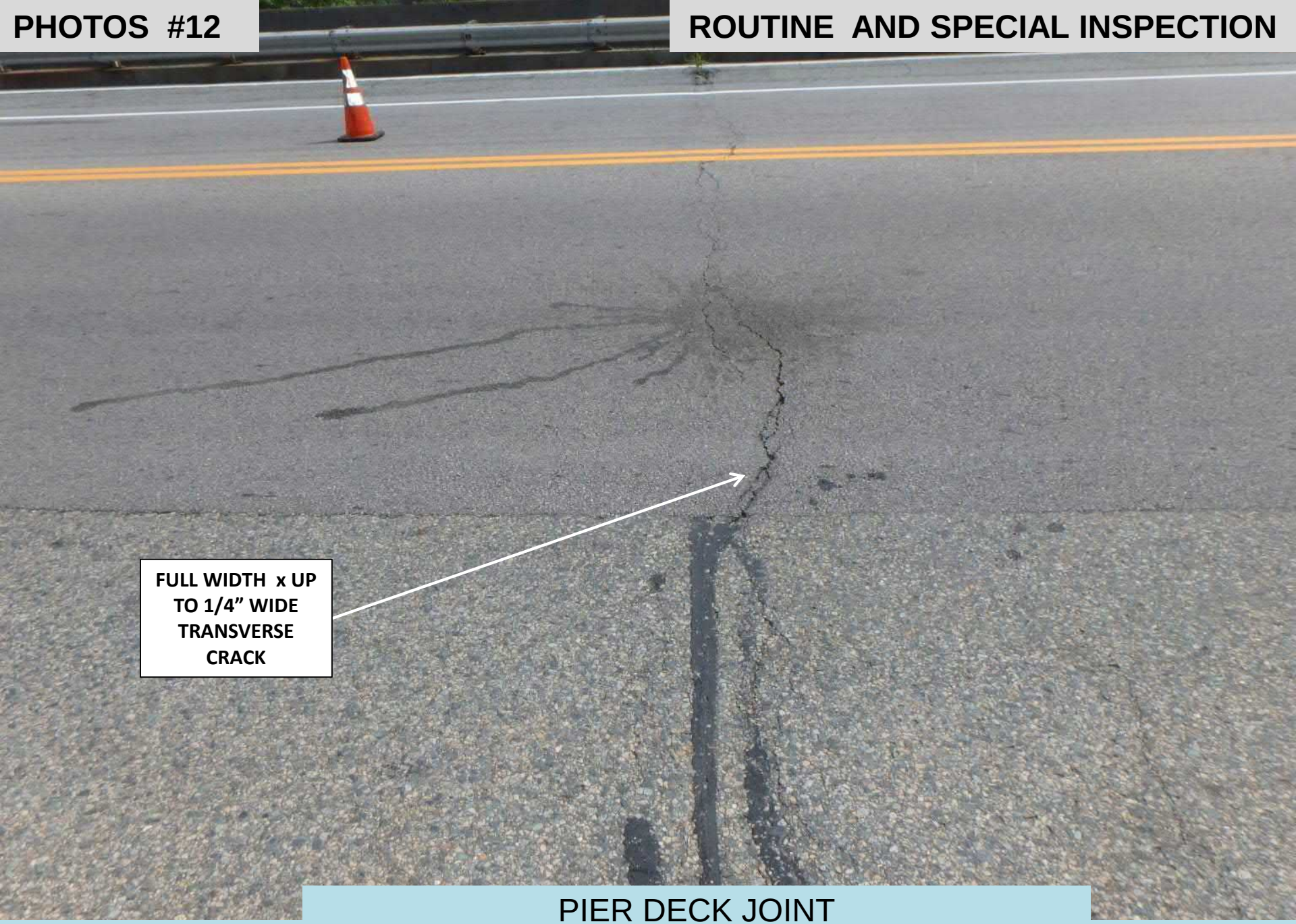

PIER DECK JOINT
AT PIER 1 (LOOKING EAST)

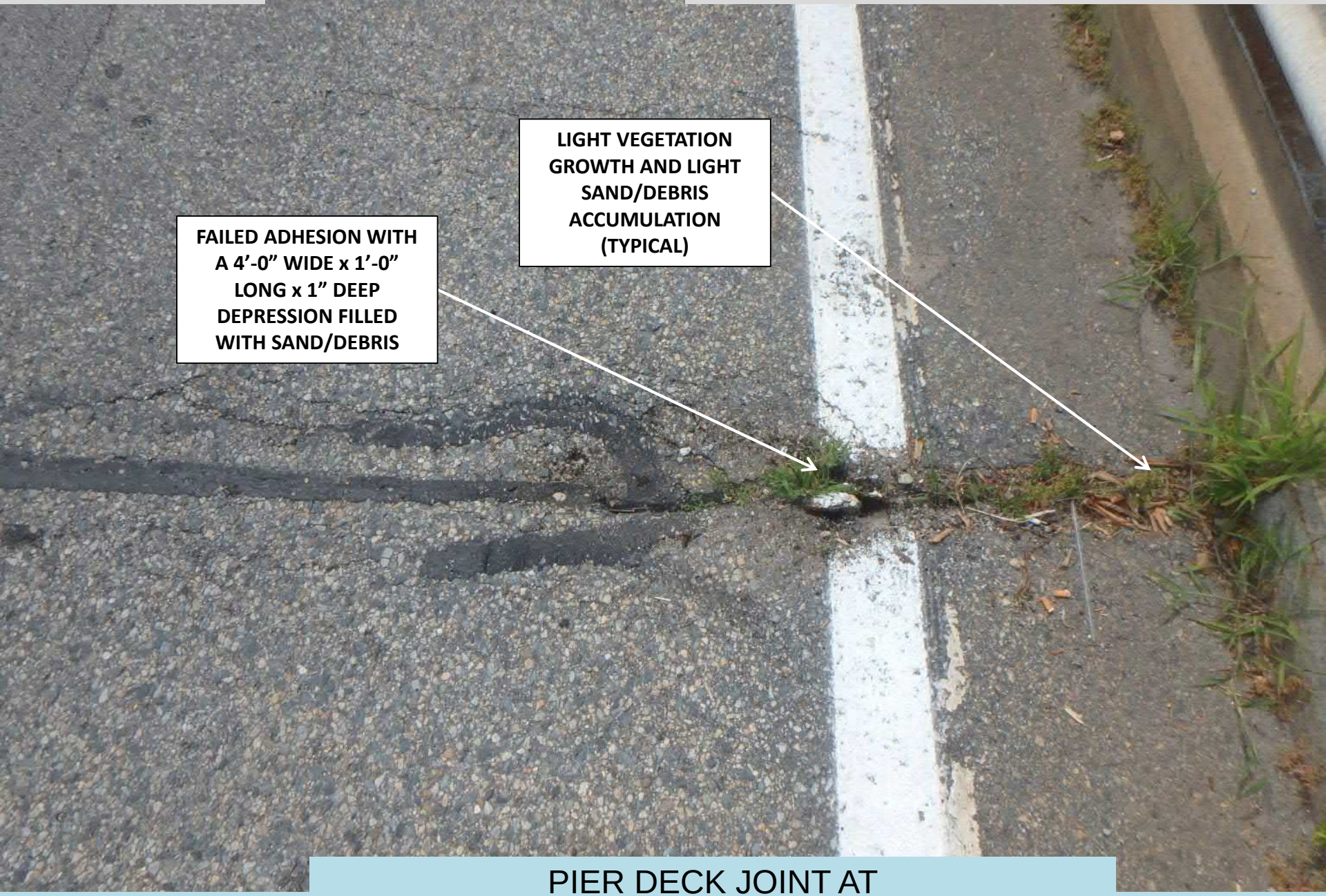

PIER DECK JOINT AT
PIER 1 WEST SHOULDER (LOOKING SOUTH)

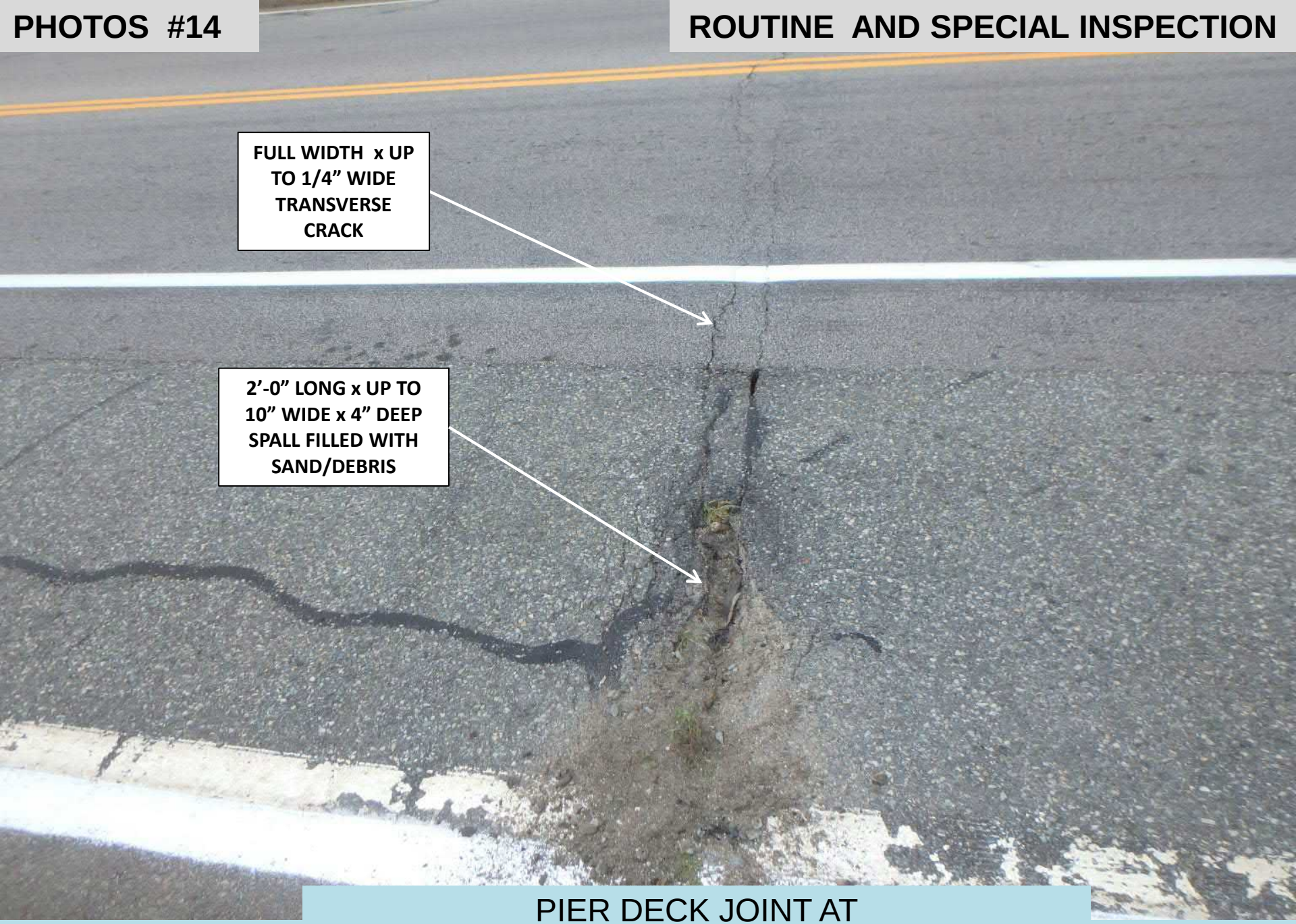

PIER DECK JOINT AT
PIER 1 EAST SHOULDER (LOOKING WEST)

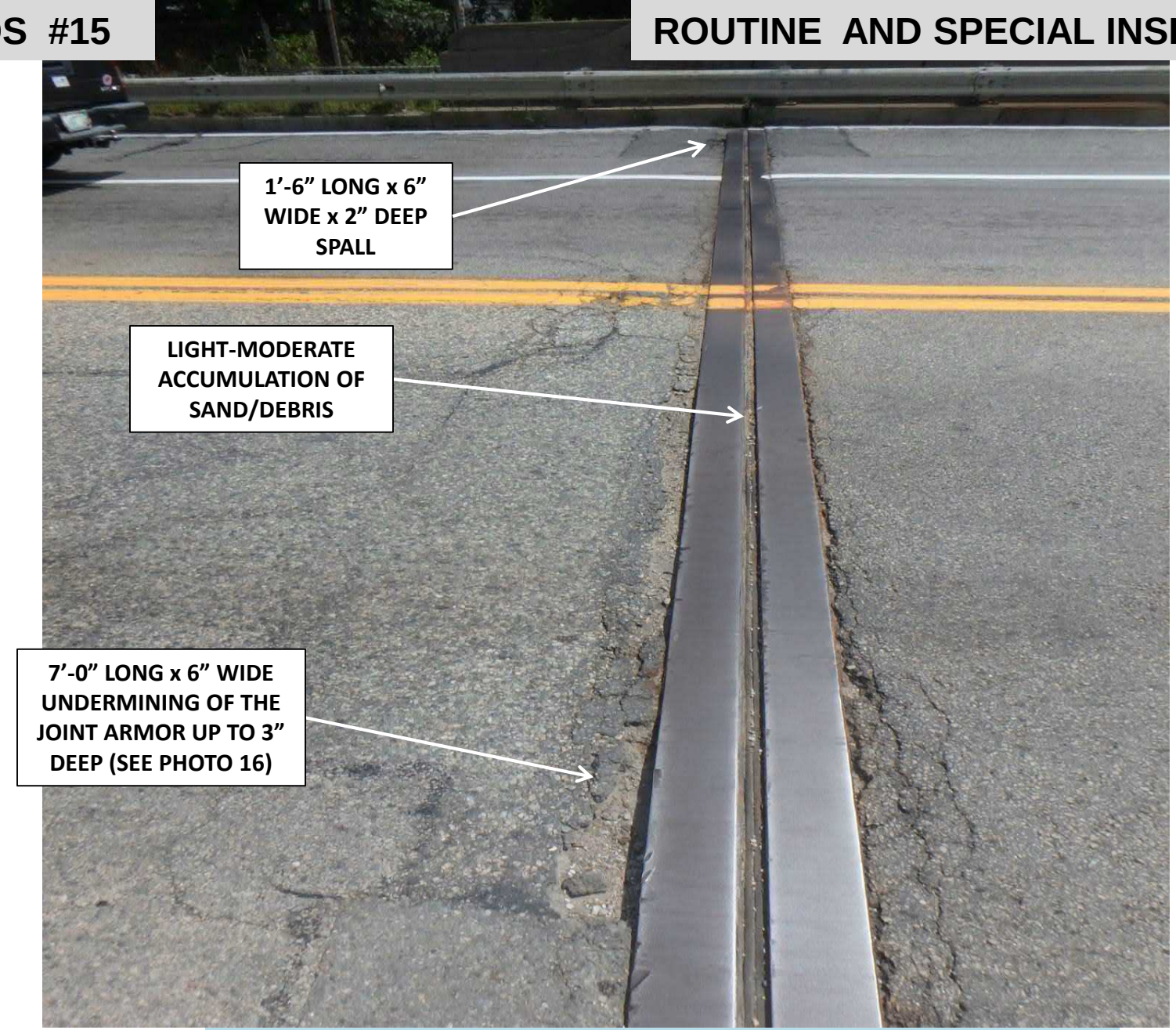

NORTH DECK JOINT AT
NORTH ABUTMENT #2 (LOOKING EAST)

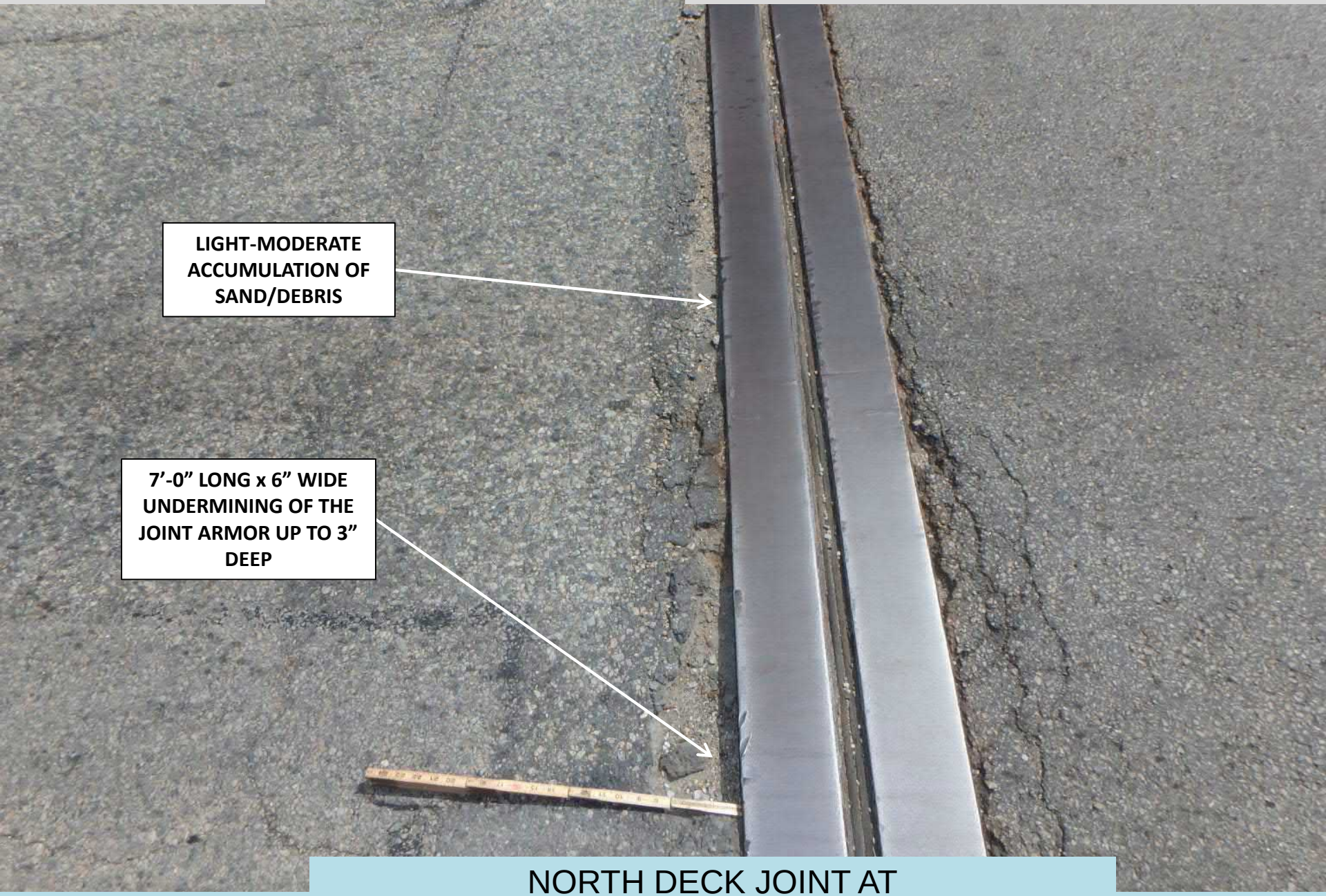

NORTH DECK JOINT AT
NORTH ABUTMENT #2 (LOOKING EAST)

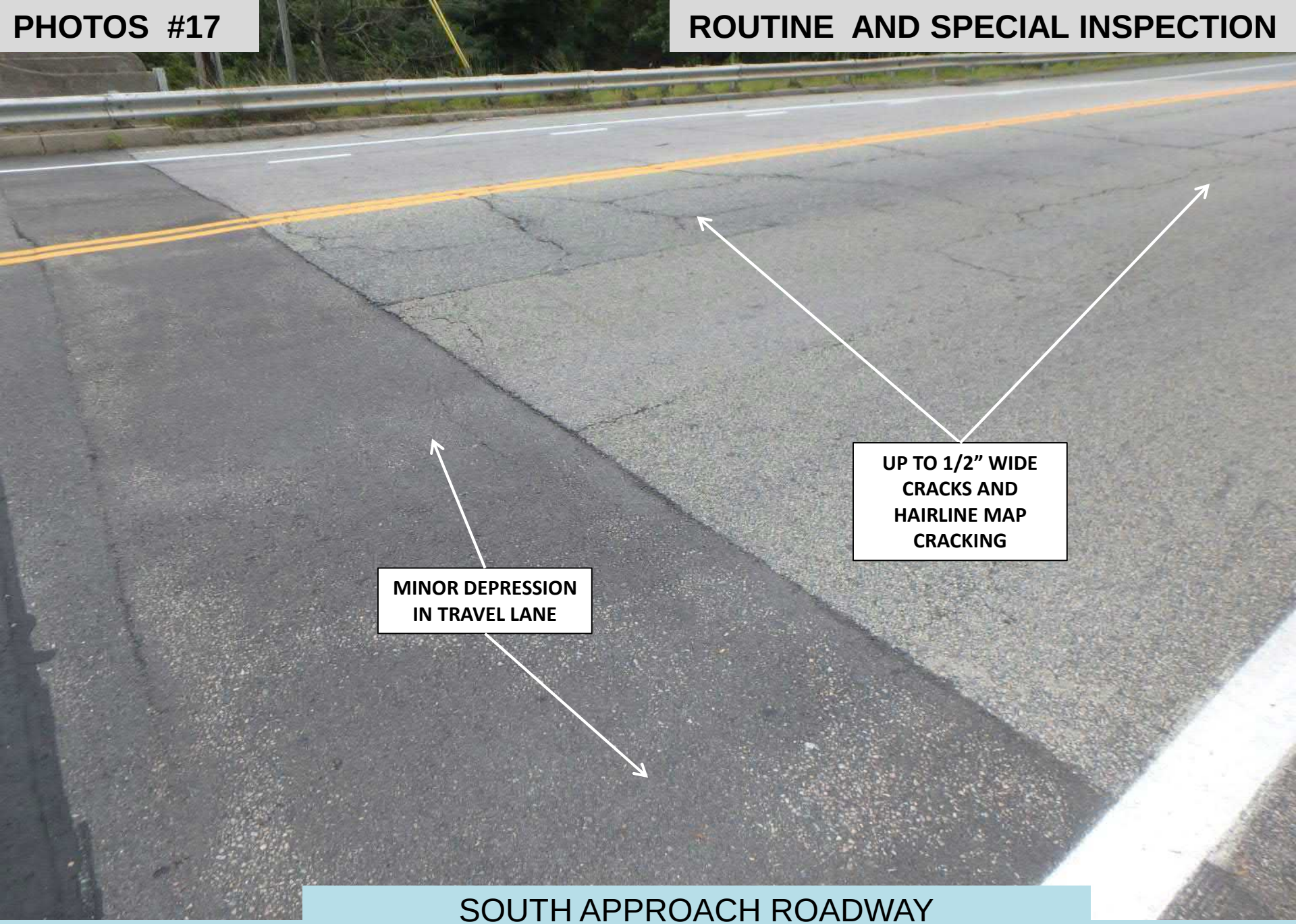

SOUTH APPROACH ROADWAY
(LOOKING SOUTHEAST)

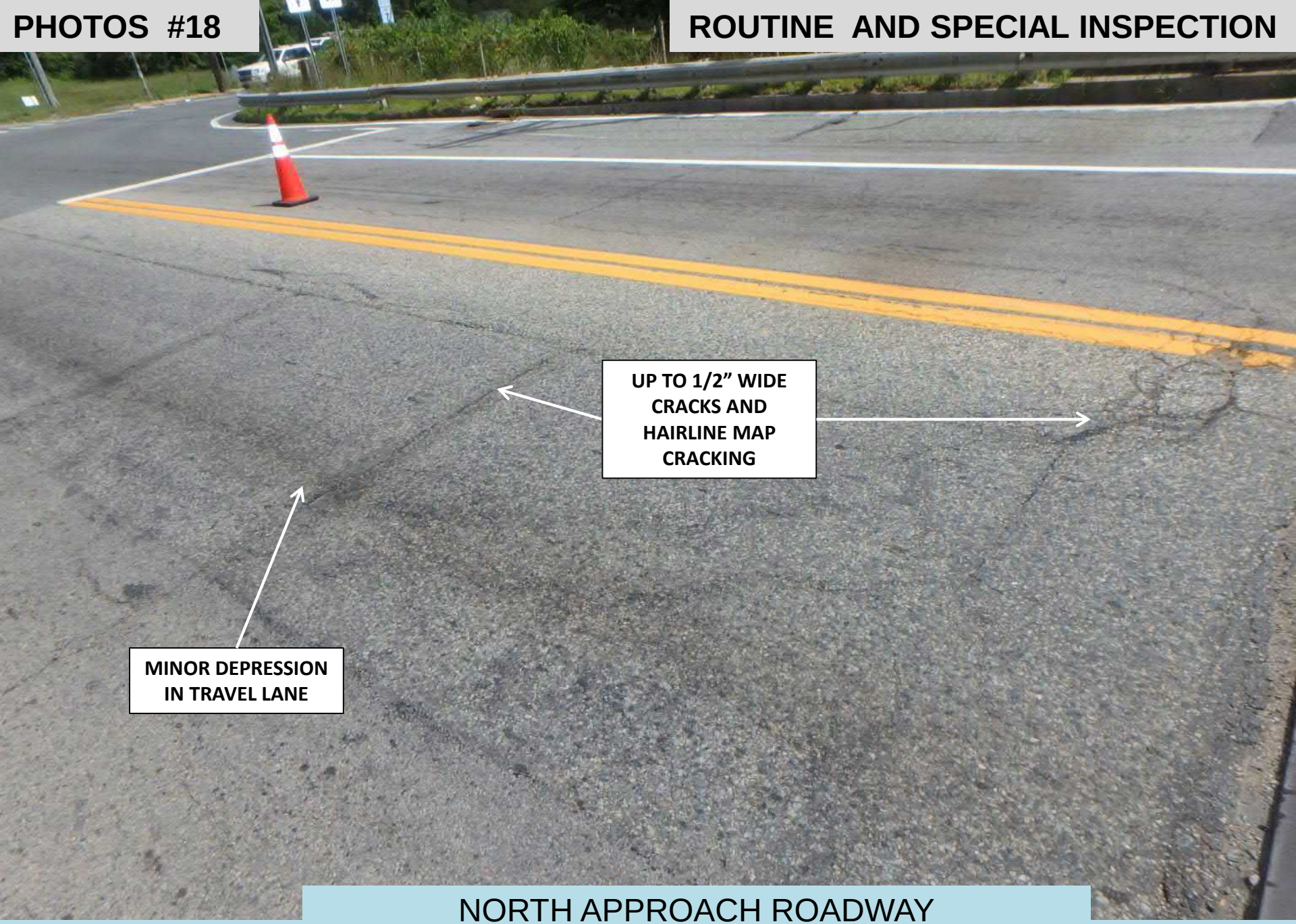

NORTH APPROACH ROADWAY
(LOOKING NORTHEAST)

EAST SAFETY WALK AT PIER 1
IN SPAN 2 (LOOKING NORTH)

WEST BRIDGE RAIL AT
PIER 1 IN SPAN 1 (LOOKING SOUTHWEST)

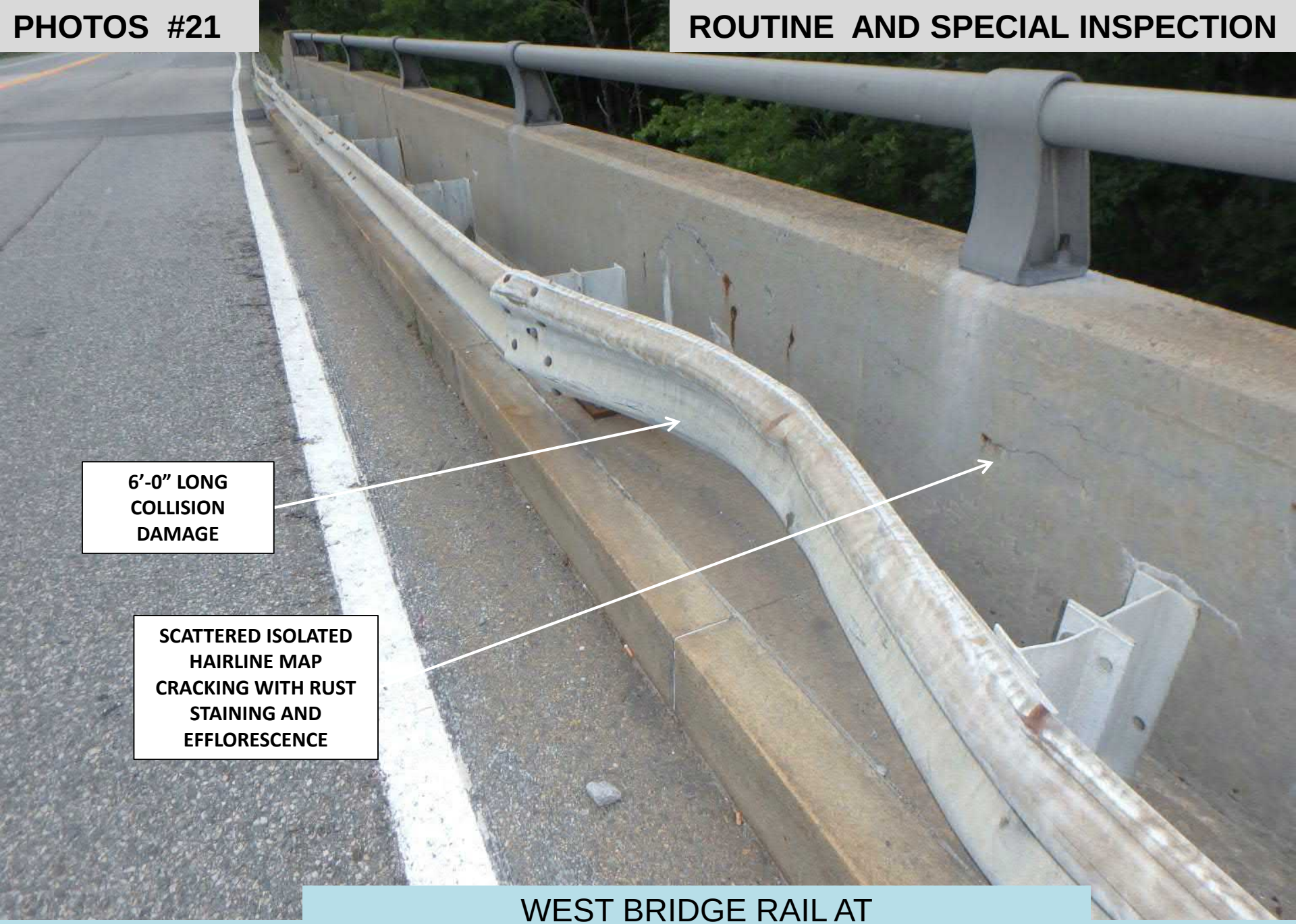

WEST BRIDGE RAIL AT MIDSPAN IN SPAN 1 (LOOKING SOUTHWEST)

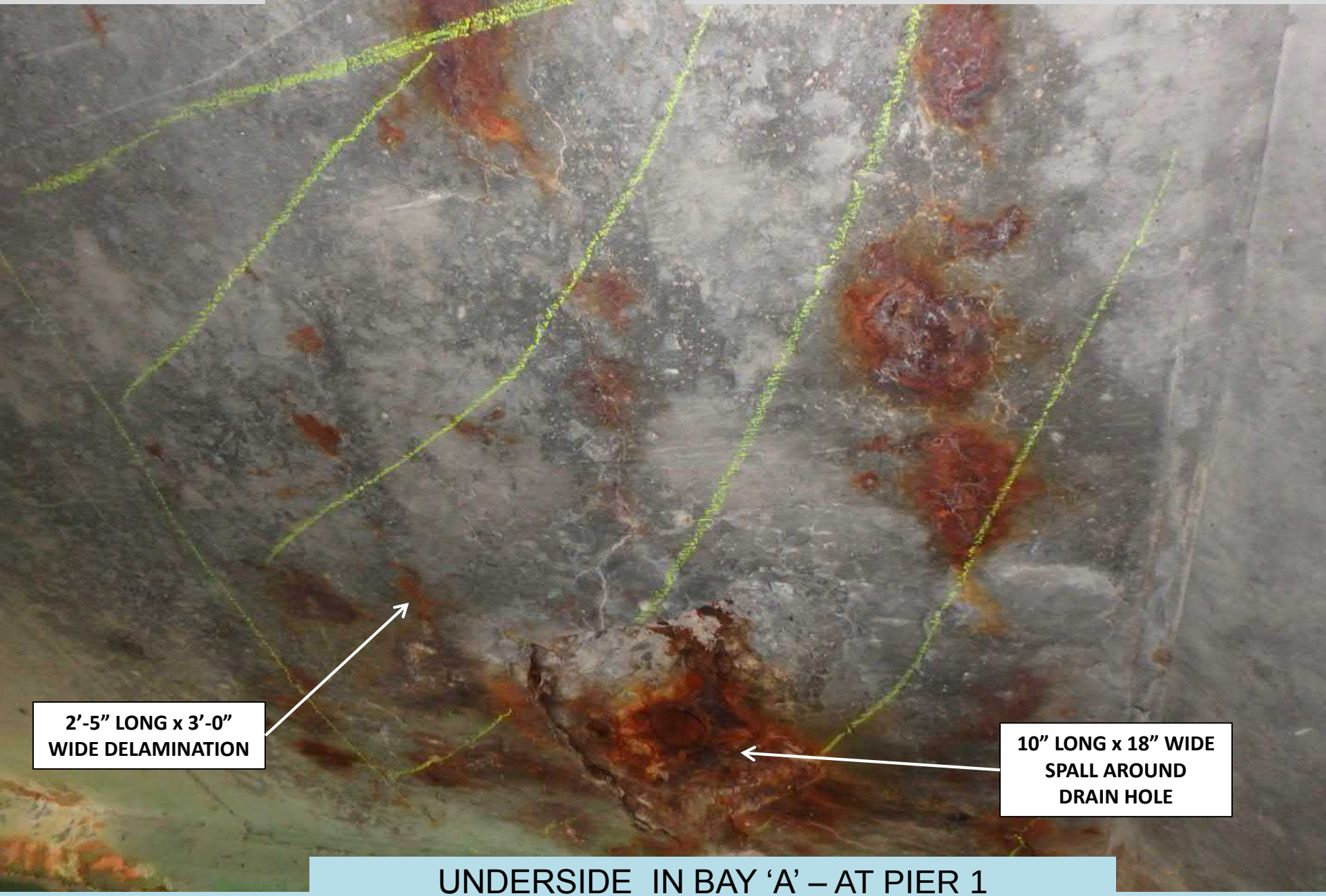

UNDERSIDE IN BAY 'A' – AT PIER 1
IN SPAN 1 (LOOKING SOUTH)

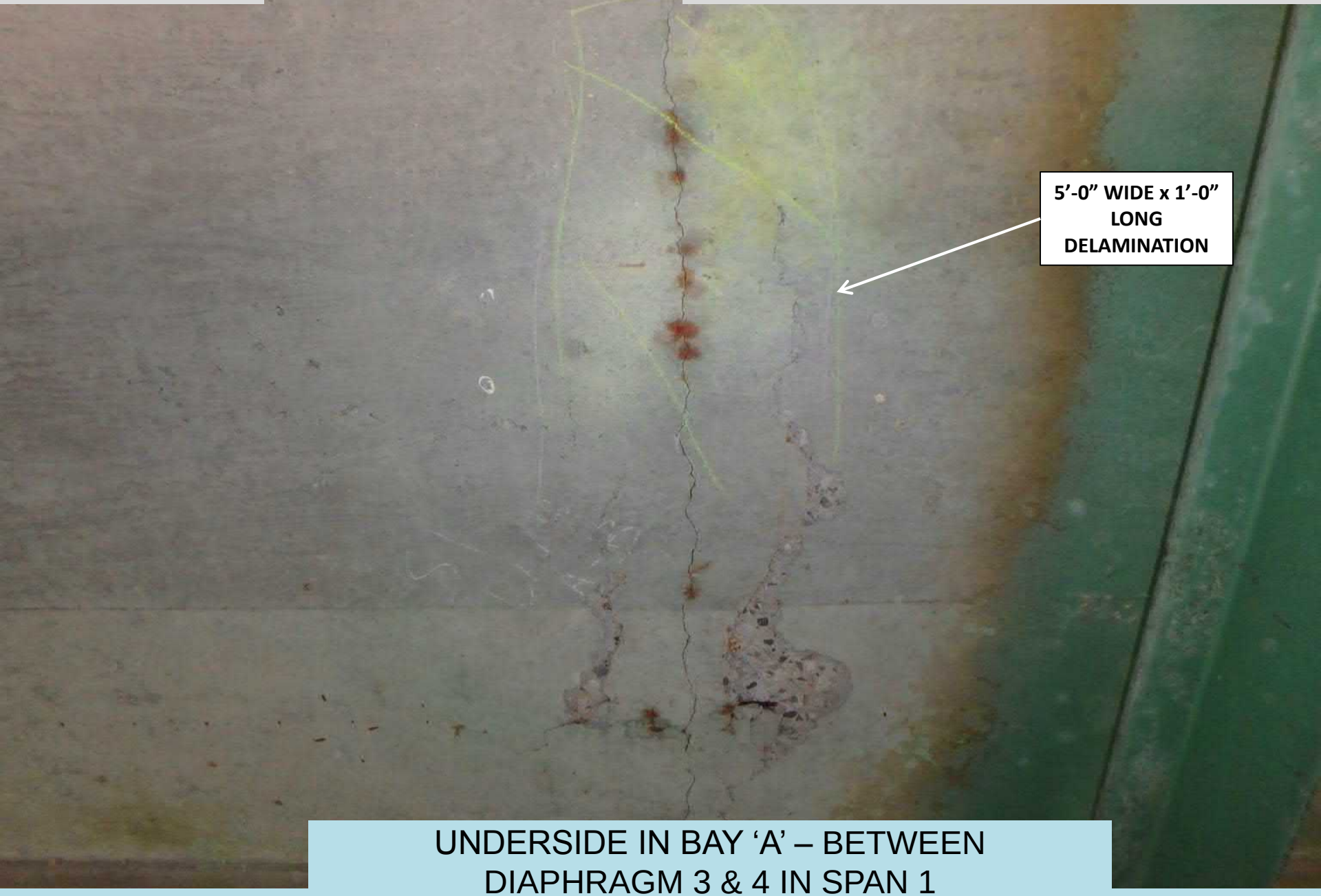

UNDERSIDE IN BAY ‘A’ – BETWEEN DIAPHRAGM 3 & 4 IN SPAN 1 (LOOKING EAST)

UNDERSIDE IN BAY ‘C’ – ABOVE PIER 1
BEYOND END DIAPHRAGM (LOOKING EAST)

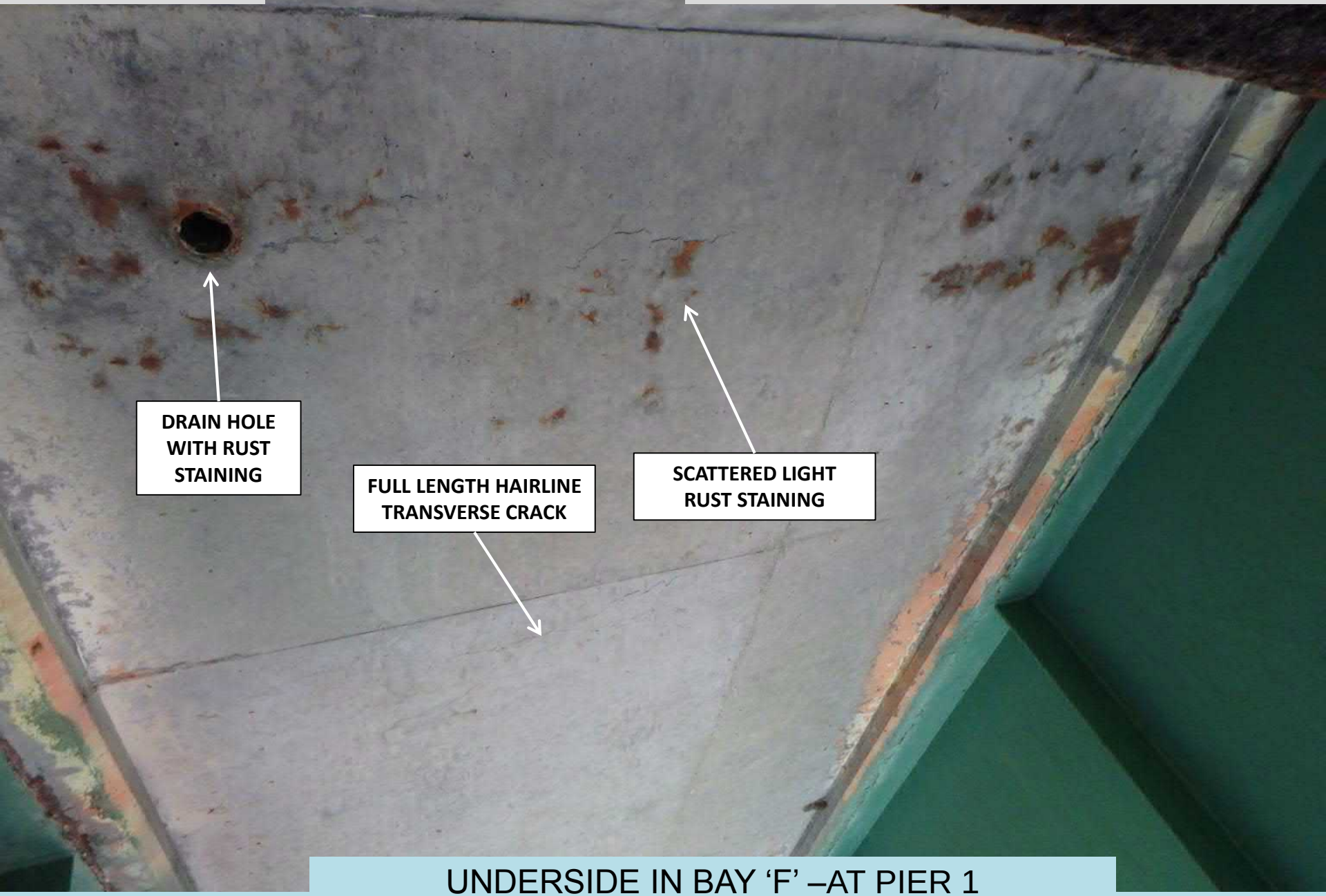

UNDERSIDE IN BAY ‘F’ –AT PIER 1
IN SPAN 1 (LOOKING SOUTH)

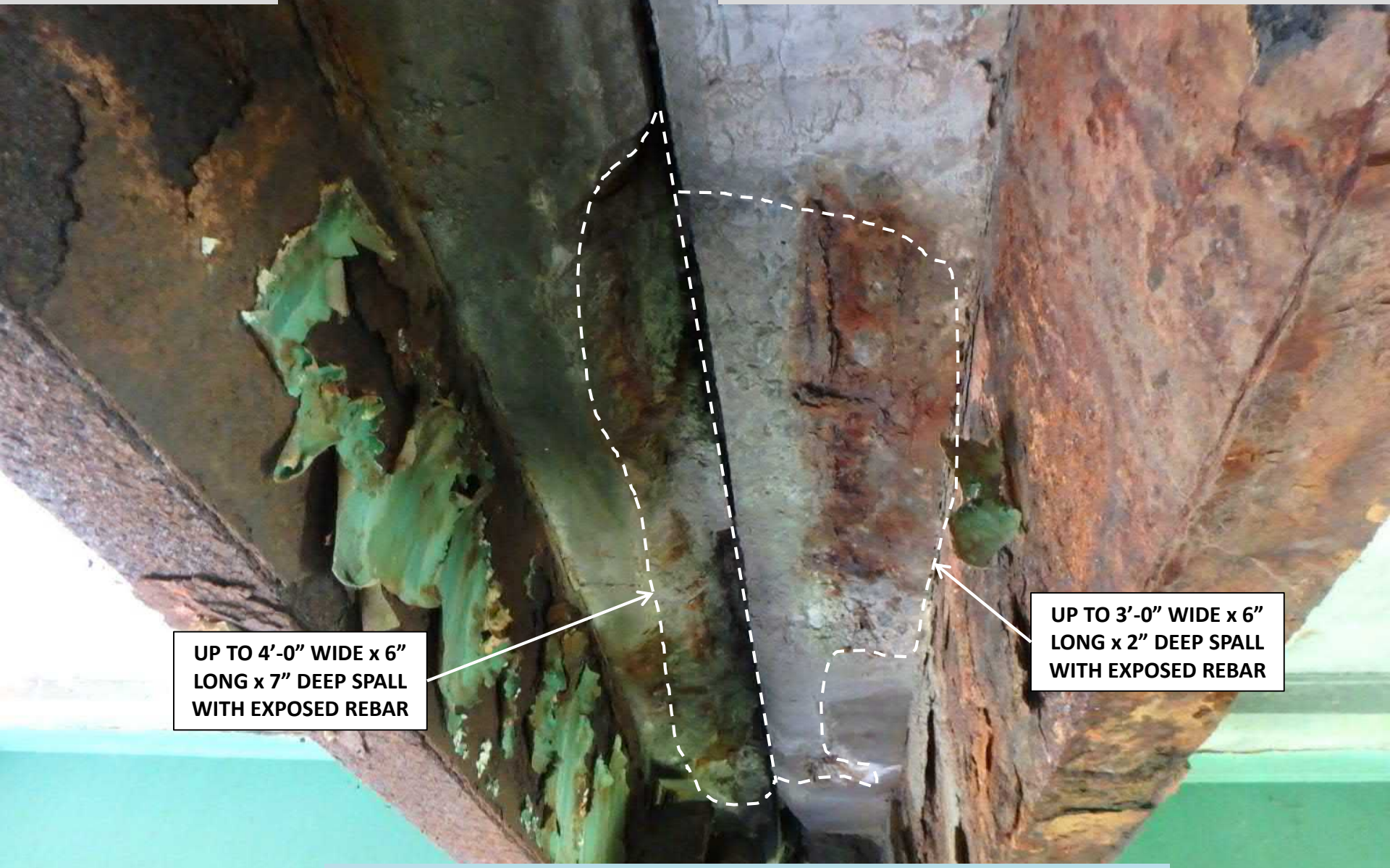

UNDERSIDE IN BAY 'F' – ABOVE PIER 1
BEYOND END DIAPHRAGM
(LOOKING WEST)

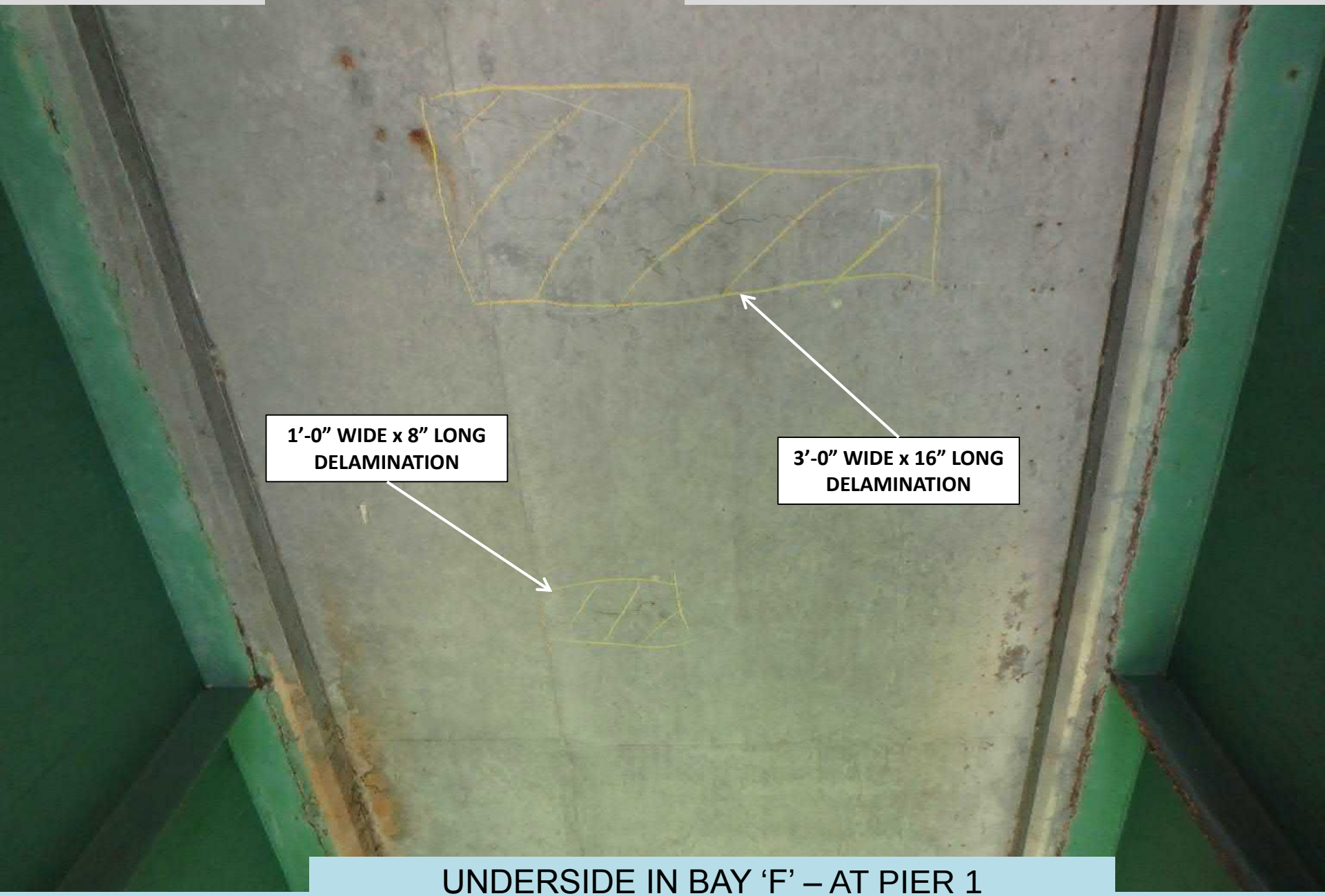

UNDERSIDE IN BAY 'F' – AT PIER 1
IN SPAN 2 (LOOKING NORTH)

GIRDER 'A' – WEST FACE AT SOUTH ABUTMENT #1 IN SPAN 1 (LOOKING EAST)

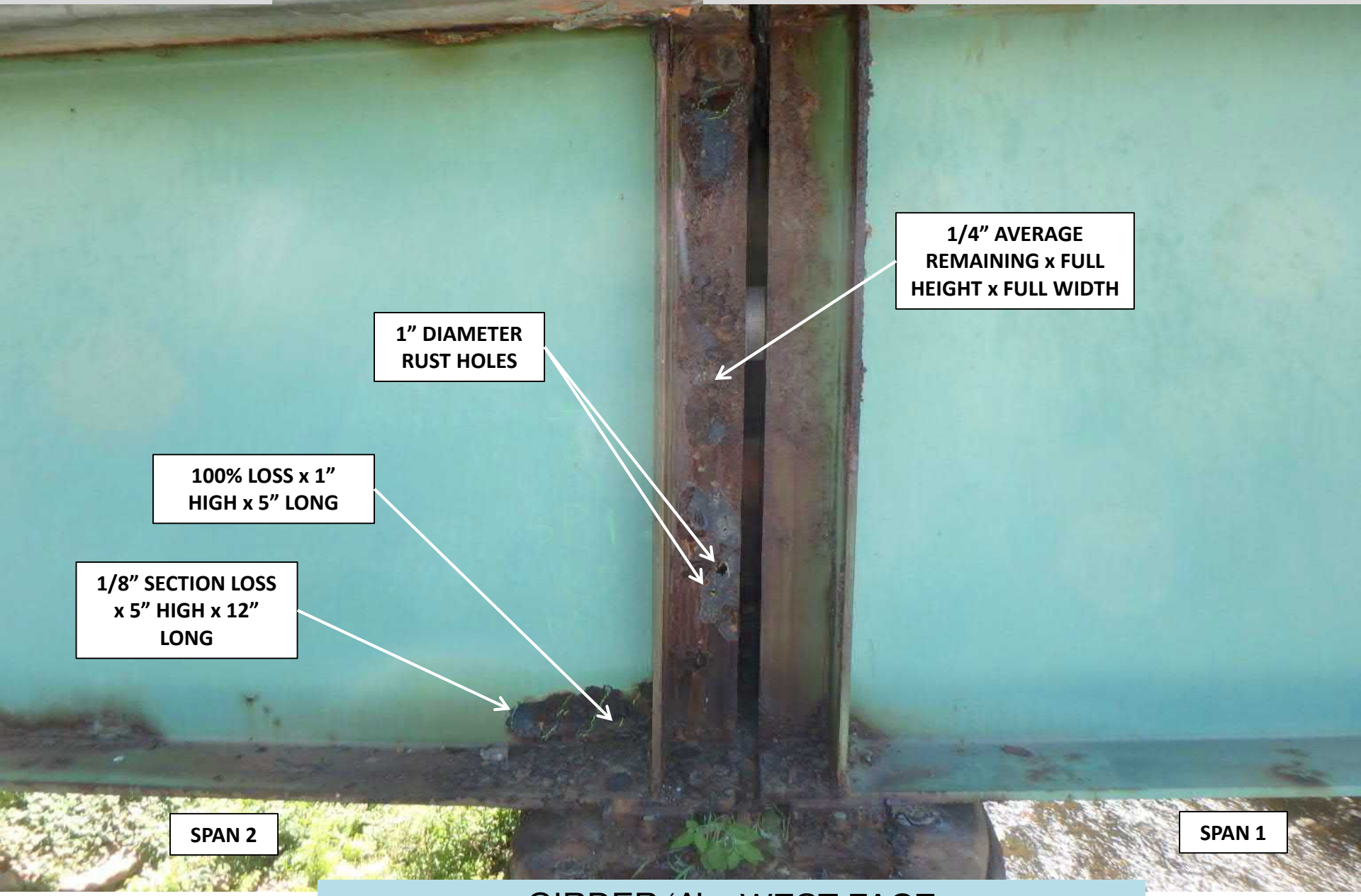

GIRDER 'A' – WEST FACE
AT PIER 1 IN SPAN 1 & 2 (LOOKING EAST)

GIRDER ‘G’ – WEST FACE
AT PIER 1 IN SPAN 1 (LOOKING EAST)

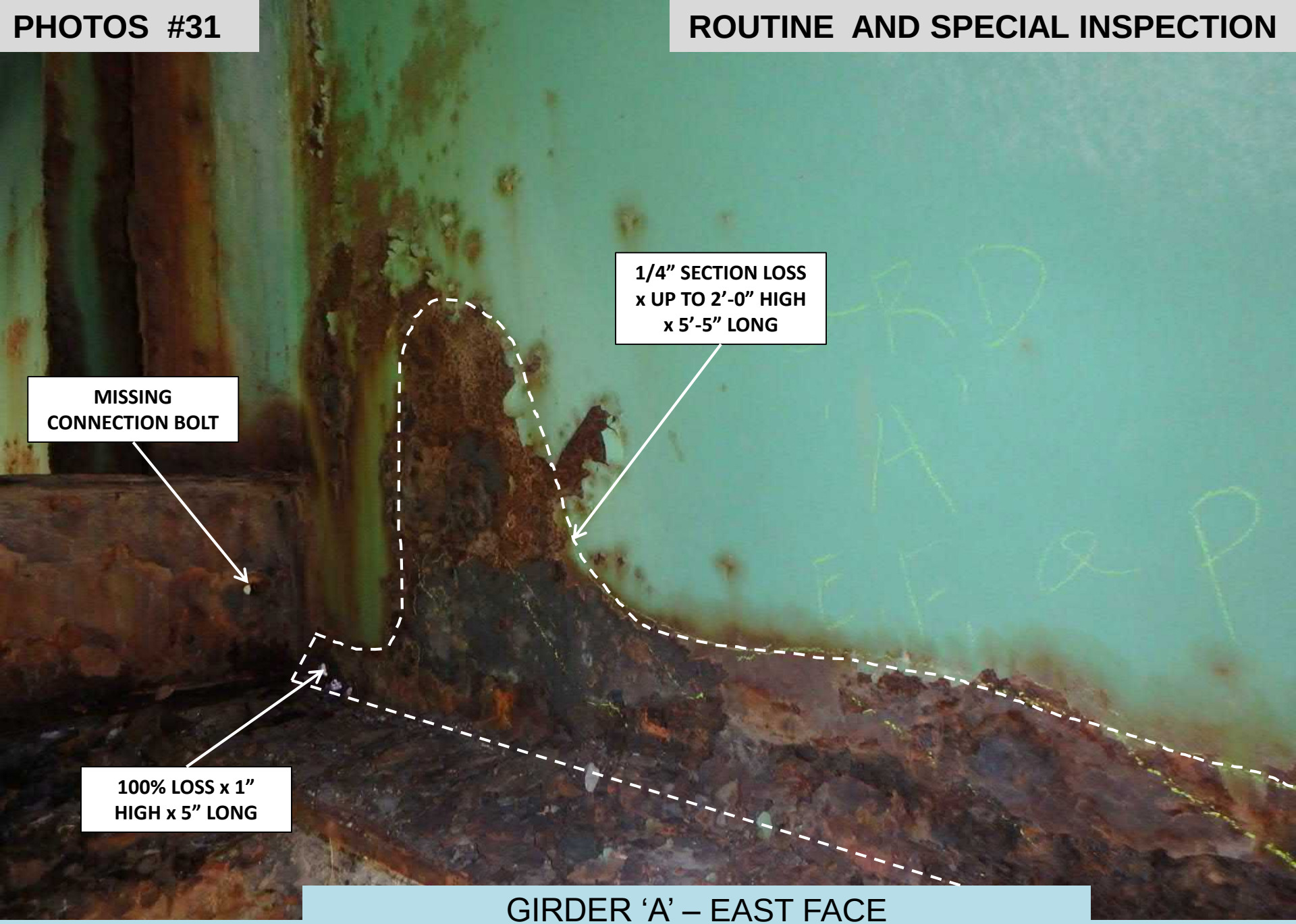

GIRDER 'A' – EAST FACE
AT PIER 1 IN SPAN 2 (LOOKING NORTHWEST)

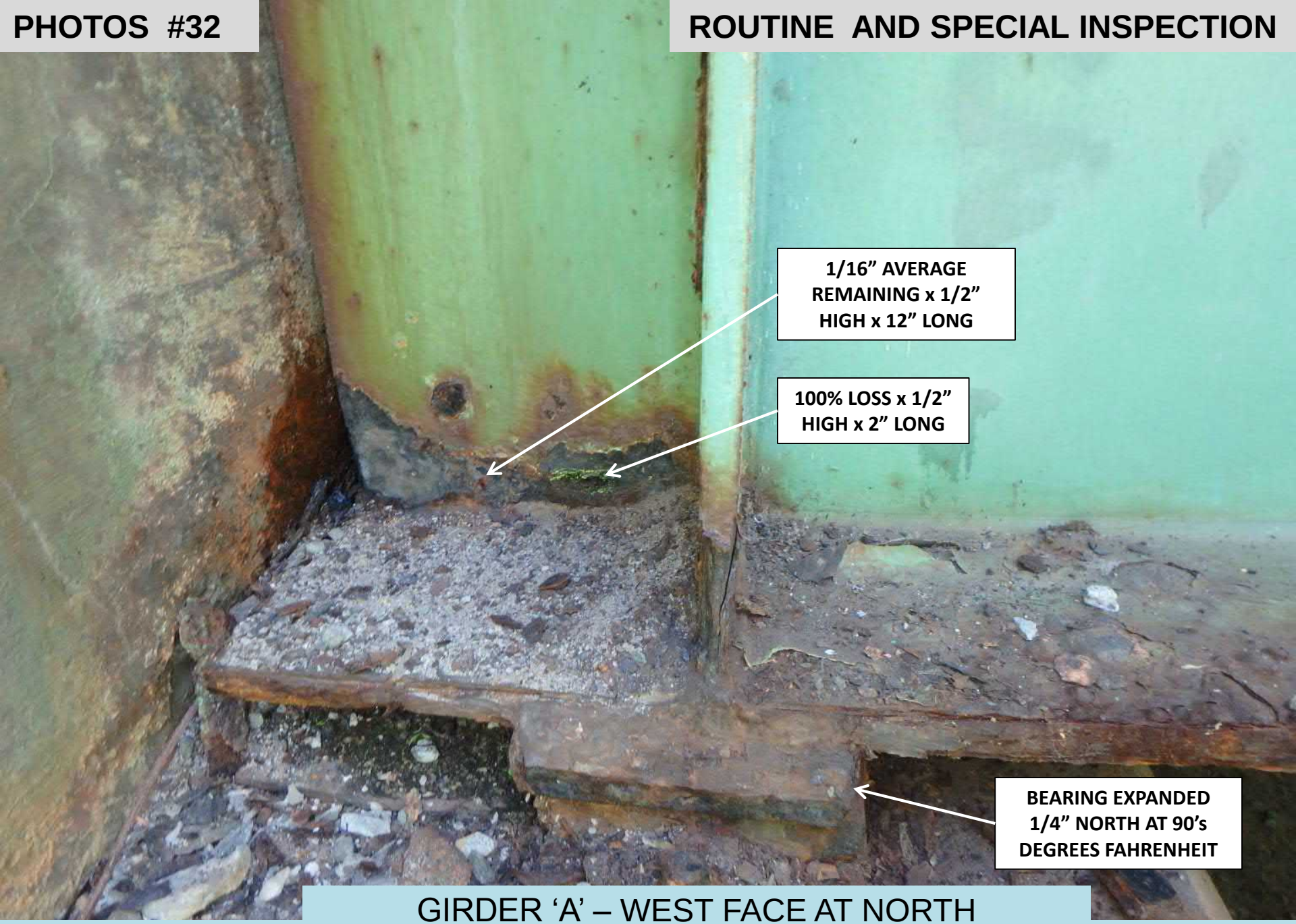

GIRDER ‘A’ – WEST FACE AT NORTH ABUTMENT #2 IN SPAN 2 (LOOKING EAST)

GIRDER 'A' – EAST FACE AT NORTH ABUTMENT #2 IN SPAN 2 (LOOKING WEST)

GIRDER 'E' – WEST FACE
AT PIER 1 IN SPAN 2 (LOOKING EAST)

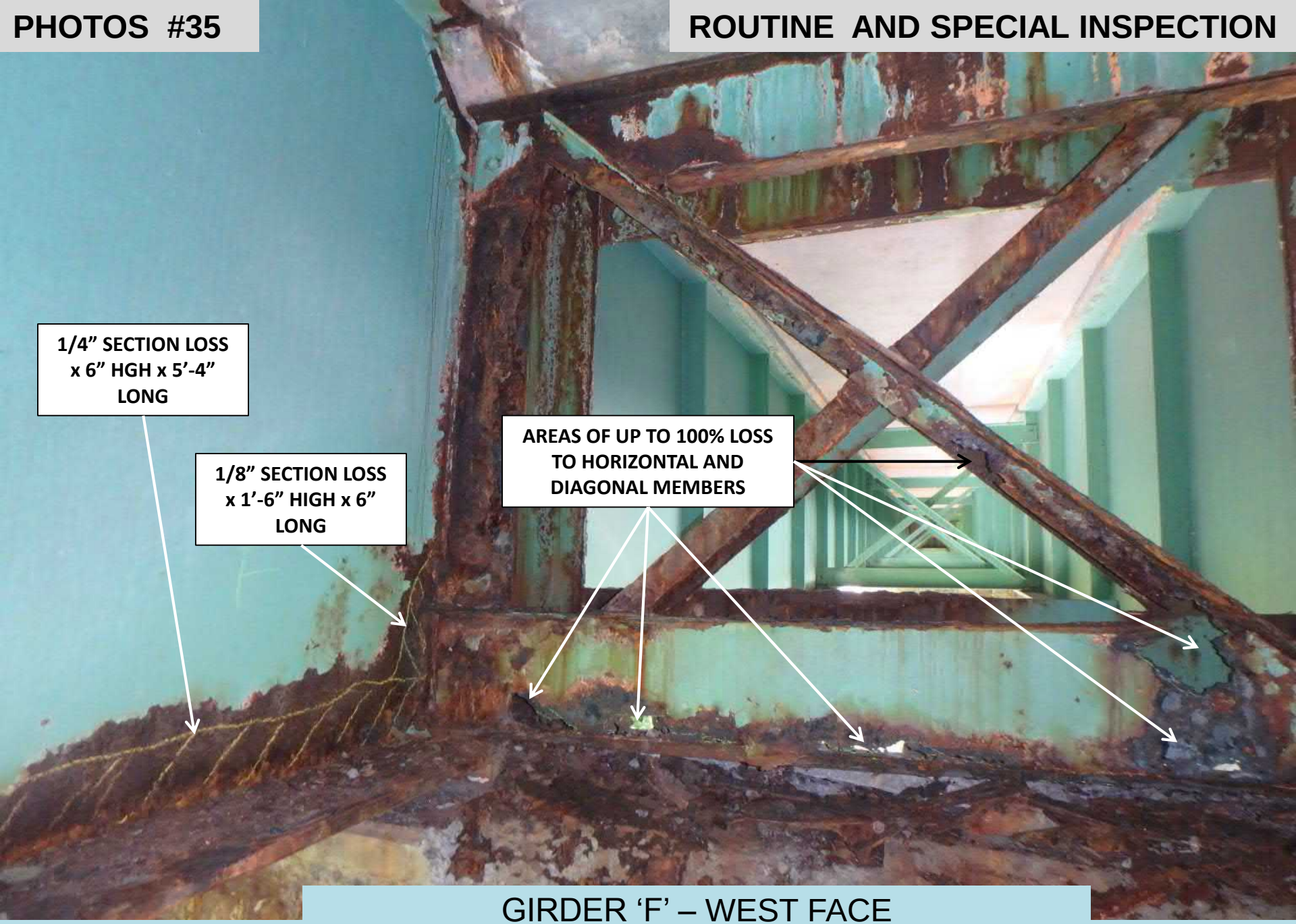

GIRDER 'F' – WEST FACE
AT PIER 1 IN SPAN 2 (LOOKING NORTHEAST)

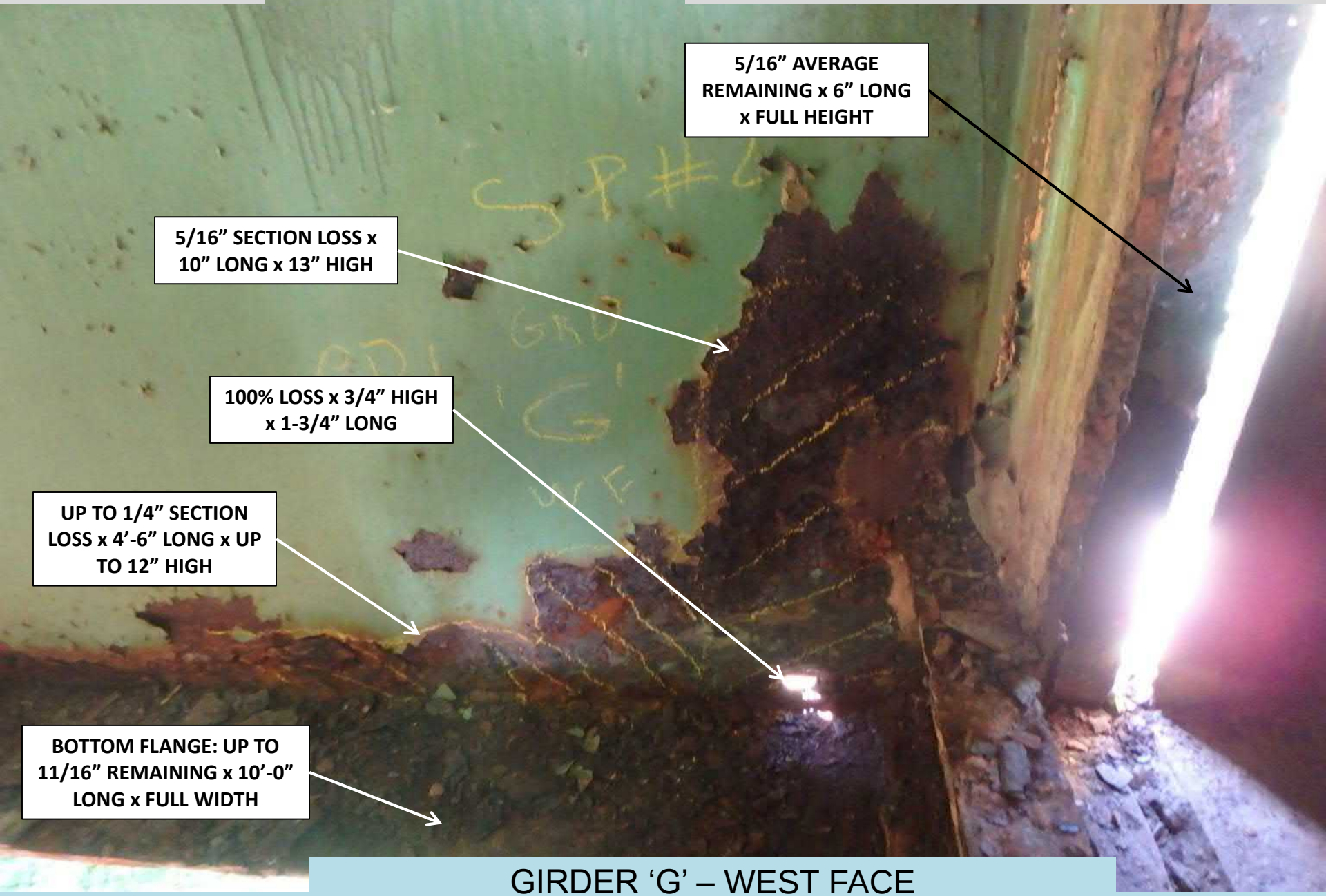

GIRDER ‘G’ – WEST FACE
AT PIER 1 IN SPAN 2 (LOOKING EAST)

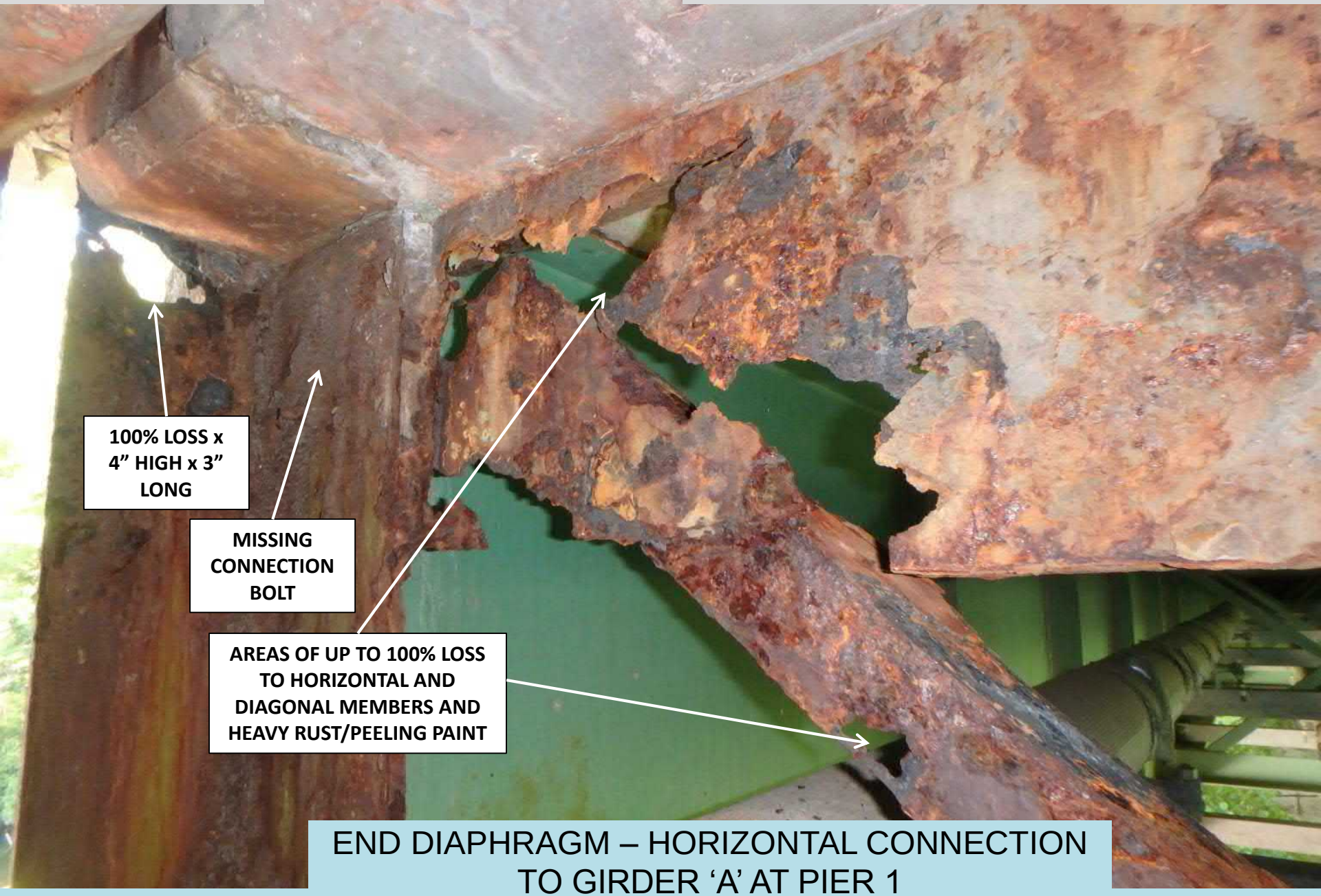

END DIAPHRAGM – HORIZONTAL CONNECTION TO GIRDER ‘A’ AT PIER 1 IN SPAN 2 (LOOKING WEST)

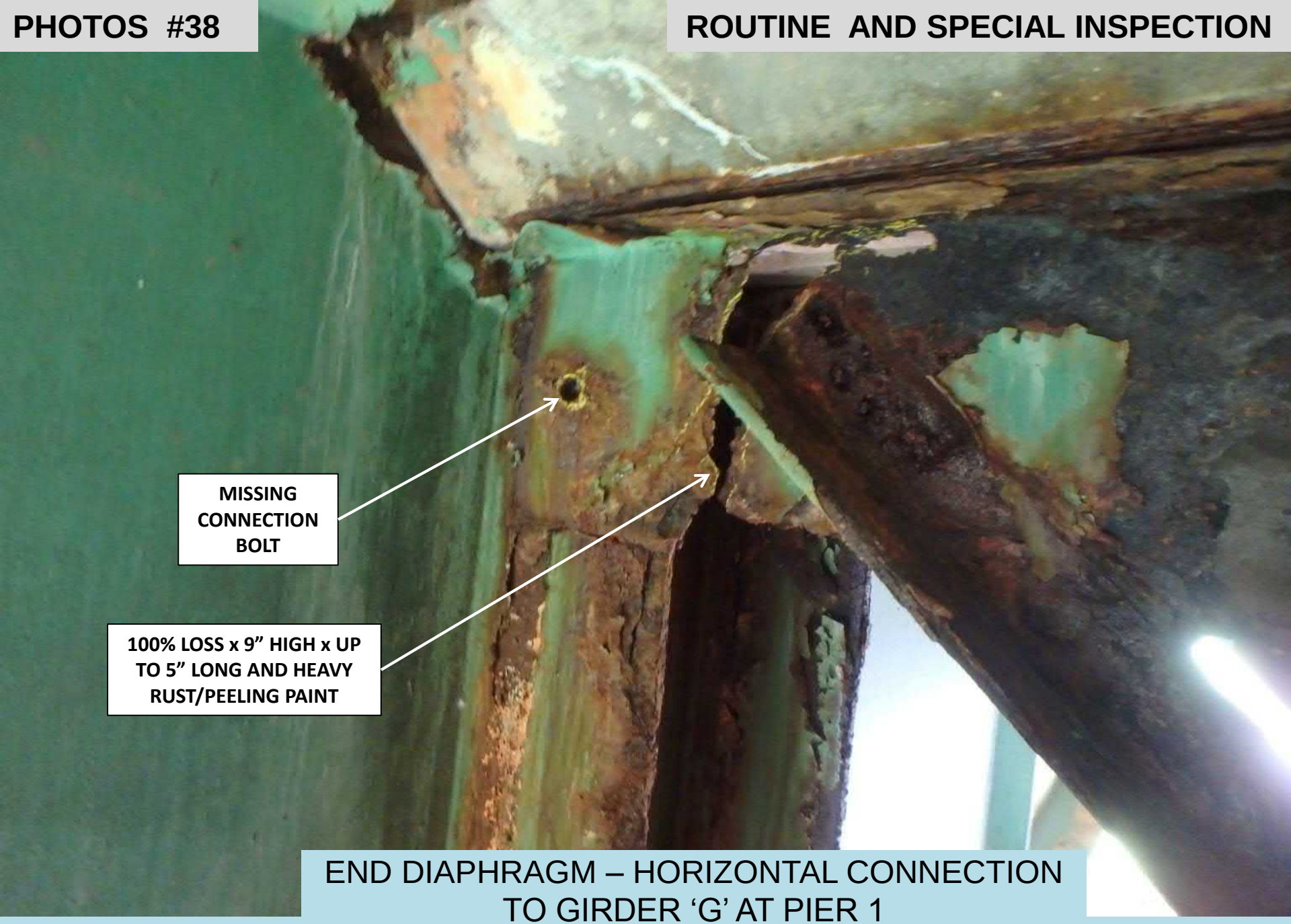

END DIAPHRAGM – HORIZONTAL CONNECTION TO GIRDER ‘G’ AT PIER 1 IN SPAN 2 (LOOKING EAST)

DIAPHRAGM #2 – BAY ‘C’
IN SPAN 2 (LOOKING SOUTH)

1ST UTILITY SUPPORT – BAY ‘A’ BETWEEN DIAPHRAGM 1 & 2 IN SPAN 2 (LOOKING SOUTH)

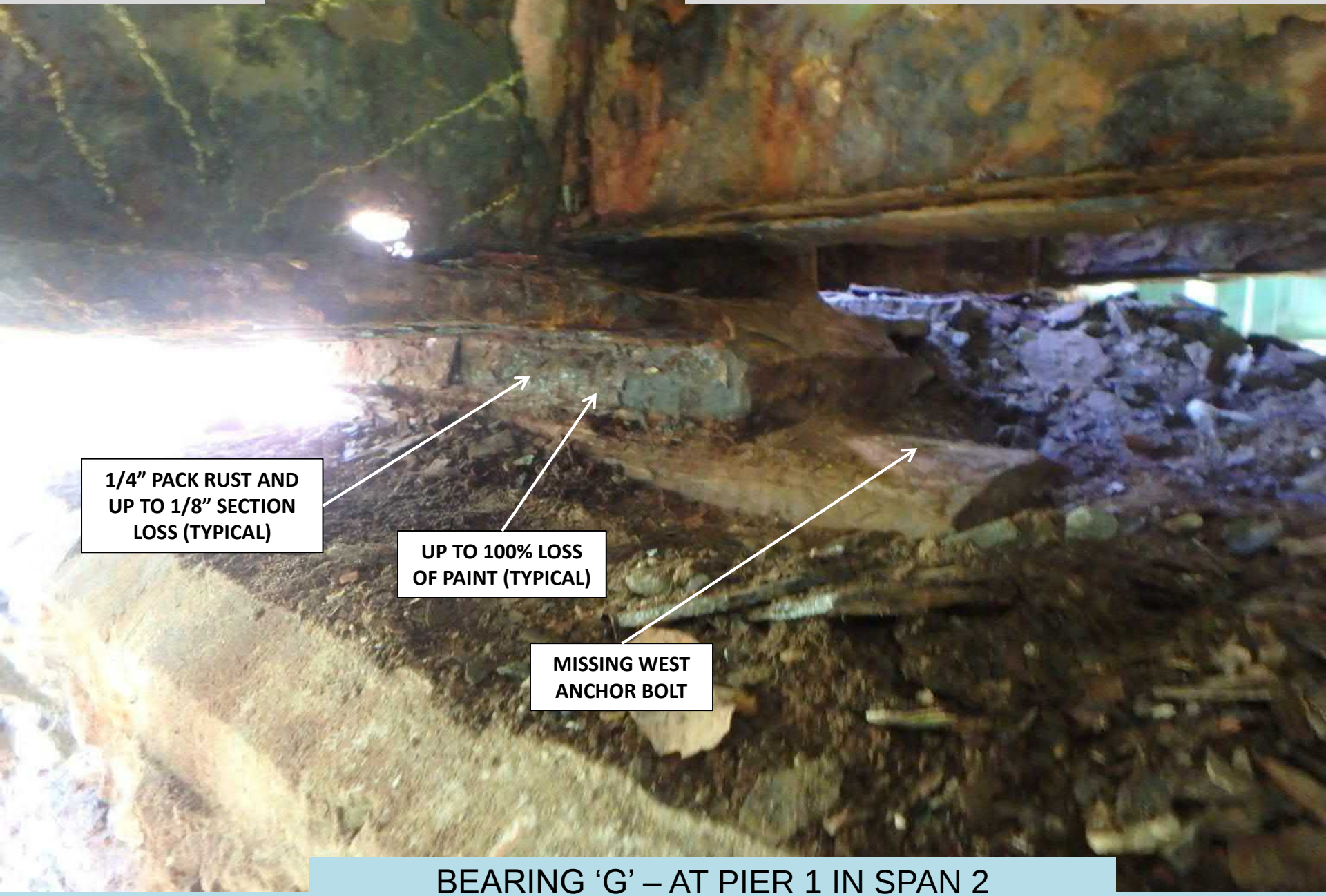

BEARING 'G' – AT PIER 1 IN SPAN 2
(LOOKING EAST)

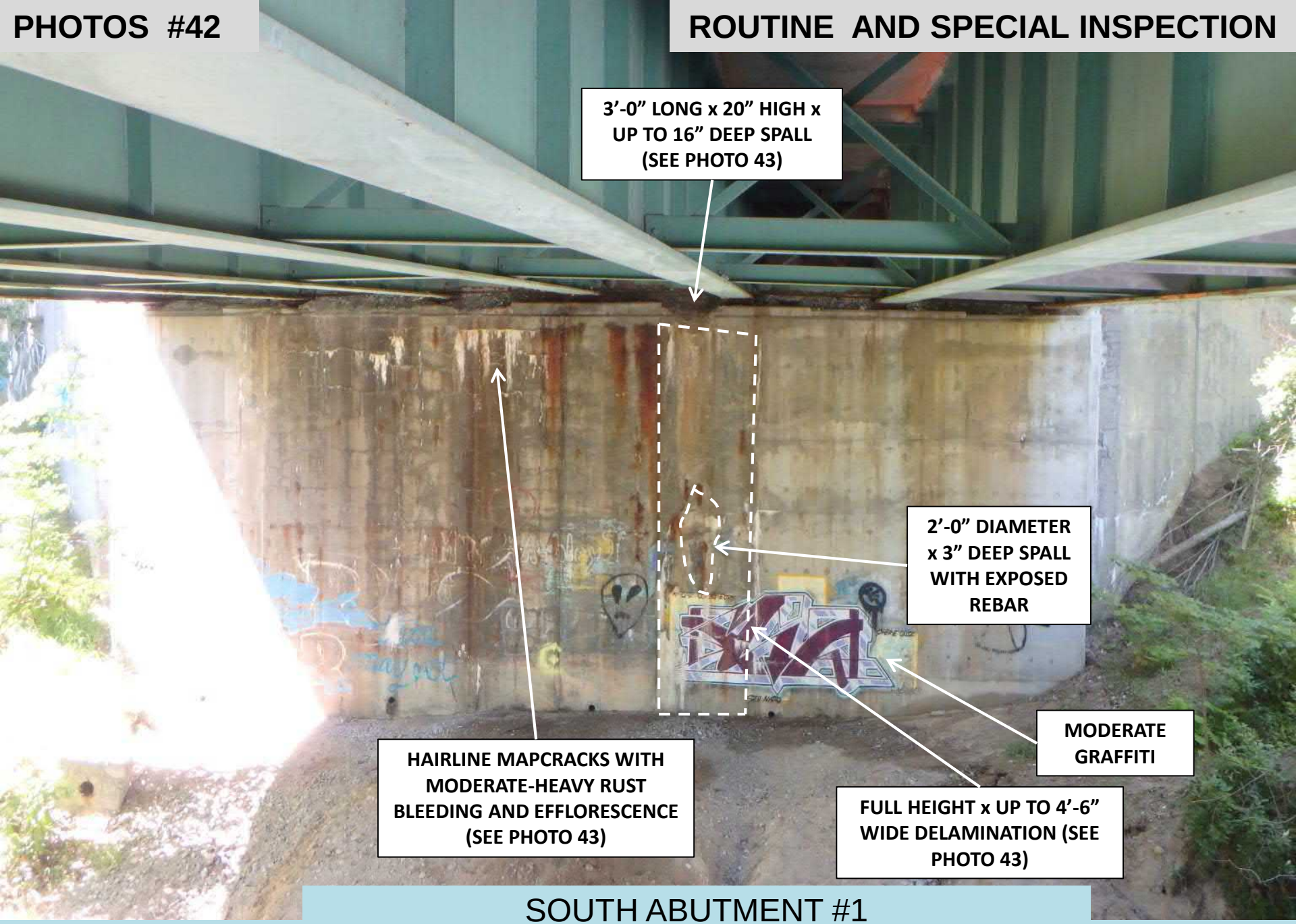

SOUTH ABUTMENT #1
GENERAL ELEVATION (LOOKING SOUTH)

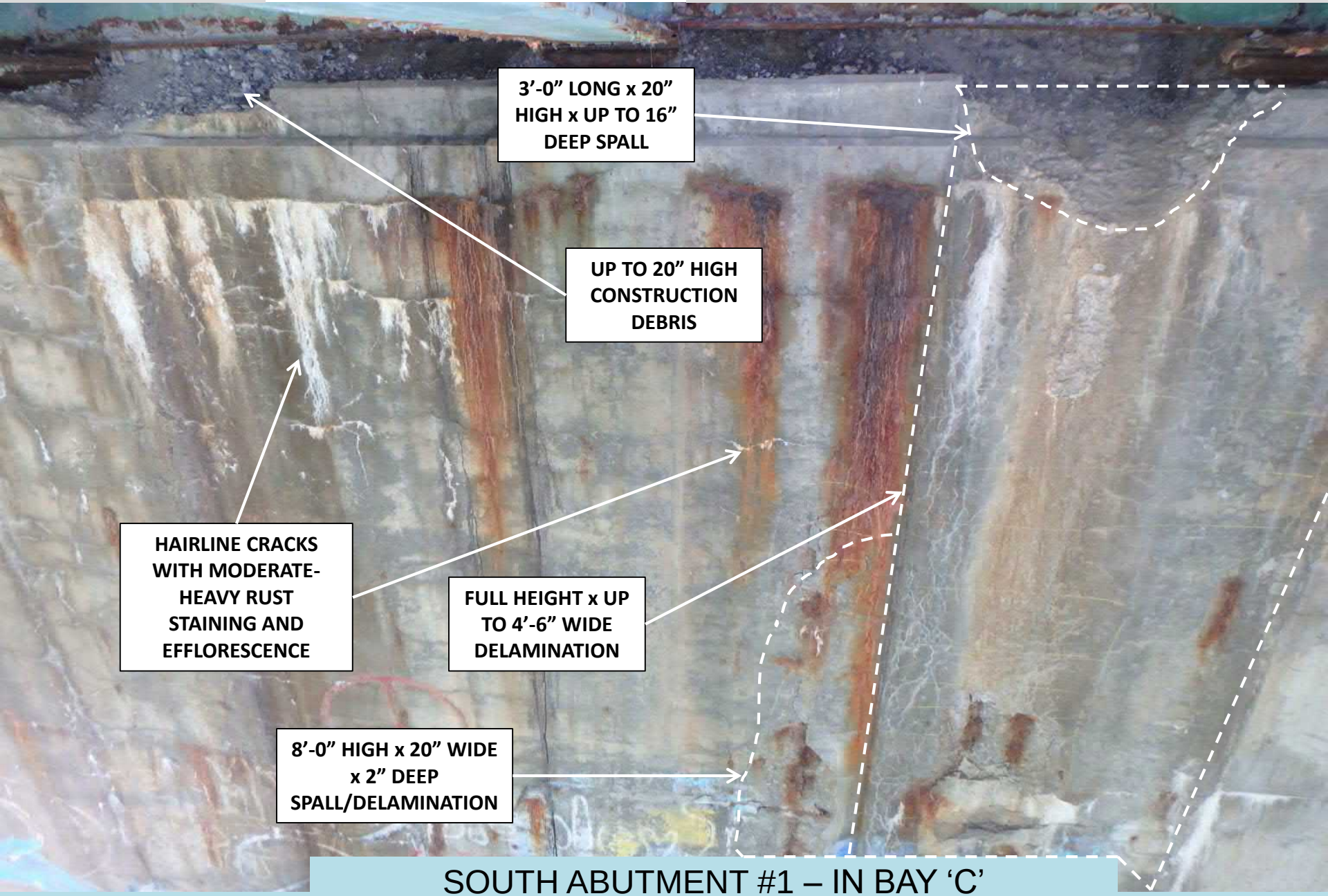

SOUTH ABUTMENT #1 – IN BAY 'C'
(LOOKING SOUTH)

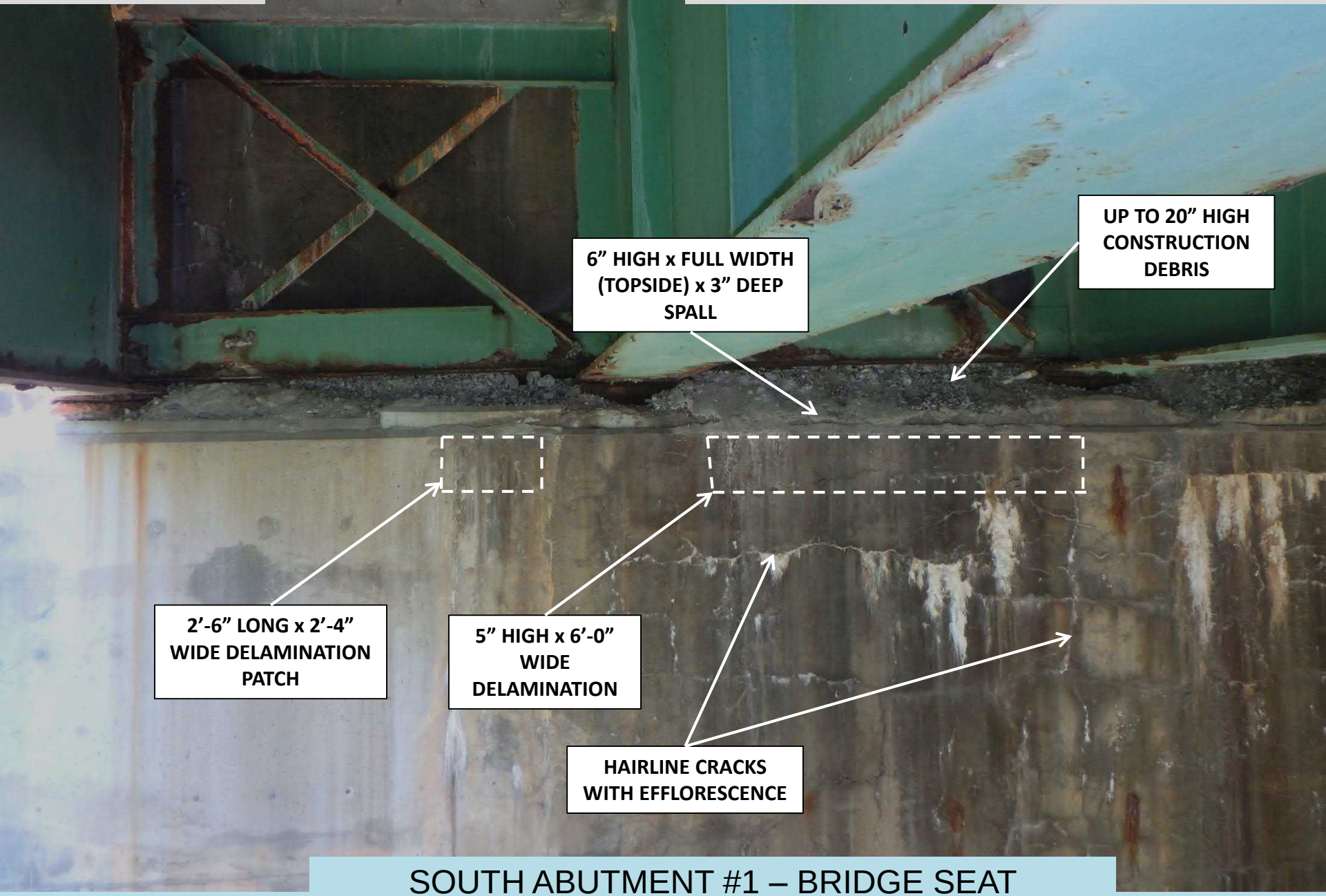

SOUTH ABUTMENT #1 – BRIDGE SEAT BETWEEN BAY ‘E’ & ‘F’ (LOOKING SOUTH)

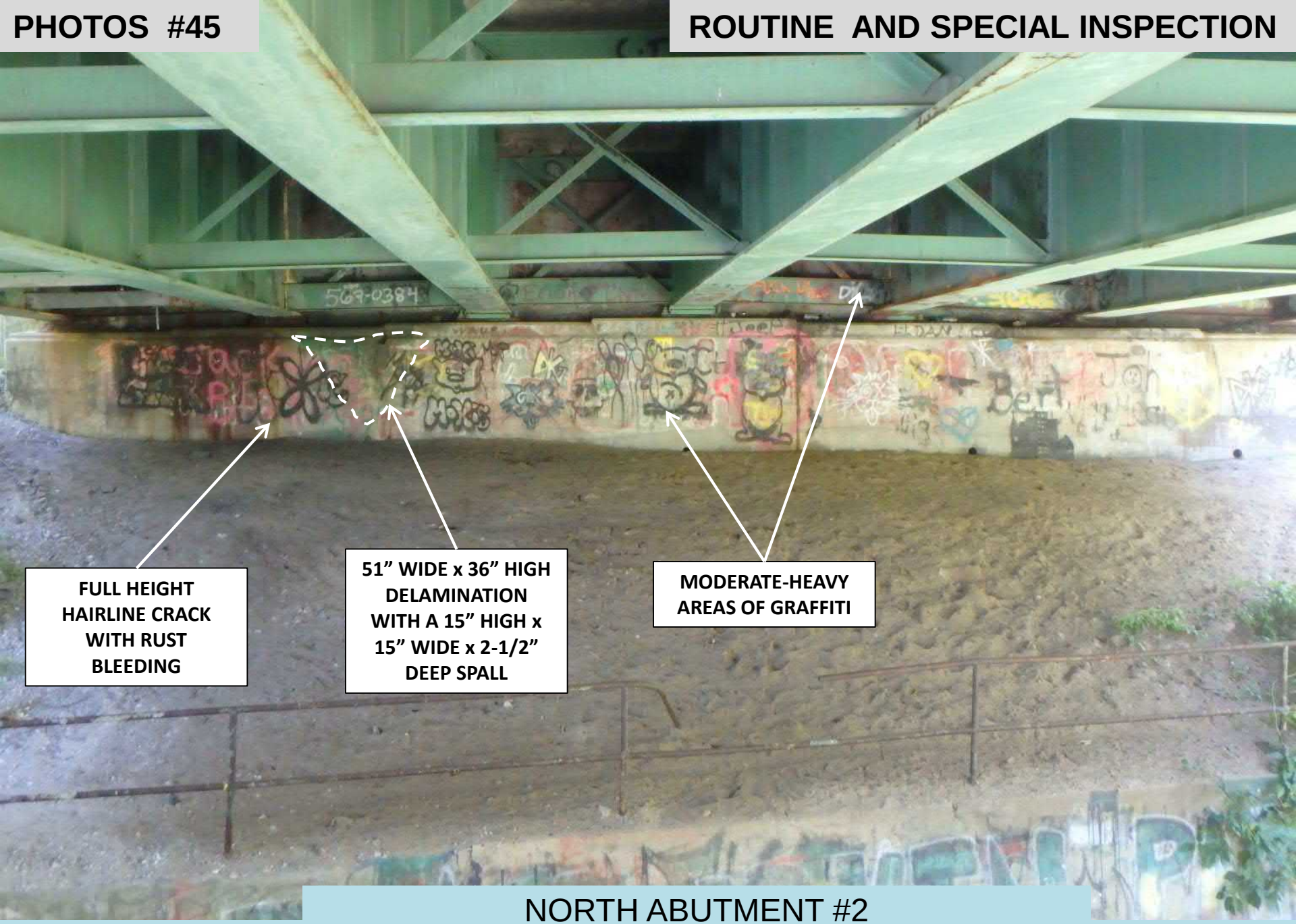

NORTH ABUTMENT #2
GENERAL ELEVATION (LOOKING NORTH)

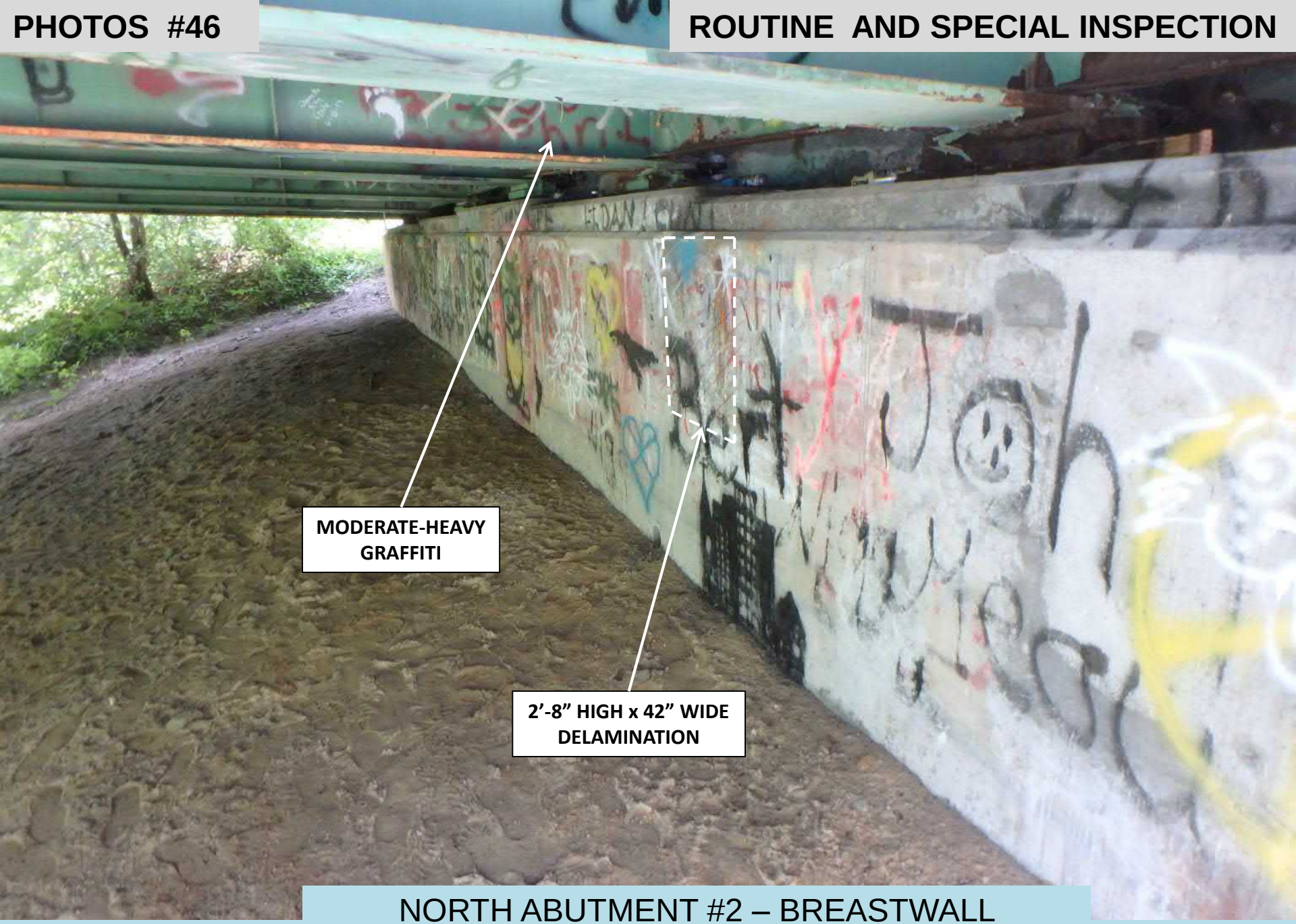

NORTH ABUTMENT #2 – BREASTWALL
FROM GIRDER 'G' (LOOKING NORTHWEST)

NORTH ABUTMENT #2 – BACKWALL
IN BAY ‘A’ (LOOKING NORTH)

NORTH ABUTMENT #2 – BACKWALL
BEHIND GIRDER 'G' (LOOKING NORTH)

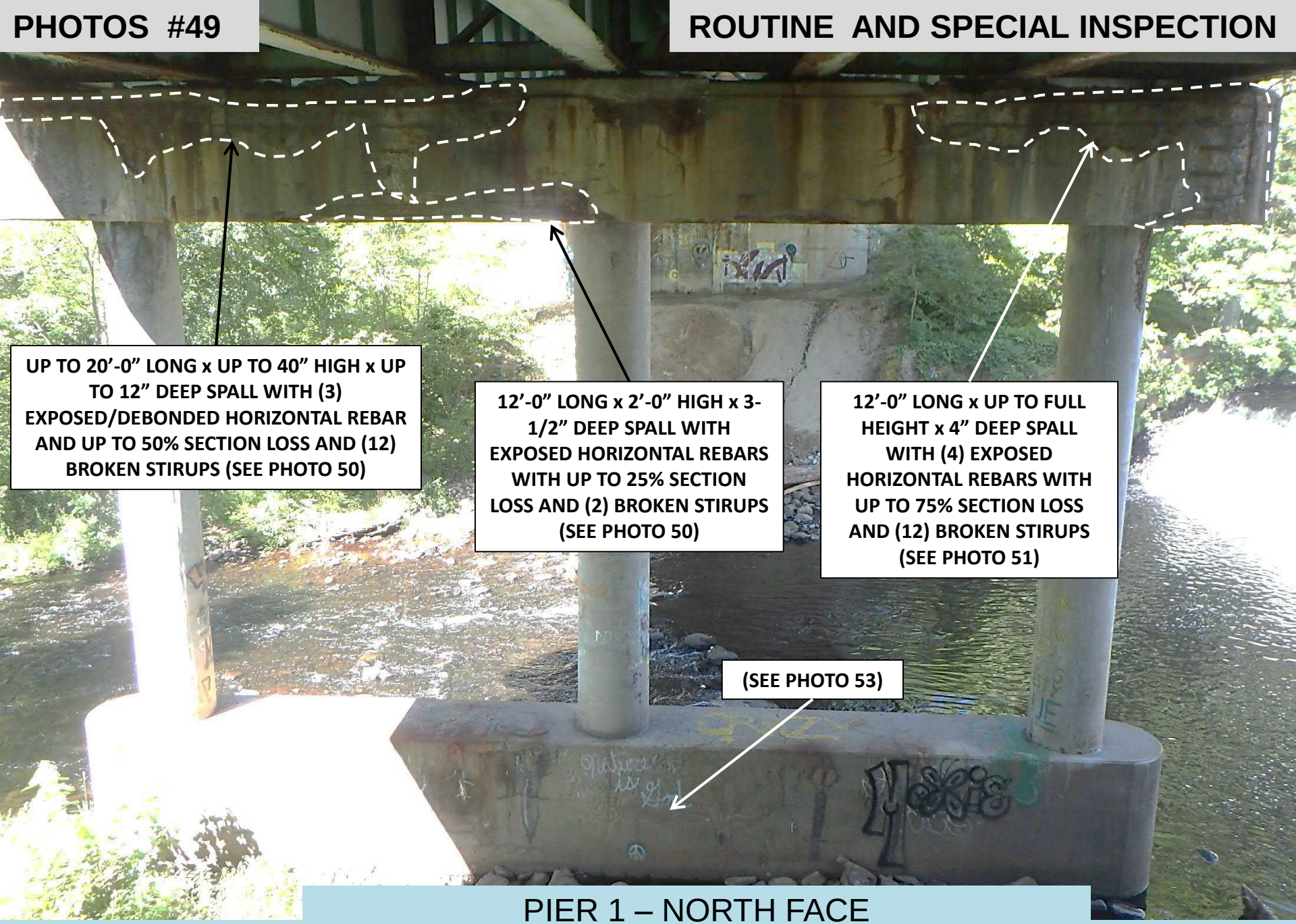

PIER 1 – NORTH FACE
GENERAL ELEVATION (LOOKING SOUTH)

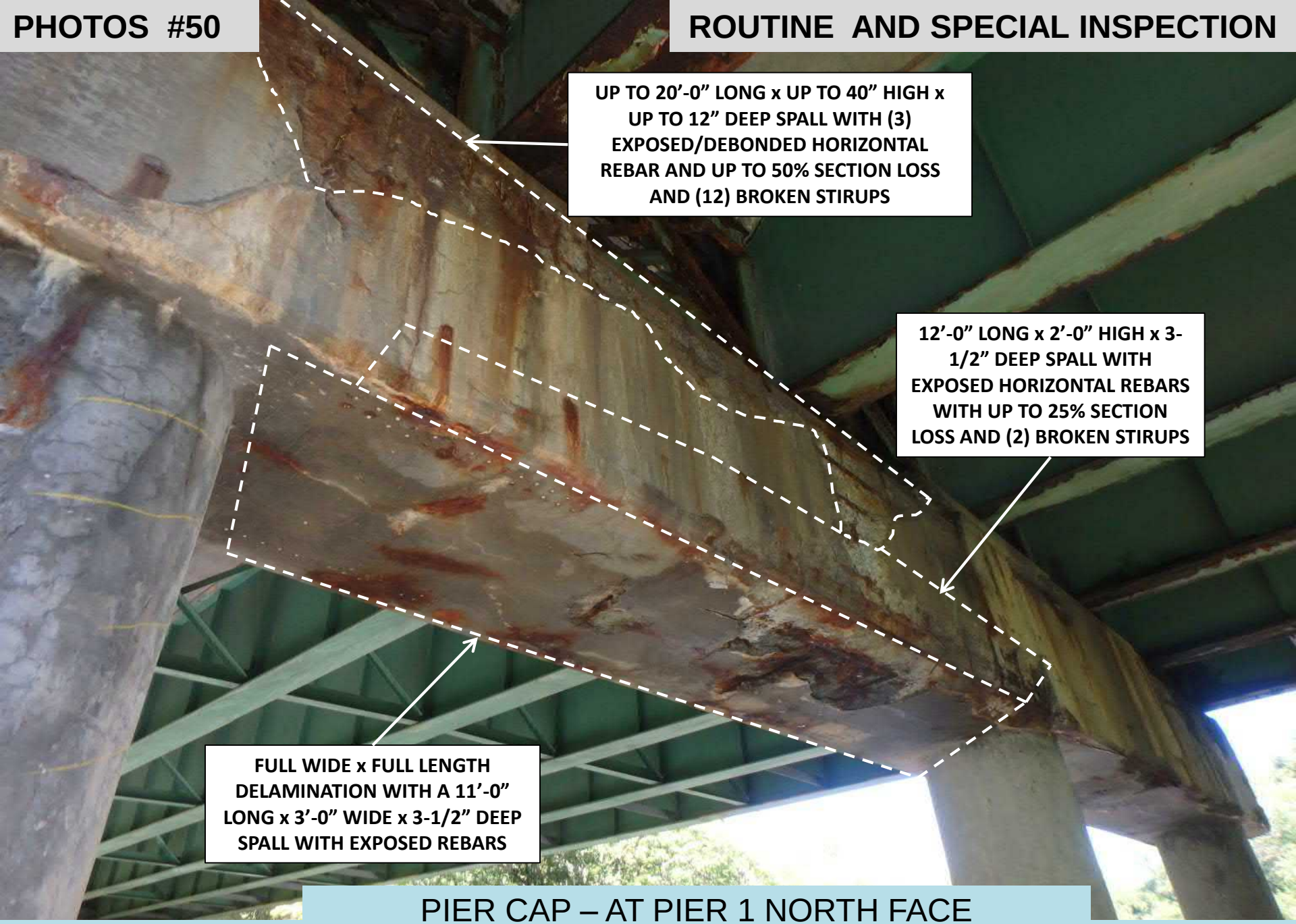

PIER CAP – AT PIER 1 NORTH FACE
BETWEEN COLUMN 'B' & 'C' (LOOKING SOUTH)

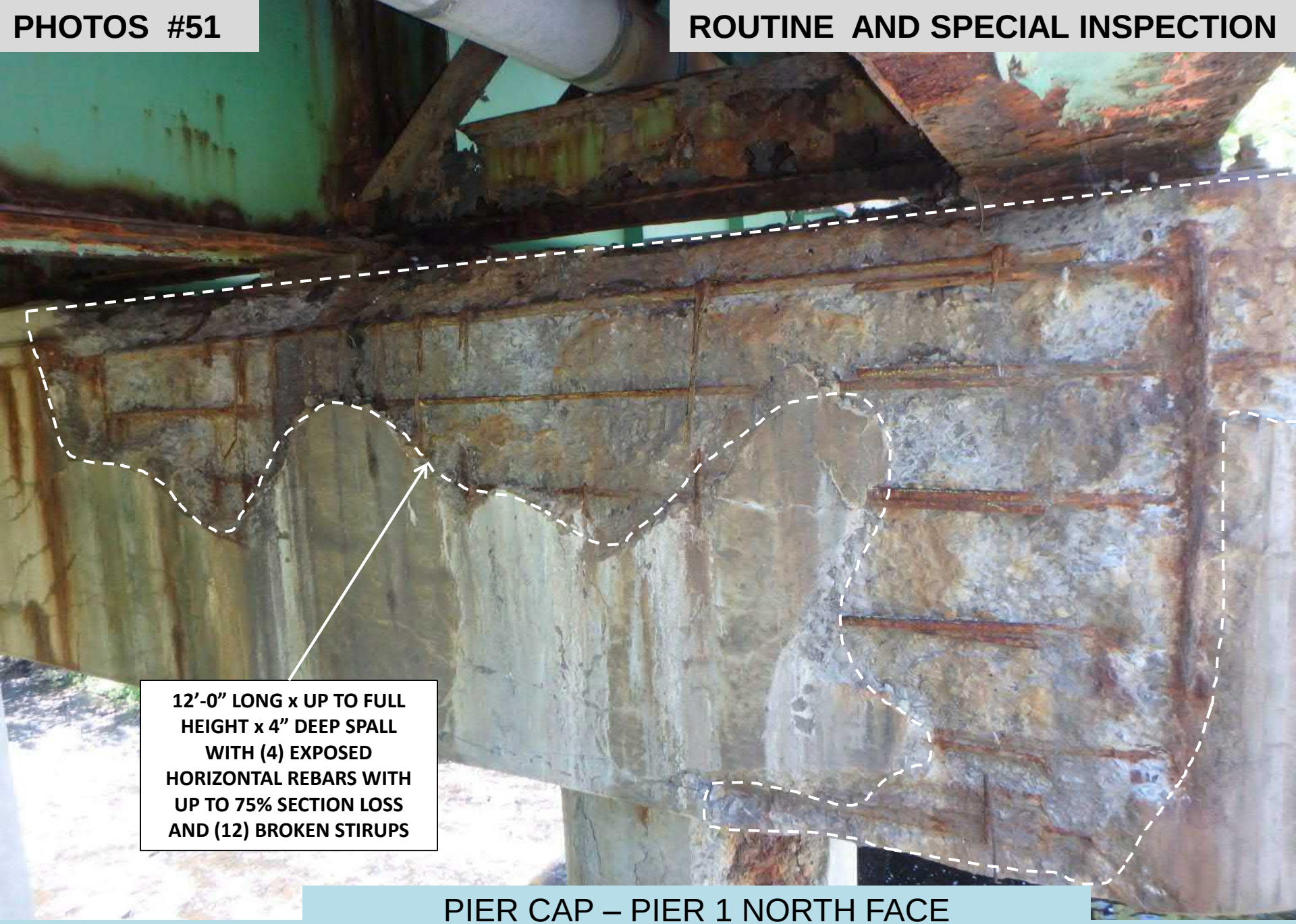

PIER CAP – PIER 1 NORTH FACE
ABOVE COLUMN 'A' (LOOKING NORTH)

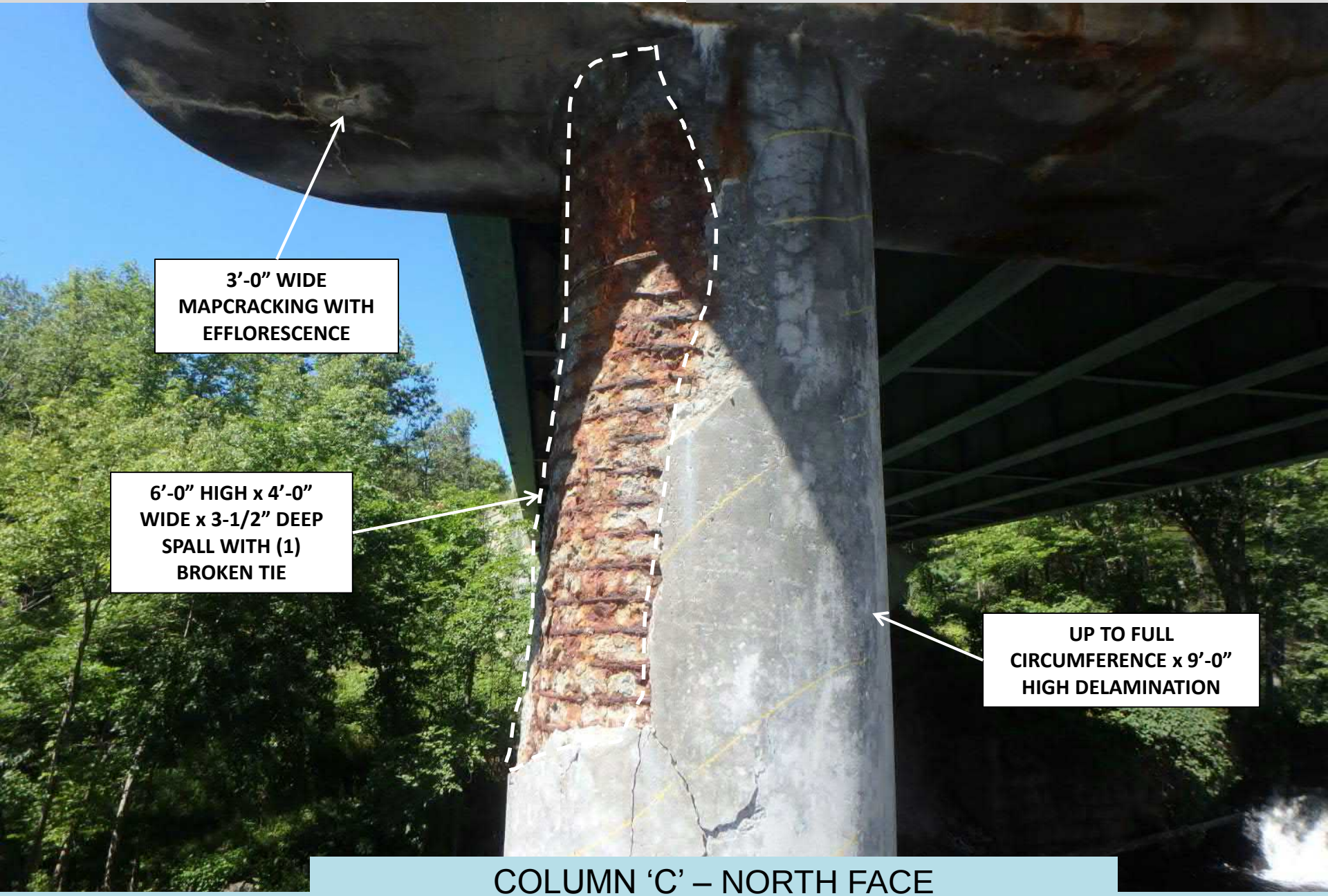

COLUMN ‘C’ – NORTH FACE
AT PIER 1 (LOOKING SOUTH)

PIER WALL – PIER 1 NORTH FACE
(LOOKING SOUTHEAST)

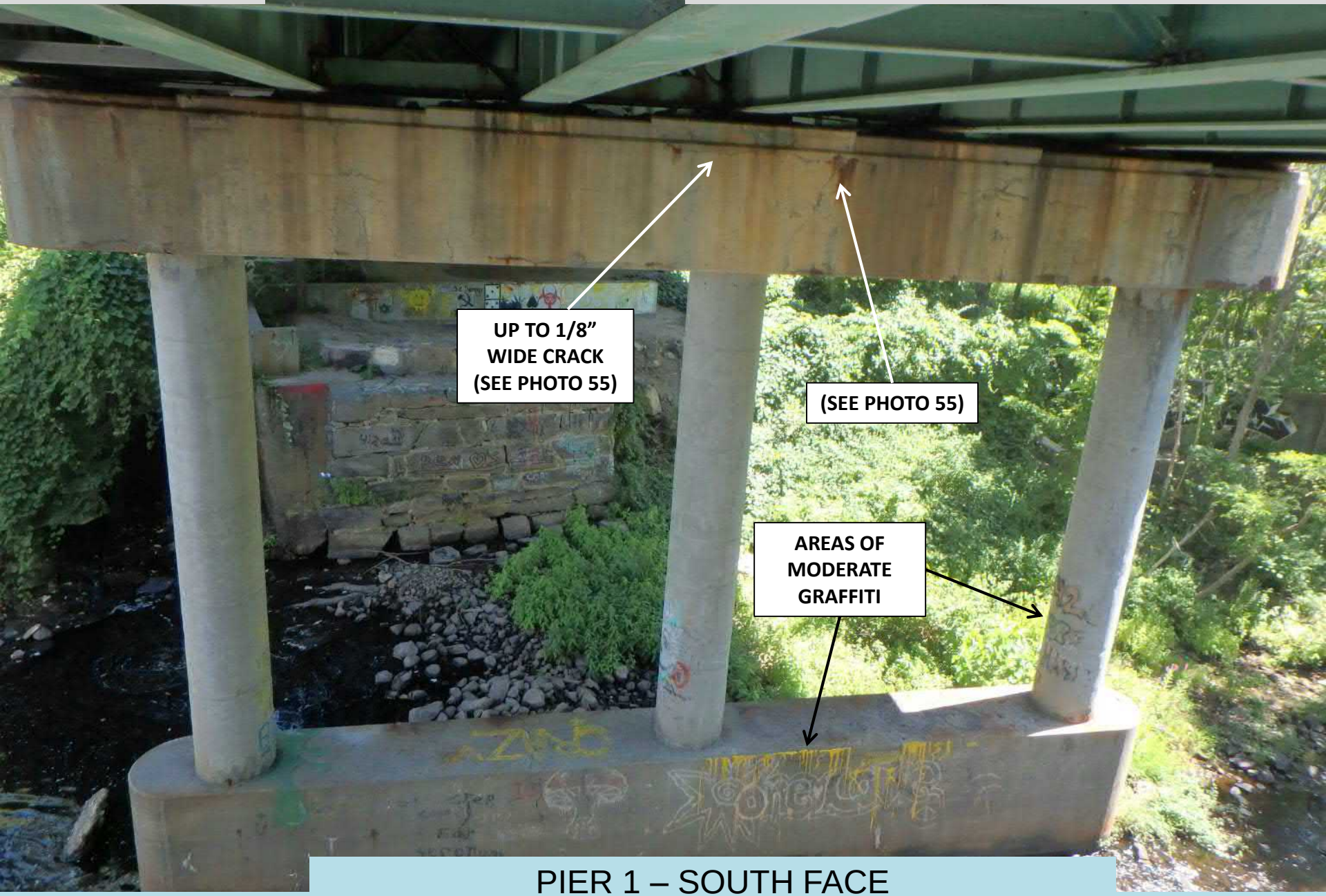

PIER 1 – SOUTH FACE
GENERAL ELEVATION (LOOKING NORTH)

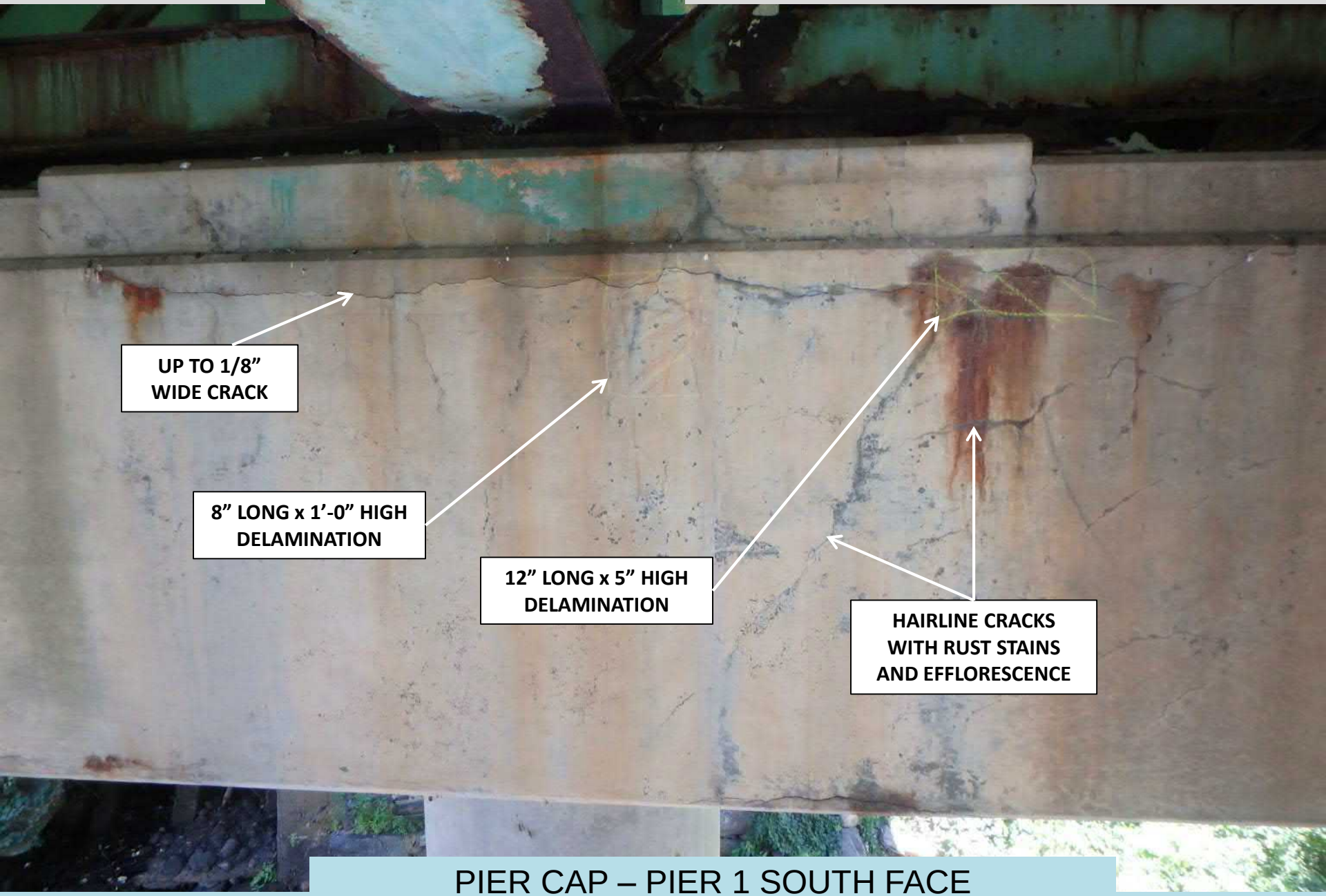

PIER CAP – PIER 1 SOUTH FACE
ABOVE COLUMN ‘B’ (LOOKING NORTH)

SOUTHWEST WINGWALL
AT SOUTH ABUTMENT #1 (LOOKING SOUTH)

SOUTHEAST WINGWALL
GENERAL ELEVATION (LOOKING SOUTH)

NORTHWEST WINGWALL
GENERAL ELEVATION (LOOKING NORTH)

NORTHEAST WINGWALL
GENERAL ELEVATION (LOOKING NORTHEAST)

UPSTREAM
(LOOKING EAST)

BRIDGE #067301

8/2/2018

DOWNSTREAM
(LOOKING WEST)

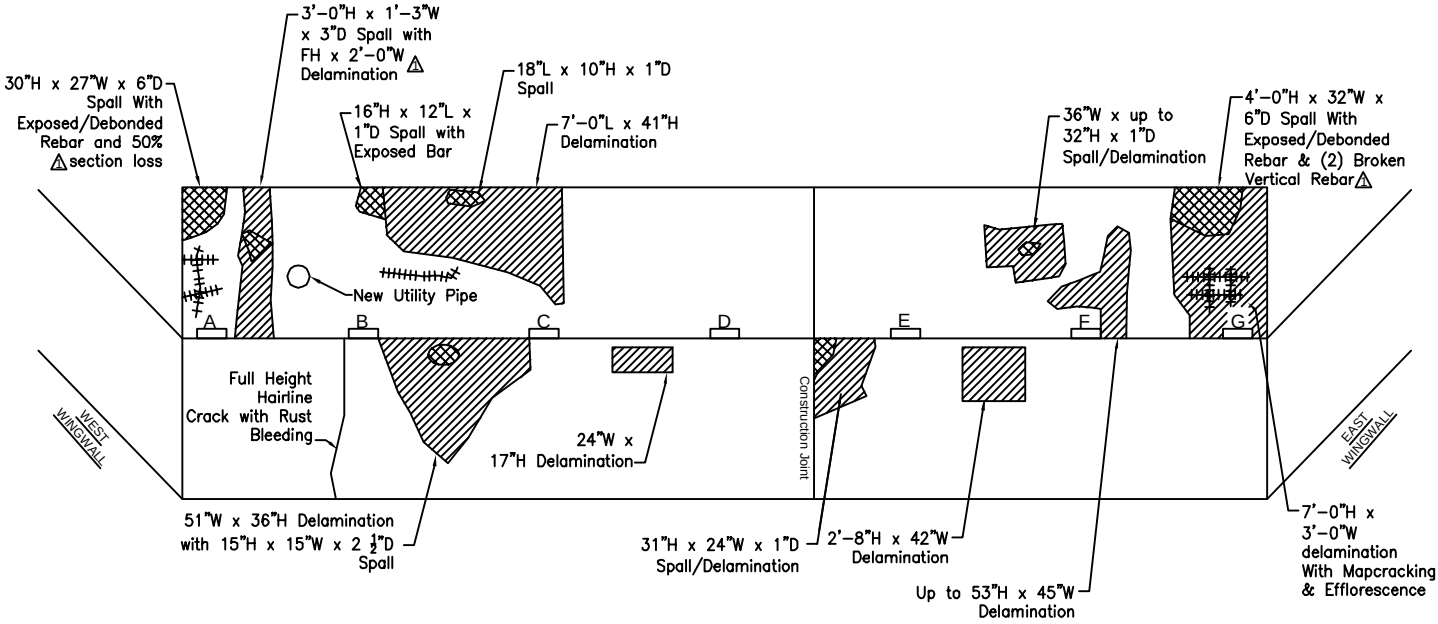

North Abutment #2

LEGEND:

- HAIRLINE CRACKS
- HAIRLINE CRACKS WITH EFFLORSCENCE
- MAP CRACKS
- DELAMINATION
- SPALLING AREA
- SCALE
- HONEYCOMB AREA
- 1 CHANGE IN PREVIOUSLY NOTED CONDITION (08/04/17 SPECIAL INSPECTION)
- 2 NEWLY DOCUMENTED CONDITION (08/02/18 ROUTINE INSPECTION)

Bridge # 067301
Route 102 over Branch River
Burrillville, RI

REVISIONS BY:	REVISIONS:	AECOM	NOT TO SCALE	INSPECTED BY:	DATE INSPECTED:
MP	09/04/2018			TVF & MP	08/02/2018

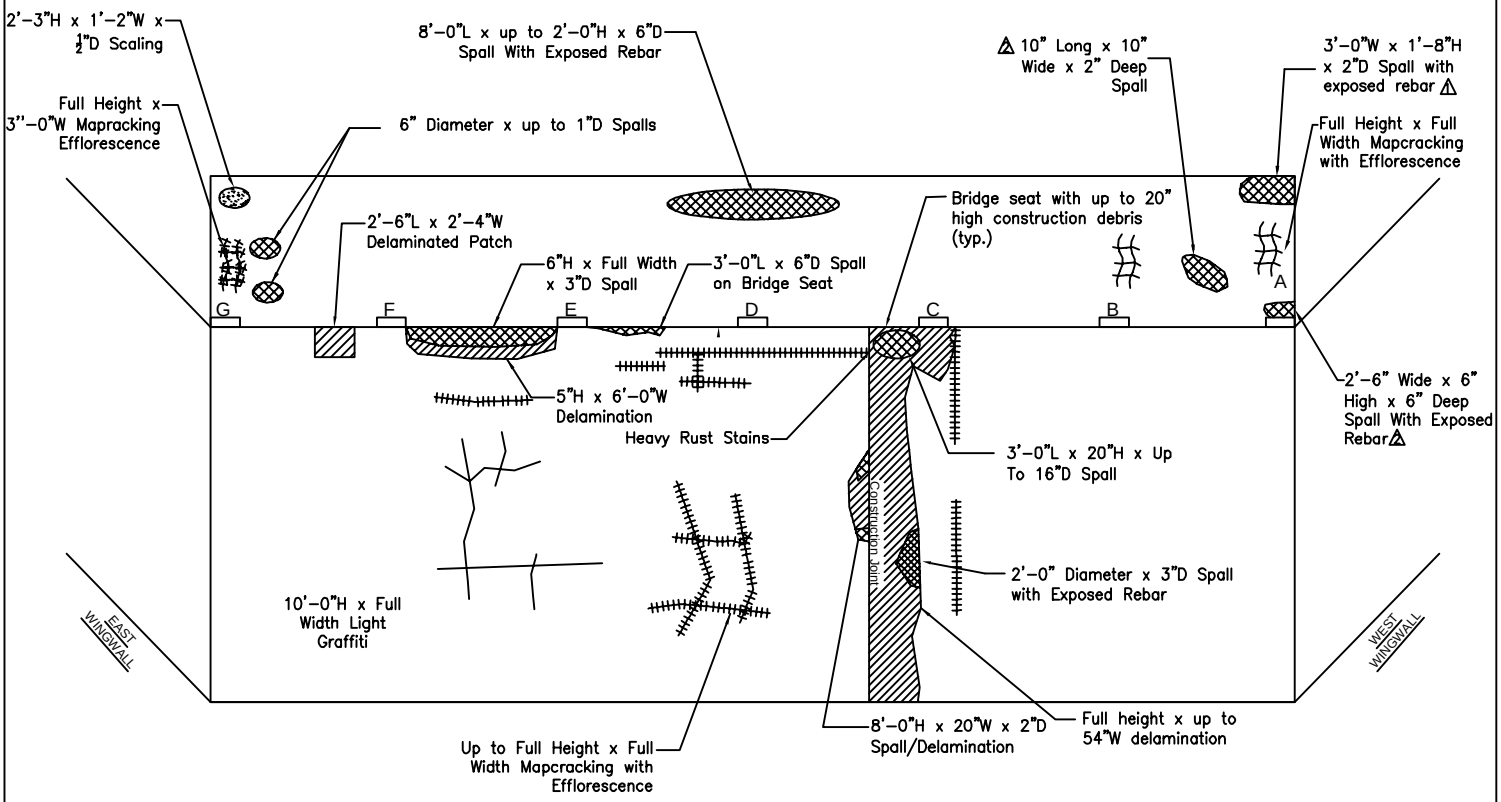

South Abutment #1

LEGEND:

- HAIRLINE CRACKS
- HAIRLINE CRACKS WITH EFFLORSCENCE
- MAP CRACKS
- DELAMINATION
- SPALLING AREA
- SCALE
- HONEYCOMB AREA
- 1 CHANGE IN PREVIOUSLY NOTED CONDITION (08/04/17 SPECIAL INSPECTION)
- 2 NEWLY DOCUMENTED CONDITION (08/02/18 ROUTINE INSPECTION)

Bridge # 067301
Route 102 over Branch River
Burrillville, RI

REVISIONS BY:	REVISIONS:	AECOM	NOT TO SCALE	INSPECTED BY:	DATE INSPECTED:
MP	09/04/2018			TVF & MP	08/02/2018

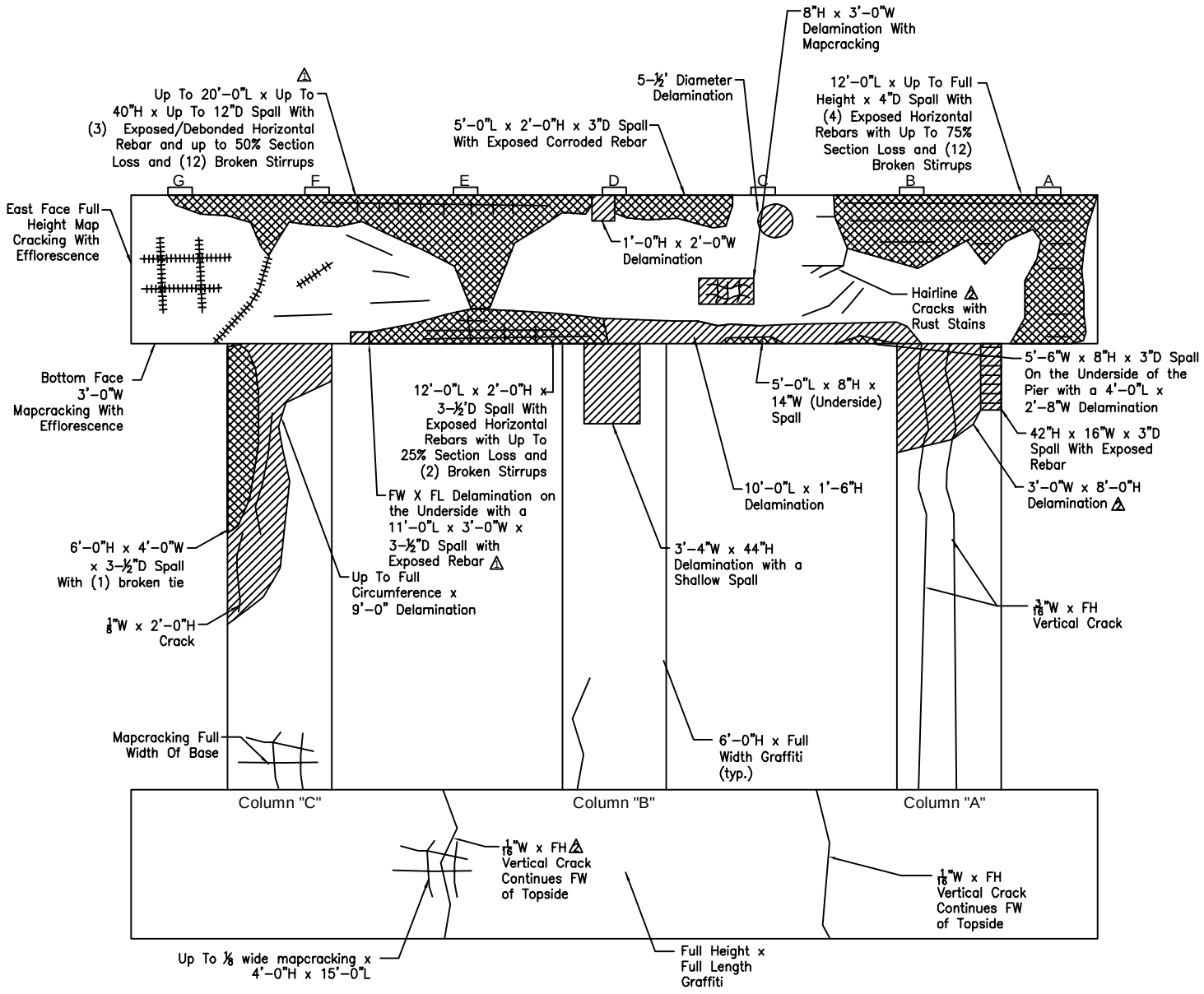

Pier #1 - North Face

GENERAL NOTES:

Pier cap has hairline mapcracking up to full width x full height with efflorescence & rust stains throughout (typ.)

LEGEND:

- HAIRLINE CRACKS
- HAIRLINE CRACKS WITH EFFLORSCENCE
- MAP CRACKS
- DELAMINATION
- SPALLING AREA
- SCALE
- HONEYCOMB AREA
- 1 CHANGE IN PREVIOUSLY NOTED CONDITION (08/04/17 SPECIAL INSPECTION)
- 2 NEWLY DOCUMENTED CONDITION (08/02/18 ROUTINE INSPECTION)

Bridge # 067301
Route 102 over Branch River
Burrillville, RI

REVISIONS BY:	REVISIONS:	AECOM	NOT TO SCALE	INSPECTED BY:	DATE INSPECTED:
MP	09/04/2018			TVF & MP	08/02/2018

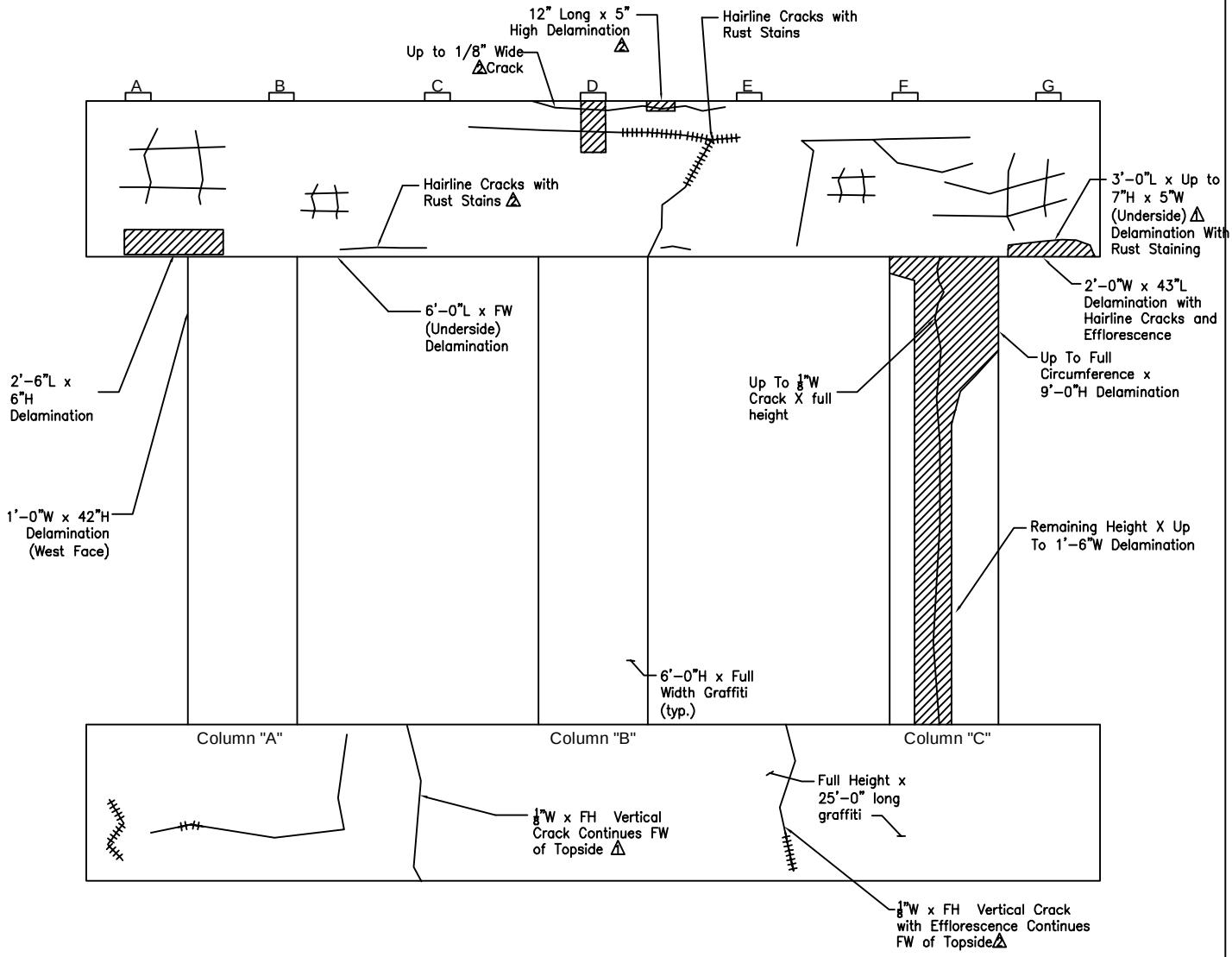

Pier #1 - South Face

LEGEND:

- HAIRLINE CRACKS
- HAIRLINE CRACKS WITH EFFLORSCENCE
- MAP CRACKS
- DELAMINATION
- SPALLING AREA
- SCALE
- HONEYCOMB AREA
- 1 CHANGE IN PREVIOUSLY NOTED CONDITION (08/04/17 SPECIAL INSPECTION)
- 2 NEWLY DOCUMENTED CONDITION (08/02/18 ROUTINE INSPECTION)

Bridge # 067301
Route 102 over Branch River
Burrillville, RI

REVISIONS BY:	REVISIONS:	AECOM	NOT TO SCALE	INSPECTED BY:	DATE INSPECTED:
MP	09/04/2018			TVF & MP	08/02/2018

SKETCH 1

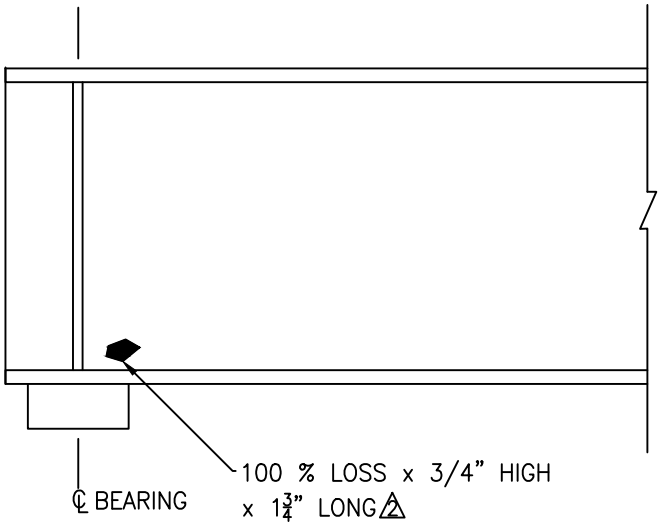

GIRDER 'G' – EAST FACE

AT PIER #1 SPAN 2

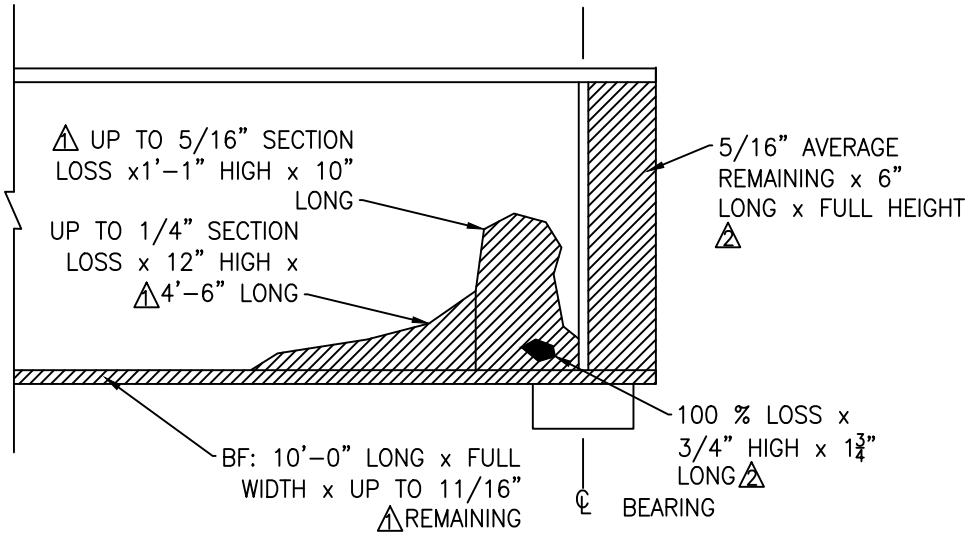

GIRDER 'G' – WEST FACE

AT PIER #1 SPAN 2

LEGEND:

SECTION LOSS

100% LOSS

△1 CHANGE IN PREVIOUSLY NOTED CONDITION (08/04/17 SPECIAL INSPECTION)

△2 NEWLY DOCUMENTED CONDITION (08/02/18 ROUTINE INSPECTION)

REVISED BY:	DATE DRAWN:				INSPECTED BY:	DATE INSPECTED:
MP	09/04/2018	AECOM	BRIDGE #067301 MOHEGAN BRIDGE OVER BRANCH RIVER BURRILLVILLE, RI	NOT TO SCALE	TVF & MP	09/04/2018

SKETCH 2

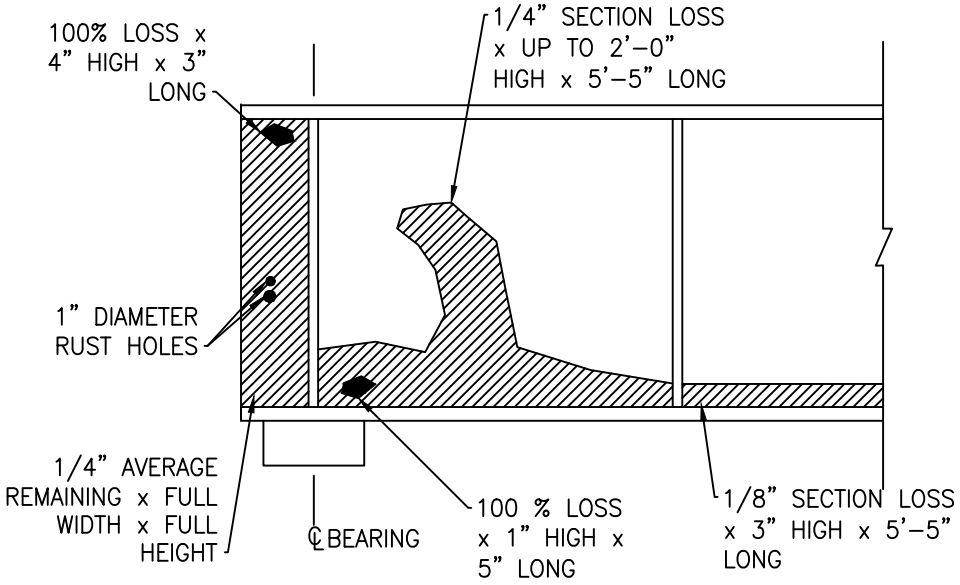

GIRDER 'A' – EAST FACE

AT PIER #1 SPAN 2

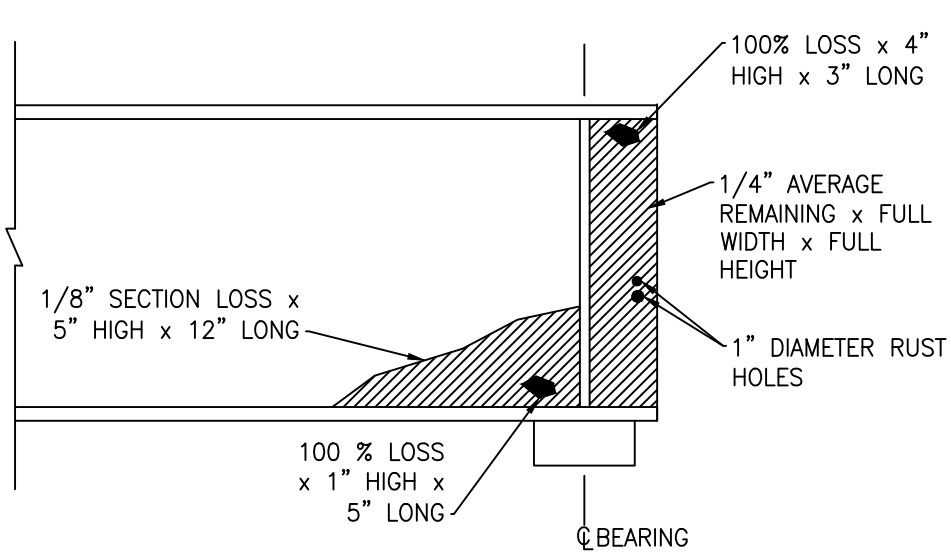

GIRDER 'A' – WEST FACE

AT PIER #1 SPAN 2

LEGEND:

SECTION LOSS

100% LOSS

1 CHANGE IN PREVIOUSLY NOTED CONDITION (08/04/17 SPECIAL INSPECTION)

2 NEWLY DOCUMENTED CONDITION (08/02/18 ROUTINE INSPECTION)

DRAWN BY:	DATE DRAWN:				INSPECTED BY:	DATE INSPECTED:
MP	09/04/2018	AECOM	BRIDGE #067301 MOHEGAN BRIDGE OVER BRANCH RIVER BURRILLVILLE, RI	NOT TO SCALE	TVF & MP	09/04/2018

SKETCH 3

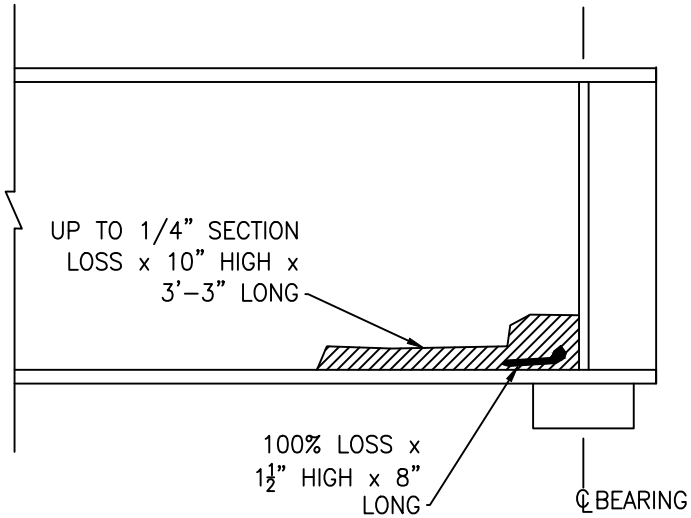

GIRDER 'E' – WEST FACE

AT PIER #1 SPAN 2

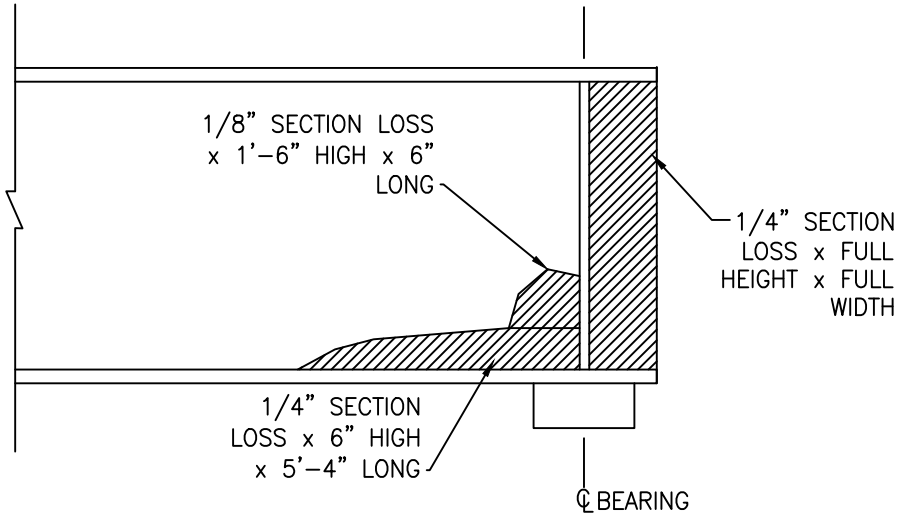

GIRDER 'F' – WEST FACE

AT PIER #1 SPAN 2

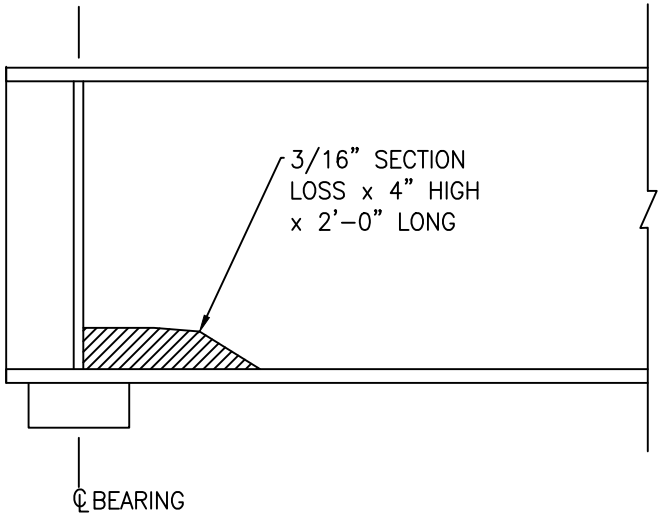

GIRDER 'F' – EAST FACE

AT PIER #1 SPAN 2

LEGEND:

- SECTION LOSS
- 100% LOSS
- 1 CHANGE IN PREVIOUSLY NOTED CONDITION (08/04/17 SPECIAL INSPECTION)
- 2 NEWLY DOCUMENTED CONDITION (08/02/18 ROUTINE INSPECTION)

DRAWN BY:	DATE DRAWN:	AECOM	BRIDGE #067301 MOHEGAN BRIDGE OVER BRANCH RIVER BURRILLVILLE, RI	NOT TO SCALE	INSPECTED BY:	DATE INSPECTED:
MP	09/04/2018				TVF & MP	09/04/2018

SKETCH 4

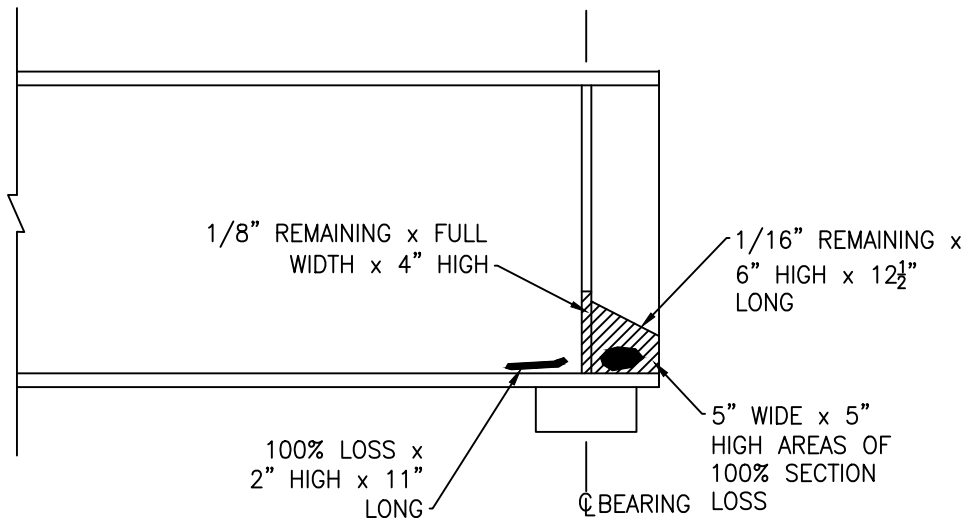

GIRDER 'A' – WEST FACE

AT SOUTH ABUTMENT #1 SPAN 1

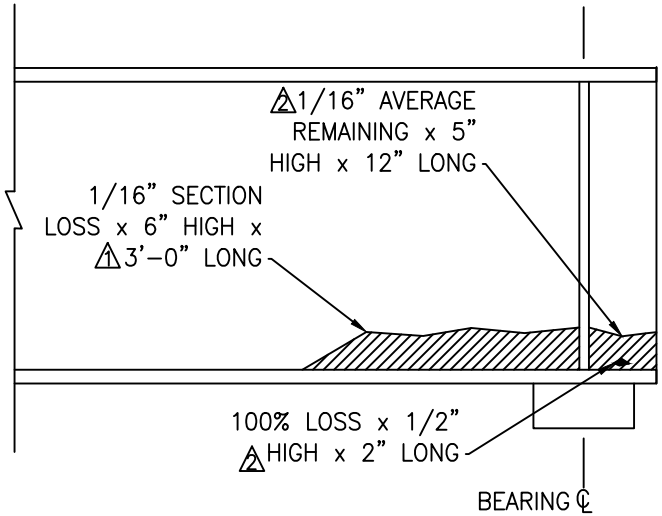

GIRDER 'A' – EAST FACE

AT NORTH ABUTMENT #2 SPAN 2

LEGEND:

- SECTION LOSS
- 100% LOSS
- 1 CHANGE IN PREVIOUSLY NOTED CONDITION (08/04/17 SPECIAL INSPECTION)
- 2 NEWLY DOCUMENTED CONDITION (08/02/18 ROUTINE INSPECTION)

DRAWN BY:	DATE DRAWN:				INSPECTED BY:	DATE INSPECTED:
MP	09/04/2018	AECOM	BRIDGE #067301 MOHEGAN BRIDGE OVER BRANCH RIVER BURRILLVILLE, RI	NOT TO SCALE	TVF & MP	09/04/2018

Bridge #067301 - RI 102 Bronco Highway OVER Branch River Routine and Special Member Inspection Date: 08/02/18
Element 107 - Steel Opn Girder/Beam

AECOM

SPAN	GIRDER	LOCATION	DESCRIPTION	Photo (s)	Changes
1	A	SOUTH ABUTMENT #1	SEE SKETCH 4	28	1
	G		1/4" DEEP SECTION LOSS x 2-1/2" HIGH x 1'-8" LONG OF WEST FACE WEB. UP TO 1/2" REMAINING x 1'-6" WIDE x 6" LONG OF BOTTOM FLANGE.	-	-
	D	PIER 1 IN SPAN 1	3/16" DEEP SECTION LOSS x 3" HIGH x 12" LONG OF EAST FACE WEB.	-	1
	E		1/8" DEEP SECTION LOSS x 4" HIGH x 20" LONG OF WEST FACE WEB.	-	1
	G		1/4" DEEP SECTION LOSS x 6" HIGH x 2'-0" LONG OF WEST FACE WEB.	30	1
2	A	PIER 1 IN SPAN 2	SEE SKETCH 2	29, 31 & 37	1
	B		1/8" DEEP SECTION LOSS x 2" HIGH x 10" LONG OF EAST FACE WEB.	-	2
	C		1/8" DEEP SECTION LOSS x 2" HIGH x 10" LONG OF EAST AND WEST FACES WEB.	-	2
	D		1/8" DEEP SECTION LOSS x 2" HIGH x 10" LONG OF WEST FACE WEB. 3/16" DEEP SECTION LOSS x 17" HIGH x 8'-0" LONG OF EAST FACE WEB.	-	2
	E		SEE SKETCH 3	34	1
	F		SEE SKETCH 3	35	1
	G		SEE SKETCH 1	36	1
	A	NORTH ABUTMENT #2	SEE SKETCH 4	32 & 33	1
	G	NORTH ABUTMENT #2	3/16" DEEP SECTION LOSS x 5" HIGH x 3'-0" LONG OF THE WEST FACE AT BOTTOM OF WEB; 3/16" LOSS x 1'-1" HIGH x 6" LONG AT TOP OF WEB. 1/8" REMAINING SECTION LOSS x 6" HIGH x UP TO 12" LONG OF THE WEB BEYOND THE BEARING.	-	1

1 CHANGE IN PREVIOUSLY NOTED CONDITION (08/04/17 SPECIAL INSPECTION)

2 NEWLY DOCUMENTED CONDITION (08/02/18 ROUTINE AND SPECIAL INSPECTION)

Bridge No.:	067301	Structure Name:	Mohegan Bridge
Consultant:	AECOM	Town:	Burrillville, RI
Inspection Date:	8/2/2018	Waterway:	Branch River

	X_0	X_1	X_2	X_3	X_4	X_5	X_6	X_7	X_8	X_9	X_{10}	X_{11}	X_{12}	X_{13}	X_{14}	X_{15}	X_{16}	X_{17}	X_{18}	X_{19}	X_{20}	X_{21}	X_{22}	X_{23}	X_{24}	X_{25}	X_{26}	X_{27}	X_{28}	X_{29}	X_{30}	X_{31}
Distance from beginning of cross-section	6.0	6.0	0.0	0.0	20.0	20.0	16.0	16.0	22.0	44.0	66.0	88.0	112.5	112.5	110.0	110.0	119.0	119.0	116.5	116.5	132.0	154.0	176.0	198.0	223.0	223.0	220.0	220.0	231.0	231.0	227.0	227.0
Top of Parapet	-0.2	-0.2	0.0	0.0	-0.8	-0.8	-0.6	-0.6	-0.9	-1.8	-2.6	-3.5	-4.5	-4.5	-4.4	-4.4	-4.8	-4.8	-4.7	-4.7	-5.3	-6.2	-7.0	-7.9	-8.9	-8.9	-8.8	-8.8	-9.2	-9.2	-9.1	-9.1
Bottom of Superstructure	-7.91	-7.91	-7.67	-7.67	-8.47	-8.47	-8.31	-8.31	-8.55	-9.43	-10.31	-11.19	-12.17	-12.17	-12.07	-12.07	-12.43	-12.43	-12.33	-12.33	-12.95	-13.83	-14.71	-15.59	-16.59	-16.59	-16.47	-16.47	-16.91	-16.91	-16.75	-16.75
Pier	-7.9	-36.8	-36.8	-40.55	-40.55	-36.8	-36.8	-8.31					-12.17	-38.06	-38.06	-52.06	-52.06	-38.06	-38.06	-12.33					-16.65	-22.65	-22.65	-25.65	-25.65	-22.65	-22.65	-16.65
Average Water Depth (2018)										-44.13	-44.13	-44.13			-44.49						-44.47											
Ground Elevation (2016)								-23.34	-32.23	-44.22	-45.53	-45.93			-45.16						-44.47	-30.96	-31.19	-24.42		-18.9						
Ground Elevation - Current (2018)							-32.8			-43.00	-45.00	-46.60	-45.30	-43.25							-44.47	-30.96	-31.19	-24.42		-18.9						

	X_0	X_1	X_2	X_3	X_4	X_5	X_6	X_7	X_8	X_9	X_{10}	X_{11}	X_{12}	X_{13}	X_{14}	X_{15}	X_{16}	X_{17}	X_{18}	X_{19}	X_{20}	X_{21}	X_{22}	X_{23}	X_{24}	X_{25}	X_{26}	X_{27}	X_{28}	X_{29}	X_{30}	X_{31}
Distance	6.0	6.0	0.0	0.0	20.0	20.0	16.0	16.0	22.0	44.0	66.0	88.0	112.5	112.5	110.0	110.0	119.0	119.0	116.5	116.5	132.0	154.0	176.0	198.0	223.0	223.0	220.0	220.0	231.0	231.0	227.0	227.0
Elevation	-0.2	-0.2	0	0	-0.8	-0.8	-0.6	-0.6	-0.9	-1.8	-2.6	-3.5	-4.5	-4.5	-4.4	-4.4	-4.8	-4.8	-4.7	-4.7	-5.3	-6.2	-7	-7.9	-8.9	-8.9	-8.8	-8.8	-9.2	-9.2	-9.1	-9.1
Rod Reading (2016)								-23.34	-32.23	-44.22	-45.53	-45.93			-45.16						-44.47	-30.96	-31.19	-24.42		-18.9						
Rod Reading - Current (2018)							-32.8			-43.00	-45.00	-46.60	-45.30	-43.25							-44.47	-30.96	-31.19	-24.42		-18.9						

*WATER STARTS AT 76.00 FT AND ENDS AT 112.5 FT.

** MEASUREMENTS ARE TAKEN FROM TOP OF PARAPET

Bridge No.:	067301	Structure Name:	Mohegan Bridge
Consultant:	AECOM	Town:	Burrillville, RI
Inspection Date:	8/2/2018	Waterway:	Branch River

Inventory information, consultant and inspection date from previous page

Beginning of cross-section

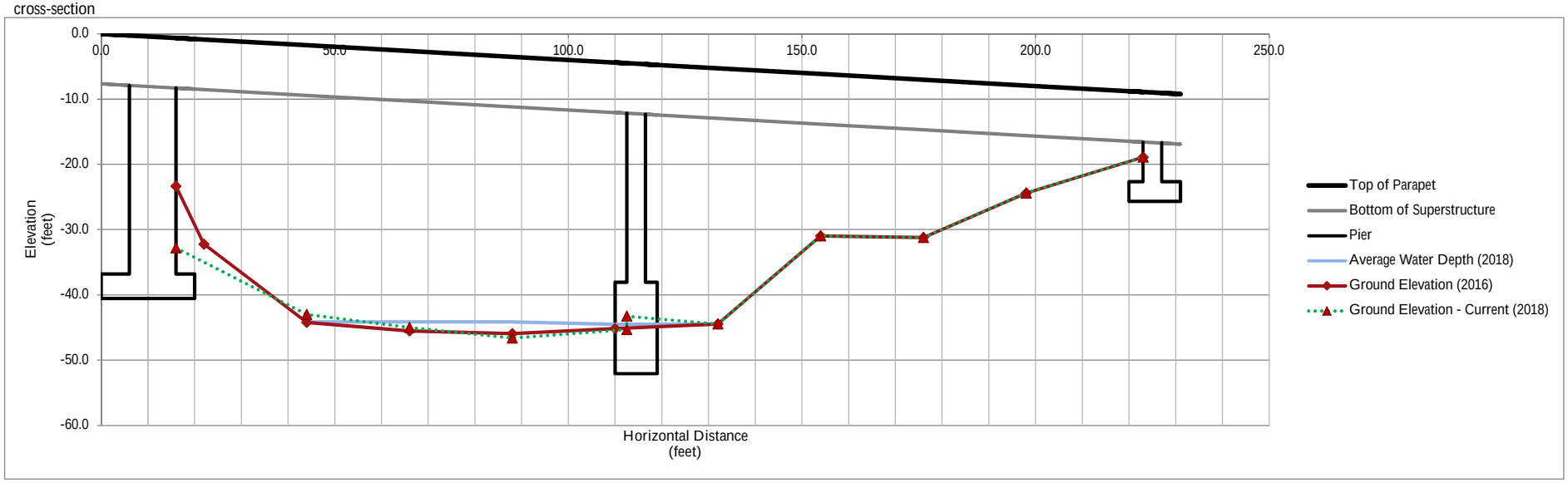

SUBMITTAL REVIEW
Draft #1
Originator Intials:_____ Date:
Reviewer Intials:_____ Date:

____Final Review (Check)

June 1, 2019
David J. Cluley, P.E.
Administrator/Chief Civil Engineer
Bridge Inspection Section
RIDOT Maintenance Headquarters
360 Lincoln Avenue, 1st Floor
Warwick, Rhode Island, 02888

Subject: Statewide Bridge Inspection
Contract No. MPA 359
Assignment No. 58
Engineering Firm Project No. 60330198

Dear Mr. Cluley:

AECOM is pleased to submit the Special Inspection Report for the following bridge:

Bridge No. 067301:	**RI 102 Bronco Highway over Branch River, Burrillville**
Date Inspection Completed:	05/14/2019
Date Submitted:	03/08/2019
Previously Inspected:	02/15/2019 Special 3 Month Inspection

Very truly yours,

Engineering Firm

CC:

P.E. Stamp

Rhode Island Department of Transportation

Bridge Inspection Report

Structure Inventory and Appraisal Sheet (English Units)

Name: Mohegan | Agency ID: 067301 | Inspec Date: 05/14/2019 | Inspected By: AECOM

IDENTIFICATION

Rte.(On/Under) 5A:	Route On Structure	State 1:	44 Rhode Island
Rte. Signing Prefix 5B:	3 State Hwy	Facility Carried 7:	RI 102 BRONCO HWY
Level of Service 5C:	1 Mainline	Municipality 4:	Burrillville
Route Number 5D:	00102	SHD District 2:	District 1
Directional Suffix 5E:	0 N/A (NBI)	Feature Intersected 6:	BRANCH RIVER
Border Bridge Code 98:	Not Applicable (P)	County Code 3:	Providence
Border Bridge Number 99:		Location 9:	0.1 Mi S of JCT RI 7
Mile Post 11:	41.743 mi	Latitude 16:	41° 58' 54"
Struc Num 8:	000000000006730	Longitude 17:	071° 37' 03"
% Responsibility:			

INSPECTION

Inspection Date 90:	8/2/2018	Frequency 91:	24 months	Next Inspection:	8/2/2020
FC Inspection Date 93A:	NA	FC Frequency 92A:		Next FC Inspection:	NA
UW Inspection Date 93B:	NA	UW Frequency 92B:		Next UW Inspection:	NA
SI Date 93C:	5/14/2019	SI Frequency 92C:	12 months	Next SI:	8/2/2019
Element Insp. Date:	5/14/2019	Element Frequency:	12 months	Next Elem. Insp.:	8/2/2019

CONDITION

Deck 58: 6 Satisfactory	Super 59: 4 Poor	Sub 60: 3 Serious
Culvert 62: N N/A (NBI)	Channel/Channel Protection 61: 6 Bank Slumping	

CONDITION Poor

SD/FO: SD

SUFF RATE: 40.0

LOAD RATING AND POSTING

Inventory Rating Method 65:	8 LRFR (HL93)	Operating Rating Method 63:	8 LRFR (HL93)
Inventory Rating 66:	MS 7.2	Operating Rating 64:	MS11.3
Design Load 31:	5 MS 18 (HS 20)		
Posting Status 41:	P Posted for load	Posting 70:	2 20.0-29.9%below

GEOMETRIC DATA

Length Max Span 48:	110.00 ft	Structure Length 49:	226.00 ft
Width Curb to Curb 51:	44.00 ft	Curb/Sdwlk Width L 50A:	2.00 ft
Approach Roadway width (w/ shoulders) 32:	44.00 ft	Curb/Sidewalk Width R 50B:	2.00 ft
		Width Out to Out 52:	50.50 ft
Deck Area:	11,413.00ft²	Median 33:	0 No median
Skew 34:	0.00°	Structure Flared 35:	0 No flare
Vertical Clearance 10:	99.99 ft	Horizontal Clearance 47:	44.00 ft

Minimum Vertical Clearance Over Bridge 53:	99.99 ft
Minimum Vertical Underclearance Reference 54A:	N Feature not hwy or RR
Minimum Vertical Underclearance 54B:	0.00 ft
Minimum Lateral Underclearance Reference R 55A:	N Feature not hwy or RR
Minimum Lateral Underclearance R 55:	0.00 ft
Minimum Lateral Underclearance L 56:	0.00 ft

Rhode Island Department of Transportation

Bridge Inspection Report

Structure Inventory and Appraisal Sheet (English Units)

AGE AND SERVICE

Year Built	27:	1966	ADT	29:	13,939
Type of Service on	42A:	1 Highway	Year Reconstructed	106:	
Type of Service under	42B:	5 Waterway	Detour Length	19:	0.3 mi
Lanes on	28A:	2	Truck ADT	109:	1%
Lanes under	28B:	0	Year of ADT	30:	2014

STRUCTURE TYPE AND MATERIALS

Number of Approach Spans	46:	0	Number of Spans Main Unit	45:	2
Wearing Surface	108A:	6 Bituminous	Main Span Material Design	43A:	3 Steel
Membrane	108B:	9 Other	Main Span Material Design	43B:	02 Stringer/Girder
Deck protection	108C:	None	Deck Type	107:	1 Concrete-Cast-ir

APPRAISAL

Bridge Rail	36A:	0 Substandard	Approach Rail	36C:	0 Substandard
Transition	36B:	0 Substandard	Approach Rail Ends	36D:	0 Substandard
Str Evaluation	67:	3 Intolerable - Correct	Deck Geometry	68:	9 Above Desirable Crit
Waterway Adequacy	71:	8 Equal Desirable	Approach Alignment	72:	6 Equal Min Criteria
Scour Critical	113:	8 Stable Above Footing			
Underclearance, Vertical and Horizontal	69:	N Not applicable (NBI)			

CLASSIFICATION

Defense Highway	100:	0 Not a STRAHNET hwy	Parallel Structure	101:	No || bridge exists
Direction of Traffic	102:	2 2-way traffic	Temporary Structure	103:	Not Applicable (P)
Highway System	104:	3 On free road	NBIS Length	112:	Long Enough
Defense Hwy	110:	1 On the NHS	Functional Class	26:	14 Urban Other Princ
Toll Facility	20:	0 Not a STRAHNET hwy	Historical Significance	37:	5 Not eligible for NRHP
Owner	22:	01 State Highway Agency	Custodian	21:	01 State Highway Agency

PROPOSED IMPROVEMENTS

Bridge Cost	94:	$626,000	Type of Work	75:	35 Rehabilitate-gen.
Roadway Cost	95:	$62,600	Length of Improvement	76:	226.05
Total Cost	96:	$939,000	Future ADT	114:	16,727
Year of Cost Estimate	97:	2007	Year of Future ADT	115:	2036

NAVIGATION DATA

Navigation Control	38:	Permit Not Required	Horizontal Clearance	40:	0.0 ft
Vertical Clearance	39:	0.0 ft			
Pier Protection	111:	Not Applicable (P)	Lift Bridge Vertical Clearance	116:	

0	**12/3**	**Re Concrete Deck**	**10,735.00**	**98%**	**10,554.00**	**0%**	**0.00**	**2%**	**181.00**	**0%**	**0.00**
	510/3	Wearing Surfaces	9,944.00	100%	9,898.00	0%	2.00	0%	44.00	0%	0.00
	3210/3	*Del/Spall/Patch/Pot(Wear Surf)*	*2.00*	*0%*	*0.00*	*100%*	*2.00*	*0%*	*0.00*	*0%*	*0.00*
	3220/3	*Crack (Wearing Surface)*	*44.00*	*0%*	*0.00*	*0%*	*0.00*	*100%*	*44.00*	*0%*	*0.00*
	1080/3	Delamination/Spall/Patched Area	11.00	0%	0.00	0%	0.00	100%	11.00	0%	0.00
	1090/3	Exposed Rebar	30.00	0%	0.00	0%	0.00	100%	30.00	0%	0.00
	1120/3	Efflorescence/Rust Staining	25.00	0%	0.00	0%	0.00	100%	25.00	0%	0.00
	1130/3	Cracking (RC and Other)	110.00	0%	0.00	0%	0.00	100%	110.00	0%	0.00
0	**107/3**	**Steel Opn Girder/Beam**	**1,582.00**	**85%**	**1,350.00**	**11%**	**173.00**	**3%**	**55.00**	**0%**	**4.00**
	515/3	Steel Protective Coating	26,280.00	96%	25,260.00	0%	0.00	1%	325.00	3%	695.00
	3420/3	*Peel/Bub/Crack(Stl Protect Coat)*	*1,020.00*	*0%*	*0.00*	*0%*	*0.00*	*32%*	*325.00*	*68%*	*695.00*
	1000/3	Corrosion	232.00	0%	0.00	75%	173.00	24%	55.00	2%	4.00
	8368/3	Graffiti	482.00	100%	482.00	0%	0.00	0%	0.00	0%	0.00
0	**205/3**	**Re Conc Column**	**3.00**	**0%**	**0.00**	**33%**	**1.00**	**67%**	**2.00**	**0%**	**0.00**
	1080/3	Delamination/Spall/Patched Area	1.00	0%	0.00	100%	1.00	0%	0.00	0%	0.00
	1090/3	Exposed Rebar	1.00	0%	0.00	0%	0.00	100%	1.00	0%	0.00
	1130/3	Cracking (RC and Other)	1.00	0%	0.00	0%	0.00	100%	1.00	0%	0.00
	8368/3	Graffiti	180.00	100%	180.00	0%	0.00	0%	0.00	0%	0.00
0	**210/3**	**Re Conc Pier Wall**	**46.00**	**54%**	**25.00**	**0%**	**0.00**	**22%**	**10.00**	**24%**	**11.00**
	1130/3	Cracking (RC and Other)	20.00	0%	0.00	0%	0.00	50%	10.00	50%	10.00
	6000/3	Scour	1.00	0%	0.00	0%	0.00	0%	0.00	100%	1.00
	8368/3	Graffiti	426.00	100%	426.00	0%	0.00	0%	0.00	0%	0.00
0	**215/3**	**Re Conc Abutment**	**146.00**	**19%**	**28.00**	**43%**	**63.00**	**38%**	**55.00**	**0%**	**0.00**
	1080/3	Delamination/Spall/Patched Area	35.00	0%	0.00	43%	15.00	57%	20.00	0%	0.00
	1090/3	Exposed Rebar	10.00	0%	0.00	0%	0.00	100%	10.00	0%	0.00
	1120/3	Efflorescence/Rust Staining	10.00	0%	0.00	0%	0.00	100%	10.00	0%	0.00
	1130/3	Cracking (RC and Other)	15.00	0%	0.00	0%	0.00	100%	15.00	0%	0.00
	8368/3	Graffiti	756.00	100%	756.00	0%	0.00	0%	0.00	0%	0.00
0	**234/3**	**Re Conc Pier Cap**	**49.00**	**0%**	**0.00**	**0%**	**0.00**	**31%**	**15.00**	**69%**	**34.00**
	1080/3	Delamination/Spall/Patched Area	23.00	0%	0.00	0%	0.00	39%	9.00	61%	14.00
	1090/3	Exposed Rebar	20.00	0%	0.00	0%	0.00	0%	0.00	100%	20.00
	1120/3	Efflorescence/Rust Staining	5.00	0%	0.00	0%	0.00	100%	5.00	0%	0.00
	1130/3	Cracking (RC and Other)	1.00	0%	0.00	0%	0.00	100%	1.00	0%	0.00
0	**301/3**	**Pourable Joint Seal**	**49.00**	**67%**	**33.00**	**33%**	**16.00**	**0%**	**0.00**	**0%**	**0.00**
	2320/3	Seal Adhesion	16.00	0%	0.00	100%	16.00	0%	0.00	0%	0.00
0	**302/3**	**Compressn Joint Seal**	**49.00**	**6%**	**3.00**	**0%**	**0.00**	**76%**	**37.00**	**18%**	**9.00**
	2350/3	Debris Impaction	37.00	0%	0.00	0%	0.00	100%	37.00	0%	0.00
	2360/3	Adjacent Deck or Header	12.00	25%	3.00	0%	0.00	0%	0.00	75%	9.00
0	**311/3**	**Moveable Bearing**	**14.00**	**0%**	**0.00**	**71%**	**10.00**	**14%**	**2.00**	**14%**	**2.00**
	515/3	Steel Protective Coating	14.00	29%	4.00	0%	0.00	0%	0.00	71%	10.00
	3420/3	*Peel/Bub/Crack(Stl Protect Coat)*	*10.00*	*0%*	*0.00*	*0%*	*0.00*	*0%*	*0.00*	*100%*	*10.00*
	1000/3	Corrosion	7.00	0%	0.00	86%	6.00	14%	1.00	0%	0.00
	1020/3	Connection	4.00	0%	0.00	100%	4.00	0%	0.00	0%	0.00
	2220/3	Alignment	3.00	0%	0.00	0%	0.00	33%	1.00	67%	2.00
0	**313/3**	**Fixed Bearing**	**14.00**	**0%**	**0.00**	**93%**	**13.00**	**7%**	**1.00**	**0%**	**0.00**
	515/3	Steel Protective Coating	14.00	0%	0.00	0%	0.00	14%	2.00	86%	12.00
	3420/3	*Peel/Bub/Crack(Stl Protect Coat)*	*14.00*	*0%*	*0.00*	*0%*	*0.00*	*14%*	*2.00*	*86%*	*12.00*
	1000/3	Corrosion	9.00	0%	0.00	100%	9.00	0%	0.00	0%	0.00
	1020/3	Connection	5.00	0%	0.00	80%	4.00	20%	1.00	0%	0.00
0	**321/3**	**Re Conc Approach Slab**	**880.00**	**100%**	**880.00**	**0%**	**0.00**	**0%**	**0.00**	**0%**	**0.00**
	510/3	Wearing Surfaces	880.00	68%	594.00	0%	0.00	33%	286.00	0%	0.00
	3220/3	*Crack (Wearing Surface)*	*286.00*	*0%*	*0.00*	*0%*	*0.00*	*100%*	*286.00*	*0%*	*0.00*
0	**8214/3**	**R/C Wingwall**	**54.00**	**50%**	**27.00**	**50%**	**27.00**	**0%**	**0.00**	**0%**	**0.00**
	1120/3	Efflorescence/Rust Staining	27.00	100%	27.00	0%	0.00	0%	0.00	0%	0.00
	1130/3	Cracking (RC and Other)	27.00	0%	0.00	100%	27.00	0%	0.00	0%	0.00
	8368/3	Graffiti	120.00	100%	120.00	0%	0.00	0%	0.00	0%	0.00
0	**8218/3**	**Backwall, All Types**	**98.00**	**0%**	**0.00**	**63%**	**62.00**	**36%**	**35.00**	**1%**	**1.00**
	1080/3	Delamination/Spall/Patched Area	17.00	0%	0.00	0%	0.00	100%	17.00	0%	0.00

	1090/3	Exposed Rebar	8.00	0%	0.00	0%	0.00	88%	7.00	13%	1.00
	1120/3	Efflorescence/Rust Staining	30.00	0%	0.00	100%	30.00	0%	0.00	0%	0.00
	1130/3	Cracking (RC and Other)	31.00	0%	0.00	100%	31.00	0%	0.00	0%	0.00
	1180/3	Abrasion	1.00	0%	0.00	100%	1.00	0%	0.00	0%	0.00
0	**8305/3**	**Asphaltic Joint Material**	**49.00**	**100%**	**49.00**	**0%**	**0.00**	**0%**	**0.00**	**0%**	**0.00**
0	**8335/3**	**Guardrail, Vehicular**	**848.00**	**81%**	**684.00**	**17%**	**140.00**	**3%**	**24.00**	**0%**	**0.00**
	515/3	Steel Protective Coating	848.00	90%	763.00	10%	85.00	0%	0.00	0%	0.00
	1000/3	Corrosion	85.00	0%	0.00	100%	85.00	0%	0.00	0%	0.00
	7000/3	Damage	78.00	0%	0.00	69%	54.00	31%	24.00	0%	0.00
0	**8336/3**	**Conc Bridge Parapet**	**448.00**	**82%**	**368.00**	**9%**	**40.00**	**9%**	**40.00**	**0%**	**0.00**
	1120/3	Efflorescence/Rust Staining	40.00	0%	0.00	0%	0.00	100%	40.00	0%	0.00
	1130/3	Cracking (RC and Other)	40.00	0%	0.00	100%	40.00	0%	0.00	0%	0.00
0	**8370/3**	**Steel Diaphragms**	**72.00**	**64%**	**46.00**	**11%**	**8.00**	**25%**	**18.00**	**0%**	**0.00**
	515/3	Steel Protective Coating	864.00	71%	612.00	0%	0.00	0%	0.00	29%	252.00
	3420/3	*Peel/Bub/Crack(Stl Protect Coat)*	*252.00*	*0%*	*0.00*	*0%*	*0.00*	*0%*	*0.00*	*100%*	*252.00*
	1000/3	Corrosion	24.00	0%	0.00	25%	6.00	75%	18.00	0%	0.00
	8368/3	Graffiti	54.00	100%	54.00	0%	0.00	0%	0.00	0%	0.00
	8375/3	Loose or Missing Bolts defect	2.00	0%	0.00	100%	2.00	0%	0.00	0%	0.00
0	**8398/3**	**Curb/sidewalks - Con**	**448.00**	**88%**	**394.00**	**12%**	**54.00**	**0%**	**0.00**	**0%**	**0.00**
	1180/3	Abrasion	54.00	0%	0.00	100%	54.00	0%	0.00	0%	0.00
0	**8440/3**	**Posting Sign**	**2.00**	**100%**	**2.00**	**0%**	**0.00**	**0%**	**0.00**	**0%**	**0.00**
0	**8441/3**	**Advanced Posting Sign**	**1.00**	**100%**	**1.00**	**0%**	**0.00**	**0%**	**0.00**	**0%**	**0.00**

ELEM NBR	ELEMENT NAME	ENV	INSP. DATE	QUANTITY	UNITS	QTY CS 1	QTY CS 2	QTY CS 3	QTY CS 4
12	**Re Concrete Deck**	**3**	**05/14/2019**	**10,735.00**	**sq.ft**	**10,554.00**	**0.00**	**181.00**	**0.00**

This element was not inspected per the scope of this special inspection. The following has been retained from the previous Special & Routine Inspection Report dated 08/02/2018.

There is a reinforced concrete deck overlaid with a bituminous wearing surface throughout the bridge (see photos 5 -8).

510	Wearing Surfaces	3	05/14/2019	9,944.00	sq.ft	9,898.00	2.00	44.00	0.00

This element was not inspected per the scope of this special inspection. The following has been retained from the previous Special & Routine Inspection Report dated 08/02/2018.

There is a bituminous wearing surface throughout the bridge.

There is typically light vegetation growth along the curbs with light debris and sand accumulation throughout the bridge (see photo 13).

3210	*Del/Spall/Patch/Pot(Wear Surf)*	*3*	*05/14/2019*	*2.00*	*sq.ft*	*0.00*	*2.00*	*0.00*	*0.00*

The parent element for this defect was not inspected per the scope of this special inspection. The following has been retained from the previous Special & Routine Inspection Report dated 08/02/2018.

There is a 2'-0" long x up to 10" wide x 4" deep spall filled with sand/debris at the pier deck joint on the east shoulder (see photo 14).

There is a 2'-0" long x 1'-0" wide x 1" deep spall at midpsan of span 2 near the east shoulder (see photo 10).

3220	*Crack (Wearing Surface)*	*3*	*05/14/2019*	*44.00*	*sq.ft*	*0.00*	*0.00*	*44.00*	*0.00*

The parent element for this defect was not inspected per the scope of this special inspection. The following has been retained from the previous Special & Routine Inspection Report dated 08/02/2018.

Up to 1/4" wide sealed and unsealed cracks throughout (see photos 7 & 8).

There is a full width x up to 1/4" wide transverse crack over the pier where the deck joint has been paved over(see photo 12).

1080	Delamination/Spall/Patched Area	3	05/14/2019	11.00	sq.ft	0.00	0.00	11.00	0.00

The parent element for this defect was not inspected per the scope of this special inspection. The following has been retained from the previous Special & Routine Inspection Report dated 08/02/2018.

The underside of the reinforced concrete deck contains the following spalls and delaminations:

SPAN #1:
- There are concrete patched areas in bay 'B' - 'C' at south abutment #1.
- West overhang at pier: 10" wide x 4" long x 4" deep spall.
- East overhang at south abutment #1: 2'-0" long x 1'-0" high x 4" deep haunch spall.
- East overhang at midspan: 6" long x 1'-0" wide x 1" deep spall with exposed rebar.
- Bay 'A' between diaphragm 2-4: two (2) 5'-0" long x 1'-0" long delaminations with minor spalls (see photo 23).
- Bay 'A' between pier and diaphragm: 3'-0" long x 2'-0" wide delamination.
- Bay 'A' at pier: 2'-5" long x 2'-0" wide delamination and adjacent 10" long x 18" wide spall around drain hole. (see photo 22).

ABOVE THE PIER & BEYOND BEARING:
- There are up to 4'-0" wide x 6" long x 7" deep spalls with exposed rebars in bay 'B', 'E' and 'F' (see photo 26).
- There are up to full width x up to 6" long X 1'-0" wide spalls with exposed rebars in bay 'C' and 'D' (see photo 24).

SPAN #2:
- Bay 'F' at pier: two (2) 3'-0" wide x 16" long delamination and 1'-0" wide x 8" long delamination (see photo 27).

1090	Exposed Rebar	3	05/14/2019	30.00	sq.ft	0.00	0.00	30.00	0.00

The parent element for this defect was not inspected per the scope of this special inspection. The following has been retained from the previous Special & Routine Inspection Report dated 08/02/2018.

See Defect 1080 - Delamination/Spall/Patched area for comments associated with exposed rebar.

1120	Efflorescence/Rust Staining	3	05/14/2019	25.00	sq.ft	0.00	0.00	25.00	0.00

The parent element for this defect was not inspected per the scope of this special inspection. The following has been retained from the previous Special & Routine Inspection Report dated 08/02/2018.

The underside of deck typically exhibits isolatted scattered rust staining in bay 'A' through 'F' at both abutments and at the pier in span 1 and 2 (see photo 25).

1130	Cracking (RC and Other)	3	05/14/2019	110.00	sq.ft	0.00	0.00	110.00	0.00

The parent element for this defect was not inspected per the scope of this special inspection. The following has been retained from the previous Special & Routine Inspection Report dated 08/02/2018.

There are scattered up to full length hairline transverse cracks, some with rust staining in bay 'D' and 'F' at pier 1 span 1 (see photo 25) and bay 'B' - 'D' at pier 1 span 2.

There are scattered hairline mapcracking with rust staining throughout bay 'E' in span 2.

ELEM NBR	ELEMENT NAME	ENV	INSP. DATE	QUANTITY	UNITS	QTY CS 1	QTY CS 2	QTY CS 3	QTY CS 4
107	**Steel Opn Girder/Beam**	**3**	**05/14/2019**	**1,582.00**	**ft**	**1,350.00**	**173.00**	**55.00**	**4.00**

This element was not inspected per the scope of this special inspection. The following has been retained from the previous Special & Routine Inspection Report dated 08/02/2018.

There are seven (7) welded steel plate girders labeled girder 'A' through 'G' from west to east (see photos 6).

The girder ends have areas of up to 100% loss. See attached document "Element 107 - Corrosion.pdf" for conditions and locations.

515	Steel Protective Coating	3	05/14/2019	26,280.00	sq.ft	25,260.00	0.00	325.00	695.00

This element was not inspected per the scope of this special inspection. The following has been retained from the previous Special & Routine Inspection Report dated 08/02/2018.

The steel girders have a painted steel protective coating.

3420	*Peel/Bub/Crack(Stl Protect Coat)*	*3*	*05/14/2019*	*1,020.00*	*sq.ft*	*0.00*	*0.00*	*325.00*	*695.00*

The parent element for this defect was not inspected per the scope of this special inspection. The following has been retained from the previous Special & Routine Inspection Report dated 08/02/2018.

There is typically areas of heavy peeling paint of the girder ends at pier in both span 1 and 2 (see photos 28-37).

1000	Corrosion	3	05/14/2019	232.00	ft	0.00	173.00	55.00	4.00

The parent element for this defect was not inspected per the scope of this special inspection. The following has been retained from the previous Special & Routine Inspection Report dated 08/02/2018.

Girder ends exhibits typical peeling paint with scattered section loss to lower webs in front of bearing stiffeners and isolated loss to the webs beyond stiffeners and bottom flanges (see photos 28-37).

See attached document "Element 107 - Corrosion.pdf" for locations and conditions.

8368	Graffiti	3	05/14/2019	482.00	ft	482.00	0.00	0.00	0.00

This element was not inspected per the scope of this special inspection. The following has been retained from the previous Special & Routine Inspection Report dated 08/02/2018.

There are typically heavy areas of graffiti of the girder ends and diaphragms at north abutment #2 (see photos 33 & 46) . There are also scattered isolated areas of light graffiti of griders 'B' and 'C' at midspan.

ELEM NBR	ELEMENT NAME	ENV	INSP. DATE	QUANTITY	UNITS	QTY CS 1	QTY CS 2	QTY CS 3	QTY CS 4
205	**Re Conc Column**	**3**	**05/14/2019**	**3.00**	**each**	**0.00**	**1.00**	**2.00**	**0.00**

There are three (3) reinforced concrete columns labeled column "A" through "C" from west to east (see photos 5, 6 & 9).

The reinforced concrete columns are included in the special 3 month inspection.

See attached documents "Pier #1 North Face.pdf and Pier #1 South Face.pdf" for locations and conditions.

1080	Delamination/Spall/Patched Area	3	05/14/2019	1.00	each	0.00	1.00	0.00	0.00

The columns have up to full circumference delaminations and up to 6'-0" high x 4'-0" wide x 3-1/2" deep spalls, some with exposed rebar at the top of the columns (see photos 6, 9- 11, 13 & 14).

See attached documents " Pier #1 North Face.pdf and Pier #1 South Face.pdf" for locations and conditions.

1090	Exposed Rebar	3	05/14/2019	1.00	each	0.00	0.00	1.00	0.00

See Defect 1080 - Delaminations/Spalls/Patched Area for comments.

1130	Cracking (RC and Other)	3	05/14/2019	1.00	each	0.00	0.00	1.00	0.00

There are up to 1/4" wide x full height cracks in the columns and scattered hairline mapcracking on columns 'A' and 'C' (see photos 13 & 14).

See attached documents "Pier #1 South Face.pdf and Pier #1 North Face.pdf" for locations and conditions.

8368	Graffiti	3	05/14/2019	180.00	each	180.00	0.00	0.00	0.00

All the columns have areas of moderate graffiti (see photos 6 & 9).

See attached documents "Pier #1 North Face.pdf and Pier #1 South Face.pdf" for locations and conditions.

ELEM NBR	ELEMENT NAME	ENV	INSP. DATE	QUANTITY	UNITS	QTY CS 1	QTY CS 2	QTY CS 3	QTY CS 4
210	**Re Conc Pier Wall**	**3**	**05/14/2019**	**46.00**	**ft**	**25.00**	**0.00**	**10.00**	**11.00**

There is a reinforced concrete pier wall in the river channel that supports the three (3) concrete columns (see photos 7 & 10-12).

The reinforced concrete pier wall is included in the special 3 month inspection.

See attached documents "Pier #1 North Face.pdf and Pier #1 South Face.pdf" for locations and conditions.

1130	Cracking (RC and Other)	3	05/14/2019	20.00	ft	0.00	0.00	10.00	10.00

There is up to 4'-0" high x 15'-0" long areas of up to 1/8" wide mapcracking throughout the pier walls. There are two (2) up to 1/4" wide x full height vertical cracks that continues across the topside between columns 'A' and 'B' and columns 'B' and 'C' (see photos 7 & 10-12).

See attached documents "Pier #1 North Face.pdf and Pier #1 South Face.pdf" for locations and conditions.

6000	Scour	3	05/14/2019	1.00	ft	0.00	0.00	0.00	1.00

There are up to 1'-8" vertical differences in channel bottom measurements between the nose of the pier wall and the pier wall at mid length (see photo 5).

See attached document "Pier #1 - Channel Measurments.pdf" for location and measurements of the channel bottom along the pier wall.

8368	Graffiti	3	05/14/2019	426.00	ft	426.00	0.00	0.00	0.00

Both faces of the pier wall have areas of moderate graffiti (see photos 6 & 9).

See attached documents "Pier #1 North Face.pdf and Pier #1 South Face.pdf" for locations and conditions.

ELEM NBR	ELEMENT NAME	ENV	INSP. DATE	QUANTITY	UNITS	QTY CS 1	QTY CS 2	QTY CS 3	QTY CS 4
215	**Re Conc Abutment**	**3**	**05/14/2019**	**146.00**	**ft**	**28.00**	**63.00**	**55.00**	**0.00**

This element was not inspected per the scope of this special inspection. The following has been retained from the previous Special & Routine Inspection Report dated 08/02/2018.

There are reinforced concrete abutments at both ends of the bridge labeled south abutment #1 and north abutment #2 (see photos 42 & 45).

The bridge seat at south abutment #1 has up to 20" high build-up of construction debris (see photos 43 & 44).

See attached documents "South Abutment #1.pdf and North Abutment #2.pdf" for locations and conditions.

1080	Delamination/Spall/Patched Area	3	05/14/2019	35.00	ft	0.00	15.00	20.00	0.00

The parent element for this defect was not inspected per the scope of this special inspection. The following has been retained from the previous Special & Routine Inspection Report dated 08/02/2018.

The south abutment #1 has up to 8'-0" high x up to 20" wide x up to 2" deep spalls, some with exposed rebar and full height x up to 54" wide delaminations (see photo 43).

The north abutment #2 has up to 15" wide x up to 15" high x up to 2-1/2" deep spalls and up to 51" wide x 36" high delaminations (see photo 45).

See attached documents "South Abutment #1.pdf and North Abutment #2.pdf" for locations and conditions.

1090	Exposed Rebar	3	05/14/2019	10.00	ft	0.00	0.00	10.00	0.00

The parent element for this defect was not inspected per the scope of this special inspection. The following has been retained from the previous Special & Routine Inspection Report dated 08/02/2018.

The south abutment #1 has spalls with exposed rebar up to 2'-0" in diameter x 3" deep (see photo 42).

See attached documents "South Abutment #1.pdf and North Abutment #2.pdf" for locations and conditions.

1120	Efflorescence/Rust Staining	3	05/14/2019	10.00	ft	0.00	0.00	10.00	0.00

The parent element for this defect was not inspected per the scope of this special inspection. The following has been retained from the previous Special & Routine Inspection Report dated 08/02/2018.

The abutments exhibits areas of hairline vertical and mapcracks with and without efflorescence and rust stains (see photos 42 & 45).

See attached documents "South Abutment #1.pdf and North Abutment #2.pdf" for locations and conditions.

1130	Cracking (RC and Other)	3	05/14/2019	15.00	ft	0.00	0.00	15.00	0.00

The parent element for this defect was not inspected per the scope of this special inspection. The following has been retained from the previous Special & Routine Inspection Report dated 08/02/2018.

See Defect 1120 - Efflorescence /Rust Staining for comments.

8368	Graffiti	3	05/14/2019	756.00	ft	756.00	0.00	0.00	0.00

This element was not inspected per the scope of this special inspection. The following has been retained from the previous Special & Routine Inspection Report dated 08/02/2018.

The south abutment #1 has an area of moderate graffiti (see photo 42).
The North Abutment # 2 has an area of moderate-heavy graffiti (see photos 45 & 46).

See attached documents "South Abutment #1.pdf and North Abutment #2.pdf" for locations and conditions.

ELEM NBR	ELEMENT NAME	ENV	INSP. DATE	QUANTITY	UNITS	QTY CS 1	QTY CS 2	QTY CS 3	QTY CS 4
234	**Re Conc Pier Cap**	**3**	**05/14/2019**	**49.00**	**ft**	**0.00**	**0.00**	**15.00**	**34.00**

Pier #1 has a reinforced concrete pier cap; the north face has significantly greater deterioration than the south face (see photos 6-12).

The reinforced concrete pier cap is included in the special 3 month inspection.

See attached documents "Pier #1 North Face.pdf and Pier #1 South Face.pdf" for locations and conditions.

1080	Delamination/Spall/Patched Area	3	05/14/2019	23.00	ft	0.00	0.00	9.00	14.00

The pier cap has up to 20'-0" long x up to 3'-4" high x up to 1'-2" deep spalls with exposed/debonded rebar and broken stirrups and up to full width delaminations on the underside (see photos 6-12).

See attached documents "Pier #1 North Face.pdf and Pier #1 South Face.pdf" for locations and conditions.

1090	Exposed Rebar	3	05/14/2019	20.00	ft	0.00	0.00	0.00	20.00

The pier cap has multiple areas of exposed and broken stirrups and exposed /debonded primary horizontal rebar with down to 1" remaining section.

See Defect 1080 - Delamination/Spall/Patched Area for additional comments.

1120	Efflorescence/Rust Staining	3	05/14/2019	5.00	ft	0.00	0.00	5.00	0.00

The pier cap has up to 1/8" wide vertical, horizontal and mapcracking up to 8'-0" wide x full height, some with efflorescence and rust stains throughout (see photos 6-12).

See attached documents "Pier #1 North Face.pdf and Pier #1 South Face.pdf" for locations and conditions.

1130	Cracking (RC and Other)	3	05/14/2019	1.00	ft	0.00	0.00	1.00	0.00

See Defect 1120 - Efflorescence and Rust Staining for comments.

ELEM NBR	ELEMENT NAME	ENV	INSP. DATE	QUANTITY	UNITS	QTY CS 1	QTY CS 2	QTY CS 3	QTY CS 4
301	**Pourable Joint Seal**	**3**	**05/14/2019**	**49.00**	**ft**	**33.00**	**16.00**	**0.00**	**0.00**

This element was not inspected per the scope of this special inspection. The following has been retained from the previous Special & Routine Inspection Report dated 08/02/2018.

There is a pourable deck joint seal at the pier deck joint (see photos 12-14). The pourable deck joint seal has been paved over in the travel lanes, has light vegetation growth and light accumulation of sand/debris along the curb line (see photo 13).

2320	Seal Adhesion	3	05/14/2019	16.00	ft	0.00	16.00	0.00	0.00

The parent element for this defect was not inspected per the scope of this special inspection. The following has been retained from the previous Special & Routine Inspection Report dated 08/02/2018.

There is a full width x up to 1/4" wide transverse crack over the pier deck joint where the seal has been paved over (see photos 12 & 14).

There is a 4'-0" wide x 1'-0" long x 1" deep depression with failed adhesion filled with sand/debris at the west curb (s ee photo 13).

ELEM NBR	ELEMENT NAME	ENV	INSP. DATE	QUANTITY	UNITS	QTY CS 1	QTY CS 2	QTY CS 3	QTY CS 4
302	**Compressn Joint Seal**	**3**	**05/14/2019**	**49.00**	**ft**	**3.00**	**0.00**	**37.00**	**9.00**

This element was not inspected per the scope of this special inspection. The following has been retained from the previous Special & Routine Inspection Report dated 08/02/2018.

There is a compression joint seal at north abutment #2 (see photo 15).

2350	Debris Impaction	3	05/14/2019	37.00	ft	0.00	0.00	37.00	0.00

The parent element for this defect was not inspected per the scope of this special inspection. The following has been retained from the previous Special & Routine Inspection Report dated 08/02/2018.

The north deck joint has light-moderate accumlation of sand/debris (see photos 15 & 16).

2360	Adjacent Deck or Header	3	05/14/2019	12.00	ft	3.00	0.00	0.00	9.00

The parent element for this defect was not inspected per the scope of this special inspection. The following has been retained from the previous Special & Routine Inspection Report dated 08/02/2018.

There is a 1'-6" long x 6" wide x 2" deep spall and a 7'-6" wide x 3" deep spall undermining the joint armor (see photos 15 & 16).

ELEM NBR	ELEMENT NAME	ENV	INSP. DATE	QUANTITY	UNITS	QTY CS 1	QTY CS 2	QTY CS 3	QTY CS 4
311	**Moveable Bearing**	**3**	**05/14/2019**	**14.00**	**each**	**0.00**	**10.00**	**2.00**	**2.00**

This element was not inspected per the scope of this special inspection. The following has been retained from the previous Special & Routine Inspection Report dated 08/02/2018.

There are fourteen (14) moveable bearings lableded bearing 'A' through 'G' at south abutment #1 and north abutment #2.

The south abutment #1 bearings typically exhibit 1/2" expansion at 90's degrees fahrenheit.

The north abutment #2 bearing 'A' is expanded 1/4" (see photo 32) and bearing 'B' is expanded 1" north at 90's degrees Fahrenheit. Bearings 'B' through 'F' at south abutment #1 are covered in heavy construction debris (see photo 44).

515	Steel Protective Coating	3	05/14/2019	14.00	sq.ft	4.00	0.00	0.00	10.00

This element was not inspected per the scope of this special inspection. The following has been retained from the previous Special & Routine Inspection Report dated 08/02/2018.

The moveable bearings have a painted steel protective coating.

3420	*Peel/Bub/Crack(Stl Protect Coat)*	*3*	*05/14/2019*	*10.00*	*sq.ft*	*0.00*	*0.00*	*0.00*	*10.00*

The parent element for this defect was not inspected per the scope of this special inspection. The following has been retained from the previous Special & Routine Inspection Report dated 08/02/2018.

The bearings at both abutment typically exhibits up to 100% loss of the painted steel protective coating (see photos 28, 32 & 33).

1000	Corrosion	3	05/14/2019	7.00	each	0.00	6.00	1.00	0.00

The parent element for this defect was not inspected per the scope of this special inspection. The following has been retained from the previous Special & Routine Inspection Report dated 08/02/2018.

The bearings at both abutments exhibit heavy rust throughout.

SOUTH ABUTMENT #1:

- Bearing "A" has complete loss of the East keeper plate.
- Bearing "G" has complete loss of the East keeper plate

NORTH ABUTMENT #2:

- Bearing "B" has pack rust throughout up to 1/4".

1020	Connection	3	05/14/2019	4.00	each	0.00	4.00	0.00	0.00

The parent element for this defect was not inspected per the scope of this special inspection. The following has been retained from the previous Special & Routine Inspection Report dated 08/02/2018.

SOUTH ABUTMENT #1: The previously noted comments below were unable to be verified, bearings 'B' through 'F' are covered in heavy construction debris (see photo 44).

- Bearing 'A' is missing the east anchor bolt.
- Bearing 'F' is missing the east anchor bolt.

NORTH ABUTMENT #2:

- Bearing 'C' is missing the East anchor bolt nut.
- Bearing 'D' is missing the East anchor bolt nut.
- Bearing 'F' is missing the East anchor bolt nut.
- Bearing 'G' is missing both the East and West anchor bolt nuts.

2220	Alignment	3	05/14/2019	3.00	each	0.00	0.00	1.00	2.00

The parent element for this defect was not inspected per the scope of this special inspection. The following has been retained from the previous Special & Routine Inspection Report dated 08/02/2018.

SOUTH ABUTMENT #1:

The previously noted comments below were unable to be verified, bearings 'B' through 'F' are covered in heavy construction debris.

- Bearing A is shifted 1" to the East. There is also up to 5/8" gap between the sole plate and the masonry plate on the East side.
- Bearing F exhibits out of plane movement with 4" expansion on the East side and 1/2" expansion on the West side.
- Bearing G is shifted 1-1/2" to the West and is in contact with the West anchor bolt.

ELEM NBR	ELEMENT NAME	ENV	INSP. DATE	QUANTITY	UNITS	QTY CS 1	QTY CS 2	QTY CS 3	QTY CS 4
313	**Fixed Bearing**	**3**	**05/14/2019**	**14.00**	**each**	**0.00**	**13.00**	**1.00**	**0.00**

This element was not inspected per the scope of this special inspection. The following has been retained from the previous Special & Routine Inspection Report dated 08/02/2018.

There are fourteen (14) fixed bearings lableded bearing 'A' through 'G' at pier 1 in span 1 and 2 (see photo 41).

515	Steel Protective Coating	3	05/14/2019	14.00	sq.ft	0.00	0.00	2.00	12.00

This element was not inspected per the scope of this special inspection. The following has been retained from the previous Special & Routine Inspection Report dated 08/02/2018.

The fixed bearings have a steel painted protective system.

3420	*Peel/Bub/Crack(Stl Protect Coat)*	*3*	*05/14/2019*	*14.00*	*sq.ft*	*0.00*	*0.00*	*2.00*	*12.00*

The parent element for this defect was not inspected per the scope of this special inspection. The following has been retained from the previous Special & Routine Inspection Report dated 08/02/2018.

There is typically up to 100% failure of the painted steel protective coating throughout (see photo 41).

1000	Corrosion	3	05/14/2019	9.00	each	0.00	9.00	0.00	0.00

The parent element for this defect was not inspected per the scope of this special inspection. The following has been retained from the previous Special & Routine Inspection Report dated 08/02/2018.

There is typically heavy rust of the fixed bearings and up to 1/8" section loss to the anchor bolt nuts and bearing assemblies throughout (see photo 41).

1020	Connection	3	05/14/2019	5.00	each	0.00	4.00	1.00	0.00

The parent element for this defect was not inspected per the scope of this special inspection. The following has been retained from the previous Special & Routine Inspection Report dated 08/02/2018.

There is typically up to 1/4" thick of pack rust between bearing plates (see photo 41).

- Bearing "B" in Span 1 has the East anchor bolt nut backed off 1".
- Bearing "G" in Span 1 is missing the West anchor bolt (see photo 41).
- Bearings A, F, and G in Span 2 are missing one (1) anchor bolt nut.

ELEM NBR	ELEMENT NAME	ENV	INSP. DATE	QUANTITY	UNITS	QTY CS 1	QTY CS 2	QTY CS 3	QTY CS 4
321	**Re Conc Approach Slab**	**3**	**05/14/2019**	**880.00**	**sq.ft**	**880.00**	**0.00**	**0.00**	**0.00**

This element was not inspected per the scope of this special inspection. The following has been retained from the previous Special & Routine Inspection Report dated 08/02/2018.

The reinforced concrete approach slabs labeled south and north approach roadway have a bituminous concrete overlay (see photos 17 & 18). Both approaches typically have light-moderate accumulations of sand/debris and light vegetation growth along the curblines.

There are minor areas of depression in both north and south the travel lanes (see photos 17 & 18).

510	Wearing Surfaces	3	05/14/2019	880.00	sq.ft	594.00	0.00	286.00	0.00

This element was not inspected per the scope of this special inspection. The following has been retained from the previous Special & Routine Inspection Report dated 08/02/2018.

The south and north approaches have a bituminous wearing surface.

3220	*Crack (Wearing Surface)*	*3*	*05/14/2019*	*286.00*	*sq.ft*	*0.00*	*0.00*	*286.00*	*0.00*

The parent element for this defect was not inspected per the scope of this special inspection. The following has been retained from the previous Special & Routine Inspection Report dated 08/02/2018.

There are up to 1/2" wide cracks and hairline mapcracking in the south and north approach roadways (see photo 17).

ELEM NBR	ELEMENT NAME	ENV	INSP. DATE	QUANTITY	UNITS	QTY CS 1	QTY CS 2	QTY CS 3	QTY CS 4
8214	**R/C Wingwall**	**3**	**05/14/2019**	**54.00**	**(LF)**	**27.00**	**27.00**	**0.00**	**0.00**

This element was not inspected per the scope of this special inspection. The following has been retained from the previous Special & Routine Inspection Report dated 08/02/2018.

There are four (4) reinforced concrete wingwalls at each corner of the bridge (see photos 56-59).

1120	Efflorescence/Rust Staining	3	05/14/2019	27.00	(LF)	27.00	0.00	0.00	0.00

The parent element for this defect was not inspected per the scope of this special inspection. The following has been retained from the previous Special & Routine Inspection Report dated 08/02/2018.

See Defect 1130 - Cracking (RC and Other).

1130	Cracking (RC and Other)	3	05/14/2019	27.00	(LF)	0.00	27.00	0.00	0.00

The parent element for this defect was not inspected per the scope of this special inspection. The following has been retained from the previous Special & Routine Inspection Report dated 08/02/2018.

The wingwalls typically exhibits mapcracking with moderate efflorescence throughout (see photos 56-59).

8368	Graffiti	3	05/14/2019	120.00	(LF)	120.00	0.00	0.00	0.00

This element was not inspected per the scope of this special inspection. The following has been retained from the previous Special & Routine Inspection Report dated 08/02/2018.

There are up to 6'-0" high x up to 15'-0" wide area of light-moderate graffiti on the wingwalls (see photos 56-59).

ELEM NBR	ELEMENT NAME	ENV	INSP. DATE	QUANTITY	UNITS	QTY CS 1	QTY CS 2	QTY CS 3	QTY CS 4
8218	**Backwall, All Types**	**3**	**05/14/2019**	**98.00**	**(LF)**	**0.00**	**62.00**	**35.00**	**1.00**

This element was not inspected per the scope of this special inspection. The following has been retained from the previous Special & Routine Inspection Report dated 08/02/2018.

There are reinforced backwalls at south abutment #1 and north abutment #2 (see photos 42 & 45).

See attached documents "South Abutment #1.pdf and North Abutment #2.pdf" for locations and conditions.

1080	Delamination/Spall/Patched Area	3	05/14/2019	17.00	(LF)	0.00	0.00	17.00	0.00

The parent element for this defect was not inspected per the scope of this special inspection. The following has been retained from the previous Special & Routine Inspection Report dated 08/02/2018.

The reinforced concrete backwalls have spalls up to 8'-0" long x 2'-0" high x up to 6" deep, some with exposed rebar and up to 7'-0" long x up to full height delaminations (see photos 47 & 59).

See attached documents "South Abutment #1.pdf and North Abutment #2.pdf" for locations and conditions.

1090	Exposed Rebar	3	05/14/2019	8.00	(LF)	0.00	0.00	7.00	1.00

The parent element for this defect was not inspected per the scope of this special inspection. The following has been retained from the previous Special & Routine Inspection Report dated 08/02/2018.

See Defect 1080 - Delaminations/Spall/Patched Area for additional comments.

1120	Efflorescence/Rust Staining	3	05/14/2019	30.00	(LF)	0.00	30.00	0.00	0.00

The parent element for this defect was not inspected per the scope of this special inspection. The following has been retained from the previous Special & Routine Inspection Report dated 08/02/2018.

There are hairline vertical, horizontal and map cracks, some with efflorescence throughout the reinforced concrete backwalls (see photo 48).

See attached documents "South Abutment #1.pdf and North Abutment #2.pdf" for locations and conditions.

1130	Cracking (RC and Other)	3	05/14/2019	31.00	(LF)	0.00	31.00	0.00	0.00

The parent element for this defect was not inspected per the scope of this special inspection. The following has been retained from the previous Special & Routine Inspection Report dated 08/02/2018.

See Defect 1130 - Cracking (RC and Other) for comments.

1180	Abrasion	3	05/14/2019	1.00	(LF)	0.00	1.00	0.00	0.00

The parent element for this defect was not inspected per the scope of this special inspection. The following has been retained from the previous Special & Routine Inspection Report dated 08/02/2018.

At the south abutment #1 backwall under the east overhang there is a 2'-3" high x 1'-2" long area of moderate scaling.

See attached documents "South Abutment #1.pdf" for locations and conditions.

ELEM NBR	ELEMENT NAME	ENV	INSP. DATE	QUANTITY	UNITS	QTY CS 1	QTY CS 2	QTY CS 3	QTY CS 4
8305	**Asphaltic Joint Material**	**3**	**05/14/2019**	**49.00**	**(LF)**	**49.00**	**0.00**	**0.00**	**0.00**

This element was not inspected per the scope of this special inspection. The following has been retained from the previous Special & Routine Inspection Report dated 08/02/2018.

There is a new asphaltic joint plug over the south deck joint at south abutment #1 (see photo 11).

ELEM NBR	ELEMENT NAME	ENV	INSP. DATE	QUANTITY	UNITS	QTY CS 1	QTY CS 2	QTY CS 3	QTY CS 4
8335	**Guardrail, Vehicular**	**3**	**05/14/2019**	**848.00**	**(LF)**	**684.00**	**140.00**	**24.00**	**0.00**

This element was not inspected per the scope of this special inspection. The following has been retained from the previous Special & Routine Inspection Report dated 08/02/2018.

There are steel vehicular guardrails at all corners and continuous over the bridge (see photos 1, 2, 19-21)

515	Steel Protective Coating	3	05/14/2019	848.00	sq.ft	763.00	85.00	0.00	0.00

This element was not inspected per the scope of this special inspection. The following has been retained from the previous Special & Routine Inspection Report dated 08/02/2018.

The steel guardrails exhibit scattered areas of light surface rust.

1000	Corrosion	3	05/14/2019	85.00	(LF)	0.00	85.00	0.00	0.00

The parent element for this defect was not inspected per the scope of this special inspection. The following has been retained from the previous Special & Routine Inspection Report dated 08/02/2018.

The guardrail exhibits scattered areas of light rust.

7000	Damage	3	05/14/2019	78.00	(LF)	0.00	54.00	24.00	0.00

The parent element for this defect was not inspected per the scope of this special inspection. The following has been retained from the previous Special & Routine Inspection Report dated 08/02/2018.

- The southeast approach guardrail exhibits a 12'-6" long area of moderate collision damage 100'-0" from the bridge.
- The northeast approach guardrail exhibits a 12'-0" long area of moderate collision damage 45'-0" from the bridge.
- The northwest approach guardrail exhibits a 25'-0" area of light collision damage 37'-0" from the bridge.

- The west guardrail on the bridge exhibits two (2) areas of 6'-0" long impact damage in span 1 (see photo 21) and a 12'-0" long section of moderate collision damage in Span 1 and an area of moderate collision damage 2'-0" long in Span 2.

- The East guardrail on the bridge exhibits an area of 6'-0" long light collision damage in span 2 near north abutment #2.

ELEM NBR	ELEMENT NAME	ENV	INSP. DATE	QUANTITY	UNITS	QTY CS 1	QTY CS 2	QTY CS 3	QTY CS 4
8336	**Conc Bridge Parapet**	**3**	**05/14/2019**	**448.00**	**(LF)**	**368.00**	**40.00**	**40.00**	**0.00**

This element was not inspected per the scope of this special inspection. The following has been retained from the previous Special & Routine Inspection Report dated 08/02/2018.

There are concrete bridge parapets over the west and east side of the bridge (see photos 19-21).

1120	Efflorescence/Rust Staining	3	05/14/2019	40.00	(LF)	0.00	0.00	40.00	0.00

The parent element for this defect was not inspected per the scope of this special inspection. The following has been retained from the previous Special & Routine Inspection Report dated 08/02/2018.

The parapets along the west and east fascia exhibit vertical and horizontal cracks up to 1/16" wide with rust and efflorescence and hairline map cracks (see photos 20 & 21).

The end block at each corner exhibits wide spread map cracking with efflorescence and rust bleeding (Photo 1).

1130	Cracking (RC and Other)	3	05/14/2019	40.00	(LF)	0.00	40.00	0.00	0.00

The parent element for this defect was not inspected per the scope of this special inspection. The following has been retained from the previous Special & Routine Inspection Report dated 08/02/2018.

The parapets along the west and east fascia exhibit vertical and horizontal cracks up to 1/16" wide with rust and efflorescence and hairline map cracks (see photos 20 & 21).

ELEM NBR	ELEMENT NAME	ENV	INSP. DATE	QUANTITY	UNITS	QTY CS 1	QTY CS 2	QTY CS 3	QTY CS 4
8370	**Steel Diaphragms**	**3**	**05/14/2019**	**72.00**	**(EA)**	**46.00**	**8.00**	**18.00**	**0.00**

This element was not inspected per the scope of this special inspection. The following has been retained from the previous Special & Routine Inspection Report dated 08/02/2018.

There are end diaphragms at both abutments and at the pier. There are four (4) intermediate diaphragms in each bay between girder 'A' through 'G' (see photos 5 & 6).

515	Steel Protective Coating	3	05/14/2019	864.00	sq.ft	612.00	0.00	0.00	252.00

This element was not inspected per the scope of this special inspection. The following has been retained from the previous Special & Routine Inspection Report dated 08/02/2018.

The steel diaphragms have a painted steel protective coating.

3420	*Peel/Bub/Crack(Stl Protect Coat)*	*3*	*05/14/2019*	*252.00*	*sq.ft*	*0.00*	*0.00*	*0.00*	*252.00*

The parent element for this defect was not inspected per the scope of this special inspection. The following has been retained from the previous Special & Routine Inspection Report dated 08/02/2018.

There are typically areas of scattered isolated peeling paint and light-moderate rust of the intermediate diaphragms throughout in both span 1 and 2 (see photo 39).

There is typically up to 100% loss to the protective coating of the end diaphgrams at the pier in both span 1 and 2 (see photos 33-35, 37 & 38).

1000	Corrosion	3	05/14/2019	24.00	(EA)	0.00	6.00	18.00	0.00

The parent element for this defect was not inspected per the scope of this special inspection. The following has been retained from the previous Special & Routine Inspection Report dated 08/02/2018.

There are up to 100% loss to the horizontal and diagonal members, heavy rust and peeling paint of the end diaphragms at the pier in both span 1 and 2 (see photos 33-35).

SOUTH ABUTMENT #1:
- Bay 'F'

PIER 1 (SPAN 1):
- Bay 'A' and 'D'

PIER 1 (SPAN 2):
- Bay 'A' (see photo 37).
- Bay 'C' through 'E' (see photo 34 & 35)
- Bay 'F' (see photo 38).

NORTH ABUTMENT #2:
- BAY 'A' (see photo 33).

8368	Graffiti	3	05/14/2019	54.00	(EA)	54.00	0.00	0.00	0.00

This element was not inspected per the scope of this special inspection. The following has been retained from the previous Special & Routine Inspection Report dated 08/02/2018.

There are numerous areas of heavy graffiti of the end diaphragms at north abutment #2 (see photo 45).

8375	Loose or Missing Bolts defect	3	05/14/2019	2.00	(EA)	0.00	2.00	0.00	0.00

The parent element for this defect was not inspected per the scope of this special inspection. The following has been retained from the previous Special & Routine Inspection Report dated 08/02/2018.

There are missing connection bolt(s) at the following locations:

- Girder 'A' at pier 1 in span 2 (see photo 31 & 37).
- Girder 'G' at pier 1 in span 2 (see photo 38).

ELEM NBR	ELEMENT NAME	ENV	INSP. DATE	QUANTITY	UNITS	QTY CS 1	QTY CS 2	QTY CS 3	QTY CS 4
8398	**Curb/sidewalks - Con**	**3**	**05/14/2019**	**448.00**	**ft**	**394.00**	**54.00**	**0.00**	**0.00**

This element was not inspected per the scope of this special inspection. The following has been retained from the previous Special & Routine Inspection Report dated 08/02/2018.

There is a reinforced concrete safety walk between the vehicular guardrails and the concrete bridge parapets (see photo 19, 20 & 21). The granite curbs exhibit scrapes and rust stains throughout.

The deck joint seals at the east safety walk are dislodged at pier and north abutment #2 (see photo 19).

The average of both west and east curb reveal is 7.5".

1180	Abrasion	3	05/14/2019	54.00	ft	0.00	54.00	0.00	0.00

The parent element for this defect was not inspected per the scope of this special inspection. The following has been retained from the previous Special & Routine Inspection Report dated 08/02/2018.

There is a 10'-0" long x full width x 1" deep scale/abrasion of the east safety walk at pier 1 in span 2 (see photo 19).

There is a 6'-0" long x 1'-6" wide area of scale of the south approach west safety walk in span 1. Also, there is an 18'-0" long x 1'-6" wide area of scale near the midpsan of the safety walk in span 1.

ELEM NBR	ELEMENT NAME	ENV	INSP. DATE	QUANTITY	UNITS	QTY CS 1	QTY CS 2	QTY CS 3	QTY CS 4

8440	Posting Sign	3	05/14/2019	2.00	each	2.00	0.00	0.00	0.00

There are two (2) at bridge posting signs. One (1) sign each is placed on either end of the bridge (see photos 18 & 19)

The bridge has a posted weight limit of 3 axle+ 21T.

ELEM NBR	ELEMENT NAME	ENV	INSP. DATE	QUANTITY	UNITS	QTY CS 1	QTY CS 2	QTY CS 3	QTY CS 4
8441	Advanced Posting Sign	3	05/14/2019	1.00	each	1.00	0.00	0.00	0.00

There is one (1) advanced posting sign on RI 102 at the intersection immediatley north of the bridge (se e photo 1). There are no advanced posting signs on RI 7 which intersects RI 102 just north of the bridge and there is no advanced posting sign south of the bridge.

The bridge has a posted weight limit of 3 axle+ 21T.

BRIDGE NOTES

EQUIPMENT USED: 60-foot snooper truck.

TRAFFIC CONTROL: Crash truck, cones and signs. Note: The snooper was only deployed on the west side of the bridge due to overhead lines on the east side.

POLICE DETAIL NEEDED: Yes.

DEFLECTION AND VIBRATION: Light to moderate vibration was noted during live load conditions.

The following were not inspected per the scope of this special inspection but were retained from the previous Routine and Special Inspection Report done on 8/02/2018.

UTILITIES: There are 10in and 12in diameter insulated utilities pipes in bay 'A' with scattered light rust in the insulation (see photo 40). There is a missing nut on the utility support at bay 'A' in span 1 at south abutment #1.

CHANNEL NOTES: There is a spillway on the west side of the bridge and the channel mainly flows in span 1. There are abandoned dam structures in span 2 . The channel in Span 1 consists of rocks and gravel. There is a tree debris upstream and light overhang tree growth downstream (see photos 60-61).

VEGETATION: All corners of the bridge are heavily vegetated with overhanging trees (see photo 9).

EMBANKMENT EROSION: The northwest channel is lined with concrete and has been slightly undermined.

INSPECTION NOTES

SPECIAL 3 MONTH INSPECTION

AECOM
Team Leader: Timothy Franciosa, PE
Team Member: Jeffrey Sam, EIT
Date: 5/14/2019
Weather: 40s, Raining

ORIENTATION: The Branch River flows from west to east. The bridge is logged from south to north and west to east.

SCOPE: The scope of the special 3 month inspection is to monitor the advanced deterioration of the reinforced concrete pier.

NBI RATINGS: The overall condition of the bridge is 4-Poor. Item 58 - Deck: 6 (satisfactory), Item 59 - Superstructure: 4 (poor), Item 60 - Substructure: 3 (Serious), and Item 61 - Channel: 6 (Bank Slumping) have not changed since the previous inspection.

SCHEDULE NOTES

Rhode Island Department of Transportation

Bridge Inspection Report

Structure Inventory and Appraisal Sheet (English Units)

Equipment

Aerial Lift	☐
Boat	☐
Underbridgeinspvel	☑
Scaffolding	☐
BoesemansChair	☐
Waders	☐
Rail Mount Elliot	☐
Crash Truck	☑
Air Monitor	☐
Ladder	☐
Bucket Truck	☐
Rigging	☐
Floats	☐
Climbing	☐
Rail Mount Bucket Truck	☐
Light Tower	☐

Poison Ivy	☑
Heavy Vegetation	☑
Hurricane Evac Route ?	☐

Cones	Yes
Traffic Setup Req	Yes
Police Req	Yes
Night Insp Req	No
Signs	Yes

Speed Limit	50.00
Prep Time	4
Crew SIize	2
Under Insp Vehicle Time	1
Traffic Control Time	1
Mile Post	41.74
Crew Days	1
Time Report Time	46
Bucket Truck Time	

Site Access Notes

Avg Curb Reveal North/East	7.50
Avg Curb Reveal South/West	7.50
Posted Weight Limit	3 axel-21
Posting Sign ?	☑
Post Signs Legible	01
Post Sign Rec	01
Adv Min Vert Clear Sign	-1
Min Ver tClear Signs Leg	-1
Min Vert Clear Post Vales	
Min Vert Clear Sign Rec	-1
Old Rating and Postings	
RR Mile Post	
US DOT/AAR No.	

Telephone	☐
Sewer	☐
Cable	☐
Oil	☐
Fire Alarm	☐
OH Lines Present	☑
Water	☑
Gas	☐
Electric	☐
Fiber Optic	☐

Rhode Island Department of Transportation

Bridge Inspection Report

Structure Inventory and Appraisal Sheet (English Units)

Work Candidates

Assigned to Agency

Status	Priority	Action	Date Proposed	Notes
Unknown	High	Joint-Replace	07/25/2015	[AI Engineers] - The deck joint over south abutment #1 is open and water can freely flow throughout the joint. Replace the whole joint Total 30 LF.
Unknown	High	Substruct-Patch spalls (Col)	07/25/2015	[AI Engineers] - Both abutment stems, pier cap, columns and backwalls exhibit hollow areas, extensive spalls with exposed corroded rebars throughout. Repair the delaminated concrete [VHB, for TranSystems] - Both abutment stems have been patched and repaired under the flascia girders. Patching and/or repair of the pier cap, columns and backwalls still remains.

PHOTO #1

SPECIAL 3 MONTH INSPECTION

BRIDGE #067301

NORTH APPROACH
(LOOKING SOUTH)

5/14/2019

PHOTO #2

SPECIAL 3 MONTH INSPECTION

BRIDGE #067301

GENERAL TOPSIDE
(LOOKING SOUTH)

5/14/2019

PHOTO #3

SPECIAL 3 MONTH INSPECTION

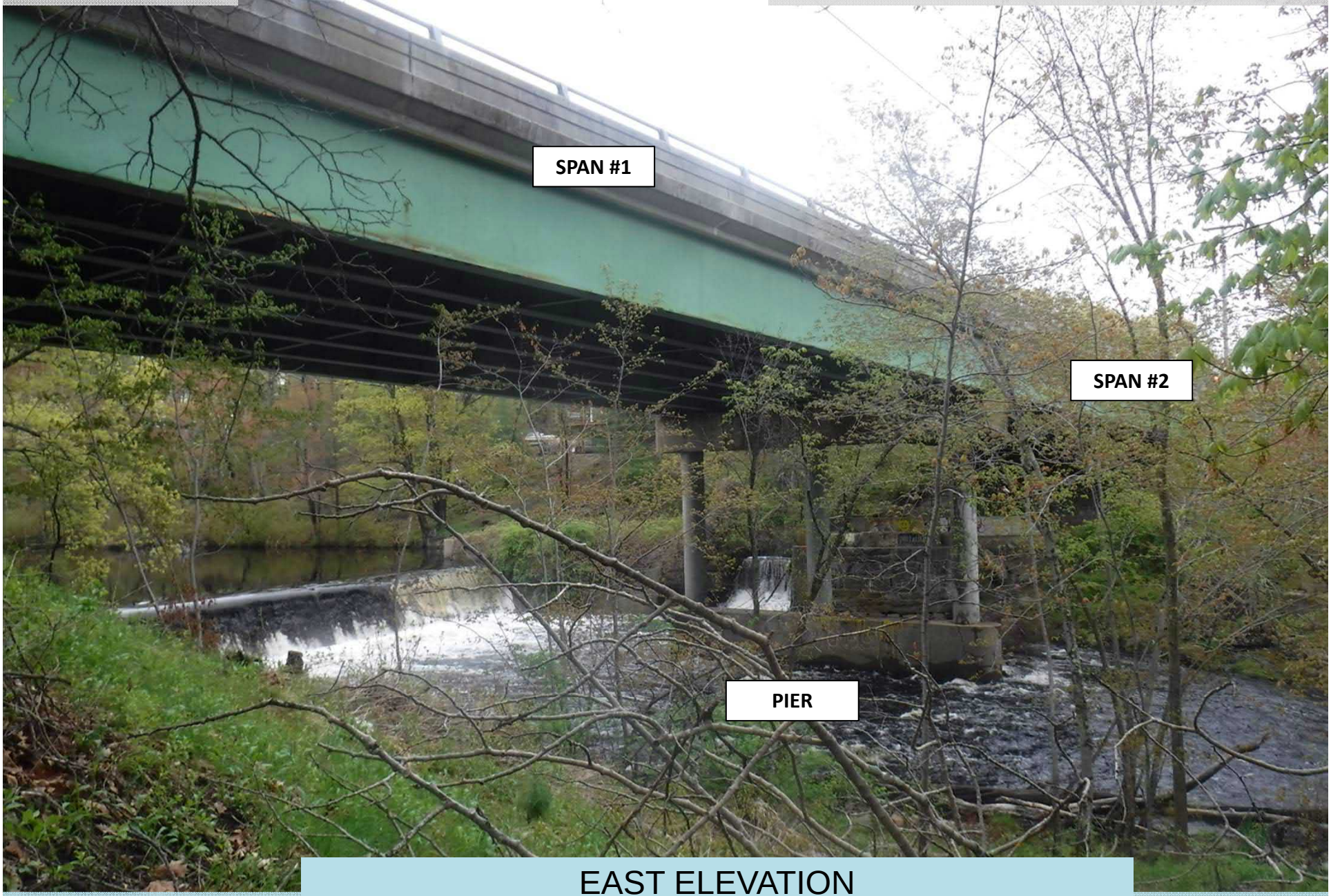

EAST ELEVATION
(LOOKING WEST)

BRIDGE #067301

5/14/2019

PHOTO #4

SPECIAL 3 MONTH INSPECTION

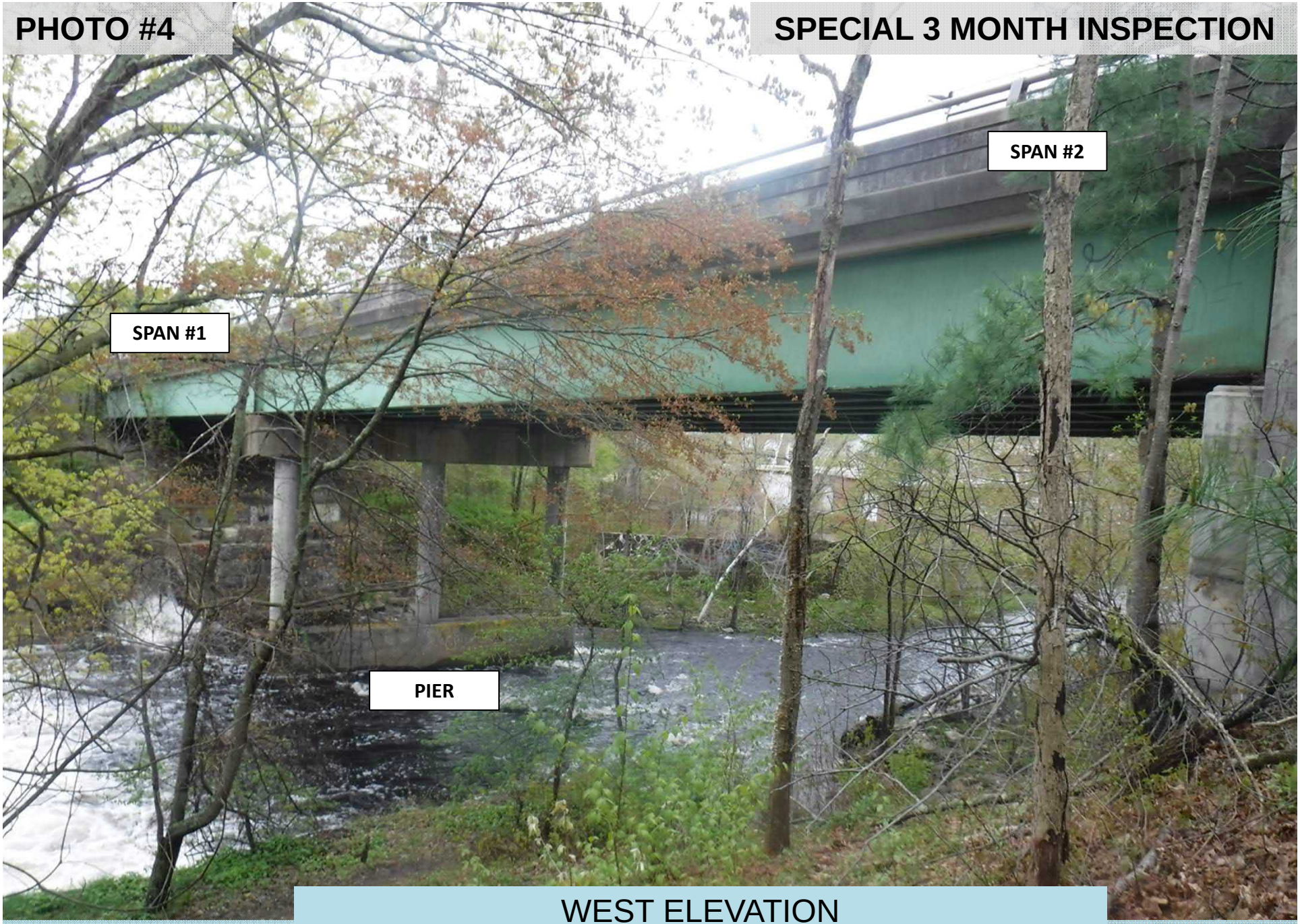

BRIDGE #067301

WEST ELEVATION
(LOOKING WEST)

5/14/2019

PHOTO #5

SPECIAL 3 MONTH INSPECTION

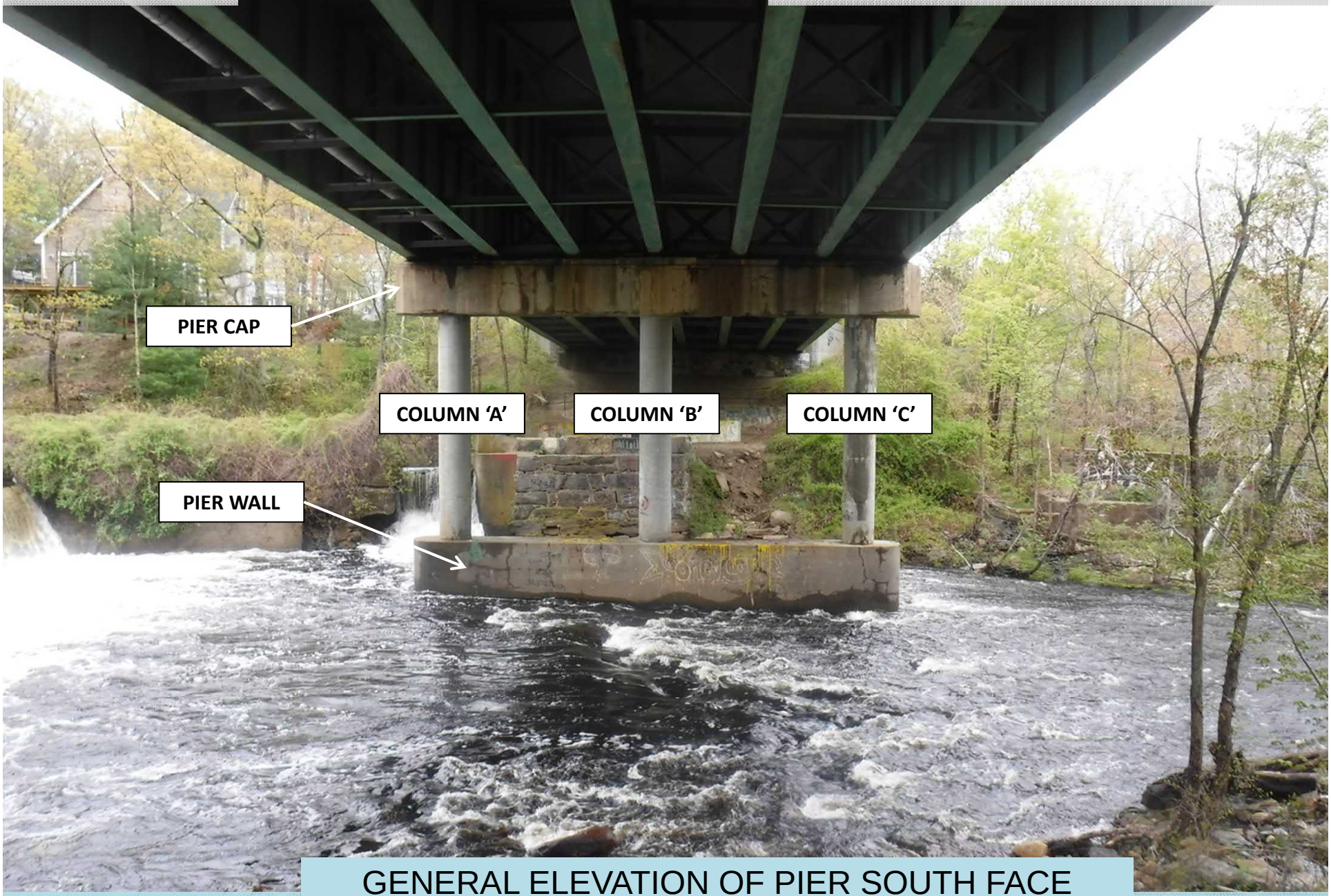

GENERAL ELEVATION OF PIER SOUTH FACE
(LOOKING NORTH)

BRIDGE #067301

5/14/2019

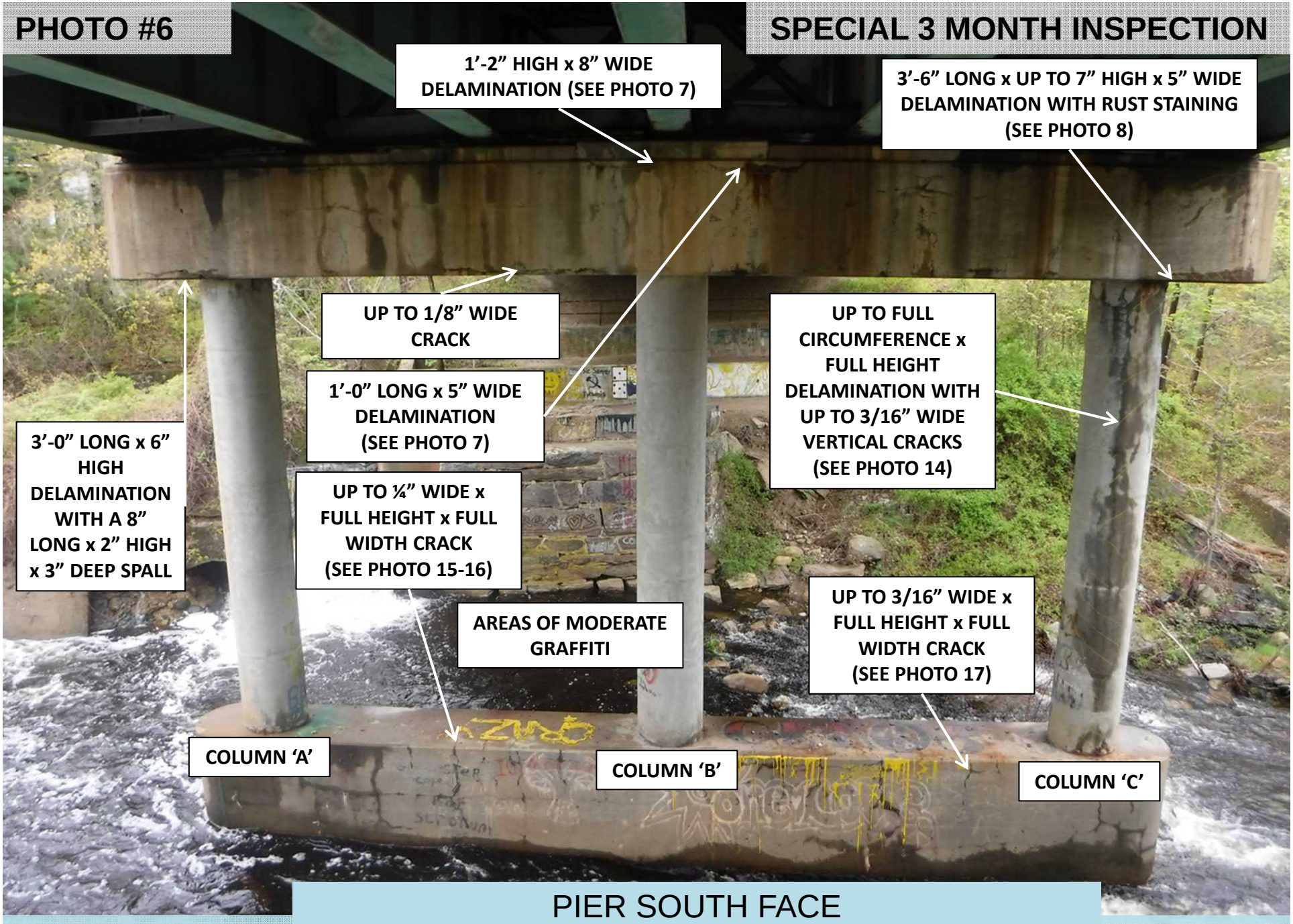

BRIDGE #067301

PIER SOUTH FACE
(LOOKING NORTH)

5/14/2019

PHOTO #7

SPECIAL 3 MONTH INSPECTION

PIER CAP SOUTH FACE ABOVE COLUMN 'B'
(LOOKING NORTH)

BRIDGE #067301

5/14/2019

PHOTO #8

SPECIAL 3 MONTH INSPECTION

BRIDGE #067301

PIER CAP SOUTH FACE AT THE EAST END
(LOOKING NORTH)

5/14/2019

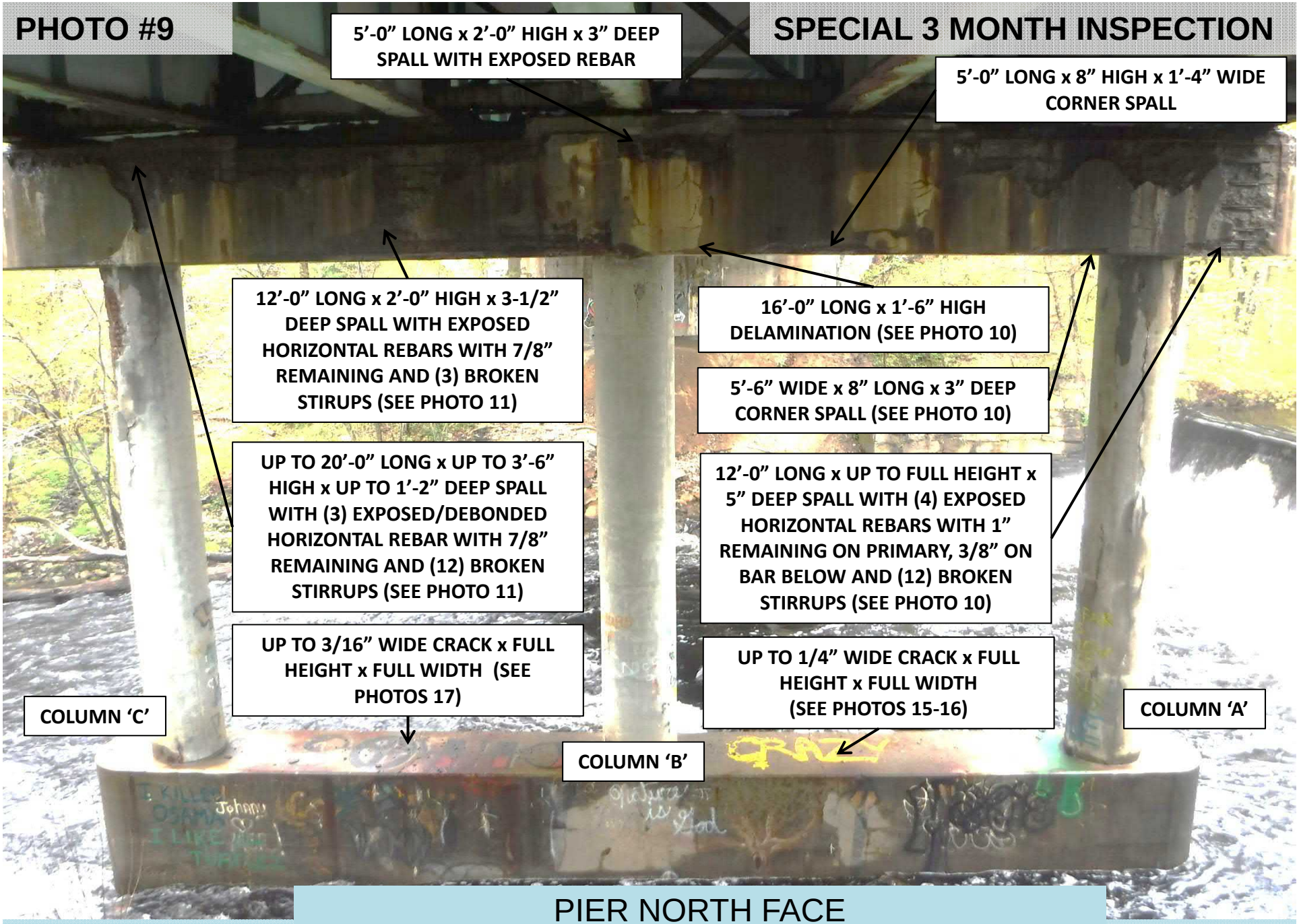
PHOTO #9
SPECIAL 3 MONTH INSPECTION
5'-0" LONG x 2'-0" HIGH x 3" DEEP SPALL WITH EXPOSED REBAR
5'-0" LONG x 8" HIGH x 1'-4" WIDE CORNER SPALL
12'-0" LONG x 2'-0" HIGH x 3-1/2" DEEP SPALL WITH EXPOSED HORIZONTAL REBARS WITH 7/8" REMAINING AND (3) BROKEN STIRUPS (SEE PHOTO 11)
16'-0" LONG x 1'-6" HIGH DELAMINATION (SEE PHOTO 10)
5'-6" WIDE x 8" LONG x 3" DEEP CORNER SPALL (SEE PHOTO 10)
UP TO 20'-0" LONG x UP TO 3'-6" HIGH x UP TO 1'-2" DEEP SPALL WITH (3) EXPOSED/DEBONDED HORIZONTAL REBAR WITH 7/8" REMAINING AND (12) BROKEN STIRRUPS (SEE PHOTO 11)
12'-0" LONG x UP TO FULL HEIGHT x 5" DEEP SPALL WITH (4) EXPOSED HORIZONTAL REBARS WITH 1" REMAINING ON PRIMARY, 3/8" ON BAR BELOW AND (12) BROKEN STIRRUPS (SEE PHOTO 10)
UP TO 3/16" WIDE CRACK x FULL HEIGHT x FULL WIDTH (SEE PHOTOS 17)
UP TO 1/4" WIDE CRACK x FULL HEIGHT x FULL WIDTH (SEE PHOTOS 15-16)
COLUMN 'C'
COLUMN 'B'
COLUMN 'A'
BRIDGE #067301
PIER NORTH FACE (LOOKING SOUTH)
5/14/2019

PHOTO #10

SPECIAL 3 MONTH INSPECTION

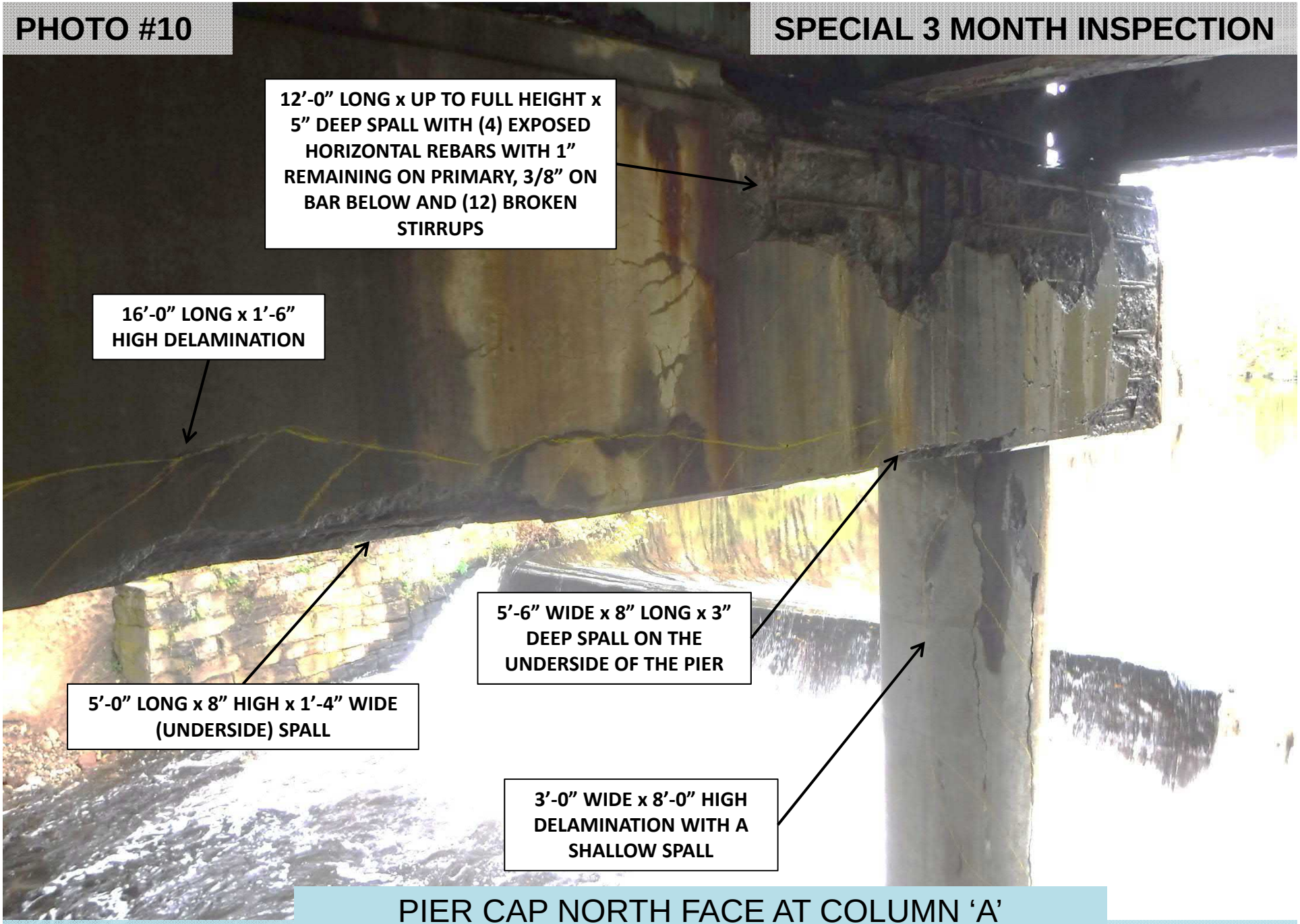

BRIDGE #067301

PIER CAP NORTH FACE AT COLUMN 'A'
(LOOKING SOUTH)

5/14/2019

BRIDGE #067301

PIER CAP NORTH FACE BETWEEN COLUMNS 'B' AND 'C' (LOOKING SOUTH)

5/14/2019

BRIDGE #067301

PIER CAP NORTH FACE/UNDERSIDE BETWEEN COLUMN ‘B’ AND ‘C’ (LOOKING SOUTH)

5/14/2019

PHOTO #13

SPECIAL 3 MONTH INSPECTION

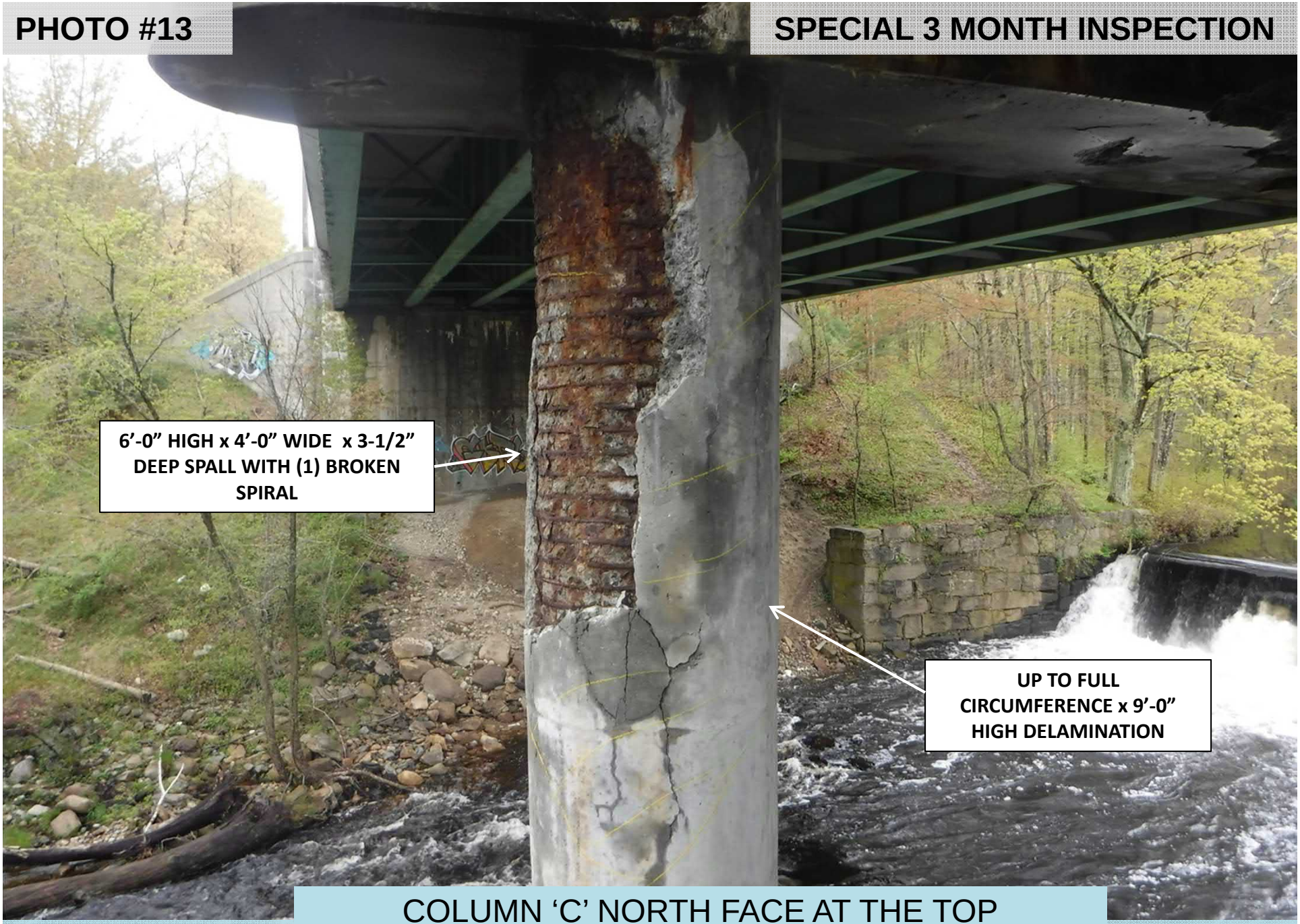

COLUMN 'C' NORTH FACE AT THE TOP
(LOOKING SOUTH)

BRIDGE #067301

5/14/2019

PHOTO #14

SPECIAL 3 MONTH INSPECTION

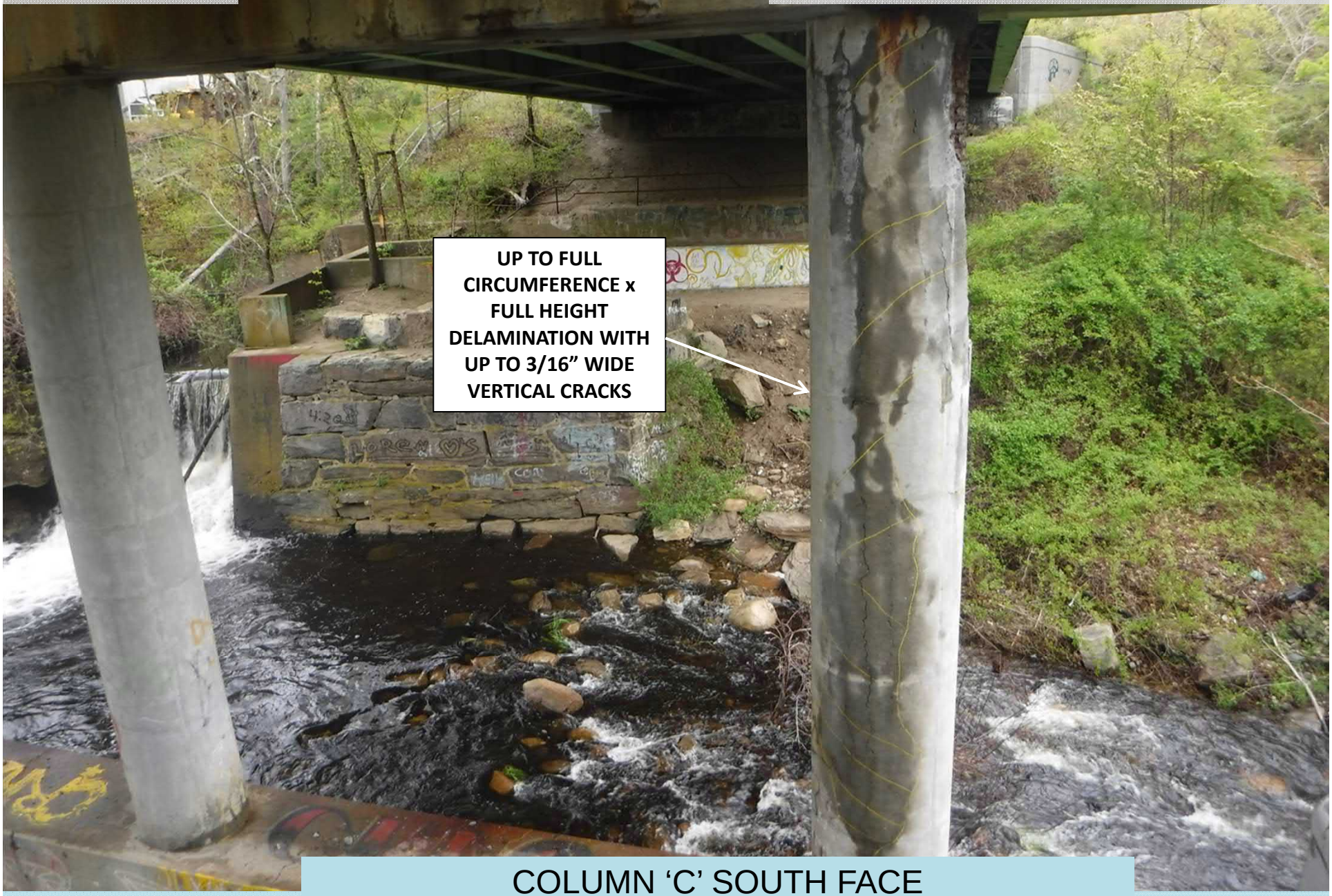

COLUMN 'C' SOUTH FACE
(LOOKING NORTH)

BRIDGE #067301

5/14/2019

PHOTO #15

SPECIAL 3 MONTH INSPECTION

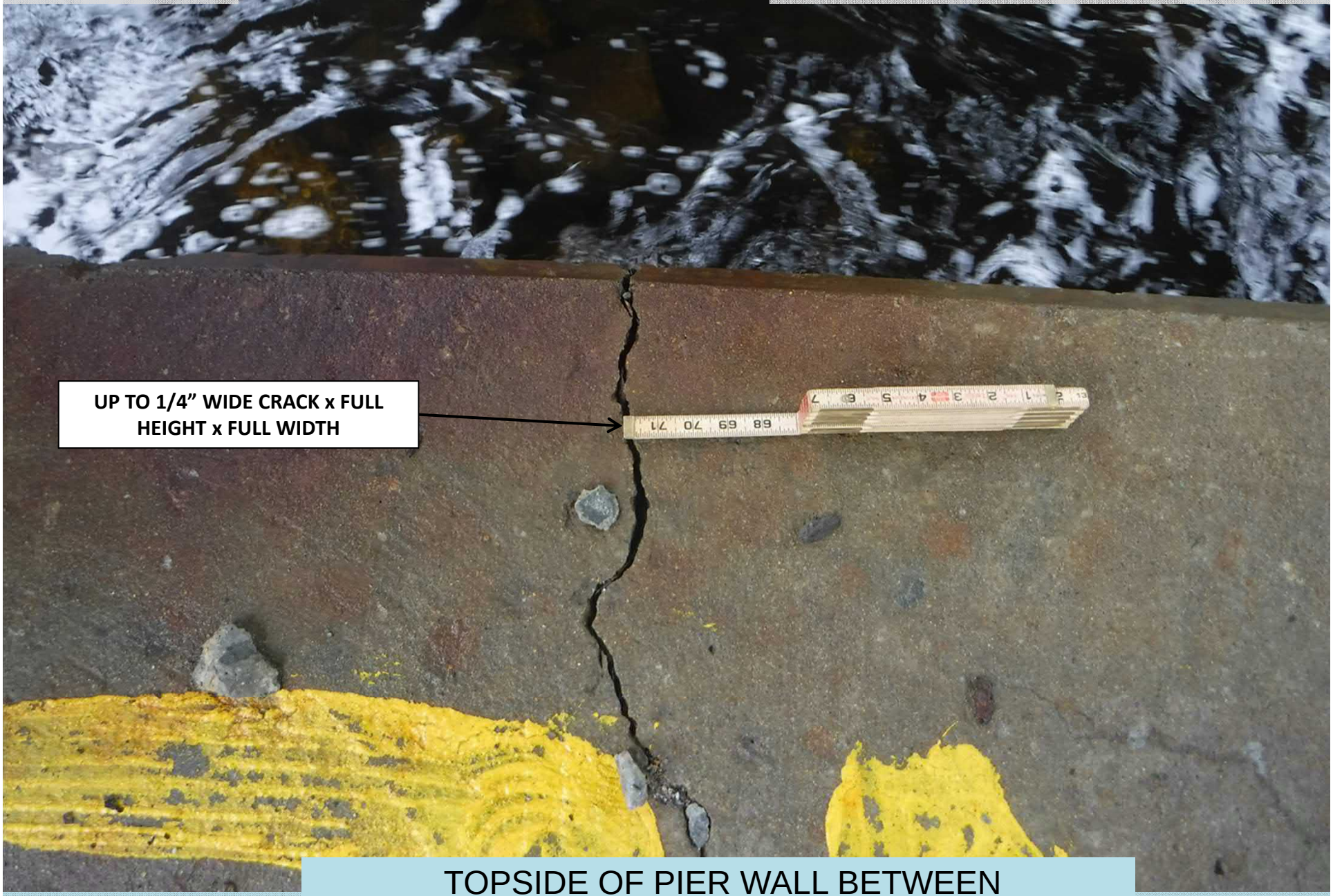

TOPSIDE OF PIER WALL BETWEEN COLUMN 'A' AND 'B' (LOOKING NORTH)

BRIDGE #067301

5/14/2019

PHOTO #16

SPECIAL 3 MONTH INSPECTION

TOPSIDE OF PIER WALL BETWEEN COLUMN 'A' AND 'B' (LOOKING WEST)

BRIDGE #067301

5/14/2019

BRIDGE #067301

TOPSIDE OF PIER WALL BETWEEN
COLUMN 'B' AND 'C' (LOOKING WEST)

5/14/2019

PHOTO #18

SPECIAL 3 MONTH INSPECTION

AT BRIDGE POSTING FOR SOUTH APPROACH
(LOOKING NORTH)

BRIDGE #067301

5/14/2019

PHOTO #19

SPECIAL 3 MONTH INSPECTION

AT BRIDGE POSTING FOR NORTH APPROACH
(LOOKING SOUTH)

BRIDGE #067301

5/14/2019

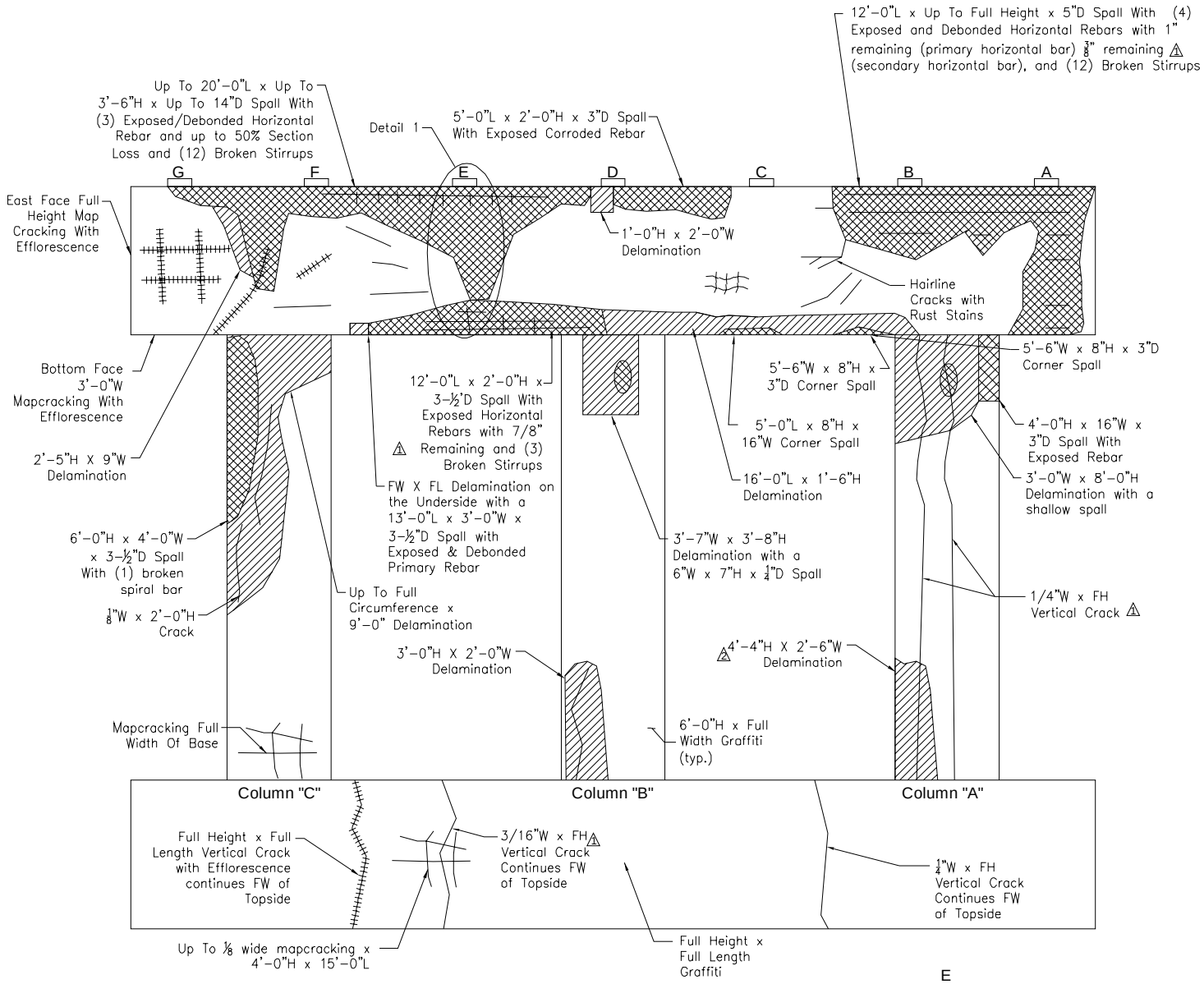

Pier #1 - North Face

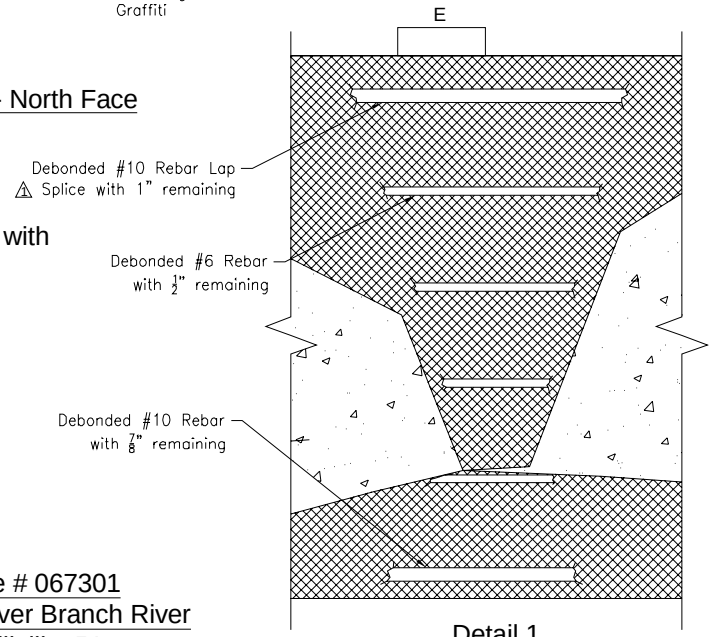

Detail 1

GENERAL NOTES:

Pier cap has hairline mapcracking up to full width x full height with efflorescence & rust stains throughout (typ.)

LEGEND:

- HAIRLINE CRACKS
- HAIRLINE CRACKS WITH EFFLORSCENCE
- MAP CRACKS
- DELAMINATION
- SPALLING AREA
- SCALE
- HONEYCOMB AREA
- 1 CHANGE IN PREVIOUSLY NOTED CONDITION (02/15/2019 SPECIAL INSPECTION)
- 2 NEWLY DOCUMENTED CONDITION (05/14/2019 SPECIAL INSPECTION)

Bridge # 067301
Route 102 over Branch River
Burrillville, RI

REVISIONS BY:	REVISIONS:	AECOM	NOT TO SCALE	INSPECTED BY:	DATE INSPECTED:
TVF	05/14/2019			TVF & JAS	05/14/2019

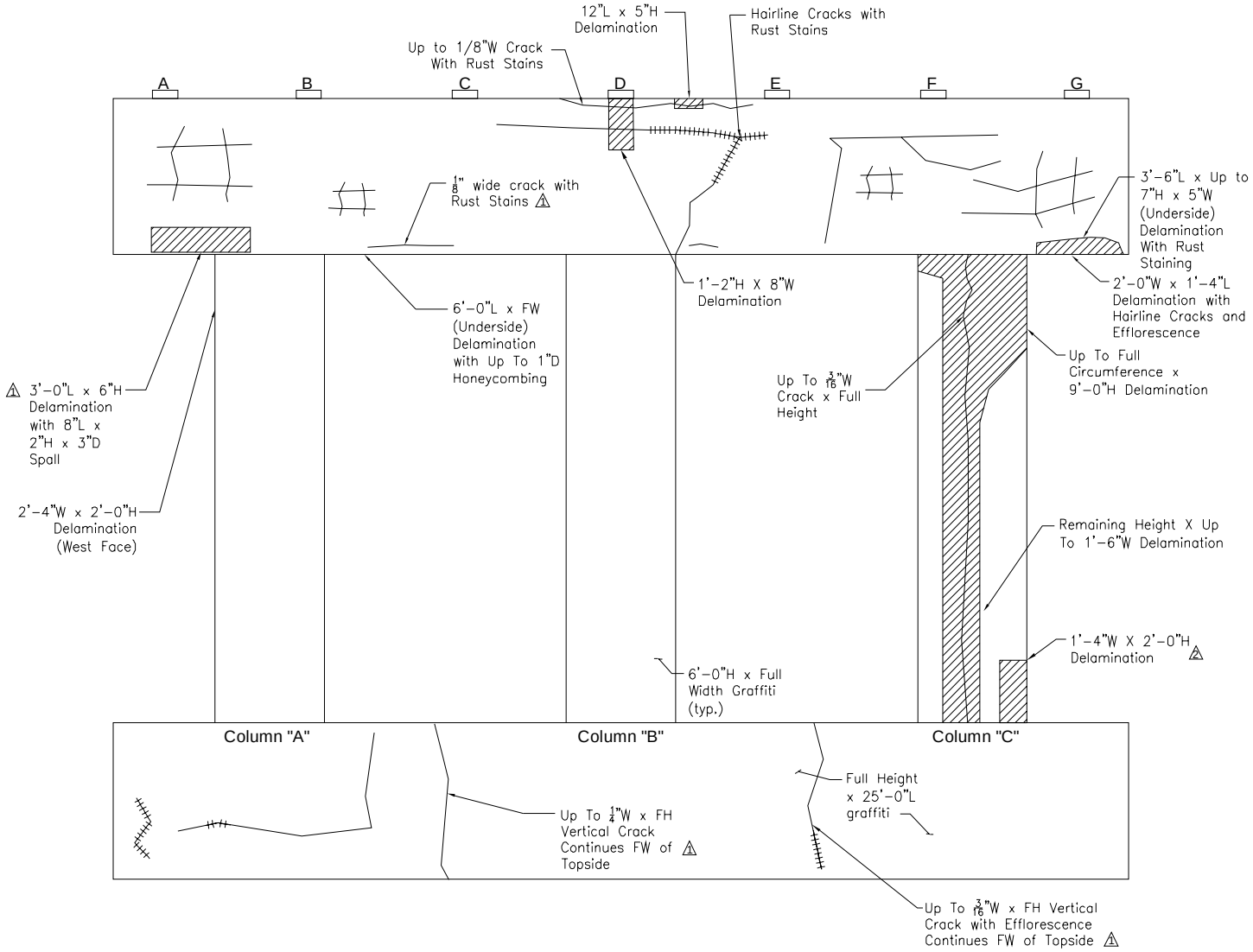

Pier #1 - South Face

LEGEND:

- HAIRLINE CRACKS
- HAIRLINE CRACKS WITH EFFLORSCENCE
- MAP CRACKS
- DELAMINATION
- SPALLING AREA
- SCALE
- HONEYCOMB AREA
- 1 CHANGE IN PREVIOUSLY NOTED CONDITION (02/15/2019 SPECIAL INSPECTION)
- 2 NEWLY DOCUMENTED CONDITION (05/14/2019 SPECIAL INSPECTION)

Bridge # 067301
Route 102 over Branch River
Burrillville, RI

REVISIONS BY:	REVISIONS:	AECOM	NOT TO SCALE	INSPECTED BY:	DATE INSPECTED:
TVF	05/14/2019			TVF & JAS	05/14/2019

Bridge #067301 – RI 102 Bronco Highway over Branch River – Burrillville
Special Inspection Date: 02/15/2019

S:\Projects\60330198 2014 RIDOT Bridge Inspections\500-DELIVERABLES\558-Assignment No 58 - Group SP8\060201\05.23.19S\Report DocumentsThe following is a list of changes made to BrM Items and reasoning behind the changes.

Note 1: The scope of the special 3 month inspection is to monitor the advanced deterioration of the reinforced concrete pier.

Note 2: In the previous 3 month special inspection submittal AECOM recommended Item 113 – Scour be re-evaluated to determine scour potential of the reinforced concrete pier. Included in this submittal is an additional "Pier #1 - Channel Measurements.pdf" sketch to be included and updated as a part of the 3 month special inspection scope.

RIDOT SCHEDULE

- **Schedule**

  - **Item 93C – Special Inspection Date – Changed**
    - From: 8/2/2018
    - To: 5/14/2019
    - Next: 8/2/2019

  - **Item – Element Inspection Date – Changed**
    - From: 8/2/2018
    - To: 5/14/2019
    - Next: 8/2/2020

CONDITION

- **Element Condition**

  - **Element 210 – Re Conc Pier Wall – Changed**
    - From: 26.00 ft CS-1; 10.00 ft CS-3; 10.00 ft CS-4
    - To: 25.00 ft CS-1; 10.00 ft CS-3; 11.00 ft CS-4
    - Reasoning: Quantities updated to include Defect 6000 - Scour

    - **Defect 210 – Scour – Added**
      - Quantity: 1.00 ft CS-4
      - Reasoning: Channel measurements and locations of up to ¼" wide full width x height cracks in the reinforced concrete pier wall indicate possible scour potential.

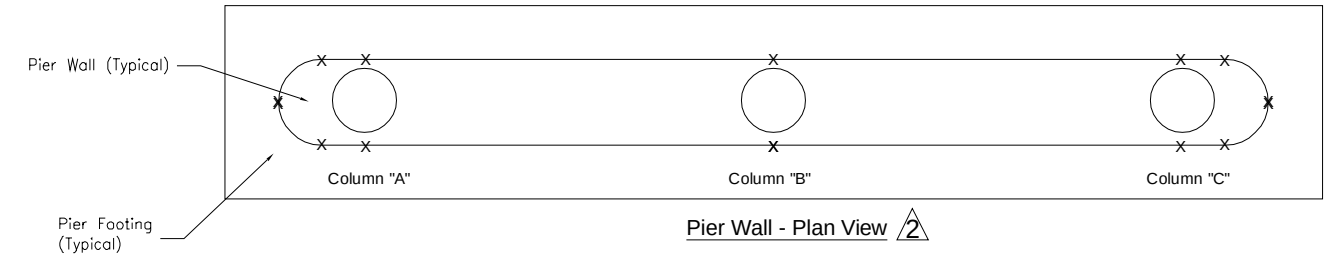

Pier Wall - Plan View 2

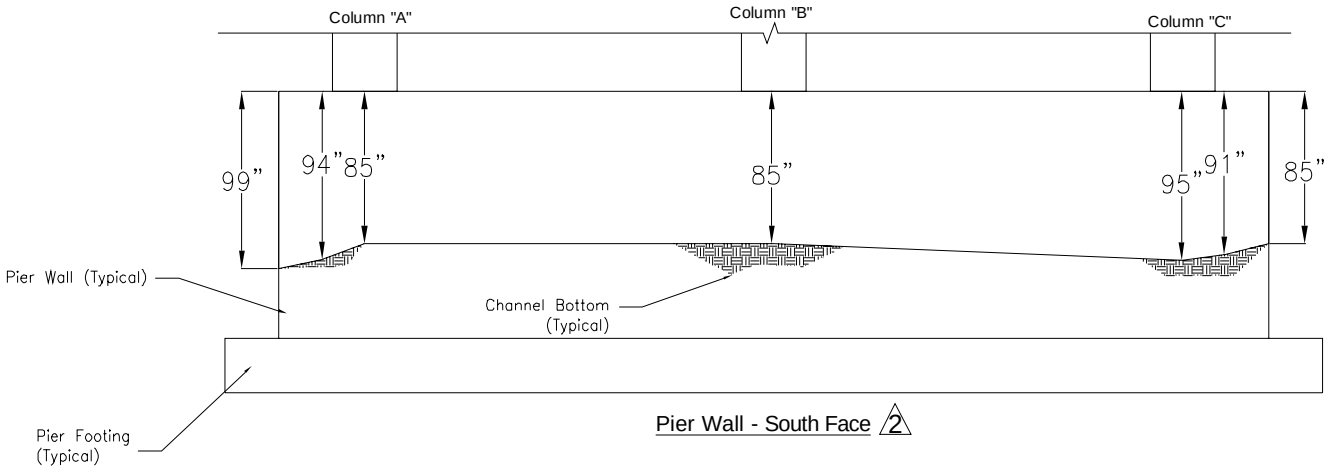

Pier Wall - South Face 2

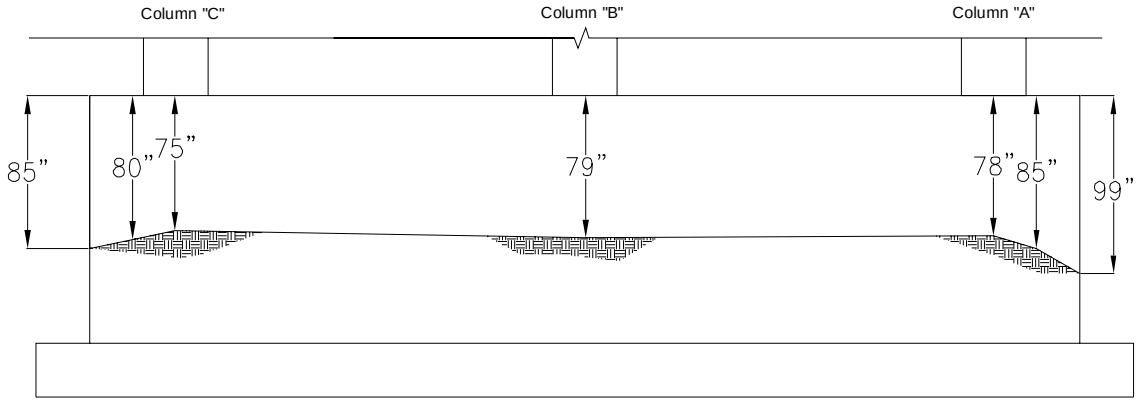

Pier Wall - North Face 2

Channel Depth Measurments

Note:
The footing is founded on ledge per contract drawings

LEGEND:

X LOCATION OF MEASUREMENTS

1 CHANGE IN PREVIOUSLY NOTED CONDITION (02/15/2019 SPECIAL INSPECTION)

2 NEWLY DOCUMENTED CONDITION (05/14/2019 SPECIAL INSPECTION)

Bridge # 067301
Route 102 over Branch River
Burrillville, RI

REVISIONS BY:	REVISIONS:	AECOM	NOT TO SCALE	INSPECTED BY:	DATE INSPECTED:
TVF	05/14/2019			TVF & JAS	05/14/2019