RHODE ISLAND COLLEGE

FOGARTY RESEARCH LABORATORY, INBRE

600 MT. PLEASANT AVENUE, PROVIDENCE, RI 02908

ARCHITECT:
BREWSTER THORNTON GROUP
ARCHITECTS, LLP
317 IRON HORSE WAY, SUITE 202
PROVIDENCE, RI 02908

MEP/FP ENGINEER:
WOZNY/BARBAR & ASSOCIATES, INC.
1076 WASHINGTON STREET
HANOVER, MA 02339

G0.0

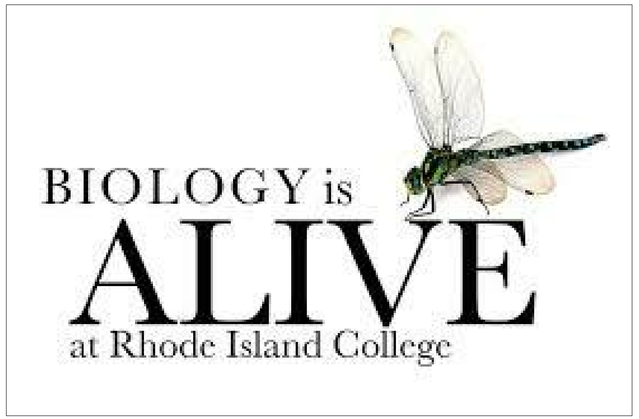

BUILDING KEY PLAN

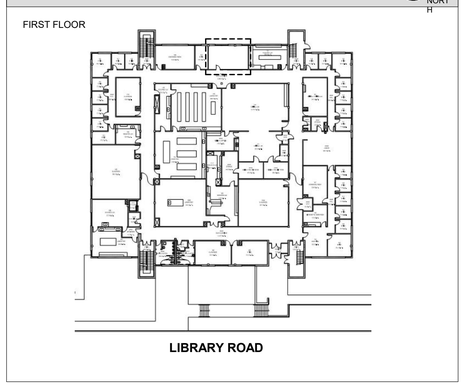

LOCUS MAP

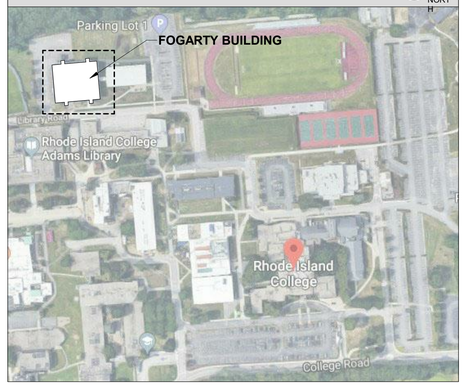

BREWSTER THORNTON GROUP ARCHITECTS LLP

BID SET
01/31/20
BTGA# 1942

COMMON ABBREVIATIONS

(USE OF PUNCTUATION IS OPTIONAL)

ABV	ABOVE
A/C.	AIR CONDITION
ACC.	ACCESS(IBLE)
ACT	ACOUSTICAL CEILING TILE
ADA	AMERICANS WITH DISABILITY ACT
ADDL	ADDITIONAL
ADJ.	ADJUSTABLE (OR) ADJACENT
A/E	ARCHITECT/ENGINEER
A.S.F	ABOVE SUBFLOOR
A.F.	ABOVE FLOOR
A.F.F.	ABOVE FINISH FLOOR
AHJ	AUTHORITY HAVING JURISDICTION
AL./ALUM.	ALUMINUM
ALT.	ALTERNATE
ANOD.	ANODIZED
ARCH.	ARCHITECT(URAL)
A.P.	ACCESS PANEL
APP.	APPROXIMATE
APT	APARTMENT
APPROX.	APPROXIMATE
ASI	ARCHITECT'S SUPPLEMENTAL INSTRUCTION
AUTO.	AUTOMATIC
AUX.	AUXILIARY
BAS	BUILDING AUTOMATION SYSTEM
BD	BOARD
BDRM	BEDROOM
BITUM.	BITUMINOUS
BLDG	BUILDING
BLW	BELOW
BSMT	BASEMENT
BOTT.	BOTTOM
B.O.F	BOTTOM OF FOOTING
B.O.	BLOW OFF VENT
BLKG	BLOCKING
BIT.	BITUMEN OR BITUMENOUS
BLUEBD	BLUEBOARD (VENEER PLASTER BASE)
BRK	BRICK
BRZ	BRONZE
BTWN	BETWEEN
CAB.	CABINET
C.F.M.F.	COLD-FORMED METAL FRAMING
CG	COLUMN GRID
C.L.	CENTER LINE
CLL	CONTRACT LIMIT LINE
CLO	CLOSET
CLG	CEILING
CLR	CLEAR(ANCE)
C.J.	CONTROL JOINT
CMU	CONCRETE MASONRY UNIT
CO	CASED OPENING
COL.	COLUMN
COMP.	COMPRESS(ED), (ION). (IBLE)
CONC.	CONCRETE
CONST.	CONSTRUCTION
CONT.	CONTINU(E), (OUS)
COORD.	COORDINATE
CPT	CARPET
CPR	COPPER
C.T.	CERAMIC TILE
C.U.H.	CABINET UNIT HEATER
DBL	DOUBLE
DEMO	DEMO(LISH), (LITION)
DEG	DEGREES
DET.	DETAIL
D.F.	DRINKING FOUNTAIN
DH	DOUBLE HUNG
DIA.	DIAMETER
DIAG.	DIAGONAL
DIM.	DIMENSION
DISP.	DISPOSE
DN	DOWN
DR	DOOR
DS	DOWNSPOUT
DTL	DETAIL
DWG	DRAWING
DWGS	DRAWINGS
DX	DUPLEX
EA.	EACH
EL.	ELEVATION
ELEC.	ELECTRIC(AL)
ELEV.	ELEVATOR
EMER.	EMERGENCY
EMS	EMERGENCY MANAGEMENT SYSTEM
E.J.	EXPANSION JOINT
EQ	EQUAL
EQUIP	EQUIPMENT
ETR	EXISTING TO REMAIN
EV	EXHAUST VENT
EX.	EXISTING
EXIST.	EXISTING
EXG	EXISTING
EXT.	EXTERIOR
F.A.	FIRE ALARM
F.A.R.	FLOOR AREA RATIO
F.C.U.	FAN COIL UNIT
F.D.	FLOOR DRAIN
F.E.	FIRE EXTINGUISHER
FEC	FIRE EXTINGUISHER CABINET
FF&E	FURNITURE, FIXTURE, AND EQUIPMENT
FGL	FIBERGLASS
FIN.	FINISH
FIN.CLG	FINISH CEILING
FIN.FLR	FINISH FLOOR
FIN.SCH	FINISH SCHEDULE
FIXT.	FIXTURE
FLR.	FLOOR
FLUOR.	FLUORESCENT
FND.	FOUNDATION
F.O.	FACE OF _____
F.P.	FIRE PROTECTION
F.RATING	FIRE RATING
FR	FIRE RETARDANT
FRP	FIBERGLASS REINFORCED PLASTIC
FT	FEET
FTG	FOOTING
FURN.	FURNITURE
GA	GAGE/GAUGE
GALV	GALVANIZED
GB	GRAB BAR
GL	GLASS
GLAM	GLUE LAMINATED BEAM
GLZ	GLAZING
GWB	GYPSUM BOARD
HC	HANDICAP
HDF	HIGH DENSITY FIBERBOARD
HM	HOLLOW METAL
HDW	HARDWARE
HRW	HARDWARE
HOR.	HORIZONTAL
HR	HOUR
HT	HEIGHT
IN.	INCHES
INCL.	INCLUDE(D),(ING)
INFO.	INFORMATION
INSUL.	INSULATION
INT.	INTERIOR
J.C.	JANITOR'S CLOSET
J-BOX	JUNCTON BOX
JT	JOINT
K.B.	KNOX BOX
KIT.	KITCHEN
LAB.	LABORATORY
LAV.	LAVATORY
LB	POUND(S)
LCC	SEE Z.C.C.
L.E.D.	LIGHT EMITTING DIODE
LF	LIGHT FIXTURE
L.H.	LEFT HAND
LIB.	LIBRARY
LIN	LINOLEUM
LKR	LOCKER
LVL	LAMINATED VENEER LUMBER
LOC.	LOCATION
LVR	LOUVER
LVT	LUXURY VINYL TILE
MACH.	MACHINE
MAS.	MASONRY
MAT.	MATERIAL
MAX.	MAXIMUM
MCT	MARMOLEUM COMPOSITION TILE
MECH.	MECHANICAL
MED.	MEDIUM
MEMB	MEMBRANE
MDF	MEDIUM DENSITY FIBERBOARD
MIL	MILLIMETER
MIN.	MINIMUM
MISC.	MISCELLANEOUS
M.O.	MASONRY OPENING
M.R.	MOISTURE RESISTANT
MTL	METAL
N.A.	NOT APPLICABLE
NAT.	NATURAL
N.C.	NOISE CRITERIA
N.I.C.	NOT IN CONTRACT
NKL	NICKEL
NOM.	NOMINAL
NO	NUMBER
NR	NOT RATED
N.R.C.	NOISE REDUCTION COEFFICIENT
N.T.S.	NOT TO SCALE
O.C.	ON CENTER
O.H.	OPPOSITE HAND
OPNG	OPENING
OPP	OPPOSITE
ORIG.	ORIGINAL
OHD	OVERHEAD
OZ.	OUNCE
PCC	PRE-CAST CONCRETE
PERP	PERPENDICULAR
PL	PLATE
PLAM	PLASTIC LAMINATE
PNL	PANEL
PNT	PAINT
PPL	PEOPLE
PTD	PAINTED
PR	PAIR
PREP	PREPARATION
P.T.	PRESSURE TREATED
PTN	PARTITION
PWD	PLYWOOD
P.V.	PLUMBING VENT
Q.T.	QUARRY TILE
R#	RADIUS
R	RISER
R.B.	RESILENT BASE
RCP	REFLECTED CEILING PLAN
R&D	REMOVE & DISPOSE
R.D.	ROOF DRAIN
RE:	REFER TO
REF.	REFER
REFR	REFRIGERATOR
REQ.	REQUIRE(D)
RES.	RESILIENT
REV.	REVISION
R.H.	RIGHT HAND
RM	ROOM
R.O.	ROUGH OPENING
RWB	RUBBER WALL BASE
SCHED.	SCHEDULE
SD	SIDE
SECT.	SECTION
SF	SQUARE FEET
SF	SUB FLOOR
S.GASKET	SMOKE GASKET
SGL	SAFETY GLASS
SHT	SHEET
SHTH	SHEATHING
SIM.	SIMILAR
SPEC.	SPEC (-IFIED) (-IFICATION)
SRL	SUBMITTAL REVIEW LETTER
SQ.	SQUARE
S.S.	STAINLESS STEEL
S.S.M.	SOLID SURFACE MATERIAL
STC	SOUND TRANSMISSION COEFFICIENT
STD	STANDARD
STOR.	STORAGE
STL	STEEL
STRUCT.	STRUCTURAL
SUSP.	SUSPEND(ED)
SYS.	SYSTEM
T	TREAD
T&G	TONGUE AND GROOVE
TEL	TELEPHONE
TEMP	TEMPORARY
TGL	TEMPERED GLASS
THK	THICK(NESS)
THRESH	THRESHOLD
T.O.	TOP OF _____
T.O.F.	TOP OF FOOTING
T.O.S.	TOP OF SHELF
T.O.W.	TOP OF WALL
TS	TUBE STEEL
TSTAT	THERMOSTAT
TYP.	TYPICAL
TZ	TERRAZZO
U.H.	UNIT HEATER
U.N.O.	UNLESS NOTED OTHERWISE
V.A.T.	VINYL ASBESTOS TILE
VCT	VINYL COMPOSITION TILE
VERT.	VERTICAL
V.I.F.	VERIFY IN FIELD
V.R.	VAPOR RETARDER
W/	WITH
W.C.	WATER CLOSET
WD	WOOD
WDW	WINDOW
WSU	WATERPROOF SHINGLE UNDERLAYMENT
WWF	WELDED WIRE FABRIC
Z.C.C.	ZINC COATED COPPER
@	AT
&	AND

LEGEND

BATT INSULATION
BRICK
CONCRETE
CONCRETE BLOCK
CULTURED STONE
DISTURBED EARTH
UNDISTURBED EARTH
ENGINEERED WOOD (MDF, HDF, ETC.)
GLASS, SPECIALTY
GLASS, VERTICAL SURFACE
GYPSUM WALLBOARD
MARBLE/ GRANITE
MILLWORK
PLASTIC/PVC
PLYWOOD
RIGID INSULATION
RUBBLE
ASPHALT SHINGLES
STEEL/METAL
WOOD SHINGLES
WOOD

DISCLAIMER: HATCH PATTERN SCALE ADJUSTS BY DRAWING SCALE. SEE OTHER DESIGN DISCIPLINES FOR ADDITIONAL LEGEND & SCHEDULE INFORMATION.

EXTERIOR ELEVATION
INTERIOR ELEVATION
SECTION
DETAIL
DETAIL KEY
DETAIL CALLOUT
NAME EL. ELEVATION — BENCHMARK ELEVATION
SPOT ELEVATION
NORTH — PROJECT NORTH SYMBOL (DASHED INDICATES TRUE NORTH)
COLUMN GRID LINE NEW CONSTRUCTION
ROOM NAME ## — ROOM NAME AND MARK
L.O.C. — LIMITS OF CONSTRUCTION
— DOOR MARK
X — WALL TYPE
X — WINDOW TYPE
— KEY NOTE
EXISTING PARTITION EXISTING CONSTRUCTION
NEW PARTITION
— REVISION
— PHOTO SYMBOL
X — ACCESSORY/ FURNITURE / SPECIALTY EQUIPMENT MARK
FLOOR CHANGE LINE
REVISION CLOUD
FIRE EXTINGUISHER CABINET (F.E.C.)

GENERAL NOTES

1. ALL WORK SHALL CONFORM TO ALL APPLICABLE CODES AND REGULATIONS IN EFFECT AT THE PROJECT SITE.
2. DO NOT SCALE DRAWINGS. FIELD VERIFY ALL DIMENSIONS.
3. THE CONTRACTOR SHALL REPORT ANY AND ALL DISCREPANCIES TO THE ARCHITECT FOR CLARIFICATION BEFORE PROCEEDING. IT IS INTENDED THAT DIMENSIONS AND FIGURES ON THE DRAWINGS SHALL AGREE. THE CONTRACTOR SHALL CONFIRM ALL DIMENSIONS AND FIGURES BEFORE STARTING THE WORK AND SHALL REPORT IN WRITING ALL DISCREPANCIES TO THE ARCHITECT FOR ADJUSTMENT.
4. ALL DIMENSIONS OF NEW WORK ARE TO THE FACE OF CONCRETE AND MASONRY, AND THE CENTER OF STUDS AND FRAME OPENINGS U.N.O.
5. DIMENSIONS NOTED TO EXISTING PLANES SHALL REFER TO THE FINISHED SURFACE OF THE WALL, FLOOR, OR CEILING PLANE, UNLESS NOTED OTHERWISE.
6. ALL ITEMS OF WORK ARE TO BE NEW UNLESS NOTED AS EXISTING.
7. CONTRACTOR SHALL VERIFY ALL DOOR AND WINDOW DIMENSIONS IN FIELD BEFORE PURCHASE.
8. ALL DRAWINGS ARE COMPLIMENTARY AND MUST BE USED AS A SET FOR COMPLETE CONSTRUCTION INFORMATION.
9. IT SHALL BE THE DUTY OF THE CONTRACTOR TO REQUEST FROM THE ARCHITECT ALL NECESSARY INTERPRETATIONS OF THE CONTRACT DOCUMENTS.
10. DIMENSIONS AND ELEVATIONS INDICATED ON THE DRAWINGS IN REFERENCE TO EXISTING STRUCTURES ARE THE BEST AVAILABLE DATA OBTAINABLE BUT ARE NOT GUARANTEED BY THE OWNER AND THE OWNER WILL NOT BE RESPONSIBLE FOR THEIR ACCURACY. THE CONTRACTOR SHALL FIELD CHECK AND VERIFY ALL DIMENSIONS, GRADES, LINES, LEVELS, OR OTHER CONDITIONS OF LIMITATIONS AT THE SITE TO AVOID CONSTRUCTION ERRORS. IF ANY WORK IS PERFORMED BY THE CONTRACTOR OR ANY OF HIS SUB-CONTRACTORS PRIOR TO ADEQUATE VERIFICATION OF APPLICABLE DATA, ANY RESULTANT EXTRA COST FOR ADJUSTMENT OF WORK AS REQUIRED TO CONFORM TO EXISTING LIMITATIONS SHALL BE ASSUMED BY THE CONTRACTOR WITHOUT REIMBURSEMENT OF COMPENSATION BY THE OWNER.
11. OMISSION FROM THE DRAWINGS AND SPECIFICATIONS OF ITEMS WHICH OBVIOUSLY ARE NEEDED TO PROPERLY PERFORM THE WORK, SUCH AS ATTACHMENTS, BOLTS, HANGERS, ETC., SHALL NOT RELIEVE THE CONTRACTOR FROM FURNISHING AND INSTALLING THEM.
12. PRIOR TO BEGINNING ANY MECHANICAL, ELECTRICAL, PLUMBING, OR FIRE PROTECTION WORK THE CONTRACTOR WILL PROVIDE COMPLETE CAD BASED COORDINATION DRAWINGS THAT CONFIRM ALL DESIRED CEILING HEIGHTS. ANY CONFLICTS THAT WILL AFFECT THE DESIGN INTENT OR DESIGNED CEILING HEIGHTS WILL BE REPORTED TO THE ARCHITECT PROMPTLY IN ADVANCE OF ENGAGING IN THE WORK.
13. AFTER THE CONTRACT HAS BEEN AWARDED, THE CONTRACTOR WILL SUBMIT A FULL BAR CHART TYPE SCHEDULE THAT WILL INDICATE ALL MAJOR AND MINOR MILESTONES FOR THE WORK. THE CONTRACTOR WILL ALSO SUBMIT A SUBMITTAL AND SHOP DRAWING SCHEDULE FOR ALL COMPONENTS
14. ALL SUBMITTALS AND SHOP DRAWINGS WILL NEED TO BE STAMPED AS HAVING BEEN REVIEWED AND APPROVED BY THE CONTRACTOR FOR CONFORMANCE WITH THE PROJECT PRIOR TO SUBMITTING TO THE ARCHITECT. ANY SUBMITTAL WITHOUT THIS STAMP WILL BE PROMPTLY REJECTED AND RETURNED.
15. CHECKING OF THE SUBMITTALS AND SHOP DRAWINGS BY THE ARCHITECT IS ONLY FOR LIMITED GENERAL CONFORMANCE WITH THE INFORMATION GIVEN AND DESIGN CONCEPT EXPRESSED IN THE CONTRACT DOCUMENTS FOR THE PROJECT. THE CONTRACTOR IS RESPONSIBLE FOR QUANTITIES AND DIMENSIONS WHICH SHALL BE CONFIRMED AND CORRELATED AT THE JOBSITE; CONSTRUCTION MEANS, METHODS, PROCEDURES, TECHNIQUES, SEQUENCES, AND JOBSITE SAFETY; AND COORDINATION OF THEIR WORK WITH THAT OF THE OTHER TRADES.
16. CAREFULLY REVIEW THE SPECIFICATIONS FOR REQUIREMENTS RELATED TO FIELD APPROVED "MOCKUPS". ANY WORK BEGUN WITHOUT THE AUTHORIZATION OF AN APPROVED MOCKUP BY THE OWNER AND THE ARCHITECT IS AT THE CONTRACTOR'S RISK. UNSATISFACTORY WORK IS SUBJECT TO POSSIBLE REMOVAL AND REPLACEMENT AT THE CONTRACTOR'S EXPENSE.
17. IF DISCREPANCIES OCCUR BETWEEN THE DRAWINGS AND SPECIFICATIONS, CONSULT ARCHITECT FOR CLARIFICATION OF DESIRED METHOD. DURING THE BIDDING PHASE IF DISCREPANCIES ARE FOUND IN THE CONTRACT DOCUMENTS, CARRY THE AMOUNT OF WORK WHICH WOULD COME AT A GREATER COST.
18. CERTIFY AS PART OF EACH APPLICATION FOR PAYMENT THAT THE PROJECT RECORD DOCUMENTS "AS-BUILTS" ARE CURRENT AT THE TIME OF THE APPLICATION SUBMITTED. SUCH DRAWINGS ARE REQUIRED TO BE CURRENT AS A CONDITION OF APPROVING ANY PAYMENT TO THE CONTRACTOR OR SUB-CONTRACTOR.

DRAWING LIST

SHEET	SHEET NAME
GENERAL	
G0.0	COVER SHEET
G0.1	LEGEND, GENERAL NOTES, COMMON ABBREV., & DRAWING LIST
G0.2	CODE SUMMARY & EGRESS PLAN
ARCHITECTURAL	
A1.1	DEMO PLAN, FINISH PLAN, FLOOR PLAN, & REFLECTED CEILING PLAN
A1.2	INTERIOR ELEVATIONS, SCHEDULES, AND DETAILS
A1.3	CASEWORK
MECHANICAL	
M0.0	MECHANICAL LEGEND, GENERAL NOTES & DETAILS
M1.0	MECHANICAL FLOOR PLANS & WIRING DIAGRAM
M2.0	MECHANICAL DETAILS
PLUMBING	
P1.1	PARTIAL FIRST FLOOR PLAN PLUMBING
FIRE PROTECTION	
FP1.1	FIRE PROTECTION FLOOR PLANS
ELECTRICAL	
E0.0	ELECTRICAL SYMBOL LEGEND AND NOTES
E1.0	DEMOLITION AND NEW ELECTRICAL PLAN
E2.0	SCHEDULE & DETAILS AND OVERALL KEYPLAN

RHODE ISLAND COLLEGE

FOGARTY RESEARCH LABORATORY, INBRE

600 MT. PLEASANT AVENUE, PROVIDENCE, RI 02908

BREWSTER THORNTON GROUP ARCHITECTS LLP

317 Iron Horse Way, Suite 202
Providence, RI 02908

401.861.1600
brewsterthornton.com

NATHANIEL J. GIUSTINO

JOB NO. 1942 | DATE 01/31/20

ISSUE : **BID SET**

NO.	REVISION DESCRIPTION	DATE

SHEET TITLE

LEGEND, GENERAL NOTES, COMMON ABBREV., & DRAWING LIST

SHEET

G0.1

2/4/2020 10:09:13 AM

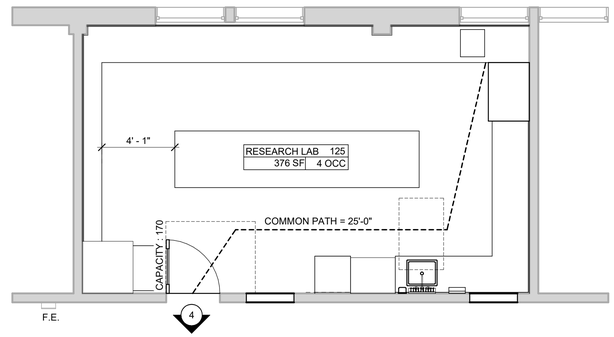

1 / G0.2 EGRESS PLAN
Scale: 1/4" = 1'-0"

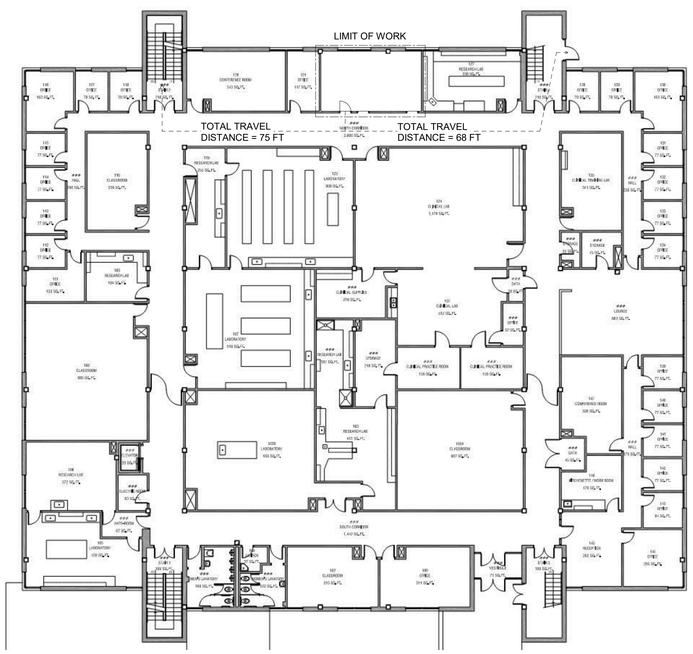

2 / G0.2 BUILDING EGRESS

CODE SUMMARY

APPLICABLE CODES

Rhode Island State Building Code (SBC-1-2019 (International Building Code, 2015 amended)
Rhode Island Fire Safety Code 2015 (RIFC: Rhode Island NFPA 1 - Fire Code (NFPA1, 2015 amended)
(RILSC: Rhode Island Life Safety Code (NFPA 101, 2015 amended)
Rhode Island Accessibility Code (ADAAG 2010: Accessible and Usable Buildings (ICC A117.1-2009)
City of Providence Zoning Ordinance

BUILDING INFORMATION

Higher Education - 376 SF Renovated Space

ZONING INFORMATION

I-2 Educational Institutional District

OCCUPANCY CLASS

Use/Occupancy	Business (B)
Accessory Use	N/A
Incidental Uses	N/A
Occupancy Separation	None Required

OCCUPANT LOADING

	REQUIRED	ACTUAL	REFERENCE
Business (B)	100 SF gross/person	4	SBC (Table 1004.1.1)
	100 SF gross/person	4	RILSC (Table 7.3.1.2)

HEIGHT & AREA REQUIREMENTS

Allowable Height & Area

Use Group	Allowable Height*	Max Area**	Area Increase**	Total Area Allowed
B	65'	23,000	200%	46,000

* Values from Table 503 per Floor
** Frontage & Sprinkler System Height & Area Increases from Section 506

TYPES OF CONSTRUCTION

Construction Type:	Type IIB (111)	Non-combustible Building Elements	SBC Table 601 RILSC A8.2.1.2

MEANS OF EGRESS

Egress Widths	REQUIRED	PROVIDED	REFERENCE
Corridors (w/ sprinkler)	.2"/occupant, but not less than 44" (36" if occupant load is less than 50)	Existing to remain	SBC 1024
Doors	32" minimum clear width	36" door provided	SBC 1008
Aisles in fixed furniture	36" minimum clear width	49"	SBC 1017

Minimum Number of Exits	REQUIRED	PROVIDED	REFERENCE
	Occupant load of greater than 50 requires minimum of 2 exits per space.	One (1) exit. Occupancy less than 50	SBC Table 1006.3.1

Travel Requirements	REQUIRED	PROVIDED	REFERENCE
Common Path	100 ft.	25 ft.	SBC 1029.8 & LSC Table A7.6
Total Travel	300 ft.	68 ft.	SBC Table 1029.7

FIRE & SMOKE PROTECTION

Rated Assemblies	REQUIRED		PROVIDED	REFERENCE
Corridor Protection	0 HR required if occupant load is greater than 30 w/ automatic sprinkler system		0 HR - Existing Sprinklered Building	SBC Table 1018.1 RILSC 38.3.6.1 (3)
Component	SBC REQ.	FSC REQ.		
Structural Frame	0 HR	0 HR	Proposed construction meets the minimum fire resistance requirements.	SBC Table 601 RILSC Table A8.2.1.2
Bearing Walls (Exterior)	0 HR	0 HR		
Bearing Walls (Interior)	0 HR	0 HR		
Nonbearing Walls	0 HR	0 HR		
Floor	0 HR	0 HR		
Roof	0 HR	0 HR		

LEGEND

LIMIT OF WORK		EXISTING FIRE EXTINGUISHER	F.E.
ROOM DESIGNATION	ROOM NAME / ROOM # / AREA / OCCUPANCY	CAPACITY OF EGRESS OPENING	CAPACITY = ##
EGRESS ANNOTATION (DIRECTION + # OCC.)	##	EXISTING TO REMAIN	
TRAVEL DISTANCE/ EGRESS PATH		NEW CONSTRUCTION	

RHODE ISLAND COLLEGE
FOGARTY RESEARCH LABORATORY, INBRE
600 MT. PLEASANT AVENUE, PROVIDENCE, RI 02908

BREWSTER THORNTON GROUP ARCHITECTS LLP
317 Iron Horse Way, Suite 202
Providence, RI 02908
401.861.1600
brewsterthornton.com

JOB NO. 1942
DATE 01/31/20
ISSUE : BID SET

NO.	REVISION DESCRIPTION	DATE

SHEET TITLE
CODE SUMMARY & EGRESS PLAN

SHEET
G0.2

2/4/2020 10:09:13 AM

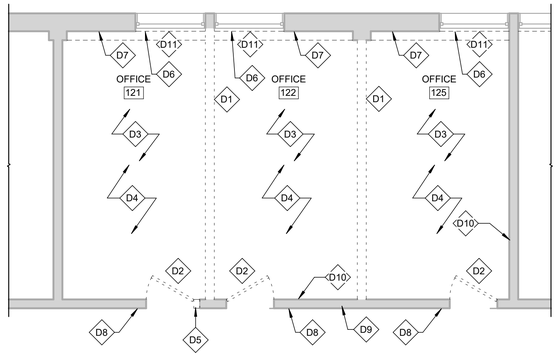

1 A1.1 DEMOLITION PLAN
Scale: 1/4" = 1'-0"

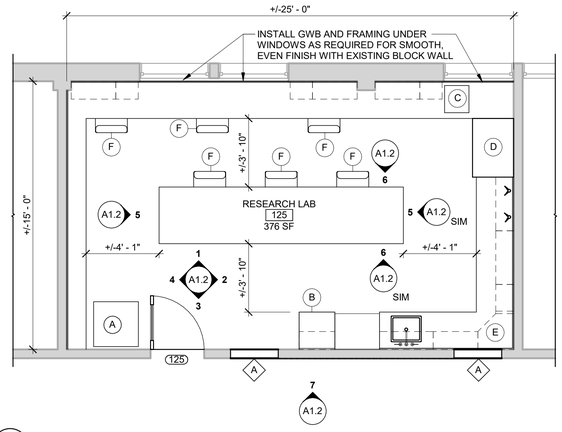

2 A1.1 PROPOSED FLOOR PLAN
Scale: 1/4" = 1'-0"

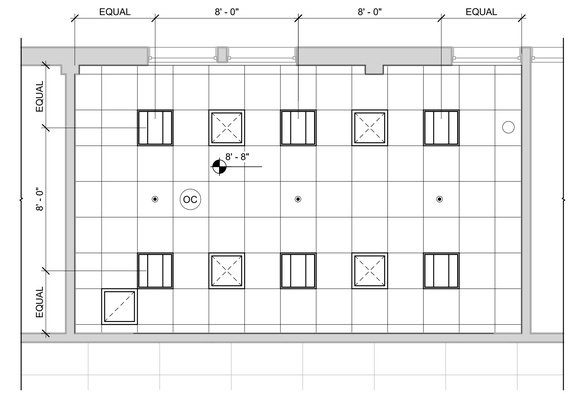

3 A1.1 REFLECTED CEILING PLAN
Scale: 1/4" = 1'-0"

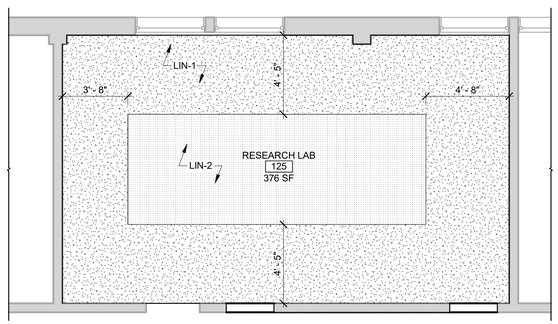

4 A1.1 FINISH FLOOR PLAN
Scale: 1/4" = 1'-0"

DEMOLITION KEYNOTES

KEYNOTE NUMBER	KEYNOTE
D1	R&D INTERIOR PARTITION WALL IN ITS ENTIRETY. SEE SPECIFICATIONS FOR HAZARDOUS MATERIALS AND ABATEMENT REQUIREMENTS. PATCH AND PREP WALL FOR SMOOTH, EVEN FINISH.
D2	R&D DOOR AND FRAME IN ITS ENTIRETY. SEE SPECIFICATIONS FOR HAZARDOUS MATERIALS AND ABATEMENT REQUIREMENTS. PATCH AND PREP SURROUNDING WALL AS NEEDED FOR SMOOTH, EVEN FINIS.
D3	R&D EXISTING CARPET, TILE FLOORING BELOW, AND WALL BASE IN THEIR ENTIRETY. SEE SPECIFICATIONS FOR HAZARDOUS MATERIALS AND ABATEMENT REQUIREMENTS.
D4	R&D ACT AND GRID IN ITS ENTIRETY. SEE SPECIFICATIONS FOR HAZARDOUS MATERIALS AND ABATEMENT REQUIREMENTS.
D5	R&D INTERIOR PARTITION WALL TO ACCOMMODATE DOOR AND FRAME. SEE SPECIFICATIONS FOR HAZARDOUS MATERIALS AND ABATEMENT REQUIREMENTS. PATCH AND PREP WALL FOR SMOOTH, EVEN FINISH.
D6	R&D WINDOW SHADES IN THEIR ENTIRETY.
D7	R&D WOOD SOFFIT IN ITS ENTIRETY.
D8	R&D ROOM SIGNAGE IN ITS ENTIRETY.
D9	R&D WALL BASE BETWEEN DOOR OPENINGS WITH IN THE SCOPE OF WORK. SEE SPECIFICATIONS FOR HAZARDOUS MATERIALS AND ABATEMENT REQUIREMENTS.
D10	R&D WALL AS NEEDED TO ACCOMMODATE MEP WORK. SEE SPECIFICATIONS FOR HAZARDOUS MATERIALS AND ABATEMENT REQUIREMENTS.PATCH AND PREP WALL AS NEEDED FOR SMOOTH, EVEN FINISH.
D11	R&D EXISTING INTERIOR WALL FINISH UNDER WINDOWS IN ITS ENTIRETY. PREP FOR INSTALLATION OF NEW WALL BOARD.

EQUIPMENT SCHEDULE

MARK	DESCRIPTION	COMMENT
A	REFRIGERATOR	PROVIDED BY OWNER-INSTALLED BY CONTRACTOR
B	UNDER-COUNTER FREEZER	PROVIDED BY OWNER-INSTALLED BY CONTRACTOR
C	INCUBATOR	PROVIDED BY OWNER-INSTALLED BY CONTRACTOR
D	FUME HOOD AND ACID CABINET	BY CONTRACTOR - LABCONCO 4'-0" PROTECTOR XSTREAM LABORATORY HOOD. MODEL #110 41 0000. ACID CABINET BELOW 48" ADA #9905600 AND INTERIOR SHELF #9919000
E	WATER FILTRATION SYSTEM	PROVIDED BY OWNER-INSTALLED BY CONTRACTOR
F	CHAIR	BY CONTRACTOR - KNOLL MULTIGENERATION HIGH TASK ARMLESS CHAIR ON CASTERS. BLACK FRAME AND STAR BASE. DARK RED SHELL FINISH. ONYX SEAT FABRIC.

DEMOLITION LEGEND

INDICATES ITEM OR AREA TO BE REMOVED

WALL STRUCTURE TO REMAIN, WALL FINISH TO BE REMOVED

WALL TO BE REMOVED IN ITS ENTIRETY

EXISTING DOOR & FRAME TO BE REMOVED

DEMOLITION KEY NOTE, SEE KEYNOTE SCHEDULE

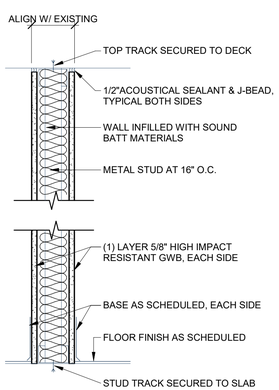

5 A1.1 WALL TYPE A
Scale: 1 1/2" = 1'-0"

RCP LEGEND

REFER TO MEP PLANS FOR ADDITIONAL INFORMATION

2'X2' ACOUSTIC CEILING TILE AND GRID

CEILING HEIGHT

CEILING HVAC SUPPLY DIFFUSER

2x2 RECESSED FIXTURE

CEILING HVAC RETURN GRILLE

EXIT LIGHT

SPRINKLER HEAD

OC OCCUPANCY SENSOR

RCP GENERAL NOTES

1. CONTRACTOR SHALL COORDINATE WITH ALL DISCIPLINES FOR SYSTEM EXTENTS & INSTALLATION. CONTRACTOR SHALL REFER TO ARCHITECTURAL DRAWINGS FOR COORDINATION OR EXACT LOCATIONS OF ALL DEVICES, LIGHT TRACKS, AND FIXTURES. OBTAIN ARCHITECT'S APPROVAL OF ALL CONDUIT, LIGHT TRACK, AND DEVICE LOCATIONS BEFORE INSTALLATION.
2. ALL LIGHT FIXTURES ARE CENTERED IN ROOM AND EQUALLY SPACED UNLESS OTHERWISE NOTED.
3. REFER TO MEP & FP DRAWINGS FOR ADDITIONAL INFORMATION FOR ALL FIXTURES, EQUIPMENT, AND DEVICES.
4. FIRE ALARM DEVICES & SPRINKLER HEADS SHOWN FOR LOCATION & COORDINATION PURPOSES ONLY. REFER TO FP DRAWINGS FOR COMPLETE SYSTEMS.
5. ALL CEILING HEIGHTS MEASURED FROM T.O. FINISH FLOOR, V.I.F.
6. COORDINATE MEP HEIGHTS TO ENSURE DOOR SWINGS & MILLWORK DO NOT CONFLICT. - V.I.F. W/ ARCHITECT.
7. REVIEW LAYOUT OF CEILING GRID WITH ARCHITECT PRIOR TO INSTALLATION.

GENERAL DEMOLITION NOTES

A. IT SHALL BE THE DUTY OF THE CONTRACTOR TO REQUEST FROM THE ARCHITECT ALL NECESSARY INTERPRETATION OF THE CONTRACT DOCUMENTS.

B. DRAWINGS ARE FOR ILLUSTRATIVE PURPOSES ONLY AND MAY NOT SHOW ALL DEMOLITION WORK REQUIRED TO COMPLETE THE CONTRACT WORK.

C. VERIFY ALL GIVEN DIMENSIONS AND CLEARANCES IN FIELD PRIOR TO WORK. THE CONTRACTOR SHALL VISIT THE SITE AND FAMILIARIZE THEMSELVES WITH ALL FIELD CONDITIONS TO DETERMINE THE EXTENT OF DEMOLITION, REMOVAL AND REPAIR. THE CONTRACTOR SHALL IMMEDIATELY NOTIFY THE ARCHITECT OF ANY ERRORS, OMISSIONS, DISCREPANCIES OR HIDDEN FIELD CONDITIONS WHICH PREVENT THE EXECUTION OF THE WORK AS SHOWN. EXTRA COMPENSATION FOR INADEQUATE EXAMINATION OF EXISTING CONDITIONS SHALL NOT BE CONSIDERED.

D. REFER TO ALL CONTRACT DOCUMENTS INCLUDING, BUT NOT LIMITED TO DRAWINGS AND SPECIFICATIONS FOR COORDINATION AND ADDITIONAL DEMOLITION INFORMATION. ALL PENETRATIONS IN WALLS OR FLOORS RESULTING FROM DEMOLITION OR OVER-DEMOLITION (AS REQUIRED TO PROPERLY INSTALL NEW WORK) OF ANY EXISTING STRUCTURAL, MECHANICAL, ELECTRICAL, FIRE PROTECTION, OR PLUMBING EQUIPMENT ARE TO BE PATCHED WITH NEW MATERIAL TO MATCH EXISTING AND FINISHED TO MATCH SURROUNDING FINISHED CONSTRUCTION.

E. THE GENERAL CONTRACTOR IS REQUIRED TO COORDINATE THE DEMOLITION WORK ASSIGNED TO THE SUB-TRADES, INCLUDING BUT NOT LIMITED TO ALL UTILITY DISCONNECTS, CUTOFF CAPPING, REMOVAL, DISMANTLING OR DISMOUNTING OF FIXTURES, EQUIPMENT, WIRING, PIPING, ETC. GENERAL CONTRACTOR IS RESPONSIBLE FOR ALL REMOVAL AND DISPOSAL.

F. THE GENERAL CONTRACTOR SHALL BE FULLY RESPONSIBLE FOR REMOVING ALL EXISTING MATERIALS WHICH WOULD OTHERWISE INTERFERE WITH THE PROPER INSTALLATION OR FUNCTION OF THE NEW WORK, WHETHER OR NOT SUCH EXISTING MATERIALS OR CONDITIONS HAVE BEEN INDICATED. THIS INCLUDES ALL ABANDONED FURNISHINGS, EQUIPMENT AND FINISHES.

G. ALL MATERIALS AND ITEMS TO BE REMOVED AND NOT RE-USED ON THIS PROJECT SHALL REMAIN THE PROPERTY OF THE OWNER AND SHALL BE TRANSPORTED TO AND STORED IN A PLACE DESIGNATED BY THE OWNER. IF, HOWEVER, THE OWNER DOES NOT DESIRE TO RETAIN POSSESSION OF ANY ITEMS, THEY SHALL BECOME THE PROPERTY OF THE CONTRACTOR WHO SHALL REMOVE THEM FROM THE PREMISES AND LEGALLY DISPOSE THEREOF.

H. UNLESS INDICATED OTHERWISE, THE OWNER WILL REMOVE ALL MOVEABLE EQUIPMENT AND FURNISHINGS.

I. CONTRACTOR SHALL PROVIDE TEMPORARY SHORING AT ALL LOCATIONS AS REQUIRED TO COMPLETE THE SCOPE OF WORK.

J. PROTECT EXISTING TO REMAIN AREAS DURING CONSTRUCTION. PATCH & REPAIR ANY DAMAGE CAUSED BY CONSTRUCTION ACTIVITIES.

K. REFER TO MEP DRAWINGS FOR ADDITIONAL DEMOLITION SCOPE.

L. PATCH ALL EXISTING WALLS FOR SMOOTH, EVEN FINISH INCLUDING AREAS AT DEMOLISHED WALLS AND EXISTING CRACKS.

M. ALL ABATEMENT PLAN, STATE FILING, REMEDIATION, AND AIR QUALITY TESTING BY CONTRACTOR.

RHODE ISLAND COLLEGE
FOGARTY RESEARCH LABORATORY, INBRE
600 MT. PLEASANT AVENUE, PROVIDENCE, RI 02908

BREWSTER THORNTON GROUP ARCHITECTS LLP
317 Iron Horse Way, Suite 202
Providence, RI 02908
401.861.1600
brewsterthornton.com

JOB NO.	DATE
1942	01/31/20

ISSUE : **BID SET**

NO.	REVISION DESCRIPTION	DATE

SHEET TITLE
DEMO PLAN, FINISH PLAN, FLOOR PLAN, & REFLECTED CEILING PLAN

SHEET
A1.1

2/18/2020 11:27:01 AM

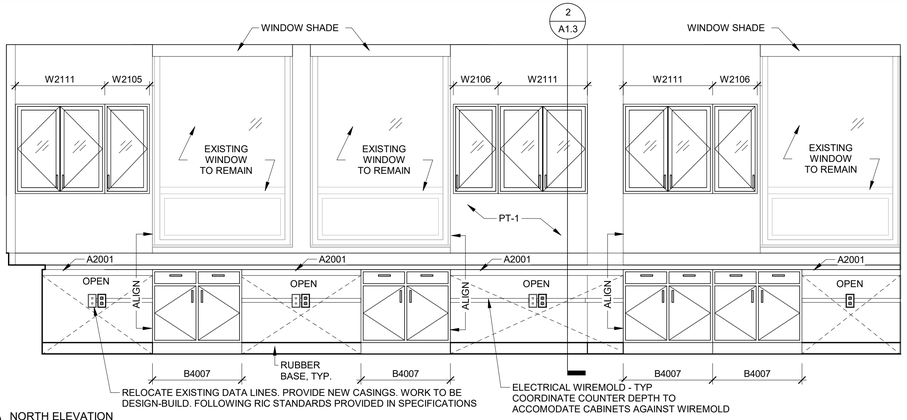

1 A1.2 NORTH ELEVATION
Scale: 1/2" = 1'-0"

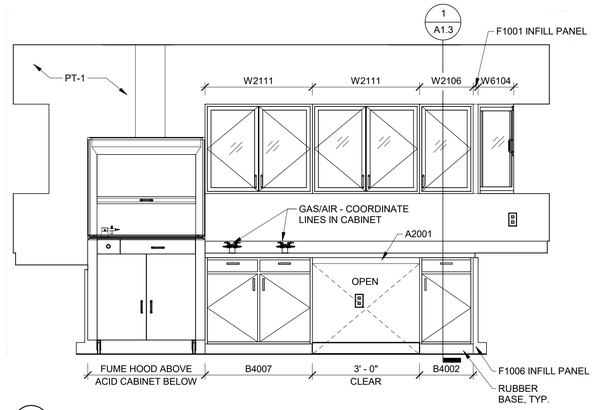

2 A1.2 EAST ELEVATION
Scale: 1/2" = 1'-0"

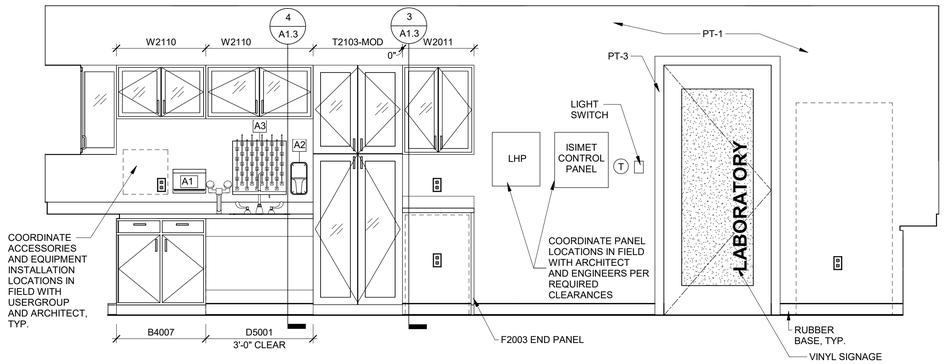

3 A1.2 SOUTH ELEVATION
Scale: 1/2" = 1'-0"

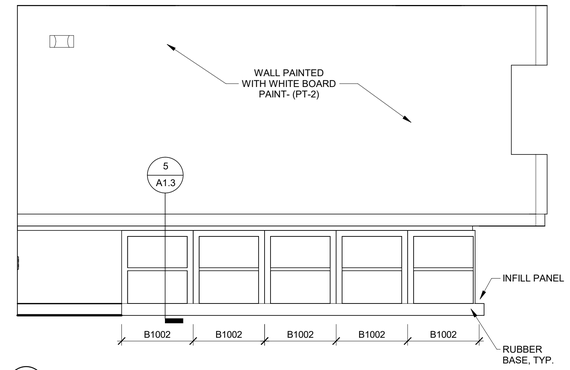

4 A1.2 WEST ELEVATION
Scale: 1/2" = 1'-0"

HEIGHTS OF ELECTRICAL DEVICES, U.N.O.

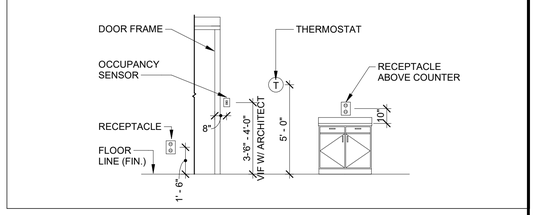

ACCESSORY MOUNTING HEIGHT LEGEND

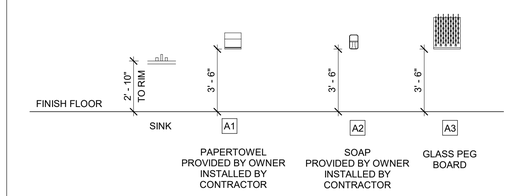

SEE SPECIFICATION FOR ADDITIONAL ACCESSORY INFORMATION.
REFER TO PLUMBING DRAWINGS FOR FIXTURE INFORMATION.

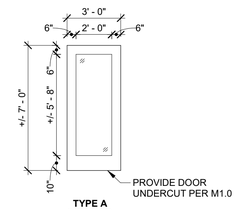

DOOR TYPE LEGEND
1/4" = 1'-0"

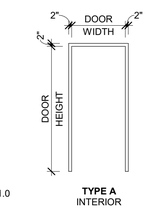

DOOR FRAME LEGEND
1/4" = 1'-0"

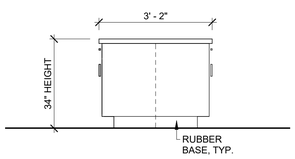

5 A1.2 ISLAND SIDE ELEVATION
Scale: 1/2" = 1'-0"

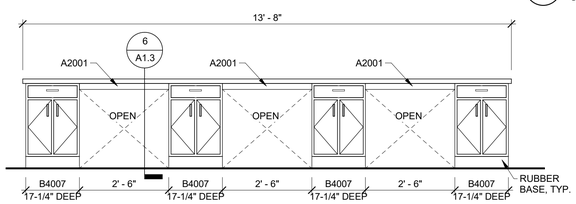

6 A1.2 ISLAND ELEVATION
Scale: 1/2" = 1'-0"

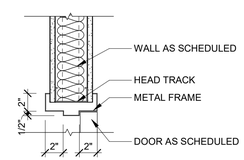

8 A1.2 TYPICAL HEAD DETAIL
Scale: 1 1/2" = 1'-0"

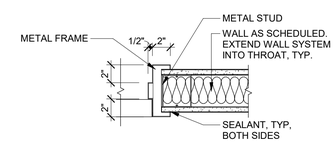

9 A1.2 TYPICAL JAMB DETAIL
Scale: 1 1/2" = 1'-0"

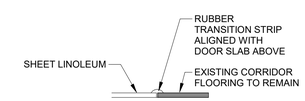

10 A1.2 TYPICAL THRESHOLD DETAIL
Scale: 3" = 1'-0"

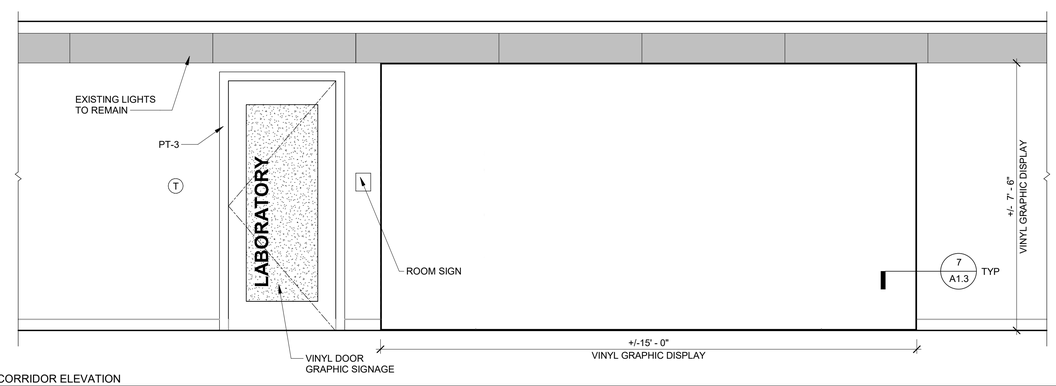

7 A1.2 CORRIDOR ELEVATION
Scale: 1/2" = 1'-0"

DOOR SCHEDULE

DOOR NUMBER	DOOR TYPE	DOOR MATERIAL	DOOR WIDTH	DOOR HEIGHT	DOOR THICKNESS	FIRE RATING	FRAME TYPE	FRAME MATERIAL	DETAILS HEAD	DETAILS JAMB	DETAILS SILL	HARDWARE	NOTES
125	A	WOOD	3' - 0"	7' - 0"	1-3/4"	N/A	A	H.M.	8/A1.2	9/A1.2	10/A1.2	01	

FINISH SCHEDULE

ROOM #	NAME	FLOOR	WALLS BASE	WALLS NORTH	WALLS EAST	WALLS SOUTH	WALLS WEST	CEILING
125	RESEARCH LAB	LINOLEUM	RUBBER	PT-1	PT-1	PT-1	PT-2	ACT

RHODE ISLAND COLLEGE
FOGARTY RESEARCH LABORATORY, INBRE
600 MT. PLEASANT AVENUE, PROVIDENCE, RI 02908

BREWSTER THORNTON GROUP ARCHITECTS LLP
317 Iron Horse Way, Suite 202
Providence, RI 02908
401.861.1600
brewsterthornton.com

JOB NO. 1942
DATE 01/31/20
ISSUE : BID SET

NO.	REVISION DESCRIPTION	DATE

SHEET TITLE
INTERIOR ELEVATIONS, SCHEDULES, AND DETAILS

SHEET
A1.2

2/4/2020 10:09:12 AM

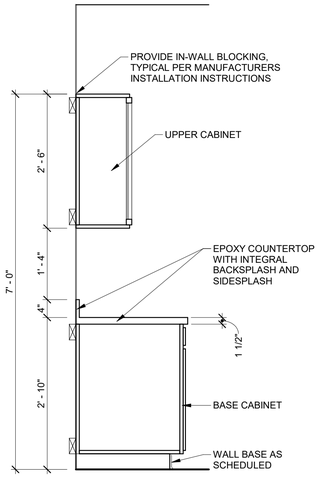

1 A1.3 TYPICAL CASEWORK SECTION
Scale: 3/4" = 1'-0"

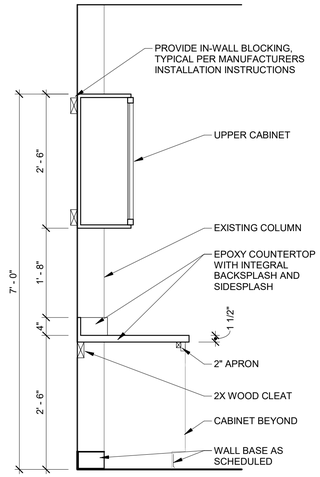

2 A1.3 SECTION @ LOW COUNTER
Scale: 3/4" = 1'-0"

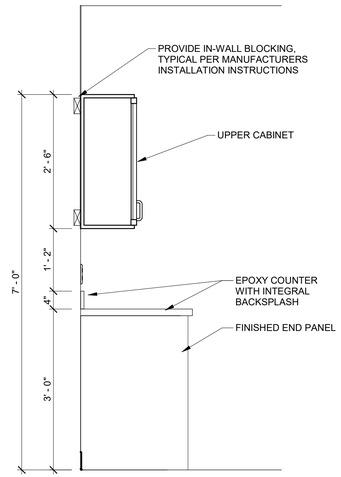

3 A1.3 CASEWORK SECTION @ HIGH COUNTER
Scale: 3/4" = 1'-0"

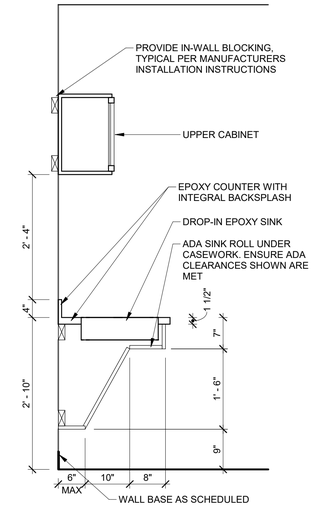

4 A1.3 CASEWORK SECTION @ SINK
Scale: 3/4" = 1'-0"

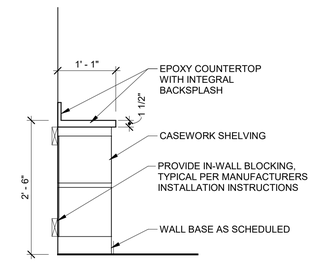

5 A1.3 SECTION @ BOOKSHELVES
Scale: 3/4" = 1'-0"

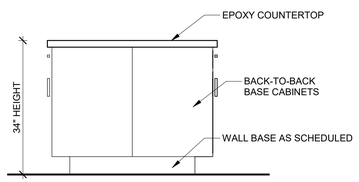

6 A1.3 SECTION @ ISLAND
Scale: 3/4" = 1'-0"

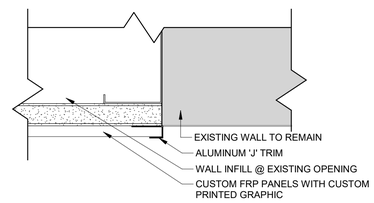

7 A1.3 TRIM DETAIL TYPICAL AT ALL SIDES
Scale: 6" = 1'-0"

RHODE ISLAND COLLEGE
FOGARTY RESEARCH LABORATORY, INBRE
600 MT. PLEASANT AVENUE, PROVIDENCE, RI 02908

BREWSTER THORNTON GROUP ARCHITECTS LLP
317 Iron Horse Way,
Suite 202
Providence, RI 02908

401.861.1600
brewsterthornton.com

MICHAEL J. GINSBURG

JOB NO.	DATE
1942	01/31/20

ISSUE : **BID SET**

NO.	REVISION DESCRIPTION	DATE

SHEET TITLE
CASEWORK

SHEET
A1.3

2/4/2020 10:09:13 AM

HVAC Ductwork Symbols & Abbreviations

SYMBOL	DESCRIPTION
	NEW PIPING, DUCTWORK, EQUIPMENT, ETC. (LINE WEIGHT)
	EXISTING PIPING, DUCTWORK, EQUIPMENT, ETC. (LINE WEIGHT)
	EXISTING PIPING, DUCTWORK, EQUIPMENT, ETC. (TO BE REMOVED)
	CONNECT NEW TO EXISTING
	EXHAUST DUCT UP
	SUPPLY DIFFUSER
	RETURN/EXHAUST REGISTER
FD	FIRE DAMPER
T	THERMOSTAT
U	UNDER CUT DOOR
BHP	BRAKE HORSEPOWER
BTU	BRITISH THERMAL UNIT
BTUH	BRITISH THERMAL UNIT PER HOUR
CD	CEILING DIFFUSER/CONDENSATE
CFM	CUBIC FEET PER MINUTE
CO	CLEANOUT
DB	DRY BULB TEMPERATURE °F
DN	DOWN
EF	EXHAUST FAN
EG	EXHAUST GRILLE
ETR	EXISTING TO REMAIN
EV	EXHAUST VALVE
EWT	ENTERING WATER TEMPERATURE
EXH	EXHAUST
FLA	FULL LOAD AMPS
FPM	FEET PER MINUTE
GC	GENERAL CONTRACTOR
GPM	GALLONS PER MINUTE
HP	HEAT PUMP/HORSE POWER
HWR	HOT WATER RETURN
HWS	HOT WATER SUPPLY
LAT	LEAVING AIR TEMPERATURE
LVG	LEAVING
LWT	LEAVING WATER TEMPERATURE
MBH	THOUSAND BTU PER HOUR
NTS	NOT TO SCALE
OA	OUTSIDE AIR
OBD	OPPOSED BLADE DAMPER
PD	PRESSURE DROP
PSI	POUNDS PER SQUARE INCH
RG	RETURN GRILLE
RPM	REVOLUTIONS PER MINUTE
SP	STATIC PRESSURE (INCHES OF WATER)
SS	STAINLESS STEEL
TYP	TYPICAL
WB	WET-BULB TEMPERATURE °F

HVAC Equipment Designations

SYMBOL	DESCRIPTION
– / –	EQUIPMENT TAG DESIGNATION NOTE: THE HEXAGON SYMBOL SHALL BE USED FOR ALL EQUIPMENT CALLOUTS REQUIRING ELECTRICAL POWER HOOK-UP.
– / –	EQUIPMENT TAG DESIGNATION/ACTIVE LENGTH FOR FIN-TUBE NOTE: THE SQUARE SYMBOL SHALL BE USED FOR ALL EQUIPMENT CALLOUTS THAT DO NOT REQUIRE ELECTRICAL POWER.

HVAC Piping Symbols

SYMBOL	DESCRIPTION
HWS	HOT WATER SUPPLY
HWR	HOT WATER RETURN
CD	CONDENSATE DRAIN
	DIRECTION OF DOWNWARD PITCH 1/8"/FOOT
	DIRECTION OF FLOW
	ELBOW TURNED DOWN
	ELBOW TURNED UP
	BALL VALVE
	BALL DRAIN VALVE WITH HOSE BIB, CAP & CHAIN
	GATE VALVE
	ANGLE VALVE (SHOWN IN SECTION DWGS)
	ANGLE VALVE (SHOWN ON DWG PLANS)
	BUTTERFLY VALVE
	BUTTERFLY VALVE WITH MEMORY STOP
	GLOBE VALVE
	CHECK VALVE
	LUBRICATED PLUG VALVE
T	THERMOSTATIC CONTROL VALVE
	TWO-WAY AUTOMATIC CONTROL VALVE
	THREE-WAY AUTOMATIC CONTROL VALVE
	PRESSURE REDUCING VALVE
	MANUAL AIR VENT
	AUTOMATIC AIR VENT WITH ISOLATION VALVE
	THERMOMETER
	PRESSURE GAUGE WITH BALL VALVE
	TEMPERATURE/PRESSURE WELL ("PETE'S PLUG")
	BALANCE VALVE & SHUT-OFF (CIRCUIT SETTER)
	UNION-SCREWED
	BLIND FLANGE (END OF SYSTEM)
	END CAP-SCREWED
	TOP TAKE-OFF
	BOTTOM TAKE-OFF
	DIRT LEG
	FLEXIBLE CONNECTION (SINGLE LINE PIPING)
	FLEXIBLE CONNECTION (DOUBLE LINE PIPING)
	VIBRATION ISOLATORS FLOOR MOUNTED & HANGING TYPE

HVAC GENERAL NOTES

GENERAL:

1. PROVIDE ALL MATERIALS AND EQUIPMENT AND PERFORM ALL LABOR REQUIRED TO INSTALL COMPLETE AND OPERATIONAL MECHANICAL SYSTEMS AS INDICATED ON THE DRAWINGS, AS SPECIFIED AND AS REQUIRED BY THE GOVERNING CODES AND STANDARDS.
2. EXAMINE ALL DRAWING AND SPECIFICATIONS FOR THE SCOPE OF WORK AND REQUIREMENTS OF THIS TRADE.
3. ALL WORK SHALL CONFORM TO LATEST ADOPTED CODES AND STANDARDS AND SHALL MEET THE REQUIREMENTS OF THE THE AUTHORITY HAVING JURISDICTION (AHJ). INSTALLATION PROCEDURES AND METHODS SHALL COMPLY WITH THE LATEST REQUIREMENTS OF THE FEDERAL OCCUPATIONAL SAFETY AND HEALTH ACT (OSHA). ALL PERMITS SHALL BE OBTAINED, PAID FOR AND MADE AVAILABLE AT THE COMPLETION OF WORK.
4. CONTRACT DOCUMENT DRAWINGS FOR MECHANICAL WORK ARE DIAGRAMMATIC IN NATURE AND ARE INTENDED TO CONVEY THE SCOPE OF WORK AND GENERAL ARRANGEMENT ONLY.
5. INSTALL ALL MECHANICAL EQUIPMENT AND APPURTENANCES IN ACCORDANCE WITH MANUFACTURERS RECOMMENDATIONS, CONTRACT DOCUMENTS AND ALL APPLICABLE CODES AND STANDARDS.
6. PRIOR TO PURCHASING ANY EQUIPMENT OR MATERIALS, THE PRODUCT DATA SHALL BE SUBMITTED FOR REVIEW. ALL EQUIPMENT AND MATERIALS SHALL BE NEW AND WITHOUT BLEMISH OR DEFECT. SUBSTITUTED EQUIPMENT OR OPTIONAL EQUIPMENT WHERE PERMITTED, SHALL CONFORM TO SPACE REQUIREMENTS. ANY SUBSTITUTED EQUIPMENT THAT CANNOT MEET SPACE REQUIREMENTS, ACCEPTED OR NOT, SHALL BE REPLACED WITH NO ADDITIONAL COST TO THE OWNER.
7. PROVIDE VIBRATION ISOLATION FOR ALL MECHANICAL EQUIPMENT TO PREVENT TRANSMISSION OF VIBRATION TO THE BUILDING STRUCTURE.
8. COORDINATE CONSTRUCTION OF ALL MECHANICAL WORK WITH ARCHITECTURAL, STRUCTURAL, ELECTRICAL WORK, ETC., SHOWN ON OTHER CONTRACT DOCUMENT DRAWINGS AND SPECIFICATIONS.
9. MAINTAIN A MINIMUM 8'-6" CLEARANCE TO THE UNDERSIDE OF PIPES, DUCTS, CONDUITS, AND SUSPENDED EQUIPMENT THROUGHOUT ACCESS ROUTES IN MECHANICAL ROOMS.
10. ALL TESTS SHALL BE COMPLETED PRIOR TO EQUIPMENT INSULATION IS APPLIED.
11. THE TESTING, ADJUSTING AND BALANCING CONTRACTOR SHALL BE A MEMBER OF THE ASSOCIATED AIR BALANCE COUNCIL (AABC) OR THE NATIONAL ENVIRONMENTAL BALANCING BUREAU (NEBB). TESTING, ADJUSTING AND BALANCING SHALL BE PERFORMED IN ACCORDANCE WITH THE AABC STANDARDS.
12. WHERE TWO OR MORE ITEMS OF THE SAME TYPE OF EQUIPMENT ARE REQUIRED, THE PRODUCT OF ONE MANUFACTURER SHALL BE USED.
13. COORDINATE ALL EQUIPMENT CONNECTIONS WITH MANUFACTURERS CERTIFIED DRAWINGS. COORDINATE AND PROVIDE ALL DUCT TRANSITIONS REQUIRED FOR FINAL EQUIPMENT CONNECTIONS TO FURNISHED EQUIPMENT. FIELD VERIFY AND COORDINATE ALL DUCT AND PIPING DIMENSIONS BEFORE FABRICATION.
14. ALL CONTROL WIRING AND CONDUIT SHALL COMPLY WITH THE LATEST NATIONAL ELECTRIC CODE (NEC).
15. CUTTING, CORING, DRILLING AND PATCHING OF HOLES AND OPENINGS IN ALL THE STRUCTURAL WALLS FOR THE WORK OF THE MECHANICAL CONTRACTOR SHALL BE PERFORMED BY THE MECHANICAL CONTRACTOR WHEN THE OPENING IS 6 INCHES OR LESS. IF THE OPENING EXCEEDS 6 INCHES, THE GENERAL CONTRACTOR SHALL PERFORM THE WORK. ALL SUCH WORK SHALL BE COORDINATED WITH THE GENERAL CONTRACTOR PRIOR TO ANY CUTTING.
16. LOCATIONS OF ALL ITEMS SHOWN ON THE DRAWINGS OR CALLED FOR IN THE SPECIFICATIONS THAT ARE NOT DEFINITELY FIXED BY DIMENSIONS ARE APPROXIMATE ONLY. THE EXACT LOCATIONS NECESSARY TO SECURE THE MOST FAVORABLE CONDITIONS AND RESULTS MUST BE DETERMINED BY THE ACTUAL PROJECT SITE CONDITIONS.
17. ALL EQUIPMENT, DUCTWORK, ETC., SHALL BE SUPPORTED AS REQUIRED TO PROVIDE A VIBRATION FREE INSTALLATION.
18. ALL DUCTWORK AND EQUIPMENT SUPPORTED FROM THE STRUCTURAL STEEL SHALL BE COORDINATED WITH THE GENERAL CONTRACTOR.
19. DUCTWORK DOWNSTREAM OF FAN TERMINAL BOXES SHALL BE PROVIDED WITH 1" LINER MINIMUM 10'-0" FROM BOX.
20. ALL NEW DUCTWORK RUN OUTS TO FAN BOXES SHALL CONNECT TO EXISTING SUPPLY AIR MAIN.
21. ALL EXISTING SUPPLY TAPS AT EXISTING SUPPLY MAIN SHALL BE CAPPED AND SEALED IF NOT REUSED. COVER WITH INSULATION TO MATCH EXISTING.
22. MOUNT ALL THERMOSTATS 60" AFF. COORDINATE LOCATION WITH ARCHITECT AND OWNER.

DIFFUSER, GRILLE & REGISTER SCHEDULE

SYMBOL	SELECTION RANGE (CFM)	NECK SIZE	MODULE FACE SIZE	FRAME TYPE	ACCESSORIES	MANUFACTURE/MODEL #	NC OR AIR PRESSURE DROP NOT TO EXCEED
CD-1	UP TO 210	8"ø	24x24	LAY-IN	N/A	PRICE SCD/3P/4A/B12	25 NC
EG-1	UP TO 500	12x12	24x24	LAY-IN	N/A	PRICE 80/TB/B12	25 NC

1. ALL DIFFUSER & REGISTERS SHALL BE SUPPLIED WITH BORDER TO SUIT ACTUAL INSTALLATION (I.E T-BAR CEILING OR DUCT MOUNTING).
2. ALL SUPPLY DIFFUSERS AND REGISTER SHALL BE SUPPLIED WITH A VOLUME CONTROL DAMPER ACCESSIBLE THROUGH THE DIFFUSER.
3. REFER TO THE ARCHITECTS DRAWINGS FOR THE FINAL LOCATIONS OF ALL DIFFUSERS, REGISTERS, AND GRILLES.

EXHAUST AIR VALVE SCHEDULE

SYMBOL	SELECTION RANGE (CFM)	MANUFACTURE/MODEL #	REMARKS
EV-1	10"ø	SIEMENS	NEW
EV-2	10"ø	SIEMENS	NEW
EV-128 (ETR)	10"ø	N/A	NEW

VARIABLE AIR VOLUME SCHEDULE

UNIT SYMBOL	TYPE	SELECTION RANGE (CFM)	HEATING CFM	INLET SIZE (IN.)	DISCHARGE SIZE WxH (IN.)	MAX S.P. DROP (IN. WG)	NC RATING		REHEAT COIL (HOT WATER)							MANUFACTURER MODEL NUMBER	REMARKS
							@1.5" SP	%CFM	MBH	EWT °F	LWT °F	EAT °F	GPM	PD (FT.)	ROWS		
VAV-125	SINGLE DUCT	250-700	350	10	14x10	0.03	28	100	–	180	–	55	–	–	–	ENVIRO-TEC SCR-WC-10	HIGH CAPACITY COIL
VAV-CORR	SINGLE DUCT	315-315	315	6	12x6	0.04	24	100	–	180	–	55	–	–	–	ENVIRO-TEC SCR-WC-6	HIGH CAPACITY COIL

NOTES:
1. PROVIDE 36" INTEGRAL ATTENUATORS W/ TERMINAL UNITS NOTED. COIL SHALL BE AT END OF ATTENUATOR.
2. PROVIDE UNIT W/ 1" PERFORATED METAL LINER.

EXISTING VARIABLE AIR VOLUME SCHEDULE

UNIT SYMBOL	TYPE	SELECTION RANGE (CFM)	HEATING CFM	INLET SIZE (IN.)	DISCHARGE SIZE WxH (IN.)	MAX S.P. DROP (IN. WG)	NC RATING		REHEAT COIL (HOT WATER)							MANUFACTURER MODEL NUMBER	REMARKS
							@1.5" SP	%CFM	MBH	EWT °F	LWT °F	EAT °F	GPM	PD (FT.)	ROWS		
EVAV-CORR	SINGLE DUCT	315-315	315	6	12x6	0.04	24	100	–	180	–	55	2	0.20	2	ENVIRO-TEC SCR-WC-6	HIGH CAPACITY COIL

HVAC SPECIFIC NOTES

EXISTING BUILDING CONTROL SYSTEM (BCS) IS SIEMENS. ALL NEW BCS ELEMENTS FOR THIS PROJECT ARE TO BE SIEMENS.

DEMOLITION NOTES

1. DISCONNECT AND REMOVE EXISTING DIFFUSERS AS INDICATED ON PLANS.
2. ALL DUCTWORK SHALL BE REMOVED AS SHOWN ON THE PLANS TO ALLOW NEW INSTALLATION. DUCTWORK NOT REUSED SHALL BE CAPPED AND SEALED AIR TIGHT.
3. REMOVED EXISTING THERMOSTATS AND CONTROL WIRING IN THEIR ENTIRETY. AS INDICATED. RELOCATE AS CALLED FOR.
4. DUCTWORK BEING REUSED SHALL HAVE THE OPENINGS TEMPORARILY COVERED.
5. WORK NOT SHOWN TO BE REMOVED IS EXISTING TO REMAIN.
6. ALL EQUIPMENT AND DUCTWORK REMOVED SHALL HAVE THE ASSOCIATED HANGERS REMOVED AS WELL.
7. VAV IN ROOM 22 SHALL BE RETURNED TO RIC FACILITY.

RHODE ISLAND COLLEGE
FOGARTY RESEARCH LABORATORY, INBRE
600 MT. PLEASANT AVENUE, PROVIDENCE, RI 02908

BREWSTER THORNTON GROUP ARCHITECTS LLP
317 Iron Horse Way, Suite 202
Providence, RI 02908
401.861.1600
brewsterthornton.com

Z.M. WOZNY
REGISTERED PROFESSIONAL ENGINEER

JOB NO. 1942
DATE 01/31/20
ISSUE : BID SET

NO.	REVISION DESCRIPTION	DATE

SHEET TITLE
MECHANICAL LEGEND, GENERAL NOTES & DETAILS

SHEET
M0.0

1/31/2020 8:52:15 AM

NOTES:

1. PATCH WALL OPENING AFTER DUCTWORK REMOVAL.

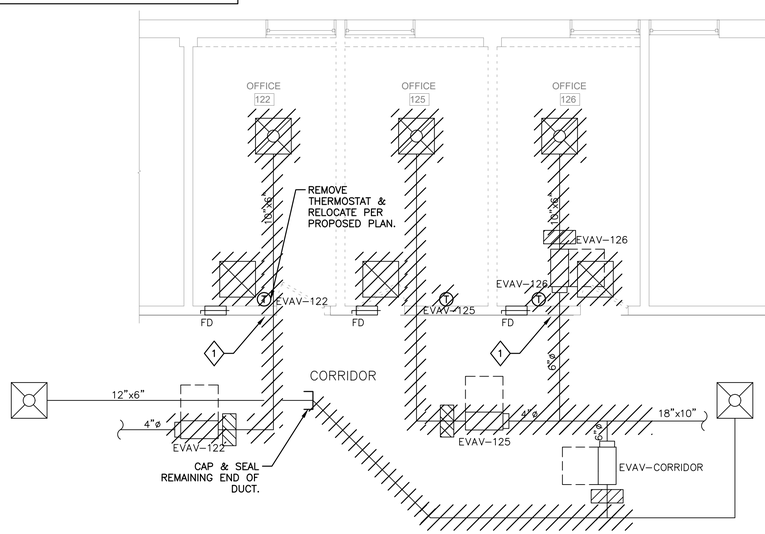

1 MECHANICAL DEMOLITION PLAN

SCALE: 1/4"=1'-0"

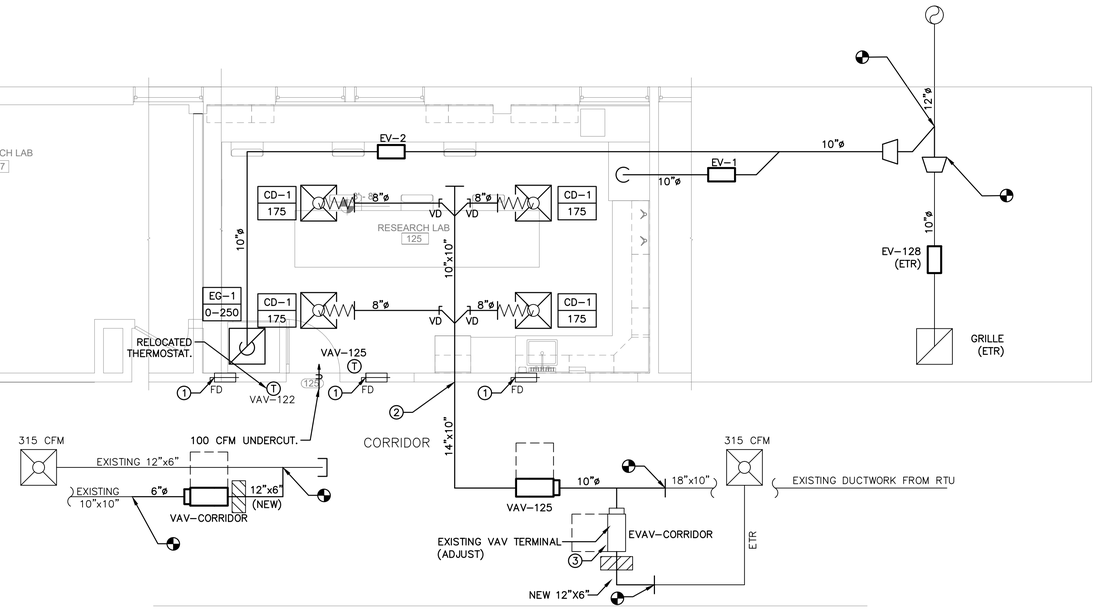

NOTES:

1. REMOVE FUSIBLE LINK & SHUT FIRE DAMPER TO MAINTAIN FIRE RATING OF WALL.
2. ENLARGE EXISTING WALL OPENING FOR NEW DUCTWORK IN LAB 125.
3. ADJUST VAV-CORRIDOR TO 315 CFM.

2 MECHANICAL PROPOSED PLAN

SCALE: 1/4"=1'-0"

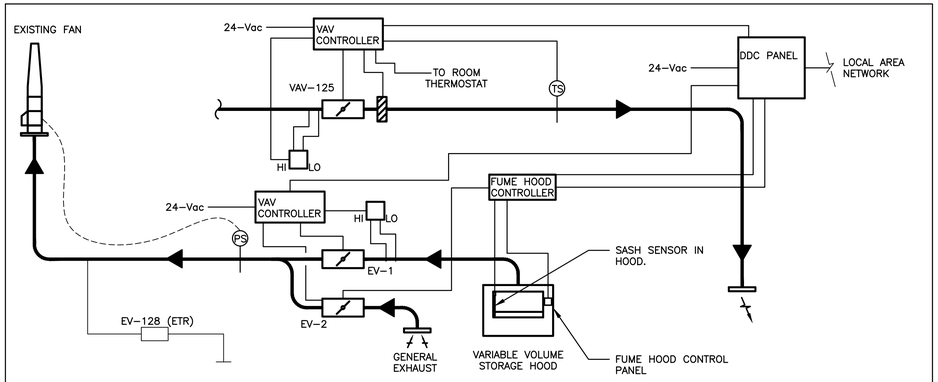

CONTROL SEQUENCE

1. THE LABORATORY CONTROL SYSTEM SHALL MAINTAIN A NEGATIVE PRESSURE (BY CFM OFFSET) WITHIN THE LAB RELATIVE TO THE CORRIDOR, INDEPENDENT OF FUME HOOD SASH POSITION OR SUPPLY OR EXHAUST SYSTEM FLUCTUATIONS, THE BMS SHALL TOTALIZE THE EXHAUST AND SUPPLY CFM VALUES AND THEN MAINTAIN A 100 CFM (ADJUSTABLE) OFFSET BETWEEN THE SUPPLY & EXHAUST.
2. THERE SHALL BE AN "IN USE" MODE AND A "STAND-BY" MODE. WHEN THE ZONE PRESENCE SENSOR IS ACTIVATED (IN-USE MODE), THE FUME HOOD OPERATES AT 100 FPM FACE VELOCITY. WHEN THE ZONE PRESENCE SENSOR IS DE-ACTIVATED (STAND-BY MODE) THE FUME HOOD OPERATES AT 60 FPM FACE VELOCITY.
3. HORIZONTAL AND VERTICAL SASH SENSORS SHALL SEND A RESISTANCE SIGNAL TO THE FUME HOOD CONTROLLER TO MAINTAIN FUME HOOD FACE VELOCITY BASED ON CALCULATED AREA. THE EXHAUST VOLUME WILL VARY DEPENDENT ON SASH POSITION AND THE SUPPLY AIR VALVE WILL VARY TO MAINTAIN AIR VOLUME OFFSET BETWEEN SUPPLY AND EXHAUST TO MAINTAIN REQUIRED NEGATIVE PRESSURE RELATIVE TO THE CORRIDOR.
4. REHEAT COILS ON THE LEAVING SIDE OF THE SUPPLY AIR VALVES SHALL CONTROL SPACE TEMPERATURE AT ALL AIR VOLUME SET POINTS.
5. DISCHARGE AIR TEMPERATURE SHALL BE MEASURED AND INPUTTED INTO THE BMS FOR INDICATION ONLY.

SCOPE OF WORK

1. INSTALL NEW FUME HOOD CONTROLS, VAV BOXES, ETC. FOR LAB 125. FOR FUME HOOD EXHAUST VALVE SIZE REFER TO DRAWINGS.
2. RE-CALIBRATE AND CONFIRM SEQUENCES AND LAB EXHAUST OFFSETS LAB LISTED IN THE TITLE ABOVE.
3. WORK WITH AIR BALANCER AS NEEDED TO SET THE PROPER AK FACTORS FOR ALL EXHAUST VALVES. REVISE CFM EXHAUST VALVES AS INDICATED ON THE SCHEDULE SHEETS.
4. PROVIDE REPORT WITH BEFORE AND AFTER READINGS OF EXHAUST BOX SETPOINTS.

3 LAB - CONTROLS DIAGRAM

SCALE: N/A

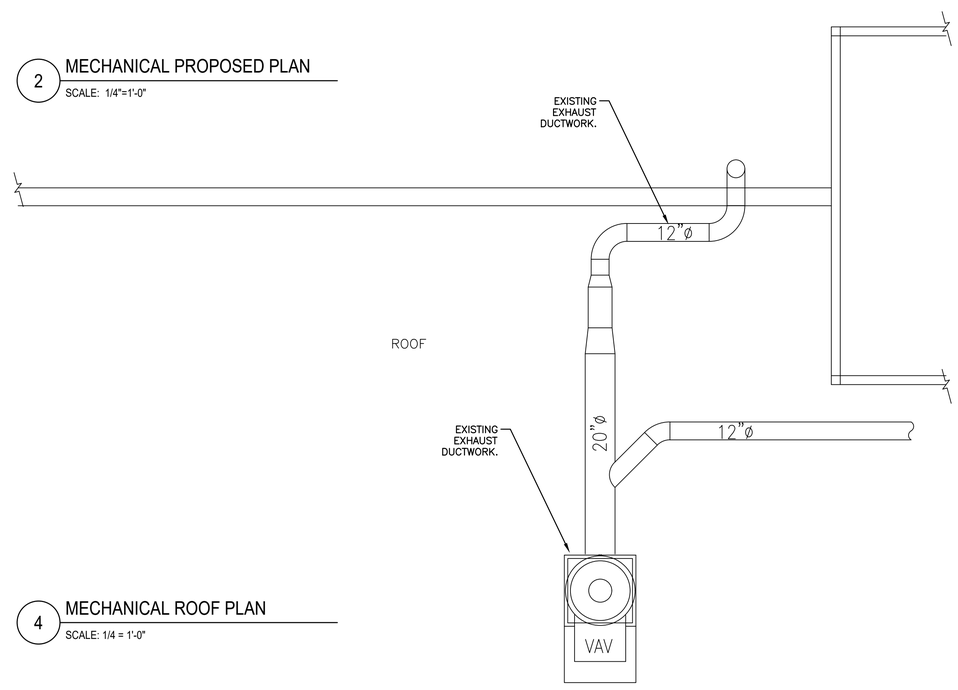

4 MECHANICAL ROOF PLAN

SCALE: 1/4 = 1'-0"

RHODE ISLAND COLLEGE

FOGARTY RESEARCH LABORATORY, INBRE

600 MT. PLEASANT AVENUE, PROVIDENCE, RI 02908

BREWSTER THORNTON GROUP ARCHITECTS LLP

317 Iron Horse Way, Suite 202
Providence, RI 02908

401.861.1600
brewsterthornton.com

Z.M. WOZNY
REGISTERED PROFESSIONAL ENGINEER

JOB NO.	DATE
1942	01/31/20

ISSUE : **BID SET**

NO.	REVISION DESCRIPTION	DATE

SHEET TITLE

MECHANICAL FLOOR PLANS & WIRING DIAGRAM

SHEET

M1.0

1/31/2020 8:52:16 AM

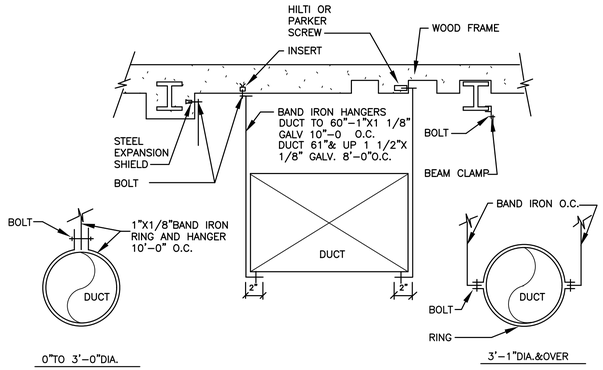

STANDARD HANGING DETAIL

Scale: None

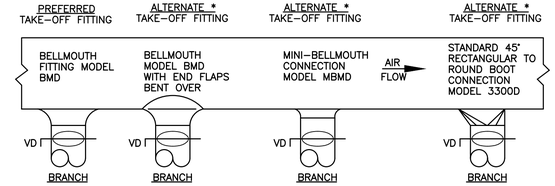

ALTERNATE FITTINGS TO BE USED WHEN DUCT HEIGHT DOES NOT PERMIT THE USE OF THE FULL SIZE BELLMOUTH.

DUCT SIZE	HOLE SIZE	MINIMUM DUCT HEIGHT
5"	8"	9"
6"	9"	10"
7"	10"	11"
8"	11"	12"
9"	12"	13"
10"	13"	14"
12"	15"	16"
14"	17"	18"
16"	19"	20"

DUCT SIZE	HOLE SIZE	MINIMUM DUCT HEIGHT
5"	–	–
6"	7"	9"
7"	–	–
8"	9"	11"
9"	–	–
10"	11"	13"
12"	–	–
14"	–	–
16"	–	–

DUCT SIZE	HOLE SIZE	MINIMUM DUCT HEIGHT
5"	5"x10"	7"
6"	6"x12"	8"
7"	6"x12"	8"
8"	6.5"x12"	8.5"
9"	6.5"x14"	8.5"
10"	6.5"x16"	8.5"
12"	8.5"x18"	12"
14"	10"x20"	10.5"
16"	–	–

ALTERNATE ROUND BRANCH DUCT TAKE–OFF

Scale: None

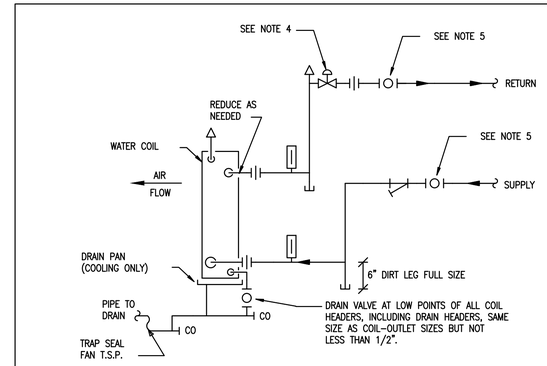

NOTES:

1. LOCATE PIPE UNIONS AND ARRANGE PIPING TO FACILITATE COIL REMOVAL.
2. UNIONS (OR FLANGED BODY) INDICATED TO PERMIT REMOVAL OF CONTROL VALVES. PROVIDE REDUCERS AS REQUIRED.
3. ON LINES 2" AND SMALLER, PROVIDE TEMPERATURE WELLS IN PIPE ELBOW.
4. TWO–WAY VALVE SHOWN SHALL BE PRESSURE INDEPENDENT TYPE. SEE AUTOMATIC–TEMPERATURE–CONTROL DIAGRAM AND SPECIFICATIONS FOR ACTUAL JOB REQUIREMENTS.
5. FOR SUPPLY AND RETURN 2.5" AND LARGER USE BUTTERFLY VALVES WITH FLANGES FOR ISOLATION.
6. FOR PIPE 1" AND SMALLER REPLACE PRESSURE GAUGES AND THERMOMETERS WITH TEMPERATURE/PRESSURE FITTING (PETE'S PLUG).

TYPICAL HOT WATER COIL DETAIL W/ 2–WAY VALVE

Scale: None

DIFFUSER NECK SIZE	ROUND DUCT SIZE
6"X6"	6"ø
7 1/2"X7 1/2"	7"ø
9"X9"	9"ø
10 1/2"X10 1/2"	10"ø
12"X12"	12"ø

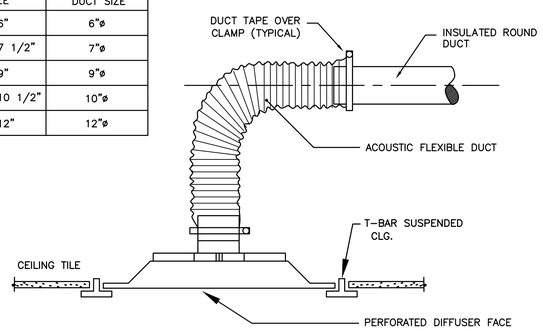

TYPICAL LAY–IN SUPPLY DIFFUSER DETAIL

Scale: None

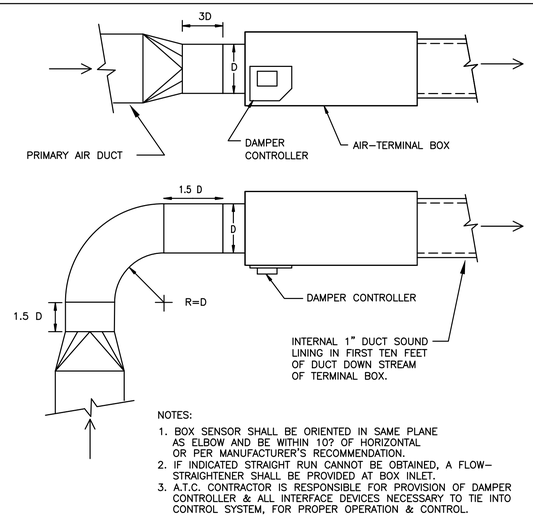

NOTES:

1. BOX SENSOR SHALL BE ORIENTED IN SAME PLANE AS ELBOW AND BE WITHIN 10? OF HORIZONTAL OR PER MANUFACTURER'S RECOMMENDATION.
2. IF INDICATED STRAIGHT RUN CANNOT BE OBTAINED, A FLOW–STRAIGHTENER SHALL BE PROVIDED AT BOX INLET.
3. A.T.C. CONTRACTOR IS RESPONSIBLE FOR PROVISION OF DAMPER CONTROLLER & ALL INTERFACE DEVICES NECESSARY TO TIE INTO CONTROL SYSTEM, FOR PROPER OPERATION & CONTROL.

VAV TERMINAL UNIT CONNECTIONS (HARD DUCTED) Scale: None

DUCT SIZE	HOLE SIZE	MINIMUM DUCT HEIGHT
6x4	7.5x5.5	7.5
10x4	11.5x5.5	7.5
16x4	17.5x5.5	7.5
24x4	25.5x5.5	7.5
6x5	7.5x6.5	8.5
10x5	11.5x6.5	8.5
16x5	17.5x6.5	8.5
24x5	25.5x6.5	8.5
6x6	7.5x7.5	9.5
10x6	11.5x7.5	9.5
16x6	17.5x7.5	9.5
24x6	25.5x7.5	9.5
8x8	9.5x9.5	11.5
16x8	17.5x9.5	11.5
24x8	25.5x9.5	11.5
10x10	11.5x11.5	13.5
16x10	17.5x11.5	13.5
24x10	25.5x11.5	13.5

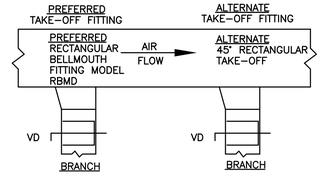

NOTES:

ALL ROUND AND RECTANGULAR BELLMOUTH FITTINGS SHALL BE INCLUDED WITH THE FOL–LOWING STANDARD FEATURES:

1. NEOPRENE GASKET TO MINIMIZE AIR LEAKAGE.
2. PRE–DRILLED HOLES FOR QUICK MOUNTING.
3. CONSTRUCTED OF HEAVY DUTY GALVANIZED STEEL

OPTIONAL FEATURES SHALL INCLUDE THE FOLLOWING:

1. 26 GAUGE GALVANIZED QUADRANT VOLUME DAMPER WITH TIGHT FITTING GASKETING TO MINIMIZE LEAKAGE AT DAMPER PIVOT POINTS.
2. HEAVY DUTY HARDWARE IS AVAILABLE FOR APPLICATIONS WITH INCREASED STATIC PRESSURE.

ALTERNATE RECTANGULAR BRANCH DUCT TAKE–OFF

Scale: None

NOTE:

INCREASE ALL DUCT DIMENSIONS TO ACC–OMODATE DUCT LINING, FREE AREA SIZE SHALL BE AS SHOWN ON DWG'S.

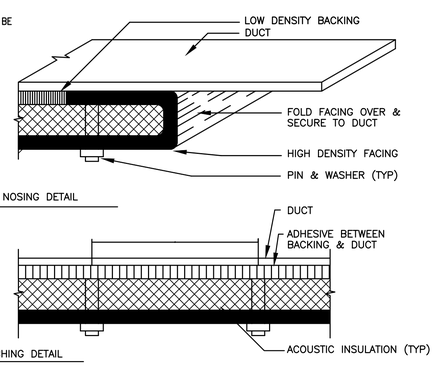

ACOUSTICAL DUCT LINING DETAIL

Scale: None

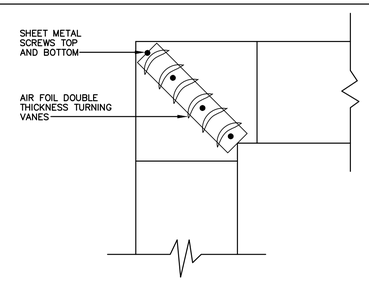

TYPICAL 90° DUCT ELBOW DETAIL

Scale: None

RHODE ISLAND COLLEGE

FOGARTY RESEARCH LABORATORY, INBRE

600 MT. PLEASANT AVENUE, PROVIDENCE, RI 02908

BREWSTER THORNTON GROUP ARCHITECTS LLP

317 Iron Horse Way, Suite 202
Providence, RI 02908

401.861.1600
brewsterthornton.com

Z.M. WOZNY

REGISTERED PROFESSIONAL ENGINEER

JOB NO.	DATE
1942	01/31/20

ISSUE : **BID SET**

NO.	REVISION DESCRIPTION	DATE

SHEET TITLE

MECHANICAL DETAILS

SHEET

M2.0

1/31/2020 8:52:17 AM

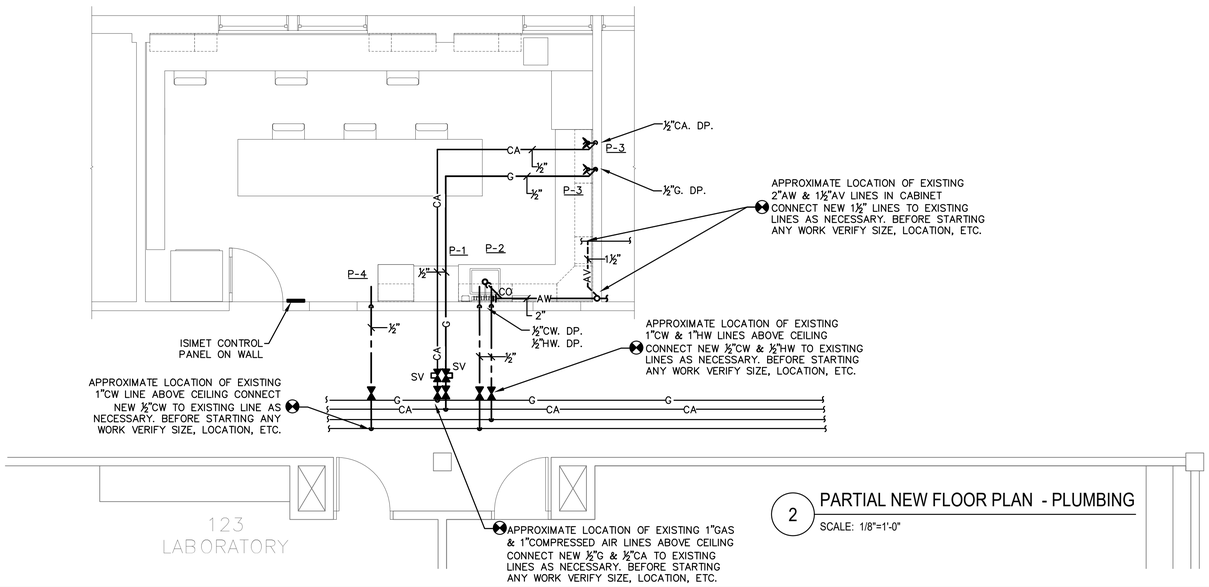

2 PARTIAL NEW FLOOR PLAN - PLUMBING

SCALE: 1/8"=1'-0"

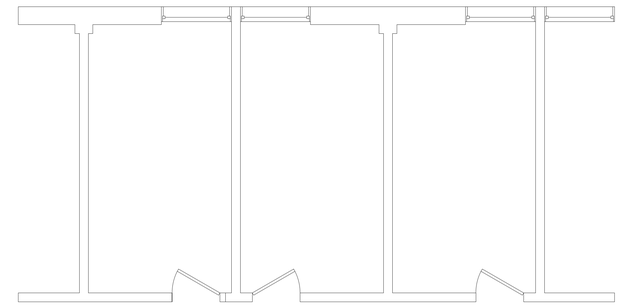

1 EXISTING FLOOR PLAN - PLUMBING

SCALE: 1/8"=1'-0"

PLUMBING EQUIPMENT CONNECTION SCHEDULE

DESIGNATION	FIXTURE DESCRIPTION	CONNECTION SIZE CW	HW	S/W	V	G	A	REMARKS
P-1	NEW SINK	1/2"	1/2"	1-1/2"AW	1-1/2"AV	–	–	THIS CONTRACTOR IS TO PROVIDE NEW ACID WASTE AND VENT PIPING CONNECTING TO EXISTING LINES IN ADJACENT. THIS CONTRACTOR IS TO MODIFY EXISTING ACID WASTE AND VENT PIPING IN CABINET FOR NEW PIPING CONNECTIONS. INTEGRAL SINK WITH COUNTER TOP PROVIDE CHICAGO FAUCET 930-369CP, GOOSE NECK SPOUT TO SUIT CENTERLINE OF DRAIN, VACUUM BREAKER, SERRATED NOZZLE, LEVER HANDLES 1.5 GPM FLOW RESTRICTOR, ACID WASTE TRAP TO MATCH PIPE TYPE SPECIFIED MCGUIRE LFH-175 HEAVY DUTY SUPPLIES AND STOPS. STRAINER IS TO MATCH EXISTING SINK MATERIAL.
P-2	EMERGENCY EYE-WASH	1/2"	1/2"	–	–	–	–	GUARDIAN G5022-FSH-HG-VB-TMV DECK MOUNTED UNIT COMPLETE WITH HOSE, HOSE UNDER COUNTER GUIDE, VACUUM BREAKER, G3600LF MIXING VALVE SUPPLIED FOR UNIT.
P-3	GAS TURRET	–	–	–	–	1/2"	1/2"	GAS/CA TURRET CHICAGO MODEL 982-909CAGCP DOUBLE GAS OUTLET. PROVIDE COMPRESSED AIR OR GAS INDEX ON UNIT.
P-4	REVERSE OSMOSIS SYSTEM	1/2"	–	–	–	–	–	NEW REVERSE OSMOSIS UNIT TO BE PROVIDED AND INSTALLED BY EQUIPMENT SUPPLIER. PROVIDE NEW ½" CW CONNECTION WITH VALVE AND STAINLESS STEEL FLEXIBLE CONNECTION FOR FINAL CONNECTION TO UNIT. COORDINATE ALL PIPING REQUIREMENTS WITH EQUIPMENT SUPPLIER. SEE ARCHITECTURAL INTERIOR ELEVATIONS FOR EQUIPMENT LOCATIONS.

ALL MATERIALS ARE TO CONFORM TO RHODE ISLAND COLLEGE STANDARDS. SEE ARCHITECTURAL INTERIOR ELEVATIONS FOR EQUIPMENT LOCATIONS.

PLUMBING LEGEND

SYMBOL	ABBREVIATION	DESCRIPTION
G	G	NATURAL GAS
CA	CA	COMPRESSED AIR
	CW	COLD WATER PIPING
	HW	HOT WATER PIPING
	HWR	HOT WATER RETURN PIPING
	AW	ACID WASTE PIPING
	AV	ACID VENT PIPING
	UP	UP (PENETRATES LEVEL ABOVE)
		RISE (BUT DOES NOT PENETRATE LEVEL ABOVE)
	DN	DOWN (PENETRATES LEVEL BELOW)
		DROP (BUT DOES NOT PENETRATE LEVEL BELOW)
		DIRECTION OF FLOW
.01		DIRECTION & DESIGNATION OF SLOPE (IN FT/FT)
		SHUTOFF VALVE
	DV	DRAIN VALVE WITH HOSE THREADS
		NATURAL GAS SHUTOFF VALVE
	WHA	WATER HAMMER ARRESTOR
	EXPJ	EXPANSION JOINT
	CO	CLEANOUT
	COT	CLEANOUT TEE
	WCO	WALL CLEANOUT
	W&T	WASTE & TRAP
	UN	UNION
	CTE	CONNECT TO EXISTING
	P–	PLUMBING FIXTURE DESIGNATION

PLUMBING GENERAL NOTES

1. THE WORK CONSISTS OF FURNISHING ALL LABOR AND MATERIALS NECESSARY TO INSTALL A COMPLETE AND READY FOR CONTINUOUS OPERATION PLUMBING SYSTEM INCLUDING BUT NOT LIMITED TO APPARATUS AND EQUIPMENT FOR THIS PROJECT.
2. ALL EQUIPMENT AND MATERIALS FURNISHED UNDER THE PLUMBING SUB CONTRACT. INCLUDING LABOR AND TESTING PERFORMED HEREIN SHALL BE IN ACCORDANCE WITH THE STATE BUILDING CODE, FUEL GAS AND PLUMBING CODE, ALL LOCAL CODES AND REGULATIONS, NATIONAL FIRE PROTECTION ASSOCIATION, INSURANCE REGULATIONS AND REQUIREMENTS GOVERNING SUCH WORK.
3. ANY AND ALL PERMITS REQUIRED FOR INSTALLATION OF ANY MATERIALS SHALL BE. OBTAINED AS PART OF THE WORK OF THE DRAWINGS AND SPECIFICATIONS INCLUDING ALL FEES AND EXPENSES INCURRED.
4. REFER TO ARCHITECTURAL DRAWINGS FOR EXACT LOCATION AND MOUNTING HEIGHTS OF ALL PLUMBING FIXTURES AND EQUIPMENT.
5. MISCELLANEOUS DISCREPANCIES OR OMISSIONS WHICH MIGHT APPEAR ON THE PLANS. OR SPECIFICATIONS WILL NOT RELIEVE THE PLUMBING SUB CONTRACTOR OF CODE COMPLIANCE.
6. PROVIDE FIRE STOPPING OF MATERIAL OR COMBINATION OF MATERIALS, TO RETAIN THE INTEGRITY OF TIME RATED CONSTRUCTION BY MAINTAINING AN EFFECTIVE BARRIER AGAINST THE SPREAD OF FLAME, SMOKE AND GASES. IT SHALL BE USED IN ALL PIPING AND HANGER PENETRATIONS THROUGH FLOOR SLABS, TIME RATED PARTITIONS AND FIRE WALLS.
7. FIRE STOPPING MATERIAL SHALL BE ASBESTOS-FREE AND IN COMPLIANCE WITH ASTM E814 AND UL 1479. ALL MATERIAL SHALL MEET THE REQUIREMENTS OF NFPA 101 SAFETY CODE AND NFPA 70 NATIONAL ELECTRIC CODE.
8. UPON COMPLETION OF ALL NEW GAS WORK THIS CONTRACTOR IS TO PURGE THE EXISTING GAS PIPING SYSTEM AND VERIFY ALL EXISTING GAS-FIRED EQUIPMENT IS PROPERLY OPERATING.
9. BEFORE STARTING ANY WORK CONTRACTOR IS TO FIELD VERIFY ALL EXISTING CONDITIONS FOR SIZE, LOCATION, INVERT, ETC.
10. CONTRACTOR IS TO COORDINATE ALL SHUT DOWNS WITH RHODE ISLAND COLLEGE PRIOR TO COMMENCING ANY WORK.

RHODE ISLAND COLLEGE

FOGARTY RESEARCH LABORATORY, INBRE

600 MT. PLEASANT AVENUE, PROVIDENCE, RI 02908

BREWSTER THORNTON GROUP ARCHITECTS LLP
317 Iron Horse Way, Suite 202
Providence, RI 02908
401.861.1600
brewsterthornton.com

Z.M. WOZNY
REGISTERED PROFESSIONAL ENGINEER

JOB NO. 1942
DATE 01/31/20

ISSUE : BID SET

NO.	REVISION DESCRIPTION	DATE

SHEET TITLE
PARTIAL FIRST FLOOR PLAN PLUMBING

SHEET
P1.1

1/24/2020 3:38:57 PM

SPRINKLER HEADS

SYMBOL	DESCRIPTION
	SEMI-RECESSED SPRINKLER
	UPRIGHT SPRINKLER
	NEW UPRIGHT SPRINKLER
EC	NEW CHROME PENDANT EXTENDED COVERAGE SPRINKLER
	NEW CONCEALED SPRINKLER (PROVIDE WHITE CAPS)
	ARM-OVER TO NEW SPRINKLER HEAD LOCATION
	EXISTING TO BE REMOVED (VARIOUS TYPES)

PIPES

SYMBOL	ABBREVIATION	DESCRIPTION
		CONTINUATION MARK
		TEE LOOKING DOWN
		CAP OR END OF PIPE
		ELBOW UP OR RISER
		ELBOW DOWN OR DROP
F	F	UNDERGROUND FIRE SERVICE PIPING
	D	EXISTING SPRINKLER PIPING
	DR	SPRINKLER DRAIN
	WS	WET SPRINKLER PIPING
		EXISTING TO BE REMOVED (PIPING)

VALVES & GAUGES

SYMBOL	ABBREVIATION	DESCRIPTION
	SOV	SHUT-OFF VALVE W/ TAMPER SWITCH
	CV	CHECK VALVE
	FS	FLOW SWITCH
	BV	BALL VALVE
	CTE	CONNECT TO EXISTING
	FCVA	FLOOR CONTROL VALVE ASSEMBLY

MISC.

SYMBOL	ABBREVIATION	DESCRIPTION
	TS	TAMPER SWITCH
	NTS	NOT TO SCALE
#		HYDRAULIC NODE POINTS (SPRINKLER)
#		HYDRAULIC NODE POINTS (PIPING)

NOT ALL SYMBOLS MAY BE USED

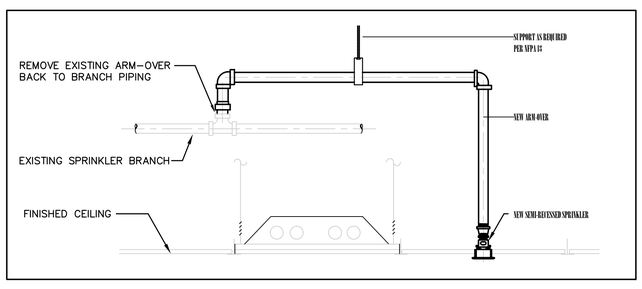

1 CONNECTION TO EXISTING BRANCH OUTLET (NTS)

GENERAL NOTES

1. THE WORK COVERED CONSISTS OF FURNISHING ALL LABOR AND MATERIALS NECESSARY TO INSTALL, COMPLETE AND READY THE FIRE PROTECTION SYSTEM FOR CONTINUOUS OPERATION.
2. ALL EQUIPMENT AND MATERIALS FURNISHED UNDER THE FIRE PROTECTION SUB-CONTRACT, LABOR AND TESTING PERFORMED HEREIN SHALL BE IN COMPLETE ACCORDANCE WITH THE RHODE ISLAND STATE BUILDING CODE, THE LOCAL AUTHORITIES, THE NATIONAL FIRE PROTECTION ASSOCIATION AND INSURANCE REGULATIONS AND REQUIREMENTS GOVERNING SUCH WORK.
3. ANY AND ALL PERMITS REQUIRED FOR INSTALLATION OF ANY MATERIAL SHALL BE OBTAINED AS PART OF THE SPECIFICATIONS INCLUDING ALL FEES OR EXPENSES INCURRED.
4. SPRINKLER DENSITY AND AREA OF APPLICATION SHALL BE IN ACCORDANCE WITH NFPA 13-2013.
5. THE SPRINKLER CONTRACTOR SHALL PREPARE WORKING DRAWINGS OF THE SPRINKLER WORK AND OBTAIN APPROVALS FROM THE PROVIDENCE FIRE DEPARTMENT PRIOR TO INSTALLATION.
6. ROUTING OF SPRINKLER MAINS, BRANCHES AND HEADS SHALL BE THOROUGHLY COORDINATED WITH THE OTHER TRADES AND BUILDING STRUCTURE PRIOR TO SUBMISSION OF COORDINATED SHOP DRAWINGS.
7. PAY ALL FEES ASSOCIATED WITH ALL FIRE PROTECTION AND FIRE ALARM DEACTIVATIONS AND REACTIVATIONS.
8. SUBMIT TO THE ENGINEER FOR APPROVAL STAMPED AND SIGNED SPRINKLER FABRICATION DRAWINGS PRIOR TO THE START OF WORK.
9. THE DESIGN DRAWINGS INDICATE SPRINKLERS IN THE HYDRAULICALLY MOST REMOTE AREAS ONLY. SPRINKLER CONTRACTOR SHALL PROVIDE SHOP DRAWINGS INDICATING ALL REQUIRED SPRINKLERS IN ACCORDANCE WITH NFPA REQUIREMENTS AND DESIGN CRITERIA PROVIDED.

FIRE PROTECTION SPECIFICATION

1. GENERAL
   - A. DRAWINGS ARE DIAGRAMMATIC AND INDICATE GENERAL ARRANGEMENT OF WORK IN CONTRACT. THE CONTRACTOR SHALL PROVIDE ALL COMPONENTS AND MATERIALS NECESSARY TO MAKE THE SYSTEM FULLY COMPLETE AND OPERATIONAL.
   - B. CHECK CONTRACT DRAWINGS AS WELL AS SHOP DRAWINGS OF ALL SUBCONTRACTORS TO VERIFY AND COORDINATE SPACES IN WHICH WORK OF THIS SECTION WILL BE INSTALLED.
2. SCOPE
   - A. PERFORM WORK AND PROVIDE MATERIAL AND EQUIPMENT AS SHOWN ON DRAWINGS AND AS SPECIFIED IN THIS SECTION OF THE SPECIFICATION
   - B. WORK SHALL INCLUDE, BUT NOT BE LIMITED TO:
     1. MODIFICATIONS TO EXISTING WET PIPE SPRINKLER SYSTEM AS INDICATED.
     2. SUBMIT WORKING PLANS/COORDINATION DRAWINGS IN ACCORDANCE WITH NFPA NO. 13, 2013.
     3. PERFORM ALL TESTS AND SUBMIT CONTRACTORS MATERIAL AND TEST CERTIFICATES IN ACCORDANCE WITH NFPA 13, 2013.
     4. PERFORM SHUT-DOWNS WITH A FIRE WATCH AS NECESSARY TO PERFORM WORK AND COORDINATE AN APPROVED IMPAIRMENT PLAN WITH THE AUTHORITY HAVING JURISDICTION.
3. SITE VISIT
   - A. BEFORE SUBMITTING BID, VISIT AND CAREFULLY EXAMINE SITE TO IDENTIFY EXISTING CONDITIONS AND DIFFICULTIES THAT WILL AFFECT WORK OF THIS SECTION. INDICATE IN BID ANY AREAS WHERE SPRINKLERS ARE REQUIRED BUT NOT SPECIFIED OR SHOWN IN THE BID DOCUMENTS. NO EXTRA PAYMENT WILL BE ALLOWED FOR ADDITIONAL WORK CAUSED BY UNFAMILIARITY WITH SITE CONDITIONS THAT ARE VISIBLE OR READILY CONSTRUED BY EXPERIENCED OBSERVER.
4. CODES, STANDARDS, AUTHORITIES AND PERMITS
   - A. PERFORM WORK REQUIRED BY RULES, REGULATIONS, STANDARDS, CODES, ORDINANCES AND LAWS OF LOCAL, STATE AND FEDERAL GOVERNMENT, AND OTHER AUTHORITIES WHOM HAVE LEGAL JURISDICTION.
   - B. MATERIALS AND EQUIPMENT SHALL BE MANUFACTURED, INSTALLED AND TESTED AS SPECIFIED:
     1. LOCAL AND STATE BUILDING AND FIRE DEPARTMENT CODES.
     2. NFPA STANDARDS ADOPTED IN RHODE ISLAND.
     3. INSURANCE UNDERWRITER REQUIREMENTS.
     4. AUTHORITY HAVING JURISDICTION: CITY OF PROVIDENCE, RI.
5. GUARANTEE
   - A. GUARANTEE WORK OF THIS SECTION IN WRITING FOR ONE YEAR FOLLOWING THE DATE OF SUBSTANTIAL COMPLETION.
6. SUBMITTALS
   - A. PROVIDE PRODUCT DATA PREPARED BY MANUFACTURERS, SUPPLIERS AND VENDORS COMPRISING:
     1. DETAILED DIMENSIONAL DRAWINGS INCLUDING SEPARATE REFLECTED CEILING PLANS OF EACH SPRINKLER HEAD.
        - a. ACCURATE AND COMPLETE DESCRIPTION OF MATERIALS OF CONSTRUCTION.
        - b. MANUFACTURER'S PUBLISHED PERFORMANCE CHARACTERISTICS AND CAPACITY RATINGS (PERFORMANCE DATA ALONE, IS NOT ACCEPTABLE)
7. PIPE AND FITTINGS
   - A. PIPE SHALL MEET APPLICABLE ANSI OR ASTM STANDARDS AND SHALL HAVE MANUFACTURERS NAME AND STANDARD MARKED ON EACH LENGTH. JOINTS SHALL MEET APPLICABLE ANSI OR ASTM STANDARDS. WHERE ANSI OR ASTM STANDARD DOES NOT EXIST, JOINTS AND FITTINGS SHALL BEAR UL LISTING SYMBOL.
   - B. MATERIALS
     1. SERVICE: WET PIPE SPRINKLER SYSTEMS, 2" OR SMALLER
     2. PIPE MATERIAL: WELDED AND SEAMLESS STEEL PIPE, SCHEDULE 40, ASTM A53.
     3. PIPE MATERIAL: MALLEABLE IRON, CLASS 150, ANSI B16.3.
     4. JOINT: THREADED.
8. HANGERS, ANCHORS, CLAMPS, AND INSERTS
   - A. HANGERS SHALL MEET NFPA STANDARDS. PROVIDE ADJUSTABLE SWIVEL RINGS FOR PIPING 3" AND SMALLER. SUPPORT PIPING FROM BUILDING STRUCTURE TO MAINTAIN REQUIRED GRADE AND PITCH OF PIPE LINES, PREVENT VIBRATION AND SECURE PIPING IN PLACE. SECURE HANGERS TO INSERTS WHERE PRACTICAL. HANGER RODS SHALL HAVE MACHINE THREADS.
   - B. HANGER RODS SHALL BE CONNECTED TO BEAM CLAP, UL-APPROVED CONCRETE INSERTS OR PHILIPS OR APPROVED EQUAL EXPANSION SHIELDS. RAMSET OR POWER DRIVEN INSERTS WILL NOT BE ALLOWED.
   - C. HANGER SPACING SHALL MEET REQUIREMENTS OF STATE AND LOCAL CODES. PIPE SUPPORTS, VERTICAL AND HORIZONTAL, SHALL NOT BEAR ON SLEEVES
9. SPRINKLER HEADS
   - A. NEW SPRINKLERS SHALL MATCH EXISTING STYLE AND TEMPERATURE RATINGS PER NFPA REQUIREMENTS..
10. SPECIAL RESPONSIBILITIES
   - A. NOTIFY OWNER OF LOCATION AND EXTEND OF EXISTING PIPING AND EQUIPMENT THAT INTERFERES WITH NEW CONSTRUCTION. IN COORDINATION WITH AND WITH APPROVAL OF OWNER, RELOCATE PIPING AND EQUIPMENT TO PERMIT NEW WORK TO BE PROVIDED AS REQUIRED BY CONTRACT DOCUMENTS. REMOVE NON-FUNCTIONING AND ABANDONED PIPING AND EQUIPMENT AS DIRECTED BY OWNER. DISPOSE OF OR STORE MATERIALS AS DIRECTED BY OWNER.
   - B. USE OF PREMISES: RESTRICT USE OF PREMISES AS DIRECTED BY BUILDING MANAGER.
11. SPRINKLER SYSTEM INSTALLATION
   - A. RECONFIGURE THE EXISTING WET PIPE SPRINKLER SYSTEM AS NECESSARY TO ACCOMMODATE THE NEW ARCHITECTURAL LAYOUT.
   - B. WORK SHALL BE NEAT AND RECTILINEAR.PIPING SHALL RUN CONCEALED. WORK SHALL BE PROPERLY AND EFFECTIVELY PROTECTED AND PIPE OPENINGS SHALL BE TEMPORARILY CLOSED TO PREVENT OBSTRUCTION AND DAMAGE BEFORE COMPLETION.
   - C. EXCEPT AS SPECIFIED OTHERWISE, MATERIAL AND EQUIPMENT SHALL BE NEW.
12. CONTINUITY OF SERVICES
   - A. COORDINATE ALL INTERRUPTIONS WITH BUILDING MANAGER AND/OR OWNER.
   - B. NOTIFY THE "AUTHORITY HAVING JURISDICTION" WHEN SHUTDOWNS OF EXISTING SYSTEMS ARE NECESSARY AND COORDINATE AN APPROVED IMPAIRMENT PLAN.
13. TESTS
   - A. TEST SPRINKLER SYSTEM AS REQUIRED BY NFPA 13 AND AUTHORITY HAVING JURISDICTION.
   - B. NOTIFY OWNER AND AUTHORITIES HAVING JURISDICTION WHEN TEST ARE TO BE MADE.
   - C. TEST SPRINKLER SYSTEM PIPING AND MAKE WATERTIGHT BEFORE PAINTING AND BEFORE CONCEALMENT. TESTS SHALL BE WITNESSED BY INSURANCE UNDERWRITER'S REPRESENTATIVE, THE MUNICIPAL INSPECTOR, AND A REPRESENTATIVE OF THE OWNER.
   - D. SPRINKLER SYSTEM SHALL BE TESTED BY HYDROSTATIC TEST AT SYSTEM PRESSURE IN ACCORDANCE WITH NFPA REQUIREMENTS.
   - E. IF INSPECTION OR TEST SHOW DEFECTS, SUCH DEFECTIVE WORK OR MATERIAL, SHALL BE REPLACED AND INSPECTION AND TESTS SHALL BE REPEATED UNTIL WORK IS ACCEPTED. REPAIRS TO PIPING SHALL BE MADE WITH NEW MATERIAL.

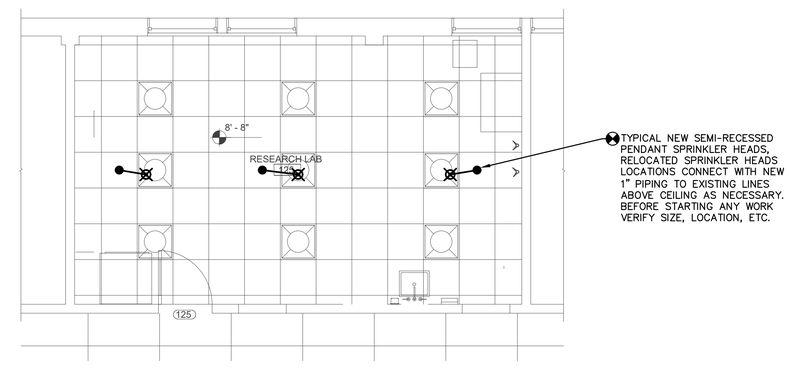

1 Fire Protection Partial Floor Plan

Scale: 1/4"=1'-0"

RHODE ISLAND COLLEGE

FOGARTY RESEARCH LABORATORY, INBRE

600 MT. PLEASANT AVENUE, PROVIDENCE, RI 02908

BREWSTER THORNTON GROUP ARCHITECTS LLP

317 Iron Horse Way, Suite 202
Providence, RI 02908

401.861.1600
brewsterthornton.com

Z.M. WOZNY
REGISTERED PROFESSIONAL ENGINEER

JOB NO.	DATE
1942	01/31/20

ISSUE : BID SET

NO.	REVISION DESCRIPTION	DATE

SHEET TITLE

FIRE PROTECTION FLOOR PLANS

SHEET

FP1.1

1/24/2020 3:39:48 PM

LIGHTING FIXTURES

SYMBOL	DESCRIPTION	NOTES
FP 1a; FP 1a; FP 1a; FP 1a; FP 1a; FP 1a	WALL OR CEILING MOUNTED LIGHTING FIXTURE	UPPER CASE LETTERS INDICATE FIXTURE TYPE. REFER TO FIXTURE SCHEDULE FOR MANUFACTURER SUBSCRIPT LOWER CASE LETTERS INDICATE SWITCH CONTROL ASSOCIATIONS FP 1a FP 1a SHADING OF FIXTURES THUS: FR FP FP INDICATES FIXTURE ON NIGHT/EMERGENCY CIRCUIT OR EMERGENCY BATTERY BACK UP BALLAST WHERE APPLICABLE, CONTRACTOR SHALL CONFIRM LOCATION OF REMOTE EMERGENCY BALLAST WITH ARCHITECT PRIOR TO PURCHASE AND INSTALLATION. EMERGENCY BALLAST SHALL BE SIMILAR TO BODINE B300T OR B30 WITH INTERNAL INDICATOR LIGHT TEST SWITCH. PROVIDE 2 LAMP APPLICATION WHERE APPLICABLE.
	EXTERIOR POLE MOUNTED FIXTURE	CONTRACTOR SHALL FURNISH AND INSTALL EMERGENCY TRANSFER RELAY ON ALL SWITHCED EMERGENCY FIXTURES CONTRACTOR SHALL PROVIDE ALL MOUNTING HARDWARE APPLICABLE TO CEILING, WALL, AND FLOOR TYPE INTO WHICH FIXTURE IS INSTALLED CONTRACTOR SHALL COORDINATE MOUNTING HEIGHT WITH ARCHITECTURAL INTERIOR/EXTERIOR ELEVATIONS CONTRACTOR SHALL COORDINATE AND CONFIRM K RATING OF LAMPS TO ACHIVE COLOR AS DESIRED PER ARCHITECT AND OWNER/TENANT CONTRACTOR SHALL FURNISH AND SUPPLY ANY STEP DOWN TRANSFORMERS FOR ANY LOW VOLTAGE LIGHTING CONTRACTOR SHALL FURNISH AND INSTALL 0-10V DIMMING BALLAST FOR LED FIXTURES

EXIT/EMERGENCY LIGHTING

SYMBOL	DESCRIPTION	NOTES
EB	EMERGENCY LIGHTING WITH BATTERY UNIT	ALL EMERGENCY BATTERY PACKS SHALL HAVE REMOTE HEAD CAPABILITY UNLESS NOTED OTHERWISE
	DUAL REMOTE EMERGENCY LIGHTING HEAD	
	CEILING MOUNTED EXIT SIGN	ALL EXIT SIGNS SHALL BE FURNISHED WITH INTERNAL, 90 MINUTE BATTERY UNLESS NOTED OTHERWISE
	WALL MOUNTED EXIT SIGN	APPLICATION OF SHADED QUADRANTS AND ARROWS THUS: INDICATE LETTERED FACE AND DIRECTIONAL CHEVERONS AS REQUIRED

SWITCHING/LIGHTING/DEVICE CONTROL

SYMBOL	DESCRIPTION	NOTES	
S WP	SINGLE POLE SWITCH	20A 120-277V AC "WP" – INDICATES WEATHER PROOF	SUBSCRIPT LOWER CASE LETTERS INDICATE SWITCH CONTROL ASSOCIATIONS SUBSCRIPT UPPER CASE LETTERS DENOTE SWITCH TYPE AS LISTED IN NON-STANDARD SWITCHES UNLESS NOTED OTHERWISE SWITCHES SHALL BE MOUNTED 48" TO CENTER LINE AFF
SP	SINGLE POLE SWITCH WITH PILOT LIGHT		
S2	DOUBLE POLE SWITCH		
S3	THREE-WAY SWITCH		
S4	FOUR-WAY SWITCH		
ST	SPRING WOUND INTERVAL TIME SWITCH WITHOUT HOLD	TORK OR EQUAL 30 MIN MAX	
KS	KEY SWITCH LINE VOLTAGE	LEVITON OR EQUAL	PROVIDE 0-10V DIMMER WHERE REQUIRED FOR LED LIGHTING FIXTURES
D	UNIVERSAL VOLTAGE SLIDE DIMMER	FLUORESCENT/INC: LEVITON RENOIR SERIES OR EQUAL 120V – 1500W 277V – 3463W	LED 0-10V: LEVITON LUMINA SERIES OR EQUAL 120V – 960W 277V – 1385W
	CEILING MOUNTED CORRIDOR OCCUPANCY SENSOR (80' oc)	WATT STOPPER: W-2000H	CONTRACTOR SHALL FURNISH AND INSTALL ALL APPROPRIATE POWER PACKS, RELAYS, CABLES, CONTROL MODULES, AND CONTACTORS TO COMPLETE SYSTEM INSTALLATION
	CEILING MOUNTED DUAL TECHNOLOGY SENSOR	WATT STOPPER: DT-300	
	CEILING MOUNTED OCCUPANCY SENSOR WHEATHERPROOF	WATT STOPPER: HB300 HB-L2W	SUBSCRIPT LOWER CASE LETTERS INDICATE SWITCH LEG CONTROL CONTRACTOR SHALL COORDINATE AND CONFIRM ALL SENSOR SETTING AND TIME DELAYS WITH OWNER OR TENANTS REPRESENTATIVE
OS	WALL MOUNTED DUAL TECHNOLOGY OCCUPANCY SENSOR	WATT STOPPER: DSW-301	
OS ob	WALL MOUNTED DUAL TECHNOLOGY DUAL RELAY SENSOR	WATT STOPPER: DSW-302	
	CEILING MOUNTED WIRELESS RECEPTACLE TRANSMITTER	WATT STOPPER: WRC-TX SERIES	
	WALL MOUNTED DIMMABLE OCCUPANCY SENSOR	WATT STOPPER: (0-10V) PW-311 (120/277) PW-1000	FURNISH AND INSTALL BALLAST COMPATIBLE WITH DIMMABLE SENSOR
	CEILING MOUNTED ON/OFF DAYLIGHT HARVEST SENSOR	WATT STOPPER: LS-102	
TR	SELF POWERED TRANSFER RELAY	ILC TR SERIES OR EQUAL	CONTRACTOR SHALL FURNISH AND INSTALL ALL RELAYS AND MODULES TO COMPLETE SYSTEM INSTALLATION
TC	7 DAY ASTRONOMICAL PROGRAMMABLE TIME CLOCK	TORK OR EQUAL	CONTRACTOR SHALL COORDINATE AND CONFIRM PROGRAMMING SCHEDULE WITH OWNER
LV	LOW VOLTAGE 1, 3, AND 4 WAY MOMENTARY SWITCH	WATT STOPPER: DCC2 SERIES OR EQUAL	CONTRACTOR SHALL FURNISH AND INSTALL ALL NECESSARY POWER PACKS, RELAYS, CABLES, CONTROL MODULES, WIRING, AND CONTACTORS TO COMPLETE SYSTEM INSTALLATION
LCRP	LIGHTING CONTROL RELAY PANEL	WATT STOPPER: LPB SERIES OR EQUAL	
MS	GUEST ROOM CARD KEY SWITCH	WATT STOPPER: HS SERIES OR EQUAL	

TELECOMMUNICATION SYSTEMS

SYMBOL	DESCRIPTION	NOTES
MHNC	MODULAR HOME NETWORK CENTER PROVIDE (1) DEDICATED 120V CIRCUIT AND DUPLEX RECEPTACLE	MODULAR HOME NETWORKING CENTER SHALL BE LEVITON 47606-ANT, 4761L-T12, 4767M-EX5, 47690-46Z, AND 47605-4CS IN 49605-30W ENCLOSURE OR EQUAL WITH 120V CIRCUIT.
	WALL MOUNTED DATA OUTLET	4"x4" SQUARE OUTLET BOX WITH 1"ⓒ. PULL STRING AND PROTECTIVE BUSHING TO ABOVE ACCESSIBLE CEILING
	WALL MOUNTED COMBINATION TEL/DATA OUTLET	P – DENOTES PUBLIC PAY PHONE W – DENOTES POWER FEED
	WALL MOUNTED TEL OUTLET	F – DENOTES MODULAR FURNITURE BEZEL (2)VOICE,(2)DATA OUTLETS BY OTHERS
T	FIRE RATED FURNITURE FEED POKE THROUGH DEVICE FOR TEL/DATA CONNECTIONS TO ELECTRIFIED FURNITURE	
T	4" SQUARE OUTLET BOX WITH 1 1/2" GROMMETTED HOLE COVERPLATE FOR TEL/DATA CONNECTION TO ELECTRIFIED FURNITURE PARTITIONS, MOUNTED 8" AFF	
TV	WALL MOUNTED CABLE TV OUTLET	4"x4" SQUARE OUTLET BOX WITH 1" CONDUIT STUBBED 6" ABOVE ACCESSIBLE CEILING SEE ARCH PLAN FOR MOUNTING HEIGHT

WIRING DEVICES – RECEPTACLES

SYMBOL	DESCRIPTION	NOTES
1	WALL DUPLEX CONVENIENCE OUTLET MTD 18" AFF	20A/125V, 2P, 3W, GNDG., NEMA 5-20R SHADING OF SYMBOL THUS: SUBSCRIPT LOWER CASE LETTERS INDICATE SWITCH CONTROL ASSOCIATIONS SHADING OF SYMBOL THUS:
	CEILING MOUNTED DUPLEX CONVENIENCE OUTLET	
IG	ISOLATED GROUND DUPLEX CONVENIENCE OUTLET	INDICATES RECEPTACLE MTD 6" ABOVE COUNTER TO CENTER LINE OR 48" AFF UNLESS NOTED OTHERWISE. CONFIRM DEVICE MOUNTING HEIGHT WITH ARCHITECTURAL ELEVATION PLANS AND/OR CMR 521 9.5.6 AND 39.3.1
	WALL DOUBLE DUPLEX CONVENIENCE OUTLET	"WP" – INDICATES WEATHER PROOF "GFI" DENOTES SELF REGULATING GROUND FAULT INTERRUPTING TYPE RECEPTACLE
	WALL MTD SINGLE CONVENIENCE OUTLET	ALL POWER OUTLET FACEPLATES SHALL BE LABELED WITH CIRCUIT NUMBER AND PANEL DESIGNATION FEEDING OUTLET
	HOSPITAL GRADE DUPLEX CONVENIENCE OUTLET	PASS & SEYMOUR 2095-HGTR OR EQUAL
USB	DUPLEX RECEPTACLE WITH (2) USB PORTS	HUBBELL: USB20X2 OR EQUAL CONFIRM DEVICE AND FACEPLATE COLOR WITH ARCHITECT
	PLUG LOAD (WIRELESS) CONTROLLABLE RF DUPLEX RECEPTACLE DUAL CONTROL	LEGRAND: RF26352CDW OR EQUAL CONFIRM DEVICE AND FACEPLATE COLOR WITH ARCHITECT
	PLUG LOAD (WIRELESS) CONTROLLABLE RF DUPLEX RECEPTACLE HALF CONTROL	LEGRAND: RF26352CHW OR EQUAL CONFIRM DEVICE AND FACEPLATE COLOR WITH ARCHITECT FURNISH AND INSTALL PLUG LOAD POWER PACK AND WIRELESS RECEPTACLE CONTROL TRANSMITTERS
9	WALL MOUNTED SPECIAL PURPOSE POWER RECEPTACLE	NUMERAL WITHIN SQUARE DENOTES RECEPTACLE TYPE AS LISTED IN SCHEDULE OF NON-STANDARD RECEPTACLES CONFIRM NEMA PLUG CONFIGURATION WITH OWNER AND TENANTS REPRESENTATIVE
P	FIRE RATED FURNITURE FEED POKE THRUGH DEVICE FOR POWER CONNECTIONS TO ELECTRIFIED FURNITURE	
P	4" SQUARE OUTLET BOX TO OUTLETS LOCATED IN FURNITURE PARTITIONS (SEE FLOOR PLANS)	

WIRING DEVICES – MISCELLANEOUS

SYMBOL	DESCRIPTION	NOTES
PP	2 CHANNEL PWR/DATA POWER POLE WITH ELEC DEVICES AND PLATES	LEGRAND TELE-POWER SERIES OR EQUAL
	2 PIECE SURFACE MTD RACEWAY WITH 20A DUPLEX RECEPTACLES CONFIRM SPACING WITH ARCHITECT	LEGRAND OR EQUAL UNLESS NOTED OTHERWISE, ALL RACEWAY SHALL BE METAL
	2 PIECE MULTI-CHANNEL RACEWAY WITH 20A DUPLEX RECEPTACLES AND DATA OUTLETS CONFIRM SPACING WITH ARCHITECT	LEGRAND OR EQUAL UNLESS NOTED OTHERWISE, ALL RACEWAY SHALL BE METAL
	FLUSH FLOOR MOUNTED POWER/DATA CONVENCE RECEPTACLES	POKE THRU APPLICATION: 2 HOUR RATED, LEGRAND RC SERIES OR EQUAL. COORDINATE FINAL POWER AND TEL/DATA TERMARINTIONS WITH TENANT FLOOR TRENCH APPLICATION: DEEP RECTANGULAR CAST IRON BOX LEGRAND EVOLUTION SERIES OR EQUAL PROVIDE 1"ⓒ FROM TEL/DATA TO 4" ABOVE ACCESSIBLE CEILING. CONTRACTOR SHALL SUPPLY ALL COVERS AND PLATES TO COMPLETE INSTALLATION

JUNCTION BOXES

SYMBOL	DESCRIPTION	NOTES
J	CEILING MOUNTED JUNCTION BOX	
J	WALL MOUNTED JUNCTION BOX	
J	SURFACE MOUNTED JUNCTION BOX	
J	FLUSH FLOOR MOUNTED JUNCTION BOX	
J	JUNCTION BOX WITH FLEXIBLE CONNECTION TO EQUIPMENT	P – DENOTES POWER FEED C – DENOTES COMMUNICATIONS FEED

MOTORS AND CONTROLS

SYMBOL	DESCRIPTION	NOTES	
	MOTOR	COMPLETE INFO. FOR MOTOR IS INDICATED BY APPLICATION OF INDEXING SYMBOLS REFERENCE TO SCHEDULE OF MECHANICAL EQUIPMENT	
	MAGNETIC MOTOR STARTER COMPLETE W/ THERMAL OVERLOAD PROTECTION	SUBSCRIPT INDICATES NEMA SIZE	COMPLETE INFORMATION FOR CONTROL ITEMS IS INDICATED BY THE APPLICATION OF INDEXING SYMBOL REFERENCE APPLIED TO ASSOCIATED EQUIP.
	MANUAL MOTOR STARTER (THERMAL OVERLOAD SWITCH)		
VFD	VARIABLE FREQUECY DRIVE	REFER TO HVAC SCHEDULE FOR MOTOR LOAD HORSEPOWER SIZE	
SV	SOLENOID VALVE		

DISTRIBUTION EQUIPMENT

SYMBOL	DESCRIPTION	NOTES
	SURFACE MOUNTED PANEL	
	FLUSH MOUNTED PANEL	
TVSS	SURGE SUPPRESSION	PROVIDE PER SPECIFICATIONS
T	TRANSFORMER	SEE ELECTRICAL PLANS FOR KVA RATING
M	METER SOCKET AND METER	METER SOCKET PROVIDED BY CONTRACTOR PROVIDED BY LOCAL UTILITY CO.
M	CHECK METER	E-MON/D-MON CLASS 2000 OR EQUAL. MATCH BUILDING STANDARD
	OVERCURRENT AND/OR SWITCHING DEVICE "WP" – INDICATES WEATHER PROOF	COMPLETE INFORMATION FOR DEVICES IS INDICATED BY APPLICATION OF TAG SYMBOLS 30 – INDICATES UNFUSED SWITCH 30 – FRAME SIZE 30/15 – INDICATES FUSED SWITCH 30 – FRAME SIZE 15 – FUSE SIZE CB – INDICATES ENCLOSED CIRCUIT BREAKER
	WALL MOUNTED EMERGENCY POWER OFF BUTTON WITH SHIELD	SAFETY TECHNOLOGY INTERNATIONAL OR EQUAL

BRANCH CIRCUITRY

SYMBOL	DESCRIPTION	NOTES
	LIGHTING AND APPLIANCE BRANCH CIRCUITRY CONCEALED ABOVE	ARROW HEAD INDICATES HOME RUN CIRCUITRY TO 20A-1P CIRCUIT BREAKER (UNLESS NOTED OTHERWISE). NUMBER OF ARROW HEADS INDICATE NUMBER OF BRANCH POLES REQUIRED IN PANEL. CROSS MARKS INDICATE NUMBER OR NO. 12 WIRES IN 3/4" CONDUIT PLUS GROUND. ABSENCE OF CROSSMARKS INDICATES 2#12, 1#12 GROUND HOME RUNS ARE INDICATED THUS: LL2 – 1, 3, 5 "LL2" DENOTES PANEL DESIGNATION. "1,3,5" DENOTES CIRCUIT NO'S 1,3,5 CONTAINING 20A. 1P. CB'S IN PANELBOARD CONDUIT RUNS REQUIRING CIRCUIT BREAKER GREATER THAN 20A-1P WIRE SIZE GREATER THAN NO. 12 AND CONDUIT SIZE GREATER THAN 3/4" ARE NOTED THUS: LL2-1, 3, 5 50A 3P 4 #4, 1 #8 GROUND 1-1/4" CONDUIT
	LIGHTING AND APPLIANCE BRANCH CIRCUITRY CONCEALED BELOW	
	LIGHTING AND APPLIANCE BRANCH RUN EXPOSED	
	INDIVIDUAL RUN TURNING UP	
	INDIVIDUAL RUN TURNING DOWN	
	INDIVIDUAL RUN TURNING UP&DOWN	

GENERAL CIRCUITRY

SYMBOL	DESCRIPTION	NOTES
	BUSWAY	
	CIRCUIT BREAKER BUS PLUG, BREAKERS AS INDICATED	
	BUSWAY FEED/ LUG CONNECTION	
PE	IDENTIFICATION OF INDIVIDUAL RUN OTHER THAN BRANCH CIRCUITRY OR SECONDARY FEEDERS	PE – PRIMARY ELECTRIC SE – SECONDARY ELECTRIC TEL – TELEPHONE TV – TELEVISION CATV – CABLE TELEVISION E – EMERGENCY

SECONDARY FEEDERS

SYMBOL	DESCRIPTION	NOTES
	FEEDER RUN CONCEALED ABOVE	ARROW HEAD INDICATES HOME RUN TO PANEL BOARD
	FEEDER RUN CONCEALED BELOW	FEEDER SIZING SHOWN ON POWER RISER DIAGRAM
	FEEDER RUN AS PER SPECIFIC NOTATION	

TAG SYMBOLS

SYMBOL	DESCRIPTION	NOTES
	INDEX SYMBOL	HEXAGONAL SYMBOLS CONTAINING TWO UPPER CASE LETTERS INDICATE REFERENCE TO A SCHEDULE OF SPECIAL EQUIPMENT HEXAGONAL SYMBOLS CONTAINING UPPER CASE LETTERS AND NUMERICALS INDICATE REFERENCE TO SCHEDULE OF MECHANICAL EQUIPMENT HEXAGONAL SYMBOLS CONTAINING NUMERICALS ONLY INDICATE REFERENCE TO AN EXPLANATION OF ELECTRICAL WORK REQUIREMENT
	GANGING CROSS REFERENCE	THE NOTED INDICATION ADJACENT TO A DEVICE DENOTES THAT THE DEVICE IS TO BE GANGED IN A BOX WITH ANOTHER DEVICE SIMILARLY NOTED AT THE SAME LOCATION ON ANOTHER DRAWING
( )	SPECIAL MOUNTING HEIGHT INDICATIONS	DIMENSION NOTED IN PARENTHESIS ADJACENT TO ANY ITEM OF THE DRAWINGS INDICATES THE HEIGHT OF IT'S HORIZONTAL CENTERLINE ABOVE FINISHED FLOOR

EXISTING ELECTRICAL EQUIPMENT

SYMBOL	DESCRIPTION	NOTES
ETR	EXISTING TO REMAIN	ALL EXISTING TO REMAIN LIGHTING SHALL BE CLEANED AND RELAMPED
X	EXISTING EQUIPMENT TO BE REMOVED	CONTRACTOR SHALL VERIFY THAT ALL EXISTING TO REMAIN ELECTRICAL DEVICES ARE OPERATIONAL & FUNCTIONAL. IF ETR DEVICES ARE NOT OPERATIONAL IT SHALL BE REPLACED WITH A NEW DEVICE OF THAT TYPE. ALL REPLACED DEVICES SHALL MATCH EXISTING
XR	EXISTING EQUIPMENT TO BE REMOVED AND RELOCATED	CONTRACTOR SHALL EXTEND AND CONNECT EXISTING WIRING TO NEW LOCATION OF RELOCATED EQUIPMENT. CONTRACTOR SHALL REPLACE EXISTING WIRING BACK TO SOURCE IF NECESSARY IF EXISTING WIRING DOES NOT REACH RELOCATED EQUIPMENT. CONTRACTOR SHALL EVALUATE CONDITION OF EXISTING WIRING AND REPLACE IF NECESSARY.
RX	NEW LOCATION OF RELOCATED EXISTING EQUIPMENT	
RR	REMOVE EXISTING DEVICE AND REINSTALL NEW DEVICE IN SAME LOCATION	
	DOTTED DENOTES EXISTING ELECTRICAL EQUIPMENT	

NURSE / EMERGENCY CALL SYSTEMS

SYMBOL	DESCRIPTION	NOTES
NC	NURSE CALL PATIENT PULL CHORD	
NC	NURSE CALL PATIENT DOME LIGHT	
NC	NURSE CALL DUTY STAFF STATION	
NCAP	NURSE CALL ANNUNCIATOR PANEL	
EC	EMERGENCY CALL PULL CHORD	
EC	EMERGENCY CALL DOME LIGHT	
EC	EMERGENCY CALL REMOTE STATION	
ECCP	EMERGENCY CALL COMMUNICATION PANEL	
AED	AUTOMATIC EXTERNAL DEFIBRILLATOR POWER CONNECTION	PROVIDE DEDICATED 120V POWER CONNECTION. CONFIRM LOCATION AND QUANTITY WITH ARCHITECT AND TENANT REPRESENTATIVE

AREA OF RESCUE/REFUGE SYSTEM

SYMBOL	DESCRIPTION	NOTES	
ARCU	VANDAL RESISTANT AREA OF RESCUE MAIN CONTROL PANEL	CORNELL: A-4204 SERIES OR EQUAL	CONTRACTOR SHALL FURNISH AND INSTALL ALL NECESSARY POWER PACKS AND EXPANSION SWITCHES TO COMPLETE SYSTEM. PROVIDE 120V POWER AT EACH DEVICE CONFIRM ARCU ZONE QUANTITY WITH RB STATION QUANTITIES ON FLOOR PLANS POWER PACK: CORNELL: B-5248A WITH BATTERY OR P-512243A WITH LIFE SAFETY CIRCUIT OR EQUAL
ARA	AREA OF RESCUE INDICATOR LIGHT WITH BATTERY BACKUP	CORNELL: SN-B SERIES OR EQUAL	
RB	VANDAL RESISTANT AREA OF RESCUE CALL STATION	CORNELL: 42018/V SERIES OR EQUAL	

FIRE ALARM SYSTEM

SYMBOL	DESCRIPTION	NOTES
F	MANUAL FIRE ALARM PULL STATION	
	VISUAL ONLY FIRE ALARM DEVICE	
F	COMBINATION AUDIO AND VISUAL FIRE ALARM DEVICE	
F C	CEILING MOUNTED AUDIO AND VISUAL FIRE ALARM DEVICE	
S	WALL MOUNTED FIRE ALARM SPEAKER	
F S	WALL MOUNTED FIRE ALARM SPEAKER AND STROBE	
M	WALL MOUNTED MINI-HORN	
F M	WALL MOUNTED FIRE ALARM MINI-HORN/STROBE	
LF	LOW FREQUENCY ALARM 520HZ IN ALL ROOMS USED FOR SLEEPING	
F	FIRE ALARM MASTER BOX	
K	KNOX BOX	
B	ROTATING FIRE ALARM BEACON LIGHT	
EB	ELECTRIC BELL PROVIDE (1) DEDICATED 120V CIRCUIT	
FF	FIRE FIGHTER FIRE EMERG PHONE	
BS	LOW FREQUENCY ALARM GENERATOR AND BED SHAKER IN EACH HEARING IMPARED UNIT SIMILAR TO LIFETONE HL PLUG IN MODEL OR EQUAL	
CO	CEILING MOUNTED CARBON MONOXIDE DETECTOR	
FACP	FIRE ALARM CONTROL PANEL	
FAA	FIRE ALARM ANNUNCIATOR PANEL	
RTS	REMOTE TEST STATION	
R	REMOTE INDICATOR ALARM DEVICE	
S	SMOKE DETECTOR	DETECTOR TYPE SUBSCRIPT: L – LOCAL 120V DETECTOR WITH INTEGRAL BATTERY BACKUP R – RECOVER UNIT T – TRANSMITTER UNIT D – IN DUCT DETECTOR E – ELEVATOR RECALL B – BEAM TYPE PHOTOELECTRIC SA – SUPPLY AIR DUCT DETECTOR RA – RETURN AIR DUCT DETECTOR CO – COMBINATION SMOKE/CARBON MONOXIDE DETECTOR
H	HEAT DETECTOR	
S H CO	WALL MOUNTED: SMOKE DETECTOR HEAT DETECTOR CARBON MONOXIDE	
FS TS PS	SPRINKLER SYSTEM MONITOR FS – WATER FLOW TS – TAMPER SWITCH PS – DRY ALARM PRESSURE SWITCH	MONITOR TYPE: MM – MONITORING MODULE CM – CONTROL MODULE
DH	MAGNETIC DOOR HOLDER	PROVIDE CONNECTION TO DOOR HARDWARE INTEGRAL HOLDERS
SK	SMOKE EXHAUST FAN KEY SWITCH	
I	ADDRESSABLE CONTROL OR MONITOR MODULE	MODULE SUBSCRIPT TYPE: C – CONTROL MODULE M – MONITOR MODULE

SECURITY/INTERCOM/ACCESS SYSTEMS

SYMBOL	DESCRIPTION	NOTES
DB PB	ILLUMINATED DOOR BELL PUSH BUTTON	EDWARDS C200 SERIES KIT OR EQUAL
DB C	DOOR BELL CHIME/BELL	CONTRACTOR SHALL PROVIDE 120V AT CHIME/BELL LOCATION
	HEARING IMPAIRED PHONE STROBE	WHEELOCK PS11AWPW OR EQUAL
	HEARING IMPAIRED INTERCOM STROBE	WHEELOCK RSSG24110NW OR EQUAL
	HEARING IMPAIRED DOORBELL STROBE	WHEELOCK RSSG24110NW OR EQUAL
CR	PROXIMITY CARD READER	UNLESS NOTED OTHERWISE, CONTRACTOR SHALL FURNISH AND INSTALL BACKBOX AT DEVICE LOCATION AND 1" CONDUIT ABOVE NEAREST ACCESSIBLE CEILING
KP	KEY PAD	
DC	DOOR CONTACT	
ES	ELECTRIC DOOR STRIKE	
LA	LOCAL DOOR ALARM	
MD	WALL MOUNTED MOTION DETECTOR	
MD	CEILING MOUNTED MOTION DETECTOR	
SP	CEILING MOUNTED PUBLIC ADDRESS SPEAKER	
CCTV	CLOSED CIRCUIT TELEVISION CAMERA	
HC	HANDICAP ACCESS PUSH BUTTON	
SCP	SECURITY CONTROL PANEL	CONTRACTOR SHALL PROVIDE 120V AT ALL MAIN SYSTEM PANEL LOCATIONS
IAP	INTRUSION ALARM PANEL	
INTP	MAIN VIDEO INTERCOM PANEL	REFER TO SPECIFICATIONS
IS	VIDEO INTERCOM STATION TALK/ACCESS	
VC	INTERCOM SPEAKER VOLUME CONTROL	

GENERAL NOTES

1. ALL CONDUITS AND EQUIPMENT SHALL BE INSTALLED AND GROUND IN ACCORDANCE WITH THE LATEST RULES AND REGULATIONS OF THE APPLICABLE LOCAL AND NATIONAL CODES.
2. CONDUIT RUNS ARE SHOWN DIAGRAMATICALLY ONLY AND SHALL BE INSTALLED IN A MANNER TO PREVENT CONFLICTS WITH EQUIPMENT AND STRUCTURAL CONDITIONS. EXPOSED CONDUITS SHALL BE INSTALLED PARRALEL TO BEAMS AND WALLS. EMPTY CONDUITS SHALL HAVE NYLON PULL LINE
3. CONDUITS SHALL BE TERMINATED SO AS TO PERMIT NEAT CONNECTIONS TO MOTORS AND OTHER EQUIPMENT.
4. NO CONDUIT SMALLER THAN 3/4", NOR WIRE SIZE SMALLER THAN NO. 12 A.W.G. FOR POWER SHALL BE USED UNLESS OTHERWISE NOTED.
5. THE WIRING DIAGRAMS, QUANTITY AND SIZE OF THE WIRES AND CONDUIT REPRESENT A SUGGESTED ARRANGEMENT BASED UPON SELECTED STANDARD COMPONENTS OF ELECTRICAL EQUIPMENT. MODIFICATIONS ACCEPTABLE TO THE CONSTRUCTION MANAGER MAY BE MADE BY THE CONTRACTOR TO ACCOMMODATE EQUIPMENT ACTUALLY PURCHASED. THE BASIC SEQUENCE AND METHOD OF CONTROL MUST BE MAINTAINED AS INDICATED ON THE DRAWINGS AND/OR SPECIFICATIONS.
6. SWITCHES SHALL BE MOUNTED 4'-0" ABOVE FINISHED FLOOR UNLESS OTHERWISE NOTED. RECEPTACLES SHALL BE MOUNTED 18" AFF
7. ALL SURFACE MOUNTED PANELS AND PANELBOARDS ON THE INSIDE OF EXTERIOR WALLS ABOVE GRADE OR IN OTHER LOCATIONS CONSIDERED AS DAMP, SHALL BE MOUNTED SO AS TO MAINTAIN A 1/4" AIR SPACE BETWEEN THE ENCLOSURE AND THE WALL.
8. ALL PANELBOARDS SHALL BE MOUNTED SO THAT THE DISTANCE FROM THE TOP CIRCUIT BREAKER OPERATING HANDLE TO THE FLOOR SHALL NOT EXCEED 6'-6"
9. LIGHTING FIXTURES SHALL BE MOUNTED ACCORDING TO THE MOUNTING HEIGHT GIVEN ON THE DRAWINGS, WITH THE DISTANCE BEING MEASURED FROM THE BOTTOM OF THE LIGHTING FIXTURE TO THE FINISHED FLOOR.
10. FOR LOCATION OF HVAC, PLUMBING, FIRE PROTECTION, AND MISCELLANEOUS EQUIPMENT SEE RESPECTIVE TRADE DRAWINGS.
11. ALL CONDUIT RUNS CROSSING EXPANSION JOINTS SHALL HAVE EXPANSION OR EXPANSION AND DEFLECTION TYPE FITTINGS AS REQUIRED. FOR EXACT LOCATIONS OF EXPANSION JOINTS SEE STRUCTURAL DRAWINGS.
12. ALL MOTOR STARTER CONTROL TRANSFORMERS SHALL BE SIZED TO PROVIDE SUFFICIENT VOLT-AMPERE CAPACITY FOR OPERATING ALL ELECTRICAL DEVICES ASSOCIATED WITH CONTROL OF THE MOTOR, IN ADDITION TO THE STARTER COIL. IT SHALL INCLUDE RELAYS, TIMERS, MOTOR HEATERS, INDICATING LIGHTS, ETC.
13. CONDUIT AND WIRE (NOT SHOWN) FOR FIXTURES, SWITCHES AND/OR RECEPTACLES SHALL BE FURNISHED AND INSTALLED BY THE ELECTRICAL CONTRACTOR AND SHALL BE:
    a. 3/4" (MIN.) CONDUIT RUN
    1. EXPOSED IN UNFINISHED AREAS.
    2. CONCEALED ABOVE HUNG CEILINGS AND IN WALLS IN FINISHED AREAS.
    b. NO.12 (MIN.) Cu. WIRE (MIN.) TYPE "THWN/THHN" NO. OF WIRES AS REQUIRED.
14. FOR EQUIPMENT PAD CONSTRUCTION DETAILS SEE STRUCTURAL DRAWINGS.
15. ALL 120V BRANCH CIRCUITS GREATER THAN 100 LINEAR FEET SHALL BE #10AWG MIN.
16. THE ELECTRICAL CONTRACTOR SHALL PROVIDE LAYOUTS FOR ALL ELECTRICAL ROOMS BASED ON ACTUAL EQUIPMENT OF MANUFACTURER SELECTED, SUBMIT FOR REVIEW PRIOR TO INSTALLATION.
17. PROVIDE ELECTRICAL OUTLET PLATE GASKET SEALS AT RECEPTACLES, SWITCHES AND OTHER ELECTRICAL BOXES ON EXTERIOR WALLS AND ON INTERIOR WALLS BETWEEN CONDITIONED AND NON-CONDITIONED SPACES.
18. THE ELECTRICAL CONTRACTOR SHALL SUBMIT A PLAN FOR APPROVAL SHOWING ALL ELECTRICAL, TELEPHONE, SECURITY, FIRE ALARM, COMMUNICATION AND OTHER SYSTEMS CONDUITS IN SLAB AND ABOVE CEILING ETC. COORDINATE WITH OTHER TRADES AND BUILDING'S STRUCTURE TO AVOID ANY CONFLICT.
19. ALL TERMINATION LUGS SHALL BE SIZED ACCORDINALY TO ACCOMMODATE INDICATED CONDUCTORS.
20. THE ELECTRICAL CONTRACTOR SHALL SUBMIT PLANS FOR APPROVAL SHOWING ALL COMMUNICATION EQUIPMENT AND DEVICES THROUGHOUT THE BUILDING. THE ELECTRICAL CONTRACTOR SHALL ALSO LABEL AND IDENTIFY ALL CONDUITS THAT SERVE DIFFERNT SYSTEMS.
21. REFER TO THE ARCHITECTURAL REFLECTED CEILING PLANS AND ELEVATIONS FOR EXACT LOCATIONS OF ALL LIGHT FIXTURES.
22. COORDINATE LOCATIONS OF ALL LIGHT FIXTURES IN MECHANICAL AND ELECTRICAL ROOMS WITH LAYOUT OF EQUIPMENT, PIPING AND DUCTWORK.
23. ALL EXIT SIGNS SHALL BE UNSWITCHED.
24. ALL SWITCHED LIGHT FIXTURES CIRCUITED TO A NORMAL/EMERGENCY CIRCUIT ARE TO BE WIRED WITH AN EMERGENCY BY-PASS RELAY.
25. ALL 20 AMPERE, SINGLE POLE CIRCUITS SHALL BE PROVIDED WITH A SEPARATE FULL SIZE NEUTRAL CONDUCTOR.
26. CONFIRM EXACT POWER REQUIREMENTS AND CONNECTION LOCATIONS FOR ALL EQUIPMENT WITH THE PLUMBING, FIRE PROTECTION, HVAC AND GENERAL CONTRACTOR
27. PROVIDE AN SOU KIT FOR ALL MECH EQUIPMENT RATED LESS THAN 1/2HP (TYP)
28. CERTAIN SYMBOLS IN THE SYMBOL LIST DO NOT APPEAR ELSEWHERE IN THE DRAWINGS. SUCH SYMBOLS ARE INCLUDED TO PERMIT INTERPRETATIONS TO BE MADE IN THE EVENT OF DESIGN CHANGES.
29. ELECTRICAL CONTRACTOR SHALL MAINTAIN RATING OF ANY CEILING, WALL, FLOOR OR ANY BUILDING STRUCTURE THAT ANY ELECTRICAL SYSTEM PENETRATES. SEE ARCHITECTURAL PLAN FOR RATINGS.
30. ELECTRICAL CONTRACTOR SHALL CONFIRM THAT ALL SUBMITTED LED DRIVERS ARE FCC COMPLIANT AND THAT ALL SUBMITTED LIGHTING FIXTURES ARE UL LISTED.

ABBREVIATIONS

ABBR	ABBREVIATIONS	L	LENGTH
A/AMP	AMPERE	LA	LIGHTNING ARRESTOR
AC	ALTERNATING CURRENT	LP	LIGHTING PANEL
A/C	AIR CONDITIONING	LTG	LIGHTING
AFF	ABOVE

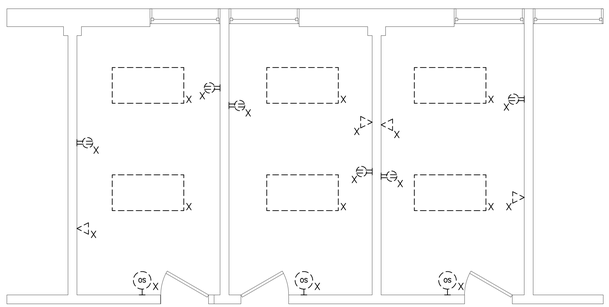

1 ELECTRICAL DEMOLITION PLAN

SCALE: 1/4"=1'-0"

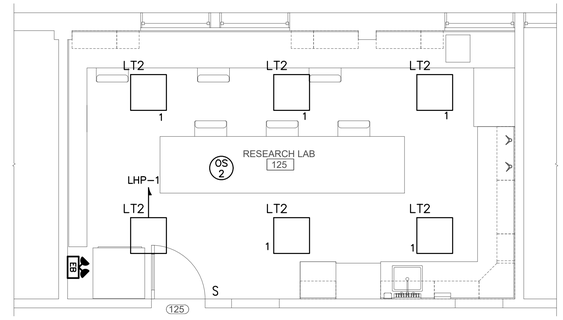

2 ELECTRICAL LIGHTING PLAN

SCALE: 1/4"=1'-0"

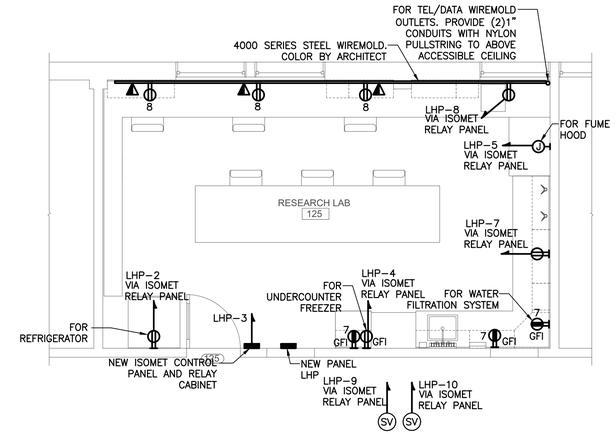

3 ELECTRICAL POWER & SYSTEMS PLAN

SCALE: 1/4"=1'-0"

DEMOLITION NOTES:

1. LIMIT OF WORK LINE INDICATES THE APPROXIMATE AREA OF RENOVATION THAT ELECTRICAL SYSTEMS MAY BE RELOCATED OR REMOVED. SCOPE OF DEMOLITION SHOWN ON PLANS ARE PARTIAL ONLY FOR THE CONTRACTORS CONVENIENCE AND NOT INTENDED TO SHOW ALL EXISTING CONDITIONS. CONTRACTOR SHALL FIELD VERIFY ALL EXISTING CONDITIONS TO INCLUDE ALL NECESSARY WORK TO MODIFY AND EXTEND EXISTING SYSTEMS, WIRING, ETC. AS REQUIRED TO ACCOMMODATE THE NEW ARCHITECTURAL FLOOR PLAN.
2. UNLESS OTHERWISE NOTED, ANY WALLS, CEILINGS, ETC SHOWN ON ARCHITECTS DEMOLITION DRAWINGS TO BE DEMOLISHED SHALL HAVE ASSOCIATED ELECTRICAL DEVICES, WIRE, ETC. WHICH SERVES THAT SPACE DEMOLISHED. ANY SYSTEMS PASSING TROUGH STRUCTURES TO BE DEMOLISHED AND SERVING OTHER AREAS SHALL BE RETAINED. NO FIRE ALARM SYSTEM WIRING OR DEVICES SHALL BE REMOVED WITHOUT COORDINATION WITH THE LANDLORD.
3. ANY ELECTRICAL SYSTEMS PASSING THROUGH OR CONTAINED WITHIN AREAS OF DEMOLITION AND CONSTRUCTION WHICH ARE TO REMAIN SHALL BE RE-ROUTED AS NECESSARY TO AVOID ANY CONFLICTS.
4. COORDINATE DEMOLITION WORK WITH OTHER SYSTEMS WITH ASSOCIATED ELECTRICAL WORK WITH OTHER TRADES AND THE ARCHITECT PRIOR TO DEMOLITION.
5. RE-FEED ANY EQUIPMENT TO OTHER TRADES WHICH HAS BEEN RELOCATED OR REPLACED.
6. THE ELECTRICAL CONTRACTOR SHALL BE RESPONSIBLE FOR ANY NECESSARY RE-FEEDING OF EQUIPMENT OR DEVICES TO MAINTAIN CIRCUIT CONTINUITY OF EXISTING EQUIPMENT REMAINING.
7. ELECTRICAL CONTRACTOR SHALL REMOVE EXISTING NOTIFICATION APPLIANCES SERVING SPACE AND MAINTAIN INTEGRITY OF WIRING SO THE NOTIFICATION APPLIANCES OUTSIDE OF SPACE REMAINS ACTIVE.
8. ALL EXISTING DEVICES AND EQUIPMENT TO BE REMOVED. DISCONNECT AND REMOVE ALL CONDUIT AND WIRING BACK TO ASSOCIATED PANEL. COORDINATE WITH OWNER FOR DISPOSAL OF ALL EXISTING EQUIPMENT. REFER TO ARCHITECTURAL DRAWINGS FOR THE INTENT OF DEMOLITION WORK
9. COORDINATE SHUT DOWN OF ELECTRICAL COMMUNICATION OR FIRE ALARM SYSTEMS WITH OWNER OR TENANTS REPRESENTATIVE.
10. PROVIDE BLANK PLATES AT EXISTING WALLS FOR UNUSED OUTLETS. UNUSED SWITCH LOCATIONS SHALL BE PATCHED BY GENERAL CONTRACTOR. COORDINATE BLANK PLATE COLOR WITH ARCHITECT.
11. COORDINATE DE-ENERGIZATION OF OTHER FLOORS OR ANY BASE BUILDING SYSTEMS WITH BUILDING MANAGEMENT.
12. EXTEND AND CONNECT EXISTING CONDUIT AND WIRING TO NEW LOCATION OF RELOCATED EQUIPMENT. EQUIPMENT. CONTRACTOR SHALL EVALUATE CONDITION OF EXISTING WIRING AND REPLACE IF NECESSARY.
13. INVENTORY ALL ELECTRICAL ITEMS THAT ARE TO BE REMOVED OR DEMOLISHED. ITEMS SHALL INCLUDE LIGHTING FIXTURES, LAMPING, LIGHTING SYSTEMS, FIRE ALARM SYSTEM EQUIPMENT, SECURITY SYSTEM EQUIPMENT PANEL BOARDS, TRANSFORMERS, HISTORICAL ITEMS, ETC. CONTRACTOR SHALL PROVIDE A LIST TO THE OWNER FOR THEIR SELECTION OF ITEMS TO BE RETAINED. ALL ITEMS REJECTED BY THE OWNER SHALL BECOME PROPERTY OF THE CONTRACTOR, REMOVED FROM THE SITE, AND DISPOSED OF PROPERLY. ALL ITEMS TO BE SAVED SHALL BE CLEANED, SAFELY PROTECTED, STORED, AND DELIVERED BACK TO THE OWNER.
14. DISCONNECT, MAKE SAFE, AND REMOVE ALL TEMPORARY AND ABANDONED WIRE WITHIN THE LIMIT OF WORK.

EXISTING ELECTRICAL LEGEND:

ETR = EXISTING TO REMAIN
X = EXISTING EQUIPMENT TO BE REMOVED
XR = EXISTING EQUIPMENT TO BE REMOVED AND RELOCATED
RX = NEW LOCATION OF RELOCATED EXISTING EQUIPMENT
RR = REMOVE EXISTING AND REPLACE WITH NEW IN SAME LOCATION

LIGHTING NOTES:

1. REFER TO DRAWING E0.0 FOR ELECTRICAL LEGEND AND GENERAL NOTES.
2. COORDINATE LIGHTING FIXTURE MOUNTING HEIGHTS WITH ARCHITECTURAL CASEWORK AND INTERIOR ELEVATION DRAWINGS.
3. COORDINATE EXACT FIXTURE LOCATIONS AND LENGTHS WITH ARCHITECTURAL REFLECTED CEILING PLAN.
4. ALL NEW EQUIPMENT SHALL MATCH BASE BUILDING STANDARDS AND SPECIFICATIONS, UNLESS NOTED OTHERWISE. ALL NEW EQUIPMENT SHALL BE COMPATIBLE WITH THE EXISTING SYSTEM
5. CIRCUIT NUMBER DESIGNATIONS ARE INTENDED TO ILLUSTRATE BRANCH WIRING CONFIGURATION ONLY.
6. ELECTRICAL CONTRACTOR SHALL COORDINATE AND CONFIRM K RATING (TEMPERATURE) OF FIXTURE LAMPS TO ACHIEVE COLOR AS PER ARCHITECT. LAMPS SHALL BE 3500K UNLESS NOTED OTHERWISE.
7. ELECTRICAL CONTRACTOR SHALL PROVIDE AND INSTALL ANY STEP DOWN TRANSFORMERS, LOW VOLTAGE WIRING, DRIVERS, JUMPER CABLES, HARNESSES AND CONTROLS FOR ALL LOW VOLTAGE AND LED LIGHTING. CONTRACTOR SHALL CONFIRM THAT ALL LIGHTING FIXTURE DRIVERS SHALL BE FCC COMPLIANT.
8. THE ELECTRICAL CONTRACTOR SHALL PROVIDE ALL MOUNTING HARDWARE APPLICABLE TO FIXTURE AND CEILINGS TYPE INTO WHICH FIXTURE IS TO BE INSTALLED. REFER TO ARCHITECTS REFLECTED CEILING PLAN FOR CEILING MATERIALS.
9. ELECTRICAL CONTRACTOR SHALL EXTEND AND CONNECT EXISTING WIRING AND RACEWAY TO LOCATION OF NEW OR RELOCATED EQUIPMENT. CONTRACTOR SHALL EVALUATE CONDITION OF EXISTING WIRING AND RACEWAY AND REPLACE BACK TO SOURCE IF NECESSARY. CONTRACTOR SHALL REPLACE EXISTING WIRING AND RACEWAY, BACK TO SOURCE, IF EXISTING, EXTENDED WIRING DOES NOT REACH NEW OR RELOCATED EQUIPMENT. CONTRACTOR SHALL WIRE EXISTING, RELOCATED LIGHTING FIXTURES TO NEW SWITCHES AS SHOWN.
10. CONTRACTOR TO VERIFY THAT ALL EXISTING LIGHTING TO REMAIN IS COMPLETE, OPERATIONAL, FUNCTIONAL. AND CODE COMPLIANT. IF ETR LIGHTING IS NOT, IT SHALL BE REPLACED, IN KIND, WITH A NEW FIXTURE. ALL REPLACED FIXTURES SHALL MATCH ELECTRICAL CHARACTERISTICS OF EXISTING FIXTURES.
11. CONTRACTOR SHALL COORDINATE ALL LIGHTING WITH EXISTING AND NEW SYSTEMS ABOVE CEILING PRIOR TO INSTALLATION. CONTRACTOR SHALL RESOLVE ANY INSTALLATION CONFLICTS IN FIELD AND NOTIFY ARCHITECT AND ENGINEER OF CHANGE.
12. ALL EXPOSED AND SURFACE MOUNTED RACEWAY SHALL BE WIREMOLD OR EQUAL. COORDINATE ROUTING WITH ARCHITECT.
13. CONTRACTOR SHALL CONFIRM THAT ALL SUBMITTED LED DRIVERS ARE FCC COMPLIANT AND ALL SUBMITTED LIGHTING FIXTURES ARE UL LISTED.

POWER/COMM NOTES:

1. REFER TO DRAWING E0.0 FOR ELECTRICAL LEGEND AND GENERAL NOTES.
2. COORDINATE EXACT ELECTRICAL DEVICE MOUNTING HEIGHTS AND LOCATIONS WITH ARCHITECTURAL CASEWORK OR ARCHITECTURAL INTERIOR/EXTERIOR ELEVATION DRAWINGS.
3. COORDINATE AND CONFIRM COLOR OF RECEPTACLE FACEPLATES AND DEVICES WITH ARCHITECT.
4. ALL NEW EQUIPMENT SHALL MATCH BASE BUILDING STANDARDS AND SPECIFICATIONS, UNLESS NOTED OTHERWISE. ALL NEW EQUIPMENT SHALL BE COMPATIBLE WITH THE EXISTING SYSTEM.
5. CIRCUIT NUMBER DESIGNATIONS ARE INTENDED TO ILLUSTRATE BRANCH WIRING CONFIGURATION ONLY.
6. DEVICES SHALL BE COORDINATED WITH THE DEPTH OF NEW PARTITIONS.
7. CONTRACTOR SHALL COORDINATE ALL NEW EQUIPMENT POWER REQUIREMENTS AND NEMA PLUG CONFIGURATION WITH OWNER REPRESENTATIVE PRIOR TO INSTALLATION. FURNISH AND INSTALL ADDITIONAL EQUIPMENT TO COMPLETE INSTALLATION.
8. CONTRACTOR TO VERIFY THAT ALL EXISTING TO REMAIN ELECTRICAL DEVICES AND EQUIP ARE OPERATIONAL, FUNCTIONAL, AND CODE COMPLIANT. IF ETR DEVICES ARE NOT, THEY SHALL BE REPLACED, IN KIND, WITH A NEW DEVICE. ALL REPLACED DEVICES SHALL MATCH EXISTING DEVICES UNLESS NOTED OTHERWISE.
9. ALL POWER/DATA OUTLET FACEPLATES SHALL BE LABELED WITH CIRCUIT NUMBER FEEDING OUTLET AND PANEL DESIGNATION. LABEL STYLE AND SIZE SHALL MATCH BASE BUILDING STANDARDS. CONTRACTOR SHALL COORDINATE COLOR, SIZE AND METHOD OF LABELING WITH ARCHITECT.
10. ELECTRICAL CONTRACTOR SHALL EXTEND AND CONNECT EXISTING WIRING AND RACEWAY TO LOCATION OF NEW OR RELOCATED EQUIPMENT. CONTRACTOR SHALL EVALUATE CONDITION OF EXISTING WIRING AND RACEWAY AND REPLACE BACK TO SOURCE IF NECESSARY. CONTRACTOR SHALL REPLACE EXISTING WIRING AND RACEWAY, BACK TO SOURCE, IF EXISTING, EXTENDED WIRING DOES NOT REACH NEW OR RELOCATED EQUIPMENT.
11. CONTRACTOR SHALL FURNISH AND INSTALL ACCESSIBLE, REMOTE TEST SWITCH STATIONS FOR GFI RECEPTACLES THAT WOULD NOT BE ACCESSIBLE DUE TO REFRIGERATORS, VENDING MACHINES, EQUIPMENT, ETC. CONFIRM LOCATIONS OF REMOTE TEST STATIONS WITH ARCHITECT.
12. ALL NEW DEVICES SHALL BE FLUSH MOUNTED IN WALL UNLESS NOTED OTHERWISE.
13. PATCH AND REPAIR EXISTING DEVICES INDICATED TO BE REMOVED. BLANK COVERPLATES ARE NOT ACCEPTABLE.

RHODE ISLAND COLLEGE
FOGARTY RESEARCH LABORATORY, INBRE
600 MT. PLEASANT AVENUE, PROVIDENCE, RI 02908

BREWSTER THORNTON GROUP ARCHITECTS LLP
317 Iron Horse Way, Suite 202
Providence, RI 02908
401.861.1600
brewsterthornton.com

Z.M. WOZNY
REGISTERED PROFESSIONAL ENGINEER

JOB NO.	DATE
1942	01/31/20

ISSUE : BID SET

NO.	REVISION DESCRIPTION	DATE

SHEET TITLE
DEMOLITION AND NEW ELECTRICAL PLAN

SHEET
E1.0

1/24/2020 2:39:26 PM

LIGHTING FIXTURE SCHEDULE

MOUNTING	FLUORESCENT	LED	EXIT	
RECESSED	FR	LR	XR	
CEILING/SURFACE	FC	LC	XC	
PENDANT/SUSPENDED	FP	LP	XP	
WALL	FW	LW	XW	
TRACK	FT	LT		

TYPE	DESCRIPTION	MANUFACTURER & CATALOG NUMBER	LAMPS		INPUT		REMARKS
			NUMBER	TYPE	VOLTS	WATTS	
LT2	2x2 LED DECORATIVE TROFFER	FINELITE #HPR-F-2X2-DCO-B-835-UNV-SC	1	LED	UNV	37	
EB	SELF CONTAINED EMERGENCY BATTERY PACK	EVENLITE #TCL4W	1	LED	120	(2) 2	

LEGEND OF FEEDER SIZES– COPPER CONDUCTORS

TAG	CONDUCTORS (3 PHASE, 3 WIRE) WITH GROUND	RACEWAY SIZE	TAG	CONDUCTORS (3 PHASE, 4 WIRE) WITH GROUND	RACEWAY SIZE	NOMINAL AMPACITY RATING
60–3G	3#6 & 1#10 GND.	3/4"	60–4G	4#6 & 1#10 GND.	1"	60

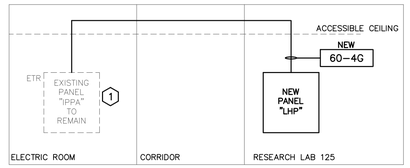

POWER DISTRIBUTION DETAIL KEYNOTE:

1. REMOVE ONE EXISTING 40A/3P CIRCUIT BREAKER AND PROVIDE ONE NEW 60A/3P CIRCUIT BREAKER. PROVIDE ALL NECESSARY HARDWARE AND ALL FINAL TERMINATIONS.

1 POWER DISTRIBUTION DETAIL

SCALE: NO SCALE

PANELBOARD SCHEDULE

PANEL DESIGNATION	VOLTS	PHASE	WIRES	MAINS (MLO = MAIN LUGS ONLY) BUS SIZE	OVERCURRENT DEVICE TRIP	OVERCURRENT DEVICE FRAME	BKR POLES	BRANCH DEVICES BREAKER AMPS 15	20	25	30	40	50	60	100	TOTAL POLES	MOUNTING: S=SURFACE F=FLUSH	ADDITTONAL CIRCUIT BREAKERS	REMARKS
LHP	120/208	3	4	60	60	60	1P		20							20	S		
							2P												
							3P												

1 OVERALL KEYPLAN

SCALE: 1/"=20'-0"

RHODE ISLAND COLLEGE

FOGARTY RESEARCH LABORATORY, INBRE

600 MT. PLEASANT AVENUE, PROVIDENCE, RI 02908

BREWSTER THORNTON GROUP ARCHITECTS LLP

317 Iron Horse Way,
Suite 202
Providence, RI 02908

401.861.1600
brewsterthornton.com

Z.M. WOZNY

REGISTERED PROFESSIONAL ENGINEER

JOB NO. 1942

DATE 01/31/20

ISSUE : BID SET

NO.	REVISION DESCRIPTION	DATE

SHEET TITLE

SCHEDULE & DETAILS AND OVERALL KEYPLAN

SHEET

E2.0

1/24/2020 2:39:31 PM