RHODE ISLAND COLLEGE

SOUTH CAMPUS SEWER IMPROVEMENTS PROJECT

JANUARY 2020

LIST OF DRAWINGS	
SHEET NO.	SHEET TITLE
1	COVER
2	LEGEND, ABBREVIATIONS, AND GENERAL NOTES
3	SEWER REPLACEMENT PLAN
4	DETOUR PLAN
5	SEWER DETAILS
6	MISCELLANEOUS DETAILS
7	TRAFFIC CONTROL DETAILS

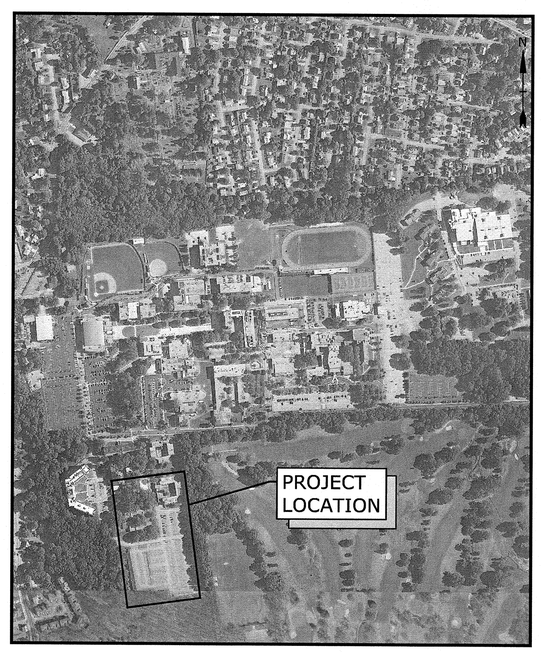

LOCATION MAP
NOT TO SCALE

PREPARED BY:
Tighe&Bond
www.tighebond.com

WILLIAM N. HARDY
No. 5047
REGISTERED
PROFESSIONAL ENGINEER

WILLIAM HARDY, PE
1/22/20

PREPARED FOR:
RHODE ISLAND COLLEGE

DIRECTOR OF CAPITAL PROJECTS
KEVIN FITTA, PE

COMPLETE SET 7 SHEETS

Last Saved: 1/22/2020
Plotted On:Jan 22, 2020-4:03pm By: NDay
Tighe & Bond: \\tighebond.com\data\Data\Projects\R\R0236\12 South Campus Sewer Improvements\Drawings_Figures\AutoCAD\Sheet\R0236-12-Cover.dwg

LEGEND

- EXISTING DRAIN MANHOLE
- EXISTING SANITARY MANHOLE
- EXISTING CATCH BASIN
- EXISTING TELEPHONE MANHOLE
- EXISTING DIGITAL SPOT ELEVATION (× 723.8)
- EXISTING INDIVIDUAL EVERGREEN
- EXISTING INDIVIDUAL DECIDUOUS
- EXISTING OVERHEAD LIGHT
- EXISTING STREET LAMP POLE (LP)
- EXISTING POST (P)
- EXISTING WATER GATE (WV)
- EXISTING GAS VALVE (GV)
- EXISTING GAS METER (G)
- EXISTING HYDRANT
- PROPOSED SANITARY MANHOLE
- PROPOSED SANITARY SEWER (SS)
- PIPELINE ABANDONMENT
- EXISTING SANITARY SEWER LINE (S)
- EXISTING STORM SEWER LINE (SD)
- EXISTING WATER SERVICE (W)
- EXISTING CABLE LINE (C)
- EXISTING GAS LINE (G)
- EXISTING ELECTRICAL LINE (E)
- EXISTING STORM DRAIN LINE (D)
- EXISTING OVERHEAD WIRE (OHW)
- EXISTING STEAM (ST)
- EXISTING STEAM CONDENSATE RETURN (SCR)
- EDGE OF BITUMINOUS PAVEMENT (UNLESS OTHERWISE NOTED)
- RETAINING WALL
- GUARDRAIL
- EDGE OF WOODED AREA
- FIRE ALARM (FA)
- HEDGES
- WIRE OR CHAIN LINK FENCE
- LIMIT OF WORK
- UTILITY POLE (UP)
- GUY WIRE
- STREET SIGN
- TEST PIT REQUIRED

ABBREVIATIONS

ABANDONED	ABAN	IRON PIPE	IP
BITUMINOUS CONCRETE	BC	MANHOLE	MH
BITUMINOUS WALK	BW	MANUAL ON UNIFORM TRAFFIC CONTROL DEVICES	MUTCD
CAST IRON	CI	POLYETHYLENE PIPE	PE
CATCH BASIN	CB	POLYVINYL CHLORIDE	PVC
CONCRETE CURB	CC	REINFORCED CONCRETE PIPE	RCP
CLEANOUT	CO	RIGHT OF WAY	R.O.W.
COMMUNICATIONS MANHOLE	CMH	REMOVE AND REPLACE	R&R
CONCRETE	CONC	SANITARY MANHOLE	SMH
CONCRETE WALK	CW	STATION	STA
CORRUGATED METAL PIPE	CMP	STONE BOUND	SB
DRAIN MANHOLE	DMH	TEMPORARY BENCH MARK	TBM
DUCTILE IRON	DI	UTILITY POLE	UP
ELEVATION	EL	VITRIFIED CLAY PIPE	VC
GAS GATE	GG	WATER GATE	WG
GATE VALVE	GV		
GRANITE CURB	GC		
GUY WIRE	GW		
GUY POLE	GP		
HYDRANT	HYD		
INVERT	INV		

GENERAL NOTES

1. THE BASE PLAN INCLUDING ALL EXISTING UTILITY LOCATIONS ARE FROM A PLAN ENTITLED: RHODE ISLAND INFRASTRUCTURE STUDY, PROVIDENCE RHODE ISLAND, MASTER UTILITIES, DATED JANUARY 2013, PREPARED BY PARE CORPORATION. THE ACCURACY AND COMPLETENESS OF SUBSURFACE INFORMATION SHOWN ON THESE DRAWINGS IS NOT GUARANTEED. DETERMINE THE LOCATIONS AND ELEVATIONS OF ALL UTILITIES WHICH MAY AFFECT CONSTRUCTION OPERATIONS.
2. CCTV INVESTIGATE POSSIBLE STUBS AND SANITARY SEWER SERVICES FOR ALL BUILDINGS WITHIN THE PROJECT AREA AND AS INDICATED ON THE DRAWINGS PRIOR TO INSTALLING THE NEW SEWER MAIN. ONCE LOCATED, PROVIDE THE ENGINEER A SKETCH OF EACH SERVICE LOCATION. ALL PROPOSED SERVICE WYES AND SERVICE LOCATIONS WILL BE DETERMINED IN THE FIELD AS DIRECTED BY THE ENGINEER. ALL SERVICE LOCATIONS BOTH ABANDONED AND NEW SHALL BE SHOWN BY CONTRACTOR ON AS-BUILT DRAWINGS UPON COMPLETION OF WORK.
3. PROCURE THE SERVICES OF AN UNDERGROUND UTILITY LOCATOR EXPERIENCED IN BOTH GROUND PENETRATING RADAR AND CABLE AND PIPE LOCATION TECHNIQUES AND IMPLEMENT SUCH TECHNIQUES AS REQUIRED TO LOCATE ALL UTILITIES WITHIN THE PROJECT AREA PRIOR TO THE START OF CONSTRUCTION AND ALSO COMPLY WITH DIG-SAFE REQUIREMENTS. FOLLOWING UTILITY LOCATION AND PRIOR TO CONSTRUCTION, PROVIDE ENGINEER A PLAN DETAILING THE LOCATION OF ALL SERVICES AND ADJACENT UTILITIES.
4. IT IS THE RESPONSIBILITY OF EACH BIDDER IN EVALUATING THESE PLANS TO MAKE EXAMINATIONS IN THE FIELD BY VARIOUS METHODS AND OBTAIN NECESSARY INFORMATION FROM AVAILABLE RECORDS, UTILITY COMPANIES, OWNER, AND INDIVIDUALS AS TO THE LOCATION OF SUBSURFACE STRUCTURES.
5. COORDINATE THE LOCATION OF STAGING AREAS AND JOB TRAILER WITH THE ENGINEER AND OWNER PRIOR TO MOBILIZATION OF ANY EQUIPMENT TO THE SITE. INSTALL SIX-FOOT CHAIN LINK FENCE W/SCREENING TO SEPARATE FROM EQUIPMENT AND CONSTRUCTION MATERIALS. INSTALL SIX-FOOT HIGH CHAIN LINK FENCE WITH SCREENING AROUND THE WORK AREA TO SEPARATE THE WORK ZONE FROM PEDESTRIANS. STORAGE OF EQUIPMENT AND MATERIALS WITHIN THE FENCED AREA WILL BE ALLOWED.
6. PROVIDE ACCESS TO ALL BUILDINGS DURING CONSTRUCTION. TEMPORARY ACCESS TO EXISTING BUILDINGS WILL BE REQUIRED AND ALL COSTS ASSOCIATED WITH TEMPORARY ACCESS TO BUILDINGS SHALL BE INCLUDED IN THE CONTRACTOR'S BID.
7. REVIEW ALL OF THE DRAWINGS AND SPECIFICATIONS ASSOCIATED WITH THIS PROJECT WORK SCOPE PRIOR TO THE INITIATION OF CONSTRUCTION. SHOULD THE CONTRACTOR FIND A CONFLICT WITH THE DOCUMENTS RELATIVE TO THE DRAWINGS, SPECIFICATIONS OR APPLICABLE CODES, NOTIFY THE ENGINEER IN WRITING PRIOR TO THE START OF CONSTRUCTION. FAILURE BY THE CONTRACTOR TO NOTIFY THE ENGINEER SHALL CONSTITUTE ACCEPTANCE OF FULL RESPONSIBILITY BY THE CONTRACTOR TO COMPLETE THE SCOPE OF WORK AS DEFINED BY THE CONTRACT DOCUMENTS AND IN FULL CONFORMANCE WITH LOCAL REGULATIONS AND CODES.
8. AREAS WITHIN AND OUTSIDE THE PROJECT LIMITS, DISTURBED BY CONSTRUCTION AND/OR EQUIPMENT SHALL BE RETURNED TO THEIR ORIGINAL CONDITION OR BETTER AND SHALL BE GRADED/RESTORED TO MEET PROPOSED CONSTRUCTION AS DIRECTED BY THE ENGINEER. COST FOR THIS WORK SHALL BE INCLUDED IN THE CONTRACTOR'S BID.
9. ALL UTILITY BOXES, FRAMES, AND GRATES, ETC. AFFECTED BY THE CONSTRUCTION ACTIVITIES SHALL BE RESET/RECONSTRUCTED TO THE PROPER GRADE AT NO ADDITIONAL COST TO THE OWNER.
10. EXCAVATION OF ANY TYPE SHALL BE ACCOMPLISHED IN SUCH A MANNER THAT UNDERGROUND UTILITIES OR STRUCTURES ARE NOT DAMAGED. IT SHALL BE THE CONTRACTOR'S SOLE RESPONSIBILITY, TO ADEQUATELY SUPPORT AND PROTECT ALL UTILITIES AND STRUCTURES THAT COULD POTENTIALLY BE AFFECTED BY THE WORK, AND TO REPAIR ANY DAMAGE INCURRED DURING EXCAVATION OPERATIONS. ALL EXCAVATION SHALL BE IN CONFORMANCE WITH THE LATEST OSHA REQUIREMENTS.
11. THE LOCATIONS OF ALL UNDERGROUND UTILITIES INSTALLED OR FOUND DURING CONSTRUCTION SHALL BE MEASURED FROM PERMANENT SURFACE FEATURES AND INDICATED BY THE CONTRACTOR ON AS-BUILT DRAWINGS.
12. COMPLETE ALL WORK SO THAT ANY MATERIALS WHICH ARE TO REMAIN IN PLACE OR WHICH ARE TO REMAIN THE PROPERTY OF THE OWNER, WILL NOT BE DAMAGED. IF THE CONTRACTOR DAMAGES ANY MATERIALS WHICH ARE TO REMAIN, OR WHICH ARE TO REMAIN THE PROPERTY OF THE OWNER, THE DAMAGED MATERIALS SHALL BE REPLACED TO THE SATISFACTION OF THE ENGINEER AT THE EXPENSE OF THE CONTRACTOR.
13. AFTER CONSTRUCTION IS COMPLETE, REMOVE ALL EXCESS MATERIAL, DEBRIS, EQUIPMENT, ETC. AND RESTORE OR REPAIR ANY DAMAGE THAT WAS A RESULT OF THE CONSTRUCTION ACTIVITIES AS DIRECTED BY THE ENGINEER.
14. ANTICIPATE THAT THE AREA OF THE PROPOSED WORK MAY BE ENCUMBERED BY UTILITY CONFLICTS. COORDINATE ALL ASPECTS OF WORK WITH RHODE ISLAND COLLEGE.
15. ALL PROPOSED WORK MAY BE VARIED IN THE FIELD BY THE ENGINEER TO MEET SITE CONDITIONS.
16. COMPLY WITH RHODE ISLAND COLLEGE STANDARDS AND REQUIREMENTS.
17. THE TESTING, HANDLING, USE AND DISPOSAL OF SOIL CONTAINING ARSENIC AND OTHER POTENTIAL CONTAMINANTS IS TO BE IN CONFORMANCE WITH THE DEPARTMENT OF ENVIRONMENTAL MANAGEMENT, OFFICE OF WASTE MANAGEMENT, REMEDIATION REGULATIONS, AS AMENDED.
18. THE CONSTRUCTION SITE MUST BE ACCESSIBLE TO EMERGENCY VEHICLES AT ALL TIMES.
19. MINIMIZE IMPACTS TO CAMPUS TRAFFIC AND PEDESTRIANS. COORDINATE ALL ROAD AND SIDEWALK CLOSURES WITH THE OWNER AND ENGINEER. PROVIDE DETAILED TRAFFIC MITIGATION PLANS TO THE ENGINEER AND OWNER AND SECURE APPROVAL BEFORE WORK BEGINS.
20. PROVIDE BYPASS PUMPING AS NECESSARY TO PROVIDE UNINTERRUPTED SERVICE DURING THE INSTALLATION, REPLACEMENT, AND LINING OF SEWER MAINS. BYPASS PUMPING IS CONSIDERED INCIDENTAL TO THE PROJECT AND NO SEPARATE PAYMENT WILL BE MADE.
21. PROVIDE TEMPORARY WORK ZONE BARRIERS AND WARNING SIGNAGE TO DELINEATE ACTIVE CONSTRUCTION ZONES AND PROVIDE SAFE PEDESTRIAN TRAVEL ROUTES AROUND THE CONSTRUCTION ZONE.
22. ONLY EXCAVATE MATERIAL THAT CAN BE BACKFILLED AND COMPACTED IN A SINGLE WORKING DAY. LEAVING OPEN EXCAVATIONS AT THE END OF THE WORK DAY IS PROHIBITED. EXCEPTIONS MAY BE CONSIDERED FOLLOWING A FORMAL WRITTEN REQUEST SUBMITTED TO THE COLLEGE AND ENGINEER.
23. STOCKPILED SOIL MUST BE USED AS BACKFILL OR DISPOSED OF WITHIN 2 WEEKS TO PREVENT EXCESSIVE STOCKPILING OF MATERIALS ON-SITE.
24. EXISTING LAWN SPRINKLERS ARE LOCATED WITHIN THE WORK AREA. PRIOR TO EXCAVATION, MEET WITH THE COLLEGE TO DETERMINE LOCATIONS. DURING EXCAVATION, DOCUMENT THE LOCATION OF ANY UNDERGROUND LINES THAT ARE ENCOUNTERED AND REPAIR ANY PORTION OF THE SYSTEM THAT WAS DAMAGED WITH EQUAL OR BETTER MATERIALS. THE REPLACED MATERIALS NEED TO BE APPROVED BY THE COLLEGE AND THE REPAIR WORK IS CONSIDERED INCIDENTAL AND SHOULD BE CONSIDERED IN THE BASE BID.
25. HYDROSEEDING OR SOD INSTALLATION WILL BE THE ONLY ACCEPTABLE LAWN RESTORATION. LOAM AND SEED WILL NOT BE ALLOWED.

Tighe&Bond
www.tighebond.com

WILLIAM N. HARDY
No. 5047
REGISTERED PROFESSIONAL ENGINEER
1/22/20

South Campus Sewer Improvements Project

Rhode Island College

Providence, RI

VERIFY SCALE
BAR IS 1 INCH ON ORIGINAL DRAWING
0 — 1 INCH
IF NOT ONE INCH ON THIS SHEET, ADJUST SCALES ACCORDINGLY

MARK	DATE	DESCRIPTION

PROJECT NO:	R0236-12
DATE:	01/2020
FILE: R0236-12-Notes.dwg	
DRAWN BY:	TMP
CHECKED:	DSH
APPROVED:	DEP

LEGEND, ABBREVIATIONS, AND GENERAL NOTES

SCALE: NO SCALE

SHEET 2

Last Saved: 1/22/2020
Plotted On:Jan 22, 2020-4:06pm By: NDay
Tighe & Bond: \\tighebond.com\data\Data\Projects\R\R0236\12 South Campus Sewer Improvements\Drawings_Figures\AutoCAD\Sheet\R0236-12-Notes.dwg

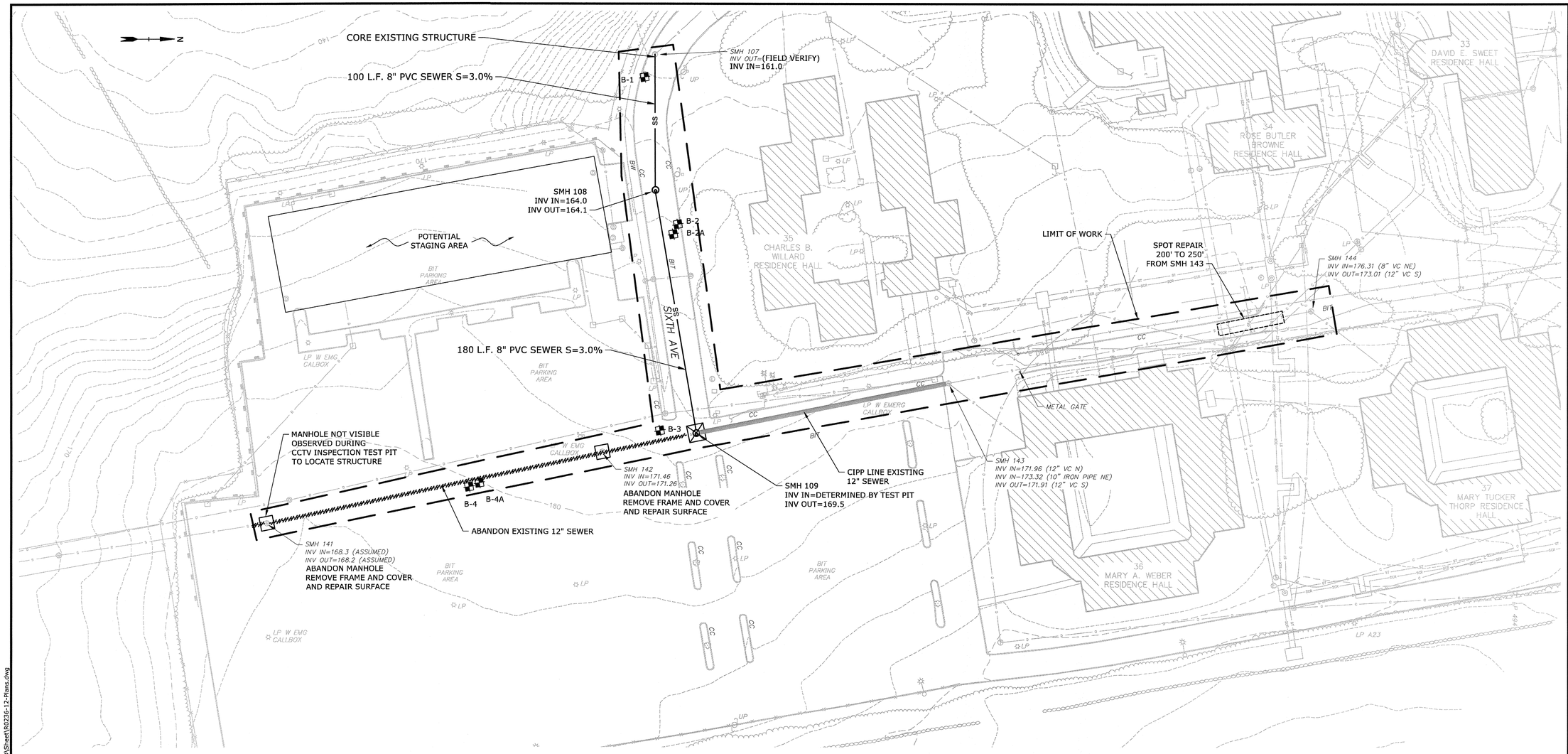

NOTES:

1. CONFIRM INVERT ELEVATIONS WITHIN ALL MANHOLES IMPACTED BY PIPE REPLACEMENT WORK PRIOR TO STARTING ANY CONSTRUCTION.
2. CLEAN, SWEEP, RE-STRIPE, REPAIR, AND SEAL COAT ANY AREAS DAMAGED IN THE STAGING AREA AT NO ADDITIONAL COST.
3. CONFIRM SEWER PIPE DIAMETER FOR PIPE TO RECEIVE CIPP LINER.
4. THE SMH 141 MANHOLE COVER IS NOT VISIBLE AT THE PARKING LOT SURFACE. THE MANHOLE WAS OBSERVED DURING CCTV INSPECTION. LOCATE USING METAL DETECTOR AND MEASUREMENTS PROVIDED BY THE COLLEGE OR OTHER MEANS NECESSARY TO LOCATE THE STRUCTURE.

SCALE IN FEET
0 40' 80'
GRAPHIC SCALE

Tighe&Bond
www.tighebond.com

WILLIAM N. HARDY
No. 5047
REGISTERED
PROFESSIONAL ENGINEER
1/22/20

South Campus Sewer Improvements Project

Rhode Island College

Providence, RI

VERIFY SCALE
BAR IS 1 INCH ON ORIGINAL DRAWING
0 1 INCH
IF NOT ONE INCH ON THIS SHEET, ADJUST SCALES ACCORDINGLY

MARK	DATE	DESCRIPTION

PROJECT NO:	R0236-12
DATE:	01/2020
FILE: R0236-12-Plans.dwg	
DRAWN BY:	
CHECKED:	
APPROVED:	DEP

SEWER REPLACEMENT PLAN

SCALE: 1" = 40'

SHEET 3

Last Saved: 1/22/2020
Plotted On:Jan 22, 2020-4:05pm By: NDay
Tighe & Bond:\\tighebond.com\data\Data\Projects\R\R0236\12 South Campus Sewer Improvements\Drawings_Figures\AutoCAD\Sheet\R0236-12-Plans.dwg

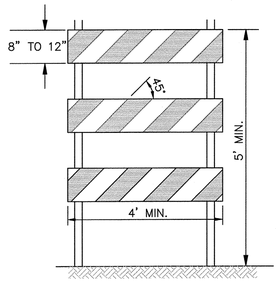

TYPE III BARRICADE
NO SCALE

NOTES:

1. CONSTRUCTION BARRICADES SHALL CONFORM TO THE REQUIREMENTS OF THE LATEST EDITION OF MUTCD.
2. MARKINGS FOR BARRICADE RAILS SHALL BE ALTERNATE ORANGE AND WHITE STRIPES SLOPING DOWNWARD IN THE DIRECTION TRAFFIC IS TO PASS. 6" WIDE STRIPES SHALL BE USED.
3. THE ENTIRE AREA OF ORANGE AND WHITE STRIPES SHALL BE RETROREFLECTIVE SHEETING AS REQUIRED IN THE SPECIFICATIONS. RAILS FOR TYPE II BARRICADES SHALL BE RETROREFLECTIVE ON BOTH SIDES. WHERE TRAFFIC PASSES ONLY IN ONE DIRECTION OF TRAVEL, ONLY THE SIDE FACING TRAFFIC SHALL BE RETROREFLECTIVE.
4. THE ENGINEER RESERVES THE RIGHT TO REJECT ANY BARRICADE DEEMED UNSUITABLE FOR THE PURPOSE INTENDED.
5. CORNERS OF BARRICADE RAILS SHALL BE ROUNDED.

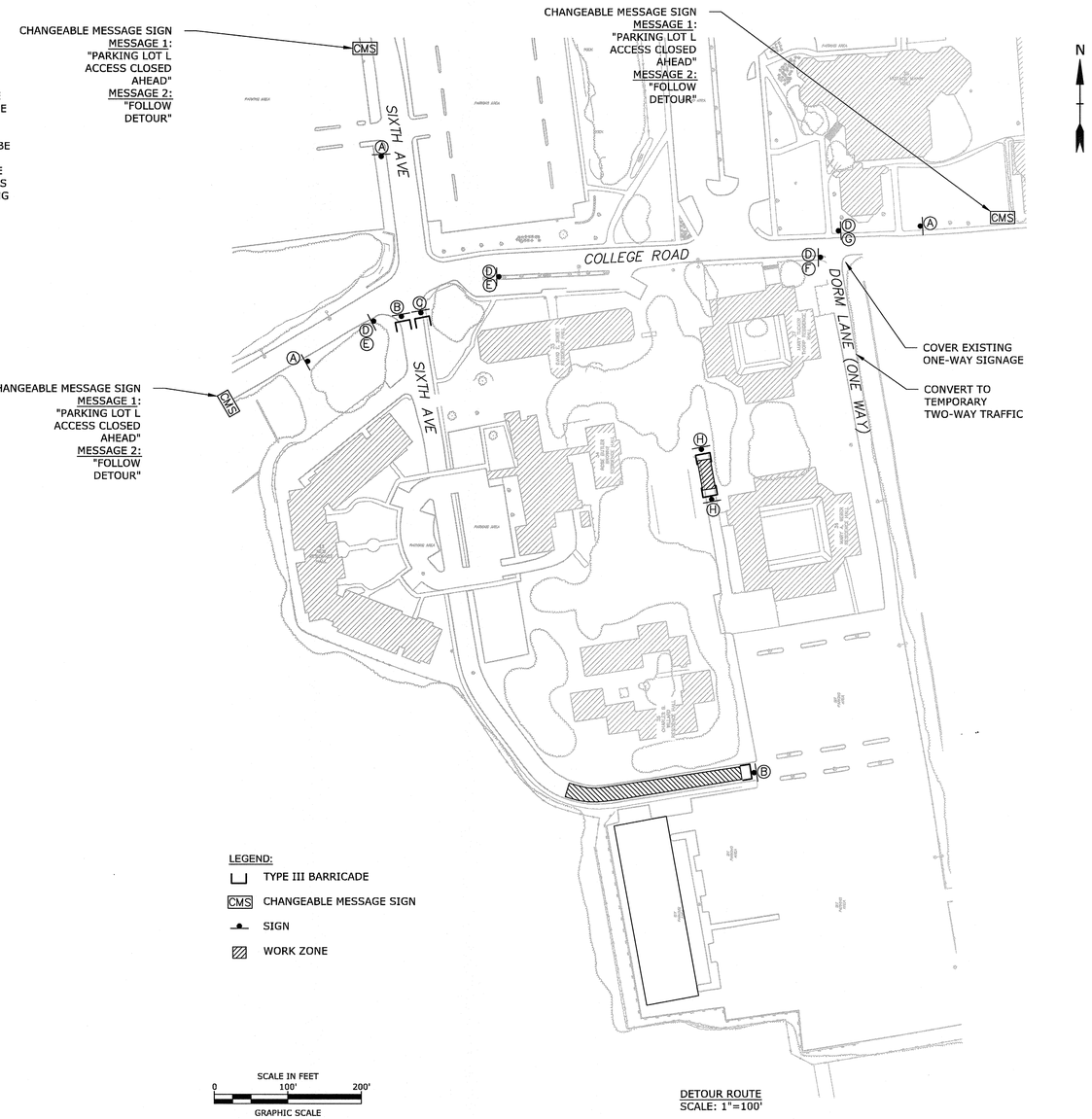

LEGEND:

- TYPE III BARRICADE
- CMS CHANGEABLE MESSAGE SIGN
- SIGN
- WORK ZONE

SCALE IN FEET
0 100' 200'
GRAPHIC SCALE

DETOUR ROUTE
SCALE: 1"=100'

NOTES:

1. ALL ROADWAYS MUST BE OPEN TO VEHICULAR TRAFFIC DAILY AND STEEL PLATES OR GRAVEL SHALL BE USED TO PROVIDE SMOOTH TRANSITION OVER EXCAVATION WORK.
2. DORM LANE MAY BE USED AS A DETOUR ROUTE IF SIXTH AVE (SOUTH OF COLLEGE ROAD) MUST BE CLOSED. PROVIDE PROPER SIGNAGE TO CONVERT TO TWO-WAY TRAFFIC.

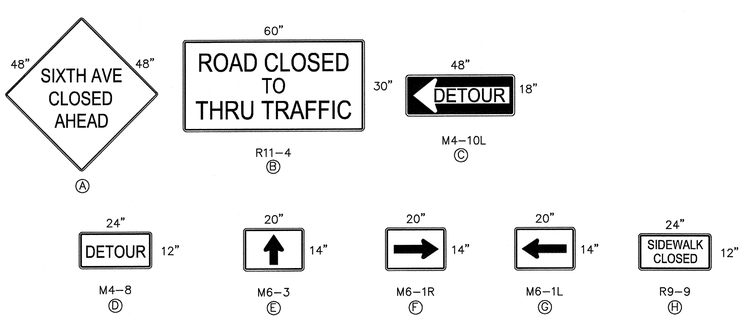

Tighe&Bond
www.tighebond.com

WILLIAM N. HARDY
No. 5047
REGISTERED
PROFESSIONAL ENGINEER
1/22/20

South Campus Sewer Improvements Project

Rhode Island College

Providence, RI

VERIFY SCALE
BAR IS 1 INCH ON ORIGINAL DRAWING
0 1 INCH
IF NOT ONE INCH ON THIS SHEET, ADJUST SCALES ACCORDINGLY

MARK	DATE	DESCRIPTION

PROJECT NO:	R0236-12
DATE:	01/2020
FILE: R0236-12-Plans.dwg	
DRAWN BY:	
CHECKED:	
APPROVED:	DEP

DETOUR PLAN

SCALE: AS SHOWN

SHEET 4

Last Saved: 1/22/2020
Plotted On:Jan 22, 2020-4:05pm By: NDay
Tighe & Bond:\\tighebond.com\data\Data\Projects\R\R0236\12 South Campus Sewer Improvements\Drawings_Figures\AutoCAD\Sheet\R0236-12-Plans.dwg

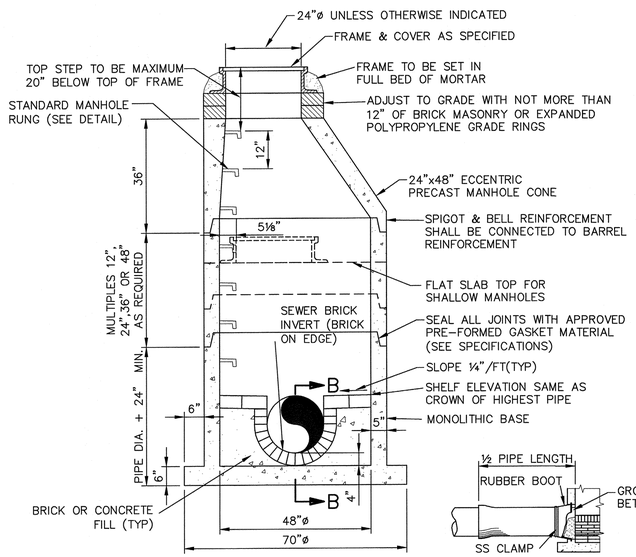

48" PRECAST SANITARY SEWER MANHOLE
NO SCALE

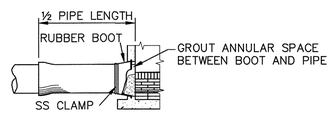

SECTION B–B

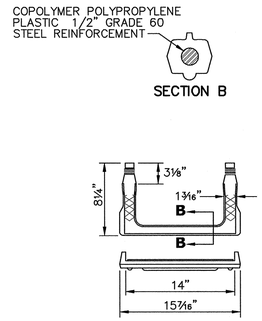

STANDARD MANHOLE RUNG
NOT TO SCALE

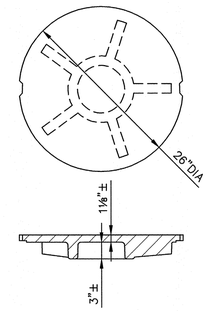

STANDARD MANHOLE COVER
MINIMUM WEIGHT: 208 LBS.

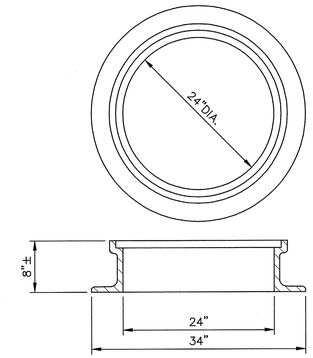

STANDARD MANHOLE FRAME
MINIMUM WEIGHT: 288 LBS.

NOTES:
1. FRAME AND COVER SHALL BE PROVIDED FROM THE SAME MANUFACTURER.
2. LETTERING SHALL BE CAST INTO COVERS AS SPECIFIED.

MANHOLE FRAME & COVER
NO SCALE

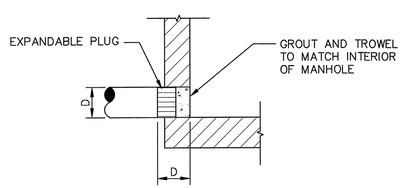

PLUG AT ACTIVE MANHOLE

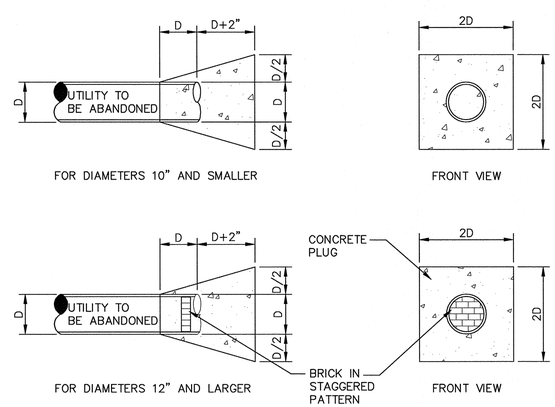

TYPICAL PLUGS FOR GRAVITY SEWER ABANDONMENT
NO SCALE

Tighe&Bond
www.tighebond.com

WILLIAM N. HARDY
No. 5047
REGISTERED PROFESSIONAL ENGINEER
1/22/20

South Campus Sewer Improvements Project

Rhode Island College

Providence, RI

VERIFY SCALE
BAR IS 1 INCH ON ORIGINAL DRAWING
0 — 1 INCH
IF NOT ONE INCH ON THIS SHEET, ADJUST SCALES ACCORDINGLY

MARK	DATE	DESCRIPTION

PROJECT NO:	R0236-12
DATE:	01/2020
FILE:	R0236-12-Details.dwg
DRAWN BY:	
CHECKED:	
APPROVED:	DEP

SEWER DETAILS

SCALE: AS SHOWN

SHEET 5

Last Saved: 1/22/2020
Plotted On:Jan 22, 2020-4:04pm By: NDay
Tighe & Bond:\\tighebond.com\data\Data\Projects\R\R0236\12 South Campus Sewer Improvements\Drawings_Figures\AutoCAD\Sheet\R0236-12-Details.dwg

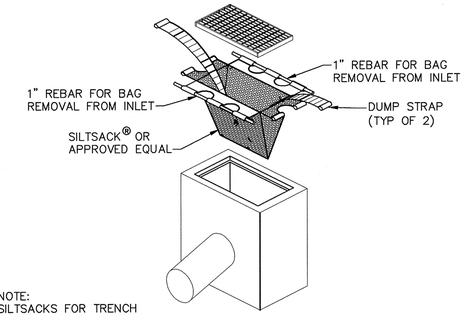

NOTE:
SILTSACKS FOR TRENCH GRATE MATCHED OPENING LENGTH AS REQUIRED.

SILTSACK® EROSION CONTROL

NO SCALE

SILTSACK MANUFACTURED BY:
ATLANTIC CONSTRUCTION FABRICS, INC.
1801-A WILLIS ROAD
RICHMOND, VIRGINIA 23237

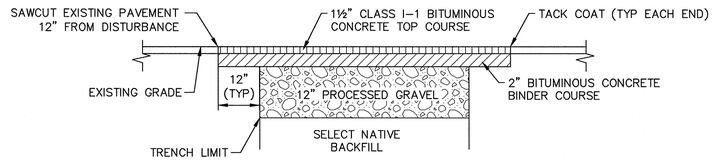

PERMANENT ROADWAY TRENCH REPAIR

NO SCALE

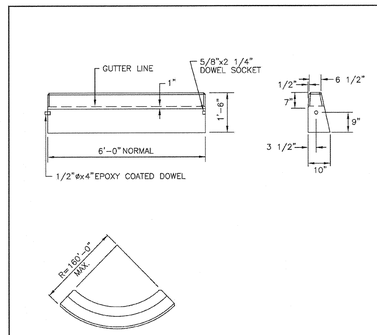

CIRCULAR CURB

NOTES:
1. SHALL BE IN ACCORDANCE WITH SECTION 906 OF THE R.I. STANDARD SPECIFICATIONS.
2. MINIMUM LENGTH OF STRAIGHT OR CIRCULAR FILLER PIECES TO BE 3'-0".
3. EXPOSED SURFACES TO HAVE A SPONGE FLOAT FINISH.
4. CIRCULAR CURB IS REQUIRED ON CURVES WITH RADII OF 160'-0" OR LESS. STRAIGHT CURB TO BE USED ON CURVES OF MORE THAN 160'-0" RADIUS.
5. EXPOSED EDGES TO HAVE A 3/4" CHAMFER.

RHODE ISLAND DEPARTMENT OF TRANSPORTATION

REVISIONS			PRECAST CONCRETE CURB	R.I. STANDARD 7.1.0
NO.	BY	DATE		
1	MLP	Mar 05	JUNE 15, 1998 (ISSUE DATE)	

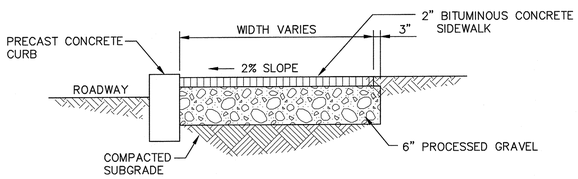

BITUMINOUS CONCRETE SIDEWALK REPAIR

NO SCALE

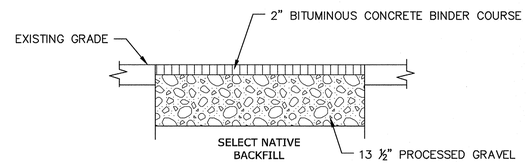

* TO BE REMOVED DURING PERMANENT ROADWAY TRENCH INSTALLATION

TEMPORARY TRENCH REPAIR

NO SCALE

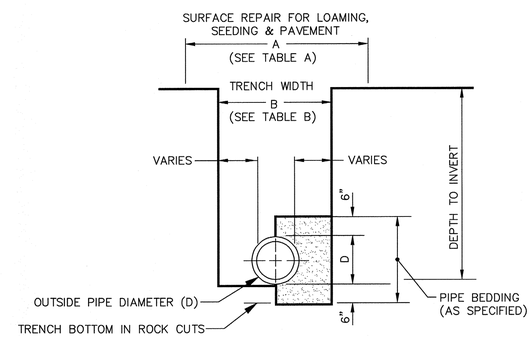

TYPICAL TRENCH SECTION

TABLE A – MAXIMUM SURFACE REPAIR PAY WIDTHS (SEE NOTE 1)			
OUTSIDE PIPE DIAMETER 0 – 24"		OUTSIDE PIPE DIAMETER GREATER THAN 24"	
TEMPORARY REPAIR (3)	PERMANENT RAPAIR (4)	TEMPORARY REPAIR (3)	PERMANENT REPAIR (4)
6'-6" MAX.	8'-6" MAX.	D + 4'-0" MAX.	D + 6'-0" MAX.

TABLE B – MAXIMUM TRENCH EXCAVATION PAY WIDTHS (SEE NOTE 1)	
OUTSIDE PIPE DIAMETER 0 – 24"	OUTSIDE PIPE DIAMETER GREATER THAN 24"
5'-0"	D + 3'-0"

NOTE:
1. THE PAYLINE DETAIL WILL BE USED TO DETERMINE QUANTITIES INCLUDED IN PARAGRAPH 3 – UNIT PRICES NOTED IN THE BID FORM. PAYLINES WILL NOT BE MEASURED FOR WORK INCLUDED IN THE BASE BID – ITEM 1.
2. THE PAYLINE DIMENSIONS SHOWN REPRESENT THE MAXIMUM PAYLINE LIMITS TO BE PAID. WHEN THE ACTUAL SURFACE REPAIR OR TRENCH WIDTH IS LESS, THE ACTUAL WIDTH SHALL BE PAID FOR AT THE APPLICABLE UNIT PRICE.
3. TRENCH SURFACE REPAIR WIDTH FOR STREETS WHICH INCLUDE FULL WIDTH OVERLAY OR GRAVEL SURFACE SHALL BE 6'-6" MAX, FOR PIPES 0"-24".
4. INCLUDES TEMPORARY PAVEMENT PATCHES FOR SIDEWALKS AND DRIVEWAYS.
5. INCLUDES PERMANENT REPAIRS FOR DRIVEWAYS, SIDEWALKS, LAWN AREAS (LOAM & SEED), BERMS, ROADWAYS AND CURBS.

TRENCH EXCAVATION AND SURFACE REPAIR PAYLINES

NO SCALE

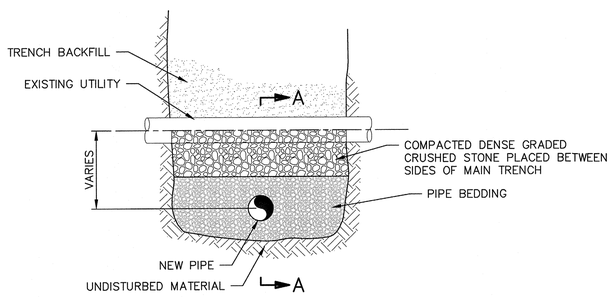

TYPICAL TRENCH SECTION

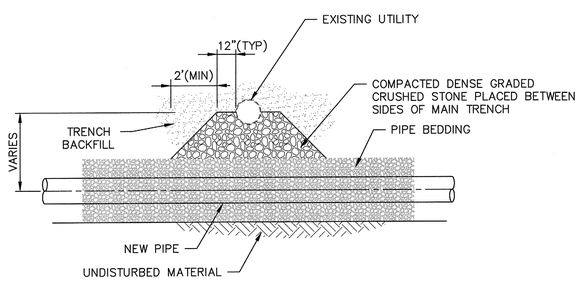

SECTION A–A

UTILITY CROSSING DETAIL

NO SCALE

Tighe&Bond
www.tighebond.com

WILLIAM N. HARDY
No. 5047
REGISTERED PROFESSIONAL ENGINEER
1/22/20

South Campus Sewer Improvements Project

Rhode Island College

Providence, RI

VERIFY SCALE
BAR IS 1 INCH ON ORIGINAL DRAWING
0 — 1 INCH
IF NOT ONE INCH ON THIS SHEET, ADJUST SCALES ACCORDINGLY

MARK	DATE	DESCRIPTION

PROJECT NO:	R0236-12
DATE:	01/2020
FILE:	R0236-12-Details.dwg
DRAWN BY:	
CHECKED:	
APPROVED:	DEP

MISCELLANEOUS DETAILS

SCALE: AS SHOWN

SHEET 6

Last Saved: 1/22/2020
Plotted On:Jan 22, 2020-4:04pm By: NDay
Tighe & Bond:\\tighebond.com\data\Data\Projects\R\R0236\12 South Campus Sewer Improvements\Drawings_Figures\AutoCAD\Sheet\R0236-12-Details.dwg

NOTES:

1. COORDINATE ALL TRAFFIC CONTROL SETUPS WITH RHODE ISLAND COLLEGE AND THE ENGINEER 2 BUSINESS DAYS PRIOR TO SETUP. APPROVAL BY THE COLLEGE PRIOR TO IMPLEMENTATION IS REQUIRED. REFER TO SPECIFICATION SECTION 01550.
2. FLAGS SHALL BE AT LEAST 16"x16".
3. DISTANCES ARE A GUIDE AND MAY BE ADJUSTED IN FIELD BY ENGINEER.
4. • = CHANNELIZING DEVICE
5. MAXIMUM SPACING OF CHANNELIZING DEVICES IS EQUAL IN FEET TO SPEED LIMIT.
6. NO TRAFFIC CONTROL DEVICES SHALL REMAIN ON THE ROADWAY AT THE END OF EACH WORK DAY.
7. SIGNS MUST BE COVERED OR REMOVED AT THE END OF EACH WORK DAY, OR WHENEVER BOTH LANES ARE OPEN TO TRAFFIC.
8. ALL WARNING SIGNS SHALL BE BLACK LEGEND ON A REFLECTIVE ORANGE BACKGROUND.
9. ADVISORY SPEED PLATES (W13-1) TO BE USED WHERE APPROPRIATE.
10. ALL TRAFFIC CONTROL DEVICES USED SHALL CONFORM TO THE LATEST EDITION OF THE "FHWA MANUAL ON UNIFORM TRAFFIC CONTROL DEVICES FOR STREETS AND HIGHWAYS" (MUTCD) IN BOTH SPECIFICATION AND APPLICATION.
11. TYPICAL LAYOUTS:
    - TYPICAL LAYOUT "A" SHALL BE USED WHEN THE TRAVEL WIDTH FROM THE CHANNELING DEVICES TO THE EDGE OF PAVEMENT IS GREATER THAN 22 FEET.
    - TYPICAL LAYOUT "B" SHALL BE USED WHEN THE TRAVEL WIDTH FROM THE CHANNELING DEVICES TO THE EDGE OF PAVEMENT IS LESS THAN 22 FEET.
    - TYPICAL LAYOUT "C" SHALL BE USED FOR ALL INTERSECTIONS, WHETHER OR NOT THE PROPOSED WATER OR SEWER LINE CROSSES THE INTERSECTION.
12. FOR TYPICAL LAYOUT B & C THE CONTRACTOR SHALL MAINTAIN ONE OPEN TRAVEL LANE OF NOT LESS THAN 12 FEET AT ALL TIMES.
13. THE WORK ZONE AS SHOWN ON THESE PLANS IS REPRESENTATIVE ONLY AND MAY VARY IN BOTH LENGTH AND LOCATION AS CONSTRUCTION PROGRESSES. REGARDLESS OF THESE VARIATIONS, THE OFFSET DISTANCES TO THE TRAFFIC CONTROL DEVICES SHOWN SHALL BE MAINTAINED.
14. NO CONSTRUCTION EQUIPMENT OR MATERIALS (EXCEPT THOSE IN USE) SHALL BE STORED CLOSER THAN 8 FEET TO THE EDGE OF TRAVELLED LANES.
15. ALL OPERATIONS SHALL BE CONDUCTED SO AS NOT TO INTERFERE WITH, INTERRUPT, OR ENDANGER THE GENERAL PUBLIC OR THE TRAFFIC FLOW.
16. NO TRENCH SHALL BE LEFT OPEN OVERNIGHT. IF IT BECOMES NECESSARY FOR SAID TRENCH TO BE LEFT OVERNIGHT, THEN IT SHALL BE COVERED WITH STEEL PLATES AND MADE PASSABLE FOR VEHICLES AND PEDESTRIANS. ADDED ASPHALT RAMPS ON PLATE EDGES WILL BE REQUIRED.
17. IF A ROAD NEEDS TO BE CLOSED TEMPORARILY, COORDINATE ROAD CLOSURE WITH RHODE ISLAND COLLEGE 2 WEEKS IN ADVANCE. CAMPUS TRAFFIC MUST HAVE ACCESS TO EVERY BUILDING ON-SITE AT ALL TIMES.
18. FOR ANY PLANNED ROAD CLOSURE, SUBMIT A DETAILED ROAD CLOSURE PLAN IDENTIFYING ACCESS ROUTES TO ALL BUILDING ON CAMPUS, CAMPUS TRAFFIC TRAVEL DIRECTION, SIGNING AND TEMPORARY PARKING AREAS AS NEEDED. PLAN MUST INCLUDE A SEQUENCE OF CONSTRUCTION THAT DETAILS HOW ALL AREAS OF CAMPUS ARE TO REMAIN ACCESSIBLE DURING CONSTRUCTION ACTIVITIES. PLAN MUST BE SUBMITTED TWO WEEKS PRIOR TO ROAD CLOSURE FOR APPROVAL BY THE OWNER. NO WORK IS TO TAKE PLACE PRIOR TO APPROVAL.

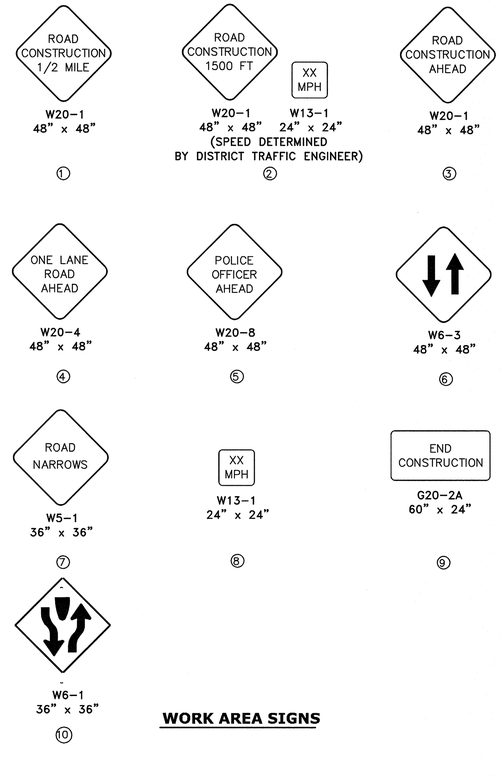

WORK AREA SIGNS

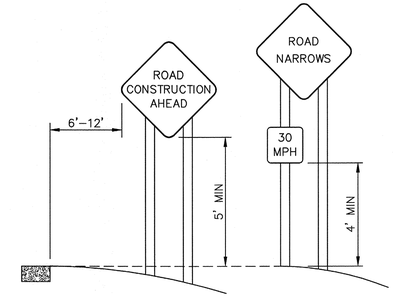

TYPICAL INSTALLATION OF PROJECT SIGNS

LEGEND

- • • • • TRAFFIC CONES/DRUMS (CHANNELING DEVICE)
- TRAFFIC OFFICER
- BARRICADE
- SIGN
- WORK AREA
- TWO WAY TRAFFIC FLOW- SINGLE LANE WITH TRAFFIC CONTROL
- TWO WAY TRAFFIC FLOW- TWO LANES

TYPICAL LAYOUT "A"

TWO OPERATING LANES

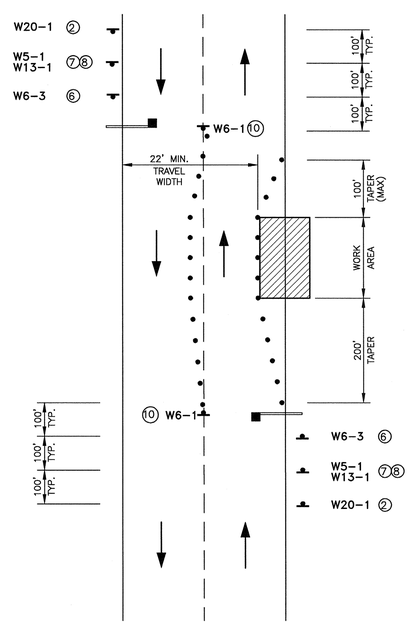

TYPICAL LAYOUT "B"

INTERSECTION LANE CLOSURE WHEN WORKING AT A CORNER WITHIN AN INTERSECTION

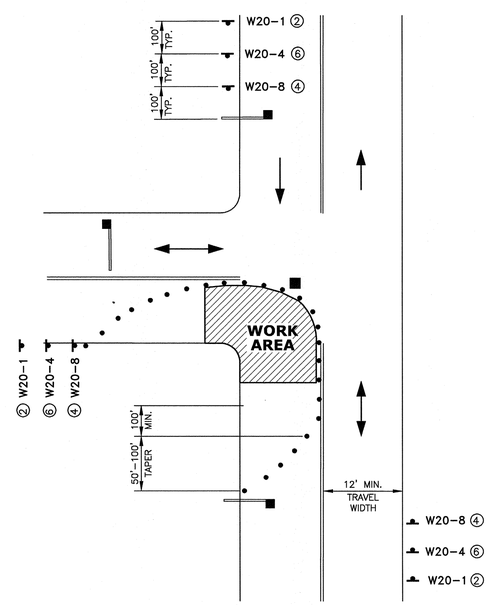

TYPICAL LAYOUT "C"

TWO LANE ROADWAY WITH ONE LANE CLOSED

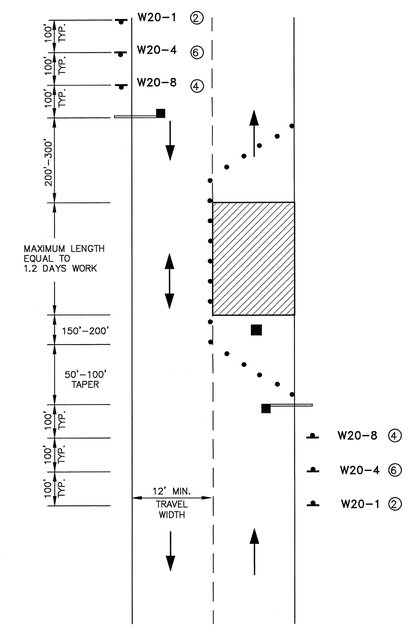

PLASTIC DRUMS

NOTES:

1. DRUM DESIGN AND APPLICATIONS SHALL BE AS PER THE CURRENT EDITION OF THE MUTCD.
2. DRUMS SHALL BE APPROXIMATELY 36" IN HEIGHT, HAVING A MINIMUM WALL THICKNESS OF 3/32" AND A MINIMUM DIAMETER OF 18" REGARDLESS OF ORIENTATION.
3. DRUM MATERIAL SHALL BE APPROVED U.V. RESISTANT, LOW DENSITY, IMPACT RESISTANT, LINEAR POLYETHYLENE (OR APPROVED EQUIVALENT). METAL DRUMS ARE PROHIBITED FROM USE ON ALL STATE HIGHWAY PROJECTS.
4. SHEETING SHALL BE APPROVED ORANGE AND WHITE TYPE IV REFLECTORIZED SHEETING CONFORMING TO M.9.30.0.
5. ALL DRUMS SHALL BE WELL MAINTAINED INCLUDING REMOVAL OF DUST OR ROAD FILM, SO AS NOT TO REDUCE REFLECTIVE EFFICIENCY. WHEN A DRUM LOSES TARGET VALUE IT SHALL BE REPLACED.
6. WHEN A DRUM IS NO LONGER NEEDED IT SHALL BE STORED IN A DRUM STORAGE AREA, UNLESS IT IS REQUIRED FOR FUTURE USE WITHIN A FIVE DAY PERIOD, IN WHICH CASE IT MAY BE STORED ON LOCATION.

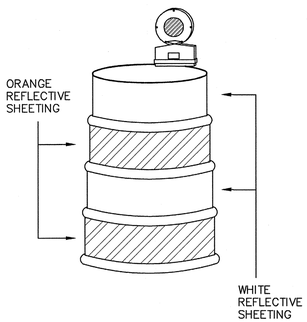

Tighe&Bond
www.tighebond.com

WILLIAM N. HARDY
No. 5047
REGISTERED PROFESSIONAL ENGINEER
1/22/20

South Campus Sewer Improvements Project

Rhode Island College

Providence, RI

VERIFY SCALE
BAR IS 1 INCH ON ORIGINAL DRAWING
0 — 1 INCH
IF NOT ONE INCH ON THIS SHEET, ADJUST SCALES ACCORDINGLY

MARK	DATE	DESCRIPTION

PROJECT NO:	R0236-12
DATE:	01/2020
FILE:	R0236-12-Details.dwg
DRAWN BY:	
CHECKED:	
APPROVED:	DEP

TRAFFIC CONTROL DETAILS

SCALE: AS SHOWN

SHEET 7

Last Saved:1/22/2020
Plotted On:Jan 22, 2020-4:04pm By: NDay
Tighe & Bond: \\tighebond.com\data\Data\Projects\R\R0236\12 South Campus Sewer Improvements\Drawings_Figures\AutoCAD\Sheet\R0236-12-Details.dwg