CENTER GENERAL COMPLEX
CRANSTON, RI

SIEBE ENVIRONMENTAL CONTROLS ENE, INC.
BARBER-COLMAN/ROBERTSHAW

CAJ CONSULTING ENGINEERS
CATAUDELLA ASSOCIATES, INC.
PROVIDENCE, RHODE ISLAND
DATE 11/6/99
BY JSC
☐ APPROVED ☒ APPROVED AS NOTED
☐ NOT APPROVED ☐ REVISE AND RESUBMIT
THE ENGINEERS REVIEW AND APPROVAL OF THIS SUBMITTAL ARE EXPRESSLY LIMITED AS PROVIDED IN THE CONTRACT DOCUMENTS AND ARE ONLY TO DETERMINE COMPLIANCE WITH INFORMATION GIVEN IN CONTRACT DOCUMENTS AND CONFORMANCE WITH DESIGN CONCEPT OF COMPLETED PROJECT AS A FUNCTIONING WHOLE. CONTRACTORS AND ENGINEERS NOT RESPONSIBLE FOR ALL MATTERS RELATING TO FABRICATION, SHIPPING, HANDLING, STORAGE, ASSEMBLY, INSTALLATION AND CONSTRUCTION, FOR ALL SAFETY ASPECTS OF PERFORMING THE WORK [illegible] COORDINATING THE WORK.

DRAWING INDEX

PAGE	DESCRIPTION
1	COVER SHEET
2	WIRING DETAILS
3	SYSTEM ARCHITECTURE
4	BUILDING 69-A LAN LINE LAYOUT
5	AHU-69A-1 AND REF-69A-1,2 AND SHWP-69/72 CONTROL
6	AHU-69A-2 CONTROL
6A	BUILDING 69A MN-ASDI
7	BUILDING 69-A TRANE FAN COIL A/C UNIT CONTROL
8	BUILDING 69-A UNIT HEATER, FINTUBE AND EF-69-3 CONTROL
9	BUILDING 69 LAN LINE LAYOUT
10	AHU-69-6 AND RAF-69-6 CONTROL
11	AHU-69-5 AND RAF-69-5 CONTROL
12	AHU-69-1 CONTROL
13	AHU-69-2 CONTROL
14	AHU-69-3 CONTROL
15	AHU-69-4 AND EF-69-1,4 CONTROL
16	BUILDING 69 MN-ASDI
17	BUILDING 69 TRANE FAN COIL A/C UNIT CONTROL
18	BUILDING 69 VAV CONTROL
19	BUILDING 69 UNIT HEATER AND EF-69-7 CONTROL
20	PAGE NOT USED
21	BUILDING 70 LAN LINE LAYOUT
22	RTU-70-1 AND REF-70-2 CONTROL
23	RTU-70-1 AND REF-70-2 CONTROL PANEL
24	RTU-70-2 CONTROL
25	RTU-70-2 CONTROL PANEL
26	RTU-70-3 CONTROL
27	RTU-70-4 CONTROL

PAGE	DESCRIPTION
27A	BUILDING 70 MN-ASDI
28	BUILDING 70 TRANE FAN COIL A/C UNIT CONTROL
29	BUILDING 70 VAV CONTROL
30	BUILDING 70 EF-69-3 CONTROL
31	BUILDING 71 LAN LINE LAYOUT
32	AHU-71-1 AND EF-71-1,3 CONTROL
33	PAGE NOT USED
34	AHU-71-2 CONTROL
35	AHU-71-3 CONTROL
36	PAGE NOT USED
37	AHU-71-4 CONTROL
38	BUILDING 71 MN-ASDI
39	PAGE NOT USED
40	BUILDING 71 TRANE FAN COIL A/C UNIT CONTROL
41	BUILDING 71 VAV CONTROL
42	BUILDING 71 UNIT HEATER AND EF-71-4 CONTROL
43	BUILDING 72 LAN LINE LAYOUT
44	AHU-72-1 AND EF-72-1,2 CONTROL
45	AHU-72-2 ANF RAF-72-6 CONTROL
46	AHU-72-3 AND RAF-72-7 CONTROL
47	AHU-72-4 AND EF-72-8,9 CONTROL
48	AHU-72-5 CONTROL
48A	BUILDING 72 MN-ASDI
49	BUILDING 72 TRANE FAN COIL A/C UNIT CONTROL
50	BUILDING 72 VAV CONTROL
51	BUILDING 72 UNIT HEATER AND EF-72-4 CONTROL
52	BUILDING 73 LAN LINE LAYOUT
53	AHU-73-1 AND RAF-73-7 CONTROL

PAGE	DESCRIPTION
54	AHU-73-2 AND REF-73-2 CONTROL
55	RTU-73-1 CONTROL
56	RTU-73-2 CONTROL
57	RTU-73-3 AND REF-73-5 CONTROL
58	RTU-73-3 AND REF-73-5 CONTROL PANEL
59	BUILDING 73 CW/HW DIFFERENTIAL PRESSURE SENSORS
59A	BUILDING 73 MN-ASDI
60	BUILDING 73 TRANE FAN COIL A/C UNIT CONTROL
61	BUILDING 73 VAV CONTROL
62	BUILDING 73 UH/CUH, EF-73-8 AND REF-73-6 CONTROL
63	CHILLED WATER SYSTEM LAYOUT
64	HOT WATER SYSTEM LAYOUT
65	CHILLED WATER/HOT WATER SYSTEM CONTROL PANEL
66	VALVE SHEDULE
67	VALVE SCHEDULE
68	VALVE SCHEDULE
69	DAMPER SCHEDULE
70	SEQUENCES OF OPERATION
71	SEQUENCES OF OPERATION
71A	EQUIPMENT TAGS

SIEBE ENVIRONMENTAL CONTROLS ENE, INC
Rhode Island Branch
54B Vermont Ave
Warwick RI 02888
PH: (401) 737-8905
FAX: (401) 737-8948

No.	Revision	Date
2		10-20-99
1		9-28-99

Architect: SA-GCA ARCHITECTS
Engineer: JOSEPH CATAUDELLA
Contractor: DELTA MECHANICAL OF N.E.
Drawn by: MC
Checked by: _____
CAD file: STD-ACAD Date: 8-12-99

CENTER GENERAL COMPLEX
CRANSTON, RI
COVER SHEET

JOB NUMBER 7721R
SHEET NO. 1 OF 71

WIRING DETAILS

24 ELECTRICAL PANEL TERMINAL

AA PNEUMATIC LINE ID

MICROZONE II ANALOG INPUT (RTD)

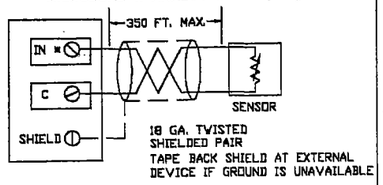

FIGURE "A"

MICROZONE II ANALOG INPUT (4–20 ma.)
(REFERENCE FIGURE F)

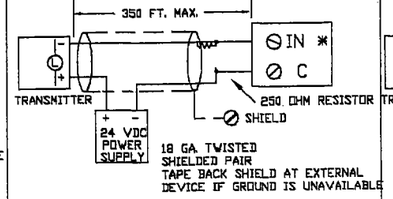

FIGURE "B"

MICROZONE II ANALOG INPUT (0–5 Vdc)
(REFERENCE FIGURE F)

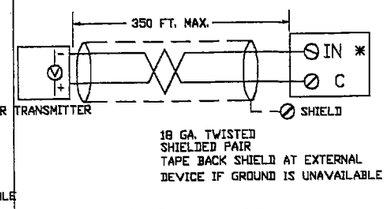

FIGURE "C"

MICROZONE II DIGITAL INPUT

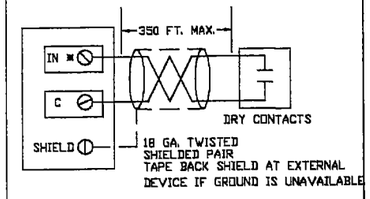

FIGURE "D"

4–20ma OR 0–5vdc ON OLD MICROZONES

ON OLDER MICROZONE II'S A VOLTAGE LIMITER IS REQUIRED TO BE INSTALLED AT MICROZONE. 4–20 ma APPLICATION SET DIP TO MA AND INSTALL A 200 OHM RESISTOR. 0–5 VDC APPLICATIONS JUST SET DIP FOR VDC

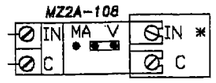

FIGURE "E"

FIGURE "F"

LCM/GCS ANALOG INPUT (RTD)

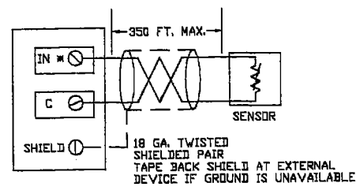

FIGURE "G"

LCM/GCS ANALOG INPUT (4–20 ma.)

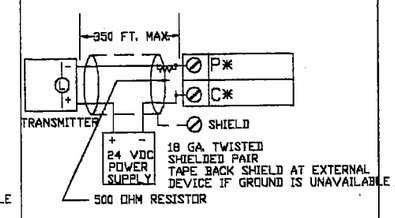

FIGURE "H"

LCM/GCS ANALOG INPUT (0–10 Vdc)

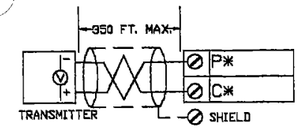

18 GA. TWISTED SHIELDED PAIR
TAPE BACK SHIELD AT EXTERNAL DEVICE IF GROUND IS UNAVAILABLE

FIGURE "I"

LCM/GCS DIGITAL INPUT

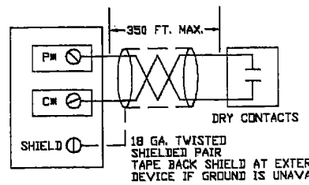

18 GA. TWISTED SHIELDED PAIR
TAPE BACK SHIELD AT EXTERNAL DEVICE IF GROUND IS UNAVAILABLE

FIGURE "J"

LCM/GCS PULSE INPUT COUNTER

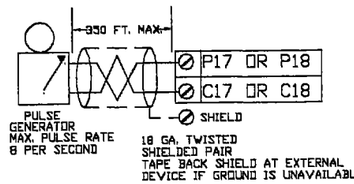

18 GA. TWISTED SHIELDED PAIR
TAPE BACK SHIELD AT EXTERNAL DEVICE IF GROUND IS UNAVAILABLE

FIGURE "K"

FIGURE "L"

LCM/GCS ANALOG OUTPUT (0–10 Vdc)

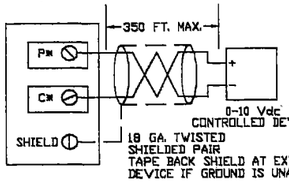

18 GA. TWISTED SHIELDED PAIR
TAPE BACK SHIELD AT EXTERNAL DEVICE IF GROUND IS UNAVAILABLE

FIGURE "N"

MICROZONE II ANALOG OUTPUT (4–20 ma.)

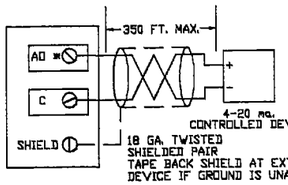

18 GA. TWISTED SHIELDED PAIR
TAPE BACK SHIELD AT EXTERNAL DEVICE IF GROUND IS UNAVAILABLE

FIGURE "M"

MICROZONE II DIGITAL OUTPUT (N.O.)

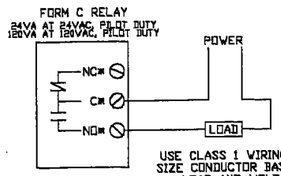

USE CLASS 1 WIRING ONLY
SIZE CONDUCTOR BASED ON LOAD AND VOLTAGE

FIGURE "O"

MICROZONE II DIGITAL OUTPUT (N.C.)

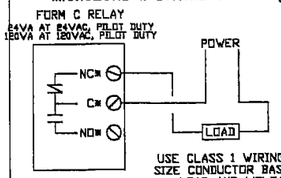

USE CLASS 1 WIRING ONLY
SIZE CONDUCTOR BASED ON LOAD AND VOLTAGE

FIGURE "P"

MICROZONE II MOMENTARY START/STOP

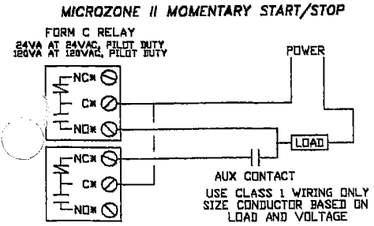

USE CLASS 1 WIRING ONLY
SIZE CONDUCTOR BASED ON LOAD AND VOLTAGE

FIGURE "Q"

LCM/GCS DIGITAL OUTPUT (N.O.)

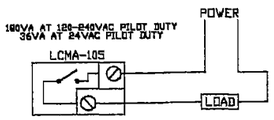

USE CLASS 1 WIRING ONLY
SIZE CONDUCTOR BASED ON LOAD AND VOLTAGE

FIGURE "R"

LCM/GCS DIGITAL OUTPUT (N.C.)

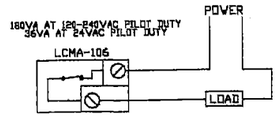

USE CLASS 1 WIRING ONLY
SIZE CONDUCTOR BASED ON LOAD AND VOLTAGE

FIGURE "S"

LCM/GCS MOMENTARY START/STOP

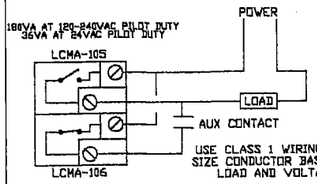

USE CLASS 1 WIRING ONLY
SIZE CONDUCTOR BASED ON LOAD AND VOLTAGE

FIGURE "T"

DEVICE TERMINATION CODING

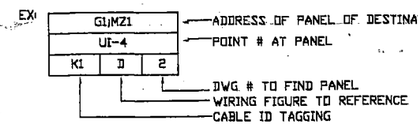

PANEL TERMINATION CODING

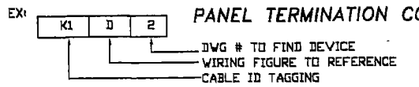

Network 8000 I/O Wiring and Installation Guide Lines

General Wiring

High voltage cables (over 30VAC or 30VDC) shall never be routed in the low voltage wiring side of the unit's base (Left Hand Side).
High voltage cables (over 30VAC or 30VDC) shall not be run in the same conduit as point wiring (AI, AO, DI). A separate conduit shall be installed.
All wiring must be done in accordance with the job wiring diagram and in compliance with local codes, ordinances, regulations and job specifications.

This equipment must have a dedicated ground. Any type of metal raceway shall not be used as the grounding source.

All equipment requiring a line power source shall be on a dedicated circuit.

AI, AO, DI, Lan Line Wiring *(Analog Input, Analog Output, Digital Input)*

External devices shall be connected to the Network 8000 controller using 18AWG stranded color coded twisted pair or twisted three conductor cable with a minimum of six twists per foot. This wiring must also be shielded cable and connected in the following manner:

D.O. Wiring – *(Digital Output)*

All D.O. wiring shall only be routed on right side of base.

GCM, GCS, & LCM CONFIGURATION

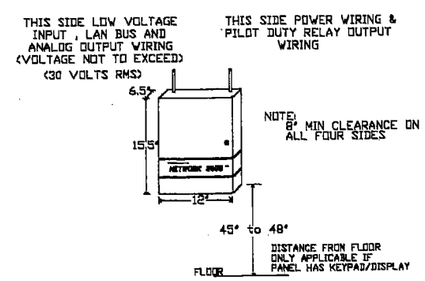

MICRO ZONE CONFIGURATION

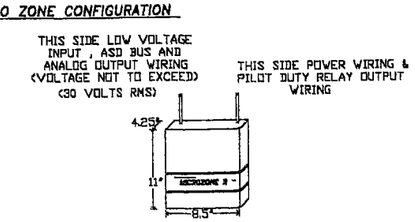

SIEBE ENVIRONMENTAL CONTROLS ENE, INC
Rhode Island Branch
54B Vermont Ave
Warwick RI 02888
PH: (401) 737-8905
FAX: (401) 737-8948

No.	Revision	Date

Architect: SA–GCA ARCHITECTS
Engineer: JOSEPH CATAUDELLA
Contractor: DELTA MECHANICAL OF N.E.
Drawn by: MG
Checked by:
CAD file: 8000–DTL Date: 8–12–98

CENTER GENERAL COMPLEX
CRANSTON, RI
WIRING DETAILS

JOB NUMBER 7721R
SHEET NO. 2 OF 71

CENTER GENERAL. COMPLEX

SYSTEM ARCHITECTURE

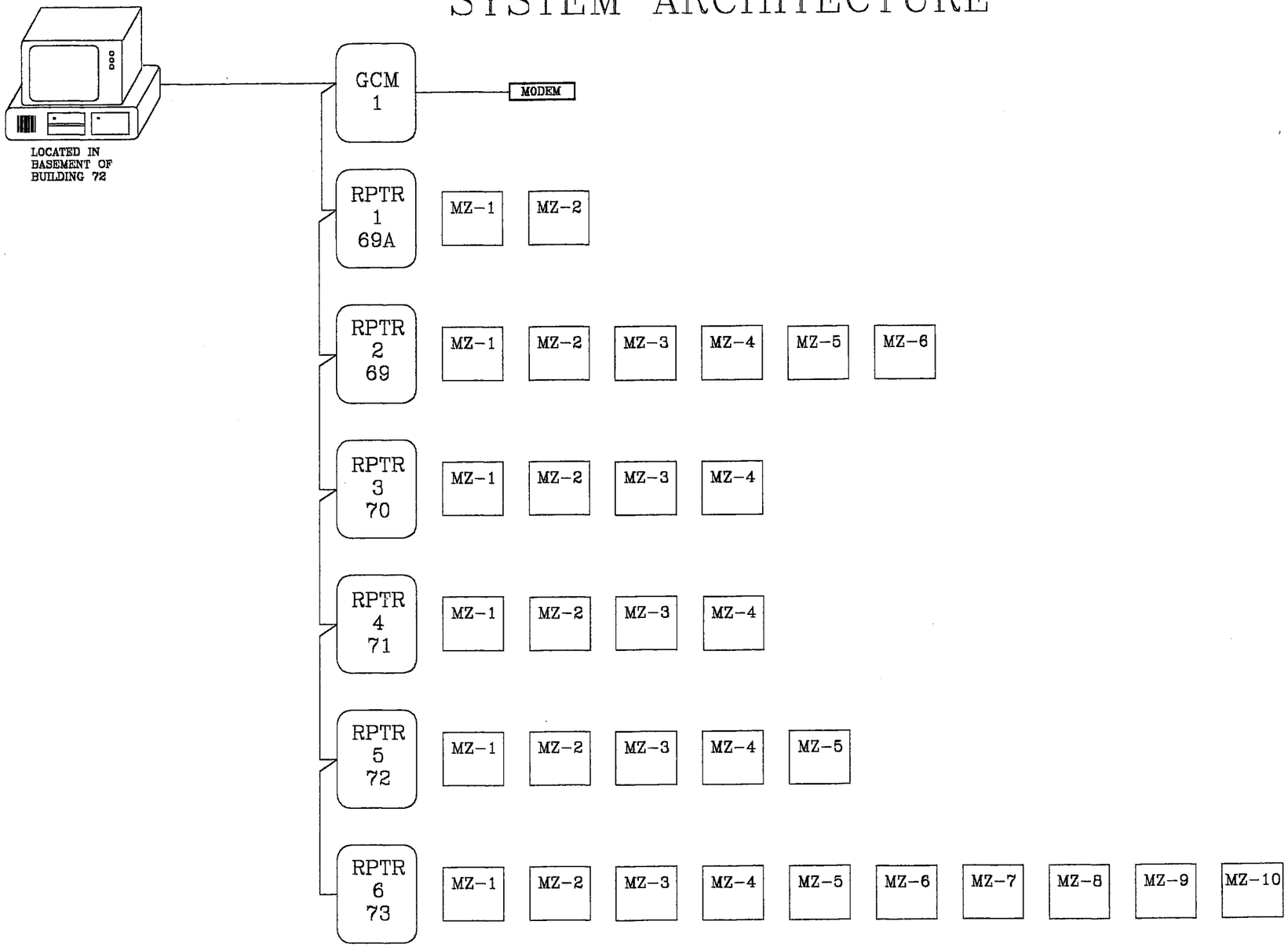

BILL OF MATERIALS

ITEM	QTY.	PART NUMBER	DESCRIPTION	VA	MANUF.
SIG-1	1	SIG-80302	SIGNAL SOFTWARE	--	SIEBE
SIG-1	1	SIG-NW8-DRV	SIGNAL SOFTWARE GATEWAY	--	SIEBE

SIEBE ENVIRONMENTAL CONTROLS ENE, INC
Rhode Island Branch
54B Vermont Ave
Warwick RI 02888
PH: (401) 737-8905
FAX: (401) 737-8948

No.	Revision	Date

Architect: SA-GCA ARCHITECTS
Engineer: JOSEPH CATAUDELLA
Contractor: DELTA MECHANICAL OF N.E.
Drawn by: MC
Checked by: _____
CAD file: STD-ACAD Date: 8-12-99

CENTER GENERAL COMPLEX
CRANSTON, RI
SYSTEM ARCHITECTURE

JOB NUMBER 7721R
SHEET NO. 3 OF 71

BUILDING 69-A

LAN LINE LAYOUT

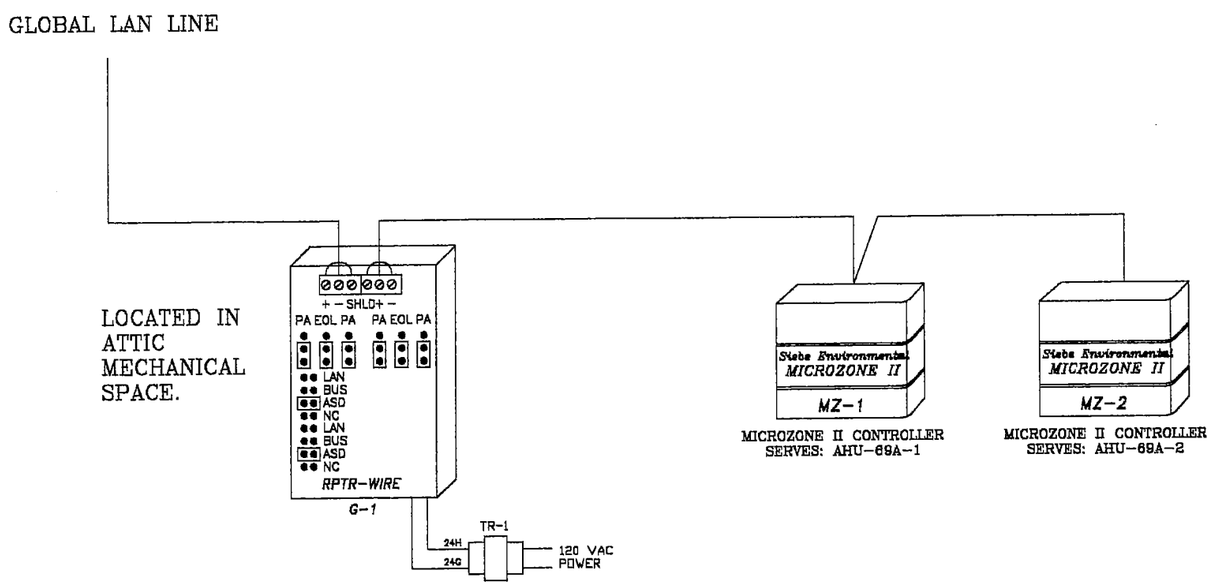

BILL OF MATERIALS

ITEM	QTY.	PART NUMBER	DESCRIPTION	VA	MANUF.
G-1	1	RPTR-WIRE	REPEATER WIRE	--	SIEBE
TR-1	1	T-201-1	120/24 TRANSFORMER	50	SIEBE

SIEBE ENVIRONMENTAL CONTROLS ENE, INC
Rhode Island Branch
54B Vermont Ave
Warwick RI 02888
PH: (401) 737-6805
FAX: (401) 737-6946

No.	Revision	Date
1	REPEATER LOCATION	8-26-99

Architect: SA-GCA ARCHITECTS
Engineer: JOSEPH CATAUDELLA
Contractor: DELTA MECHANICAL OF N.E.
Drawn by: MC
Checked by: ----------
CAD file: STD-ACAD Date: 8-12-99

CENTER GENERAL COMPLEX
CRANSTON, RI
BUILDING 69-A LAN LINE

JOB NUMBER 7721R
SHEET NO. 4 OF 71

AIR HANDLING UNIT AHU-69A-1, REF-69A-1,2 AND SHWP-69/72

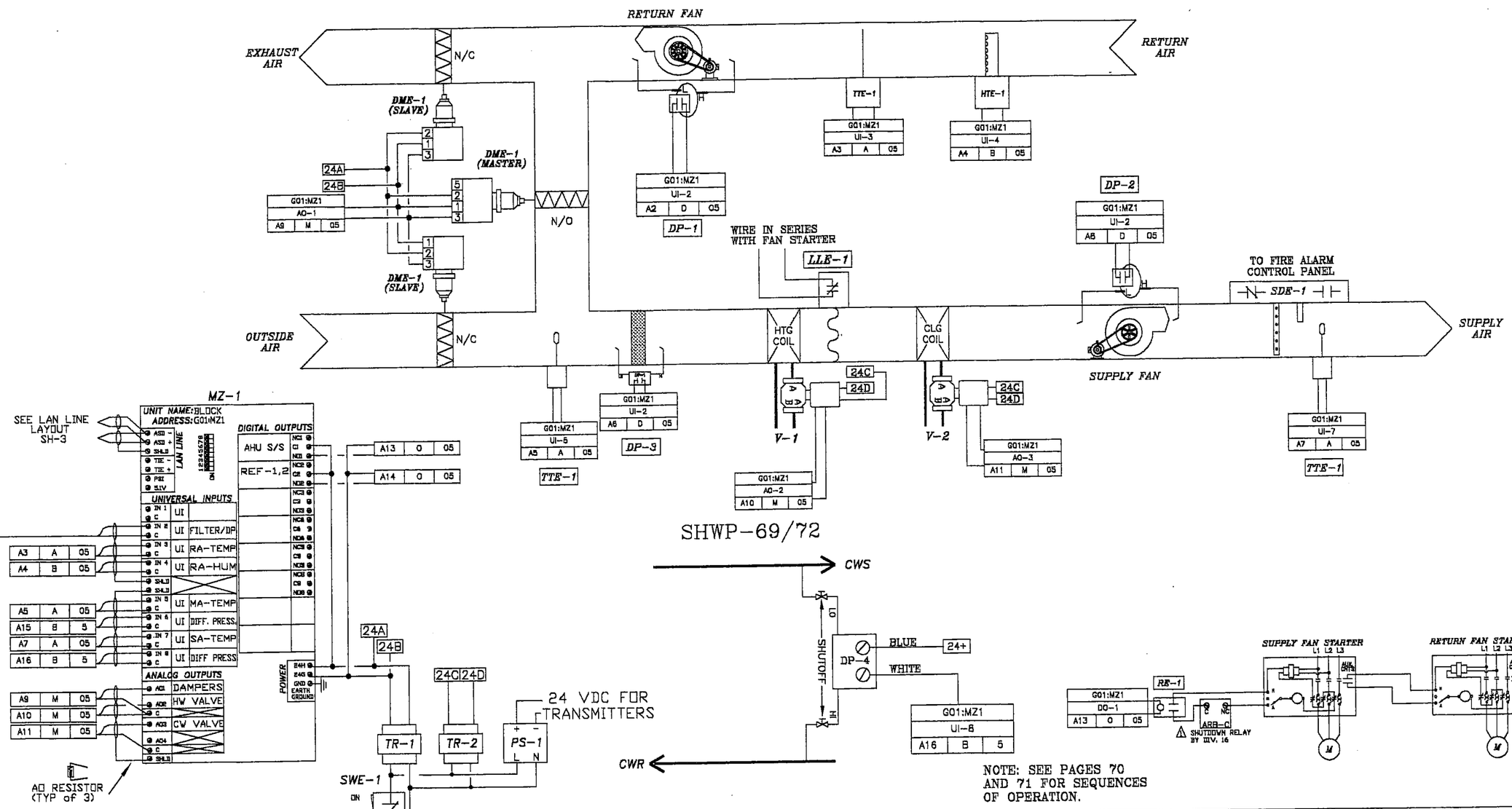

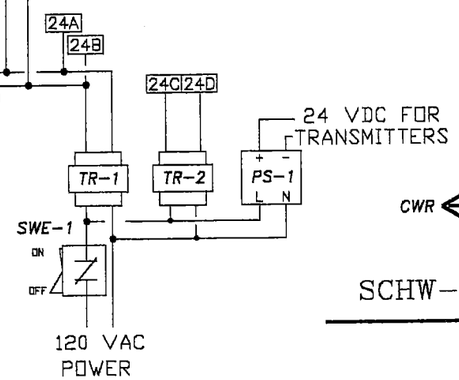

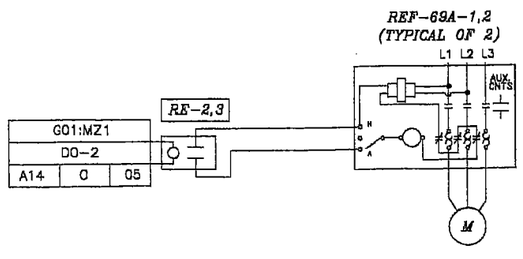

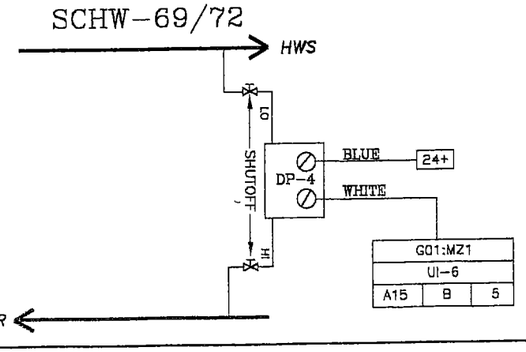

NOTE: SEE PAGES 70 AND 71 FOR SEQUENCES OF OPERATION.

BILL OF MATERIALS

ITEM	QTY.	PART NUMBER	DESCRIPTION	VA	MANUF.
TTE-1	3	TRANE	DUCT SENSORS	--	TRANE
LLE-1	1	TRANE	LOW LIMIT	--	TRANE
HTE-1	1	HT-2-D	HUMIDITY SENSOR	--	KELE
RE-1,2,3	3	PAM-1	24V SPDT RELAY	2	SIEBE
SDE-1	1	BY OTHERS	SMOKE DETECTOR	--	------
MZ-1	1	MZ2-1C	MICROZONE CONTROLLER W/ CLOCK	18	SIEBE
CP-1	1	AE-630	PANEL ENCLOSURE	--	SIEBE
TR-1,2	2	T-208	96VA TRANSFORMER	96	SIEBE
PS-1	1	PS-200-A-1-N	DC POWER SUPPLY	--	SIEBE
DP-1,2,3	3	TRANE	DIFFERENTIAL PRESSURE SWITCH	--	TRANE
DME-1	3	TRANE	DAMPER ACTUATOR	--	TRANE
DPC-3	1	DPC-3-1	DIGITAL INPUT CARD	--	SIEBE
DP-4	2	360C-P120	DIFFERENTIAL PRESSURE SENSOR	--	KELE
V-1,2	2	SEE SCHEDULE	CONTROL VALVE	--	SIEBE

SIEBE ENVIRONMENTAL CONTROLS
SIEBE ENVIRONMENTAL CONTROLS ENE, INC
Rhode Island Branch
54B Vermont Ave
Warwick RI 02888
PH: (401) 737-8905
FAX: (401) 737-8948

No.	Revision	Date
1	ADDED SHWP-69/72	8-26-99

Architect: SA-GCA ARCHITECTS
Engineer: JOSEPH CATAUDELLA
Contractor: DELTA MECHANICAL OF N.E.
Drawn by: MC
Checked by: ---------
CAD file: STD-ACAD Date: 8-12-99

CENTER GENERAL COMPLEX

CRANSTON, RI

AHU-69A-1/REF-69A-1,2

JOB NUMBER 7721R

SHEET NO. 5 OF 71

AIR HANDLING UNIT AHU-69A-2

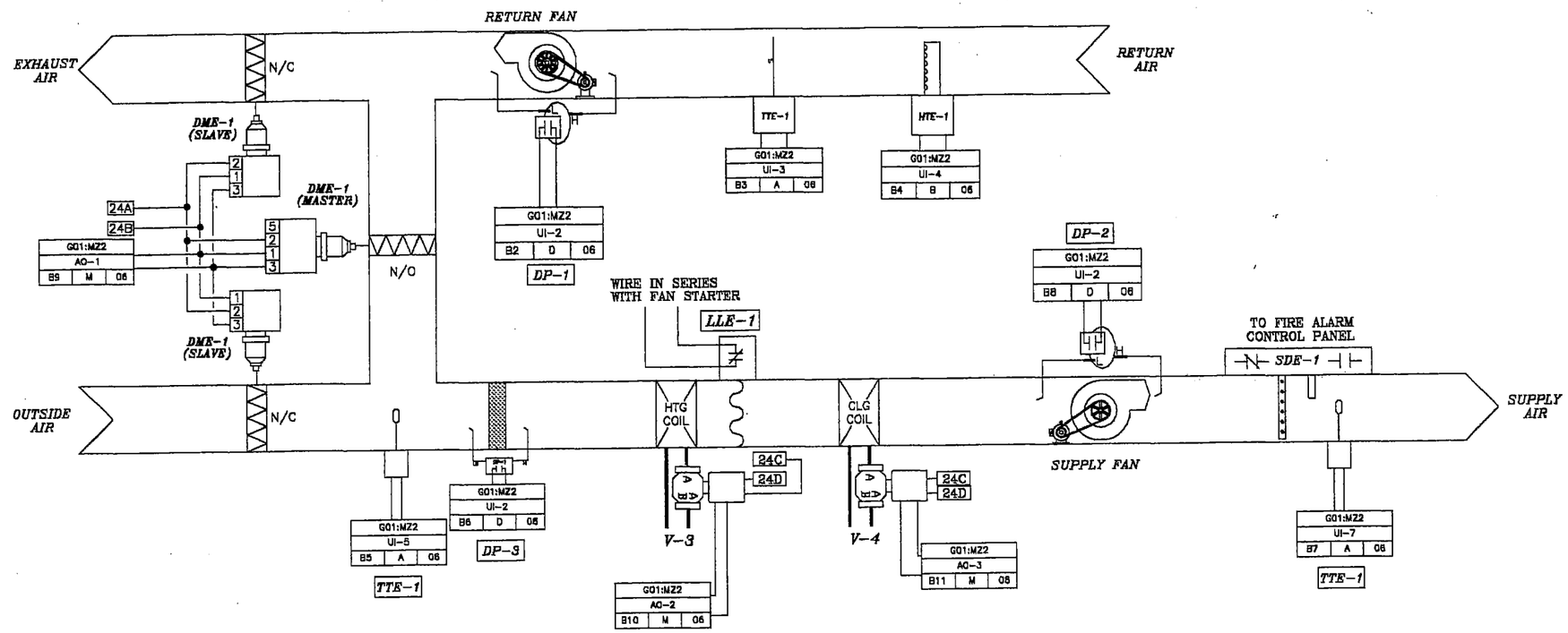

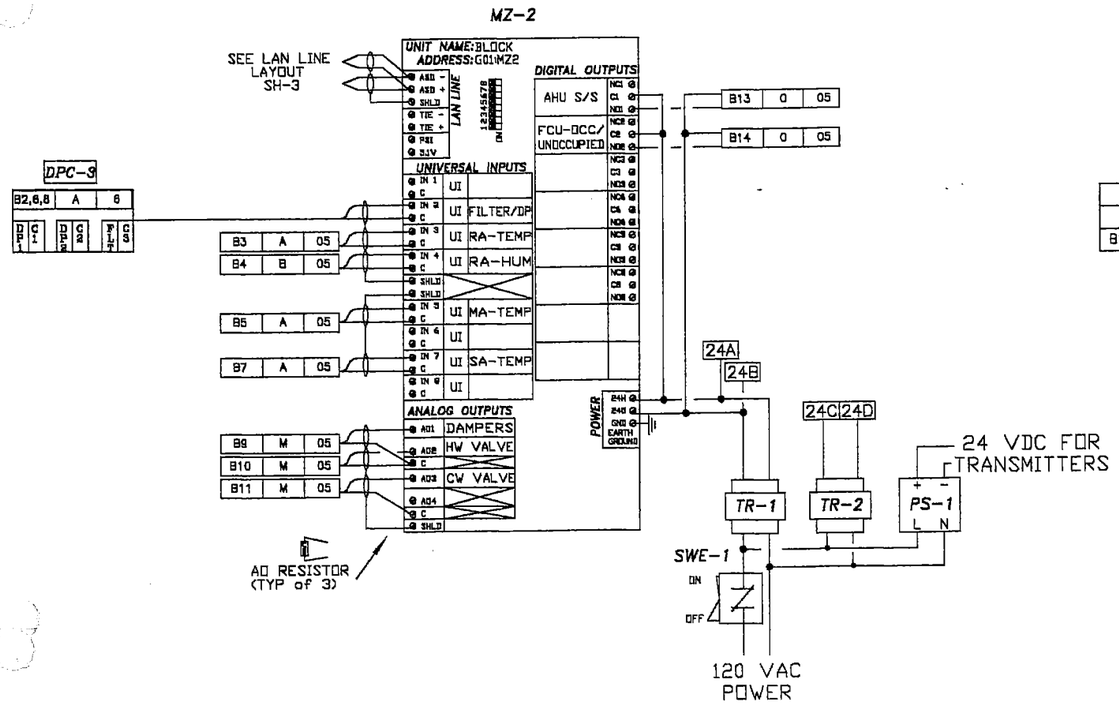

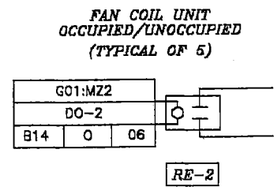

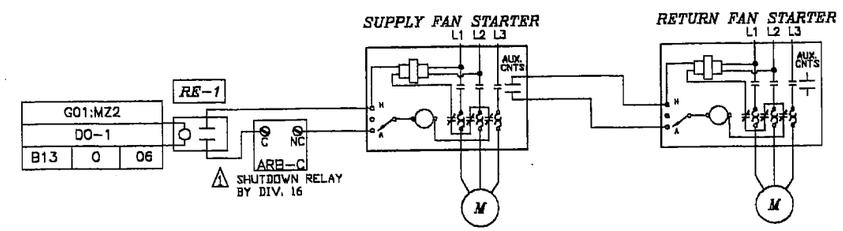

NOTE: SEE PAGES 70 AND 71 FOR SEQUENCES OF OPERATION.

BILL OF MATERIALS

ITEM	QTY.	PART NUMBER	DESCRIPTION	VA	MANUF.
TTE-1	3	TRANE	DUCT SENSORS	--	TRANE
LLE-1	1	TRANE	LOW LIMIT	--	TRANE
HTE-1	1	HT-2-D	HUMIDITY SENSOR	--	KELE
RE-1,2	6	PAM-1	24V SPDT RELAY	2	SIEBE
SDE-1	1	BY OTHERS	SMOKE DETECTOR	--	-----
MZ-2	1	MZ2-1C	MICROZONE CONTROLLER W/ CLOCK	18	SIEBE
CP-1	1	AE-631	PANEL ENCLOSURE	--	SIEBE
TR-1,2	2	T-208	96VA TRANSFORMER	96	SIEBE
PS-1	1	PS-200-A-1-N	DC POWER SUPPLY	--	SIEBE
DP-1,2,3	3	TRANE	DIFFERENTIAL PRESSURE SWITCH	--	TRANE
DME-1	3	TRANE	DAMPER ACTUATOR	--	TRANE
DPC-3	1	DPC-3-1	DIGITAL INPUT CARD	--	SIEBE
V-3,4	2	SEE SCHEDULE	CONTROL VALVE	--	SIEBE

SIEBE ENVIRONMENTAL CONTROLS ENE, INC
Rhode Island Branch
54B Vermont Ave
Warwick RI 02888
PH: (401) 737-8905
FAX: (401) 737-8948

Architect: SA-GCA ARCHITECTS
Engineer: JOSEPH CATAUDELLA
Contractor: DELTA MECHANICAL OF N.E.
Drawn by: MC
Checked by: ----
CAD file: STD-ACAD Date: 8-12-99

No. Description Date

CENTER GENERAL COMPLEX
CRANSTON, RI
AHU-69A-2 CONTROL

JOB NUMBER 7721R
SHEET NO. 6 OF 71

BUILDING 69A

(LOCATED IN AHU-69A-2 CONTROL PANEL ON PAGE 6)

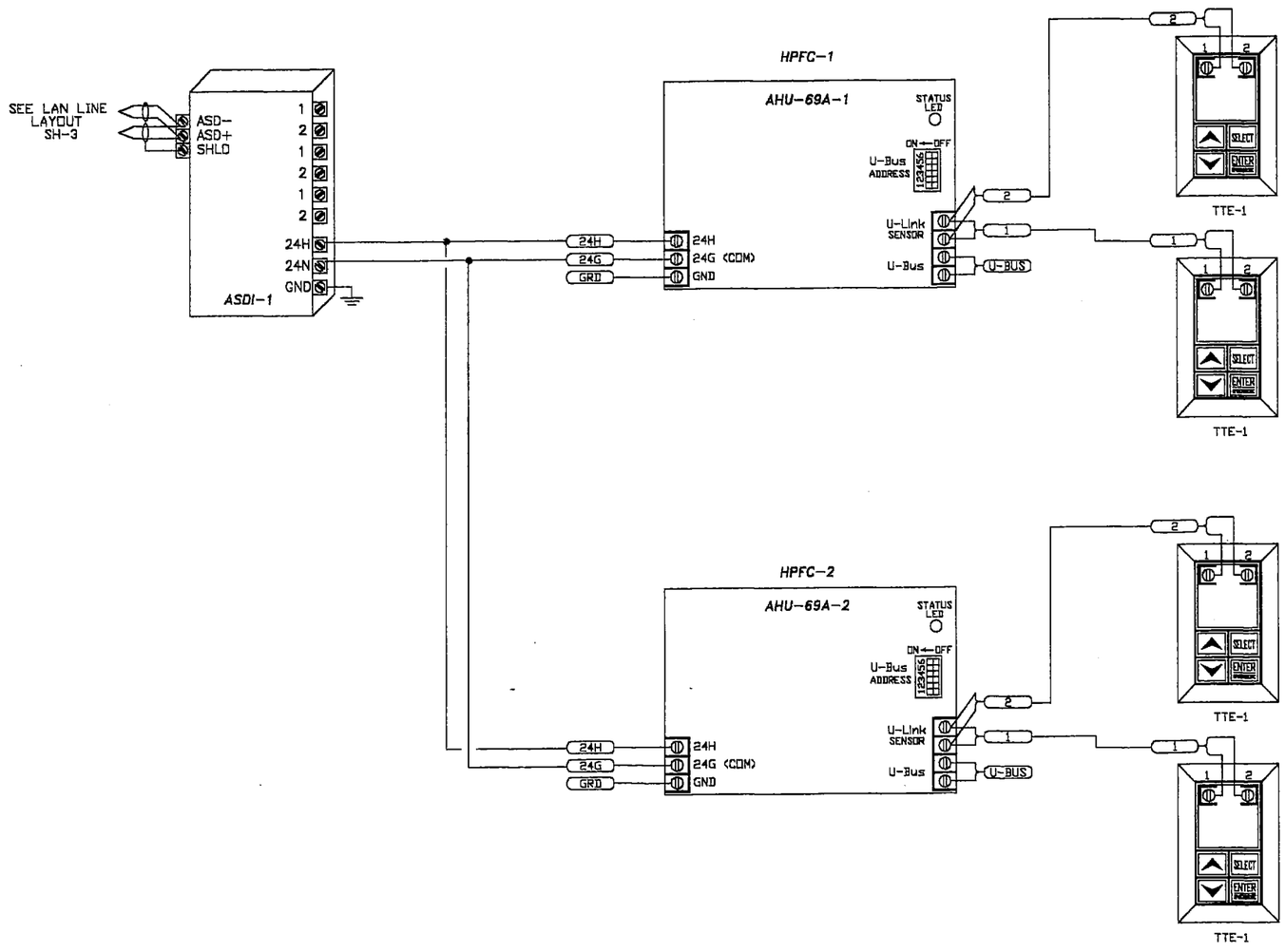

NOTE: SEE PAGES 70 AND 71 FOR SEQUENCES OF OPERATION.

BILL OF MATERIALS

ITEM	QTY.	PART NUMBER	DESCRIPTION	VA	MANUF.
ASDI-1	1	MN-ASDI	MICRONET INTEGRATOR	--	SIEBE
HPFC-1,2	2	MN-HPFC	MICRONET CONTROLLER	--	SIEBE
TTE-1	4	MN-SDK	SPACE SENSOR	--	SIEBE

SIEBE ENVIRONMENTAL CONTROLS ENG, INC
Rhode Island Branch
54B Vermont Ave
Warwick RI 02888
PH: (401) 737-8805
FAX: (401) 737-8948

SIEBE ENVIRONMENTAL CONTROLS

No.	Revision	Date

Architect: SA-GCA ARCHITECTS
Engineer: JOSEPH CATAUDELLA
Contractor: DELTA MECHANICAL OF N.E.
Drawn by: MC
Checked by: _____
CAD file: STD-ACAD Date: 8-12-98

CENTER GENERAL COMPLEX
CRANSTON, RI
BLDG. 69A

JOB NUMBER 7721R
SHEET NO. 6A OF 71

BUILDING 69A

TRANE– FAN COIL AIR CONDITIONING UNIT
(TYPICAL OF 5)

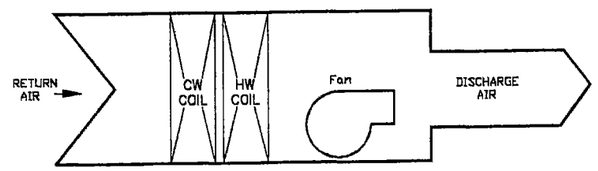

WALL SENSOR

TRANE– FACTORY INSTALLED
AND WIRED DDC CONTROLLER

TRANE– FACTORY SUPPLIED
WALL SENSOR

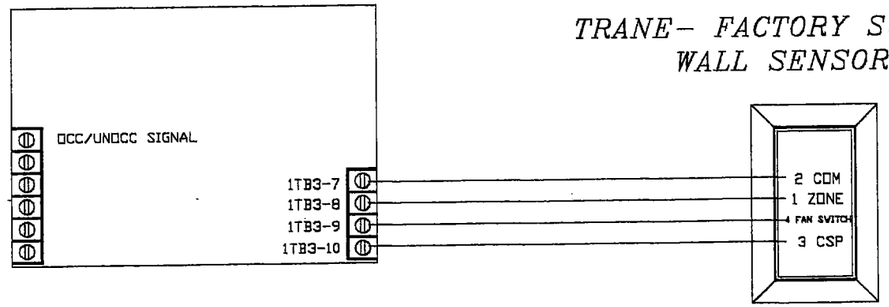

NOTE: SEE PAGES 70
AND 71 FOR SEQUENCES
OF OPERATION.

SIEBE ENVIRONMENTAL CONTROLS ENE, INC
Rhode Island Branch
54B Vermont Ave
Warwick RI 02888
PH: (401) 737-8905
FAX: (401) 737-8946

No.	Revision	Date

Architect: SA–GCA ARCHITECTS
Engineer: JOSEPH CATAUDELLA
Contractor: DELTA MECHANICAL OF N.E.
Drawn by: MC
Checked by: _____
CAD file: _____ Date: 8-12-98

CENTER GENERAL COMPLEX
CRANSTON, RI
TRANE FAN COIL UNIT

JOB NUMBER
7721R
SHEET NO.
7 OF 71

BUILDING 69A

UNIT HEATER
(TYPICAL OF 1)

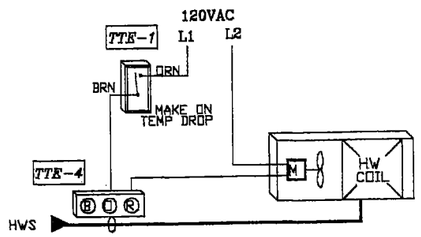

EXHAUST FAN EF-69-3
(TYPICAL OF 1)

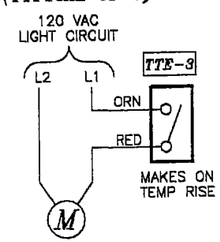

FINTUBE RADIATION
(TYPICAL OF 1)

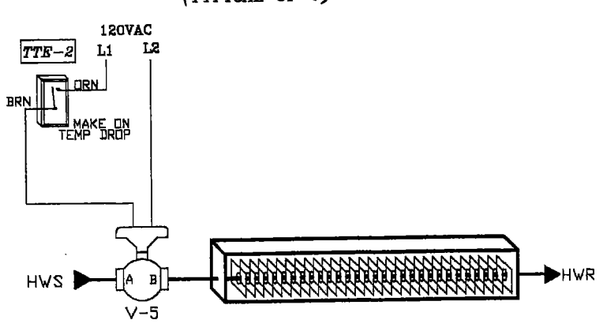

NOTE: SEE PAGES 70 AND 71 FOR SEQUENCES OF OPERATION.

BILL OF MATERIALS

ITEM	QTY.	PART NUMBER	DESCRIPTION	VA	MANUF.
TTE-1,3	2	TC-114	THERMOSTAT	--	SIEBE
TTE-2	1	TC-1101	THERMOSTAT	--	SIEBE
TTE-4	1	TC-2974	STRAP-ON AQUASTAT	--	SIEBE
V-5	1	SEE SCHEDULE	CONTROL VALVE	--	SIEBE

SIEBE ENVIRONMENTAL CONTROLS ENE, INC
Rhode Island Branch
54B Vermont Ave
Warwick RI 02888
PH: (401) 737-8805
FAX: (401) 737-8946

No.	Revision	Date

Architect: SA-GCA ARCHITECTS
Engineer: JOSEPH CATAUDELLA
Contractor: DELTA MECHANICAL OF N.E.
Drawn by: MC
Checked by: _____
CAD file: STD-ACAD Date: 8-12-99

CENTER GENERAL COMPLEX
CRANSTON, RI
UH, FT. EF CONTROL

JOB NUMBER 7721R
SHEET NO. 8 OF 71

BUILDING 69
LAN LINE LAYOUT

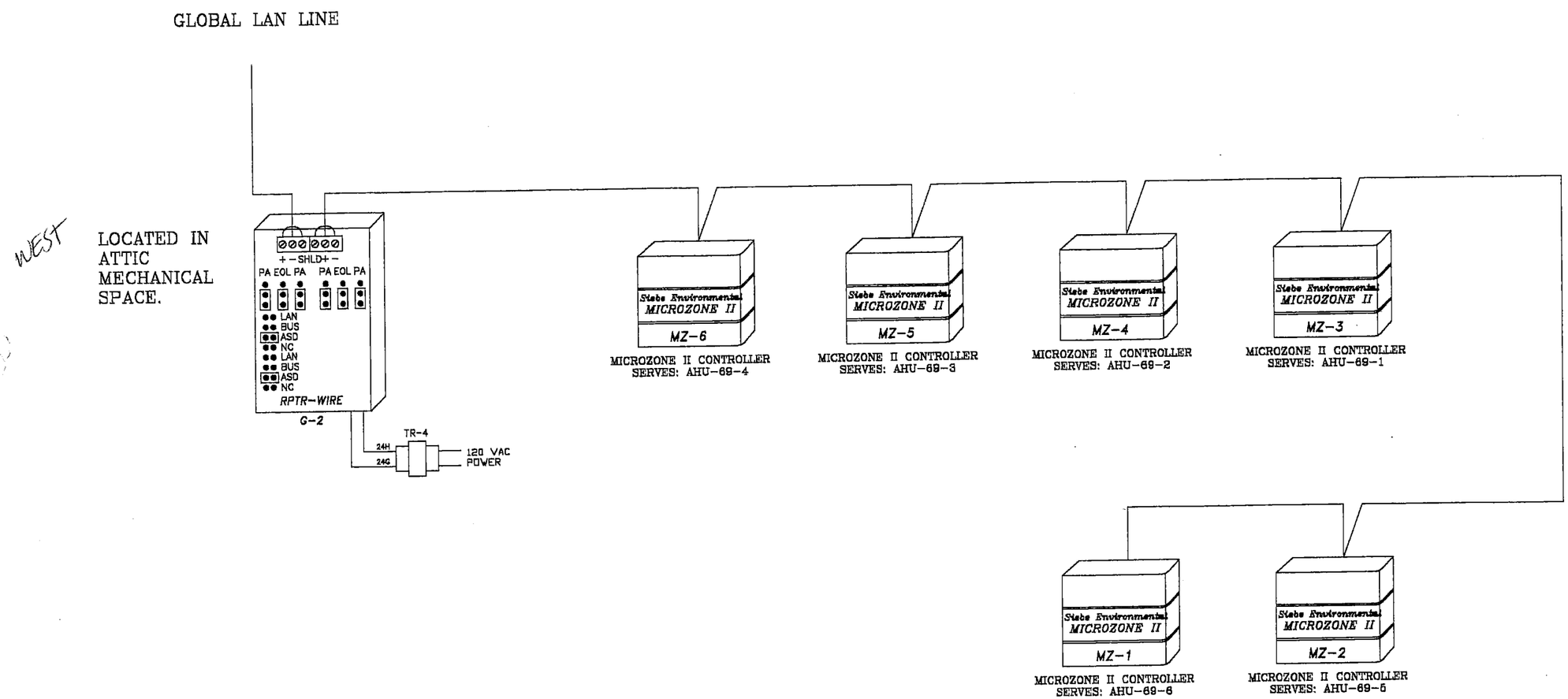

BILL OF MATERIALS

ITEM	QTY.	PART NUMBER	DESCRIPTION	VA	MANUF.
G-2	1	RPTR-WIRE	REPEATER WIRE	--	SIEBE
TR-1	1	T-201-1	120/24 TRANSFORMER	50	SIEBE

SIEBE ENVIRONMENTAL CONTROLS ENE, INC
Rhode Island Branch
54B Vermont Ave
Warwick RI 02888
PH: (401) 737-8905
FAX: (401) 737-8948

No.	Description	Date
1	DISPLAYER LOCATION	9-28-99

Architect: SA-GCA ARCHITECTS
Engineer: JOSEPH CATAUDELLA
Contractor: DELTA MECHANICAL OF N.E.
Drawn by: MC
Checked by: ———
CAD file: STD-ACAD Date: 8-12-99

CENTER GENERAL COMPLEX
CRANSTON, RI
BUILDING 69 LAN LINE

JOB NUMBER 7721R
SHEET NO. 9 OF 71

AIR HANDLING UNIT AHU-69-6 AND RAF-69-6

LOCATED IN CORRIDOR 69.022
COLUMN 36.3I

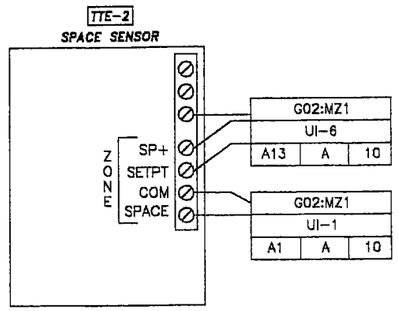

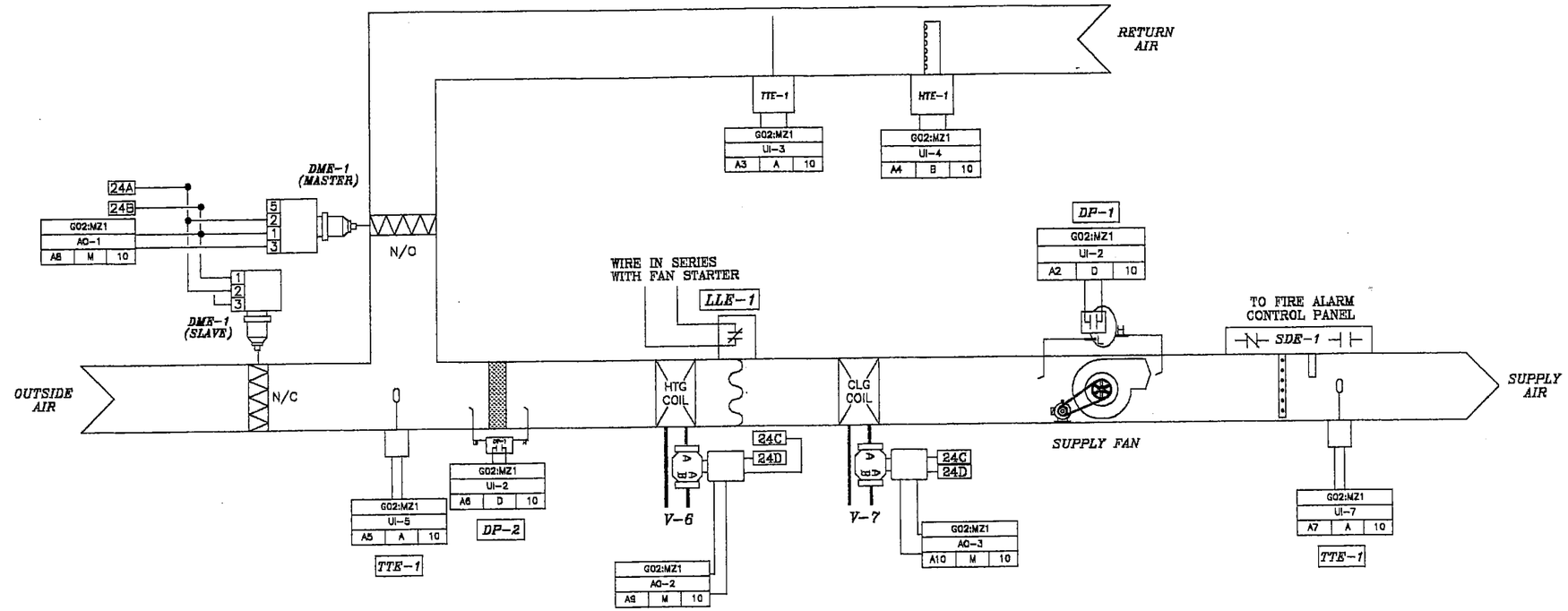

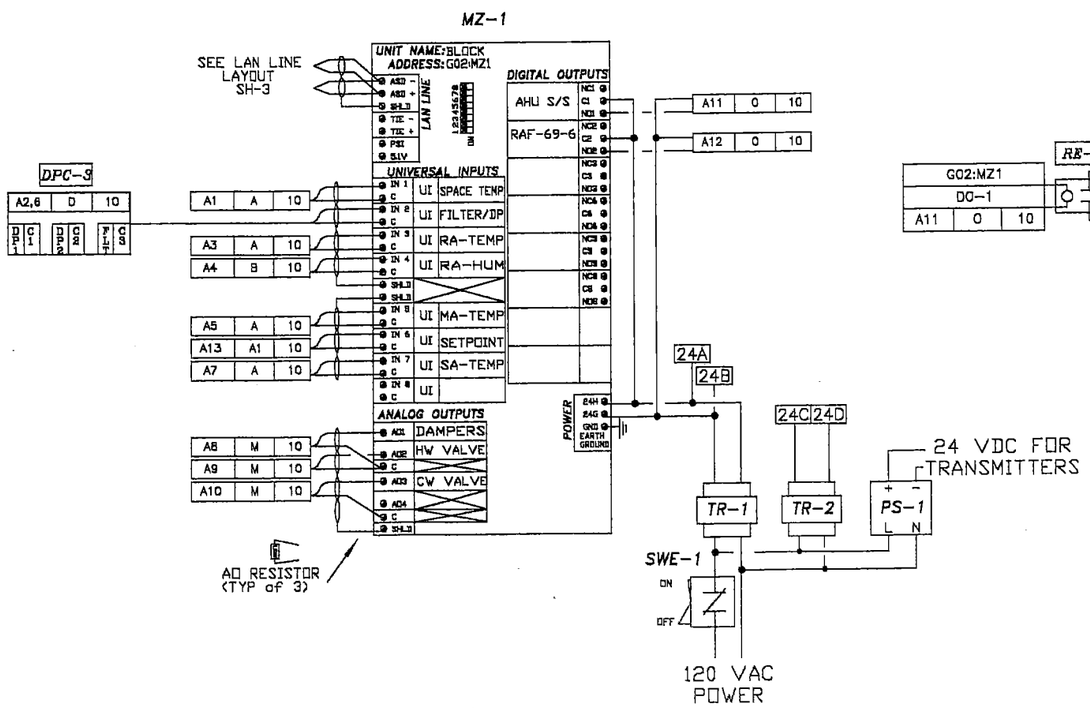

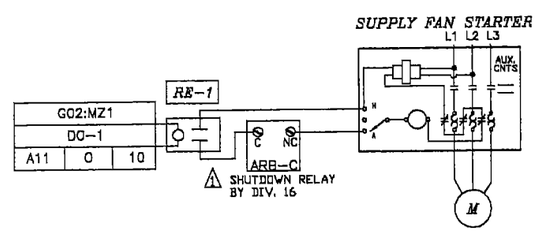

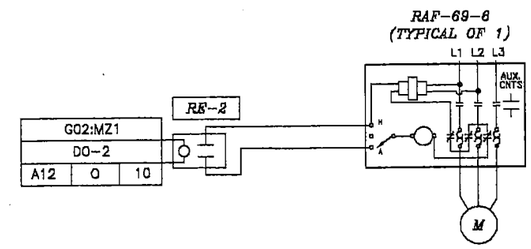

NOTE: SEE PAGES 70 AND 71 FOR SEQUENCES OF OPERATION.

BILL OF MATERIALS

ITEM	QTY.	PART NUMBER	DESCRIPTION	VA	MANUF.
TTE-1	3	TRANE	DUCT SENSORS	--	TRANE
LLE-1	1	TRANE	LOW LIMIT	--	TRANE
HTE-1	1	HT-2-D	HUMIDITY SENSOR	--	KELE
RE-1,2	2	PAM-1	24V SPDT RELAY	2	SIEBE
SDE-1	1	BY OTHERS	SMOKE DETECTOR	--	-----
TTE-2	1	TS-90250-850	SPACE SENSOR	--	SIEBE
MZ-1	1	MZ2-1C	MICROZONE CONTROLLER W/ CLOCK	18	SIEBE
CP-1	1	AE-630	PANEL ENCLOSURE	--	SIEBE
TR-1,2	2	T-208	96VA TRANSFORMER	96	SIEBE
PS-1	1	PS-200-A-1-N	DC POWER SUPPLY	--	SIEBE
DP-1,2,3	3	TRANE	DIFFERENTIAL PRESSURE SWITCH	--	TRANE
DME-1	2	TRANE	DAMPER ACTUATOR	--	TRANE
DPC-3	1	DPC-3-1	DIGITAL INPUT CARD	--	SIEBE
V-6,7	2	SEE SCHEDULE	CONTROL VALVE	--	SIEBE

SIEBE ENVIRONMENTAL CONTROLS ENE, INC
Rhode Island Branch
54B Vermont Ave
Warwick RI 02888
PH: (401) 737-8905
FAX: (401) 737-8946

No.	Revision	Date
1	SENSOR LOCATION	6-28-99

Architect: SA-GCA ARCHITECTS
Engineer: JOSEPH CATAUDELLA
Contractor: DELTA MECHANICAL OF N.E.
Drawn by: MC
Checked by: ----------
CAD file: STD-ACAD Date: 8-12-99

CENTER GENERAL COMPLEX
CRANSTON, RI
AHU-6-69-6 AND RAF-69-6

JOB NUMBER 7721R
SHEET NO. 10 OF 71

AIR HANDLING UNIT AHU-69-5 AND RAF-69-5

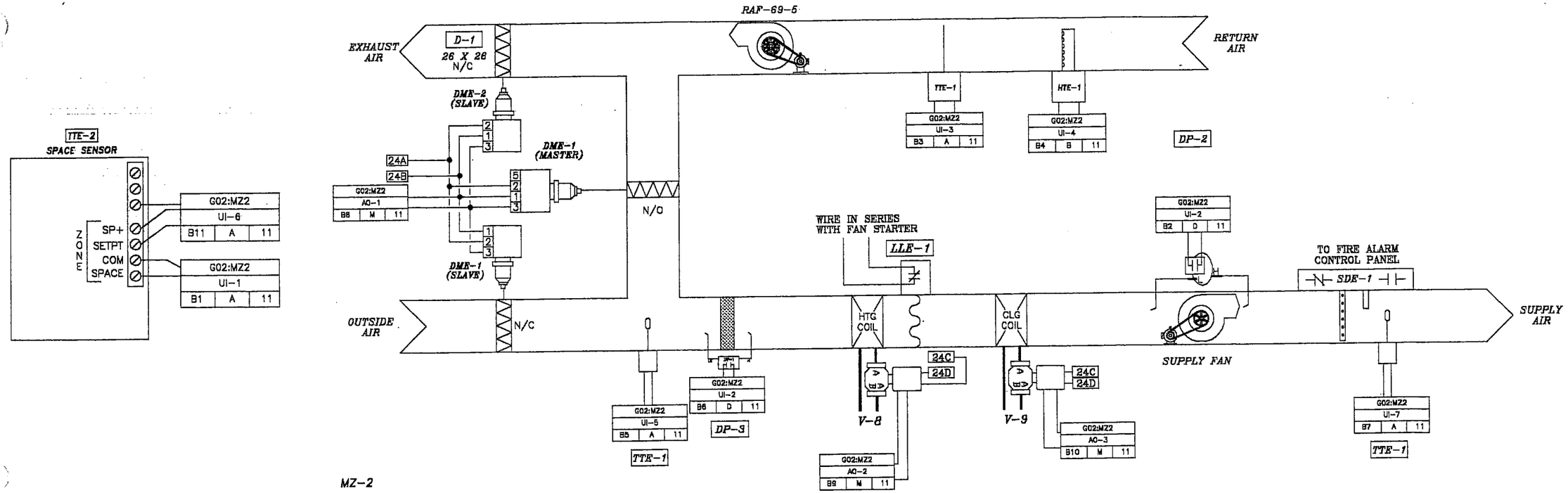

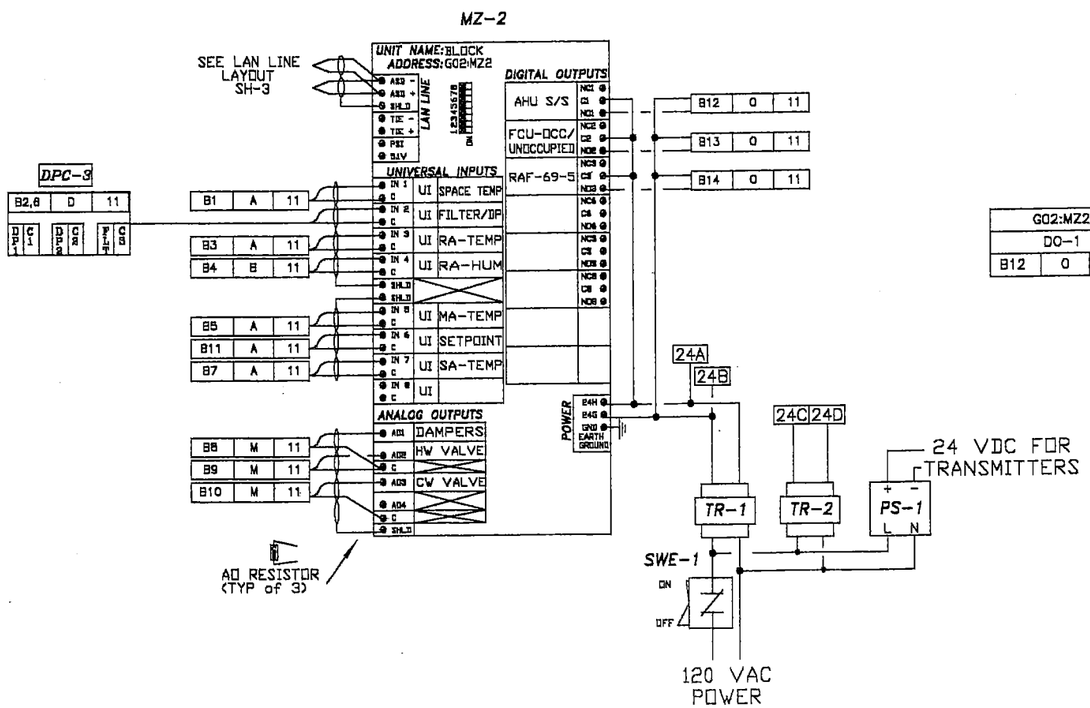

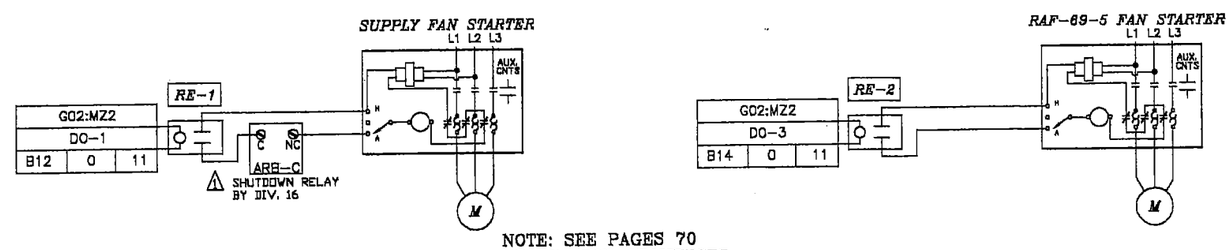

NOTE: SEE PAGES 70 AND 71 FOR SEQUENCES OF OPERATION.

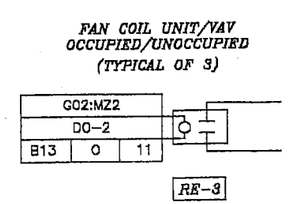

BILL OF MATERIALS

ITEM	QTY.	PART NUMBER	DESCRIPTION	VA	MANUF.
TTE-1	3	TRANE	DUCT SENSORS	--	TRANE
LLE-1	1	TRANE	LOW LIMIT	--	TRANE
HTE-1	1	HT-2-D	HUMIDITY SENSOR	--	KELE
RE-1,2,3	5	PAM-1	24V SPDT RELAY	2	SIEBE
SDE-1	1	BY OTHERS	SMOKE DETECTOR	--	------
TTE-2	1	TS-90250-850	SPACE SENSOR	--	SIEBE
MZ-2	1	MZ2-1C	MICROZONE CONTROLLER W/ CLOCK	18	SIEBE
CP-1	1	AE-630	PANEL ENCLOSURE	--	SIEBE
TR-1,2	2	T-208	96VA TRANSFORMER	96	SIEBE
PS-1	1	PS-200-A-1-N	DC POWER SUPPLY	--	SIEBE
DP-1,2,3	3	TRANE	DIFFERENTIAL PRESSURE SWITCH	--	TRANE
DME-1	2	TRANE	DAMPER ACTUATOR	--	TRANE
DME-2	1	MS-7203	DAMPER ACTUATOR	10	SIEBE
D-1	1	SEE SCHEDULE	CONTROL DAMPER	--	PENN
DPC-3	1	DPC-3-1	DIGITAL INPUT CARD	--	SIEBE
V-8,9	2	SEE SCHEDULE	CONTROL VALVE	--	SIEBE

SIEBE ENVIRONMENTAL CONTROLS ENE, INC
Rhode Island Branch
54B Vermont Ave
Warwick RI 02888
PH: (401) 737-8905
FAX: (401) 737-8946

No.	Description	Date
1	RAF-69-5 LOCATION	8-26-99

Architect: SA-GCA ARCHITECTS
Engineer: JOSEPH CATAUDELLA
Contractor: DELTA MECHANICAL OF N.E.
Drawn by: MC
Checked by: ——
CAD file: STD-ACAD Date: 8-12-98

CENTER GENERAL COMPLEX
CRANSTON, RI
AHU-69-5 AND RAF-69-5

JOB NUMBER 7721R
SHEET NO. 11 OF 71

AIR HANDLING UNIT AHU-69-1

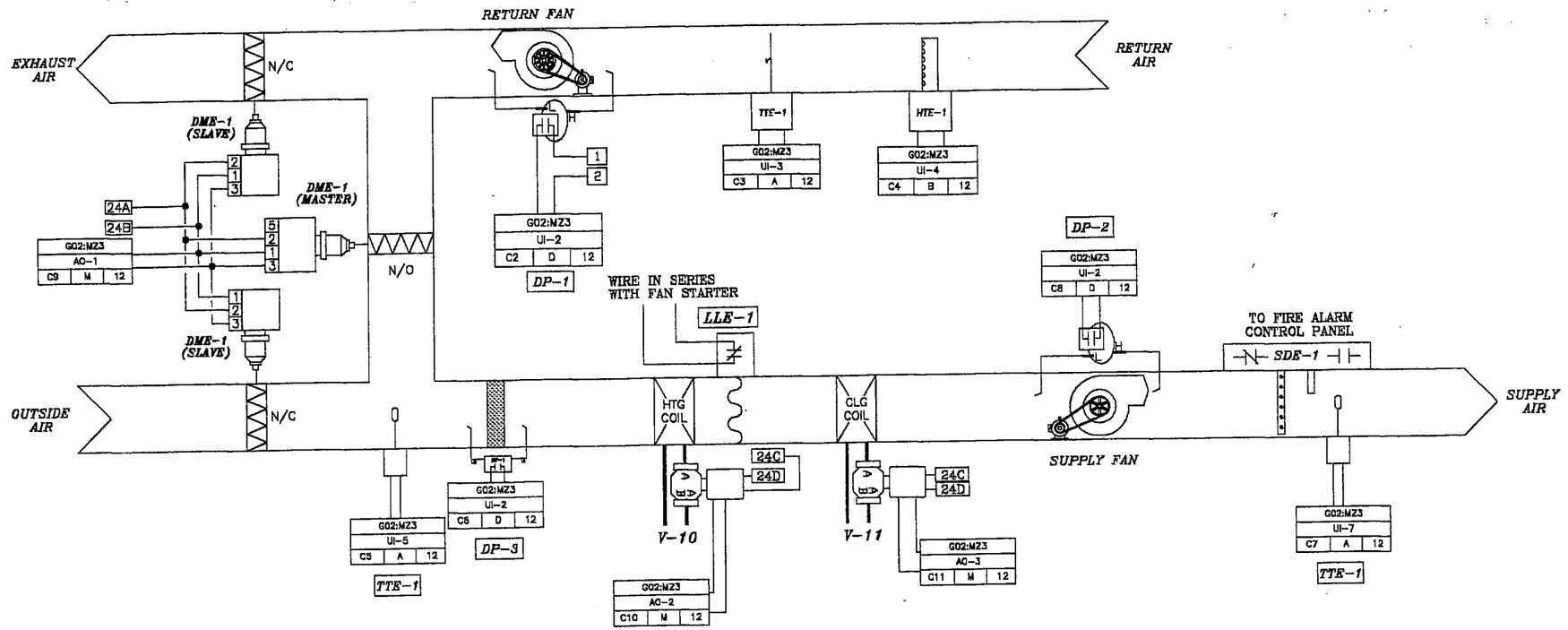

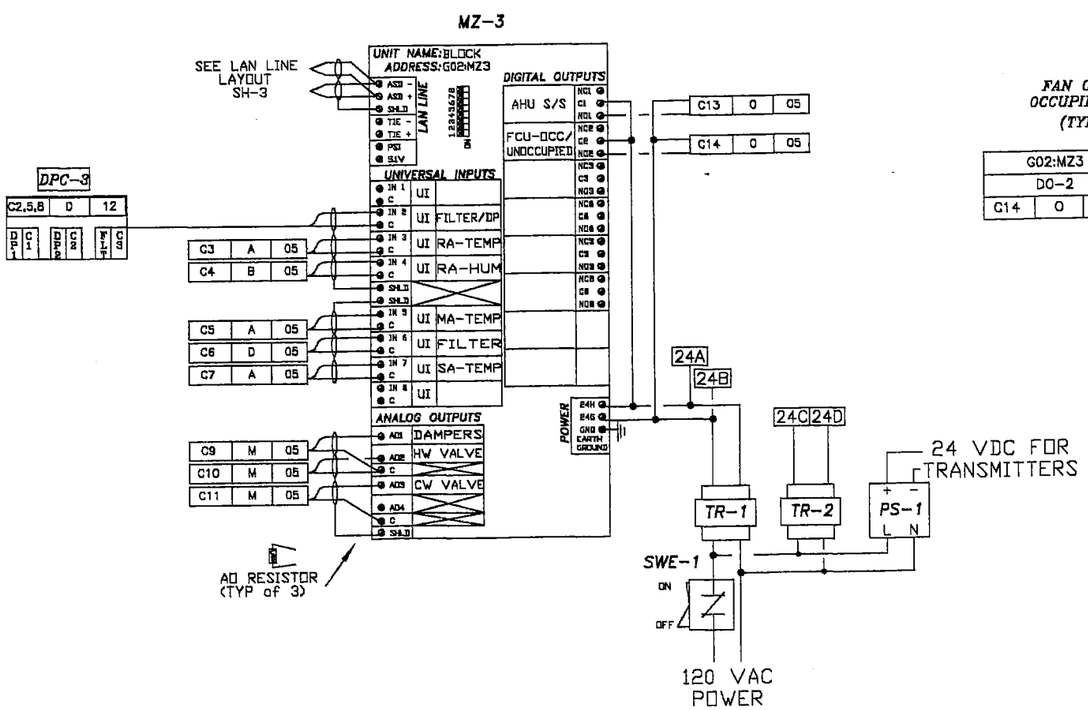

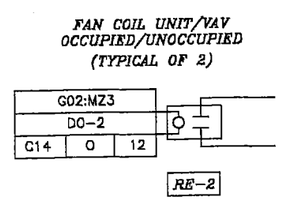

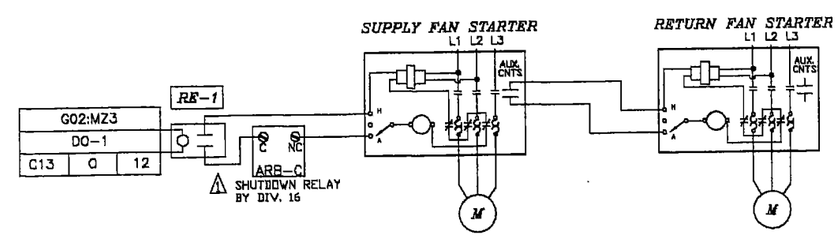

NOTE: SEE PAGES 70 AND 71 FOR SEQUENCES OF OPERATION.

BILL OF MATERIALS

ITEM	QTY.	PART NUMBER	DESCRIPTION	VA	MANUF.
TTE-1	3	TRANE	DUCT SENSORS	--	TRANE
LLE-1	1	TRANE	LOW LIMIT	--	TRANE
HTE-1	1	HT-2-D	HUMIDITY SENSOR	--	KELE
RE-1,2	3	PAM-1	24V SPDT RELAY	2	SIEBE
SDE-1	1	BY OTHERS	SMOKE DETECTOR	--	-----
MZ-3	1	MZ2-1C	MICROZONE CONTROLLER W/ CLOCK	18	SIEBE
CP-1	1	AE-630	PANEL ENCLOSURE	--	SIEBE
TR-1,2	2	T-208	96VA TRANSFORMER	96	SIEBE
PS-1	1	PS-200-A-1-N	DC POWER SUPPLY	--	SIEBE
DP-1,2,3	3	TRANE	DIFFERENTIAL PRESSURE SWITCH	--	TRANE
DME-1	3	TRANE	DAMPER ACTUATOR	--	TRANE
DPC-3	1	DPC-3-1	DIGITAL INPUT CARD	--	SIEBE
V-10,11	2	SEE SCHEDULE	CONTROL VALVE	--	SIEBE

SIEBE ENVIRONMENTAL CONTROLS ENE, INC
Rhode Island Branch
54B Vermont Ave
Warwick RI 02888
PH: (401) 737-8905
FAX: (401) 737-8948

No. Revision Date

Architect: SA-GCA ARCHITECTS
Engineer: JOSEPH CATAUDELLA
Contractor: DELTA MECHANICAL OF N.E.
Drawn by: MC
Checked by: ----------
CAD file: STD-ACAD Date: 8-12-98

CENTER GENERAL COMPLEX
CRANSTON, RI
AHU-69-1 CONTROL

JOB NUMBER 7721R
SHEET NO. 12 OF 71

AIR HANDLING UNIT AHU-69-2

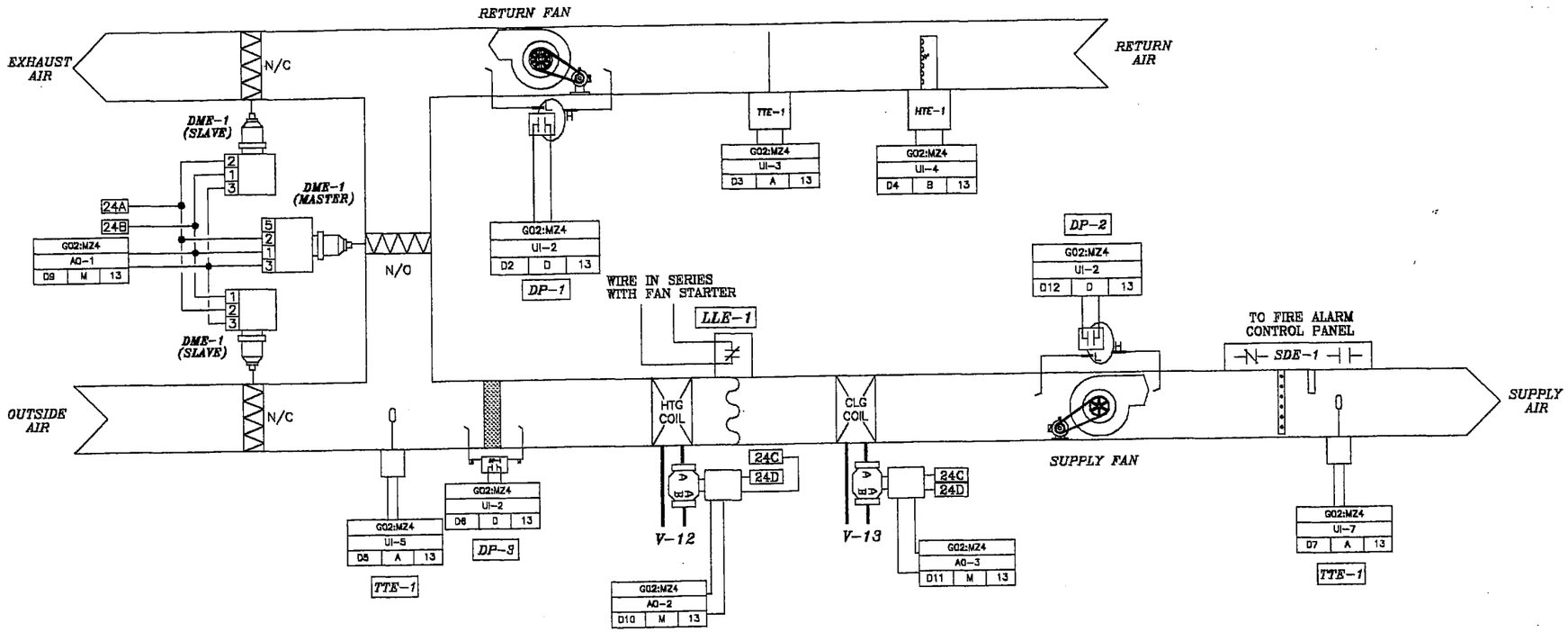

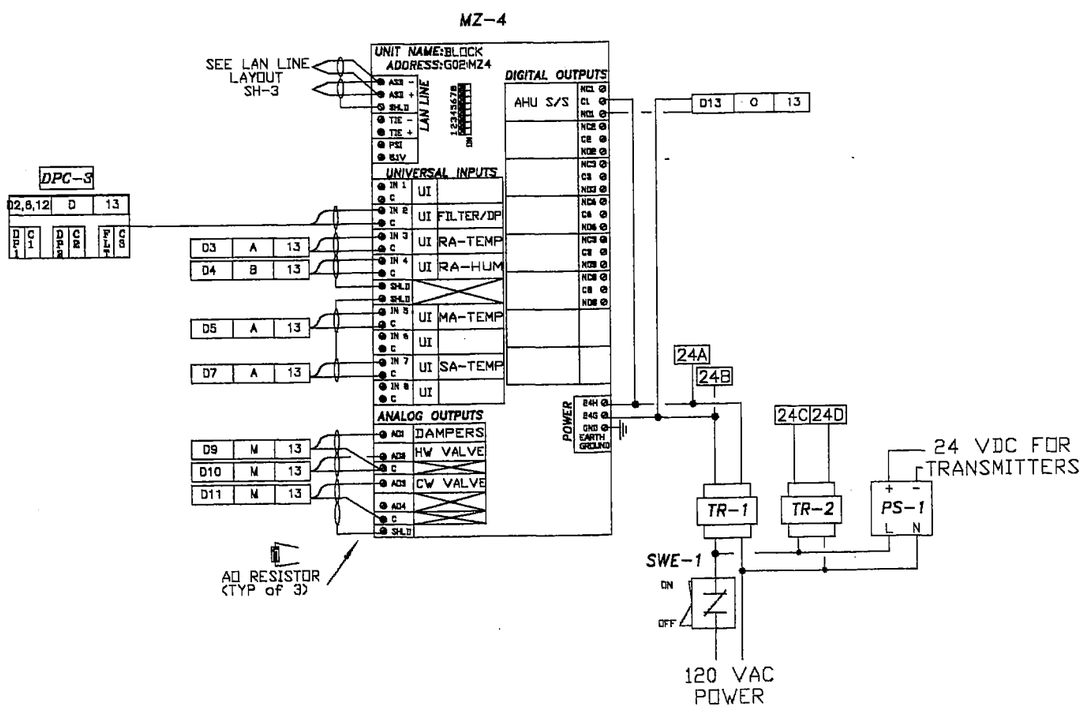

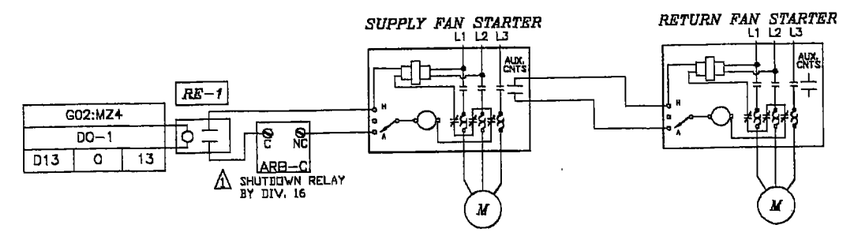

NOTE: SEE PAGES 70 AND 71 FOR SEQUENCES OF OPERATION.

BILL OF MATERIALS

ITEM	QTY.	PART NUMBER	DESCRIPTION	VA	MANUF.
TTE-1	3	TRANE	DUCT SENSORS	--	TRANE
LLE-1	1	TRANE	LOW LIMIT	--	TRANE
HTE-1	1	HT-2-D	HUMIDITY SENSOR	--	KELE
RE-1	1	PAM-1	24V SPDT RELAY	2	SIEBE
SDE-1	1	BY OTHERS	SMOKE DETECTOR	--	-----
MZ-4	1	MZ2-1C	MICROZONE CONTROLLER W/ CLOCK	18	SIEBE
CP-1	1	AE-630	PANEL ENCLOSURE	--	SIEBE
TR-1,2	2	T-208	96VA TRANSFORMER	96	SIEBE
PS-1	1	PS-200-A-1-N	DC POWER SUPPLY	--	SIEBE
DP-1,2,3	3	TRANE	DIFFERENTIAL PRESSURE SWITCH	--	TRANE
DME-1	3	TRANE	DAMPER ACTUATOR	--	TRANE
DPC-3	1	DPC-3-1	DIGITAL INPUT CARD	--	SIEBE
V-12,13	2	SEE SCHEDULE	CONTROL VALVE	--	SIEBE

SIEBE ENVIRONMENTAL CONTROLS ENE, INC
Rhode Island Branch
54B Vermont Ave
Warwick RI 02888
PH: (401) 737-8905
FAX: (401) 737-8946

Architect: SA-GCA ARCHITECTS
Engineer: JOSEPH CATAUDELLA
Contractor: DELTA MECHANICAL OF N.E.
Drawn by: MC
Checked by: ---------
CAD file: STD-ACAD Date: 8-12-98

No. Revision Date

CENTER GENERAL COMPLEX
CRANSTON, RI
AHU-69A-2

JOB NUMBER 7721R
SHEET NO. 13 OF 71

AIR HANDLING UNIT AHU-69-3

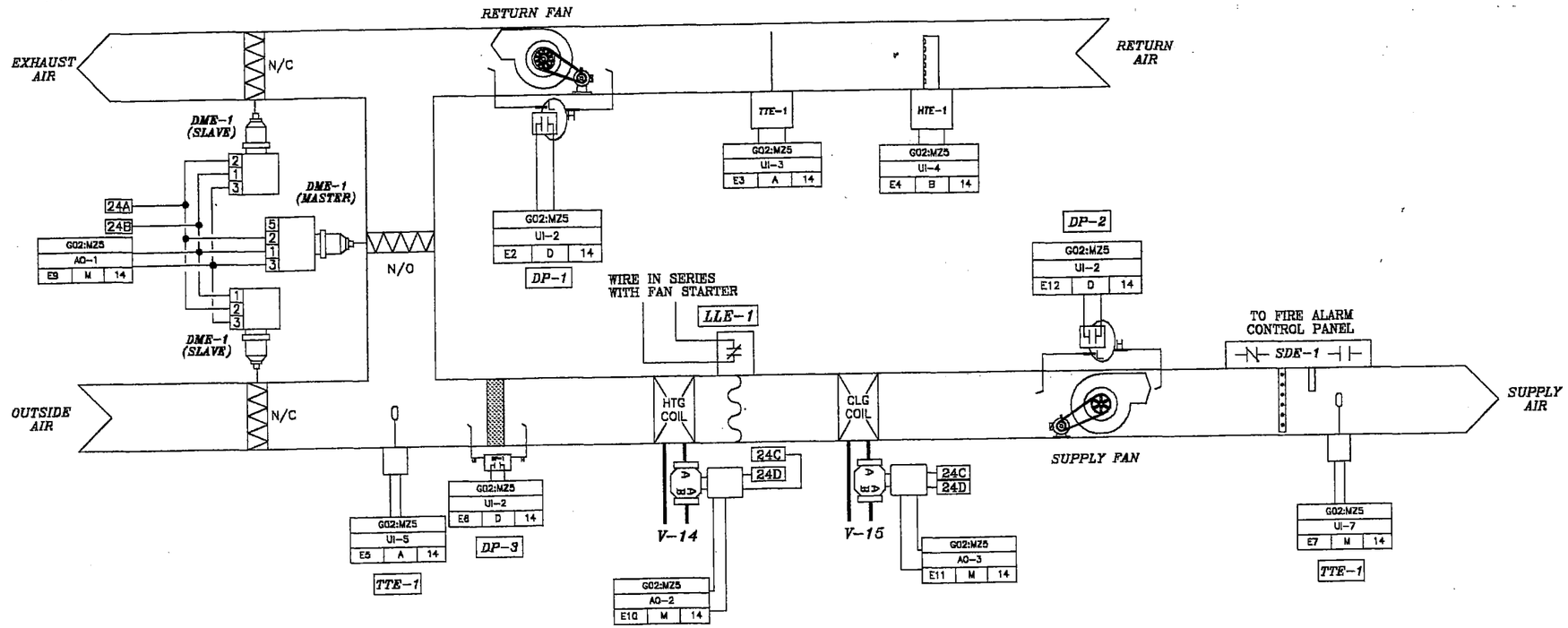

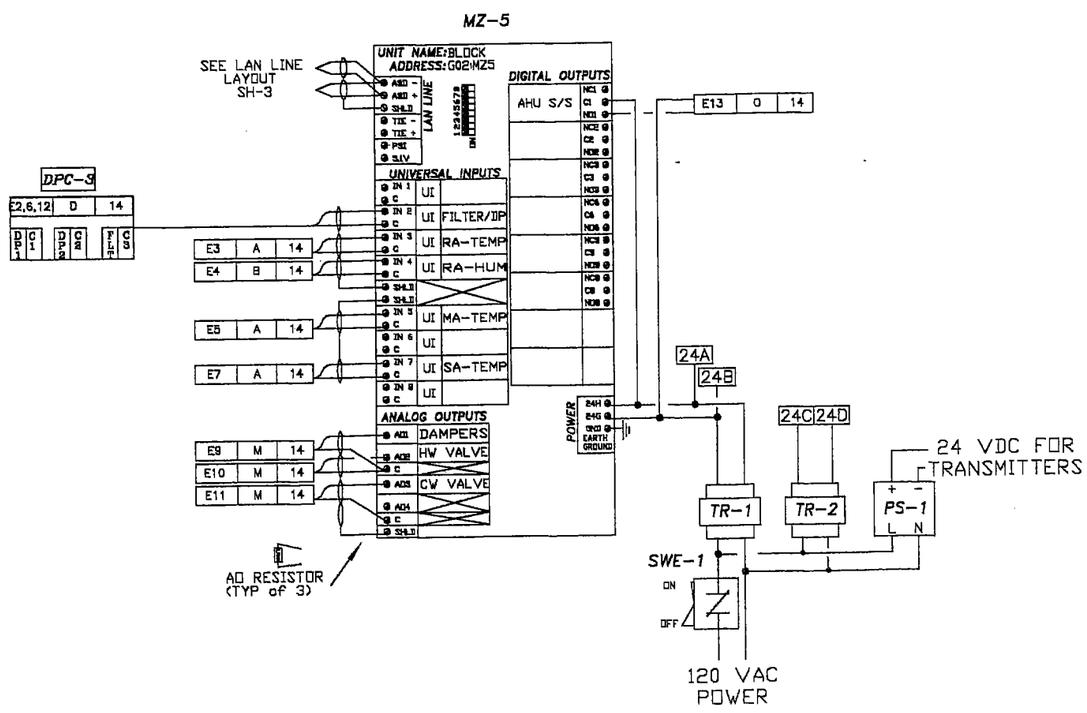

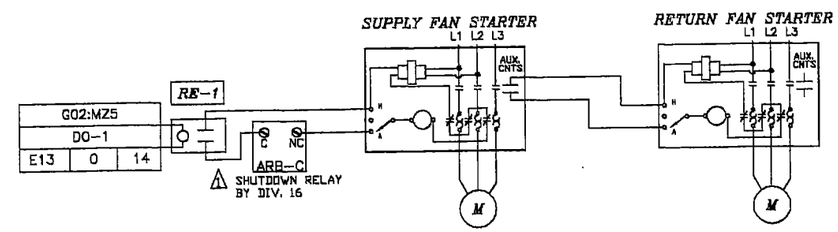

NOTE: SEE PAGES 70 AND 71 FOR SEQUENCES OF OPERATION.

BILL OF MATERIALS

ITEM	QTY.	PART NUMBER	DESCRIPTION	VA	MANUF.
TTE-1	3	TRANE	DUCT SENSORS	--	TRANE
LLE-1	1	TRANE	LOW LIMIT	--	TRANE
HTE-1	1	HT-2-D	HUMIDITY SENSOR	--	KELE
RE-1	1	PAM-1	24V SPDT RELAY	2	SIEBE
SDE-1	1	BY OTHERS	SMOKE DETECTOR	--	------
MZ-5	1	MZ2-1C	MICROZONE CONTROLLER W/ CLOCK	18	SIEBE
CP-1	1	AE-630	PANEL ENCLOSURE	--	SIEBE
TR-1,2	2	T-208	96VA TRANSFORMER	96	SIEBE
PS-1	1	PS-200-A-1-N	DC POWER SUPPLY	--	SIEBE
DP-1,2,3	3	TRANE	DIFFERENTIAL PRESSURE SWITCH	--	TRANE
DME-1	3	TRANE	DAMPER ACTUATOR	--	TRANE
DPC-3	1	DPC-3-1	DIGITAL INPUT CARD	--	SIEBE
V-14,15	2	SEE SCHEDULE	CONTROL VALVE	--	SIEBE

SIEBE ENVIRONMENTAL CONTROLS ENE, INC
Rhode Island Branch
54B Vermont Ave
Warwick RI 02888
PH: (401) 737-8905
FAX: (401) 737-8846

No.	Revision	Date

Architect: SA-GCA ARCHITECTS
Engineer: JOSEPH CATAUDELLA
Contractor: DELTA MECHANICAL OF N.E.
Drawn by: MC
Checked by: _____
CAD file: STD-ACAD Date: 8-12-99

CENTER GENERAL COMPLEX

CRANSTON, RI

AHU-69-3

JOB NUMBER 7721R

AIR HANDLING UNIT AHU-69-4 AND EF-69-1,4

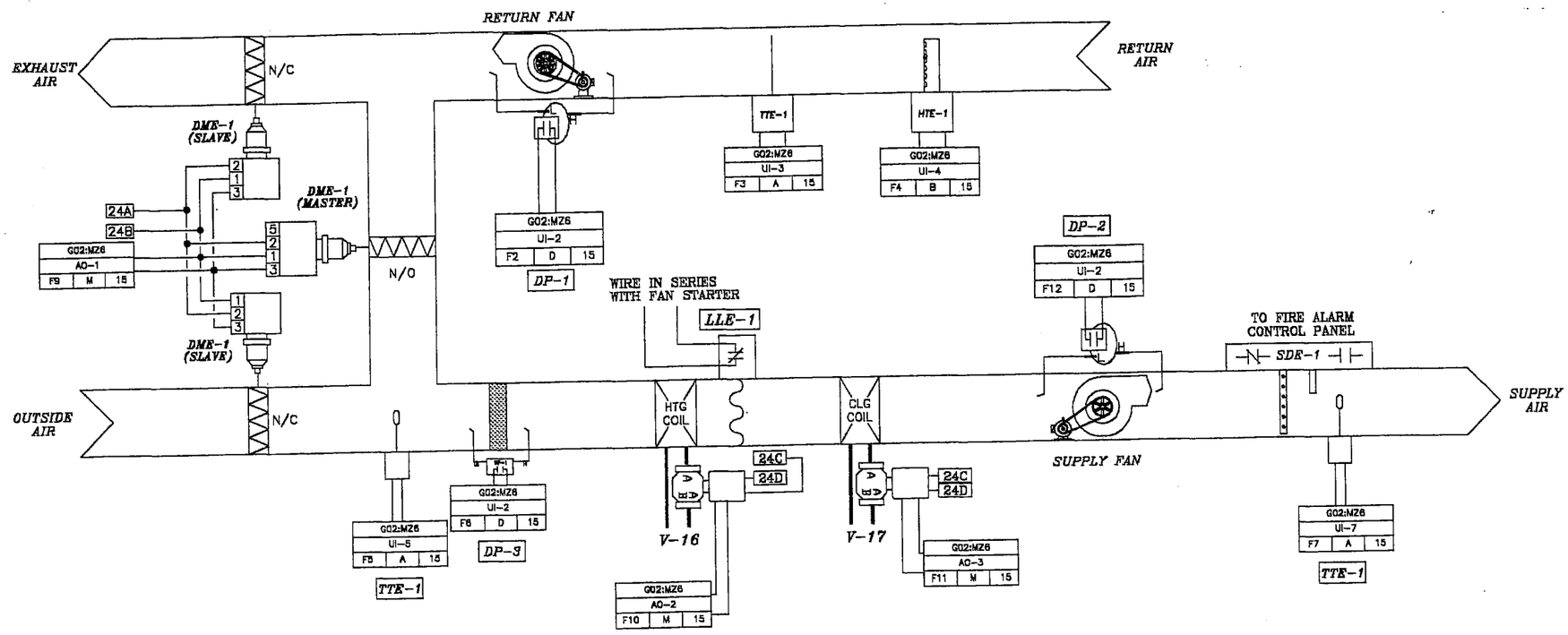

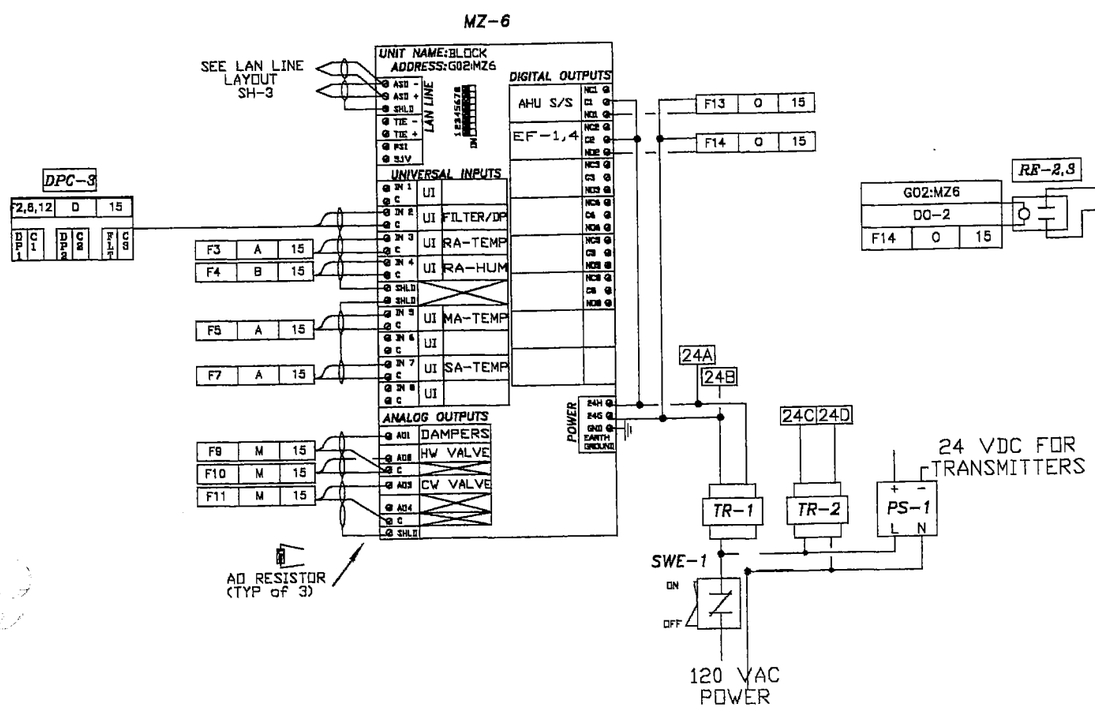

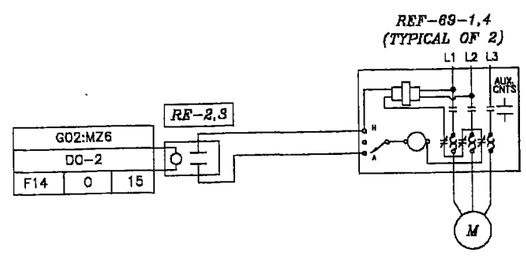

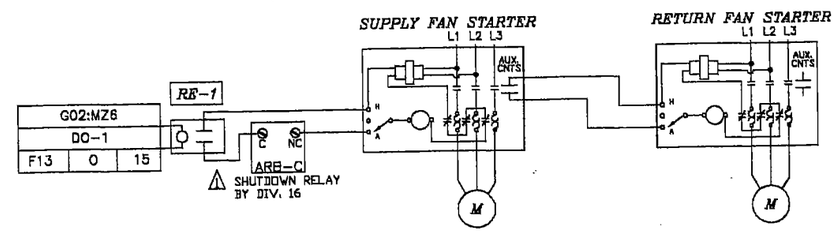

NOTE: SEE PAGES 70 AND 71 FOR SEQUENCES OF OPERATION.

BILL OF MATERIALS

ITEM	QTY.	PART NUMBER	DESCRIPTION	VA	MANUF.
TTE-1	3	TRANE	DUCT SENSORS	--	TRANE
LLE-1	1	TRANE	LOW LIMIT	--	TRANE
HTE-1	1	HT-2-D	HUMIDITY SENSOR	--	KELE
RE-1,2,3	3	PAM-1	24V SPDT RELAY	2	SIEBE
SDE-1	1	BY OTHERS	SMOKE DETECTOR	--	-----
DPC-3	1	DPC-3-1	DIGITAL INPUT CARD	--	SIEBE
MZ-6	1	MZ2-1C	MICROZONE CONTROLLER W/ CLOCK	18	SIEBE
CP-1	1	AE-632	PANEL ENCLOSURE	--	SIEBE
TR-1,2	2	T-208	96VA TRANSFORMER	96	SIEBE
PS-1	1	PS-200-A-1-N	DC POWER SUPPLY	--	SIEBE
DP-1,2,3	3	TRANE	DIFFERENTIAL PRESSURE SWITCH	--	TRANE
DME-1	3	TRANE	DAMPER ACTUATOR	--	TRANE
V-16,17	2	SEE SCHEDULE	CONTROL VALVE	--	SIEBE

SIEBE ENVIRONMENTAL CONTROLS ENE, INC
Rhode Island Branch
54B Vermont Ave
Warwick RI 02888
PH: (401) 737-8905
FAX: (401) 737-8946

No. Revision Date

Architect: SA-GCA ARCHITECTS
Engineer: JOSEPH CATAUDELLA
Contractor: DELTA MECHANICAL OF N.E.
Drawn by: MC
Checked by: ---------
CAD file: STD-ACAD Date: 8-12-98

CENTER GENERAL COMPLEX
CRANSTON, RI
AHU-69-4 AND EF-69-1,4

JOB NUMBER 7721R
SHEET NO. 15 OF 71

BUILDING 69

(LOCATED IN AHU-69-4 CONTROL PANEL ON PAGE 15)

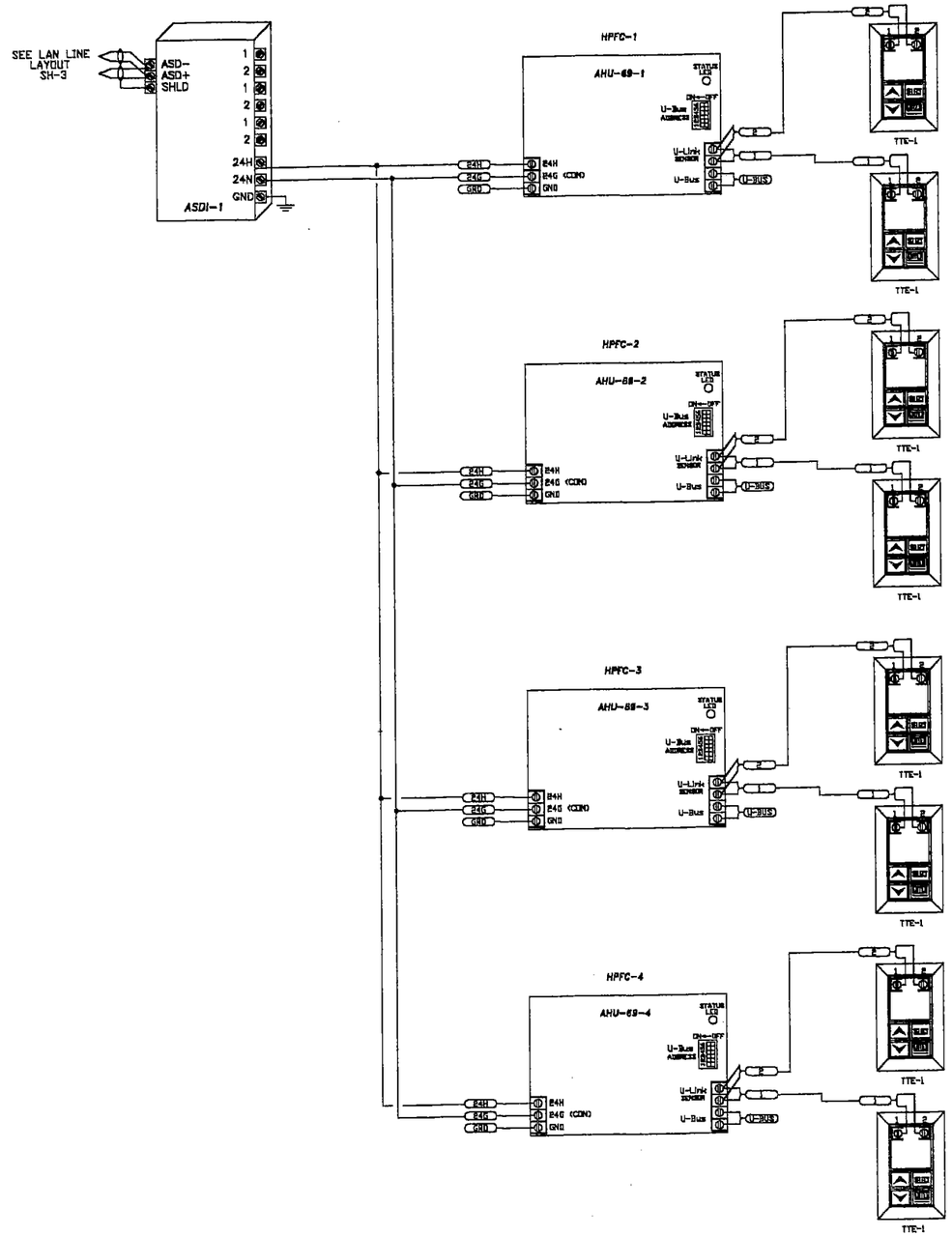

NOTE: SEE PAGES 70 AND 71 FOR SEQUENCES OF OPERATION.

BILL OF MATERIALS

ITEM	QTY.	PART NUMBER	DESCRIPTION	VA	MANUF.
ASDI-1	1	MN-ASDI	MICRONET INTEGRATOR	--	SIEBE
HPFC-1-4	4	MN-HPFC	MICRONET CONTROLLER	--	SIEBE
TTE-1	8	MN-SDK	SPACE SENSOR	--	SIEBE

SIEBE ENVIRONMENTAL CONTROLS ENE, INC
Rhode Island Branch
54B Vermont Ave
Warwick RI 02888
PH: (401) 737-8805
FAX: (401) 737-8946

No.	Revision	Date

Architect: SA-GCA ARCHITECTS
Engineer: JOSEPH CATAUDELLA
Contractor: DELTA MECHANICAL OF N.E.
Drawn by: MC
Checked by: _____
CAD file: STD-ACAD Date: 8-12-99

CENTER GENERAL COMPLEX
CRANSTON, RI
BLDG. 69

JOB NUMBER 7721R
SHEET NO. 16 OF 71

BUILDING 69

TRANE– FAN COIL AIR CONDITIONING UNIT
(TYPICAL OF 2)

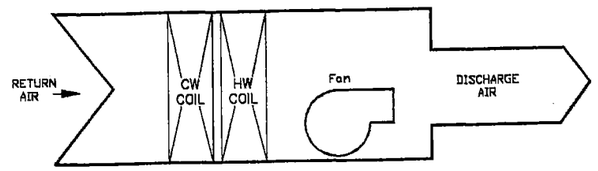

WALL SENSOR

TRANE– FACTORY INSTALLED
AND WIRED DDC CONTROLLER

TRANE– FACTORY SUPPLIED
WALL SENSOR

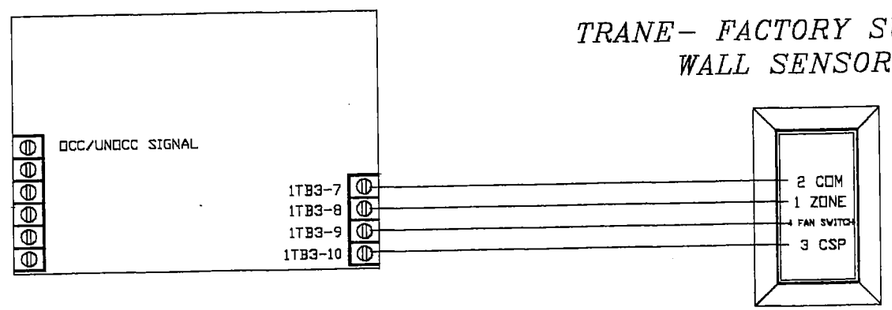

NOTE: SEE PAGES 70
AND 71 FOR SEQUENCES
OF OPERATION.

SIEBE ENVIRONMENTAL CONTROLS ENT. INC
Rhode Island Branch
54B Vermont Ave
Warwick RI 02888
PH: (401) 737-8905
FAX: (401) 737-8946

No.	Revision	Date

Architect: SA–GCA ARCHITECTS
Engineer: JOSEPH CATAUDELLA
Contractor: DELTA MECHANICAL OF N.E.
Drawn by: MC
Checked by: _____
CAD file: _____
Date: 8-12-99

CENTER GENERAL COMPLEX
CRANSTON, RI
TRANE FAN COIL UNIT

JOB NUMBER
7721R
SHEET NO.
17 OF 71

BUILDING 69

VARIABLE AIR VOLUME CONTROL
(TYPICAL OF 2)

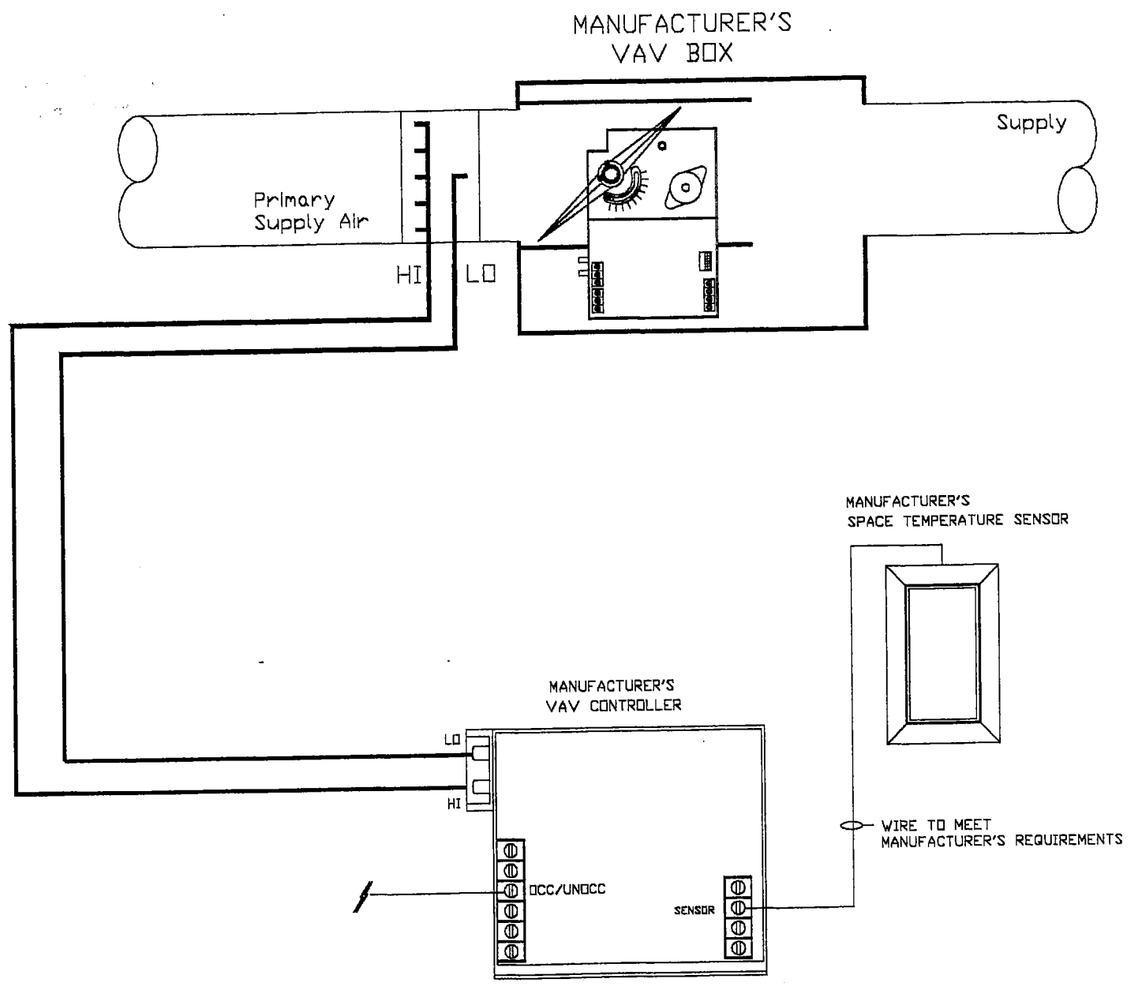

NOTE: SEE PAGES 70 AND 71 FOR SEQUENCES OF OPERATION.

SIEBE ENVIRONMENTAL CONTROLS ENE, INC
Rhode Island Branch
54B Vermont Ave
Warwick RI 02888
PH: (401) 737-8905
FAX: (401) 737-8946

No.	Revision	Date

Architect: SA-GCA ARCHITECTS
Engineer: JOSEPH CATAUDELLA
Contractor: DELTA MECHANICAL OF N.E.
Drawn by: MC
Checked by: _____
CAD file: STD-ACAD Date: 8-12-99

CENTER GENERAL COMPLEX
CRANSTON, RI
VAV CONTROL

JOB NUMBER
7721R
SHEET NO.
18 OF 71

BUILDING 69

UH 69-1,2,3

UNIT HEATER

(TYPICAL OF ~~4~~ 3)

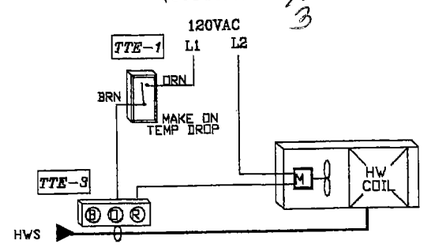

ELEV. MACH RM

EXHAUST FAN EF-69-7

(TYPICAL OF 1)

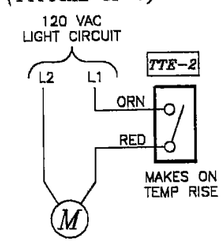

NOTE: SEE PAGES 70 AND 71 FOR SEQUENCES OF OPERATION.

BILL OF MATERIALS

ITEM	QTY.	PART NUMBER	DESCRIPTION	VA	MANUF.
TTE-1,2	5	TC-114	THERMOSTAT	--	SIEBE
TTE-3	4	TC-2974	STRAP-ON AQUASTAT	--	SIEBE

ALL WIRING TO BE DONE PER WIRING SPECIFICATIONS AND GUIDELINES ON DRAWING D02

SIEBE ENVIRONMENTAL CONTROLS ENE, INC
Rhode Island Branch
54B Vermont Ave
Warwick RI 02888
PH: (401) 737-8905
FAX: (401) 737-8946

No.	Revision	Date

Architect: SA-GCA ARCHITECTS
Engineer: JOSEPH CATAUDELLA
Contractor: DELTA MECHANICAL OF N.E.
Drawn by: MG
Checked by: _____
CAD file: STD-ACAD Date: 8-12-99

CENTER GENERAL COMPLEX
CRANSTON, RI
UH, EF-69-7 CONTROL

JOB NUMBER 7721R
SHEET NO. 19 OF 71

PAGE NOT USED

SIEBE ENVIRONMENTAL CONTROLS ENG, INC
Rhode Island Branch
54B Vermont Ave
Warwick RI 02888
PH: (401) 737-8905
FAX: (401) 737-8946

SIEBE ENVIRONMENTAL CONTROLS

No.	Revision	Date

Architect: SA-GCA ARCHITECTS
Engineer: JOSEPH CATAUDELLA
Contractor: DELTA MECHANICAL OF N.E.
Drawn by: MC
Checked by: _____
CAD file: STD-ACAD Date: 8-12-98

CENTER GENERAL COMPLEX
CRANSTON, RI
PAGE NOT USED

JOB NUMBER
7721R
SHEET NO.
20 OF 71

BUILDING 70
LAN LINE LAYOUT

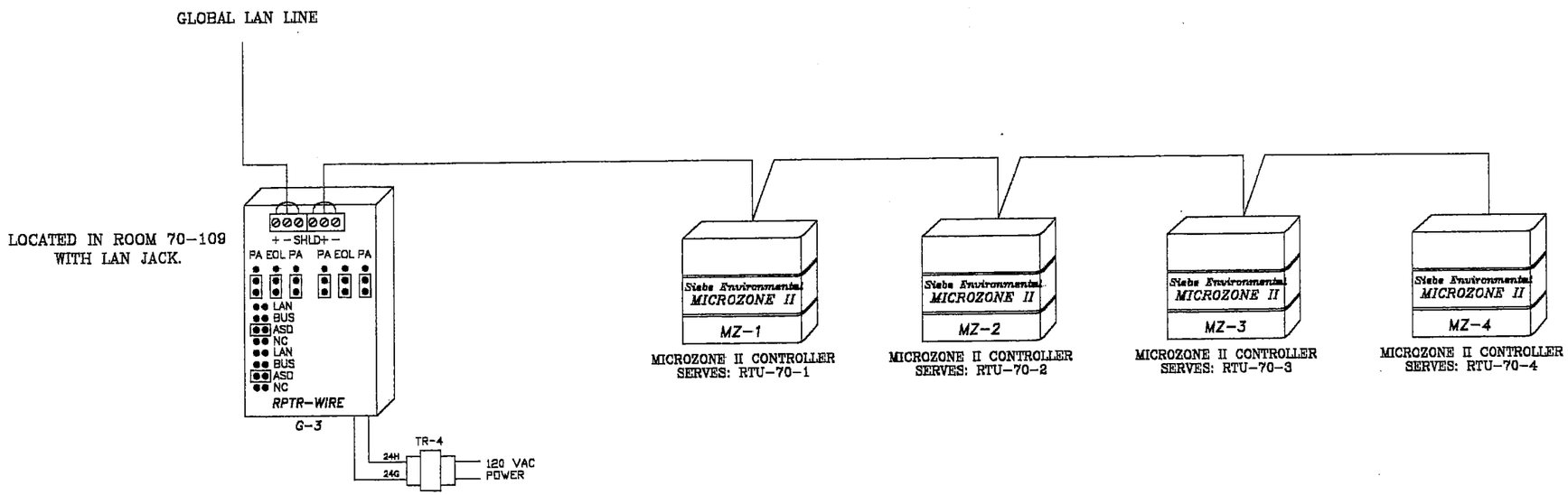

LOCATE IN
MECH. ROOM # 70-109

BILL OF MATERIALS

ITEM	QTY.	PART NUMBER	DESCRIPTION	VA	MANUF.
G-3	1	RPTR-WIRE	REPEATER WIRE	--	SIEBE
TR-1	1	T-201-1	120/24 TRANSFORMER	50	SIEBE

SIEBE ENVIRONMENTAL CONTROLS ENE, INC
Rhode Island Branch
54B Vermont Ave
Warwick RI 02888
PH: (401) 737-8905
FAX: (401) 737-8946

No.	Description	Date
1	REPEATER LOCATION	9-96-00

Architect: SA-GCA ARCHITECTS
Engineer: JOSEPH CATAUDELLA
Contractor: DELTA MECHANICAL OF N.E.
Drawn by: MC
Checked by: ---
CAD file: STD-ACAD Date: 8-12-99

CENTER GENERAL COMPLEX
CRANSTON, RI
BUILDING 70 LAN LINE

JOB NUMBER 7721R
SHEET NO. 21 OF 71

ROOFTOP UNIT 70-1 AND REF-70-2

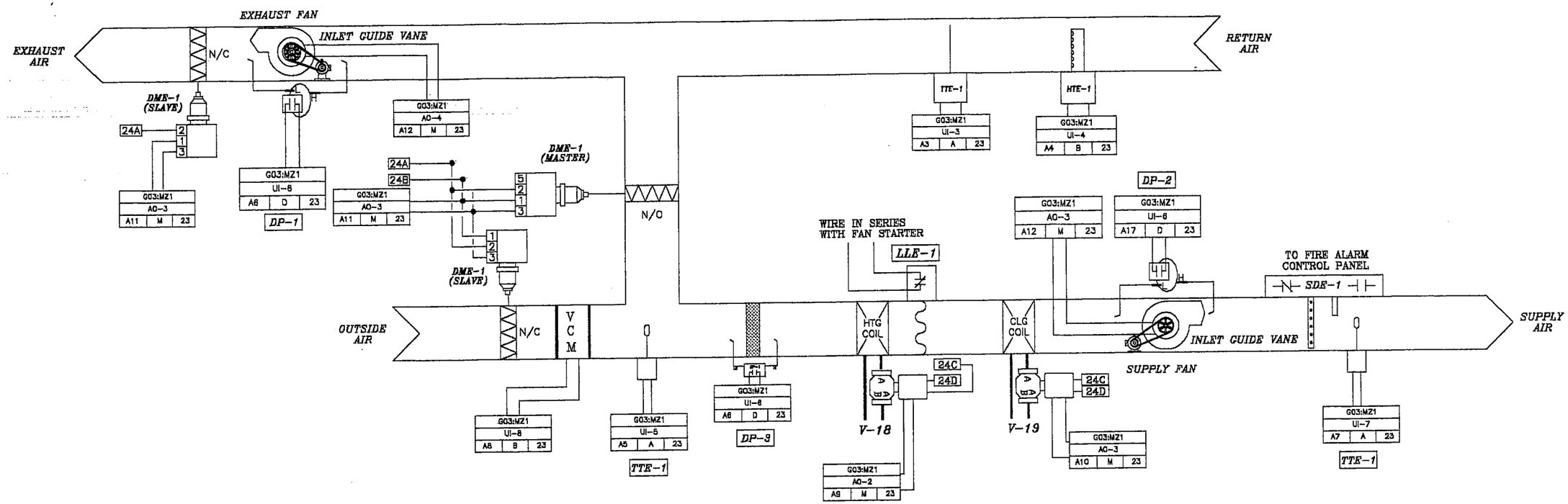

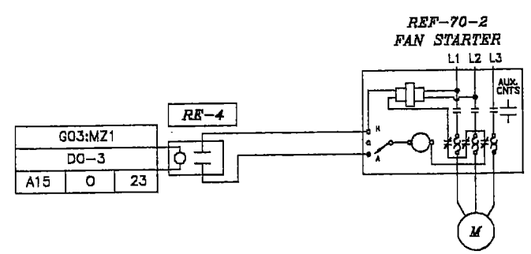

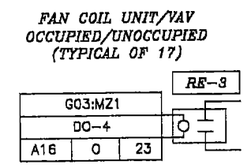

NOTE: SEE PAGES 70 AND 71 FOR SEQUENCES OF OPERATION.

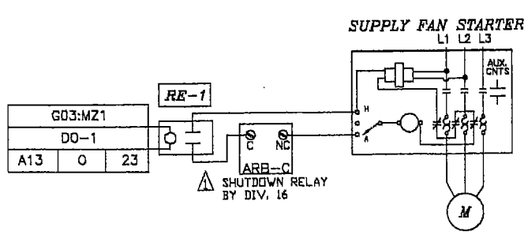

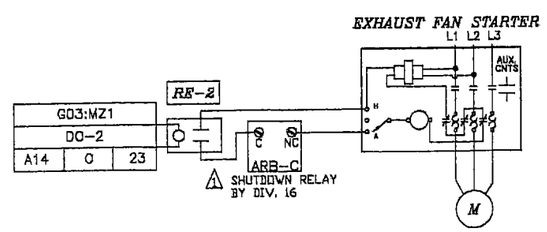

BILL OF MATERIALS

ITEM	QTY.	PART NUMBER	DESCRIPTION	VA	MANUF.
TTE-1	3	TRANE	DUCT SENSORS	--	TRANE
LLE-1	1	TRANE	LOW LIMIT	--	TRANE
HTE-1	1	HT-2-X	HUMIDITY SENSOR	--	KELE
RE-1-4	20	PAM-1	24V SPDT RELAY	2	SIEBE
SDE-1	1	BY OTHERS	SMOKE DETECTOR	--	-----
MZ-1,2	2	MZ2-1C	MICROZONE CONTROLLER W/ CLOCK	18	SIEBE
CP-1	1	AE-630	PANEL ENCLOSURE	--	SIEBE
TR-1-3	3	T-208	96VA TRANSFORMER	96	SIEBE
PS-1	1	PS-200-A-1-N	DC POWER SUPPLY	--	SIEBE
DP-1-3	3	TRANE	DIFFERENTIAL PRESSURE SWITCH	--	TRANE
DP-4	1	C-264	DIFFERENTIAL PRESSURE SWITCH	--	SETRA
VCM	1	TRANE	TRANE AIR MONITORING STATION	--	TRANE
DME-1	3	TRANE	DAMPER ACTUATOR	--	TRANE
DPC-3	1	DPC-3-1	DIGITAL INPUT CARD	--	SIEBE
V-18,19	2	SEE SCHEDULE	CONTROL VALVE	--	SIEBE

SIEBE ENVIRONMENTAL CONTROLS ENE, INC
Rhode Island Branch
54B Vermont Ave
Warwick RI 02888
PH: (401) 737-8905
FAX: (401) 737-8946

No.	Description	Date
1	INLET GUIDE VANE	9-28-99

Architect: SA-GCA ARCHITECTS
Engineer: JOSEPH CATAUDELLA
Contractor: DELTA MECHANICAL OF N.E.
Drawn by: MC
Checked by: ——
CAD file: STD-ACAD Date: 8-12-99

CENTER GENERAL COMPLEX
CRANSTON, RI
RTU-70-1 / REF-70-2

JOB NUMBER 7721R
SHEET NO. 22 OF 71

ROOFTOP UNIT 70-2

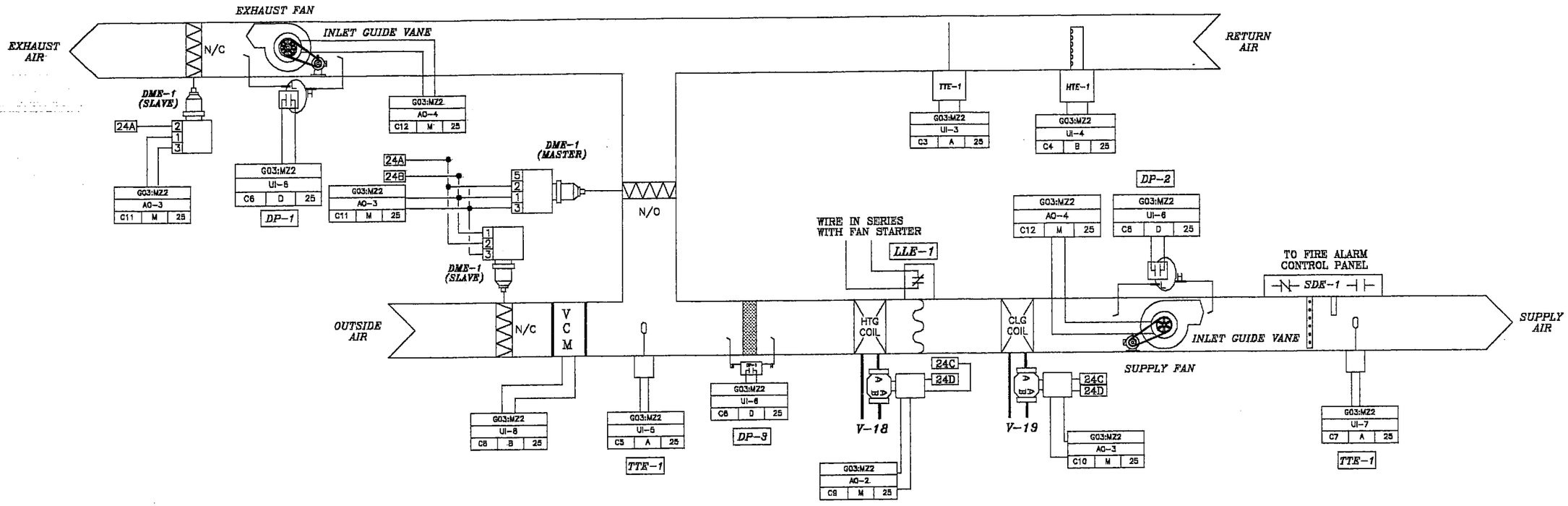

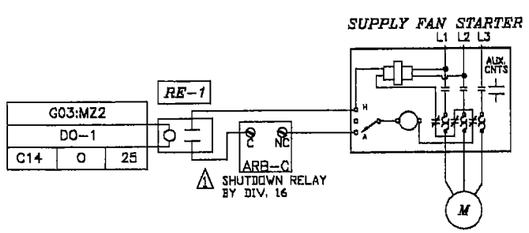

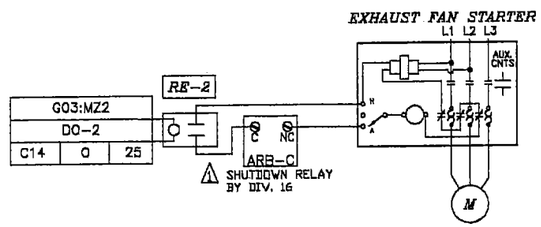

NOTE: SEE PAGES 70 AND 71 FOR SEQUENCES OF OPERATION.

BILL OF MATERIALS

ITEM	QTY.	PART NUMBER	DESCRIPTION	VA	MANUF.
TTE-1	3	TRANE	DUCT SENSORS	--	TRANE
LLE-1	1	TRANE	LOW LIMIT	--	TRANE
HTE-1	1	HT-2-X	HUMIDITY SENSOR	--	KELE
RE-1-4	20	PAM-1	24V SPDT RELAY	2	SIEBE
SDE-1	1	BY OTHERS	SMOKE DETECTOR	--	-----
MZ-1,2	2	MZ2-1C	MICROZONE CONTROLLER W/ CLOCK	18	SIEBE
CP-1	1	AE-630	PANEL ENCLOSURE	--	SIEBE
TR-1-3	3	T-208	96VA TRANSFORMER	96	SIEBE
PS-1	1	PS-200-A-1-N	DC POWER SUPPLY	--	SIEBE
DP-1-3	3	TRANE	DIFFERENTIAL PRESSURE SWITCH	--	TRANE
DP-4	1	C-264	DIFFERENTIAL PRESSURE SWITCH	--	SETRA
VCM	1	TRANE	TRANE AIR MONITORING STATION	--	TRANE
DME-1	3	TRANE	DAMPER ACTUATOR	--	TRANE
DPC-3	1	DPC-3-1	DIGITAL INPUT CARD	--	SIEBE
V-18,19	2	SEE SCHEDULE	CONTROL VALVE	--	SIEBE

SIEBE ENVIRONMENTAL CONTROLS ENE, INC
Rhode Island Branch
54B Vermont Ave
Warwick RI 02888
PH: (401) 737-8905
FAX: (401) 737-8946

No.	Revision	Date
1	INLET GUIDE VANE	

Architect: SA-GCA ARCHITECTS
Engineer: JOSEPH CATAUDELLA
Contractor: DELTA MECHANICAL OF N.E.
Drawn by: MC
Checked by: ____
CAD file: STD-ACAD Date: 8-12-99

CENTER GENERAL COMPLEX
CRANSTON, RI
RTU-70-2

JOB NUMBER 7721R
SHEET NO. 24 OF 71

ROOFTOP UNIT 70-2

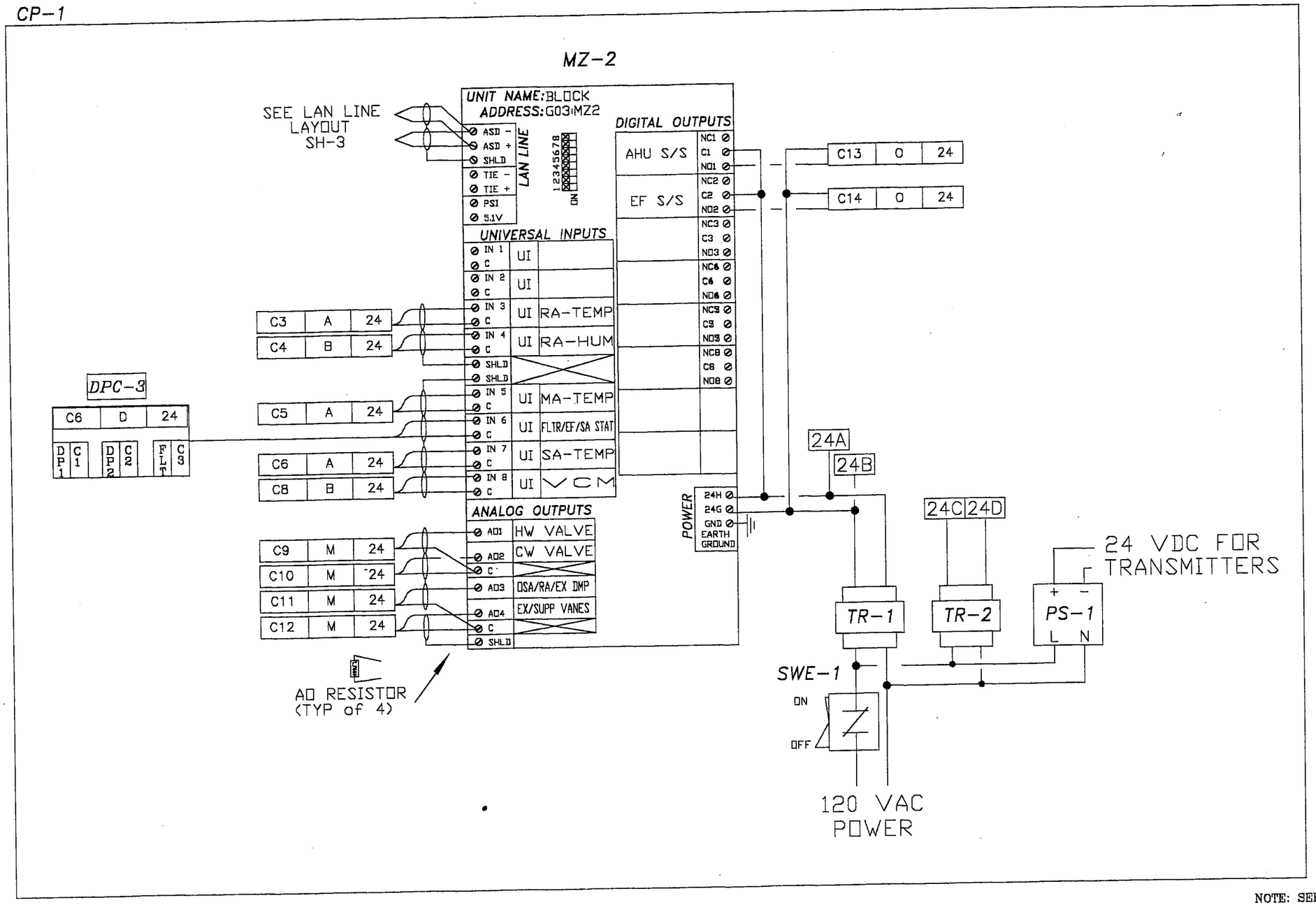

NOTE: SEE PAGES 70 AND 71 FOR SEQUENCES OF OPERATION.

SIEBE ENVIRONMENTAL CONTROLS ENG, INC
Rhode Island Branch
54B Vermont Ave
Warwick RI 02888
PH: (401) 737-8905
FAX: (401) 737-8948
SIEBE ENVIRONMENTAL CONTROLS

No.	Revision	Date

Architect: SA-GCA ARCHITECTS
Engineer: JOSEPH CATAUDELLA
Contractor: DELTA MECHANICAL OF N.E.
Drawn by: MC
Checked by: ———
CAD file: STD-ACAD Date: 8-12-98

CENTER GENERAL COMPLEX
CRANSTON, RI
RTU-70-2

JOB NUMBER 7721R
SHEET NO. 25 OF 71

ROOFTOP UNIT 70-3

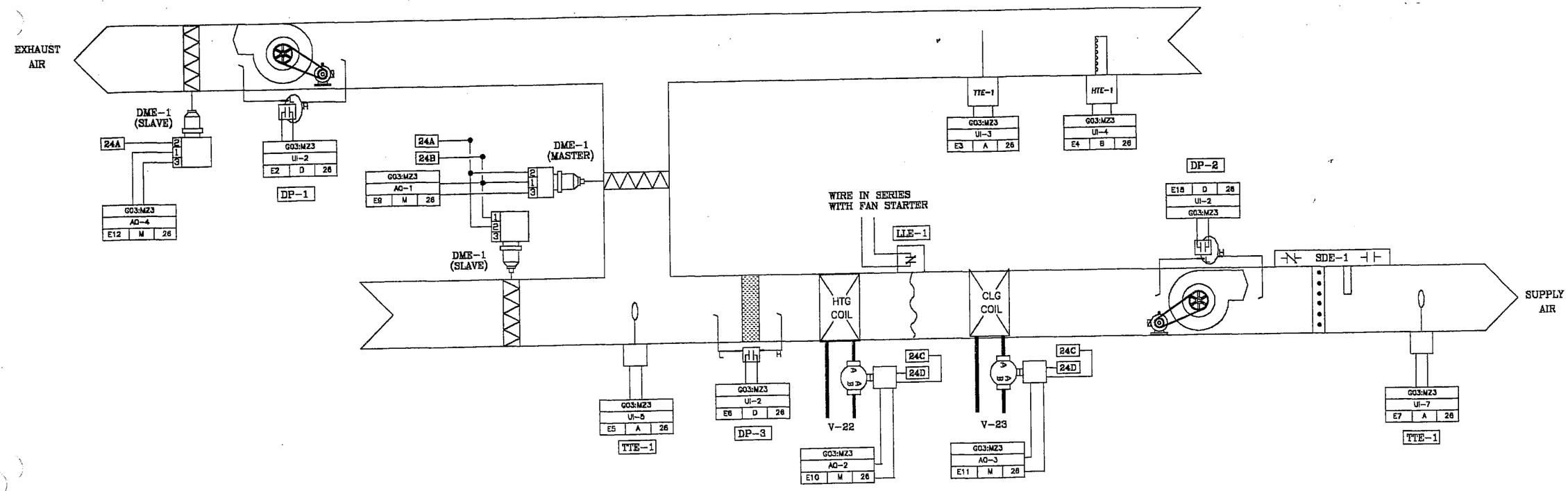

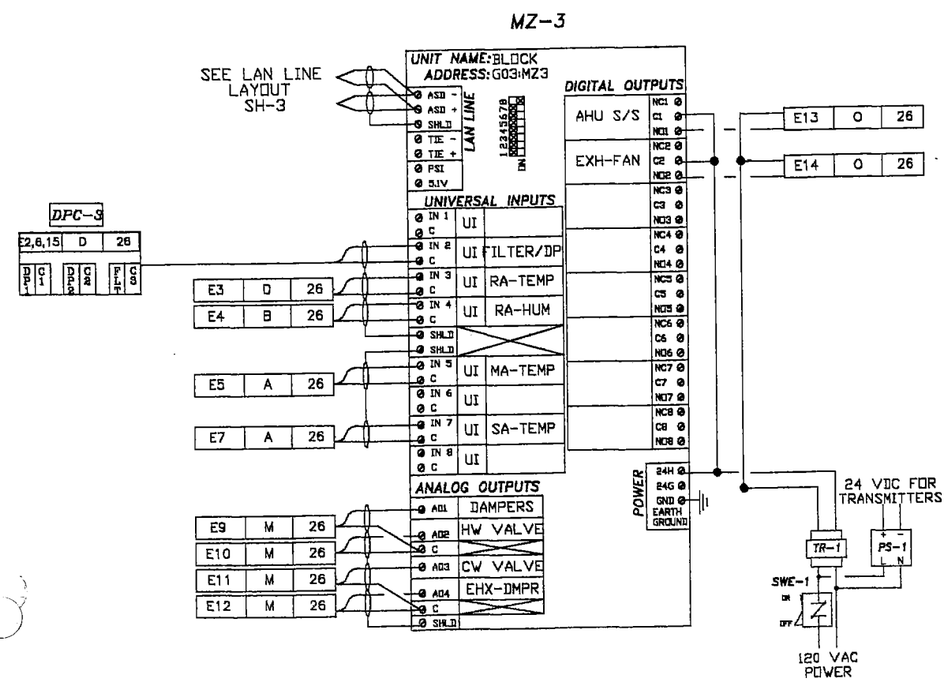

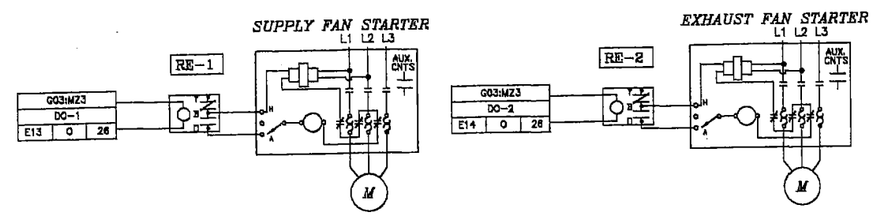

NOTE: SEE PAGES 70 AND 71 FOR SEQUENCES OF OPERATION.

BILL OF MATERIALS

ITEM	QTY.	PART NUMBER	DESCRIPTION	VA	MANUF.
TTE-1	3	TRANE	DUCT SENSOR	--	TRANE
LLE-1	1	TRANE	LOW LIMIT	--	TRANE
HTE-1	1	HT-2-D	HUMIDITY SENSOR	--	KELE
RE-1,2	2	PAM-1	24V SPDT RELAY	2	SIEBE
SDE-1	1	BY OTHERS	SMOKE STECTOR	--	--------
DPC-3	1	DPC-3-1	DIGITAL INPUT CARD	--	SIEBE
MZ-3	1	MZ2-1C	MICROZONE CONTROLLER W/ CLOCK	18	SIEBE
CP-1	1	AE-630	PANEL ENCLOSURE	--	SIEBE
TR-1,2	2	T-208	96VA TRANSFORMER	96	SIEBE
PS-1	1	PS-200-1-A-1-N	DC POWER SUPPLY	--	SIEBE
DP-1,2,3	3	TRANE	DIFFERENTIAL PRESSURE SWITCH	--	TRANE
DME-1	3	TRANE	DAMPER ACTUATOR	--	TRANE
V-22,23	2	SEE SCHEDULE	CONTROL VALVE	--	SIEBE

SIEBE ENVIRONMENTAL CONTROLS ENE, INC
Rhode Island Branch
54B Vermont Ave
Warwick RI 02888
PH: (401) 737-8905
FAX: (401) 737-8948

No. Revision Date

Architect: SA-GCA ARCHITECTS
Engineer: JOSEPH CATAUDELLA
Contractor: DELTA MECHANICAL OF N.E.
Drawn by: MC
Checked by: _____
CAD file: STD-ACAD Date: 8-12-98

CENTER GENERAL COMPLEX
CRANSTON, RI
RTU-70-3

JOB NUMBER 7721R
SHEET NO. 26 OF 71

ROOFTOP UNIT 70-4

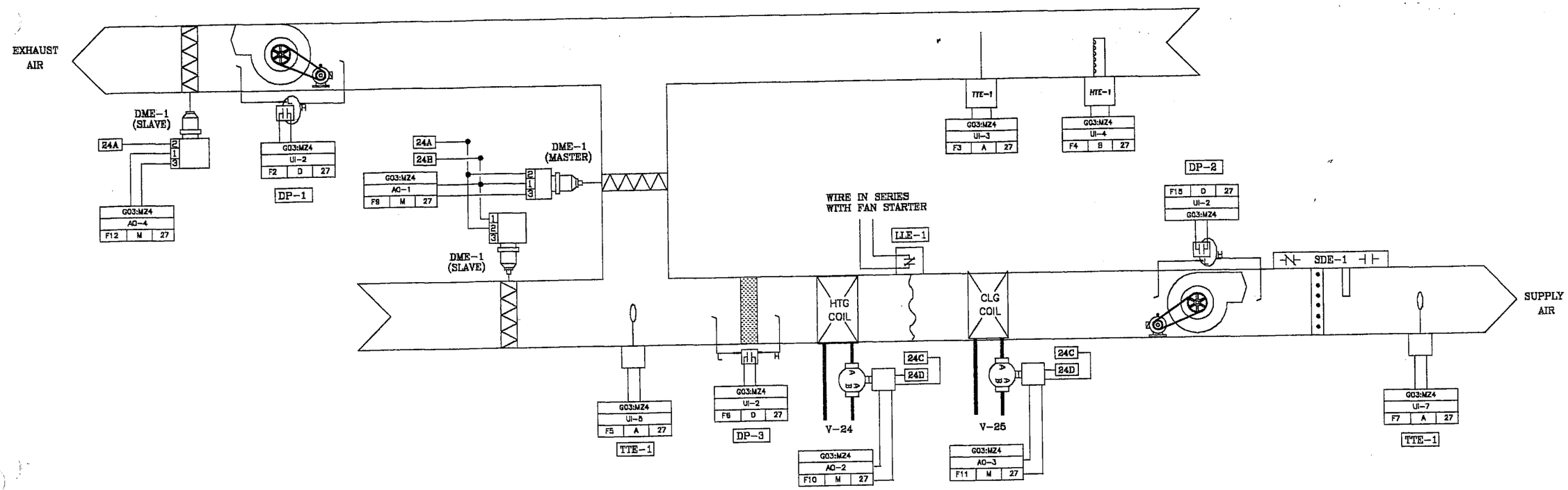

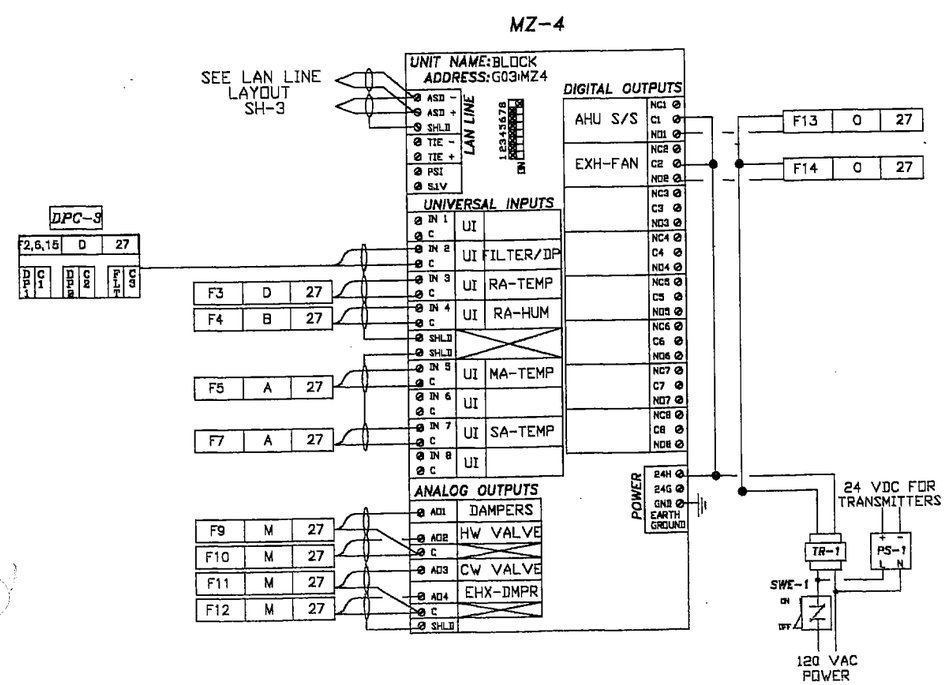

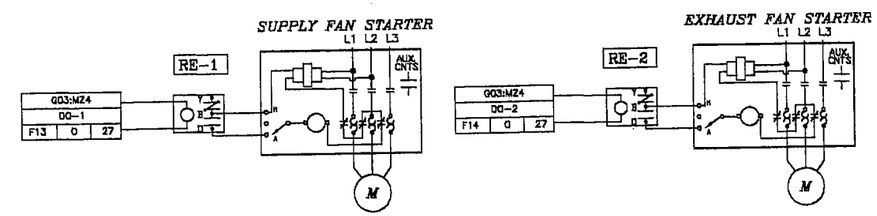

NOTE: SEE PAGES 70 AND 71 FOR SEQUENCES OF OPERATION.

BILL OF MATERIALS

ITEM	QTY.	PART NUMBER	DESCRIPTION	VA	MANUF.
TTE-1	3	TRANE	DUCT SENSOR	--	TRANE
LLE-1	1	TRANE	LOW LIMIT	--	TRANE
HTE-1	1	HT-2-D	HUMIDITY SENSOR	--	KELE
RE-1,2	2	PAM-1	24V SPDT RELAY	2	SIEBE
SDE-1	1	BY OTHERS	SMOKE STECTOR	--	-------
DPC-3	1	DPC-3-1	DIGITAL INPUT CARD	--	SIEBE
MZ-3	1	MZ2-1C	MICROZONE CONTROLLER W/ CLOCK	18	SIEBE
CP-1	1	AE-632	PANEL ENCLOSURE	--	SIEBE
TR-1,2	2	T-208	96VA TRANSFORMER	96	SIEBE
PS-1	1	PS-200-1-A-1-N	DC POWER SUPPLY	--	SIEBE
DP-1,2,3	3	TRANE	DIFFERENTIAL PRESSURE SWITCH	--	TRANE
DME-1	3	TRANE	DAMPER ACTUATOR	--	TRANE
V-24,25	2	SEE SCHEDULE	CONTROL VALVE	--	SIEBE

SIEBE ENVIRONMENTAL CONTROLS ENE, INC
Rhode Island Branch
54B Vermont Ave
Warwick RI 02888
PH: (401) 737-8905
FAX: (401) 737-8946

No.	Revision	Date

Architect: SA-GCA ARCHITECTS
Engineer: JOSEPH CATAUDELLA
Contractor: DELTA MECHANICAL OF N.E.
Drawn by: MC
Checked by: _____
CAD file: STD-ACAD Date: 8-12-98

CENTER GENERAL COMPLEX

CRANSTON, RI

RTU-70-4

JOB NUMBER 7721R

SHEET NO. 27 OF 71

BUILDING 70

(LOCATED IN AHU-70-4 CONTROL PANEL ON PAGE 27)

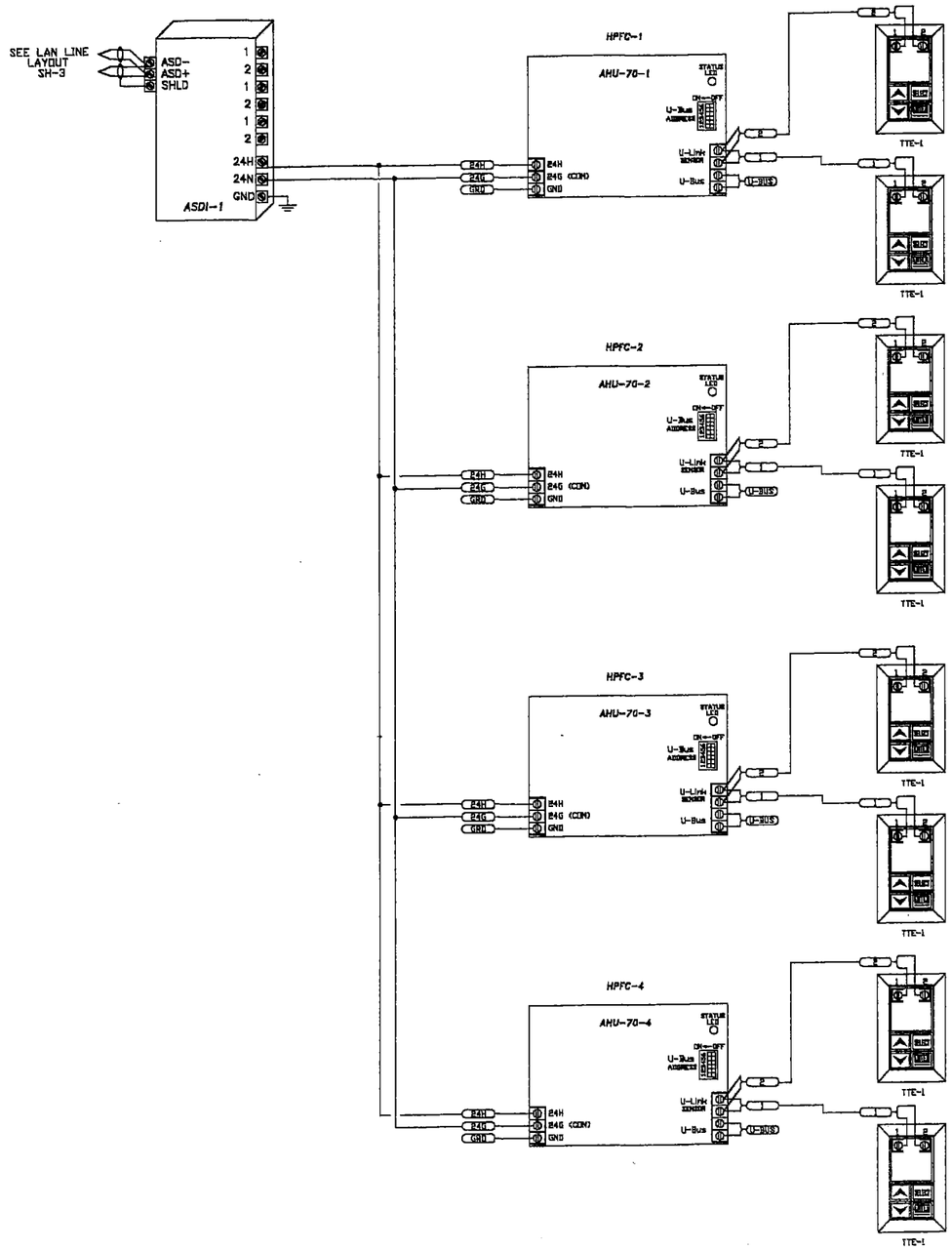

NOTE: SEE PAGES 70 AND 71 FOR SEQUENCES OF OPERATION.

BILL OF MATERIALS

ITEM	QTY.	PART NUMBER	DESCRIPTION	VA	MANUF.
ASDI-1	1	MN-ASDI	MICRONET INTEGRATOR	--	SIEBE
HPFC-1-4	4	MN-HPFC	MICRONET CONTROLLER	--	SIEBE
TTE-1	8	MN-SDK	SPACE SENSOR	--	SIEBE

SIEBE ENVIRONMENTAL CONTROLS ENE, INC
Rhode Island Branch
54B Vermont Ave
Warwick RI 02888
PH: (401) 737-8905
FAX: (401) 737-8948

No.	Revision	Date

Architect: SA-GCA ARCHITECTS
Engineer: JOSEPH CATAUDELLA
Contractor: DELTA MECHANICAL OF N.E.
Drawn by: MC
Checked by: ---
CAD file: STD-ACAD Date: 8-12-99

CENTER GENERAL COMPLEX
CRANSTON, RI
BLDG. 70

JOB NUMBER 7721R
SHEET NO. 27A OF 71

BUILDING 70

TRANE– FAN COIL AIR CONDITIONING UNIT
(TYPICAL OF 15)

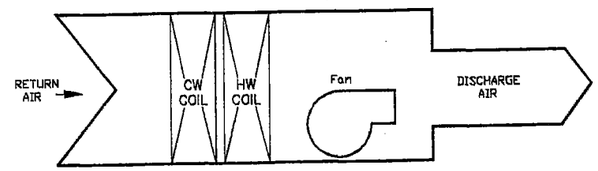

WALL SENSOR

TRANE– FACTORY INSTALLED
AND WIRED DDC CONTROLLER

TRANE– FACTORY SUPPLIED
WALL SENSOR

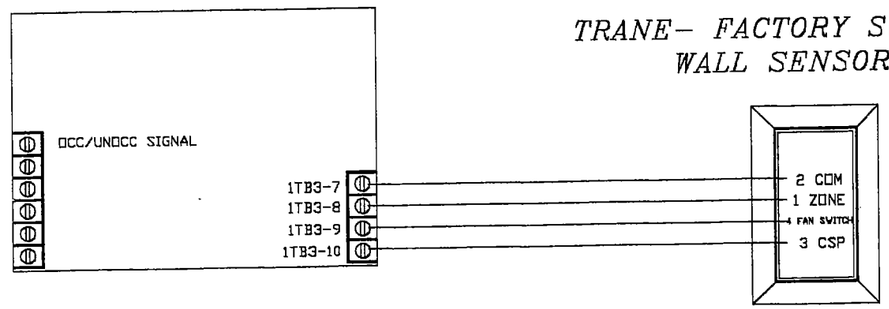

NOTE: SEE PAGES 70
AND 71 FOR SEQUENCES
OF OPERATION.

SIEBE ENVIRONMENTAL CONTROLS ENG. INC
Rhode Island Branch
54B Vermont Ave
Warwick RI 02888
PH: (401) 737-8905
FAX: (401) 737-8948

No.	Revision	Date

Architect: SA-GCA ARCHITECTS
Engineer: JOSEPH CATAUDELLA
Contractor: DELTA MECHANICAL OF N.E.
Drawn by: MC
Checked by: _____
CAD file: _____
Date: 8-12-99

CENTER GENERAL COMPLEX
CRANSTON, RI
BLDG. 70 TRANE FAN COIL UNIT

JOB NUMBER
7721R
SHEET NO.
28 OF 71

BUILDING 70

VARIABLE AIR VOLUME CONTROL
(TYPICAL OF 2)

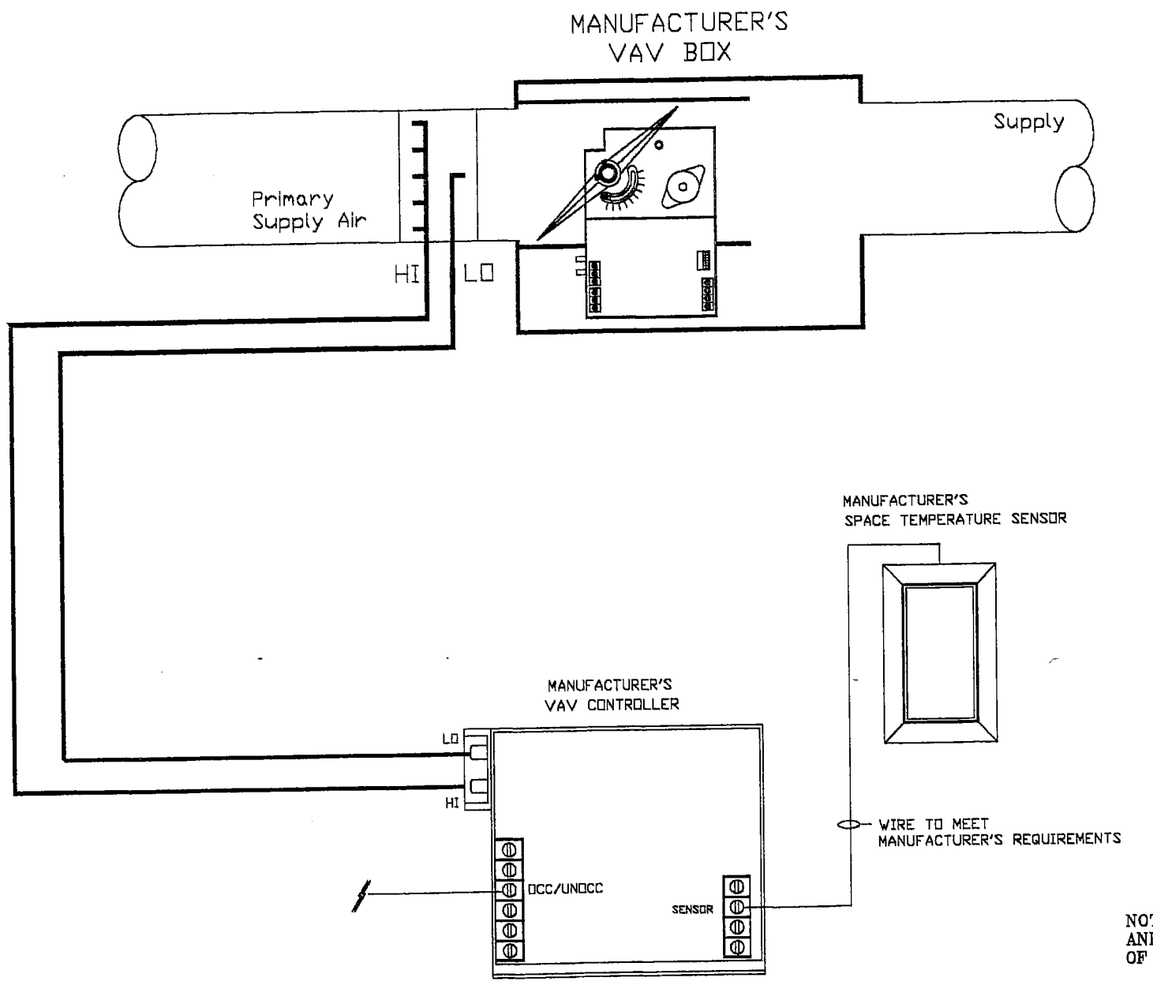

NOTE: SEE PAGES 70 AND 71 FOR SEQUENCES OF OPERATION.

SIEBE ENVIRONMENTAL CONTROLS ENE, INC
Rhode Island Branch
54B Vermont Ave
Warwick RI 02888
PH: (401) 737-8905
FAX: (401) 737-8946

No.	Revision	Date

Architect: SA-GCA ARCHITECTS
Engineer: JOSEPH CATAUDELLA
Contractor: DELTA MECHANICAL OF N.E.
Drawn by: MC
Checked by: _____
CAD file: STD-ACAD Date: 8-12-99

CENTER GENERAL COMPLEX
CRANSTON, RI
BLDG. 70 VAV CONTROL

JOB NUMBER
7721R
SHEET NO.
29 OF 71

BUILDING 70

EXHAUST FAN EF-70-3, EF 70-1

(TYPICAL OF 2)

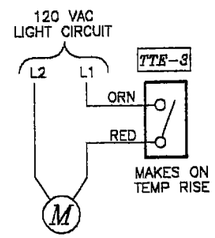

NOTE: SEE PAGES 70
AND 71 FOR SEQUENCES
OF OPERATION.

BILL OF MATERIALS

ITEM	QTY.	PART NUMBER	DESCRIPTION	VA	MANUF.
TTE-1	2	TC-114	THERMOSTAT	--	SIEBE

SIEBE ENVIRONMENTAL CONTROLS ENE, INC
Rhode Island Branch
543 Vernon Ave
Warwick RI 02888
PH: (401) 737-6905
FAX: (401) 737-6948
SIEBE ENVIRONMENTAL CONTROLS

Architect: SA-GCA ARCHITECTS
Engineer: JOSEPH CATAUDELLA
Contractor: DELTA MECHANICAL OF N.E.
Drawn by: MC
Checked by: ----------
CAD file: STD-ACAD Date: 8-12-99

No.	Revision	Date
1	CORRECTED BF NUMBER	9-28-00

CENTER GENERAL COMPLEX
CRANSTON, RI
BLDG. 70 EF-70-1,3 CONTROL

JOB NUMBER 7721R
SHEET NO. 30 OF 71

BUILDING 71
LAN LINE LAYOUT

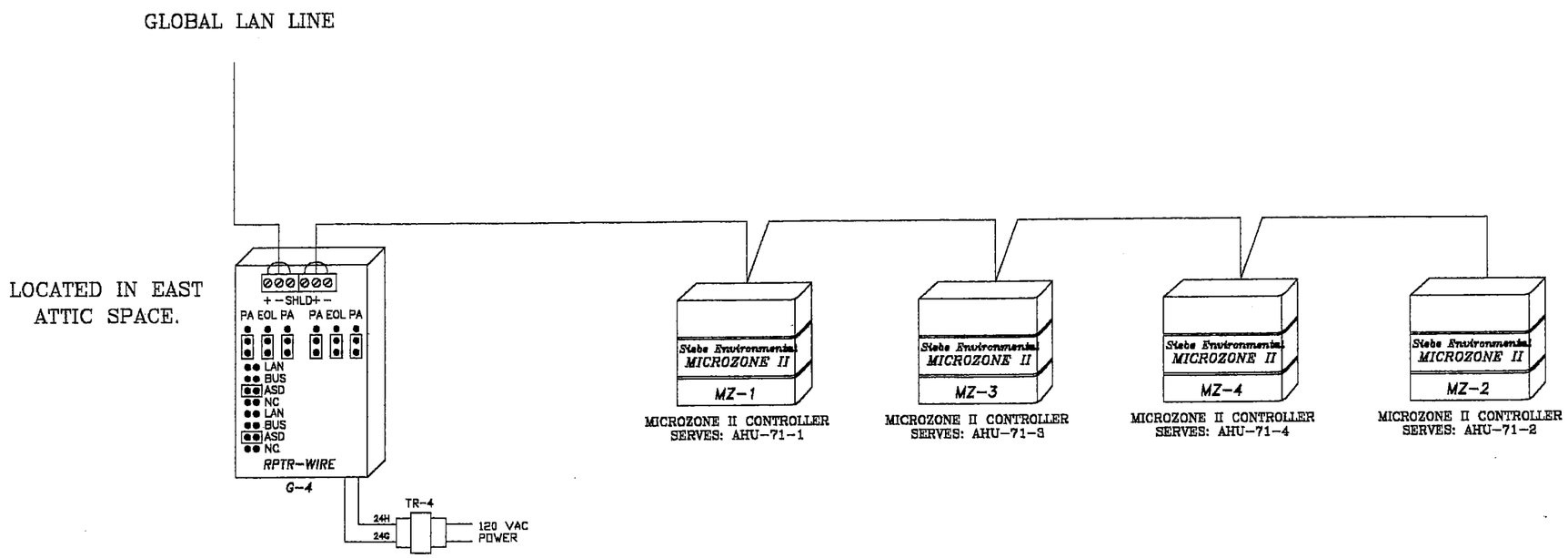

BILL OF MATERIALS

ITEM	QTY.	PART NUMBER	DESCRIPTION	VA	MANUF.
G-4	1	RPTR-WIRE	REPEATER WIRE	--	SIEBE
TR-1	1	T-201-1	120/24 TRANSFORMER	50	SIEBE

SIEBE ENVIRONMENTAL CONTROLS ENE, INC
SIEBE ENVIRONMENTAL CONTROLS
Rhode Island Branch
643 Vermont Ave
Warwick RI 02888
PH: (401) 737-8905
FAX: (401) 737-8948

No.	Description	Date
1	REPEATER LOCATION	8-26-99

Architect: SA-GCA ARCHITECTS
Engineer: JOSEPH CATAUDELLA
Contractor: DELTA MECHANICAL OF N.E.
Drawn by: MC
Checked by: ————
CAD file: STD-ACAD Date: 8-12-99

CENTER GENERAL COMPLEX
CRANSTON, RI
BUILDING 71 LAN LINE

JOB NUMBER 7721R
SHEET NO. 31 OF 71

AIR HANDLING UNIT AHU-71-1, EF-71-1,3 AND SHWP-70/71 CONTROL

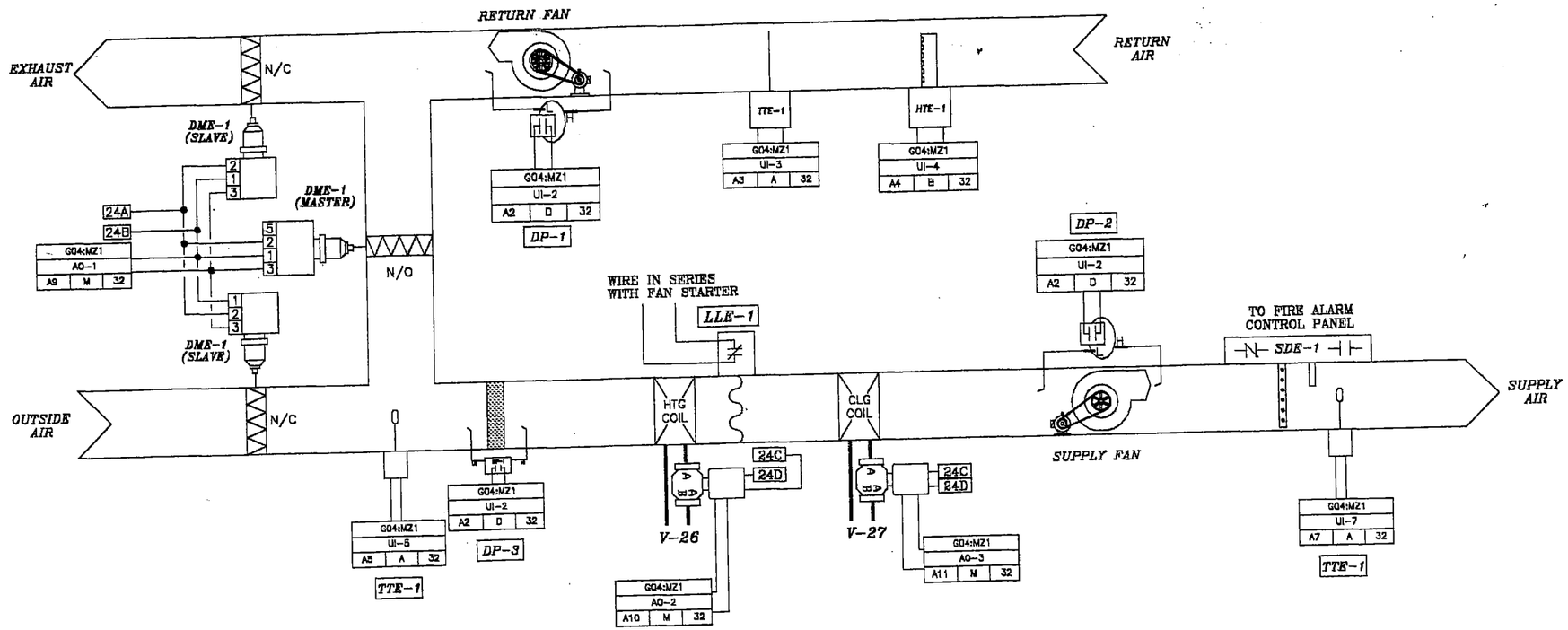

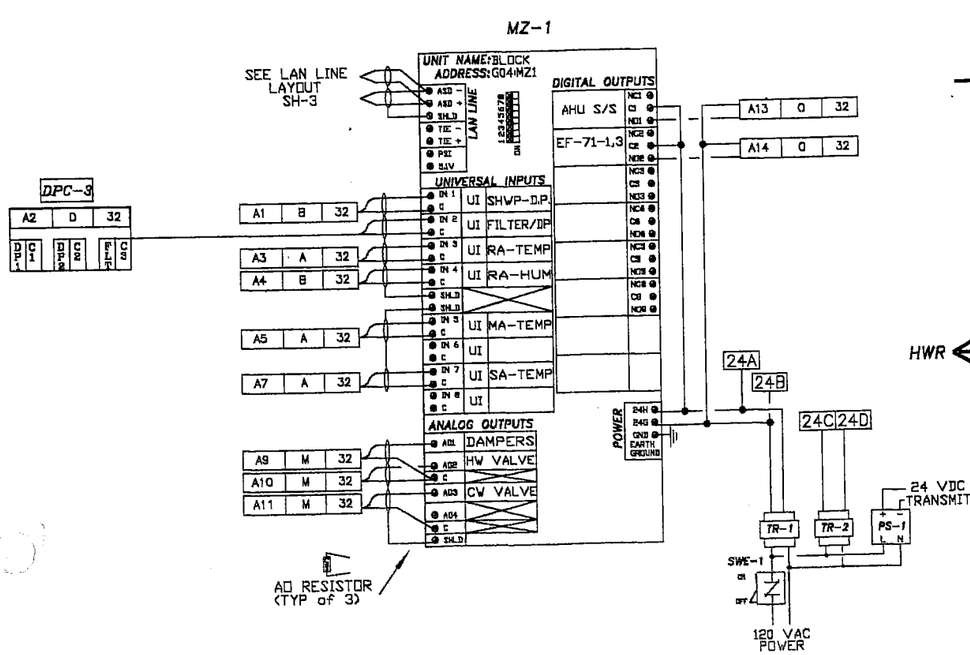

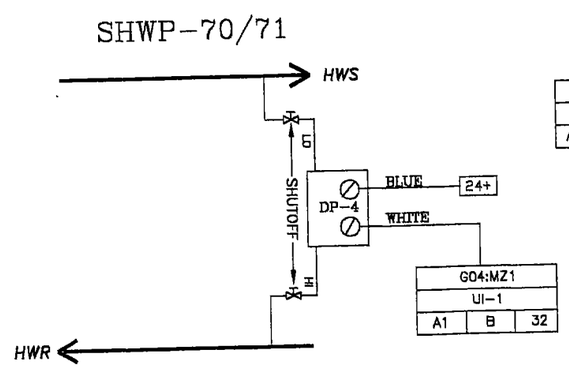

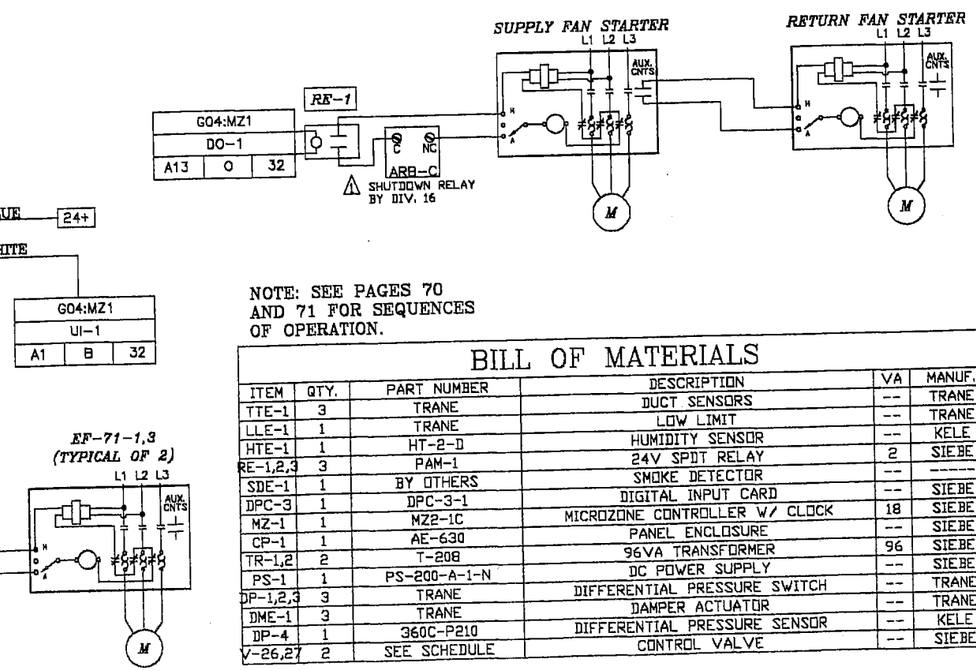

NOTE: SEE PAGES 70 AND 71 FOR SEQUENCES OF OPERATION.

BILL OF MATERIALS

ITEM	QTY.	PART NUMBER	DESCRIPTION	VA	MANUF.
TTE-1	3	TRANE	DUCT SENSORS	--	TRANE
LLE-1	1	TRANE	LOW LIMIT	--	TRANE
HTE-1	1	HT-2-D	HUMIDITY SENSOR	--	KELE
RE-1,2,3	3	PAM-1	24V SPDT RELAY	2	SIEBE
SDE-1	1	BY OTHERS	SMOKE DETECTOR	--	------
DPC-3	1	DPC-3-1	DIGITAL INPUT CARD	--	SIEBE
MZ-1	1	MZ2-1C	MICROZONE CONTROLLER W/ CLOCK	18	SIEBE
CP-1	1	AE-630	PANEL ENCLOSURE	--	SIEBE
TR-1,2	2	T-208	96VA TRANSFORMER	96	SIEBE
PS-1	1	PS-200-A-1-N	DC POWER SUPPLY	--	SIEBE
DP-1,2,3	3	TRANE	DIFFERENTIAL PRESSURE SWITCH	--	TRANE
DME-1	3	TRANE	DAMPER ACTUATOR	--	TRANE
DP-4	1	360C-P210	DIFFERENTIAL PRESSURE SENSOR	--	KELE
V-26,27	2	SEE SCHEDULE	CONTROL VALVE	--	SIEBE

SIEBE ENVIRONMENTAL CONTROLS ENE, INC
Rhode Island Branch
54B Vermont Ave
Warwick RI 02888
PH: (401) 737-8905
FAX: (401) 737-8948

Architect: SA-GCA ARCHITECTS
Engineer: JOSEPH CATAUDELLA
Contractor: DELTA MECHANICAL OF N.E.
Drawn by: MC
Checked by: ——
CAD file: STD-ACAD Date: 8-12-98

No. Revision Date

CENTER GENERAL COMPLEX
CRANSTON, RI
AHU-71-1, EF-71-1,3 AND SHWP-70/71

JOB NUMBER 7721R
SHEET NO. 32 OF 71

PAGE NOT USED

SIEBE ENVIRONMENTAL CONTROLS ENE, INC
Rhode Island Branch
648 Vermont Ave
Warwick RI 02888
PH: (401) 737-8905
FAX: (401) 737-8946

SIEBE ENVIRONMENTAL CONTROLS

No.	Revision	Date

Architect: SA-GCA ARCHITECTS
Engineer: JOSEPH CATAUDELLA
Contractor: DELTA MECHANICAL OF N.E.
Drawn by: MC
Checked by: _____
CAD file: STD-ACAD Date: 8-12-99

CENTER GENERAL COMPLEX
CRANSTON, RI
PAGE NOT USED

JOB NUMBER
7721R
SHEET NO.
33 OF 71

AIR HANDLING UNIT AHU-71-2

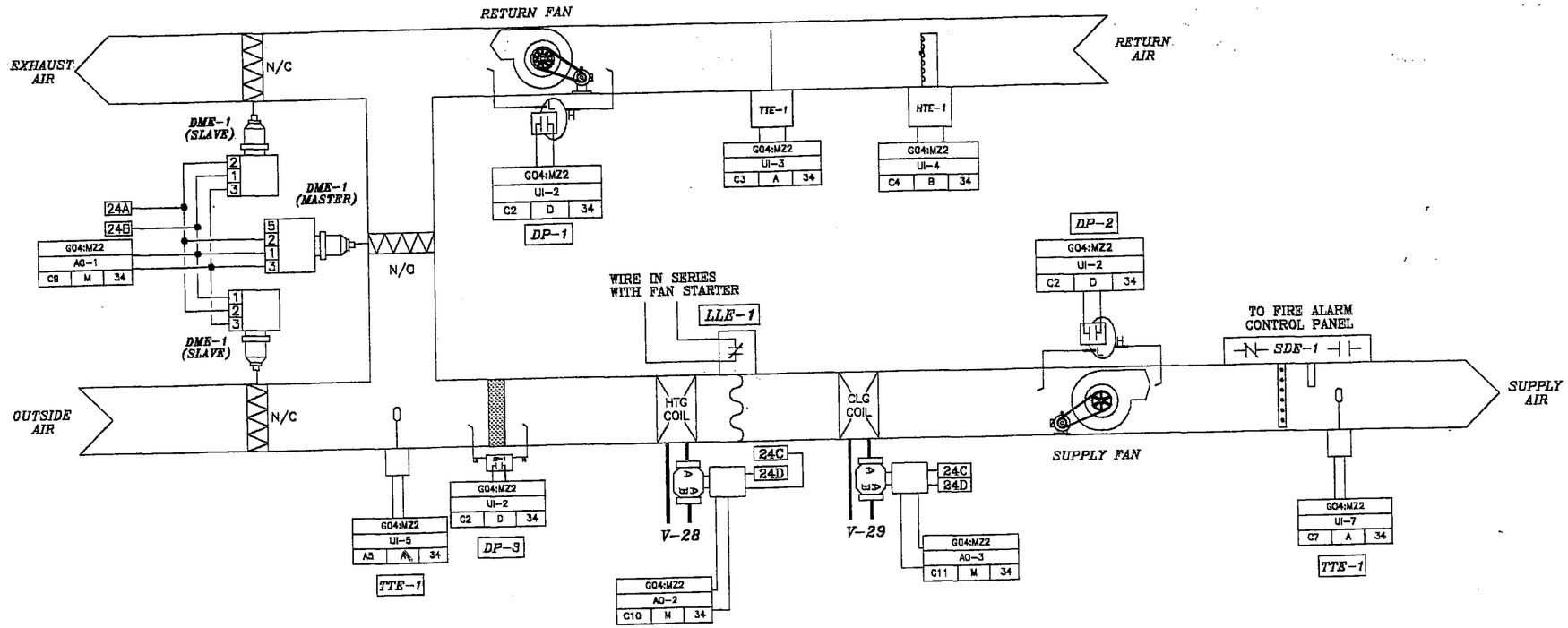

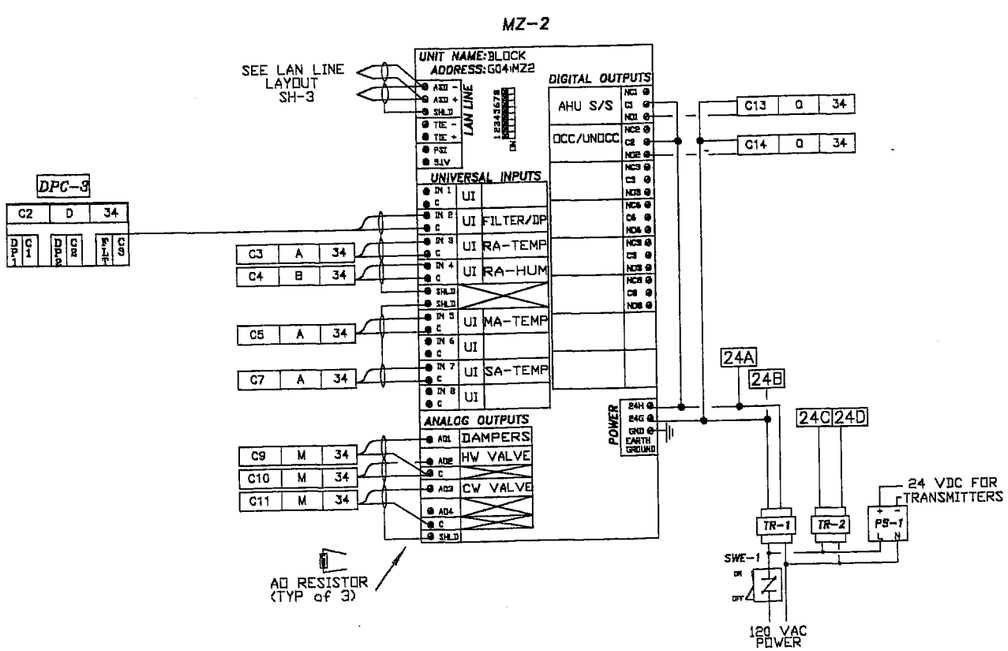

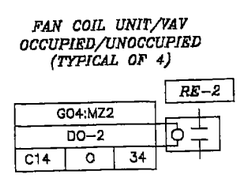

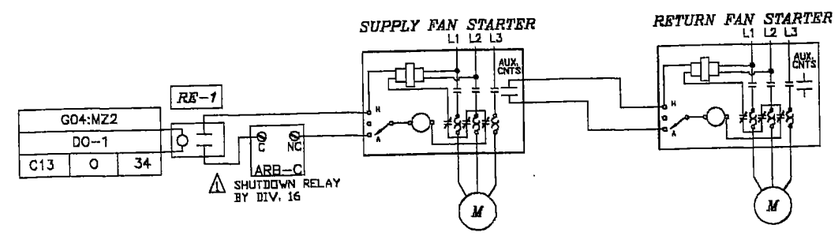

NOTE: SEE PAGES 70 AND 71 FOR SEQUENCES OF OPERATION.

BILL OF MATERIALS

ITEM	QTY.	PART NUMBER	DESCRIPTION	VA	MANUF.
TTE-1	3	TRANE	DUCT SENSORS	--	TRANE
LLE-1	1	TRANE	LOW LIMIT	--	TRANE
HTE-1	1	HT-2-D	HUMIDITY SENSOR	--	KELE
RE-1,2	5	PAM-1	24V SPDT RELAY	2	SIEBE
SDE-1	1	BY OTHERS	SMOKE DETECTOR	--	------
DPC-3	1	DPC-3-1	DIGITAL INPUT CARD	--	SIEBE
MZ-2	1	MZ2-1C	MICROZONE CONTROLLER W/ CLOCK	18	SIEBE
CP-1	1	AE-630	PANEL ENCLOSURE	--	SIEBE
TR-1,2	2	T-208	96VA TRANSFORMER	96	SIEBE
PS-1	1	PS-200-A-1-N	DC POWER SUPPLY	--	SIEBE
DP-1,2,3	3	TRANE	DIFFERENTIAL PRESSURE SWITCH	--	TRANE
DME-1	3	TRANE	DAMPER ACTUATOR	--	TRANE
V-28,29	2	SEE SCHEDULE	CONTROL VALVE	--	SIEBE

SIEBE ENVIRONMENTAL CONTROLS ENE, INC
Rhode Island Branch
54B Vermont Ave
Warwick RI 02888
PH: (401) 737-8905
FAX: (401) 737-8946

Architect: SA-GCA ARCHITECTS
Engineer: JOSEPH CATAUDELLA
Contractor: DELTA MECHANICAL OF N.E.
Drawn by: MC
Checked by: ---------
CAD file: STD-ACAD Date: 8-12-98

No. Description Date

CENTER GENERAL COMPLEX
CRANSTON, RI
AHU-71-2

JOB NUMBER 7721R
SHEET NO. 34 OF 71

AIR HANDLING UNIT AHU-71-3

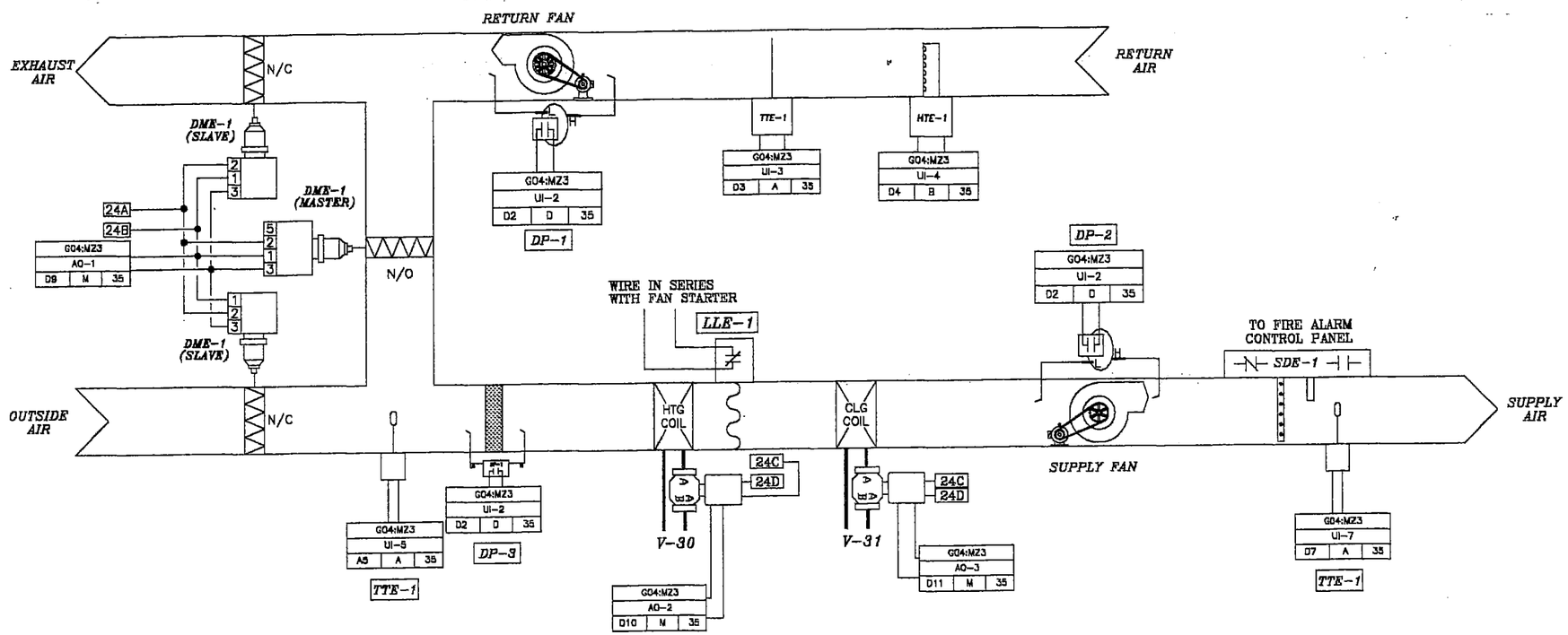

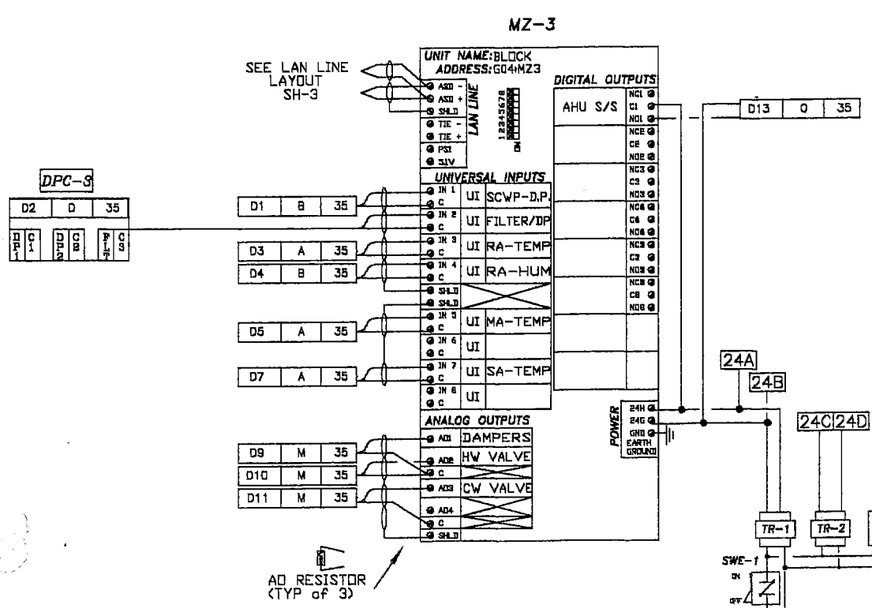

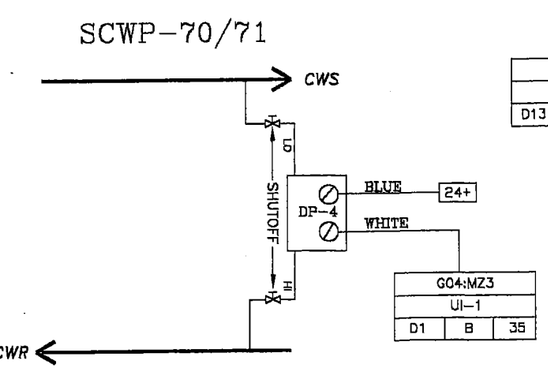

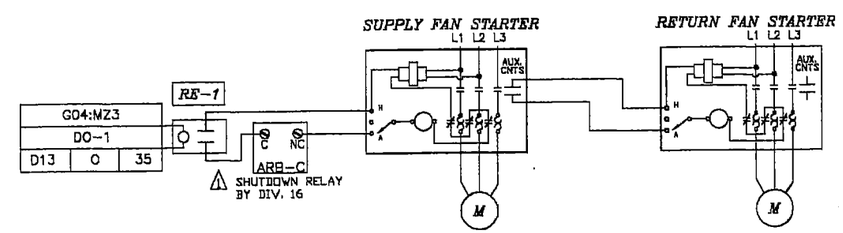

NOTE: SEE PAGES 70 AND 71 FOR SEQUENCES OF OPERATION.

BILL OF MATERIALS

ITEM	QTY.	PART NUMBER	DESCRIPTION	VA	MANUF.
TTE-1	3	TRANE	DUDT SENSORS	--	TRANE
LLE-1	1	TRANE	LOW LIMIT	--	TRANE
HTE-1	1	HT-2-D	HUMIDITY SENSOR	--	KELE
RE-1,2	5	PAM-1	24V SPDT RELAY	2	SIEBE
SDE-1	1	BY OTHERS	SMOKE DETEDTOR	--	------
DPD-3	1	DPD-3-1	DIGITAL INPUT DARD	--	SIEBE
MZ-2	1	MZ2-1D	MIDROZONE CONTROLLER W/ CLOCK	18	SIEBE
CP-1	1	AE-630	PANEL ENCLOSURE	--	SIEBE
TR-1,2	2	T-208	96VA TRANSFORMER	96	SIEBE
PS-1	1	PS-200-A-1-N	DC POWER SUPPLY	--	SIEBE
DP-1,2,3	3	TRANE	DIFFERENTIAL PRESSURE SWITCH	--	TRANE
DME-1	3	TRANE	DAMPER ACTUATOR	--	TRANE
DP-4	1	360C-P210	DIFFERENTIAL PRESSURE SENSOR	--	KELE
V-30,31	2	SEE SCHEDULE	CONTROL VALVE	--	SIEBE

SIEBE ENVIRONMENTAL CONTROLS ENE, INC
Rhode Island Branch
54B Vermont Ave
Warwick RI 02888
PH: (401) 737-8805
FAX: (401) 737-8948
SIEBE ENVIRONMENTAL CONTROLS

No.	Revision	Date

Architect: SA-GCA ARCHITECTS
Engineer: JOSEPH CATAUDELLA
Contractor: DELTA MECHANICAL OF N.E.
Drawn by: MC
Checked by: ——
CAD file: STD-ACAD Date: 8-12-98

CENTER GENERAL COMPLEX
CRANSTON, RI
AHU-71-3

JOB NUMBER 7721R
SHEET NO. 35 OF 71

PAGE NOT USED

SIEBE ENVIRONMENTAL CONTROLS ENE, INC
Rhode Island Branch
54B Vermont Ave
Warwick RI 02888
PH: (401) 737-8905
FAX: (401) 737-8948

SIEBE ENVIRONMENTAL CONTROLS

No.	Revision	Date

Architect: SA-GCA ARCHITECTS
Engineer: JOSEPH CATAUDELLA
Contractor: DELTA MECHANICAL OF N.E.
Drawn by: MC
Checked by: _____
CAD file: STD-ACAD Date: 8-12-99

CENTER GENERAL COMPLEX
CRANSTON, RI
PAGE NOT USED

JOB NUMBER
7721R
SHEET NO.
36 OF 71

AIR HANDLING UNIT AHU-71-4

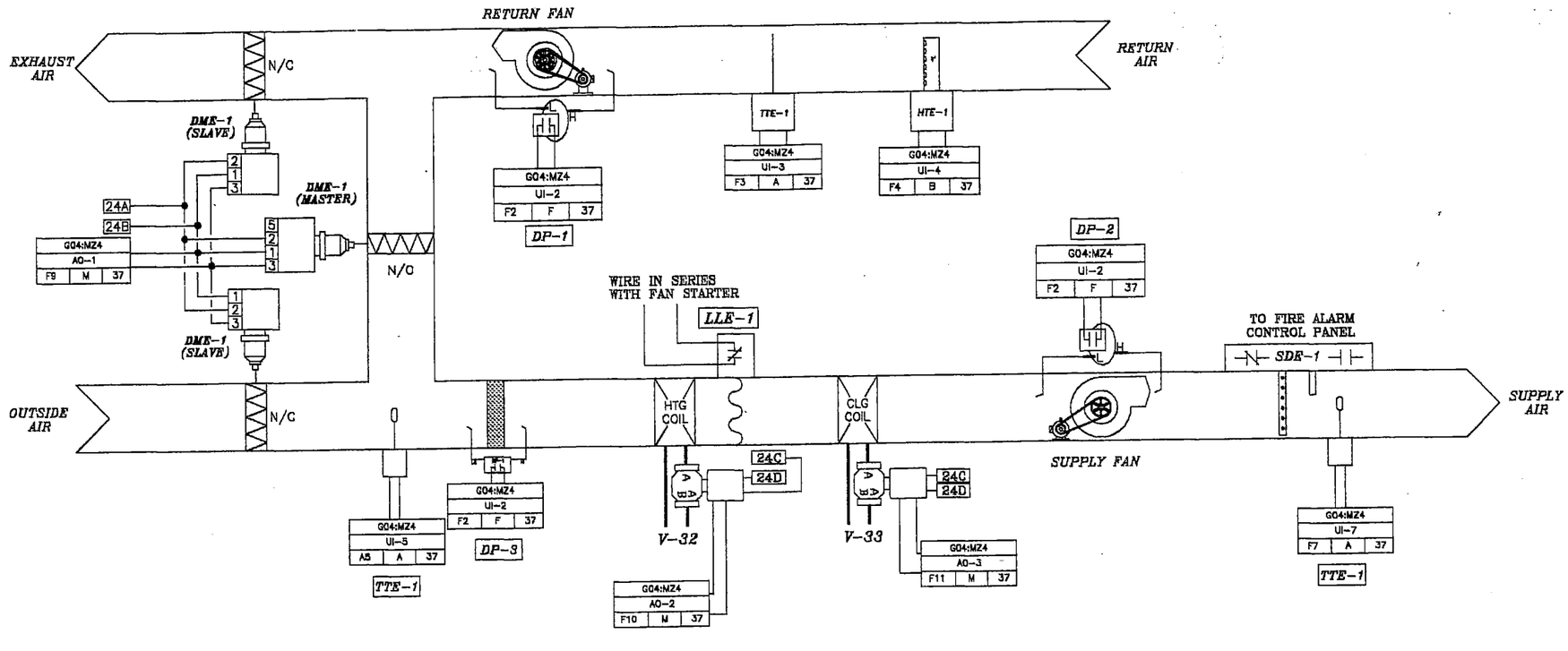

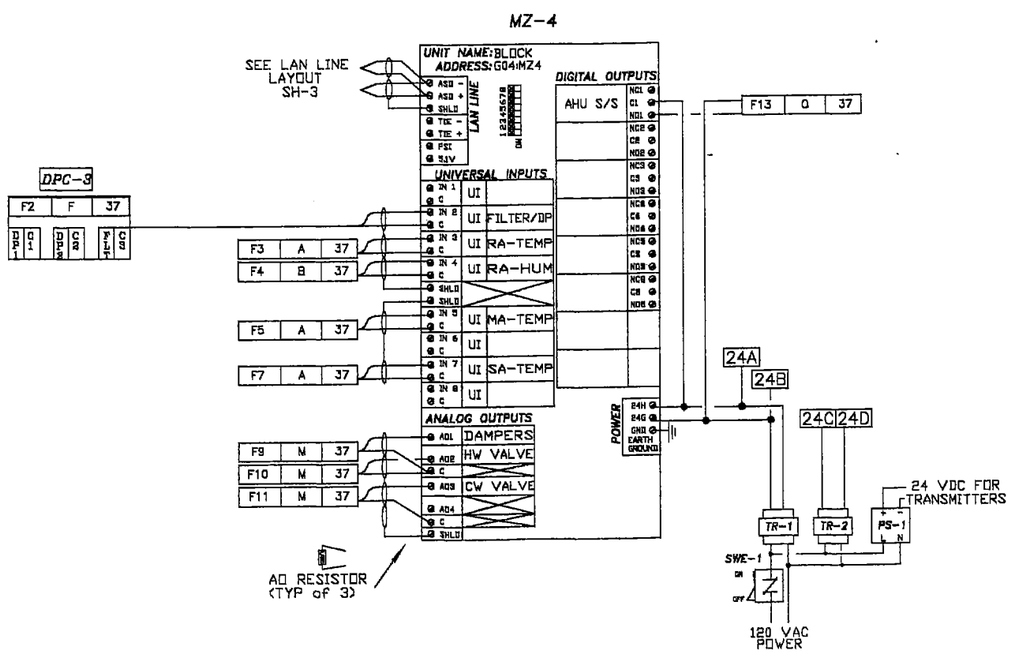

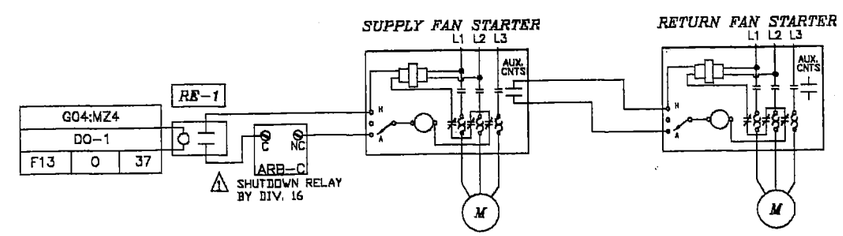

NOTE: SEE PAGES 70 AND 71 FOR SEQUENCES OF OPERATION.

BILL OF MATERIALS

ITEM	QTY.	PART NUMBER	DESCRIPTION	VA	MANUF.
TTE-1	3	TRANE	FUDT SENSORS	--	TRANE
LLE-1	1	TRANE	LOW LIMIT	--	TRANE
HTE-1	1	HT-2-D	HUMIDITY SENSOR	--	KELE
RE-1,2	5	PAM-1	24V SPFT RELAY	2	SIEBE
SFE-1	1	BY OTHERS	SMOKE FETEDTOR	--	-----
FPD-3	1	DPC-3-1	DIGITAL INPUT CARD	--	SIEBE
MZ-4	1	MZ2-1C	MICROZONE CONTROLLER W/ CLOCK	18	SIEBE
CP-1	1	AE-632	PANEL ENCLOSURE	--	SIEBE
TR-1,2	2	T-208	96VA TRANSFORMER	96	SIEBE
PS-1	1	PS-200-A-1-N	DC POWER SUPPLY	--	SIEBE
DP-1,2,3	3	TRANE	DIFFERENTIAL PRESSURE SWITCH	--	TRANE
DME-1	3	TRANE	DAMPER ACTUATOR	--	TRANE
V-32,33	2	SEE SCHEDULE	CONTROL VALVE	--	SIEBE

SIEBE ENVIRONMENTAL CONTROLS ENE, INC
Rhode Island Branch
54B Vermont Ave
Warwick RI 02888
PH: (401) 737-8905
FAX: (401) 737-8948

Architect: SA-GCA ARCHITECTS
Engineer: JOSEPH CATAUDELLA
Contractor: DELTA MECHANICAL OF N.E.
Drawn by: MC
Checked by: _____
CAD file: STD-ACAD Date: 8-12-99

No. Revision Date

CENTER GENERAL COMPLEX
CRANSTON, RI
AHU-71-4

JOB NUMBER 7721R
SHEET NO. 37 OF 71

BUILDING 71

(LOCATED IN AHU-71-4 CONTROL PANEL ON PAGE 27)

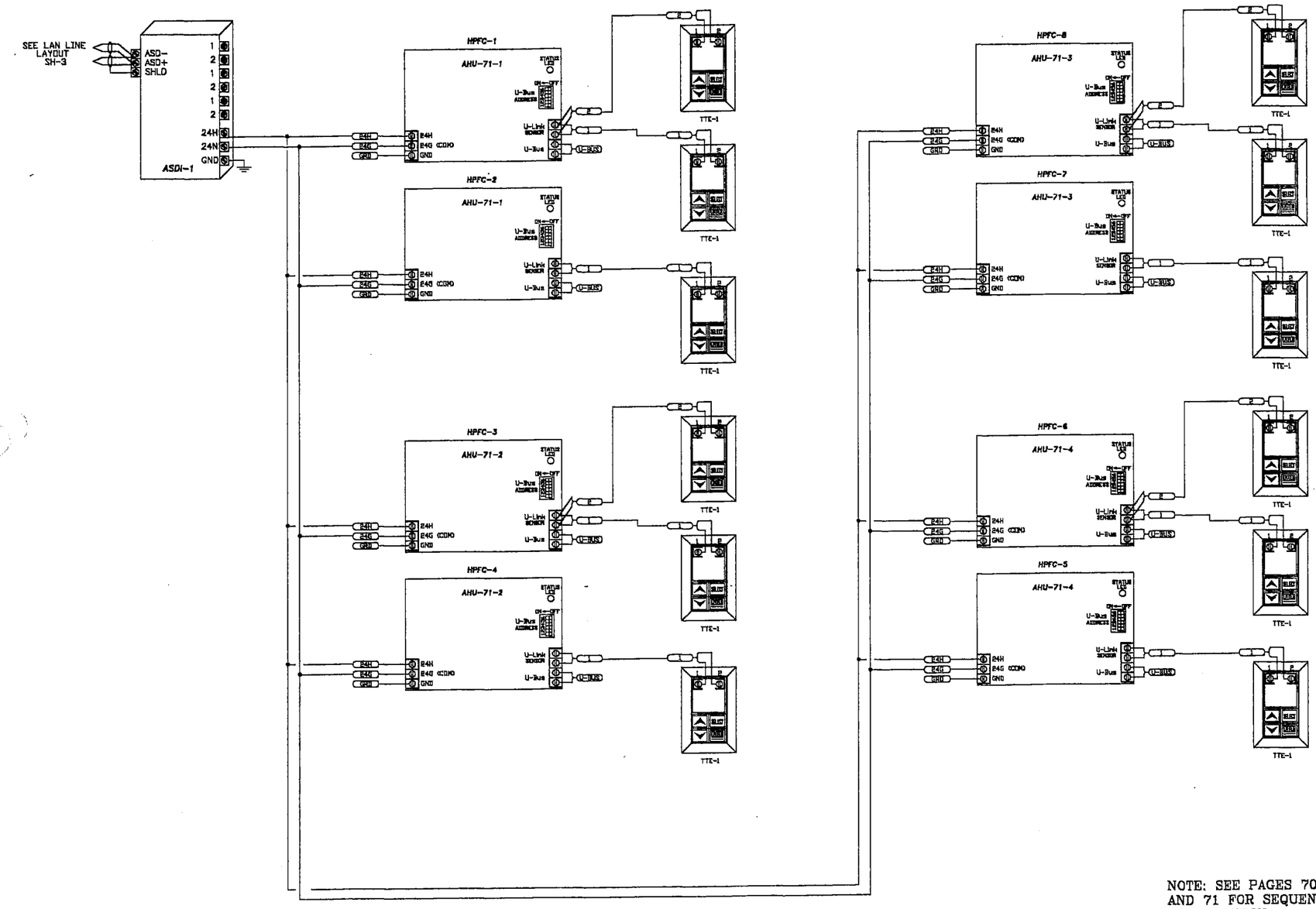

NOTE: SEE PAGES 70 AND 71 FOR SEQUENCES OF OPERATION.

BILL OF MATERIALS

ITEM	QTY.	PART NUMBER	DESCRIPTION	VA	MANUF.
ASDI-1	1	MN-ASDI	MICRONET INTEGRATOR	--	SIEBE
HPFC-1-8	8	MN-HPFC	MICRONET CONTROLLER	--	SIEBE
TTE-1	12	MN-SDK	SPACE SENSOR	--	SIEBE

SIEBE ENVIRONMENTAL CONTROLS ENE, INC
Rhode Island Branch
54B Vermont Ave
Warwick RI 02888
PH: (401) 737-8905
FAX: (401) 737-8946

Architect: SA-GCA ARCHITECTS
Engineer: JOSEPH CATAUDELLA
Contractor: DELTA MECHANICAL OF N.E.
Drawn by: MC
Checked by: ————
CAD file: STD-ACAD Date: 8-12-98

No. Revision | Date

CENTER GENERAL COMPLEX
CRANSTON, RI
BLDG. 71

JOB NUMBER 7721R
SHEET NO. 38 OF 71

PAGE NOT USED

JOB NUMBER
7721R
SHEET NO.
39 OF 71

CENTER GENERAL COMPLEX
CRANSTON, RI
PAGE NOT USED

Architect: SA-GCA ARCHITECTS
Engineer: JOSEPH CATAUDELLA
Contractor: DELTA MECHANICAL OF N.E.
Drawn by: MC
Checked by: _____
CAD file: STD-ACAD Date: 8-12-99

No.	Revision	Date

SIEBE ENVIRONMENTAL CONTROLS ENE, INC
Rhode Island Branch
548 Vermont Ave
Warwick RI 02888
PH: (401) 737-8905
FAX: (401) 737-8946

BUILDING 71

TRANE– FAN COIL AIR CONDITIONING UNIT
(TYPICAL OF 2)

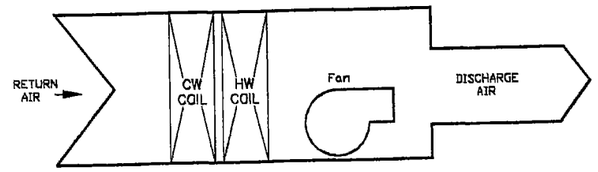

WALL SENSOR

TRANE– FACTORY INSTALLED
AND WIRED DDC CONTROLLER

TRANE– FACTORY SUPPLIED
WALL SENSOR

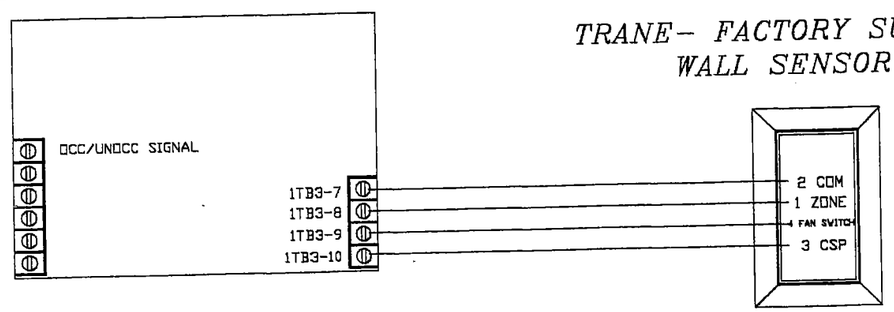

NOTE: SEE PAGES 70
AND 71 FOR SEQUENCES
OF OPERATION.

SIEBE ENVIRONMENTAL CONTROLS ENE, INC
Rhode Island Branch
548 Vermont Ave
Warwick RI 02888
PH: (401) 737-8905
FAX: (401) 737-5948

No.	Revision	Date

Architect: SA-GCA ARCHITECTS
Engineer: JOSEPH CATAUDELLA
Contractor: DELTA MECHANICAL OF N.E.
Drawn by: MC
Checked by: _____
CAD file: _____
Date: 8-12-99

CENTER GENERAL COMPLEX
CRANSTON, RI
BLDG. 71 TRANE FAN COIL UNIT

JOB NUMBER
7721R
SHEET NO.
40 OF 71

BUILDING 71

VARIABLE AIR VOLUME CONTROL
(TYPICAL OF 2)

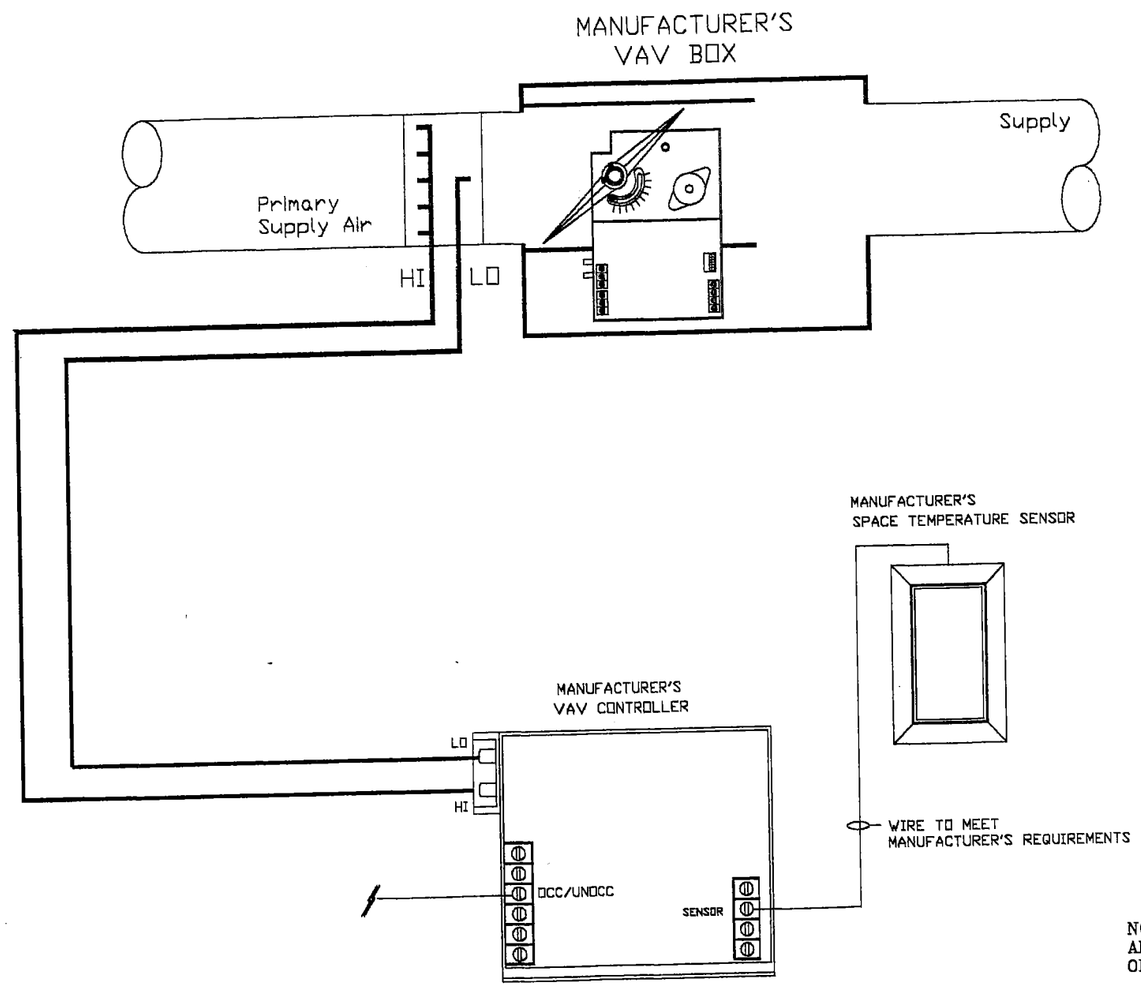

NOTE: SEE PAGES 70 AND 71 FOR SEQUENCES OF OPERATION.

SIEBE ENVIRONMENTAL CONTROLS ENE, INC
Rhode Island Branch
54B Vermont Ave
Warwick RI 02888
PH: (401) 737-8905
FAX: (401) 737-8946

No.	Revision	Date

Architect: SA-GCA ARCHITECTS
Engineer: JOSEPH CATAUDELLA
Contractor: DELTA MECHANICAL OF N.E.
Drawn by: MC
Checked by: _____
CAD file: STD-ACAD Date: 8-12-99

CENTER GENERAL COMPLEX
CRANSTON, RI
BLDG. 71 VAV CONTROL

JOB NUMBER
7721R
SHEET NO.
41 OF 71

BUILDING 71

UH 71-2,3

UNIT HEATER

(TYPICAL OF ~~4~~ 3)

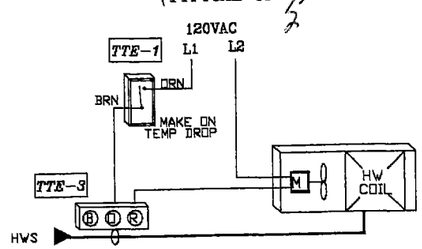

EXHAUST FAN EF-71-4

(TYPICAL OF 1)

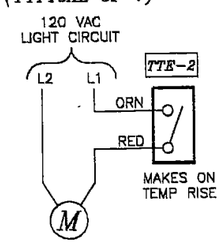

NOTE: SEE PAGES 70
AND 71 FOR SEQUENCES
OF OPERATION.

BILL OF MATERIALS

ITEM	QTY.	PART NUMBER	DESCRIPTION	VA	MANUF.
TTE-1,2	5	TC-114	THERMOSTAT	--	SIEBE
TTE-3	4	TC-2974	STRAP-ON AQUASTAT	--	SIEBE

SIEBE ENVIRONMENTAL CONTROLS ENE, INC
Rhode Island Branch
54B Vermont Ave
Warwick RI 02888
PH: (401) 737-8905
FAX: (401) 737-8948

SIEBE ENVIRONMENTAL CONTROLS

No.	Revision	Date

Architect: SA-GCA ARCHITECTS
Engineer: JOSEPH CATAUDELLA
Contractor: DELTA MECHANICAL OF N.E.
Drawn by: MC
Checked by: _____
CAD file: STD-ACAD Date: 8-12-99

CENTER GENERAL COMPLEX
CRANSTON, RI
UH, EF-71-4 CONTROL

JOB NUMBER
7721R
SHEET NO.
42 OF 71

BUILDING 72
LAN LINE LAYOUT

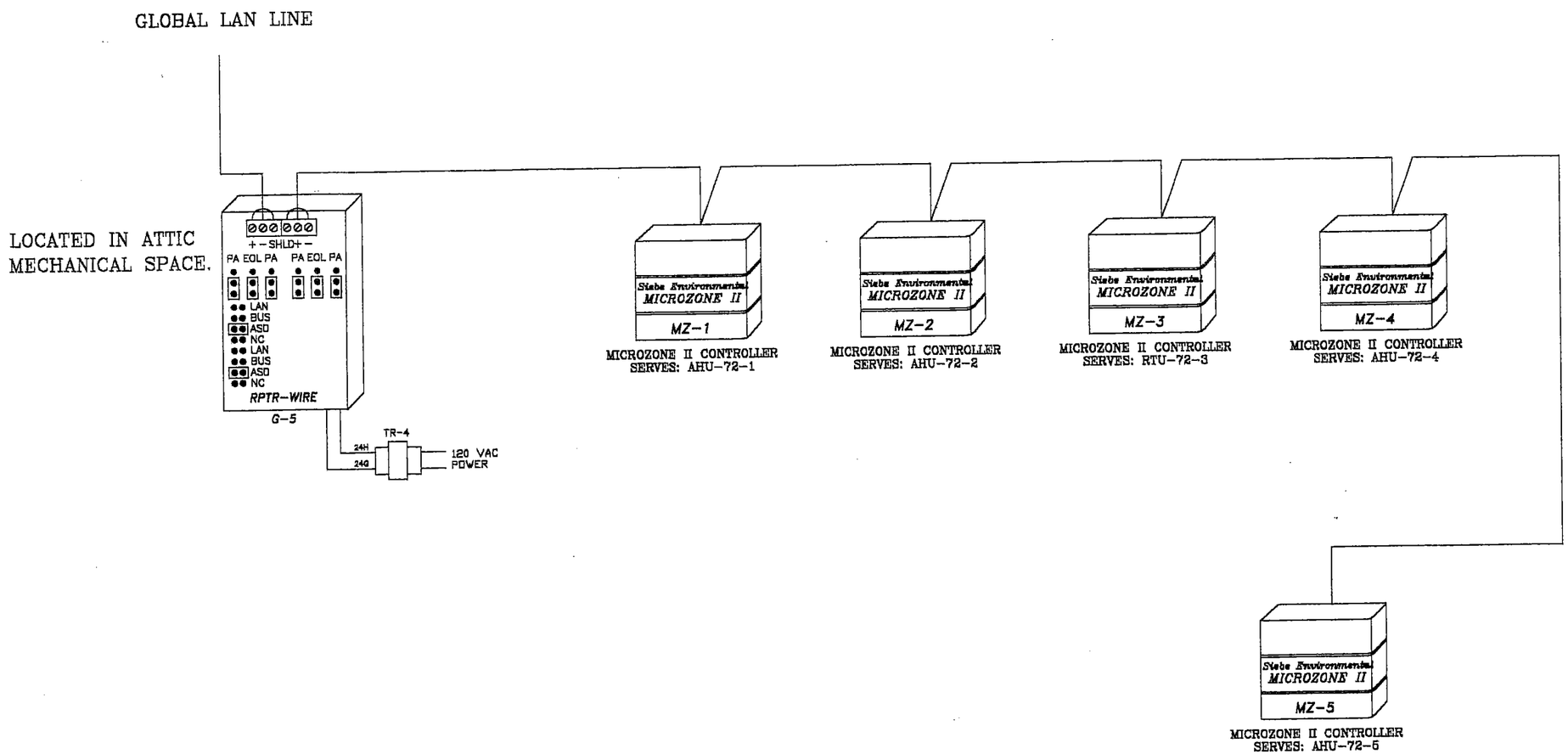

BILL OF MATERIALS

ITEM	QTY.	PART NUMBER	DESCRIPTION	VA	MANUF.
G-5	1	PRTR-WIRE	REPEATER WIRE	--	SIEBE
TR-1	1	T-201-1	120/24 TRANSFORMER	50	SIEBE

SIEBE ENVIRONMENTAL CONTROLS ENE, INC
Rhode Island Branch
54B Vermont Ave
Warwick RI 02888
PH: (401) 737-8805
FAX: (401) 737-8948

No.	Description	Date
1	REPEATER LOCATION	8-26-98

Architect: SA-GCA ARCHITECTS
Engineer: JOSEPH CATAUDELLA
Contractor: DELTA MECHANICAL OF N.E.
Drawn by: MG
Checked by: ———
CAD file: STD-ACAD Date: 8-12-98

CENTER GENERAL COMPLEX
CRANSTON, RI
BUILDING 72 LAN LINE

JOB NUMBER 7721R
SHEET NO. 43 OF 71

AIR HANDLING UNIT AHU-72-1 AND EF-72-1,2

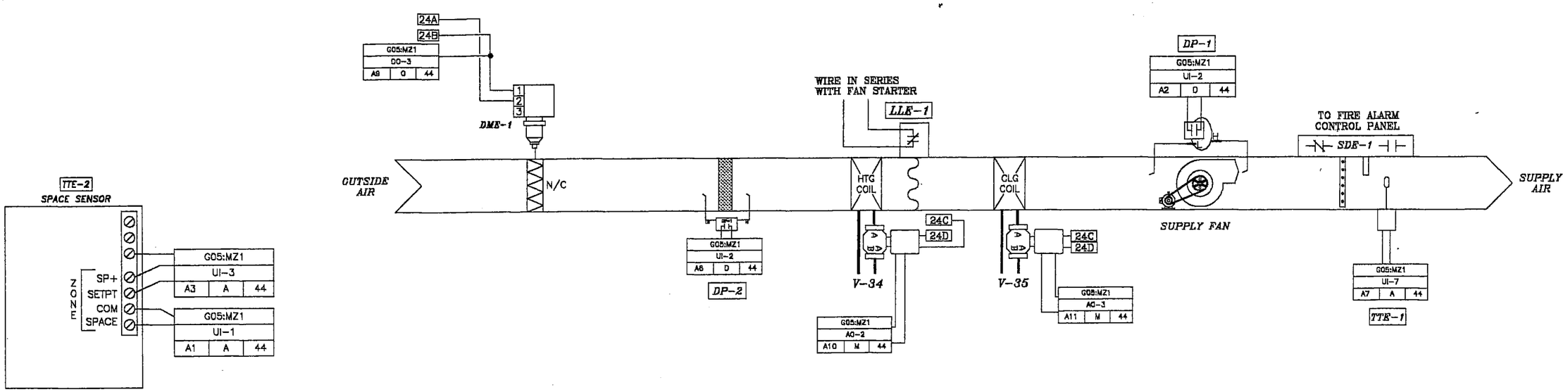

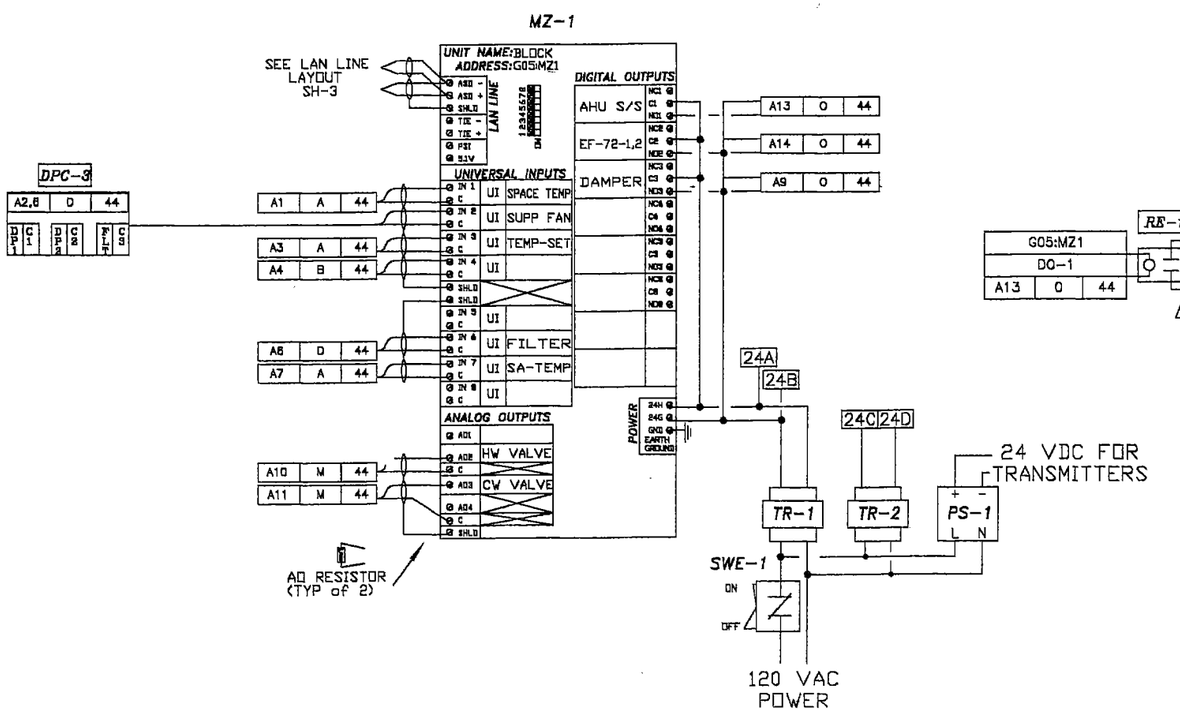

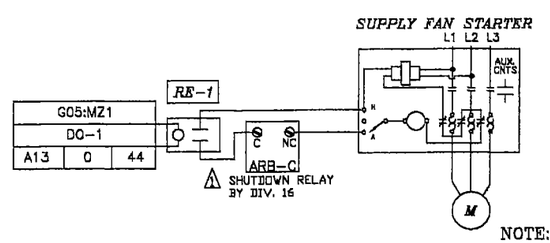

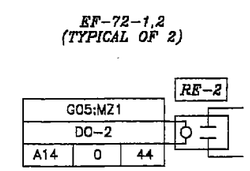

NOTE: SEE PAGES 70 AND 71 FOR SEQUENCES OF OPERATION.

BILL OF MATERIALS

ITEM	QTY.	PART NUMBER	DESCRIPTION	VA	MANUF.
TTE-1	1	TRANE	DUCT SENSOR	--	TRANE
LLE-1	1	TRANE	LOW LIMIT	--	TRANE
DPC-3	1	DPC-3-1	DIGITAL INPUT CARD	--	SIEBE
RE-1,2,3	3	PAM-1	24V SPDT RELAY	2	SIEBE
SDE-1	1	BY OTHERS	SMOKE DETECTOR	--	------
TTE-2	1	TS-90250-850	SPACE SENSOR	--	SIEBE
MZ-1	1	MZ2-1C	MICROZONE CONTROLLER W/ CLOCK	18	SIEBE
CP-1	1	AE-630	PANEL ENCLOSURE	--	SIEBE
TR-1,2	2	T-208	96VA TRANSFORMER	96	SIEBE
PS-1	1	PS-200-A-1-N	DC POWER SUPPLY	--	SIEBE
DP-1	1	TRANE	DIFFERENTIAL PRESSURE SWITCH	--	TRANE
DME-1	1	TRANE	DAMPER ACTUATOR	--	TRANE
V-34,35	2	SEE SCHEDULE	CONTROL VALVE	--	SIEBE

SIEBE ENVIRONMENTAL CONTROLS ENE, INC
Rhode Island Branch
54B Vermont Ave
Warwick RI 02888
PH: (401) 737-8905
FAX: (401) 737-8946

No. Revision Date

Architect: SA-GCA ARCHITECTS
Engineer: JOSEPH CATAUDELLA
Contractor: DELTA MECHANICAL OF N.E.
Drawn by: MC
Checked by: _____
CAD file: STD-ACAD Date: 8-12-99

CENTER GENERAL COMPLEX
CRANSTON, RI
AHU-72-1 / EF-72-1,2

JOB NUMBER 7721R
SHEET NO. 44 OF 71

AIR HANDLING UNIT AHU-72-2 AND RAF-72-6

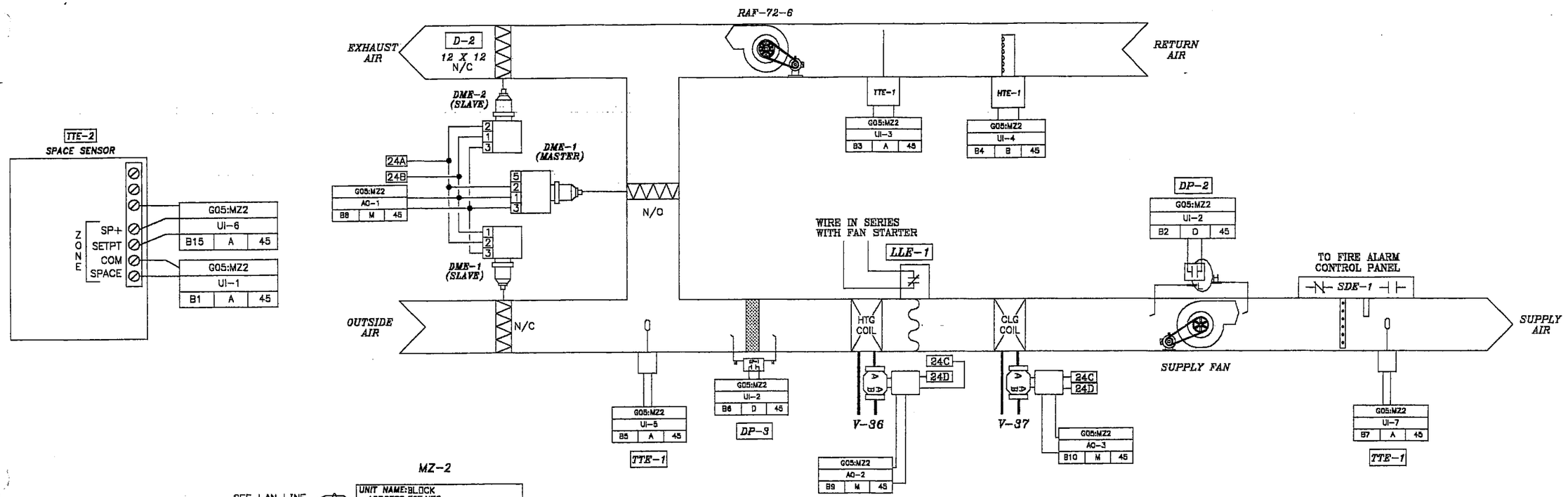

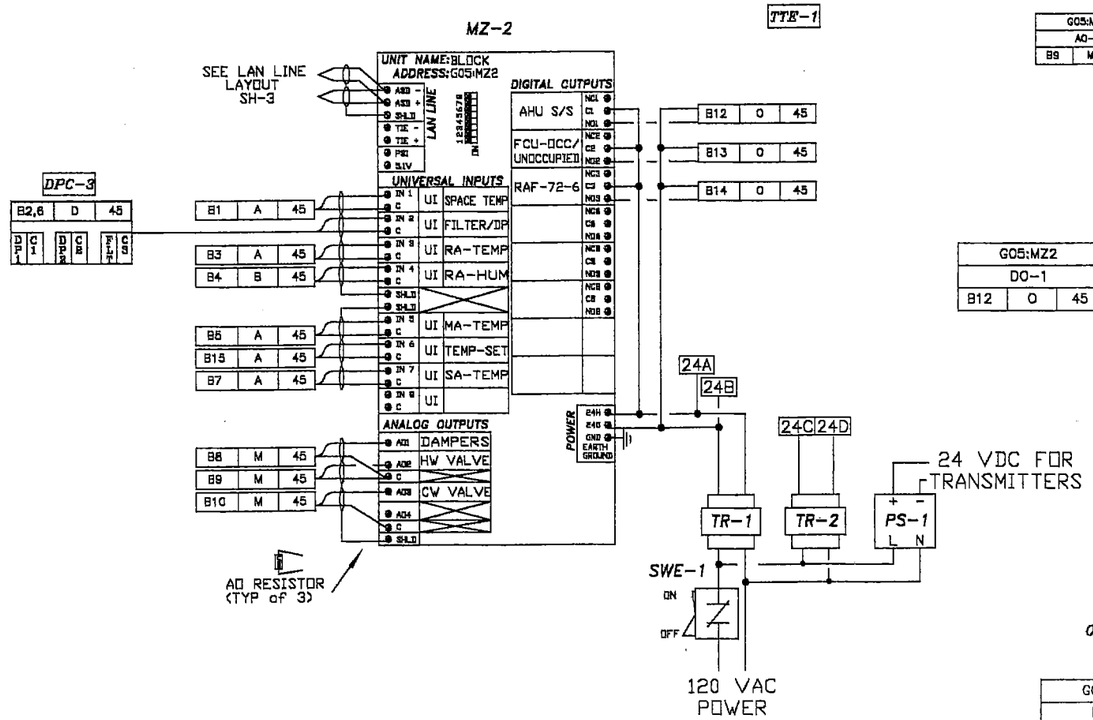

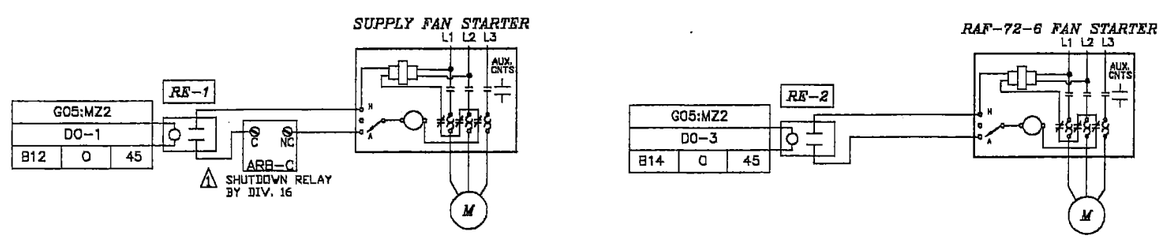

NOTE: SEE PAGES 70 AND 71 FOR SEQUENCES OF OPERATION.

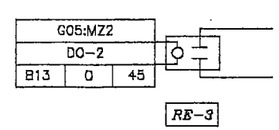

BILL OF MATERIALS

ITEM	QTY.	PART NUMBER	DESCRIPTION	VA	MANUF.
TTE-1	3	TRANE	DUCT SENSORS	--	TRANE
LLE-1	1	TRANE	LOW LIMIT	--	TRANE
HTE-1	1	HT-2-D	HUMIDITY SENSOR	--	KELE
RE-1,2,3	20	PAM-1	24V SPDT RELAY	2	SIEBE
SDE-1	1	BY OTHERS	SMOKE DETECTOR	--	------
TTE-2	1	TS-9025-850	SPACE SENSOR	--	SIEBE
MZ-2	1	MZ2-1C	MICROZONE CONTROLLER W/ CLOCK	18	SIEBE
CP-1	1	AE-630	PANEL ENCLOSURE	--	SIEBE
TR-1,2	2	T-208	96VA TRANSFORMER	96	SIEBE
PS-1	1	PS-200-A-1-N	DC POWER SUPPLY	--	SIEBE
DP-1,2,3	3	TRANE	DIFFERENTIAL PRESSURE SWITCH	--	TRANE
DME-1	2	TRANE	DAMPER ACTUATOR	--	TRANE
DME-2	1	MS-7203	DAMPER ACTUATOR	10	SIEBE
D-2	1	SEE SCHEDULE	CONTROL DAMPER	--	PENN
DPC-3	1	DPC-3-1	DIGITAL INPUT CARD	--	SIEBE
V-36,37	2	SEE SCHEDULE	CONTROL VALVE	--	SIEBE

SIEBE ENVIRONMENTAL CONTROLS ENE, INC
Rhode Island Branch
54B Vermont Ave
Warwick RI 02888
PH: (401) 737-8905
FAX: (401) 737-8946

No.	Revision	Date
1	RAF-72-6 LOCATION	9-06-00

Architect: SA-GCA ARCHITECTS
Engineer: JOSEPH CATAUDELLA
Contractor: DELTA MECHANICAL OF N.E.
Drawn by: MG
Checked by: ----------
CAD file: STD-ACAD Date: 8-12-99

CENTER GENERAL COMPLEX
CRANSTON, RI
AHU-72-2 AND RAF-72-6

JOB NUMBER 7721R
SHEET NO. 45 OF 71