CHILLED WATER SYSTEM LAYOUT

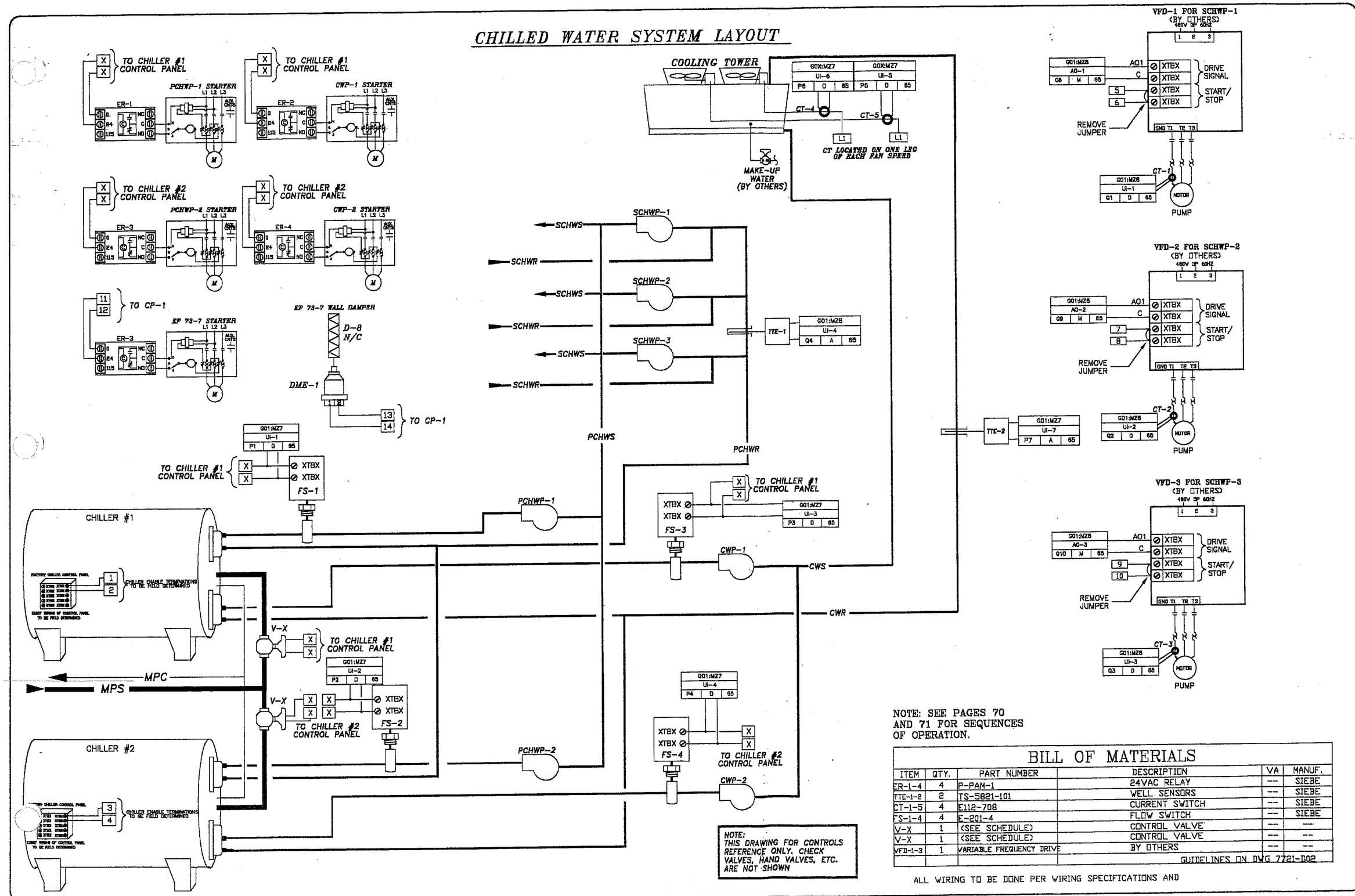

NOTE: SEE PAGES 70 AND 71 FOR SEQUENCES OF OPERATION.

NOTE: THIS DRAWING FOR CONTROLS REFERENCE ONLY. CHECK VALVES, HAND VALVES, ETC. ARE NOT SHOWN

BILL OF MATERIALS

ITEM	QTY.	PART NUMBER	DESCRIPTION	VA	MANUF.
ER-1-4	4	P-PAM-1	24VAC RELAY	--	SIEBE
TTE-1-2	2	TS-5821-101	WELL SENSORS	--	SIEBE
CT-1-5	4	E112-708	CURRENT SWITCH	--	SIEBE
FS-1-4	4	E-201-4	FLOW SWITCH	--	SIEBE
V-X	1	(SEE SCHEDULE)	CONTROL VALVE	--	--
V-X	1	(SEE SCHEDULE)	CONTROL VALVE	--	--
VFD-1-3	1	VARIABLE FREQUENCY DRIVE	BY OTHERS	--	--
			GUIDELINES ON DWG 7721-D02		

ALL WIRING TO BE DONE PER WIRING SPECIFICATIONS AND

SIEBE ENVIRONMENTAL CONTROLS ENE, INC
Rhode Island Branch
54B Vermont Ave
Warwick RI 02888
PH: (401) 737-8805
FAX: (401) 737-5948

No	Revision	Date
1		9-28-99

Architect: SA-GCA ARCHITECTS
Engineer: JOSEPH CATAUDELLA
Contractor: DELTA MECHANICAL OF N.E.
Drawn by: MC
Checked by: _____
CAD file: STD-ACAD Date: 8-12-99

CENTER GENERAL COMPLEX
CRANSTON, RI

JOB NUMBER 7721R
SHEET NO. 63 OF 71

HOT WATER SYSTEM LAYOUT / SUMP PUMP

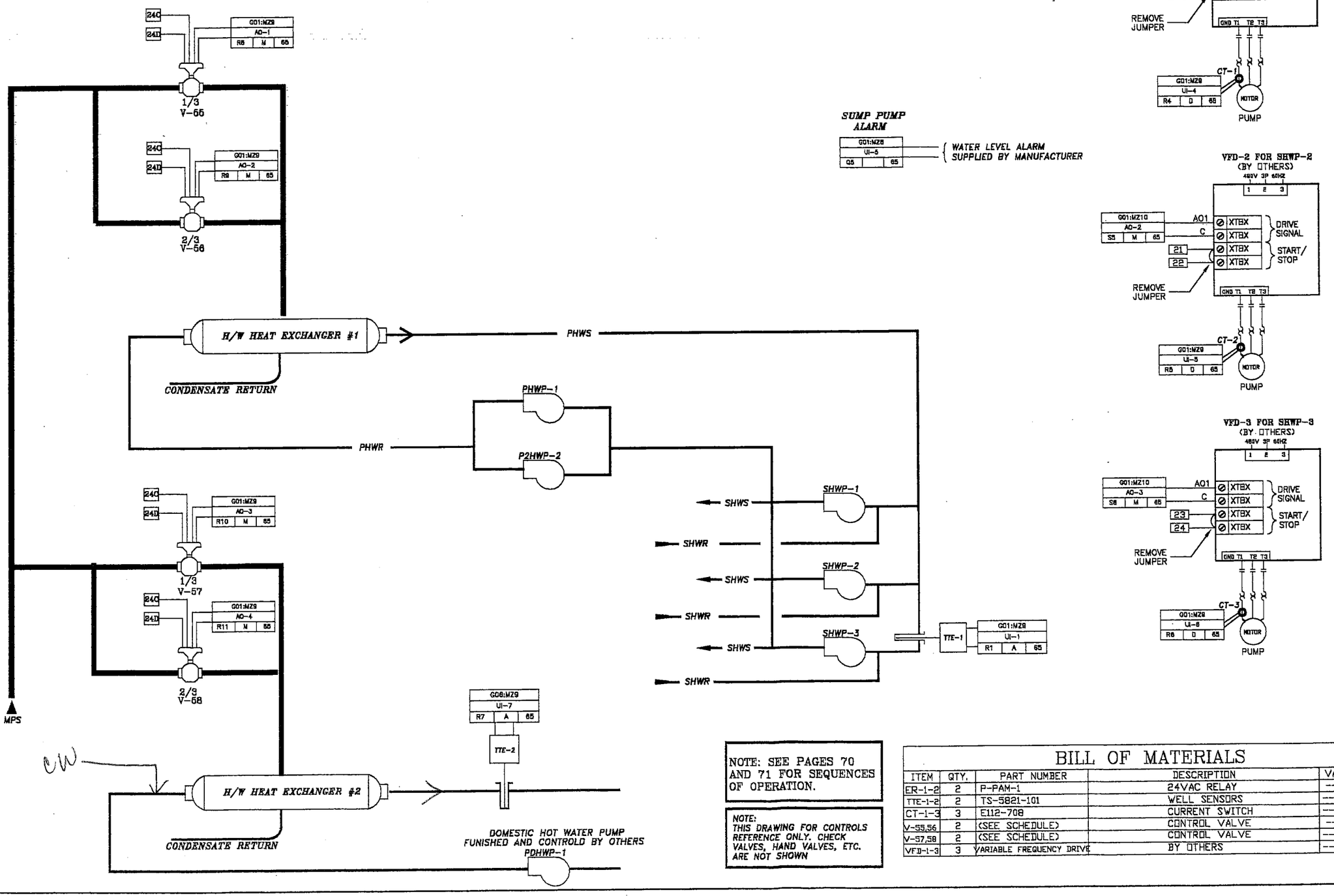

NOTE: SEE PAGES 70 AND 71 FOR SEQUENCES OF OPERATION.

NOTE:
THIS DRAWING FOR CONTROLS REFERENCE ONLY. CHECK VALVES, HAND VALVES, ETC. ARE NOT SHOWN

BILL OF MATERIALS

ITEM	QTY.	PART NUMBER	DESCRIPTION	VA	MANUF.
ER-1-2	2	P-PAM-1	24VAC RELAY	--	SIEBE
TTE-1-2	2	TS-5821-101	WELL SENSORS	---	SIEBE
CT-1-3	3	E112-708	CURRENT SWITCH	---	SIEBE
V-55,56	2	(SEE SCHEDULE)	CONTROL VALVE	--	SIEBE
V-57,58	2	(SEE SCHEDULE)	CONTROL VALVE	---	SIEBE
VFD-1-3	3	VARIABLE FREQUENCY DRIVE	BY OTHERS	---	---

SIEBE ENVIRONMENTAL CONTROLS ENG, INC
Rhode Island Branch
54B Vermont Ave
Warwick RI 02888
PH: (401) 737-8905
FAX: (401) 737-8948

No.	Revision	Date
1		8-26-99

Architect: SA-GCA ARCHITECTS
Engineer: JOSEPH CATAUDELLA
Contractor: DELTA MECHANICAL OF N.E.
Drawn by: MC
Checked by: ——
CAD file: STD-ACAD Date: 8-12-99

CENTER GENERAL COMPLEX
CRANSTON, RI

JOB NUMBER 7721R
SHEET NO. 64 OF 71

CONTROL PANEL CP-1 FOR CHILLED WATER HOT WATER SYSTEM

CONTROL PANEL CP-1

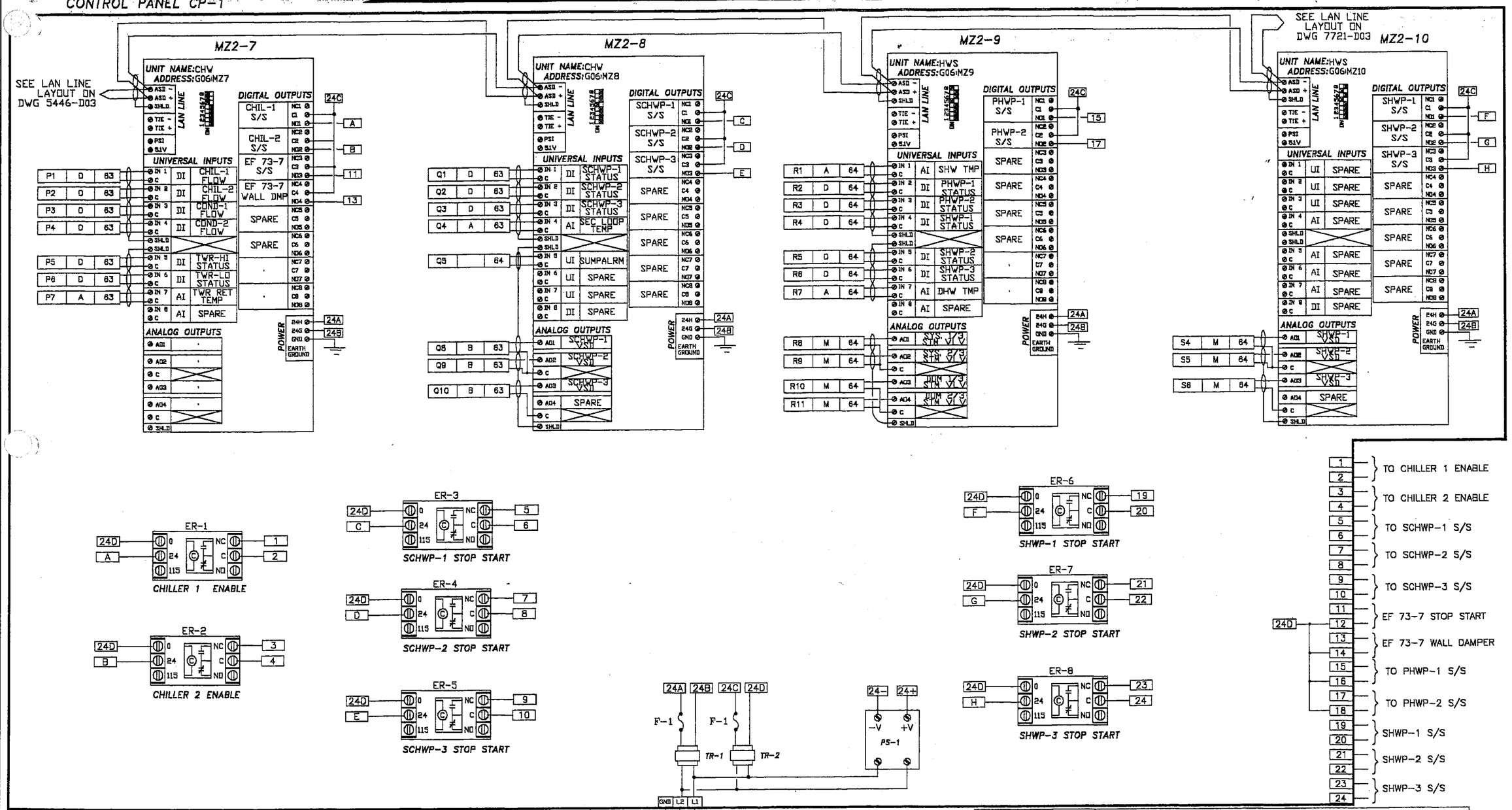

NOTE: SEE PAGES 70 AND 71 FOR SEQUENCES OF OPERATION.

BILL OF MATERIALS

ITEM	QTY.	PART NUMBER	DESCRIPTION	VA	MANUF.
CP-1	1	AE-631	PANEL ENCLOSURE	--	SIEBE
MZ2-7-10	4	MZ2-1	MICROZONE II	--	SIEBE
TR-1,2	2	KELE 691-K1	100VA TRANSFORMER	100	SIEBE
F-1	2	FH65B	FUSE HOLDER W/ 6A FUSE	--	SIEBE
PS-1	1	IDEC PSRAD0724E	POWER SUPPLY	--	SIEBE
ER 1-8	8	FINDER 55348024.0040	24V 4PDT RELAY	--	SIEBE
ER1-8	8	FINDER 94.44.1	RELAY BASE	--	SIEBE

ALL WIRING TO BE DONE PER WIRING SPECIFICATIONS AND GUIDELINES ON DWG 7721-D02

SIEBE ENVIRONMENTAL CONTROLS ENE, INC
Rhode Island Branch
54B Vermont Ave
Warwick RI 02888
PH: (401) 737-8905
FAX: (401) 737-8948

Architect: SA-GCA ARCHITECTS
Engineer: JOSEPH CATAUDELLA
Contractor: DELTA MECHANICAL OF N.E.
Drawn by: MC
Checked by: ---
CAD file: STD-ACAD Date: 8-12-99

No. Revision Date

CENTER GENERAL COMPLEX
CRANSTON, RI

JOB NUMBER 7721R
SHEET NO. 65 OF 71

VALVE SCHEDULE

TAG	SYSTEM SERVED	QTY	MODEL #	CV	SYSTEM CAPACITY			ΔP	VALVE BODY DATA						VALVE ACTUATOR DATA							FAIL POS
					GPM	LBS/HR	SYS-P		SIZE	NPT	FLDG	BODY	N.O.	N.C.	ACTUATOR	ELEC	POWER	INPUT	PNEU	PST	SPRING	
	AHU-69A-1 HW	1	B222B+LF24-SR-US	7.4	15		44	4	1"	●		2-WAY	●			●	24 VAC	4-20 MA				OPEN
V-2	AHU-69A-1 CW	1	B230B+LF24-SR-US	12 ~~19~~	25		44	4	1-1/4"	●		2-WAY		●		●	24 VAC	4-20 MA				CLOSE
V-3	AHU-69A-2 HW	1	B222B+LF24-SR-US	7.4	15		44	4	1"	●		2-WAY	●			●	24 VAC	4-20 MA				OPEN
V-4	AHU-69A-2 CW	1	B230B+LF24-SR-US	12 ~~19~~	28		44	4	1-1/4"	●		2-WAY		●		●	24 VAC	4-20 MA				CLOSE
V-5	BLDG. 69 FINTUBE	1	B220B+NM24-US	30	3		44	4	3/4"	●		2-WAY	●			●	24 VAC	4-20 MA				OPEN
V-6	AHU-69-6 HW	1	B211B+LF24-SR-US	1.9	3.5		44	4	1/2"	●		2-WAY	●			●	24 VAC	4-20 MA				OPEN
V-7	AHU-69-6 CW	1	B212B+LF24-SR-US	3	7		44	4	1/2"	●		2-WAY		●		●	24 VAC	4-20 MA				CLOSE
V-8	AHU-69-5 HW	1	B212B+LF24-SR-US	3	6		44	4	1/2"	●		2-WAY	●			●	24 VAC	4-20 MA				OPEN
V-9	AHU-69-5 CW	1	B222B+LF24-SR-US	7.4	15		44	4	1"	●		2-WAY		●		●	24 VAC	4-20 MA				CLOSE
V-10	AHU-69-1 HW	1	B222B+LF24-SR-US	7.4	15		44	4	1"	●		2-WAY	●			●	24 VAC	4-20 MA				OPEN
V-11	AHU-69-1 CW	1	B238B+NF24-SR-US	19	40		44	4	1-1/2"	●		2-WAY		●		●	24 VAC	4-20 MA				CLOSE
V-12	AHU-69-2 HW	1	B217B+LF24-SR-US	4.7	8		44	4	3/4"	●		2-WAY	●			●	24 VAC	4-20 MA				OPEN
3	AHU-69-2 CW	1	B230B+LF24-SR-US	12 ~~19~~	20		44	4	1-1/4"	●		2-WAY		●		●	24 VAC	4-20 MA				CLOSE
V-14	AHU-69-3 HW	1	B217B+LF24-SR-US	4.7	11		44	4	3/4"	●		2-WAY	●			●	24 VAC	4-20 MA				OPEN
V-15	AHU-69-3 CW	1	B230B+LF24-SR-US	12 ~~19~~	28		44	4	1-1/4"	●		2-WAY		●		●	24 VAC	4-20 MA				CLOSE
V-16	AHU-69-4 HW	1	B222B+LF24-SR-US	4.7	11		44	4	1"	●		2-WAY	●			●	24 VAC	4-20 MA				OPEN
V-17	AHU-69-4 CW	1	B230B+LF24-SR-US	12 ~~19~~	28		44	4	1-1/4"	●		2-WAY		●		●	24 VAC	4-20 MA				CLOSE
V-18	RTU-70-1 HW	1	B230B+LF24-SR-US	12 ~~19~~	26		44	4	1-1/4"	●		2-WAY	●			●	24 VAC	4-20 MA				OPEN
V-19	RTU-70-1 CW	1	B249B+AF24-SR-US	37 ~~46~~	70		44	4	2"	●		2-WAY		●		●	24 VAC	4-20 MA				CLOSE
V-20	RTU-70-2 HW	1	B230B+LF24-SR-US	12 ~~19~~	26		44	4	1-1/4"	●		2-WAY	●			●	24 VAC	4-20 MA				OPEN
V-21	RTU-70-2 CW	1	B249B+AF24-SR-US	37 ~~46~~	70		44	4	2"	●		2-WAY		●		●	24 VAC	4-20 MA				CLOSE
V-22	RTU-70-3 HW	1	B222B+LF24-SR-US	4.7	10		44	4	1"	●		2-WAY	●			●	24 VAC	4-20 MA				OPEN
V-23	RTU-70-3 CW	1	B230B+LF24-SR-US	12 ~~19~~	21		44	4	1-1/4"	●		2-WAY		●		●	24 VAC	4-20 MA				CLOSE

COMPONENTS FOR UNIT VENT
V-5 HEATING VALVE:
VB-7211-000-4-04 (1/2") VALVE BODY
MS-7103 ACTUATOR
GLZ0B15B1A1 DODGE ENG. LINKAGE

V-X	XXXX XXXX

V-X	XXX XXX XXX XXX

SIEBE ENVIRONMENTAL CONTROLS ENE, INC
Rhode Island Branch
54B Vermont Ave
Warwick RI 02888
PH: (401) 737-8905
FAX: (401) 737-8948

No.	Revision	Date
2		10/19/88
1		10/10/88

Architect: SA-GGA ARCHITECTS
Engineer: JOSEPH CATAUDELLA
Contractor: DELTA MECHANICAL OF N.E.
Drawn by: MC
Checked by:
CAD file: VALVE SCHEDULE-12-89

CENTER GENERAL COMPLEX
CRANSTON, MA
VALVE SCHEDULE

JOB NUMBER 7721R
SHEET NO. 66 OF 71

VALVE SCHEDULE

TAG	SYSTEM SERVED	QTY	MODEL #	CV	SYSTEM CAPACITY			ΔP	VALVE BODY DATA						VALVE ACTUATOR DATA							FAIL POS
					GPM	LBS/HR	SYS-P		SIZE	NPT	FLDG	BODY	N.O.	N.C.	ACTUATOR	ELEC	POWER	INPUT	PNEU	PST	SPRING	
24	RTU-70-4 HW	1	B222B+LF24-SR-US	4.7	10		44	4	1"	●		2-WAY	●			●	24 VAC	4-20 MA				OPEN
V-25	RTU-70-4 CW	1	B230B+LF24-SR-US	~~19~~ 12	21		44	4	1-1/4"	●		2-WAY		●		●	24 VAC	4-20 MA				CLOSE
V-26	AHU-71-1 HW	1	B222B+LF24-SR-US	7.4	12		44	4	1"	●		2-WAY	●			●	24 VAC	4-20 MA				OPEN
V-27	AHU-71-1 CW	1	B238B+NF24-SR-US	19	31		44	4	1-1/2"	●		2-WAY		●		●	24 VAC	4-20 MA				CLOSE
V-28	AHU-71-2 HW	1	B230B+LF24-SR-US	~~19~~ 12	20		44	4	1-1/4"	●		2-WAY	●			●	24 VAC	4-20 MA				OPEN
V-29	AHU-71-2 CW	1	B239B+NF24-SR-US	29	50		44	4	1-1/2"	●		2-WAY		●		●	24 VAC	4-20 MA				CLOSE
V-30	AHU-71-3 HW	1	B222B+LF24-SR-US	7.4	15		44	4	1"	●		2-WAY	●			●	24 VAC	4-20 MA				OPEN
V-31	AHU-71-3 CW	1	B238B+NF24-SR-US	19	35		44	4	1-1/2"	●		2-WAY		●		●	24 VAC	4-20 MA				CLOSE
V-32	AHU-71-4 HW	1	B222B+LF24-SR-US	7.4	17		44	4	1"	●		2-WAY	●			●	24 VAC	4-20 MA				OPEN
V-33	AHU-71-4 CW	1	B238B+NF24-SR-US	19	45		44	4	1-1/2"	●		2-WAY		●		●	24 VAC	4-20 MA				CLOSE
V-34	AHU-72-1 HW	1	B211B+LF24-SR-US	~~1.9~~ 12	3		44	4	1/2"	●		2-WAY	●			●	24 VAC	4-20 MA				OPEN
V-35	AHU-72-1 CW	1	B222B+LF24-SR-US	4.7	10		44	4	1"	●		2-WAY		●		●	24 VAC	4-20 MA				CLOSE
36	AHU-72-2 HW	1	B209B+LF24-SR-US	.74	1.5		44	4	1/2"	●		2-WAY	●			●	24 VAC	4-20 MA				OPEN
V-37	AHU-72-2 CW	1	B222B+LF24-SR-US	4.7	8		44	4	1"	●		2-WAY		●		●	24 VAC	4-20 MA				CLOSE
V-38	AHU-72-3 HW	1	B210B+LF24-SR-US	1.2	2.5		44	4	1/2"	●		2-WAY	●			●	24 VAC	4-20 MA				OPEN
V-39	AHU-72-3 CW	1	B217B+LF24-SR-US	4.7	9		44	4	3/4"	●		2-WAY		●		●	24 VAC	4-20 MA				CLOSE
V-40	AHU-72-4 HW	1	B212B+LF24-SR-US	3	5.5		44	4	1/2"	●		2-WAY	●			●	24 VAC	4-20 MA				OPEN
V-41	AHU-72-4 CW	1	B222B+LF24-SR-US	7.4	14		44	4	1"	●		2-WAY		●		●	24 VAC	4-20 MA				CLOSE
V-42	AHU-72-5 HW	1	B212B+LF24-SR-US	3	6.5		44	4	1/2"	●		2-WAY	●			●	24 VAC	4-20 MA				OPEN
V-43	AHU-72-5 CW	1	B222B+LF24-SR-US	7.4	16		44	4	1"	●		2-WAY		●		●	24 VAC	4-20 MA				CLOSE
V-44	AHU-73-1 HW	1	B230B+NF24-SR-US	~~19~~ 12	25		20	4	~~1-1/2"~~ 1-1/4	●		2-WAY	●			●	24 VAC	4-20 MA				OPEN
V-45	AHU-73-1 CW	1	B239B+NF24-SR-US	29	60		20	4	1-1/2"	●		2-WAY		●		●	24 VAC	4-20 MA				CLOSE
V-46	AHU-73-2 STEAM	1	G213+LM24-SR-US	1.3	--	55	18	2	1/2"	●		2-WAY	●			●	24 VAC	4-20 MA				OPEN
V-47	AHU-73-2 HW	1	B212B+LF24-SR-US	3	6		20	4	1/2"	●		2-WAY	●			●	24 VAC	4-20 MA				OPEN

COMPONENTS FOR UNIT VENT
V-5 HEATING VALVE:
VB-7211-000-4-04 (1/2") VALVE BODY
MS-7103 ACTUATOR
GLZDB15B1A1 DODGE ENG. LINKAGE

V-X	XXXX XXXX

V-X	XXX XXX XXX XXX

SIEBE ENVIRONMENTAL CONTROLS ENE, INC
Rhode Island Branch
548 Vermont Ave
Warwick RI 02888
PH: (401) 737-8905
FAX: (401) 737-8948
SIEBE ENVIRONMENTAL CONTROLS

No.	Revision	Date
2		10/18/98
1		10/98

Architect: SA-GGA ARCHITECTS
Engineer: JOSEPH CATAUDELLA
Contractor: DELTA MECHANICAL OF N.E.
Drawn by: MC
Checked by:
CAD file: VALVE SCHEDULE-12-98

CENTER GENERAL COMPLEX
CRANSTON, MA
VALVE SCHEDULE

JOB NUMBER 7721R
SHEET NO. 67 OF 71

VALVE SCHEDULE

TAG	SYSTEM SERVED	QTY	MODEL #	CV	SYSTEM CAPACITY			ΔP	VALVE BODY DATA						VALVE ACTUATOR DATA							FAIL POS
					GPM	LBS/HR	SYS-P		SIZE	NPT	FLDG	BODY	N.O.	N.C.	ACTUATOR	ELEC	POWER	INPUT	PNEU	PST	SPRING	
[illegible]8	AHU-73-2 CW	1	B230B+NF24-SR-US	12 ~~19~~	20		20	4	1-1/4 ~~1-1/2"~~	●		2-WAY		●		●	24 VAC	4-20 MA				CLOSE
V-49	RTU-73-1 HW	1	B230B+NF24-SR-US	12 ~~19~~	25		20	4	1-1/4 ~~1-1/2"~~	●		2-WAY	●			●	24 VAC	4-20 MA				OPEN
V-50	RTU-73-1 CW	1	B240B+NF24-SR-US	37	68		20	4	1-1/2"	●		2-WAY		●		●	24 VAC	4-20 MA				CLOSE
V-51	RTU-73-2 HW	1	B222B+LF24-SR-US	7.4	15		20	4	1"	●		2-WAY	●			●	24 VAC	4-20 MA				OPEN
V-52	RTU-73-2 CW	1	B238B+NF24-SR-US	19	45		20	4	1-1/2"	●		2-WAY		●		●	24 VAC	4-20 MA				CLOSE
V-53	RTU-73-3 HW	1	B230B+NF24-SR-US	12 ~~19~~	25		20	4	1-1/4 ~~1-1/2"~~	●		2-WAY	●			●	24 VAC	4-20 MA				OPEN
V-54	RTU-73-3 CW	1	B240B+NF24-SR-US	37	65		20	4	1-1/2"	●		2-WAY		●		●	24 VAC	4-20 MA				CLOSE
V-55	HEAT EXCHANGER 1/3	1	G680+AF24-SR-US	90	--	3643	18		3"	●		2-WAY		●		●	24 VAC	4-20 MA				CLOSE
V-56	HEAT EXCHANGER 2/3	1	G6100+2XAF24-SR-US	170	--	7397	18		4"	●		2-WAY		●		●	24 VAC	4-20 MA				CLOSE
V-57	DHW EXCHANGER 1/3	1	G219+LF24-SR-US	5.5	--	241	18		3/4"	●		2-WAY		●		●	24 VAC	4-20 MA				CLOSE
V-58	DHW EXCHANGER 2/3	1	G224+LF24-SR-US	10	--	490	18		1"	●		2-WAY		●		●	24 VAC	4-20 MA				CLOSE

COMPONENTS FOR UNIT VENT
V-5 HEATING VALVE:
VB-7211-000-4-04 (1/2") VALVE BODY
MS-7103 ACTUATOR
GLZOB15B1A1 DODGE ENG. LINKAGE

V-X	XXXX XXXX

V-X	XXX XXX XXX XXX

SIEBE ENVIRONMENTAL CONTROLS ENG, INC
Rhode Island Branch
54B Vermont Ave
Warwick RI 02888
PH: (401) 737-8905
FAX: (401) 737-6948
SIEBE ENVIRONMENTAL CONTROLS

No	Revision	Date
2		10/15/98
1		10/98

Architect: SA-GCA ARCHITECTS
Engineer: JOSEPH CATAUDELLA
Contractor: DELTA MECHANICAL OF N.E.
Drawn by: MC
Checked by:
CAD file: VALVE SCHEDULE-12-09

CENTER GENERAL COMPLEX
CRANSTON, MA
VALVE SCHEDULE

JOB NUMBER 7721R
SHEET NO. 68 OF 71

Siebe Environmental Controls ENE, Inc
54B Vermont Avenue
Warwick, RI 02888
Phone: (401) 737-8905
Fax: (401) 737-8946
A Siebe Group Company

Project Name:	Center General Complex
Project Number:	7721R
Owner:	
Engineer:	Joseph Cataudella
Contractor:	Delta Mechanical of N.E., Inc.

Page:	69 of 71
Date:	8/12/99
Revision #:	1 9/28/99
Dwg. By	

GENERAL NOTES:

THE DAMPER MANUFACTURER WILL DEDUCT 1/4" FROM THE CONFIRMED SIZES FOR INSTALLATION CLEARANCE

SHEETMETAL CONTRACTOR
SIZES ONLY HAVE TO BE CHECKED AND CONFIRMED.
PLEASE INDICATE SHIPPING ADDRESS

CONFIRMED BY:_____
DATE:_____

Damper Shipping Information:

Ship to:	
Mark Shipment:	

DAMPER DETAILS

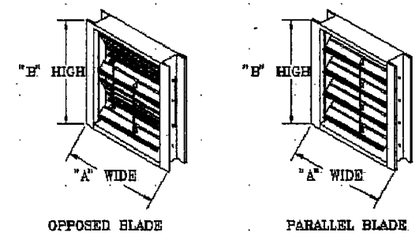

N.O. = NORMALLY OPEN
N.C. = NORMALLY CLOSED
PAR. = PARALLEL BLADES
OPP. = OPPOSED BLADES

TORQUE (INCH POUNDS) REQUIRED PER SQUARE FOOT OF DAMPER: 4.0

AUTOMATIC TEMPERATURE CONTROL DAMPER SCHEDULE

ITEM	TAG ID	MECHANICAL EQUIPMENT REFERENCE	DESCRIPTION	QTY	SUBMITTED SIZE WIDTH (Inches)	SUBMITTED SIZE HEIGHT (Inches)	APPROVED SIZE WIDTH (Inches)	APPROVED SIZE HEIGHT (Inches)	BLADE ACTION (CHECK PAR OR OPP) PARALLEL	BLADE ACTION (CHECK PAR OR OPP) OPPOSED	FAIL POSITION (N.O. - OPEN, N.C. CLOSED)	MANUFACTURER	MODEL NUMBER	SUBMITTED AIRFLOW (CFM)	SUBMITTED VELOCITY (FPM)	TORQUE REQ'D (IN.LB.)
1	D-1	AHU-69-5	OCD10S	1	26	26				X	N.C.	PENN	OCD10S		0.21301775	18.7777778
2	D-2	AHU-72-2	OCD10S	1	12	12				X	N.C.	PENN	OCD10S		1	4
3	D-3	AHU-72-3	OCD10S	1	14	12				X	N.C.	PENN	OCD10S		0.85714286	1.16666667
4	D-4	AHU-73-1	OCD10S	1	36	24				X	N.C.	PENN	OCD10S		0.16666667	6
5	D-5	AHU-73-1	OCD10S	1	18	18				X	N.C.	PENN	OCD10S		0.44444444	2.25
6	D-6	AHU-73-2	OCD10S	1	24	10				X	N.C.	PENN	OCD10S		0.6	1.66666667
7	D-7	AHU-73-2	OCD10S	1	24	10				X	N.C.	PENN	OCD10S		0.6	31.2962963
8	D-8	MECH. ROOM	OCD10S	1	48	48				X	N.C.	PENN	OCD10S		0.0625	64
9																
10																
11																
12																
13																
14																
15																
16																
17																
18																
19																
20																

COMMENTS: _____

rev: 3/18/98
file: dmpschda.xls

SEQUENCES OF OPERATION

Air Handling Units:

69A-1, 69A-2 , 69-1, 69-2, 69-3, 69-4, 71-1, 71-2, 71-3, 71-4, 72-4 and 72-5.

General:

Each Air Handling Unit will be programmed with the following energy management operations.
Optimum start warm-up cycle
Optimum start cool down cycle
Economizer cycle-comparative enthalpy
Flush Cycle

Each Air Handling Unit will be programmed for the following safety functions:
Freeze protection
Smoke
Fire Alarm

Occupied Mode:

When initiated by the optimum time start program or a local override, the supply and return fans shall start and the unit shall go through a warm-up/cool-down cycle. Space temperature shall be maintained by averaging a number of space sensors or a single sensor, as applicable, to modulate the appropriate 2-way control valve in a sequence. The unit mounted outside, relief, and return air dampers shall be modulated in unison to provide the minimum outside air and to satisfy the economizer.

Unoccupied Mode:

When initiated by the BMS, the supply fan and return fan shall stop. Outside air damper shall go to the closed position. If the outside temperature drops below 65 degrees F., the HW valve shall open; if above, the HW valve shall close. The CHW valve, in any case, shall close. A minimum set back temperature of 65 deg. F. (adj.) shall be maintained by cycling the supply fan only, without outside air. Cooling capability shall not be available during the unoccupied mode.

Air Handling Units:
69-5, 69-6, 72-2, 72-3, 73-1.

General:
Each Air Handling Unit will be programmed with the following energy management operations.
Optimum start warm-up cycle
Optimum start cool down cycle
Economizer cycle-comparative enthalpy
Flush cycle

Each Air Handling Unit will be programmed for the following safety functions.
Freeze protection
Smoke
Fire alarm

Occupied Mode:
When initiated by the optimum time start program or a local override, the supply and return air fan (RAF) shall start and the unit shall go through a warm-up/cool-down cycle. Space temperature shall be maintained by averaging a number of space sensors or a single sensor, as applicable, to modulate the appropriate 2-way control valve in sequence. The outside, relief (except 69-6, and 73-1) and return air dampers shall be modulated in unison to provide the minimum outside air and to satisfy the economizer.

Unoccupied Mode:
When initiated by the BMS, the supply fan and return air fan (RAF) shall stop. Outside air damper shall go to the closed position. If the outside temperature drops below 65 degrees F., the HW valve shall open; if above, the HW valve shall close. The CW valve, in any case, shall close. A minimum set back heating temperature shall be maintained by cycling the supply fan only, without outside air. Cooling capability shall not be available during the unoccupied mode. (65°F ADJ)

Air Handling Unit:
72-1

General:
The Air Handling Unit will be programmed with the following energy management operations.
Optimum start warm-up cycle
Flush cycle

The Air Handling Unit will be programmed for the following safety functions.
Freeze protection

Occupied Mode:
When initiated by the optimum start time program or a local override, the supply fan shall start, along with EF-1,2. Outside air damper shall open over a two (2) min. time period. Discharge temperature shall be maintained at 70 degrees F., unless reset up or down by the space sensor, located in 72-019, modulating the appropriate coil valve in sequence.

Unoccupied Mode:
When initiated by the program, the supply fan shall stop. Outside air damper shall go to the closed position. If the outside temperature drops below 65 degrees F., the HW valve shall open; if above, the HW valve shall close. The CHW valve, in any case, shall close. A minimum set back temperature of 65 degrees F. (adj.) shall be maintained by cycling the supply fan and outside air damper only. Cooling capability shall not be available during the unoccupied cycle.

Air Handling Unit:
73-2

General:
The Air Handling Unit will be programmed for the following safety functions.
Freeze protection
Smoke
Fire alarm
Hood fire suppression shutdown

Occupied Mode:
When initiated by a wall switch directly controlling the hood fan, the air handling supply fan shall start. Outside air and return air damper shall open and the return air damper shall close, over a two (2) minute period. The discharge temperature shall be maintained at 55 degrees F. unless reset upward by the room sensor to maintain space set point.
Steam pre-heat coil valve shall be open below an outside air temperature of 35 degrees F., and closed above.
The appropriate coil valves shall be modulated in sequence.

Unoccupied Mode:
When initiated by the shutting down of the hood fan, the air handling supply fan shall stop, outside air damper shall close and return air damper shall open.

If the outside temperature drops below 65 degrees F., the HW valve shall open; if above, the HW valve shall close. The CW valve, in any case, shall close. A minimum set back heating temperature of 65 degrees F. (adj.) shall be maintained by cycling the supply fan only, without outside air.

If the outside air temperature, at any time, is below 35 degrees F., the steam pre-heat valve shall open.
Cooling capability shall not be available during the unoccupied cycle.

Roof Top Units: (CONSTANT VOLUME)
70-3, 70-4, 73-1, 73-2

General:
Each Roof Top Unit will be programmed with the following energy management operations.
Optimum start warm-up cycle
Optimum start cool down cycle
Economizer cycle-comparative enthalpy
Flush Cycle

Each Roof Top Unit will be programmed for the following safety functions:
Freeze protection
Smoke
Fire Alarm

Occupied Mode:
When initiated by the optimum time start program or a local override, the supply fan shall start and the unit shall go through a warm-up/cool-down cycle. Space temperature shall be maintained by averaging a number of space sensors or a single sensor, as applicable, to modulate the appropriate 2-way control valve in a sequence. Minimum outside air shall be provided during occupancy. The unit mounted exhaust fan shall be turned on when the outside air dampers reach a 20% position. The exhaust damper shall be modulated to track the outside air damper position. The exhaust damper shall be normally closed.

Unoccupied Mode:
When initiated by the BMS, the supply fan and exhaust fan shall stop. Outside air and exhaust damper shall go to the closed position. If the outside temperature drops below 65 degrees F., the HW valve shall open; if above, the HW valve shall close. The CH valve, in any case, shall close. A minimum set back heating temperature shall be maintained by cycling the supply fan only, without outside air. Cooling capability shall not be available during the unoccupied mode.

Roof Top Units: (VAV)
70-1, 70-2, 73-3

General:
Each Roof Top Unit will be programmed with the following energy management operations.
Optimum start warm-up cycle
Optimum start cool down cycle
Economizer cycle-comparative enthalpy
Flush Cycle

SIEBE ENVIRONMENTAL CONTROLS
SIEBE ENVIRONMENTAL CONTROLS ENV, INC
Rhode Island Branch
54B Vermont Ave
Warwick RI 02888
PH: (401) 737-8805
FAX: (401) 737-8946

No	Revision	Date
1		8-26-00

Architect: SA-GCA ARCHITECTS
Engineer: JOSEPH CATAUDELLA
Contractor: DELTA MECHANICAL OF N.E.
Drawn by: MC
Checked by: ____
CAD file: STD-ACAD Date: 8-12-99

CENTER GENERAL COMPLEX
CRANSTON, RI
SEQUENCES OF OPERATION

JOB NUMBER 7721R
SHEET NO. 70 OF 71

SEQUENCES OF OPERATION

Each Roof Top Unit will be programmed for the following safety functions:
Freeze protection
Smoke
Fire Alarm

Occupied Mode:
When initiated by the optimum time start program or a local override, the supply fan shall start and the unit shall go through a warm-up/cool-down cycle. Space temperature shall be maintained (RTU 73-3 only) by averaging a number of space sensors or a single sensor, as applicable, to modulate the appropriate 2-way control valve in a sequence. RTU-73-1,2 (VAV) the averaged space sensors shall control the supply fan inlet guide vane to reduce air quantities down to a minimum of 45%. At that time, discharge temperature shall be re-set averaged space sensors.
Minimum outside air shall be provided during occupancy. The unit mounted exhaust fan shall be turned on when the outside air dampers reach a 20% position. The exhaust damper shall be modulated to track the outside air damper position. The exhaust damper shall be normally closed.

The supply fan inlet guide vanes shall be modulated to maintain a constant duct static pressure. (RTU 73-3 only)

A specialized outside air monitoring station by TRANE shall be controlled to maintain a minimum outside air quantity by modulating the outside air damper.

Unoccupied Mode:
When initiated by the BMS, the supply fan and exhaust fan shall stop. Outside air and exhaust damper shall go to the closed position. If the outside temperature drops below 65 degrees F., the HW valve shall open; if above, the HW valve shall close. The CW valve, in any case, shall close. A minimum set back temperature of 65 deg. F. (adj.) shall be maintained by cycling the supply fan only, without outside air.
Cooling capability shall not be available during the unoccupied mode.

Fan Coil Units/Wall Sensors ALL EXCEPT BELOW
Fan coil units shall be controlled by factory mounted terminal unit (DDC) controller in occupied/unoccupied modes. A digital signal shall be provided by the BMS for occupied/unoccupied determination.
Occupied Cycle:
On initiation, fan shall run continuously. Space sensor shall modulate, in sequence, individual 3-way CHW and HW valves to maintain occupied set point. (75 degrees F. ADJ.) those units with outside air capability shall open dampers to their minimum position.

Unoccupied Cycle:
On initiation, fan shall stop, HW valve shall open and CHW valve shall close, and outside air dampers shall close. A reduced setback temperature of (65 degrees F.) shall be maintained by cycling the unit fan without outside air. Chilled water shall not be available.

HFC 69/73 - 5,6,7
HFC 72/73 - 1,2,3,4
HFC 71/73 - 8,9

Fan Coil Units/Return Air Sensors
Fan coil units shall be controlled by factory mounted DDC Terminal Control Unit in occupied/unoccupied modes. A digital signal shall be provided by the BMS for occupied/unoccupied determination

Occupied Cycle:
On initiation, fan shall operate continuously. A return air sensor in the units shall modulate the appropriate 3-way CHW or HW valve to maintain occupied set point (75 degrees F. ADJ.)

On initiation, fan shall continue to run. A reduced setback temperature of 65 degrees F. shall be maintained by modulating the HW valve only. Chilled water shall not be utilized.

Variable Air Volume Units:
All boxes shall be controlled between occupied/unoccupied modes. The BMS shall provide a signal to each box indicating the building's occupied/unoccupied condition.

Occupied Mode:
When initiated, the box shall go to the open position, controlling the reheat coil if necessary, to reach the occupied set point.

Unoccupied Mode:
When receiving the unoccupied mode signal, the room sensor shall automatically reset the set point to 10 degrees F. below or above the occupied setting.
Chilled Water System:
The chilled water system shall be available to the complex only above ambient temperature of 53 degrees F.

Absorption Units:
The BMS shall provide a digital signal to enable the manufacturer's control panel (s) at the time of the first optimum start signal for the complex. The manufacturer's control panel (s) will directly control the absorption units, primary chilled water pumps and condensate water pumps to maintain the primary loop at 44 degrees F.

Secondary Chilled Water Pumps:
Each Secondary Chilled Water Pump shall be individually enabled, through its VSD, at the time of the first optimum start signal from the buildings served.

Each secondary chilled water pump shall be disabled, through the VSD, at the time of unoccupancy.

Cooling Tower:
The cooling tower fans (2) shall be enabled to operate at the time of the first optimum start signal for the complex. Cooling tower fans shall be locally cycled to maintain an 85 degree F. temperature in the basin.

Heating Hot Water System:
The Hot Water System shall be available to the complex only below an ambient temperature of 68 degrees F.
Primary Hot Water Pumps shall start and continue to operate at all temperatures below 68 degrees F.

Secondary Hot Water Pumps:
Each Secondary Hot Water Pump shall be individually enabled through its' VSD at all times when ambient temperatures are below 68 degrees F.

Heat Exchanger (HEX-1):
The leaving water temperatures shall be controlled on an outside air schedule by the operation of 1/3, 2/3 steam control valves.

Reset Schedule:
185 degrees F. @ 0 degrees F. ambient.
125 degrees F. @ 68 degrees F. ambient.

Domestic Hot Water:
(HEX-2) – the leaving domestic hot water temperature shall be controlled to maintain 180 degrees F. by 1/3, 2/3 steam control valves.

Condensate Return Set:
Pumps shall be alternately cycled at the direction of the sump float and factory control package.

Foundation Drain Pump:
A high water alarm will be reported to the BMS.

SIEBE ENVIRONMENTAL CONTROLS
SIEBE ENVIRONMENTAL CONTROLS ENE, INC
Rhode Island Branch
648 Vermont Ave
Warwick RI 02888
PH: (401) 737-8805
FAX: (401) 737-8848

No.	Revision	Date
1		8-20-98

Architect: SA-GCA ARCHITECTS
Engineer: JOSEPH CATAUDELLA
Contractor: DELTA MECHANICAL OF N.E.
Drawn by: MC
Checked by: ------
CAD file: STD-ACAD Date: 8-12-98

CENTER GENERAL COMPLEX
CRANSTON, RI
SEQUENCES OF OPERATION

JOB NUMBER 7721R
SHEET NO. 71 OF 71

EQUIPMENT TAGS

VAV MODULES

MARK	SERVICE/LOCATION
VAV69-1	CONF. RM/ 2ND FLOOR
VAV69-2	CONF. RM/1ST FLOOR
VAV69-3	MEETING RM/GRND FLR.
VAV70-1	CONF. RM/2ND FLOOR
VAV70-2	CONF. RM/3RD FLOOR
VAV71-1	CONF. RM/3RD FLOOR
VAV71-2	CONF. RM/2ND FLOOR
VAV72-1	MTG RM/3RD FLOOR
VAV73-1	MTG RM/3RD FLOOR
VAV73-2	ASSOC DIR/3RD FLOOR
VAV73-3	CONF RM/3RD FLOOR
VAV73-4	2ND MTG RM/FOYER
VAV73-5	HRG ROOM/2ND FLOOR
VAV73-6	SUPERVISOR/2ND FLOOR
VAV73-7	CONF RM/1ST FLOOR
VAV73-8	CLASSROOM/1ST FLOOR

HOT WATER UNIT HEATERS

MARK	SERVICE/LOCATION
UH 69A-1	ATTIC MECH. ROOM
UH 69-1	MECH RMS/GRND FLR
UH 69-2	ATTIC-WEST MECH. RM
UH 69-3	ATTIC-EAST MECH. RM
UH 70-1	MECH RM/BLDG 70
UH 71-1	MECH RM/1ST FLR
UH 71-2	ATTIC-EAST MECH. RM
UH 71-3	ATTIC-WEST MECH. RM
UH 72-1	ATTIC-MECH. ROOM
UH 73-1	M.E.R./BLDG 73
UH 73-2	STORAGE/BSMNT 73
UH 73-3	STORAGE/BSMNT 73
UH 73-4	SPRKLR. STOR/BSMNT 73

FAN COILS (4 PIPE)

MARK	SERVICE/LOCATION
HFC 69A-1	ENTRY STAIR
VFC 69A-2	STAIR 2ND FLOOR
VFC 69/69A-1	69/69A CONN
HFC 69/69A-2	69/69A CONN
VFC 69/69A-3	69/69A CONN
HFC 69/69A-4	69/69A CONN
HFC 69/69A-5	69/69A CONN
VFC 69-1	STAIR/GRD FLR-WEST
VFC 69-2	STAIR/2ND FLR-WEST
VFC 70-1	ENTRY VEST/BLDG 70
VFC 70-2	ELEV LOBBY/BLDG 70
VFC 70-3	OFFICE AREA/BLDG 70
VFC 70-4	BREAK RM./BLDG 70
VFC 70-5	TOILETS/BLDG 70
VFC 70-6	STAIR/BLDG 70
VFC 70-7	FOYER STAIR/BLDG 70
VFC 71-1	STAIR, 1ST FLOOR
VFC 71-2	STAIR, 3RD FLOOR

MARK	SERVICE LOCATION
VFC 72-1	WORK OUT-GROUND
VFC 72-2	CORRIDOR-GROUND
VFC 72-3	VARIOUS
VFC 72-4	VARIOUS
VFC 72-5	CONFERENCE ROOMS
VFC 72-6	CORRIDOR-1ST FLOOR
VFC 73-1	MAIN FOYER
HFC 73-3	BSMNT. CORRIDOR
VFC 73-4	1ST FLOOR STAIR
VFC 73-5	3RD FLOOR STAIR
HFC 72/73-1	72/73 CONN-GRND FLR
HFC 72/73-2	72/73 CONN-1ST FLR
HFC 72/73-3	72/73 CIBB-2ND FLR
HFC 72/73-4	72/73 CONN-3RD FLR
HFC 69/73-5	EAST CONN-GRND FLR
HFC 69/73-6	EAST CONN-MAIN FLR
HFC 69/73-7	EAST CONN-MAIN FLR
HFC 71/73-8	WEST CONN-MAIN FLR
HFC 71/73-9	WEST CONN-MAIN FLR

SIEBE ENVIRONMENTAL CONTROLS
SIEBE ENVIRONMENTAL CONTROLS ENE, INC
Rhode Island Branch
54B Vermont Ave
Warwick RI 02888
PH: (401) 737-8905
FAX: (401) 737-8946

No.	Revision	Date
1		8-25-98

Architect: SA-GCA ARCHITECTS
Engineer: JOSEPH CATAUDELLA
Contractor: DELTA MECHANICAL OF N.E.
Drawn by: MC
Checked by: ——
CAD file: STD-ACAD Date: 8-12-98

CENTER GENERAL COMPLEX
CRANSTON, RI
EQUIPMENT TAGS

JOB NUMBER 7721R
SHEET NO. 71A OF 71