Department of Labor & Training Rm 73-1

1511 Pontiac Avenue
Smithfield RI

Project Number: OI004442

Drawing Index:

Title Page	Page 1
Legends	Page 2
CAT.5 Wiring Details	Page 3
NETWORK PANEL	Page 4
AC UNITS	Page 5

ENE SYSTEMS
480 NEPONSET ST.
CANTON, MA. 02021
(781) 828-6770
www.enesystems.com

Revision: SUBMITTED

#	Change:	Date:
1	Submitted	7/7/2017
2		
3		
4		
5		

Architect:
Engineer:
Contractor:
Designed by: CFK Date: 7/7/2017
Software by: Date:
Checked by: Date:

Department of Labor & Training
Rm 73-1
1511 Pontiac Avenue
Smithfield RI
Title Page

Job Number: OI004442
File Name
Last Saved: 7/7/2017
Last Printed: 7/14/2017
Sheet Number: 1

Legends

Symbol Legend

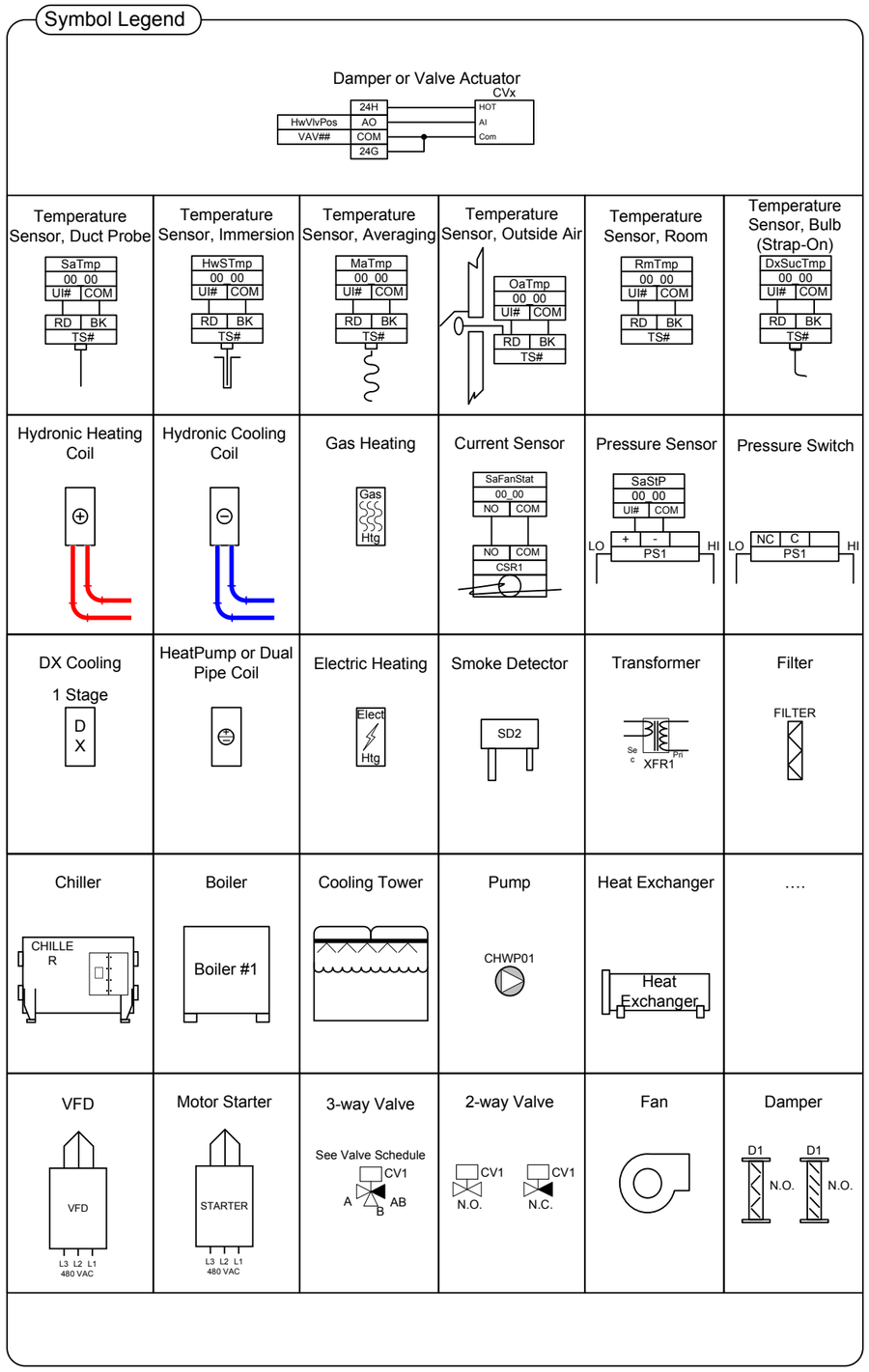

1. All wiring to be confirmed in field prior to installation

2. All room thermostats/sensors/controllers shall be installed at 54" above fixed floor for ADA compliance for new installations.

3. All thermowells shall be filled with heat conductive compound that is provided.

4. Wiring Terminations designated as 'XX' or 'TBD' indicate information was unavailable at time of submittal and is to be determined. Please inform ENE Systems before making field terminations.

5. Remote control devices, not in local panels, shall be accessible for adjustment and service - below 7' above fixed floor whenever possible or as shown on the provided Construction prints.

6. Only prints marked Construction are to be used during installation. If the prints are not marked Construction, the installer will correct any discrepancies between prints used for Construction at no cost to ENE Systems.

7. All new BAS controller panels shall have an uninterruptable 120Vac power source. This source shall be located and marked in the electrical panel as well as on the control prints returned to ENE Systems for Record prints.

8. Installer responsible for maintaining existing safeties into new BAS control – electrically or pnuematically connected.

Unique Device Naming

UNIQUE CONTROLLING DEVICE NAMING STANDARD (LON)

L###_BBFFCCC
- DEVICE TYPE
- BUILDING IDENTIFIER, FLOOR LOCATION AND UNIQUE CONTROLLER NUMBER

LON DEVICE TYPE KEY	
LV1	MNL-V1
LV2	MNL-V2
L050	MNL-50
L100	MNL-100
L150	MNL-150
L200	MNL-200
L800	MNL-800

OTHER DEVICES	
AS	AUTOMATION SERVER
ASP	AUTOMATION SERVER PREMIUM
ASB	AUTOMATION SERVER BASIC
UDS	LANTRONIX UDS1100
SW	ETHERNET SWITCH
LSW	LOYTEC L-SWITCH
LMTR	LonWorks METER
i100	ECHELON i.LON-100 LonWorks SCHEDULER & NETWORK INTERFACE
i600	ECHELON i.LON-600 LonWorks /IP TO FTT-10 ROUTER

UNIQUE CONTROLLING DEVICE NAMING STANDARD (BACnet)

B###_BBFFCCC
- DEVICE TYPE
- BUILDING IDENTIFIER, FLOOR LOCATION AND UNIQUE CONTROLLER NUMBER

BACnet DEVICE TYPE KEY	
BV1	MNB-V1
BV2	MNB-V2
B070	MNB-70
B300	MNB-300
BPC	MNB-1000
BPC15	MNB-1000-15

OTHER DEVICES	
AS	AUTOMATION SERVER
ASP	AUTOMATION SERVER PREMIUM
ASB	AUTOMATION SERVER BASIC
UDS	LANTRONIX UDS1100
SW	ETHERNET SWITCH
BRT	BASRT-B ROUTER
BMTR	BACnet METER

Device Termination Coding

DEVICE TERMINATION CODING (VERTICAL)

EX.

Fan##Cmd	SOFTWARE TAG
####_#####	CONTROLLING DEVICE NAME
UI1 COM	CONTROLLER POINT

DEVICE TERMINATION CODING (HORIZONTAL)

EX.

UI1	Fan##Cmd
COM	####_#####

- SOFTWARE TAG
- CONTROLLING DEVICE NAME
- CONTROLLER POINT

PANEL NOMENCLATURE

EX. *FEP-##-##*
- PANEL #
- PANEL FLOOR LOCATION
- PANEL TYPE:
  - FEP= FIELD EQUIPMENT PANEL
  - NCP= NETWORK COMMUNICATIONS PANEL
  - NETSW= NETWORK SWITCH PANEL

General Notes

Wiring Legend

Low Voltage (50 volts or less) control wiring for inputs and outputs shall be 18 AWG or larger rated for 600-volt service. Terminate any shields or drains for input/outputs at the controller only.

Ethernet

Ethernet Wiring: Unless stated differently by the client or the ENE systems Site Technician, network cable shall meet or exceed all requirements of Category 5e cable as specified in ANSI/TIA/EAI 568-A. No other devices other than stated in these drawings will be added to or removed from the client's Ethernet backbone or WAN.

MS/TP

MS/TP BACnet: Wiring to be installed using 22 AWG – 2 conductor stranded, 12.5 pF/ft. Maximum length is 2000'. End of Line resistor (120Ω 1/4W) to be installed at both ends of network segments. All communication cabling to be installed in a daisy chain configuration, no T's or stars are permitted. Shield on communication cable is to remain continuous and grounded at first controller only. Polarity of the conductors must be observed. Splicing of communication cable is not permitted.

FTT-10

LON or FFT-10 Wiring to be installed using Level IV network cable. Level IV network cable is 22 AWG, 2 conductor stranded. The same cable shall be used through out the project to avoid impedance issues. Maximum length is 1476' or 32 controllers without use of repeater. Terminator to be installed at both ends of network segments. All LON/FFT-10 cabling to be installed in a daisy chain configuration, no T's or stars are permitted. This cable is not to run in the same conduit with power for more than 5'.

ENE SYSTEMS
480 NEPONSET ST.
CANTON, MA. 02021
(781) 828-6770
www.enesystems.com

Revision: SUBMITTED

#	Change:	Date:
1	Submitted	7/7/2017
2		
3		
4		
5		

Architect:
Engineer:
Contractor:
Designed by: CFK Date: 7/7/2017
Software by: Date:
Checked by: Date:

Department of Labor & Training
Rm 73-1
1511 Pontiac Avenue
Smithfield RI

Legends

Job Number: OI004442
Last Saved: 7/7/2017
Last Printed: 7/14/2017
File Name
Sheet Number: 2

CAT.5 Wiring Details

LOGICAL PIN OUT OF 8-WIRE SERIAL CABLES

9-PIN TO 25-PIN

1	YELLOW	8
2	ORANGE	3
3	BLACK	2
4	BLUE	20
5	RED	7
7	BROWN	6
8	GREY	5
9	GREEN	4

9-PIN TO 9-PIN

1	YELLOW	1
2	ORANGE	2
3	BLACK	3
4	BLUE	4
5	RED	5
6	BROWN	6
7	GREY	7
8	GREEN	8

ALL CAT.5 WIRE WITH RJ-45

RJ-45 T568B WIRING STANDARD
AS VIEWED FROM THE BOTTOM

WHT/ORG	WHT/ORG
ORG	ORG
WHT/GRN	WHT/GRN
GRN	GRN
WHT/BLU	WHT/BLU
BLU	BLU
WHT/BRN	WHT/BRN
BRN	BRN

NOT TO EXCEED 328-FEET FOR IP TRAFFIC
NOT TO EXCEED 25-FEET FOR SERIAL COMMUNICATIONS

SHORT HAUL MODEM WIRE CONFIGURATION

CAT.5 CONDUCTOR WITH RJ-45 ENDS
AS VIEWED FROM THE TOP

BRN	BRN
ORG	WHT/GRN
BLU	GRN
WHT/BRN	WHT/BLU
GRN	BLU
WHT/BLU	WHT/BRN
WHT/GRN	ORG
WHT/ORG	WHT/ORG

NOT TO EXCEED 3000-FEET
IF DISTANCE REQUIREMENTS ARE EXCEEDED, USE SHORT HAUL MODEMS
BLACK BOX PART# ME733A-FSP AND ME73A-MSP
FOR FEMALE AND MALE MODEMS RESPECTIVELY

ALL CAT.5 WIRE WITH RJ-45

RJ-45 UPLINK/CROSSOVER WIRING
AS VIEWED FROM THE BOTTOM

WHT/ORG	WHT/GRN
ORG	GRN
WHT/GRN	WHT/ORN
BLU	BLU
WHT/BLU	WHT/BLU
GRN	ORN
WHT/BRN	WHT/BRN
BRN	BRN

NOT TO EXCEED 328-FEET FOR IP TRAFFIC
NOT TO EXCEED 25-FEET FOR SERIAL COMMUNICATIONS

PARALLEL PORT EXTENDER WIRE CONFIGURATION

CAT.5 CONDUCTOR WITH RJ-45 ENDS
AS VIEWED FROM THE TOP

BLU	WHT/BLU
WHT/BLU	BLU
GRN	WHT/GRN
WHT/GRN	GRN

NOT TO EXCEED 4500-FEET

ETHERNET WIRING NOTES:

1) ETHERNET LAN TO BE GREEN-JACKETED, 4-PAIR #24 SOLID, UNSHIELDED CAT.5 CABLE. MAXIMUM LENGTH EACH SEGMENT NOT TO EXCEED 328-FEET. SEE RJ-45 PIN OUT DETAIL THIS PAGE.

2) DO NOT RUN COMMUNICATIONS AND POWER IN THE SAME CONDUIT.

ENE SYSTEMS
480 NEPONSET ST.
CANTON, MA. 02021
(781) 828-6770
www.enesystems.com

Revision: SUBMITTED

#	Change:	Date:
1	Submitted	7/7/2017
2		
3		
4		
5		

Architect:
Engineer:
Contractor:
Designed by: CFK Date: 7/7/2017
Software by: Date:
Checked by: Date:

Department of Labor & Training
Rm 73-1
1511 Pontiac Avenue
Smithfield RI

CAT.5 Wiring Details

Job Number: OI004442
File Name
Last Saved: 7/7/2017
Last Printed: 7/14/2017
Sheet Number: 3

NETWORK PANEL

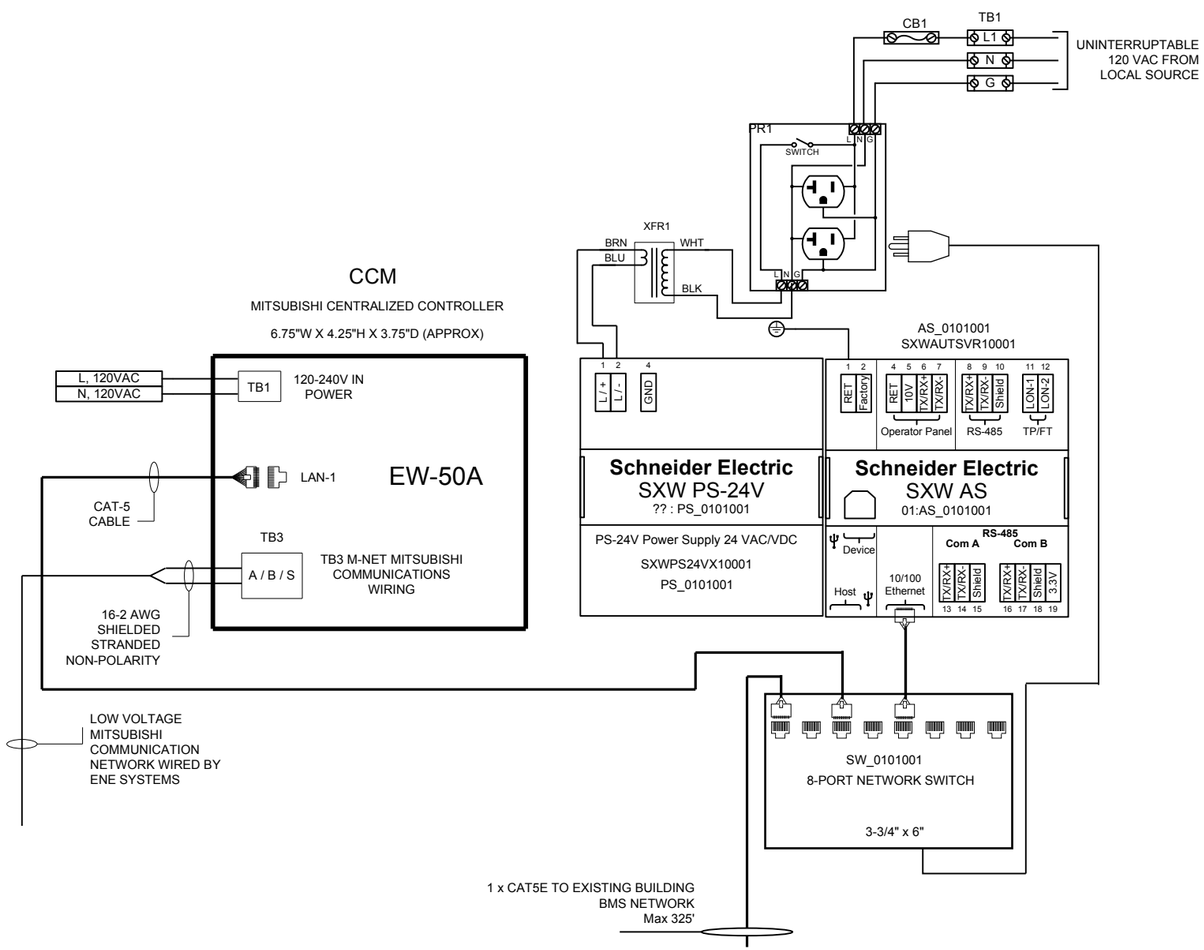

NP1
NETWORK PANEL
EXACT LOCATION TO BE DETERMINED IN THE FIELD.

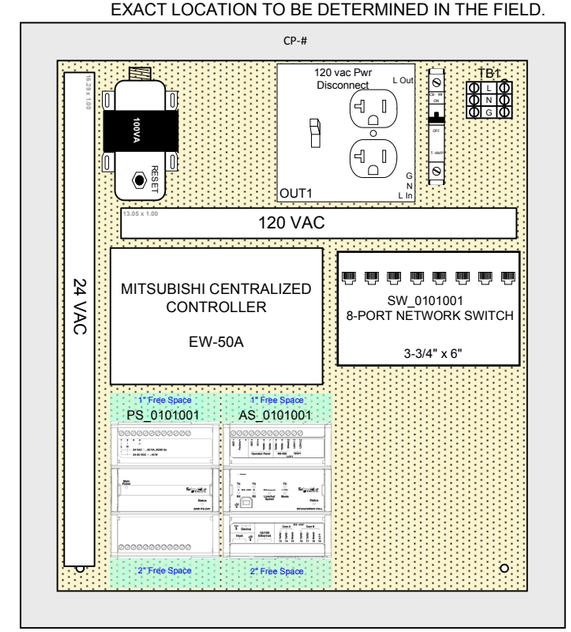

Device	Qty	Part Number	Description	Vendor
AS_0101001	1	SXWAUTSVR10001	AS AUTOMATION SERVER	Schneider Electric
AS_0101001_1	1	SXWTBASW110001	TB-AS-W1 TERM BASE AS W1	Schneider Electric
CB1	1	KEL-QL-15	15 AMP 1 POLE DIN MTD CIR BRKR	Schneider Electric
CB1_1	1	NR21	DIN Rail Plug-In Base	Local Purchase
CP-#	1	KEL-RET2018ULP	20X18X7 NEMA 1 UL ENC/PERF	Schneider Electric
PR1	1	KEL-PRK-S	PANEL SWITCH & RECEPT ASSEMBLY	Schneider Electric
PS_0101001	1	SXWPS24VX10001	PS-24V POWER SUPPLY 24 VAC/VDC	Schneider Electric
PS_0101001_1	1	SXWTBPSW110001	TB-PS-W1 TERM BASE PWR SUP W1	Schneider Electric
SW_0101001	1	J9559A#ABA	8-PORT NETWORK SWITCH	HP
XFR1	1	T-208	XFR 120-24V 99VA 1HB+FT	Schneider Electric

ENE SYSTEMS
480 NEPONSET ST.
CANTON, MA. 02021
(781) 828-6770
www.enesystems.com

SUBMITTED

Revision:

#	Change:	Date:
1	Submitted	7/7/2017
2		
3		
4		
5		

Architect: Scott Payette Architects
Engineer: Architectural Engineers Inc.
Contractor: Thomas E. Showden Inc.
Designed by: CFK Date: 7/7/2017
Software by: Date:
Checked by: JC Date: 4/10/2017

Department of Labor & Training
Rm 73-1
1511 Pontiac Avenue
Smithfield RI

NP-3 NETWORK PANEL

Job Number: OI004442
Last Saved: 7/14/2017
Last Printed: 7/14/2017
File Name
Sheet Number: 4

AC UNITS

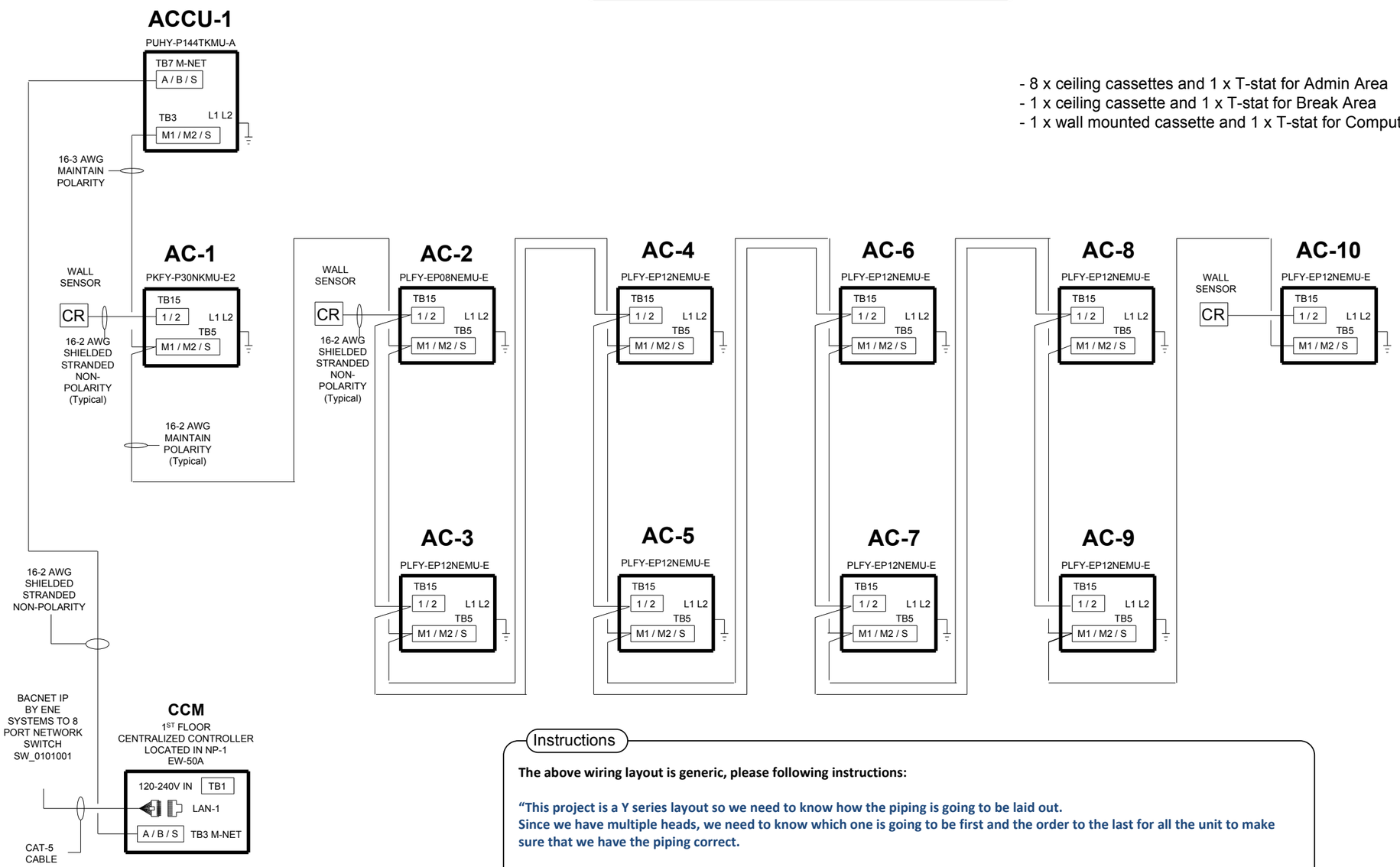

- 8 x ceiling cassettes and 1 x T-stat for Admin Area
- 1 x ceiling cassette and 1 x T-stat for Break Area
- 1 x wall mounted cassette and 1 x T-stat for Computer Training Area

Instructions

The above wiring layout is generic, please following instructions:

"This project is a Y series layout so we need to know how the piping is going to be laid out.
Since we have multiple heads, we need to know which one is going to be first and the order to the last for all the unit to make sure that we have the piping correct.

16-2 stranded shielded will come from the EW-50 central controller to the outdoor unit. Then from the outdoor unit to the indoors units and daisy change to the last indoor unit.
T stat will be the same wire and will come from a different terminal block."

Manufacturer Requirements

AC UNITS AND ASSOCIATED AIR COOLED CONDENSERS ACCU-1 WILL BE CONTROLLED BY UNIT MANUFACTURER'S (MITSUBISHI) CONTROLLERS.

THE ATC SYSTEM WILL BE INTERFACED WITH THE MITSUBISHI SYSTEM.

THE SPACES SERVED BY THE VARIOUS MITSUBISHI SYSTEM COMPONENTS WILL BE CONTROLLED AS DEFINED.

Notes

ALL POWER WIRING REQUIRED FOR THE MITSUBISHI SYSTEM EQUIPMENT WILL BE PROVIDED AND INSTALLED BY ELECTRICAL DIVISION 26.

ALL MITSUBISHI SYSTEM EQUIPMENT WILL BE PROVIDED, INSTALLED, PROGRAMMED AND STARTED-UP BY THE SYSTEM MANUFACTURER AND HVAC DIVISION 230001.

REFRIGERANT AND CONDENSATE PIPING REQUIRED FOR THE MITSUBISHI SYSTEM IS NOT SHOWN ON THIS DRAWING.

ENE SYSTEMS
480 NEPONSET ST.
CANTON, MA. 02021
(781) 828-6770
www.enesystems.com

SUBMITTED

Revision:

#	Change:	Date:
1	Submitted	7/7/2017
2		
3		
4		
5		

Department of Labor & Training
Rm 73-1
1511 Pontiac Avenue
Smithfield RI

HP-ACCU-ERV

Architect:	Scott Payette Architects		
Engineer:	Architectural Engineers Inc.		
Contractor:	Thomas E. Showden Inc.		
Designed by:	CFK	Date:	7/7/2017
Software by:		Date:	
Checked by:	JC	Date:	4/10/2017

Job Number: OI004442
File Name
Last Saved: 7/14/2017
Last Printed: 7/14/2017
Sheet Number: 5