Parallel EcoBELTs installed in Indiana.

Set your secondary processes up to succeed

That's what one Indiana city did. Located near Lake Michigan, this bustling college town was looking to improve their overall system performance without drastically impacting ratepayers.

To handle an average flow of 0.45 MGD and peak flows of 1.35 MGD, engineers called for two EcoBELT EM-7 units, each with the capacity to handle 0.75 MGD. The project's engineers had targeted 50% TSS removal, but got substantially more.

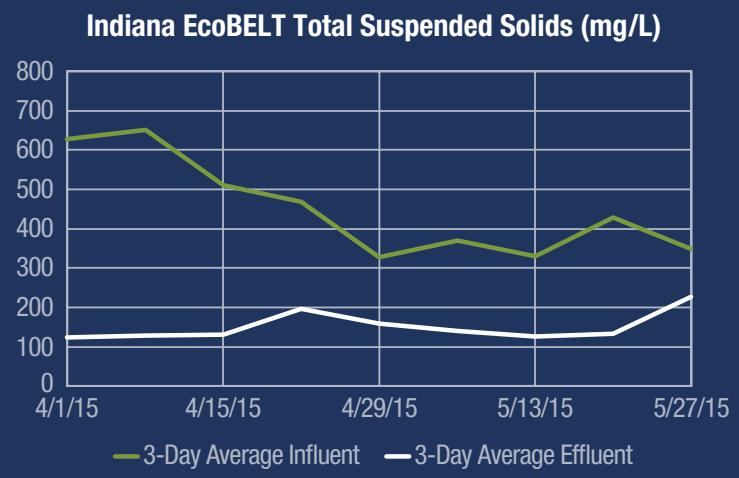

EcoBELT™

HOW IT PERFORMS

Tested across two months post-installation in 2015, the EcoBELT system averaged 66% TSS removal and 36% BOD removal. In addition to the benefits of grit removal and load reduction potential as the city's population continues to increase, performance charts illustrate a dampening effect on influent condition extremes. The level of TSS and BOD delivered to the biological treatment portion of the plant is more consistent, leading to a more stable biomass in those secondary systems.

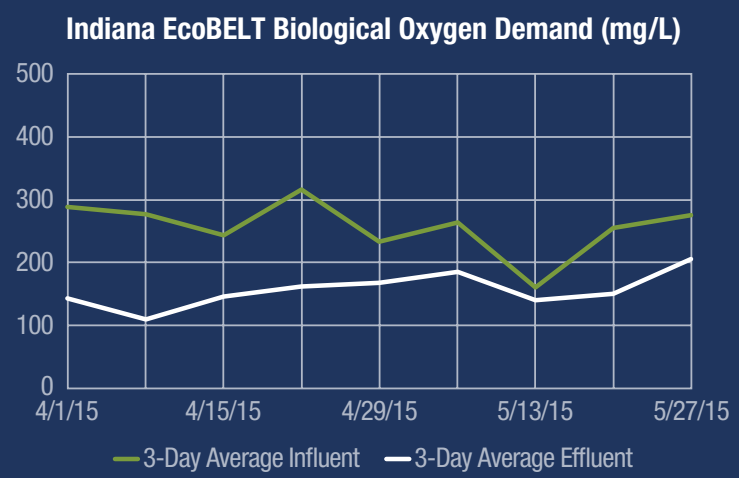

The wastewater industry has seen how nutrients and energy costs expose the limits of existing solutions. Nexom design-supports and supplies

THE NEXT WAVE OF PROVEN TECHNOLOGIES

helping consulting engineers confidently exceed all municipal or industrial demands.

Nexom™
technologies for cleaner water

Get the answers you need to move your project forward.
Call: **1-888-426-8180**
Type: **info@nexom.com**
Click: **www.nexom.com**

CB-F1-05/17

REVISIONS			
REV.	DESCRIPTION	DATE	ECO
01	Released to sales	7/9/2013	
02	Converted to Nexom Border	11/3/2016	

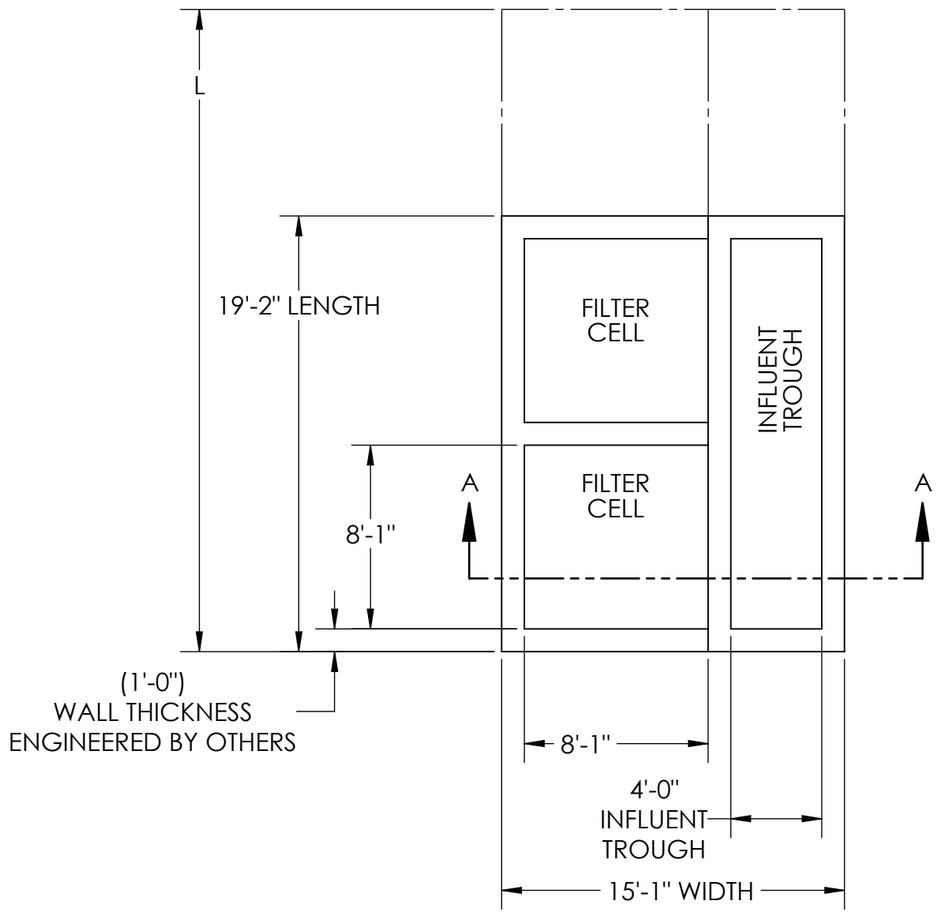

PLAN VIEW
2 CELLS SHOWN
OF 1 MODULE EACH

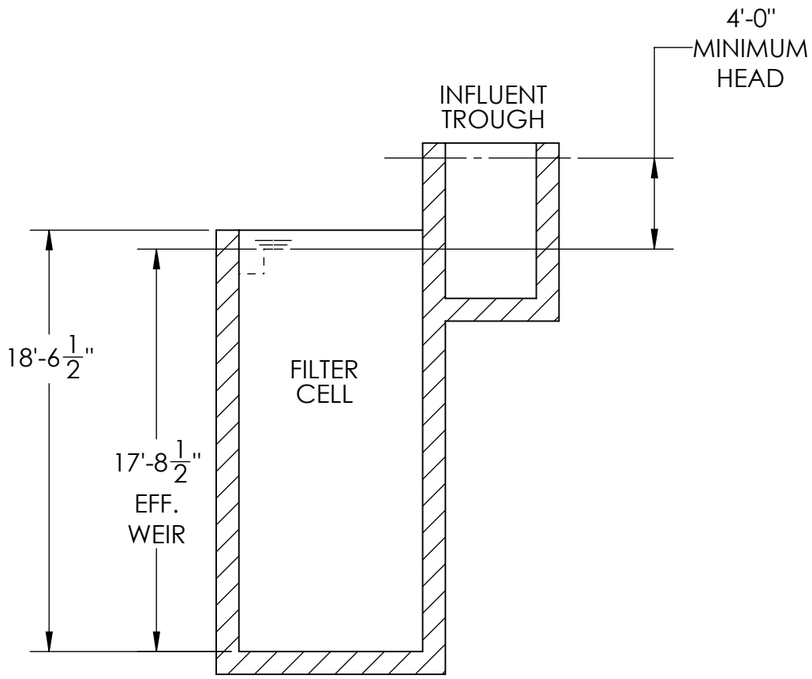

ELEVATION VIEW
SECTION A-A

FOOT PRINT LENGTH L	
NUMBER OF CELLS	OVERALL LENGTH
3	28'3"
4	37'4"
5	46'5"
6	55'6"
7	64'7"
8	73'8"
9	82'9"
10	91'10"

NOTES:

1. DIMENSIONS ARE BASED ON A 1'-0" CONCRETE WALL THICKNESS.
2. DIMENSIONS MAY VARY DEPENDING ON CONCRETE WALL THICKNESS, ENGINEERED BY OTHERS.
3. INFLUENT TROUGH DIMENSIONS MAY VARY DEPENDING ON DESIGN FLOW.
4. FOR ADDITIONAL FOOTPRINT LENGTHS ADD 8'-1" FOR EACH ADDITIONAL CELL.
5. IF AN ODD NUMBER OF CELLS ARE REQUIRED REMOVE ONE CELL AS SHOWN IN THE PLAN VIEW.
6. HEIGHTS MAY VARY DEPENDING ON REQUIRED BED DEPTH AND/OR HYDRAULIC PROFILE.
   - MINIMUM EFFLUENT WEIR HEIGHT = 17' 8 1/2"

DWG SIZE: B
SCALE: 1:80
PAGE: 1 OF 2

PROJECT: Templates
DESCRIPTION: Footprint Drawing, CF64-80BG Single Offset
REV: 02+
DRAWING NUMBER: CF64-80BG Single Offset

UNLESS OTHERWISE SPECIFIED
DIMENSIONS ARE IN INCHES
TOLERANCES:
FRACTIONAL ±1/16"
ONE PLACE DECIMAL ±.125
TWO PLACE DECIMAL ±.030
THREE PLACE DECIMAL ±.010
ANGULAR ±2.0°
THIRD ANGLE PROJECTION

COMPANY CONFIDENTIAL

ALL INFORMATION CONTAINED ON THIS DOCUMENT IS THE PROPERTY OF NEXOM WASTEWATER SYSTEMS, INC. (NEXOM) AND IS CONFIDENTIAL. THE INFORMATION CONTAINED HEREIN ARE PROPRIETARY TO NEXOM AND ARE SUBMITTED TO IN CONFIDENCE. THEY ARE NOT TRANSFERABLE AND MUST BE SATISFACTORY FOR THE PURPOSE FOR WHICH THE DOCUMENT IS EXPRESSLY SUBMITTED. THEY MUST NOT BE DISCLOSED, REPRODUCED, LOANED, OR USED IN ANY WAY INCONSISTENT WITH THE EXPRESS WRITTEN CONSENT OF NEXOM. NEXOM ASSUMES NO RESPONSIBILITY OR LIABILITY FOR THE USE OF THIS DOCUMENT OR THE DESIGN CONCEPTS AND INFORMATION CONTAINED HEREIN IN ANY OTHER PROJECT OR IN ANY MANNER NOT DIRECTLY RELATED TO THE INTEREST OF NEXOM. ALL PATENT RIGHTS ARE RESERVED. ACCEPTANCE OF THE RELEASED DOCUMENT CONSTITUTES AGREEMENT TO THESE TERMS AND CONDITIONS.

10450 N. AIRPORT RD.
HAYDEN, ID 83835

DRAWN BY:	KJennings	7/9/13
CHECKED BY:	BMesserschmidt	7/9/13
PROJECT APPROVAL:	--	--
	NAME:	DATE:

TEMPLATE LAST MODIFIED: 2012.03.23

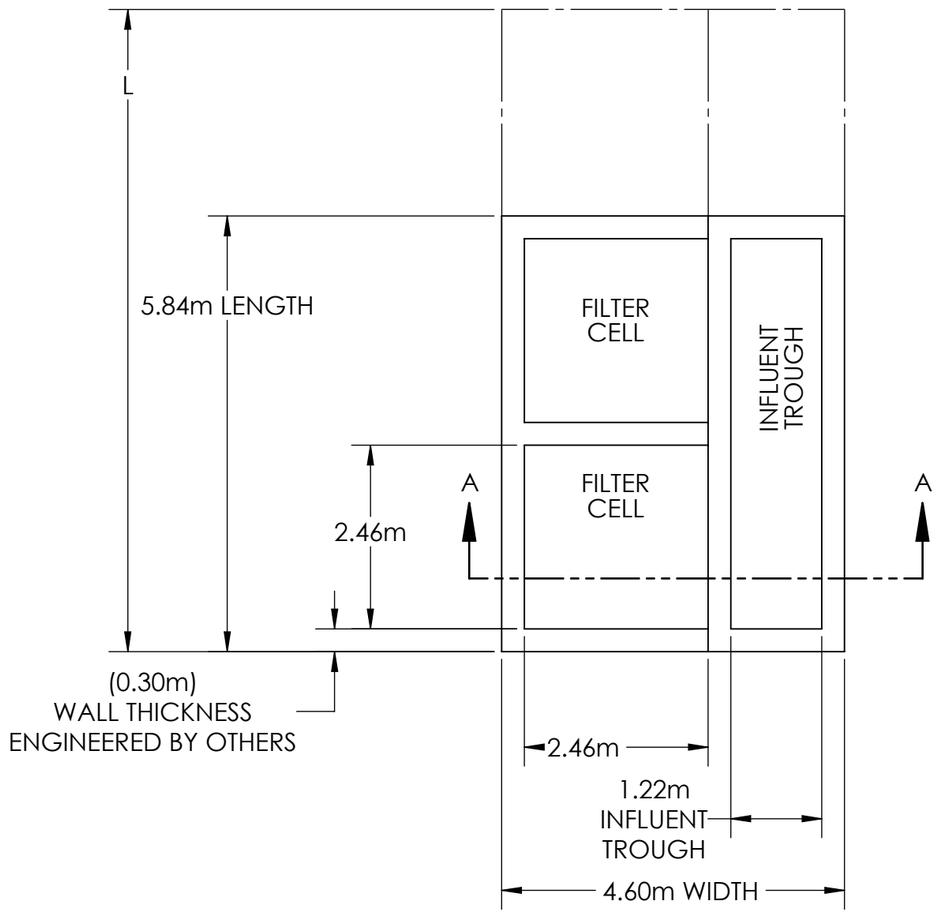

PLAN VIEW
2 CELLS SHOWN
OF 1 MODULE EACH

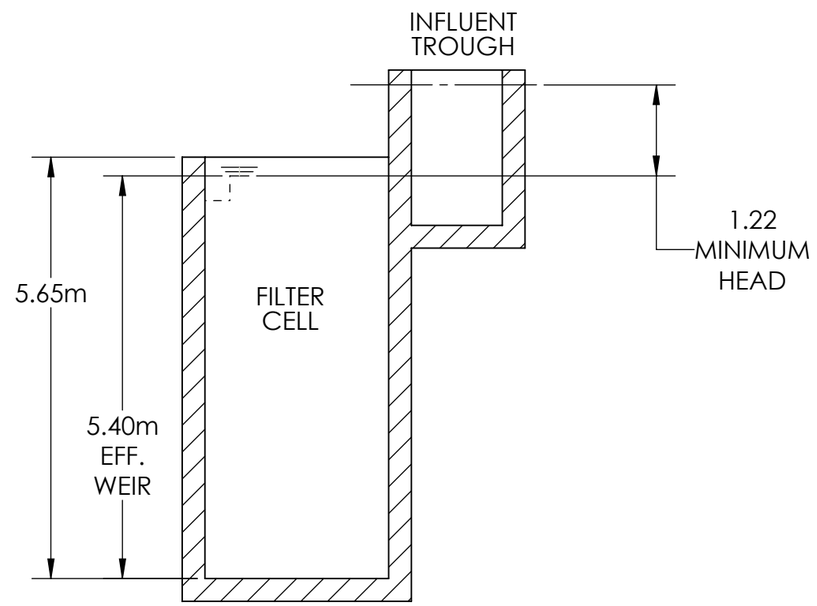

ELEVATION VIEW
SECTION A-A

FOOT PRINT LENGTH L	
NUMBER OF CELLS	OVERALL LENGTH
3	8.61m
4	11.38m
5	14.15m
6	16.92m
7	19.69m
8	22.45m
9	25.22m
10	28.00m

NOTES:

1. DIMENSIONS ARE BASED ON A 0.3m CONCRETE WALL THICKNESS.
2. DIMENSIONS MAY VARY DEPENDING ON CONCRETE WALL THICKNESS, ENGINEERED BY OTHERS.
3. INFLUENT TROUGH DIMENSIONS MAY VARY DEPENDING ON DESIGN FLOW.
4. FOR ADDITIONAL FOOTPRINT LENGTHS ADD 2.46m FOR EACH ADDITIONAL CELL.
5. IF AN ODD NUMBER OF CELLS ARE REQUIRED REMOVE ONE CELL AS SHOWN IN THE PLAN VIEW.
6. HEIGHTS MAY VARY DEPENDING ON REQUIRED BED DEPTH AND/OR HYDRAULIC PROFILE.
   - MINIMUM EFFLUENT WEIR HEIGHT = 5.40m

DWG SIZE: B
SCALE: 1:80
PAGE: 2 OF 2
REV: 02+
PROJECT: Templates
DESCRIPTION: Footprint Drawing, CF64-80BG Single Offset
DRAWING NUMBER: CF64-80BG Single Offset

UNLESS OTHERWISE SPECIFIED
DIMENSIONS ARE IN INCHES
TOLERANCES:
FRACTIONAL ±1/16"
ONE PLACE DECIMAL ±.125
TWO PLACE DECIMAL ±.030
THREE PLACE DECIMAL ±.010
ANGULAR ±2.0°
THIRD ANGLE PROJECTION

COMPANY CONFIDENTIAL
ALL INFORMATION CONTAINED ON THIS DOCUMENT IS THE PROPERTY OF NEXOM WASTEWATER SYSTEMS, INC. (NEXOM) AND MAY CONTAIN TRADE SECRET INFORMATION. KNOWLEDGE CONTAINED HEREIN ARE PROPRIETARY TO NEXOM AND ARE SUBMITTED TO IN CONFIDENCE. THEY ARE NOT TRANSFERABLE AND MUST BE RETURNED UPON REQUEST. THEY MUST NOT BE DISCLOSED TO ANY THIRD PARTY OR SUBMITTED. THEY MUST NOT BE DISCLOSED, REPRODUCED, LOANED, OR USED IN ANY WAY WITHOUT THE EXPRESS WRITTEN CONSENT OF NEXOM. NEXOM ASSUMES NO RESPONSIBILITY OR LIABILITY FOR THE USE OF THIS DOCUMENT OR THE DESIGN CONCEPTS AND INFORMATION CONTAINED HEREIN IN ANY OTHER PROJECT OR IN ANY MANNER THAT DOES NOT RELATE TO THE FITNESS OR PURPOSE OF THIS DOCUMENT. IN NO EVENT SHALL NEXOM BE LIABLE FOR ANY INDIRECT OR CONSEQUENTIAL DAMAGES INCURRED BY THE USER IN COMPANY OR PERSONAL INFORMATION, DATA, OR PROFITS. ALL RIGHTS ARE RESERVED. ACCESS TO AND USE OF THIS DOCUMENT CONSTITUTES AGREEMENT TO THESE TERMS AND CONDITIONS.

Nexom
10450 N. AIRPORT RD.
HAYDEN, ID 83835

DRAWN BY:	KJennings	7/9/13
CHECKED BY:	BMesserschmidt	7/9/13
PROJECT APPROVAL:	--	--
	NAME:	DATE:

TEMPLATE LAST MODIFIED: 2012.03.23

REVISIONS			
REV.	DESCRIPTION	DATE	ECO
01	RELEASED TO SALES	8/1/2013	
02	Converted to Nexom Border	11/3/2016	

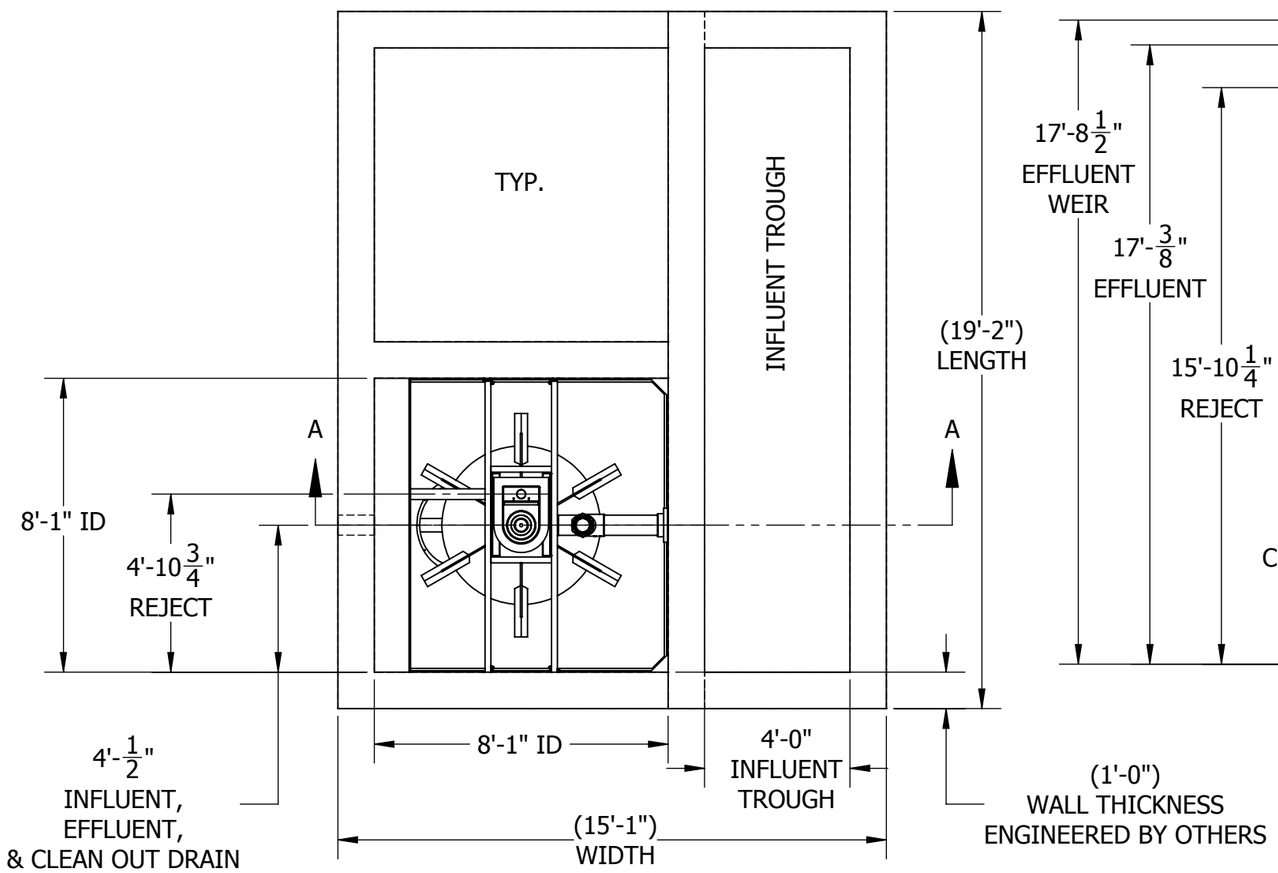

PLAN VIEW

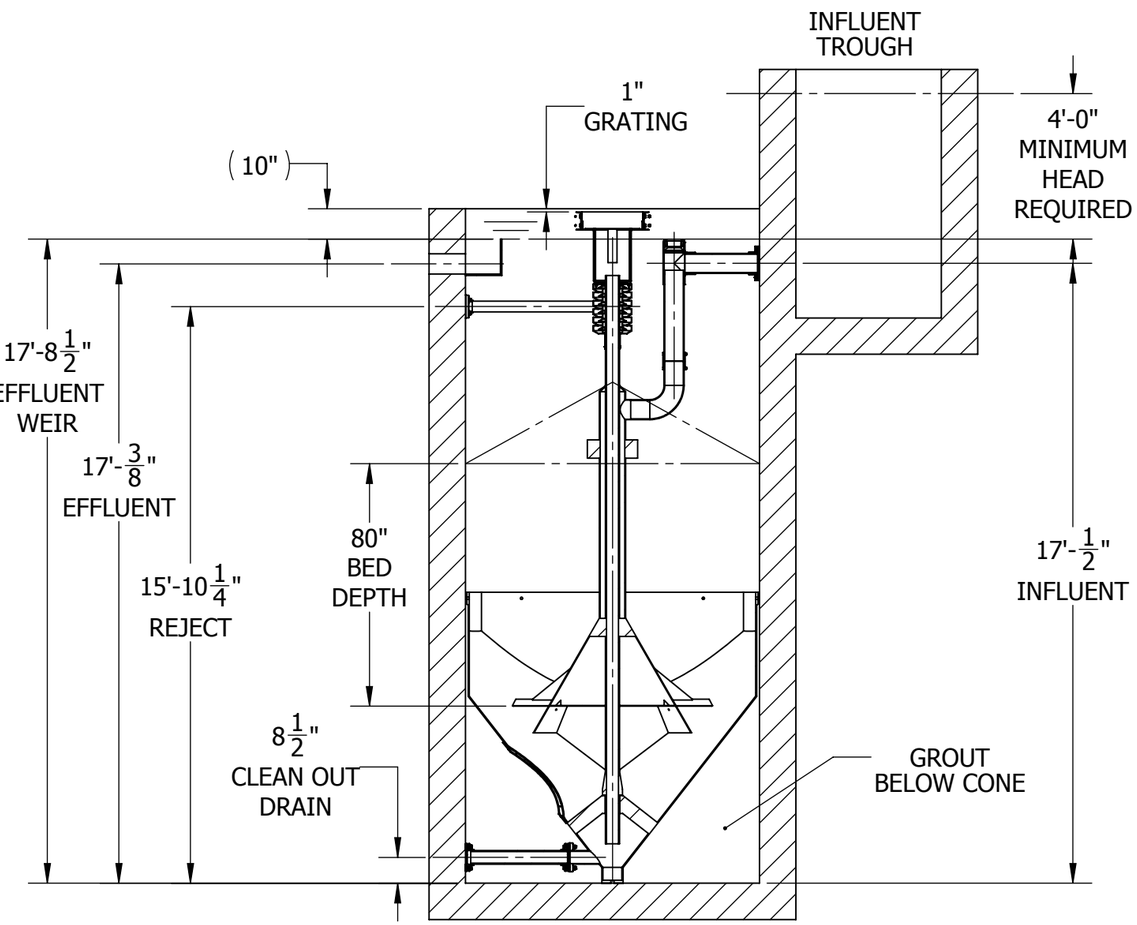

ELEVATION VIEW
SECTION A-A

1. THIS DRAWING IS FOR GENERAL ARRANGEMENT ONLY.
2. FLANGES ARE PRELIMINARY. LOCATION CHANGES MUST BE APPROVED BY NEXOM ENGINEERING.
3. FLUSH FLANGES AT INSIDE OF CONCRETE WALL PREFERRED.
4. PIPE SIZES:
   - INFLUENT 6".
   - EFFLUENT 6".
   - REJECT 3".
   - CLEAN OUT DRAIN 4".
5. INFLUENT TROUGH DIMENSIONS MAY VARY DEPENDING ON DESIGN FLOW.
6. INSTALLATION NOTES:
   - PLACE FILTER CONE.
   - ANCHOR CENTER OF CONE TO SLAB. ANCHOR CONE TO SIDEWALLS.
   - PLUMB FILTER DRAINS WITH SCREENS INSTALLED.
   - GROUT UNDER CONE IN THREE LIFTS.
   - INSTALL CENTRAL FEED CHAMBER.
   - ANCHOR FEED CHAMBER WITH ANGLES.

DWG SIZE: B
SCALE: 1:50
PAGE: 1 OF 2

PROJECT: _Templates
DESCRIPTION: CF64-80BG Single Offset Internals
REV: 02+
DRAWING NUMBER: CF64-80BG

UNLESS OTHERWISE SPECIFIED
DIMENSIONS ARE IN INCHES
TOLERANCES:
FRACTIONAL ±1/16"
ONE PLACE DECIMAL ±.125
TWO PLACE DECIMAL ±.030
THREE PLACE DECIMAL ±.010
ANGULAR ±2.0°
THIRD ANGLE PROJECTION

COMPANY CONFIDENTIAL
ALL INFORMATION CONTAINED ON THIS DOCUMENT IS THE PROPERTY OF NEXOM (DELAWARE) LLC. ALL PATENT RIGHTS, TRADE SECRETS, OR OTHER INTELLECTUAL PROPERTY RIGHTS IN THE INFORMATION CONTAINED HEREIN ARE PROPRIETARY TO NEXOM AND ARE SUBMITTED IN CONFIDENCE. THEY ARE NOT TRANSFERABLE AND MUST BE KEPT CONFIDENTIAL. NEXOM WAIVES NO RIGHTS WHATSOEVER BY THIS DOCUMENT BEING SUBMITTED. THEY MAY NOT BE DISCLOSED, REPRODUCED, LOANED, OR OFFERED TO ANY OTHER ASSUMED NEXOM PROPRIETARY INFORMATION. THE USE OF THIS DOCUMENT OR THE DESIGN CONCEPTS AND INFORMATION CONTAINED HEREIN IS RESTRICTED TO THE PURPOSE FOR WHICH IT WAS SUBMITTED. NEXOM ASSUMES NO RESPONSIBILITY OR LIABILITY FOR THE USE OF THE DOCUMENT OR THE DESIGN CONCEPTS AND INFORMATION CONTAINED HEREIN FOR ANY OTHER PURPOSE. USE OF THE DESIGN AND MANUFACTURE OF PARTS NOT RELATE TO THE FITNESS OR PURPOSE OF THIS DOCUMENT, IN NO EVENT SHALL BE CONSIDERED TO BE DETRIMENTAL TO NEXOM. IN NO EVENT SHALL THE DISCLOSURE OF THE DESIGN AND MANUFACTURE INFORMATION CONTAINED HEREIN BE CONSIDERED AS DETRIMENTAL TO THE INTEREST OF NEXOM. ALL PATENT RIGHTS ARE RESERVED. ACCEPTANCE OF THIS DOCUMENT BY THE RECIPIENT CONSTITUTES AGREEMENT TO THESE TERMS AND CONDITIONS.

10450 N. AIRPORT RD.
HAYDEN, ID 83835

DRAWN BY:	KJennings	7/10/13
CHECKED BY:	BMesserschmidt	7/10/13
PROJECT APPROVAL:	--	--
	NAME:	DATE:

TEMPLATE LAST MODIFIED: 2012.03.23

REVISIONS			
REV.	DESCRIPTION	DATE	ECO

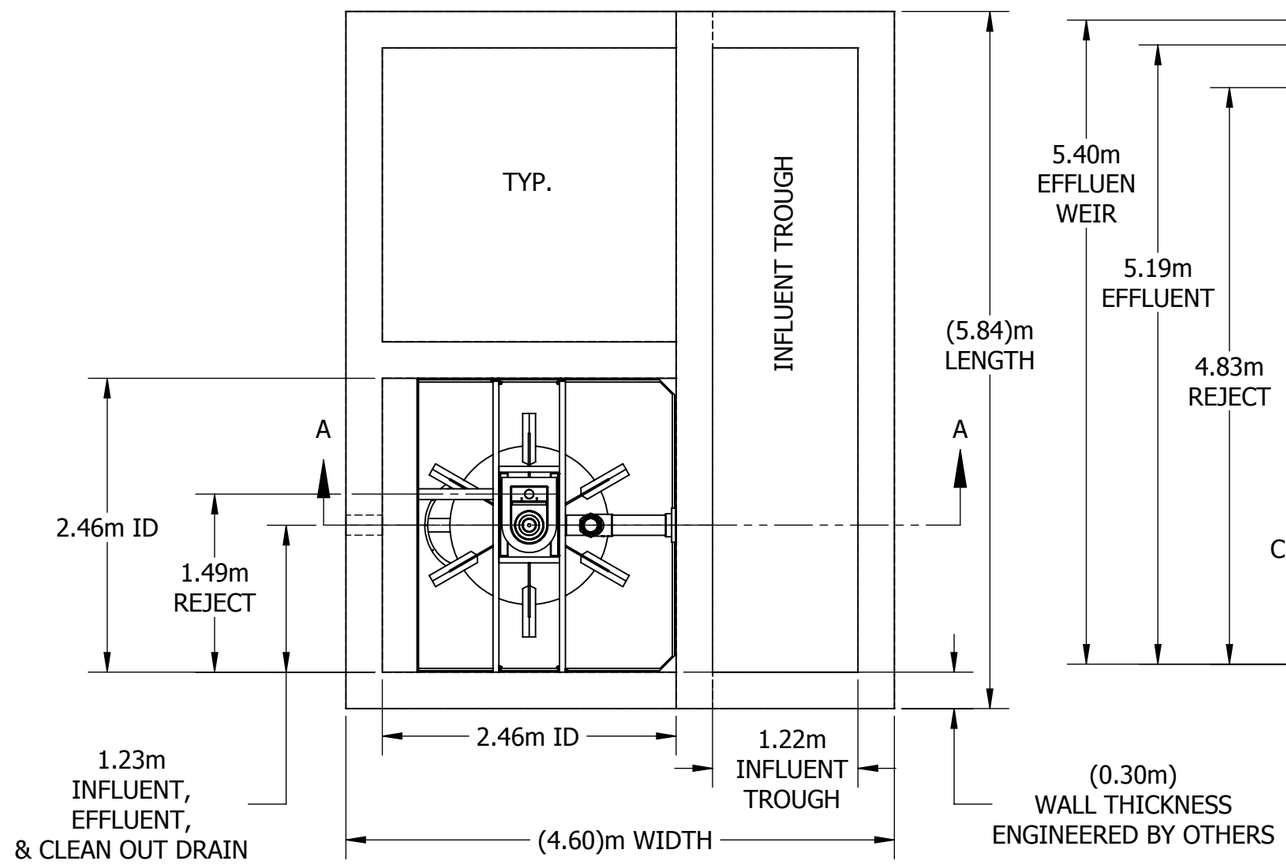

PLAN VIEW

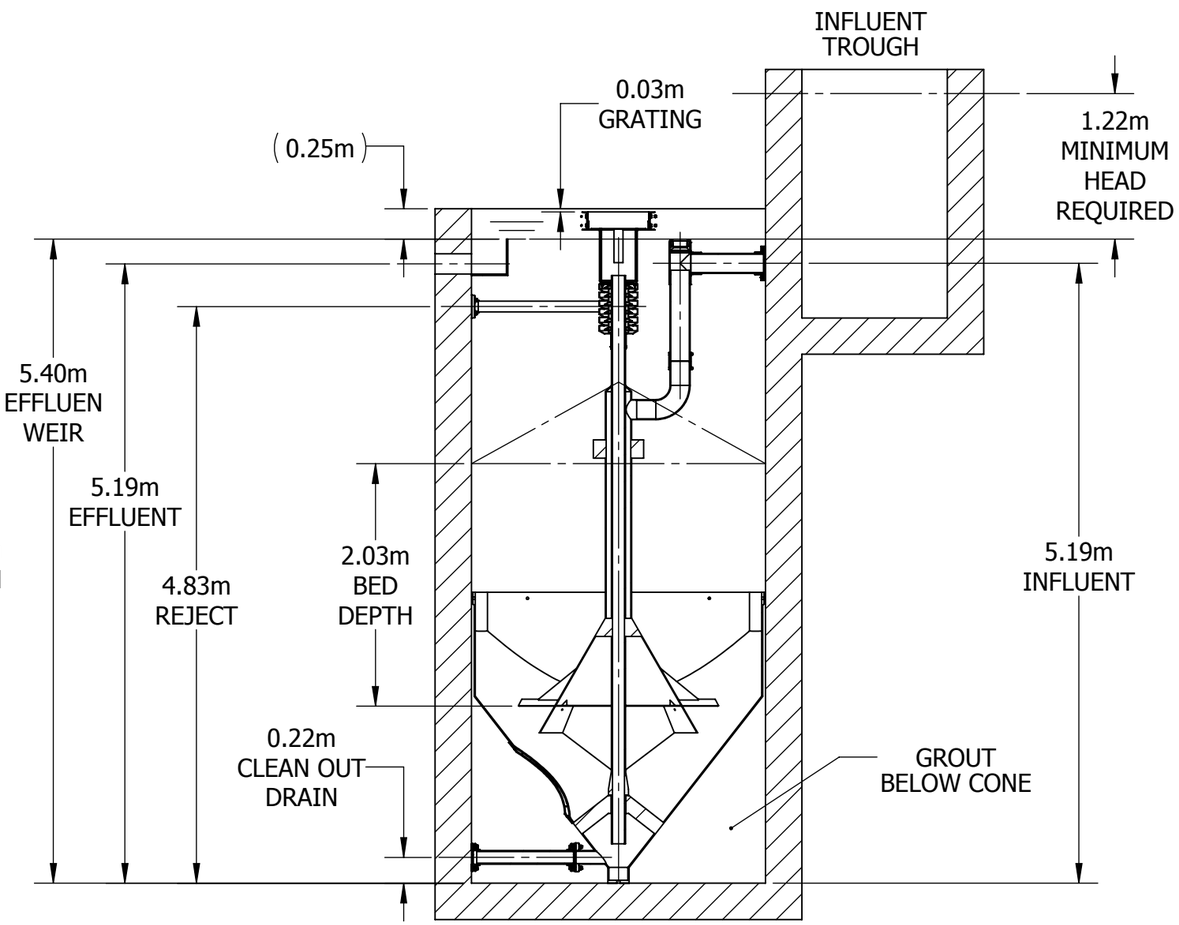

ELEVATION VIEW
SECTION A-A

1. THIS DRAWING IS FOR GENERAL ARRANGEMENT ONLY.
2. FLANGES ARE PRELIMINARY. LOCATION CHANGES MUST BE APPROVED BY NEXOM ENGINEERING.
3. FLUSH FLANGES AT INSIDE OF CONCRETE WALL PREFERRED.
4. PIPE SIZES:
   - INFLUENT .1524m.
   - EFFLUENT .1524m.
   - REJECT .0762m.
   - CLEAN OUT DRAIN .1016m.
5. INFLUENT TROUGH DIMENSIONS MAY VARY DEPENDING ON DESIGN FLOW.
6. INSTALLATION NOTES:
   - PLACE FILTER CONE.
   - ANCHOR CENTER OF CONE TO SLAB. ANCHOR CONE TO SIDEWALLS.
   - PLUMB FILTER DRAINS WITH SCREENS INSTALLED.
   - GROUT UNDER CONE IN THREE LIFTS.
   - INSTALL CENTRAL FEED CHAMBER.
   - ANCHOR FEED CHAMBER WITH ANGLES.

DWG SIZE: B
SCALE: 1:50
PAGE: 2 OF 2

PROJECT: _Templates
DESCRIPTION: CF64-80BG Single Offset Internals
REV: 02+
DRAWING NUMBER: CF64-80BG

UNLESS OTHERWISE SPECIFIED
DIMENSIONS ARE IN INCHES
TOLERANCES:
FRACTIONAL ±1/16"
ONE PLACE DECIMAL ±.125
TWO PLACE DECIMAL ±.030
THREE PLACE DECIMAL ±.010
ANGULAR ±2.0°
THIRD ANGLE PROJECTION

COMPANY CONFIDENTIAL
ALL INFORMATION CONTAINED ON THIS DOCUMENT IS THE PROPERTY OF NEXOM. THE INFORMATION CONTAINED HEREIN IS PROPRIETARY, CONFIDENTIAL AND ARE SUBMITTED IN CONFIDENCE. THEY ARE NOT TRANSFERABLE AND MUST BE KEPT IN CONFIDENCE. THEY ARE NOT TO BE DISCLOSED TO ANY PERSON NOT SUBMITTED. THEY MUST NOT BE DISCLOSED, REPRODUCED, LOANED, OR OFFERED FOR SALE WITHOUT WRITTEN PERMISSION. NEXOM MAKES NO REPRESENTATIONS OR WARRANTIES, EXPRESS OR IMPLIED, AND EXPRESSLY DISCLAIMS ANY LIABILITY CONCERNING THE USE OF THIS DOCUMENT OR THE DESIGN CONCEPTS AND INFORMATION CONTAINED HEREIN. ALL DESIGNS, DRAWINGS, SPECIFICATIONS, AND CHARGES NOT RELATE TO THE FITNESS OR PURPOSE OF THIS DOCUMENT, IN NO EVENT SHALL NEXOM BE LIABLE FOR ANY INCIDENTAL OR CONSEQUENTIAL DAMAGES TO THE INTEREST OF NEXOM. ALL PATENT RIGHTS ARE RESERVED. ACCEPTANCE OF THE USE OF THIS DOCUMENT CONSTITUTES AGREEMENT TO THESE TERMS AND CONDITIONS.

Nexom
10450 N. AIRPORT RD.
HAYDEN, ID 83835

DRAWN BY:	KJennings	7/10/13
CHECKED BY:	BMesserschmidt	7/10/13
PROJECT APPROVAL:	--	--
	NAME:	DATE:

TEMPLATE LAST MODIFIED: 2012.03.23

Parkson™
Treating Water Right

DynaSand®

Continuous, Upflow, Granular Media Filter

- Continuously cleaned sand bed
- Low power requirement
- Elimination of ancillary backwash equipment
- Reduced operator attention

Great performance, low maintenance

The DynaSand® filter is an upflow, deep bed, granular media filter with continuous backwash. The filter media is cleaned by a simple internal washing system that does not require backwash pumps or storage tanks. The absence of backwash pumps means low energy consumption.

The DynaSand® filter's deep media bed allows it to handle high levels of suspended solids. This heavy-duty performance may eliminate the need for pre-sedimentation or flotation steps in the treatment process in some applications.

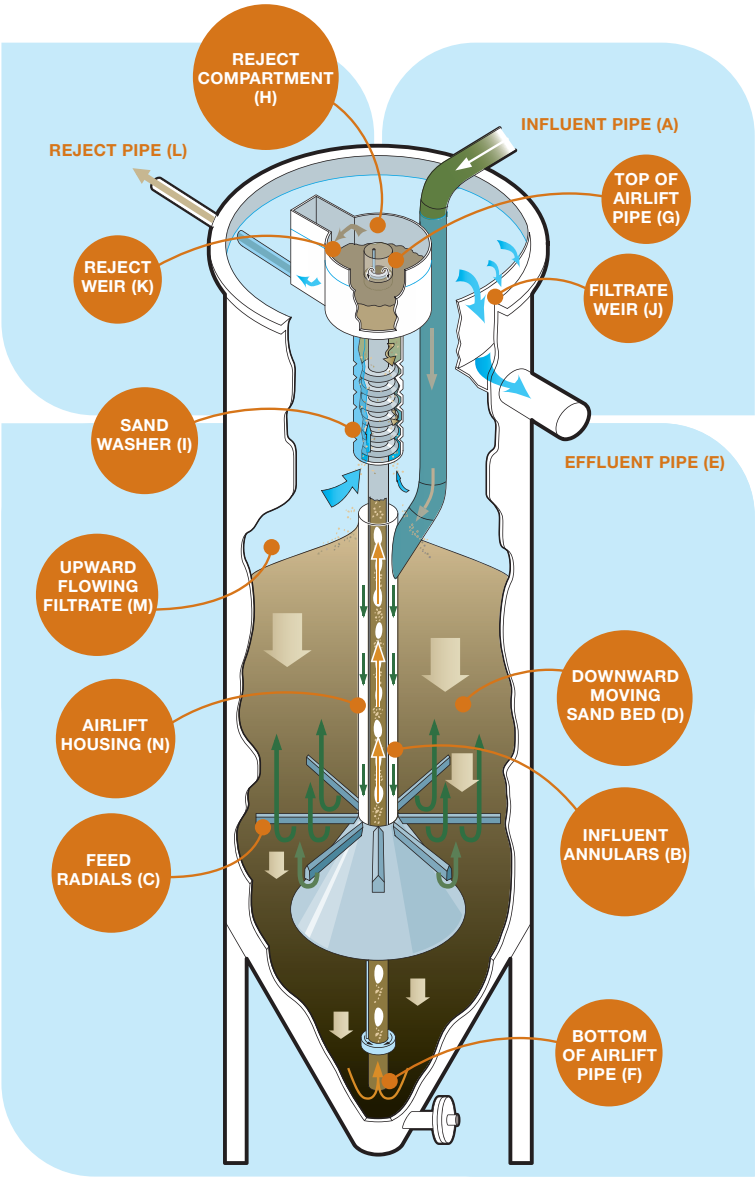

The DynaSand® filter is available in various sizes and configurations. This flexibility allows for customization to fit specific site and application requirements.

DynaSand® Filter Principles of Operation

Influent Filtration

Influent feed is introduced at the top of the filter (A) and flows downward through an annular section (B) between the influent feed pipe and airlift housing. The feed is introduced into the bottom of the sand bed through a series of feed radials (C) that are open at the bottom. As the influent flows upward (M) through the downward moving sand bed (D), organic and inorganic impurities are captured by the sand. The clean, polished filtrate continues to move upward and exits at the top of the filter over the filtrate weir (J) and out through the effluent pipe (E).

Sand Cleaning

The sand bed containing captured impurities is drawn downward into the center of the filter where the airlift pipe (F) is located. A small volume of compressed air is introduced at the bottom of the airlift, drawing the sand into the airlift pipe. The sand is scoured within the airlift pipe at an intensity of 100-150 SCFM/ft2. The effectiveness of this scouring process is vastly greater than what can be expected in conventional sand filtration backwash. The scouring dislodges any solid particles attached to the sand grains.

The dirty slurry is pushed to the top of the airlift (G) and into the reject compartment (H). From the reject compartment, the sand falls into the sand washer (I) and the lighter reject solids are carried over the reject weir (K) and out the reject pipe (L). As the sand cascades down through the concentric stages of the washer, it encounters a small amount of polished filtrate moving upward, driven by the difference in water level between the filtrate pool and the reject weir. The heavier, coarser sand grains fall through this small countercurrent flow while the remaining contaminants are carried back up to the reject compartment. The clean, recycled sand is deposited on the top of the sand bed where it once again begins the influent cleaning process and its eventual migration to the bottom of the filter.

DynaSand® Filter Configurations

The DynaSand® filter is available as either stand alone package units or in a modular concrete design. The package units are constructed of either 304 SST or FRP. Materials of construction for the internal components of both package and concrete units are SST and/or FRP. Filters are available in 40” standard bed or 80” deep-bed design depending on the nature of the application.

Concrete modules are frequently used for high flow capacity systems by placing multiple modules into a common filter cell. The modules in a filter cell share a common filter bed where cones at the bottom of each module distribute sand to their respective airlifts and sand washers. A concrete DynaSand® installation can be designed for any size filter area. This enables the technology to be applied to any size water or wastewater treatment plant. Since all filter beds are being continuously cleaned, the pressure drop remains low and even throughout all the filters. Equal pressure drop ensures even distribution of feed to each filter without the need for splitter boxes or flow controls. Therefore, a typical multiple unit installation can use a common header pipe with feed connections and isolation valves for each filter.

Features

- Continuously cleaned sand bed
- No underdrains or screens
- Sand washed with filtrate
- No level control
- Internal, vertical airlift
- Low power requirements

Benefits

- No shutdown for backwash cycles
- Elimination of ancillary backwash equipment
- No flow control valves, splitter boxes, or backwash controls
- No short-circuiting
- Optimum sand-washing efficiency
- Superior filtrate quality
- Reduced operator attention
- Minimizes overall pressure-drop
- Reduces potential for pluggage
- Significantly reduces wear/maintenance
- Can be easily maintained without filter shutdown
- Up to 70% less compressed air vs. other self-cleaning filters

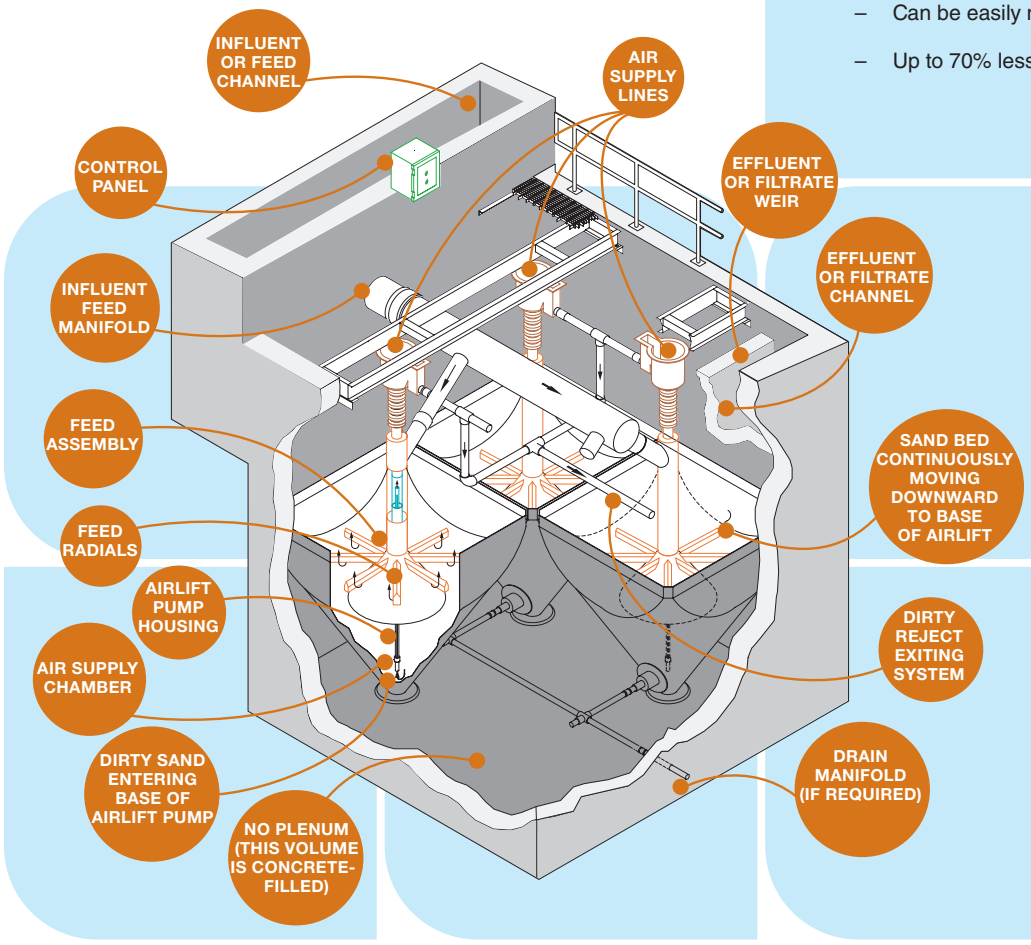

DynaSand® filter above ground package units

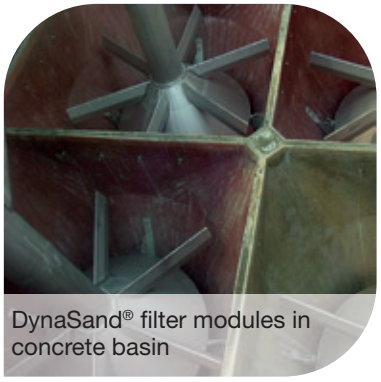

DynaSand® filter modules in concrete basin

DynaSand® ENR System Overview

Key component of process control and monitoring for meeting low limits

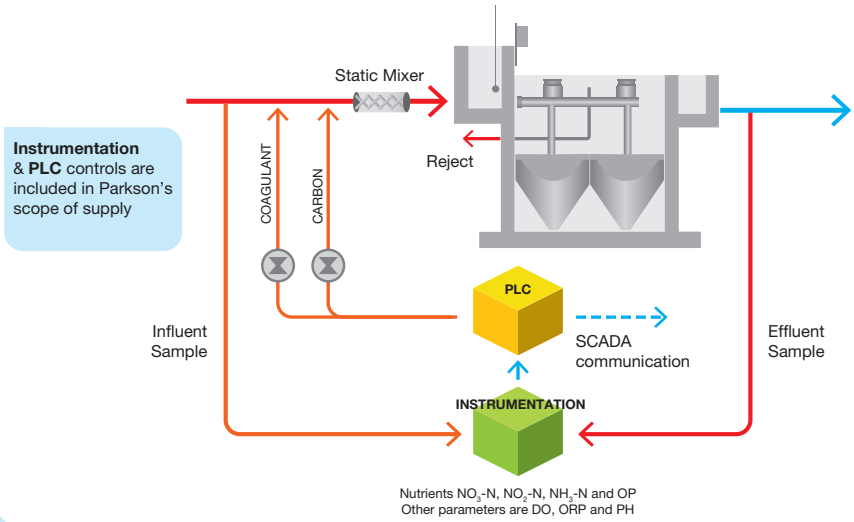

DynaSand® Filter Applications

- Tertiary filtration
- Algae removal
- Potable water (turbidity and color)
- Oil removal
- Process water
- Brine filtration
- Metal finishing
- Cooling tower blowdown
- Steel mill scale
- Chemical processing
- Phosphorus removal
- Product recovery
- Denitrification
- Cryptosporidium and Giardia removal
- Surface water
- Ground water
- Arsenic removal
- Effluent reuse

DynaSand® Continuous Filtration Process

Water and wastewater treatment in conventional plants typically involves flocculation, clarification and filtration. Direct filtration eliminates clarification but still requires flocculation. The DynaSand® filter utilizes a proprietary process known as Continuous Contact Filtration. The DynaSand® filter's 80" media bed depth provides greater hydraulic residence times and more opportunity for floc formation and attachment. Thus, coagulation, flocculation and separation can be performed within the sand bed, eliminating the need for external flocculators and clarifiers. Equipment savings can be substantial, up to 85% compared to conventional treatment and 50% compared to direct filtration. The DynaSand® Continuous Contact Filtration process is better suited to remove small floc, which can help reduce chemical requirements by 20-30% over conventional treatment.

Applications

The DynaSand® filter is currently providing exceptional treatment in over 8,000 installations worldwide in a wide variety of applications.

Typical Data	Loading rate (gpm/ft2)	Influent solids	Filtrate solids
Tertiary Filtration	3-5	20-50 ppm SS	5-10 ppm SS
Potable Water – Turbidity	4-5	10-30 NTU	0.1-0.5 NTU
Potable Water – Color	4-5	10–120 ACU	1-5 ACU
Process Water	5	10-30 NTU	0.1-0.5 NTU
Metal Finishing	4-6	20-50 ppm SS	2-5 ppm SS
Steel Mill Scale	8-10	50-300 ppm SS	5-10 ppm SS
Phosphorus Removal	3-5	<1 ppm Total P	<0.1 ppm Total P
Algae Removal	2-4	100 ppm SS	10-20 ppm SS
Denitrification	3-4	10-15 ppm TN	<3 ppm TN
Oil Removal	2-6	<50 ppm O&G	5-10 ppm O&G

Parkson™ Treating Water Right

50 YEARS 2010

Fort Lauderdale
Chicago
Montreal
Kansas City
Dubai

1.888.PARKSON
technology@parkson.com
www.parkson.com

FILT-DSF_061212

NOTES:

1. PRELIMINARY INFORMATION, NOT FOR CONSTRUCTION.
2. BOTTOM CONES MADE FROM FRP.
3. PLENUM AREA FILLED WITH CONCRETE.
4. VERIFY WALL THICKNESS.
5. ALL TOLERANCES ± 3/8 IN. UNLESS OTHERWISE NOTED.
6. ALL WALLS SHALL BE SMOOTH.
7. 8.125 Cu. Yd. OF CONCRETE FILL IS REQUIRED UNDER EACH CONE

CONTROL PANEL NOTES:

1. ELECTRICAL REQUIREMENTS 120 VAC ,1PH ,60Hz
2. PNEUMATIC REQUIREMENTS:
   2.6 SCFM PER MODULE @ 35 PSIG

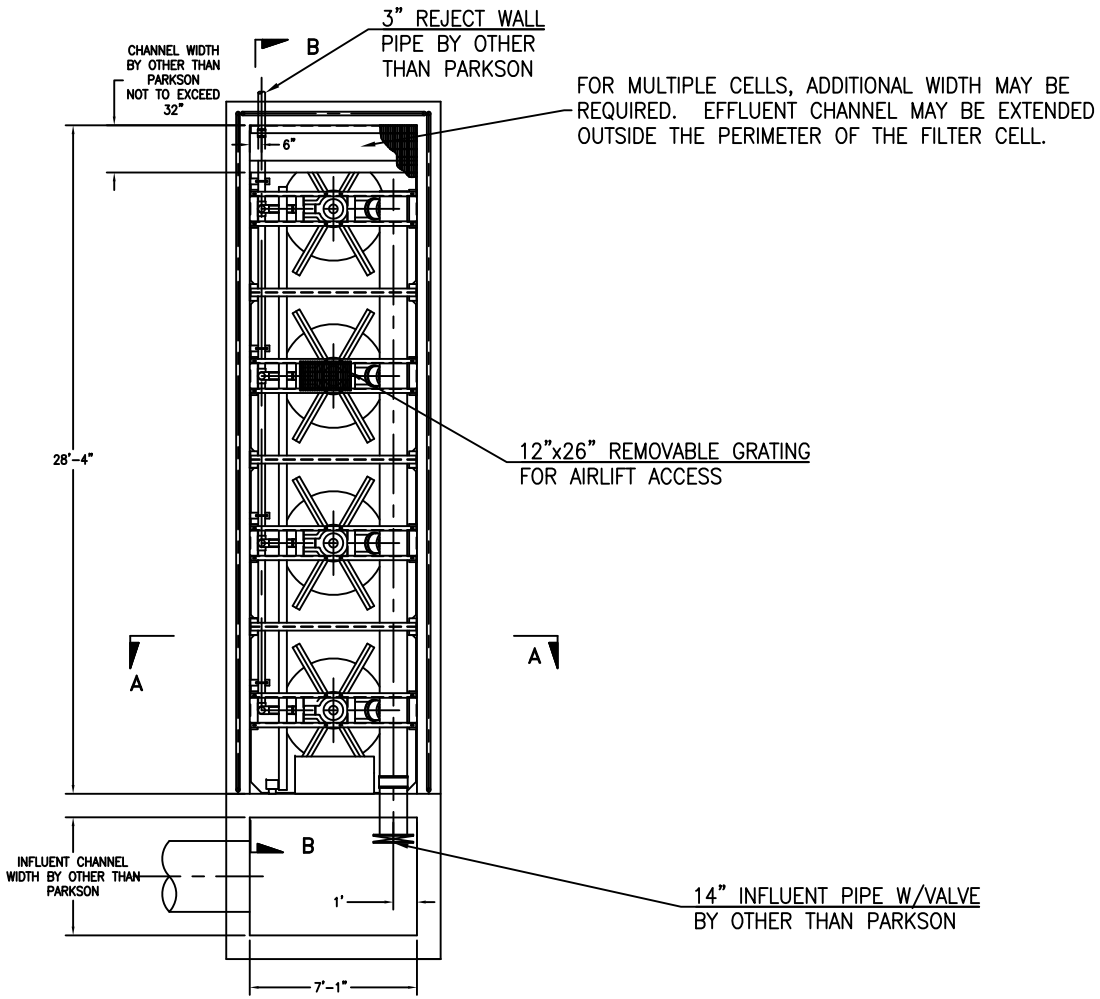

This drawing and all appurtenant matter contains information proprietary to PARKSON CORPORATION and is loaned subject to return upon demand and must not be reproduced, copied, loaned, revealed, nor used for any purpose other than that for which it is specifically furnished without expressed written consent of PARKSON CORPORATION. The Owner, Project Engineer, and all others involved with the project design must implement and follow all safety standards required by local, state and federal laws when incorporating Parkson Corporation equipment into the overall project design. Parkson Corporation will not be responsible for location and/or placement of equipment in the plant design, nor is Parkson Corporation responsible for plant safety design and for the failure to follow appropriate safety precautions in the operation and maintenance of Parkson Corporation equipment.

REV	DESCRIPTION	DATE	BY

__PRELIMINARY __APPROVAL

X INFORMATION __CERTIFIED

THIS DRAWING IS LIMITED TO FUNCTIONAL DESIGN, GENERAL ARRANGEMENT AND CLEARANCE. NO RESPONSIBILITY IS ACCEPTED BY PARKSON CORPORATION FOR OTHER DIMENSIONS, QUANTITIES, OR COORDINATION WITH OTHER EQUIPMENT OR DRAWINGS EXCEPT AS STATED IN PURCHASE ORDER.

DRAWN BY	DATE
CHECKED BY	DATE
SCALE 3/16"=1'-0"	SIZE B

Parkson™

PROJECT NAME

REFERENCE INFORMATION

TITLE
DYNASAND(R) CONTINOUS BACKWASH SAND FILTER
GENERAL ARRANGEMENT
FOUR (4) MODULES PER CELL

DRAWING NO
SALES
SHEET 1 OF 2

REV

LOADING CONDITIONS ON CONCRETE FLOOR PER CELL

144.0 KIPS OF DRY SAND
6.0 KIPS OF FILTER INTERNALS
112.8 KIPS OF WATER
132.0 KIPS OF CONCRETE FILL

TOTAL:394.8 KIPS OR 1974 #/SQ.FT.

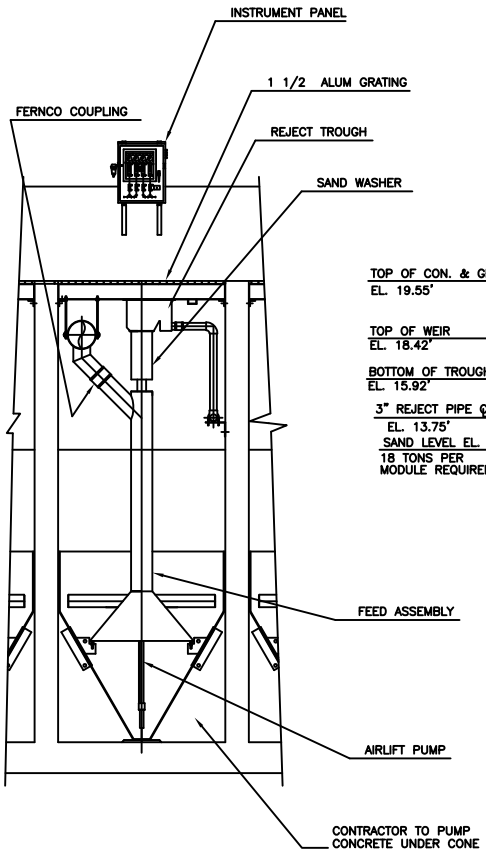

SECTION A–A

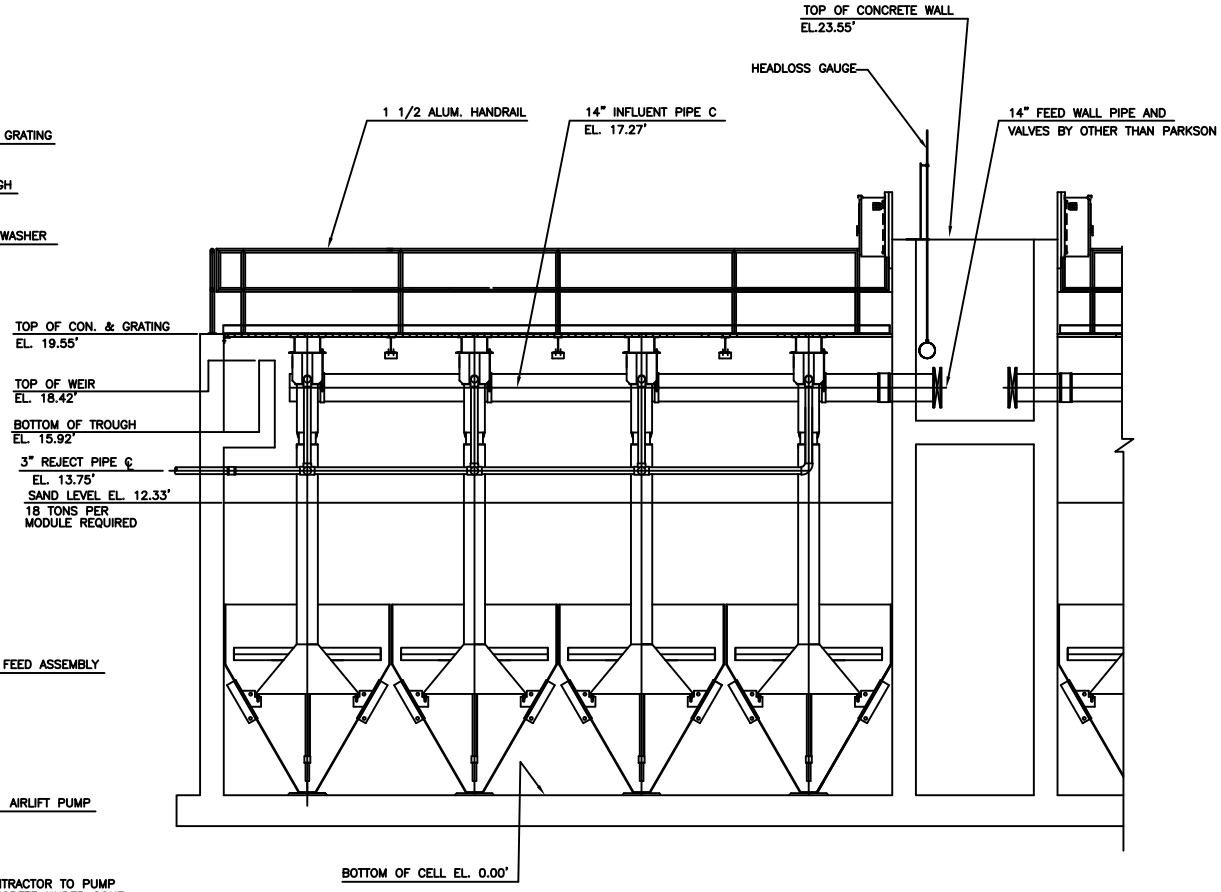

SECTION B–B

This drawing and all appurtenant matter contains information proprietary to PARKSON CORPORATION and is loaned subject to return upon demand and must not be reproduced, copied, loaned, revealed, nor used for any purpose other than that for which it is specifically furnished without expressed written consent of PARKSON CORPORATION. The Owner, Project Engineer, and all others involved with the project design must implement and follow all safety standards required by local, state and federal laws when incorporating Parkson Corporation equipment into the overall project design. Parkson Corporation will not be responsible for location and/or placement of equipment in the plant design, nor is Parkson Corporation responsible for plant safety design and for the failure to follow appropriate safety precautions in the operation and maintenance of Parkson Corporation equipment.

REV	DESCRIPTION	DATE	BY

__PRELIMINARY __APPROVAL
X INFORMATION __CERTIFIED

THIS DRAWING IS LIMITED TO FUNCTIONAL DESIGN, GENERAL ARRANGEMENT AND CLEARANCE. NO RESPONSIBILITY IS ACCEPTED BY PARKSON CORPORATION FOR OTHER DIMENSIONS, QUANTITIES, OR COORDINATION WITH OTHER EQUIPMENT OR DRAWINGS EXCEPT AS STATED IN PURCHASE ORDER.

DRAWN BY	DATE
CHECKED BY	DATE
SCALE 3/16"=1'-0"	SIZE B

Parkson™

PROJECT NAME

REFERENCE INFORMATION

TITLE
DYNASAND(R) CONTINOUS BACKWASH SAND FILTER
DEEP BED ELEVATIONS
FOUR (4) MODULES PER CELL

DRAWING NO
SALES
SHEET 2 OF 2

REV

SCHREIBER

FuzzyFilter

A unique innovative system for filtration rates of 40 gpm/ft^2 and greater.

SCHREIBER FuzzyFilter

The Schreiber *Fuzzy Filter* is an innovative and cost effective compressible media filter for water and wastewater treatment systems. The *Fuzzy Filter* system is compact, modular, and easily adaptable for numerous applications. The *Fuzzy Filter*, operating in an upflow design, achieves an exceptionally high rate of solids removal through the use of compressible synthetic fiber spheres. The low density and high porosity of the media result in more solids captured per volume of media. Because the filter media is compressible, the porosity of the filter bed can be altered to suit influent characteristics. The filter media also represents a departure from conventional filter media in that the fluids to be filtered flow through the media as opposed to flowing around the media as in sand and anthracite filters. These innovative features permit dramatically higher hydraulic loadings of 40 GPM/ft^2 and greater. Other filtration systems are typically limited to loadings of only 2 to 6 GPM/ft^2.

The *Fuzzy Filter* utilizes air scouring during the wash cycle to clean the media. Influent continues to enter the filter (filtered water is not necessary for washing) while an external blower supplies air to the diffusers located in the bottom of the filter to violently agitate the media. The media, which is retained between two perforated plates, is subjected to vigorous air scouring to free captured solids. Liberated solids continuously exit the filter with the wash water passing through the vessel. After the washing cycle, the media is returned to its compressed state and filtration is resumed.

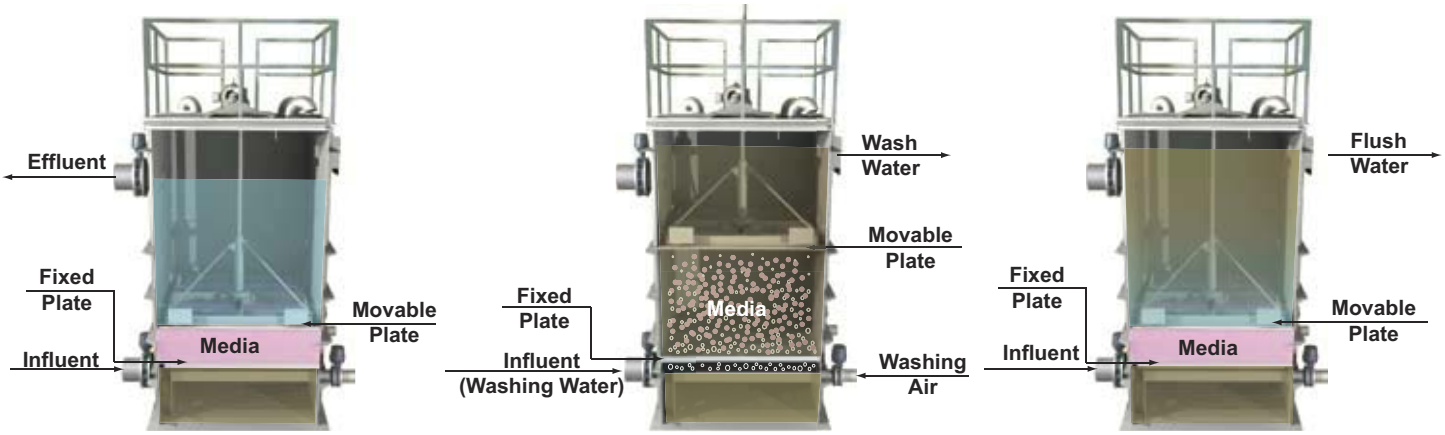

Filtration Cycle | Wash Cycle | Flush Cycle

PILOT TESTING

Schreiber maintains ***Fuzzy Filter*** pilot units for testing and demonstration purposes. All units are trailer mounted with complete automatic controls and data logging capability.

VALIDATION

Accepted for California Water Recycling Criteria (Title 22).

SIZES

The Fuzzy Filter is available in 18", 2', 3', 4', 5', 6', 7', & 8' square units. Correspondingly, the Fuzzy Filter handles flows ranging from 0.13 MGD (18" filter) to 3.69 MGD (8' filter) at a loading rate of 40 GPM/ft^2. In addition to upflow filters, the Fuzzy Filter is also available in downflow configurations, in both gravity and pressure operation.

FEATURES

- High flow rate (40 GPM/ft^2 and greater)
- Low operating costs
- Ease of installation
- Dramatic space savings
- Completely enclosed structure
- Low wash water usage (1-2%)
- High solids storage capacity
- Flexibility through media bed compression
- No media loss
- Media life in excess of 10 years

APPLICATIONS

- Tertiary treatment
- Pre-filtration for reverse osmosis
- Cooling tower water
- Water reclamation/reuse
- Reclaimed water from food processing
- Pulp and paper process water
- Wet weather flows (CSO/SSO)
- Membrane Backwash Water

TITLE 22 ACCEPTED REUSE

10 state standards

100 SCHREIBER DRIVE | TRUSSVILLE, AL 35173 | T 205 655 7466 | F 205 655 7669 | SCHREIBERWATER.COM

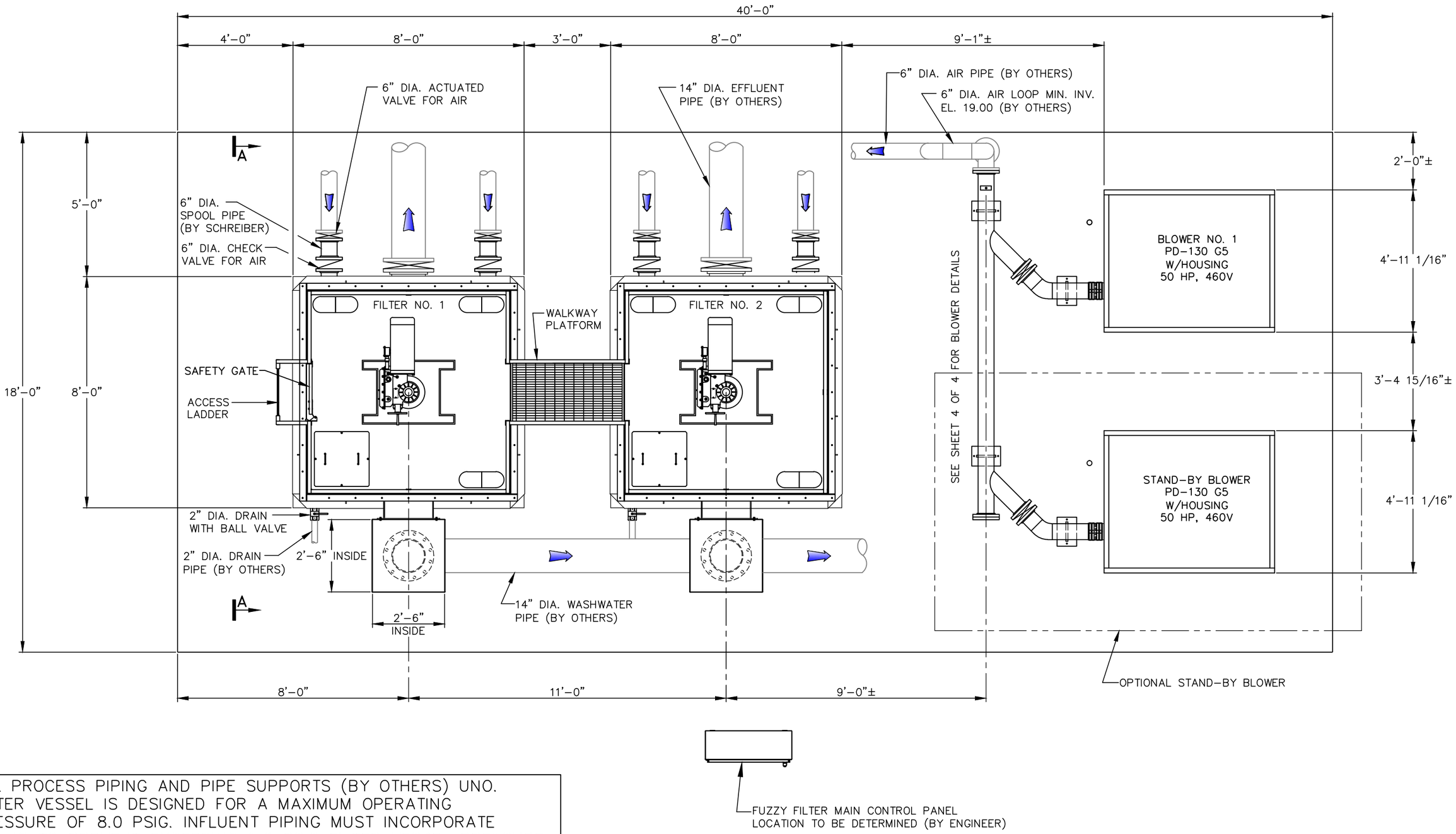

PLAN VIEW

★ALL PROCESS PIPING AND PIPE SUPPORTS (BY OTHERS) UNO.
★FILTER VESSEL IS DESIGNED FOR A MAXIMUM OPERATING PRESSURE OF 8.0 PSIG. INFLUENT PIPING MUST INCORPORATE MEANS TO PREVENT EXCEEDING 8.0 PSIG FILTER VESSEL PRESSURE.
★DIMENSIONS SHOWN FOR CONCRETE AND EQUIPMENT SPACING ON CONCRETE STRUCTURE ARE SUGGESTED BUT NOT MANDATORY. THE ENGINEER MAY DESIRE AN ALTERNATE LAYOUT TO BEST SUIT THE CONDITIONS AT THE PLANT SITE.

NOTICE:
THIS DRAWING IS THE PROPERTY OF SCHREIBER LLC AND IS LOANED SUBJECT TO THE CONDITION THAT IT SHALL NOT BE REPRODUCED, COPIED, LOANED OR OTHERWISE DISPOSED OF DIRECTLY OR INDIRECTLY. IT SHALL BE USED AS A MEANS OF REFERENCES TO WORK FURNISHED BY THIS COMPANY ONLY AND IS NOT TO BE SUBMITTED.

NOTES:
1. IF SITE ELEVATIONS ARE UNKNOWN, REFERENCE ELEVATION IS 0.0 AT BOTTOM OF EQUIPMENT STRUCTURE. OTHERWISE, ELEVATIONS ARE BASED ON ACTUAL FLOW AND SITE CONDITIONS.
2. THIS DRAWING MAY NOT CORRESPOND WITH OTHER DRAWINGS.
3. HYDRAULIC CALCULATIONS MADE WITH GIVEN OR ASSUMED FLOW CHARACTERISTICS, ENGINEER IS RESPONSIBLE FOR ACTUAL HYDRAULICS.

REPRESENTATIVE	DRAWN BY	PROJECT
	djp	STANDARD 7' x 7' FUZZY FILTER
DRAWING NAME	**DATE**	
STANDARD_7x7FF_1 PD-130 G5R2	1/30/15	

SCHREIBER
205-655-7466 SCHREIBERWATER.COM

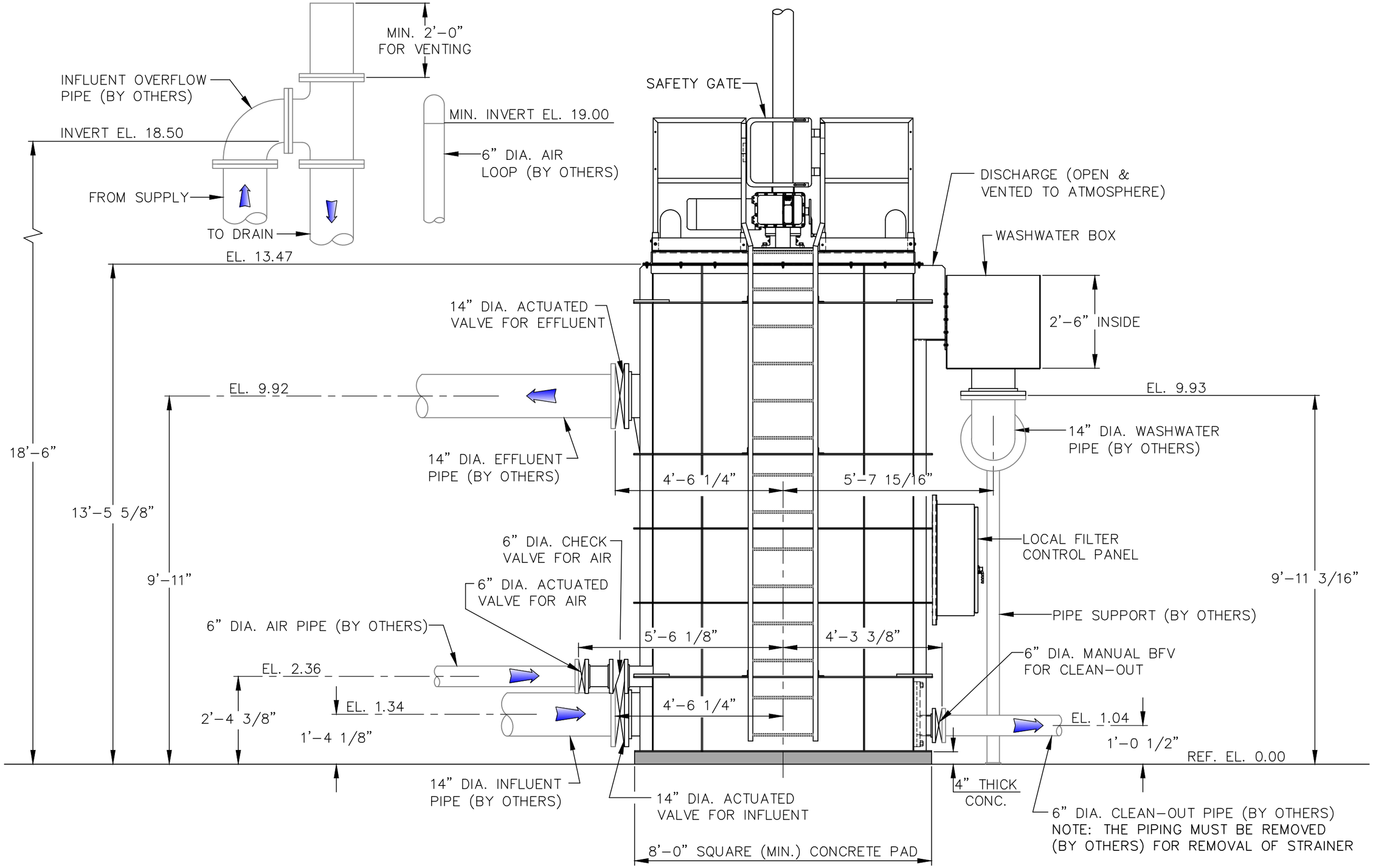

VIEW A-A

NOTE: 2" DIA. DRAIN NOT SHOW ON DRAWING FOR CLARITY

NOTICE:
THIS DRAWING IS THE PROPERTY OF SCHREIBER LLC AND IS LOANED SUBJECT TO THE CONDITION THAT IT SHALL NOT BE REPRODUCED, COPIED, LOANED OR OTHERWISE DISPOSED OF DIRECTLY OR INDIRECTLY. IT SHALL BE USED AS A MEANS OF REFERENCES TO WORK FURNISHED BY THIS COMPANY ONLY AND IS NOT TO BE SUBMITTED.

NOTES:
1. IF SITE ELEVATIONS ARE UNKNOWN, REFERENCE ELEVATION IS 0.0 AT BOTTOM OF EQUIPMENT STRUCTURE. OTHERWISE, ELEVATIONS ARE BASED ON ACTUAL FLOW AND SITE CONDITIONS.
2. THIS DRAWING MAY NOT CORRESPOND WITH OTHER DRAWINGS.
3. HYDRAULIC CALCULATIONS MADE WITH GIVEN OR ASSUMED FLOW CHARACTERISTICS, ENGINEER IS RESPONSIBLE FOR ACTUAL HYDRAULICS.

REPRESENTATIVE	DRAWN BY	PROJECT
	djp	STANDARD 7' x 7' FUZZY FILTER
DRAWING NAME	**DATE**	
STANDARD_7x7FF_2R2	12/21/10	

SCHREIBER
205-655-7466 SCHREIBERWATER.COM

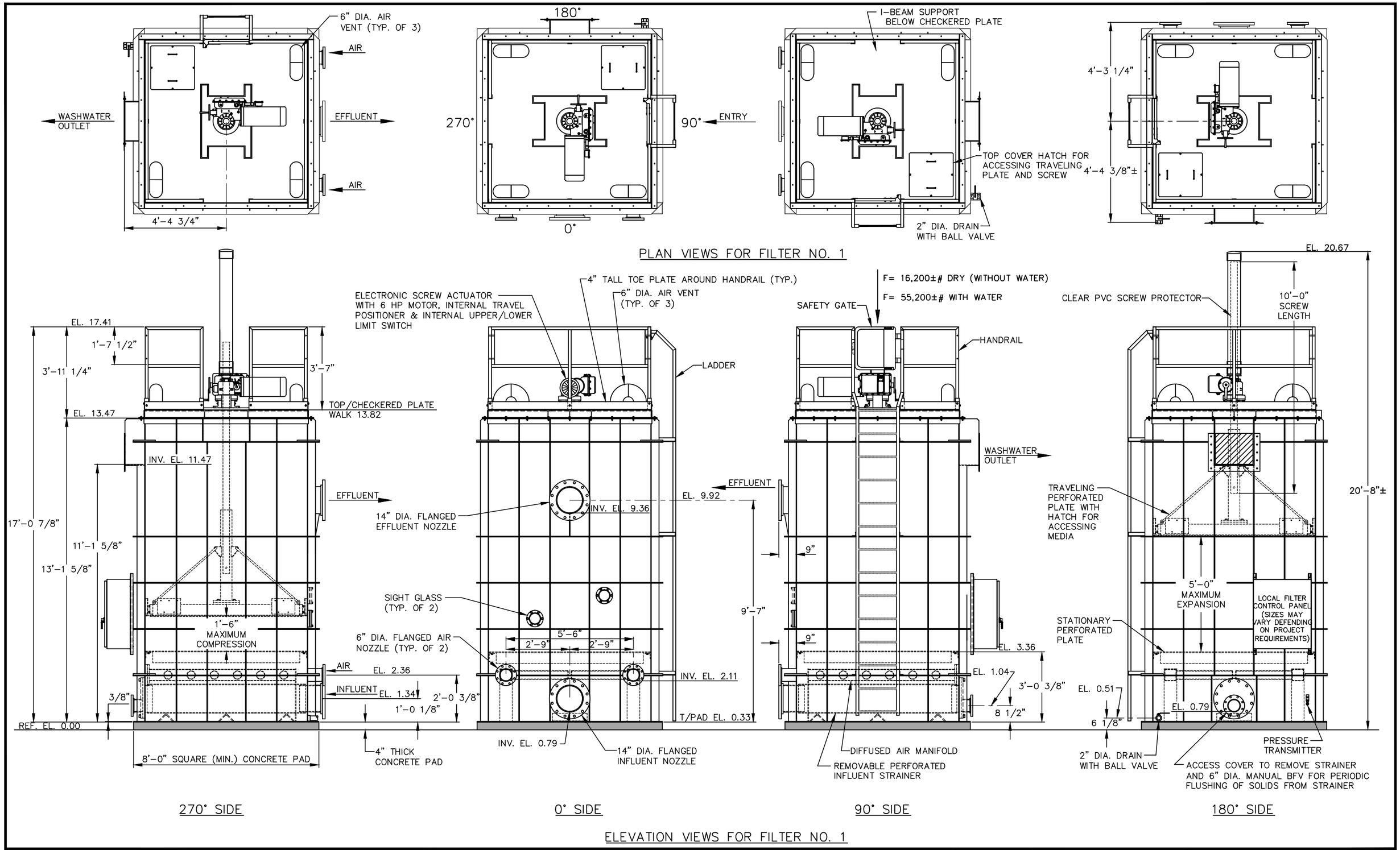

NOTICE:
THIS DRAWING IS THE PROPERTY OF SCHREIBER LLC AND IS LOANED SUBJECT TO THE CONDITION THAT IT SHALL NOT BE REPRODUCED, COPIED, LOANED OR OTHERWISE DISPOSED OF DIRECTLY OR INDIRECTLY. IT SHALL BE USED AS A MEANS OF REFERENCES TO WORK FURNISHED BY THIS COMPANY ONLY AND IS NOT TO BE SUBMITTED.

NOTES:
1. IF SITE ELEVATIONS ARE UNKNOWN, REFERENCE ELEVATION IS 0.0 AT BOTTOM OF EQUIPMENT STRUCTURE. OTHERWISE, ELEVATIONS ARE BASED ON ACTUAL FLOW AND SITE CONDITIONS.
2. THIS DRAWING MAY NOT CORRESPOND WITH OTHER DRAWINGS.
3. HYDRAULIC CALCULATIONS MADE WITH GIVEN OR ASSUMED FLOW CHARACTERISTICS, ENGINEER IS RESPONSIBLE FOR ACTUAL HYDRAULICS.

REPRESENTATIVE	DRAWN BY	PROJECT
	djp	STANDARD 7' x 7' FUZZY FILTER
DRAWING NAME	DATE	
STANDARD_7x7FF_3R2	12/21/10	

SCHREIBER
205-655-7466 SCHREIBERWATER.COM

SHEET 3 OF 4 | REVISION 2

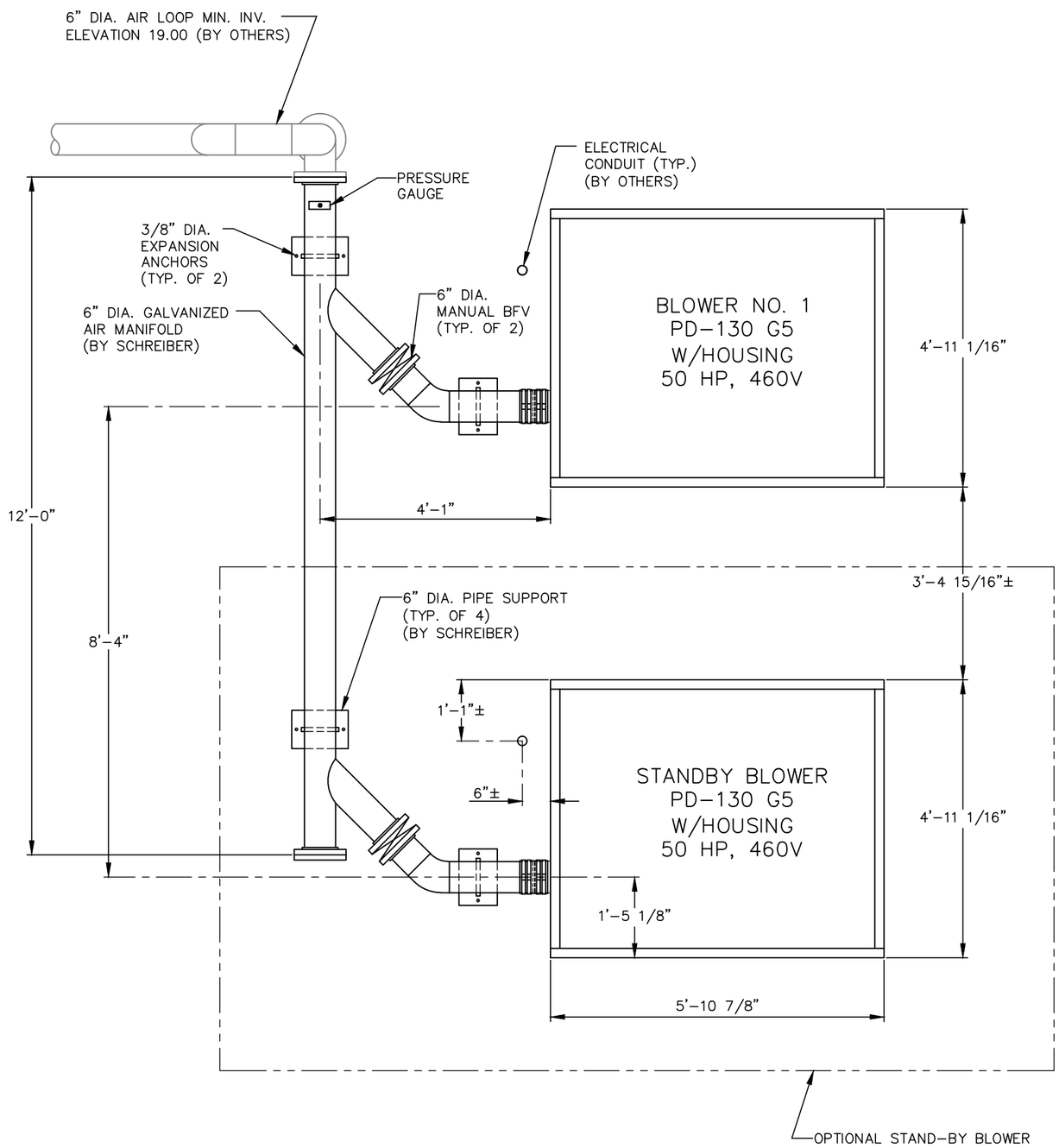

PLAN VIEW OF BLOWERS

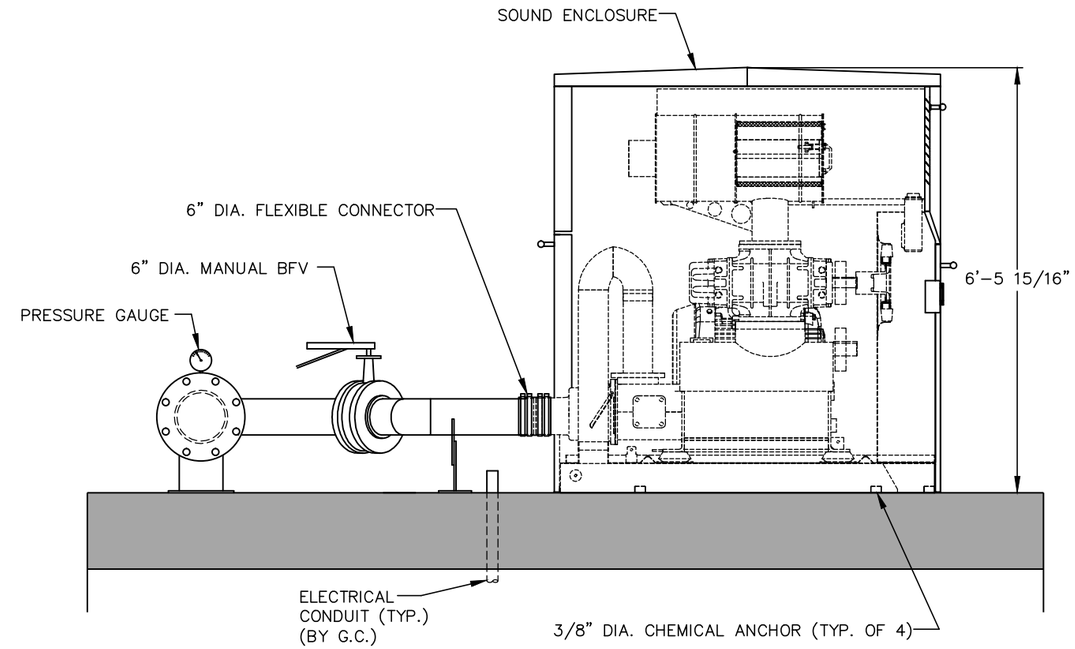

ELEVATION VIEW OF BLOWER

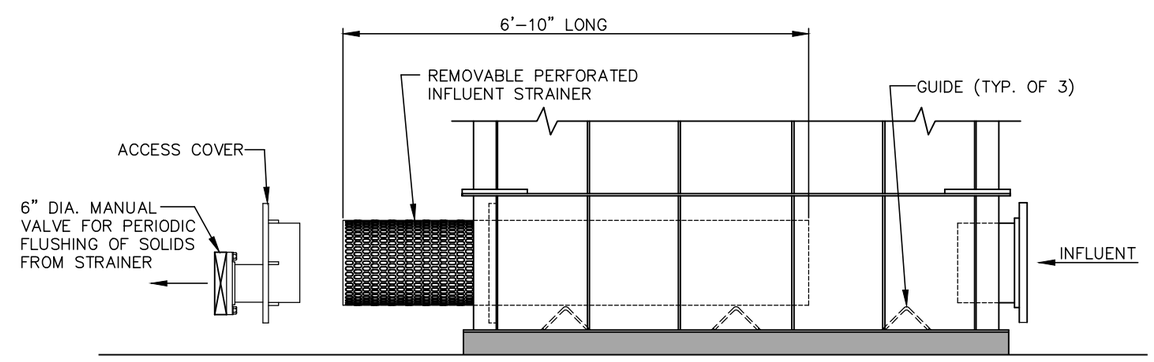

NOTE: 7'-0" MINIMUM CLEARANCE REQUIRED FOR STRAINER REMOVAL

CLEAN-OUT DETAIL
(FOR MANUAL SOLIDS REMOVAL)

NOTICE:
THIS DRAWING IS THE PROPERTY OF SCHREIBER LLC AND IS LOANED SUBJECT TO THE CONDITION THAT IT SHALL NOT BE REPRODUCED, COPIED, LOANED OR OTHERWISE DISPOSED OF DIRECTLY OR INDIRECTLY. IT SHALL BE USED AS A MEANS OF REFERENCES TO WORK FURNISHED BY THIS COMPANY ONLY AND IS NOT TO BE SUBMITTED .

NOTES:
1. IF SITE ELEVATIONS ARE UNKNOWN, REFERENCE ELEVATION IS 0.0 AT BOTTOM OF EQUIPMENT STRUCTURE. OTHERWISE, ELEVATIONS ARE BASED ON ACTUAL FLOW AND SITE CONDITIONS.
2. THIS DRAWING MAY NOT CORRESPOND WITH OTHER DRAWINGS.
3. HYDRAULIC CALCULATIONS MADE WITH GIVEN OR ASSUMED FLOW CHARACTERISTICS, ENGINEER IS RESPONSIBLE FOR ACTUAL HYDRAULICS.

REPRESENTATIVE	DRAWN BY	PROJECT
	djp	STANDARD 7' x 7' FUZZY FILTER
DRAWING NAME	DATE	
STANDAR_7x7FF_4 PD-130 G5	1/30/15	

SCHREIBER
205-655-7466 SCHREIBERWATER.COM

SHEET 4 OF 4 | REVISION

Appendix D

Ballasted Floc Separation
Manufacturer's Literature & Dimensions
(Actiflo® and CoMag®)

VEOLIA

ACTIFLO® Process

For Wet Weather and Wastewater Treatment

WATER TECHNOLOGIES

ACTIFLO®
Microsand Ballasted Clarification Process

Actiflo is a high rate, compact process developed by Veolia Water Technologies. The process operates with microsand which enhances floc formation and acts as a ballast to aid in rapid settlement of coagulated material.

The Actiflo process can be used at various stages of wastewater treatment including: enhanced primary treatment, wet weather clarification, high rate secondary clarification and final polishing for the removal of solids, phosphorus and metals.

Typical ACTIFLO Performance

Application	loading Rates gpm/sf	Phosphorus (mg/l)	sBOD (mg/l)	BOD_5 (mg/l)	TSS (mg/l)	UV Transmittiance (%)
Wet Weather	60	0.5 - 1.5	10 - 20	< 30	< 20	50 - 70
*Bio ACTIFLO™	45	0.1 - 1.0	1 - 10	< 20	< 15	60 - 70
Secondary	20	0.5 - 1.5	1 - 10	< 10	< 10	65 - 75
Tertiary	45	as low as 0.05	< 10	< 10	≤ 5	75 - 90

*Pathogen removal, post disinfection, is equivalent to or exceeds that of a conventional activated sludge plant

ACTIFLO Compactness Displaying Its True Potential

The microsand ballasted flocs display unique settling characteristics, which allow for clarifier designs with very high overflow rates and short retention times. These designs result in footprints that are 5 times smaller lamella clarifiers or dissolved air flotation (DAF) and up to 20 times smaller than conventional clarification systems.

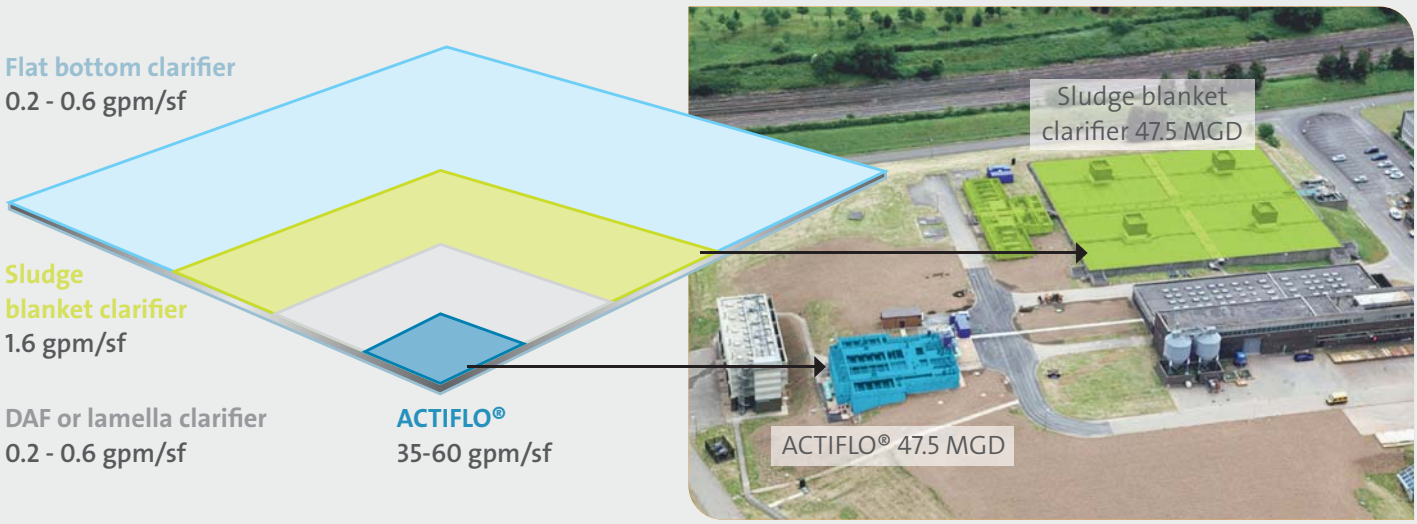

*Surface water treatment reference

CSO/SSO Parallel Treatment with ACTIFLO

Recirculation: *settled material is pumped to the hydrocyclone for separaration and microsand recovery*

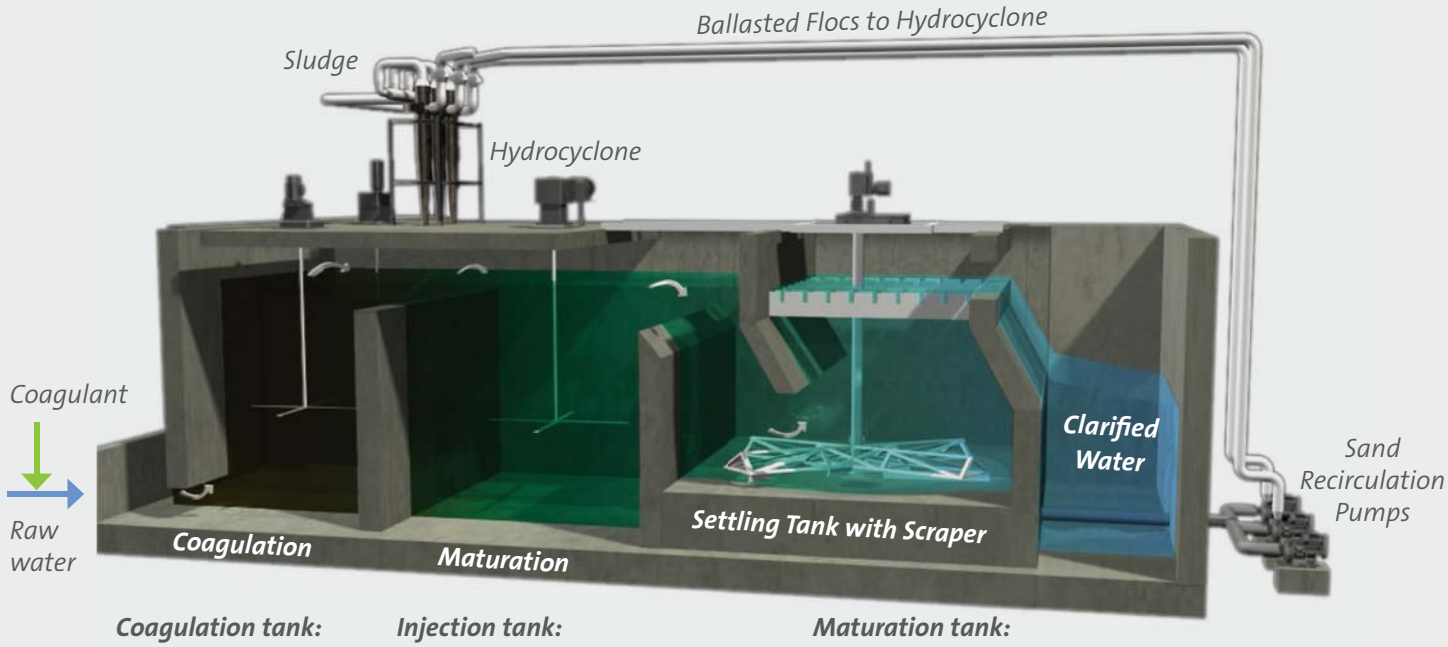

Coagulation tank: *pin floc formation*

Injection tank: *ballasted floc formation begins and microsand is re-injected*

Maturation tank: *ballasted floc formation continues with optimum mixing gradients*

During peak wet weather flow conditions, many plants need to divert a portion of the total plant flow around their biological treatment process. To achieve high levels of TSS and particulate BOD removal of these diverted excess flows, the Actiflo process can be installed at the treatment plant or at a satellite facility within the collection system. The Actiflo process can be fully automated and the process train(s) can sit idle for extended periods of time and still be fully operational within 15 minutes of start-up.

CSO/SSO Treatment BIOACTIFLO™

If flow diversion is not an option or the TSS and particulate BOD removal with Actiflo alone are not enough, a biological solids contact tank can be incorporated into the treatment flow path to improve soluble BOD removal through the system.

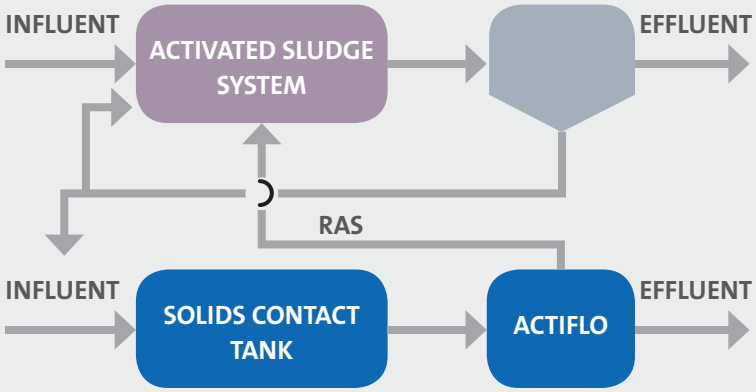

Return activated sludge (RAS) from the existing clarifiers is combined with the excess flows into a solids contact tank. A targeted mixed liquor suspended solids (MLSS) concentration is maintained in the contact tank to facilitate rapid uptake of soluble biological oxygen demand (BOD) via contact stabilization. Clarification with ACTIFLO follows, producing exceptional TSS and total BOD removal rates that allow for efficient disinfection.

Tertiary Treatment with ACTIFLO

With tighter discharge limits being imposed on wastewater treatment plants the need for a cost effective, flexible process has evolved. Over the years, the Actiflo process has proven its effectiveness in meeting extremely low phosphorus, metals and TSS limits.

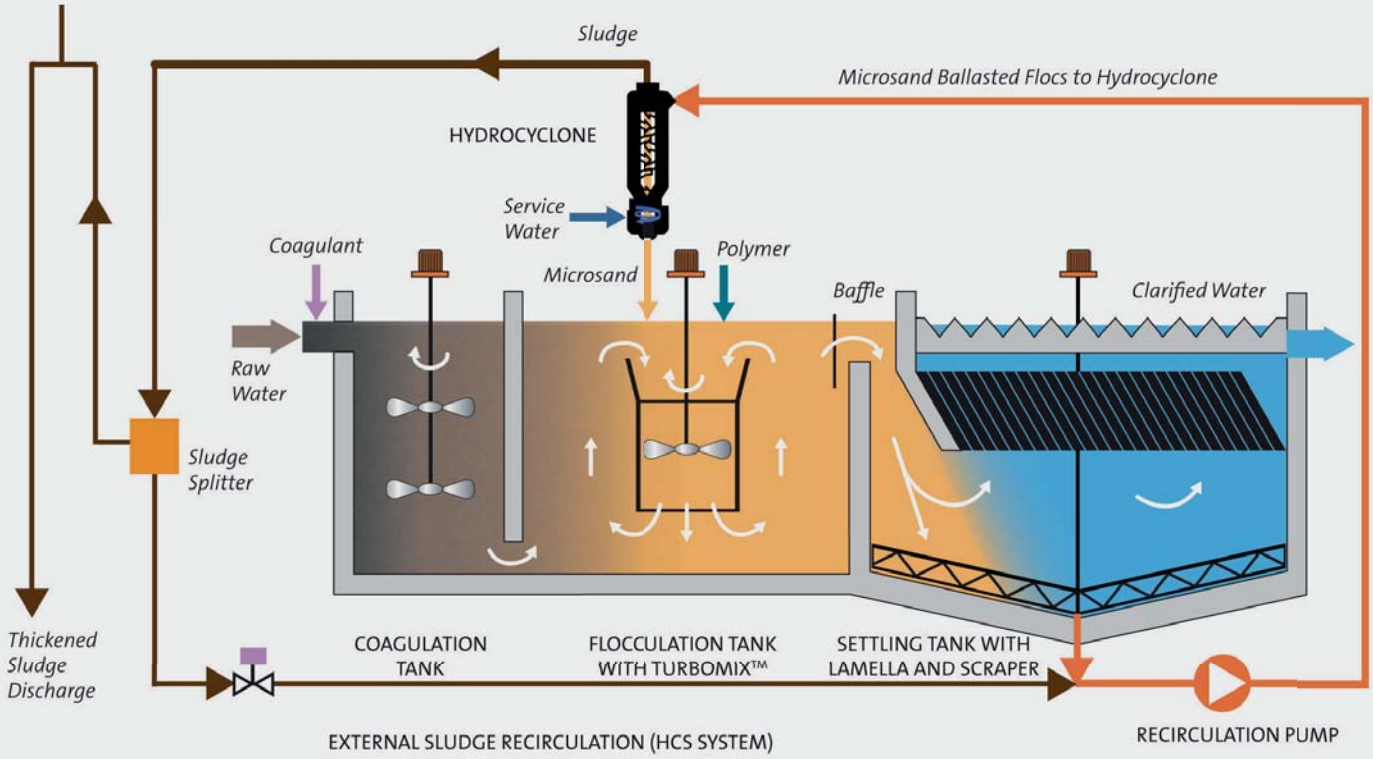

Process Benefits

- Small process footprint; suited for restricted spaces and existing basin retrofits
- Low system headloss, incorporates into most existing hydraulic profiles
- Reduced civil engineering costs
- High degree of operational flexibility
- Minimum equipment to maintain, all easily accessible

For tertiary treatment applications, the Actiflo process offers:

- Ability to treat a wide range of influent phosphorus levels to extremely low limits
- Flexibility to meet future limits (phosphorus, metals) without modifying the process train
- The same tertiary treatment trains can also be used to treat wet weather flows
- Treatment of flows with high solids concentration without impacting effluent quality (solids washout from secondary clarifiers during peak flow)
- Reduction in sludge volume by incorporating a HCS system

Worldwide References

The Actiflo process is currently in operation worldwide in small communities and large metropolitan areas, as well as in various installations for the treatment of industrial process water and effluents.

Syracuse, NY
Onondaga County wastewater treatment plant

ACTIFLO® for tertiary polishing and phosphorus removal downstream of biofiltration (BIOSTYR®) 126 MGD achieving < 0.10 mg/L Total P

Kaukauna, WI
Heart of Valley wastewater treatment facility

SSO/Primary, ACTIFLO® followed by BIOSTYR®
60 MGD Nominal, 2 x 30 MGD
70 MGD Peak Capacity, 2 x 35 MGD

Geneva, Switzerland
Aire wastewater treatment plant

ACTIFLO® for primary, wet weather and biofilter backwash water treatment (BIOSTYR®) 137 MGD

Barcelona, Spain
Baix Llobregat municipal wastewater reuse plant

Reuse of 5 millions m/year of treated water for irrigation
ACTIFLO® for tertiary treatment upstream of disc filtration 79.8 MGD

Lawrence, KS
Lawrence wastewater treatment plant

ACTIFLO® for wet weather flow treatment 40 MGD

Paris, France
Seine-Aval wastewater treatment plant

ACTIFLO® for wet weather treatment or tertiary treatment (dry weather) 686.8 MGD

Sydney, Australia
Illawarra wastewater reclamation plant

ACTIFLO® for wet weather treatment upstream of UV disinfection 84.5 MGD

Resourcing the world

Veolia Water Technologies
Kruger Inc. / 4001 Weston Parkway / Cary, NC 27513
Phone: 919.677.8310 • Fax: 919.677.0082
usmunicipal@veolia.com • www.krugerusa.com

© Veolia Water Technologies Communications - 2015 - © Veolia Photo Library - (150066)

TIE POINT DETAILS		
CONN. POINT	DESCRIPTION	TYPE/SIZE
TP01	RAW WATER INLET	12" FLANGE
TP02	CLARIFIED WATER OUTLET	14" FLANGE
TP03	SLUDGE OUTLET	3" FLANGE
TP04	SLUDGE OUTLET (OPTIONAL)	3" FLANGE
TP05	POLYMER INLET	1/2" FLANGE
TP06	SETTLING TANK DRAIN	4" FLANGE
TP07	COAGULATION TANK DRAIN	2" FLANGE
TP08	MATURATION TANK DRAIN	2" FLANGE
TP09	SERVICE WATER INLET FOR SLUDGE RECIRCULATION LINE	1-1/2" FLANGE
ALL FLANGES ANSI B16.1		

NOTES:
1. EQUIPMENT LISTED AS SHIPPED LOOSE SHALL BE INSTALLED BY INSTALLATION CONTRACTOR
2. MINIMUM CLEARANCE ABOVE TOP OF TANK: 8' 6"
3. DRY WEIGHT: XXXX
   WET WEIGHT: XXXX

ITEM	DESCRIPTION	SHIPS
1	MULTI-BASIN, SHOP WELDED, ACTIFLO TANK ASSY	ASSEMBLED
2	MIXERS	LOOSE
3	SCRAPER DRIVE	LOOSE
4	GRATING	ASSEMBLED
5	HYDROCYCLONE SUPPORT ASSY	LOOSE
6	HANDRAILS	LOOSE
7	JUNCTION BOXES	ASSEMBLED
8	CAGED LADDER	LOOSE
9	RECIRCULATION PUMP	LOOSE
10	RECIRCULATION PIPING	LOOSE
11	(NOT SHOWN) INSTRUMENTATION	LOOSE
12	(NOT SHOWN) LEVEL SWITCH	LOOSE
13	(NOT SHOWN) INLET FLOWMETER (OPTIONAL)	LOOSE
14	(NOT SHOWN) CONTROL PANEL	LOOSE
15	(NOT SHOWN) WIRING/CONDUIT	ASSEMBLED

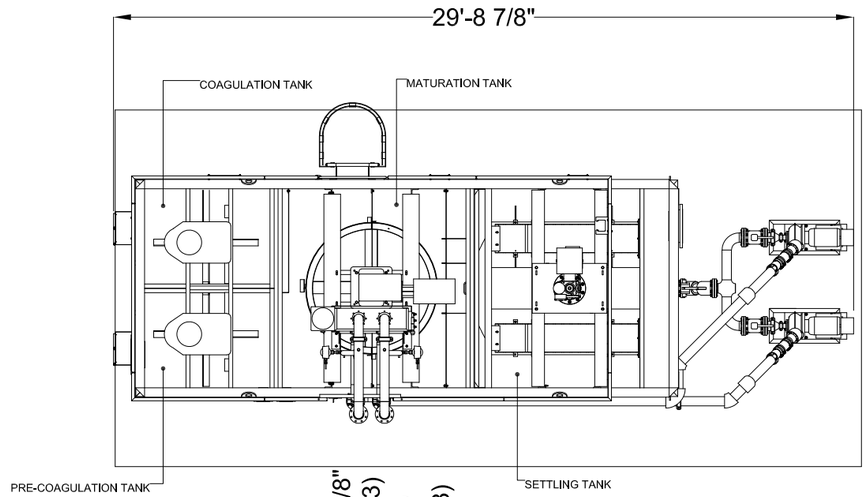

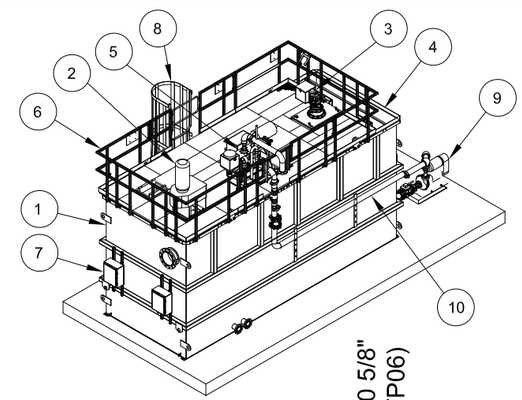

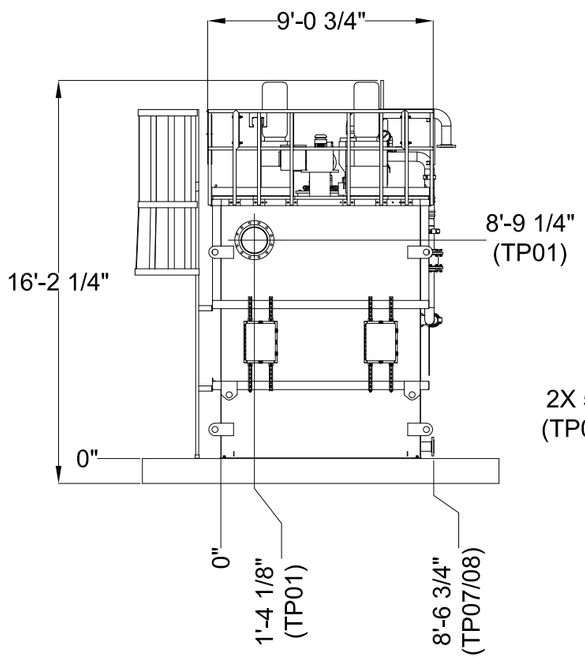

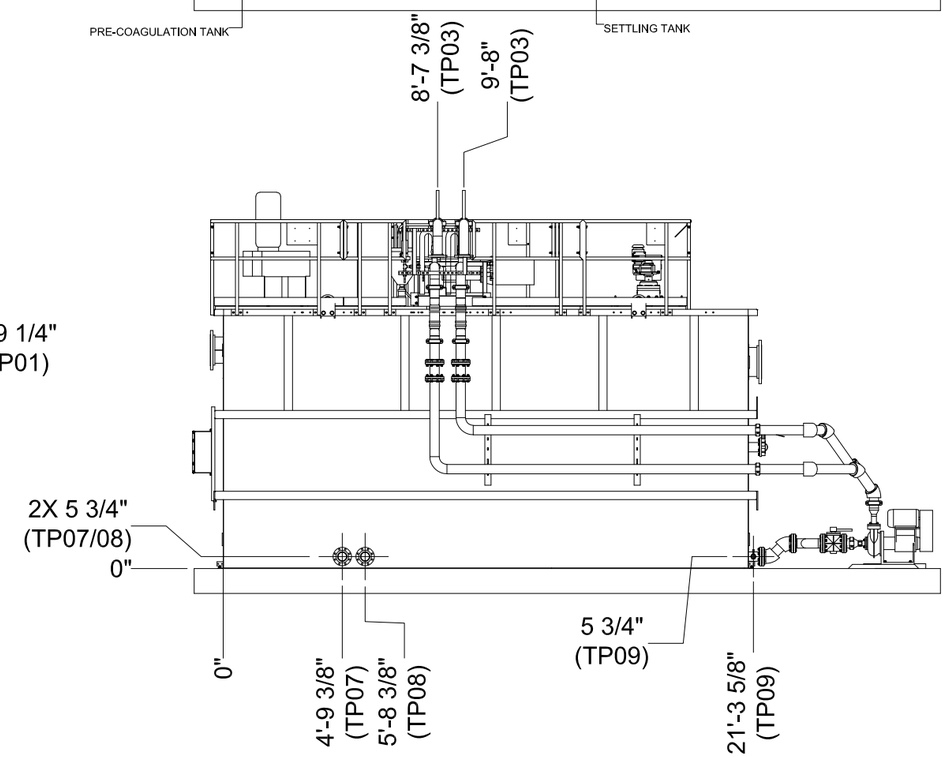

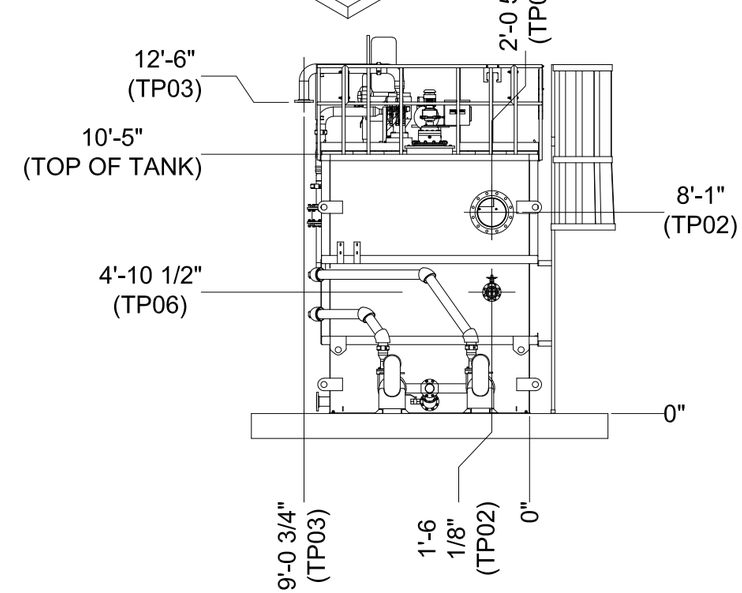

REV		DRAWN	APPR	DATE

ALL INFORMATION CONTAINED ON THIS DOCUMENT IS THE PROPERTY OF KRUGER AND/OR ITS AFFILIATES. THE DESIGN CONCEPTS AND INFORMATION CONTAINED HEREIN ARE PROPRIETARY TO KRUGER AND ARE SUBMITTED IN CONFIDENCE. THEY ARE NOT TRANSFERABLE AND MUST BE USED ONLY FOR THE PURPOSE FOR WHICH THE DOCUMENT IS EXPRESSLY SUBMITTED. THEY MUST NOT BE DISCLOSED, REPRODUCED, LOANED OR USED IN ANY OTHER MANNER WITHOUT THE EXPRESS WRITTEN CONSENT OF KRUGER. KRUGER ASSUMES NO RESPONSIBILITY OR LIABILITY FOR THE USE OF THIS DOCUMENT OR THE DESIGN CONCEPTS AND INFORMATION CONTAINED HEREIN FOR ANOTHER PROJECT OR IN A MANNER THAT DOES NOT RELATE TO THE FITNESS OR PURPOSE OF THIS DOCUMENT. IN NO EVENT SHALL THIS DOCUMENT OR THE DESIGN CONCEPTS AND INFORMATION CONTAINED HEREIN BE USED IN ANY MANNER DETRIMENTAL TO THE INTEREST OF KRUGER. ALL PATENT RIGHTS ARE RESERVED ACCEPTANCE OF THE DELIVERY OF THIS DOCUMENT CONSTITUTES AGREEMENT TO THESE TERMS AND CONDITIONS.

VEOLIA
krugerusa.com

ACTIFLO PACKAGE PLANT
GENERAL ARRANGEMENT
ACP2-45

1/8" ON LINEAR DIMENSIONS .030 = .X (X.XXX) = REFERENCE
1/32" ON HOLE DIAMETER & LOCATIONS .015 = .XX X.XXX = INSPECTION
1° ON ANGULAR DIMENSIONS .005 = .XXX BREAK SHARP EDGES

SCALE	DRAWING NO	SHEET	REV
1:60	-	1 of 1	A

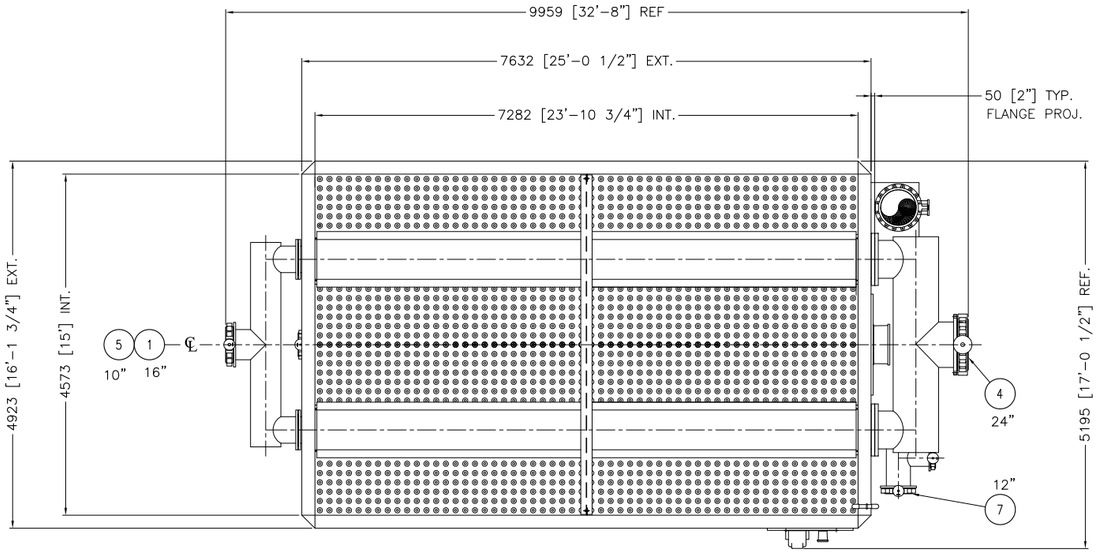

PLAN VIEW

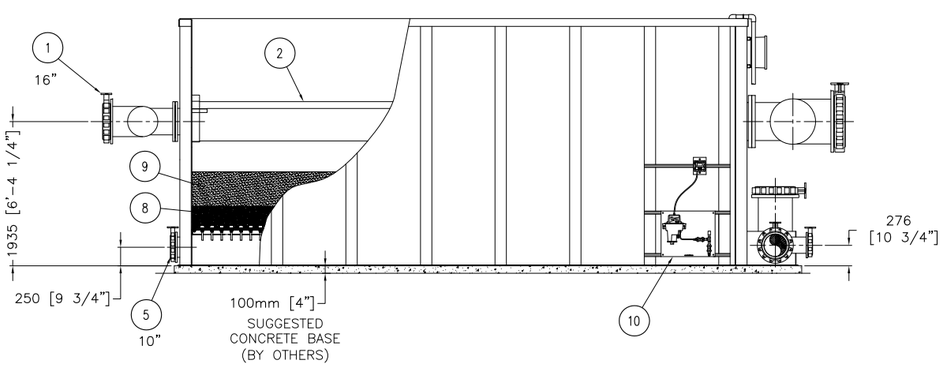

ELEVATION

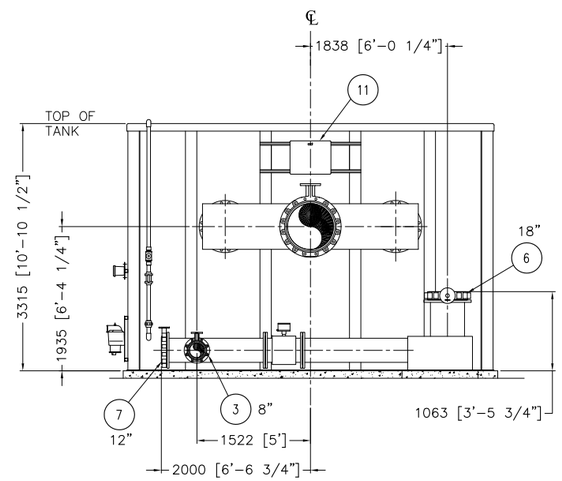

RIGHT SIDE VIEW

1. WATER INLET
2. BACKWASH WATER TROUGH
3. FILTERED WATER TO WASTE
4. BACKWASH WATER TO WASTE
5. BACKWASH AIR INLET
6. BACKWASH WATER INLET
7. FILTERED WATER
8. SAND
9. ANTHRACITE
10. FILTERED WATER TURBIDIMETER
11. JUNCTION BOX

PRELIMINARY

John Meunier

REV	DESCRIPTION	DATE	DWN	CHKD	APVD	ECN
B	GENERAL REVIEW	2006-07-24	C. M.	P. S.		
A	PRELIMINARY	2006-03-23	M.D.	P.S.		

CONFIDENTIALITY AND INTELLECTUAL PROPERTY NOTICE
ALL INFORMATION CONTAINED IN THIS DOCUMENT IS THE SOLE PROPERTY OF JOHN MEUNER INC. AND IS PROTECTED BY ALL APPLICABLE LAWS, INCLUDING BUT NOT LIMITED TO COPYRIGHT AND OTHER INTELLECTUAL PROPERTY LAWS. THE DESIGN CONCEPTS AND INFORMATION CONTAINED HEREIN ARE PROPRIETARY TO JMI AND ARE SUBMITTED IN CONFIDENCE. THEY ARE NOT TRANSFERABLE. THEY MUST BE USED ONLY FOR THE PURPOSE FOR WHICH THE DOCUMENT IS EXPRESSLY SUBMITTED AND NO IMPLICIT LICENCE IS GRANTED OTHERWISE BY THE SUBMISSION OF THIS DOCUMENT. THEY ARE CONFIDENTIAL AND PRIVILEGED INFORMATION OF JMI AND THEY MUST NOT BE DISCLOSED, REPRODUCED, LOANED, REMITTED OR USED IN ANY OTHER MANNER WITHOUT THE EXPRESS WRITTEN CONSENT OF JMI. JMI ASSUMES NO RESPONSIBILITY OR LIABILITY FOR THE USE OF THIS DOCUMENT OR THE DESIGN CONCEPTS AND INFORMATION CONTAINED HEREIN FOR ANOTHER PROJECT, OR IN A MANNER THAT DOES NOT RELATE TO THE FITNESS OR PURPOSE OF THIS DOCUMENT. IN NO EVENT SHALL THIS DOCUMENT OR THE DESIGN CONCEPTS AND INFORMATION CONTAINED HEREIN BE USED IN A MANNER DETRIMENTAL TO THE INTEREST OF JMI. ALL COPYRIGHT, PATENT AND OTHER INTELLECTUAL PROPERTY RIGHTS ARE RESERVED. ACCEPTANCE OF THE DELIVERY OF THIS DOCUMENT CONSTITUTES AGREEMENT TO THESE TERMS AND CONDITIONS.

		DATE
DESIGNER	M.D.	2004-08-19
CHECKER	P.S.	2004-08-19
ENGINEER		
MANAGER		
SCALE: 1 : 40		

TITLE: DUS-600 (FIXED LEVEL) GENERAL ARRANGEMENT

CLIENT

VEOLIA WATER Solutions & Technologies
VEOLIA Water Solutions & Technologies CANADA Inc.
4105 Sartelon Street,
Saint-Laurent, Qc, Canada H4S 2B3
Tel: (514) 334-7230 / Fax: (514) 334-5070

PROJECT	DRAWING	INTERNAL	SHEET	REV
– GA100		DUS6001	1 OF 1	B

STD: JMI_22x34_D_ANG | REF: | BAR = 1" AT PLOT SCALE

Jan 12, 2015 12:04:37 – L:\zzzEquipements\Préfabriqués\Veolia\DUS\GA100\DUS6001_B_DL_WS.dwg – simonp

evoqua
WATER TECHNOLOGIES

COMAG® BALLASTED CLARIFICATION SYSTEM

HIGH-PERFORMANCE PACKAGE PLANTS

SUPERIOR SOLIDS REMOVAL FOR WASTEWATER AND DRINKING WATER APPLICATIONS

The CoMag System is now available in pre-packaged units that provide an ultra-compact, fully functional and operator-friendly option for high-performance solids removal.

THE COMAG® SYSTEM

The CoMag® System improves chemical flocculation treatment in wastewater and drinking water applications by using magnetite (a readily available, fully inert iron ore) to ballast conventional chemical floc, resulting in rapid and reliable settling and clarification. The CoMag System settles floc up to 30 times faster than conventional treatments, enabling plants to increase capacity and clarifier performance. It also helps meet tighter regulations within existing tankage and smaller treatment volumes than alternative technologies, allowing facilities to reduce plant investment costs for upgrades. The CoMag System delivers superior particulate contaminant removal for multiple applications and reliable process stability during shock load events. Additionally, the technology is sustainable because magnetite ballast is continuously recovered for reuse in the system.

Applications include:

- Tertiary treatment
- Primary treatment
- Sidestream treatment for stormflow
- Fixed-film clarification
- Lagoon effluent treatment
- Drinking water treatment
- Industrial applications, such as particulate solids removal and process water production

PACKAGE PLANTS

To install the CoMag System quickly at the lowest possible cost, Evoqua offers pre-engineered and pre-assembled systems for both wastewater and drinking water applications. These standard package units deliver the extraordinary solids removal performance of the CoMag System in an ultra-compact, fully functional and operator-friendly design.

FEATURES & BENEFITS

- Simple, proven and reliable ballasted high-rate clarification systems
- Multiple applications for high-performance solids removal requirements
- Cost-effective package solutions with minimal civil requirements
- Fully functional and operator-friendly systems
- Short lead times and fast commissioning
- Modular design enables combining units for higher treatment capacity
- Flexible designs with optional equipment and choice of construction material
- Easy to move units to different sites for emergency solutions

The CoMag system delivers rapid and reliable settling, as seen in this clarifier underwater photo at the Sturbridge, Mass., wastewater treatment facility, which generates total phosphorous of less than 0.05 mg/L and turbidity of less than 0.5 NTU.

The CoMag System XP Series package plant comes fully equipped, including an integrated control panel and chemical feed systems, and skid mounted.

The CoMag MP Series System modular plants feature a high-flow capacity and an extremely compact design.

COMAG XP SERIES SYSTEM

		Model		
		75K	**150K**	**300K**
DW Max. Daily Flow	1000 gal/d	75	150	300
	m^3/hr	11.8	23.7	47.3
WW Avg. Daily Flow	1000 gal/d	75	150	300
	m^3/hr	11.8	23.7	47.3
WW Peak Flow	1000 gal/d	225	450	900
	m^3/hr	35.5	71.0	142.0
Length	ft	18	22	28.5
	m	5.5	6.7	8.7
Width	ft	9.5	10	11
	m	2.9	3.0	3.4
Height	ft	16.5	16.5	17
	m	5.0	5.0	5.2

DW = Drinking Water.
WW = Wastewater.

COMAG MP SERIES SYSTEM

		Model	
		1MGD	**2MGD**
DW Max. Daily Flow	MGD	1	2
	m^3/hr	158	315
WW Avg. Daily Flow	MGD	1	2
	m^3/hr	158	315
WW Peak Flow	MGD	1.5	3
	m^3/hr	237	473
Length	ft	22	28
	m	6.7	8.5
Width	ft	8	10
	m	2.4	3.0
Height	ft	19	19
	m	5.8	5.8

DW = Drinking Water.
WW = Wastewater.

Email comag@evoqua.com or visit www.evoqua.com/comag to connect with an expert.

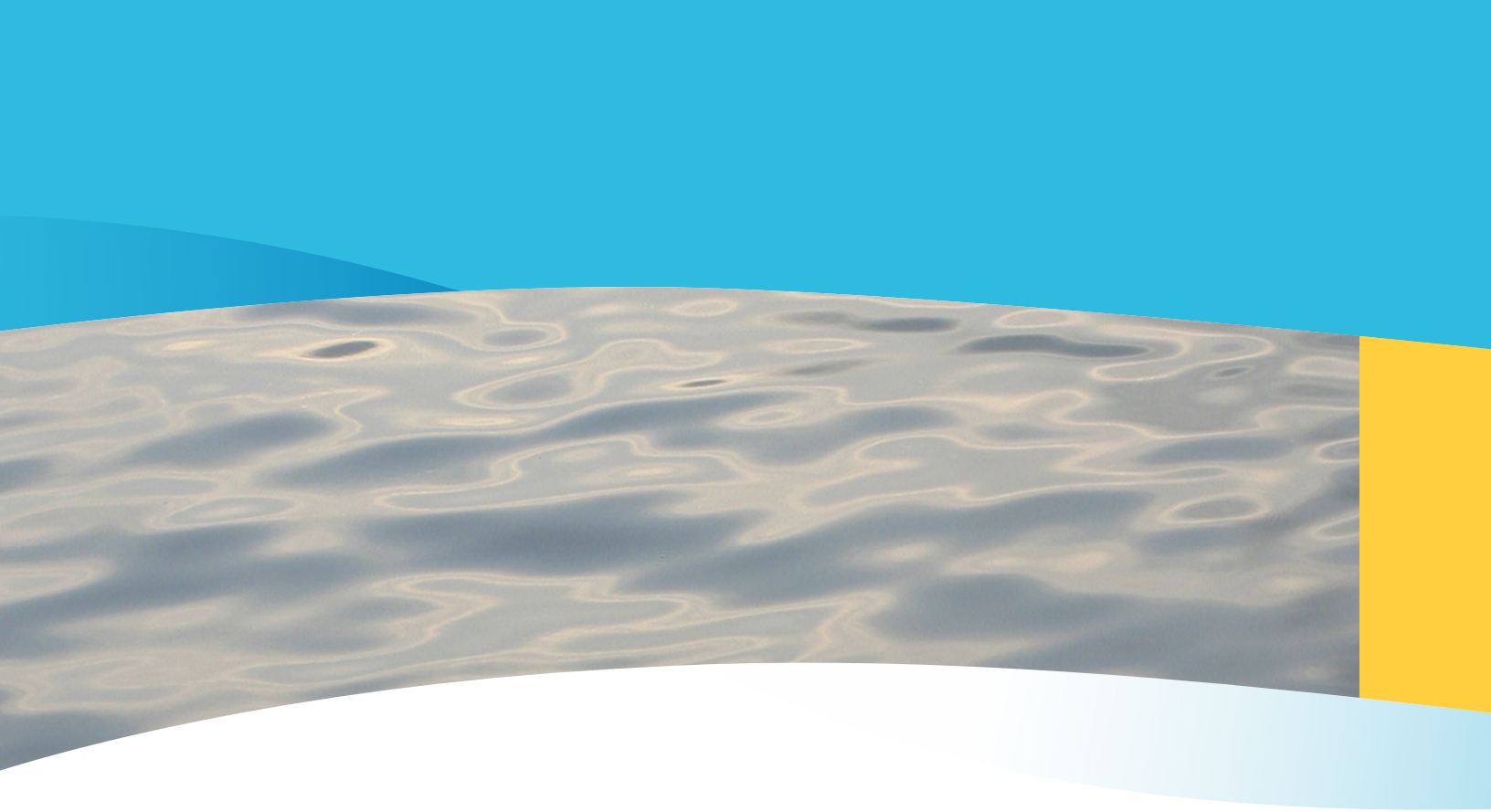

181 Thorn Hill Road, Warrendale, PA 15086

+1 (866) 926-8420 (toll-free) **+1 (978) 614-7233** (toll) **www.evoqua.com/comag**

CoMag is a trademark of Evoqua Water Technologies, its subsidiaries or affiliates, in some countries. All information presented herein is believed reliable and in accordance with accepted engineering practices. Evoqua makes no warranties as to the completeness of this information. Users are responsible for evaluating individual product suitability for specific applications. Evoqua assumes no liability whatsoever for any special, indirect or consequential damages arising from the sale, resale or misuse of its products.

© 2015 Evoqua Water Technologies LLC Subject to change without notice BC-COMAGPKG-BR-1115

evoqua
WATER TECHNOLOGIES

2.2 MGD TERTIARY CLARIFIER USING THE COMAG SYSTEM

THE COMAG® SYSTEM FOR ENHANCED PRIMARY AND TERTIARY TREATMENT

SUPERIOR SOLIDS REMOVAL IN A SMALL FOOTPRINT. <0.05 MG/L TP WITHOUT FILTRATION.

ABOUT EVOQUA WATER TECHNOLOGIES

Evoqua Water Technologies has been providing leading technologies and know-how for over 100 years to help consulting engineers and municipalities clean and purify the world's most precious resource — our water. We excel in disinfection, membrane treatment, high rate clarification, biological processes, low energy biosolids solutions, odor control, and seamless controls across process equipment. Our Wallace & Tiernan, MEMCOR, Envirex, Jet Tech, Davco and RJ Environmental brands are well established. And our experts, experience, technologies, integrated approach and services make us one reliable source for the municipal water and wastewater treatment needs of today and tomorrow.

THE COMAG® SYSTEM — ENHANCED CLARIFICATION THAT EASILY INTEGRATES INTO EXISTING PROCESSES

Simple and reliable, the CoMag® System from Evoqua uses magnetite to ballast conventional chemical floc, enhancing settling rates and increasing the performance of wastewater and water treatment facilities, while substantially reducing costs to upgrade process performance. Primarily used to improve primary and/or tertiary treatment, the CoMag System easily integrates with planned or existing facilities, making it easier than ever to solve today's operational and environmental challenges.

Key benefits of the CoMag System:

- Superior contaminant removal
  - » Total suspended solids (TSS), total phosphorus (TP), turbidity, color, pathogens and metals can be reduced to levels far below conventional treatment.
- Low costs
  - » High-rate, ballasted clarification allows for smaller reaction and solids separation tanks, minimal power consumption and moderate chemical use.
- Improved productivity
  - » The CoMag® System minimizes the risk of upsets and handles a wide range of flows and loads — including peak flow events — with no backwashing, plugging or fouling, no media filters required and almost no effect on contaminant removal performance or operational stability.
- Ultraviolet enabling
  - » The high transmissivity of the CoMag System effluent reduces energy and operating costs of final purification.

Magnetite: The little compound that pulls a lot of weight.

Magnetite is a readily available, fully inert form of iron ore (Fe_3O_4), and the ballast that powers the CoMag System.

Benefits of Magnetite:

- Hydrophobic
  - » Shuns water and naturally bonds with chemical floc and biological solids
- Dense
  - » Specific gravity of 5.2 means increased floc density, faster settling and higher surface overflow rates (SOR) and solids loading rates (SLR)
- Fully oxidized and insoluble
  - » Will not rust, degrade or easily dissolve like some ballasting agents
- Non-abrasive
  - » Will not erode components while incorporated with floc
- Inexpensive
  - » A readily-available commodity that helps keep operational costs low
- Reusable
  - » Attracted to magnets, not components, allowing for easy recovery and reuse

CHARLTON, MA. WASTEWATER FACILITY

MAGNETITE
RECOVERY DRUM

INSIDE MAGNETITE BALLASTED TECHNOLOGY

A. THE REACTION TANK:

Familiar process with one simple change

With the CoMag® System, the traditional process of flocculation, coagulation and clarification remain the same. The benefits result from the simple infusion of magnetite.

Inside the reaction tank:

- Alum, ferric or poly-aluminum chloride (PAC) is added to the influent.
- The resultant chemical floc is infused with magnetite, quickly increasing solids density through simple mixing.
- The magnetite ballasted floc then travels to a conventional clarifier.

B. THE CLARIFIER:

Where the proof is clear

The high-density, magnetite ballasted floc that flows into a conventional clarifier settles rapidly and reliably, resulting in remarkably clear effluent. It also allows for a much smaller clarifier, substantially reducing capital costs in new facilities or expansions and providing a particularly effective solution for sites with a tight footprint.

The enhanced settling capabilities of the CoMag System can help plant operators:

- Increase SOR up to 10x
- Increase SLR up to 20x
- Achieve turbidity < 1 NTU
- Expand or build new with 1/10th of the traditional clarifier footprint
- TP < 0.05 mg/L

In addition to high rate clarification, the CoMag System employs a sludge recycle function to increase system performance and the clarity of its effluent. Approximately 85% of clarifier underflow is recirculated into the system's reaction tanks. The resulting high-density slurry allows the application to easily manage upsets and variations in the influent flow stream and sweep up any fine particulate remaining in the system.

C. RECOVERY AND REUSE:

A sustainable process for lower OPEX

In addition to the low capital expense associated with installation, the CoMag System offers the cost-effective ability to continuously recover and reuse 99+% of the injected magnetite.

Here's how it works:

- Sludge moves from the clarifier via a waste sludge line to an inline high-speed sheer mixer where magnetite is liberated from floc.
- The resulting two-part slurry is then passed under a recovery drum.
- Permanent and stationary magnets inside the drum help to capture 99+% of the magnetite and deposit it back in the system.
- Sheered sludge, minus the magnetite, then flows to sludge disposal.

PRACTICAL USES FOR THE COMAG® SYSTEM

The CoMag® System competes effectively with all forms of media and membrane filtration and conventional clarification, and is proven effective for:

- Primary treatment (Chemically Enhanced Primary Treatment)
- Stormwater/CSO (combined sewer overflow)/wet weather control
- Tertiary treatment for polishing secondary effluent
- Ultralow nutrient removal
- Recycle-reuse applications
- RO pretreatment
- Drinking water

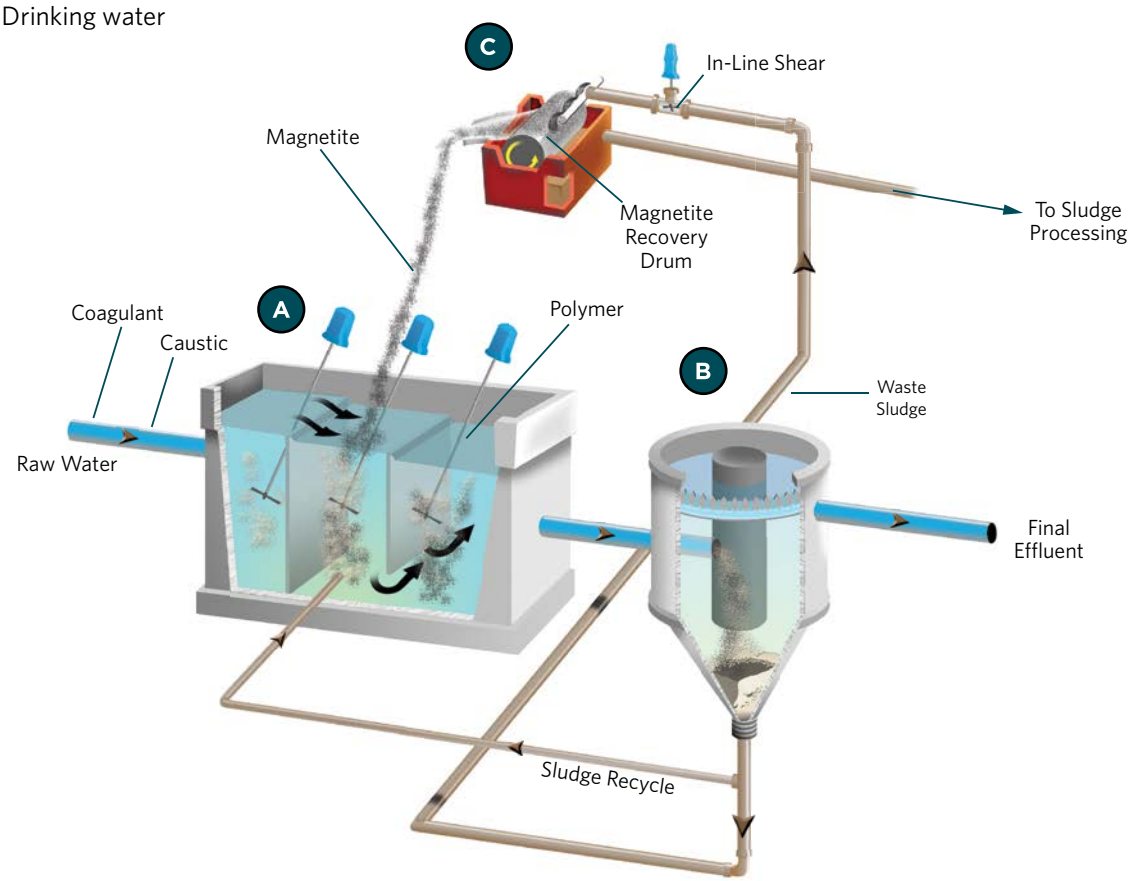

THE COMAG® SYSTEM AS PART OF A TRADITIONAL TERTIARY TREATMENT CONFIGURATION

THE HARD NUMBERS. EFFLUENT PERFORMANCE OF THE COMAG® SYSTEM

MAGNETITE REACTION TANKS IN FOREGROUND AND RECOVERY DRUMS IN BACKGROUND

The CoMag® System can produce effluent quality far superior to conventional alternatives, at lower life-cycle costs and has been proven at multiple municipal and industrial facilities to deliver the following results:

- TP < 0.05 mg/L
- TSS < 2.0 mg/L
- Color 2 Pt-Co Units
- Turbidity < 1 NTU
- Fecal Coliform < 200 Col/100 mL
- Copper ≤ 8 µg/L
- Aluminum ≤ 80 µg/L
- Arsenic < 5 µg/L
- UV Transmittance > 75%
- Oil and Grease Removal

EMBRACE GRAVITY. DEFY CONVENTION.

Learn more about how the CoMag® System harnesses the force of gravity to eliminate clarifier bottlenecks and enhance the performance of primary and tertiary treatment.

Visit www.evoqua.com/comag to access settling videos, case studies, recorded webinars and FAQ's.

INSIDE A TERTIARY CLARIFIER AT STURBRIDGE, MA WASTEWATER FACILITY
DEPICTING MAGNETITE BALLASTED TECHNOLOGY AT WORK

4800 North Point Parkway, Suite 250, Alpharetta, GA 30022

+1 (866) 926-8420 (toll-free) **+1 (978) 614-7233** (toll) **www.evoqua.com**

CoMag, Davco, Envirex, JetTech, MEMCOR and Wallace & Tiernan are trademarks of Evoqua, its subsidiaries or affiliates in some countries.

All information presented herein is believed reliable and in accordance with accepted engineering practices. Evoqua makes no warranties as to the completeness of this information. Users are responsible for evaluating individual product suitability for specific applications. Evoqua assumes no liability whatsoever for any special, indirect or consequential damages arising from the sale, resale or misuse of its products.

© 2014 Evoqua Water Technologies LLC Subject to change without notice. BC-COMAG-BR-0414

UNITED STATES ENVIRONMENTAL PROTECTION AGENCY
REGION 1
5 POST OFFICE SQUARE, SUITE 100
BOSTON, MA 02109-3912

November 30, 2011

Charles B. Hamlin
President and CEO
Cambridge Water Technology, Inc.
Suite 3L
810 Memorial Drive
Cambridge, MA 02139

Re: Ground applying sludge traced with magnetite

Dear Mr. Hamlin,

This letter is a response to your recent inquiry to David Pincumbe regarding the land application of sewage sludge. Specifically, you asked if EPA has restrictions against the land application of magnetite and if the presence of magnetite in sewage sludge is grounds for the invalidation of a permit. Federal regulations found at 40 CFR Part 503 contain the requirements for the use and disposal of sewage sludge. Subpart B of this regulation describes the management practices for land application of various metals. Since the 503 regulations do not contain a numeric limitation for magnetite, it is not regulated by this rule. The presence of magnetite in sewage sludge is not a sufficient reason for the material to be excluded from land application. However, iron is a micronutrient for plant growth and over-application of a sewage sludge containing magnetite could be toxic to plants. EPA encourages you to use proper application rates and, as appropriate, preventative measures to minimize the potential for toxicity.

Please feel free to contact Michael Cobb of my staff at (617) 918-1369 with any further questions or comments.

Sincerely,

David M. Webster

David Webster, Chief
Industrial Permits Branch
Office of Ecosystem Protection

Appendix E

Membrane Filtration
Manufacturer's Literature & Dimensions
(BioTRIPURE™, KOCH PURON®, and Pentair)

Low Energy Tertiary UF -bioTRIPURE™

BioTRIPURE™ Hollow Fiber Ultrafiltration Systems

BioTRIPURE™ Hollow Fiber Membrane Systems are skid mounted, modular, compact and fully-automated PLC controlled systems furnished with Pentair X-Flow AquaFlex™ membrane modules.

The UF Membrane is an effective treatment for reuse of secondary/tertiary effluent, phosphorus removal and pre-treatment for reverse osmosis (RO).

How the bioTRIPURE™ UF Process Works

The AquaFlex™ Modules within the bioTRIPURE™ UF Systems operate using inside-out membrane technology. Inside-out technology means the feed passes along the inside of the lumen and through the membrane wall as purified water. This approach minimizes dead space and eliminates the potential of solids build-up within the module housings.

Applications:

- Tertiary Filtration
- Wastewater Reuse using Municipal and/or Industrial effluent
- Aquifer Recharge

Main Features:

- Fully-automated PLC controlled
- Excellent chemical resistance
- Ultra-high pore density per ft^2 of active membrane surface
- Complete removal of suspended solids
- Removal of micro-organisms
- Uses conventional cleaning chemicals
- Inside-out operation allows for use of coagulants
- Drinking water certifications (NSF-61)
- CA Title 22 approved

Membrane Specifications:

- Membrane Material: PES/PVP
- Lumen Diameter: 0.8 mm
- Pore Size: 0.03 microns
- Membrane Area: 590 ft^2 or 688 ft^2
- Module Diameter: 9.5”
- Module Housing: PVC

Typical System Performance:

- Net Flux: 40 – 65 GFD
- Nominal TMP: 3 – 6 psig
- Product Recovery: >90%
- Removal of Bacteria and Cysts > 6 log
- Removal of Viruses > 4 log

bioprocessH2O
a CLARCOR company

www.bioprocessh2o.com | (401) 683-5400
45 Highpoint Ave. | Portsmouth, RI 02871

The polyethersulfone (PES) membrane wall acts as a physical barrier for all particles and molecular structures larger than 0.03 microns. This ultrafilter pore rating will provide for a 6-log rejection of bacteria, germ and large organic molecules and a 4-log rejection of viruses. The end result of the membrane process is purified water or UF permeate with turbidity levels of less than 0.1 NTU and Silt Density Index (SDI) levels of <3.

Each membrane module contains approximately 15,000 hollow fiber lumens which are bundled into sections separated by corrugated plates contained within a 9.5" diameter thermoplastic housing. The bundled lumens are centrifugally potted using polyurethane, providing complete and permanent sealing of the membrane module without wicking, this achieving highest level of membrane integrity.

The high permeate flux rates are maintained using hydraulic flushes and chemically enhanced backwashes. All system functions are fully-automated to maximize product recovery rates and minimize operator attention.

System Operation

The bioTRIPURE™ System is a fully automated PLC controlled UF system where feed water is pumped into the influent feed manifold of the UF System and directed to each membrane module operating in a parallel configuration. The feed is directed to the top of each membrane module and processed using gravity for enhanced productivity. The bioTRIPURE™ System is operated in either a dead-head mode or an internally recirculated semi-dead head mode for maximum product recovery.

Waste passes through the membrane wall from the inside-out and exits the membrane modules as purified water via a permeate discharge manifold. The solids and organics retained by the membranes are then concentrated within the hollow fibers of the membrane modules. The membranes undergo an automated hydraulic flush mode every 20 – 30 minutes based on the feed water characteristics. The membranes are cleansed every 12 – 24 hours based on feed stream characteristics using a combination of sodium hypochlorite and sodium hydroxide followed by acid to reduce the system TMP and maintain membrane flux.

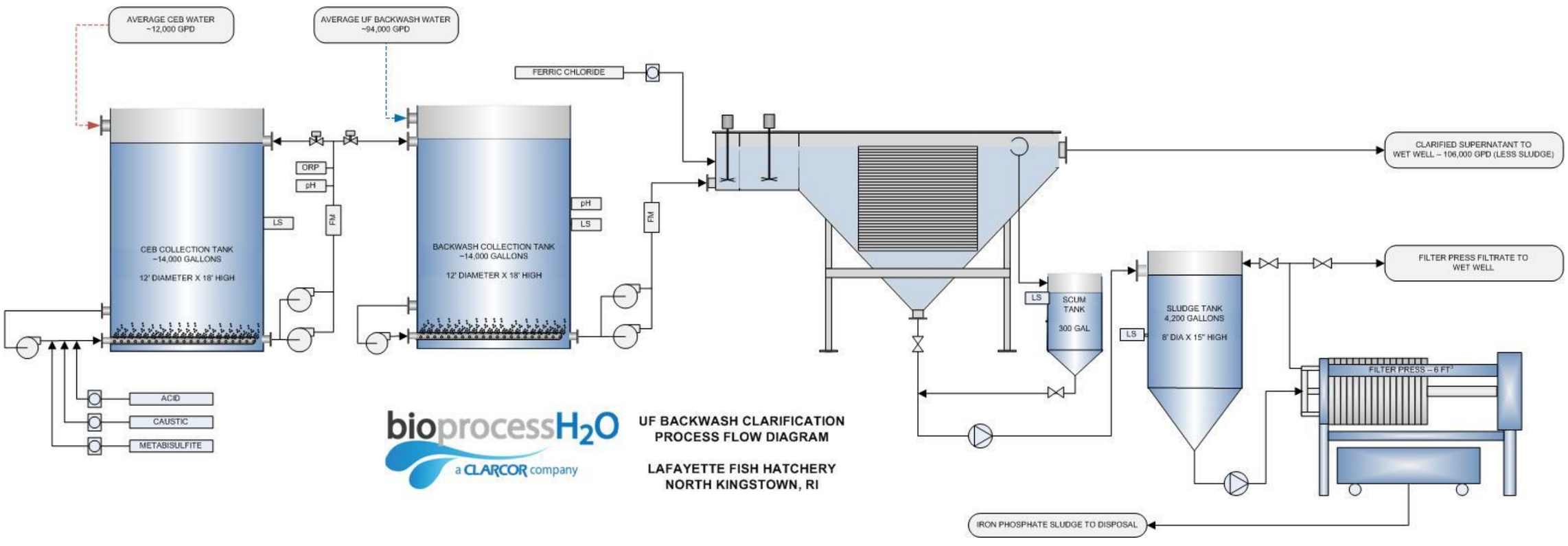
AVERAGE CEB WATER
~12,000 GPD
AVERAGE UF BACKWASH WATER
~94,000 GPD
FERRIC CHLORIDE
CLARIFIED SUPERNATANT TO
WET WELL – 106,000 GPD (LESS SLUDGE)
ORP
pH
LS
FM
CEB COLLECTION TANK
~14,000 GALLONS
12' DIAMETER X 18' HIGH
pH
LS
FM
BACKWASH COLLECTION TANK
~14,000 GALLONS
12' DIAMETER X 18' HIGH
LS
SCUM
TANK
300 GAL
LS
SLUDGE TANK
4,200 GALLONS
8' DIA X 15' HIGH
FILTER PRESS FILTRATE TO
WET WELL
FILTER PRESS – 6 FT³
ACID
CAUSTIC
METABISULFITE
IRON PHOSPHATE SLUDGE TO DISPOSAL
bioprocessH2O
a CLARCOR company
UF BACKWASH CLARIFICATION
PROCESS FLOW DIAGRAM
LAFAYETTE FISH HATCHERY
NORTH KINGSTOWN, RI

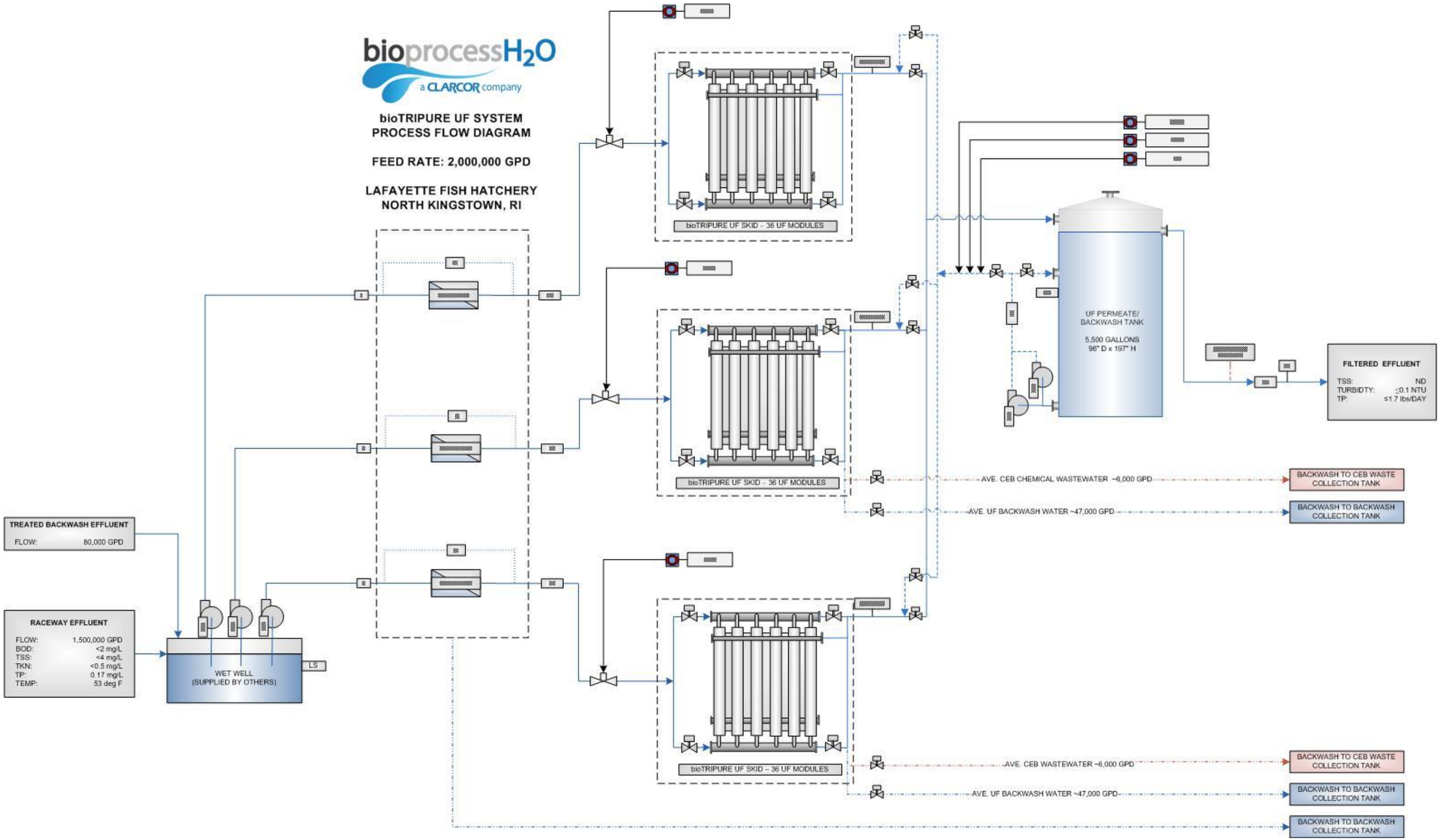
bioprocessH2O
a CLARCOR company
bioTRIPURE UF SYSTEM
PROCESS FLOW DIAGRAM
FEED RATE: 2,000,000 GPD
LAFAYETTE FISH HATCHERY
NORTH KINGSTOWN, RI
bioTRIPURE UF SKID – 36 UF MODULES
bioTRIPURE UF SKID – 36 UF MODULES
bioTRIPURE UF SKID – 36 UF MODULES
UF PERMEATE/
BACKWASH TANK
5,500 GALLONS
96" D x 197" H
FILTERED EFFLUENT
TSS: ND
TURBIDTY: ≤0.1 NTU
TP: ≤1.7 lbs/DAY
AVE. CEB CHEMICAL WASTEWATER ~6,000 GPD
BACKWASH TO CEB WASTE
COLLECTION TANK
AVE. UF BACKWASH WATER ~47,000 GPD
BACKWASH TO BACKWASH
COLLECTION TANK
TREATED BACKWASH EFFLUENT
FLOW: 80,000 GPD
RACEWAY EFFLUENT
FLOW: 1,500,000 GPD
BOD: <2 mg/L
TSS: <4 mg/L
TKN: <0.5 mg/L
TP: 0.17 mg/L
TEMP: 53 deg F
WET WELL
(SUPPLIED BY OTHERS)
LS
AVE. CEB WASTEWATER ~6,000 GPD
BACKWASH TO CEB WASTE
COLLECTION TANK
AVE. UF BACKWASH WATER ~47,000 GPD
BACKWASH TO BACKWASH
COLLECTION TANK
BACKWASH TO BACKWASH
COLLECTION TANK

Water & Wastewater

PURON® MP

Solutions

Hollow Fiber Treatment System for High Solids Water and Wastewater

KOCH MEMBRANE SYSTEMS®

Market-Driven Solutions

Meet the new standard in high solids water and wastewater treatment...

The PURON® MP hollow fiber ultrafiltration system is an innovative, cost-effective solution for a variety of water treatment applications.

Complete Solids Tolerance Solutions

Koch Membrane Systems offers a wide range of ultrafiltration products to meet any application challenge.

TARGA® II
Up to 50 mg/L

PURON® MP
Up to 250 mg/L

PURON® HF
Up to 2,000 mg/L

PURON® MBR
Up to 15,000 mg/L

ABCOR®
Up to 500,000 mg/L

The PURON MP System Advantage:

AVOID PRETREATMENT – The PURON MP system's high flux and solids tolerance properties can eliminate the need for costly clarifiers and chemical pretreatments in tough applications.

LESS DOWNTIME – Polyester reinforced membranes and a unique single potting design help to avoid downtime associated with frequent cleaning cycles, sludging and fiber repair.

LESS CHEMICALS – Superior chemistry and a tight pore structure deliver more stable membrane performance without the need for extensive chemical cleans.

SIMPLE OPERATION – Minimal system connections, an intelligent user interface and outstanding membrane reliability make PURON MP one of the easiest-running filtration systems available.

SAVE MONEY – Superior output, simplified operation, reduced maintenance and pretreatment costs and a compact footprint all add up to cost savings for you!

Primary Applications:

Industrial Water Solutions
- Achieves higher recoveries
- Removes suspended and colloidal solids
- Saves space versus conventional treatment

Tertiary Wastewater Treatment
- Can handle clarifier upsets
- Able to tolerate high coagulant doses for Phosphorus removal

Seawater Pre-treatment
- Requires significantly less space
- Longer RO membrane life
- Low overall operating cost

Potable Water Treatment
- Greater than 4-log removal of Giardia and Crypto
- Suited for turbid surface waters
- Handles high coagulant doses for TOC/Color removal

Meaningful Product Features

Easily installed and serviced, PURON® MP systems are designed for longevity and performance.

Whether it's one of our packaged plants or a custom-designed solution, the PURON MP system offers robust engineering and reliable operation in a fully scalable filtration system ranging from 6 to 64 high-output UF cartridges.

The PURON MP System Design

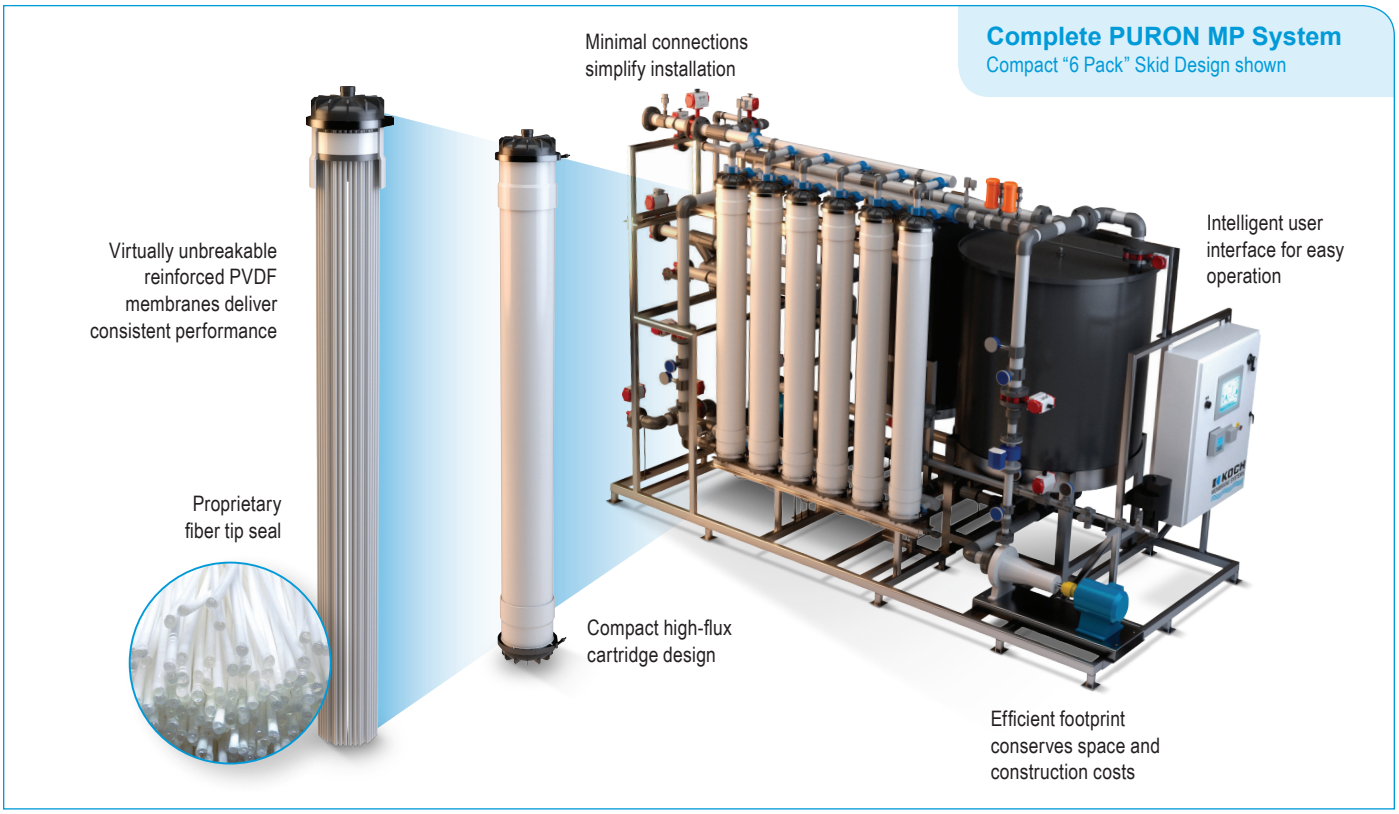

A New Configuration in Hollow Fiber Membranes

The unique free fiber construction offers the most effective solids management in the market

Traditional Designs – Potting at Both Ends

Tightly packed dual-header designs restrict fiber movement creating dead zones where solids can accumulate. This "fiber sludging" reduces membrane surface area, system output and energy efficiency.

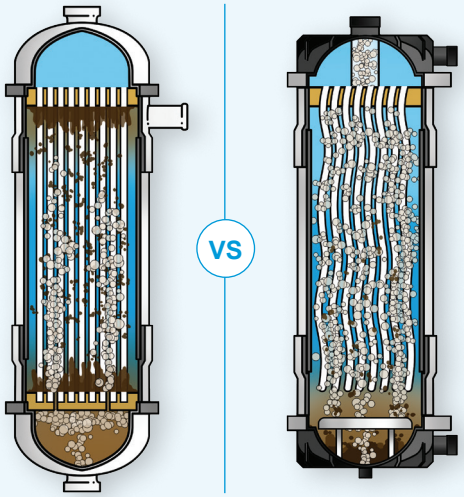

PURON MP Design – Single Potting

The innovative single-potting design allows the membrane fibers to move freely within the cartridge. This open configuration permits aeration to penetrate the fiber bundle and release filtered solids during air scouring.

The PURON® MP Solution

Our best-in-class designs provide a truly integrated solution, from membrane chemistry and fabrication to process and application design, with dedicated technical support every step of the way.

KMS isn't just a membrane company. The KMS global team of Design Specialists is ready to assist you with:

- Process & System Design
- Project Management
- Mechanical Design
- Start Up and Commisioning
- Global Fabrication
- KMS ASSIST® Service and Maintenance Program

Piloting – Unique solutions are our specialty...

> *Not all process streams are alike. New and specialized applications can benefit from pilot testing to validate system designs.*

Our Process Technology Group stands ready to support those applications that require more process expertise, attention or testing. With a sizeable inventory of pilot systems in our fleet, a unique testing program can be up and running at your facility in a matter of days.

The PURON MP Pilot unit is a skid-mounted, fully automated, and easily installed system.

Contact your local Koch Membrane Systems representative for more information:

Corporate Headquarters

Koch Membrane Systems, Inc.
850 Main Street
Wilmington, Massachusetts 01887-3388
USA

Tel: +1-888-677-KOCH
Tel: +1-978-694-7000
Fax: +1-978-657-5208

International Offices

Europe/Middle East/Africa
Aachen, Germany
Dubai, UAE
Lyon, France
Madrid, Spain
Monza Brianza, Italy
Stafford, United Kingdom
Wijnegem, Belgium

Asia/Pacific
Beijing, China
Melbourne, Australia
Mumbai, India
New Delhi, India
Shanghai, China
Singapore
Sydney, Australia

Latin America
Sao Paulo, Brazil

For complete contact information, visit:
www.kochmembrane.com

KOCH MEMBRANE SYSTEMS®

©2014 Koch Membrane Systems, Inc. All rights reserved worldwide. For related trademark information, visit www.kochmembrane.com.
Koch Membrane Systems, Inc. is a Koch Chemical Technology Group, LLC company. 10/14

NOTES:
1. THIS DRAWING HAS BEEN PREPARED FOR SALES AND MARKETING PURPOSES ONLY AND MAY THEREFORE BE SUBJECT TO CHANGE BY OUR ENGINEERING DEPARTMENT.
2. ALL DIMENSIONS ARE REFERENCE ONLY.

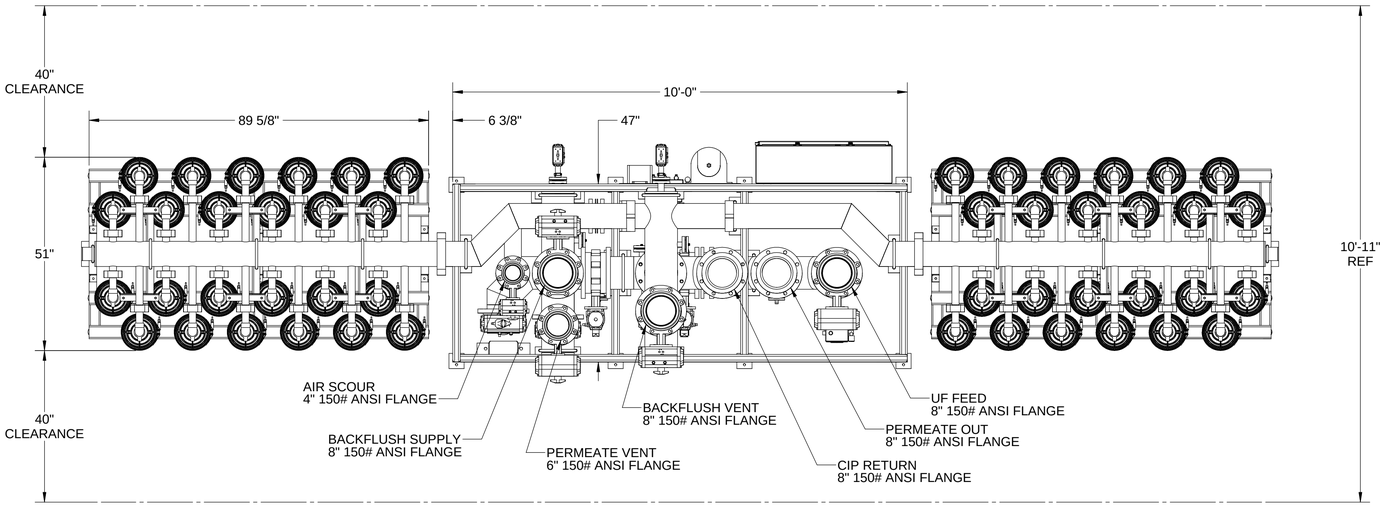

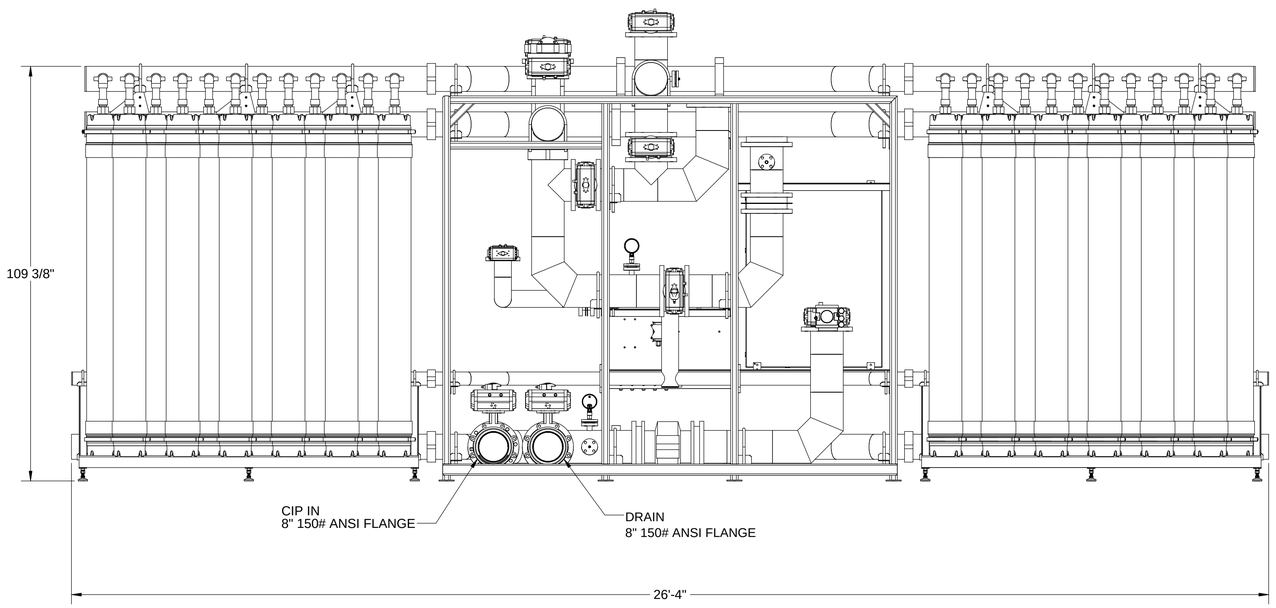

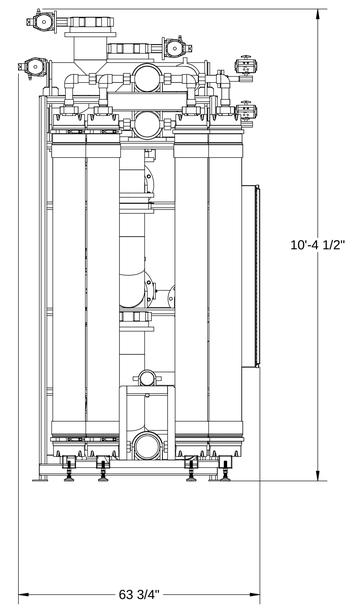

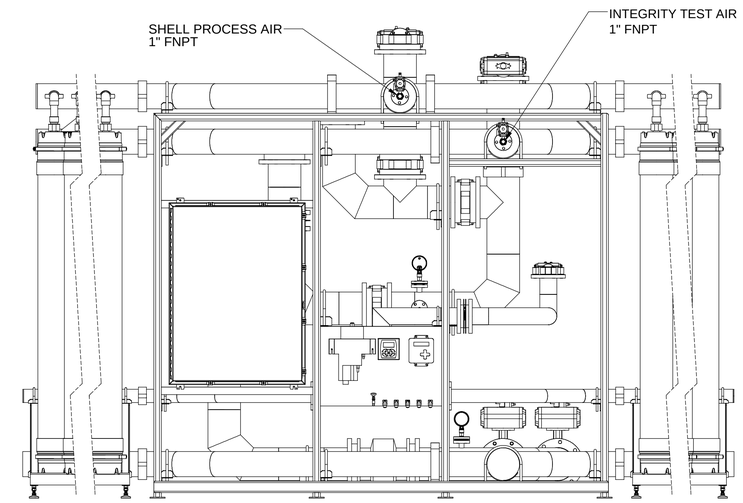

MATERIAL: -	KOCH MEMBRANE SYSTEMS, INC. www.kochmembrane.com				

NOTICE: THIS DOCUMENT AND THE INFORMATION CONTAINED HEREIN IS THE CONFIDENTIAL AND PROPRIETARY PROPERTY OF KOCH MEMBRANE SYSTEMS (KMS), AND HAS BEEN PROVIDED TO YOU IN CONFIDENCE. KMS EQUIPMENT AND PROCESSES MAY BE COVERED BY VARIOUS UNITED STATES AND FOREIGN PATENTS AND PENDING PATENT APPLICATIONS. KMS RESERVES ALL PATENT, TRADEMARK, PROPRIETARY, COPYRIGHT, DESIGN, MANUFACTURING, REPRODUCTION, USE AND SALE RIGHTS TO THIS DOCUMENT AND THE INFORMATION CONTAINED HEREIN EXCEPT TO THE EXTENT KOCH GRANTS THE CUSTOMER EXPRESS WRITTEN PERMISSION TO EXERCISE SUCH RIGHTS. IN THE EVENT THAT THIS DOCUMENT OR ANY INFORMATION CONTAINED HEREIN IS INAPPROPRIATELY USED, DISCLOSED, OR OTHERWISE REPRODUCED, THIS DOCUMENT (INCLUDING ANY COPIES) WILL BE IMMEDIATELY RETURNED TO KMS AT ITS REQUEST. © 2016, KOCH MEMBRANE SYSTEMS, INC. ALL RIGHTS RESERVED.

FOR RELATED PATENT AND TRADEMARK INFORMATION, VISIT www.kochmembrane.com/Legal

TOLERANCE ON:
LINEAR: 0 - 2ft = ±1/16"
2 - 4ft = ±1/8"
4+ft = ±1/4"
ANGULAR: ±1°
INTERPRET DIM AND TOL PER ASME Y14.5M-1994

TITLE:
8" PURON® MP48 STANDARD SYSTEM
GENERAL ARRANGEMENT

DCR:	DRAWN BY:	DRAWN DATE:	APPROVAL:	APPROVAL:	FINAL APVL:
N/A	JMM	17-NOV-16	N/A	N/A	

SCALE:	PROJECTION:	SHEET:	DRAWING NO:	REV:	SIZE:
1:20		1 / 2	7001818	1	D

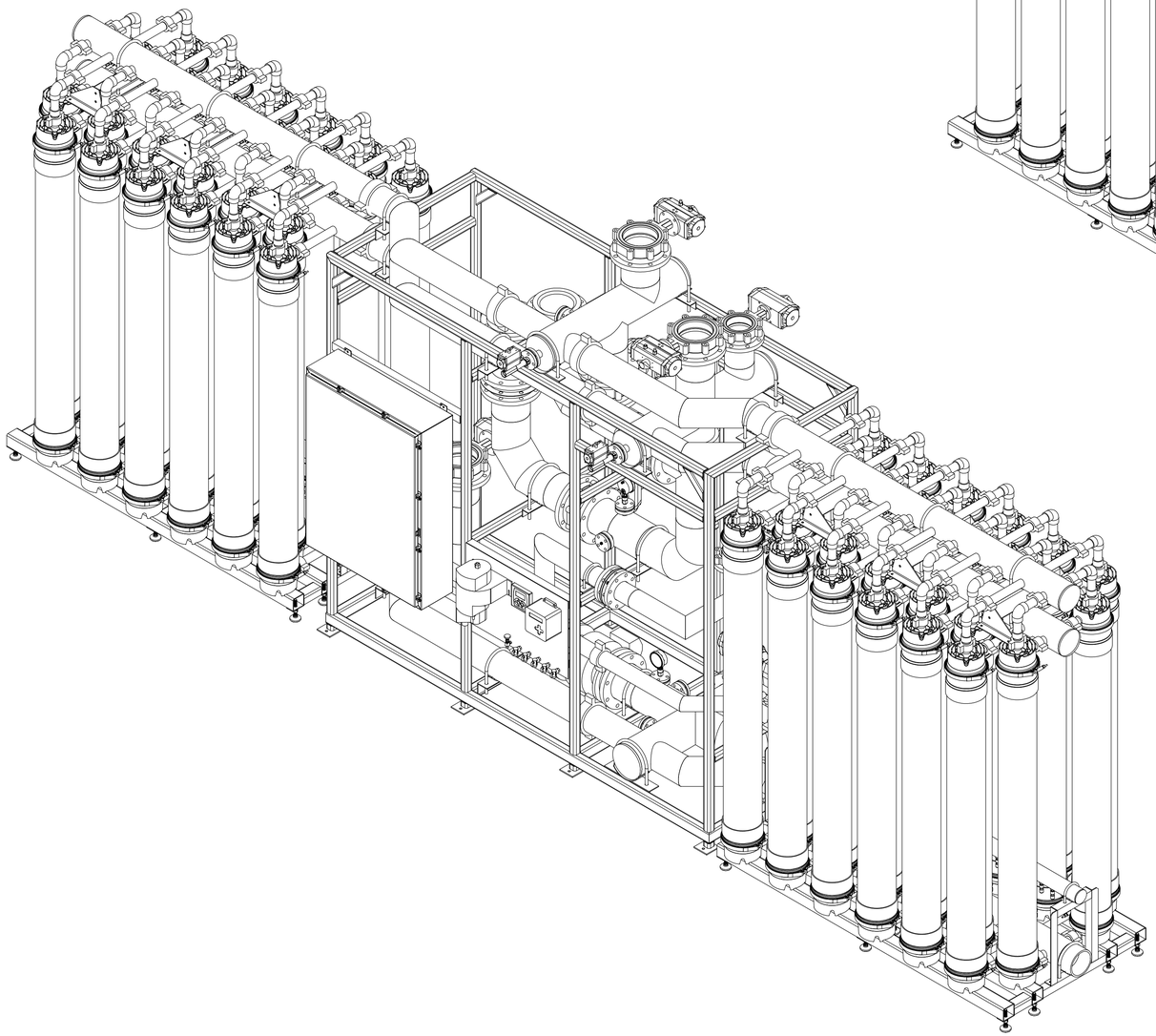

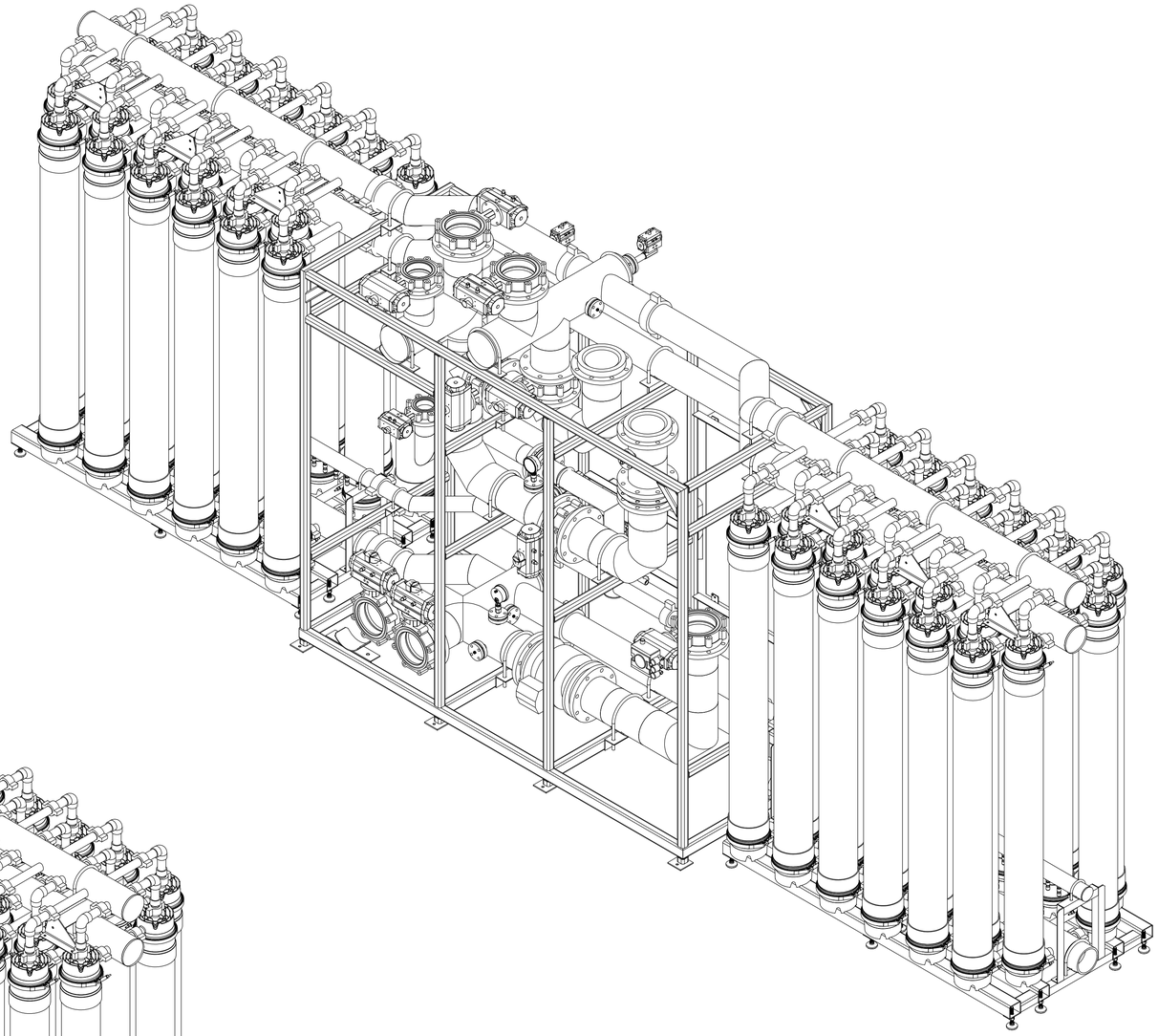

MATERIAL:
-

KOCH MEMBRANE SYSTEMS
KOCH MEMBRANE SYSTEMS, INC. www.kochmembrane.com

NOTICE: THIS DOCUMENT AND THE INFORMATION CONTAINED HEREIN IS THE CONFIDENTIAL AND PROPRIETARY PROPERTY OF KOCH MEMBRANE SYSTEMS (KMS), AND HAS BEEN PROVIDED TO YOU IN CONFIDENCE. KMS EQUIPMENT AND PROCESSES MAY BE COVERED BY VARIOUS UNITED STATES AND FOREIGN PATENTS AND PENDING PATENT APPLICATIONS. KMS RESERVES ALL PATENT, TRADEMARK, PROPRIETARY, COPYRIGHT, DESIGN, MANUFACTURING, REPRODUCTION, USE AND SALE RIGHTS TO THIS DOCUMENT AND THE INFORMATION CONTAINED HEREIN EXCEPT TO THE EXTENT KOCH GRANTS THE CUSTOMER EXPRESS WRITTEN PERMISSION TO EXERCISE SUCH RIGHTS. IN THE EVENT THAT THIS DOCUMENT OR ANY INFORMATION CONTAINED HEREIN IS INAPPROPRIATELY USED, DISCLOSED, OR OTHERWISE REPRODUCED, THIS DOCUMENT (INCLUDING ANY COPIES) WILL BE IMMEDIATELY RETURNED TO KMS AT ITS REQUEST. © 2016, KOCH MEMBRANE SYSTEMS, INC. ALL RIGHTS RESERVED.

FOR RELATED PATENT AND TRADEMARK INFORMATION, VISIT www.kochmembrane.com/Legal

TOLERANCE ON:

LINEAR: 0 - 2ft = ±1/16"
2 - 4ft = ±1/8"
4+ft = ±1/4"

ANGULAR: ±1°

INTERPRET DIM AND TOL PER ASME Y14.5M-1994

TITLE:

8" PURON® MP48 STANDARD SYSTEM

GENERAL ARRANGEMENT

DCR:	DRAWN BY:	DRAWN DATE:	APPROVAL:	APPROVAL:	FINAL APVL:
N/A	JMM	17-NOV-16	N/A	N/A	

SCALE:	PROJECTION:	SHEET:	DRAWING NO:	REV:	SIZE:
1:16		2 / 2	7001818	1	D

X-FLOW X-LINE RACK

DATASHEET

X-LINE RACK

GENERAL INFORMATION

X-line is a revolutionary pre-engineered ultrafiltration (UF) membrane solution, with a minimized footprint and maximized flow through smart flow optimization. Due to its robust and optimal design the X-line Rack is applicable to a wide range of industrial and municipal challenges. Mode of operation is dead-end with regular hydraulic clean and chemically enhanced backwash. The X-line Rack is developed in conjunction with the Aquaflex module.

FEATURES

The X-line Rack features a number of advantages:

- Highly flexible
- Highly scalable
- Integrated headers for rapid assembly on site
- Pre-engineered, plug and play
- Optimized flow ratio due to OptiFlow Caps
- Optimized footprint
- Low cost

OPERATING SPECIFICATIONS

- Maximum static pressure of 5 Bar(g)
- Maximum dynamic operating pressure of 3 Bar(g)
- Headloss, across UF during rack filtration 0.1 – 1.0 Bar
- Headloss, across UF rack during backwash 0.7 – 2.5 Bar
- 0-40 ºC (non-freezing)

NOMENCLATURE

A rack consists of multiple modules linked together with caps. Racks are connected to a manifold either single sided or two-sided. The total assembly is a skid. Multiple skids are combined into a plant.

X-line – 2 x 4 x 18 - C / N (one skid is shown in the picture)

- Option Frame (F = yes/N = No)
- Option Couplings (C = yes/N = No)
- No. of modules in a row
- No. of rows on a rack
- No. of Racks on a manifold

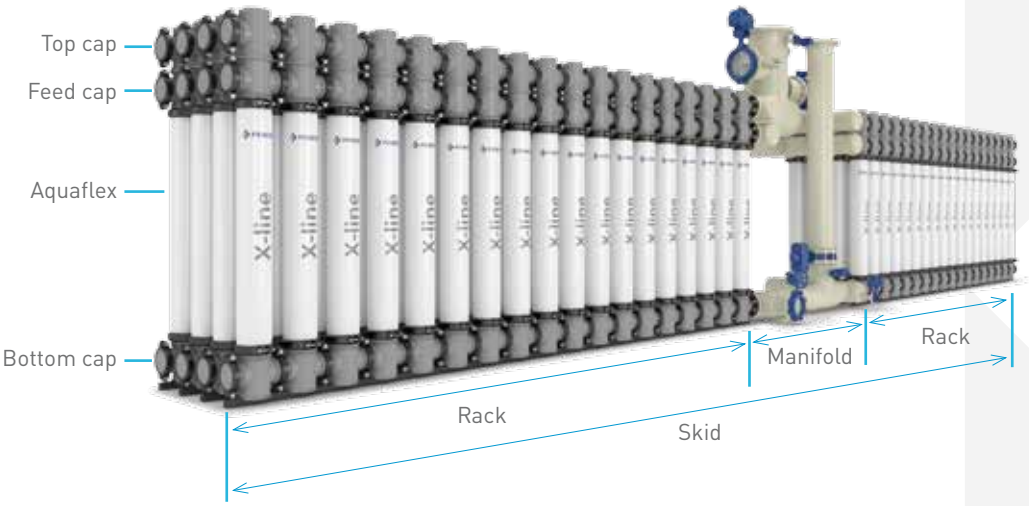

X-FLOW X-LINE RACK

DATASHEET

CERTIFICATIONS

- USA: ANSI/NSF, Standard 61
- UK: DWI Regulation 31
- France: ACS
- Germany: KTW and DVGW
- The Netherlands: KIWA-ATA

COUPLINGS

Required couplings are DN200 and DN150, where the Pentair standard DN200 has a width of 350 mm. Please note that by using different couplings the width and/or bolt diameter may vary, therefore the supplied anchor may not fit.

FRAME

Pentair offers a height adjustable frame to be set on a flat smooth surface:

- Adjustable frame height 115-140 mm
- Pentair standard couplings (or equal) are mandatory

Typical specifications can be provided for construction a frame by customer if required.

SCOPE OF SUPPLY

The X-line Rack consist of modules, O-rings, anchors and caps. Grooved couplings and frame are optional.

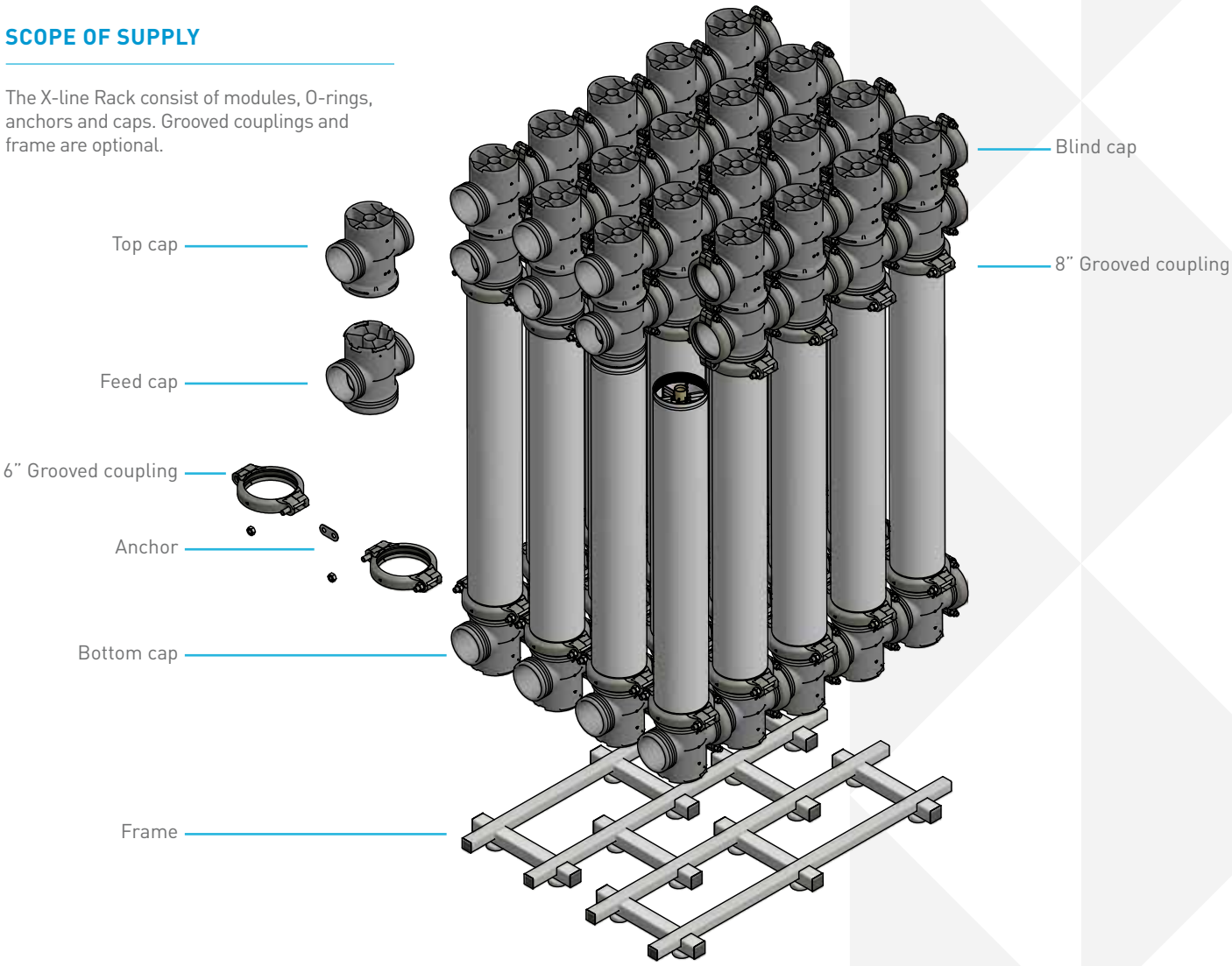

X-FLOW X-LINE RACK

DATASHEET

GENERAL DIMENSIONS AND WEIGHT

General dimensions and weights are given in this document. If more dimensions are needed please contact PENTAIR SALES.

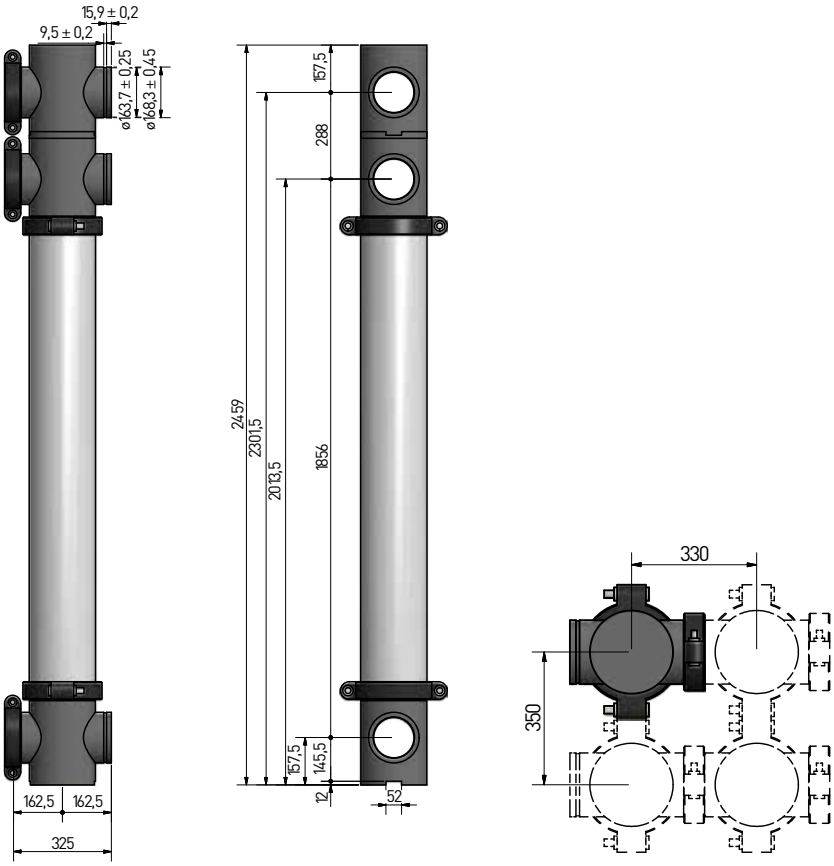

WEIGHT PER MODULE	KG	[LBS]
Dry weight including grooved couplings	75	[165]
Filled weight including grooved couplings	135	[297]
SS Frame per module	2	[4.4]

MANIFOLD

Due to the flexible design a manifold is not supplied as a standard product, nevertheless Pentair is able to provide an engineered solution.

RACK CONFIGURATION

The X-line Rack can be tailored to the requirements of the customer. In order to configure a X-line Rack the following rules need to be considered:

- Maximum number of modules in line is 18 per rack
- Minimum number of modules in width is 2 per rack, with no maximum*
- All module lines of the rack must have the same length
- All racks must be symmetrical

* Limiting width to 4 modules, will provide a high degree of accessibility while optimizing the footprint.

SHIPPING, HANDLING AND STORAGE

All components should be handled with care, by the certified personnel. During assembly personnel must work according to the assembly instructions as provided by Pentair. The X-line Rack should be stored in a dry, wind shielded place and away from direct sunlight. Reference is made to the membrane elements in the X-line Rack datasheet and storage guidelines for the membrane modules.

X-FLOW X-LINE RACK

DATASHEET

NUMBER OF MODULES LENGTH X WIDTH MM [INCH]	DIMENSIONS OF A X-LINE RACK**					
	2		3		4	
1	330 x 700	[13 x 28]	330 x 1050	[13 x 41]	330 x 1400	[13 x 55]
2	660 x 700	[26 x 28]	660 x 1050	[26 x 41]	660 x 1400	[26 x 55]
3	990 x 700	[39 x28]	990 x 1050	[39 x41]	990 x 1400	[39 x55]
4	1320 x 700	[52 x 28]	1320 x 1050	[52 x 41]	1320 x 1400	[52 x 55]
5	1650 x 700	[65 x 28]	1650 x 1050	[65 x 41]	1650 x 1400	[65 x 55]
6	1980 x 700	[78 x 28]	1980 x 1050	[78 x 41]	1980 x 1400	[78 x 55]
7	2310 x 700	[91 x 28]	2310 x 1050	[91 x 41]	2310 x 1400	[91 x 55]
8	2640 x 700	[104 x28]	2640 x 1050	[104 x41]	2640 x 1400	[104 x55]
9	2970 x 700	[117 x 28]	2970 x 1050	[117 x 41]	2970 x 1400	[117 x 55]
10	3300 x 700	[130 x 28]	3300 x 1050	[130 x 41]	3300 x 1400	[130 x 55]
11	3630 x 700	[143 x 28]	3630 x 1050	[143 x 41]	3630 x 1400	[143 x 55]
12	3960 x 700	[156 x 28]	3960 x 1050	[156 x 41]	3960 x 1400	[156 x 55]
13	4290 x 700	[169 x 28]	4290 x 1050	[169 x 41]	4290 x 1400	[169 x 55]
14	4620 x 700	[182 x 28]	4620 x 1050	[182 x 41]	4620 x 1400	[182 x 55]
15	4950 x 700	[195 x 28]	4950 x 1050	[195 x 41]	4950 x 1400	[195 x 55]
16	5280 x 700	[208 x 28]	5280 x 1050	[208 x 41]	5280 x 1400	[208 x 55]
17	5610 x 700	[221 x 28]	5610 x 1050	[221 x 41]	5610 x 1400	[221 x 55]
18	5940 x 700	[234 x 28]	5940 x 1050	[234 x 41]	5940 x 1400	[234 x 55]

** Width may vary, due to the couplings used. Sizes indicated are Pentair standard.

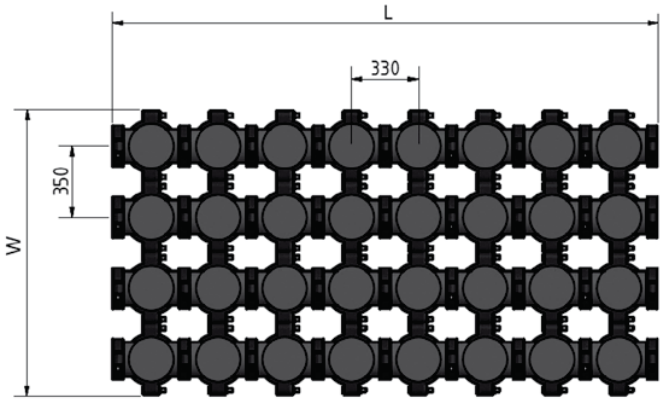

PENTAIR

X-FLOW BV
P.O. BOX 739, 7500 AS ENSCHEDE, NETHERLANDS WWW.X-FLOW.COM

Note: The information and data contained in this document are based on our general experience and are believed to be correct. They are given in good faith and are intended to provide a guideline for the selection and use of our products. Since the conditions under which our products may be used are beyond our control, this information does not imply any guarantee of final product performance and we cannot accept any liability with respect to the use of our products. The quality of our products is guaranteed under our conditions of sale. Existing industrial property rights must be observed.
DS X-LINE RACK EN 4615 © 2015 Pentair. All Rights Reserved.

Appendix E

Constructed Wetlands Standard Detail

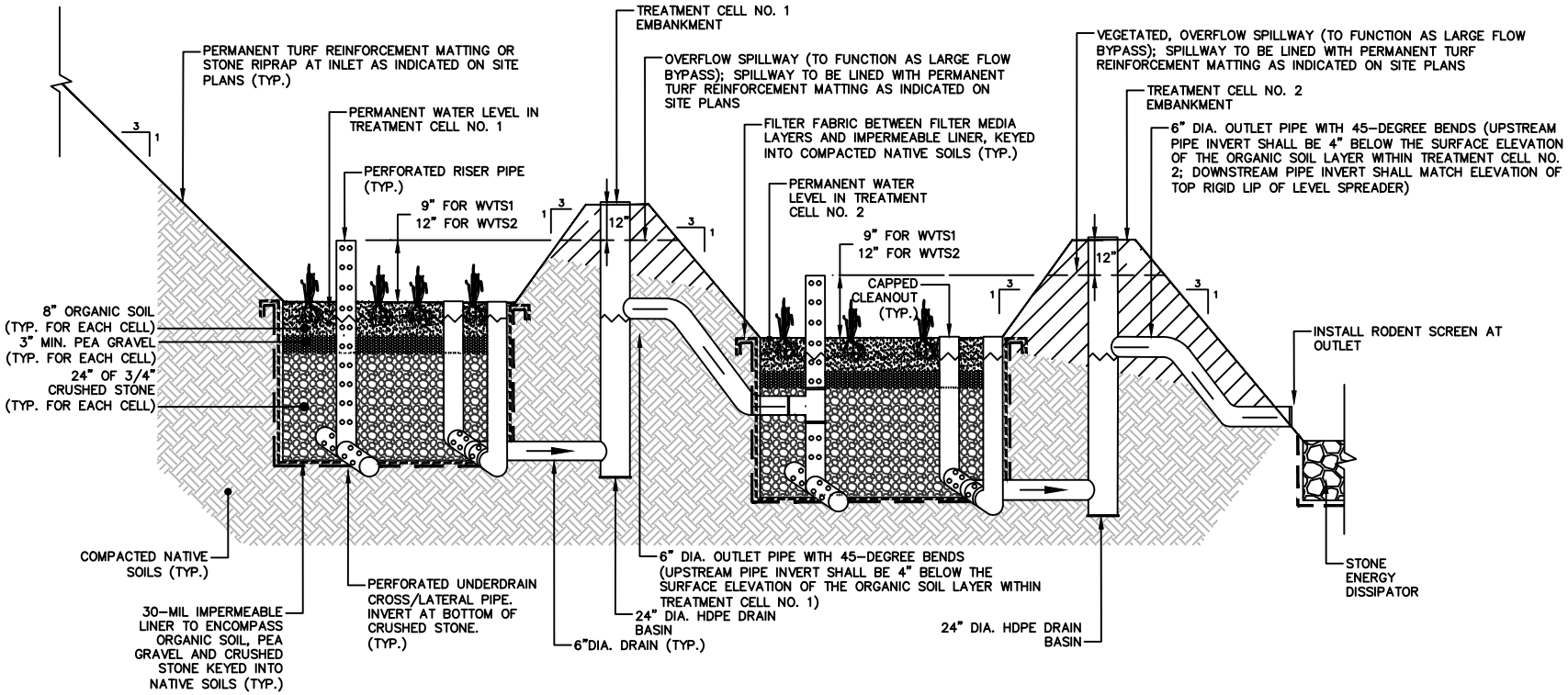

WET VEGETATED TREATMENT SYSTEM (WVTS)

NOT TO SCALE

File Path: J:\DWG\P2015\0756\A10\Civil\Details\20150756A10_DET01.dwg Layout: FIG D-1 Plotted: Wed, October 25, 2017 - 9:34 AM User: rschnabel
Plotter: DWG TO PDF.PC3 CTB File: FO.STB
MS VIEW: LAYER STATE:

SCALE:	
HORZ.:	
VERT.:	
DATUM:	
HORZ.:	
VERT.:	

0
GRAPHIC SCALE

FUSS & O'NEILL
317 IRON HORSE WAY, SUITE 204
PROVIDENCE, RI 02908
401.861.3070
www.fando.com

RIDEM

STANDARD DETAIL

LAFAYETTE HATCHERY PHOSPHORUS REMOVAL

NORTH KINGSTON RHODE ISLAND

PROJ. No.: 20150756.A10
DATE: OCTOBER 2017

FIG F-1

Appendix G

Rules and Regulations for Wastewater Treatment Facility Operators

STATE OF RHODE ISLAND AND PROVIDENCE PLANTATIONS
DEPARTMENT OF ENVIRONMENTAL MANAGEMENT

BOARD OF CERTIFICATION OF OPERATORS
OF WASTEWATER TREATMENT FACILITIES

RULES AND REGULATIONS
FOR
WASTEWATER TREATMENT FACILITY OPERATORS

Regulation 12 190 007, September 26 2002

Authority: These regulations are adopted in accordance with § 42-35 pursuant to § 42-17.4 of the Rhode Island General Laws of 1956, as amended.

STATE OF RHODE ISLAND AND PROVIDENCE PLANTATIONS
BOARD OF CERTIFICATION OF OPERATORS OF WASTEWATER TREATMENT FACILITIES

RULES AND REGULATIONS FOR WASTEWATER TREATMENT FACILITY OPERATORS

RULE 1. PURPOSE 1
RULE 2. LEGAL AUTHORITY 1
RULE 3. SEVERABILITY 1
RULE 4. SUPERSEDED REGULATIONS 1
RULE 5. PROHIBITIONS 1
RULE 6. DEFINITIONS 2
RULE 7. CLASSIFICATION OF WASTEWATER TREATMENT FACILITIES 3
RULE 8. OPERATOR QUALIFICATIONS AND CLASSIFICATIONS FOR WWTF's 3
RULE 9. ISSUANCE OF OPERATOR-IN-TRAINING CERTIFICATE 5
RULE 10. ISSUANCE OF A PROVISIONAL CERTIFICATE 5
RULE 11. APPLICATIONS 5
RULE 12. EXAMINATIONS 6
RULE 13. CERTIFICATION 6
RULE 14. REVOCATION OF CERTIFICATES 9
RULE 15. PENALTY FOR VIOLATIONS 10
TABLE I. CLASSIFICATION OF WASTEWATER TREATMENT FACILITIES - POINT VALUES 11
TABLE II. WASTEWATER TREATMENT PLANT CLASSIFICATION - VARIABLE POINT GUIDE 12

STATE OF RHODE ISLAND AND PROVIDENCE PLANTATIONS
BOARD OF CERTIFICATION OF OPERATORS OF WASTEWATER TREATMENT FACILITIES

RULES AND REGULATIONS FOR WASTEWATER TREATMENT FACILITY OPERATORS

RULE 1. PURPOSE

The purpose of these regulations is to establish a system to classify all wastewater treatment facilities (WWTF's) as to size and type, and to establish specifications, including examinations, education, and work experience, for issuing certificates for operators of each class of WWTF to ensure the proper management, operation, and maintenance of Rhode Island WWTF's.

RULE 2. LEGAL AUTHORITY

These regulations are adopted pursuant to the powers and duties of the Board of Certification of Operators of Wastewater Treatment Facilities as required and authorized by Chapter 42-17.4 of the Rhode Island General Laws of 1956, as amended (RIGL).

These regulations are promulgated pursuant to the provisions of the Administrative Procedures Act, RIGL, Chapter 42-35, and are effective twenty (20) days following the date of filing with the Secretary of State.

RULE 3. SEVERABILITY

If any provision of these rules and regulations or the application thereof to any person or circumstance is held invalid by a court of competent jurisdiction, the remainder of the rules and regulations shall not be affected thereby. The invalidity of any rule or rules or parts of any rule or rules shall not affect the validity of the remainder of these rules and regulations.

RULE 4. SUPERSEDED REGULATIONS

These regulations supersede "Rules and Regulations for Wastewater Treatment Facility Operators" dated September 1998.

RULE 5. PROHIBITIONS

(A) It shall be unlawful after June 30, 1979, for any person to operate or to cause to be operated a wastewater treatment facility unless the superintendent and assistant superintendent of such facilities hold a certificate issued by the Board. The board may waive the requirement of a certified assistant superintendent at a wastewater treatment facility designed for a flow of less than 100,000 gallons per day.

(B) It shall be unlawful after June 30, 1979 for any person to hire an individual as an operator unless he holds a certificate as required under regulations adopted pursuant to this chapter; except that the operator may be hired without such certificate provided that he obtains such certificate within one (1) year of the date of employment.

RULE 6. DEFINITIONS

"**Assistant Superintendent**" means the individual who is an operator who is assigned the direct responsibility for the management, operation and maintenance of an entire wastewater treatment facility in the absence of the superintendent and who shall have a certificate equal to the grade or classification of the wastewater treatment facility. This person is the next person in line of authority in the absence of the superintendent and, therefore, there can be only one assistant superintendent for each facility.

"**Board**" means the Board of Certification of Operators of Wastewater Treatment Facilities established by RIGL section 42-17.4-1 to ensure the proper management, operation, and maintenance of wastewater treatment facilities by certifying an individual to be qualified to be an operator.

"**Certificate**" means a certificate issued by the Board to an individual to operate one or more specified grades of wastewater treatment facilities.

"**Direct Responsible Charge**" is defined as the authority exercised by a superintendent, assistant superintendent, operations supervisor or shift supervisor.

"**In Good Standing**" refers to the status of any employee of a wastewater treatment facility who has exhibited continued reasonable care, judgement and the application of his/her knowledge and ability. Any certified employee of a wastewater treatment facility will not be considered to be in good standing if he/she has been found, after such an individual has been granted a hearing, to have performed his/her duties in a negligent manner or that he/she has practiced fraud or deception.

"**Laboratory Technician**" means any employee of and at a wastewater treatment facility who is not an operator but whose employment is directly involved with the day-to-day process control of the facility due to their full-time duties performing, analyzing and ensuring quality control for the testing of chemical, physical and biological parameters.

"**Licensee**" means any operator, maintenance technician or laboratory technician who has rightfully obtained an operator's certificate.

"**Maintenance Technician**" means any employee of and at a wastewater treatment facility who is not an operator but whose employment is directly involved in the day-to-day maintenance of major process equipment. This individual's full-time duties must be such that he/she is required to obtain a working knowledge of wastewater treatment process control, necessary to ensure the safety of the individual as well as the efficiency of the treatment process.

"**Operations Supervisor**" means an individual who is an operator who works under the superintendent, or assistant superintendent and is in direct responsible charge. This person must be responsible for two (2) or more shift supervisors.

"**Operator**" means an individual who is so employed and assigned the responsibility on one or more mechanical treatment units, processes, or other process functions at a wastewater treatment facility.

"**Person**" means any individual, partnership, firm, association, joint venture, public or private corporation, trust estate, commission, board, public or private institution, utility, cooperative, municipality or any other political subdivision of this state, any interstate body, or any other legal entity.

"**Shift Supervisor**" means an individual who is an operator who works under the superintendent, assistant superintendent, or operations supervisor who is assigned full time direct responsibility of a shift operation of a specific process or collection of processes, such as sludge dewatering, etc. This person must be in responsible charge for two (2) or more operators.

"**Superintendent**" means the individual who is an operator who is assigned the direct responsibility for the management, operation and maintenance of an entire wastewater treatment facility during all work shifts at the facility and who shall hold a certificate equal to the grade or classification of the wastewater treatment facility. It does not apply to any official who does not work at the wastewater treatment facility as an operator.

"**Wastewater**" means used water delivered to a wastewater treatment facility. From the standpoint of source, it may be a combination of the liquid and water-carried wastes from residences, commercial buildings, industrial plants, and institutions, together with any groundwater, surface water, and/or storm water that may be present.

"**Wastewater Treatment Facility**" means an arrangement of devices and structures, excluding septic tanks, constructed and installed for the purpose of treatment of wastewater from domestic, commercial or industrial sources or combinations thereof, and which discharge its treated effluent into any surface water. Privately owned wastewater treatment facilities which treat predominantly industrial wastes, or wastewater treatment facilities that have sub-surface disposal, shall be excluded from the provisions of these regulations.

RULE 7. CLASSIFICATION OF WASTEWATER TREATMENT FACILITIES

(A) Each wastewater treatment facility in the State of Rhode Island subject to these regulations shall be classified by the Board as Grade 1, 2, 3, or 4 based on the complexity of the wastewater treatment facility, and the equivalent population served. See Table I: POINT VALUES FOR CLASSIFICATION OF WASTEWATER TREATMENT FACILITIES.

(B) Classification of any treatment plant may be changed at the discretion of the Board by reason of changes in any condition or circumstance on which the original classification was predicated. Due notice of any such change shall be given to the owner, superintendent, and assistant superintendent of the treatment plant.

RULE 8. OPERATOR QUALIFICATIONS AND CLASSIFICATIONS FOR WWTF's

(A) Approved applicants shall be examined by the Board as to education, experience, and knowledge as related to the classification of plants. Applicants must pass the required written examination.

(B) In evaluating qualifications of applicants, the Board will be guided by the following:

(1) Experience requiring technical knowledge and whether direct responsible charge of work was included. In larger plants where direct responsibility is divided, shift supervisors of important sections or their equivalent may be credited with having direct responsible charge in accordance with the definitions.

(2) Experience, to be acceptable, must be the result of satisfactory accomplishment of work. Evaluation may be based on reports of the Department of Environmental Management, or other agencies having appropriate responsibilities for regulating systems or facilities.

(3) Where applicable, education may be substituted for a portion of experience requirements as specified below:

(a) Two (2) years of college studies in science, engineering, or related fields may be considered as equivalent to a maximum of one (1) year of experience.

(b) Where education is substituted for experience, it shall not exceed an amount which would reduce the requirement of actual experience to less than one (1) year for Grade 1 or less than two (2) years actual experience for Grades 2 and 3 and three (3) years for Grade 4.

(c) Education applied to the experience requirement cannot also be applied to the education requirement.

(4) Where applicable, experience may be substituted for a portion of educational requirements as specified below:

(a) One (1) year of experience may be considered as equivalent to a maximum of two (2) years of college.

(b) Experience applied to educational requirement may not also be applied to the experience requirement.

(5) Substitutions of formal education may be made as follows:

(a) Satisfactory completion of applicable courses of study approved by the Board such as correspondence courses or short courses, will be equivalent to a maximum of six (6) months of college or one (1) year of high school;

(b) An acceptable high school equivalency certificate may be used to substitute for a high school diploma.

(C) Four (4) grades of licensees are hereby established. Licensees' qualifications are intended to relate to the corresponding classifications for wastewater treatment facilities.

(1) GRADE 1

All applicants for this grade must submit satisfactory evidence of a high school or high school equivalency certificate, the completion of one (1) year employment in good standing at a wastewater treatment facility and:

(a) A passing grade on the Grade 1 examination offered by the Board; or

(b) Successful completion of a Board-approved training course within two (2) years prior to application.

(2) GRADE 2

All applicants for this grade must pass a Grade 2 examination and must submit satisfactory evidence of:

(a) Graduation from high school and one (1) year of experience in operation of treatment facilities of Grade 1 or higher; or

(b) A holder of a Grade 1 license and two (2) years of high school and successful completion of two (2) or more specialized courses, approved by the Board, related to wastewater treatment operation, and the completion of two (2) years of employment, in good standing, at a wastewater treatment facility of Grade 1 or higher; or

(c) A holder of a Grade 1 license and successful completion of two (2) or more specialized courses, approved by the Board, related to wastewater treatment operation, and the completion of three (3) years of employment, in good standing, at a wastewater treatment facility of Grade 1 or higher.

(3) GRADE 3

All applicants for this grade must pass a Grade 3 examination and must submit satisfactory evidence of:

(a) Bachelor's or Master's degree in science, engineering, or related fields and two (2) years of employment in good standing in direct responsible charge at a wastewater treatment facility of Grade 2 or higher; or

(b) Successful completion of a two (2) year college curriculum, with the equivalent of one (1) full year consisting of courses with a passing grade in science, engineering, or related fields; and four (4) years of employment as an operator in good standing, two (2) of which are to be in direct responsible charge at a wastewater treatment facility of Grade 2 or higher; or

(c) Graduation from high school or holder of Grade 2 certificate and five (5) years of employment as an operator in good standing, of which three (3) are in direct responsible charge at a wastewater treatment facility of Grade 2 or higher.

(4) GRADE 4

All applicants for this grade must pass a Grade 4 examination and must submit satisfactory evidence of:

(a) Bachelor's or Master's degree in science, engineering, or related fields and three (3) years of employment in good standing in direct responsible charge at a wastewater treatment facility of Grade 3; or

(b) Successful completion of at least two (2) years of college, the equivalent of one (1) full year consisting of courses with a passing grade in science, engineering, or related fields; and five (5) years of employment as an operator in good standing, three (3) of which are direct responsible charge at a wastewater treatment facility of Grade 3; or

(c) Graduation from high school and holder of a Grade 3 certificate and six (6) years of employment as an operator in good standing, of which three (3) are in direct responsible charge at a wastewater treatment facility of Grade 3 or higher.

(D) Any individual employed full-time as either a maintenance technician or a laboratory technician, while not required to become certified, may be allowed to become certified up to Grade 2 only. However, any individual's experience while employed as a maintenance technician or laboratory technician cannot be considered for the experience requirements of the Grade 3 or Grade 4 license.

(E) The following positions are required to be certified as follows:

Position	Minimum Grade
Superintendent	*Grade of the Facility*
Assistant Superintendent	*Grade of the Facility*
Operations Supervisor	*One grade less than facility or Grade 2 whichever is higher*
Shift Supervisor	*Grade 2*

All operators not otherwise specified shall be required to have at least a Grade 1 certificate.

(F) All persons holding the positions of Operations Supervisor or Shift Supervisor as of September 17, 1991, shall be exempt from Rule 8(E); however such exemption shall be valid only at the facility where such person was employed as of such date.

RULE 9. ISSUANCE OF OPERATOR-IN-TRAINING CERTIFICATE

(A) The Board may permit an applicant for any grade to take an examination in a given grade, if the individual has submitted evidence of education and experience satisfactory to the Board for the purpose of becoming an "operator-in-training." OIT Certificates may be valid for up to three (3) years, therefore any applicant for examination must at the time of examination require only a maximum of three (3) years additional experience.

(B) Upon successfully passing the examination the applicant shall be issued an "operator-in-training certificate" for the grade applied for.

(C) A holder of an operator-in-training certificate may, with the consent of the Board, be allowed in certain circumstances to operate a treatment facility of his examined grade on a temporary basis until his/her experience requirements are met.

RULE 10. ISSUANCE OF A PROVISIONAL CERTIFICATE

A non-renewable six- (6-) month provisional certificate may be issued to a superintendent or assistant superintendent, operations supervisor, or shift supervisor only in specific instances:

(A) Where the Board deems necessary, and;

(B) Where the Board is satisfied that such individual is able to meet all requirements of a particular grade including, but not limited, to experience and education.

RULE 11. APPLICATIONS

(A) Any individual desiring to be certified shall file an application with the Board not less than thirty (30) days before the date of the examination, on an application form provided by the Board.

(B) The application shall be accompanied by a fee of ten dollars ($10.00). The biannual renewal fee will be ten dollars ($10.00).

(C) The Board shall review applications and supporting documents, determine the eligibility of the applicant for examination and notify the applicant of the same.

(D) The application fee will not be returned upon failure to pass the examination.

RULE 12. EXAMINATIONS

(A) The Board shall prepare written examinations to be used in determining knowledge, ability and judgment of the operators.

(B) Examinations shall be held at least twice annually at a place and time set by the Board. Notification of examination shall be posted at least sixty (60) days in advance of the examination date.

(C) Except in such cases as the Board may decide, all examinations shall be written. All examinations shall be graded by the Board or by its designees, and the applicant shall be notified of the outcome in writing. Papers used in the examination will not be returned to the applicant, but the results may be reviewed with a member of the Board, or its designee, upon request by the applicant up to thirty (30) days after notification of the results.

(D) The Board will grade all exams with a minimum passing grade of 70 percent (70%). No examination will be scaled.

(E) Applicants who fail to pass an examination may apply to be re-examined at a regularly scheduled examination.

(F) A Grade 2 operator meeting all of the requirements of the Grade 3 examination except being in direct responsible charge may apply to take the Grade 3 examination. If passed, that person would receive a notice of passing valid for a period of two (2) years from the examination date. If within the two (2) years that individual secures a position of direct responsible charge at a Grade 2 or higher wastewater treatment facility, he/she would not be required to take the examination to be eligible for an OIT certificate.

(G) Individuals not employed at an approved wastewater treatment facility in the State of Rhode Island shall not be allowed to sit for examination.

RULE 13. CERTIFICATION

(A) Upon satisfactory fulfillment by an applicant of the provisions of the Rules and Regulations adopted by the Board, the Board shall issue a suitable certificate designating competency. This two (2) year certificate shall expire at the end of every other calendar year and may be renewed thereafter for additional two (2) year periods. The certificate shall indicate the grade of treatment facility for which the operator is qualified. The certificates for superintendent and assistant superintendents shall be prominently displayed in the office of the wastewater treatment facility.

(B) A newly issued certificate shall expire at the end of the calendar year and may be renewed for additional two (2) year periods thereafter.

(1) Licensees who are no longer employed at a Rhode Island wastewater treatment facility may continue to renew their certificate.

(2) Licensees will be notified at their address of record as to the expiration of their certificate, and the necessity to renew. All renewals and payments must be received by December 31 of the year of expiration.

(a) Any individual who does not apply for renewal upon receipt of the first (1st) notice will be sent a second (2nd) notice by certified mail stating the individual has until February 15th to apply for renewal and pay a late fee of fifteen dollars ($15.00) in addition to the renewal fee. A copy of the second (2nd) notice will be sent to the superintendent.

(b) If an application for renewal is not received by February 15, a third (3rd) notice will be sent to the wastewater treatment facility owner, superintendent, and the licensee by certified mail. This will be the final notice. Payment of a late fee of fifty dollars ($50.00) plus the renewal fee of ten dollars ($10.00) will be required.

(c) The licensee license will be revoked if the renewal is not received within fifteen (15) calendar days of receipt of the third (3rd) notice, and as such said individual will no longer be able to work as an operator at a wastewater treatment facility in the State of Rhode Island.

(d) Should the Board be unable to contact a licensee whose address of record has changed and no forwarding address is available, and if that licensee is no longer working at a wastewater treatment facility in Rhode Island, that individual's license will be terminated without further attempts at notification.

(e) Re-certification will be through examination only.

(3) Should the Board determine that a substantial number of acceptable training courses are available to all grades of Rhode Island licensees, then the Board may institute a **Mandatory Retraining for Renewal** (MRR) requirement which will operate with the following guidelines:

(a) The Board must notify licensees, within ninety (90) days of the close of a two-year licensure period that the MRR is presently in effect. Hence, in order to renew an operator license for the next renewal date (i.e., in approximately two (2) years) a minimum amount of training will be required.

(b) All licensees must satisfactorily attain twenty (20) hours of acceptable training within the two year period.

(c) Training hours, to be considered acceptable and to be applied to an licensee's training hours, must be achieved from a course, seminar, or other curriculum which has been approved by the Board. Any course, seminar or curriculum will be reviewed by the Board or its designees for purposes of granting prior approval.

(d) The licensee is responsible for ensuring that a course, seminar or other curriculum is approved by the Board, and that those hours with that course can be accredited to the operator's training requirements.

(e) The burden of proof lies with the licensee to satisfy the Board that any course, seminar, or other curriculum not previously approved by the Board meets Board criteria and should be approved for credit.

(f) The Board is not responsible for notifying licensees of their individual status and/or the number of credited hours which they have attained. Additionally, it is ultimately the individual licensee's responsibility to inform the Board of any training hours to be applied to their training hours.

(g) At the close of the two year renewal period, the Board will determine if each licensee has been credited with the required hours of acceptable training.

(h) If a licensee has not acquired the required hours, as specified above, then the license will not be renewed and the license will then be invalid. With an invalid license, the licensee will not be able to work as an operator at a wastewater treatment facility in the State of Rhode Island. Re-certification will be by examination only.

(C) As a condition of certification, licensees are responsible for informing the Board in writing as to a change of address or a change in employment status. Said notification must be within thirty (30) calendar days of said change.

(D) Superintendents of a facility are responsible for notifying the Board when their facility hires a new operator. Said notification must be within thirty (30) calendar days of the hiring and must include the operator's full name, address, social security number and starting date.

(E) Should a facility be upgraded or reclassified, the superintendent and assistant superintendent must become certified through examination equal to the new grade of the treatment facility prior to the initiation of operations or start-up procedures for the facility. Operations and shift supervisor reclassification, if necessary, must also occur prior to the start-up of the facility.

(F)

(1) Certificates may be issued, upon application, without examination, in a comparable classification to any I individual who holds a certificate issued by any state, recognized by the Association of Boards of Certification, if in the judgment of the Board, the requirements for certification of operators under which such individual's certificate was issued are equivalent to the requirements of these regulations. A certificate issued under the provisions of this sub-rule is valid at any wastewater treatment facility.

(2) In order for an applicant to obtain a Rhode Island Grade 4 wastewater treatment facility ("WWTF") operator's license on the basis of the applicant's possession of an operator's license issued by another state which is deemed by the Board to have requirements for licensure equivalent to that of a Rhode Island Grade 4 WWTF operator's license, the applicant must also demonstrate the following to the satisfaction of the Board:

(a) That he/she is employed or has been accepted for employment as an assistant superintendent or a superintendent at a grade 4 WWTF in the state of Rhode Island;

(b) That his/her employment as an equivalent Grade 4 WWTF operators at a WWTF located in the state which issued the equivalent Grade 4 WWTF operator's license must have terminated no earlier than one (1) year prior to the filing of his/her application with the Board; and

(c) That his/her employment as an equivalent grade 4 WWTF operator in the state which issued the equivalent grade 4 WWTF operator's license should be considered to have been accomplished with an overall favorable rating and that he/she should have been terminated his/her service in the other state in good standing.

(G) Certificates issued without examination to those operators so employed as of June 30, 1979 shall be valid only in that facility at which the operator was employed at the time of certification.

RULE 14. REVOCATION OF CERTIFICATES

(A) The Board may suspend or revoke the certificate of a superintendent, operator, laboratory technician or maintenance technician when it finds that he/she performed his/her duties in a negligent manner that produced an effluent below the standards normal for the particular facility operated; or that he/she has practiced fraud or deception; or that reasonable care, judgment or the application of his/her knowledge or ability was not used in the performance of his/her duties; or that an individual is incompetent or unable to perform his/her duties properly.

(B) Before the Board may institute proceedings to suspend or revoke a certificate, it will send notice, by certified mail to the individual whose certificate is being considered for suspension or revocation, of the facts or conduct which warrant the intended action. The notice shall afford the individual thirty (30) days from receipt of the notice to submit a written response or request a meeting before the Board to show compliance with all lawful requirements for the retention of the certificate. If the certificate holder fails to submit a written response or request a meeting before the Board to show compliance within thirty (30) days of the receipt of said notice or fails to show cause why the certificate should not be revoked, the Board may revoke the certificate in accordance with these regulations, Rhode Island General Laws §42-17.4-8, and Title 42, Chapter 35 of the Rhode Island General Laws. The notice of revocation shall be mailed by certified mail to the certificate holder.

(C) If the Board finds that public health, safety, or welfare imperatively requires emergency action, and incorporates a finding to that effect in its order, summary suspension of a certificate may be ordered pending proceedings for revocation. These proceedings shall be promptly instituted and determined.

(D) The certificate holder may request a hearing on the suspension or revocation of the certificate with the Board. The request for hearing must be received by the Board within thirty (30) days of the date of receipt of the notice of suspension or revocation. The hearing shall comply with the requirements of Rhode Island General Laws §42-35-9. Appeal from the final decision of the Board may be made as provided under Title 42, Chapter 35 of the Rhode Island General Laws.

RULE 15. PENALTY FOR VIOLATIONS

Pursuant to Rhode Island General Laws §42-17.4-10, any person who shall be found guilty of violations of any of the provisions of the Rules and Regulations for Wastewater Treatment Facility Operators shall be punished by a fine of not more than five hundred dollars ($500.00) or by imprisonment for not more than thirty (30) days, or by both fine and imprisonment, and every person shall be deemed guilty of a separate and distinct offense for each day during which the violation is repeated or continued.

TABLE I. CLASSIFICATION OF WASTEWATER TREATMENT FACILITIES - POINT VALUES

Assign points for every item that applies:

Item	Points
Size	
Maximum population equivalent (P.E.) served (peak days)	1 pt. per 10,000 P.E. or part. _____ (Max. 10 Points)
Design flow (avg. day) or peak month's flow (avg. day), whichever is larger.....	1 pt. per MGD or Part. _____ (Max. 10 Points)
Effluent Discharge	
Receiving stream (sensitivity).....	1-6*_____
Land disposal-evaporation.....	2 _____
Subsurface disposal.....	4 _____
Variation in Raw Wastes (slight to extreme).....	0-6*_____
Preliminary Treatment	
Flow equalization.....	3 _____
Screening comminution.....	3 _____
Grit removal.....	3 _____
Plant pumping of main flow.....	3 _____
Primary Treatment	
Primary clarifiers.....	5 _____
Combined sedimentation/digestion.....	5 _____
Chemical addition (except chlorine, enzymes).....	4 _____
Secondary Treatment	
Trickling filter w/sec. clarifiers.....	10 _____
Activated sludge w/sec. clarifiers..... (including ext. aeration and oxidation ditches with or without sand filters)	15 _____
Rotating Biological Contactors.....	10 _____
Stabilization ponds without aeration.....	5 _____
Aerated lagoon.....	8 _____
Advanced Waste Treatment	
Polishing pond.....	2 _____
Chemical/physical-without secondary.....	15 _____
Chemical/physical - following secondary.....	10 _____
Biological or Chemical/biological.....	12 _____
Ion exchange.....	10 _____
Reverse osmosis, electrodialysis.....	15 _____
Chemical recovery carbon regeneration.....	4 _____
Microstrainers.....	4 _____
Solids Handling	
Thickening.....	5 _____
Anaerobic digestion.....	10 _____
Aerobic digestion.....	6 _____
Mechanical dewatering.....	8 _____
Evaporative sludge drying.....	2 _____
Solids reduction (incineration, wet oxidation).....	12 _____
Sludge composting.....	5 _____
Disinfection	
Chlorination or comparable.....	5 _____
On-site generation of disinfectant.....	5 _____
Dechlorination.....	5 _____
Ultra-violet.....	5 _____
Laboratory Control by plant personnel	
Bacteriological (complexity).....	0-10* _____
Chemical/physical (complexity).....	0-10* _____

FINAL TOTAL ..... _____

* See attached Variable Point Guide, Table II

** If unique treatment plant conditions distort the point total, the certification board will adjust the facility classification.

TABLE II. WASTEWATER TREATMENT PLANT CLASSIFICATION - VARIABLE POINT GUIDE

EFFLUENT DISCHARGE

Receiving stream sensitivity (1-6)

The key concept is the degree of dilution provided under low flow conditions. Suggested point values are:

"Effluent limited segment" in EPA terminology; secondary treatment is adequate:	1
More than secondary treatment is required	2
"Water quality limited segment" in EPA terminology: stream conditions are very critical (dry run, for example) and a very high degree of treatment is required	3
Effluent used in a direct recycle and reuse system	6

Variation in Raw Wastes, slight to extreme (0-6)

The key concept is frequency and/or intensity of deviation or typical fluctuations; such deviation can be in terms of strength, toxicity, shock loads, I/I, etc. Suggested point values are:

Variations do not exceed those normally or typically expected	0
Recurring deviations or excessive variations of 100 to 200 percent in strength and/or flow	2
Recurring deviations or excessive variations of more than 200 percent in strength and/or flow	4
Raw wastes subject to toxic waste discharges	6

LABORATORY CONTROL BY PLANT PERSONNEL

Bacteriological/biological, complexity 0-10

The key concept is to credit bacteriological/biological lab work done on-site by plant personnel.
Suggested point values are:

Lab work done outside the plant	0
Membrane filter procedure	3
Use of Fermentation tubes or any dilution method: fecal coliform determination	5
Biological identification	7
Virus studies or similarly complex work conduct on-site	10

Chemical/physical, complexity (0-10)

The key concept is to credit chemical/physical lab work done on-site by plant personnel.
Suggested point values are:

Lab work done outside the plant	0
Push-button or visual methods for simple tests such as pH, Settleable solids	up to 5
More advanced determinations such as specific constituents: nutrients, total oils, phenols, etc.	up to 7
Highly sophisticated instrumentation such as atomic absorption and gas chromatography	10

Range of Points	30 and less.	31 - 55	56 - 75	76 and greater.
Resulting Facility Grade	1	2	3	4

The foregoing "Rules and Regulations for Wastewater Treatment Facility Operators", after due public notice and hearing, are hereby adopted in accordance with the provisions of Chapter 42-17.4 and Chapter 42-35 of the General Laws of Rhode Island of 1956, as amended.

_____

William Louis Patenaude, Chair
BOARD OF CERTIFICATION OF OPERATORS
OF WASTEWATER TREATMENT FACILITIES

Public Notice given on:	April 10, 2002
Filed with Secretary of State on:	September 6, 2002
Effective on:	September 26, 2002