FORT ADAMS MAINTENANCE BUILDING

RHODE ISLAND DEPARTMENT OF ENVIRONMENTAL MANAGEMENT
DIVISION OF PARKS AND RECREATION

STATE OF RHODE ISLAND AND PROVIDENCE PLANTATIONS

FORT ADAMS STATE PARK, NEWPORT, RI

50 Holden Street · Providence, Rhode Island 02908
(401) 272-1730 · www.rgb.net

Architecture · Project Management · Interior Design

RGB architects

THE ROBINSON GREEN BERETTA CORPORATION — ARCHITECTURE

CONSULTANTS

NARRAGANSETT ENGINEERING, INC. — CIVIL ENGINEERING
C.A. PRETZER ASSOCIATES, INC. — STRUCTURAL ENGINEERING
BUILDING ENGINEERING RESOURCES, INC. — MECHANICAL, ELECTRICAL & PLUMBING ENGINEERING

LIST OF DRAWINGS

CIVIL
- C100 SITE PLAN
- C101 PROPOSED STORMWATER PLAN
- C102 DETAILS & NOTES
- 1 C102.A DETAILS & NOTES
- C103 FULL LOT EXTENTS

ARCHITECTURAL
- G001 ABBREVIATIONS & SYMBOLS
- A010 CODE REVIEW
- A030 CONSTRUCTION TYPES
- D100 DEMOLITION PLAN
- A100 FLOOR & ROOF PLAN
- A200 BUILDING ELEVATIONS
- A300 ENLARGED FLOOR PLAN
- A301 ENLARGED TOILET PLAN & INTERIOR ELEVATIONS
- A400 BUILDING SECTIONS
- A410 WALL SECTIONS
- A500 EXTERIOR SECTION DETAILS
- A501 EXTERIOR DETAILS
- A600 REFLECTED CEILING PLAN & FINISH SCHEDULE
- A801 INTERIOR DETAILS
- A810 INTERIOR DETAILS & CASEWORK
- A900 DOOR SCHEDULE & EXTERIOR GATE DETAILS
- A901 DOOR DETAILS
- A902 OVERHEAD DOOR DETAILS
- A910 WINDOW SCHEDULE & DETAILS

STRUCTURAL
- S100 GENERAL NOTES AND MASONRY DETAILS
- S101 FOUNDATION PLAN AND UPPER FLOOR FRAMING PLAN
- S201 FOUNDATION DETAILS

ELECTRICAL
- E001 ELECTRICAL- LEGEND, SCHEDULE & NOTES
- E002 ELECTRICAL- SPECIFICATIONS
- E003 ELECTRICAL SITE PLAN
- E100 ELECTRICAL- LOWER LEVEL PLAN
- E200 ELECTRICAL- UPPER LEVEL PLAN
- FA100 FIRE ALARM- PLAN
- FA200 FIRE ALARM- SPECIFICATION

SECURITY
- TY001 SECURITY LEGEND, AND NOTES 1
- TY002 SPECIFICATIONS
- TY100 FLOOR PLAN
- TY300 SECURITY DETAILS

PLUMBING
- P001 PLUMBING- LEGEND, SCHEDULE & NOTES
- P100 PLUMBING- FLOOR PLANS
- P200 PLUMBING DETAILS
- P201 PLUMBING DETAILS
- P300 PLUMBING SPECIFICATIONS

MECHANICAL
- M100 MECHANICAL LEGENDS, NOTES AND DETAILS
- M101 LOWER & UPPER FLOOR PLANS- MECHANICAL
- M201 MECHANICAL SCHEDULES
- M301 MECHANICAL SPECIFICATIONS
- M305 MECHANICAL SPECIFICATIONS

1 ADDENDUM 1 02/07/2020

FORT ADAMS MAINTENANCE BUILDING - 6380

STATUS: ISSUED FOR CONSTRUCTION

DATE: MAY 29, 2018

BENCHMARK NOTE:
NEI WILL ALWAYS PROVIDE A MINIMUM OF TWO SITE BENCHMARKS. CONTRACTOR TO VERIFY ALL BENCHMARKS EXIST PRIOR TO CONSTRUCTION. ELEVATIONS OF ALL BENCHMARKS TO BE SHOT IN FIELD (WITH SUITABLE EQUIPMENT) AND DIFFERENTIAL TO BE VERIFIED, IF VERTICAL DIFFERENTIAL EXCEEDS 0.05' IT SHALL BE IMMEDIATELY REPORTED TO NEI. DIFFERENTIAL IN EXCESS OF 0.05 INDICATES THAT BENCHMARKS MAY HAVE BEEN DISTURBED AND ARE NOT SUITABLE FOR USE.

PROPOSED COVERAGE AREA

NO.	ITEM	AREA		NOTES
1	STRUCTURE + PADS	5,280	ft^2	
2	PARKING AREA	14,030	ft^2	
3	EXISTING ROADWAY	1,115	ft^2	PROPOSED AND EXISTING (PROPOSED = 5521 SF)
4	PROPOSED ROADWAY	5,521	ft^2	NEW TOTAL IMPERVIOUS ROADWAY = 1009 SF
5	TOTAL	25,946	ft^2	PROPOSED>EXISTING (25,946 SF>21,889 SF)
6	Lot Area	2,289,513	ft^2	52.56 ACRES
7	Cover Percentage	1.1%		
8	Project Site Area	45,416	ft^2	Defined by Engineer
9	Impervious Cover	57.1%		Redevelopment Site

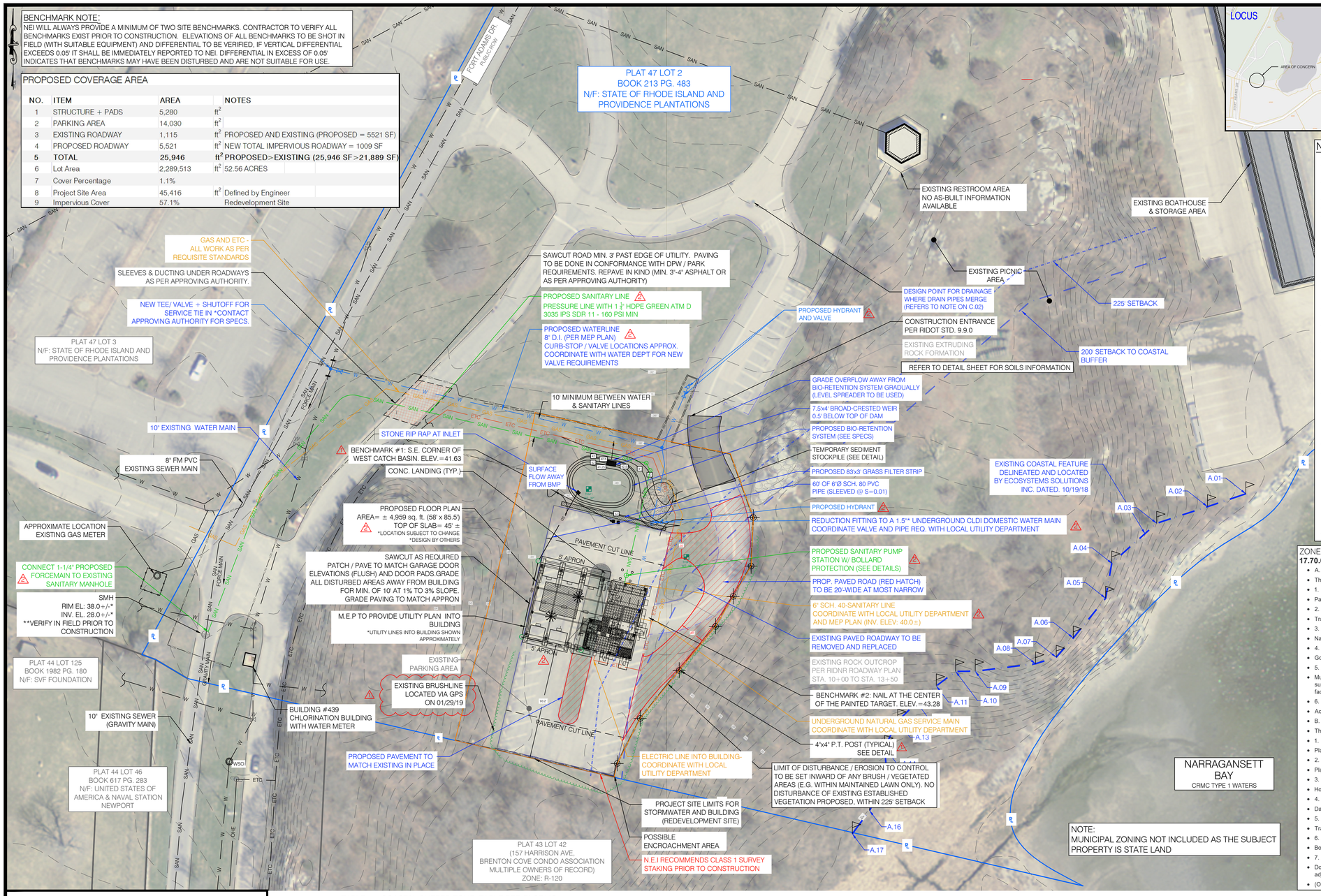

PLAN REFERENCE:
1. "UPGRADE/IMPROVEMENTS TO SANITARY SEWER SYSTEM". PREPARED BY:NAVAL EDUCATION AND TRAINING CENTER.NEWPORT, RHODE ISLAND. 1994
- MEP PLANS; 90% CONSTRUCTION DRAWINGS. PREPARED BY BUILDIING ENGINEERING RESOURCES, INC. DATED JULY 9TH, 2018.
- ARCHITECTURE PLANS PREPARED BY RBG ARCHITECTS.

DEED REFERENCES
DEED VOLUME - BOOK 213, PAGE 483.

NOTE:
- LIDAR AND ORTHOPHOTO PER RIGIS
- ALL EXISTING UTILITY INFORMATION SHOWN APPROXIMATELY PER PLAN REF. 1. FIELD VERIFICATION MAY BE REQUIRED
- COASTAL FEATURE FLAGGED AND LOCATED BY ECOSYSTEMS SOLUTIONS INC. DATED 10/19/2018
- CRMC FILE NO.
- 2017-07-073, 2016-05-084
- 2013-05-221, 2013-05-036, 2011-03-061

-ZONE: RECREATIONAL

-22.3 (NOTE 2) - ALL PIPES TO BE SLEEVED IN SEAMLESS OR SCHEDULE 40 PVC OR EQUIVALENT PIPE WITH WATERTIGHT JOINTS, AND SHALL HAVE A WATERTIGHT SEAL THAT IS FASTENED TO THE PIPES WITH A STAINLESS STEEL RETRACTABLE CLAMP.

- NO PARKING CALCULATIONS OR DESIGNS ARE INCLUSIVE. NO RE-STRIPING IS INCLUSIVE.
- THIS BUILDING IS PART OF A LARGER FACILITY, PARKING SPACES (INCLUDING ADA)ARE LOCATED ELSEWHERE.
- NO LANDSCAPE DESIGN IS INCLUSIVE
- NO LIGHTING DESIGN IS INCLUSIVE
- PROPOSED UTILITIES SHOWN IN PLAN BY: BUILDING ENGINEERING RESOURCES, INC 90% CONSTRUCTION DOCUMENTS. COORDINATE ALL INSTALLATIONS WITH M.E.P. NEED COORDINATION WITH LOCAL UTILITIES DEPARTMENTS
- PLAN WAS PREPARED WITHOUT THE BENEFIT OF ANY GEO-TECHNICAL INVESTIGATIONS, SOIL EVALUATIONS OR REPORTS. NEI RECOMMENDS LEDGE PROBED (AT 50' o.c) BE CONDUCTED PRIOR TO EXCAVATION TO VERIFY LOCATION AND DEPTH OF LEDGE

- EXISTING UTILITY INFORMATION, GRADE CONTOURS, BUILDINGS AND SITE FEATURES ARE SHOWN WITHOUT THE BENEFIT OF A SURVEY. INFORMATION IS SHOWN FROM BEST AVAILABLE SOURCES (PLANS, GIS, ETC.), BUT NEED TO BE FIELD VERIFIED BY CONTRACTOR. NEI RECOMMENDS CARRYING EFFORT TO LOCATE AND IDENTIFY ALL EXISTING UTILITIES PRIOR TO CONSTRUCTION. UTILITY LOCATION INFORMATION IS NOT GUARANTEED AND IS SUBJECT TO FIELD VERIFICATION
(VIF - VERIFY IN FIELD)

THIS IS NOT A AS-BUILT UTILITY OR SURVEY PLAN.

ZONE: REC (RECREATION DISTRICT)
17.70.020. - Use regulations.
- A.
- The following uses are permitted by right:
- 1.
- Parks;
- 2.
- Trails for walking or biking;
- 3.
- Natural beach swimming areas, both public and private;
- 4.
- Golf courses excluding miniature golf courses and commercial driving ranges;
- 5.
- Municipal and public service corporation buildings and facilities; community water supply reservoirs; community well houses; water towers; water and sewage treatment facilities, water and sewage pumping stations;
- 6.
- Accessory uses with respect to the foregoing.
- B.
- The following uses require a special use permit from the zoning board of review:
- 1.
- Playgrounds;
- 2.
- Playing fields;
- 3.
- Horse-riding academies and boarding stables for horses;
- 4.
- Day camps for children and youth;
- 5.
- Trails for horseback riding;
- 6.
- Boating instruction;
- 7.
- Docks, slips and piers where boats may be berthed provided that the parcel of land is adjacent to an open water body.
- (Ord. 2000-4 (part), 2000: Ord. 98-51 § 1 (part), 1998; Ord. 97-50B § 2 (part), 1997)

LEGEND

	BRUSH LINE (APPROXIMATE)
100.00'	DIMENSION - EXISTING
100.00' (D)	DIMENSION - PLAN / DEED
100.00'	DIMENSION - PROPOSED
100.00' (S)	DIMENSION - SURVEY
	EDGE OF PAVEMENT - EXISTING
	EDGE OF PAVEMENT - PROPOSED
	ELECTRIC - OVERHEAD (OHE)
ETC	ELECTRIC - TELEPHONE - CABLE (ETC)
UGE	ELECTRIC - UNDERGROUND (UGE)
	FENCE - METAL
	FENCE - WOOD
	FLOW ARROWS
GAS	GAS (G)
	GRADE CONTOUR - EXISTING
100.00	GRADE CONTOUR - PROPOSED
	HIGH VISIBILITY FENCE (HVF)
LOD	LIMIT OF DISTURBANCE (LOD)
	PROPERTY LINE - ABUTTING
	PROPERTY LINE - EXISTING
	PROPERTY LINE - PROPOSED
SAN	SANITARY SEWER (S)
SED	SEDIMENT CONTROL (SED)
	SETBACKS
	STONE WALL
SD	STORM DRAIN (SD)
	SUBDIVISION LINE - EXISTING
W	WATER
	WETLAND LIMIT
	CATCH BASIN
	DRILL HOLE
	ELECTRIC BOX (ETC)
	FIRE HYDRANT
	GATE VALVE
G	GRANITE BOUND, EXISTING
	LOW WATER LINE
	LIMIT OF DISTURBANCE MARKER
MH	MANHOLE (MH TYPE)
	REBAR / STEEL PIPE FOUND
	SPIKE
X 5.10	SPOT GRADE - EXISTING
X 6.6	SPOT GRADE - PROPOSED
	STRUCTURE, EXISTING
	STRUCTURE, PROPOSED
	SURVEY MONUMENT TO BE SET
	SURVEY MARKER TO BE SET
SE #	SOIL EVALUATION
	TREE
	UTILITY POLE
WSO	WATER SHUT OFF
	WETLAND FLAG LOCATION

TABLE 2a. COASTAL BUFFER ZONE TABLE PER RI CRMC

Residential Lot Size (sq. ft.)	Water Use Category: Type 3, 4, 5, & 6	Water Use Category: Type 1 & 2
	Required Buffer (ft)	
<10,000	15.	25
10,000 - 20,000	25	50
20,001 - 40,000	50	75
40,001 - 60,000	75	100
60,001 - 80,000	100	125
80,001 - 200,000	125	150
>200,000	150	200

0 40 60 80 100 200

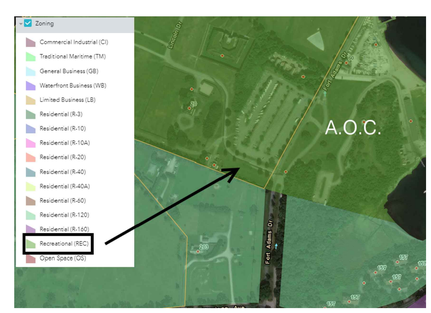

FEMA FIRM MAP 44005C0177J ZONE X

This drawing is copyrighted and is subject to copyright protection as an "architectural work" under 17 U. S. C. Sec. 101 et seq. The protection includes but is not limited to the overall form as well as the arrangement and composition of spaces, materials, color and elements in the design. Under such protection, unauthorized use of this drawing may result in the cessation of construction or buildings being seized and/or monetary compensation being awarded to The Robinson Green Beretta Corporation (RGB).

Any reproduction, possession, or use of this drawing or any part thereof without the express written permission of RGB, is prohibited. Violators will be prosecuted to the full extent of the law.

© RGB 2008

Certification

Drawn by RJB

Checked by NKH, KH, EC

Revised on

1 (ADD EXISTING BRUSHLINE AND PT POSTS)(ADD BENCHMARKS) (01/30/19)

2 (RE–ROUTE WATER & STORM–WATER)(ADD APRONS)(ADD DETAILS) (02/07/20)

PURPOSE:
PROPOSED SITE GRADING AND UTILITIES FOR ASSENT APPLICATION

KAMAL R. HINGORANY
NO. 4089
REGISTERED PROFESSIONAL ENGINEER
02.07.20

DRAWINGS MUST BE PRINTED IN COLOR TO BE VALID. THIS NOTE SHOULD BE BLUE. IF THIS NOTE IS NOT BLUE, PLEASE REPRINT IN COLOR OR CONTACT NEI.

NARRAGANSETT ENGINEERING INC.
MAIN OFFICE:
3102 EAST MAIN ROAD,
PORTSMOUTH, RI 02871
TEL : (401) 683-6630
nei-cds.com

REVISION 1. 10/28/2018
- COASTAL FEATURE FLAGGED, SANITARY LINE EDITS

50 Holden Street
Providence, Rhode Island 02908
Phone: (401) 272-1730
Fax: (401) 273-7156
E-mail: rgbinfo@rgb.net
www.rgb.net
Architecture · Project Management · Interior Design

Project

FORT ADAMS MAITENANCE BUILDING

RIDEM / DIVISION OF PARKS & RECREATION

STATE OF RHODE ISLAND AND PROVIDENCE PLANTATIONS

FORT ADAMS STATE PARK, NEWPORT, RI

Drawing Status
ISSUED FOR CONSTRUCTION

Issued On FEBRUARY 21, 2019

Sheet Contents
PROPOSED SITE PLAN
SCALE 1"= 40'
ADDENDUM 1

Project Number. 6380
NEI # 17.0200

Drawing No.
C100

Sheet 1 of 4

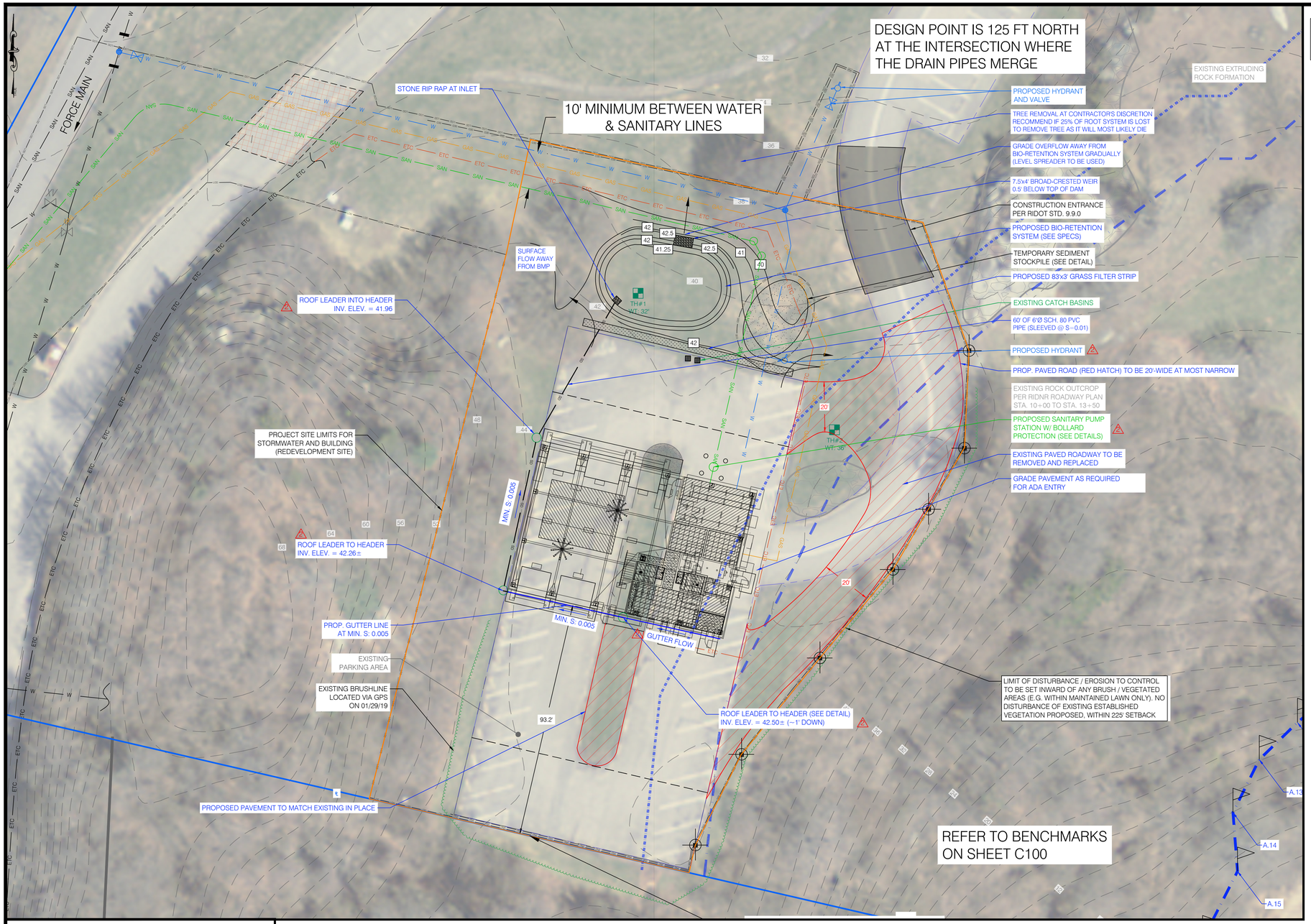

PLAN REFERENCE:
- "PROPOSED SITE PLAN" BY NARRAGANSETT ENGINEERING INC. SCALE = 1"=30' (IN THIS PLAN SET)

PURPOSE:
PROPOSED STORMWATER DESIGN AND GRADING FOR ASSENT APPLICATION

LOCUS

SOIL PROFILES

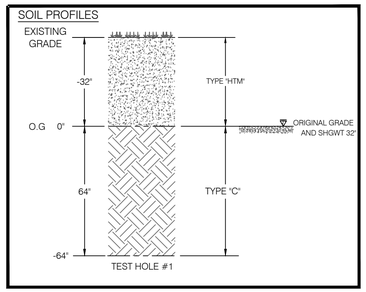

SOIL PROFILES

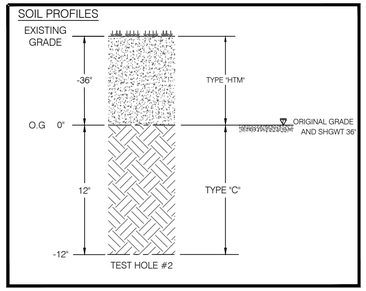

* NOTE:
THE NEW PROPOSED ROADWAY HAS 5.521 S.F. OF IMPERVIOUS AREA AND THE EXISTING ROADWAY THAT IS TO BE REMOVED IS 3,374 S.F., WHERE ONLY 866 S.F. IS TO BE TURNED INTO A GRASS AREA. THEREFORE, THE NEW IMPERVIOUS AREA IS 2,190 S.F.

THE RUNOFF FROM BOTH THE PROPOSED PAVEMENT AND EXISTING PAVEMENT TO REMAIN WILL BE CAPTURED BY CATCH BASINS DOWN GRADIENT AND JOIN WITH THE RUNOFF CAUGHT BY THE CATCH BASINS IN THE PARKING LOT. THE NEW IMPERVIOUS AREA CAN NOT BE TREATED DUE TO ELEVATION CONSTRAINTS AND UTILITY LINE PLACEMENT.

WE ATTEMPTED TO DESIGN A CATCH BASIN ON THE ROADWAY AND PIPE IT INTO THE PROPOSED BIO-RETENTION FILTER THAT SHALL TREAT RUNOFF FROM THE PROPOSED BUILDING, BUT IT BECAME IMPRACTICAL. THE PIPE COULD NOT BE TRENCHED THROUGH THE FOUR UTILITY LINES AND MAINTAINING A MINIMUM SLOPE TO THE BIO-RETENTION SYSTEM IS NOT PRACTICABLE.

THE ATTEMPTS TO TREAT THE ROADWAY RUNOFF WERE TO THE "MAXIMUM EXTENT PRACTICABLE". THE PROPOSED BIO-RETENTION SYSTEM IS DESIGNED TO HANDLE A 100-YEAR STORM EVENT WHEN STANDARDS FOR A REDEVELOPMENT SITE REQUIRED DESIGN FOR ONLY GROUNDWATER RECHARGE AND WATER QUALITY. A WATER QUALITY RAINFALL EVENT (1-INCH) IS FULLY INFILTRATED AND GROUNDWATER RECHARGE REQUIREMENTS ARE EASILY MET.

OVER SIZING THE BIO-RETENTION SYSTEM TO HANDLE MUCH MORE STORMWATER THAN NEEDED TO BE DESIGNED FOR WAS THE HIGHEST PRACTICABLE LEVEL OF MANAGEMENT IMPLEMENTED FOR THE LACK OF TREATMENT FOR JUST OVER 2,000 S.F. OF NEW IMPERVIOUS AREA.

LEGEND

BRUSH LINE (APPROXIMATE)	CATCH BASIN
100.00' DIMENSION - EXISTING	DRILL HOLE
100.00' (D) DIMENSION - PLAN / DEED	ELECTRIC BOX (ETC)
100.00' DIMENSION - PROPOSED	FIRE HYDRANT
100.00' (S) DIMENSION - SURVEY	GATE VALVE
EDGE OF PAVEMENT - EXISTING	GRANITE BOUND, EXISTING
EDGE OF PAVEMENT - PROPOSED	LOW WATER LINE
ELECTRIC - OVERHEAD (OHE)	LIMIT OF DISTURBANCE MARKER
ETC ELECTRIC - TELEPHONE - CABLE (ETC)	MANHOLE (MH TYPE)
UGE ELECTRIC - UNDERGROUND (UGE)	REBAR / STEEL PIPE FOUND
FENCE - METAL	SPIKE
FENCE - WOOD	X 5.10 SPOT GRADE - EXISTING
FLOW ARROWS	X 6.6 SPOT GRADE - PROPOSED
GAS GAS (G)	STRUCTURE, EXISTING
GRADE CONTOUR - EXISTING	STRUCTURE, PROPOSED
100.00 GRADE CONTOUR - PROPOSED	SURVEY MONUMENT TO BE SET
HIGH VISIBILITY FENCE (HVF)	SURVEY MARKER TO BE SET
LOD LIMIT OF DISTURBANCE (LOD)	SE # SOIL EVALUATION
PROPERTY LINE - ABUTTING	TREE
PROPERTY LINE - EXISTING	UTILITY POLE
PROPERTY LINE - PROPOSED	WSO WATER SHUT OFF
SAN SANITARY SEWER (S)	WETLAND FLAG LOCATION
SED SEDIMENT CONTROL (SED)	
SETBACKS	
STONE WALL	
SD STORM DRAIN (SD)	
SUBDIVISION LINE - EXISTING	
W WATER	
WETLAND LIMIT	

EXISTING IMPERVIOUS AREA

NO.	ITEM	AREA		NOTES
1	PARKING AREA	17,377	ft^2	
2	ROADWAY TO PARKING	4,512	ft^2	
3	TOTAL	21,889	ft^2	
4	Lot Area	2,289,513	ft^2	52.56 ACRES
5	Cover Percentage	1.0%		FROM SURVEY
6	Project Site Area	45,416	ft^2	Defined by Engineer
7	Impervious Cover	48.2%		>40% (Redevelopment Site)

REDEVELOPMENT PROJECT SITE

PROPOSED IMPERVIOUS AREA

NO.	ITEM	AREA		NOTES
1	STRUCTURE + PADS	5,324	ft^2	
2	PARKING AREA	14,030	ft^2	
3	EXISTING ROADWAY	1,138	ft^2	
4	PROPOSED ROADWAY	5,521	ft^2	NEW TOTAL IMPERVIOUS ROADWAY = 2,190 SF
5	TOTAL	26,013	ft^2	PROPOSED>EXISTING (26,031 SF>21,889 SF)
6	Lot Area	2,289,513	ft^2	52.56 ACRES
7	Cover Percentage	1.1%		
8	Project Site Area	45,416	ft^2	Defined by Engineer
9	Impervious Cover	57.3%		Redevelopment Site

PROPOSED > EXISTING (Δ = 4,142)

This drawing is copyrighted and is subject to copyright protection as an "architectural work" under 17 U. S. C. Sec. 101 et seq. The protection includes but is not limited to the overall form as well as the arrangement and composition of spaces, materials, color and elements in the design. Under such protection, unauthorized use of this drawing may result in the cessation of construction or buildings being seized and/or monetary compensation being awarded to The Robinson Green Beretta Corporation (RGB).

Any reproduction, possession, or use of this drawing or any part thereof without the express written permission of RGB, is prohibited. Violators will be prosecuted to the full extent of the law.

© RGB 2008

Certification

Drawn by RJB

Checked by NKH, KH, EC

Revised on

1 (ADD EXISTING BRUSHLINE AND PT POSTS)(ADD BENCHMARKS) (01/30/19)

2 (RE-ROUTE STORMWATER)(ADD APRONS)(ADD FORCE MAIN DETAILS) (02/07/20)

KAMAL R. HINGORANY
NO. 4089
REGISTERED PROFESSIONAL ENGINEER
02.07.20

DRAWINGS MUST BE PRINTED IN COLOR TO BE VALID. THIS NOTE SHOULD BE BLUE. IF THIS NOTE IS NOT BLUE, PLEASE REPRINT IN COLOR OR CONTACT NEI.

NARRAGANSETT ENGINEERING INC.
MAIN OFFICE:
3102 EAST MAIN ROAD,
PORTSMOUTH, RI 02871
TEL : (401) 683-6630
nei-cds.com

REVISION 1, 10/28/2018
- COASTAL FEATURE FLAGGED, SANITARY LINE EDITS

50 Holden Street
Providence, Rhode Island 02908

Phone: (401) 272-1730
Fax: (401) 273-7156

E-mail: rgbinfo@rgb.net
www.rgb.net

RGB architects

Architecture · Project Management · Interior Design

Project

FORT ADAMS MAITENANCE BUILDING

RIDEM / DIVISION OF PARKS & RECREATION

STATE OF RHODE ISLAND AND PROVIDENCE PLANTATIONS

FORT ADAMS STATE PARK, NEWPORT, RI

Drawing Status

ISSUED FOR CONSTRUCTION

Issued On FEBRUARY 21, 2019

Sheet Contents

PROPOSED STORMWATER PLAN SCALE 1'= 20" ADDENDUM 1

Project Number. 6380
NEI # 17.0200

Drawing No.

C101

Sheet 2 of 4

DEWATERING - TEMPORARY SEDIMENT BASIN OR FILTER BAGS

DEPENDING ON THE TIME OF YEAR OF CONSTRUCTION, SHGWT AND DEPTH OF EXCAVATION, CONSTRUCTION SITE DEWATERING MAY BE REQUIRED. NEI RECOMMENDS CONTRACTOR CARRY PROVISIONS FOR ANY / ALL SITES IN AREAS OF HIGH WATER TABLES, NEAR WETLAND OR COASTAL RESOURCE AREAS.

DEPENDING ON THE SITE AND SEASONAL SPECIFICS, A SITE SPECIFIC DEWATERING PLAN MAY NEED TO BE DEVISED. IF A SPECIFIC PLAN HAS NOT BEEN PREPARED, OWNER AND CONTRACTOR MUST NOTIFY NEI IF GROUNDWATER IS ENCOUNTERED DURING CONSTRUCTION .

GENERALIZED PRACTICE MAY BE A TEMPORARY SEDIMENT FILTER BAG OR TEMPORARY SEDIMENT BASIN.

GENERAL NOTES

- AT A MINIMUM, THE FOLLOWING DISCHARGE REQUIREMENTS MUST BE MET FOR DEWATERING ACTIVITIES:
- DO NOT DISCHARGE VISIBLE FLOATING SOLIDS OR FOAM;
- TO THE EXTENT FEASIBLE, UTILIZE VEGETATED, UPLAND AREAS2 OF THE SITE TO INFILTRATE DEWATERING FLUIDS BEFORE DISCHARGE. IN NO CASE WILL SURFACE WATERS BE CONSIDERED PART OF THE TREATMENT AREA;

  2 THESE AREAS CAN BE BEST IDENTIFIED ON SESC PLANS AS SOILS THAT ARE CLASSIFIED AS BEING HYDROLOGIC SOIL GROUPS (HSGS) A AND B. PART D. SOIL EROSION AND SEDIMENT CONTROL PLANS - PAGE 9
- AT ALL POINTS WHERE DEWATERING FLUIDS ARE DISCHARGED UTILIZE VELOCITY DISSIPATION DEVICES SUCH AS THOSE SPECIFIED IN SECTION FIVE: RUNOFF CONTROL MEASURES;
- WITH FILTER BACKWASH WATER, EITHER HAUL IT AWAY FOR DISPOSAL OR RETURN IT TO THE BEGINNING OF THE TREATMENT PROCESS;
- REPLACE AND CLEAN THE FILTER MEDIA USED IN DEWATERING DEVICES WHEN THE PRESSURE DIFFERENTIAL EQUALS OR EXCEEDS THE MANUFACTURER'S SPECIFICATIONS.
- DEWATERING CONTROL MEASURES MUST BE IMPLEMENTED IN ACCORDANCE WITH MEASURES, CONTAINMENT AREA FOR EARTH MATERIALS; PORTABLE SEDIMENT TANKS AND BAGS; PUMPING SETTLING BASINS; AND PUMP INTAKE PROTECTION.
- TREATMENT CHEMICAL RESTRICTIONS: IF THE OWNER AND/OR THE OPERATOR PLANS TO UTILIZE POLYMERS, FLOCCULANTS, OR OTHER TREATMENT CHEMICALS TO TREAT DEWATERING FLUIDS, THE USE OF SUCH CHEMICALS MUST BE MANAGED IN ACCORDANCE WITH APPENDIX J, CHEMICAL TREATMENT FOR EROSION AND SEDIMENT CONTROL.

• THE DEWATERING OF CONTAMINATED WATER CANNOT BE DISCHARGED WITHOUT PRIOR NOTICE AND A SPECIFIC PERMIT FROM THE RIDEM RIPDES PERMITTING PROGRAM

REFER TO RI EROSION AND SEDIMENT CONTROL HANDBOOK: HTTP://WWW.DEM.RI.GOV/PROGRAMS/BNATRES/WATER/PDF/RIESC-HANDBOOK16.PDF

P.T. POST DETAIL AT L.O.D.
N.T.S.

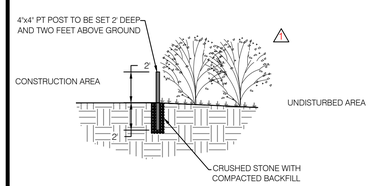

BIORETENTION DETAIL

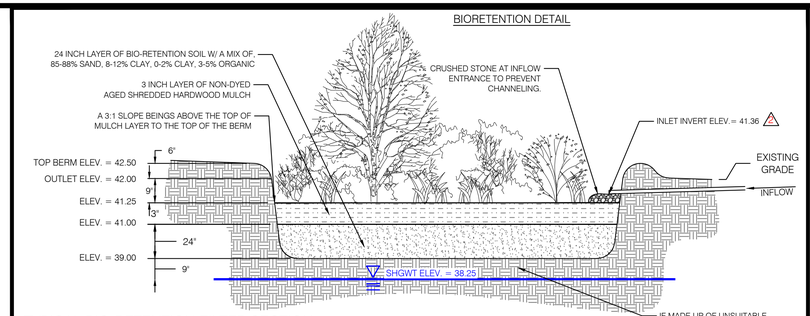

TYPICAL BIO-RETENTION FILTER SECTION

NEI RECOMMENDS CONSULTING WITH A LOCAL LANDSCAPE ARCHITECT FOR EACH SPECIFIC SITE; PLANT SELECTIONS SHOULD BE BASED OFF REQUISITE CRITERIA IN RI COASTAL PLANT GUIDE. HTTP://WEB.URI.EDU/CELS/CEOC/COASTALPLANTS/COASTALPLANTGUIDE.HTM

TEMPORARY SEDIMENT STOCKPILE

N.T.S.

NOTES:

1. PRIOR TO CONSTRUCTION, CONTRACTOR SHALL PREPARE PLAN INDICATING LOCATIONS OF SEDIMENT STOCKPILES FOR APPROVAL BY THE ENGINEER OR APPROPRIATE REGULATORY AUTHORITY.
2. STOCKPILE SHALL NOT EXCEED GIVEN DIMENSIONS WITHOUT APPROVAL BY ENGINEER OR APPROPRIATE REGULATORY AUTHORITY.
3. STOCKPILED MATERIAL NOT TO BE USED WITHIN 14 CALENDAR DAYS SHALL BE PLANTED WITH TEMPORARY SEED MIX PER RIDOT STD M.18.10.5.

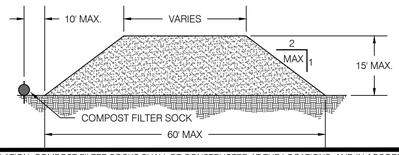

TYPICAL ROOF DRAIN TO BMP
N.T.S.

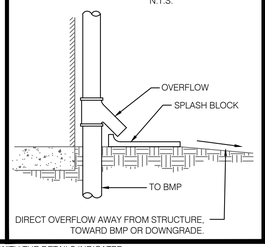

BIO-RETENTION FILTER

N.T.S.

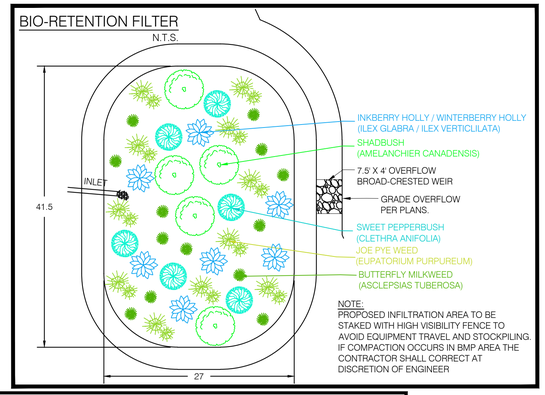

NOTE:
PROPOSED INFILTRATION AREA TO BE STAKED WITH HIGH VISIBILITY FENCE TO AVOID EQUIPMENT TRAVEL AND STOCKPILING. IF COMPACTION OCCURS IN BMP AREA THE CONTRACTOR SHALL CORRECT AT DISCRETION OF ENGINEER

A. INSTALLATION. COMPOST FILTER SOCKS SHALL BE CONSTRUCTED AT THE LOCATIONS, AND IN ACCORDANCE WITH THE DETAILS INDICATED ON THE PLANS, OR AS DIRECTED BY THE ENGINEER. THE FOLLOWING STIPULATIONS ALSO APPLY:
   1. COMPOST FILTER SOCKS MAY BE EITHER FABRICATED ON SITE OR DELIVERED TO THE SITE.
   2. COMPOST MEDIA SHALL CONFORM TO AASHTO MP 9-06 AND RIDOT SECTION 206.
   3. TRENCHING IS NOT REQUIRED. COMPOST FILTER SOCKS SHALL BE PLACED OVER THE TOP OF GROUND, WOODEN STAKES SHALL BE DRIVEN THROUGH THE CENTER OF THE FILTER SOCKS TO ANCHOR THEM TO THE GROUND. TO ENSURE OPTIMUM PERFORMANCE, HEAVY VEGETATION SHALL BE CUT DOWN OR REMOVED, AND EXTREMELY UNEVEN SURFACES SHALL BE GRADED TO ENSURE THAT THE COMPOST FILTER SOCK UNIFORMLY CONTACTS THE GROUND SURFACE..
   4. FILTER SOCKS SHALL BE PLACED IN A CONTINUOUS LINE. WHERE ENDS INTERSECT THEY SHALL BE SLEEVED TO CREATE AN INTERLOCK WITH A TWO (2) FOOT OVERLAP. AFTER ONE SECTION IS FILLED AND THE ENDS TIED OFF, THE NEXT SECTION SHALL BE PULLED OVER THE TIED OFF END OF THE PREVIOUS SECTION, TO CREATE A 2 FOOT OVERLAP. THE OVERLAP SHALL BE STAKED. THE INTERSECTING OVERLAPS SHALL BE CONSTRUCTED TO ENSURE THAT STORMWATER DOES NOT BREAK THROUGH AT THESE INTERSECTION POINTS.

B. REMOVAL. THIS WORK, IF REQUIRED, SHALL INCLUDE THE REMOVAL OF THE COMPOST FILTER SOCK AND STAKES. UNLESS BIODEGRADABLE, THE MESH FILTER SOCK MATERIAL SHALL BE CUT OPEN AND THE MESH REMOVED. IN GENERAL, THE COMPOST FILTER MATERIAL MAY BE LEFT IN PLACE, HOWEVER THE MATERIAL WILL BE RAKED OUT LEVELED TO SURROUNDING GRADES, THEN SEEDED. PRIOR TO SUCH REMOVAL, HOWEVER, ALL SILT, MUD AND DEBRIS ENTRAPPED OUTSIDE OF THE COMPOST FILTER SOCK SHALL BE REMOVED AND THE AREA CLEANED UP IN ACCORDANCE WITH THE APPLICABLE PROVISIONS OF SECTION 212 OF RIDOT STANDARD SPECIFICATIONS FOR ROAD AND BRIDGE CONSTRUCTION.

SEDIMENT BARRIER
COMPOST FILTER SOCK DETAIL
REF. SECTION 206.03.4 OF RIDOT STANDARD SPECIFICATIONS FOR ROAD AND BRIDGE CONSTRUCTION
N.T.S.

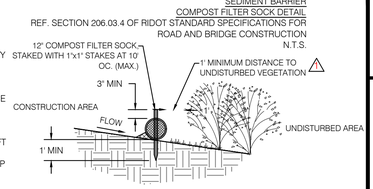

PAVING NOTE:
PROPOSED PAVING SHALL ADHERE TO THE FOLLOWING SPECIFICATIONS:
4" CLASS 12.5 HMA SURFACE IN (2" MAX. LIFT) +
6" CLASS 19.0 HMA BASE OVER
12" GRAVEL SUB-BASE OVER COMPACTED BASE

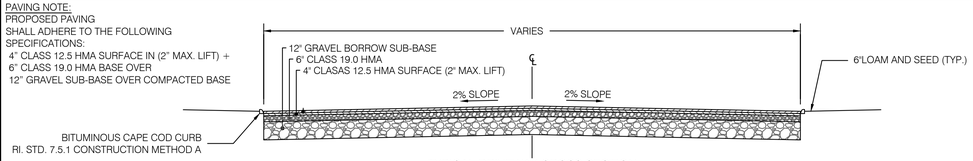

TYPICAL DRIVEWAY CROSS SECTION
NOTE: 1.ALL MATERIALS SHALL MEET R.I.D.O.T. STANDARDS

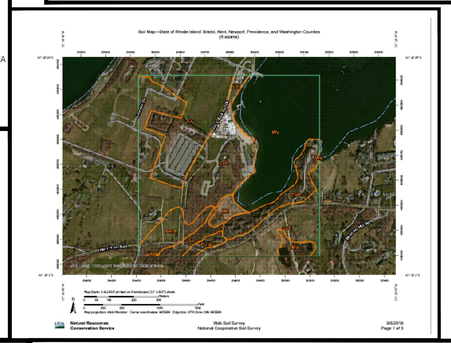

State of Rhode Island: Bristol, Kent, Newport, Providence, and Washington Counties
CnC—Canton and Charlton fine sandy loams, 3 to 15 percent slopes, very rocky

Map Unit Setting

National map unit symbol: 2w81y
Elevation: 0 to 820 feet
Mean annual precipitation: 36 to 71 inches
Mean annual air temperature: 39 to 55 degrees F
Frost-free period: 145 to 240 days
Farmland classification: Not prime farmland

Map Unit Composition

Canton, very stony, and similar soils: 55 percent
Charlton, very stony, and similar soils: 30 percent
Minor components: 15 percent
Estimates are based on observations, descriptions, and transects of the mapunit.
Description of Canton, Very Stony
Setting

Landform: Hills, moraines, ridges
Landform position (two-dimensional): Backslope, shoulder, summit
Landform position (three-dimensional): Side slope, crest, nose slope
Down-slope shape: Linear, convex
Across-slope shape: Convex
Parent material: Coarse-loamy over sandy melt-out till derived from gneiss, granite, and/or schist

Typical profile

Oi - 0 to 2 inches: slightly decomposed plant material
A - 2 to 5 inches: fine sandy loam
Bw1 - 5 to 16 inches: fine sandy loam
Bw2 - 16 to 22 inches: gravelly fine sandy loam
2C - 22 to 67 inches: gravelly loamy sand

Properties and qualities

Slope: 3 to 15 percent
Percent of area covered with surface fragments: 1.6 percent
Depth to restrictive feature: 19 to 39 inches to strongly contrasting textural stratification
Natural drainage class: Well drained
Runoff class: Low
Capacity of the most limiting layer to transmit water (Ksat):Moderately low to high (0.14 to 14.17 in/hr)
Depth to water table: More than 80 inches
Frequency of flooding: None
Frequency of ponding: None
Salinity, maximum in profile: Nonsaline (0.0 to 1.9 mmhos/cm)
Available water storage in profile: Low (about 3.4 inches)

Interpretive groups

Land capability classification (irrigated): None specified
Land capability classification (nonirrigated): 6s
Hydrologic Soil Group: B
Hydric soil rating: No

Description of Charlton, Very Stony
Setting

Landform: Ground moraines, ridges, hills
Landform position (two-dimensional): Backslope, shoulder, summit
Landform position (three-dimensional): Side slope, crest
Down-slope shape: Linear, convex
Across-slope shape: Convex
Parent material: Coarse-loamy melt-out till derived from granite, gneiss, and/or schist

Typical profile

Oe - 0 to 2 inches: moderately decomposed plant material
A - 2 to 4 inches: fine sandy loam
Bw - 4 to 27 inches: gravelly fine sandy loam
C - 27 to 65 inches: gravelly fine sandy loam

Properties and qualities

Slope: 3 to 15 percent
Percent of area covered with surface fragments: 1.6 percent
Depth to restrictive feature: More than 80 inches
Natural drainage class: Well drained
Runoff class: Low
Capacity of the most limiting layer to transmit water (Ksat):Moderately low to high (0.14 to 14.17 in/hr)
Depth to water table: More than 80 inches
Frequency of flooding: None
Frequency of ponding: None
Salinity, maximum in profile: Nonsaline (0.0 to 1.9 mmhos/cm)
Available water storage in profile: Moderate (about 8.7 inches)

Interpretive groups

Land capability classification (irrigated): None specified
Land capability classification (nonirrigated): 6s
Hydrologic Soil Group: B
Hydric soil rating: No

Minor Components
Rock outcrop

Percent of map unit: 5 percent
Landform: Ridges, hills
Hydric soil rating: Unranked

Gloucester, very stony

Percent of map unit: 4 percent
Landform: Moraines, ridges, hills
Landform position (two-dimensional): Backslope, shoulder, summit
Landform position (three-dimensional): Side slope, crest
Down-slope shape: Convex, linear
Across-slope shape: Convex
Hydric soil rating: No

Sutton, very stony

Percent of map unit: 4 percent
Landform: Ground moraines, hills
Landform position (two-dimensional): Footslope
Landform position (three-dimensional): Base slope
Down-slope shape: Concave
Across-slope shape: Linear
Hydric soil rating: No

Chatfield, very stony

Percent of map unit: 2 percent
Landform: Ridges, hills
Landform position (two-dimensional): Backslope, shoulder, summit
Landform position (three-dimensional): Crest, side slope, nose slope
Down-slope shape: Convex
Across-slope shape: Linear, convex
Hydric soil rating: No

GENERAL NOTES:

1. THE STATE OF RHODE ISLAND STANDARD SPECIFICATION FOR ROAD AND BRIDGE CONSTRUCTION, 2004 EDITION, AND THE RHODE ISLAND STANDARD DETAILS ARE MADE A PART HEREOF AS FULLY AND COMPLETELY AS IF ATTACHED HERETO. ALL WORK SHALL CONFORM TO RHODE ISLAND STANDARD SPECIFICATION FOR ROAD AND BRIDGE CONSTRUCTION 2004 EDITION OR LATEST REVISION. THE 2004 EDITION OF THE STANDARD SPECIFICATION MAY BE OBTAINED AT THE RHODE ISLAND DEPARTMENT OF TRANSPORTATION.
2. IT SHALL BE THE CONTRACTOR'S SOLE RESPONSIBILITY TO APPLY FOR AND OBTAIN ANY AND ALL NECESSARY PERMITS, PAY ALL FEES AND POST ALL BONDS ASSOCIATED WITH THE SAME, AND COORDINATE WITH ARCHITECT OR ENGINEER AS NECESSARY
3. THE CONTRACTOR IS SOLELY RESPONSIBLE FOR THE SAFETY OF THE JOB SITE. THE CONTRACTOR SHALL PROVIDE TEMPORARY FENCING AND/OR BARRIERS AROUND ANY EXPOSED EXCAVATED AREAS IN ACCORDANCE WITH OSHA STANDARDS.
4. IN THE CASE THAT ANY DEVIATION / ALTERATION / OR IMPROVEMENT FROM THE APPROVED PLANS IS NECESSARY THE CONTRACTOR SHALL IMMEDIATELY CONTACT THE ENGINEER AND OWNER PRIOR TO OCCURRENCE OF DEVIATION
5. ALL WORK SHALL BE LIMITED TO THE AREAS WITHIN THE LIMIT OF DISTURBANCE DISPLAYED ON THESE PLANS OR PROPERTY LINE IF LIMIT OF DISTURBANCE IS UNCLEAR. ANY AREA DISTURBED OUTSIDE OF THE LIMIT OF DISTURBANCE SHALL BE REPAIRED AND RESTORED TO ITS ORIGINAL CONDITION AT NO COST TO THE OWNER OR ENGINEER, AND PREFORMED TO THE ENGINEERS SATISFACTION
6. ALL SITE WORK SHALL MEET OR EXCEED THE SITE WORK SPECIFICATION SHOWN ON THESE PLANS AND/OR ACCOMPANYING SPECIFICATIONS. THE CONTRACTOR SHALL BE RESPONSIBLE FOR DETERMINING IF ANY CONFLICTS WITH EXISTING CONDITIONS OR PROPOSED CONDITIONS EXIST. IF ANY CONFLICTS ARE DISCOVERED, THE CONTRACTOR SHALL NOTIFY THE OWNER AND ENGINEER PRIOR TO INSTALLATION OF ANY PORTION OF THE SITE WORK THAT WOULD BE AFFECTED
7. EXCAVATED ROCK SHALL BE REMOVED FROM THE SITE AND LEGALLY DISPOSED OF UNLESS OTHER ARRANGEMENTS ARE MADE WITH THE OWNER. SUITABLE ROCK MAY BE UTILIZED IN FILL AREAS WITH WRITTEN PERMISSION OF THE OWNERS REPRESENTATIVES
8. DEBRIS, ORGANICS AND OTHER UNSUITABLE MATERIALS UNCOVERED DURING THE COURSE OF SITE EXCAVATION SHALL BE REMOVED FROM THE SITE AND DISPOSED OF LEGALLY
9. THE CONTRACTOR SHALL BE SOLELY RESPONSIBLE FOR MAINTAINING THE INTEGRITY OF ALL EXISTING UTILITIES THAT SERVICE THE SITE AND NEIGHBORING AREAS. IF ANY DAMAGE OCCURS TO EXISTING UTILITIES IT SHALL BE THE CONTRACTORS RESPONSIBILITY TO PAY ALL COSTS ASSOCIATED WITH REPAIR OF UTILITIES AS DIRECTED BY THE ENGINEER, UTILITY OWNER, OR GOVERNING AGENCY
10. THE CONTRACTOR SHALL BE SOLELY RESPONSIBLE FOR QUANTITY TAKE-OFF IN COMPUTING ANY ESTIMATES
11. THE CONTRACTOR SHALL BE RESPONSIBLE FOR ESTABLISHING AND MAINTAINING ALL TEMPORARY SEDIMENTATION AND EROSION CONTROLS.
12. THE LOCATION OF EXISTING UTILITIES AS SHOWN ARE APPROXIMATE AND SHALL BE VERIFIED BY THE CONTRACTOR. "DIG SAFE" SHALL BE CONTACTED BY THE CONTRACTOR AS PART OF THIS VERIFICATION
13. NO EXCAVATION SHALL PROCEED UNTIL UTILITY COMPANIES ARE NOTIFIED IN ADVANCE
14. ALL TREE PROTECTION BY OTHERS UNLESS OTHERWISE NOTED
15. CONTRACTOR TO LOAM AND SEED ALL DISTURBED AREAS WITH APPROPRIATE SEED MIXTURES

EROSION AND SEDIMENT CONTROL NOTES:

1. ALL EROSION CONTROL SHALL BE IN ACCORDANCE WITH RHODE ISLAND SOIL EROSION AND SEDIMENT CONTROL HANDBOOK, LATEST REVISION
2. THE CONTRACTOR SHALL BE RESPONSIBLE FOR INSTALLATION AND MAINTENANCE OF ALL SEDIMENT AND EROSION CONTROL MEASURES SHOWN ON THESE PLANS
3. EROSION AND SEDIMENT CONTROL MEASURES SHALL BE INSPECTED AND MAINTAINED ONCE WEEKLY OR AFTER EVERY RAINFALL EVENT GREATER THAN 0.25 INCHES.
4. SEDIMENT BUILD UP GREATER THAN ONE-HALF THE BARRIER HEIGHT SHALL BE REMOVED AND DISPOSED OF PROPERLY AS REQUIRED. ANY SEDIMENT BUILD UP OUTSIDE OF THE SEDIMENT BARRIER SHALL BE REMOVED IMMEDIATELY
5. CONTRACTOR SHALL MAINTAIN A RESERVE OF EROSION CONTROL MATERIALS FOR EMERGENCY USE AND ROUTINE MAINTENANCE
6. THE CONTROLS SHOWN ON THESE PLANS ARE INTENDED AS MINIMUM MEASURES. ADDITIONAL MEASURES MAY BE REQUIRED AND SHALL BE IMPLEMENTED BY THE CONTRACTOR IF WARRANTED OR REQUESTED BY THE OWNER, OWNERS REPRESENTATIVE, ENGINEER, OR ANY APPLICABLE REGULATING AGENCY.
7. PRIOR TO THE START OF ANY LAND CLEARING / GRUBING OR OTHER CONSTRUCTION ACTIVITY THE PERIMETER CONTROLS SHALL BE PLACED, PROPERLY CONSTRUCTED AND CLEARLY VISIBLE. THESE CONTROLS SHALL REPRESENT THE LIMITS OF WORK AND WORKERS SHALL BE NOTIFIED THAT NO CONSTRUCTION ACTIVITY IS ALLOWED BEYOND THESE CONTROLS
8. IF OR AS POSSIBLE CONSTRUCTION SHALL BE PHASED TO LIMIT TO THE MAXIMUM EXTENT PRACTICABLE THE AMOUNT OF EXPOSED SOILS. ALL DISTURBED AREAS SHALL BE TEMPORARILY OR PERMANENTLY STABILIZED WITHIN 14 DAYS OF COMPLETION OF GRADING ACTIVITIES
9. THE CONTRACTOR SHALL SCHEDULE WORK IN A WAY TO ALLOW POSITIVE DRAINAGE OF SUBGRADE THROUGHOUT CONSTRUCTION
10. CONSTRUCTION ENTRANCES PER RIDOT STANDARD DETAIL 9.9.0 SHALL BE EMPLOYED AT ALL POINTS OF INGRESS AND EGRESS FROM THE SITE
11. TEMPORARY DIVERSIONS, SEDIMENT BASINS, AND TEMPORARY SWALES MAY BE USED AND SHALL BE SIZED ACCORDING TO THE RHODE ISLAND SOIL EROSION AND SEDIMENT CONTROL HANDBOOK
12. CATCH BASINS AND STORM DRAINS SHALL BE PROTECTED PER RIDOT STANDARD DETAIL 9.8.0 IN GRASSED AREAS OR SEDIMENT BAGS IN PAVED AREAS
13. TEMPORARY SEDIMENT STOCK PILES SHALL BE KEPT MOIST AND COVERED AT ALL TIMES. CALCIUM CHLORIDE SHALL ONLY BE USED IF AN APPROVAL FROM THE TOWN/CITY OR OTHER APPLICABLE AGENCY HAS BEEN GRANTED
14. DEWATERING FROM EXCAVATIONS WILL BE CONVEYED BY HOSE TO AN UPLAND AREAS AND DISCHARGED INTO A DEWATERING BASIN PER RIDOT STANDARD 9.7.0, HAYBALE CORRALS, OR SEDIMENTATION BAGS. THE CONTRACTOR SHALL ENSURE THAT NO CONTAMINATE IS PRESENT IN ANY WATERS PRIOR TO DISCHARGE FROM SITE AND IS RESPONSIBLE FOR ALL ENGINEERING, EQUIPMENT, MATERIAL AND LABOR REQUIRED FOR THE SITE WATER REMOVAL DURING CONSTRUCTION
15. CONSTRUCTION WASTE MATERIALS SHALL BE KEPT ON-SITE AND DISPOSED OF IN AN APPROVED AND APPROPRIATE MANNER IN ACCORDANCE WITH ALL APPLICABLE REGULATORY AGENCIES.
16. RIPRAP SHALL BE USED WHERE NECESSARY TO CONTROL EXIT VELOCITIES
17. NON MOBILE (I.E. TRACKED MACHINERY) SHALL BE MAINTAINED WITHIN THE LIMIT OF DISTURBANCE DEFINED BY SEDIMENT BARRIER
18. NEWLY VEGETATED AREAS SHALL BE REGULARLY INSPECTED AND MAINTAINED TO ENSURE ESTABLISHMENT OF APPROPRIATE VEGETATION
19. THE CONTRACTOR SHALL NOT REMOVE ANY EROSION AND SEDIMENTATION CONTROL MEASURES UNTIL FINAL ACCEPTANCE OF THE SITE HAS OCCURRED
20. ALL DRAINAGE STRUCTURES SHALL BE CLEARED OF ACCUMULATED SEDIMENT PRIOR TO THE FINAL SITE ACCEPTANCE

UTILITIES NOTES:

1. THE UTILITIES SHOW ON THIS PLAN ARE SHOWN FROM SURFACE FEATURES AND DIGSAFE MARKINGS
2. THE CONTRACTOR SHALL VERIFY THE LOCATION OF ALL UTILITIES PRIOR TO THE START OF CONSTRUCTION
3. IF THE CONTRACTOR FINDS UTILITIES UNMARKED ON THESE PLANS OR IN LOCATIONS OTHER THAN THOSE ON THESE PLANS THE CONTRACTOR SHALL CONTACT THE ENGINEER, OWNER OR OWNERS REPRESENTATIVE AS SOON AS POSSIBLE WITH THE SIZE LOCATION AND MATERIAL OF THE UTILITY
4. NO WORK SHALL PROCEED IF UTILITIES FOUND ON SITE DO NOT MATCH THOSE SHOWN ON THESE PLANS UNTIL THE ENGINEER HAS GIVEN THEIR WRITTEN PERMISSION

STANDARD GRADATIONS TABLE F-7 RIDEM

US STANDARD SIEVE SIZE	PERCENT PASSING (%)			
	CHOKER COURSE (AASHTO NO. 57)	FILTER COURSE (AASHTO NO M-6)	RESERVOIR COURSE (AASHTO NO. 3)	RESERVOIR COURSE (AASHTO NO. 5)
6 INCHES 150 MM	-	-	-	-
2½ INCHES 63 MM	-	-	100	-
2 INCHES 50 MM	-	-	90 - 100	-
1½ INCHES 37.5 MM	100	-	35 - 70	100
1 INCH 25 MM	95 - 100	-	0 - 15	90 - 100
¾ INCH 19 MM	-	-	-	20 - 55
½ INCH 12.5 MM	25 - 60	-	0 - 5	0 - 10
⅜ INCH 9.5 MM	-	100	-	0 - 5
#4 4.75 MM	0 - 10	70 - 100	-	-
#8 2.36 MM	0 - 5	-	-	-
#200 0.075 MM	-	0 - 6**	-	-
% COMPACTION ASTM D698 / AASHTO T99	95	95	95	95

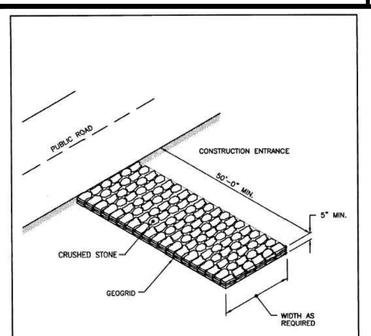

NOTE:
SHALL BE IN ACCORDANCE WITH SECTION 211 OF THE R.I. STANDARD SPECIFICATIONS.

RHODE ISLAND DEPARTMENT OF TRANSPORTATION

REVISIONS		
NO.	BY	DATE

CONSTRUCTION ACCESS

CHIEF ENGINEER CONSTRUCTION — CHIEF DESIGN ENGINEER TRANSPORTATION — JUNE 15, 1998 — ISSUE DATE

R.I. STANDARD 9.9.0

KEY CONSIDERATIONS: BIORETENTION/TREE FILTERS

FEASIBILITY
- Bottom of filter at or above SHGT.
- Top of filter at least 3ft above SHGT.

CONVEYANCE
- Provide overflow for the 1-yr storm to the conveyance system.
- Conveyance to the system is typically overland flow delivered to the surface of the system, typically through curb cuts or over a concrete lip.

PRETREATMENT
- Pretreatment volume of 25% (or equivalent) of WQ_v.
- Typically grass channel or grass filter strip, a pea gravel diaphragm, and a mulch layer.

TREATMENT
- Total system (including pretreatment) must hold 75% of the WQ_v.
- Treatment area to have a 2-4ft deep planting soil bed, a surface mulch layer, and a 6"-9" ponding layer.
- Soil media as detailed in Appendix F.

VEGETATION
- Detailed planting plan required.
- Use of native plants is recommended.

MAINTENANCE REQUIREMENTS
- Legally binding maintenance agreement.
- Inspect and repair/replace treatment area components.
- Remulch annually.
- Vegetation pruning, harvesting.

IMPLEMENTATION CONSIDERATIONS (BIORETENTION/TREE FILTERS)

M Capital Cost

M Maintenance Burden

Residential/Subdivision Use: *Yes*
High Density/Ultra-Urban: *Yes*

Drainage Area: *5 acres max.*

Soils: *Planting soils must meet specified criteria; No restrictions on surrounding soils, except the depth above water table.*

Key: L=Low M=Moderate H=High

POLLUTANT REMOVAL – ALL FILTERS

F Phosphorus

G Nitrogen

G Metals - Cadmium, Copper, Lead, and Zinc removal

G Pathogens - Coliform, *Streptococci, E. coli* removal

Key: G=Good F=Fair P=Poor

This drawing is copyrighted and is subject to copyright protection as an "architectural work" under 17 U. S. C. Sec. 101 et seq. The protection includes but is not limited to the overall form as well as the arrangement and composition of spaces, materials, color and elements in the design. Under such protection, unauthorized use of this drawing may result in the cessation of construction or buildings being seized and/or monetary compensation being awarded to The Robinson Green Beretta Corporation (RGB).

Any reproduction, possession, or use of this drawing or any part thereof without the express written permission of RGB, is prohibited. Violators will be prosecuted to the full extent of the law.

© RGB 2008

Certification

Drawn by RJB
Checked by NKH, KH, EC

Revised on
1 (ADD EXISTING BRUSHLINE AND PT POSTS)(ADD BENCHMARKS) (01/30/19)
2 (RE-ROUTE STORMWATER)(ADD APRONS)(ADD FORCE MAIN DETAILS) (02/07/20)

KAMAL R. HINGORANY
NO. 4089
REGISTERED PROFESSIONAL ENGINEER
02.07.20

DRAWINGS MUST BE PRINTED IN COLOR TO BE VALID. THIS NOTE SHOULD BE BLUE. IF THIS NOTE IS NOT BLUE, PLEASE REPRINT IN COLOR OR CONTACT NEI.

NARRAGANSETT ENGINEERING INC.
MAIN OFFICE:
3102 EAST MAIN ROAD,
PORTSMOUTH, RI 02871
TEL : (401) 683-6630
nei-cds.com
NEI

REVISION 1. 10/28/2018
- COASTAL FEATURE FLAGGED, SANITARY LINE EDITS

50 Holden Street
Providence, Rhode Island 02908
Phone: (401) 272-1730
Fax: (401) 273-7156
E-mail: rgbinfo@rgb.net
www.rgb.net
RGB architects
Architecture · Project Management · Interior Design

Project

FORT ADAMS MAITENANCE BUILDING

RIDEM / DIVISION OF PARKS & RECREATION

STATE OF RHODE ISLAND AND PROVIDENCE PLANTATIONS

FORT ADAMS STATE PARK, NEWPORT, RI

Drawing Status

ISSUED FOR CONSTRUCTION

Issued On FEBRUARY 21, 2019

Sheet Contents

DETAILS & NOTES

ADDENDUM 1

Project Number. 6380
NEI # 17.0200

Drawing No.

C102

Sheet 3 of 4

Table 6-1 Guidelines for Filter Strip Pretreatment Sizing

Parameter	Impervious Parking Lots				Residential Lawns			
Maximum Inflow Approach Length (ft)	35		75		75		150	
Filter Strip Slope (%)	<2	>2	<2	>2	<2	>2	<2	>2
Filter Strip Minimum Length (ft)	10	15	20	25	10	12	15	18

- Smaller/shorter filter strips may be considered for projects with a specifically enhanced maintenance program.
- Typically, filter strips are used to treat very small drainage areas. The limiting design factor, however, is not the drainage area the filter strip treats but rather the length of flow contributing to it. As stormwater runoff flows over the ground's surface, it changes from sheet flow to concentrated flow. That is, rather than moving uniformly over the surface, it forms rivulets which are slightly deeper and cover less area than the sheet flow. When flow concentrates, it moves too rapidly to be effectively treated by a grassed filter strip. As a rule, flow concentrates within a maximum of 75 feet for impervious surfaces, and 150 feet for pervious surfaces (Claytor and Schueler, 1996).
- Filter strips should be designed on slopes between 2% and 4%. Greater slopes than this would encourage the formation of concentrated flow. Except in the case of very sandy or gravelly soil, runoff tends to pond on the surface of filter strips. Slopes flatter than 2% may result in puddling and other nuisance problems. Slopes may be between 4 and 6% but will require erosion control matting and a detailed engineering evaluation.

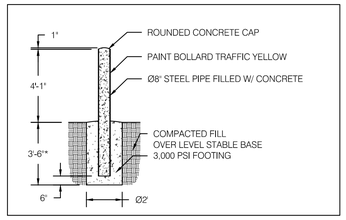

BOLLARD DETAIL
1/4" = 1'-0"

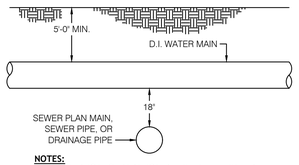

NOTES:
1. THE VERTICAL SEPARATION BETWEEN THE WATER MANIN AND THE PROPOSED UTILITY SHALL BE A MINIMUM OF 18 INCHES.
2. THE HORIZONTAL SEPARATION BETWEEN THE WATER MAIN AND THE PROPOSED UTILITY SHALL BE MINIMUM OF 10 FEET.
3. IF 1 OR 2 CANNOT BE MAINTAINED THE PROPOSED UTILTY SHALL BE INSTALLED WITHIN A CARRIER PIPE UPON WRITTEN APPROVAL BY NEWPORT UTILITIES.
4. SEWER MAIN AND SERVICES ARE NOT ALLOWED TO CROSS OVER THE TOP OF WATER MAIN.
5. CONCRETE ENCASEMENT IS NOT ALLOWED.

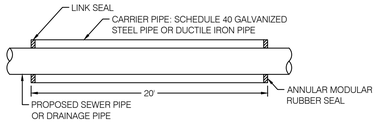

UTILITY SEPARATION
NOT TO SCALE

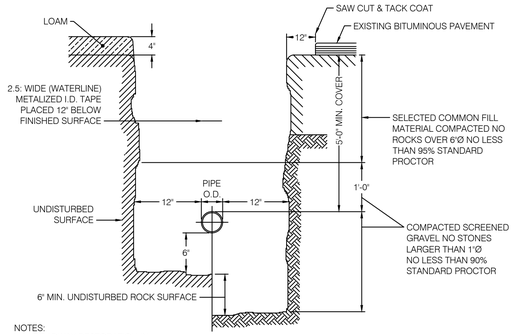

NOTES:
1. ROADWAY RESTORATION IN ACCORDANCE WITH COMMUNITY OR RIDOT.

TRENCH INSTALLATION IN ROCK AND SOIL
NOT TO SCALE

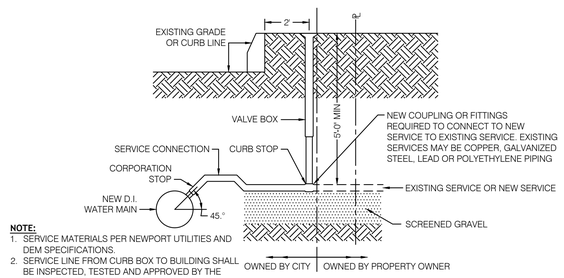

NOTE:
1. SERVICE MATERIALS PER NEWPORT UTILITIES AND DEM SPECIFICATIONS.
2. SERVICE LINE FROM CURB BOX TO BUILDING SHALL BE INSPECTED, TESTED AND APPROVED BY THE LOCAL PLUMBING INSPECTOR.

SERVICE CONNECTION
NOT TO SCALE

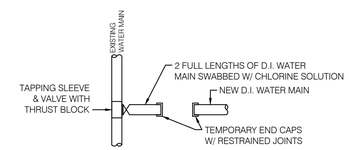

PRIOR TO CONNECTION

NOTES:
1. PRIOR TO FINAL APPROVAL FOR PERMANENT CONNECTION FROM NEWPORT UTILITIES/DEM, CONTRACTOR SHALL PERFORM. PRESSURE TESTING AND CHLORINATION.
2. SLEEVE FOR CLOSURE TO BE SWABBED WITH CHLORINE SOLUTION.

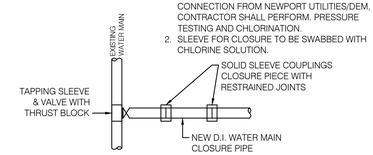

CONNECTION

CONNECTION OF NEW WATER MAIN TO EXISTING WATER MAIN
NOT TO SCALE

GRINDER/PUMP STATION NOTES

1. SITE CONTRACTOR TO FURNISH AND INSTALL A GRINDER PUMP STATION PER THE PROJECT MANUAL, ALSO ALL TRENCHING AND BACKFILL AS REQUIRED FOR INSTALLATION OF THE STATION AND ALL ASSSOCIATED SCOPE BY OTHER TRADES.

2. ELECTICAL CONTRACTOR SHALL FURNISH AND INSTALL PER CODE CONDUIT FROM THE ELECTRIC PANEL P1 I NTHE BIULDING TO THE STATION AS TO PROVIDE SUFFICIENT POWER FOR THE PUMP.

3. ELECTRICAL CONTRACTOR SHALL FURNISH AND INSTALL PER CODE CONDUITS FROM THE STATION TO THE ALARM PANEL LOCATE IN THE BUILDING ON THE NORTH WALL OF ROOM 107A. ACTUAL LOCATION TO BE DETERMINED IN THE FIELD.

4. ELECTRICAL CONTRACTOR SHALL FURNISH AND INSTALL PER CODE SUFFICIENT POWER FROM ELCTRIC PANEL P1 TO THE ALARM PANEL AND TO THE ALARM BEACON ON THE EXTERIOR OF THE BUILDING. BEACON TO E MOUNTED BY EC. EXACT LOACTION TO BE DETERMINED IN THE FIELD.

5. PLUMBING CONTRACTOR TO EXTEND SANITARY PIPING FROM BUILDING TO PUMP STATION PER DRAWING P100

6. GENERAL CONTRACTOR TO COORDINATE ALL ASSOCIATED WORK FOR THE INSTALLATION OF THE GRINDER PUMP STATION WITH THE CIVIL ENEGINEER AND THE ARCHITECT.

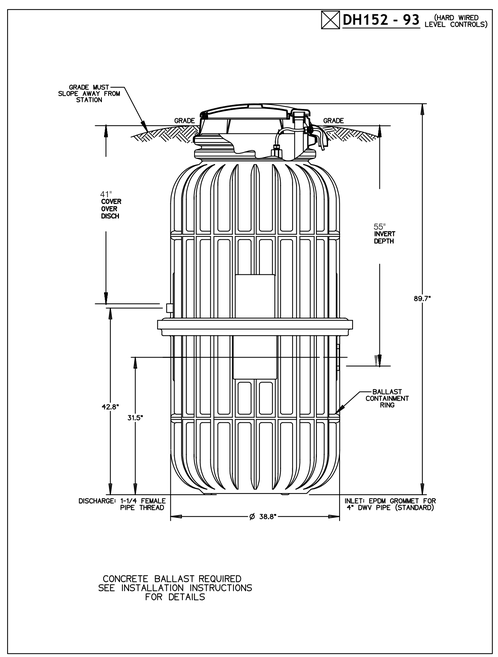

MOTOR
I HP, 1,725 RPM, HIGH TORQUE, CAPACITOR START, THERMALLY PROTECTED, 240V, 60 HZ, 1 PHASE

INLET CONNECTIONS
4-INCH INLET GROMMET STANDARD FOR DWV PIPE

DISCHARGE CONNECTIONS
PUMP DISCHARGE TERMINATES IN 1.25-INCH NPT FEMALE THREAD. ADAPTOR TO 1-1/4" HDPE GREEN ASTM D3035 IPS OD CONTROLLED SDR 11 200 PSI

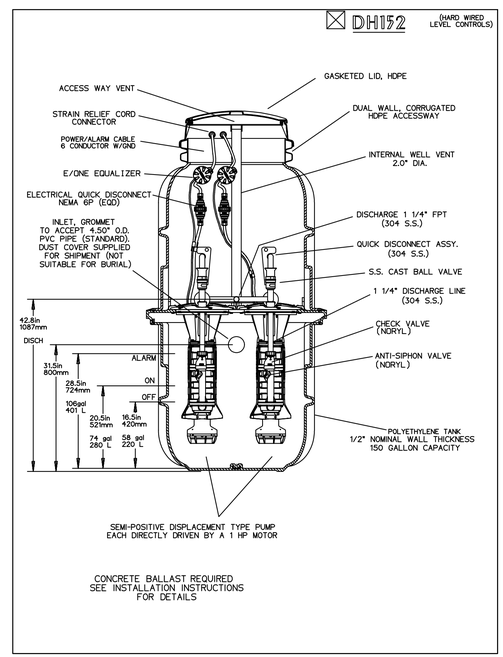

This drawing is copyrighted and is subject to copyright protection as an "architectural work" under 17 U. S. C. Sec. 101 et seq. The protection includes but is not limited to the overall form as well as the arrangement and composition of spaces, materials, color and elements in the design. Under such protection, unauthorized use of this drawing may result in the cessation of construction or buildings being seized and/or monetary compensation being awarded to The Robinson Green Beretta Corporation (RGB).

Any reproduction, possession, or use of this drawing or any part thereof without the express written permission of RGB, is prohibited. Violators will be prosecuted to the full extent of the law.

© RGB 2008

Certification

Drawn by RJB
Checked by NKH, KH, EC

Revised on
1. (ADD EXISTING BRUSHLINE AND PT POSTS)(ADD BENCHMARKS) (01/30/19)
2. (RE-ROUTE STORMWATER)(ADD APRONS)(ADD FORCE MAIN DETAILS) (02/07/20)

KAMAL R. HINGORANY
NO. 4089
REGISTERED PROFESSIONAL ENGINEER
02.07.20

DRAWINGS MUST BE PRINTED IN COLOR TO BE VALID. THIS NOTE SHOULD BE BLUE. IF THIS NOTE IS NOT BLUE, PLEASE REPRINT IN COLOR OR CONTACT NEI.

NARRAGANSETT ENGINEERING INC.
MAIN OFFICE:
3102 EAST MAIN ROAD,
PORTSMOUTH, RI 02871
TEL : (401) 683-6630
nei-cds.com

REVISION 1. 10/28/2018
- COASTAL FEATURE FLAGGED, SANITARY LINE EDITS

50 Holden Street
Providence, Rhode Island 02908
Phone: (401) 272-1730
Fax: (401) 273-7156
E-mail: rgbinfo@rgb.net
www.rgb.net
RGB architects
Architecture · Project Management · Interior Design

Project
FORT ADAMS MAITENANCE BUILDING
RIDEM / DIVISION OF PARKS & RECREATION
STATE OF RHODE ISLAND AND PROVIDENCE PLANTATIONS
FORT ADAMS STATE PARK, NEWPORT, RI

Drawing Status
ISSUED FOR CONSTRUCTION
Issued On FEBRUARY 21, 2019

Sheet Contents
DETAILS & NOTES

ADDENDUM 1

Project Number. 6380
NEI # 17.0200
Drawing No.
C102.A
Sheet 3 of 4

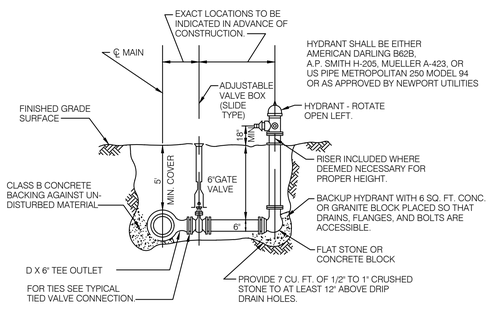

TYPICAL HYDRANT ASSEMBLY DETAIL

NOT TO SCALE

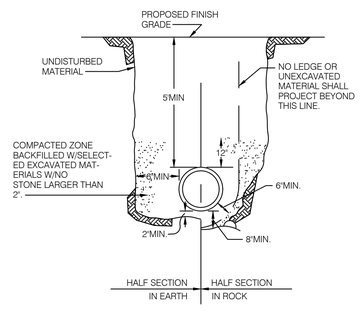

WATER MAIN TRENCH DETAIL

NOT TO SCALE

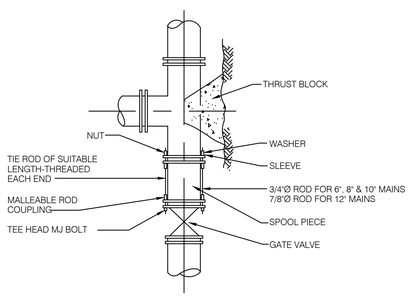

TYPICAL TIED MECHANICAL JOINT

VALVE CONNECTION DETAILS

NOT TO SCALE

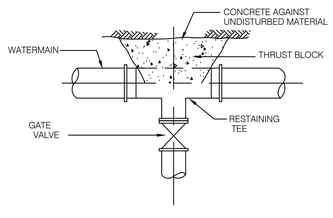

TYPICAL LATERAL GATE VALVE

CONNECTION DETAILS

NOT TO SCALE

NOTE:
WRAP BOLTS/FITTINGS IN PLASTIC WHERE MIXED CONCRETE IS USED.

NOTES:

1. WATER SERVICES SHALL BE LAID AT LEAST 10'-0" HORIZONTALLY FROM SEWER LINES AND SERVICES . SEWER CROSSINGS MUST PROVIDE A 0'-18" VERTICAL SEPARATION AND FOLLOW "NEWPORT UTILITIES GUIDELINES AND POLICIES FOR PUBLIC WATER SYSTEMS".
2. NO BACKFILL WHAT-SO-EVER SHALL BE PLACED UNTIL PERMITTED BY NEWPORT UTILITIES.
3. LEDGE, ROCK, BOULDERS AND LARGE STONES SHALL BE REMOVED TO PROVIDE A MINIMUM CLEARANCE OF 0'-6" BELOW AND ON EACH SIDE OF THE PIPE.
4. THE INITIAL BACKFILL MATERIAL WITHIN 0'-6" OF THE PIPE SHALL CONSIST OF COURSE SAND.
5. DEBRIS, FROZEN MATERIAL, LARGE CLODS OR STONES, ORGANIC MATTER, OR OTHER MATERIAL DEEMED UNSUITABLE BY THE ENGINEER SHALL NOT BE USED AS BACKFILL.
6. WATER SERVICES SHALL HAVE A MINIMUM COVER OF 5'-0" FROM THE TOP OF THE PIPE. SERVICES UNDER PAVED SURFACES OR SIDEWALKS SHALL BE FORMED OF SUCCESSIVE LAYERS NOT MORE THAN ONE (1) FOOT IN DEPTH, UNIFORMLY DISTRIBUTED AND EACH LAYER THOROUGHLY COMPACTED TO NOT LESS THAN 95% OF THE MAXIMUM DRY DENSITY OF THE MATERIAL. JACKING IS NOT ALLOWED.
7. NO PUDDLING OR JETTING IS ALLOWED.

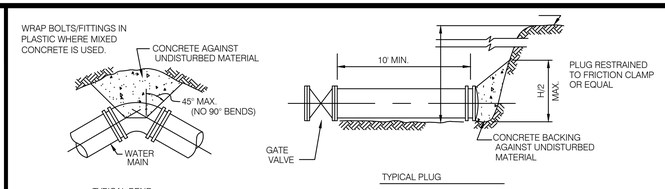

TYPICAL BEND

TYPICAL PLUG

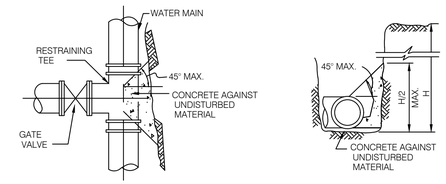

TYPICAL TEE

TYPICAL SECTION

NOTE: CONCRETE FOR THRUST BLOCKS SHALL BE NO LONGER THAN THE RATIO OF 2 1/2 : 5 1/2 AND SHALL HAVE A MINIMUM COMPRESSION STRENGTH OF 2000 PSI (SO THAT FLANGES AND BOLTS ARE ACCESSIBLE.)

BEARING AREAS OF THRUST BLOCKS (BEARING AREA IN SQUARE FT.)				
PIPE SIZE INCHES	1/4 BEND	1/8 BEND	1/16 BEND OR LESS	PLUG TEES
6 AND 8	8	8		8
10 AND 12	22	13	8	16

TYPICAL THRUST BLOCK DETAIL

NOT TO SCALE

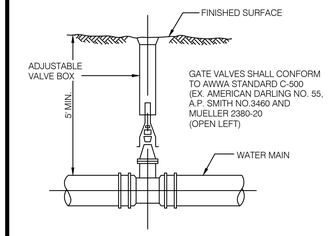

TYPICAL GATE VALVE

NOT TO SCALE

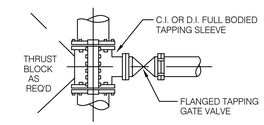

TAPPING SLEEVE AND

VALVE DETAILS

NOT TO SCALE

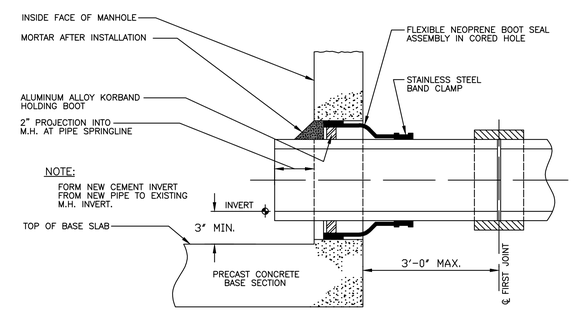

EXISTING MANHOLE WALL PIPE PENETRATION DETAIL

NOT TO SCALE

ADS DESIGN AND INSTALLATION SPECIFICATIONS:
REFER TO:
https://www.ads-pipe.com/sites/default/files/Drainage_Handbook_ADH2_Structures_%2805-19%29.pdf

ADS COVER AND TRENCH DETAILS UNDER PAVEMENT:
REFER TO:
https://www.ads-pipe.com/sites/default/files/Minimum_and_Maximum_Cover_Depths_4in-48in_F2648_Pipe_N-12_%28Tech_Note_A2.02_01-16%29.pdf

This drawing is copyrighted and is subject to copyright protection as an "architectural work" under 17 U. S. C. Sec. 101 et seq. The protection includes but is not limited to the overall form as well as the arrangement and composition of spaces, materials, color and elements in the design. Under such protection, unauthorized use of this drawing may result in the cessation of construction or buildings being seized and/or monetary compensation being awarded to The Robinson Green Beretta Corporation (RGB).

Any reproduction, possession, or use of this drawing or any part thereof without the express written permission of RGB, is prohibited. Violators will be prosecuted to the full extent of the law.

© RGB 2008

Certification

Drawn by RJB

Checked by NKH, KH, EC

Revised on

⚠ (ADD EXISTING BRUSHLINE AND PT POSTS)(ADD BENCHMARKS) (01/30/19)

⚠ (RE-ROUTE STORMWATER)(ADD APRONS)(ADD FORCE MAIN DETAILS) (02/07/20)

KAMAL R. HINGORANY
NO. 4089
REGISTERED PROFESSIONAL ENGINEER
02.07.20

DRAWINGS MUST BE PRINTED IN COLOR TO BE VALID. THIS NOTE SHOULD BE BLUE. IF THIS NOTE IS NOT BLUE, PLEASE REPRINT IN COLOR OR CONTACT NEI.

NARRAGANSETT ENGINEERING INC.
MAIN OFFICE:
3102 EAST MAIN ROAD,
PORTSMOUTH, RI 02871
TEL. : (401) 683-6630
nei-cds.com

REVISION 1. 10/28/2018
- COASTAL FEATURE FLAGGED, SANITARY LINE EDITS

50 Holden Street
Providence, Rhode Island 02908
Phone: (401) 272-1730
Fax: (401) 273-7156
E-mail: rgbinfo@rgb.net
www.rgb.net
RGB architects
Architecture · Project Management · Interior Design

Project

FORT ADAMS MAITENANCE BUILDING

RIDEM / DIVISION OF PARKS & RECREATION

STATE OF RHODE ISLAND AND PROVIDENCE PLANTATIONS

FORT ADAMS STATE PARK, NEWPORT, RI

Drawing Status

ISSUED FOR CONSTRUCTION

Issued On FEBRUARY 21, 2019

Sheet Contents

DETAILS & NOTES

ADDENDUM 1

Project Number. 6380
NEI # 17.0200

Drawing No.

C102.B

Sheet 3 of 4

PLAN REFERENCE:
- "PROPOSED SITE PLAN" BY NARRAGANSETT ENGINEERING INC. SCALE = 1"=30' (IN THIS PLAN SET)

PURPOSE:
TO SHOW THE EXTENT OF FORT ADAMS PROPERTY AND THE PROJECT SITE. THE TWO VIEWPORTS ARE AT DIFFERENT SCALES

LOCUS

This drawing is copyrighted and is subject to copyright protection as an "architectural work" under 17 U. S. C. Sec. 101 et seq. The protection includes but is not limited to the overall form as well as the arrangement and composition of spaces, materials, color and elements in the design. Under such protection, unauthorized use of this drawing may result in the cessation of construction or buildings being seized and/or monetary compensation being awarded to The Robinson Green Beretta Corporation (RGB).

Any reproduction, possession, or use of this drawing or any part thereof without the express written permission of RGB, is prohibited. Violators will be prosecuted to the full extent of the law.

© RGB 2008

Certification

Drawn by RJB

Checked by NKH, KH, EC

Revised on

1 (ADD EXISTING BRUSHLINE AND PT POSTS)(ADD BENCHMARKS) (01/30/19)

2 (RE-ROUTE STORMWATER)(ADD APRONS)(ADD FORCE MAIN DETAILS) (02/07/20)

KAMAL R. HINGORANY
No. 4089
REGISTERED PROFESSIONAL ENGINEER
02.07.20

DRAWINGS MUST BE PRINTED IN COLOR TO BE VALID. THIS NOTE SHOULD BE BLUE. IF THIS NOTE IS NOT BLUE, PLEASE REPRINT IN COLOR OR CONTACT NEI.

NARRAGANSETT ENGINEERING INC.
MAIN OFFICE:
3102 EAST MAIN ROAD,
PORTSMOUTH, RI 02871
TEL : (401) 683-6630
nei-cds.com

REVISION 1, 10/28/2018
- COASTAL FEATURE FLAGGED, SANITARY LINE EDITS

50 Holden Street
Providence, Rhode Island 02908

Phone: (401) 272-1730
Fax: (401) 273-7156

E-mail: rgbinfo@rgb.net
www.rgb.net

RGB architects

Architecture · Project Management · Interior Design

Project

FORT ADAMS
MAITENANCE
BUILDING

RIDEM / DIVISION OF PARKS
& RECREATION

STATE OF RHODE ISLAND
AND PROVIDENCE
PLANTATIONS

FORT ADAMS STATE PARK,
NEWPORT, RI

Drawing Status

ISSUED FOR
REVIEW

Issued On FEBRUARY 21, 2019

LEGEND

BRUSH LINE (APPROXIMATE)	CATCH BASIN
100.00' DIMENSION - EXISTING	DRILL HOLE
100.00' (D) DIMENSION - PLAN / DEED	ELECTRIC BOX (ETC)
100.00' DIMENSION - PROPOSED	FIRE HYDRANT
100.00' (S) DIMENSION - SURVEY	GATE VALVE
EDGE OF PAVEMENT - EXISTING	GRANITE BOUND, EXISTING
EDGE OF PAVEMENT - PROPOSED	LOW WATER LINE
ETC ELECTRIC - OVERHEAD (OHE)	LIMIT OF DISTURBANCE MARKER
ELECTRIC - TELEPHONE - CABLE (ETC)	MANHOLE (MH TYPE)
UGE ELECTRIC - UNDERGROUND (UGE)	REBAR / STEEL PIPE FOUND
FENCE - METAL	SPIKE
FENCE - WOOD	X 5.10 SPOT GRADE - EXISTING
FLOW ARROWS	X 6.6 SPOT GRADE - PROPOSED
GAS GAS (G)	STRUCTURE, EXISTING
100.00 GRADE CONTOUR - EXISTING	STRUCTURE, PROPOSED
GRADE CONTOUR - PROPOSED	
HIGH VISIBILITY FENCE (HVF)	
LOD LIMIT OF DISTURBANCE (LOD)	
PROPERTY LINE - ABUTTING	
PROPERTY LINE - EXISTING	SURVEY MONUMENT TO BE SET
PROPERTY LINE - PROPOSED	
SAN SANITARY SEWER (S)	SURVEY MARKER TO BE SET
SED SEDIMENT CONTROL (SED)	SE # SOIL EVALUATION
SETBACKS	TREE
STONE WALL	UTILITY POLE
SD STORM DRAIN (SD)	WATER SHUT OFF
SUBDIVISION LINE - EXISTING	WETLAND FLAG LOCATION
W WATER	
WETLAND LIMIT	

EXISTING IMPERVIOUS AREA

NO.	ITEM	AREA		NOTES
1	PARKING AREA	17,377	ft^2	
2	ROADWAY TO PARKING	4,512	ft^2	
3	TOTAL	21,889	ft^2	
4	Lot Area	2,289,513	ft^2	52.56 ACRES
5	Cover Percentage	1.0%		FROM SURVEY
6	Project Site Area	45,416	ft^2	Defined by Engineer
7	Impervious Cover	48.2%		>40% (Redevelopment Site)

REDEVELOPMENT PROJECT SITE

PROPOSED IMPERVIOUS AREA

NO.	ITEM	AREA		NOTES
1	STRUCTURE + PADS	5,324	ft^2	
2	PARKING AREA	14,030	ft^2	
3	EXISTING ROADWAY	1,138	ft^2	
4	PROPOSED ROADWAY	5,521	ft^2	NEW TOTAL IMPERVIOUS ROADWAY = 2,190 SF
5	TOTAL	26,013	ft^2	PROPOSED>EXISTING (26,031 SF>21,889 SF)
6	Lot Area	2,289,513	ft^2	52.56 ACRES
7	Cover Percentage	1.1%		
8	Project Site Area	45,416	ft^2	Defined by Engineer
9	Impervious Cover	57.3%		Redevelopment Site

PROPOSED > EXISTING (Δ = 4,142)

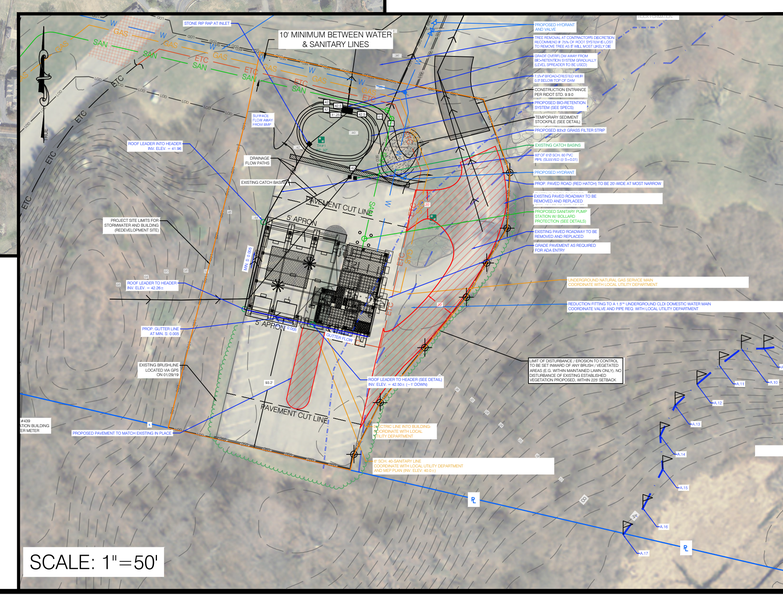

Sheet Contents

FULL LOT EXTENTS:
SCALE: 1"=200'
PROJECT SITE:
SCALE: 1"=50'
ADDENDUM 1

Project Number. 6380
NEI # 17.0200

Drawing No.

C103

Sheet 4 of 4

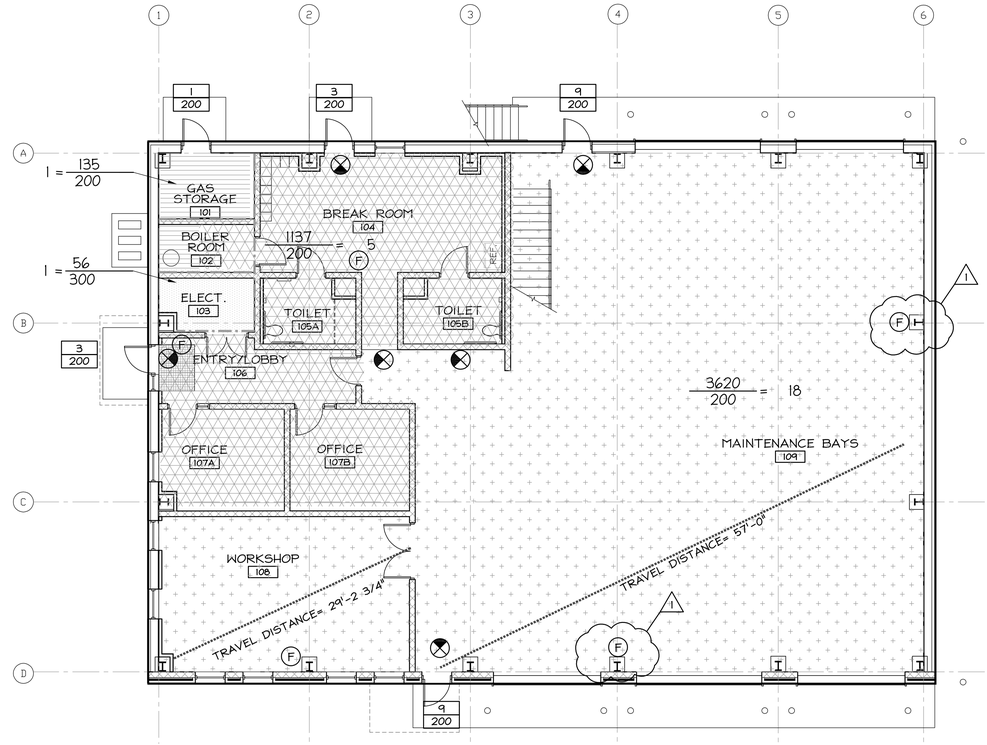

REF NORTH

NORTH

1 A010 CODE PLAN

Scale: 1/8" = 1'-0"

SCALE: 1/8" = 1'-0"

OCCUPANCY DESIGNATIONS LEGEND

- BUSINESS
- STORAGE S-1
- STORAGE / MECHANICAL

CODE DATA

I. BUILDING & FIRE CODE DATA

RHODE ISLAND STATE BUILDING CODES

SBC-01-2013 BUILDING CODE	IBC-2012 plus RI Amendments 2013 07 01
SBC-02-2013 RESIDENTIAL CODE	IRC-2012 plus RI Amendments 2013 07 01
SBC-03-2013 PLUMBING CODE	IPC-2012 plus RI Amendments 2013 07 01
SBC-04-2013 MECHANICAL CODE	IMC-2012 plus RI Amendments 2013 07 01
SBC-05-2014 ELECTRIC CODE	NFPA 2014 plus RI Amendments 2014 07 01
SBC-08-2013 ENERGY CONSERVATION CODE	IECC-2012 plus RI Amendments 2013 07 01
SBC-19-2010 FUEL GAS CODE	IFGC-2012 plus RI Amendments 2013 07 01

RI ACCESSIBILITY REGULATIONS
SBC-1 IBC-2012 Chapter 11;
ICC/ANSI A117.1 2009 plus RI Amendments 2010 07 01
AMERICANS w/ DISABILITIES ACT (ADA - 2010)

RHODE ISLAND FIRE SAFETY CODE (RIFSC - 2013)

RHODE ISLAND FIRE LAWS (RIFL)
TITLE 23, CHAPTERS 28.1 - 28.39

RULES & REGULATIONS PROMULGATED BY the Board of Appeals & Review
SECTIONS 1 THRU 15

RHODE ISLAND UNIFORM FIRE CODE (RIUFC - 2012)
NFPA 1-2012 plus RI AMENDMENTS

RHODE ISLAND LIFE SAFETY CODE (RILSC - 2012)
NFPA 101-2012 plus RI AMENDMENTS

ADDITIONAL APPLICABLE NFPA STANDARDS
NFPA 10 2013 PORTABLE FIRE EXTINGUISHERS
NFPA 13 2013 INSTALLATION OF SPRINKLER SYSTEMS
NFPA 14 2013 STANDPIPES
NFPA 72 2010 NATIONAL FIRE ALARM CODE PLUS RI AMENDMENTS
NFPA 220 2012 STANDARD OF TYPES OF BUILDING CONSTRUCTION
NFPA 701 1999 STANDARD METHOD OF FIRE TESTS FOR FLAME PROPAGATION OF TEXTILES

II. BUILDING AREA

BUILDING AREA	5220 SF
MEZZANINE	1933 SF#

#IBC 505.1 The mezzanine shall not contribute to the building area or number of stories.

A. OCCUPANCY & CONSTRUCTION TYPES

BUILDING OCCUPANCY: MIX USE, NON SEPERATED

	HEIGHT & AREA	
S-1 MODERATE HAZARD STORAGE (MAINTENANCE)	2	3,902 SF
M-MECHANICAL/STORAGE	1	135 SF
B-BUSINESS	1	788 SF

S-1 MOST RESTRICTIVE HEIGHT AND AREA

CONSTRUCTION TYPE: IIB (IBC 2009)

B. ALLOWABLE AREA AND HEIGHT

1. AREA FOR IIB CONSTRUCTION
   OCCUPANCY S-1 = 17,500 SF/FLOOR
2. HEIGHT FOR IIB CONSTRUCTION
   OCCUPANCY S-1 = 2 STORIES
3. AREA AND HEIGHT CALCULATIONS

ACTUAL AREA	5340 SF < 17,500 SF
ACTUAL HEIGHT	2 STORIES = 2 STORIES

C. OCCUPANCY LOAD TYPES

	IBC TABLE 1004.1.2	NFPA 101 TABLE 7.3.1.2
S-1 STORAGE	200 SF./PERSON GROSS	N/A SF./PERSON
S-2 STORAGE	200 SF./PERSON GROSS	
B-BUSINESS	100 SF./PERSON GROSS	
ACCESSORARY STORAGE AREAS, MECHANICAL, EQUIPMENT ROOM	300 SF./PERSON GROSS	

TOTAL OCCUPANCY 25 PERSONS

BUILDING ELEMENT	RATING IN HOURS IBC (TABLE 601) IIB	NFPA 220 (TABLE 4.1.1) II(000)
STRUCTURAL FRAME	0	0
BEARING WALLS EXTERIOR INTERIOR	0	0
NON BEARING WALLS AND PARTITIONS EXTERIOR	0	0
NON BEARING WALLS AND PARTITIONS INTERIOR	0	0
FLOOR CONSTRUCTION INCLUDING SUPPORTING BEAMS AND JOISTS	0	0
ROOF CONSTRUCTION INCLUDING SUPPORTING BEAMS AND JOISTS	0	0

D. FIRE PROTECTION

1. FIRE ALARM SYSTEM
2. FIRE EXTINGUISHERS

E. EGRESS REQUIREMENTS

1. LENGTH OF TRAVEL

	IBC 1016.2	NFPA 7.6
S-1 STORAGE	250 LF	400 LF

MAXIMUM LENGTH OF TRAVEL ALLOWED = 250 LF

2. COMMON PATH

	IBC 10.14.3	NFPA 7.6
S-1 STORAGE	75 LF	50 LF
DEAD END CORRIDOR	20 LF	50 LF

3. MEANS OF EGRESS

NUMBER AND WIDTH REQUIRED
OCCUPANCY LOAD PER FLOOR 30 PERSONS

TOTAL EXITS REQUIRED = 2 EXIT PER FLOOR/AREA

EGRESS WIDTHS REQUIRED
TOTAL WIDTH REQUIRED FOR DOORS = .0.2"/person x 30 = 6"

WIDTH PROVIDED
TOTAL WIDTH PROVIDED FOR DOORS = 36"

F. SEISMIC CRITERIA

SEE STRUCTURAL DRAWINGS FOR SEISMIC REQUIREMENTS

G. STRUCTURAL LOADS

ZONE
WIND SPEED = 105 MPH
GROUND SNOW LOAD = 35 PSF
ROOF SNOW LOAD = 30 PSF

H. ENERGY CONSERVATION (IECC)

BUILDING ENVELOPE REQUIREMENTS: OPAQUE ASSEMBLIES

	RI -IECC 2013 Table C402.2 Climate Zone 5	Proposed Design
Roofs		
Insulation entirely above deck	R-25 ci	R-28 ci
Metal Buildings (w/ R-5 thermal blocks)	R-19 + R-11LS	n/a
Attic and Other	R-38	n/a
Walls, Above Grade		
Mass	R-11.4 ci	n/a
Metal Building	R-13 + 13ci	26 ci
Metal Framed	R-13 + R-7.5 ci	--
Wood Framed and Other	R-13 + R-3.8 ci OR R-20	n/a
Walls, Below Grade		
Mass, exterior insulation	R-7.5 ci	n/a
Floors		
Mass	R-10 ci	R-10 ci
Joist/Framing	R-30	n/a
Slab on Grade Floors		
Unheated Slabs	R-10 (for 24" below)	R-10 (for 24" below)
Heated Slabs	R-15 (for 36 below)	R-15 (for 36" below) + R-5 ci below
Opaque Doors	+R-5 ci below	
Swinging	U-0.37	U-0.37
Roll-up or Sliding	R-4.75	R-4.75

BUILDING ENVELOPE REQUIREMENTS: FENESTRATION

	RI-IECC Table C402.3 Zone 5
Fixed Fenestration	U-0.38
Operable Fenestration	U-0.45
Entrance Door	U-0.77
All Other (operable & fixed windows, and non-entrance doors)	U-0.45
SHGC - All frame types	All Frame Types
SHGC:	U-0.40

SHGC= Solar Heat Gain Coefficient
VLT= Visible light transmittance
PF= Projection Factor.
PF=A/B
A= Distance measured horizontally from the furthest continuous extremity of any overhang, eave, or permanently attached shading device to the vertical surface of the glazing.
B= Distance measured vertically from the bottom of the glazing to the underside of the overhang, eave, or permanently attached shading device.

III. PLUMBING FIXTURE ANALYSIS (RI STATE PLUMBING CODE)

STORAGE S-1 - BASED ON 25 OCCUPANTS, 13 MALE, 12 FEMALE

	FIXTURES		CODE REQUIREMENT MALE	FEMALE	TOTAL	PROJECT DESIGN PROVIDED MALE	FEMALE	UNISEX	TOTAL
	WATER CLOSETS	1/100	1	1	2	-	-	1	1
	URINALS	NOT MORE THAN 50%				-	NA	-	-
	LAVATORIES	1/100	1	1	2	-	-	1	1
	DRINKING FOUNTAIN				1				1
	SERVICE SINK	1			1				1

KEY

OCCUPANT LOAD INDICATOR

#,### / ## = ###

- AREA OF BUSINESS USE
- TOTAL OCCUPANTS
- LOAD FACTOR FROM TABLE 1008.1.2

EGRESS ELEMENT LOAD INDICATOR

57 / 213

- ACTUAL OCCUPANT LOAD PASSING THROUGH DOOR/STAIR
- ALLOWABLE OCCUPANT LOAD OF DOOR/STAIR

TRAVEL DISTANCE

COMMON PATH OF TRAVEL

2 HR WALL

LEGEND

- SITE HYDRANT
- EXIT SIGNAGE
- INSPECTORS TEST VALVE
- FIRE EXTINGUISHER 4A-60BC (UL RATING) SURFACE MOUNTED RETAINER BRACKET
- E — EMERGENCY LIGHT

This drawing is copyrighted and is subject to copyright protection as an "architectural work" under 17 U. S. C. Sec. 101 et seq. The protection includes but is not limited to the overall form as well as the arrangement and composition of spaces, materials, color and elements in the design. Under such protection, unauthorized use of this drawing may result in the cessation of construction or buildings being seized and/or monetary compensation being awarded to The Robinson Green Beretta Corporation (RGB).

Any reproduction, possession, or use of this drawing or any part thereof without the express written permission of RGB, is prohibited. Violators will be prosecuted to the full extent of the law.

© RGB 2019

Certification

Drawn by TPL

Checked by RJJ, DLD

Revised on

1 ADDENDUM 1 02/07/2020

50 Holden Street
Providence, Rhode Island 02908

Phone: (401) 272-1730
Fax: (401) 273-7156

E-mail: rgbinfo@rgb.net
www.rgb.net

RGB architects

Architecture · Project Management · Interior Design

Project

FORT ADAMS MAINTENANCE BUILDING

RIDEM / DIVISION OF PARKS & RECREATION

STATE OF RHODE ISLAND AND PROVIDENCE PLANTATIONS

FORT ADAMS STATE PARK, NEWPORT, RI

Drawing Status

ISSUED FOR CONSTRUCTION

Issued On MAY 29, 2019

Sheet Contents

CODE REVIEW

Project Number. 6380

Drawing No.

A010

Sheet of

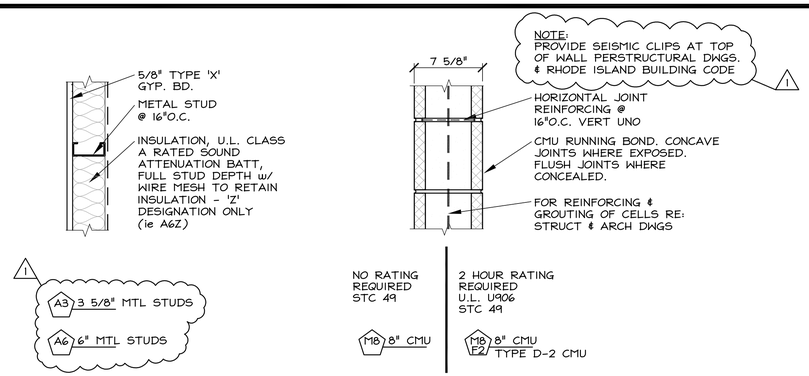

1 / A030 INTERIOR WALL CONSTRUCTION TYPES

Scale: 1 1/2" = 1'-0"

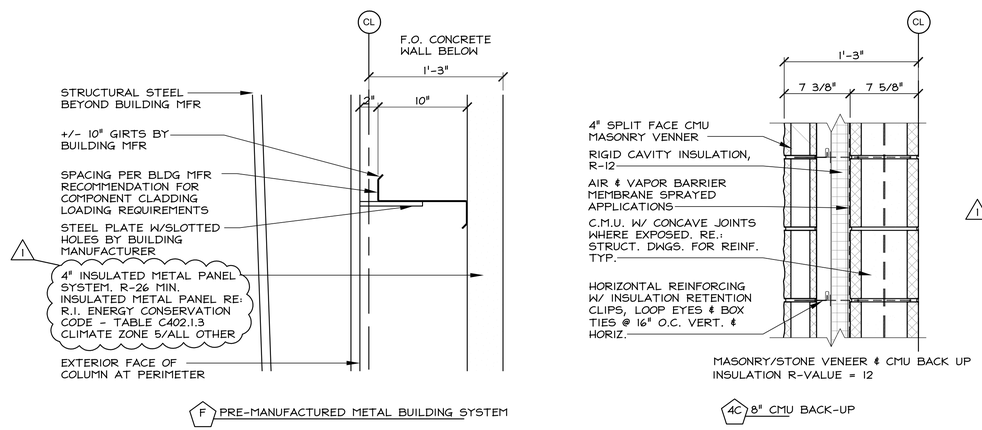

2 / A030 EXTERIOR WALL CONSTRUCTION TYPES

Scale: 1 1/2" = 1'-0"

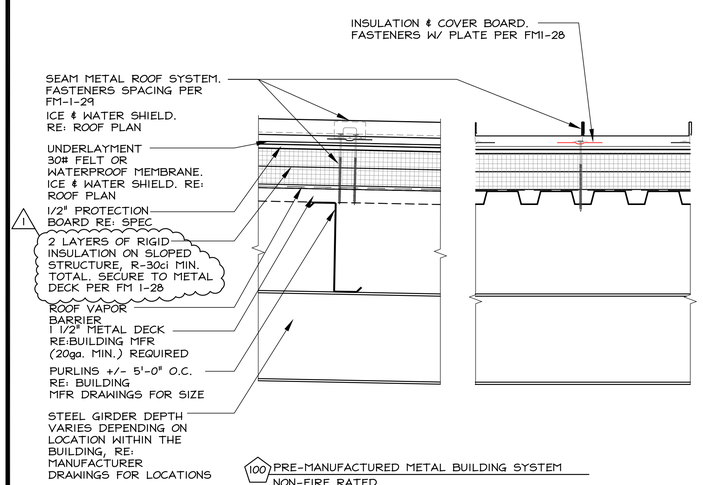

3 / A030 ROOF CONSTRUCTION TYPES

Scale: 1 1/2" = 1'-0"

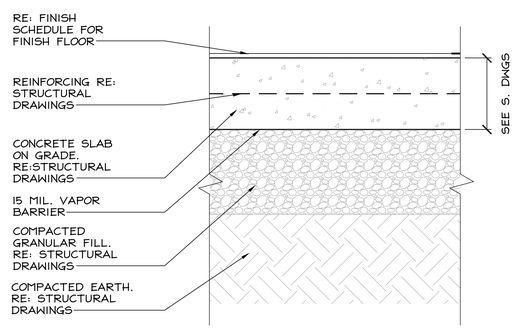

4 / A030 FLOOR CONSTRUCTION TYPES

Scale: 1 1/2" = 1'-0"

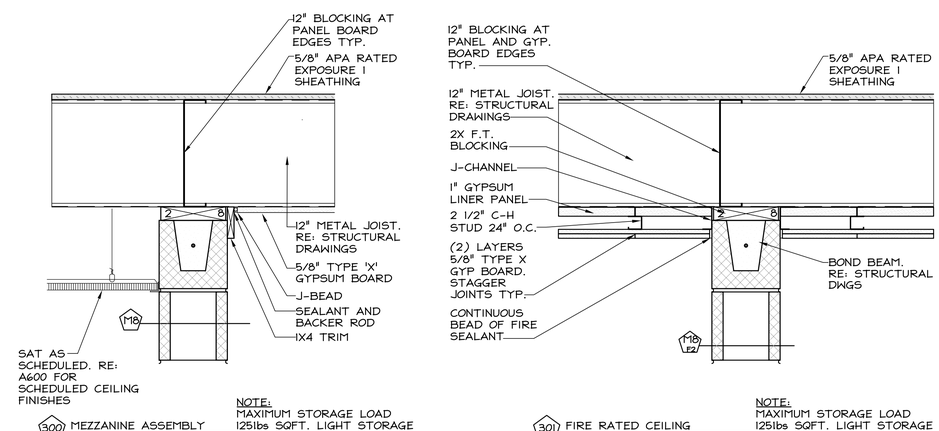

5 / A030 CEILING CONSTRUCTION TYPES

Scale: 1 1/2" = 1'-0"

INTERIOR WALL DESIGNATIONS:

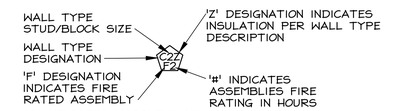

"M" INDICATES MASONRY WALL
"CL" INDICATES PROTECTED COLUMN ASSEMBLY - SEE COLUMN FIREPROOFING NOTES THIS SHEET

EXAMPLE - WALL "A2"
"A" - WALL TYPE
"2" - STUD THICKNESS

EXAMPLE - WALL TYPE "M4"
"M" - MASONRY WALL
"4" - CMU THICKNESS

METAL STUDS	WOOD STUDS	MASONRY WALLS
1 = 1 5/8" STUDS	3 = 2 X 3 STUDS	2 = 1 5/8" SOAP
2 = 2 1/2" STUDS	4 = 2 X 4 STUDS	4 = 4" BLOCK
3 = 3 5/8" STUDS	6 = 2 X 6 STUDS	6 = 6" BLOCK
4 = 4" STUDS		8 = 8" BLOCK
6 = 6" STUDS		10 = 10" BLOCK
		12 = 12" BLOCK

TYPICAL CONTROL JOINTS

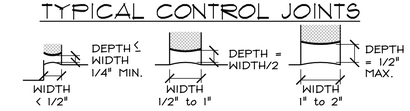

INTERIOR GENERAL NOTES:

1. ALL GYPSUM SHEATHING/WALL BOARD IS TYPE 'X'.
2. PROVIDE METAL STUD GAUGE AS RECOMMENDED BY STUD MFG. FOR WALL LIVE LOAD OF 5 psf FOR HEIGHT OF THE UNBRACED WALL VERTICAL SPAN. MAXIMUM DEFLECTION 1/360 OF THE SPAN.
3. FOR NON-LOAD BEARING WALLS THAT SEAL TO ROOF STRUCTURE ABOVE, PROVIDE SUITABLE STUD TRACK TO ALLOW FOR MINIMUM ROOF DEFLECTION OF 1" WITHOUT TRANSFERING LOAD TO METAL STUDS RE: STRUCTURAL DWGS FOR MORE STRINGENT DEFLECTION INFORMATION. (NOT REQUIRED @ PERIMETER EXTERIOR WALLS UNLESS NOTED OTHERWISE)
4. HOLD BOTTOM OF GWB @ 1/4" ABOVE CONCRETE FLOOR TYPICAL (TO PREVENT MOISTURE WICKING)
5. PROVIDE TYPE 'X' MOISTURE RESISTANT GYPSUM WALL BOARD AT ALL TOILET ROOMS, UNLESS NOTED OTHERWISE.
6. PROVIDE 20 GA METAL STUDS MIN. AT CEMENT BOARD WALLS.
7. PROVIDE FIRE RATED CAULKING AT TOP OF ALL FIRE RATED WALLS THAT SEAL TO UNDERSIDE OF STRUCTURE. (i.e. BETWEEN METAL DECK FLUTES.)
8. ALL EXPOSED INTERIOR MASONRY WALLS TO HAVE 1" BULLNOSE CORNERS @ EXTERIOR CORNERS AND WINDOW/DOOR JAMBS UNLESS NOTED OTHERWISE.
9. STC RATINGS FOR WALL CONSTRUCTION TYPES ARE BASED ON USG CORPORATION SELECTOR GUIDE TO SOUND-RATED PARTITIONS (SA100).
10. ALL WALL SYSTEM 'R' & 'U' VALUES ARE BASED ON"
    -6" METAL STUD
    -8" NORMAL WEIGHT CMU
    -8" NORMAL WEIGHT CONCRETE
11. ALL WALL VAPOR BARRIERS ARE TO BE 10MIL POLY MIN. U.N.O.

This drawing is copyrighted and is subject to copyright protection as an "architectural work" under 17 U. S. C. Sec. 101 et seq. The protection includes but is not limited to the overall form as well as the arrangement and composition of spaces, materials, color and elements in the design. Under such protection, unauthorized use of this drawing may result in the cessation of construction or buildings being seized and/or monetary compensation being awarded to The Robinson Green Beretta Corporation (RGB).

Any reproduction, possession, or use of this drawing or any part thereof without the express written permission of RGB, is prohibited. Violators will be prosecuted to the full extent of the law.

© RGB 2019

Certification

Drawn by TPL

Checked by RJJ, DLD

Revised on

1 ADDENDUM 1 02/07/2020

50 Holden Street
Providence, Rhode Island 02908

Phone: (401) 272-1730
Fax: (401) 273-7156

E-mail: rgbinfo@rgb.net
www.rgb.net

RGB ARCHITECTS

Architecture · Project Management · Interior Design

Project

FORT ADAMS MAINTENANCE BUILDING

RIDEM / DIVISION OF PARKS & RECREATION

STATE OF RHODE ISLAND AND PROVIDENCE PLANTATIONS

FORT ADAMS STATE PARK, NEWPORT, RI

Drawing Status

ISSUED FOR CONSTRUCTION

Issued On MAY 29, 2019

Sheet Contents

CONSTRUCTION TYPES

Project Number. 6380

Drawing No.

A030

Sheet of

1 / D100 ENLARGED SITE PLAN AT EX. MAINTENANCE SHEDS

Scale: NTS

2 / D100 SITE PLAN

Scale: NTS

EX. SHED EXTERIOR

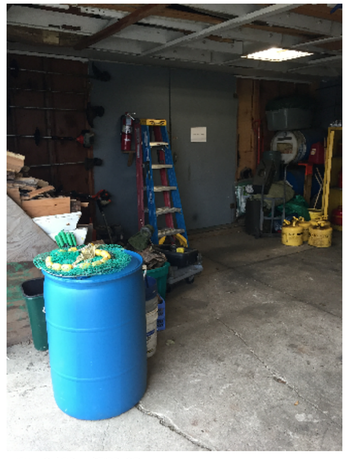

EX. SHED INTERIOR

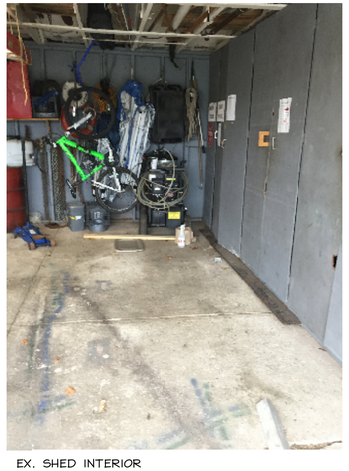

EX. SHED INTERIOR

2 / D100 EX. PHOTOS

Scale: NTS

DEMOLITION NOTES:

1. THE SCOPE OF THIS DEMOLITION PACKAGE REMOVE 2 EXISTING MAINTENANCE SHEDS IN THEIR ENTIRELY.
2. THE EXISTING CONDITIONS INFORMATION SHOWN &/or INDICATED ON THE DRAWINGS WAS OBTAINED FROM LIMITED EXISTING DRAWINGS PREPARED BY OTHERS, FIELD REVIEW; FIELD MEASUREMENT; &/or OTHER AVAILABLE DOCUMENTATION &/or OBSERVATION BY OTHERS. NOT ALL EXISTING CONDITIONS &/or ACTUAL CONSTRUCTION MAY BE INDICATED &/or KNOWN.
3. CONTRACTOR TO VERIFY ALL EXISTING, CONDITIONS, CONNECTIONS, LOCATIONS, SIZES, ETC. IN THE FIELD AND NOTIFY THE ARCHITECT OF ANY DISCREPANCIES BEFORE STARTING DEMOLITION WORK.
4. CONTRACTOR TO COORDINATE EXTENTS OF ALL DEMOLITION WORK WITH ALL NEW WORK AND NOTIFY THE ARCHITECT OF ANY DISCREPANCIES BEFORE STARTING DEMOLITION WORK.
5. 1 CONTRACTOR TO PROPERLY DE-ENERGIZE, SHUT OFF, CUT & CAP ALL UTILITIES (ELECTRICAL, GAS, WATER, SEWER, TELEPHONE, ETC.) BACK TO THE EXISTING EXTERIOR WALLS, ROOF DECK, AND/OR TO SLAB OR GRADE. U.N.O. COORDINATE W\ MEP DEMOLITION DWGS & LOCAL UTILITY COMPANIES.
6. FULL EXTENT OF BUILDING MATERIALS IS UNKNOWN. EXISTING BUILDING CONSTRUCTION MAY CONTAIN MATERIALS THAT REQUIRE ABATEMENT. IF POTENTIAL MATERIALS ARE DISCOVERED, CONTRACTOR TO NOTIFY OWNER & ARCHITECT BEFORE PROCEEDING WITH WORK.
7. CONTRACTOR TO PROVIDE ALL OSHA and/or BUILDING CODE REQUIRED SAFETY PROTECTION TO PROTECT WORKERS FROM FALLS, CRUSHING, ELECTROCUTION, IMPACT FROM ABOVE, ETC.
8. CONTRACTOR TO MAINTAIN BUILDING IN A SAFE AND SECURE MANNER AND TO ELIMINATE THE APPEARANCE OF AN ATTRACTIVE NUISANCE. MAINTAIN PHYSICAL BARRIER TO PREVENT BUILDING/ SITE ACCESS BY CHILDREN AT A MINIMUM.
9. CONTRACTOR TO PROTECT ALL EXISTING WORK TO REMAIN DURING DEMOLITION.
10. CONTRACTOR TO FURNISH AND INSTALL ALL SHORING AND/OR BRACING TO SUPPORT ALL EXISTING WALLS, FLOORS/ROOFS, ETC. PRIOR TO REMOVALS OF EXISTING CONSTRUCTION.
11. EXISTING BUILDING CONSTRUCTION DEFICIENCIES NOT INDICATED ON THE DRAWINGS, BUT UNCOVERED &/or DISCOVERED BY CONTRACTOR'S CONSTRUCTION ACTIVITIES SHALL BE REPORTED TO THE ARCHITECT FOR REVIEW PRIOR TO INSTALLATION OF NEW WORK. ADDITIONAL DETAILS WILL BE FURNISHED AS NECESSARY. TYPICAL.

DEMOLITION LEGEND:

EXISTING WALL/ITEM TO BE REMOVED

This drawing is copyrighted and is subject to copyright protection as an "architectural work" under 17 U. S. C. Sec. 101 et seq. The protection includes but is not limited to the overall form as well as the arrangement and composition of spaces, materials, color and elements in the design. Under such protection, unauthorized use of this drawing may result in the cessation of construction or buildings being seized and/or monetary compensation being awarded to The Robinson Green Beretta Corporation (RGB).

Any reproduction, possession, or use of this drawing or any part thereof without the express written permission of RGB, is prohibited. Violators will be prosecuted to the full extent of the law.

© RGB 2019

Certification

Drawn by TPL

Checked by RJJ, DLD

Revised on

1 ADDENDUM 1 02/07/2020

50 Holden Street
Providence, Rhode Island 02908

Phone: (401) 272-1730
Fax: (401) 273-7156

E-mail: rgbinfo@rgb.net
www.rgb.net

RGB ARCHITECTS

Architecture · Project Management · Interior Design

Project

FORT ADAMS MAINTENANCE BUILDING

RIDEM / DIVISION OF PARKS & RECREATION

STATE OF RHODE ISLAND AND PROVIDENCE PLANTATIONS

FORT ADAMS STATE PARK, NEWPORT, RI

Drawing Status

ISSUED FOR CONSTRUCTION

Issued On MAY 29, 2019

Sheet Contents

DEMOLITION PLAN EXISTING MAINTENANCE SHEDS

Project Number. 6380

Drawing No.

D100

Sheet of

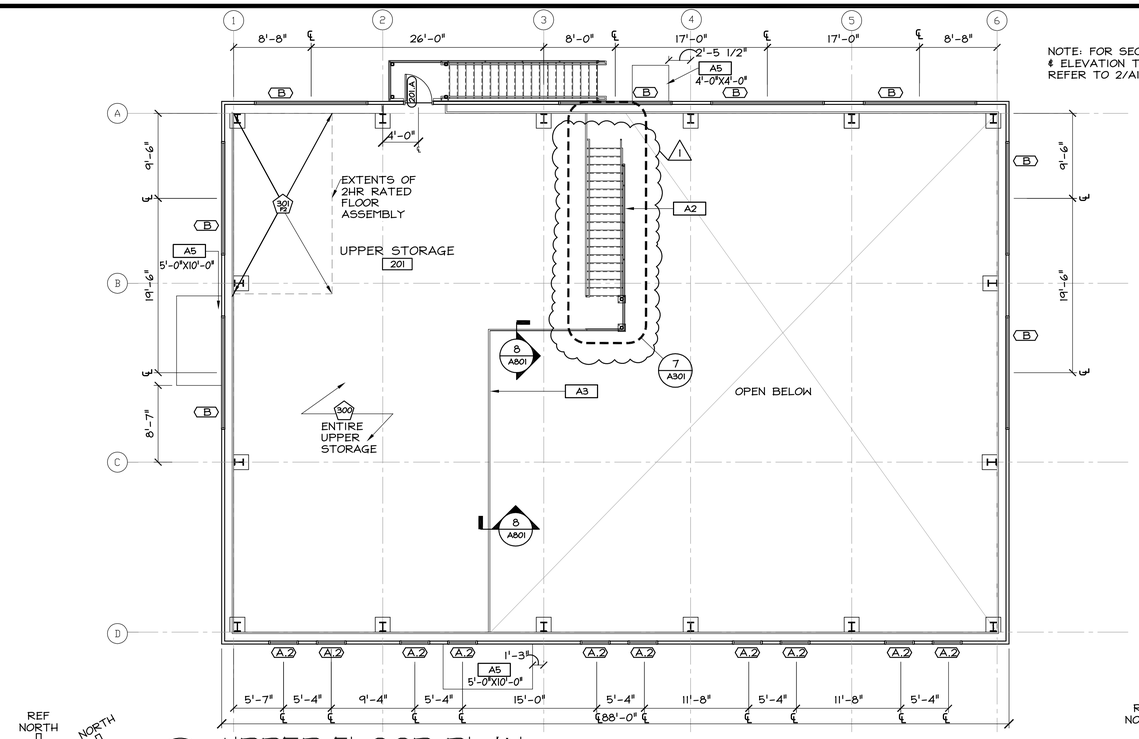

1 / A100 UPPER FLOOR PLAN

Scale: 1/8" = 1'-0"

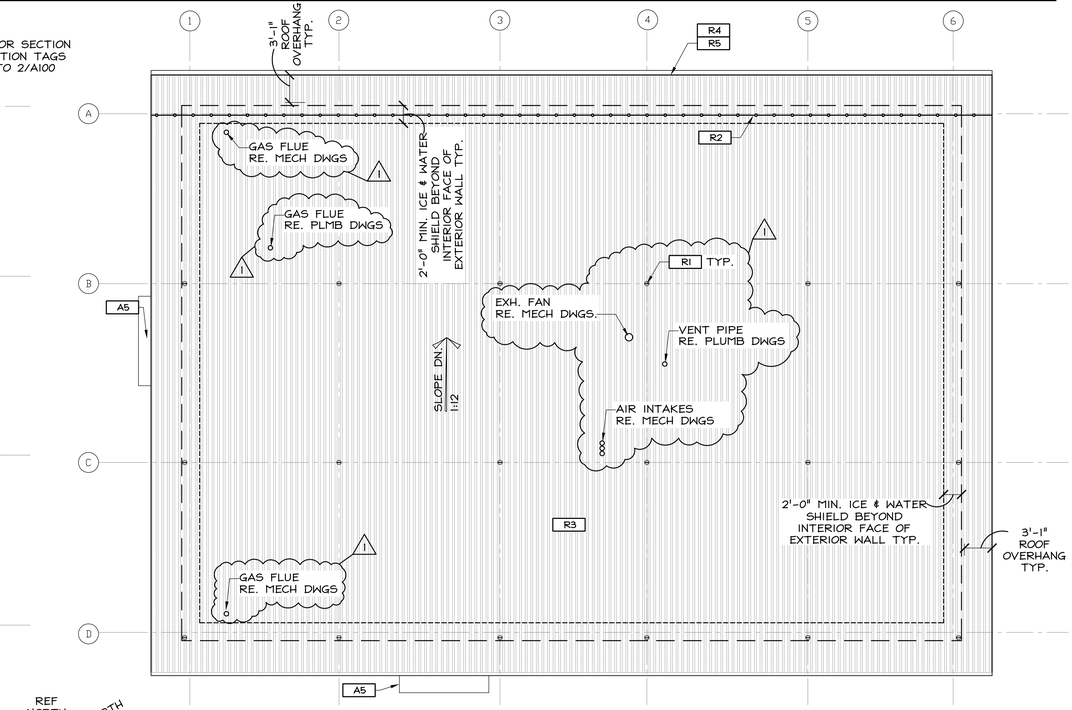

3 / A100 ROOF PLAN

Scale: 1/8" = 1'-0"

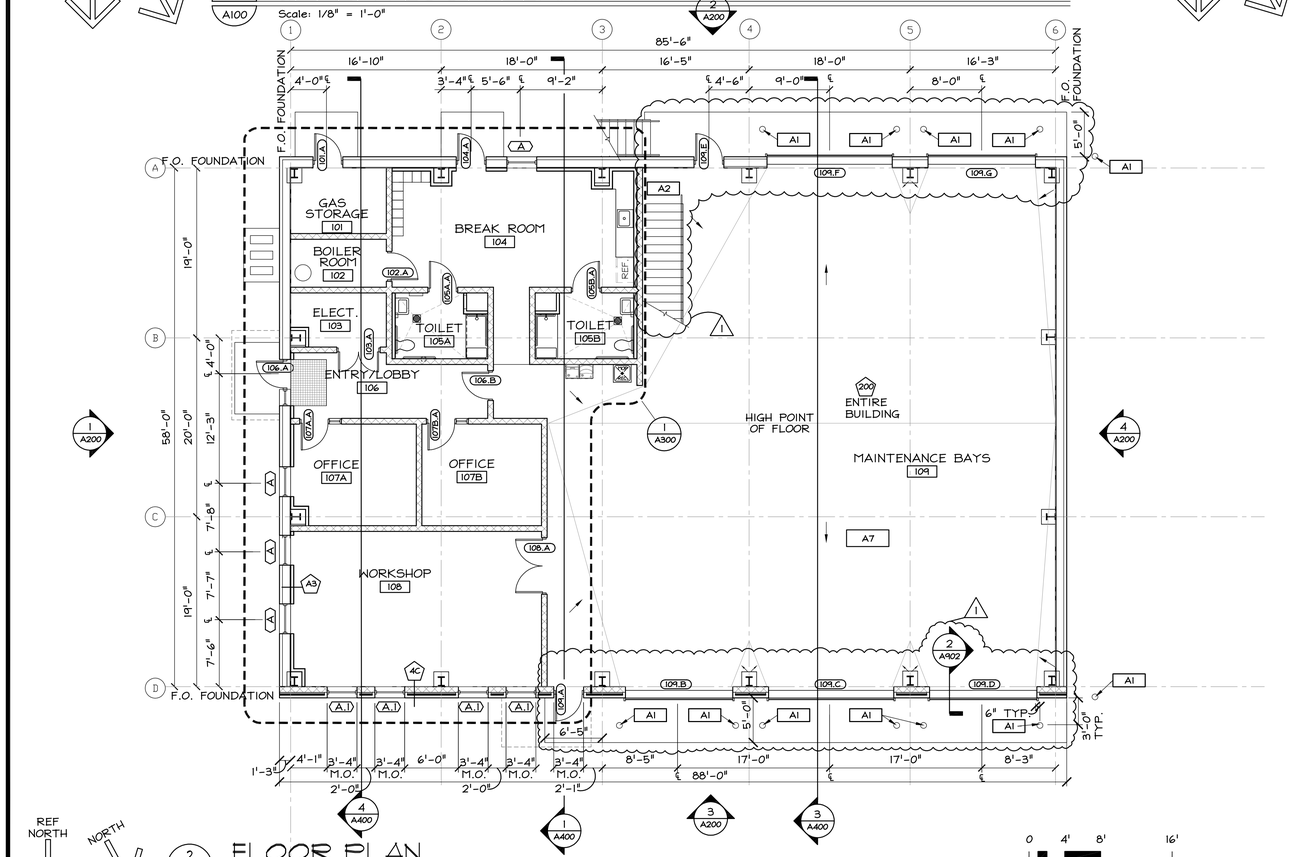

2 / A100 FLOOR PLAN

Scale: 1/8" = 1'-0"

SCALE: 1/8" = 1'-0"

GENERAL ROOF NOTES:

1. NOT ALL PENETRATIONS MAY BE SHOWN. COORDINATE ALL WORK w/ STRUCTURAL, PLUMBING, MECHANICAL, ELECTRICAL &/or OTHER DRAWINGS.
2. ALL DIMENSIONS TO NEW CONSTRUCTION ARE TO FACE OF STUD AND FACE OF MASONRY U.N.O.
3. ALL NEW ROOF SYSTEMS ARE TYPE 100 U.N.O.
4. CONTRACTOR TO LOCATE MECHANICAL EQUIPMENT 10' MINIMUM FROM ROOF EDGE(S) WITH FALL POTENTIAL UNLESS GUARD RAIL SYSTEM IS INDICATED.

ICE AND WATER SHIELD

PLUMBING VENT

FALL PROTECTION ANCHOR

SUPPLY/EXHAUST FAN

T.O.S. ?'-?" — TOP OF STEEL

SLOPE DN. X:12 — ROOF SLOPE

ROOF WORK NOTES:

- R1 — FALL PROTECTION ANCHOR. SECURE TO STRUCTURE & FLASH WEATHER TIGHT. RE. 8/A500
- R2 — SNOW GUARD FENCE. PROVIDE ROOFING MEMBRANE FLASHING SCREWED TO DECK. RE. 7/A500
- R3 — PROVIDE PREFABRICATED ROOF BOOTS FOR ALL CONDUIT PENETRATIONS. COORDINATE W/ ELECTRICAL, PLUMBING & MECHANICAL DRAWING SET T.O. BOOT MIN. 10" ABOVE ROOF SEAL TO CONDUIT/PIPING WEATHER TIGHT.
- R4 — INSTALL HEAT TRACE IN GUTTER
- R5 — PRE-FINISHED GUTTER W/ LEAF GUARD

GENERAL PLAN NOTES:

1. COORDINATE ALL NEW WORK w/ CIVIL, STRUCTURAL, PLUMBING, MECHANICAL, ELECTRICAL, &/or OTHER DRAWGINS. NOTIFY ARCHITECT OF ANY DISCREPANCIES BEFORE PROCEEDING WITH WORK.
2. ALL DIMENSIONS TO NEW CONSTRUCTION ARE TO FACE OF STUD AND FACE OF MASONRY U.N.O.
4. ALL NEW EXTERIOR WALLS ARE TYPE F U.N.O.
5. ALL NEW INTERIOR WALLS ARE TYPE M16 U.N.O.
6. ALL NEW INTERIOR WALLS ARE TO EXTEND TO THE UNDERSIDE OF ROOF &/or FLOOR STRUCTURE ABOVE U.N.O.
7. ALL NEW DOOR FRAMES SHALL BE A MINIMUM OF 4" CLEAR FROM THE FACE OF ADJACENT WALL TO DOOR JAMB, U.N.O.
8. SLAB PITCHED TO DRAIN INDICATED DIRECTION PITCH AT 1/4" MAX SLOPE UNLESS NOTED OTHERWISE
9. GENERAL CONTRACTOR TO FURNISH AND INSTALL ALL TOILET ACCESSORIES. REVIEW/CONFIRM STANDARDS AND MODEL TYPES WITH CLIENT

LEGEND:

FLOOR PITCH TO DRAIN

PLAN WORK NOTES:

- A1 — 8" GALVANIZED STEEL CONCRETE FILLED BOLLARD. PROVIDE POLYETHYLENE THERMOPLASTIC COVER. RE. 6/A810
- A2 — 3/8" BENT PLATE STEEL STAIR TREADS. PROVIDE TREADS WITH EITHER DIAMOND PLATE OR NON-SLIP FINISH
- A3 — POST AND RAIL GUARDRAIL SYSTEM AT UPPER STORAGE MEZZANINE PERIMETER.
- A4 — PROVIDE NEW MILLWORK. RE. A810 FOR DETAILS
- A5 — PRE-FINISHED ALUMINUM CANOPY BELOW. RE. SPEC & DETAIL 5/A500 OR 6/A501
- A6 — GC TO PROVIDE AND INSTALL FULL HEIGHT LOCKERS RE. 4/A810
- A7 — SLAB PITCHED TO EXTERIOR INDICATED DIRECTION PITCH AT 1/4" SLOPE UNLESS NOTED OTHER WISE

This drawing is copyrighted and is subject to copyright protection as an "architectural work" under 17 U. S. C. Sec. 101 et seq. The protection includes but is not limited to the overall form as well as the arrangement and composition of spaces, materials, color and elements in the design. Under such protection, unauthorized use of this drawing may result in the cessation of construction or buildings being seized and/or monetary compensation being awarded to The Robinson Green Beretta Corporation (RGB).

Any reproduction, possession, or use of this drawing or any part thereof without the express written permission of RGB, is prohibited. Violators will be prosecuted to the full extent of the law.

© RGB 2019

Certification

Drawn by TPL

Checked by RJJ, DLD

Revised on

1 ADDENDUM 1 02/07/2020

50 Holden Street
Providence, Rhode Island 02908

Phone: (401) 272-1730
Fax: (401) 273-7156

E-mail: rgbinfo@rgb.net
www.rgb.net

RGB architects

Architecture · Project Management · Interior Design

Project

FORT ADAMS MAINTENANCE BUILDING

RIDEM / DIVISION OF PARKS & RECREATION

STATE OF RHODE ISLAND AND PROVIDENCE PLANTATIONS

FORT ADAMS STATE PARK, NEWPORT, RI

Drawing Status

ISSUED FOR CONSTRUCTION

Issued On MAY 29, 2019

Sheet Contents

FLOOR & ROOF PLANS

Project Number. 6380

Drawing No.

A100

Sheet of

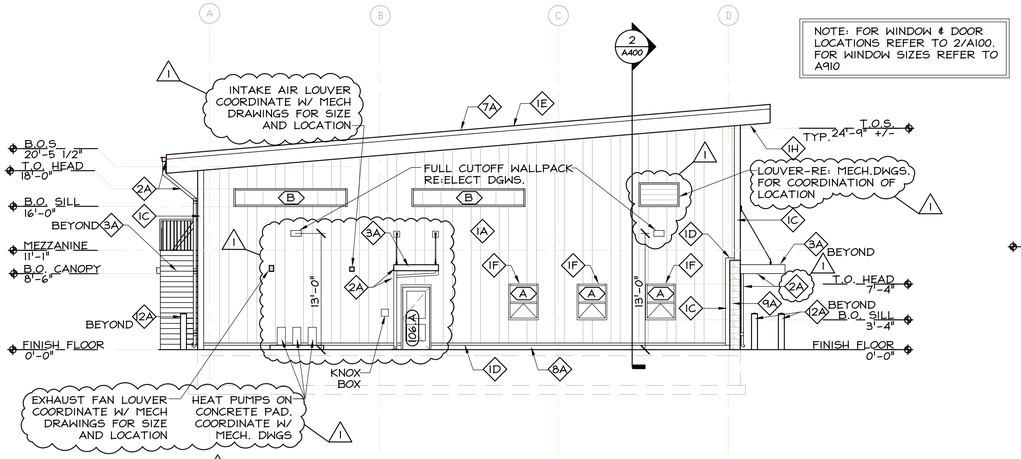

1 / A200 EAST ELEVATION

Scale: 1/8" = 1'-0"

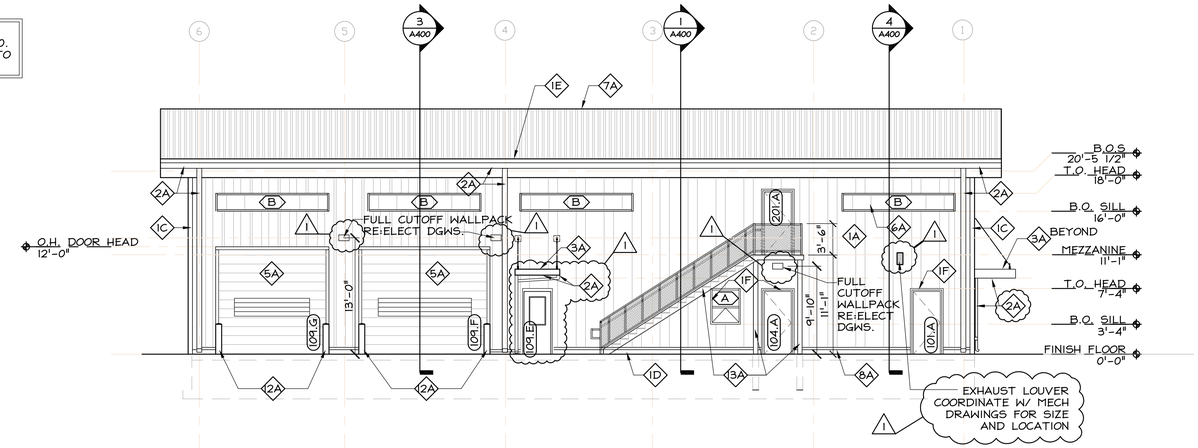

2 / A200 SOUTH ELEVATION

Scale: 1/8" = 1'-0"

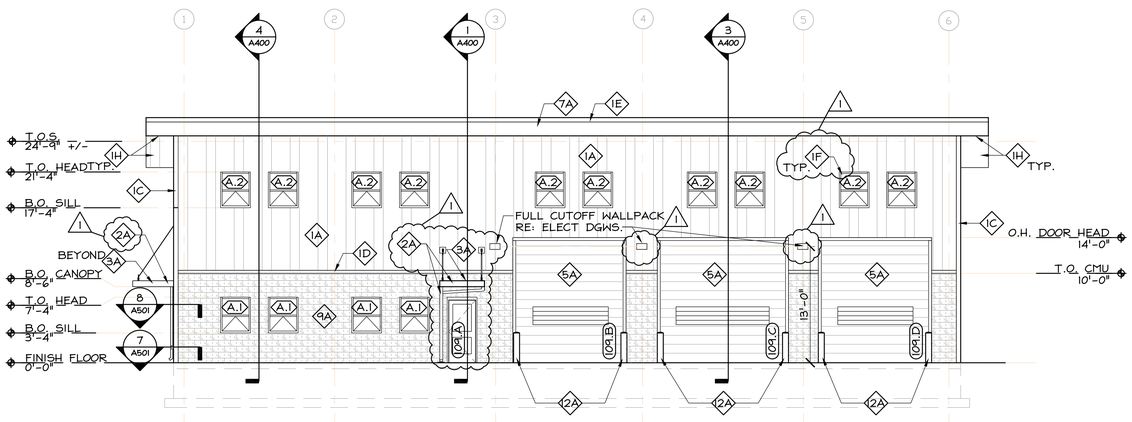

3 / A200 NORTH ELEVATION

Scale: 1/8" = 1'-0"

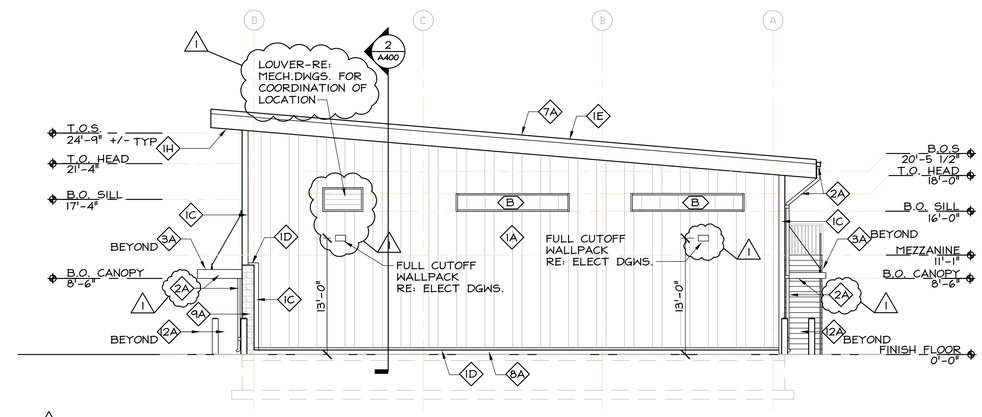

4 / A200 WEST ELEVATION

Scale: 1/8" = 1'-0"

EXTERIOR ELEVATION NOTES:

1. NOT ALL EXTERIOR WALL PENETRATIONS, ITEMS, &/or COMPONENTS MAY BE INDICATED &/or SHOWN. RE: ALL DRAWINGS INCLUDING THE PLUMBING, MECHANICAL, ELECTRICAL DRAWINGS.
2. NOT ALL EXTERIOR WALL ELEVATIONS MAY BE SHOWN. COORDINATE w/ PLANS AND SECTIONS FOR ADDITIONAL EXTERIOR WORK. MATERIALS AND TEXTURES ARE CONTINUOUS IN AREAS WHERE WALL MAY BE CONCEALED BY OTHER BUILDING PROJECTIONS.
3. SUBMIT SAMPLES OF ALL EXTERIOR FINISH MATERIALS FOR REVIEW & APPROVAL PRIOR TO FABRICATING/CONSTRUCTION, TYPICAL.
4. FINISH GRADES SHOWN ARE APPROXIMATE. CONTRACTOR TO REVIEW & COORDINATE W/ SITE GRADING PLAN.
5. PAINT ALL EXPOSED EXTERIOR GALVANIZED PRIME STEEL LINTELS TO MATCH ADJACENT EXTERIOR FINISH COLOR, U.N.O.
6. PROVIDE PREFINISHED BACK PLATE @ ALL METAL FASCIA & TRIM JOINTS. BACK PLATE TO BE 8" MIN. WIDTH.
7. SEALANT/CAULKING COLORS TO MATCH ADJACENT FINISH LISTED IN REQUIRED PRIORITY. ARCHITECT TO APPROVE SAMPLE IN FIELD PRIOR TO INSTALLATION.
   A. SEALANT COLOR @ WINDOWS, STOREFRONT, CURTAIN WALL TO MATCH FRAME COLOR.
   B. SEALANT COLOR @ HOLLOW METAL FRAME TO MATCH FRAME COLOR.

EXTERIOR MATERIAL AND COLOR SCHEDULE

#	MATERIAL	DESCRIPTION
1A	VERTICAL METAL PANEL (INSULATED)	BASIS OF DESIGN: MBCI MODEL: DESIGNER SERIES FLAT EMBOSSED 22 GAUGE COLOR: SIGNATURE 300 TUNDRA FINISH: FLUROPAN CLASSIC II
1C	TRIM CORNER	BASIS OF DESIGN: MBCI MODEL: DESIGNER SERIES FLAT EMBOSSED 22 GAUGE COLOR: SIGNATURE 300 TUNDRA FINISH: FLUROPAN CLASSIC II
1D	BASE TRIM AT VERTICAL METAL PANEL	BASIS OF DESIGN: MBCI MODEL: DESIGNER SERIES FLAT EMBOSSED 22 GAUGE COLOR: SIGNATURE 300 SNOW WHITE FINISH: FLUROPAN CLASSIC II
1E	PRE-FINISHED ALUMINUM FASCIA	BASIS OF DESIGN: MBCI MODEL: SECURE EDGE COLOR: SNOW WHITE FINISH: FLUROPAN CLASSIC II
1F	WINDOW / DOOR TRIM &/ OR FLASHING	BASIS OF DESIGN: METLSPAN MODEL: METLSPAN TRIM COLOR: TO BE SELECTED FROM MFR'S PREMIUM COLOR SELECTION FINISH: FLUROPAN CLASSIC II
1H	SOFFIT METAL PANEL (INSULATED)	BASIS OF DESIGN: MBCI MODEL: SIGNATURE-300 COLOR: SNOW WHITE FINISH: FLUROPAN CLASSIC II
2A	GUTTER & DOWNSPOUT(S) WITH OFFSETS	BASIS OF DESIGN: MBCI COLOR: WHITE

#	MATERIAL	DESCRIPTION
3A	PRE-FINISHED ALUMINUM CANOPY	BASIS OF DESIGN: MAPES MODEL: SUPER LUMIDECK COLOR: TO BE SELECTED FROM MFR'S PREMIUM COLOR SELECTION FINISH: FLUROPAN CLASSIC II
4A	INSULATED METAL CLAD DOOR	BASIS OF DESIGN; COLOR: CLEAR ANODIZED
5A	INSULATED OVERHEAD SERVICE COILING DOOR W/ VISION PANEL	BASIS OF DESIGN: COLOR: CLEAR ANODIZED
7A	STANDING SEAM METAL ROOF	BASIS OF DESIGN: MBCI COLOR: SIGNATURE -300 COLNIAL RED FINISH: FLUROPAN CLASSIC II
8A	PVC TRIM	BASIS OF DESIGN: AZEK MODEL: TRIM COLOR: TO BE SELECTED FROM MFR'S COLOR SELECTION
9A	SPLIT FACE CMU	BASIS OF DESIGN: TRENWYTH MODEL: TRENDSTONE SPLIT FACED MASONRY UNIT COLOR: COLONIAL RED
12A	BOLLARD WITH COVER	GALVANIZED STEEL, CONCRETE FILLED, PROVIDE POLYETHYLENE THERMOPLASTIC COVER COLOR: YELLOW
13A	EXTERIOR EGRESS STAIR	GALVANIZED STEEL, PREFAB EGRESS STAIR 44" CLEAR BETWEEN RAILS. 11" TREADS/7" RISERS SECURE TO BUILDING FRAMING. FOUNDATION - 8" GRADE BEAM, 48" DEEP

This drawing is copyrighted and is subject to copyright protection as an "architectural work" under 17 U. S. C. Sec. 101 et seq. The protection includes but is not limited to the overall form as well as the arrangement and composition of spaces, materials, color and elements in the design. Under such protection, unauthorized use of this drawing may result in the cessation of construction or buildings being seized and/or monetary compensation being awarded to The Robinson Green Beretta Corporation (RGB).

Any reproduction, possession, or use of this drawing or any part thereof without the express written permission of RGB, is prohibited. Violators will be prosecuted to the full extent of the law.

© RGB 2019

Certification

Drawn by TPL

Checked by RJJ, DLD

Revised on

1 ADDENDUM 1 02/07/2020

50 Holden Street
Providence, Rhode Island 02908

Phone: (401) 272-1730
Fax: (401) 273-7156

E-mail: rgbinfo@rgb.net
www.rgb.net

RGB ARCHITECTS

Architecture · Project Management · Interior Design

Project

FORT ADAMS MAINTENANCE BUILDING

RIDEM / DIVISION OF PARKS & RECREATION

STATE OF RHODE ISLAND AND PROVIDENCE PLANTATIONS

FORT ADAMS STATE PARK, NEWPORT, RI

Drawing Status

ISSUED FOR CONSTRUCTION

Issued On MAY 29, 2019

Sheet Contents

BUILDING ELEVATIONS

Project Number. 6380

Drawing No.

A200

Sheet of

NOTE: FOR WINDOW & DOOR LOCATIONS REFER TO 2/A100

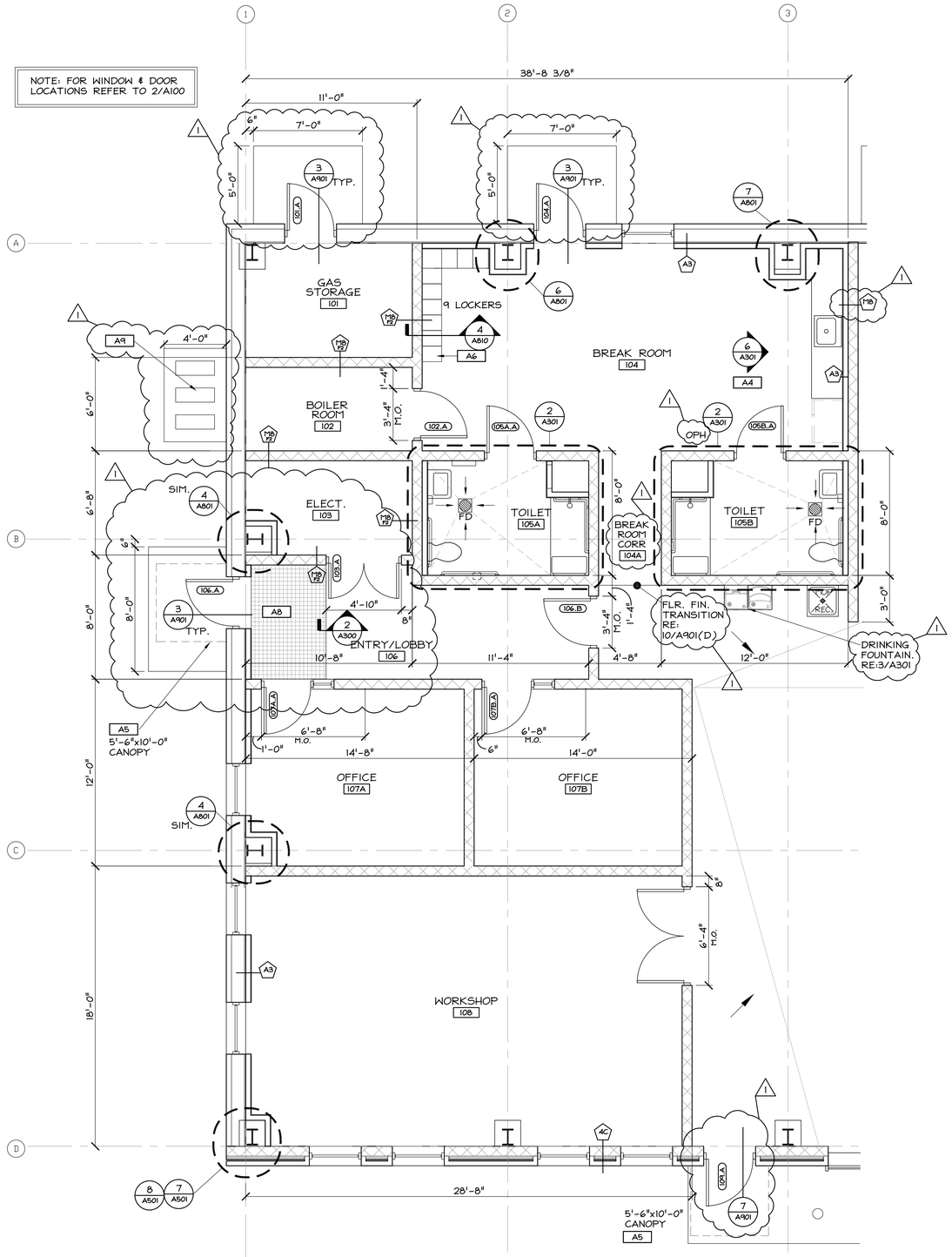

REF NORTH

NORTH

1 / A300 ENLARGED FLOOR PLAN

Scale: 1/4" = 1'-0"

GENERAL PLAN NOTES:

1. COORDINATE ALL NEW WORK w/ CIVIL, STRUCTURAL, PLUMBING, MECHANICAL, ELECTRICAL, &/or OTHER DRAWGINS. NOTIFY ARCHITECT OF ANY DISCREPANCIES BEFORE PROCEEDING WITH WORK.
2. ALL DIMENSIONS TO NEW CONSTRUCTION ARE TO FACE OF STUD AND FACE OF MASONRY U.N.O.
4. ALL NEW EXTERIOR WALLS ARE TYPE F U.N.O.
5. ALL NEW INTERIOR WALLS ARE TYPE M8 U.N.O.
6. ALL NEW INTERIOR WALLS ARE TO EXTEND TO THE UNDERSIDE OF ROOF &/or FLOOR STRUCTURE ABOVE U.N.O.
7. ALL NEW DOOR FRAMES SHALL BE A MINIMUM OF 4" CLEAR FROM THE FACE OF ADJACENT WALL TO DOOR JAMB, U.N.O.
8. SLAB PITCHED TO DRAIN INDICATED DIRECTION PITCH AT 1/4" MAX SLOPE UNLESS NOTED OTHERWISE
9. GENERAL CONTRACTOR TO FURNISH AND INSTALL ALL TOILET ACCESSORIES. REVIEW/CONFIRM STANDARDS AND MODEL TYPES WITH CLIENT

LEGEND:

FLOOR PITCH TO DRAIN

PLAN WORK NOTES:

A1	8" GALVANIZED STEEL CONCRETE FILLED BOLLARD. PROVIDE POLYETHYLENE THERMOPLASTIC COVER. RE. 6/A810
A2	METAL PAN STAIR SYSTEM W/ SOLID TREAD AND RISER. PROVIDE 1 1/2" O.C. STAIR RAILING W/ POSTS AND GUARDS PER OSHA REQUIREMENTS.
A3	POST AND RAIL GUARDRAIL SYSTEM AT UPPER STORAGE MEZZANINE PERIMETER.
A4	PROVIDE NEW MILLWORK. RE. A810 FOR DETAILS
A5	PRE-FINISHED ALUMINUM CANOPY BELOW. RE. SPEC & DETAILS ON SHEET A500 OR A501
A6	GC TO PROVIDE AND INSTALL FULL HEIGHT LOCKERS RE. A810
A7	SLAB PITCHED TO EXTERIOR INDICATED DIRECTION PITCH AT 1/4" SLOPE UNLESS NOTED OTHER WISE
A8	WALK OFF MAT. RE. ROOM FINISH SCHEDULE
A9	HEAT PUMPS ON 4'X6'X6" CONCRETE PAD RE:MECH. DRAWINGS. EXACT LOCATION TO BE FIELD COORDINATED

This drawing is copyrighted and is subject to copyright protection as an "architectural work" under 17 U. S. C. Sec. 101 et seq. The protection includes but is not limited to the overall form as well as the arrangement and composition of spaces, materials, color and elements in the design. Under such protection, unauthorized use of this drawing may result in the cessation of construction or buildings being seized and/or monetary compensation being awarded to The Robinson Green Beretta Corporation (RGB).

Any reproduction, possession, or use of this drawing or any part thereof without the express written permission of RGB, is prohibited. Violators will be prosecuted to the full extent of the law.

© RGB 2019

Certification

Drawn by TPL

Checked by RJJ, DLD

Revised on

1 ADDENDUM 1 02/07/2020

50 Holden Street
Providence, Rhode Island 02908

Phone: (401) 272-1730
Fax: (401) 273-7156

E-mail: rgbinfo@rgb.net
www.rgb.net

RGB ARCHITECTS

Architecture · Project Management · Interior Design

Project

FORT ADAMS MAINTENANCE BUILDING

RIDEM / DIVISION OF PARKS & RECREATION

STATE OF RHODE ISLAND AND PROVIDENCE PLANTATIONS

FORT ADAMS STATE PARK, NEWPORT, RI

Drawing Status

ISSUED FOR CONSTRUCTION

Issued On MAY 29, 2019

Sheet Contents

ENLARGED FLOOR PLAN

Project Number. 6380

Drawing No.

A300

Sheet of

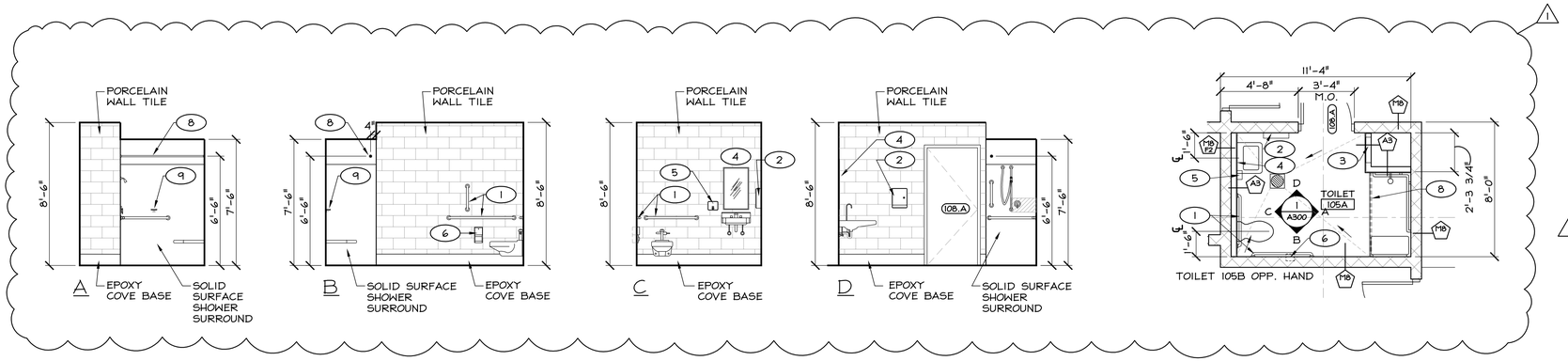

1 A301 TYPICAL ELEVATIONS

Scale: 1/4" = 1'-0"

2 A301 ENLARGED TOILET PLAN

Scale: 1/4" = 1'-0"

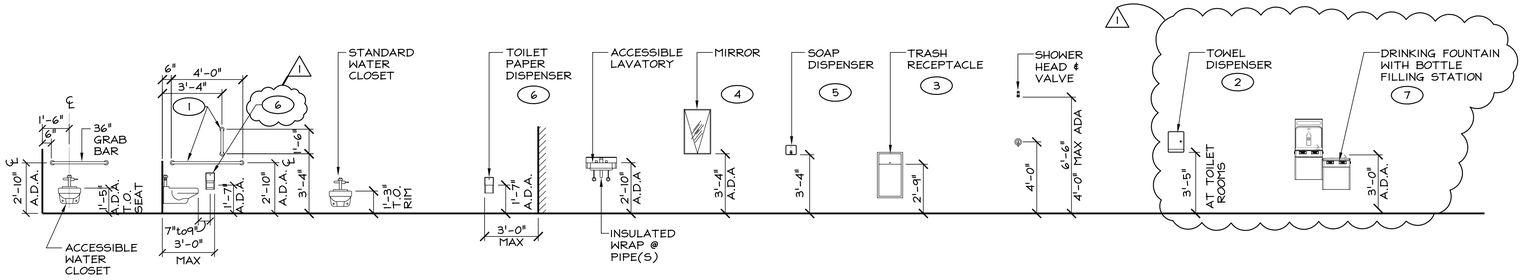

3 A301 TYPICAL FIXTURE & ACCESSORY MOUNTING HEIGHTS - ADULTS

Scale: 1/4" = 1'-0"

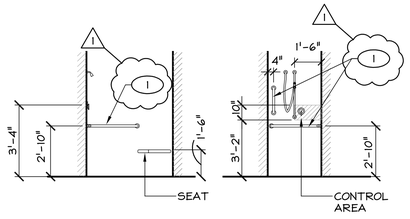

4 A301 TYPICAL H.C. SHOWER

Scale: 1/4" = 1'-0"

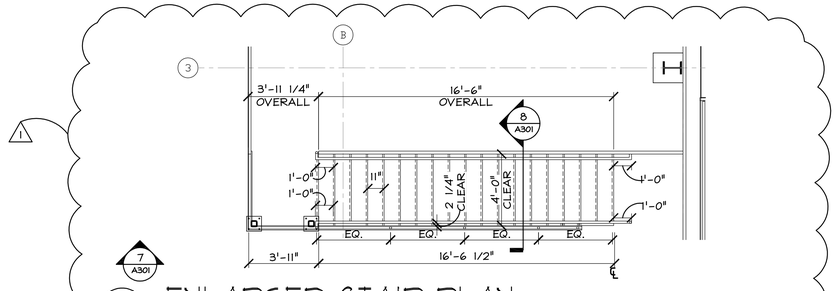

5 A301 ENLARGED STAIR PLAN

Scale: 1/4" = 1'-0"

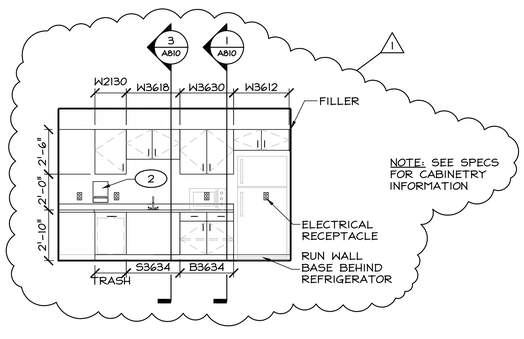

6 A301 KITCHENETTE ELEVATION

Scale: 1/4" = 1'-0"

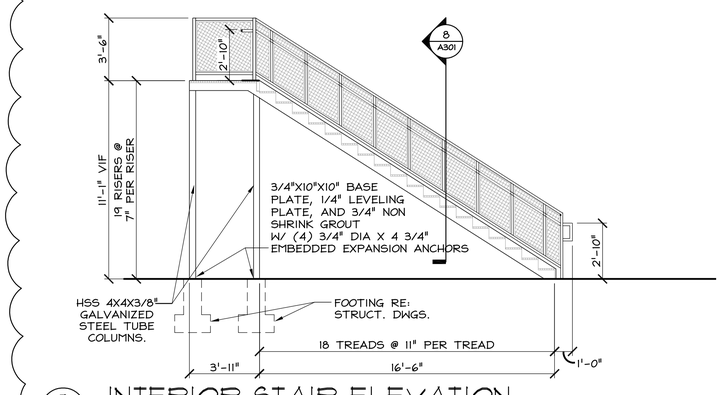

7 A301 INTERIOR STAIR ELEVATION

Scale: 1/4" = 1'-0"

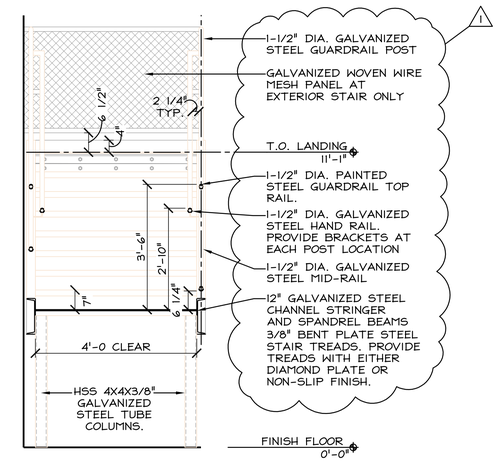

8 A301 STAIR CROSS SECTION

Scale: 1/2" = 1'-0"

GENERAL PLAN NOTES:

1. COORDINATE ALL NEW WORK w/ CIVIL, STRUCTURAL, PLUMBING, MECHANICAL, ELECTRICAL, &/or OTHER DRAWGINS. NOTIFY ARCHITECT OF ANY DISCREPANCIES BEFORE PROCEEDING WITH WORK.
2. ALL DIMENSIONS TO NEW CONSTRUCTION ARE TO FACE OF STUD AND FACE OF MASONRY U.N.O.
4. ALL NEW EXTERIOR WALLS ARE TYPE F U.N.O.
5. ALL NEW INTERIOR WALLS ARE TYPE M8 U.N.O.
6. ALL NEW INTERIOR WALLS ARE TO EXTEND TO THE UNDERSIDE OF ROOF &/or FLOOR STRUCTURE ABOVE U.N.O.
7. ALL NEW DOOR FRAMES SHALL BE A MINIMUM OF 4" CLEAR FROM THE FACE OF ADJACENT WALL TO DOOR JAMB, U.N.O.
8. SLAB PITCHED TO DRAIN INDICATED DIRECTION PITCH AT 1/4" MAX SLOPE UNLESS NOTED OTHERWISE
9. GENERAL CONTRACTOR TO FURNISH AND INSTALL ALL TOILET ACCESSORIES. REVIEW/CONFIRM STANDARDS AND MODEL TYPES WITH CLIENT

PLAN WORK NOTES:

XXX	NOTES WITHOUT AN ARROW INDICATE AN ENTIRE SPACE/AREA.
XXX	NOTES WITH AN ARROW(S) INDICATE SPECIFIC AREAS &/or ITEMS.
A1	8"GALVANIZED STEEL CONCRETE FILLED BOLLARD. PROVIDE POLYETHYLENE THERMOPLASTIC COVER. RE. 6/A501
A2	METAL STAIR SYSTEM W/ SOLID TREAD AND RISER. PROVIDE 1 1/2" O.C. STAIR RAILING W/ POSTS AND GUARDS PER OSHA REQUIREMENTS.
A3	POST AND RAIL GUARDRAIL SYSTEM AT UPPER STORAGE MEZZANINE PERIMETER.
A4	PROVIDE NEW MILLWORK. RE. A810 FOR DETAILS
A5	PRE-FINISHED ALUMINUM CANOPY. RE. SPEC & DETAILS ON SHEET 5/A500

TOILET ACCESSORY SCHEDULE

1	GRAB BAR BOBRICK #B6806 SERIES
2	PAPER TOWEL DISPENSER BOBRICK B-262
3	WASTE RECEPTACLE BOBRICK B-277
4	A.D.A MIRROR BOBRICK #16581830
5	SOAP DISPENSER BOBRICK #B4112
6	TOILET PAPER DISPENSER BOBRICK #B4388
7	DRINKING FOUNTAIN RE: PLUMBING FIXTURE SCHEDULE
8	SHOWER CURTAIN ROD BOBRICK #6047X36,WITH HOOKS 204 AND CURTAIN 204-2
9	SURFACE-MOUNTED SOAP DISH BOBRICK #B-680

CONTRACTOR TO FURNISH & INSTALL FRT WOOD BLOCKING FOR ALL TOILET ACCESSORIES PER MANUFACTURER'S REQUIREMENTS.

This drawing is copyrighted and is subject to copyright protection as an "architectural work" under 17 U. S. C. Sec. 101 et seq. The protection includes but is not limited to the overall form as well as the arrangement and composition of spaces, materials, color and elements in the design. Under such protection, unauthorized use of this drawing may result in the cessation of construction or buildings being seized and/or monetary compensation being awarded to The Robinson Green Beretta Corporation (RGB).

Any reproduction, possession, or use of this drawing or any part thereof without the express written permission of RGB, is prohibited. Violators will be prosecuted to the full extent of the law.

© RGB 2019

Certification

Drawn by TPL

Checked by RJJ, DLD

Revised on

1 ADDENDUM 1 02/07/2020

50 Holden Street
Providence, Rhode Island 02908

Phone: (401) 272-1730
Fax: (401) 273-7156

E-mail: rgbinfo@rgb.net
www.rgb.net

RGB ARCHITECTS

Architecture · Project Management · Interior Design

Project

FORT ADAMS MAINTENANCE BUILDING

RIDEM / DIVISION OF PARKS & RECREATION

STATE OF RHODE ISLAND AND PROVIDENCE PLANTATIONS

FORT ADAMS STATE PARK, NEWPORT, RI

Drawing Status

ISSUED FOR CONSTRUCTION

Issued On MAY 29 2019

Sheet Contents

ENLARGED TOILET PLAN & INTERIOR ELEVATIONS

Project Number. 6380

Drawing No.

A301

Sheet of

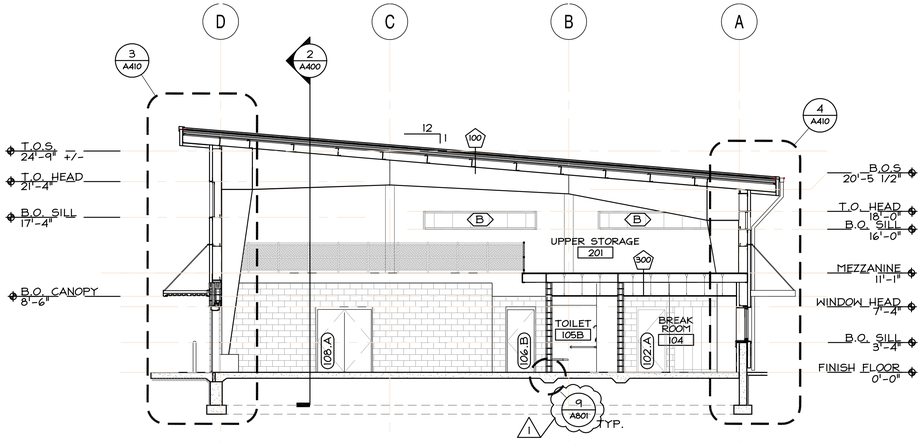

1 A400 BUILDING SECTION AT BREAK ROOM

Scale: 1/8" = 1'-0"

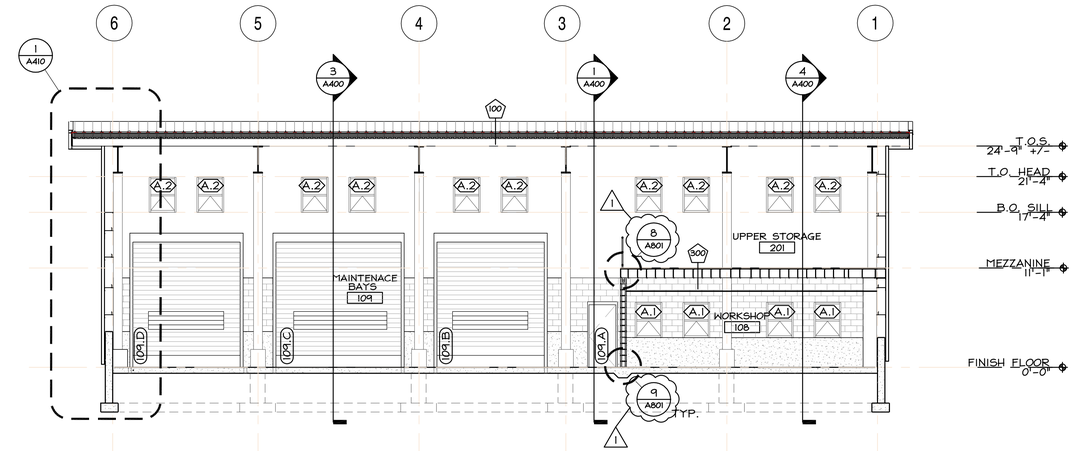

2 A400 BUILDING SECTION AT MAINTENANCE BAYS & WORKSHOP

Scale: 1/8" = 1'-0"

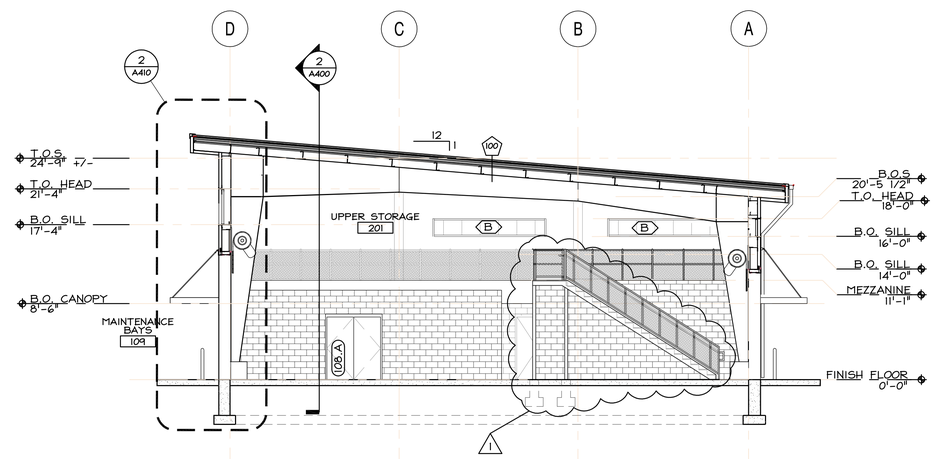

3 A400 BUILDING SECTION AT MAINTENANCE BAYS

Scale: 1/8" = 1'-0"

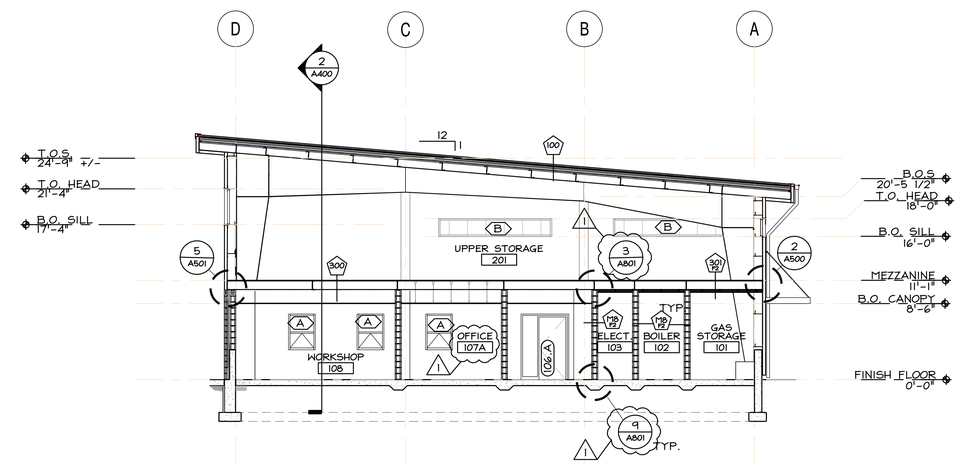

4 A400 BUILDING SECTION AT UPPER STORAGE

Scale: 1/8" = 1'-0"

EXTERIOR ELEVATION NOTES:

1. NOT ALL EXTERIOR WALL PENETRATIONS MAY BE SHOWN. RE: PLUMBING, MECH., ELECT. DWGS.
2. NOT ALL METAL BUILDING COMPONENTS ARE SHOWN. IT IS THE RESPONSIBILITY OF THE G.C. AND THEIR SUBCONTRACTOR TO FURNISH AND INSTALL ALL COMPONENTS REQUIRED FOR A FULLY FUNCTIONING BUILDING SYSTEM.
3. SUBMIT SAMPLES OF ALL EXTERIOR FINISH MATERIALS FOR REVIEW & APPROVAL PRIOR TO FABRICATING/CONSTRUCTION, TYP.
4. FINISH GRADES SHOWN ARE APPROXIMATE. CONTRACTOR TO REVIEW & COORDINATE W/SITE GRADING PLAN.
5. PROVIDE PREFINISHED BACK PLATE & SEALANT @ ALL METAL FASCIA & TRIM JOINTS. BACK PLATE TO BE 4" MIN. WIDTH.
6. SEALANT/CAULKING COLORS TO MATCH ADJACENT FINISH LISTED IN REQUIRED PRIORITY. ARCHITECT TO APPROVE SAMPLE IN FIELD PRIOR TO INSTALLATION.

   A. SEALANT COLOR @ WINDOWS & DOORS TO MATCH FRAME COLOR.

This drawing is copyrighted and is subject to copyright protection as an "architectural work" under 17 U. S. C. Sec. 101 et seq. The protection includes but is not limited to the overall form as well as the arrangement and composition of spaces, materials, color and elements in the design. Under such protection, unauthorized use of this drawing may result in the cessation of construction or buildings being seized and/or monetary compensation being awarded to The Robinson Green Beretta Corporation (RGB).

Any reproduction, possession, or use of this drawing or any part thereof without the express written permission of RGB, is prohibited. Violators will be prosecuted to the full extent of the law.

© RGB 2019

Certification

Drawn by TPL

Checked by RJJ, DLD

Revised on

1 ADDENDUM 1 02/07/2020

50 Holden Street
Providence, Rhode Island 02908

Phone: (401) 272-1730
Fax: (401) 273-7156

E-mail: rgbinfo@rgb.net
www.rgb.net

RGB ARCHITECTS

Architecture · Project Management · Interior Design

Project

FORT ADAMS MAINTENANCE BUILDING

RIDEM / DIVISION OF PARKS & RECREATION

STATE OF RHODE ISLAND AND PROVIDENCE PLANTATIONS

FORT ADAMS STATE PARK, NEWPORT, RI

Drawing Status

ISSUED FOR CONSTRUCTION

Issued On MAY 29,2018

Sheet Contents

BUILDING SECTIONS

Project Number. 6380

Drawing No.

A400

Sheet of

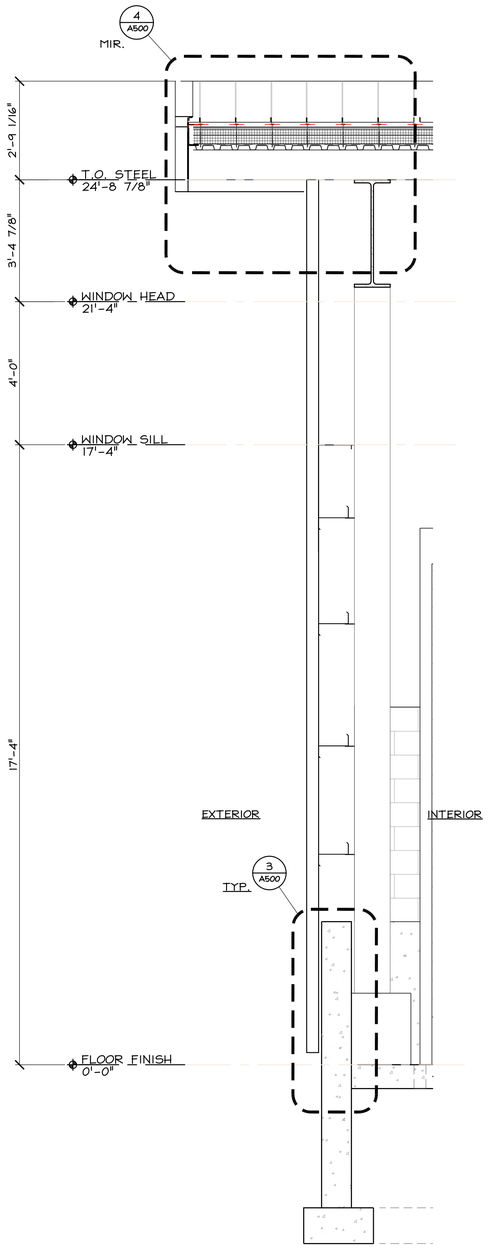

1 A410 WALL SECTION, TYP.

Scale: 1/2" = 1'-0"

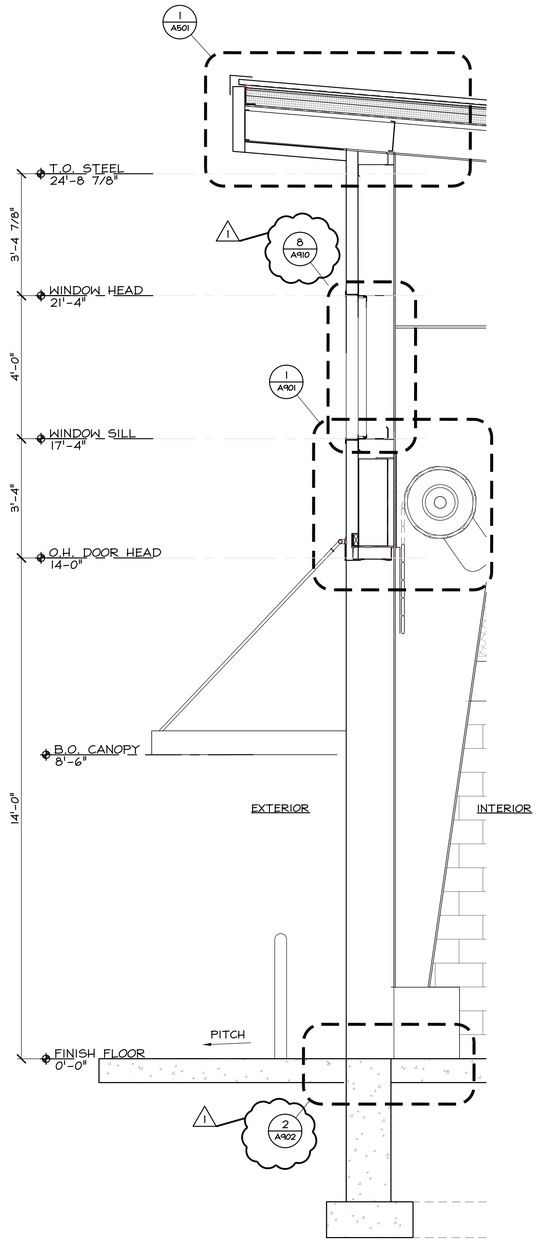

2 A410 WALL SECTION @ O.H. DOOR

Scale: 1/2" = 1'-0"

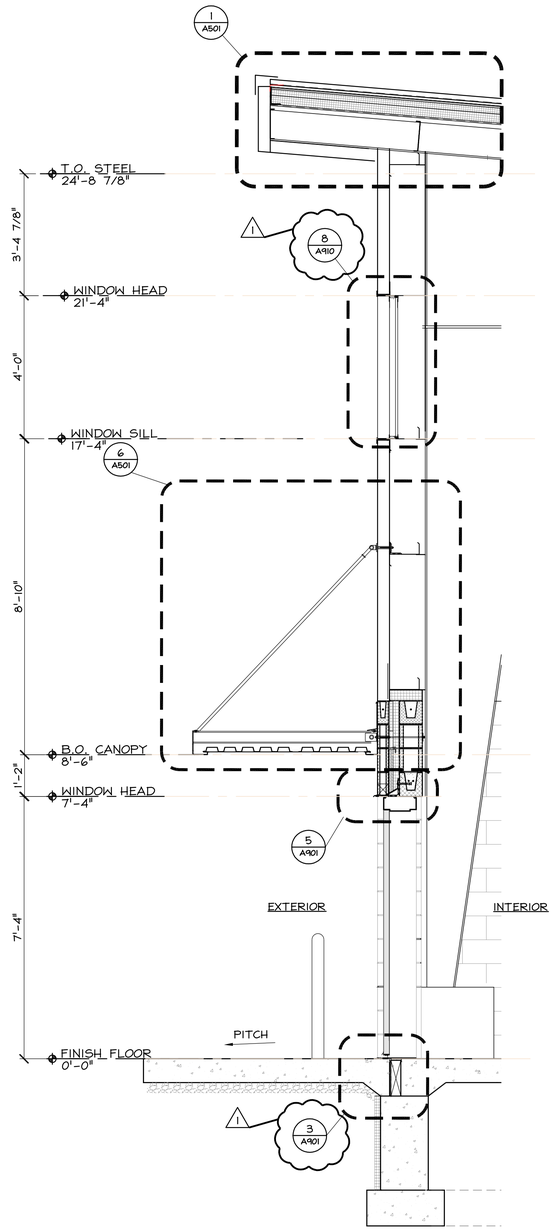

3 A410 WALL SECTION @ MAN DOOR & CANOPY

Scale: 1/2" = 1'-0"

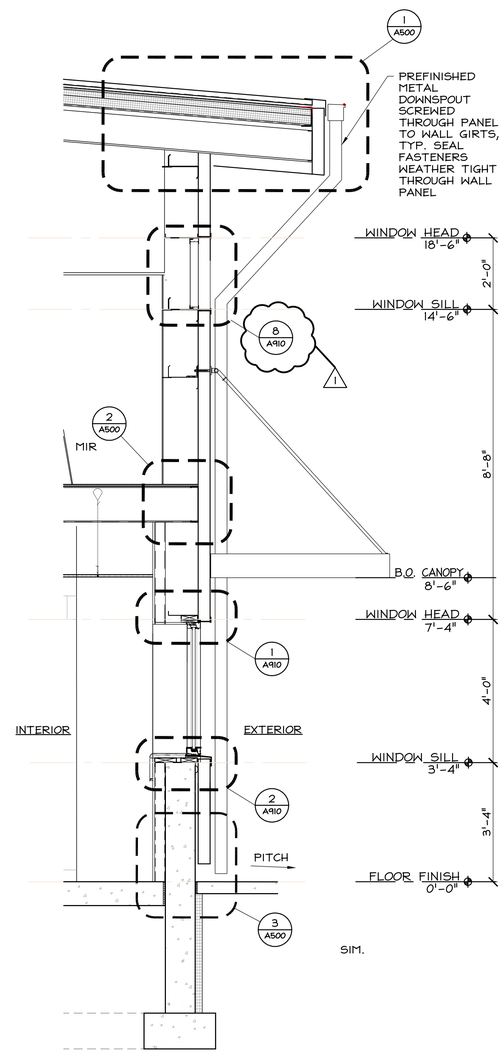

4 A410 WALL SECTION @ WINDOW

Scale: 1/2" = 1'-0"

This drawing is copyrighted and is subject to copyright protection as an "architectural work" under 17 U. S. C. Sec. 101 et seq. The protection includes but is not limited to the overall form as well as the arrangement and composition of spaces, materials, color and elements in the design. Under such protection, unauthorized use of this drawing may result in the cessation of construction or buildings being seized and/or monetary compensation being awarded to The Robinson Green Beretta Corporation (RGB).

Any reproduction, possession, or use of this drawing or any part thereof without the express written permission of RGB, is prohibited. Violators will be prosecuted to the full extent of the law.

© RGB 2019

Certification

Drawn by TPL

Checked by RJJ, DLD

Revised on

1 ADDENDUM 1 02/07/2020

50 Holden Street
Providence, Rhode Island 02908

Phone: (401) 272-1730
Fax: (401) 273-7156

E-mail: rgbinfo@rgb.net
www.rgb.net

Architecture · Project Management · Interior Design

Project

FORT ADAMS MAINTENANCE BUILDING

RIDEM / DIVISION OF PARKS & RECREATION

STATE OF RHODE ISLAND AND PROVIDENCE PLANTATIONS

FORT ADAMS STATE PARK, NEWPORT, RI

Drawing Status

ISSUED FOR CONSTRUCTION

Issued On MAY 29, 2019

Sheet Contents

WALLS SECTIONS

Project Number. 6380

Drawing No.

A410

Sheet of

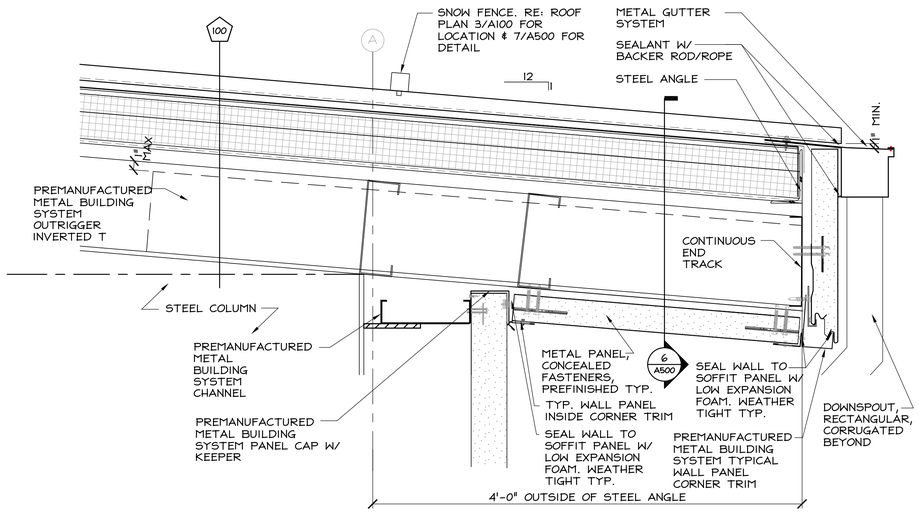

1 A500 METAL BUILDING @ ROOF EDGE

Scale: 1 1/2" = 1'-0"

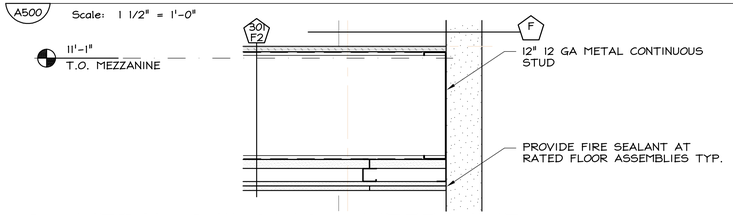

2 A500 METAL BUILDING @ MEZZANINE

Scale: 1 1/2" = 1'-0"

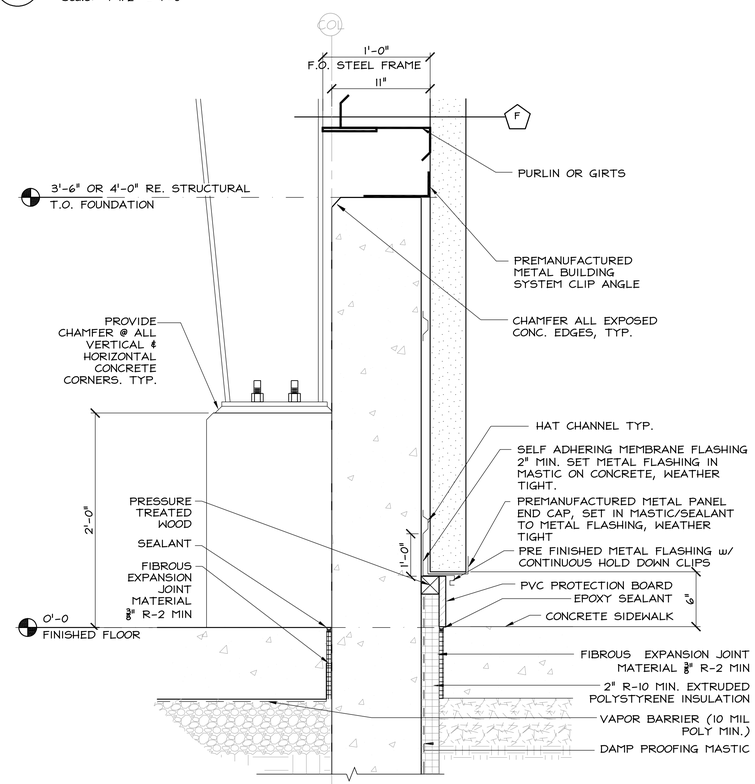

3 A500 SECTION: FOUNDATION @ COLUMNS, TYP.

Scale: 1 1/2" = 1'-0"

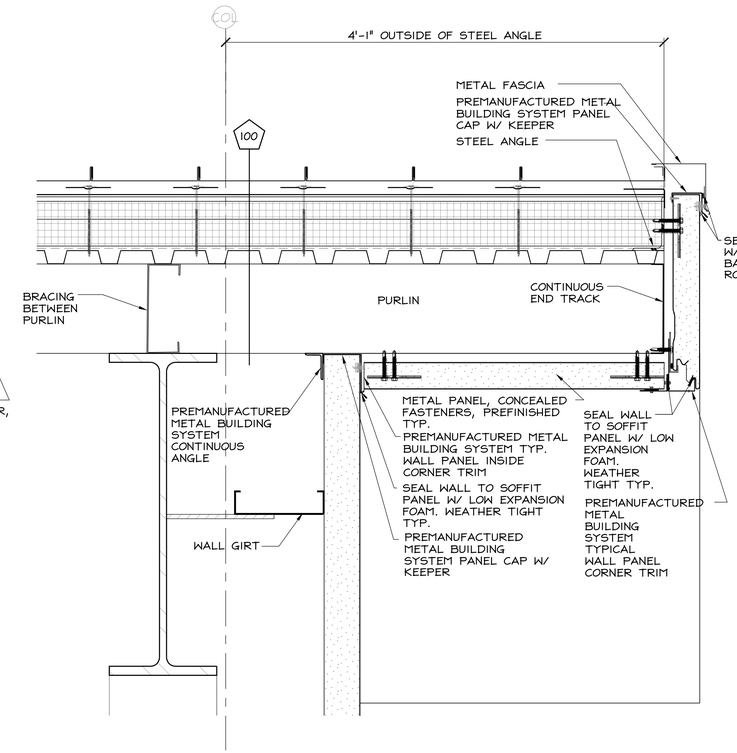

4 A500 ROOF EAVE W/O GUTTER @ WEST SIDE

Scale: 1 1/2" = 1'-0"

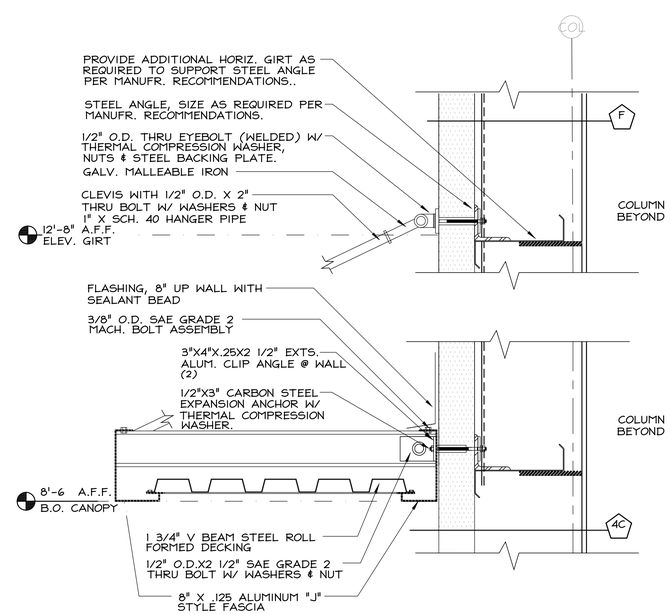

5 A500 TYPICAL CANOPY @ METAL PANEL

Scale: 1 1/2" = 1'-0"

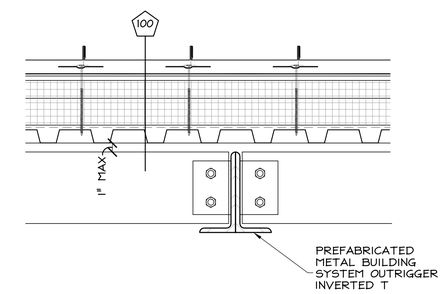

6 A500 TYP. OVERHANG THRU OUTRIGGER

Scale: 1 1/2" = 1'-0"

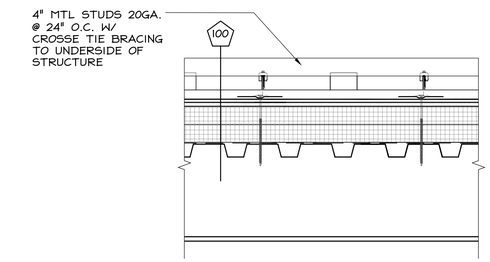

7 A500 SNOW FENCE SECTION

Scale: 1 1/2" = 1'-0"

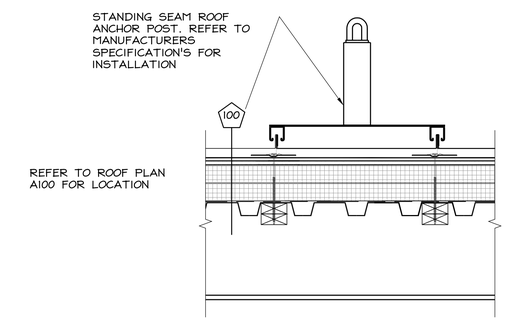

8 A500 ROOF TIE-OFF SECTION

Scale: 1 1/2" = 1'-0"

1

1. REMOVE ALL EXIST. FLASHING, LEAD, ETC. PIPE SURFACE MUST BE FREE OF ALL RUST, GREASE, INSULATION, ETC.
2. PIPE MUST BE ANCHORED TO ENSURE STABILITY.
3. PRE-MOULDED PIPE FLASHING MAY BE CUT TO HEIGHT, BUT NO LOWER THAN REINFORCING RING (NO WRINKLES OR FOLDS UNDER CLAMPING RING).
4. APPLY LAP SEALANT BETWEEN PENETRATION & PRE-MOLDED PIPE FLASHING PRIOR TO INSTALLATION OF CLAMPING RING.
5. DO NOT USE WHEN SERVICE LINE TEMP. EXCEEDS 180°F. REFER DET: 10/A501H

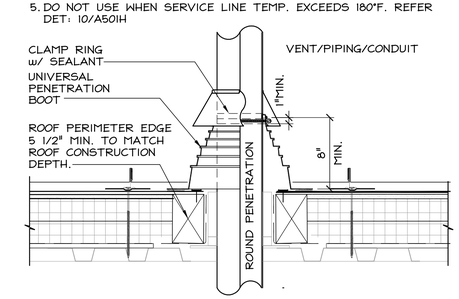

4 A102C FLASHING BOOT TYP.

Scale: 1 1/2" = 1'-0" VENT/ PIPE/ CONDUIT

This drawing is copyrighted and is subject to copyright protection as an "architectural work" under 17 U. S. C. Sec. 101 et seq. The protection includes but is not limited to the overall form as well as the arrangement and composition of spaces, materials, color and elements in the design. Under such protection, unauthorized use of this drawing may result in the cessation of construction or buildings being seized and/or monetary compensation being awarded to The Robinson Green Beretta Corporation (RGB).

Any reproduction, possession, or use of this drawing or any part thereof without the express written permission of RGB, is prohibited. Violators will be prosecuted to the full extent of the law.

© RGB 2019

Certification

Drawn by	TPL
Checked by	RJJ, DLD

Revised on

1	ADDENDUM 1	02/07/2020

50 Holden Street
Providence, Rhode Island 02908

Phone: (401) 272-1730
Fax: (401) 273-7156

E-mail: rgbinfo@rgb.net
www.rgb.net

RGB ARCHITECTS

Architecture · Project Management · Interior Design

Project

FORT ADAMS MAINTENANCE BUILDING

RIDEM / DIVISION OF PARKS & RECREATION

STATE OF RHODE ISLAND AND PROVIDENCE PLANTATIONS

FORT ADAMS STATE PARK, NEWPORT, RI

Drawing Status

ISSUED FOR CONSTRUCTION

Issued On MAY 29, 2019

Sheet Contents

EXTERIOR SECTION DETAILS

Project Number. 6380

Drawing No.

A500

Sheet of

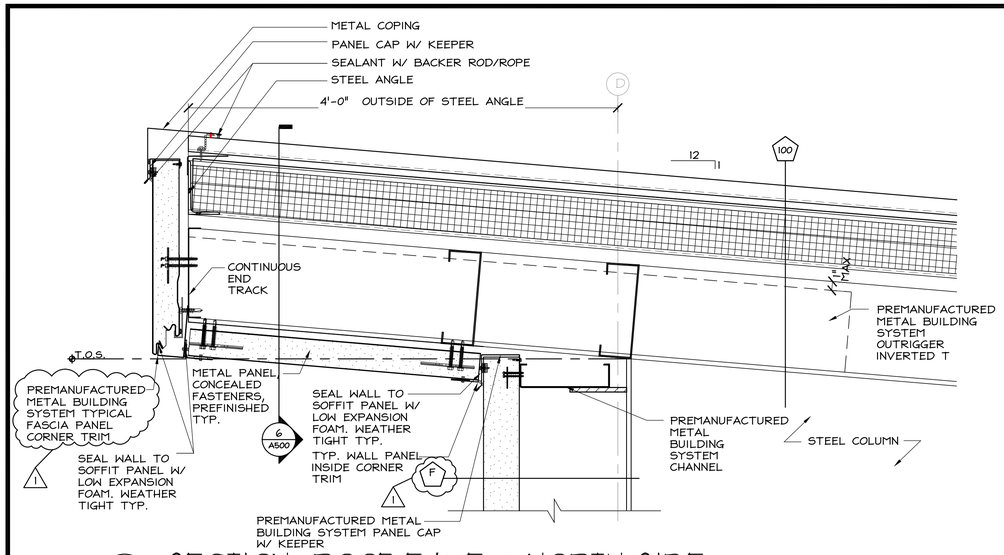

1 / A501 SECTION: ROOF EAVE @ NORTH SIDE

Scale: 1 1/2" = 1'-0"

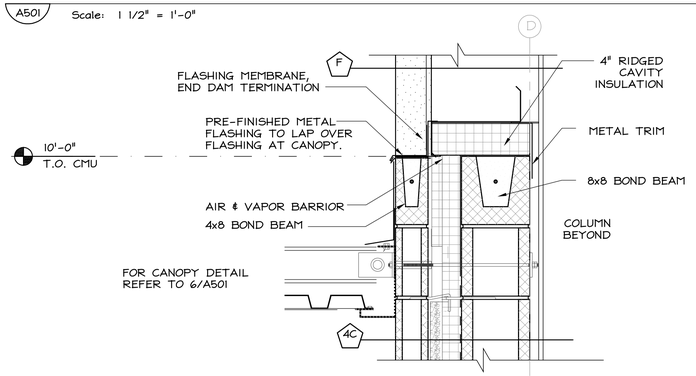

2 / A501 TYP. F & C4 WALL TRANSITION

Scale: 1 1/2" = 1'-0" (SECTION DETAIL)

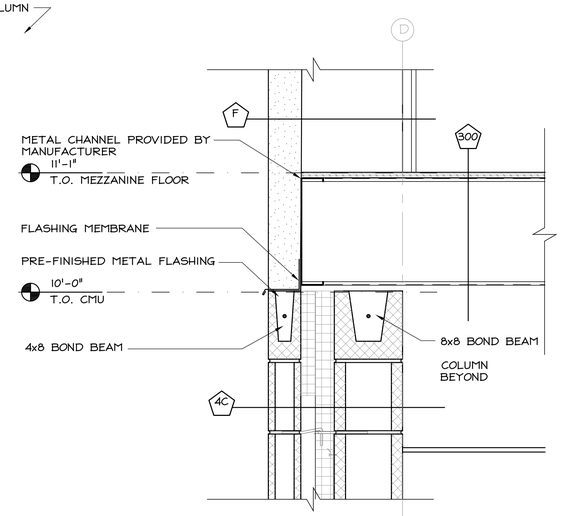

5 / A501 F & C4 WALL TRANSITION @ FLOOR

Scale: 1 1/2" = 1'-0" (SECTION DETAIL)

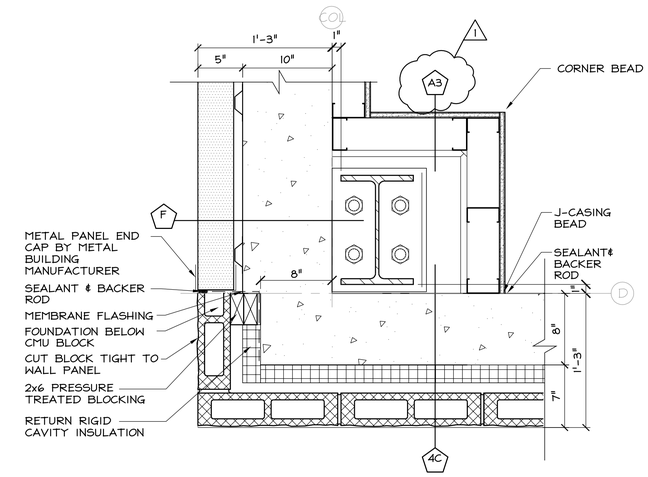

7 / A501 WALL TRANSITION @ FOUNDATION

Scale: 1 1/2" = 1'-0" (PLAN DETAIL)

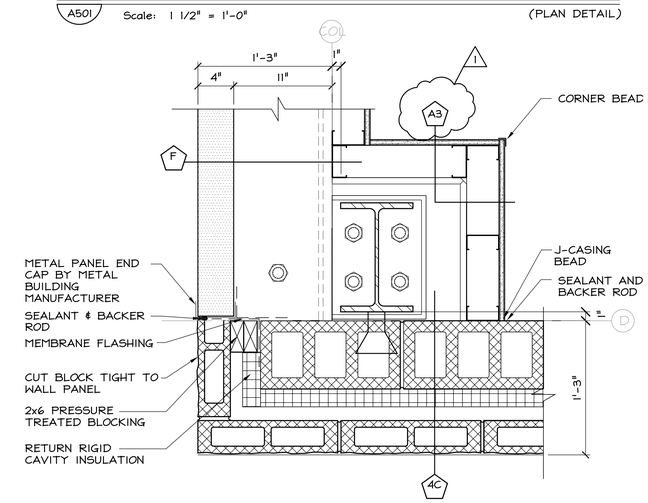

8 / A501 WALL TRANSITION @ 6' AFF

Scale: 1 1/2" = 1'-0" (PLAN DETAIL)

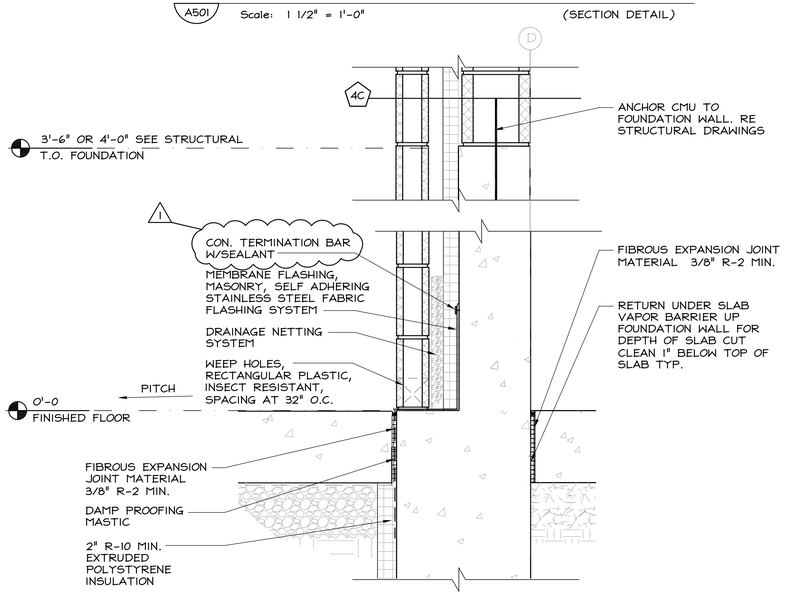

3 / A501 FOUNDATION DETAIL

Scale: 1 1/2" = 1'-0" (SECTION DETAIL)

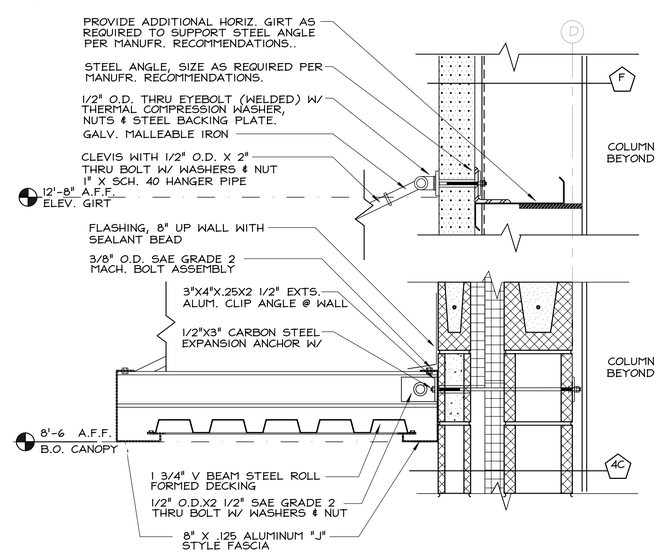

6 / A501 CANOPY @ CMU

Scale: 1 1/2" = 1'-0"

This drawing is copyrighted and is subject to copyright protection as an "architectural work" under 17 U. S. C. Sec. 101 et seq. The protection includes but is not limited to the overall form as well as the arrangement and composition of spaces, materials, color and elements in the design. Under such protection, unauthorized use of this drawing may result in the cessation of construction or buildings being seized and/or monetary compensation being awarded to The Robinson Green Beretta Corporation (RGB).

Any reproduction, possession, or use of this drawing or any part thereof without the express written permission of RGB, is prohibited. Violators will be prosecuted to the full extent of the law.

© RGB 2019

Certification

Drawn by TPL

Checked by RJJ, DLD

Revised on

1 ADDENDUM 1 02/07/2020

50 Holden Street
Providence, Rhode Island 02908

Phone: (401) 272-1730
Fax: (401) 273-7156

E-mail: rgbinfo@rgb.net
www.rgb.net

RGB Architects

Architecture · Project Management · Interior Design

Project

FORT ADAMS MAINTENANCE BUILDING

RIDEM / DIVISION OF PARKS & RECREATION

STATE OF RHODE ISLAND AND PROVIDENCE PLANTATIONS

FORT ADAMS STATE PARK, NEWPORT, RI

Drawing Status

ISSUED FOR CONSTRUCTION

Issued On MAY 29, 2019

Sheet Contents

EXTERIOR DETAILS

Project Number. 6380

Drawing No.

A501

Sheet of

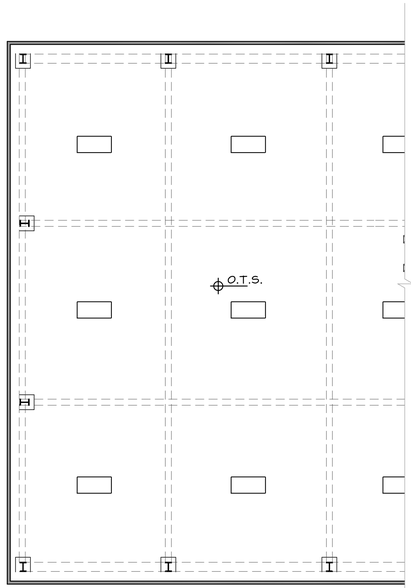

1 A600 RCP AT STORAGE AREA

Scale: 1/8" = 1'-0"

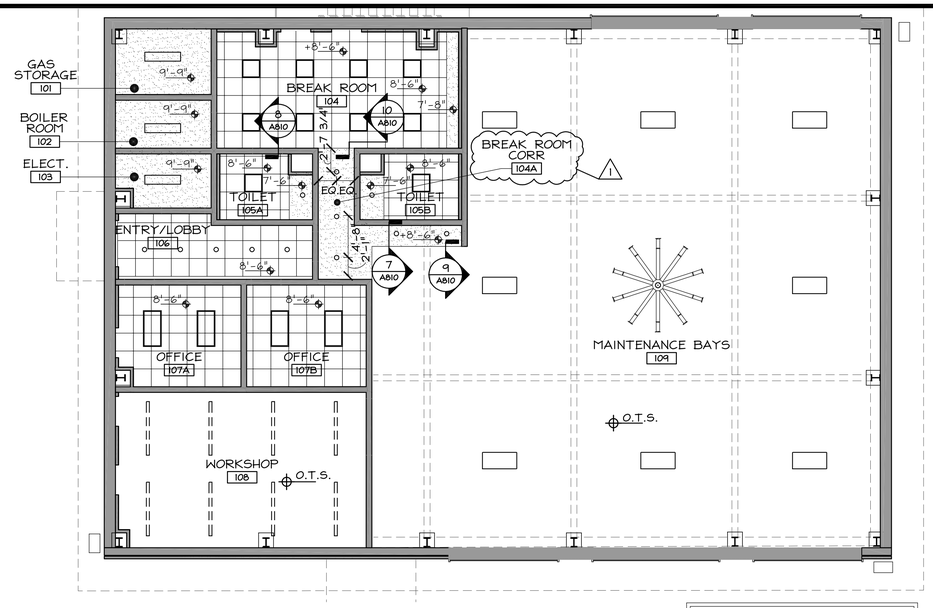

2 A600 REFLECTED CEILING PLAN

Scale: 1/8" = 1'-0"

NOTE: SUSPENDED LIGHTS ABOVE MAINTENANCE BAY AND UPPER STORAGE TO BE CENTERED IN COLUMN BAYS

ROOM FINISH SCHEDULE

MARK	ROOM NAME	FLOOR	BASE	WALLS	CEILING MATL	CEILING HEIGHT	REMARKS	MARK
101	GAS STORAGE	96Z	98E	97Z	95C	9'- 9"	RATED CEILING, RE. 5/A030	101
102	BOILER ROOM	96Z	98E	97Z	95C	9'- 9"	RATED CEILING, RE. 5/A030	102
103	ELECT.	96Z	98E	97Z	95C	9'- 9"	RATED CEILING, RE. 5/A030	103
104	BREAK ROOM	96D.1	98E	97D.1, L-1	95A	8'-6"	GYP. SOFFIT & CABINETS	104
104A	BREAK ROOM CORR	96D.1	98E	97D.1	95C	8'-6"	VNYL TO CONC. @ FLOOR RE:10/A901 CONDITION G	104A
105A	TOILET	96L	98F	97A.1, 97A.2	95A	8'-6"	SOFFIT @ SHOWER	105A
105B	TOILET	96L	98F	97A.1, 97A.2	95A	8'-6"	SOFFIT @ SHOWER	105B
106	ENTRY/LOBBY	96D.1, 96D.2 , 96M	98E	97D.1	95A	8'-6"	WALK OFF MAT RE: SPECS	106
107A	OFFICE	96D.2	98E	97D.1	95A	8'-6"	-	107A
107B	OFFICE	96D.2	98E	97D.1	95A	8'-6"	-	107B
108	WORKSHOP	96Z	98Z	97D.1, 97D.2	95C, 95D.1, 95D.2	8'-6"	98E ON WALLBOARD ONLY	108
109	MAINTENANCE BAYS	96Z	98Z	97D.2, 97Z	95C, 95D.1, 95D.2, 95E	OPEN TO STRUC.	--	109
201	UPPER STORAGE	96D.1	98Z	97Z	95E	OPEN TO STRUC.	--	201

FINISH MATERIAL SCHEDULE

TAG	DESCRIPTION	MANUFACTURER	STYLE NAME / NUMBER	COLOR NAME	FINISH / REMARKS
95A	ACOUSTICAL CEILING TILE	USG	MARS CLIMA PLUS HIGH NRC SLT 87200	WHITE	-
95C	PAINTED GYPSUM BOARD	PPG	PPG 6-4110XI SPEEDHIDE ZERO INTERIOR ZERO VOC FLAT LATEX	DELICATE WHITE PPG1001-1	FLAT FINISH
95D.1	EXPOSED BEAMS / COLUMNS STRUCTURE - PAINTED	PPG	PITT-TECHE PLUS INTERIOR/EXTERIOR SEMI-GLOSS DTM INDUSTRIAL ENAMEL	BLUE TANG PPI160-7	SEMI-GLOSS FINISH
95D.2	EXPOSED JOISTS STRUCTURE - PAINTED	PPG	PITT-TECHE PLUS INTERIOR/EXTERIOR SEMI-GLOSS DTM INDUSTRIAL ENAMEL	BLUE TANG PPI160-7	SEMI-GLOSS FINISH
95E	SPRAYED ACOUSTIC TREATMENT- 2"	K-13	SONASPRAY FC	WHITE	-
96D.1	VNYL COMPOSITION TILE - 12 X 24	ARMSTRONG	RAFIA STREAM W/ DIAMOND 10	Z5901 RAIN	HERRINGBONE INSTALLATION
96D.2	VNYL COMPOSITION TILE - 12 X 24	ARMSTRONG	RAFIA STREAM W/ DIAMOND 10	Z5900 AVALANCHE	HERRINGBONE INSTALLATION
96L	EPOXY FLOORING - SLIP RESISTANT	SHERWIN WILLIAMS	BIO FLAKE WITH 4685 TOP COAT	CU-11	-
96M	ENTRANCE MAT TILE	LEES CARPET	STEP IN STYLE	COBALT - 955	MONOLITHIC INSTALLATION
96N	ALUMINUM EDGE STRIP	SCHLUTER	QUADEC @ WALLS,	STAINLESS STEEL	TBD
96Z	SEALED CONC. TROWEL FINISH				
97A.1	12 X 24 PORCELAIN WALL TILE	GARDEN STATE TILE	ALFALUX STONE PRINTS	GHIACCIO	GROUT - LATICRETE 78 STERLING SILVER
97A.2	12 X 24 PORCELAIN WALL TILE	GARDEN STATE TILE	ALFALUX STONE PRINTS	GRIGIO	UP TO 4'-0" AFF, GROUT LATICRETE 78 STERLING SILVER
97D.1	PAINT	PPG	PPG PAINTS; 6-4310XI SPEEDHIDE ZERO INTERIOR ZERO VOC EGGSHELL LATEX	PPG1002-1 SILVER FEATHER	GYPSUM WALLS
97D.2	PAINT	PPG	PPG PAINTS; 6-4310XI SPEEDHIDE ZERO INTERIOR ZERO VOC EGGSHELL LATEX	PPG1001-4 FLAGSTONE	BLOCK WALLS & GYP WALLS @ MAINTENANCE BAY UP TO FIRST HORIZONTAL BEAM
97D.3	PAINT	PPG	PITT-TECHE PLUS INTERIOR/EXTERIOR SEMI-GLOSS DTM INDUSTRIAL ENAMEL	BLUE TANG PPI160-7	BEAMS 7 COLUMNS @ MAINTENANCE BAY
97D.4	PAINT	BENJAMIN MOORE	ECO - ZERO VOC	APACHE RED 1295	ACCENT WALL AT WOOD CABINETS @ BREAKROOM
97Z	NO ADDITIONAL FINISH REQUIRED				
98E	RUBBER BASE - 6"	ROPPE	PINNACLE RUBBER BASE	114 LUNAR DUST	-
98Z	NO BASE				
SS-1	SOLID SURFACE - KITCHEN	STARON	EARTHEN STRATUM - QL287	SEMI-GLOSS	BREAK ROOM COUNTERTOP
WD-1	WOOD CABINET	MILLWORK	HARDWOOD - MAPLE	CLEAR	BREAK ROOM CABINETS

REFLECTED CEILING PLAN NOTES:

1. NOT ALL CEILING MOUNTED &/or SUSPENDED ITEMS, COMPONENTS, &/or WORK MAY BE SHOWN. CONTRACTOR TO COORDINATE w/ ALL DRAWINGS INCLUDING THE STRUCTURAL, PLUMBING, MECHANICAL & ELECTRICAL DRAWINGS. NOTIFY THE ARCHITECT OF ANY ADDITIONAL ITEMS &/or DISCREPANCIES BEFORE STARTING WORK.
2. ALL CEILING MOUNTED ITEMS ARE TO BE CENTERED IN CEILING TILES U.N.O.
3. SPRINKLER HEAD LAYOUT IS APPROXIMATE AND NOT ALL HEADS MAY BE SHOWN. COORDINATE w/ SPRINKLER DWGS AND NOTIFY ARCHITECT OF ANY DISCREPANCIES BEFORE STARTING WORK.
4. PROVIDE WHITE GROMMET TRIM @ ALL SUPPORT CABLE &/or WIRING PENETRATIONS FOR SUSPENDED ELEMENTS.

REFLECTED CEILING PLAN LEGEND:

- NEW GYPSUM BOARD SOFFIT OR GYPSUM BOARD CEILING
- NEW CEILING GRID
- 2X2 CEILING LIGHT. COORDINATE w/ ELECTRICAL DWGS
- 2X4 CEILING LIGHT. COORDINATE w/ ELECTRICAL DWGS
- PENDANT HUNG LIGHT COORDINATE w/ ELECTRICAL DWGS
- SUSPENDED ELEMENT BELOW CEILING.
- NEW CEILING MOUNTED LIGHT COORDINATE w/ ELECTRICAL DWGS
- EXTERIOR FLOOD LIGHTS
- NEW CEILING MOUNTED HVAC SUPPLY DIFFUSER COORDINATE w/ MECHANICAL DWGS
- NEW CEILING MOUNTED HVAC RETURN DIFFUSER, COORDINATE w/ MECHANICAL DWGS.
- EXIT SIGN COORDINATE w/ ELECTRICAL DWGS
- SMOKE DETECTOR COORDINATE w/ ELECTRICAL DWGS
- HEAT DETECTOR COORDINATE w/ ELECTRICAL DWGS
- SPRINKLER HEAD COORDINATE w/ PLUMBING/SPRINKLER DWGS
- CEILING FAN COORDINATE w/ MECHANICAL DWGS
- O.T.S. OPEN TO STRUCTURE

INTERIOR FINISH NOTES:

1. G.C. SHALL SUBMIT MANUFACTURER'S COLOR SELECTION FOR ALL SPECIFIED MATERIALS. (COLOR SCHEDULE TO BE COMPLETED UPON RECEIPT AND APPROVAL OF ALL SPECIFIED FINISHES)

2. G.C. SHALL INSTALL FRT WOOD BLOCKING AT ALL AREAS INDICATED TO RECEIVE WALL MOUNTED ITEMS, CABINETRY, SHELVING, TOILET ACCESSORIES, ETC.

3. ALL SPECIFIED FINISHES SHALL BE CONTINUOUS BEHIND ALL MOUNTED OR APPLIED ITEMS, i.e.: MIRRORS, TACK BOARDS, ETC.

4. ALL VINYL BASE WILL BE COVED AT RESILIENT FLOORING.

5. PAINT ALL EXPOSED DUCTS, CONDUITS, PIPING, ETC, NOT CONCEALED BY ROOM FINISHES. COORDINATE WITH MEP DRAWINGS

6. PAINT ALL METAL HANDRAILS, RISERS, STAIR STRINGERS AND UNDERSIDE OF STAIR AT ALL EXPOSED AREAS.

7. GC AND VENDORS SHALL DETERMINE AVAILABILITY OF ALL FINISH MATERIALS. ANY DELIVERY SCHEDULE THAT POTENTIALLY MAY CAUSE COORDINATION PROBLEMS DURING THE FINAL STAGES OF CONSTRUCTION/INSTALLATION SHALL BE BROUGHT TO ATTENTION OF RGB, EARLY ON, FOR POSSIBLE REEVALUATION OF MATERIAL DESIGNATION. THE LACK OF A TIMELY ORDER DOES NOT CONSTITUTE A RE-SELECTION.

8. GC SHALL ASSURE THAT NO ELECTRIC RECEPTACLE OR TELECOMMUNICATIONS OUTLET COVERPLATES HAVE BEEN INSTALLED PRIOR TO COMPLETION OF APPLICATION OF ANY WALL FINISH MATERIALS. ANY SUCH COVERPLATES OR SURFACE HARDWARE, ETC., IN PLACE, SHALL BE REMOVED PRIOR TO WALL FINISH APPLICATION.

9. UPON COMPLETION OF FINISH PHASE OF JOB, GC SHALL REMOVE ALL PAINT, WALLCOVERING PASTE, ETC., FROM WHERE IT HAS SPILLED, SPLASHED, OR SPATTERED.

10. ALL FINISH FLOORING MATERIAL INSTALLATION SHALL BE PER MANUFACTURERS RECOMMENDATION. SEAMS SHALL BE TIGHT/INVISIBLE. GC SHALL PROVIDE AND MAINTAIN ADEQUATE PROTECTION FOR ALL NEWLY INSTALLED FLOORING MATERIALS FOR THE DURATION OF CONSTRUCTION AND REMOVE PROTECTION ONLY IMMEDIATELY BEFORE JOB COMPLETION, FLOOR WILL BE THOROUGHLY CLEANED OF ALL ADHESIVE, GROUT, CONSTRUCTION STAINS, ETC.

11. GC IS RESPONSIBLE FOR ALL FLASH PATCHING AND TO HAVE FLOOR IN CONDITION TO RECEIVE NEW FLOORING MATERIALS.

12. GC, ALL VENDORS/SUBCONTRACTORS ARE RESPONSIBLE FOR FIELD VERIFICATION OF ALL DIMENSIONS, QUANTITIES ETC., OF THEIR RESPECTIVE WORK.

13. PROVIDE SPLASH TRIM @ ALL WALLS ADJACENT TO COUNTER TOPS. TYPICAL

14. PROVIDE BASE FINISH @ TOE KICKS OF ALL CABINETRY KITCHENS & VANITIES

15. PROVIDE BASE FINISH @ ALL FINISH CABINETRY END PANELS

16. PROVIDE WALL BASE BEHIND ALL REFRIGERATORS & RANGES PROVIDE PAINTED FINISH AND CAULKING BEHIND ALL MIRRORS

17. PROVIDE PAINTED FINISH AND CAULKING BEHIND MIRRORS AND SINKS, TYP

18. NOT ALL WALL OBJECTS MAY BE SHOWN. COORDINATE WITH MECH; PLUMBING;ELECTRICAL DRAWINGS ALSO REFER ARCHITECTURAL DWGS & SPECIFICATIONS FOR ADDITIONAL ITEMS

19. INSULATE ALL EXPOSED PIPES & SINK BOTTOM WITH TRAP WRAP PROTECTIFE KIP #500R-MA A, AS MFR'D BY BROCAR PRODUCTS (1-8400-827-1207), OR ARCHITECT APPROVED EQUAL

20. PROVIDE WATER RESISTANT CEMENT BOARD @ ALL TOILET ROOMS

This drawing is copyrighted and is subject to copyright protection as an "architectural work" under 17 U. S. C. Sec. 101 et seq. The protection includes but is not limited to the overall form as well as the arrangement and composition of spaces, materials, color and elements in the design. Under such protection, unauthorized use of this drawing may result in the cessation of construction or buildings being seized and/or monetary compensation being awarded to The Robinson Green Beretta Corporation (RGB).

Any reproduction, possession, or use of this drawing or any part thereof without the express written permission of RGB, is prohibited. Violators will be prosecuted to the full extent of the law.

© RGB 2019

Certification

Drawn by TPL

Checked by RJJ, DLD

Revised on

1 ADDENDUM 1 02/07/2020

50 Holden Street
Providence, Rhode Island 02908

Phone: (401) 272-1730
Fax: (401) 273-7156

E-mail: rgbinfo@rgb.net
www.rgb.net

RGB ARCHITECTS

Architecture · Project Management · Interior Design

FORT ADAMS MAINTENANCE BUILDING

RIDEM / DIVISION OF PARKS & RECREATION

STATE OF RHODE ISLAND AND PROVIDENCE PLANTATIONS

FORT ADAMS STATE PARK, NEWPORT, RI

Drawing Status

ISSUED FOR CONSTRUCTION

Issued On MAY 29, 2019

Sheet Contents

REFLECTED CEILING PLAN & FINISH SCHEDULE

Project Number. 6380

Drawing No.

A600

Sheet of

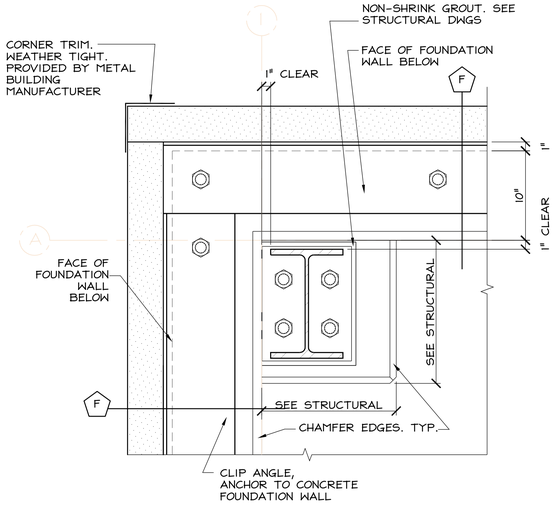

1 A801 PLAN: TYP. COLUMN @ CORNER

Scale: 1 1/2" = 1'-0"

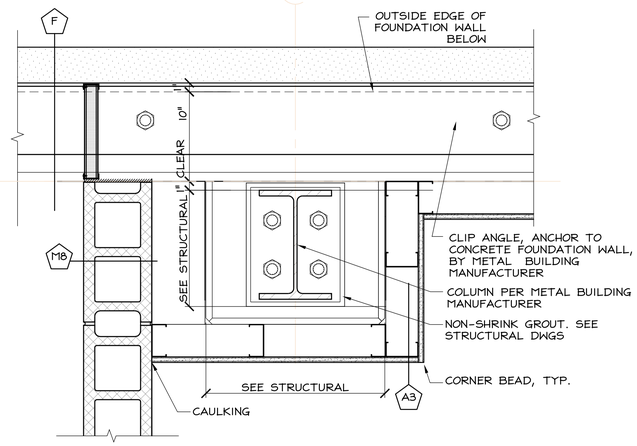

4 A801 COLUMN ENCLOSURE @ BREAKROM, OFFICE & WORKSHOP

Scale: 1 1/2" = 1'-0"

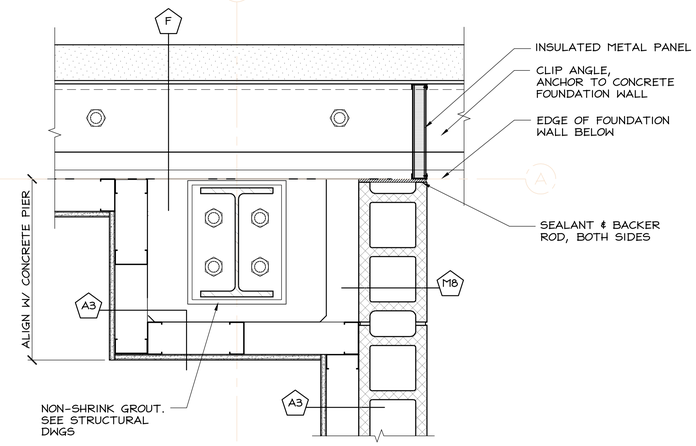

7 A801 COLUMN ENCLOSURE AT BREAK ROOM

Scale: 1 1/2" = 1'-0"

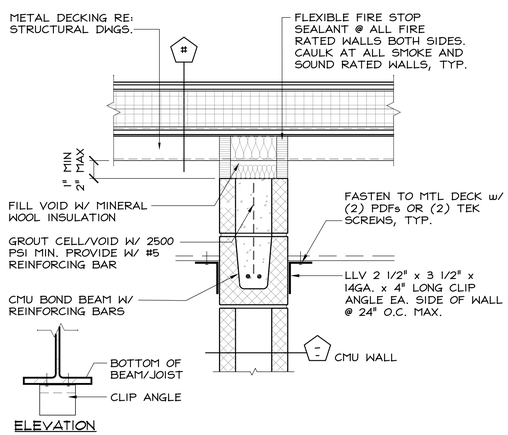

2 A801 TYP. TOP OF NON-BEARING CMU WALL

Scale: 1 1/2" = 1'-0"

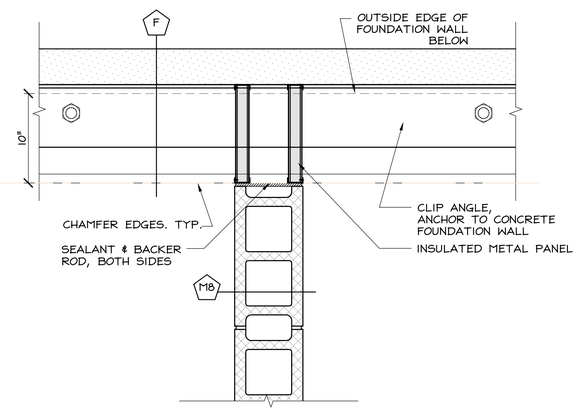

5 A801 PLAN: CLOSURE @ CMU/EXTERIOR WALL

Scale: 1 1/2" = 1'-0"

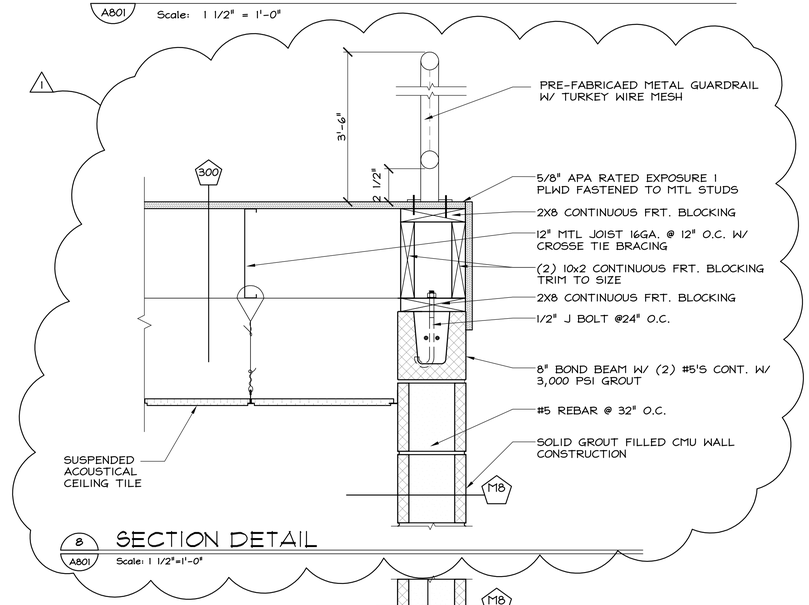

8 A801 SECTION DETAIL

Scale: 1 1/2"=1'-0"

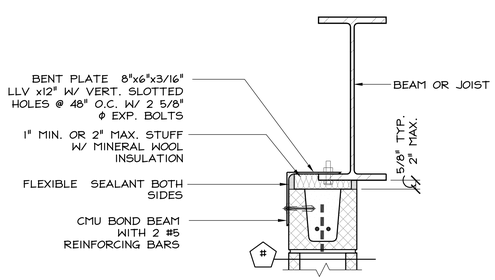

3 A801 TYP. TOP OF NON-BEARING CMU WALL

Scale: 1 1/2" = 1'-0"

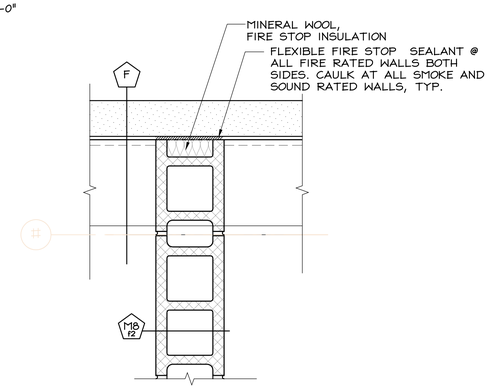

6 A801 TYP CLOSURE AT 2 HR CMU WALL

Scale: 1 1/2" = 1'-0"

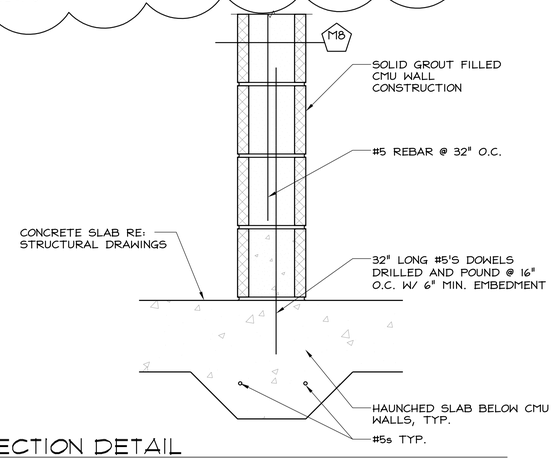

9 A801 SECTION DETAIL

Scale: 1 1/2"=1'-0"

This drawing is copyrighted and is subject to copyright protection as an "architectural work" under 17 U. S. C. Sec. 101 et seq. The protection includes but is not limited to the overall form as well as the arrangement and composition of spaces, materials, color and elements in the design. Under such protection, unauthorized use of this drawing may result in the cessation of construction or buildings being seized and/or monetary compensation being awarded to The Robinson Green Beretta Corporation (RGB).

Any reproduction, possession, or use of this drawing or any part thereof without the express written permission of RGB, is prohibited. Violators will be prosecuted to the full extent of the law.

© RGB 2019

Certification

Drawn by TPL

Checked by RJJ, DLD

Revised on

1 ADDENDUM 1 02/07/2020

50 Holden Street
Providence, Rhode Island 02908

Phone: (401) 272-1730
Fax: (401) 273-7156

E-mail: rgbinfo@rgb.net
www.rgb.net

RGB ARCHITECTS

Architecture · Project Management · Interior Design

Project

FORT ADAMS MAINTENANCE BUILDING

RIDEM / DIVISION OF PARKS & RECREATION

STATE OF RHODE ISLAND AND PROVIDENCE PLANTATIONS

FORT ADAMS STATE PARK, NEWPORT, RI

Drawing Status

ISSUED FOR CONSTRUCTION

Issued On MAY 29, 2019

Sheet Contents

INTERIOR DETAILS

Project Number. 6380

Drawing No.

A801

Sheet of

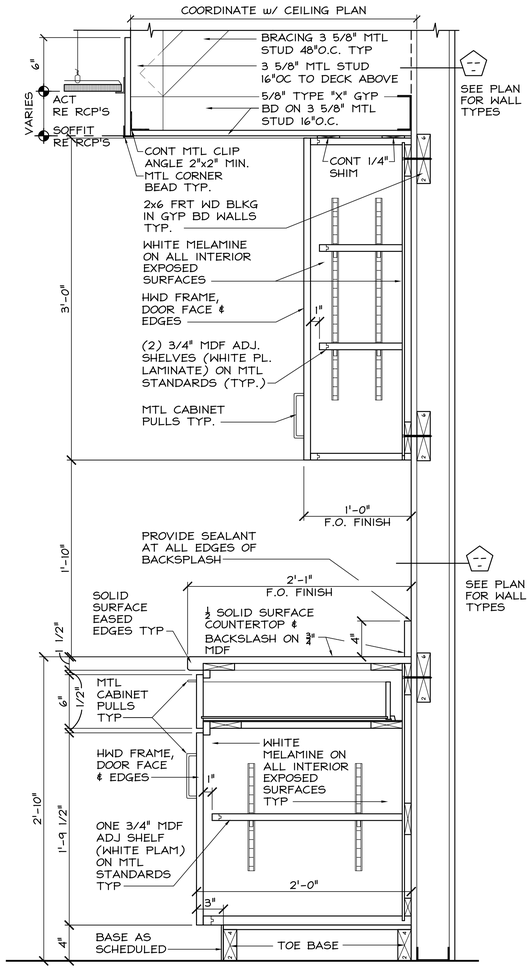

1 A810 SECTION MILLWORK w/ SOFFIT

Scale: 1 1/2" = 1'-0"

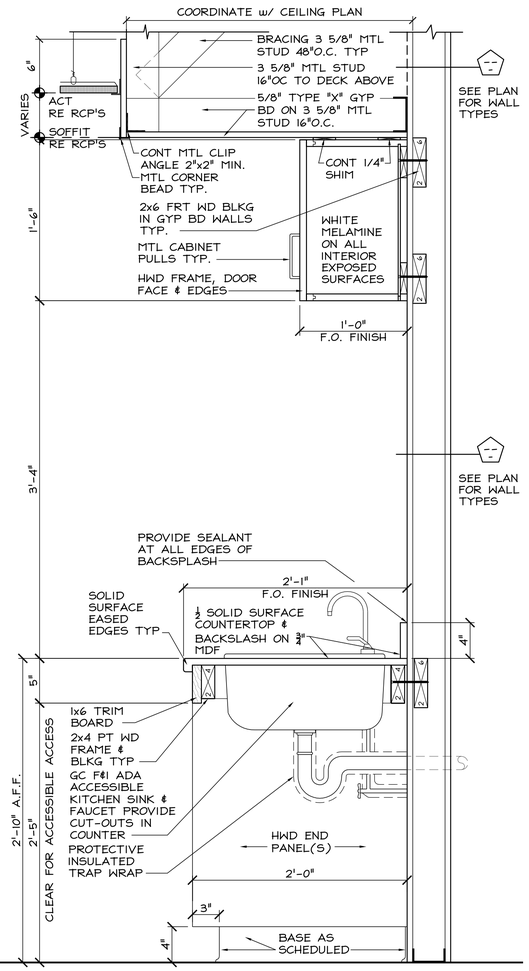

3 A810 MILLWORK w/ SINK & SOFFIT

Scale: 1 1/2" = 1'-0"

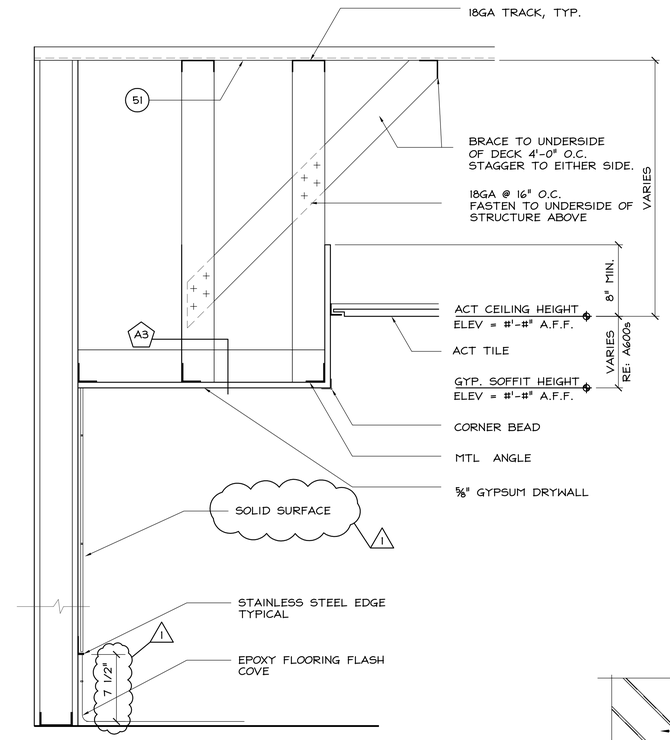

5 A810 TYPICAL SOFFIT @ SHOWER

Scale: 1 1/2" = 1'-0" (SECTION DETAIL)

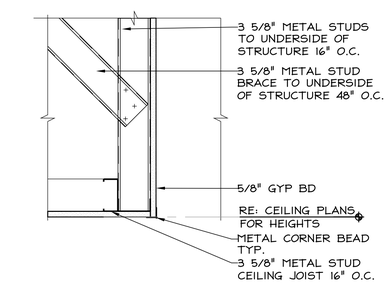

9 A810 SOFFIT

Scale: 1 1/2" = 1'-0"

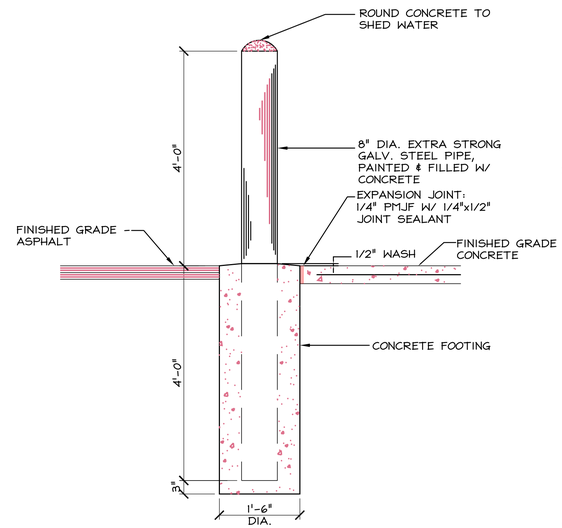

6 A810 TYP. BOLLARD DETAIL

Scale: 3/4" = 1'-0"

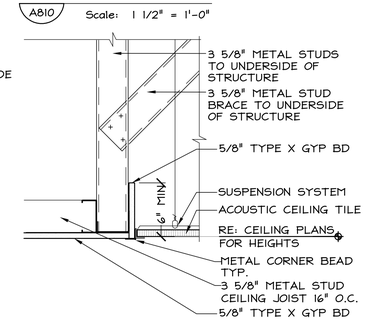

10 A810 MATERIAL TRANSITION

Scale: 1 1/2" = 1'-0"

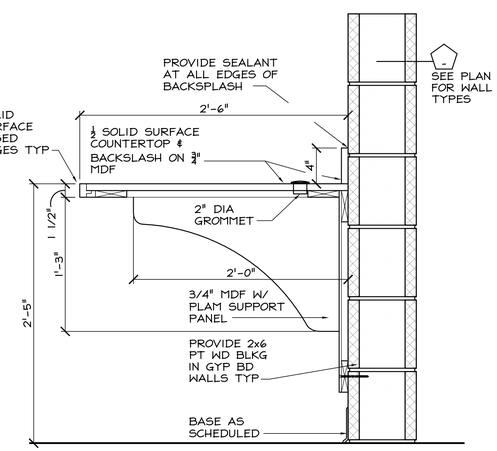

2 A810 SECTION AT MILLWORK DESK

Scale: 1 1/2" = 1'-0"

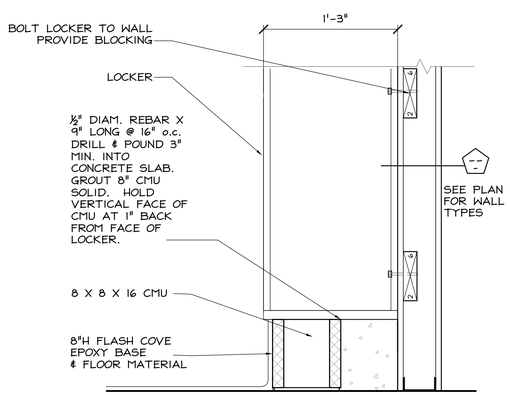

NOTE: GC TO COORDINATE ALL DIMENSIONS AND SUPPORTS WITH MASON AND LOCKER MANUFACTURER.

4 A810 SECTION AT LOCKER BASE PLATFORM

Scale: 1 1/2" = 1'-0"

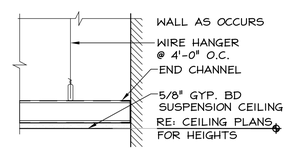

7 A810 GWB @ WALL

Scale: 1 1/2" = 1'-0"

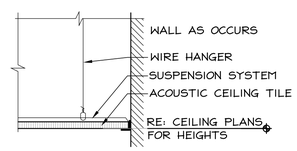

8 A810 SAT @ WALL

Scale: 1 1/2" = 1'-0"

This drawing is copyrighted and is subject to copyright protection as an "architectural work" under 17 U. S. C. Sec. 101 et seq. The protection includes but is not limited to the overall form as well as the arrangement and composition of spaces, materials, color and elements in the design. Under such protection, unauthorized use of this drawing may result in the cessation of construction or buildings being seized and/or monetary compensation being awarded to The Robinson Green Beretta Corporation (RGB).

Any reproduction, possession, or use of this drawing or any part thereof without the express written permission of RGB, is prohibited. Violators will be prosecuted to the full extent of the law.

© RGB 2019

Certification

Drawn by TPL

Checked by RJJ, DLD

Revised on

1 ADDENDUM 1 02/07/2020

50 Holden Street
Providence, Rhode Island 02908

Phone: (401) 272-1730
Fax: (401) 273-7156

E-mail: rgbinfo@rgb.net
www.rgb.net

RGB architects

Architecture · Project Management · Interior Design

Project

FORT ADAMS MAINTENANCE BUILDING

RIDEM / DIVISION OF PARKS & RECREATION

STATE OF RHODE ISLAND AND PROVIDENCE PLANTATIONS

FORT ADAMS STATE PARK, NEWPORT, RI

Drawing Status

ISSUED FOR CONSTRUCTION

Issued On MAY 29, 2019

Sheet Contents

INTERIOR & CASEWORK DETAILS

Project Number. 6380

Drawing No.

A810

Sheet of

DOOR AND FRAME SCHEDULE

MARK	DOOR SIZE	DOOR TYPE	DOOR MATL	FRAME DEPTH	FRAME TYPE	FRAME MATL	DETAIL HEAD	DETAIL JAMB	DETAIL SILL	DETAIL MULL	REQ'D FIRE RATING	HARDWARE (REFER TO SPECIFICATIONS)	REMARKS	MARK
101.A	3'-0" x 7'-0" x 1 3/4"	1	HM	6	1	HM	1/A901	2/A901	3/A901	--	90 MIN.	SET # 6	1	101.A
102.A	3'-0" x 7'-0" x 1 3/4"	1	HM.	6	1	HM	8/A901	9/A901	10/A901	--	90 MIN.	SET # 6	1,3&5	102.A
103.A	PR 2'-3" x 7'-0" x 1 3/4"	1	HM	6	1	HM	8/A901	9/A901	10/A901	--	90 MIN.	SET # 6	1,3&5	103.A
104.A	3'-0" x 6'-8" x 1 3/4"	3	HM	6	1	HM	1/A901	2/A901	3/A901	--	N/A	SET # 5	1&2T	104.A
105A.A	3'-0" x 7'-0" x 1 3/4"	1	HM	6	1	HM	8/A901	9/A901	10/A901	--	N/A	SET # 4	1&5	105A.A
105B.A	3'-0" x 7'-0" x 1 3/4"	1	HM	6	1	HM	8/A901	9/A901	10/A901	--	N/A	SET # 4	1&5	105B.A
106.A	3'-0" x 7'-0" x 1 3/4"	4	AL	6	1	HM	1/A901	2/A901	3/A901	--	N/A	SET # 1	1&2T	106.A
106.B	3'-0" x 7'-0" x 1 3/4"	2	HM	6	1	HM	8/A901	9/A901	10/A901	--	N/A	SET # 5	1&5	106.B
107A.A	3'-0" x 7'-0" x 1 3/4"	1	HM	6	3	HM	8/A901	9/A901	10/A901	--	N/A	SET # 2	1&5	107A.A
107B.A	3'-0" x 7'-0" x 1 3/4"	1	HM	6	3	HM	8/A901	9/A901	10/A901	--	N/A	SET # 2	1&5	107B.A
108.A	PR 3'-0" x 7'-0" x 1 3/4"	3	HM	6	1	HM	8/A901	9/A901	10/A901	--	N/A	SET # 2	1,2T &5	108.A
109.A	3'-0" x 7'-0" x 1 3/4"	4	AL	6	1	HM	4/A901	5&6/A901	7/A901	--	N/A	SET # 1	1&2T	109.A
109.B	12'-0" x 14'-0" x 1"	5	STEEL	1'-2"	2	STEEL	1/A910	3&4/A902	2/A902	--	N/A	--	4&6	109.B
109.C	14'-0" x 14'-0" x 1"	5	STEEL	1'-2"	2	STEEL	1/A902	3&4/A902	2/A902	--	N/A	--	4&6	109.C
109.D	12'-0" x 14'-0" x 1"	5	STEEL	1'-2"	2	STEEL	1/A902	3&4/A902	2/A902	--	N/A	--	4&6	109.D
109.E	3'-0" x 7'-0" x 1 3/4"	3	HM	6	1	HM	1/A901	2/A901	3/A901	--	N/A	SET # 5	1&2T	109.E
109.F	14'-0" x 12'-0" x 1"	5	STEEL	1'-2"	2	STEEL	1/A902	4&5/A902	2/A902	--	N/A	--	4&6	109.F
109.G	12'-0" x 12'-0" x 1"	5	STEEL	1'-2"	2	STEEL	1/A902	4&5/A902	2/A902	--	N/A	--	4&6	109.G
201.A	3'-0" x 7'-0" x 1 3/4"	2	HM	6	1	HM	4/A901	5&6/A901	7/A901	--	N/A	SET # 5	1&2T	201.A

REMARK NOTES:

1. A60 GALVANIZED HM FRAME & DOOR. ALL FRAMES TO BE WELDED.
2. GLAZING AS NOTED &/or INDICATED BELOW. 2T PROVIDE TEMPERED GLAZING IN DOOR &/or FRAME
3. PROVIDE INTEGRAL TACTILE WARNING ON KNOB/LEVER HANDLE
4. HARDWARE BY DOOR MANUFACTURER & /OR SUPPLIER U.N.O.
5. PROVIDE SIGNAGE MEETING ADA REQUIREMENTS MOUNTED @ 48" MIN. & 60" MAX. A.F.F. ON WALL ADJACENT TO LATCH SIDE OF DOOR.
6. OVERHEAD DOOR (COILING) VERIFY R.O. DIMENSIONS WITH MFGR. REQUIREMENTS. ALL TRACKS, SPRINGS, HARDWARE, WEATHERSTRIPPING, ETC. TO BE HEAVY DUTY AND FURNISHED AND INSTALLED BY THE DOOR SUPPLUER/MFGR.

GENERAL NOTES:

GENERAL:

1. FOR DOOR HEAD, JAMB, & THRESHOLD DETAILS RE: A920 UNO.
2. WINDOW DIMENSIONS SHOWN ARE ROUGH OPENING &/or MASONRY OPENINGS.
3. SYMBOL ☆ [STAR] DENOTES LOCATIONS REQUIRING SPANDREL GLASS TYP.
4. SYMBOL * DENOTES LOCATION REQUIRING TEMPERED GLAZING. TYPICAL.

DOORS:

1. EXTERIOR DOOR FINISHES UNLESS NOTED OTHERWISE
   ALUMINIUM STOREFRONT: CLEAR ANODIZED
   HOLLOW METAL: FACTORY A60 GALV & PRIMED FOR FIELD PAINTING
2. INTERIOR DOOR FINISHES:
   A. ALUMINUM STOREFRONT: CLEAR ANODIZED
   B. WOOD: FACTORY PREFINISHED
   C. HOLLOW METAL: FACTORY PRIMED FOR FIELD PAINTING UNO
3. QUICK SET KNOCK DOWN FRAMES ARE NOT ACCEPTABLE.
6. FIELD PAINT ALL METAL FRAMES w/ COLOR AS SELECTED BY THE ARCHITECT. RE: ARCHITECTURAL EXTERIOR ELEVATIONS &/or FINISH SCHEDULE.

HARDWARE:

1. HARDWARE & ACCESSORY LIST SCHEDULE ESTABLISHES GENERAL SCOPE REQUIREMENTS. CONTRACTOR, SUPPLIERS &/or MANUFACTURERS TO PROVIDE ALL NECESSARY ACCESSORIES, SCREWS, SEX BOLTS, STRIKES, COVER PLATES, TOOLS, ETC. FOR A COMPLETED INSTALLATION OF HARDWARE FOR A FULLY FUNCTIONAL SYSTEM FOR THE INTENDED USE.
2. TYPICAL HARDWARE FINISH REQUIREMENTS UNO.
   HARDWARE FINISH: US26D
   KICK PLATES METAL FINISH: US26D
   WASH & TOILET ROOMS: US26
B. CLOSERS, THRESHOLDS, WEATHERSTRIPPING, ETC TO APPROXIMATE DOOR HARDWARE FINISH NOTED ABOVE.
C. CYLINDER FINISHES IS TO MATCH FINISH OF ITEM IN WHICH CYLINDER IS INSTALLED IN UNO. (IE. STOREFRONT FRAME COLOR, EXIT DEVICE FINISH, LOCKSET FINISH, etc.
3. PROVIDE LEVER HANDLES @ ALL LATCHSETS, LOCKSETS, PANIC DEVICES, DUMMY LATCHSETS TYPICAL UNO.
4. TACTILE WARNING: PROVIDE MECHANICAL KNURLING WHERE REQUIRED (HIGH HAZARDS, ELECTRICAL & MECHANICAL ROOMS, ETC.) ABRASIVE COATINGS APPLIED ARE NOT ACCEPTABLE.
5. PROVIDE DOOR SILENCERS @ ALL DOORS NOT RECEIVING WEATHERSTRIPPING.
   SINGLE DOORS PROVIDE 3
   DOUBLE DOORS PROVIDE 2
6. PROVIDE FULL WEATHERSTRIPPING @ ALL EXTERIOR DOORS, HEAD, JAMBS, SILLS TYPICAL UNO.
7. PROVIDE ALUMINUM THRESHOLDS BY DOOR(S) WIDTH WHERE SHOWN ON PLANS, IN SILL DETAILS, &/or WHERE NOTED. TYPICAL.
8. AT ALL WALL MOUNTED DOOR STOPS STUD FRAME WALLS, PROVIDE 2x6 FRT WOOD BLOCKING &/or 6" x 20 gauge METAL PLATE UNDER THE GYPSUM WALL BOARD SECURED TO THE STUDS TO ATTACH THE STOP TO.

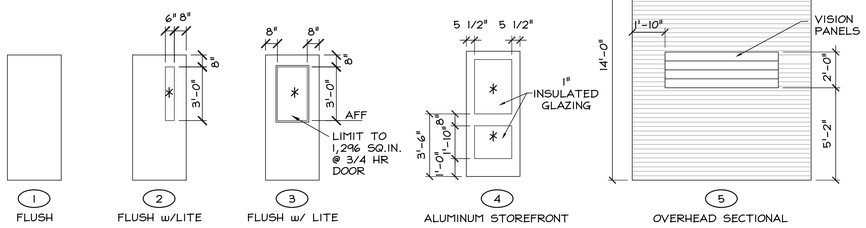

1 ELEVATION DOOR TYPES
A900 Scale: 1/4" = 1'-0"

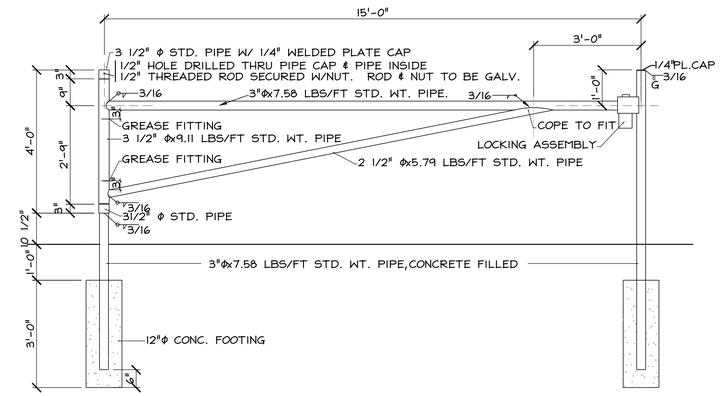

3 GATE LAYOUT
A900 Scale: 1/2" = 1'-0"

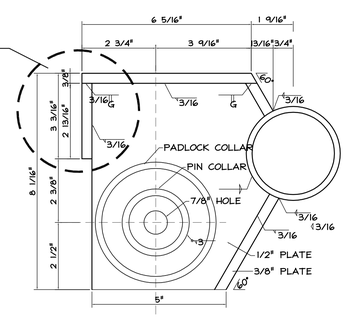

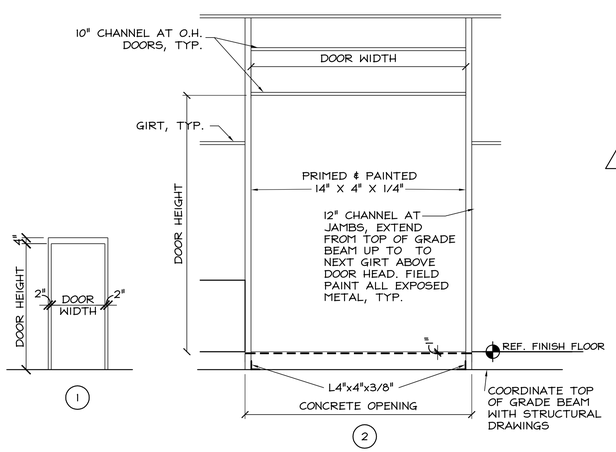

2 FRAME TYPES
A900 Scale: 1/4" = 1'-0"

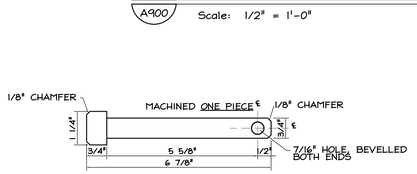

4 LOCKING PIN
A900 Scale: NTS

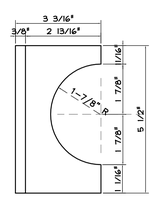

5 PLATE DETAIL
A900 Scale: NTS

NOTES:
1. ALL PIPE SHALL BE ASTM GRADE 501 STEEL PIPE.
2. ALL PLATES AND BARS SHALL BE A-36 STEEL.
3. 3"ϕ PIPE SHALL BE GROUND AS REQUIRED TO PROVIDE A SMOOTH SLIDING FIT.
4. ALL STEEL SHALL BE HOT-DIP GALVANIZED AFTER FABRICATION.
5. ALL WELDING SHALL CONFORM TO AWS A5.1 OR A5.5 WITH E70 XX ELECTRODES.

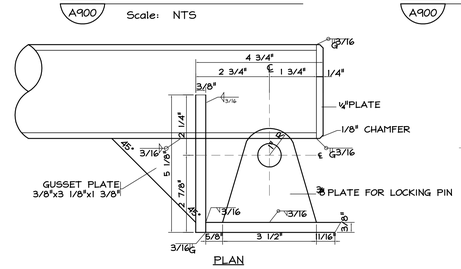

6 BAR GATE W/ ENCLOSURE PLATE
A900 Scale: NTS

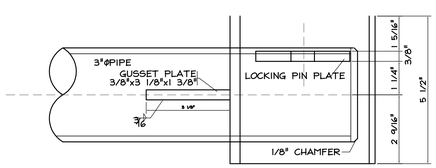

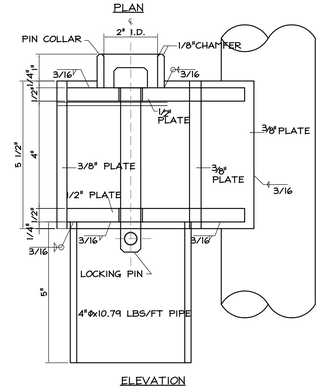

7 BAR GATE CHAMBER
A900 Scale: NTS

This drawing is copyrighted and is subject to copyright protection as an "architectural work" under 17 U. S. C. Sec. 101 et seq. The protection includes but is not limited to the overall form as well as the arrangement and composition of spaces, materials, color and elements in the design. Under such protection, unauthorized use of this drawing may result in the cessation of construction or buildings being seized and/or monetary compensation being awarded to The Robinson Green Beretta Corporation (RGB).

Any reproduction, possession, or use of this drawing or any part thereof without the express written permission of RGB, is prohibited. Violators will be prosecuted to the full extent of the law.

© RGB 2019

Certification

Drawn by TPL

Checked by RJJ, DLD

Revised on
1 ADDENDUM 1 02/07/2020

50 Holden Street
Providence, Rhode Island 02908

Phone: (401) 272-1730
Fax: (401) 273-7156

E-mail: rgbinfo@rgb.net
www.rgb.net

RGB ARCHITECTS

Architecture · Project Management · Interior Design

Project

FORT ADAMS MAINTENANCE BUILDING

RIDEM / DIVISION OF PARKS & RECREATION

STATE OF RHODE ISLAND AND PROVIDENCE PLANTATIONS

FORT ADAMS STATE PARK, NEWPORT, RI

Drawing Status

ISSUED FOR CONSTRUCTION

Issued On MAY 29, 2019

Sheet Contents

DOOR SCHEDULE & EXTERIOR GATE DETAILS

Project Number. 6380

Drawing No.

A900

Sheet of

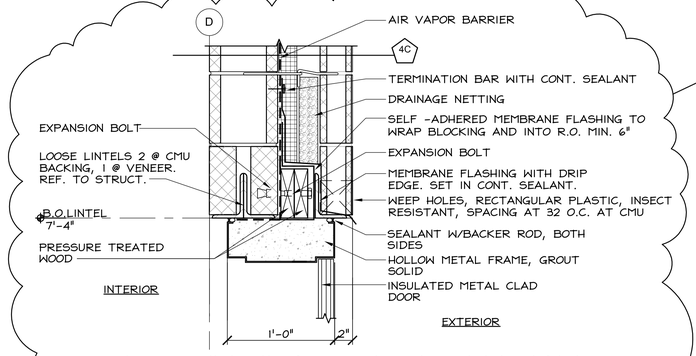

4 A901 TYP. HM HEAD @ EXT. CMU WALL

Scale: 1 1/2" = 1'-0" (SECTION DETAIL)

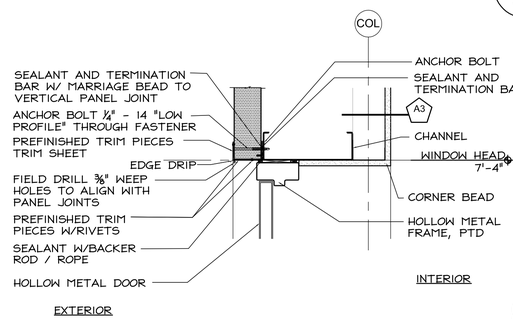

1 A901 HOLLOW METAL DOOR HEAD

Scale: 1 1/2" = 1'-0"

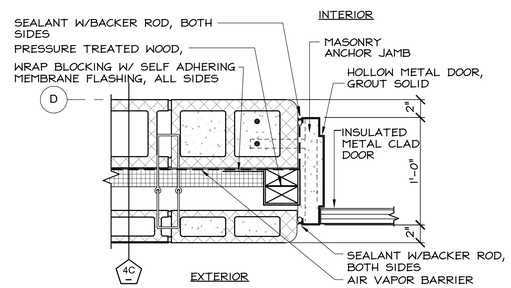

5 A901 TYP. HM JAMB @ EXT. CMU WALL

Scale: 1 1/2" = 1'-0" (PLAN DETAIL)

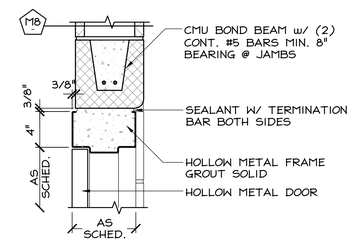

8 A901 TYP. HM HEAD @ CMU

Scale: 1 1/2" = 1'-0" (SECTION DETAIL)

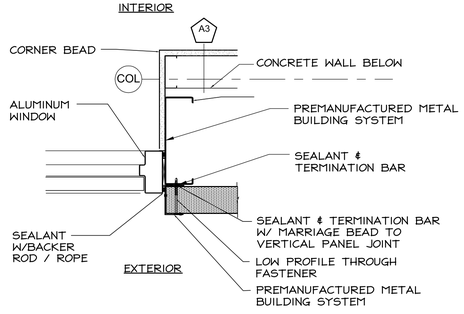

2 A901 HOLLOW METAL DOOR JAMB

Scale: 1 1/2" = 1'-0" (PLAN DETAIL)

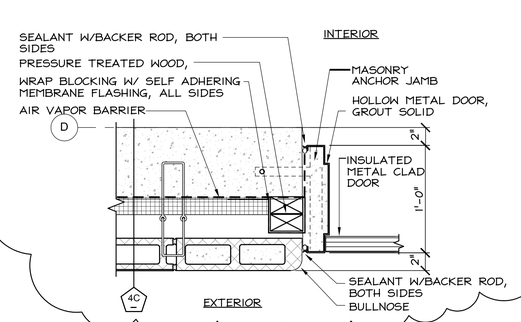

6 A901 TYP. HM JAMB @ FOUNDATION/CMU WALL

Scale: 1 1/2" = 1'-0" (PLAN DETAIL)

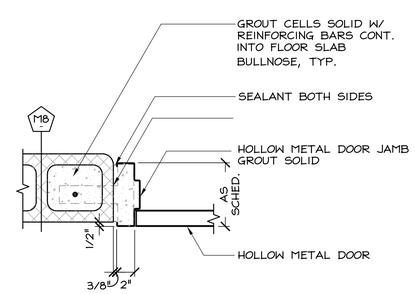

9 A901 TYP. HM JAMB @ CMU

Scale: 1 1/2" = 1'-0" (PLAN DETAIL)

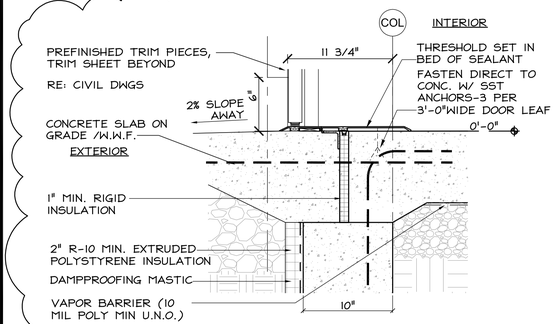

3 A901 HOLLOW METAL DOOR SILL

Scale: 1 1/2" = 1'-0"

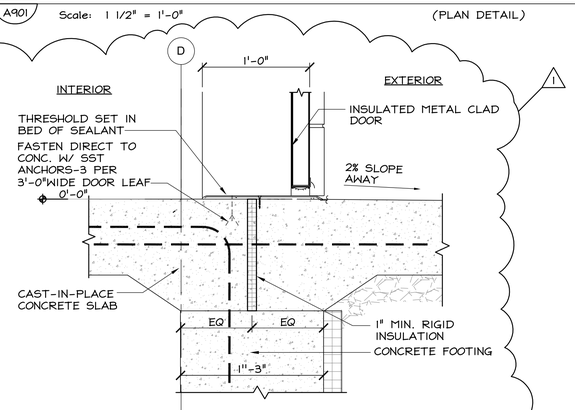

7 A901 TYP. HM SILL @ EXT. CMU WALL

Scale: 1 1/2" = 1'-0" (SECTION DETAIL)

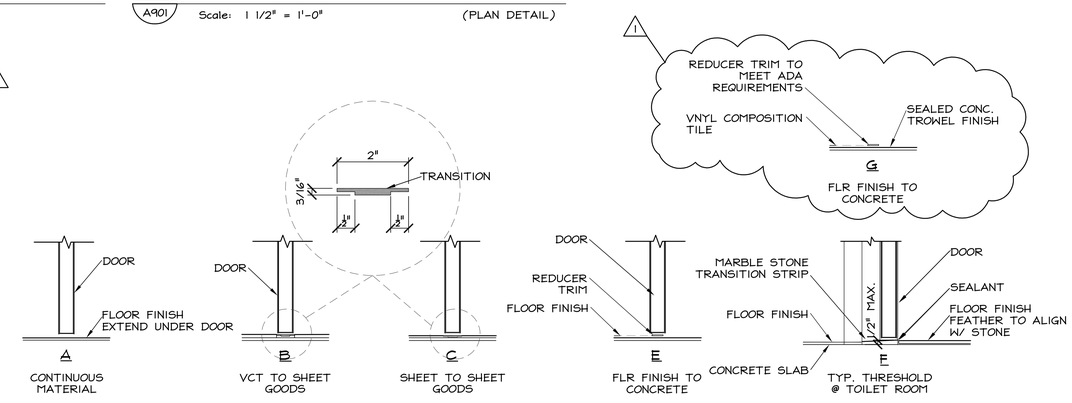

10 A901 TYP. INTERIOR DOOR SILLS

Scale: 1 1/2" = 1'-0" (SECTION DETAILS)

This drawing is copyrighted and is subject to copyright protection as an "architectural work" under 17 U. S. C. Sec. 101 et seq. The protection includes but is not limited to the overall form as well as the arrangement and composition of spaces, materials, color and elements in the design. Under such protection, unauthorized use of this drawing may result in the cessation of construction or buildings being seized and/or monetary compensation being awarded to The Robinson Green Beretta Corporation (RGB).

Any reproduction, possession, or use of this drawing or any part thereof without the express written permission of RGB, is prohibited. Violators will be prosecuted to the full extent of the law.

© RGB 2019

Certification

Drawn by TPL

Checked by RJJ, DLD

Revised on

1 ADDENDUM 1 02/07/2020

50 Holden Street
Providence, Rhode Island 02908

Phone: (401) 272-1730
Fax: (401) 273-7156

E-mail: rgbinfo@rgb.net
www.rgb.net

RGB ARCHITECTS

Architecture · Project Management · Interior Design

Project

FORT ADAMS MAINTENANCE BUILDING

RIDEM / DIVISION OF PARKS & RECREATION

STATE OF RHODE ISLAND AND PROVIDENCE PLANTATIONS

FORT ADAMS STATE PARK, NEWPORT, RI

Drawing Status

ISSUED FOR CONSTRUCTION

Issued On MAY 29, 2019

Sheet Contents

DOOR DETAILS

Project Number. 6380

Drawing No.

A901

Sheet of

WINDOW SCHEDULE

MARK	SIZE	DETAIL HEAD	DETAIL JAMB	DETAIL SILL	DETAIL MULL	REMARKS
A	4'-0"H x 3'-4"W	1/A910	3/A910	2/A910	--	INSULATED ALUMINUM WINDOW
A.1	4'-0"H x 3'-4"W	4/A910	6/A910	5/A910	--	INSULATED ALUMINUM WINDOW
A.2	4'-0"H x 3'-4"W	1/A910	3/A910	11/A910	--	INSULATED ALUMINUM WINDOW
B	2'-0"H x 12'-8"W	8/A910	9/A910	8/A910	--	INSULATED TRANSLUCENT WINDOW

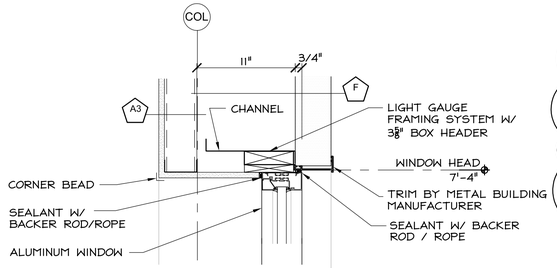

1 A910 ALUM. WINDOW HEAD DETAIL
Scale: 1 1/2" = 1'-0"

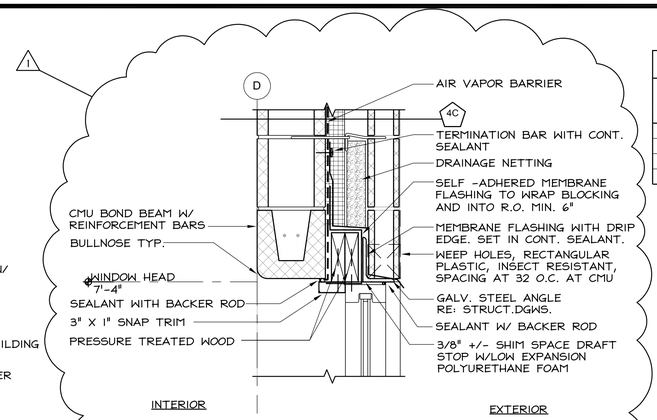

4 A910 WINDOW HEAD DETAIL
Scale: 1 1/2" = 1'-0"

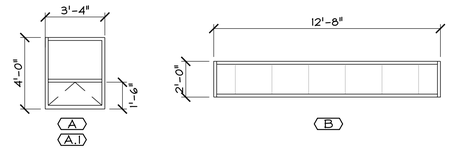

7 A910 ELEVATION WINDOW TYPES
Scale: 1/4" = 1'-0"

WINDBORNE DEBRIS ZONE LARGE MISSILE IMPACT RATED

STOREFRONT FRAMING - EFCO 526 SERIES OR EQUAL
ENTRANCE DOORS - D518 DURASTILE WIDE STILE DOOR OR EQUAL
OPERABLE WINDOWS - EFCO 321X PROJECT OUT OR EQUAL
GLAZING - 1 5/16" INSULATED GLASS, OUTER LITE 1/4" THICK TEMPERED LOW E GLASS WITH COATING ON THE #2 SURFACE (PPG SOLARBAN 60 OR GUARDIAN SN68 OR VIRACON VE1-2M) AIR SPACE 1/2" ARGON GAS FILLED, INNER LITE 9/16" LAMINATED GLASS CONSISTING OF 2 LITES OF 1/4" CLEAR ANNEALED GLASS WITH A .060 PVB INTERLAYER.

NOTE, THE D518 DOORS ONLY ACCEPT UP TO 1 1/6" GLASS THICKNESS, SO THE AIR SPACE FOR THE DOOR GLAZING WILL BE CHANGED FROM 1/2" TO 1/4".

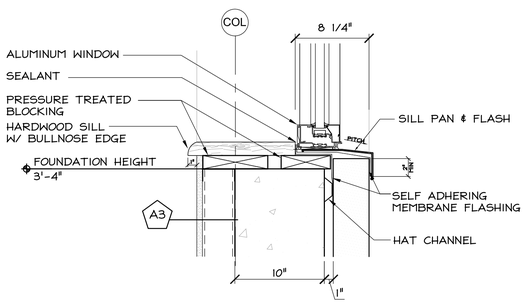

2 A910 ALUM. WINDOW SILL DETAIL
Scale: 1 1/2" = 1'-0"

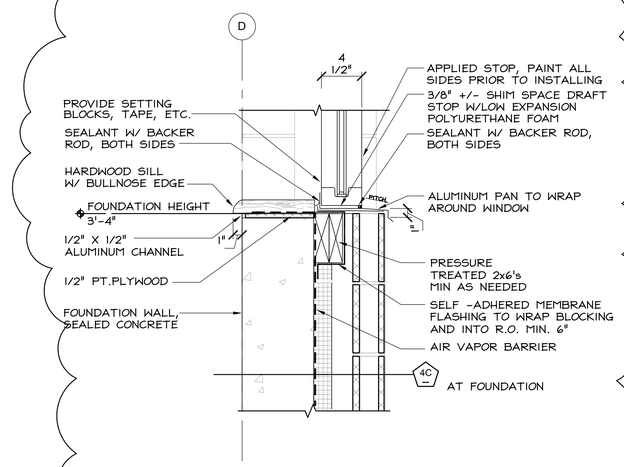

5 A910 WINDOW SILL DETAIL
Scale: 1 1/2" = 1'-0"

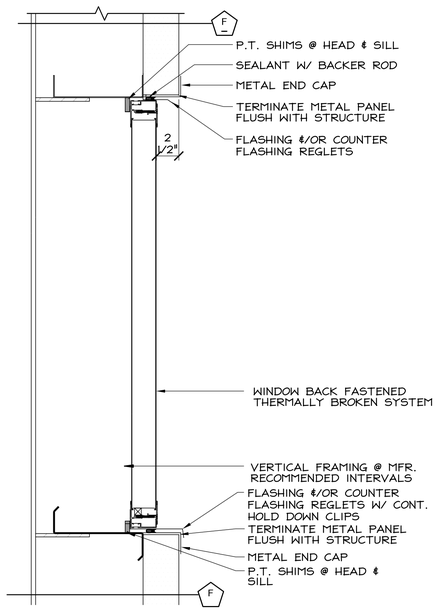

8 A910 TRANSLUCENT WINDOW HEAD & SILL
Scale: 1 1/2" = 1'-0"

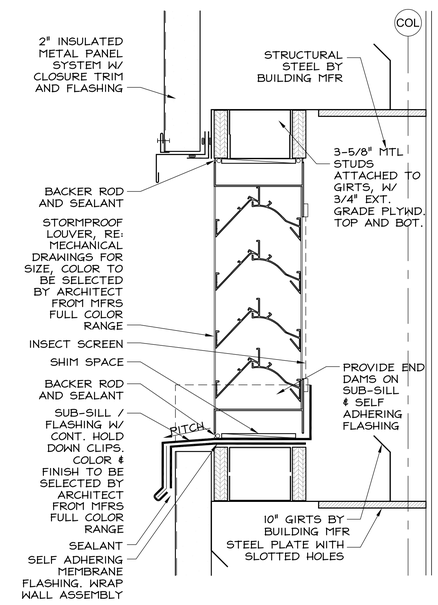

10 A910 LOUVER DETAIL
Scale: 3" = 1'-0"

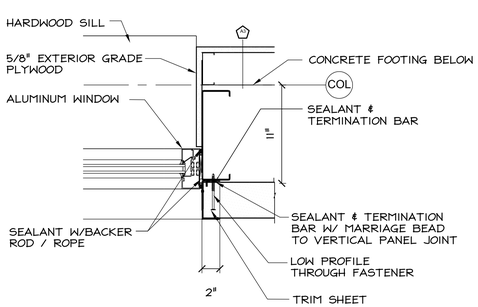

3 A910 ALUM. WINDOW JAMB DETAIL
Scale: 1 1/2" = 1'-0"

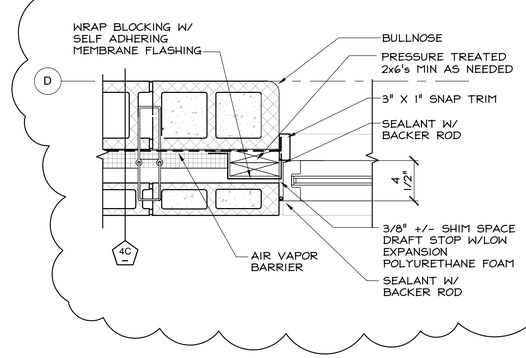

6 A910 WINDOW JAMB DETAIL
Scale: 1 1/2" = 1'-0"

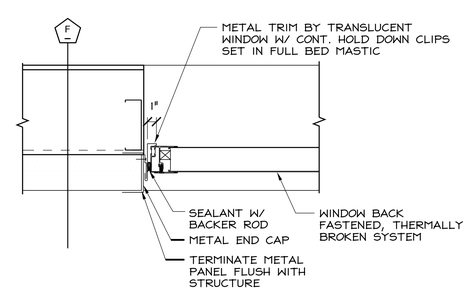

9 A910 TRANSLUCENT WINDOW JAMB
Scale: 1 1/2" = 1'-0"

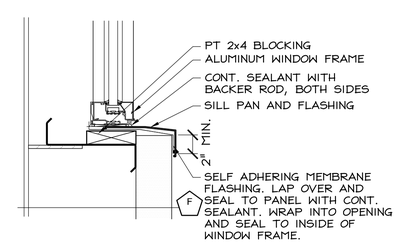

11 A910 ALUM. WINDOW SILL DETAIL
Scale: 1 1/2" = 1'-0"

This drawing is copyrighted and is subject to copyright protection as an "architectural work" under 17 U. S. C. Sec. 101 et seq. The protection includes but is not limited to the overall form as well as the arrangement and composition of spaces, materials, color and elements in the design. Under such protection, unauthorized use of this drawing may result in the cessation of construction or buildings being seized and/or monetary compensation being awarded to The Robinson Green Beretta Corporation (RGB).

Any reproduction, possession, or use of this drawing or any part thereof without the express written permission of RGB, is prohibited. Violators will be prosecuted to the full extent of the law.

© RGB 2019

Certification

Drawn by TPL
Checked by RJJ, DLD

Revised on
1 ADDENDUM 1 02/07/2020

50 Holden Street
Providence, Rhode Island 02908
Phone: (401) 272-1730
Fax: (401) 273-7156
E-mail: rgbinfo@rgb.net
www.rgb.net
RGB ARCHITECTS
Architecture · Project Management · Interior Design

Project
FORT ADAMS MAINTENANCE BUILDING
RIDEM / DIVISION OF PARKS & RECREATION

STATE OF RHODE ISLAND AND PROVIDENCE PLANTATIONS

FORT ADAMS STATE PARK, NEWPORT, RI

Drawing Status
ISSUED FOR CONSTRUCTION

Issued On MAY 29, 2019

Sheet Contents
WINDOW SCHEDULE AND DETAILS

Project Number. 6380

Drawing No.
A910

Sheet of

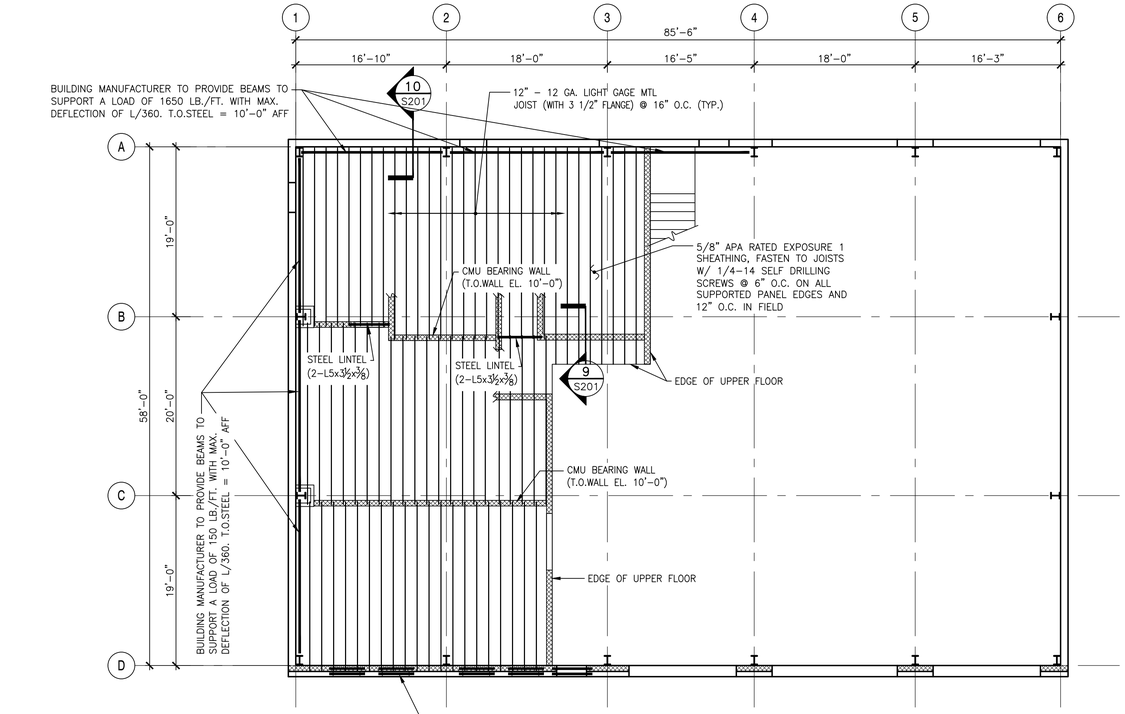

UPPER FLOOR FRAMING PLAN

SCALE: 1/8"=1'-0"

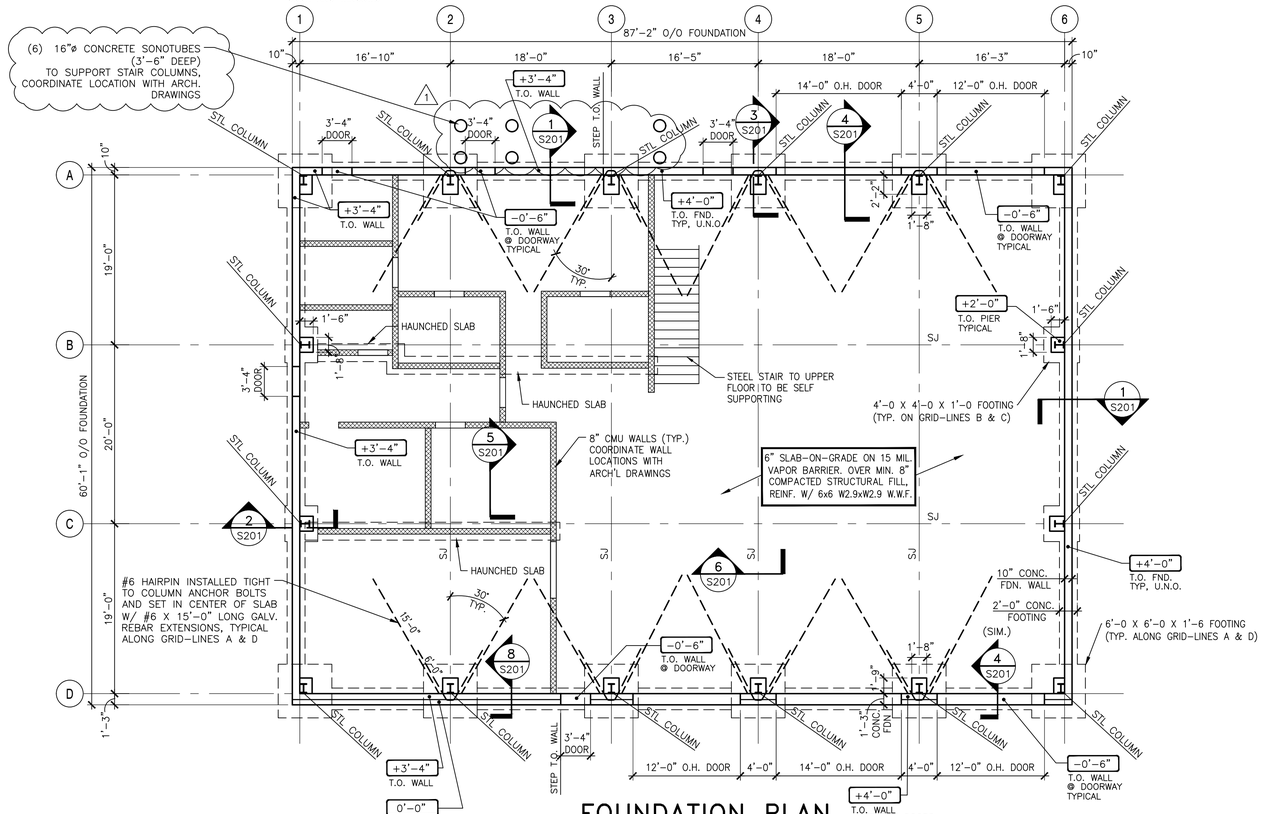

FOUNDATION PLAN

SCALE: 1/8"=1'-0"

This drawing is copyrighted and is subject to copyright protection as an "architectural work" under 17 U. S. C. Sec. 101 et seq. The protection includes but is not limited to the overall form as well as the arrangement and composition of spaces, materials, color and elements in the design. Under such protection, unauthorized use of this drawing may result in the cessation of construction or buildings being seized and/or monetary compensation being awarded to The Robinson Green Beretta Corporation (RGB).

Any reproduction, possession, or use of this drawing or any part thereof without the express written permission of RGB, is prohibited. Violators will be prosecuted to the full extent of the law.

© RGB 2018

Certification

Drawn by AG

Checked by JM

Revised on

1 ADDENDUM 1 01/17/2020

Consultants

C.A. PRETZER ASSOCIATES INC.
STRUCTURAL ENGINEERS
50 Freeway Drive
Cranston, R.I. 02930
TEL. 401-785-2690 FAX: 401-461-9360
DESIGN, CONSULTATION, INVESTIGATION

50 Holden Street
Providence, Rhode Island 02908

Phone: (401) 272-1730
Fax: (401) 273-7156

E-mail: rgbinfo@rgb.net
www.rgb.net

RGB
Architecture · Engineering · Interior Design

Project

FORT ADAMS MAINTENANCE BUILDING

RIDEM / DIVISION OF PARKS & RECREATION

STATE OF RHODE ISLAND AND PROVIDENCE PLANTATIONS

FORT ADAMS STATE PARK, NEWPORT, RI

Drawing Status

ISSUED FOR CONSTRUCTION

Issued On AUGUST 30, 2018

Sheet Contents

FOUNDATION PLAN AND UPPER FLOOR FRAMING PLAN

Project Number. 6110

Drawing No.

S101

Sheet of

SECURITY LEGEND AND ABBREVIATIONS

ABBREVIATIONS

℄	CENTER LINE
ACS	ACCESS CONTROL SYSTEM
AFF	ABOVE FINISHED FLOOR
AIC	AMPERES INTERRUPTING CAPACITY
AF/AS	AMPERE RATING OF FUSE/SWITCH
AT/AF	AMPERE RATING OF CIRCUIT, BREAKER TRIP/FRAME
A/V	AUDIO/VISUAL
BMS	BUILDING MANAGEMENT SYSTEM
CKT	CIRCUIT
CR	CARD READER
DC	DOOR CONTACT
DPDT	DOUBLE POLE DOUBLE THROW
DPST	DOUBLE POLE SINGLE THROW
(E)	EXISTING TO REMAIN
EC	ELECTRICAL CONTRACTOR
ECC	ENGINEER'S CONTROL CENTER
EL	ELECTRIC LOCK
ELEV	ELEVATOR
EMT	ELECTRICAL METALLIC TUBING
ES	ELECTRIC STRIKE
FCC	FIRE CONTROL CENTER
GC	GENERAL CONTRACTOR
GFI	GROUND FAULT INTERRUPTER
GND	GROUND
IG	ISOLATED GROUND
MCP	MOTOR CIRCUIT PROTECTOR
MIC	MINERAL INSULATED CABLE
MDF	MAIN DISTRIBUTION FRAME
MS	MAIN SWITCHBOARD
(N)	NEW
NC	NORMALLY CLOSED
NO	NORMALLY OPEN
NTS	NOT TO SCALE
OPP	OPPOSITE
PVC	POLYVINYL CHLORIDE CONDUIT
(R)	EXISTING TO BE RELOCATED
RAC	RIGID ALUMINUM CONDUIT
RSC	RIGID STEEL CONDUIT
RTE	REQUEST-TO-EXIT DEVICE
SCC	SECURITY CONTROL CENTER
SDF	SECURITY DISTRIBUTION FRAME
SPDT	SINGLE POLE DOUBLE THROW
SPST	SINGLE POLE SINGLE THROW
TBD	TO BE DETERMINED
TC	TELECOMMUNICATIONS CONTRACTOR
TEL	TELECOM
TVSS	TRANSIENT VOLTAGE SURGE SUPPRESSION
TYP	TYPICAL
UON	UNLESS OTHERWISE NOTED
UPS	UNINTERRUPTIBLE POWER SUPPLY
WP	WEATHERPROOF
WT	WATERTIGHT
(X)	EXISTING TO BE REMOVED
XP	EXPLOSION PROOF

LEGEND NOTE

THIS SHEET IS A GENERAL LIST OF SYMBOLS AND ABBREVIATIONS AND SHALL BE USED AS A DICTIONARY TO DEFINE ITEMS INDICATED ON DRAWINGS. NOT ALL SYMBOLS OR ABBREVIATIONS ARE NECESSARILY USED ON THIS PROJECT.

SECURITY LEGEND

C	FIXED CEILING MOUNT CCTV CAMERA (1) CAT 6 CABLE IN 1" CONDUIT TO MDF
EXT 270	FIXED CCTV CAMERA (1) CAT 6 CABLE IN 1" CONDUIT TO NEAREST MDF
IC S	INTERCOM = AIPHONE SUBSTATION
IC M	INTERCOM = AIPHONE MASTER STATION
DC	MAGNETIC DOOR CONTACT
REX	REQUEST TO EXIT DEVICE
M	MOTION SENSOR (ARROW INDICATES COVERAGE AREA)
WS	WORKSTATION
CR	CARD READER
EL	ELECTRIC LOCK
JB	JUNCTION BOX

GENERAL NOTES

1. LOCATION OF ALL SECURITY DEVICES AND OTHER SECURITY COMPONENTS OUTSIDE OF TELECOMMUNICATIONS/SECURITY ROOMS ARE APPROXIMATE AND SUBJECT TO CHANGE. SEE ARCHITECTURAL DRAWINGS FOR EXACT DETAILS.
2. PROVIDE FIRE STOPPING FOR ALL SLEEVE, CONDUIT AND CABLE TRAY PENETRATIONS THROUGH RATED PARTITIONS OR FLOORS IN ACCORDANCE WITH THE CODE AND SPECIFICATIONS.
3. ALL WALL MOUNTED DEVICES TO BE WIRED VIA 1" I.D. RIGID METAL CONDUIT (PROVIDED UNDER ELECTRICAL CONTRACT) WITHIN WALL TO THE NEAREST ACCESSIBLE CEILING. UON.
4. ANY ELECTRICAL AND MECHANICAL DEVICES SHOWN ON THESE DRAWINGS ARE FOR REFERENCE PURPOSES ONLY, UON. SEE MEP DRAWINGS FOR DETAILS AND LOCATION OF ALL SUCH EQUIPMENT.
5. GROUND ALL EQUIPMENT RACKS, FRAMES, CABLE TRAYS, CABLE LADDERS AND OTHER PERMANENT SUPPORTS WITH #6 AWG (MIN), STRANDED, GREEN, INSULATED, COPPER WIRE AND SCREW COMPRESSION LUGS.
6. LABEL ALL CLOSETS, RACKS, CABINETS, CABLES, CABLE SUPPORTS, ETC. IN ACCORDANCE WITH ANSI/TIA/EIA-606-A.
7. ALL SECURITY DEVICES ARE TO BE U.L. LISTED. CABLES FOR DEVICES ARE TO BE WIRED TO THE SAME CLOSET THAT SERVES THE REST OF THE FLOOR.
8. WRITTEN SPECIFICATIONS ARE PART OF THIS DOCUMENT SET INCLUDING SECURITY, ELECTRICAL AND TELECOMMUNICATION LOW VOLTAGE. REFER TO DRAWINGS AND SPECIFICATIONS ON SHEET TY002.

RACEWAY LEGEND

	CONDUIT CONCEALED ABOVE CEILING OR WITHIN WALL
	CONDUIT BELOW GRADE OR EMBEDDED WITHIN SLAB
	CONDUIT UP
	CONDUIT DOWN
	CONDUIT STUBBED OUT WITH BUSHING NOTE: PROVIDE PULLSTRING IN EACH EMPTY RACEWAY
	CONDUIT STUBBED OUT AND CAPPED NOTE: PROVIDE PULLSTRING IN EACH EMPTY RACEWAY
AV	AUDIO/VISUAL SYSTEM RACEWAY
CT	CABLE TRAY
G	GROUNDING SYSTEM RACEWAY
FA	FIRE ALARM SYSTEM RACEWAY
S	SECURITY SYSTEM RACEWAY NOTE: PROVIDE PULLSTRING IN EACH EMPTY RACEWAY
T	TELECOM SYSTEM RACEWAY NOTE: PROVIDE PULLSTRING IN EACH EMPTY RACEWAY
TV	TELEVISION SYSTEM RACEWAY NOTE: PROVIDE PULLSTRING IN EACH EMPTY RACEWAY
	CONDUIT HOMERUN, MAXIMUM OF (3) BRANCH CIRCUITS, UON NOTE: MAXIMUM OF THREE BRANCH CIRCUITS FOR EACH HOMERUN, UON

SECURITY NOTES

1. THE DRAWINGS AND SPECIFICATIONS INDICATE THE INTENT OF THE DESIGN AND SHALL BE CONSIDERED AS DIAGRAMMATIC ONLY. EXACT LOCATIONS FOR SECURITY DEVICES AND EQUIPMENT SHALL BE DETERMINED AT THE SITE BY THE SECURITY VENDOR. AS WORK PROGRESSES, DIMENSIONS AND CONDITIONS SHALL BE CHECKED AND VERIFIED BY THE CONTRACTOR AT THE SITE.
2. REFER TO SECURITY SPECIFICATIONS SHEET TY100.
3. USE ONLY PRODUCTS LISTED FOR THEIR INTENDED USE BY A NATIONALLY RECOGNIZED TESTING LABORATORY (NRTL), EXCEPT THOSE TYPES OF PRODUCTS FOR WHICH NO RELEVANT STANDARDS EXIST.
4. PROVIDE FIRE STOPPING FOR ALL SLEEVE, CONDUIT AND CABLE TRAY PENETRATIONS THROUGH RATED PARTITIONS OR FLOORS IN ACCORDANCE WITH THE CODE AND SPECIFICATIONS.
5. WALL MOUNTED DEVICES SHALL BE WIRED VIA 1" RIGID METAL CONDUIT WITHIN WALL TO THE NEAREST ACCESSIBLE CEILING UNLESS OTHERWISE SPECIFIED.
6. ALL CONDUITS, BACK BOXES AND PLASTER RINGS WILL BE PROVIDED BY THE ELECTRICAL CONTRACTOR. SECURITY CONTRACTOR SHALL COORDINATE AND VERIFY THE DEVICE LOCATIONS BY REFERRING TO THE ARCHITECTURAL DRAWINGS AND DETAILS.
7. ELECTRICAL AND MECHANICAL DEVICES SHOWN ON THESE DRAWINGS ARE FOR REFERENCE PURPOSES ONLY UNLESS OTHERWISE SPECIFIED. SEE MEP DRAWINGS FOR DETAILS AND LOCATION OF ALL SUCH EQUIPMENT.
8. GROUND ALL EQUIPMENT RACKS, FRAMES, CABLE TRAYS, CABLE LADDERS AND OTHER PERMANENT SUPPORTS WITH #6 AWG (MIN), STRANDED, GREEN, INSULATED, COPPER WIRE AND MECHANICAL COMPRESSION LUGS.
9. LABEL ALL CLOSETS, RACKS, CABINETS, CABLES, CABLE SUPPORTS, ETC. IN ACCORDANCE WITH ANSI/TIA/EIA-606-A.
10. SECURITY DEVICES SHALL BE U.L. LISTED. CABLES FOR DEVICES SHALL BE WIRED TO THE SAME CLOSET THAT SERVES THE REST OF THE FLOOR.
11. MOUNTING HEIGHTS SHALL BE AS INDICATED ON ARCHITECTURAL DRAWINGS.

This drawing is copyrighted and is subject to copyright protection as an "architectural work" under 17 U. S. C. Sec. 101 et seq. The protection includes but is not limited to the overall form as well as the arrangement and composition of spaces, materials, color and elements in the design. Under such protection, unauthorized use of this drawing may result in the cessation of construction or buildings being seized and/or monetary compensation being awarded to The Robinson Green Beretta Corporation (RGB).

Any reproduction, possession, or use of this drawing or any part thereof without the express written permission of RGB, is prohibited. Violators will be prosecuted to the full extent of the law.

© RGB 2017

Certification

MARC R. PLANTE
No. 6397
REGISTERED PROFESSIONAL ENGINEER ELECTRICAL

Drawn by

Checked by

Revised on

B|E|R
BUILDING ENGINEERING RESOURCES, INC.
66 Main Street
N. Easton, MA 02356
T 508.230.0260
F 508.230.0265
ber@ber-engineering.com
100 Midway Road - Suite 23
Cranston, RI 02920
T 401.942.3500
F 401.228.6205
www.ber-engineering.com

50 Holden Street
Providence, Rhode Island 02908

Phone: (401) 272-1730
Fax: (401) 273-7156

E-mail: rgbinfo@rgb.net
www.rgb.net

RGB architects

Architecture · Project Management · Interior Design

Project

FORT ADAMS MAINTENANCE BUILDING

RIDEM / DIVISION OF PARKS & RECREATION

STATE OF RHODE ISLAND AND PROVIDENCE PLANTATIONS

FORT ADAMS STATE PARK, NEWPORT, RI

Drawing Status

ISSUED FOR CONSTRUCTION

Issued On APRIL 01, 2019

Sheet Contents

SECURITY LEGEND, AND NOTES

Project Number.

Drawing No.

TY001

Sheet of

SECURITY SPECIFICATION

1. GENERAL

A. THE WORK COVERED CONSISTS OF:

FURNISHING ALL LABOR AND MATERIALS NECESSARY TO INSTALL, COMPLETE AND READY FOR CONTINUOUS OPERATION, THE CCTV SYSTEM, INTRUSION DETECTION SYSTEM AND ACCESS CONTROL SYSTEM FOR THE SIMMONS COLLEGE BEATLEY LIBRARY RENOVATION PROJECT.

B. SHOP DRAWINGS OF ALL SPECIFIED FIXTURES, EQUIPMENT AND APPARATUS SHALL BE SUBMITTED TO THE ENGINEER FOR APPROVAL.

C. CODES: ALL EQUIPMENT AND MATERIALS FURNISHED UNDER THE SECURITY SUBCONTRACTS AND LABOR PERFORMED HEREIN SHALL BE IN COMPLETE ACCORDANCE WITH THE MASSACHUSETTS STATE BUILDING, THE CITY OF CAMBRIDGE, NATIONAL FIRE PROTECTION ASSOCIATION, ANSI/EIA/TIA STANDARDS AND INSURANCE REGULATIONS AND REQUIREMENTS GOVERNING SUCH WORK.

D. PERMITS, CERTIFICATIONS, REVIEWS, APPROVALS: ANY AND ALL PERMITS, CERTIFICATIONS, REVIEWS OR APPROVALS REQUIRED FOR INSTALLATION OF ANY MATERIAL OR SYSTEM SHALL BE OBTAINED AS PART OF THE WORK OF THE SPECIFICATION INCLUDING ALL FEES OR EXPENSES INCURRED.

E. GUARANTEE: ALL MATERIALS AND EQUIPMENT FURNISHED AND INSTALLED SHALL BE GUARANTEED IN WRITING FOR ONE YEAR FROM THE DATE OF ACCEPTANCE OF THE BUILDING BY THE OWNER.

F. RECORD DRAWINGS: THE SECURITY SUBCONTRACTOR SHALL MAINTAIN AT THE JOB, AT ALL TIMES, A COMPLETE AND SEPARATE SET OF BLACK LINE PRINTS OF THE SECURITY DRAWINGS OF HIS TRADE ON WHICH HE SHALL MARK CLEARLY, NEATLY, ACCURATELY AND PROMPTLY AS THE WORK PROGRESSES. SEPIA REPRODUCIBLE "AS-BUILTS" SHALL BE FURNISHED BY THE SECURITY SUBCONTRACTOR AT THE JOB COMPLETION.

G. INSPECTION: ALL WORK SHALL BE SUBJECT TO THE INSPECTION OF THE OWNER, THE ENGINEER AND SUCH OTHER INSPECTORS HAVING JURISDICTION. A PROPERLY EXECUTED CERTIFICATE OF INSPECTION SHALL BE PROVIDED.

H. TESTS: THE SECURITY SUBCONTRACTOR SHALL PERFORM ALL TESTS AT THE COMPLETION OF THE WORK AND THE RESULTS FURNISHED TO THE OWNER AND ENGINEER IN WRITING.

I. UPON COMPLETION OF ALL WORK, THE SECURITY SUBCONTRACTOR SHALL FURNISH, IN DUPLICATE, CERTIFICATES OF INSPECTIONS FROM ALL INSPECTORS AND AUTHORITIES HAVING JURISDICTION.

J. CONTINUITY OF SERVICE AND SCHEDULING OF WORK

1) CONTINUITY OF ALL SERVICES SHALL BE MAINTAINED IN ALL AREAS, WHICH WILL BE OCCUPIED OR TEMPORARILY RELOCATED DURING THE CONSTRUCTION PERIOD. IF AN INTERRUPTION OF SERVICE BECOMES NECESSARY, SUCH SHALL BE SCHEDULED IN ADVANCED, MADE ONLY UPON CONSENT OF OWNER SECURITY AND AT A TIME OUTSIDE NORMAL WORKING HOURS AS THEY SHALL DESIGNATE.

2) REFER TO THE OVERALL SCHEDULING OF THE WORK OF THE PROJECT. SCHEDULE WORK, PROCESS SUBMITTALS AND ORDER MATERIALS AND EQUIPMENT TO CONFORM TO THIS SCHEDULE AND INSTALL WORK TO NOT DELAY NOR INTERFERE WITH THE PROGRESS OF THE PROJECT.

3) INFORM CONSTRUCTION MANAGER AND ENGINEER IMMEDIATELY OF ANY DELAYS OR POTENTIAL DELAYS. FURNISH MANUFACTURE'S LETTER TO VERIFY ORDER DATE, EQUIPMENT DELAYS, EXPECTED SHIPMENT DATE, ORDER NUMBER, AND POTENTIAL REMEDIES TO SPEED UP DELIVERY. ANY COSTS TO SPEED UP DELIVERY SHALL BE IMPLEMENTED AT NO COST TO THE PROJECT IF THE EQUIPMENT OR MATERIALS WAS NOT ORDERED AS SOON AS POSSIBLE AFTER CONTRACT AWARD OR WITHIN THE TIME FRAMES INDICATED WITH THE SUBMITTALS.

4) INCLUDE PREMIUM TIME REQUIRED TO COMPLY WITH THE PROJECT SCHEDULING AND PHASING.

5) BE AWARE OF, AND PLAN FOR, PROJECT SCHEDULING AND PHASING. PROVIDE FOR COMPLETE CONTINUOUS OPERATION OF ALL SYSTEMS. COORDINATE SCHEDULING AND PHASING WITH THE ENGINEER, OWNER, OTHER TRADES AND THE CONSTRUCTION MANAGER.

2. SCOPE

A. THE WORK OF THIS SECTION CONSISTS OF ALL LABOR, MATERIALS AND SUPPORT EQUIPMENT AS INDICATED. CONTRACTOR IS REQUIRED TO PROVIDE ALL SECURITY WORK, NOT SPECIFICALLY DESCRIBED IN OTHER TRADES. COMPLETE ALL WORK AS SHOWN ON THE DRAWINGS, SPECIFIED HEREIN AND AS NECESSARY FOR A PROPER INSTALLATION.

B. PROVIDE PROX/SEOS CARD READERS, CONCEALED DOOR POSITION SWITCHES AND REQUEST-TO-EXIT MOTION SENSORS AS INDICATED ON THE SECURITY DEVICE DRAWINGS.

C. DOOR CONTACTS SHALL BE WIRED TO BOTH THE DMP INTRUSION PANEL AND THE ACCESS CONTROL PANEL SIMULTANEOUSLY VIA A DPDT DOOR CONTACTS.

D. PROVIDE MANUFACTURES RECOMMENDED POWER SUPPLIES AS REQUIRED. THE POWER SUPPLIES SHALL BE UL CLASS II, POWER LIMITED AND SHALL PROVIDE NECESSARY OUTPUT VOLTAGES TO ALLOW THE CARD READERS TO OPERATE AT MAXIMUM SPECIFIED READ RANGE.

3. ALL CARD READERS SHALL MEET THE FOLLOWING REQUIREMENTS:

A. THE CARD READER SHALL BE PROXIMITY AND SEOS TECHNOLOGY AND SHALL READ ENCODED DATA FROM ACCESS CARDS AND TRANSMIT THE DATA TO THE DATA GATHERING PANEL. THE OPERATING FREQUENCY SHALL MEET ALL LOCAL REGULATIONS.

B. A TWO-COLOR LED AND AN AUDIBLE TONE SHALL INDICATE AUTHORIZED AND UNAUTHORIZED READER USES. OPERATION OF LEDS, AND AUDIBLE TONES SHALL BE CONSISTENT THROUGHOUT.

C. THE CARD READER SHALL BE CAPABLE OF MOUNTING DIRECTLY TO A METAL SURFACE.

D. THE CARD READER AND BIT PATTERN SHALL NOT BE PROPRIETARY TO A SINGLE CONTRACTOR OR SMS MANUFACTURER.

4. WALL MOUNTED PROXIMITY CARD READER

A. SHALL BE SPECIFICALLY DESIGNED FOR FLUSH MOUNTING TO THE WALL USING A DOUBLE GANG ELECTRICAL BOX WITH A SINGLE GANG DEVICE RING.

B. THE WALL MOUNTED CARD READER SHALL HAVE A MINIMUM READ RANGE OF 3 INCHES.

C. ACCEPTABLE MANUFACTURERS:

1) HUGHES IDENTIFICATION DEVICES (HID) ICLASS/SEOS OR APPROVED EQUAL

5. REQUEST-TO-EXIT MOTION SENSOR.

A. MINIMUM SPECIFICATIONS:

1) DETECTION TECHNOLOGY PASSIVE INFRARED

2) DETECTION PATTERN ADJUSTABLE TO PROVIDE COVERAGE OF IMMEDIATE DOOR AREA.

3) OUTPUT CONTACT NORMALLY OPEN CONTACT THAT CLOSES MOMENTARILY (ONE SECOND OR LESS) WHEN SENSOR IS ACTIVATED

4) POWER REQUIREMENTS 12-24 VDC

5) MOUNTING SURFACE MOUNT TO WALL OR CEILING B. PROVIDE A MANUFACTURER RECOMMENDED POWER SUPPLY. THE POWER SUPPLY SHALL BE UL CLASS II, POWER LIMITED.

B. ACCEPTABLE MANUFACTURERS:

1) DETECTION SYSTEMS INC.
2) KANTECH
3) PULNIX
4) OR APPROVED EQUAL

6. ELECTRIC LOCKING MECHANISM POWER SUPPLY.

A. MINIMUM SPECIFICATIONS:

1) TYPE UL LISTED CLASS II POWER LIMITED
2) INPUT VOLTAGE 120 VAC
3) OUTPUT VOLTAGE 24 VDC
4) OUTPUT CONNECTIONS INDIVIDUALLY FUSED OUTPUTS TO EACH LOCK
5) OUTPUT RATING 150 PERCENT OF THE ACTUAL CONNECTED LOAD
6) ALARM OUTPUT POWER FAIL
7) ENCLOSURE STEEL ENCLOSURE WITH INTEGRAL LOCK AND TAMPER SWITCH

B. ACCEPTABLE MANUFACTURERS:

1) ALARM-SAF
2) ALTRONIX
3) DOORTRONICS
4) OR APPROVED EQUAL

7. CONCEALED DOOR POSITION SWITCH.

A. MINIMUM SPECIFICATIONS:

1) GAP 1/2 INCH BETWEEN THE MAGNET AND SWITCH
2) CONFIGURATION NORMALLY CLOSED WHEN THE DOOR IS CLOSED
3) SECURITY BIASED
4) MOUNTING AS RECOMMENDED BY THE DOOR POSITION SWITCH MANUFACTURER
5) DPDT

B. ACCEPTABLE MANUFACTURERS:

1) SENTROL
2) ADEMCO
3) GEORGE RISK INDUSTRIES (GRI)
4) OR APPROVED EQUAL

8. ACCESS CONTROL/INTRUSION WIRE MINIMUM SPECIFICATIONS:

A. ALL WIRE AND CABLE SHALL BE UNDERWRITER'S LABORATORIES (UL) APPROVED FOR ITS INTENDED APPLICATION, SHALL MEET ALL NATIONAL, STATE AND LOCAL CODE REQUIREMENTS FOR ITS APPLICATION, AND SHALL MEET OR EXCEED MANUFACTURERS' RECOMMENDATIONS FOR THE COMPONENTS CONNECTED. PROVIDE PLENUM-RATED CABLE AS REQUIRED BY CODE.

B. ALL WIRE AND CABLE SHALL MEET INDIVIDUAL SYSTEM OR SUBSYSTEM MANUFACTURER SPECIFICATIONS.

C. ALL INSULATED WIRE AND CABLE SHALL CONFORM TO THE MINIMUM REQUIREMENTS OF INSULATED CABLE ENGINEERS

D. ASSOCIATION (ICEA) STANDARDS. WIRE AND CABLE SHALL COMPLY WITH THE APPLICABLE REQUIREMENTS OF THE NATIONAL ELECTRICAL CODE (NEC),

E. LATEST EDITION, IN REGARDS TO CABLE CONSTRUCTION AND USAGE. THE CONDUCTORS OF WIRES SHALL BE COPPER, AND HAVE CONDUCTIVITY IN ACCORDANCE WITH THE STANDARDIZATION

F. RULES OF THE INSTITUTE OF ELECTRICAL AND ELECTRONICS ENGINEERS, INC. (IEEE). THE CONDUCTOR AND EACH STRAND SHALL BE ROUND AND FREE OF KINKS AND DEFECTS. INSULATION SHALL BE RATED FOR A MINIMUM OF 300 V.

G. COLOR CODING SHALL BE ACCOMPLISHED BY USING SOLIDLY COLORED INSULATION. GROUNDING CONDUCTORS, WHERE INSULATED, SHALL BE COLORED SOLID GREEN OR IDENTIFIED WITH GREEN COLOR AS REQUIRED BY THE NATIONAL ELECTRIC CODE (NEC).

H. MINIMUM WIRE TYPES AND SIZES:

1) LOW VOLTAGE POWER CABLE: WIRE SIZE SHALL BE A MINIMUM OF 18 AWG, TWISTED, STRANDED, INSULATED AND JACKETED

2) CONTROL POINT CABLE (NON-POWER): WIRE SIZE SHALL BE A MINIMUM OF 20 AWG, TWISTED, STRANDED, INSULATED AND JACKETED

3) CONTROL POINT CABLE (LOW VOLTAGE POWER): WIRE SIZE SHALL BE A MINIMUM OF 18 AWG, STRANDED, INSULATED, AND JACKETED

4) ALL CABLE CARRYING DATA OR VOICE TRANSMISSIONS SHALL BE SHIELDED, ALL OTHER CABLE SHALL BE SHIELDED WHERE NECESSARY TO GUARANTEE INTERFERENCE-FREE SIGNALS

5) CATEGORY 6 205MHZ FOR ALL CAMERAS.

I. ACCEPTABLE MANUFACTURERS:

1) AT&T
2) BELDEN
3) WEST PENN WIRE
4) OR APPROVED EQUAL

9. DATA GATHERING PANEL

A. THE DATA GATHERING PANEL SHALL PROVIDE THE FOLLOWING:

1) AN INTELLIGENT INTERFACE BETWEEN CARD READERS AND THE FILE SERVER UTILIZING DISTRIBUTED PROCESSING TECHNOLOGY.

2) SIMULTANEOUS SUPPORT OF A MINIMUM OF TWO ACCESS CARD FACILITY CODES AND BIT-FORMATS. THE DATA GATHERING PANEL SHALL GRANT ACCESS THROUGH CARD READER CONTROLLED DEVICES BASED ON CARDHOLDER ACCESS LEVEL, ACCESS CARD FACILITY CODE, AND ACCESS CARD NUMBER.

3) SUPERVISED ALARM INPUTS TO MONITOR THE STATUS OF ALARM CIRCUITS AND REPORT THE STATUS INFORMATION TO THE SMS FILE SERVER. SUPERVISION OF ALL WIRING BETWEEN THE DATA GATHERING PANEL AND THE MONITORED ALARM DEVICES SHALL MEET UL 1076 GUIDELINES FOR 4-STATE SUPERVISION.

4) CONTROL RELAY OUTPUTS FOR CONTROLLING DEVICES BY REMOTE COMMAND FROM THE SYSTEM WORKSTATION, THROUGH TIME PROGRAMMING OR ON ALARM POINT ACTIVATION. OUTPUTS SHALL BE RATED FOR A MINIMUM OF 2A AT 24VDC.

5) SUPERVISION AND MONITORING OF ALL WIRING BETWEEN THE DATA GATHERING PANEL AND THE MONITORED ALARM DEVICES FOR SECURE, ALARM, AND FAULT CONDITIONS. SUPERVISION SHALL MEET UL 1076 GUIDELINES.

6) ADEQUATE RAM TO MAINTAIN A MINIMUM CARD DATABASE OF 10,000 CARDS INCLUDING ACCESS LEVELS AND TIME ZONES.

7) ETHERNET COMMUNICATIONS BETWEEN DATA GATHERING PANELS AND THE FILE SERVER.
COMMUNICATION FAILURE WITHIN THE DATA GATHERING PANEL TO PREVENT COMMUNICATION TO OTHER DATA GATHERING PANELS IN THE LOOP FROM BEING INTERRUPTED.

8) AUTOMATIC DISCONNECTION FROM THE COMMUNICATION LOOP UPON A

9) INTRUSION ALARM INDICATION ON THE SYSTEM WORKSTATION IF A CARD READER CONTROLLED DOOR IS OPENED WITHOUT AN AUTHORIZED CARD USE OR REQUEST TO EXIT SIGNAL.

10) A DOOR PROP ALARM INDICATION ON THE SYSTEM WORKSTATION IF THE CARD READER CONTROLLED DOOR IS PROPPED OPEN PAST AN ADJUSTABLE TIME PERIOD AFTER AN AUTHORIZED CARD USE OR REQUEST TO EXIT. THE DOOR PROP TIME DELAY SHALL BE ADJUSTABLE FROM THE SYSTEM WORKSTATION FROM ONE TO 60 SECONDS ON A PER READER BASIS.

11) EACH DATA GATHERING PANEL SHALL INCLUDE ONE SPARE CARD READER INPUT POINT AND 20 PERCENT SPARE ALARM INPUT POINTS AND OUTPUT POINTS AFTER ALL SPECIFIED POINTS ARE INITIALLY CONNECTED.

12) A LOCKING STEEL ENCLOSURE DESIGNED FOR SURFACE MOUNTING. PROVIDE A TAMPER SWITCH TO SENSE THE REMOVAL OR OPENING OF THE ENCLOSURE COVER. PROVIDE ANY CONDUIT REQUIRED FROM THE DATA GATHERING PANEL TO POWER SUPPLIES, JUNCTION BOXED OR WIREWAYS. ALL DATA GATHERING PANELS SHALL BE KEYED ALIKE AND SHALL BE ON THE SAME KEY AS ALL SECURITY SYSTEM POWER SUPPLIES AND POWER DISTRIBUTION CABINETS.

13). UPON LOSS OF COMMUNICATION WITH THE FILE SERVER, THE DATA GATHERING PANEL SHALL CONTAIN ENOUGH RAM TO OPERATE NORMALLY. IN ADDITION, THE DATA GATHERING PANEL SHALL STORE UP TO 10,000 CARD TRANSACTIONS AND UP TO 16 EVENTS PER POTENTIAL ALARM INPUT, AND TRANSMIT THAT DATA TO THE FILE SERVER AS SOON AS COMMUNICATION IS RESTORED.

14). UPON VERIFICATION OF CARD AUTHORIZATION OR REQUEST TO EXIT THE DATA GATHERING PANEL SHALL ACTIVATE A DOOR CONTROL RELAY OUTPUT AND SHUNT THE INTRUSION ALARM. THE LOCK CONTROL OUTPUT CONTACTS SHALL BE RATED FOR 2 A @ 24 VDC. RELAY ACTIVATION TIME SHALL BE ADJUSTABLE FROM THE SYSTEM WORKSTATION FROM ONE TO 30 SECONDS ON A PER READER BASIS. THE DOOR SHALL AUTOMATICALLY RELOCK UPON CLOSURE.

15). TRANSACTION TIME FOR AUTHORIZED CARDS SHALL BE LESS THAN 0.5 SECONDS FROM THE TIME OF CARD READ UNTIL THE DOOR IS UNLOCKED.

16). ALL ALARM AND CONTROL POINTS AS WELL AS CARD READER INPUTS, SHALL BE CAPABLE OF INDEPENDENT TIME PROGRAMMING VIA SOFTWARE CONTROLS FROM THE SYSTEM FILE SERVER.

17). DATA GATHERING PANEL POWER SUPPLY SHALL BE DEDICATED TO DATA GATHERING PANELS AND SHALL NOT PROVIDE POWER FOR LOCKS OR ANY OTHER LOW VOLTAGE DEVICE.

18). ACCEPTABLE MANUFACTURER GENETEC /HID V1000 ONLY.

19). PROVIDE SEOS ID MOBILE APPLICATIONS INTERFACE AS REQUIRED BY THE OWNER.

20). PROVIDE 200 KEY FOBS PROVIDED CREDENTIALS AND 200 MULTI CLASS AND THE SEOS ID MOBILE APPLICATION. PROVIDE ALL PROGRAMMING. COORDINATE WITH THE OWNER.

21). GENETEC ACCESS CONTROL ONLY.

B. NETWORK VIDEO RECORDER AND SOFTWARE.

1). PROVIDE GENETEC STREAM VAULT 100 WITH OMNICAST IP STANDARD VIDEO SURVEILLANCE AND ACCESS CONTROL MODULE.

2). THE STREAMVAULT 100 SHALL:

A. WINDOWS 10 ENTERPRISE LTSB
B. 8GB DDR4 RAM
C. 1 GIG ETHERNET PORT
D. 2 TB INTERNAL STORAGE
E. 1 DISPLAY PORT
F. 1 HDMI PORT

3). VIDEO RETENTION SHALL BE 30 DAYS AT 15 FPS WITH 50% MOTION.

C. FIXED CCTV CAMERA

A. MINIMUM SPECIFICATIONS:

1) IMAGE DEVICE: 1/4" FORMAT, PROGRESSIVE SCAN RGB CMOS

2) RESOLUTION - 3MP

3) SENSITIVITY: FULL VIDEO - .1 FC WITH F/1.4 LENS, 75% SCENE ILLUMINATION, AGC OFF

4) VIDEO OUTPUT - RJ-45, TERMINAL BLOCK FOR (1) INPUT AND 3.5 mm AUDIO OUTPUT

5) LENS MOUNT - CMOS VARI-FOCAL

6) ELECTRONIC SHUTTER - 1/25000 S TO 1/6 S

7) POWER REQUIREMENTS - POE IEEE 802.3AF

8) ACCEPTABLE MANUFACTURERS:

a. AXIS
b. SONY
c. OR APPROVED EQUAL

D. 270° CCTV CAMERA

A. MINIMUM SPECIFICATIONS:

1) 270° 5MP WALL PENDANT EXTERIOR

2) IMAGE DEVICE - 1/3 2" INCH COLOR HAD PROGRESSIVE SCAN CCD

3) VIDEO OUTPUT - RJ45

4) LENS 1.27MM F2.0 FIXED IRIS IR CORRECTED.

5) WHITE BALANCE - AUTOMATIC TRACKING

6) POWER REQUIREMENTS - HIGH POWER OVER ETHERNET IEEE 802.3AT 30 WATTS MAX. PROVIDE HIGH POE MIDSPAN INJECTOR WITH EACH CAMERA

7) ACCEPTABLE MANUFACTURERS:

a. AXIS M3037-- PVE 270° EXTERIOR CAMERA
b. OR APPROVED EQUAL

E. INTRUSION DETECTION PANEL

A. MINIMUM SPECIFICATIONS:

1) PROVIDE DMP INTRUSION DETECTION PANEL.

2) PROVIDE DMP KEYPADS WITH ALPHA NUMERIC DISPLAYS

3) PROVIDE AUDIBLE CLASS BREAK SENSORS AS INDICATED.

4) PROVIDE INFRARED MOTION SENSORS AS INDICATED.

5) PROGRAM SYSTEM WITH OWNER INPUT.

This drawing is copyrighted and is subject to copyright protection as an "architectural work" under 17 U. S. C. Sec. 101 et seq. The protection includes but is not limited to the overall form as well as the arrangement and composition of spaces, materials, color and elements in the design. Under such protection, unauthorized use of this drawing may result in the cessation of construction or buildings being seized and/or monetary compensation being awarded to The Robinson Green Beretta Corporation (RGB).

Any reproduction, possession, or use of this drawing or any part thereof without the express written permission of RGB, is prohibited. Violators will be prosecuted to the full extent of the law.

© RGB 2017

Certification

MARC R. PLANTE
No. 6397
REGISTERED PROFESSIONAL ENGINEER ELECTRICAL

Drawn by

Checked by

Revised on

B|E|R
BUILDING ENGINEERING RESOURCES, INC.
66 Main Street
N. Easton, MA 02356
T 508.230.0260
F 508.230.0265
100 Midway Road - Suite 23
Cranston, RI 02920
T 401.942.3500
F 401.228.6205
ber@ber-engineering.com
www.ber-engineering.com

50 Holden Street
Providence, Rhode Island 02908
Phone: (401) 272-1730
Fax: (401) 273-7156
E-mail: rgbinfo@rgb.net
www.rgb.net
RGB architects
Architecture · Project Management · Interior Design

Project

FORT ADAMS MAINTENANCE BUILDING

RIDEM / DIVISION OF PARKS & RECREATION

STATE OF RHODE ISLAND AND PROVIDENCE PLANTATIONS

FORT ADAMS STATE PARK, NEWPORT, RI

Drawing Status

ISSUED FOR CONSTRUCTION

Issued On APRIL 01, 2019

Sheet Contents

SPECIFICATIONS

Project Number.

Drawing No.

TY002

Sheet of

KEY NOTES:

1. PROVIDE GENETEC CLIENT SOFTWARE FOR CARD ACCESS AND INTEGRATED VIDEO SURVEILLANCE. PROVIDE MANUFACTURER SPECIFIED COMPUTER, 22" HD MONITOR, KEYBOARD AND MOUSE. PROGRAM ALL CAMERAS AND CARD ACCESS FOR COMPLETE OPERATIONAL SYSTEM.

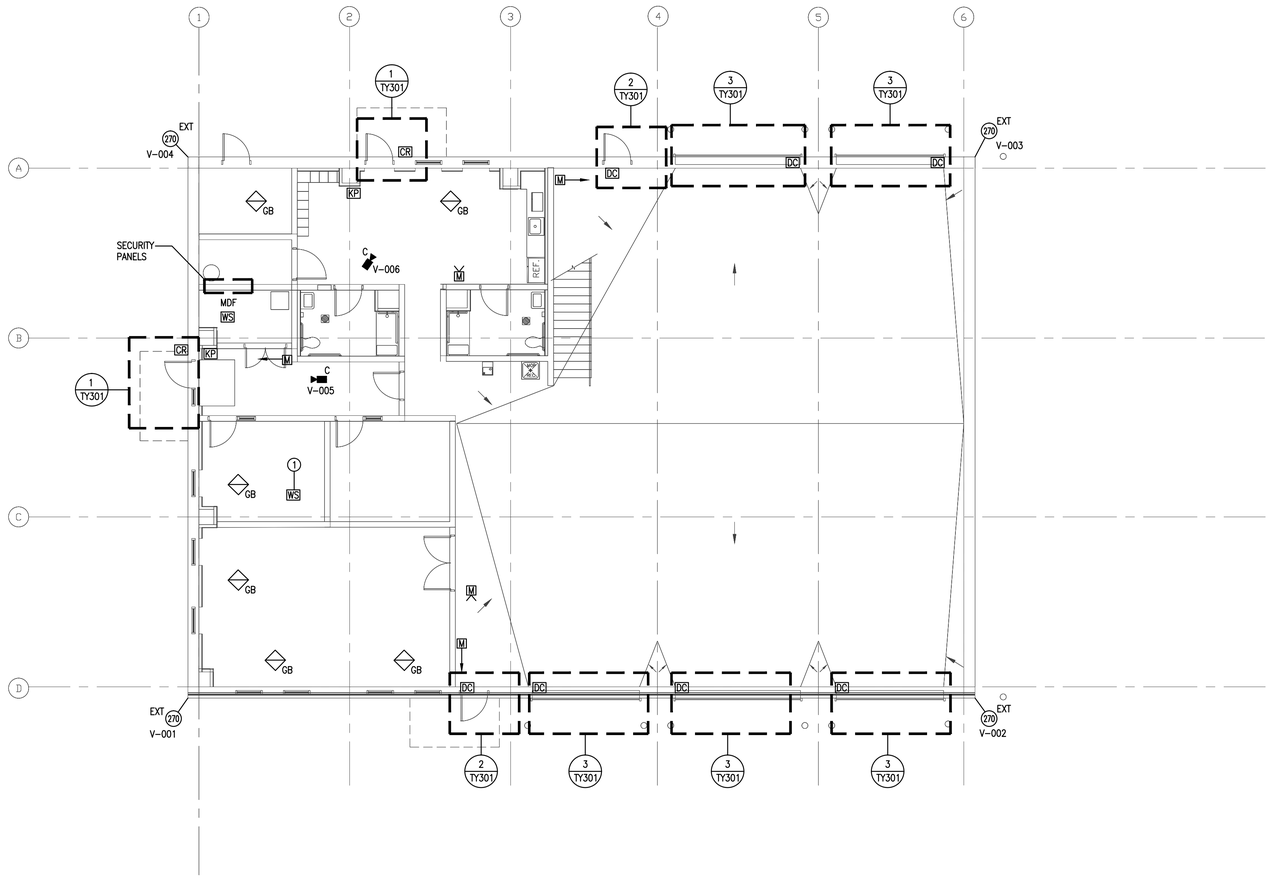

NORTH

2 / A100 FLOOR PLAN

Scale: 1/8" = 1'-0"

0 4' 8' 16'

SCALE: 1/8" = 1'-0"

This drawing is copyrighted and is subject to copyright protection as an "architectural work" under 17 U. S. C. Sec. 101 et seq. The protection includes but is not limited to the overall form as well as the arrangement and composition of spaces, materials, color and elements in the design. Under such protection, unauthorized use of this drawing may result in the cessation of construction or buildings being seized and/or monetary compensation being awarded to The Robinson Green Beretta Corporation (RGB).

Any reproduction, possession, or use of this drawing or any part thereof without the express written permission of RGB, is prohibited. Violators will be prosecuted to the full extent of the law.

© RGB 2017

Certification

MARC R. PLANTE
No. 6397
REGISTERED PROFESSIONAL ENGINEER ELECTRICAL

Drawn by

Checked by

Revised on

B|E|R
BUILDING ENGINEERING RESOURCES, INC.
66 Main Street
N. Easton, MA 02356
T 508.230.0260
F 508.230.0265
ber@ber-engineering.com
100 Midway Road - Suite 23
Cranston, RI 02920
T 401.942.3500
F 401.228.6205
www.ber-engineering.com

50 Holden Street
Providence, Rhode Island 02908

Phone: (401) 272-1730
Fax: (401) 273-7156

E-mail: rgbinfo@rgb.net
www.rgb.net

RGB architects

Architecture · Project Management · Interior Design

Project

FORT ADAMS MAINTENANCE BUILDING

RIDEM / DIVISION OF PARKS & RECREATION

STATE OF RHODE ISLAND AND PROVIDENCE PLANTATIONS

FORT ADAMS STATE PARK, NEWPORT, RI

Drawing Status

ISSUED FOR CONSTRUCTION

Issued On APRIL 01, 2019

Sheet Contents

FLOOR PLAN

Project Number.

Drawing No.

TY100

Sheet of

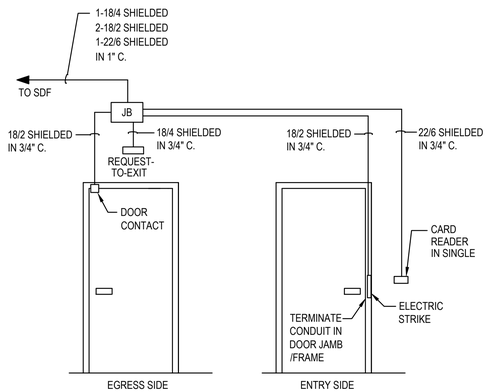

1 SINGLE DOOR WIRING DIAGRAM WITH CARD READER — NO SCALE

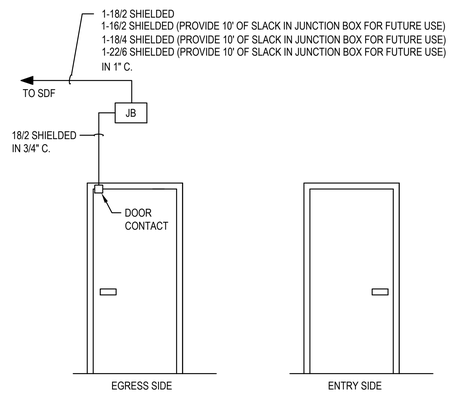

2 MONITORED SINGLE DOOR WIRING DIAGRAM — NO SCALE

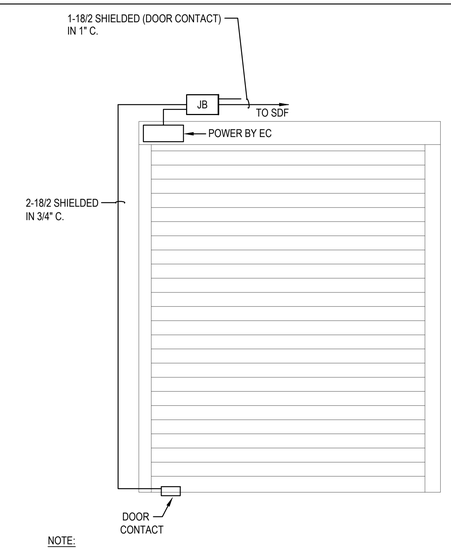

NOTE:

1. COORDINATE EXACT LOCATION OF CEILING MOUNTED RECEIVER WITH FIELD CONDITIONS. REFER TO MANUFACTURER'S SPECIFICATIONS FOR ADDITIONAL INFORMATION.

3 OVERHEAD ROLLUP DOOR WIRING DIAGRAM

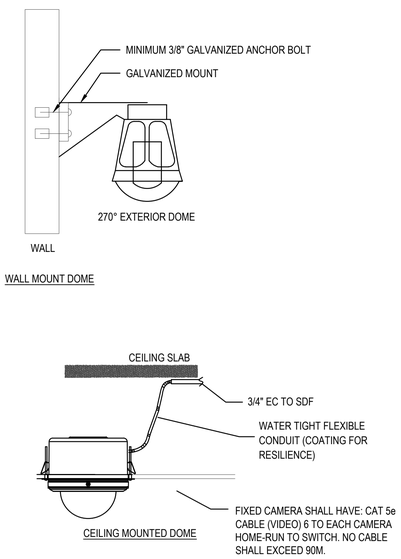

4 CAMERA MOUNTING DETAILS — NO SCALE

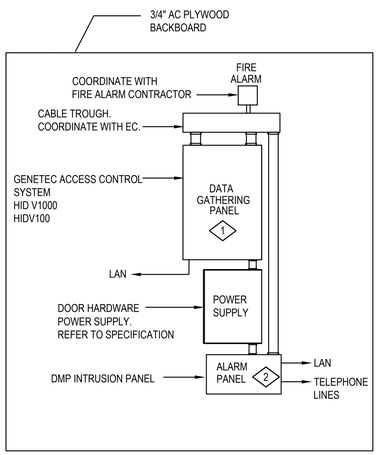

NUMBERED NOTES:

1. PROVIDE GENETEC PANEL WITH SYSTEM CAPABILITIES FOR 2 DOORS. REFER TO SECURITY FLOOR PLAN FOR EXACT QUANTITIES.
2. PROVIDE DMP INTRUSION PANEL FOR REMOTE MONITORING. COORDINATE CONNECTION TO REMOTE MONITORING SERVICE WITH OWNER.

5 SECURITY WALL FIELD (LOCATED IN MDF) — NO SCALE

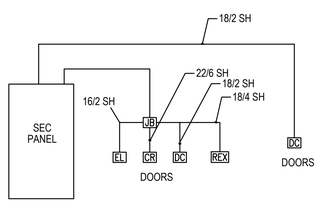

6 CARD ACCESS RISER — NO SCALE

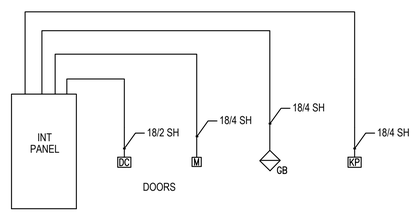

7 INTRUSION DETECTION RISER — NO SCALE

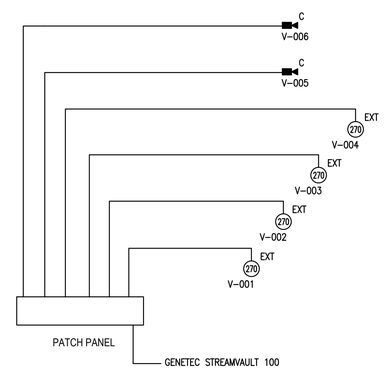

NOTE: ALL CAMERAS SHALL CONNECT TO OWNERS POET NETWORK SWITCH COORDINATE ALL CONNECTIONS AND PROGRAMMING WITH THE OWNER.

8 VIDEO SURVEILLANCE RISER

This drawing is copyrighted and is subject to copyright protection as an "architectural work" under 17 U. S. C. Sec. 101 et seq. The protection includes but is not limited to the overall form as well as the arrangement and composition of spaces, materials, color and elements in the design. Under such protection, unauthorized use of this drawing may result in the cessation of construction or buildings being seized and/or monetary compensation being awarded to The Robinson Green Beretta Corporation (RGB).

Any reproduction, possession, or use of this drawing or any part thereof without the express written permission of RGB, is prohibited. Violators will be prosecuted to the full extent of the law.

© RGB 2017

Certification

MARC R. PLANTE
No. 6397
REGISTERED PROFESSIONAL ENGINEER ELECTRICAL

Drawn by

Checked by

Revised on

B|E|R
BUILDING ENGINEERING RESOURCES, INC.
66 Main Street
N. Easton, MA 02356
T 508.230.0260
F 508.230.0265
ber@ber-engineering.com
100 Midway Road - Suite 23
Cranston, RI 02920
T 401.942.3500
F 401.228.6205
www.ber-engineering.com

50 Holden Street
Providence, Rhode Island 02908
Phone: (401) 272-1730
Fax: (401) 273-7156
E-mail: rgbinfo@rgb.net
www.rgb.net
RGB architects
Architecture · Project Management · Interior Design

Project

FORT ADAMS MAINTENANCE BUILDING

RIDEM / DIVISION OF PARKS & RECREATION

STATE OF RHODE ISLAND AND PROVIDENCE PLANTATIONS

FORT ADAMS STATE PARK, NEWPORT, RI

Drawing Status

ISSUED FOR CONSTRUCTION

Issued On APRIL 01, 2019

Sheet Contents

SECURITY DETAILS

Project Number.

Drawing No.

TY300

Sheet of

EXPANSION TANK SCHEDULE

SYMBOL	MANUFACTURER	MODEL #	CAPACITY	MAX. ACCEPT. FACTOR	CW SUPPLY	REMARKS
ET-1	AMTROL	ST-12	4.4 GALLONS	0.73	3/4"	THERM-X-TROL, IN-LINE, ASME, MAX. OPERATING TEMPERATURE - 200°F, MAX. WORKING PRESSURE - 150 PSIG, 55 PSIG-PRECHARGE, CHARGE TO CITY WATER PRESSURE.

NOTES:
INSTALL PER ALL RI CODE AND MANUFACTURER'S INSTALLATION REQUIREMENTS.

PUMP SCHEDULE

SYMBOL	MANUFACTURER	MODEL	GPM	HEAD	ELECTRICAL CHARACTERISTICS					REMARKS
					HP	FLA	VOLT	PHASE	RPM	
RP-1	TACO	005	9	6'	1/35	0.52	115	1	3250	STAINLESS STEEL CIRCULATOR, STAINLESS STEEL CARTRIDGE, FLANGED, LOW LEAD COMPLIANT.

NOTES:
INSTALL PER ALL STATE & LOCAL CODES AND MANUFACTURER'S INSTALLATION REQUIREMENTS. COORDINATE EXACT LOCATION WITH ARCHITECT & OWNER PRIOR TO INSTALLATION.

THERMOSTATIC MIXING VALVE SCHEDULE

SYMBOL	MANUFACTURER	MODEL #	FLOW RATE	WATER SUPPLY		REMARKS
				INLETS	OUTLET	
TMV-1	LEONARD	TM-26-LF	10 GPM	1"	1"	HIGH-LOW, LEAD-FREE, SET TEMPERATURE TO 120°F, MAX DIFF. PRESSURE = 5 PSI. PROVIDE WALL MOUNTING BRACKET.

NOTE: INSTALL PER RI CODE AND MANUFACTURER'S REQUIREMENTS.

WATER HEATER SCHEDULE

SYMBOL	MODEL #	MANUFACTURER	CAPACITY	RECOVERY		WATER SUPPLY		GAS	ELECTRICAL				REMARKS
				GPM	ΔT	CW	HW	CFH	KW	VOLTS	PHASE	HZ	
GWH-1	SUF60 120NE	STATE	60 GALLON	138	100°	1"	1"	120	–	120	1	60	CONDENSING HIGH EFFICIENCY GAS FIRED TANK TYPE WATER HEATER, SEALED COMBUSTION, ASME, 96% EFFICIENCY, 1"GAS CONNECTION, 3.5"WC, 4" INTAKE & EXHAUST FLUES. PIPE DRAIN LINE TO DRAIN PUMP. COORDINATE EXACT LOCATION WITH ARCHITECT.

NOTES:
INSTALL PER ALL RI CODE AND MANUFACTURER'S INSTALLATION REQUIREMENTS. PROVIDE CONDENSATE ACID NEUTRALIZATION KIT #100112381.

DRAIN SCHEDULE

SYMBOL	TYPE	MANUFACTURER	MODEL	OUTLET	STRAINER	REMARKS
FD-1	FLOOR DRAIN	J.R. SMITH	2005Y-A-NB	2"	6"ø NICKEL BRONZE	CAST IRON BODY, NO-HUB, ADJUSTABLE STRAINER, SEDIMENT BUCKET.
FD-2	FLOOR DRAIN	J.R. SMITH	2110Y-B-NB	4"	8½"ø NICKEL BRONZE	CAST IRON BODY, NO-HUB, CAST IRON GRATE, SEDIMENT BUCKET.

NOTES: ALL FLOOR DRAINS & TRENCH DRAINS SHALL HAVE TRAP SEAL GASKETS EQUAL TO "SURE SEAL".
COORDINATE FINAL FLOOR DRAIN LOCATIONS WITH ARCHITECT AND GC PRIOR TO INSTALLATION.

PLUMBING FIXTURE SCHEDULE

SYMBOL	DESCRIPTION	FIXTURE				FIXTURE			SERVICES					REMARKS
		MANUFACTURER	MODEL	TYPE	SIZE	MANUFACTURER	MODEL	TYPE	S/W	V	CW	HW	TW	
P-1	WATER CLOSET - ADA	AMERICAN STANDARD	3461.528	FLOOR MOUNTED	1.28 GPF	AMERICAN STANDARD	6065.121	SENSOR FLUSH VALVE	4"	2"	1"	–	–	VITREOUS CHINA, ELONGATED, LOW CONSUMPTION. AMERICAN STANDARD 5901.100 OPEN FRONT SEAT. BARRIER FREE, ADA COMPLIANT
P-2A	LAVATORY - ADA	AMERICAN STANDARD	0356.421	WALL HUNG	20½"x18¾"	CHICAGO	EQ-A11A-12ABCP	SENSOR	2"	1-1/2"	1/2"	1/2"	–	VITREOUS CHINA, SINGLE HOLE, 0.5 GPM SENSOR FAUCET. PROVIDE GRID DRAIN ASSEMBLY. PROVIDE CHROME PLATED HEAVY DUTY OFFSET P-TRAP, SUPPLIES & STOPS. PROVIDE WALL CARRIER. BARRIER FREE, ADA COMPLIANT.
P-3	SINK - ADA	ELKAY	LRAD0172065	COUNTER MOUNTED	17"x20"x6½"	SYMMONS	SPP-3510-1.5	MANUAL	2"	1-1/2"	1/2"	1/2"	–	STAINLESS STEEL, DROP-IN, 6¾" DEEP, 1-HOLE, DECK PLATE, 1.5 GPM LEVER FAUCET. PROVIDE CHROME PLATED HEAVY DUTY P-TRAP W/ CLEANOUT, SUPPLIES & STOPS. BARRIER FREE, ADA COMPLIANT.
P-4	SHOWER - ADA	AQUATIC	16030BFSC	SOLID SURFACE SURROUND	–	SYMMONS	96-500-B30-L-V-X	MANUAL	2"	1-1/2"	1/2"	1/2"	–	ROLL-IN SHOWER, CENTER GRID DRAIN. GRAB BARS, FOLD-UP SEAT BY GC. TEMPTROL PRESSURE-BALANCING MIXING VALVE W/ ADJUSTABLE STOP SCREW TO LIMIT HANDLE TURN. 1.5 GPM, SHOWER HEAD W/ ARM & FLANGE. SHOWER VALVE & HEAD SHALL BE INSTALLED PER ADA REQUIREMENTS. BARRIER FREE, ADA COMPLIANT.
P-5	WATER COOLER	HALSEY TAYLOR	HTHB-HACGBSS-WF	WALL MOUNTED	–	–	–	MANUAL	1-1/2"	1-1/2"	1/2"	–	–	BOTTLE FILLING STATION WATER COOLER, FILTERED 8 GPH, STAINLESS. BARRIER FREE, ADA COMPLIANT.
P-6	SERVICE SINK	FIAT	MSB2424	FLOOR MOUNTED	24"x24"x12"	CHICAGO	540-LD897SGCCP	MANUAL	3"	2"	1/2"	1/2"	–	FLOOR MOUNTED, WALL MOUNTED CHROME PLATED LEVER FAUCET, VACUUM BREAKER. PROVIDE SPLASH GUARD, MOP & HOSE BRACKETS.
HB-1	HOSE BIBB	JR SMITH	5670-H-CP	WALL MOUNTED	3½"x2¾"	–	–	–	–	–	1/2"	–	–	BRASS BODY, VACUUM BREAKER AND REMOVABLE WHEEL HANDLE.
WH-1	EXTERIOR WALL HYDRANT	JR SMITH	5509QT-WC-NB	WALL MOUNTED	7"x7"	–	–	–	–	–	3/4"	–	–	BRONZE NICKEL PLATED, NON-FREEZE WALL HYDRANT WITH INTEGRAL VACUUM BREAKER, ADJUSTABLE WALL CLAMP AND STAINLESS STEEL RECESSED LOCKABLE BOX.

NOTES:
1. ALL ADA FIXTURES SHALL BE INSTALLED PER ADA REQUIREMENTS.
2. ALL PLUMBING FIXTURES, EQUIPMENT & ACCESSORIES SHALL BE INSTALLED MANUFACTUER'S REQUIREMENTS.

GENERAL NOTES

1. GENERAL NOTES, SYMBOLS LIST AND DETAILS ARE APPLICABLE TO ALL PLUMBING DRAWINGS.
2. DRAWINGS ARE DIAGRAMMATIC: DETERMINE LOCATIONS OF SYSTEMS AND COMPONENTS IN FIELD. DO NOT SCALE DRAWINGS.
3. NEITHER ACCURACY NOR COMPLETION OF UTILITY LOCATIONS SHOWN ON DRAWINGS IS GUARANTEED. DETERMINE EXACT LOCATIONS OF EXISTING UTILITIES IN FIELD, WHETHER OR NOT SHOWN ON DRAWINGS. EXERCISE CAUTION AND IDENTIFY LOCATIONS OF UNMARKED UTILITY LINES AS NECESSARY TO PERFORM WORK OF THIS SECTION.
4. ALL PLUMBING WORK SHALL BE IN ACCORDANCE WITH THE PRESIDING PLUMBING CODE AND ALL APPLICABLE LOCAL CODES.
5. IT SHALL BE THE RESPONSIBILITY OF THIS CONTRACTOR TO COORDINATE WORK WITH THAT OF ALL OTHER TRADES, INCLUDING (BUT NOT LIMITED TO), ELECTRICAL, HVAC, FIRE PROTECTION, STRUCTURAL AND GENERAL ARCHITECTURE.
6. ANY INTERFERENCE SHALL BE BROUGHT TO THE ATTENTION OF THE CONSTRUCTION MANAGER, GENERAL CONTRACTOR, AND/OR THE OWNER'S REPRESENTATIVE, AND RESOLVED PRIOR TO THE INSTALLATION OF THE WORK INVOLVED.
7. ALL PIPING PENETRATING CEILINGS AND WALLS SHALL BE INSTALLED WITH CHROME (STAINLESS WHERE NOTED) PLATED ESCUTCHEONS AT THE PENETRATION. ALL PIPING PENETRATING EXTERIOR WALLS AND ROOFS SHALL BE FLASHED AS REQUIRED AND SHALL BE SEALED WEATHERTIGHT. PIPING PENETRATING FIRE RATED PARTITIONS SHALL BE PROTECTED WITH UL LISTED SEALS OF EQUAL RATING.
8. MANUFACTURERS' MODEL NUMBERS ARE SPECIFIED TO ESTABLISH STANDARDS OF QUALITY FOR PERFORMANCE AND MATERIALS.
9. ALL PRODUCT INSTALLATION SHALL ADHERE TO THE MANUFACTURERS' RECOMMENDATIONS.
10. PROVIDE ACCESS PANELS FOR ALL EQUIPMENT THAT REQUIRES PERIODIC SERVICE AND FOR ALL VALVES.
11. TOPS OF ALL FLOOR DRAINS AND CLEANOUTS SHALL BE SET FLUSH WITH FINISHED FLOOR. ALL PIPING ABOVE GRADE SHALL BE PROPERLY SUPPORTED BY THE BUILDING STRUCTURE AND SHALL NOT REST ON CEILING TILES OR CEILING STRUCTURE.
12. CONTRACTOR SHALL COORDINATE ELECTRICAL CHARACTERISTICS AND REQUIREMENTS OF ALL PLUMBING EQUIPMENT WITH THE ELECTRICAL DRAWINGS, AND SHALL FURNISH EQUIPMENT WIRED FOR THE VOLTAGES SHOWN HEREIN.
13. ALL PLUMBING EQUIPMENT, PIPING, INSULATION, ETC., INSTALLED IN HVAC PLENUM SPACES SHALL MEET CODE REQUIREMENTS FOR SMOKE AND COMBUSTIBILITY.
14. PROVIDE SHUTOFF VALVES ON ALL BRANCH PIPING AND SUPPLIES TO INDIVIDUAL FIXTURES AND EQUIPMENT. PROVIDE BALL VALVES ON ALL WATER MAIN BRANCHES IN CORRIDORS AND WHERE INDICATED ON DRAWINGS. ALL VALVES SHALL BE ACCESSIBLE.
15. ALL SLEEVES THROUGH CONCRETE FLOORS AND ALL CORE DRILLING OF CONCRETE FLOORS SHALL BE BY THIS CONTRACTOR. CONCRETE PADS AND PLATFORMS FOR WORK OF THIS SECTION WILL BE PROVIDED BY GENERAL CONTRACTOR. PROVIDE INFORMATION AS NECESSARY TO COORDINATE WORK.
16. RUN PIPING CONCEALED WHERE POSSIBLE, UNLESS SPECIFIED OTHERWISE.
17. PROVIDE CLAMPS, OFFSETS, EXPANSION JOINTS, ANCHORS AND GUIDES AS NECESSARY TO PREVENT STRESS ON PIPING.
18. PROVIDE BALANCING VALVES AT SYSTEM LOOP RETURNS AND AT RETURN RISERS, PROVIDE SHUTOFF VALVES AT SYSTEM LOOP SUPPLIES AND SUPPLY RISERS.
19. PROVIDE VENTS AT HIGH POINTS IN PIPING SYSTEMS AND DRAIN VALVES AT LOW POINTS.
20. PROVIDE GAUGE FITTINGS AND THERMOMETER WELLS AT HOT WATER SUPPLY AND RETURN BRANCHES AND AT PUMP INLETS AND OUTLETS.
21. VERIFY EXACT SIZES, LOCATIONS, INVERTS AND ELEVATIONS PRIOR TO RUNNING ANY PIPING. REFER TO ARCHITECTURAL DRAWINGS FOR EXACT LOCATIONS OF ALL FIXTURES AND EQUIPMENT.
22. PIPE SUPPORTS FOR PLUMBING IN BUILDING SHAFTS ARE BY THIS CONTRACTOR. CAREFULLY COORDINATE WITH PLACEMENT OF STEEL GRATE SUPPORT BEAMS. SHAFT PIPE SUPPORT SHALL BEAR FROM WALL AND FROM FLOOR SUPPORT BEAMS.
23. OBTAIN GAS PERMITS AND DEFRAY ALL COSTS INCIDENTAL TO THE GAS PIPING SYSTEM. CONTRACTOR'S WORK SHALL COMMENCE ON THE HOUSE SIDE OF THE UTILITY COMPANY METER.
24. A SUITABLE DRIP OF CONDENSATE POCKET SHALL BE INSTALLED AT THE BOTTOM OF ALL GAS RISERS.
25. ALL GAS PIPING TO COMPLY WITH LOCAL AND STATE CODES.
26. GAS PIPING AND SAFETY DEVICES SHALL CONFORM TO REQUIREMENTS OF NFPA 54 AND SHALL BE SUBJECT TO THE INSPECTION AND APPROVAL OF THE AUTHORITY HAVING JURISDICTION.
27. PROVIDE A SUITABLE GAS COCK VALVE AT HOUSE SIDE OF METER AND EACH BRANCH RUNOUT FROM THE MAIN SERVING GAS OUTLETS AND INDIVIDUAL GAS FIXTURES.
28. GAS PIPING SHALL BE TESTED ACCORDING TO THE STATE FUEL GAS CODE AND NATIONAL CODE PROVISIONS OF THE LOCAL PLUMBING INSPECTOR. IF INSPECTION OF THE TEST SHOWS DEFECTS, SUCH DEFECTIVE WORK AND MATERIAL SHALL BE REPLACED AND INSPECTION AND TEST SHALL BE REDONE.
29. PLUMBING CONTRACTOR IS RESPONSIBLE FOR EXTENDING ALL REGULATOR VENTS TO ATMOSPHERE. REGULATORS ARE PART OF EQUIPMENT GAS TRAIN. PIPE ALL GAS TRAN VENTS FROM HVAC BOILERS TO ATMOSPHERE.
30. ALL EXTERIOR GAS PIPING SHALL BE PAINTED WITH TWO(2) COATS OF EPOXY BASED PAINT. COLOR TO MATCH EXISTING.
31. NO PIPING SHALL RUN OVER ELECTRICAL PANELS.
32. ALL PIPING THAT PENETRATES FLOORS OR FIRE RATED WALLS SHALL BE FIRE STOPPED W/ HILTI CAULKING PER MANUFACTURERS RECOMMENDATIONS.
33. ELECTRICAL SUB CONTRACTOR IS RESPONSIBLE FOR PROVIDING POWER TO ALL EQUIPMENT AND CONTROLS WITHIN THE PLUMBING SYSTEMS FOR THIS PROJECT.

PLUMBING LEGEND

V&C	VALVE & CAP
CW	COLD WATER
HW	HOT WATER
HWR	HOT WATER RECIRCULATION
S or W	SOIL OR WASTE
S or W	SOIL OR WASTE BELOW FLOOR OR BURIED
V	VENT
V OR (V)	VENT BELOW FLOOR OR BURIED
EV	EXHAUST VENT (WATER HEATER)
AI	AIR INTAKE (WATER HEATER)
G	NATURAL GAS
G	NATURAL GAS BELOW FLOOR OR BURIED
	SHUT-OFF VALVE
CV	CHECK VALVE
BVA	BALANCING VALVE ASSEMBLY
W&T	WASTE & TRAP
CO	CLEANOUT PLUG
FCO	FLUSH FLOOR CLEANOUT
WCO	WALL CLEANOUT
	CAPPED PIPE
	ARROW INDICATES DIRECTION OF FLOW
.01	ARROW INDICATES DIRECTION OF SLOPE
	UNION
HB	HOSE BIBB
WH	EXTERIOR WALL HYDRANT
FD	FLOOR DRAIN
WM	WATER METER
GM	GAS METER
TMV	MIXING VALVE
	CIRCULATION PUMP
DN	DOWN
DR	DROP/RISE
VTR	VENT THRU ROOF
INV/IE	INVERT ELEVATION
TYP	TYPICAL
VIF	VERIFY SIZE, ROUTING & INVERT IN FIELD
NTS	NOT TO SCALE
W&V	WASTE AND VENT
S&V	SOIL AND VENT
NC	NORMALLY CLOSED
AFF	ABOVE FINISHED FLOOR
FFE	FINSHED FLOOR ELEVATION
LPC	LIMIT OF PLUMBING CONTRACT
NIPC	NOT IN PLUMBING CONTRACT
GC	GENERAL CONTRACTOR
FPC	FIRE PROTECTION CONTRACTOR
PC	PLUMBING CONTRACTOR
EC	ELECTRICAL CONTRACTOR
HVAC	HVAC CONTRACTOR
S=.01	SLOPE = 1/8" PER FOOT
S=.02	SLOPE = 1/4" PER FOOT

This drawing is copyrighted and is subject to copyright protection as an "architectural work" under 17 U. S. C. Sec. 101 et seq. The protection includes but is not limited to the overall form as well as the arrangement and composition of spaces, materials, color and elements in the design. Under such protection, unauthorized use of this drawing may result in the cessation of construction or buildings being seized and/or monetary compensation being awarded to The Robinson Green Beretta Corporation (RGB).

Any reproduction, possession, or use of this drawing or any part thereof without the express written permission of RGB, is prohibited. Violators will be prosecuted to the full extent of the law.

© RGB 2017

Certification

Drawn by AG
Checked by ARV

Revised on
1 ADDENDUM 1 - 01-17-2020

B|E|R
BUILDING ENGINEERING RESOURCES, INC.
66 Main Street
N. Easton, MA 02356
T 508.230.0260
F 508.230.0265
ber@ber-engineering.com
100 Midway Road - Suite 23
Cranston, RI 02920
T 401.942.3500
F 401.228.6205
www.ber-engineering.com

50 Holden Street
Providence, Rhode Island 02908
Phone: (401) 272-1730
Fax: (401) 273-7156
E-mail: rgbinfo@rgb.net
www.rgb.net
RGB architects
Architecture · Project Management · Interior Design

Project

FORT ADAMS MAINTENANCE BUILDING

RIDEM / DIVISION OF PARKS & RECREATION

STATE OF RHODE ISLAND AND PROVIDENCE PLANTATIONS

FORT ADAMS STATE PARK, NEWPORT, RI

Drawing Status
ISSUED FOR CONSTRUCTION

Issued On AUGUST 30, 2018

Sheet Contents
PLUMBING - LEGEND, NOTES & SCHEDULES

Project Number.

Drawing No.
P001

Sheet of

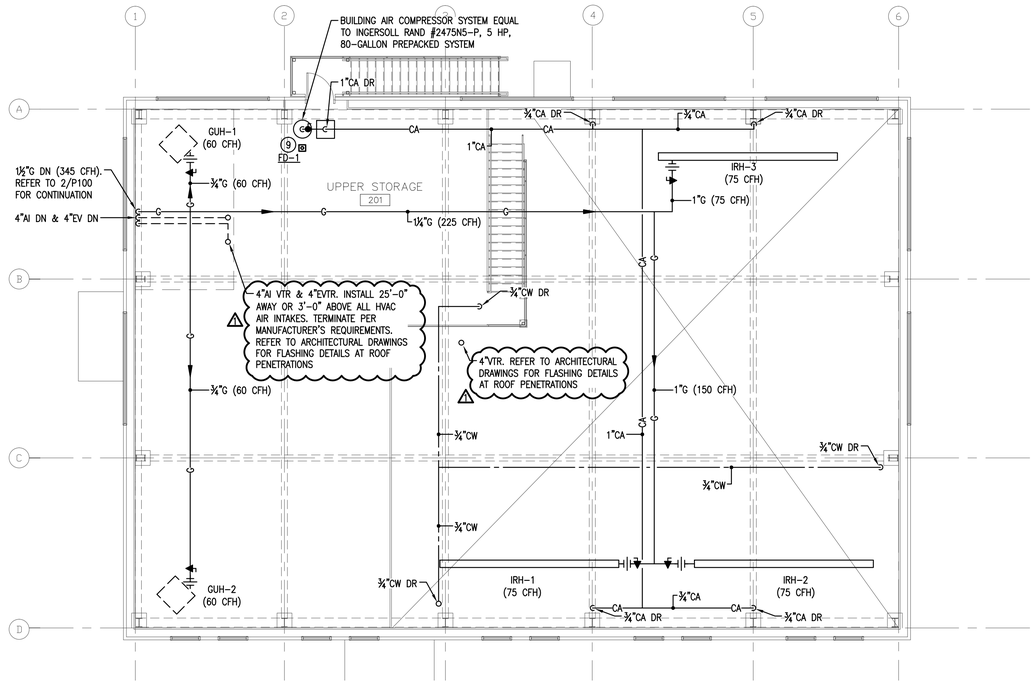

3 UPPER LEVEL PLAN
P100 Scale: 1/8" = 1'-0"

PLUMBING KEYED NOTES

1. NEW FLOOR MOUNTED FLUSH VALVE WATERCLOSET: 1"CW DR, 4"S DN & 2"V DR
2. NEW WALL MOUNTED LAVATORY & FAUCET: 1/2"CW DR, 1/2"HW DR, 1½"W DN, 1½"V DR
3. NEW COUNTER MOUNTED SINK & FAUCET: 1/2"CW DR, 1/2"HW DR, 2"W DN, 2"V DR
4. NEW SHOWER ENCLOSURE & VALVE SYSTEM: 1/2"CW DR, 1/2"HW DR, 2"W DN, 2"V DR
5. NEW WALL MOUNTED WATER COOLER: 1/2"CW DR, 1½"W DN, 1½"V DR
6. NEW FLOOR MOUNTED SERVICE SINK & FAUCET: ½"CW DR, ½"HW DR, 3"W DN, 2"V DR
7. NEW WALL MOUNTED HOSE BIBB: 1/2"CW DR
8. NEW EXTERIOR WALL HYDRANT: 3/4"CW DR
9. NEW 2" FLOOR DRAIN: 2"W DN, 2"V DN
10. NEW 4" FLOOR DRAIN: 4"W DN, 2"V DN
11. NEW GAS-FIRED WATER HEATER: 1"CW DR, 1"HW DR, 1"G DR, 4"AI DR, 4"GV DR
12. NEW WALL MOUNTED THERMOSTATIC MIXING VALVE: 1"CW DR, 1"HW DR

NOTE:
CONNECT ALL NEW DOMESTIC WATER, SANITARY, KITCHEN, WASTE & VENT AND NATURAL GAS SUPPLY PIPING FROM NEW FIXTURES & EQUIPMENT TO EXISTING RESPECTIVE MAIN LINES. VERIFY EXACT LOCATIONS IN FIELD. TRENCH PIPING AS REQUIRED.

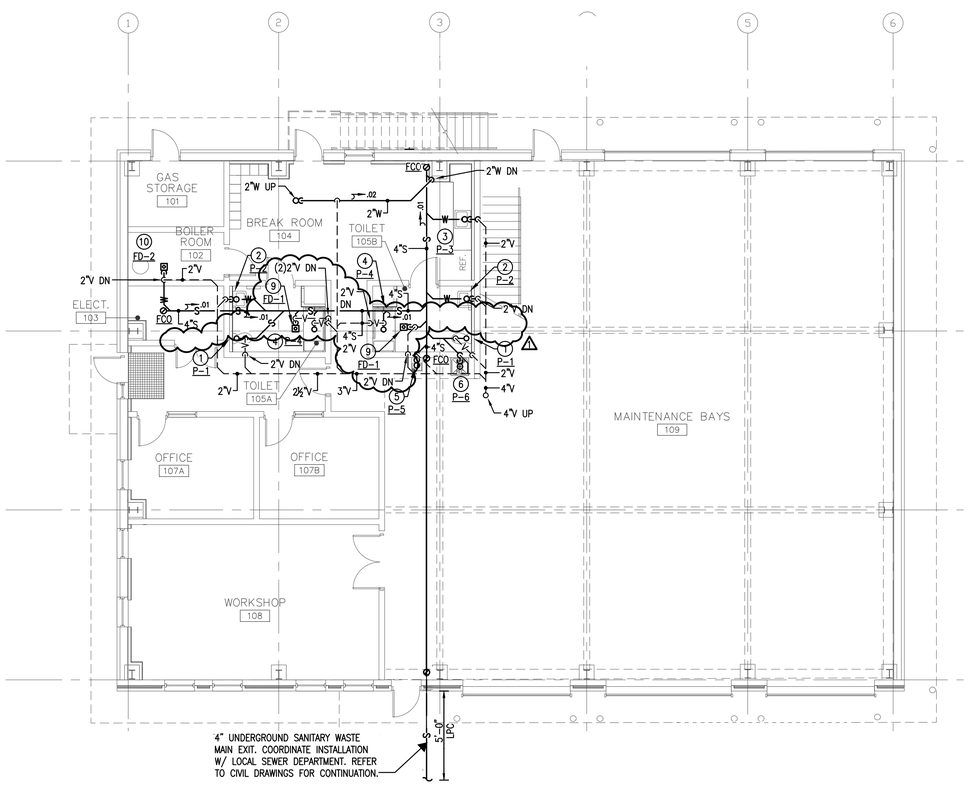

1 LOWER LEVEL PLAN – WASTE & VENT
P100 Scale: 1/8" = 1'-0"

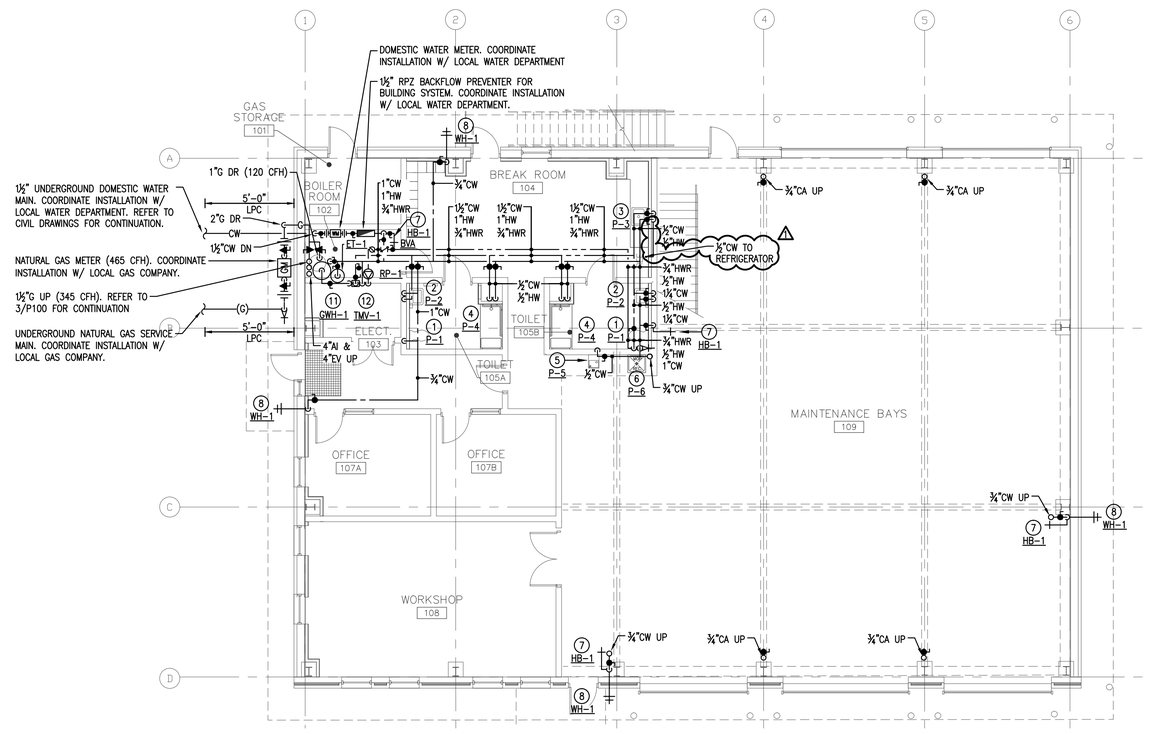

2 LOWER LEVEL PLAN – WATER & GAS
P100 Scale: 1/8" = 1'-0"

This drawing is copyrighted and is subject to copyright protection as an "architectural work" under 17 U. S. C. Sec. 101 et seq. The protection includes but is not limited to the overall form as well as the arrangement and composition of spaces, materials, color and elements in the design. Under such protection, unauthorized use of this drawing may result in the cessation of construction or buildings being seized and/or monetary compensation being awarded to The Robinson Green Beretta Corporation (RGB).

Any reproduction, possession, or use of this drawing or any part thereof without the express written permission of RGB, is prohibited. Violators will be prosecuted to the full extent of the law.

© RGB 2017

Certification

Drawn by AG
Checked by ARV

Revised on
1 ADDENDUM 1 – 01-17-2020

B|E|R
BUILDING ENGINEERING RESOURCES, INC.
66 Main Street
N. Easton, MA 02356
T 508.230.0260
F 508.230.0265
ber@ber-engineering.com
100 Midway Road - Suite 23
Cranston, RI 02920
T 401.942.3500
F 401.228.6205
www.ber-engineering.com

50 Holden Street
Providence, Rhode Island 02908
Phone: (401) 272-1730
Fax: (401) 273-7156
E-mail: rgbinfo@rgb.net
www.rgb.net
RGB architects
Architecture · Project Management · Interior Design

Project
FORT ADAMS MAINTENANCE BUILDING
RIDEM / DIVISION OF PARKS & RECREATION

STATE OF RHODE ISLAND AND PROVIDENCE PLANTATIONS

FORT ADAMS STATE PARK, NEWPORT, RI

Drawing Status
ISSUED FOR CONSTRUCTION

Issued On AUGUST 30, 2018

Sheet Contents
PLUMBING FLOOR PLANS

Project Number.

Drawing No.
P100

Sheet of