FORT ADAMS MAINTENANCE BUILDING

RHODE ISLAND DEPARTMENT OF ENVIRONMENTAL MANAGEMENT
DIVISION OF PARKS AND RECREATION

STATE OF RHODE ISLAND AND PROVIDENCE PLANTATIONS

FORT ADAMS STATE PARK, NEWPORT, RI

50 Holden Street · Providence, Rhode Island 02908
(401) 272-1730 · www.rgb.net

Architecture · Project Management · Interior Design

RGB architects

THE ROBINSON GREEN BERETTA CORPORATION — ARCHITECTURE

CONSULTANTS

NARRAGANSETT ENGINEERING, INC. — CIVIL ENGINEERING
C.A. PRETZER ASSOCIATES, INC. — STRUCTURAL ENGINEERING
BUILDING ENGINEERING RESOURCES, INC. — MECHANICAL, ELECTRICAL & PLUMBING ENGINEERING

LIST OF DRAWINGS

CIVIL
- C100 SITE PLAN
- C101 PROPOSED STORMWATER PLAN
- C102 DETAILS & NOTES
- C103 FULL LOT EXTENTS

ARCHITECTURAL
- G001 ABBREVIATIONS & SYMBOLS
- A010 CODE REVIEW
- A030 CONSTRUCTION TYPES
- D100 DEMOLITION PLAN
- A100 FLOOR & ROOF PLAN
- A200 BUILDING ELEVATIONS
- A300 ENLARGED FLOOR PLAN
- A301 ENLARGED TOILET PLAN & INTERIOR ELEVATIONS
- A400 BUILDING SECTIONS
- A410 WALL SECTIONS
- A500 EXTERIOR SECTION DETAILS
- A501 EXTERIOR DETAILS
- A600 REFLECTED CEILING PLAN & FINISH SCHEDULE
- A801 INTERIOR DETAILS
- A810 INTERIOR DETAILS & CASEWORK
- A900 DOOR SCHEDULE & EXTERIOR GATE DETAILS
- A901 DOOR DETAILS
- A902 OVERHEAD DOOR DETAILS
- A910 WINDOW SCHEDULE & DETAILS

STRUCTURAL
- S100 GENERAL NOTES AND MASONRY DETAILS
- S101 FOUNDATION PLAN AND UPPER FLOOR FRAMING PLAN
- S201 FOUNDATION DETAILS

ELECTRICAL
- E001 ELECTRICAL- LEGEND, SCHEDULE & NOTES
- E002 ELECTRICAL- SPECIFICATIONS
- E003 ELECTRICAL SITE PLAN
- E100 ELECTRICAL- LOWER LEVEL PLAN
- E200 ELECTRICAL- UPPER LEVEL PLAN
- FA100 FIRE ALARM- PLAN
- FA200 FIRE ALARM- SPECIFICATION

PLUMBING
- P001 PLUMBING- LEGEND, SCHEDULE & NOTES
- P100 PLUMBING- FLOOR PLANS
- P200 PLUMBING DETAILS
- P201 PLUMBING DETAILS
- P300 PLUMBING SPECIFICATIONS

MECHANICAL
- M100 MECHANICAL LEGENDS, NOTES AND DETAILS
- M101 LOWER & UPPER FLOOR PLANS- MECHANICAL
- M201 MECHANICAL SCHEDULES
- M301 MECHANICAL SPECIFICATIONS
- M305 MECHANICAL SPECIFICATIONS

Approved

RHODE ISLAND DIVISION OF STATE FIRE MARSHAL

08/26/2019 Christine.Kent

Approved as Noted

Portable fire extinguishers shall be installed at each exit doorway opening & including the Workshop Room. A Class "B" portable fire extinguisher shall be installed in the Gas Storage Room

FORT ADAMS MAINTENANCE BUILDING - 6380

STATUS: ISSUED FOR CONSTRUCTION

DATE: MAY 29, 2018

BENCHMARK NOTE:
NEI WILL ALWAYS PROVIDE A MINIMUM OF TWO SITE BENCHMARKS. CONTRACTOR TO VERIFY ALL BENCHMARKS EXIST PRIOR TO CONSTRUCTION. ELEVATIONS OF ALL BENCHMARKS TO BE SHOT IN FIELD (WITH SUITABLE EQUIPMENT) AND DIFFERENTIAL TO BE VERIFIED, IF VERTICAL DIFFERENTIAL EXCEEDS 0.05' IT SHALL BE IMMEDIATELY REPORTED TO NEI. DIFFERENTIAL IN EXCESS OF 0.05' INDICATES THAT BENCHMARKS MAY HAVE BEEN DISTURBED AND ARE NOT SUITABLE FOR USE.

PROPOSED COVERAGE AREAS

NO.	ITEM	AREA		NOTES
1	STRUCTURE + PADS	5,280	ft^2	
2	PARKING AREA	14,030	ft^2	
3	REDUCED PAVING OPTION*	6,636	ft^2	
4	TOTAL	25,946	ft^2	PROPOSED>EXISTING (25,946 SF>21,889 SF)
5	Lot Area	2,289,513	ft^2	52.56 ACRES
6	Cover Percentage	1.1%		
7	BIO-RETENTION SYSTEM	1,349	ft^2	NOT INCLUDED IN LOT COVERAGE

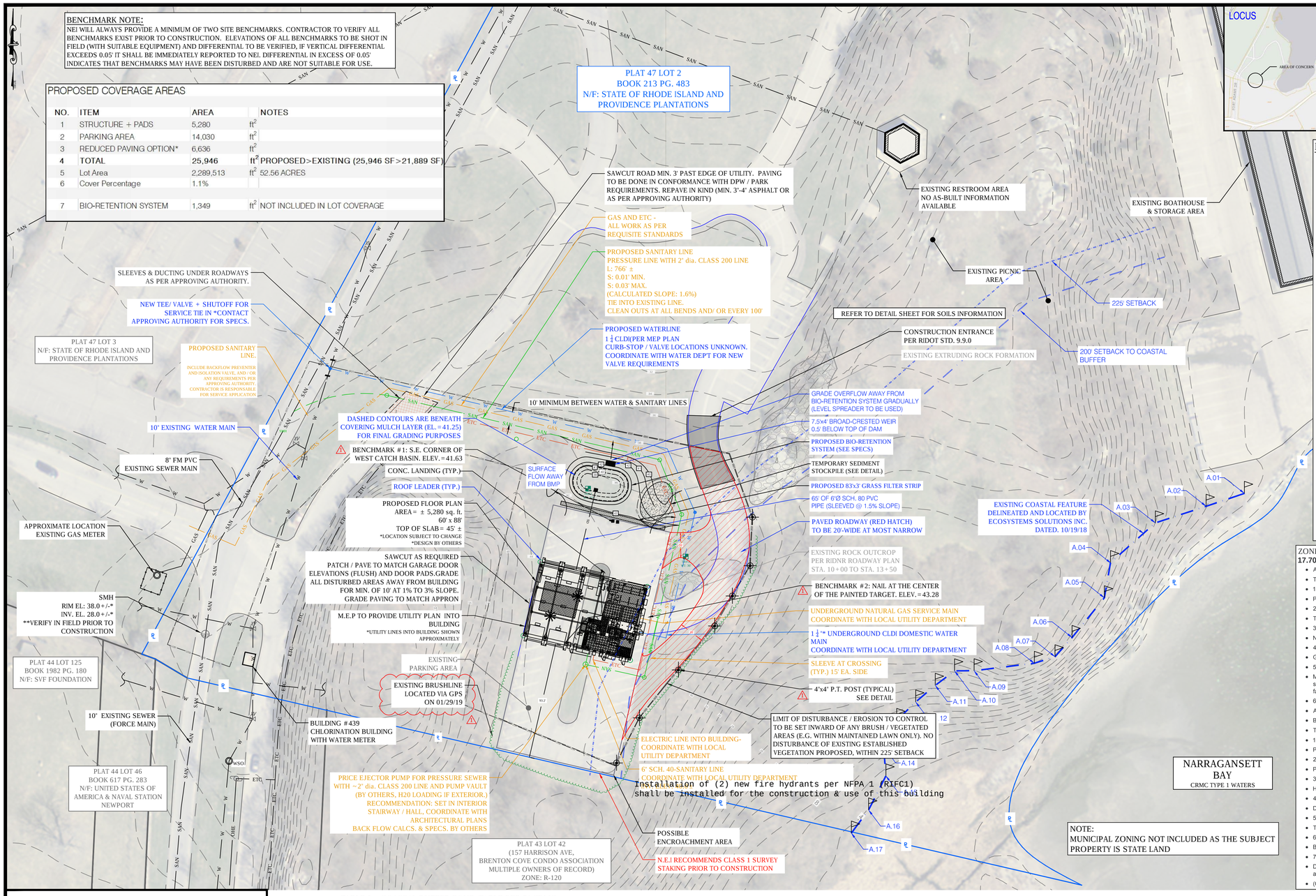

PLAN REFERENCE:
1. 'UPGRADE/IMPROVEMENTS TO SANITARY SEWER SYSTEM'.PREPARED BY:NAVAL EDUCATION AND TRAINING CENTER.NEWPORT, RHODE ISLAND. 1994
- MEP PLANS; 90% CONSTRUCTION DRAWINGS. PREPARED BY BUILDIING ENGINEERING RESOURCES, INC. DATED JULY 9TH, 2018.
- ARCHITECTURE PLANS PREPARED BY RBG ARCHITECTS.

DEED REFERENCES
DEED VOLUME - BOOK 213, PAGE 483.

NOTE:
- LIDAR AND ORTHOPHOTO PER RIGIS
- ALL EXISTING UTILITY INFORMATION SHOWN APPROXIMATELY PER PLAN REF. 1. FIELD VERIFICATION MAY BE REQUIRED
- COASTAL FEATURE FLAGGED AND LOCATED BY ECOSYSTEMS SOLUTIONS INC. DATED 10/19/2018
- CRMC FILE NO.
- 2017-07-073, 2016-05-084
- 2013-05-221, 2013-05-036, 2011-03-061

-ZONE: RECREATIONAL

-22.3 (NOTE 2) - ALL PIPES TO BE SLEEVED IN SEAMLESS OR SCHEDULE 40 PVC OR EQUIVALENT PIPE WITH WATERTIGHT JOINTS, AND SHALL HAVE A WATERTIGHT SEAL THAT IS FASTENED TO THE PIPES WITH A STAINLESS STEEL RETRACTABLE CLAMP.

- NO PARKING CALCULATIONS OR DESIGNS ARE INCLUSIVE. NO RE-STRIPING IS INCLUSIVE.
- THIS BUILDING IS PART OF A LARGER FACILITY, PARKING SPACES (INCLUDING ADA)ARE LOCATED ELSEWHERE.
- NO LANDSCAPE DESIGN IS INCLUSIVE
- NO LIGHTING DESIGN IS INCLUSIVE
- PROPOSED UTILITIES SHOWN IN PLAN BY: BUILDING ENGINEERING RESOURCES, INC 90% CONSTRUCTION DOCUMENTS. COORDINATE ALL INSTALLATIONS WITH M.E.P. NEED COORDINATION WITH LOCAL UTILITIES DEPARTMENTS
- PLAN WAS PREPARED WITHOUT THE BENEFIT OF ANY GEO-TECHNICAL INVESTIGATIONS, SOIL EVALUATIONS OR REPORTS. NEI RECOMMENDS LEDGE PROBED (AT 50' o.c) BE CONDUCTED PRIOR TO EXCAVATION TO VERIFY LOCATION AND DEPTH OF LEDGE

- EXISTING UTILITY INFORMATION, GRADE CONTOURS, BUILDINGS AND SITE FEATURES ARE SHOWN WITHOUT THE BENEFIT OF A SURVEY. INFORMATION IS SHOWN FROM BEST AVAILABLE SOURCES (PLANS, GIS, ETC.), BUT NEED TO BE FIELD VERIFIED BY CONTRACTOR. NEI RECOMMENDS CARRYING EFFORT TO LOCATE AND IDENTIFY ALL EXISTING UTILITIES PRIOR TO CONSTRUCTION. UTILITY LOCATION INFORMATION IS NOT GUARANTEED AND IS SUBJECT TO FIELD VERIFICATION
(VIF - VERIFY IN FIELD)

THIS IS NOT A AS-BUILT UTILITY OR SURVEY PLAN.

ZONE: REC (RECREATION DISTRICT)
17.70.020. - Use regulations.
- A.
- The following uses are permitted by right:
- 1.
- Parks□
- 2.
- Trails for walking or biking□
- 3.
- Natural beach swimming areas, both public and private□
- 4.
- Golf courses excluding miniature golf courses and commercial driving ranges□
- 5.
- Municipal and public service corporation buildings and facilities□community water supply reservoirs□community well houses□water towers□water and sewage treatment facilities, water and sewage pumping stations□
- 6.
- Accessory uses with respect to the foregoing.
- B.
- The following uses require a special use permit from the zoning board of review:
- 1.
- Playgrounds□
- 2.
- Playing fields□
- 3.
- Horse-riding academies and boarding stables for horses□
- 4.
- Day camps for children and youth□
- 5.
- Trails for horseback riding□
- 6.
- Boating instruction□
- 7.
- Docks, slips and piers where boats may be berthed provided that the parcel of land is adjacent to an open water body.
- (Ord. 2000-4 (part), 2000: Ord. 98-51 1 (part), 1998 Ord. 97-50B 2 (part), 1997)

LEGEND

BRUSH LINE (APPROXIMATE)	CATCH BASIN
100.00' DIMENSION - EXISTING	DRILL HOLE
100.00' (D) DIMENSION - PLAN / DEED	ELECTRIC BOX (ETC)
100.00' DIMENSION - PROPOSED	FIRE HYDRANT
100.00' (S) DIMENSION - SURVEY	GATE VALVE
EDGE OF PAVEMENT - EXISTING	GRANITE BOUND, EXISTING
EDGE OF PAVEMENT - PROPOSED	LOW WATER LINE
ELECTRIC - OVERHEAD (OHE)	LIMIT OF DISTURBANCE MARKER
ETC ELECTRIC - TELEPHONE - CABLE (ETC)	MANHOLE (MH TYPE)
UGE ELECTRIC - UNDERGROUND (UGE)	REBAR / STEEL PIPE FOUND
FENCE - METAL	SPIKE
FENCE - WOOD	X 5.10 SPOT GRADE - EXISTING
FLOW ARROWS	X 6.6 SPOT GRADE - PROPOSED
GAS GAS (G)	STRUCTURE, EXISTING
GRADE CONTOUR - EXISTING	STRUCTURE, PROPOSED
100.00 GRADE CONTOUR - PROPOSED	SURVEY MONUMENT TO BE SET
HIGH VISIBILITY FENCE (HVF)	SURVEY MARKER TO BE SET
LOD LIMIT OF DISTURBANCE (LOD)	SE # SOIL EVALUATION
PROPERTY LINE - ABUTTING	TREE
L PROPERTY LINE - EXISTING	UTILITY POLE
PROPERTY LINE - PROPOSED	WSO WATER SHUT OFF
SAN SANITARY SEWER (S)	WETLAND FLAG LOCATION
SED SEDIMENT CONTROL (SED)	
SETBACKS	
STONE WALL	
SD STORM DRAIN (SD)	
SUBDIVISION LINE - EXISTING	
W WATER	
WETLAND LIMIT	

TABLE 2a. COASTAL BUFFER ZONE TABLE PER RI CRMC

Residential Lot Size (sq. ft.)	Water Use Category: Type 3, 4, 5, & 6	Water Use Category: Type 1 & 2
	Required Buffer (ft)	
<10,000	15.	25
10,000 - 20,000	25	50
20,001 - 40,000	50	75
40,001 - 60,000	75	100
60,001 - 80,000	100	125
80,001 - 200,000	125	150
>200,000	150	200

0 40 60 80 120 200

Refer to written letter provided by DEM
for the installation of two (2) fire hydrants
for the building

FEMA FIRM MAP 44005C0177J ZONE X

This drawing is copyrighted and is subject to copyright protection as an "architectural work" under 17 U. S. C. Sec. 101 et seq. The protection includes but is not limited to the overall form as well as the arrangement and composition of spaces, materials, color and elements in the design. Under such protection, unauthorized use of this drawing may result in the cessation of construction or buildings being seized and/or monetary compensation being awarded to The Robinson Green Beretta Corporation (RGB).

Any reproduction, possession, or use of this drawing or any part thereof without the express written permission of RGB, is prohibited. Violators will be prosecuted to the full extent of the law.

© RGB 2008

Certification

Drawn by R. B

Checked by NKH, KH

Revised on

⚠ (ADD EXISTING BRUSHLINE AND PT POSTS)(ADD BENCHMARKS) (01/30/19)

PURPOSE:
PROPOSED SITE GRADING AND UTILITIES FOR ASSENT APPLICATION

KAMAL R. HINGORANY
NO. 4089
REGISTERED PROFESSIONAL ENGINEER
01.31.19

DRAWINGS MUST BE PRINTED IN COLOR TO BE VALID. THIS NOTE SHOULD BE BLUE. IF THIS NOTE IS NOT BLUE, PLEASE REPRINT IN COLOR OR CONTACT NEI.

NARRAGANSETT ENGINEERING INC.
MAIN OFFICE:
3102 EAST MAIN ROAD,
PORTSMOUTH, RI 02871
TEL : (401) 683-6630
nei-cds.com

REVISION 1. 10/28/2018
- COASTAL FEATURE FLAGGED, SANITARY LINE EDITS

50 Holden Street
Providence, Rhode Island 02908
Phone: (401) 272-1730
Fax: (401) 273-7156
E-mail: rgbinfo@rgb.net
www.rgb.net
Architecture · Project Management · Interior Design

Project

FORT ADAMS MAITENANCE BUILDING

RIDEM / DIVISION OF PARKS & RECREATION

STATE OF RHODE ISLAND AND PROVIDENCE PLANTATIONS

FORT ADAMS STATE PARK, NEWPORT, RI

Drawing Status
ISSUED FOR CONSTRUCTION

Issued On MAY 29, 2019

Sheet Contents
PROPOSED SITE PLAN
SCALE 1" = 40'

Project Number. 6380
NEI □17.0200

Drawing No.
C100

Sheet 1 of 3

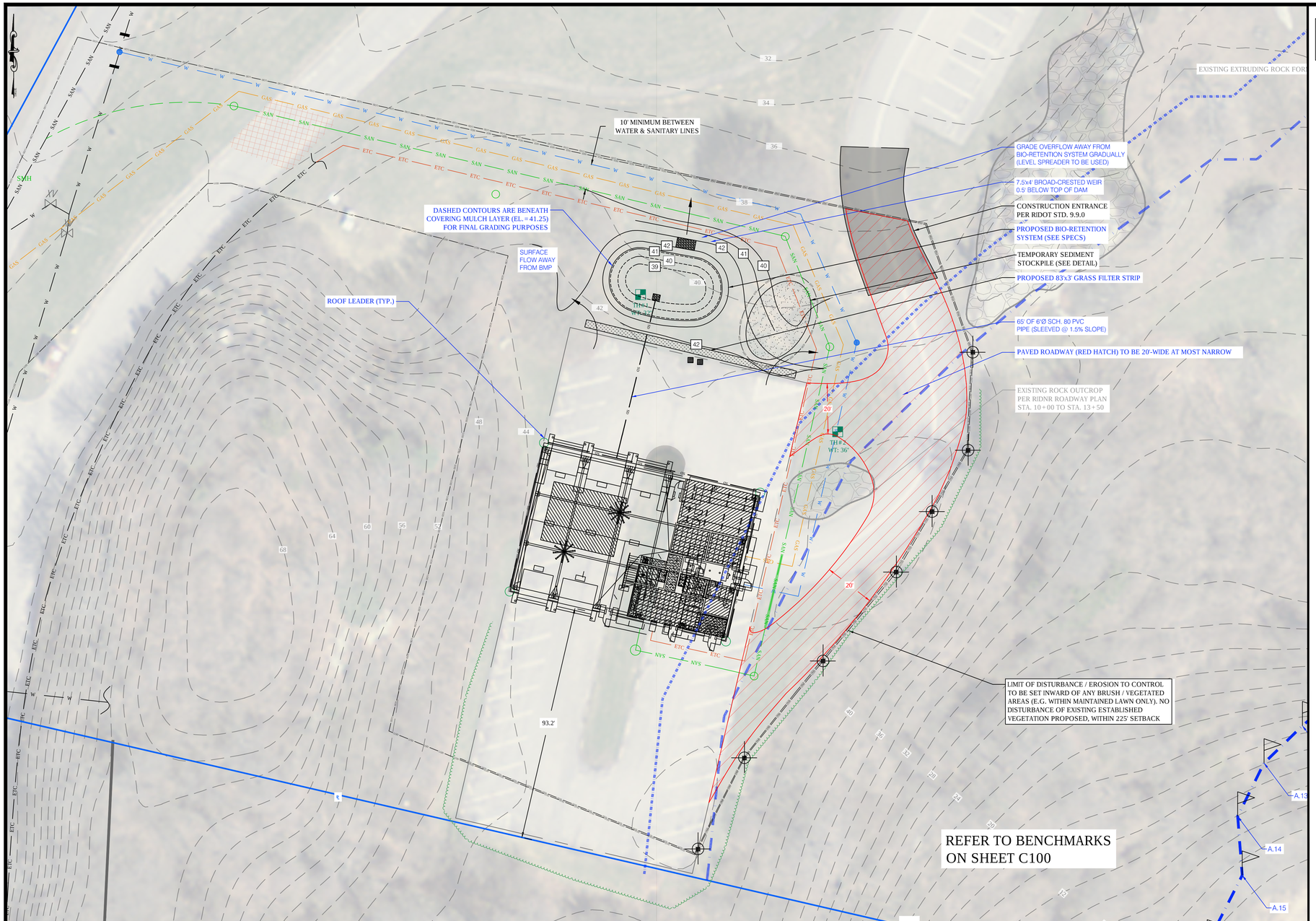

PLAN REFERENCE:
- "PROPOSED SITE PLAN" BY NARRAGANSETT ENGINEERING INC. SCALE = 1" = 30' (IN THIS PLAN SET)

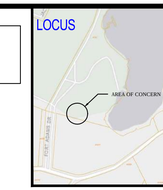

SOIL PROFILES

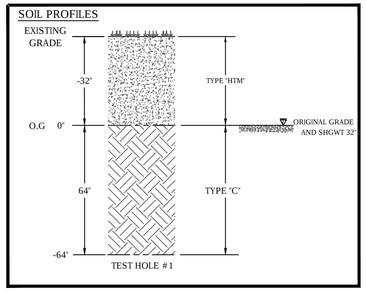

SOIL PROFILES

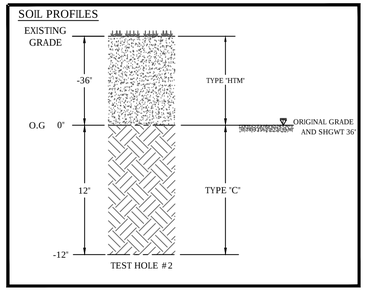

LEGEND

BRUSH LINE (APPROXIMATE)	CATCH BASIN
100.00' DIMENSION - EXISTING	DRILL HOLE
100.00' (D) DIMENSION - PLAN / DEED	ELECTRIC BOX (ETC)
100.00' DIMENSION - PROPOSED	FIRE HYDRANT
100.00' (S) DIMENSION - SURVEY	GATE VALVE
EDGE OF PAVEMENT - EXISTING	GRANITE BOUND, EXISTING
EDGE OF PAVEMENT - PROPOSED	LOW WATER LINE
ETC ELECTRIC - OVERHEAD (OHE)	LIMIT OF DISTURBANCE MARKER
UGE ELECTRIC - TELEPHONE - CABLE (ETC)	MANHOLE (MH:TYPE)
ELECTRIC - UNDERGROUND (UGE)	REBAR / STEEL PIPE FOUND
FENCE - METAL	SPIKE
FENCE - WOOD	SPOT GRADE - EXISTING
FLOW ARROWS	SPOT GRADE - PROPOSED
GAS GAS (G)	STRUCTURE, EXISTING
GRADE CONTOUR - EXISTING	STRUCTURE, PROPOSED
100.00 GRADE CONTOUR - PROPOSED	SURVEY MONUMENT TO BE SET
HIGH VISIBILITY FENCE (HVF)	SURVEY MARKER TO BE SET
LOD LIMIT OF DISTURBANCE (LOD)	SE # SOIL EVALUATION
PROPERTY LINE - ABUTTING	TREE
PROPERTY LINE - EXISTING	UTILITY POLE
PROPERTY LINE - PROPOSED	WATER SHUT OFF
SAN SANITARY SEWER (S)	WETLAND FLAG LOCATION
SED SEDIMENT CONTROL (SED)	
SETBACKS	
STONE WALL	
SD STORM DRAIN (SD)	
SUBDIVISION LINE - EXISTING	
W WATER	
WETLAND LIMIT	

EXISTING IMPERVIOUS AREA

NO.	ITEM	AREA		NOTES
1	PARKING AREA	17,377	ft^2	
2	ROADWAY TO PARKING	4,512	ft^2	
3	TOTAL	21,889	ft^2	
4	Lot Area	2,289,513	ft^2	52.56 ACRES
5	Cover Percentage	1.0%		FROM SURVEY

PROPOSED IMPERVIOUS AREA

NO.	ITEM	AREA		NOTES
1	STRUCTURE + PADS	5,280	ft^2	
2	PARKING AREA	14,030	ft^2	
3	PAVED ROADWAY	6,636	ft^2	REDUCED PAVEMENT OPTION CHOSEN
4	TOTAL	25,946	ft^2	PROPOSED>EXISTING (25,946 SF >21,889 SF)
5	Lot Area	2,289,513	ft^2	52.56 ACRES
6	Cover Percentage	1.1%		

PROPOSED > EXISTING (Δ = 4,057)

This drawing is copyrighted and is subject to copyright protection as an "architectural work" under 17 U. S. C. Sec. 101 et seq. The protection includes but is not limited to the overall form as well as the arrangement and composition of spaces, materials, color and elements in the design. Under such protection, unauthorized use of this drawing may result in the cessation of construction or buildings being seized and/or monetary compensation being awarded to The Robinson Green Beretta Corporation (RGB).

Any reproduction, possession, or use of this drawing or any part thereof without the express written permission of RGB, is prohibited. Violators will be prosecuted to the full extent of the law.

© RGB 2008

Certification

Drawn by R.B

Checked by NKH, KH

Revised on

1 (ADD EXISTING BRUSHLINE AND PT POSTS)(ADD BENCHMARKS) (01/30/19)

KAMAL R. HINGORANY NO. 4089 REGISTERED PROFESSIONAL ENGINEER

01.31.19

DRAWINGS MUST BE PRINTED IN COLOR TO BE VALID. THIS NOTE SHOULD BE BLUE. IF THIS NOTE IS NOT BLUE, PLEASE REPRINT IN COLOR OR CONTACT NEI.

NARRAGANSETT ENGINEERING INC.
MAIN OFFICE:
3102 EAST MAIN ROAD,
PORTSMOUTH, RI 02871
TEL : (401) 683-6630
nei-cds.com

REVISION 1, 10/28/2018
- COASTAL FEATURE FLAGGED, SANITARY LINE EDITS

50 Holden Street
Providence, Rhode Island 02908

Phone: (401) 272-1730
Fax: (401) 273-7156

E-mail: rgbinfo@rgb.net
www.rgb.net

RGB architects

Architecture · Project Management · Interior Design

Project

FORT ADAMS MAITENANCE BUILDING

RIDEM / DIVISION OF PARKS & RECREATION

STATE OF RHODE ISLAND AND PROVIDENCE PLANTATIONS

FORT ADAMS STATE PARK, NEWPORT, RI

Drawing Status

ISSUED FOR CONSTRUCTION

Issued On MAY 29, 2019

Sheet Contents

PROPOSED STORMWATER PLAN SCALE 1 20"

Project Number. 6380
NEI 17.0200

Drawing No.

C101

Sheet 2 of 3

DEWATERING - TEMPORARY SEDIMENT BASIN OR FILTER BAGS

DEPENDING ON THE TIME OF YEAR OF CONSTRUCTION, SHGWT AND DEPTH OF EXCAVATION, CONSTRUCTION SITE DEWATERING MAY BE REQUIRED. NEI RECOMMENDS CONTRACTOR CARRY PROVISIONS FOR ANY / ALL SITES IN AREAS OF HIGH WATER TABLES, NEAR WETLAND OR COASTAL RESOURCE AREAS.

DEPENDING ON THE SITE AND SEASONAL SPECIFICS, A SITE SPECIFIC DEWATERING PLAN MAY NEED TO BE DEVISED. IF A SPECIFIC PLAN HAS NOT BEEN PREPARED, OWNER AND CONTRACTOR MUST NOTIFY NEI IF GROUNDWATER IS ENCOUNTERED DURING CONSTRUCTION .

GENERALIZED PRACTICE MAY BE A TEMPORARY SEDIMENT FILTER BAG OR TEMPORARY SEDIMENT BASIN.

GENERAL NOTES

- AT A MINIMUM, THE FOLLOWING DISCHARGE REQUIREMENTS MUST BE MET FOR DEWATERING ACTIVITIES:
- DO NOT DISCHARGE VISIBLE FLOATING SOLIDS OR FOAM;
- TO THE EXTENT FEASIBLE, UTILIZE VEGETATED, UPLAND AREAS2 OF THE SITE TO INFILTRATE DEWATERING FLUIDS BEFORE DISCHARGE. IN NO CASE WILL SURFACE WATERS BE CONSIDERED PART OF THE TREATMENT AREA;

2 THESE AREAS CAN BE BEST IDENTIFIED ON SESC PLANS AS SOILS THAT ARE CLASSFIED AS BEING HYDROLOGIC SOIL GROUPS (HSGS) A AND B. PART D. SOIL EROSION AND SEDIMENT CONTROL PLANS - PAGE 9

- AT ALL POINTS WHERE DEWATERING FLUIDS ARE DISCHARGED UTILIZE VELOCITY DISSIPATION DEVICES SUCH AS THOSE SPECIFIED IN SECTION FIVE: RUNOFF CONTROL MEASURES;
- WITH FILTER BACKWASH WATER, EITHER HAUL IT AWAY FOR DISPOSAL OR RETURN IT TO THE BEGINNING OF THE TREATMENT PROCESS;
- REPLACE AND CLEAN THE FILTER MEDIA USED IN DEWATERING DEVICES WHEN THE PRESSURE DIFFERENTIAL EQUALS OR EXCEEDS THE MANUFACTURER'S SPECIFICATIONS.
- DEWATERING CONTROL MEASURES MUST BE IMPLEMENTED IN ACCORDANCE WITH MEASURES, CONTAINMENT AREA FOR EARTH MATERIALS; PORTABLE SEDIMENT TANKS AND BAGS; PUMPING SETTLING BASINS; AND PUMP INTAKE PROTECTION.
- TREATMENT CHEMICAL RESTRICTIONS: IF THE OWNER AND/OR THE OPERATOR PLANS TO UTILIZE POLYMERS, FLOCCULANTS, OR OTHER TREATMENT CHEMICALS TO TREAT DEWATERING FLUIDS, THE USE OF SUCH CHEMICALS MUST BE MANAGED IN ACCORDANCE WITH APPENDIX J, CHEMICAL TREATMENT FOR EROSION AND SEDIMENT CONTROL.

• THE DEWATERING OF CONTAMINATED WATER CANNOT BE DISCHARGED WITHOUT PRIOR NOTICE AND A SPECIFIC PERMIT FROM THE RIDEM RIPDES PERMITTING PROGRAM

REFER TO RI EROSION AND SEDIMENT CONTROL HANDBOOK: HTTP://WWW.DEM.RI.GOV/PROGRAMS/BNATRES/WATER/PDF/RIESC-HANDBOOK16.PDF

P.T. POST DETAIL AT L.O.D.
N.T.S.

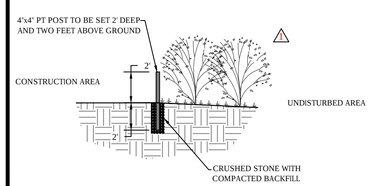

BIORETENTION DETAIL

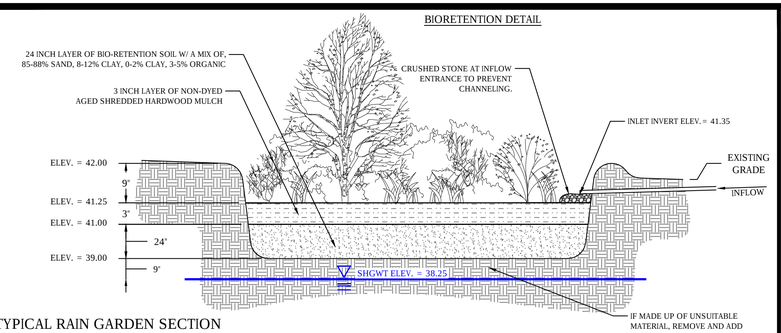

TYPICAL RAIN GARDEN SECTION

NEI RECOMMENDS CONSULTING WITH A LOCAL LANDSCAPE ARCHITECT FOR EACH SPECIFIC SITE; PLANT SELECTIONS SHOULD BE BASED OFF REQUISITE CRITERIA IN RI COASTAL PLANT GUIDE. HTTP://WEB.URI.EDU/CELS/CEOC/COASTALPLANTS/COASTALPLANTGUIDE.HTM

GENERAL NOTES:

1. THE STATE OF RHODE ISLAND STANDARD SPECIFICATION FOR ROAD AND BRIDGE CONSTRUCTION, 2004 EDITION, AND THE RHODE ISLAND STANDARD DETAILS ARE MADE A PART HEREOF AS FULLY AND COMPLETELY AS IF ATTACHED HERETO. ALL WORK SHALL CONFORM TO RHODE ISLAND STANDARD SPECIFICATION FOR ROAD AND BRIDGE CONSTRUCTION 2004 EDITION OR LATEST REVISION. THE 2004 EDITION OF THE STANDARD SPECIFICATION MAY BE OBTAINED AT THE RHODE ISLAND DEPARTMENT OF TRANSPORTATION.
2. IT SHALL BE THE CONTRACTOR'S SOLE RESPONSIBILITY TO APPLY FOR AND OBTAIN ANY AND ALL NECESSARY PERMITS, PAY ALL FEES AND POST ALL BONDS ASSOCIATED WITH THE SAME, AND COORDINATE WITH ARCHITECT OR ENGINEER AS NECESSARY
3. THE CONTRACTOR IS SOLELY RESPONSIBLE FOR THE SAFETY OF THE JOB SITE. THE CONTRACTOR SHALL PROVIDE TEMPORARY FENCING AND/OR BARRIERS AROUND ANY EXPOSED EXCAVATED AREAS IN ACCORDANCE WITH OSHA STANDARDS.
4. IN THE CASE THAT ANY DEVIATION / ALTERATION / OR IMPROVEMENT FROM THE APPROVED PLANS IS NECESSARY THE CONTRACTOR SHALL IMMEDIATELY CONTACT THE ENGINEER AND OWNER PRIOR TO OCCURRENCE OF DEVIATION
5. ALL WORK SHALL BE LIMITED TO THE AREAS WITHIN THE LIMIT OF DISTURBANCE DISPLAYED ON THESE PLANS OR PROPERTY LINE IF LIMIT OF DISTURBANCE IS UNCLEAR. ANY AREA DISTURBED OUTSIDE OF THE LIMIT OF DISTURBANCE SHALL BE REPAIRED AND RESTORED TO ITS ORIGINAL CONDITION AT NO COST TO THE OWNER OR ENGINEER, AND PREFORMED TO THE ENGINEERS SATISFACTION
6. ALL SITE WORK SHALL MEET OR EXCEED THE SITE WORK SPECIFICATION SHOWN ON THESE PLANS AND/OR ACCOMPANYING SPECIFICATIONS. THE CONTRACTOR SHALL BE RESPONSIBLE FOR DETERMINING IF ANY CONFLICTS WITH EXISTING CONDITIONS OR PROPOSED CONDITIONS EXIST. IF ANY CONFLICTS ARE DISCOVERED, THE CONTRACTOR SHALL NOTIFY THE OWNER AND ENGINEER PRIOR TO INSTALLATION OF ANY PORTION OF THE SITE WORK THAT WOULD BE AFFECTED
7. EXCAVATED ROCK SHALL BE REMOVED FROM THE SITE AND LEGALLY DISPOSED OF UNLESS OTHER ARRANGEMENTS ARE MADE WITH THE OWNER. SUITABLE ROCK MAY BE UTILIZED IN FILL AREAS WITH WRITTEN PERMISSION OF THE OWNERS REPRESENTATIVES
8. DEBRIS, ORGANICS AND OTHER UNSUITABLE MATERIALS UNCOVERED DURING THE COURSE OF SITE EXCAVATION SHALL BE REMOVED FROM THE SITE AND DISPOSED OF LEGALLY
9. THE CONTRACTOR SHALL BE SOLELY RESPONSIBLE FOR MAINTAINING THE INTEGRITY OF ALL EXISTING UTILITIES THAT SERVICE THE SITE AND NEIGHBORING AREAS. IF ANY DAMAGE OCCURS TO EXISTING UTILITIES IT SHALL BE THE CONTRACTORS RESPONSIBILITY TO PAY ALL COSTS ASSOCIATED WITH REPAIR OF UTILITIES AS DIRECTED BY THE ENGINEER, UTILITY OWNER, OR GOVERNING AGENCY
10. THE CONTRACTOR SHALL BE SOLELY RESPONSIBLE FOR QUANTITY TAKE-OFF IN COMPUTING ANY ESTIMATES
11. THE CONTRACTOR SHALL BE RESPONSIBLE FOR ESTABLISHING AND MAINTAINING ALL TEMPORARY SEDIMENTATION AND EROSION CONTROLS.
12. THE LOCATION OF EXISTING UTILITIES AS SHOWN ARE APPROXIMATE AND SHALL BE VERIFIED BY THE CONTRACTOR. "DIG SAFE" SHALL BE CONTACTED BY THE CONTRACTOR AS PART OF THIS VERIFICATION
13. NO EXCAVATION SHALL PROCEED UNTIL UTILITY COMPANIES ARE NOTIFIED IN ADVANCE
14. ALL TREE PROTECTION BY OTHERS UNLESS OTHERWISE NOTED
15. CONTRACTOR TO LOAM AND SEED ALL DISTURBED AREAS WITH APPROPRIATE SEED MIXTURES

EROSION AND SEDIMENT CONTROL NOTES:

1. ALL EROSION CONTROL SHALL BE IN ACCORDANCE WITH RHODE ISLAND SOIL EROSION AND SEDIMENT CONTROL HANDBOOK, LATEST REVISION
2. THE CONTRACTOR SHALL BE RESPONSIBLE FOR INSTALLATION AND MAINTENANCE OF ALL SEDIMENT AND EROSION CONTROL MEASURES SHOWN ON THESE PLANS
3. EROSION AND SEDIMENT CONTROL MEASURES SHALL BE INSPECTED AND MAINTAINED ONCE WEEKLY OR AFTER EVERY RAINFALL EVENT GREATER THAN 0.25 INCHES.
4. SEDIMENT BUILD UP GREATER THAN ONE-HALF THE BARRIER HEIGHT SHALL BE REMOVED AND DISPOSED OF PROPERLY AS REQUIRED. ANY SEDIMENT BUILD UP OUTSIDE OF THE SEDIMENT BARRIER SHALL BE REMOVED IMMEDIATELY
5. CONTRACTOR SHALL MAINTAIN A RESERVE OF EROSION CONTROL MATERIALS FOR EMERGENCY USE AND ROUTINE MAINTENANCE
6. THE CONTROLS SHOWN ON THESE PLANS ARE INTENDED AS MINIMUM MEASURES. ADDITIONAL MEASURES MAY BE REQUIRED AND SHALL BE IMPLEMENTED BY THE CONTRACTOR IF WARRANTED OR REQUESTED BY THE OWNER, OWNERS REPRESENTATIVE, ENGINEER, OR ANY APPLICABLE REGULATING AGENCY.
7. PRIOR TO THE START OF ANY LAND CLEARING / GRUBING OR OTHER CONSTRUCTION ACTIVITY THE PERIMETER CONTROLS SHALL BE PLACED, PROPERLY CONSTRUCTED AND CLEARLY VISIBLE. THESE CONTROLS SHALL REPRESENT THE LIMITS OF WORK AND WORKERS SHALL BE NOTIFIED THAT NO CONSTRUCTION ACTIVITY IS ALLOWED BEYOND THESE CONTROLS
8. IF OR AS POSSIBLE CONSTRUCTION SHALL BE PHASED TO LIMIT TO THE MAXIMUM EXTENT PRACTICABLE THE AMOUNT OF EXPOSED SOILS. ALL DISTURBED AREAS SHALL BE TEMPORARILY OR PERMANENTLY STABILIZED WITHIN 14 DAYS OF COMPLETION OF GRADING ACTIVITIES
9. THE CONTRACTOR SHALL SCHEDULE WORK IN A WAY TO ALLOW POSITIVE DRAINAGE OF SUBGRADE THROUGHOUT CONSTRUCTION
10. CONSTRUCTION ENTRANCES PER RIDOT STANDARD DETAIL 9.9.0 SHALL BE EMPLOYED AT ALL POINTS OF INGRESS AND EGRESS FROM THE SITE
11. TEMPORARY DIVERSIONS, SEDIMENT BASINS, AND TEMPORARY SWALES MAY BE USED AND SHALL BE SIZED ACCORDING TO THE RHODE ISLAND SOIL EROSION AND SEDIMENT CONTROL HANDBOOK
12. CATCH BASINS AND STORM DRAINS SHALL BE PROTECTED PER RIDOT STANDARD DETAIL 9.8.0 IN GRASSED AREAS OR SEDIMENT BAGS IN PAVED AREAS
13. TEMPORARY SEDIMENT STOCK PILES SHALL BE KEPT MOIST AND COVERED AT ALL TIMES. CALCIUM CHLORIDE SHALL ONLY BE USED IF AN APPROVAL FROM THE TOWN/CITY OR OTHER APPLICABLE AGENCY HAS BEEN GRANTED
14. DEWATERING FROM EXCAVATIONS WILL BE CONVEYED BY HOSE TO AN UPLAND AREAS AND DISCHARGED INTO A DEWATERING BASIN PER RIDOT STANDARD 9.7.0, HAYBALE CORRALS, OR SEDIMENTATION BAGS. THE CONTRACTOR SHALL ENSURE THAT NO CONTAMINATE IS PRESENT IN ANY WATERS PRIOR TO DISCHARGE FROM SITE AND IS RESPONSIBLE FOR ALL ENGINEERING, EQUIPMENT, MATERIAL AND LABOR REQUIRED FOR THE SITE WATER REMOVAL DURING CONSTRUCTION
15. CONSTRUCTION WASTE MATERIALS SHALL BE KEPT ON-SITE AND DISPOSED OF IN AN APPROVED AND APPROPRIATE MANNER IN ACCORDANCE WITH ALL APPLICABLE REGULATORY AGENCIES.
16. RIPRAP SHALL BE USED WHERE NECESSARY TO CONTROL EXIT VELOCITIES
17. NON MOBILE (I.E. TRACKED MACHINERY) SHALL BE MAINTAINED WITHIN THE LIMIT OF DISTURBANCE DEFINED BY SEDIMENT BARRIER
18. NEWLY VEGETATED AREAS SHALL BE REGULARLY INSPECTED AND MAINTAINED TO ENSURE ESTABLISHMENT OF APPROPRIATE VEGETATION
19. THE CONTRACTOR SHALL NOT REMOVE ANY EROSION AND SEDIMENTATION CONTROL MEASURES UNTIL FINAL ACCEPTANCE OF THE SITE HAS OCCURRED
20. ALL DRAINAGE STRUCTURES SHALL BE CLEARED OF ACCUMULATED SEDIMENT PRIOR TO THE FINAL SITE ACCEPTANCE

UTILITIES NOTES:

1. THE UTILITIES SHOW ON THIS PLAN ARE SHOWN FROM SURFACE FEATURES AND DIGSAFE MARKINGS
2. THE CONTRACTOR SHALL VERIFY THE LOCATION OF ALL UTILITIES PRIOR TO THE START OF CONSTRUCTION
3. IF THE CONTRACTOR FINDS UTILITIES UNMARKED ON THESE PLANS OR IN LOCATIONS OTHER THAN THOSE ON THESE PLANS THE CONTRACTOR SHALL CONTACT THE ENGINEER, OWNER OR OWNERS REPRESENTATIVE AS SOON AS POSSIBLE WITH THE SIZE LOCATION AND MATERIAL OF THE UTILITY
4. NO WORK SHALL PROCEED IF UTILITIES FOUND ON SITE DO NOT MATCH THOSE SHOWN ON THESE PLANS UNTIL THE ENGINEER HAS GIVEN THEIR WRITTEN PERMISSION

TEMPORARY SEDIMENT STOCKPILE

N.T.S.

NOTES:

1. PRIOR TO CONSTRUCTION, CONTRACTOR SHALL PREPARE PLAN INDICATING LOCATIONS OF SEDIMENT STOCKPILES FOR APPROVAL BY THE ENGINEER OR APPROPRIATE REGULATORY AUTHORITY.
2. STOCKPILE SHALL NOT EXCEED GIVEN DIMENSIONS WITHOUT APPROVAL BY ENGINEER OR APPROPRIATE REGULATORY AUTHORITY.
3. STOCKPILED MATERIAL NOT TO BE USED WITHIN 14 CALENDAR DAYS SHALL BE PLANTED WITH TEMPORARY SEED MIX PER RIDOT STD M.18.10.5.

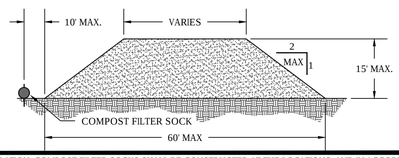

TYPICAL ROOF DRAIN TO BMP
N.T.S.

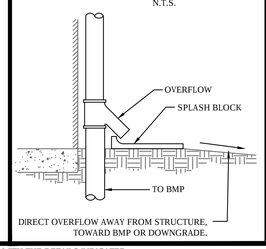

A. INSTALLATION. COMPOST FILTER SOCKS SHALL BE CONSTRUCTED AT THE LOCATIONS, AND IN ACCORDANCE WITH THE DETAILS INDICATED ON THE PLANS, OR AS DIRECTED BY THE ENGINEER. THE FOLLOWING STIPULATIONS ALSO APPLY:
1. COMPOST FILTER SOCKS MAY BE EITHER FABRICATED ON SITE OR DELIVERED TO THE SITE.
2. COMPOST MEDIA SHALL CONFORM TO AASHTO MP 9-06 AND RIDOT SECTION 206.
3. TRENCHING IS NOT REQUIRED. COMPOST FILTER SOCKS SHALL BE PLACED OVER THE TOP OF GROUND, WOODEN STAKES SHALL BE DRIVEN THROUGH THE CENTER OF THE FILTER SOCKS TO ANCHOR THEM TO THE GROUND. TO ENSURE OPTIMUM PERFORMANCE, HEAVY VEGETATION SHALL BE CUT DOWN OR REMOVED, AND EXTREMELY UNEVEN SURFACES SHALL BE GRADED TO ENSURE THAT THE COMPOST FILTER SOCK UNIFORMLY CONTACTS THE GROUND SURFACE.
4. FILTER SOCKS SHALL BE PLACED IN A CONTINUOUS LINE. WHERE ENDS INTERSECT THEY SHALL BE SLEEVED TO CREATE AN INTERLOCK WITH A TWO (2) FOOT OVERLAP. AFTER ONE SECTION IS FILLED AND THE ENDS TIED OFF, THE NEXT SECTION SHALL BE PULLED OVER THE TIED OFF END OF THE PREVIOUS SECTION, TO CREATE A 2 FOOT OVERLAP. THE OVERLAP SHALL BE STAKED. THE INTERSECTING OVERLAPS SHALL BE CONSTRUCTED TO ENSURE THAT STORMWATER DOES NOT BREAK THROUGH AT THESE INTERSECTION POINTS.

B. REMOVAL. THIS WORK, IF REQUIRED, SHALL INCLUDE THE REMOVAL OF THE COMPOST FILTER SOCK AND STAKES. UNLESS BIODEGRADABLE, THE MESH FILTER SOCK MATERIAL SHALL BE CUT OPEN AND THE MESH REMOVED. IN GENERAL, THE COMPOST FILTER MATERIAL MAY BE LEFT IN PLACE, HOWEVER THE MATERIAL WILL BE RAKED OUT LEVELED TO SURROUNDING GRADES, THEN SEEDED. PRIOR TO SUCH REMOVAL, HOWEVER, ALL SILT, MUD AND DEBRIS ENTRAPPED OUTSIDE OF THE COMPOST FILTER SOCK SHALL BE REMOVED AND THE AREA CLEANED UP IN ACCORDANCE WITH THE APPLICABLE PROVISIONS OF SECTION 212 OF RIDOT STANDARD SPECIFICATIONS FOR ROAD AND BRIDGE CONSTRUCTION.

SEDIMENT BARRIER
COMPOST FILTER SOCK DETAIL
REF. SECTION 206.03.4 OF RIDOT STANDARD SPECIFICATIONS FOR ROAD AND BRIDGE CONSTRUCTION
N.T.S.

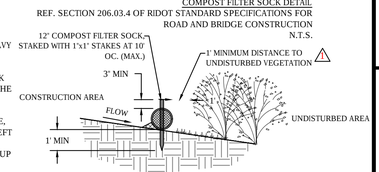

PAVING NOTE:
PROPOSED PAVING SHALL ADHERE TO THE FOLLOWING SPECIFICATIONS:
4" CLASS 12.5 HMA SURFACE IN (2" MAX. LIFT) +
6" CLASS 19.0 HMA BASE OVER
12" GRAVEL SUB-BASE OVER COMPACTED BASE

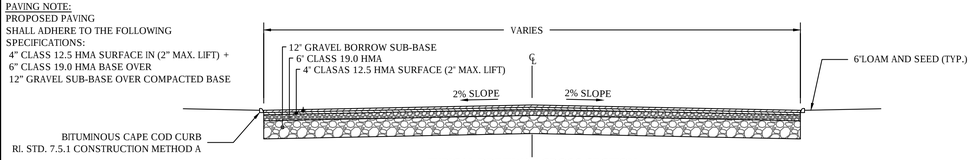

TYPICAL DRIVEWAY CROSS SECTION
NOTE: 1.ALL MATERIALS SHALL MEET R.I.D.O.T. STANDARDS

RAIN GARDEN
N.T.S.

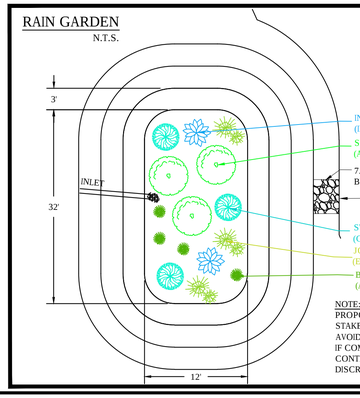

NOTE:
PROPOSED INFILTRATION AREA TO BE STAKED WITH HIGH VISIBILITY FENCE TO AVOID EQUIPMENT TRAVEL AND STOCKPILING. IF COMPACTION OCCURS IN BMP AREA THE CONTRACTOR SHALL CORRECT AT DISCRETION OF ENGINEER

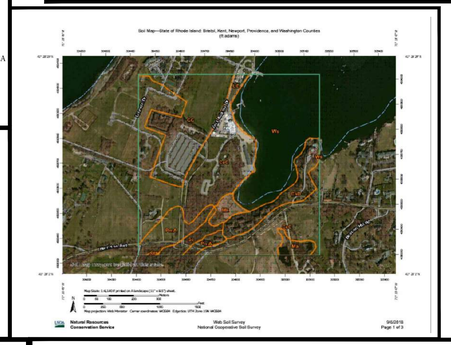

State of Rhode Island: Bristol, Kent, Newport, Providence, and Washington Counties
CrC 6 Canton and Charlton fine sandy loams, 3 to 15 percent slopes, very rocky

Map Unit Setting

National map unit symbol: 2w81y
Elevation: 0 to 820 feet
Mean annual precipitation: 36 to 71 inches
Mean annual air temperature: 39 to 55 degrees F
Frost-free period: 145 to 240 days
Farmland classification: Not prime farmland

Map Unit Composition

Canton, very stony, and similar soils: 55 percent
Charlton, very stony, and similar soils: 30 percent
Minor components: 15 percent
Estimates are based on observations, descriptions, and transects of the mapunit.
Description of Canton, Very Stony
Setting

Landform: Hills, moraines, ridges
Landform position (two-dimensional): Backslope, shoulder, summit
Landform position (three-dimensional): Side slope, crest, nose slope
Down-slope shape: Linear, convex
Across-slope shape: Convex
Parent material: Coarse-loamy over sandy melt-out till derived from gneiss, granite, and/or schist

Typical profile

Oi - 0 to 2 inches: slightly decomposed plant material
A - 2 to 5 inches: fine sandy loam
Bw1 - 5 to 16 inches: fine sandy loam
Bw2 - 16 to 22 inches: gravelly fine sandy loam
2C - 22 to 67 inches: gravelly loamy sand

Properties and qualities

Slope: 3 to 15 percent
Percent of area covered with surface fragments: 1.6 percent
Depth to restrictive feature: 19 to 39 inches to strongly contrasting textural stratification
Natural drainage class: Well drained
Runoff class: Low
Capacity of the most limiting layer to transmit water (Ksat):Moderately low to high (0.14 to 14.17 in/hr)
Depth to water table: More than 80 inches
Frequency of flooding: None
Frequency of ponding: None
Salinity, maximum in profile: Nonsaline (0.0 to 1.9 mmhos/cm)
Available water storage in profile: Low (about 3.4 inches)

Interpretive groups

Land capability classification (irrigated): None specified
Land capability classification (nonirrigated): 6s
Hydrologic Soil Group: B
Hydric soil rating: No

Description of Charlton, Very Stony
Setting

Landform: Ground moraines, ridges, hills
Landform position (two-dimensional): Backslope, shoulder, summit
Landform position (three-dimensional): Side slope, crest
Down-slope shape: Linear, convex
Across-slope shape: Convex
Parent material: Coarse-loamy melt-out till derived from granite, gneiss, and/or schist

Typical profile

Oe - 0 to 2 inches: moderately decomposed plant material
A - 2 to 4 inches: fine sandy loam
Bw - 4 to 27 inches: gravelly fine sandy loam
C - 27 to 65 inches: gravelly fine sandy loam

Properties and qualities

Slope: 3 to 15 percent
Percent of area covered with surface fragments: 1.6 percent
Depth to restrictive feature: More than 80 inches
Natural drainage class: Well drained
Runoff class: Low
Capacity of the most limiting layer to transmit water (Ksat):Moderately low to high (0.14 to 14.17 in/hr)
Depth to water table: More than 80 inches
Frequency of flooding: None
Frequency of ponding: None
Salinity, maximum in profile: Nonsaline (0.0 to 1.9 mmhos/cm)
Available water storage in profile: Moderate (about 8.7 inches)

Interpretive groups

Land capability classification (irrigated): None specified
Land capability classification (nonirrigated): 6s
Hydrologic Soil Group: B
Hydric soil rating: No

Minor Components
Rock outcrop

Percent of map unit: 5 percent
Landform: Ridges, hills
Hydric soil rating: Unranked

Gloucester, very stony

Percent of map unit: 4 percent
Landform: Moraines, ridges, hills
Landform position (two-dimensional): Backslope, shoulder, summit
Landform position (three-dimensional): Side slope, crest
Down-slope shape: Convex, linear
Across-slope shape: Convex
Hydric soil rating: No

Sutton, very stony

Percent of map unit: 4 percent
Landform: Ground moraines, hills
Landform position (two-dimensional): Footslope
Landform position (three-dimensional): Base slope
Down-slope shape: Concave
Across-slope shape: Linear
Hydric soil rating: No

Chatfield, very stony

Percent of map unit: 2 percent
Landform: Ridges, hills
Landform position (two-dimensional): Backslope, shoulder, summit
Landform position (three-dimensional): Crest, side slope, nose slope
Down-slope shape: Convex
Across-slope shape: Linear, convex
Hydric soil rating: No

STANDARD GRADATIONS TABLE F-7 RIDEM

US STANDARD SIEVE SIZE	PERCENT PASSING (%)			
	CHOKER COURSE (AASHTO NO. 57)	FILTER COURSE (AASHTO NO M-6)	RESERVOIR COURSE (AASHTO NO. 3)	RESERVOIR COURSE (AASHTO NO. 5)
6 INCHES 150 MM	-	-	-	-
2½ INCHES 63 MM	-	-	100	-
2 INCHES 50 MM	-	-	90 - 100	-
1½ INCHES 37.5 MM	100	-	35 - 70	100
1 INCH 25 MM	95 - 100	-	0 - 15	90 - 100
¾ INCH 19 MM	-	-	-	20 - 55
½ INCH 12.5 MM	25 - 60	-	0 - 5	0 - 10
⅜ INCH 9.5 MM	-	100	-	0 - 5
#4 4.75 MM	0 - 10	70 - 100	-	-
#8 2.36 MM	0 - 5	-	-	-
#200 0.075 MM	-	0 - 6**	-	-
% COMPACTION ASTM D698 / AASHTO T99	95	95	95	95

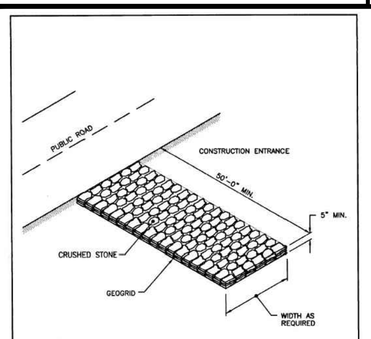

NOTE:
SHALL BE IN ACCORDANCE WITH SECTION 211 OF THE R.I. STANDARD SPECIFICATIONS.

RHODE ISLAND DEPARTMENT OF TRANSPORTATION
REVISIONS | NO. | BY | DATE
CONSTRUCTION ACCESS
CHIEF ENGINEER TRANSPORTATION — CHIEF DESIGN ENGINEER TRANSPORTATION — JUNE 15, 1998 ISSUE DATE
R.I. STANDARD 9.9.0

KEY CONSIDERATIONS: BIORETENTION/TREE FILTERS

FEASIBILITY
- Bottom of filter at or above SHGT.
- Top of filter at least 3ft above SHGT.

CONVEYANCE
- Provide overflow for the 1-yr storm to the conveyance system.
- Conveyance to the system is typically overland flow delivered to the surface of the system, typically through curb cuts or over a concrete lip.

PRETREATMENT
- Pretreatment volume of 25% (or equivalent) of WQ_v.
- Typically grass channel or grass filter strip, a pea gravel diaphragm, and a mulch layer.

TREATMENT
- Total system (including pretreatment) must hold 75% of the WQ_v
- Treatment area to have a 2-4ft deep planting soil bed, a surface mulch layer, and a 6"-9" ponding layer.
- Soil media as detailed in Appendix F.

VEGETATION
- Detailed planting plan required.
- Use of native plants is recommended.

MAINTENANCE REQUIREMENTS
- Legally binding maintenance agreement.
- Inspect and repair/replace treatment area components.
- Remulch annually.
- Vegetation pruning, harvesting.

IMPLEMENTATION CONSIDERATIONS (BIORETENTION/TREE FILTERS)

M Capital Cost
M Maintenance Burden

Residential/Subdivision Use: *Yes*
High Density/Ultra-Urban: *Yes*
Drainage Area: *5 acres max.*
Soils: *Planting soils must meet specified criteria; No restrictions on surrounding soils, except the depth above water table.*

Key: L=Low M=Moderate H=High

POLLUTANT REMOVAL – ALL FILTERS

F Phosphorus
G Nitrogen
G Metals - Cadmium, Copper, Lead, and Zinc removal
G Pathogens - Coliform, *Streptococci, E. coli* removal

Key: G=Good F=Fair P=Poor

This drawing is copyrighted and is subject to copyright protection as an "architectural work" under 17 U. S. C. Sec. 101 et seq. The protection includes but is not limited to the overall form as well as the arrangement and composition of spaces, materials, color and elements in the design. Under such protection, unauthorized use of this drawing may result in the cessation of construction or buildings being seized and/or monetary compensation being awarded to The Robinson Green Beretta Corporation (RGB).

Any reproduction, possession, or use of this drawing or any part thereof without the express written permission of RGB, is prohibited. Violators will be prosecuted to the full extent of the law.

© RGB 2008

Certification

Drawn by R.B
Checked by NKH, KH

Revised on
1 (ADD EXISTING BRUSHLINE AND PT POSTS)(ADD BENCHMARKS) (01/30/19)

KAMAL R. HINGORANY
NO. 4089
REGISTERED PROFESSIONAL ENGINEER
01.31.19

DRAWINGS MUST BE PRINTED IN COLOR TO BE VALID. THIS NOTE SHOULD BE BLUE. IF THIS NOTE IS NOT BLUE, PLEASE REPRINT IN COLOR OR CONTACT NEI.

NARRAGANSETT ENGINEERING INC.
MAIN OFFICE:
3102 EAST MAIN ROAD,
PORTSMOUTH, RI 02871
TEL : (401) 683-6630
nei-cds.com

REVISION 1. 10/28/2018
- COASTAL FEATURE FLAGGED, SANITARY LINE EDITS

50 Holden Street
Providence, Rhode Island 02908
Phone: (401) 272-1730
Fax: (401) 273-7156
E-mail: rgbinfo@rgb.net
www.rgb.net
Architecture · Project Management · Interior Design

Project

FORT ADAMS MAITENANCE BUILDING

RIDEM / DIVISION OF PARKS & RECREATION

STATE OF RHODE ISLAND AND PROVIDENCE PLANTATIONS

FORT ADAMS STATE PARK, NEWPORT, RI

Drawing Status

ISSUED FOR CONSTRUCTION

Issued On MAY 29, 2019

Sheet Contents

DETAILS & NOTES

Project Number. 6380
NEI 17.0200

Drawing No.

C102

Sheet 3 of 3

ABBREVIATIONS

AFF	ABOVE FINISHED FLOOR
AF	ABOVE FLOOR
ACP	ACCESS PANEL
ACC	ACCESSORY, ACCESSORIES
ACOUS	ACOUSTICAL
ACT	ACOUSTIC CEILING TILE
ADH	ADHESIVE
ADJ	ADJUSTABLE
AGG	AGGREGATE (S)
A/C	AIR CONDITIONING
AVB	AIR/VAPOR BARRIER
AC	ALTERNATING CURRENT
ALT	ALTERNATE
ALUM	ALUMINUM
AT	ALUMINUM THRESHOLD
ANC	ANCHOR (S) ANCHORAGE (S)
AB	ANCHOR BOLTS
L,∠	ANGLE
ANOD	ANODIZED
ANT	ANTENNA (E)
APP	APPROVED, APPROVAL
APPROX	APPROXIMATE
AD	AREA DRAIN
@	AT
ATT	ATTACH, ATTACHMENT
ALD	AUTOMATIC LOUVER DAMPER
AVE	AVENUE
AVG	AVERAGE
BTB	BACK TO BACK
BM	BEAM
BMK	BENCH MARK
BG	BEARING
BPL	BEARING PLATE
BIT	BITUMINOUS
BC	BOTTOM OF CURB
BLK	BLOCK
BLKG	BLOCKING
BD	BOARD
BF	BOTTOM OF FOOTING
BO	BOTTOM OF
BOC	BOTTOM OF CURB
BS	BOTH SIDES
BW	BOTH WAYS
BOT	BOTTOM
BKT	BRACKET
BK	BRICK
BRG	BRIDGING, BRIDGE (D)
BTU	BRITISH THERMAL UNIT
BLDG	BUILDING
BUR	BUILT-UP ROOFING
CK	CHALK
CBT, CAB	CABINET
CPT	CARPET
CI	CAST IRON
CB	CATCH BASIN
CLG	CEILING
CTR	CENTER
CL, ℄	CENTERLINE
CTC	CENTER TO CENTER
C	CENTIGRADE(CELSIUS)
CT	CERAMIC TILE
CLF	CHAIN-LINK FENCE
CB	CHALKBOARD
CH, [	CHANNEL
CM	CENTIMETER
CV	CHECK VALVE
CHWR	CHILLED WATER RETURN
CHWS	CHILLED WATER SUPPLY
CKT	CIRCUIT
CO	CLEANOUT
CLR	CLEAR, CLEARANCES
CLS	CLOSURE
CW	COLD WATER
C,COL	COLUMN
COMP	COMPRESS (ED),(ION),(IBLE)
CONC	CONCRETE (PORTLAND CEMENT)
CMU	CONCRETE MASONRY UNITS
COND	CONDUIT
CX	CONNECTION
CONT	CONTINUOUS
CLL	CONTRACT LIMIT LINE
CONTR	CONTRACTOR
CJ	CONTROL JOINT
CFL	COUNTERFLASHING (S)
CS	COUNTERSINK, COUNTERSUNK
CU	CUBIC
CU	COPPER
CFM	CUBIC FEET PER MINUTE
CFS	CUBIC FEET PER SECOND
CF	CUBIC FEET
CU IN	CUBIC INCH
CY	CUBIC YARD
CYL	CYLINDER, CYLINDRICAL
DPR	DAMPER
DP	DAMPPROOF (ED),(ING)
DL	DEAD LOAD
DB	DECIBEL
DEG	DEGREE
DEM	DEMOLISH, DEMOLITION
DEP	DEPRESSED
DET	DETAIL
DIA or Φ	DIAMETER
DIAG	DIAGONAL
DIM	DIMENSION
DC	DIRECT CURRENT
DCX	DISCONNECT (ION)
DPN	DISPENSER
DPL	DISPOSAL, DISPOSABLE
DR	DOOR
DBL	DOUBLE
DH	DOUBLE-HUNG
DTA	DOVETAIL ANCHOR
DTS	DOVETAIL ANCHOR SLOT
DN	DOWN
DS	DOWNSPOUT
D	DRAIN, DRAINAGE LINE
DI	DRAIN INLET
DT	DRAIN TILE
DWG,DRWG	DRAWING (S)
DF	DRINKING FOUNTAIN
DMH	DROP MANHOLE
EIFS	EXT. INSUL FINISH SYSTEM
EW	EACH WAY
EA	EACH
EFF	EFFICIENCY
E, ELECT.	ELECTRIC, ELECTRICAL
EP	ELECTRIC PANEL
EWC	ELECTRIC WATER COOLER
EL, ELEV	ELEVATION
ENC	ENCLOSE, ENCLOSURE
EQ, =	EQUAL (TO)
EQP, EQUIP	EQUIPMENT
EXH	EXHAUST
ED	EXHAUST DUCT
EF	EXHAUST FAN
EH	EXHAUST HOOD
EXIST.	EXISTING
EXP	EXPANSION
EXP	EXPOSED
EB	EXPANSION BOLT
EJ	EXPANSION JOINT
ET	EXTENDED, EXTENSION
EPS	EXTRUDED POLYSTYRENE
EXT	EXTERIOR
FAB	FABRICATE
FO	FACE OF
FS, FOS	FACE OF STUD
FAS	FASTEN, FASTENER
FPM	FEET PER MINUTE
FPS	FEET PER SECOND
FNDR	FEMININE NAPKIN DISPENSER
FNDP	FEMININE NAPKIN DISPOSAL UNIT
FF	FINISH FLOOR
FBD	FIBERBOARD
FGL	FIBERGLASS
FIL	FILLER (S)
FIN	FINISH
FFE	FINISH FLOOR ELEVATION
FFL	FINISH FLOOR LINE
FTR	FINNED TUBE RADIATION
FA	FIRE ALARM STATION
FDC	FIRE DEPARTMENT CONN.
FE	FIRE EXTINGUISHER
FEC, FXC	FIRE EXTINGUISHER CABINET
FHC	FIRE HOSE CABINET
FHR	FIRE HOSE RACK
FH	FIRE HYDRANT
FMN	FIRE MAIN
FP	FIREPROOF (ING)
FR	FIRE RESISTANT
FRC	FIRE-RESISTANT COATING
FRT	FIRE-RETARDANT TREATMENT
FSP	FIRE STANDPIPE
FXD	FIXED
FXT	FIXTURE
FLG	FLASHING
FHCS	FLAT HEAD COUNTERSUNK SCREW
FHWS	FLAT HEAD WOOD SCREW
FLX	FLEXIBLE
FLR	FLOOR, FLOORING
FD	FLOOR DRAIN
FGR	FLOOR GRILLE (REGISTER)
FLU	FLUORESCENT
FL	FLOW LINE
FT	FOOT, FEET
FC	FOOTCANDLES
FTG	FOOTING
FWK	FORMWORK
FND, FDW	FOUNDATION (WALL)
FR	FRAME (D),(ING)
FBO	FURNISHED BY OTHERS
F & I	FURNISH & INSTALL
FURR	FURRING
FUT	FUTURE
FAI	FRESH AIR INTAKE
FRP	FIBER REINFORCED PLASTIC
FSL	FUSIBLE LINK
GAL	GALLON (S)
GPH	GALLONS PER HOUR
GPM	GALLONS PER MINUTE
GPS	GALLONS PER SECOND
GALV	GALVANIZED
GI	GALVANIZED IRON
GST	GALVANIZED STEEL
G	GAS
GKT	GASKET (ED)
GAV	GATE VALVE
GA	GAUGE
GLB	GLASS BLOCK
GMU	GLAZED MASONRY UNITS
GB	GRAB BARS
GRD	GRADE, GRADING
GRT	GRANITE
GVL	GRAVEL
GR	GRILLE
GD	GROUND (ED)
GT	GROUT (ED)
GYP. BD.	GYPSUM WALLBOARD
GWB	GYPSUM WALLBOARD
GYL	GYPSUM LATH
GFRC	GLASS FIBER REINF. CONC.
GPL	GYPSUM PLASTER
HH	HAND HOLD
HA	HANGER
HBD	HARDBOARD
HC	HANDICAP(PED)
HDN	HARDENER (ED)
HDW	HARDWARE
HWD	HARDWOOD
HD	HEAD
HDR	HEADER
HDE	HEAT DETECTOR
HTG	HEATING
HAC	HEATING & AIR CONDITIONING
H & V	HEATING & VENTILATING
HVAC	HEATING, VENTILATING & AIR CONDITIONING
HVC	HEATING, VENTILATING, COOLING
Hz	HERTZ (CYCLES PER SECOND)
HPL	HIGH PRESSURE LAMINATE
HV	HIGH VOLTAGE
HWY	HIGHWAY
HO	HOLD OPEN
HCWD	HOLLOW CORE WOOD
HM	HOLLOW METAL
HMD	HOLLOW METAL DOOR
HMF	HOLLOW METAL FRAME
HK	HOOK (S)
HR	HOUR
HOR, HORZ.	HORIZONTAL
HP	HORSEPOWER
HB	HOSE BIBB
HW	HOT WATER
HWR	HOT WATER RETURN
HWC	HOT WATER, CIRCULATOR
HWF	HOT WATER FAUCET
HWH	HOT WATER HEATING
HWT	HOT WATER TANK
HYD	HYDRANT
IN	INCH
INCL	INCLUDING (ED),(SIVE)
INFO	INFORMATION
ID	INSIDE DIAMETER
INSL	INSULATE (D),(ATION)
IMC	INSULATED METAL CLAD
INT	INTERIOR, INTERNAL
INV	INVERT
IE	INVERT ELEVATION
IDM	ISOLATE DISC. METALS
JAN	JANITOR
JT	JOINT
JF	JOINT FILLER
JS	JOINT SEALER
J	JOIST
JCT	JUNCTION
JB	JUNCTION BOX
KVA	KILOVOLT-AMPERE
KW	KILOWATT
K	KIP
KD	KNOCK DOWN
LAB	LABORATORY
LAD	LADDER
LAM	LAMINATE (D)
LAT	LATERAL
LAV	LAVATORY
LB	LAG BOLT
LBL	LABEL
LBS, #	POUND'S
LCC	LEAD COATED COPPER
LDR	LEADER
LH	LEFT-HAND
LWOD	LESS WIDTH OF DOOR
LIN	LINEN
LP	LIGHT PROOF
LS	LIMESTONE
LTL	LINTEL
LL	LIVE LOAD
LLV	LONG LEG VERTICAL
LW	LIGHT WEIGHT
LP	LOW PRESSURE
LOC	LOCATION
LKR	LOCKER
LG	LONG, LENGTH
LONG	LONGITUDINAL
L or LH	LONG SPAN STEEL JOIST
LVR	LOUVER
LV	LOW VOLTAGE
MB	MACHINE BOLT
MH	MANHOLE
MFD,MFR'D	MANUFACTURED
MFR	MANUFACTURER
MFG	MANUFACTURING
MBL	MARBLE
MK	MARK
MAS	MASONRY
MCJ	MASONRY CONTROL JOINT
MJ	MASONRY JOINT
MO	MASONRY OPENING
MTL	MATERIAL (S)
MAX	MAXIMUM
MC	MEDICINE CABINETS
MED	MEDIUM
MDF	MEDIUM DENSITY FIBERBOARD
MBR	MEMBER
MMB,MEMB	MEMBRANE
MTL	METAL
METC	METAL CLAD
ME	METAL EDGE
MRE	METAL ROOF DECK(ING)
M	METER (S)
MEZZ	MEZZANINE
MIC	MICROPHONE
MM	MILLIMETER
MWK	MILLWORK
MIN	MINIMUM
MIR	MIRROR
MIS	MISCELLANEOUS
MXV	MIXING VALVE
MOD	MODULAR
MLD	MOLDING
MDO	MEDIUM DENSITY OVERLAY
MT	MOUNT (ED), (ING)
MHT	MOUNTING HEIGHT
MUL	MULLION
NL	NAILABLE
NAT	NATURAL (FINISH)
NRC	NOISE-REDUCTION CO-EFFICIENT
NOM	NOMINAL
NC	NON-CORROSIVE
NIC	NOT IN THIS CONTRACT
NTS	NOT TO SCALE
NO,#	NUMBER
OC	ON-CENTER
K,L,H	OPEN-WEB STEEL JOIST
OPG, OPNG	OPENING
OPR	OPERATOR
OPP	OPPOSITE
O.H.,OPH	OPPOSITE HAND
OHS	OPPOSITE HAND SIMILAR
OSB	ORIENTED STRAND BOARD
OAE	OR APPROVED EQUAL
OZ	OUNCE (S)
OD	OUTSIDE DIAMETER
OA	OVERALL
OH	OVERHEAD
OHB	OVERHEAD BRACED
OHD	OVERHEAD DOOR
OF	OWNER FURNISHED
OFI	OWNER FURNISHED & INSTALLED
OFCI	OWNER FURNISH-CONTRACTOR INSTALL
OX	OXYGEN
PT	"P" TRAP
PNT, PTD	PAINT, PAINTED
PR	PAIR
PNL	PANEL
PAR, //	PARALLEL
PBD	PARTICLE BOARD
PTN	PARTITION
PCT or %	PERCENT (AGE)
PF	PERFORATED (D)
PERIM	PERIMETER
PERP, ⊥	PERPENDICULAR
P	PHASE
PLAS	PLASTER
PL	PLATE
PLUMB	PLUMBING
PLYWD	PLYWOOD
PNU	PNEUMATIC
POL	POLISH (ED)
PE	PORCELAIN ENAMEL
PCF	POUNDS PER CUBIC FOOT
PLF	POUNDS PER LINEAR FOOT
PSF	POUNDS PER SQUARE FOOT
PSI	POUNDS PER SQUARE INCH
PIC	POURED INPLACE CONCRETE
PDF	POWER DRIVEN FASTENER (ING)
PCC	PRECAST CONCRETE
PREFAB	PREFABRICATED
PRN	PREFINISH (ED)
PRF	PREFORMED
PM	PREMOLDED
PMTL	PRESSED METAL
PVT	PRIVATE
PROJ	PROJECT
PL, ℄	PROPERTY LINE
P&I	PROVIDE & INSTALL
PUB	PUBLIC
PA	PUBLIC ADDRESS SYSTEM
PB	PULL BOX
PU	PULL, PULL CHAIN
PP	PUMP
PD	PUMP DISCHARGE
PIV	POST INDICATOR VALVE
PC	PHYSICALLY CHALLENGED
PVC	POLY VINYL CHLORIDE
QT	QUARRY TILE
RW	RACEWAY
RAD	RADIATOR, RADIATION
RA, R	RADIUS
R	RISER
RL	RAIL, RAILING
RR	RAILROAD
RECP	RECEPTACLE
REF	REFERENCE
RFL	REFLECTIVE
RE	REFER TO
REG	REGISTER
RFC	REINFORCE (D) (ING)
RC	REINFORCED CONCRETE
REQ,REQ'D	REQUIRE(ED), REQUIREMENTS
R & S	REMOVE AND SALVAGE
R & D	REMOVE AND DISPOSE
R & R	REMOVE AND REINSTALL
RESIL	RESILIENT
RTN	RETAIN (ED) (ER) (ING)
RVS, REV	REVERSE (SIDE)
REV	REVISE (ED), REVISION
RPM	REVOLUTIONS PER MINUTE
RPS	REVOLUTIONS PER SECOND
RH	RIGHT HAND
ROW	RIGHT-OF-WAY
RD	ROOF DRAIN
RFG	ROOFING
RM	ROOM
RO	ROUGH OPENING
RU	RUBBER
RP	RUSTPROOF (ING)
SDL	SADDLE
SAN	SANITARY (SEWER)
SCN	SCREEN
SLT	SEALANT
SLR	SEALER
STG	SEATING
SEC	SECTION
SEL	SELECT (OR)
SPT	SEPTIC TANK
SVC	SERVICE
SSK	SERVICE SINK
STH	SHEATHING
SHT	SHEET
SH	SHELF, SHELVING
S & R	SHELF & ROD
SHR	SHOWER RECEPTOR
SIM	SIMILAR (TO)
SH	SINGLE HUNG
SK	SINK
SKL	SKYLIGHT
SL	SLEEVE
SDE, SD	SMOKE DETECTOR
SMV	SMOKE-VENTING HATCH
SCWD	SOLID CORE WOOD
SSM	SOLID SURFACE MATERIAL
SP	SOUNDPROOF
SPK	SPEAKER
SPEC	SPECIFICATIONS, PROJECT MANUAL
SPF	SPECIFIED
SPR	SPRINKLER
SQ, ⧈	SQUARE
SF	SQUARE FOOT (FEET)
SY	SQUARE YARD
STAG	STAGGER
SS	STAINLESS STEEL
STD	STANDARD
ST	STEEL
STIFF	STIFFENER
STN	STONE
STO	STORAGE
SD	STORM DRAIN
ST	STREET
S	STRUCTURAL
SIP	STRUCTURAL INSULATED PANEL
SUP	SUPPORT
SUSP	SUSPENDED
SAT	SUSPENDED ACOUSTIC TILE
SUSP CEIL	SUSPENDED CEILING
SYM	SYMMETRY (ICAL)
SYS	SYSTEM
TB	TACKBOARD
TEL	TELEPHONE
TV	TELEVISION
TMP, TEMP	TEMPER (ED)
TCV	TEMPERATURE CONTROL VALVE
TP	TEST PIT
TZ	TERRAZZO
THM	THERMOMETER
THS	THERMOSTAT
TH	THICK, THICKNESS
THR	THRESHOLD
TCL	TIME CLOCK
TOL	TOLERANCE
TG, T & G	TONGUE AND GROOVE
TO	TOP OF
TOC	TOP OF CONCRETE / CURB
TOS, TS	TOP OF STEEL
TOW	TOP OF WALL
TRANS	TRANSFORMER
TR	TRANSOM
TJI	TRUSS JOIST 'I' SECTION
TP	TURNING POINT
TYP	TYPICAL
TOM	TOP OF MASONRY
UHF	ULTRAHIGH FREQUENCY
UF	UNDERFLOOR (DUCT)
UG	UNDERGROUND
UL	UNDERWRITERS LABORATORY
UNF	UNFINISHED
UNO	UNLESS NOTED OTHERWISE
UH	UNIT HEATER
UK	UNIT KITCHEN
UV	UNIT VENTILATOR
UAS	UPWARD ACTING SECTIONAL
VJ	V-JOINTED
VA	VACUUM
VAB	VACUUM BREAKER
VB	VAPOR BARRIER
VP	VAPORPROOF
VNR	VENEER
VE	VENT
VR, VTR	VENT THROUGH ROOF
VTR	VENTILATOR
VER, VERT	VERTICAL
VHF	VERY HIGH FREQUENCY
VLF	VERY LOW FREQUENCY
VI	VIBRATION ISOLATOR
VNL	VINYL
VCT	VINYL COMPOSITION TILE
VB	VINYL BASE
VF	VINYL FABRIC
VQT	VINYL QUARTZ TILE
VS	VINYL SHEET
VT	VINYL TILE
VIT	VITREOUS
VC	VITRIFIED CLAY
V	VOLT (AGE)
VWC	VINYL WALLCOVERING
WN	WAINSCOT
WH	WALL-HUNG
WHY	WALL HYDRANT
WTW	WALL TO WALL
W	WASTE
WR	WASTE RECEPTACLES
WC	WATER CLOSET
WHA	WATER HAMMER ARRESTOR
WP	WATERPROOF (ED), (ING)
WPT (WP)	WORK (ING) POINT
WST	WEATHERSTRIPPING
WE	WEEPHOLE
WWF	WELDED WIRE FABRIC
WID	WIDE, WIDTH
WF,WF	WIDE-FLANGE BEAM
WG	WIRE GLASS
WM	WIRE MESH
W, W/	WITH
W/IN	WITHIN
WO, W/O	WITHOUT
WD	WOOD
WB	WOOD BASE
WBM	WOOD BEAM
WBO	WORK BY OTHERS
WBOR	WORK BY OWNER
WBT	WORK BY TENANT
WK	WORK
WKRM	WORKROOM
WI	WROUGHT IRON
XR	X-RAY
Y	WYE FITTING
Z	ZONE
ZC	ZINC COATED
ZS	ZEE STUD

SYMBOLS

TITLE MARK

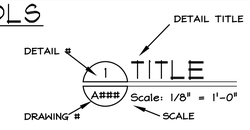

DETAIL MARK

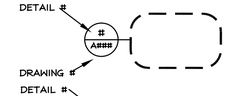

SECTION MARK

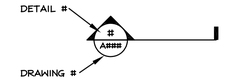

INTERIOR ELEVATION TAG

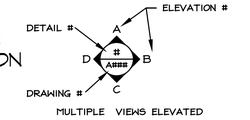

EXTERIOR ELEVATION TAG

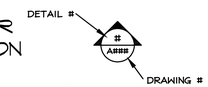

DOOR TAG

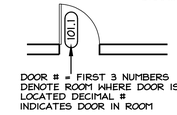

WINDOW TAG

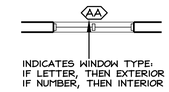

WORK NOTES

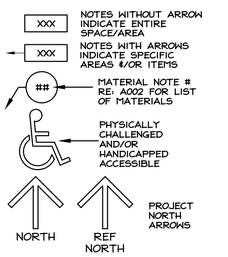

ROOM TAG

WALL TAG

DIMENSIONS

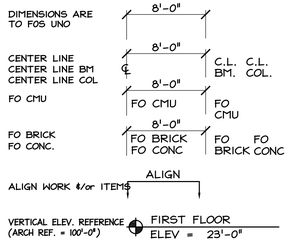

INTERIOR WALL DESIGNATIONS:

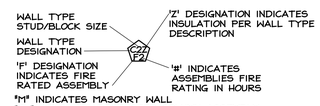

"M" INDICATES MASONRY WALL
"CL" INDICATES PROTECTED COLUMN ASSEMBLY - SEE COLUMN FIREPROOFING NOTES THIS SHEET

EXAMPLE - WALL "A2"
"A" - WALL TYPE
"2" - STUD THICKNESS

EXAMPLE - WALL TYPE "M4"
"M" - MASONRY WALL
"4" - CMU THICKNESS

METAL STUDS	WOOD STUDS	MASONRY WALLS
1 = 1 5/8" STUDS	3 = 2 X 3 STUDS	2 = 1 5/8" SOAP
2 = 2 1/2" STUDS	4 = 2 X 4 STUDS	4 = 4" BLOCK
3 = 3 5/8" STUDS	6 = 2 X 6 STUDS	6 = 6" BLOCK
4 = 4" STUDS		8 = 8" BLOCK
6 = 6" STUDS		10 = 10" BLOCK
		12 = 12" BLOCK

This drawing is copyrighted and is subject to copyright protection as an "architectural work" under 17 U. S. C. Sec. 101 et seq. The protection includes but is not limited to the overall form as well as the arrangement and composition of spaces, materials, color and elements in the design. Under such protection, unauthorized use of this drawing may result in the cessation of construction or buildings being seized and/or monetary compensation being awarded to The Robinson Green Beretta Corporation (RGB).

Any reproduction, possession, or use of this drawing or part thereof without the express written permission of RGB, is prohibited. Violators will be prosecuted to the full extent of the law.

© RGB 2019

Certification

Drawn by TPL

Checked by RJJ, DLD

Revised on

50 Holden Street
Providence, Rhode Island 02908

Phone: (401) 272-1730
Fax: (401) 273-7156

E-mail: rgbinfo@rgb.net
www.rgb.net

RGB architects

Architecture · Project Management · Interior Design

Project

FORT ADAMS MAINTENANCE BUILDING

RIDEM / DIVISION OF PARKS & RECREATION

STATE OF RHODE ISLAND AND PROVIDENCE PLANTATIONS

FORT ADAMS STATE PARK, NEWPORT, RI

Drawing Status

ISSUED FOR CONSTRUCTION

Issued On MAY 29, 2019

Sheet Contents

ABBREVIATIONS & SYMBOLS

Project Number. 6380

Drawing No.

G001

Sheet of

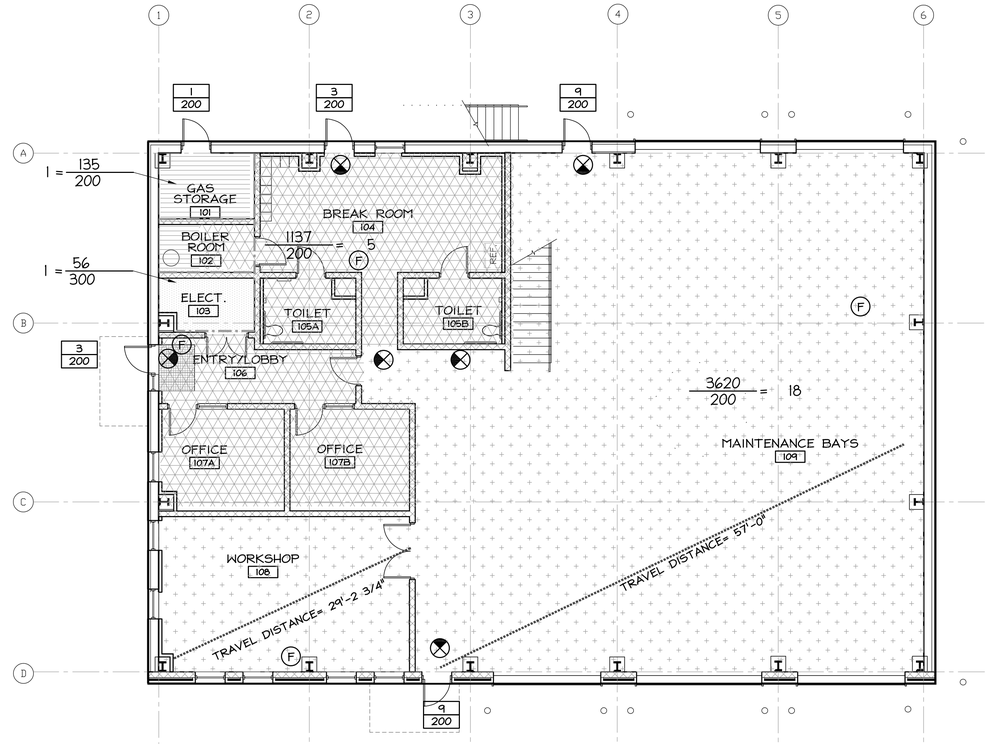

1 / A010 CODE PLAN

Scale: 1/8" = 1'-0"

0 4' 8' 16'

SCALE: 1/8" = 1'-0"

OCCUPANCY DESIGNATIONS LEGEND

- BUSINESS
- STORAGE S-1
- STORAGE / MECHANICAL

CODE DATA

I. BUILDING & FIRE CODE DATA

RHODE ISLAND STATE BUILDING CODES

SBC-01-2013 BUILDING CODE	IBC-2012 plus RI Amendments 2013 07 01
SBC-02-2013 RESIDENTIAL CODE	IRC-2012 plus RI Amendments 2013 07 01
SBC-03-2013 PLUMBING CODE	IPC-2012 plus RI Amendments 2013 07 01
SBC-04-2013 MECHANICAL CODE	IMC-2012 plus RI Amendments 2013 07 01
SBC-05-2014 ELECTRIC CODE	NFPA 2014 plus RI Amendments 2014 07 01
SBC-08-2013 ENERGY CONSERVATION CODE	IECC-2012 plus RI Amendments 2013 07 01
SBC-19-2010 FUEL GAS CODE	IFGC-2012 plus RI Amendments 2013 07 01

RI ACCESSIBILITY REGULATIONS
SBC-1 IBC-2012 Chapter 11;
ICC/ANSI A117.1 2009 plus RI Amendments 2010 07 01
AMERICANS w/ DISABILITIES ACT (ADA - 2010)

RHODE ISLAND FIRE SAFETY CODE (RIFSC - 2013)

RHODE ISLAND FIRE LAWS (RIFL)
TITLE 23, CHAPTERS 28.1 - 28.39

RULES & REGULATIONS PROMULGATED BY the Board of Appeals & Review
SECTIONS 1 THRU 15

RHODE ISLAND UNIFORM FIRE CODE (RIUFC - 2012)
NFPA 1-2012 plus RI AMENDMENTS

RHODE ISLAND LIFE SAFETY CODE (RILSC - 2012)
NFPA 101-2012 plus RI AMENDMENTS

ADDITIONAL APPLICABLE NFPA STANDARDS
NFPA 10 2013 PORTABLE FIRE EXTINGUISHERS
NFPA 13 2013 INSTALLATION OF SPRINKLER SYSTEMS
NFPA 14 2013 STANDPIPES
NFPA 72 2010 NATIONAL FIRE ALARM CODE PLUS RI AMENDMENTS
NFPA 220 2012 STANDARD OF TYPES OF BUILDING CONSTRUCTION
NFPA 701 1999 STANDARD METHOD OF FIRE TESTS FOR FLAME PROPAGATION OF TEXTILES

II. BUILDING AREA

BUILDING AREA	5220 SF
MEZZANINE	1933 SF*

*IBC 505.1 The mezzanine shall not contribute to the building area or number of stories.

A. OCCUPANCY & CONSTRUCTION TYPES

BUILDING OCCUPANCY: MIX USE, NON SEPERATED

	HEIGHT & AREA	
S-1 MODERATE HAZARD STORAGE (MAINTENANCE)	2	3,902 SF
M-MECHANICAL/STORAGE	1	135 SF
B-BUSINESS	1	788 SF

S-1 MOST RESTRICTIVE HEIGHT AND AREA

CONSTRUCTION TYPE: IIB (IBC 2009)

B. ALLOWABLE AREA AND HEIGHT

1. AREA FOR IIB CONSTRUCTION
   OCCUPANCY S-1 = 17,500 SF/FLOOR
2. HEIGHT FOR IIB CONSTRUCTION
   OCCUPANCY S-1 = 2 STORIES
3. AREA AND HEIGHT CALCULATIONS

ACTUAL AREA	5340 SF < 17,500 SF
ACTUAL HEIGHT	2 STORIES = 2 STORIES

C. OCCUPANCY LOAD TYPES

	IBC TABLE 1004.1.2	NFPA 101 TABLE 7.3.1.2
S-1 STORAGE	200 SF./PERSON GROSS	N/A SF./PERSON
S-2 STORAGE	200 SF./PERSON GROSS	
B-BUSINESS	100 SF./PERSON GROSS	
ACCESSORARY STORAGE AREAS, MECHANICAL, EQUIPMENT ROOM	300 SF./PERSON GROSS	

TOTAL OCCUPANCY 25 PERSONS

BUILDING ELEMENT	RATING IN HOURS IBC (TABLE 601) IIB	RATING IN HOURS NFPA 220 (TABLE 4.1.1) II(000)
STRUCTURAL FRAME	0	0
BEARING WALLS EXTERIOR INTERIOR	0	0
NON BEARING WALLS AND PARTITIONS EXTERIOR	0	0
NON BEARING WALLS AND PARTITIONS INTERIOR	0	0
FLOOR CONSTRUCTION INCLUDING SUPPORTING BEAMS AND JOISTS	0	0
ROOF CONSTRUCTION INCLUDING SUPPORTING BEAMS AND JOISTS	0	0

D. FIRE PROTECTION

1. FIRE ALARM SYSTEM
2. FIRE EXTINGUISHERS

E. EGRESS REQUIREMENTS

1. LENGTH OF TRAVEL — IBC 1016.2 / NFPA 7.6

S-1 STORAGE	250 LF	400 LF

MAXIMUM LENGTH OF TRAVEL ALLOWED = 250 LF

2. COMMON PATH — IBC 10.14.3 / NFPA 7.6

S-1 STORAGE	75 LF	50 LF
DEAD END CORRIDOR	20 LF	50 LF

3. MEANS OF EGRESS

NUMBER AND WIDTH REQUIRED
OCCUPANCY LOAD PER FLOOR 30 PERSONS

TOTAL EXITS REQUIRED = 2 EXIT PER FLOOR/AREA

EGRESS WIDTHS REQUIRED
TOTAL WIDTH REQUIRED FOR DOORS = .0.2"/person x 30 = 6"

WIDTH PROVIDED
TOTAL WIDTH PROVIDED FOR DOORS = 36"

F. SEISMIC CRITERIA

SEE STRUCTURAL DRAWINGS FOR SEISMIC REQUIREMENTS

G. STRUCTURAL LOADS

ZONE
WIND SPEED = 105 MPH
GROUND SNOW LOAD = 35 PSF
ROOF SNOW LOAD = 30 PSF

H. ENERGY CONSERVATION (IECC)

BUILDING ENVELOPE REQUIREMENTS: OPAQUE ASSEMBLIES

	RI -IECC 2013 Table C402.2 Climate Zone 5	Proposed Design
Roofs		
Insulation entirely above deck	R-25 ci	R-28 ci
Metal Buildings (w/ R-5 thermal blocks)	R-19 + R-11LS	n/a
Attic and Other	R-38	n/a
Walls, Above Grade		
Mass	R-11.4 ci	n/a
Metal Building	R-13 + 13ci	26 ci
Metal Framed	R-13 + R-7.5 ci	--
Wood Framed and Other	R-13 + R-3.8 ci OR R-20	n/a
Walls, Below Grade		
Mass, exterior insulation	R-7.5 ci	n/a
Floors		
Mass	R-10 ci	R-10 ci
Joist/Framing	R-30	n/a
Slab on Grade Floors		
Unheated Slabs	R-10 (for 24" below)	R-10 (for 24" below)
Heated Slabs	R-15 (for 36 below)	R-15 (for 36" below) + R-5 ci below
Opaque Doors	+R-5 ci below	
Swinging	U-0.37	U-0.37
Roll-up or Sliding	R-4.75	R-4.75

BUILDING ENVELOPE REQUIREMENTS: FENESTRATION

	RI-IECC Table C402.3 Zone 5
Fixed Fenestration	U-0.38
Operable Fenestration	U-0.45
Entrance Door	U-0.77
All Other (operable & fixed windows, and non-entrance doors)	U-0.45
SHGC - All frame types	All Frame Types
SHGC:	U-0.40

SHGC= Solar Heat Gain Coefficient
VLT= Visible light transmittance
PF= Projection Factor.
PF=A/B
A= Distance measured horizontally from the furthest continuous extremity of any overhang, eave, or permanentlyattached shading device to the vertical surface of the glazing.
B= Distance measured vertically from the bottom of the glazing to the underside of the overhang, eave, or permanently attached shading device.

III. PLUMBING FIXTURE ANALYSIS (RI STATE PLUMBING CODE)

STORAGE S-1 - BASED ON 25 OCCUPANTS, 13 MALE, 12 FEMALE

	FIXTURES		CODE REQUIREMENT MALE	CODE REQUIREMENT FEMALE	CODE REQUIREMENT TOTAL	PROJECT DESIGN PROVIDED MALE	PROJECT DESIGN PROVIDED FEMALE	PROJECT DESIGN PROVIDED UNISEX	PROJECT DESIGN PROVIDED TOTAL
	WATER CLOSETS	1/100	1	1	2	-	-	1	1
	URINALS	NOT MORE THAN 50%				-	NA	-	-
	LAVATORIES	1/100	1	1	2	-	-	1	1
	DRINKING FOUNTAIN				1				1
	SERVICE SINK	1			1				1

KEY

OCCUPANT LOAD INDICATOR

#,### / ## = ###
- AREA OF BUSINESS USE
- TOTAL OCCUPANTS
- LOAD FACTOR FROM TABLE 1008.1.2

EGRESS ELEMENT LOAD INDICATOR

57 / 213
- ACTUAL OCCUPANT LOAD PASSING THROUGH DOOR/STAIR
- ALLOWABLE OCCUPANT LOAD OF DOOR/STAIR

- TRAVEL DISTANCE
- COMMON PATH OF TRAVEL
- 2 HR WALL

LEGEND

- SITE HYDRANT
- EXIT SIGNAGE
- INSPECTORS TEST VALVE
- FIRE EXTINGUISHER 4A-60BC (UL RATING) SURFACE MOUNTED RETAINER BRACKET
- E — EMERGENCY LIGHT

This drawing is copyrighted and is subject to copyright protection as an "architectural work" under 17 U. S. C. Sec. 101 et seq. The protection includes but is not limited to the overall form as well as the arrangement and composition of spaces, materials, color and elements in the design. Under such protection, unauthorized use of this drawing may result in the cessation of construction or buildings being seized and/or monetary compensation being awarded to The Robinson Green Beretta Corporation (RGB).

Any reproduction, possession, or use of this drawing or any part thereof without the express written permission of RGB, is prohibited. Violators will be prosecuted to the full extent of the law.

© RGB 2019

Certification

Drawn by TPL
Checked by RJJ, DLD

Revised on

50 Holden Street
Providence, Rhode Island 02908

Phone: (401) 272-1730
Fax: (401) 273-7156

E-mail: rgbinfo@rgb.net
www.rgb.net

RGB architects

Architecture · Project Management · Interior Design

Project

FORT ADAMS MAINTENANCE BUILDING

RIDEM / DIVISION OF PARKS & RECREATION

STATE OF RHODE ISLAND AND PROVIDENCE PLANTATIONS

FORT ADAMS STATE PARK, NEWPORT, RI

Drawing Status

ISSUED FOR CONSTRUCTION

Issued On MAY 29, 2019

Sheet Contents

CODE REVIEW

Project Number. 6380

Drawing No.

A010

Sheet of

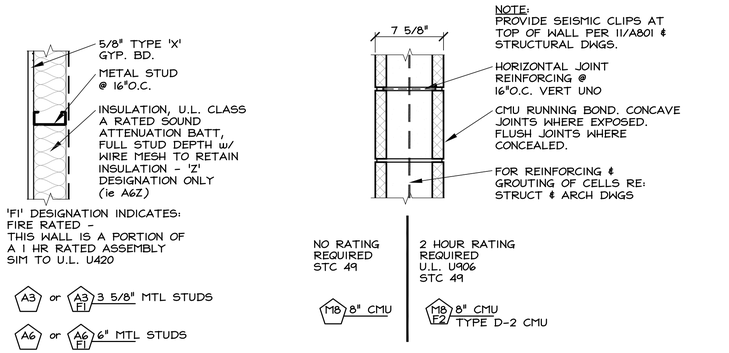

1 / A030 INTERIOR WALL CONSTRUCTION TYPES

Scale: 1 1/2" = 1'-0"

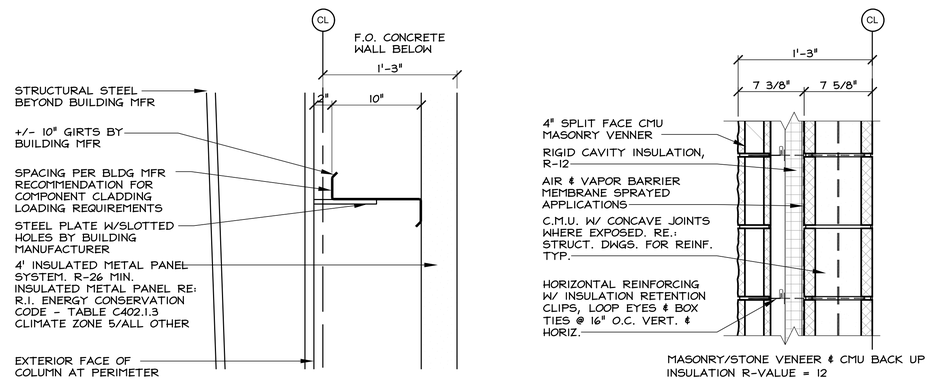

2 / A030 EXTERIOR WALL CONSTRUCTION TYPES

Scale: 1 1/2" = 1'-0"

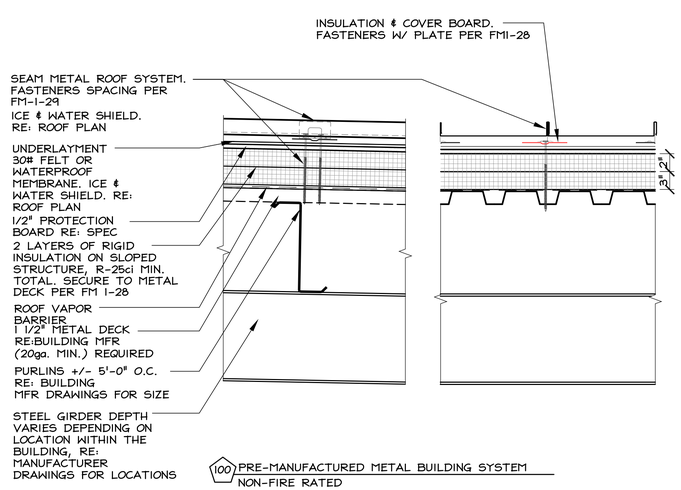

3 / A030 ROOF CONSTRUCTION TYPES

Scale: 1 1/2" = 1'-0"

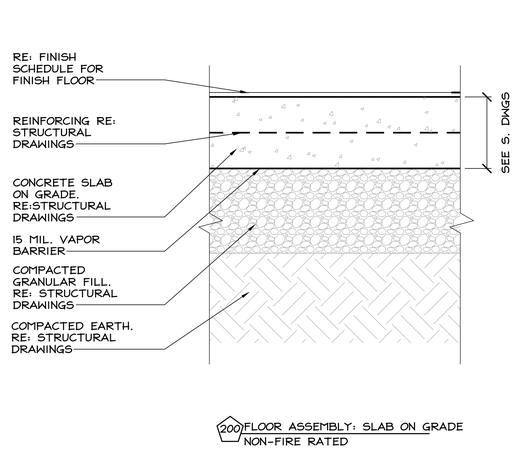

4 / A030 FLOOR CONSTRUCTION TYPES

Scale: 1 1/2" = 1'-0"

INTERIOR WALL DESIGNATIONS:

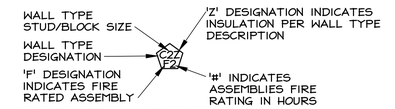

"M" INDICATES MASONRY WALL
"CL" INDICATES PROTECTED COLUMN ASSEMBLY - SEE COLUMN FIREPROOFING NOTES THIS SHEET

EXAMPLE - WALL "A2"
"A" - WALL TYPE
"2" - STUD THICKNESS

EXAMPLE - WALL TYPE "M4"
"M" - MASONRY WALL
"4" - CMU THICKNESS

METAL STUDS	WOOD STUDS	MASONRY WALLS
1 = 1 5/8" STUDS	3 = 2 X 3 STUDS	2 = 1 5/8" SOAP
2 = 2 1/2" STUDS	4 = 2 X 4 STUDS	4 = 4" BLOCK
3 = 3 5/8" STUDS	6 = 2 X 6 STUDS	6 = 6" BLOCK
4 = 4" STUDS		8 = 8" BLOCK
6 = 6" STUDS		10 = 10" BLOCK
		12 = 12" BLOCK

TYPICAL CONTROL JOINTS

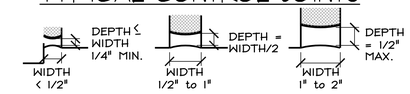

INTERIOR GENERAL NOTES:

1. ALL GYPSUM SHEATHING/WALL BOARD IS TYPE 'X'.
2. PROVIDE METAL STUD GAUGE AS RECOMMENDED BY STUD MFG. FOR WALL LIVE LOAD OF 5 psf FOR HEIGHT OF THE UNBRACED WALL VERTICAL SPAN. MAXIMUM DEFLECTION 1/360 OF THE SPAN.
3. FOR NON-LOAD BEARING WALLS THAT SEAL TO ROOF STRUCTURE ABOVE, PROVIDE SUITABLE STUD TRACK TO ALLOW FOR MINIMUM ROOF DEFLECTION OF 1" WITHOUT TRANSFERING LOAD TO METAL STUDS RE: STRUCTURAL DWGS FOR MORE STRINGENT DEFLECTION INFORMATION. (NOT REQUIRED @ PERIMETER EXTERIOR WALLS UNLESS NOTED OTHERWISE)
4. HOLD BOTTOM OF GWB @ 1/4" ABOVE CONCRETE FLOOR TYPICAL (TO PREVENT MOISTURE WICKING)
5. PROVIDE TYPE 'X' MOISTURE RESISTANT GYPSUM WALL BOARD AT ALL TOILET ROOMS, SPRINKLER ROOMS AND JANITOR CLOSETS UNLESS NOTED OTHERWISE.
6. PROVIDE 20 GA METAL STUDS MIN. AT CEMENT BOARD WALLS.
7. PROVIDE FIRE RATED CAULKING AT TOP OF ALL FIRE RATED WALLS THAT SEAL TO UNDERSIDE OF STRUCTURE. (i.e. BETWEEN METAL DECK FLUTES.)
8. ALL EXPOSED INTERIOR MASONRY WALLS TO HAVE 1" BULLNOSE CORNERS @ EXTERIOR CORNERS AND WINDOW/DOOR JAMBS UNLESS NOTED OTHERWISE.
9. STC RATINGS FOR WALL CONSTRUCTION TYPES ARE BASED ON USG CORPORATION SELECTOR GUIDE TO SOUND-RATED PARTITIONS (SA100).
10. ALL WALL SYSTEM 'R' & 'U' VALUES ARE BASED ON"
    -6" METAL STUD
    -8" NORMAL WEIGHT CMU
    -8" NORMAL WEIGHT CONCRETE
11. ALL WALL VAPOR BARRIERS ARE TO BE 10MIL POLY MIN. U.N.O.

This drawing is copyrighted and is subject to copyright protection as an "architectural work" under 17 U. S. C. Sec. 101 et seq. The protection includes but is not limited to the overall form as well as the arrangement and composition of spaces, materials, color and elements in the design. Under such protection, unauthorized use of this drawing may result in the cessation of construction or buildings being seized and/or monetary compensation being awarded to The Robinson Green Beretta Corporation (RGB).

Any reproduction, possession, or use of this drawing or any part thereof without the express written permission of RGB, is prohibited. Violators will be prosecuted to the full extent of the law.

© RGB 2019

Certification

Drawn by TPL

Checked by RJJ, DLD

Revised on

50 Holden Street
Providence, Rhode Island 02908

Phone: (401) 272-1730
Fax: (401) 273-7156

E-mail: rgbinfo@rgb.net
www.rgb.net

RGB ARCHITECTS

Architecture · Project Management · Interior Design

Project

FORT ADAMS MAINTENANCE BUILDING

RIDEM / DIVISION OF PARKS & RECREATION

STATE OF RHODE ISLAND AND PROVIDENCE PLANTATIONS

FORT ADAMS STATE PARK, NEWPORT, RI

Drawing Status

ISSUED FOR CONSTRUCTION

Issued On MAY 29, 2019

Sheet Contents

CONSTRUCTION TYPES

Project Number. 6380

Drawing No.

A030

Sheet of

1 / D100 ENLARGED SITE PLAN AT EX. MAINTENANCE SHEDS

Scale: NTS

2 / D100 SITE PLAN

Scale: NTS

EX. SHED EXTERIOR

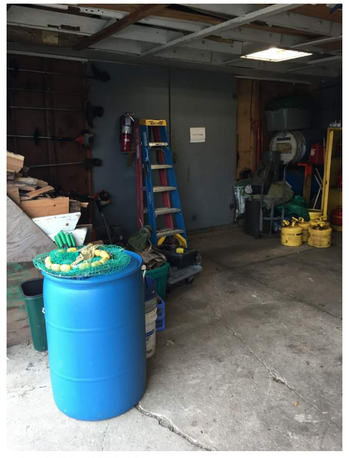

EX. SHED INTERIOR

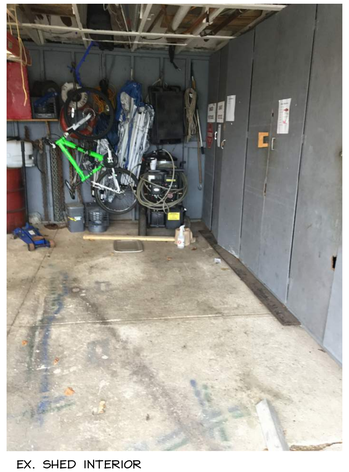

EX. SHED INTERIOR

2 / D100 EX. PHOTOS

Scale: NTS

DEMOLITION NOTES:

1. THE SCOPE OF THIS DEMOLITION PACKAGE REMOVE 2 EXISTING MAINTENANCE SHEDS IN THEIR ENTIRELY.
2. THE EXISTING CONDITIONS INFORMATION SHOWN &/or INDICATED ON THE DRAWINGS WAS OBTAINED FROM LIMITED EXISTING DRAWINGS PREPARED BY OTHERS, FIELD REVIEW; FIELD MEASUREMENT; &/or OTHER AVAILABLE DOCUMENTATION &/or OBSERVATION BY OTHERS. NOT ALL EXISTING CONDITIONS &/or ACTUAL CONSTRUCTION MAY BE INDICATED &/or KNOWN.
3. CONTRACTOR TO VERIFY ALL EXISTING, CONDITIONS, CONNECTIONS, LOCATIONS, SIZES, ETC. IN THE FIELD AND NOTIFY THE ARCHITECT OF ANY DISCREPANCIES BEFORE STARTING DEMOLITION WORK.
4. CONTRACTOR TO COORDINATE EXTENTS OF ALL DEMOLITION WORK WITH ALL NEW WORK AND NOTIFY THE ARCHITECT OF ANY DISCREPANCIES BEFORE STARTING DEMOLITION WORK.
5. CONTRACTOR TO PROPERLY DE-ENERGIZE, SHUT OFF & CAP ALL UTILITIES (ELECTRICAL, GAS, WATER, SEWER, TELEPHONE, ETC.) BACK TO THE EXISTING EXTERIOR WALLS, ROOF DECK, AND/OR TO SLAB OR GRADE. U.N.O. COORDINATE W\ MEP DEMOLITION DWGS & LOCAL UTILITY COMPANIES.
6. FULL EXTENT OF BUILDING MATERIALS IS UNKNOWN. EXISTING BUILDING CONSTRUCTION MAY CONTAIN MATERIALS THAT REQUIRE ABATEMENT. IF POTENTIAL MATERIALS ARE DISCOVERED, CONTRACTOR TO NOTIFY OWNER & ARCHITECT BEFORE PROCEEDING WITH WORK.
7. CONTRACTOR TO PROVIDE ALL OSHA and/or BUILDING CODE REQUIRED SAFETY PROTECTION TO PROTECT WORKERS FROM FALLS, CRUSHING, ELECTROCUTION, IMPACT FROM ABOVE, ETC.
8. CONTRACTOR TO MAINTAIN BUILDING IN A SAFE AND SECURE MANNER AND TO ELIMINATE THE APPEARANCE OF AN ATTRACTIVE NUISANCE. MAINTAIN PHYSICAL BARRIER TO PREVENT BUILDING/ SITE ACCESS BY CHILDREN AT A MINIMUM.
9. CONTRACTOR TO PROTECT ALL EXISTING WORK TO REMAIN DURING DEMOLITION.
10. CONTRACTOR TO FURNISH AND INSTALL ALL SHORING AND/OR BRACING TO SUPPORT ALL EXISTING WALLS, FLOORS/ROOFS, ETC. PRIOR TO REMOVALS OF EXISTING CONSTRUCTION.
11. EXISTING BUILDING CONSTRUCTION DEFICIENCIES NOT INDICATED ON THE DRAWINGS, BUT UNCOVERED &/or DISCOVERED BY CONTRACTOR'S CONSTRUCTION ACTIVITIES SHALL BE REPORTED TO THE ARCHITECT FOR REVIEW PRIOR TO INSTALLATION OF NEW WORK. ADDITIONAL DETAILS WILL BE FURNISHED AS NECESSARY. TYPICAL.

DEMOLITION LEGEND:

= = = EXISTING WALL/ITEM TO BE REMOVED

This drawing is copyrighted and is subject to copyright protection as an "architectural work" under 17 U. S. C. Sec. 101 et seq. The protection includes but is not limited to the overall form as well as the arrangement and composition of spaces, materials, color and elements in the design. Under such protection, unauthorized use of this drawing may result in the cessation of construction or buildings being seized and/or monetary compensation being awarded to The Robinson Green Beretta Corporation (RGB).

Any reproduction, possession, or use of this drawing or any part thereof without the express written permission of RGB, is prohibited. Violators will be prosecuted to the full extent of the law.

© RGB 2019

Certification

Drawn by TPL

Checked by RJJ, DLD

Revised on

50 Holden Street
Providence, Rhode Island 02908

Phone: (401) 272-1730
Fax: (401) 273-7156

E-mail: rgbinfo@rgb.net
www.rgb.net

RGB architects

Architecture · Project Management · Interior Design

Project

FORT ADAMS MAINTENANCE BUILDING

RIDEM / DIVISION OF PARKS & RECREATION

STATE OF RHODE ISLAND AND PROVIDENCE PLANTATIONS

FORT ADAMS STATE PARK, NEWPORT, RI

Drawing Status

ISSUED FOR CONSTRUCTION

Issued On MAY 29, 2019

Sheet Contents

DEMOLITION PLAN EXISTING MAINTENANCE SHEDS

Project Number. 6380

Drawing No.

D100

Sheet of

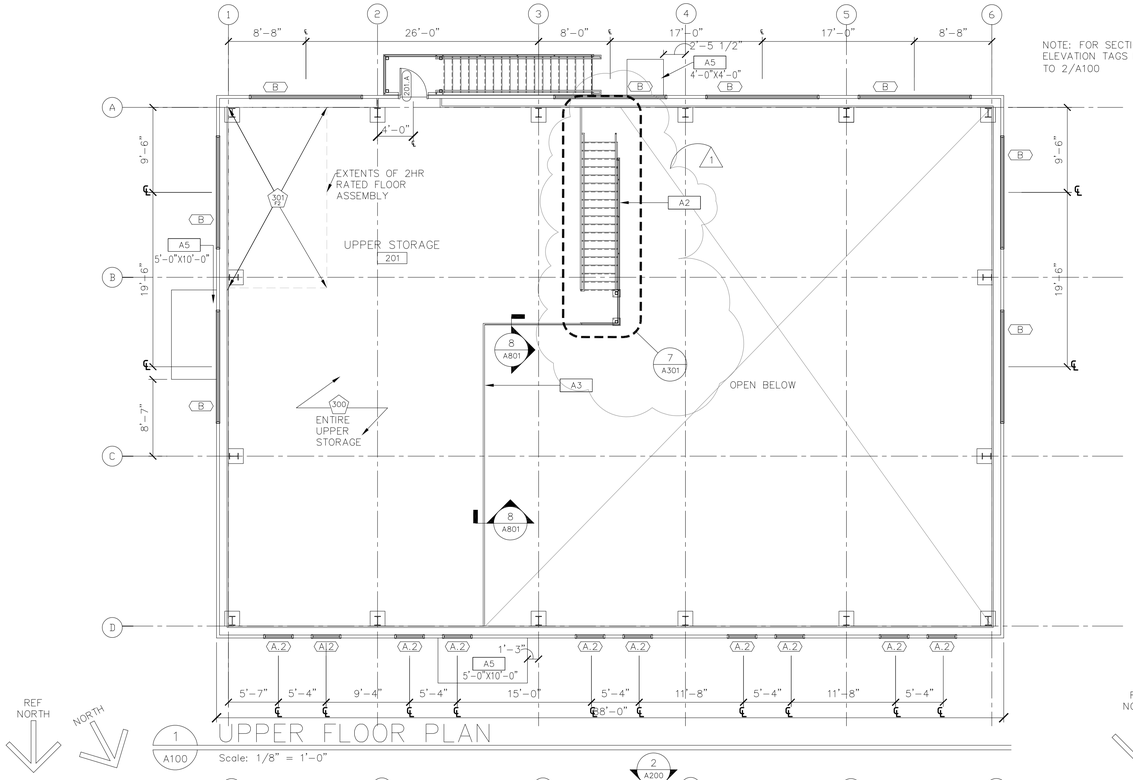

1 A100 UPPER FLOOR PLAN

Scale: 1/8" = 1'-0"

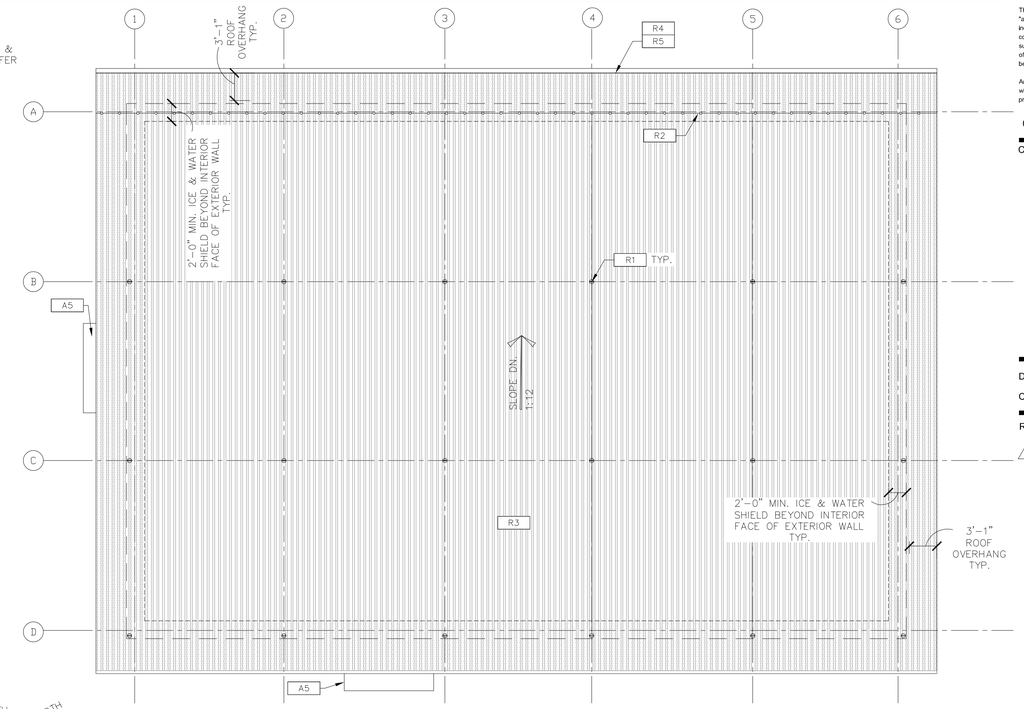

3 A100 ROOF PLAN

Scale: 1/8" = 1'-0"

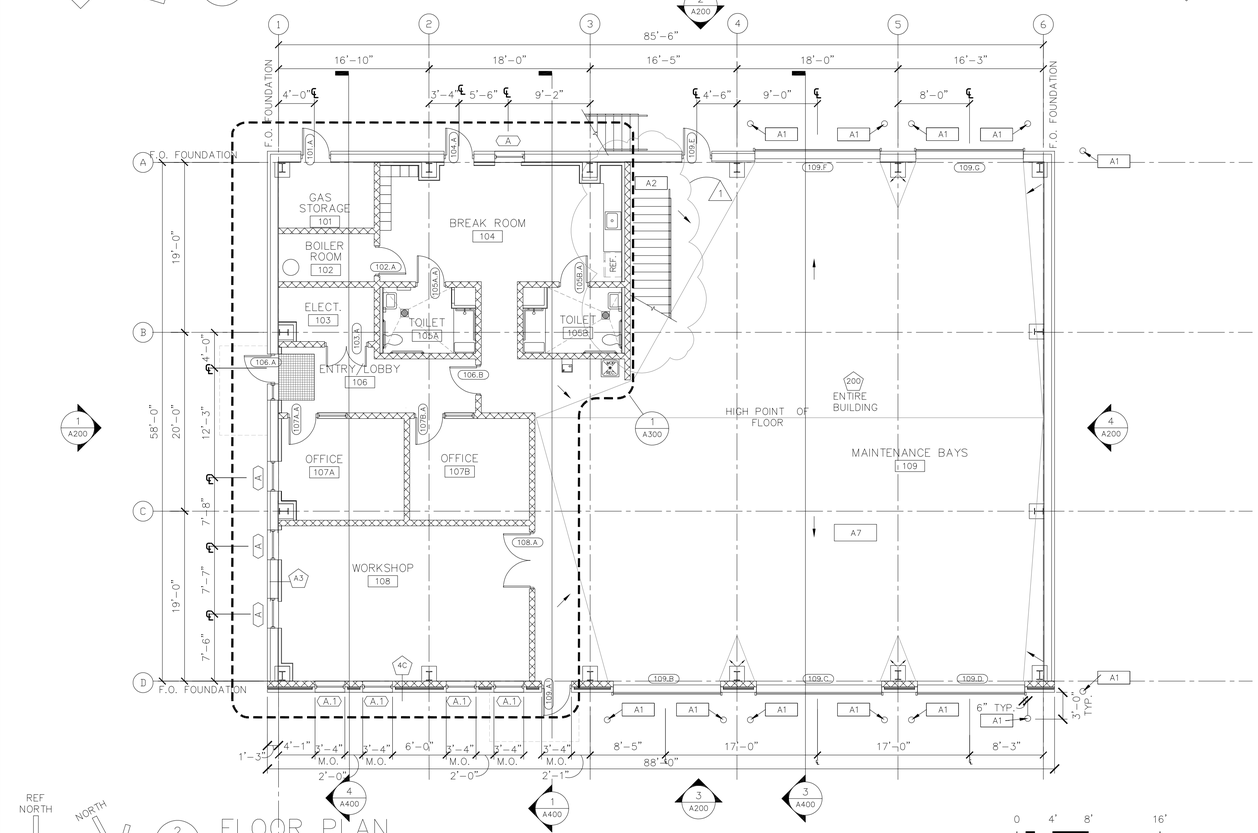

2 A100 FLOOR PLAN

Scale: 1/8" = 1'-0"

SCALE: 1/8" = 1'-0"

GENERAL ROOF NOTES:

1. NOT ALL PENETRATIONS MAY BE SHOWN. COORDINATE ALL WORK w/ STRUCTURAL, PLUMBING, MECHANICAL, ELECTRICAL &/or OTHER DRAWINGS.
2. ALL DIMENSIONS TO NEW CONSTRUCTION ARE TO FACE OF STUD AND FACE OF MASONRY U.N.O.
3. ALL NEW ROOF SYSTEMS ARE TYPE U.N.O.
4. CONTRACTOR TO LOCATE MECHANICAL EQUIPMENT 10' MINIMUM FROM ROOF EDGE(S) WITH FALL POTENTIAL UNLESS GUARD RAIL SYSTEM IS INDICATED.

ICE AND WATER SHIELD

PLUMBING VENT

FALL PROTECTION ANCHOR

SUPPLY/EXHAUST FAN

T.O.S. + ?'-?" — TOP OF STEEL

SLOPE DN. X:12 — ROOF SLOPE

ROOF WORK NOTES:

- R1 — FALL PROTECTION ANCHOR. SECURE TO STRUCTURE & FLASH WEATHER TIGHT. RE. 8/A500
- R2 — SNOW GUARD FENCE. PROVIDE ROOFING MEMBRANE FLASHING SCREWED TO DECK. RE. 7/A500
- R3 — PROVIDE PREFABRICATED ROOF BOOTS FOR ALL CONDUIT PENETRATIONS. COORDINATE W/ ELECTRICAL, PLUMBING & MECHANICAL DRAWING SET T.O. BOOT MIN. 10" ABOVE ROOF SEAL TO CONDUIT/PIPING WEATHER TIGHT.
- R4 — INSTALL HEAT TRACE IN GUTTER
- R5 — PRE-FINISHED GUTTER W/ LEAF GUARD

GENERAL PLAN NOTES:

1. COORDINATE ALL NEW WORK w/ CIVIL, STRUCTURAL, PLUMBING, MECHANICAL,ELECTRICAL, &/or OTHER DRAWGINS. NOTIFY ARCHITECT OF ANY DISCREPANCIES BEFORE PROCEEDING WITH WORK.
2. ALL DIMENSIONS TO NEW CONSTRUCTION ARE TO FACE OF STUD AND FACE OF MASONRY U.N.O.
4. ALL NEW EXTERIOR WALLS ARE TYPE U.N.O.
5. ALL NEW INTERIOR WALLS ARE TYPE U.N.O.
6. ALL NEW INTERIOR WALLS ARE TO EXTEND TO THE UNDERSIDE OF ROOF &/or FLOOR STRUCTURE ABOVE U.N.O.
7. ALL NEW DOOR FRAMES SHALL BE A MINIMUM OF 4" CLEAR FROM THE FACE OF ADJACENT WALL TO DOOR JAMB, U.N.O.

LEGEND:

FLOOR PITCH TO DRAIN

PLAN WORK NOTES:

- A1 — 8" GALVANIZED STEEL CONCRETE FILLED BOLLARD. PROVIDE POLYETHYLENE THERMOPLASTIC COVER. RE. 6/A810
- A2 — METAL PAN STAIR SYSTEM W/ SOLID TREAD AND RISER. PROVIDE 1 1/2" O.C. STAIR RAILING W/ POSTS AND GUARDS PER OSHA REQUIREMENTS.
- A3 — POST AND RAIL GUARDRAIL SYSTEM AT UPPER STORAGE MEZZANINE PERIMETER.
- A4 — PROVIDE NEW MILLWORK. RE. A810 FOR DETAILS
- A5 — PRE-FINISHED ALUMINUM CANOPY BELOW. RE. SPEC & DETAILS ON SHEET A500 OR A501
- A6 — GC TO PROVIDE AND INSTALL FULL HEIGHT LOCKERS RE. A810
- A7 — SLAB PITCHED TO EXTERIOR INDICATED DIRECTION PITCH AT 1/4" SLOPE UNLESS NOTED OTHER WISE

This drawing is copyrighted and is subject to copyright protection as an "architectural work" under 17 U. S. C. Sec. 101 et seq. The protection includes but is not limited to the overall form as well as the arrangement and composition of spaces, materials, color and elements in the design. Under such protection, unauthorized use of this drawing may result in the cessation of construction or buildings being seized and/or monetary compensation being awarded to The Robinson Green Beretta Corporation (RGB).

Any reproduction, possession, or use of this drawing or any part thereof without the express written permission of RGB, is prohibited. Violators will be prosecuted to the full extent of the law.

© RGB 2019

Certification

Drawn by TPL

Checked by RJJ, DLD

Revised on

1 METAL STORAGE STAIRS UPDATE 8/5/2019

50 Holden Street
Providence, Rhode Island 02908

Phone: (401) 272-1730
Fax: (401) 273-7156

E-mail: rgbinfo@rgb.net
www.rgb.net

RGB ARCHITECTS

Architecture · Project Management · Interior Design

Project

FORT ADAMS MAINTENANCE BUILDING

RIDEM / DIVISION OF PARKS & RECREATION

STATE OF RHODE ISLAND AND PROVIDENCE PLANTATIONS

FORT ADAMS STATE PARK, NEWPORT, RI

Drawing Status

ISSUED FOR CONSTRUCTION

Issued On MAY 29, 2019

Sheet Contents

FLOOR & ROOF PLANS

Project Number. 6380

Drawing No.

A100

Sheet of

NOTE: FOR WINDOW & DOOR LOCATIONS REFER TO 2/A100. FOR WINDOW SIZES REFER TO A910

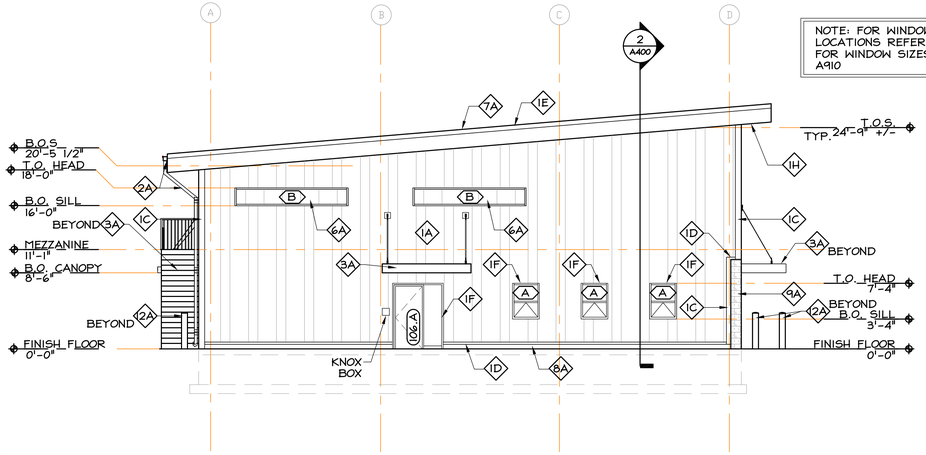

1 NORTH ELEVATION
1 / A200
Scale: 1/8" = 1'-0"

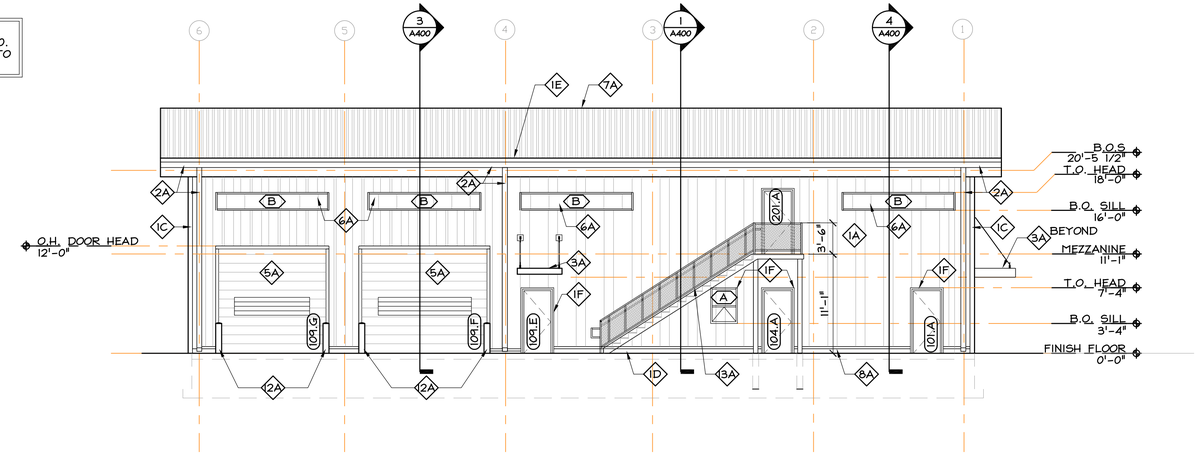

2 EAST ELEVATION
2 / A200
Scale: 1/8" = 1'-0"

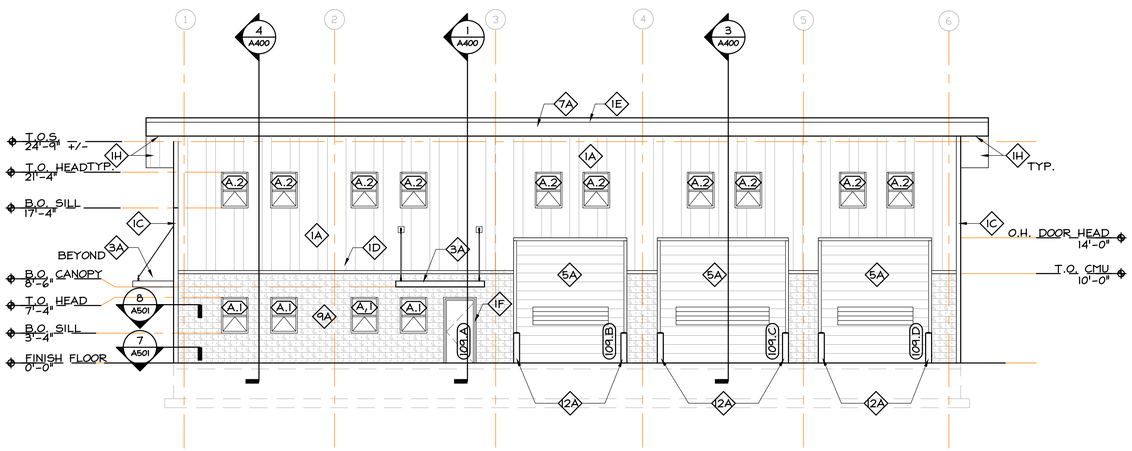

3 WEST ELEVATION
3 / A200
Scale: 1/8" = 1'-0"

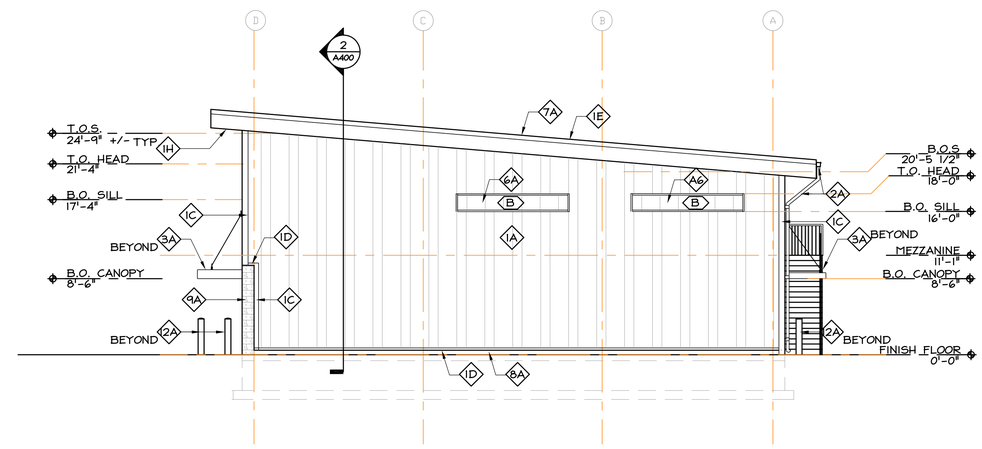

4 SOUTH ELEVATION
4 / A200
Scale: 1/8" = 1'-0"

EXTERIOR ELEVATION NOTES:

1. NOT ALL EXTERIOR WALL PENETRATIONS, ITEMS, &/or COMPONENTS MAY BE INDICATED &/or SHOWN. RE: ALL DRAWINGS INCLUDING THE PLUMBING, MECHANICAL, ELECTRICAL DRAWINGS.
2. NOT ALL EXTERIOR WALL ELEVATIONS MAY BE SHOWN. COORDINATE w/ PLANS AND SECTIONS FOR ADDITIONAL EXTERIOR WORK. MATERIALS AND TEXTURES ARE CONTINUOUS IN AREAS WHERE WALL MAY BE CONCEALED BY OTHER BUILDING PROJECTIONS.
3. SUBMIT SAMPLES OF ALL EXTERIOR FINISH MATERIALS FOR REVIEW & APPROVAL PRIOR TO FABRICATING/CONSTRUCTION, TYPICAL.
4. FINISH GRADES SHOWN ARE APPROXIMATE. CONTRACTOR TO REVIEW & COORDINATE W/ SITE GRADING PLAN.
5. PAINT ALL EXPOSED EXTERIOR GALVANIZED PRIME STEEL LINTELS TO MATCH ADJACENT EXTERIOR FINISH COLOR, U.N.O.
6. PROVIDE PREFINISHED BACK PLATE @ ALL METAL FASCIA & TRIM JOINTS. BACK PLATE TO BE 8" MIN. WIDTH.
7. SEALANT/CAULKING COLORS TO MATCH ADJACENT FINISH LISTED IN REQUIRED PRIORITY. ARCHITECT TO APPROVE SAMPLE IN FIELD PRIOR TO INSTALLATION.
   A. SEALANT COLOR @ WINDOWS, STOREFRONT, CURTAIN WALL TO MATCH FRAME COLOR.
   B. SEALANT COLOR @ HOLLOW METAL FRAME TO MATCH FRAME COLOR.

EXTERIOR MATERIAL AND COLOR SCHEDULE

#	MATERIAL	DESCRIPTION
1A	VERTICAL METAL PANEL (INSULATED)	BASIS OF DESIGN: MBCI MODEL: DESIGNER SERIES FLAT EMBOSSED 22 GAUGE COLOR: SIGNATURE 300 TUNDRA FINISH: FLUROPAN CLASSIC II
1C	TRIM CORNER	BASIS OF DESIGN: MBCI MODEL: DESIGNER SERIES FLAT EMBOSSED 22 GAUGE COLOR: SIGNATURE 300 TUNDRA FINISH: FLUROPAN CLASSIC II
1D	BASE TRIM AT VERTICAL METAL PANEL	BASIS OF DESIGN: MBCI MODEL: DESIGNER SERIES FLAT EMBOSSED 22 GAUGE COLOR: SIGNATURE 300 SNOW WHITE FINISH: FLUROPAN CLASSIC II
1E	PRE-FINISHED ALUMINUM FASCIA	BASIS OF DESIGN: MBCI MODEL: SECURE EDGE COLOR: SNOW WHITE FINISH: FLUROPAN CLASSIC II
1F	WINDOW / DOOR TRIM &/ OR FLASHING	BASIS OF DESIGN: METLSPAN MODEL: METLSPAN TRIM COLOR: TO BE SELECTED FROM MFR'S PREMIUM COLOR SELECTION FINISH: FLUROPAN CLASSIC II
1H	SOFFIT METAL PANEL (INSULATED)	BASIS OF DESIGN: MBCI MODEL: SIGNATURE-300 COLOR: SNOW WHITE FINISH: FLUROPAN CLASSIC II
2A	GUTTER & DOWNSPOUT(S) WITH OFFSETS	BASIS OF DESIGN: MBCI COLOR: WHITE

#	MATERIAL	DESCRIPTION
3A	PRE-FINISHED ALUMINUM CANOPY	BASIS OF DESIGN: MAPES MODEL: SUPER LUMIDECK COLOR: TO BE SELECTED FROM MFR'S PREMIUM COLOR SELECTION FINISH: FLUROPAN CLASSIC II
4A	INSULATED METAL CLAD DOOR	BASIS OF DESIGN; COLOR: CLEAR ANODIZED
5A	INSULATED OVERHEAD SERVICE COILING DOOR W/ VISION PANEL	BASIS OF DESIGN: COLOR: CLEAR ANODIZED
6A	TRANSLUCENT INSULATED WALL PANEL	BASIS OF DESIGN: KALWALL THERMALLY BROKEN WALL SYSTEM MODEL: REVERSE SHOJI: 2" HEAD, JAMB & SILL PROFILES. 4" OUTSIDE CORNERS. FACE COLOR: WHITE
7A	STANDING SEAM METAL ROOF	BASIS OF DESIGN: MBCI COLOR: SIGNATURE -300 COLNIAL RED FINISH: FLUROPAN CLASSIC II
8A	PVC TRIM	BASIS OF DESIGN: AZEK MODEL: TRIM COLOR: TO BE SELECTED FROM MFR'S COLOR SELECTION
9A	SPLIT FACE CMU	BASIS OF DESIGN: TRENWYTH MODEL: TRENDSTONE SPLIT FACED MASONRY UNIT COLOR: COLONIAL RED
12A	BOLLARD WITH COVER	GALVANIZED STEEL, CONCRETE FILLED, PROVIDE POLYETHYLENE THERMOPLASTIC COVER COLOR: YELLOW
13A	EXTERIOR EGRESS STAIR	GALVANIZED STEEL, PREFAB EGRESS STAIR 44" CLEAR BETWEEN RAILS. 11" TREADS/7" RISERS SECURE TO BUILDING FRAMING. FOUNDATION - 8" GRADE BEAM, 48" DEEP

This drawing is copyrighted and is subject to copyright protection as an "architectural work" under 17 U. S. C. Sec. 101 et seq. The protection includes but is not limited to the overall form as well as the arrangement and composition of spaces, materials, color and elements in the design. Under such protection, unauthorized use of this drawing may result in the cessation of construction or buildings being seized and/or monetary compensation being awarded to The Robinson Green Beretta Corporation (RGB).

Any reproduction, possession, or use of this drawing or any part thereof without the express written permission of RGB, is prohibited. Violators will be prosecuted to the full extent of the law.

© RGB 2019

Certification

Drawn by TPL

Checked by RJJ, DLD

Revised on

50 Holden Street
Providence, Rhode Island 02908

Phone: (401) 272-1730
Fax: (401) 273-7156

E-mail: rgbinfo@rgb.net
www.rgb.net

RGB ARCHITECTS

Architecture · Project Management · Interior Design

Project

FORT ADAMS MAINTENANCE BUILDING

RIDEM / DIVISION OF PARKS & RECREATION

STATE OF RHODE ISLAND AND PROVIDENCE PLANTATIONS

FORT ADAMS STATE PARK, NEWPORT, RI

Drawing Status

ISSUED FOR CONSTRUCTION

Issued On MAY 29, 2019

Sheet Contents

BUILDING ELEVATIONS

Project Number. 6380

Drawing No.

A200

Sheet of

NOTE: FOR WINDOW & DOOR LOCATIONS REFER TO 2/A100

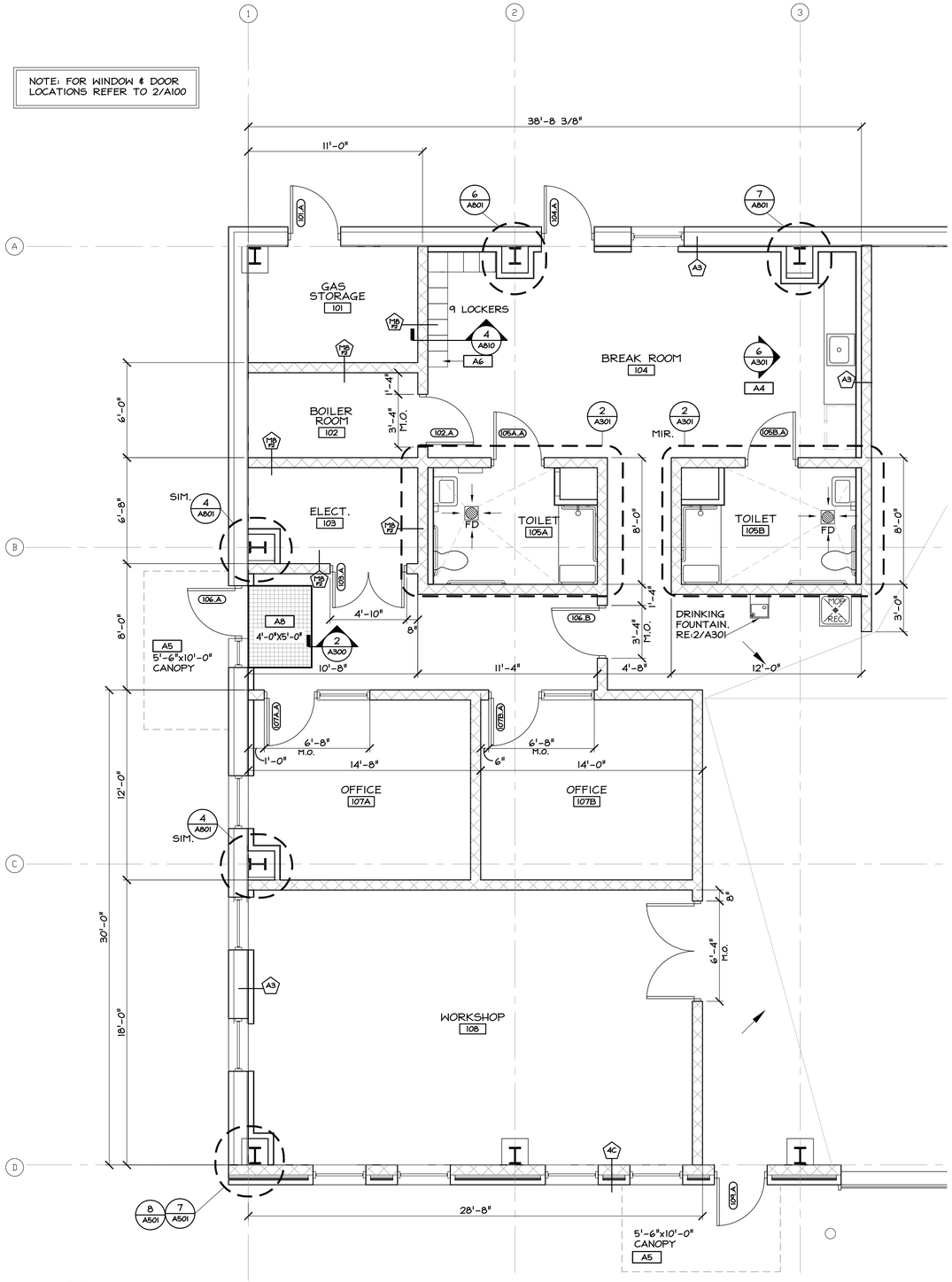

REF NORTH

NORTH

1 / A300 ENLARGED FLOOR PLAN

Scale: 1/4" = 1'-0"

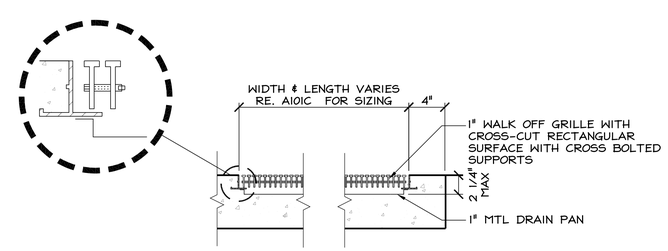

2 / A300 WALK-OFF GRILLE

Scale: 1 1/2" = 1'-0"

GENERAL PLAN NOTES:

1. COORDINATE ALL NEW WORK w/ CIVIL, STRUCTURAL, PLUMBING, MECHANICAL, ELECTRICAL, &/or OTHER DRAWGINS. NOTIFY ARCHITECT OF ANY DISCREPANCIES BEFORE PROCEEDING WITH WORK.
2. ALL DIMENSIONS TO NEW CONSTRUCTION ARE TO FACE OF STUD AND FACE OF MASONRY U.N.O.
4. ALL NEW EXTERIOR WALLS ARE TYPE F U.N.O.
5. ALL NEW INTERIOR WALLS ARE TYPE M18 U.N.O.
6. ALL NEW INTERIOR WALLS ARE TO EXTEND TO THE UNDERSIDE OF ROOF &/or FLOOR STRUCTURE ABOVE U.N.O.
7. ALL NEW DOOR FRAMES SHALL BE A MINIMUM OF 4" CLEAR FROM THE FACE OF ADJACENT WALL TO DOOR JAMB, U.N.O.
8. SLAB PITCHED TO DRAIN INDICATED DIRECTION PITCH AT 1/4" SLOPE UNLESS NOTED OTHER WISE

LEGEND:

FLOOR PITCH TO DRAIN

PLAN WORK NOTES:

A1	8" GALVANIZED STEEL CONCRETE FILLED BOLLARD. PROVIDE POLYETHYLENE THERMOPLASTIC COVER. RE. 6/A810
A2	METAL PAN STAIR SYSTEM W/ SOLID TREAD AND RISER. PROVIDE 1 1/2" O.C. STAIR RAILING W/ POSTS AND GUARDS PER OSHA REQUIREMENTS.
A3	POST AND RAIL GUARDRAIL SYSTEM AT UPPER STORAGE MEZZANINE PERIMETER.
A4	PROVIDE NEW MILLWORK. RE. A810 FOR DETAILS
A5	PRE-FINISHED ALUMINUM CANOPY BELOW. RE. SPEC & DETAILS ON SHEET A500 OR A501
A6	GC TO PROVIDE AND INSTALL FULL HEIGHT LOCKERS RE. A810
A7	SLAB PITCHED TO EXTERIOR INDICATED DIRECTION PITCH AT 1/4" SLOPE UNLESS NOTED OTHER WISE
A8	WALK OFF MAT. RE. ROOM FINISH SCHEDULE

This drawing is copyrighted and is subject to copyright protection as an "architectural work" under 17 U. S. C. Sec. 101 et seq. The protection includes but is not limited to the overall form as well as the arrangement and composition of spaces, materials, color and elements in the design. Under such protection, unauthorized use of this drawing may result in the cessation of construction or buildings being seized and/or monetary compensation being awarded to The Robinson Green Beretta Corporation (RGB).

Any reproduction, possession, or use of this drawing or any part thereof without the express written permission of RGB, is prohibited. Violators will be prosecuted to the full extent of the law.

© RGB 2019

Certification

Drawn by TPL

Checked by RJJ, DLD

Revised on

50 Holden Street
Providence, Rhode Island 02908

Phone: (401) 272-1730
Fax: (401) 273-7156

E-mail: rgbinfo@rgb.net
www.rgb.net

Architecture · Project Management · Interior Design

Project

FORT ADAMS MAINTENANCE BUILDING

RIDEM / DIVISION OF PARKS & RECREATION

STATE OF RHODE ISLAND AND PROVIDENCE PLANTATIONS

FORT ADAMS STATE PARK, NEWPORT, RI

Drawing Status

ISSUED FOR CONSTRUCTION

Issued On MAY 29, 2019

Sheet Contents

ENLARGED FLOOR PLAN

Project Number. 6380

Drawing No.

A300

Sheet of

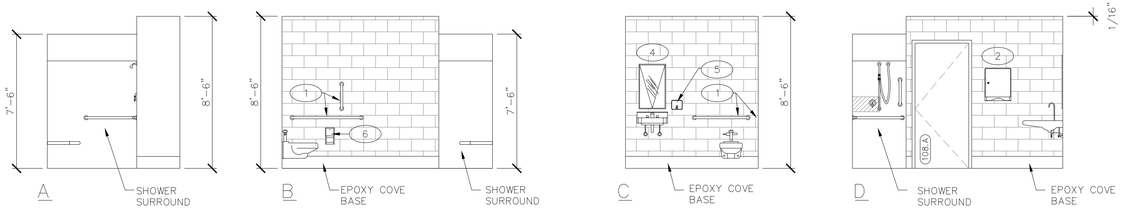

1 A301 TYPICAL ELEVATIONS

Scale: 1/4" = 1'-0"

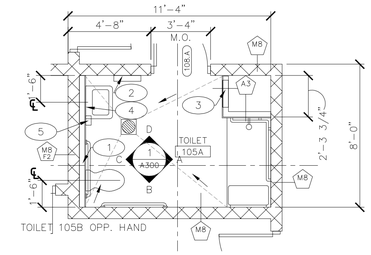

2 A301 ENLARGED TOILET PLAN

Scale: 1/4" = 1'-0"

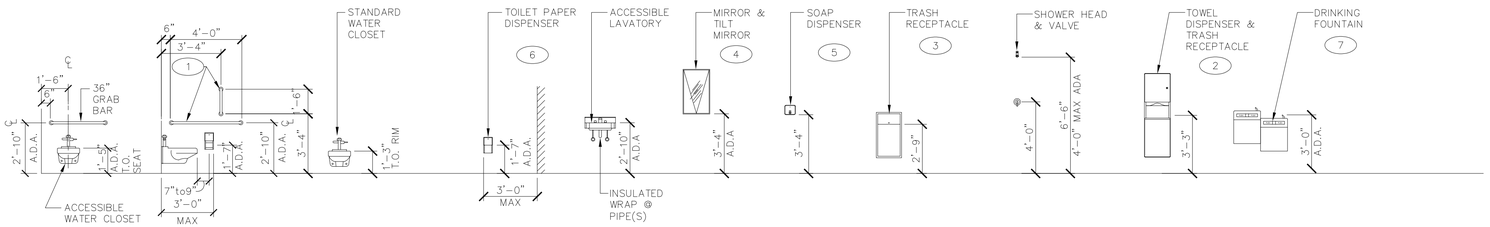

3 A301 TYPICAL FIXTURE & ACCESSORY MOUNTING HEIGHTS – ADULTS

Scale: 1/4" = 1'-0"

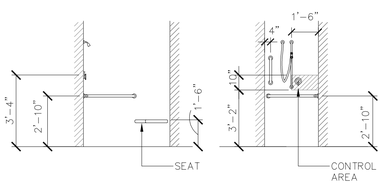

4 A301 TYPICAL H.C. SHOWER

Scale: 1/4" = 1'-0"

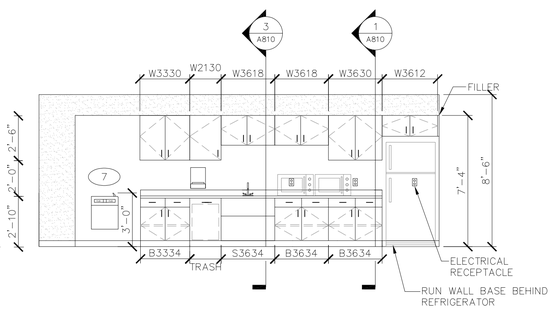

6 A301 KITCHENETTE ELEVATION

Scale: 1/4" = 1'-0"

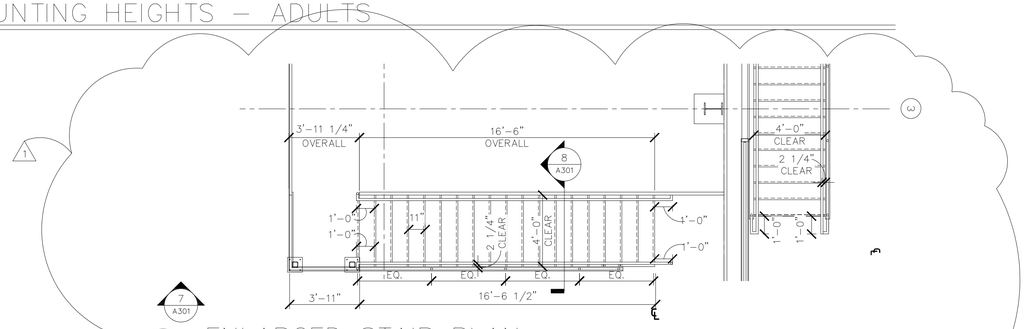

5 A301 ENLARGED STAIR PLAN

Scale: 1/4" = 1'-0"

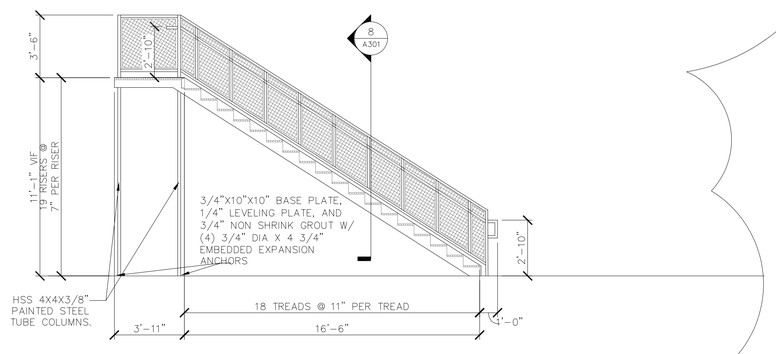

7 A301 INTERIOR STAIR ELEVATION

Scale: 1/4" = 1'-0"

GENERAL PLAN NOTES:

1. COORDINATE ALL NEW WORK w/ CIVIL, STRUCTURAL, PLUMBING, MECHANICAL,ELECTRICAL, &/or OTHER DRAWGINS. NOTIFY ARCHITECT OF ANY DISCREPANCIES BEFORE PROCEEDING WITH WORK.
2. ALL DIMENSIONS TO NEW CONSTRUCTION ARE TO FACE OF STUD AND FACE OF MASONRY U.N.O.
4. ALL NEW EXTERIOR WALLS ARE TYPE U.N.O.
5. ALL NEW INTERIOR WALLS ARE TYPE U.N.O.
6. ALL NEW INTERIOR WALLS ARE TO EXTEND TO THE UNDERSIDE OF ROOF &/or FLOOR STRUCTURE ABOVE U.N.O.
7. ALL NEW DOOR FRAMES SHALL BE A MINIMUM OF 4" CLEAR FROM THE FACE OF ADJACENT WALL TO DOOR JAMB, U.N.O.
8. SLAB PITCHED TO DRAIN INDICATED DIRECTION PITCH AT 1/4" SLOPE UNLESS NOTED OTHER WISE
9. GENERAL CONTRACTOR TO FURNISH AND INSTALL ALL TOILET ACCESSORIES. REVIEW/CONFIRM STANDARDS AND MODEL TYPES WITH CLIENT

PLAN WORK NOTES:

XXX	NOTES WITHOUT AN ARROW INDICATE AN ENTIRE SPACE/AREA.
XXX	NOTES WITH AN ARROW(S) INDICATE SPECIFIC AREAS &/or ITEMS.
A1	8"GALVANIZED STEEL CONCRETE FILLED BOLLARD. PROVIDE POLYETHYLENE THERMOPLASTIC COVER. RE. 3/A501
A2	METAL PAN STAIR SYSTEM W/ SOLID TREAD AND RISER. PROVIDE 1 1/2" O.C. STAIR RAILING W/ POSTS AND GUARDS PER OSHA REQUIREMENTS.
A3	POST AND RAIL GUARDRAIL SYSTEM AT UPPER STORAGE MEZZANINE PERIMETER.
A4	PROVIDE NEW MILLWORK. RE. A810 FOR DETAILS
A5	PRE-FINISHED ALUMINUM CANOPY. RE. SPEC & DETAILS ON SHEET 5/A500

TOILET ACCESSORY SCHEDULE

1	GRAB BAR BOBRICK #B6806 SERIES
2	PAPER TOWEL DISPENSER BOBRICK B-262
3	WASTE RECEPTACLE BOBRICK B-277
4	A.D.A TILT MIRROR BOBRICK #B294
5	SOAP DISPENSER BOBRICK #B4112
6	TOILET PAPER DISPENSER BOBRICK #B4388
7	DRINKING FOUNTAIN

CONTRACTOR TO FURNISH & INSTALL FRT WOOD BLOCKING FOR ALL TOILET ACCESSORIES PER MANUFACTURER'S REQUIREMENTS.

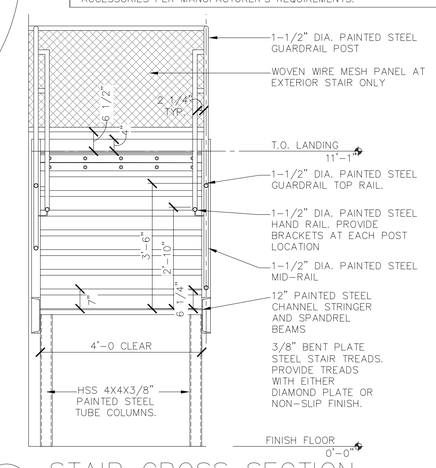

8 A301 STAIR CROSS SECTION

Scale: 1/2" = 1'-0"

This drawing is copyrighted and is subject to copyright protection as an "architectural work" under 17 U. S. C. Sec. 101 et seq. The protection includes but is not limited to the overall form as well as the arrangement and composition of spaces, materials, color and elements in the design. Under such protection, unauthorized use of this drawing may result in the cessation of construction or buildings being seized and/or monetary compensation being awarded to The Robinson Green Beretta Corporation (RGB).

Any reproduction, possession, or use of this drawing or any part thereof without the express written permission of RGB, is prohibited. Violators will be prosecuted to the full extent of the law.

© RGB 2019

Certification

Drawn by TPL

Checked by RJJ, DLD

Revised on

1 METAL STORAGE STAIRS UPDATE 8/5/2019

50 Holden Street
Providence, Rhode Island 02908

Phone: (401) 272-1730
Fax: (401) 273-7156

E-mail: rgbinfo@rgb.net
www.rgb.net

RGB ARCHITECTS

Architecture · Project Management · Interior Design

Project

FORT ADAMS MAINTENANCE BUILDING

RIDEM / DIVISION OF PARKS & RECREATION

STATE OF RHODE ISLAND AND PROVIDENCE PLANTATIONS

FORT ADAMS STATE PARK, NEWPORT, RI

Drawing Status

ISSUED FOR CONSTRUCTION

Issued On MAY 29 2019

Sheet Contents

ENLARGED TOILET PLAN & INTERIOR ELEVATIONS

Project Number. 6380

Drawing No.

A301

Sheet of

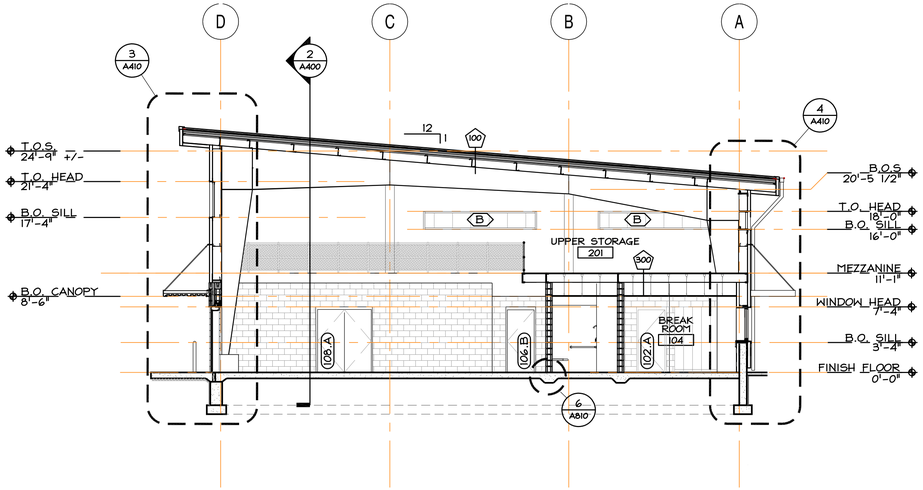

1 / A400 BUILDING SECTION AT BREAK ROOM

Scale: 1/8" = 1'-0"

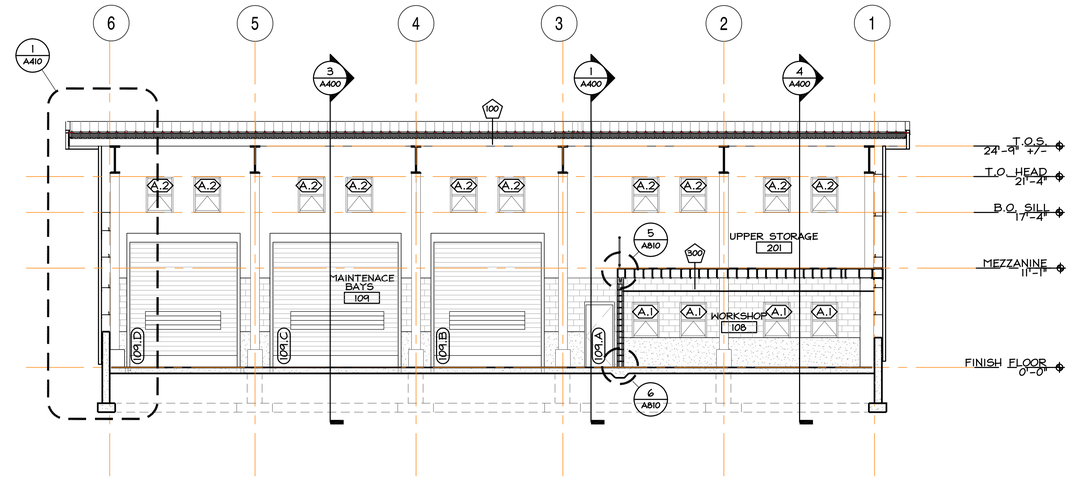

2 / A400 BUILDING SECTION AT MAINTENANCE BAYS & WORKSHOP

Scale: 1/8" = 1'-0"

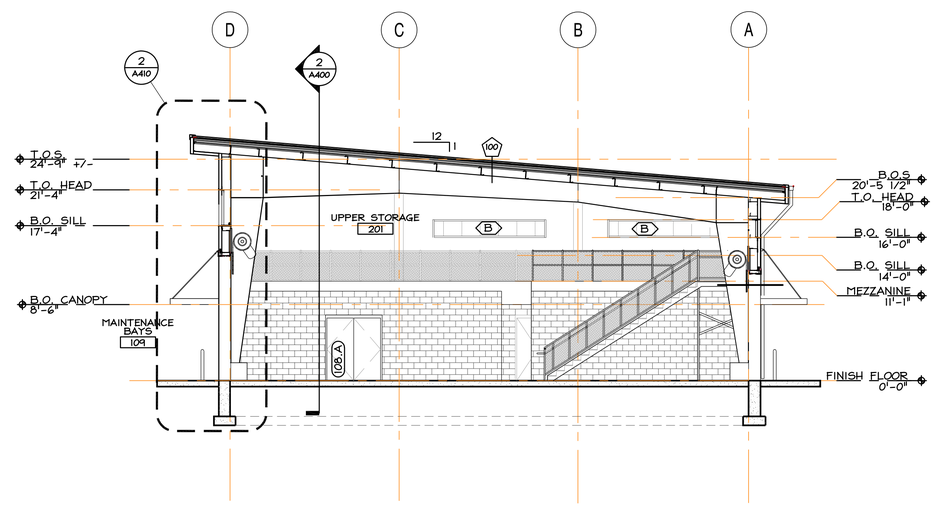

3 / A400 BUILDING SECTION AT MAINTENANCE BAYS

Scale: 1/8" = 1'-0"

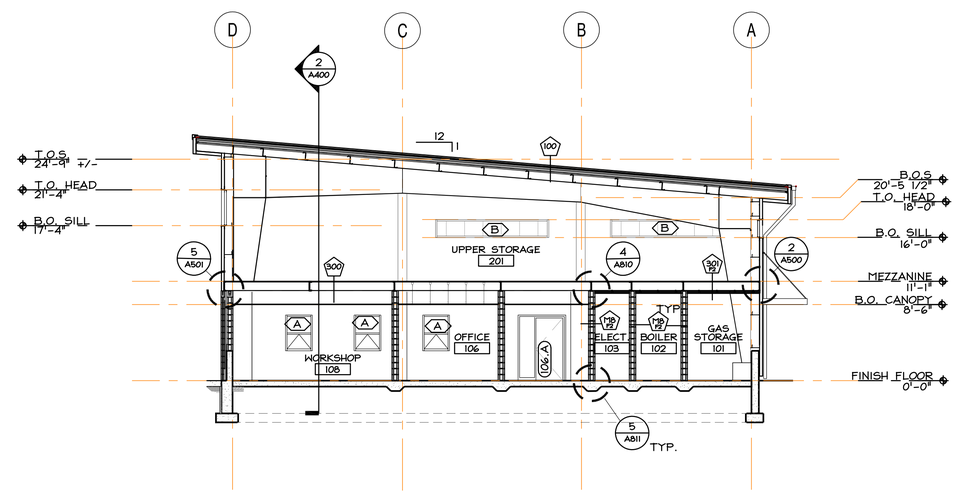

4 / A400 BUILDING SECTION AT UPPER STORAGE

Scale: 1/8" = 1'-0"

EXTERIOR ELEVATION NOTES:

1. NOT ALL EXTERIOR WALL PENETRATIONS MAY BE SHOWN. RE: PLUMBING, MECH., ELECT. DWGS.
2. NOT ALL METAL BUILDING COMPONENTS ARE SHOWN. IT IS THE RESPONSIBILITY OF THE G.C. AND THEIR SUBCONTRACTOR TO FURNISH AND INSTALL ALL COMPONENTS REQUIRED FOR A FULLY FUNCTIONING BUILDING SYSTEM.
3. SUBMIT SAMPLES OF ALL EXTERIOR FINISH MATERIALS FOR REVIEW & APPROVAL PRIOR TO FABRICATING/CONSTRUCTION, TYP.
4. FINISH GRADES SHOWN ARE APPROXIMATE. CONTRACTOR TO REVIEW & COORDINATE W/SITE GRADING PLAN.
5. PROVIDE PREFINISHED BACK PLATE & SEALANT @ ALL METAL FASCIA & TRIM JOINTS. BACK PLATE TO BE 4" MIN. WIDTH.
6. SEALANT/CAULKING COLORS TO MATCH ADJACENT FINISH LISTED IN REQUIRED PRIORITY. ARCHITECT TO APPROVE SAMPLE IN FIELD PRIOR TO INSTALLATION.

   A. SEALANT COLOR @ WINDOWS & DOORS TO MATCH FRAME COLOR.

This drawing is copyrighted and is subject to copyright protection as an "architectural work" under 17 U. S. C. Sec. 101 et seq. The protection includes but is not limited to the overall form as well as the arrangement and composition of spaces, materials, color and elements in the design. Under such protection, unauthorized use of this drawing may result in the cessation of construction or buildings being seized and/or monetary compensation being awarded to The Robinson Green Beretta Corporation (RGB).

Any reproduction, possession, or use of this drawing or any part thereof without the express written permission of RGB, is prohibited. Violators will be prosecuted to the full extent of the law.

© RGB 2019

Certification

Drawn by TPL

Checked by RJJ, DLD

Revised on

50 Holden Street
Providence, Rhode Island 02908

Phone: (401) 272-1730
Fax: (401) 273-7156

E-mail: rgbinfo@rgb.net
www.rgb.net

RGB ARCHITECTS

Architecture · Project Management · Interior Design

Project

FORT ADAMS MAINTENANCE BUILDING

RIDEM / DIVISION OF PARKS & RECREATION

STATE OF RHODE ISLAND AND PROVIDENCE PLANTATIONS

FORT ADAMS STATE PARK, NEWPORT, RI

Drawing Status

ISSUED FOR CONSTRUCTION

Issued On MAY 29,2018

Sheet Contents

BUILDING SECTIONS

Project Number. 6380

Drawing No.

A400

Sheet of

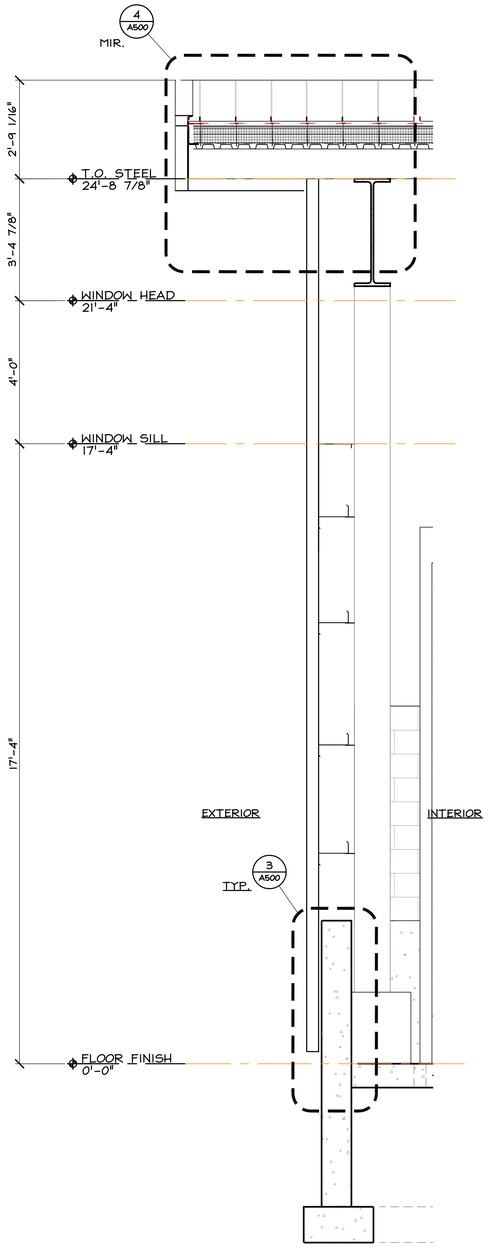

1 A410 WALL SECTION, TYP.
Scale: 1/2" = 1'-0"

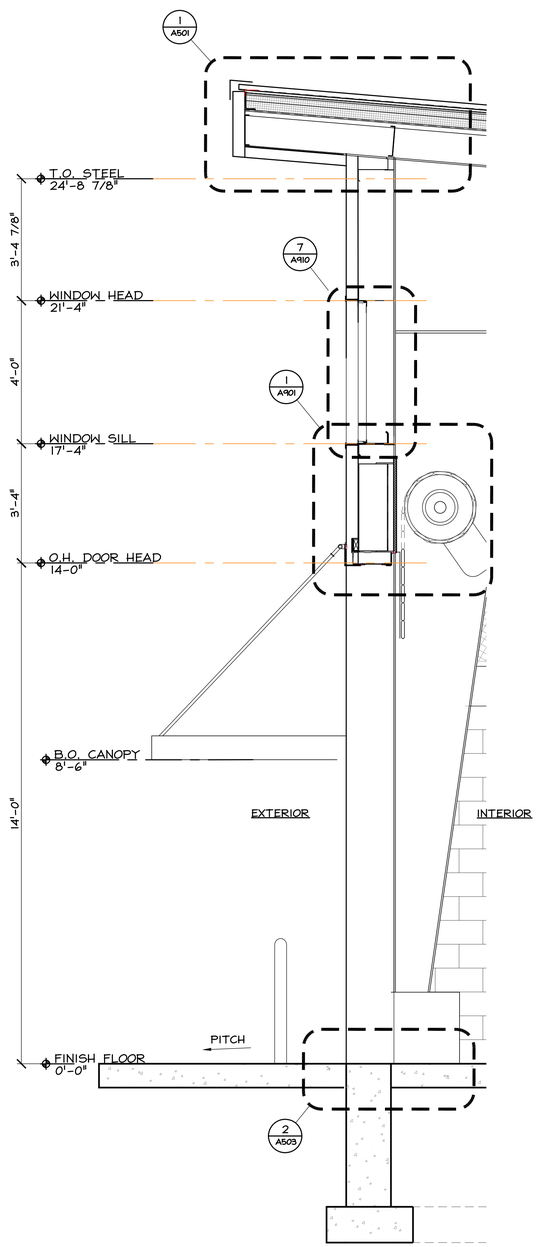

2 A410 WALL SECTION @ O.H. DOOR
Scale: 1/2" = 1'-0"

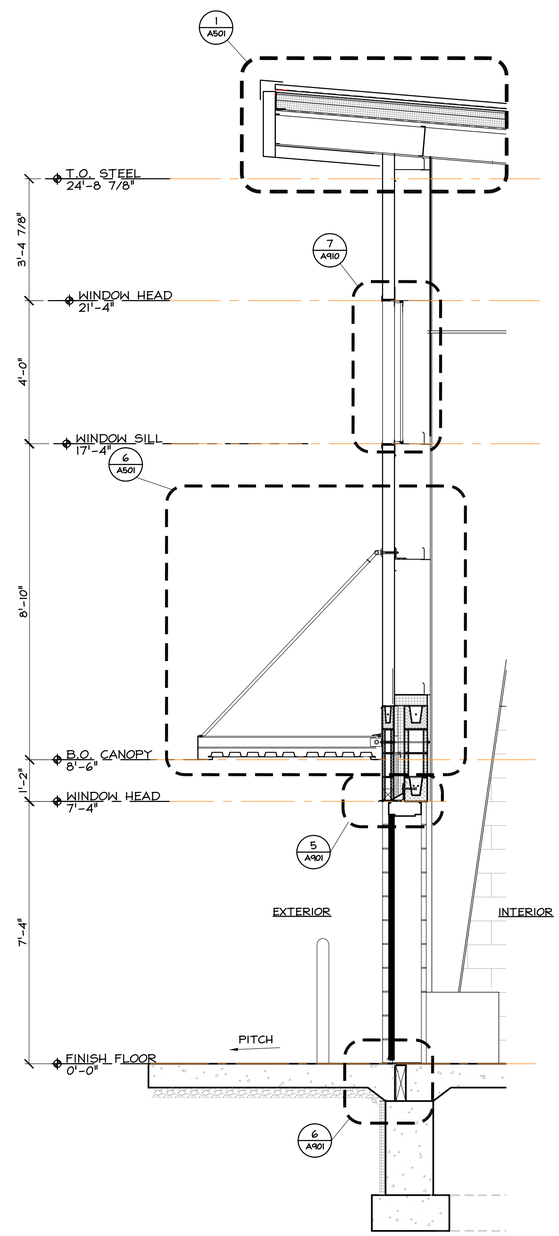

3 A410 WALL SECTION @ MAN DOOR & CANOPY
Scale: 1/2" = 1'-0"

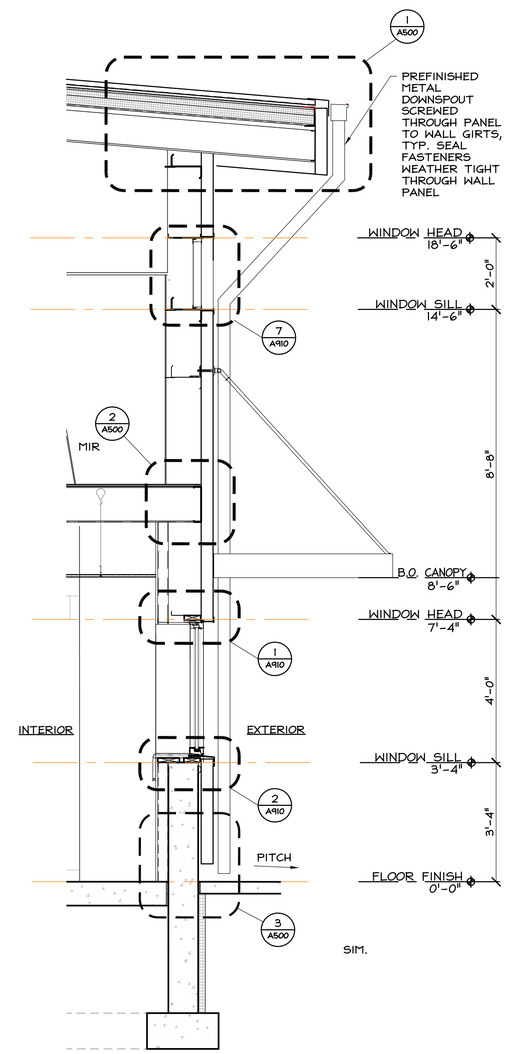

4 A410 WALL SECTION @ WINDOW
Scale: 1/2" = 1'-0"

This drawing is copyrighted and is subject to copyright protection as an "architectural work" under 17 U. S. C. Sec. 101 et seq. The protection includes but is not limited to the overall form as well as the arrangement and composition of spaces, materials, color and elements in the design. Under such protection, unauthorized use of this drawing may result in the cessation of construction or buildings being seized and/or monetary compensation being awarded to The Robinson Green Beretta Corporation (RGB).

Any reproduction, possession, or use of this drawing or any part thereof without the express written permission of RGB, is prohibited. Violators will be prosecuted to the full extent of the law.

© RGB 2019

Certification

Drawn by TPL

Checked by RJJ, DLD

Revised on

50 Holden Street
Providence, Rhode Island 02908

Phone: (401) 272-1730
Fax: (401) 273-7156

E-mail: rgbinfo@rgb.net
www.rgb.net

RGB architects

Architecture · Project Management · Interior Design

Project

FORT ADAMS MAINTENANCE BUILDING

RIDEM / DIVISION OF PARKS & RECREATION

STATE OF RHODE ISLAND AND PROVIDENCE PLANTATIONS

FORT ADAMS STATE PARK, NEWPORT, RI

Drawing Status

ISSUED FOR CONSTRUCTION

Issued On MAY 29, 2019

Sheet Contents

WALLS SECTIONS

Project Number. 6380

Drawing No.

A410

Sheet of

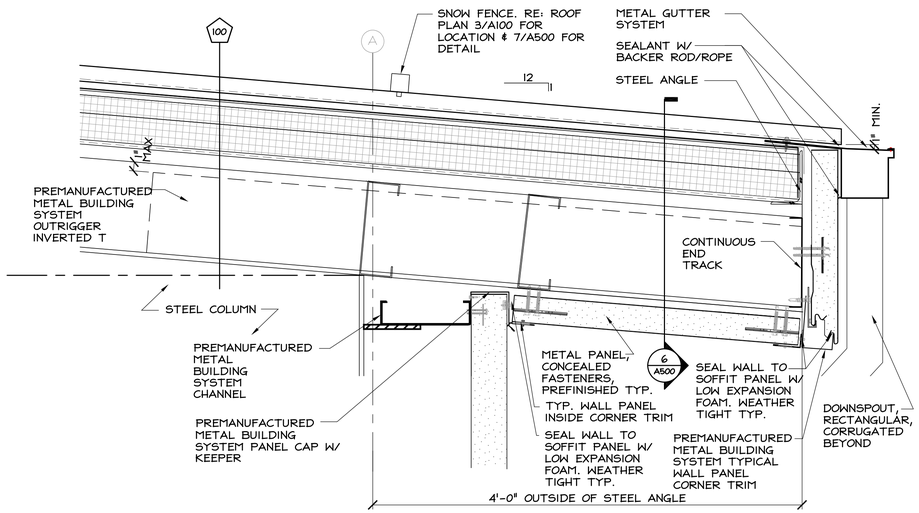

1 / A500 METAL BUILDING @ ROOF EDGE

Scale: 1 1/2" = 1'-0"

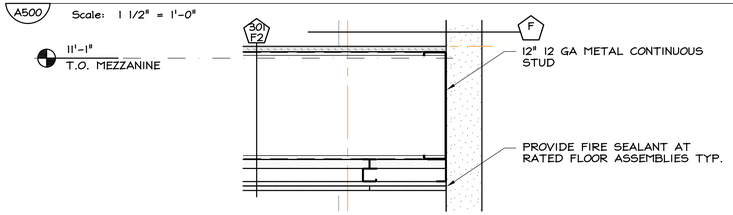

2 / A500 METAL BUILDING @ MEZZANINE

Scale: 1 1/2" = 1'-0"

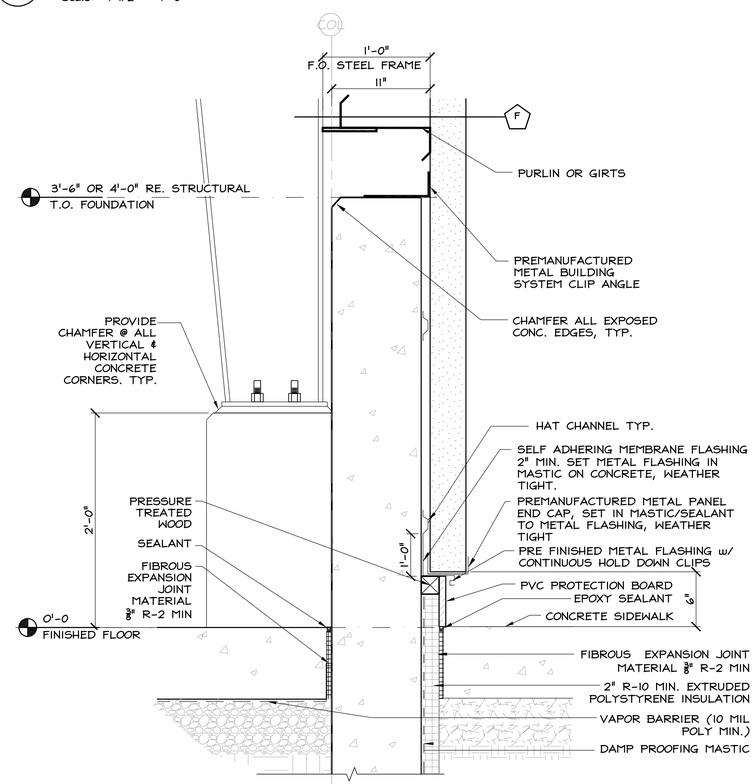

3 / A500 SECTION: FOUNDATION @ COLUMNS, TYP.

Scale: 1 1/2" = 1'-0"

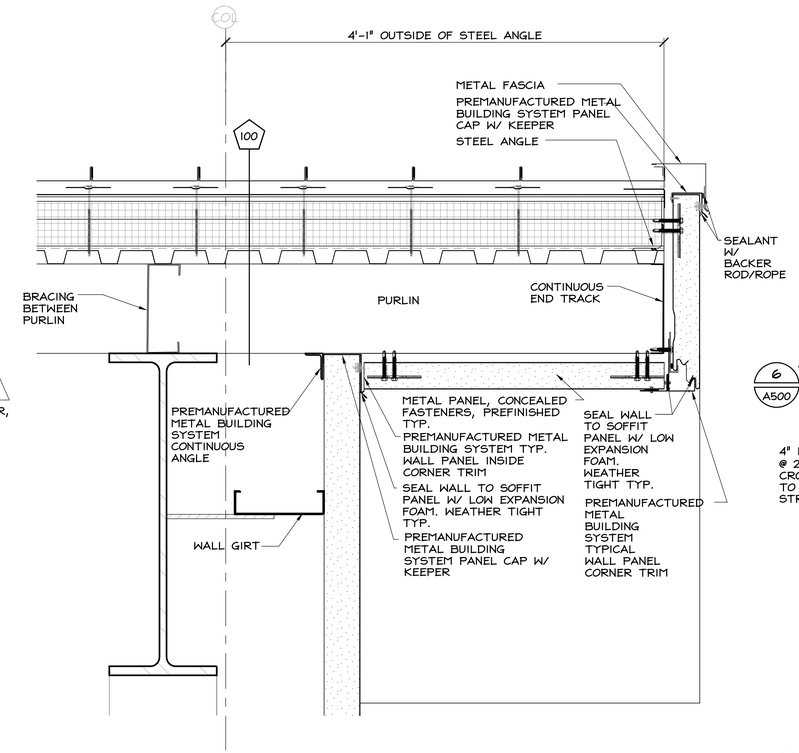

4 / A500 ROOF EAVE W/O GUTTER @ WEST SIDE

Scale: 1 1/2" = 1'-0"

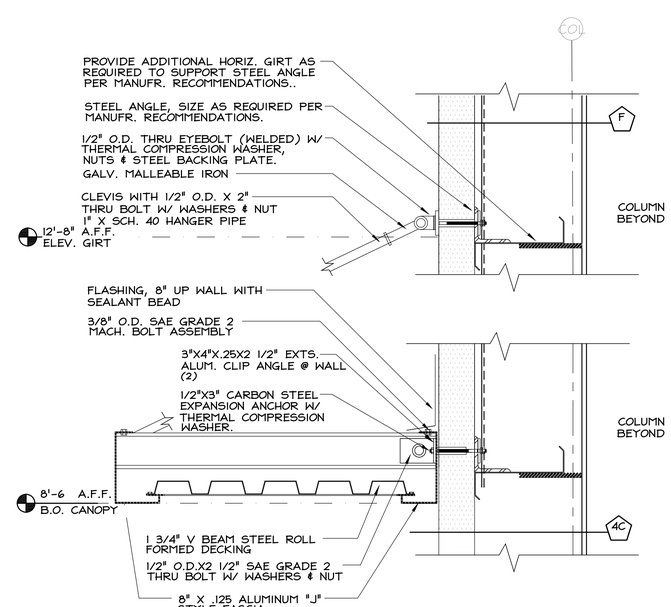

5 / A500 TYPICAL CANOPY @ METAL PANEL

Scale: 1 1/2" = 1'-0"

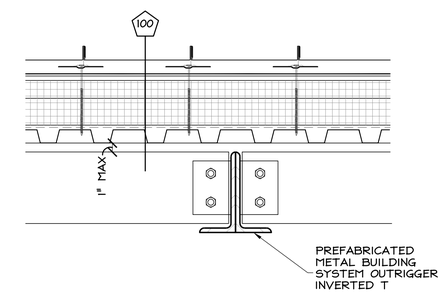

6 / A500 TYP. OVERHANG THRU OUTRIGGER

Scale: 1 1/2" = 1'-0"

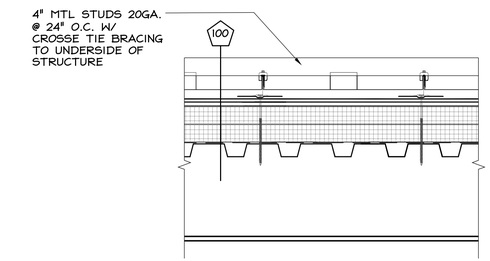

7 / A500 SNOW FENCE SECTION

Scale: 1 1/2" = 1'-0"

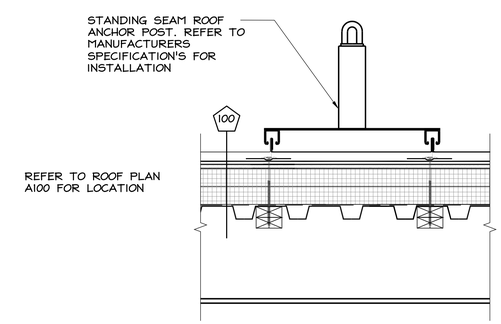

8 / A500 ROOF TIE-OFF SECTION

Scale: 1 1/2" = 1'-0"

This drawing is copyrighted and is subject to copyright protection as an "architectural work" under 17 U. S. C. Sec. 101 et seq. The protection includes but is not limited to the overall form as well as the arrangement and composition of spaces, materials, color and elements in the design. Under such protection, unauthorized use of this drawing may result in the cessation of construction or buildings being seized and/or monetary compensation being awarded to The Robinson Green Beretta Corporation (RGB).

Any reproduction, possession, or use of this drawing or any part thereof without the express written permission of RGB, is prohibited. Violators will be prosecuted to the full extent of the law.

© RGB 2019

Certification

Drawn by TPL

Checked by RJJ, DLD

Revised on

50 Holden Street
Providence, Rhode Island 02908

Phone: (401) 272-1730
Fax: (401) 273-7156

E-mail: rgbinfo@rgb.net
www.rgb.net

RGB Architects

Architecture · Project Management · Interior Design

Project

FORT ADAMS MAINTENANCE BUILDING

RIDEM / DIVISION OF PARKS & RECREATION

STATE OF RHODE ISLAND AND PROVIDENCE PLANTATIONS

FORT ADAMS STATE PARK, NEWPORT, RI

Drawing Status

ISSUED FOR CONSTRUCTION

Issued On MAY 29, 2019

Sheet Contents

EXTERIOR SECTION DETAILS

Project Number. 6380

Drawing No.

A500

Sheet of

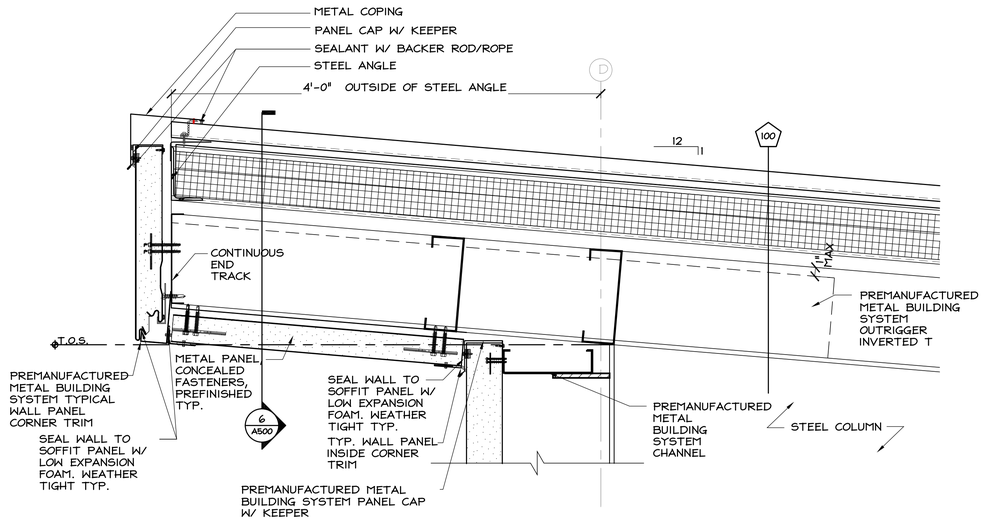

1 / A501 SECTION: ROOF EAVE @ NORTH SIDE

Scale: 1 1/2" = 1'-0"

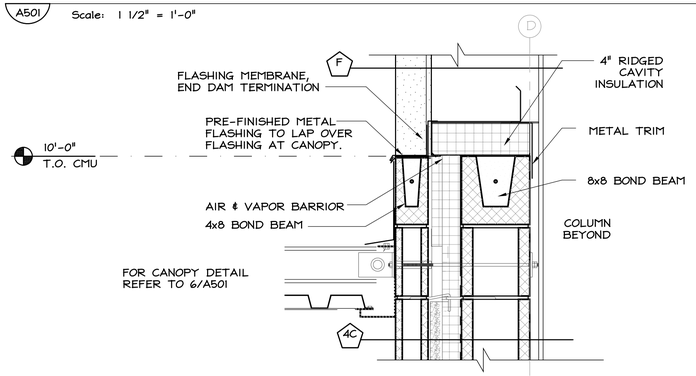

2 / A501 TYP. F & C4 WALL TRANSITION

Scale: 1 1/2" = 1'-0" (SECTION DETAIL)

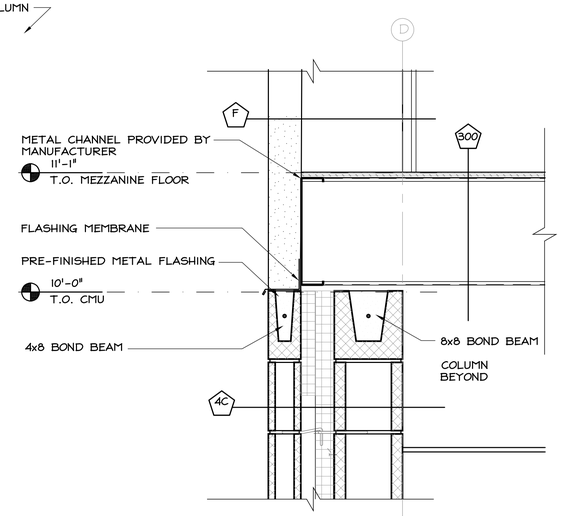

5 / A501 F & C4 WALL TRANSITION @ FLOOR

Scale: 1 1/2" = 1'-0" (SECTION DETAIL)

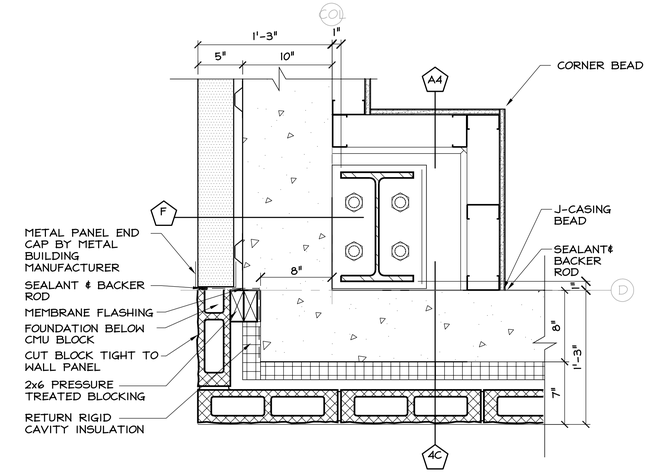

7 / A501 WALL TRANSITION @ FOUNDATION

Scale: 1 1/2" = 1'-0" (PLAN DETAIL)

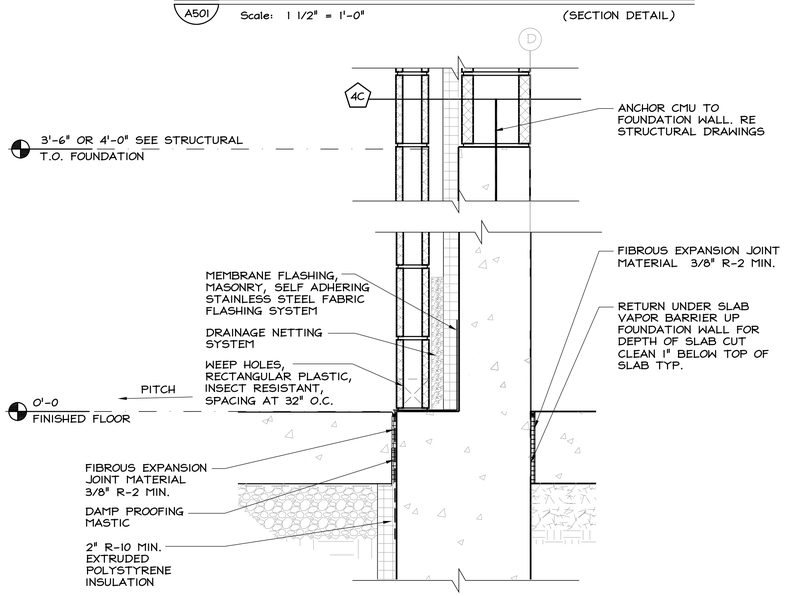

3 / A501 FOUNDATION DETAIL

Scale: 1 1/2" = 1'-0" (SECTION DETAIL)

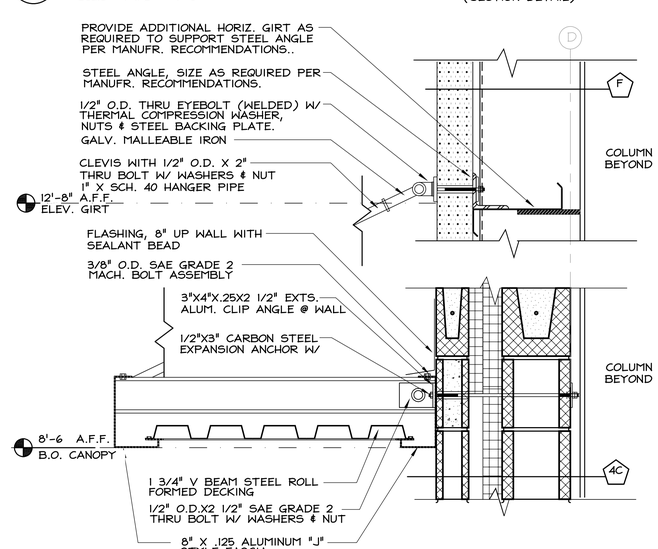

6 / A501 CANOPY @ CMU

Scale: 1 1/2" = 1'-0"

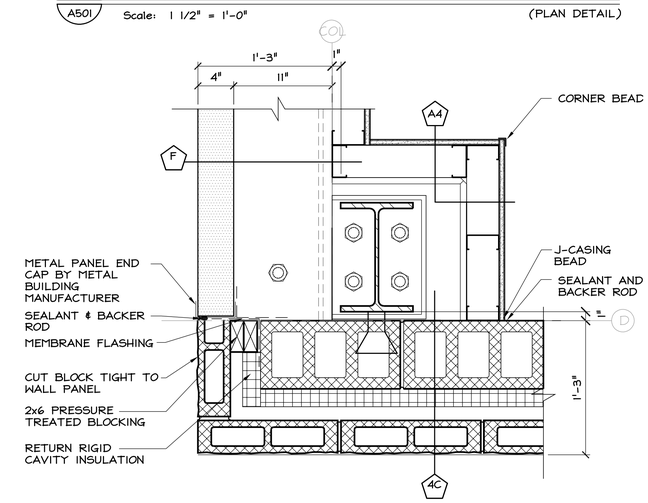

8 / A501 WALL TRANSITION @ 6' AFF

Scale: 1 1/2" = 1'-0" (PLAN DETAIL)

This drawing is copyrighted and is subject to copyright protection as an "architectural work" under 17 U. S. C. Sec. 101 et seq. The protection includes but is not limited to the overall form as well as the arrangement and composition of spaces, materials, color and elements in the design. Under such protection, unauthorized use of this drawing may result in the cessation of construction or buildings being seized and/or monetary compensation being awarded to The Robinson Green Beretta Corporation (RGB).

Any reproduction, possession, or use of this drawing or any part thereof without the express written permission of RGB, is prohibited. Violators will be prosecuted to the full extent of the law.

© RGB 2019

Certification

Drawn by TPL

Checked by RJJ, DLD

Revised on

50 Holden Street
Providence, Rhode Island 02908

Phone: (401) 272-1730
Fax: (401) 273-7156

E-mail: rgbinfo@rgb.net
www.rgb.net

RGB architects

Architecture · Project Management · Interior Design

Project

FORT ADAMS MAINTENANCE BUILDING

RIDEM / DIVISION OF PARKS & RECREATION

STATE OF RHODE ISLAND AND PROVIDENCE PLANTATIONS

FORT ADAMS STATE PARK, NEWPORT, RI

Drawing Status

ISSUED FOR CONSTRUCTION

Issued On MAY 29, 2019

Sheet Contents

EXTERIOR DETAILS

Project Number. 6380

Drawing No.

A501

Sheet of

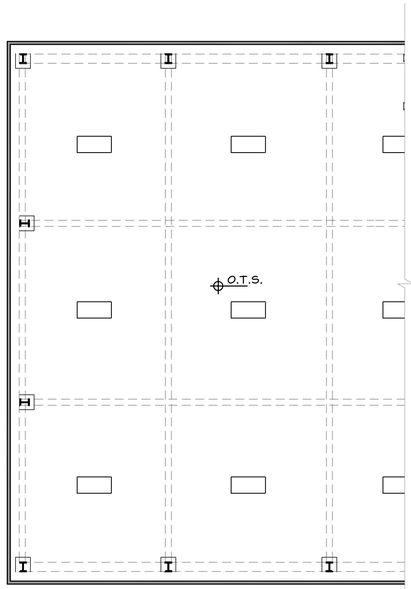

1 A600 RCP AT STORAGE AREA

Scale: 1/8" = 1'-0"

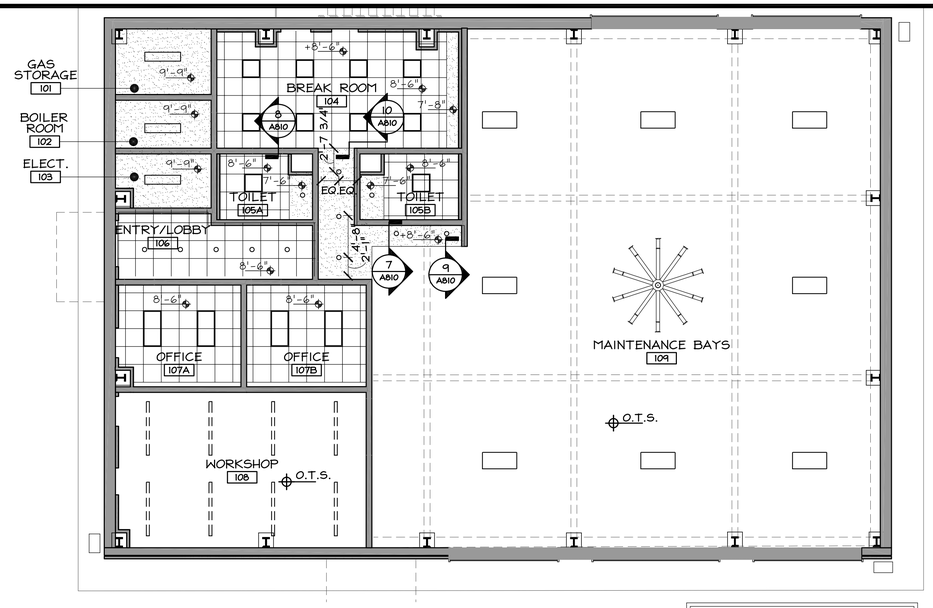

2 A600 REFLECTED CEILING PLAN

Scale: 1/8" = 1'-0"

NOTE: SUSPENDED LIGHTS ABOVE MAINTENANCE BAY AND UPPER STORAGE TO BE CENTERED IN COLUMN BAYS

REFLECTED CEILING PLAN NOTES:

1. NOT ALL CEILING MOUNTED &/or SUSPENDED ITEMS, COMPONENTS, &/or WORK MAY BE SHOWN. CONTRACTOR TO COORDINATE w/ ALL DRAWINGS INCLUDING THE STRUCTURAL, PLUMBING, MECHANICAL & ELECTRICAL DRAWINGS. NOTIFY THE ARCHITECT OF ANY ADDITIONAL ITEMS &/or DISCREPANCIES BEFORE STARTING WORK.
2. ALL CEILING MOUNTED ITEMS ARE TO BE CENTERED IN CEILING TILES U.N.O.
3. SPRINKLER HEAD LAYOUT IS APPROXIMATE AND NOT ALL HEADS MAY BE SHOWN. COORDINATE w/ SPRINKLER DWGS AND NOTIFY ARCHITECT OF ANY DISCREPANCIES BEFORE STARTING WORK.
4. PROVIDE WHITE GROMMET TRIM @ ALL SUPPORT CABLE &/or WIRING PENETRATIONS FOR SUSPENDED ELEMENTS.

REFLECTED CEILING PLAN LEGEND:

- NEW GYPSUM BOARD SOFFIT OR GYPSUM BOARD CEILING
- NEW CEILING GRID
- 2X2 CEILING LIGHT. COORDINATE w/ ELECTRICAL DWGS
- 2X4 CEILING LIGHT. COORDINATE w/ ELECTRICAL DWGS
- PENDANT HUNG LIGHT COORDINATE w/ ELECTRICAL DWGS
- SUSPENDED ELEMENT BELOW CEILING.
- NEW CEILING MOUNTED LIGHT COORDINATE w/ ELECTRICAL DWGS
- EXTERIOR FLOOD LIGHTS
- NEW CEILING MOUNTED HVAC SUPPLY DIFFUSER COORDINATE w/ MECHANICAL DWGS
- NEW CEILING MOUNTED HVAC RETURN DIFFUSER. COORDINATE w/ MECHANICAL DWGS.
- EXIT SIGN COORDINATE w/ ELECTRICAL DWGS
- SMOKE DETECTOR COORDINATE w/ ELECTRICAL DWGS
- HEAT DETECTOR COORDINATE w/ ELECTRICAL DWGS
- SPRINKLER HEAD COORDINATE w/ PLUMBING/SPRINKLER DWGS
- CEILING FAN COORDINATE w/ MECHANICAL DWGS
- O.T.S. OPEN TO STRUCTURE

ROOM FINISH SCHEDULE

MARK	ROOM NAME	FLOOR	BASE	WALLS	CEILING MATL	CEILING HEIGHT	REMARKS	MARK
101	GAS STORAGE	96Z	98E	97Z	95C	9'- 9"	RATED CEILING, RE. A030	101
102	BOILER ROOM	96Z	98E	97Z	95C	9'- 9"	RATED CEILING, RE. A030	102
103	ELECT.	96Z	98E	97Z	95C	9'- 9"	RATED CEILING, RE. A030	103
104	BREAK ROOM	96D.1, 96D.2	98E	97D.1, 97D.4, L-1	95A, 95C	8'-6"	GYP. SOFFIT @ CABINETS	104
105A	TOILET	96L	98F	97A.1, 97A.2	95A	8'-6"	SOFFIT @ SHOWER	105A
105B	TOILET	96L	98F	97A.1, 97A.2	95A	8'-6"	SOFFIT @ SHOWER	105B
106	ENTRY/LOBBY	96D.1, 97D.2', 96M	98E	97D.1	95A	8'-6"	--	106
107A	OFFICE	96D.2	98E	97D.1	95A	8'-6"	-	107A
107B	OFFICE	96D.2	98E	97D.1	95A	8'-6"	-	107B
108	WORKSHOP	96Z	98Z	97D.1, 97D.2	95C, 95D.1, 95D.2	8'-6"	--	108
109	MAINTENANCE BAYS	96Z	98Z	97D.2, 97Z	95C, 95D.1, 95D.2, 95E	OPEN TO STRUC.	--	109
201	UPPER STORAGE	96D	98Z	97Z	95E	OPEN TO STRUC.	--	201

FINISH MATERIAL SCHEDULE

TAG	DESCRIPTION	MANUFACTURER	STYLE NAME / NUMBER	COLOR NAME	FINISH / REMARKS
95A	ACOUSTICAL CEILING TILE	USG	MARS CLIMA PLUS HIGH NRC SLT 87200	WHITE	-
95C	PAINTED GYPSUM BOARD	PPG	PPG 6-4110XI SPEEDHIDE ZERO INTERIOR ZERO VOC FLAT LATEX	DELICATE WHITE PPG1001-1	FLAT FINISH
95D.1	EXPOSED BEAMS / COLUMNS STRUCTURE - PAINTED	PPG	PITT-TECH© PLUS INTERIOR/EXTERIOR SEMI-GLOSS DTM INDUSTRIAL ENAMEL	BLUE TANG PPI160-7	SEMI-GLOSS FINISH
95D.2	EXPOSED JOISTS STRUCTURE - PAINTED	PPG	PITT-TECH© PLUS INTERIOR/EXTERIOR SEMI-GLOSS DTM INDUSTRIAL ENAMEL	BLUE TANG PPI160-7	SEMI-GLOSS FINISH
95E	SPRAYED ACOUSTIC TREATMENT- 2"	K-13	SONASPRAY FC	WHITE	-
96D.1	VNYL COMPOSITION TILE - 12 X 24	ARMSTRONG	RAFIA STREAM W/ DIAMOND 10	Z5901 RAIN	HERRINGBONE INSTALLATION
96D.2	VNYL COMPOSITION TILE - 12 X 24	ARMSTRONG	RAFIA STREAM W/ DIAMOND 10	Z5900 AVALANCHE	HERRINGBONE INSTALLATION
96L	EPOXY FLOORING - SLIP RESISTANT	SHERWIN WILLIAMS	BIO FLAKE WITH 4685 TOP COAT	CU-11	-
96M	ENTRANCE MAT TILE	LEES CARPET	STEP IN STYLE	COBALT - 955	MONOLITHIC INSTALLATION
96N	ALUMINUM EDGE STRIP	SCHLUTER	QUADEC @ WALLS,	STAINLESS STEEL	TBD
97A.1	12 X 24 PORCELAIN WALL TILE	GARDEN STATE TILE	ALFALUX STONE PRINTS	GHIACCIO	GROUT - LATICRETE 78 STERLING SILVER
97A.2	12 X 24 PORCELAIN WALL TILE	GARDEN STATE TILE	ALFALUX STONE PRINTS	GRIGIO	UP TO 4'-0" AFF, GROUT LATICRETE 78 STERLING SILVER
97D.1	PAINT	PPG	PPG PAINTS; 6-4310XI SPEEDHIDE ZERO INTERIOR ZERO VOC EGGSHELL LATEX	PPG1002-1 SILVER FEATHER	GYPSUM WALLS
97D.2	PAINT	PPG	PPG PAINTS; 6-4310XI SPEEDHIDE ZERO INTERIOR ZERO VOC EGGSHELL LATEX	PPG1001-4 FLAGSTONE	BLOCK WALLS & GYP WALLS @ MAINTENANCE BAY UP TO FIRST HORIZONTAL BEAM
97D.3	PAINT	PPG	PITT-TECH© PLUS INTERIOR/EXTERIOR SEMI-GLOSS DTM INDUSTRIAL ENAMEL	BLUE TANG PPI160-7	BEAMS 7 COLUMNS @ MAINTENANCE BAY
97D.4	PAINT	BENJAMIN MOORE	ECO - ZERO VOC	APACHE RED 1295	ACCENT WALL AT WOOD CABINETS @ BREAKROOM
98E	RUBBER BASE - 6"	ROPPE	PINNACLE RUBBER BASE	114 LUNAR DUST	-
SS-1	SOLID SURFACE - KITCHEN	STARON	EARTHEN STRATUM - QL287	SEMI-GLOSS	BREAK ROOM COUNTERTOP
WD-1	WOOD CABINET	MILLWORK	HARDWOOD - MAPLE	CLEAR	BREAK ROOM CABINETS

MATERIALS:

DIVISION 09

95 CEILING, SUSPENDED
- (95A) LAY-IN TILE
- (95B) 5/8" TYPE 'X' GWB w/ SUSPENDED GRID SYSTEM
- (95C) GYPSUM - PAINTED
- (95D) EXPOSED STRUCTURE
- (95E) SPRAYED ACOUSTICAL TREATMENT- 1" THICK- WHITE

96 FLOOR FINISH
- (96A) --
- (96B) SHEET GOODS
- (96C) --
- (96D) VCT
- (96E) --
- (96F) --
- (96H) --
- (96J) --
- (96K) --
- (96L) EPOXY
- (96M) RUBBERS TREADS &/or NOSING
- (96N) --
- (96P) --
- (96Z) CONCRETE SEALED

97 WALL FINISH
- (97A) TILE
- (97B) --
- (97C) --
- (97D) PAINT (P)
- (97E) --
- (97F) --
- (97G) --
- (97H) WALL PROTECTION
- (97J) --
- (97L) EPOXY PAINT
- (97Z) NO ADDITIONAL FINISH REQUIRED

98 WALL BASE
- (98A) --
- (98B) --
- (98C) --
- (98D) --
- (98E) RUBBER
- (98F) 8" EPOXY COVE
- (98Z) NO BASE FINISH REQUIRED

INTERIOR FINISH NOTES:

1. G.C. SHALL SUBMIT MANUFACTURER'S COLOR SELECTION FOR ALL SPECIFIED MATERIALS. (COLOR SCHEDULE TO BE COMPLETED UPON RECEIPT AND APPROVAL OF ALL SPECIFIED FINISHES)
2. G.C. SHALL INSTALL FRT WOOD BLOCKING AT ALL AREAS INDICATED TO RECEIVE WALL MOUNTED ITEMS, CABINETRY, SHELVING, TOILET ACCESSORIES, ETC.
3. ALL SPECIFIED FINISHES SHALL BE CONTINUOUS BEHIND ALL MOUNTED OR APPLIED ITEMS, i.e.: MIRRORS, TACK BOARDS, ETC.
4. ALL VINYL BASE WILL BE COVED AT RESILIENT FLOORING.
5. PAINT ALL EXPOSED DUCTS, CONDUITS, PIPING, ETC, NOT CONCEALED BY ROOM FINISHES. COORDINATE WITH MEP DRAWINGS
6. PAINT ALL METAL HANDRAILS, RISERS, STAIR STRINGERS AND UNDERSIDE OF STAIR AT ALL EXPOSED AREAS.
7. GC AND VENDORS SHALL DETERMINE AVAILABILITY OF ALL FINISH MATERIALS. ANY DELIVERY SCHEDULE THAT POTENTIALLY MAY CAUSE COORDINATION PROBLEMS DURING THE FINAL STAGES OF CONSTRUCTION/INSTALLATION SHALL BE BROUGHT TO ATTENTION OF RGB, EARLY ON, FOR POSSIBLE REEVALUATION OF MATERIAL DESIGNATION. THE LACK OF A TIMELY ORDER DOES NOT CONSTITUTE A RE-SELECTION.
8. GC SHALL ASSURE THAT NO ELECTRIC RECEPTACLE OR TELECOMMUNICATIONS OUTLET COVERPLATES HAVE BEEN INSTALLED PRIOR TO COMPLETION OF APPLICATION OF ANY WALL FINISH MATERIALS. ANY SUCH COVERPLATES OR SURFACE HARDWARE, ETC., IN PLACE, SHALL BE REMOVED PRIOR TO WALL FINISH APPLICATION.
9. UPON COMPLETION OF FINISH PHASE OF JOB, GC SHALL REMOVE ALL PAINT, WALLCOVERING PASTE, ETC., FROM WHERE IT HAS SPILLED, SPLASHED, OR SPATTERED.
10. ALL FINISH FLOORING MATERIAL INSTALLATION SHALL BE PER MANUFACTURERS RECOMMENDATION. SEAMS SHALL BE TIGHT/INVISIBLE. GC SHALL PROVIDE AND MAINTAIN ADEQUATE PROTECTION FOR ALL NEWLY INSTALLED FLOORING MATERIALS FOR THE DURATION OF CONSTRUCTION AND REMOVE PROTECTION ONLY IMMEDIATELY BEFORE JOB COMPLETION, FLOOR WILL BE THOROUGHLY CLEANED OF ALL ADHESIVE, GROUT, CONSTRUCTION STAINS, ETC.
11. GC IS RESPONSIBLE FOR ALL FLASH PATCHING AND TO HAVE FLOOR IN CONDITION TO RECEIVE NEW FLOORING MATERIALS.
12. GC, ALL VENDORS/SUBCONTRACTORS ARE RESPONSIBLE FOR FIELD VERIFICATION OF ALL DIMENSIONS, QUANTITIES ETC., OF THEIR RESPECTIVE WORK.
13. PROVIDE SPLASH TRIM @ ALL WALLS ADJACENT TO COUNTER TOPS. TYPICAL
14. PROVIDE BASE FINISH @ TOE KICKS OF ALL CABINETRY KITCHENS & VANITIES
15. PROVIDE BASE FINISH @ ALL FINISH CABINETRY END PANELS
16. PROVIDE WALL BASE BEHIND ALL REFRIGERATORS & RANGES PROVIDE PAINTED FINISH AND CAULKING BEHIND ALL MIRRORS
17. PROVIDE PAINTED FINISH AND CAULKING BEHIND MIRRORS AND SINKS, TYP
18. NOT ALL WALL OBJECTS MAY BE SHOWN. COORDINATE WITH MECH; PLUMBING;ELECTRICAL DRAWINGS ALSO REFER ARCHITECTURAL DWGS & SPECIFICATIONS FOR ADDITIONAL ITEMS
19. INSULATE ALL EXPOSED PIPES & SINK BOTTOM WITH TRAP WRAP PROTECTIFE KIP #500R-MA A, AS MFR'D BY BROCAR PRODUCTS (1-8900-827-1207), OR ARCHITECT APPROVED EQUAL
20. PROVIDE WATER RESISTANT CEMENT BOARD @ ALL TOILET ROOMS

This drawing is copyrighted and is subject to copyright protection as an "architectural work" under 17 U. S. C. Sec. 101 et seq. The protection includes but is not limited to the overall form as well as the arrangement and composition of spaces, materials, color and elements in the design. Under such protection, unauthorized use of this drawing may result in the cessation of construction or buildings being seized and/or monetary compensation being awarded to The Robinson Green Beretta Corporation (RGB).

Any reproduction, possession, or use of this drawing or any part thereof without the express written permission of RGB, is prohibited. Violators will be prosecuted to the full extent of the law.

© RGB 2019

Certification

Drawn by TPL

Checked by RJJ, DLD

Revised on

50 Holden Street
Providence, Rhode Island 02908

Phone: (401) 272-1730
Fax: (401) 273-7156

E-mail: rgbinfo@rgb.net
www.rgb.net

RGB ARCHITECTS

Architecture · Project Management · Interior Design

FORT ADAMS MAINTENANCE BUILDING

RIDEM / DIVISION OF PARKS & RECREATION

STATE OF RHODE ISLAND AND PROVIDENCE PLANTATIONS

FORT ADAMS STATE PARK, NEWPORT, RI

Drawing Status

ISSUED FOR CONSTRUCTION

Issued On MAY 29, 2019

Sheet Contents

REFLECTED CEILING PLAN & FINISH SCHEDULE

Project Number. 6380

Drawing No.

A600

Sheet of

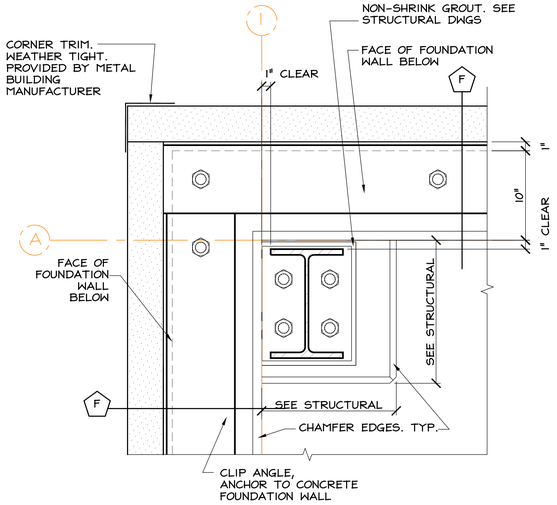

1 A801 PLAN: TYP. COLUMN @ CORNER

Scale: 1 1/2" = 1'-0"

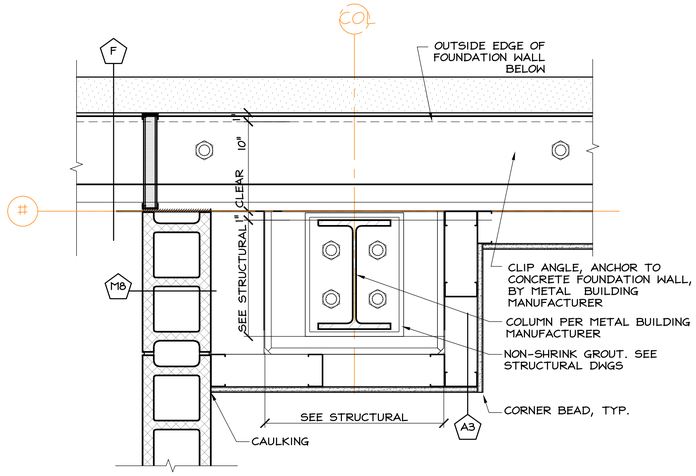

4 A801 COLUMN ENCLOSURE @ BREAKROM, OFFICE & WORKSHOP

Scale: 1 1/2" = 1'-0"

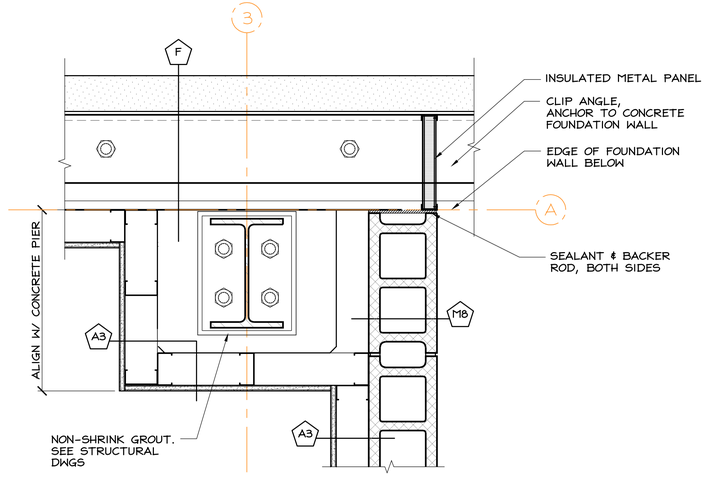

7 A801 COLUMN ENCLOSURE AT BREAK ROOM

Scale: 1 1/2" = 1'-0"

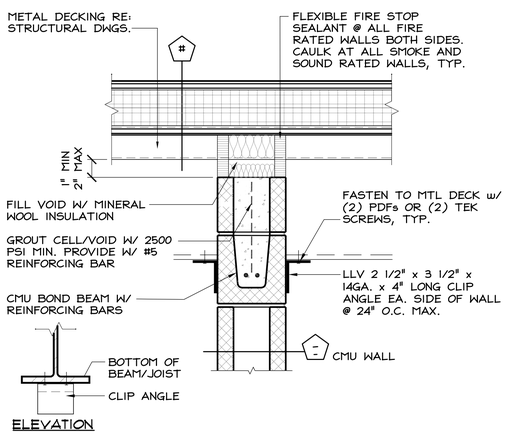

2 A801 TYP. TOP OF NON-BEARING CMU WALL

Scale: 1 1/2" = 1'-0"

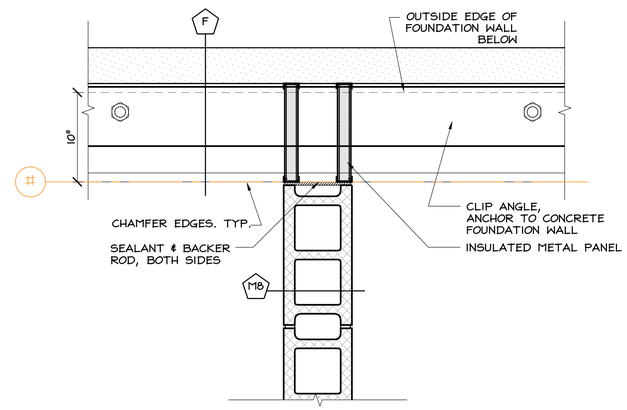

5 A801 PLAN: CLOSURE @ CMU/EXTERIOR WALL

Scale: 1 1/2" = 1'-0"

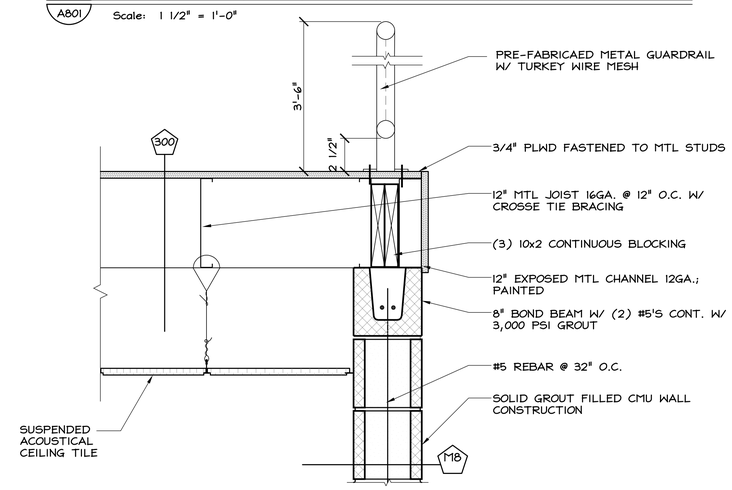

8 A801 SECTION DETAIL

Scale: 1 1/2"=1'-0"

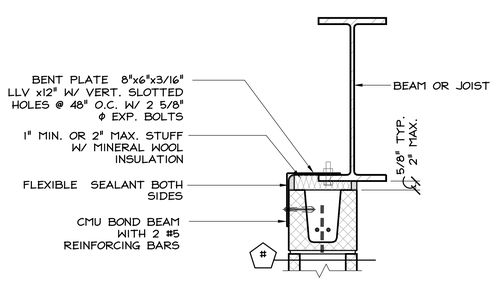

3 A801 TYP. TOP OF NON-BEARING CMU WALL

Scale: 1 1/2" = 1'-0"

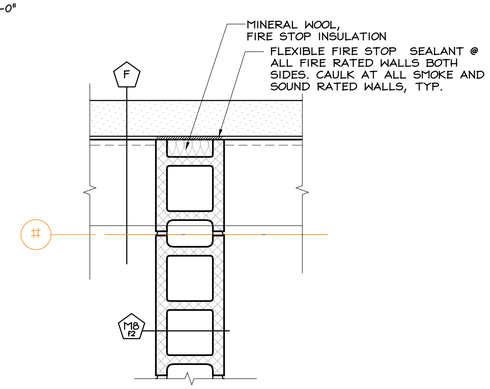

6 A801 TYP CLOSURE AT 2 HR CMU WALL

Scale: 1 1/2" = 1'-0"

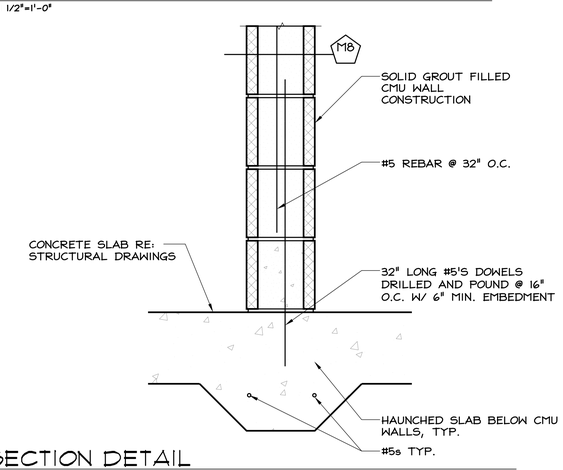

9 A801 SECTION DETAIL

Scale: 1 1/2"=1'-0"

This drawing is copyrighted and is subject to copyright protection as an "architectural work" under 17 U. S. C. Sec. 101 et seq. The protection includes but is not limited to the overall form as well as the arrangement and composition of spaces, materials, color and elements in the design. Under such protection, unauthorized use of this drawing may result in the cessation of construction or buildings being seized and/or monetary compensation being awarded to The Robinson Green Beretta Corporation (RGB).

Any reproduction, possession, or use of this drawing or any part thereof without the express written permission of RGB, is prohibited. Violators will be prosecuted to the full extent of the law.

© RGB 2019

Certification

Drawn by TPL

Checked by RJJ, DLD

Revised on

50 Holden Street
Providence, Rhode Island 02908

Phone: (401) 272-1730
Fax: (401) 273-7156

E-mail: rgbinfo@rgb.net
www.rgb.net

RGB ARCHITECTS

Architecture · Project Management · Interior Design

Project

FORT ADAMS MAINTENANCE BUILDING

RIDEM / DIVISION OF PARKS & RECREATION

STATE OF RHODE ISLAND AND PROVIDENCE PLANTATIONS

FORT ADAMS STATE PARK, NEWPORT, RI

Drawing Status

ISSUED FOR CONSTRUCTION

Issued On MAY 29, 2019

Sheet Contents

INTERIOR DETAILS

Project Number. 6380

Drawing No.

A801

Sheet of

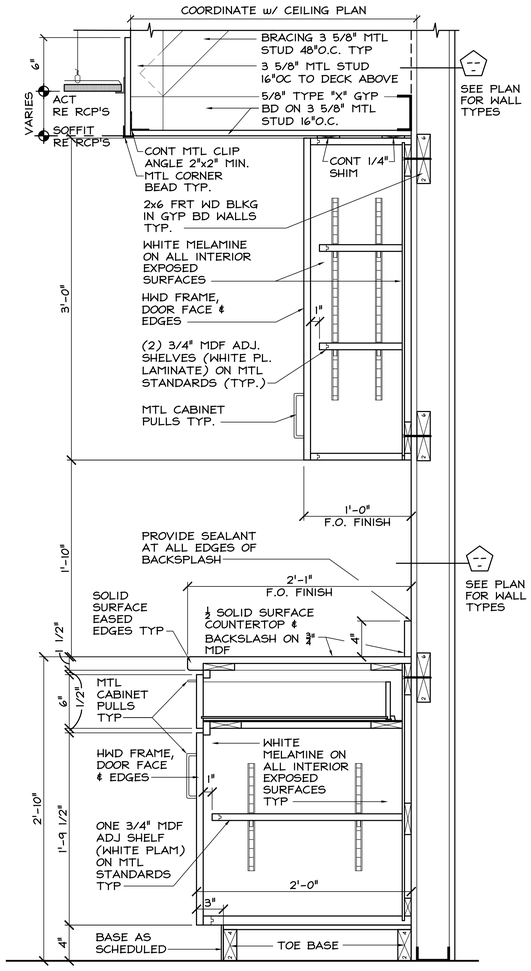

1 A810 SECTION MILLWORK w/ SOFFIT

Scale: 1 1/2" = 1'-0"

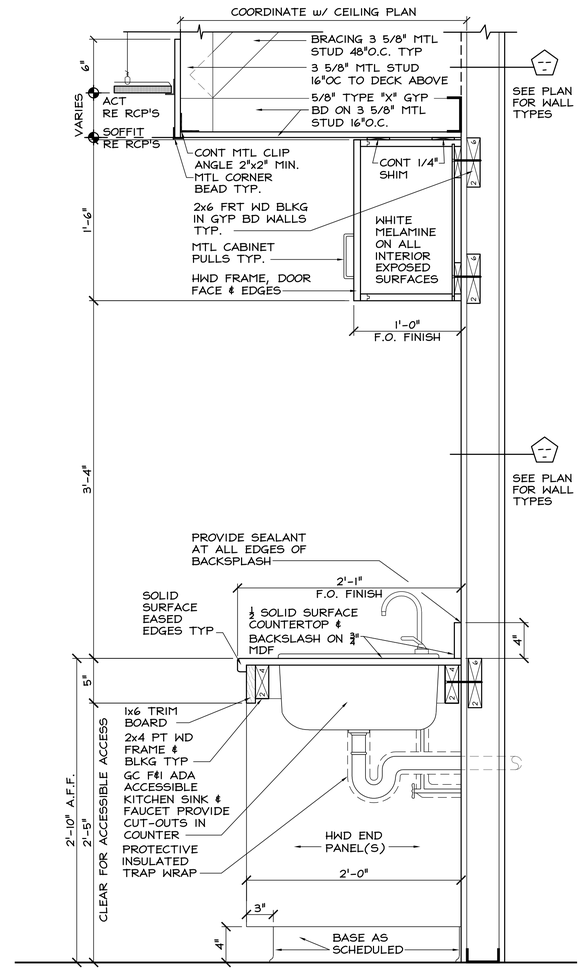

3 A810 MILLWORK w/ SINK & SOFFIT

Scale: 1 1/2" = 1'-0"

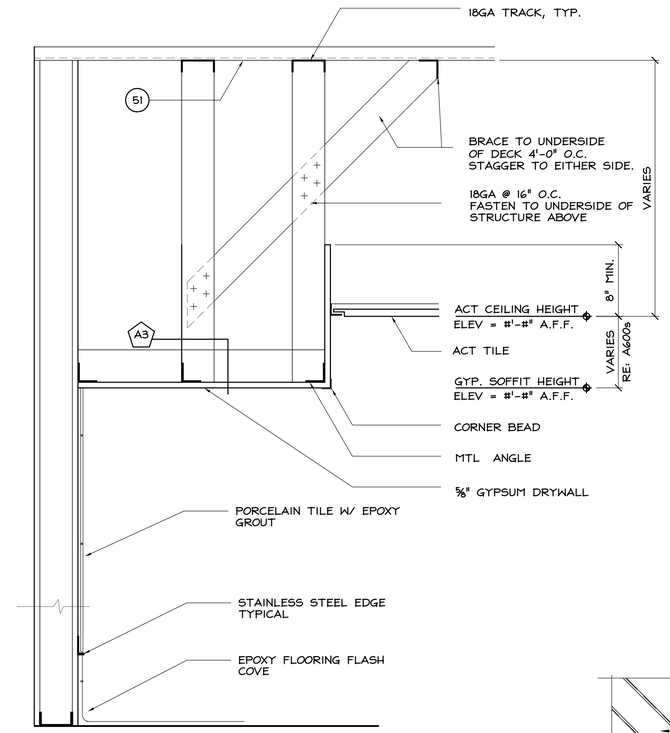

5 A810 TYPICAL SOFFIT @ SHOWER

Scale: 1 1/2" = 1'-0" (SECTION DETAIL)

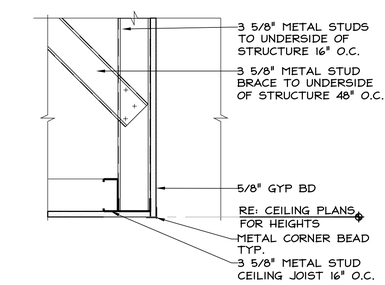

9 A810 SOFFIT

Scale: 1 1/2" = 1'-0"

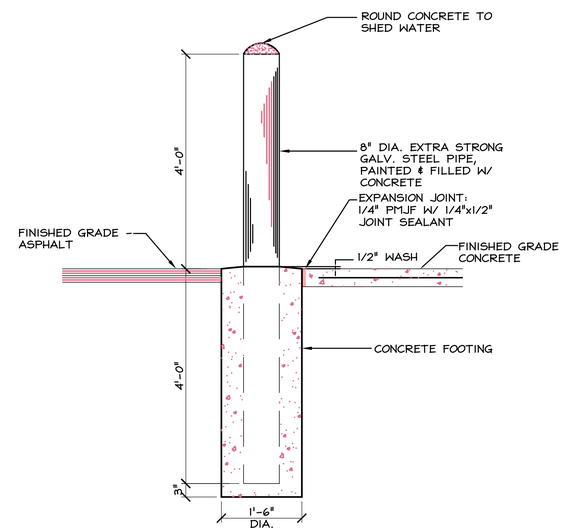

6 A810 TYP. BOLLARD DETAIL

Scale: 3/4" = 1'-0"

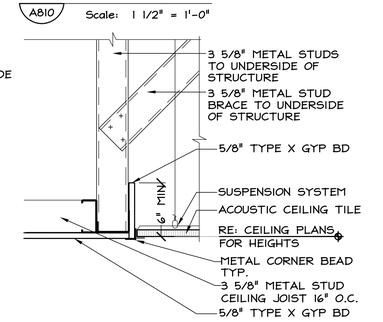

10 A810 MATERIAL TRANSITION

Scale: 1 1/2" = 1'-0"

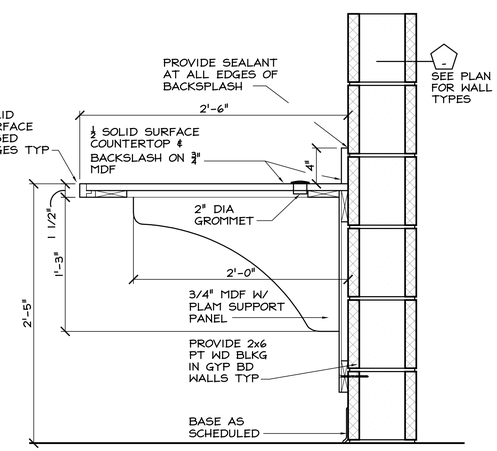

2 A810 SECTION AT MILLWORK DESK

Scale: 1 1/2" = 1'-0"

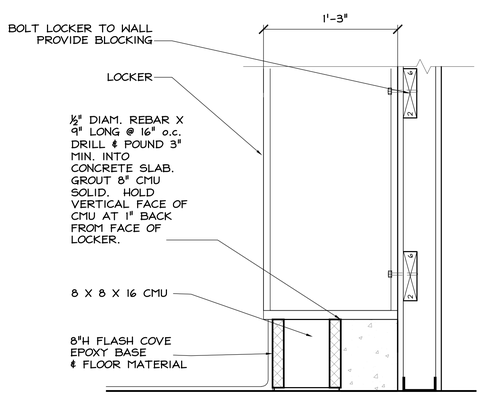

NOTE: GC TO COORDINATE ALL DIMENSIONS AND SUPPORTS WITH MASON AND LOCKER MANUFACTURER.

4 A810 SECTION AT LOCKER BASE PLATFORM

Scale: 1 1/2" = 1'-0"

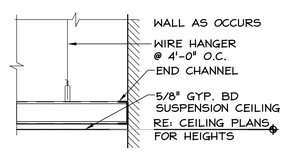

7 A810 GWB @ WALL

Scale: 1 1/2" = 1'-0"

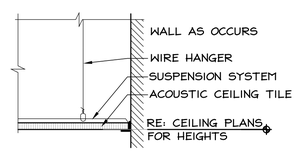

8 A810 SAT @ WALL

Scale: 1 1/2" = 1'-0"

This drawing is copyrighted and is subject to copyright protection as an "architectural work" under 17 U. S. C. Sec. 101 et seq. The protection includes but is not limited to the overall form as well as the arrangement and composition of spaces, materials, color and elements in the design. Under such protection, unauthorized use of this drawing may result in the cessation of construction or buildings being seized and/or monetary compensation being awarded to The Robinson Green Beretta Corporation (RGB).

Any reproduction, possession, or use of this drawing or any part thereof without the express written permission of RGB, is prohibited. Violators will be prosecuted to the full extent of the law.

© RGB 2019

Certification

Drawn by TPL

Checked by RJJ, DLD

Revised on

50 Holden Street
Providence, Rhode Island 02908

Phone: (401) 272-1730
Fax: (401) 273-7156

E-mail: rgbinfo@rgb.net
www.rgb.net

RGB ARCHITECTS

Architecture · Project Management · Interior Design

Project

FORT ADAMS MAINTENANCE BUILDING

RIDEM / DIVISION OF PARKS & RECREATION

STATE OF RHODE ISLAND AND PROVIDENCE PLANTATIONS

FORT ADAMS STATE PARK, NEWPORT, RI

Drawing Status

ISSUED FOR CONSTRUCTION

Issued On MAY 29, 2019

Sheet Contents

INTERIOR & CASEWORK DETAILS

Project Number. 6380

Drawing No.

A810

Sheet of

DOOR AND FRAME SCHEDULE

MARK	DOOR SIZE	DOOR TYPE	DOOR MATL	FRAME DEPTH	FRAME TYPE	FRAME MATL	DETAIL HEAD	DETAIL JAMB	DETAIL SILL	DETAIL MULL	REQ'D FIRE RATING	HARDWARE (REFER TO SPECIFICATIONS)	REMARKS	MARK
101.A	3'-0" x 7'-0" x 1 3/4"	1	HM	6	1	HM	1/A901	2/A901	3/A901	--	90 MIN.	SET # 6	1	101.A
102.A	3'-0" x 7'-0" x 1 3/4"	1	HM.	6	1	HM	8/A901	9/A901	10/A901	--	90 MIN.	SET # 6	1,3&5	102.A
103.A	PR 2'-3" x 7'-0" x 1 3/4"	1	HM	6	1	HM	8/A901	9/A901	10/A901	--	90 MIN.	SET # 6	1,3&5	103.A
104.A	3'-0" x 6'-8" x 1 3/4"	3	HM	6	1	HM	1/A901	2/A901	3/A901	--	N/A	SET # 5	1&2T	104.A
105A.A	3'-0" x 7'-0" x 1 3/4"	1	HM	6	1	HM	8/A901	9/A901	10/A901	--	N/A	SET # 4	1&5	105A.A
105B.A	3'-0" x 7'-0" x 1 3/4"	1	HM	6	1	HM	8/A901	9/A901	10/A901	--	N/A	SET # 4	1&5	105B.A
106.A	3'-0" x 7'-0" x 1 3/4"	4	AL	6	1	HM	1/A901	2/A901	3/A901	--	N/A	SET # 1	1&2T	106.A
106.B	3'-0" x 7'-0" x 1 3/4"	2	HM	6	1	HM	8/A901	9/A901	10/A901	--	N/A	SET # 5	1&5	106.B
107A.A	3'-0" x 7'-0" x 1 3/4"	1	HM	6	1	HM	8/A901	9/A901	10/A901	--	N/A	SET # 2	1&5	107A.A
107B.A	3'-0" x 7'-0" x 1 3/4"	1	HM	6	1	HM	8/A901	9/A901	10/A901	--	N/A	SET # 2	1&5	107B.A
108.A	PR 3'-0" x 7'-0" x 1 3/4"	3	HM	6	1	HM	8/A901	9/A901	10/A901	--	N/A	SET # 2	1,2T &5	108.A
109.A	3'-0" x 7'-0" x 1 3/4"	4	AL	6	1	HM	4/A901	5&6/A901	7/A901	--	N/A	SET # 1	1&2T	109.A
109.B	12'-0" x 14'-0" x 1"	5	STEEL	1'-2"	2	STEEL	1/A910	3&4/A902	2/A902	--	N/A	--	4&6	109.B
109.C	14'-0" x 14'-0" x 1"	5	STEEL	1'-2"	2	STEEL	1/A902	3&4/A902	2/A902	--	N/A	--	4&6	109.C
109.D	12'-0" x 14'-0" x 1"	5	STEEL	1'-2"	2	STEEL	1/A902	3&4/A902	2/A902	--	N/A	--	4&6	109.D
109.E	3'-0" x 7'-0" x 1 3/4"	3	HM	6	1	HM	1/A901	2/A901	3/A901	--	N/A	SET # 5	1&2T	109.E
109.F	14'-0" x 12'-0" x 1"	5	STEEL	1'-2"	2	STEEL	1/A902	4&5/A902	2/A902	--	N/A	--	4&6	109.F
109.G	12'-0" x 12'-0" x 1"	5	STEEL	1'-2"	2	STEEL	1/A902	4&5/A902	2/A902	--	N/A	--	4&6	109.G
201.A	3'-0" x 7'-0" x 1 3/4"	2	HM	6	1	HM	4/A901	5&6/A901	7/A901	--	N/A	SET # 5	1&2T	201.A

REMARK NOTES:

1. A60 GALVANIZED HM FRAME & DOOR
2. GLAZING AS NOTED &/or INDICATED BELOW. 2T PROVIDE TEMPERED GLAZING IN DOOR &/or FRAME
3. PROVIDE INTEGRAL TACTILE WARNING ON KNOB/LEVER HANDLE
4. HARDWARE BY DOOR MANUFACTURER & /OR SUPPLIER U.N.O.
5. PROVIDE SIGNAGE MEETING ADA REQUIREMENTS MOUNTED @ 48" MIN. & 60" MAX. A.F.F. ON WALL ADJACENT TO LATCH SIDE OF DOOR.
6. OVERHEAD DOOR (COILING) VERIFY R.O. DIMENSIONS WITH MFGR. REQUIREMENTS. ALL TRACKS, SPRINGS, HARDWARE, WEATHERSTRIPPING, ETC. TO BE HEAVY DUTY AND FURNISHED AND INSTALLED BY THE DOOR SUPPLUER/MFGR.

GENERAL NOTES:

GENERAL:

1. FOR DOOR HEAD, JAMB, & THRESHOLD DETAILS RE: A920 UNO.
2. WINDOW DIMENSIONS SHOWN ARE ROUGHT OPENING &/or MASONRY OPENINGS.
3. SYMBOL TYP. ☆ [STAR] DENOTES LOCATIONS REQUIRING SPANDREL GLASS
4. SYMBOL * DENOTES LOCATION REQUIRING TEMPERED GLAZING. TYPICAL.

DOORS:

1. EXTERIOR DOOR FINISHES UNLESS NOTED OTHERWISE
   ALUMINUM STOREFRONT: CLEAR ANODIZED
   HOLLOW METAL: FACTORY A60 GALV & PRIMED FOR FIELD PAINTING
2. INTERIOR DOOR FINISHES:
   A. ALUMINUM STOREFRONT: CLEAR ANODIZED
   B. WOOD: FACTORY PREFINISHED
   C. HOLLOW METAL: FACTORY PRIMED FOR FIELD PAINTING UNO
3. QUICK SET KNOCK DOWN FRAMES ARE NOT ACCEPTABLE.
4. PRE-ASSEMBLIED FRAMES FULLY WELDED KNOCK DOWN FRAMES MEETING THE REQUIRED UL FIRE RATINGS REQUIRED ARE ACCEPTABLE FOR USE ON THIS PROJECT IF APPROVED PRIOR BY ARCHITECT IN WRITING.
5. FRAME PROFILE DEPTH DIMENSION GIVEN INCLUDES THE THROAT DIMENSION PLUS 1" [1/2" RETURNS BOTH SIDES] UNO RE: 1/A920
6. FIELD PAINT ALL METAL FRAMES w/ COLOR AS SELECTED BY THE ARCHITECT. RE: ARCHITECTURAL EXTERIOR ELEVATIONS &/or FINISH SCHEDULE.

HARDWARE:

1. HARDWARE & ACCESSORY LIST SCHEDULE ESTABLISHES GENERAL SCOPE REQUIREMENTS. CONTRACTOR, SUPPLIERS &/or MANUFACTURERS TO PROVIDE ALL NECESSARY ACCESSORIES, SCREWS, SEX BOLTS, STRIKES, COVER PLATES, TOOLS, ETC. FOR A COMPLETED INSTALLATION OF HARDWARE FOR A FULLY FUNCTIONAL SYSTEM FOR THE INTENDED USE.
2. TYPICAL HARDWARE FINISH REQUIREMENTS UNO.
   HARDWARE FINISH: US26D
   KICK PLATES METAL FINISH: US26D
   WASH & TOILET ROOMS: US26
B. CLOSERS, THRESHOLDS, WEATHERSTRIPPING, ETC TO APPROXIMATE DOOR HARDWARE FINISH NOTED ABOVE.
C. CYLINDER FINISHES IS TO MATCH FINISH OF ITEM IN WHICH CYLINDER IS INSTALLED IN UNO. (IE. STOREFRONT FRAME COLOR, EXIT DEVICE FINISH, LOCKSET FINISH, etc.
3. PROVIDE LEVER HANDLES @ ALL LATCHSETS, LOCKSETS, PANIC DEVICES, DUMMY LATCHSETS TYPICAL UNO.
4. TACTILE WARNING: PROVIDE MECHANICAL KNURLING WHERE REQUIRED (HIGH HAZARDS, ELECTRICAL & MECHANICAL ROOMS, ETC.) ABRASIVE COATINGS APPLIED ARE NOT ACCEPTABLE.
5. PROVIDE DOOR SILENCERS @ ALL DOORS NOT RECEIVING WEATHERSTRIPPING.
   SINGLE DOORS PROVIDE 3
   DOUBLE DOORS PROVIDE 2
6. PROVIDE FULL WEATHERSTRIPPING @ ALL EXTERIOR DOORS, HEAD, JAMBS, SILLS TYPICAL UNO.
7. PROVIDE ALUMINUM THRESHOLDS BY DOOR(S) WIDTH WHERE SHOWN ON PLANS, IN SILL DETAILS, &/or WHERE NOTED. TYPICAL.
8. AT ALL WALL MOUNTED DOOR STOPS STUD FRAME WALLS, PROVIDE 2x6 FRT WOOD BLOCKING &/or 6" x 20 gauge METAL PLATE UNDER THE GYPSUM WALL BOARD SECURED TO THE STUDS TO ATTACH THE STOP TO.

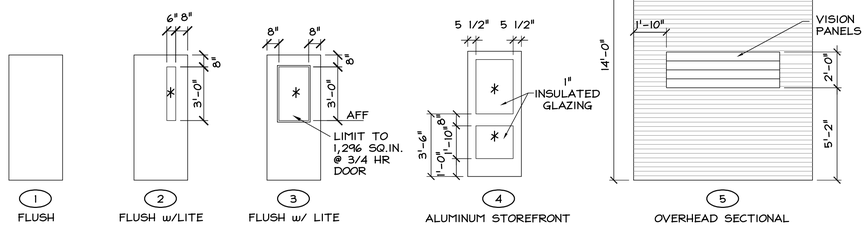

1 / A900 ELEVATION DOOR TYPES

Scale: 1/4" = 1'-0"

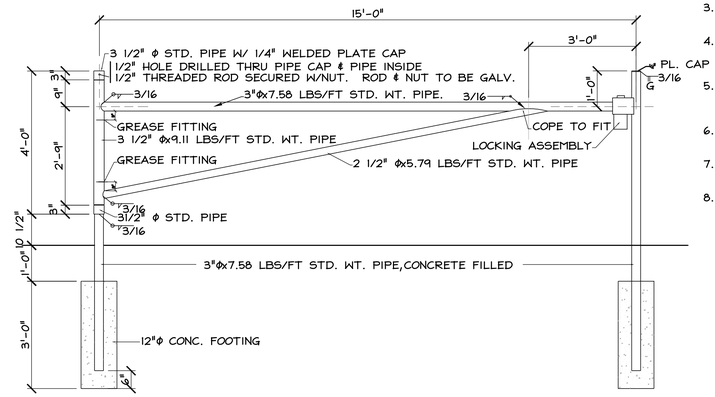

3 / A900 GATE LAYOUT

Scale: 1/2" = 1'-0"

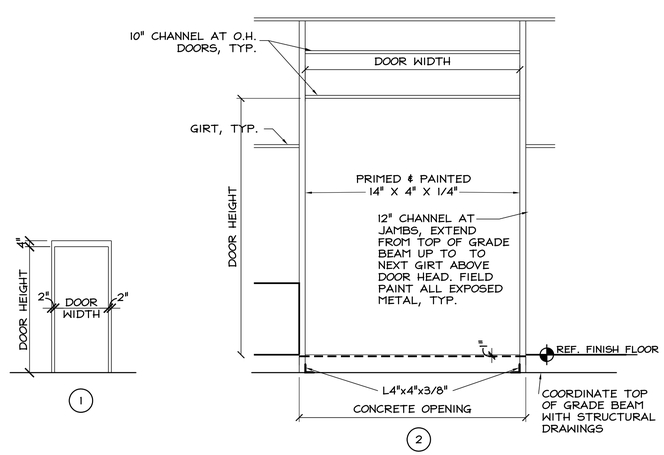

2 / A900 FRAME TYPES

Scale: 1/4" = 1'-0"

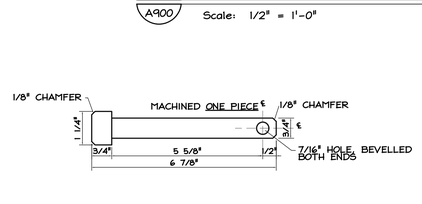

4 / A900 LOCKING PIN

Scale: NTS

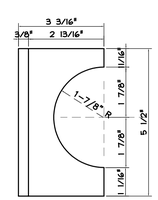

5 / A900 PLATE DETAIL

Scale: NTS

NOTES:
1. ALL PIPE SHALL BE ASTM GRADE 501 STEEL PIPE.
2. ALL PLATES AND BARS SHALL BE A-36 STEEL.
3. 3"ϕ PIPE SHALL BE GROUND AS REQUIRED TO PROVIDE A SMOOTH SLIDING FIT.
4. ALL STEEL SHALL BE HOT-DIP GALVANIZED AFTER FABRICATION.
5. ALL WELDING SHALL CONFORM TO AWS A5.1 OR A5.5 WITH E70 XX ELECTRODES.

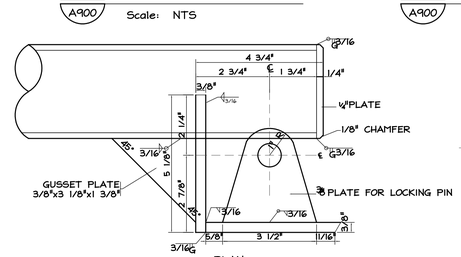

6 / A900 BAR GATE W/ ENCLOSURE PLATE

Scale: NTS

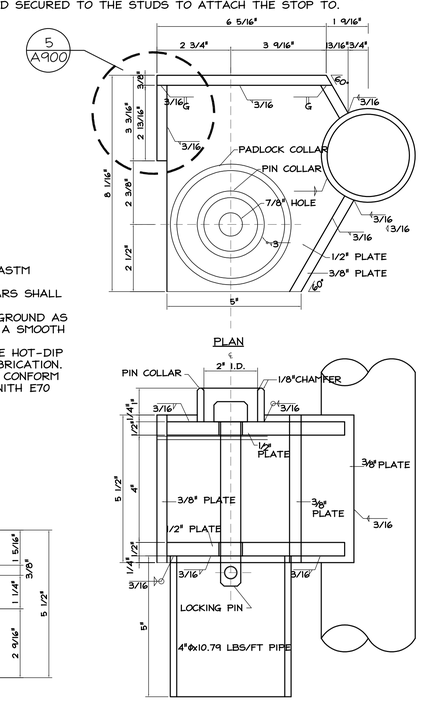

7 / A900 BAR GATE CHAMBER

Scale: NTS

This drawing is copyrighted and is subject to copyright protection as an "architectural work" under 17 U. S. C. Sec. 101 et seq. The protection includes but is not limited to the overall form as well as the arrangement and composition of spaces, materials, color and elements in the design. Under such protection, unauthorized use of this drawing may result in the cessation of construction or buildings being seized and/or monetary compensation being awarded to The Robinson Green Beretta Corporation (RGB).

Any reproduction, possession, or use of this drawing or any part thereof without the express written permission of RGB, is prohibited. Violators will be prosecuted to the full extent of the law.

© RGB 2019

Certification

Drawn by TPL

Checked by RJJ, DLD

Revised on

50 Holden Street
Providence, Rhode Island 02908

Phone: (401) 272-1730
Fax: (401) 273-7156

E-mail: rgbinfo@rgb.net
www.rgb.net

RGB ARCHITECTS

Architecture · Project Management · Interior Design

Project

FORT ADAMS MAINTENANCE BUILDING

RIDEM / DIVISION OF PARKS & RECREATION

STATE OF RHODE ISLAND AND PROVIDENCE PLANTATIONS

FORT ADAMS STATE PARK, NEWPORT, RI

Drawing Status

ISSUED FOR CONSTRUCTION

Issued On MAY 29, 2019

Sheet Contents

DOOR SCHEDULE & EXTERIOR GATE DETAILS

Project Number. 6380

Drawing No.

A900

Sheet of

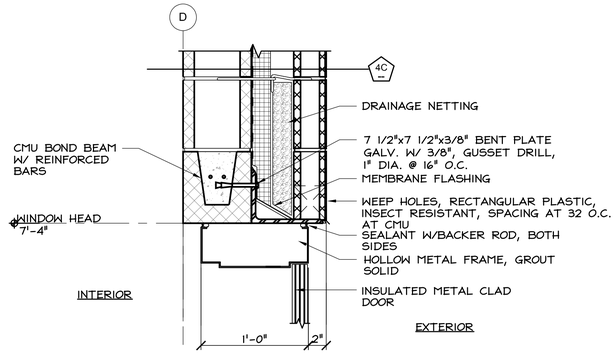

4 / A901 TYP. HM HEAD @ EXT. CMU WALL

Scale: 1 1/2" = 1'-0" (SECTION DETAIL)

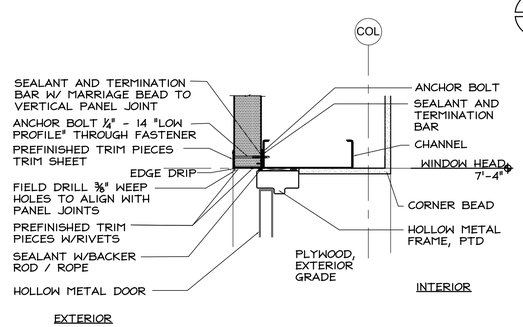

1 / A901 HOLLOW METAL DOOR HEAD

Scale: 1 1/2" = 1'-0"

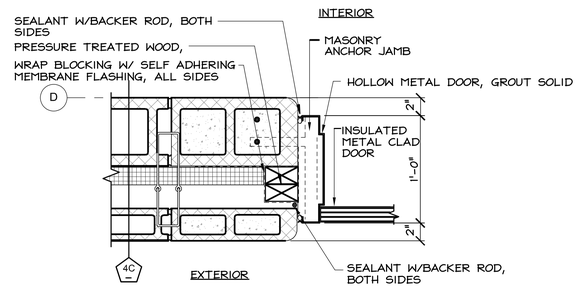

5 / A901 TYP. HM JAMB @ EXT. CMU WALL

Scale: 1 1/2" = 1'-0" (PLAN DETAIL)

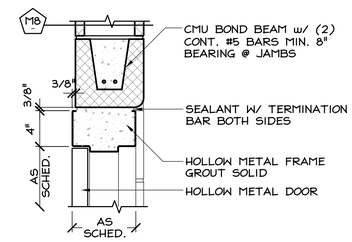

8 / A901 TYP. HM HEAD @ CMU

Scale: 1 1/2" = 1'-0" (SECTION DETAIL)

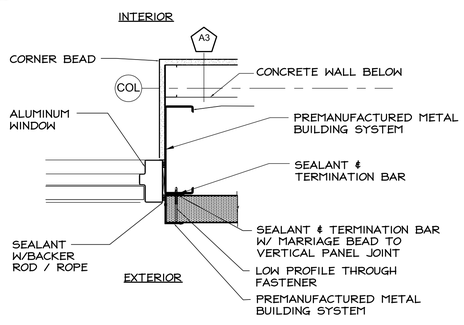

2 / A901 HOLLOW METAL DOOR JAMB

Scale: 1 1/2" = 1'-0" (PLAN DETAIL)

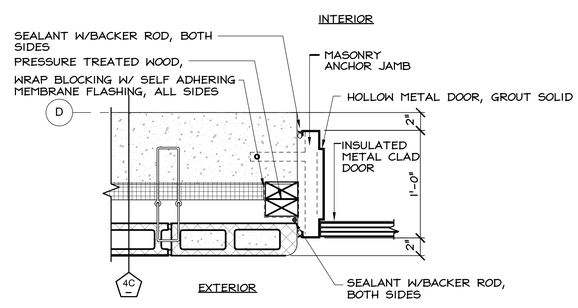

6 / A901 TYP. HM JAMB @ FOUNDATION/CMU WALL

Scale: 1 1/2" = 1'-0" (PLAN DETAIL)

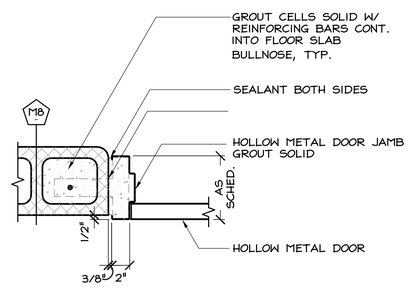

9 / A901 TYP. HM JAMB @ CMU

Scale: 1 1/2" = 1'-0" (PLAN DETAIL)

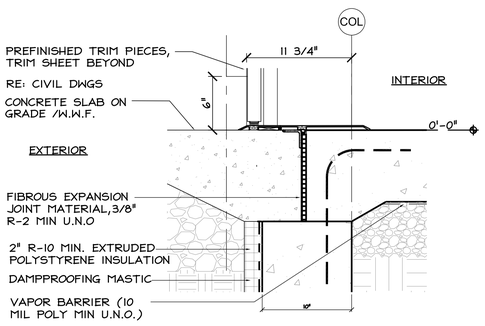

3 / A901 HOLLOW METAL DOOR SILL

Scale: 1 1/2" = 1'-0"

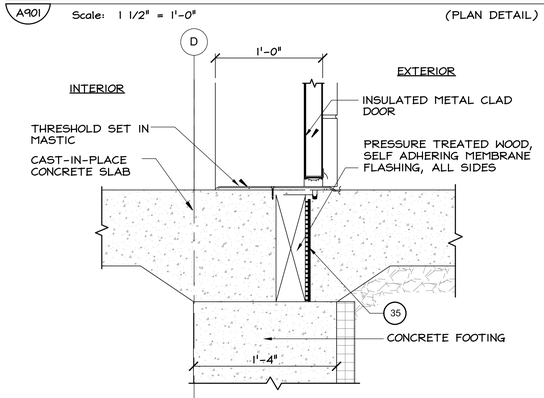

7 / A901 TYP. HM HEAD @ EXT. CMU WALL

Scale: 1 1/2" = 1'-0" (SECTION DETAIL)

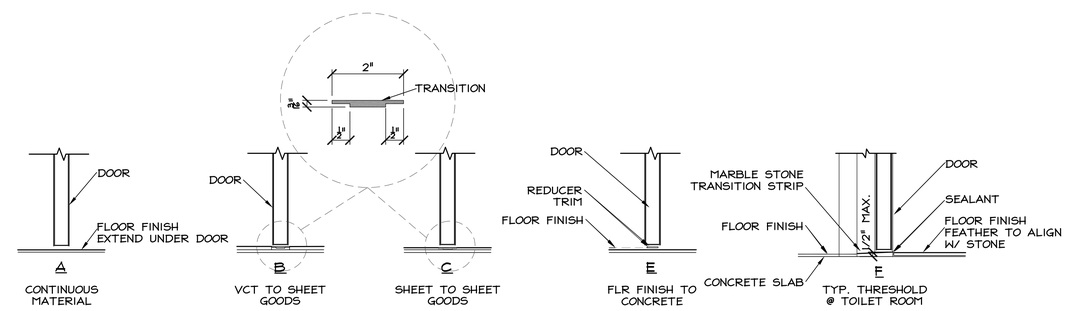

10 / A901 TYP. INTERIOR DOOR SILLS

Scale: 1 1/2" = 1'-0" (SECTION DETAILS)

This drawing is copyrighted and is subject to copyright protection as an "architectural work" under 17 U. S. C. Sec. 101 et seq. The protection includes but is not limited to the overall form as well as the arrangement and composition of spaces, materials, color and elements in the design. Under such protection, unauthorized use of this drawing may result in the cessation of construction or buildings being seized and/or monetary compensation being awarded to The Robinson Green Beretta Corporation (RGB).

Any reproduction, possession, or use of this drawing or any part thereof without the express written permission of RGB, is prohibited. Violators will be prosecuted to the full extent of the law.

© RGB 2019

Certification

Drawn by TPL

Checked by RJJ, DLD

Revised on

50 Holden Street
Providence, Rhode Island 02908

Phone: (401) 272-1730
Fax: (401) 273-7156

E-mail: rgbinfo@rgb.net
www.rgb.net

RGB ARCHITECTS

Architecture · Project Management · Interior Design

Project

FORT ADAMS MAINTENANCE BUILDING

RIDEM / DIVISION OF PARKS & RECREATION

STATE OF RHODE ISLAND AND PROVIDENCE PLANTATIONS

FORT ADAMS STATE PARK, NEWPORT, RI

Drawing Status

ISSUED FOR CONSTRUCTION

Issued On MAY 29, 2019

Sheet Contents

DOOR DETAILS

Project Number. 6380

Drawing No.

A901

Sheet of

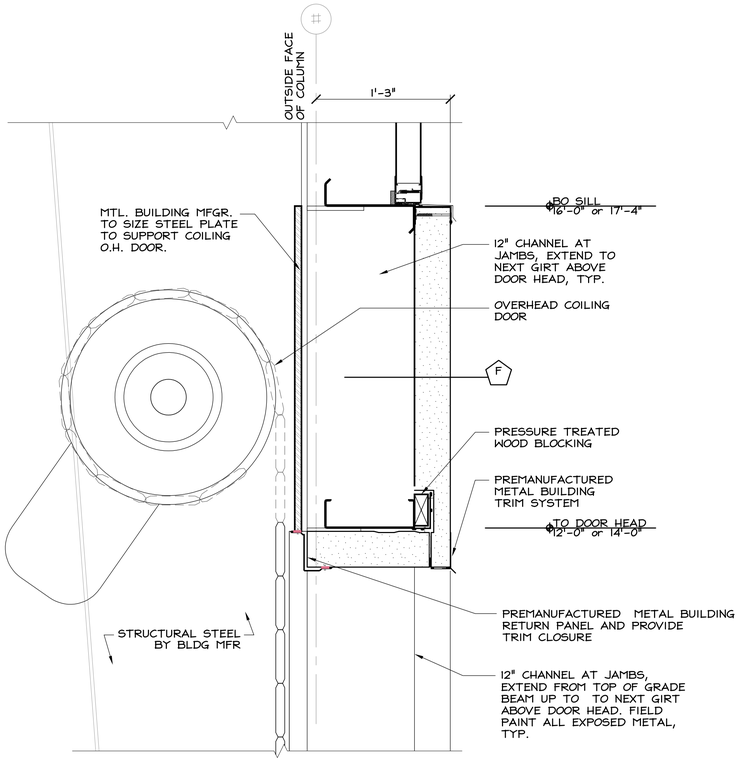

1 A902 TYPICAL OVERHEAD DOOR HEAD DETAIL

Scale: 1 1/2" = 1'-0" (SECTION DETAIL)

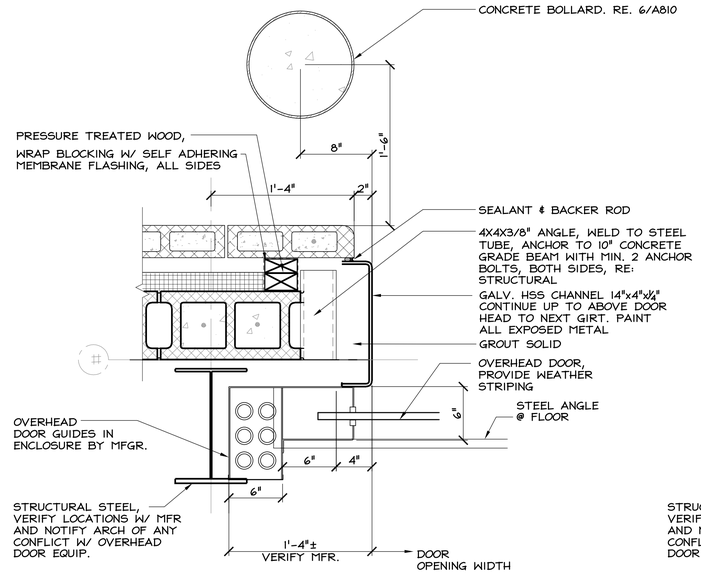

3 A902 OVERHEAD DOOR JAMB AT CMU WALL

Scale: 1 1/2" = 1'-0"

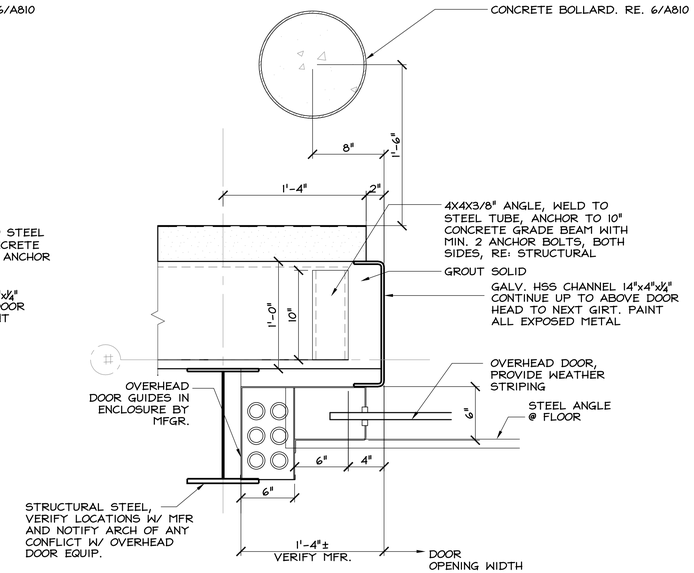

5 A902 OVERHEAD DOOR JAMB DETAIL AT INSULATED PANEL WALL

Scale: 1 1/2" = 1'-0"

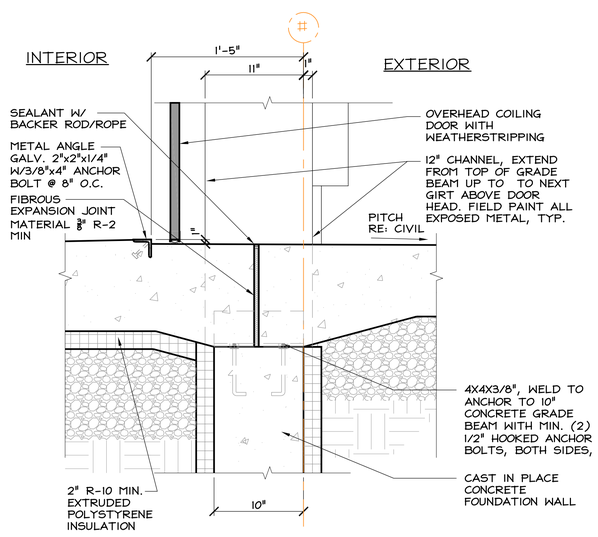

2 A902 TYP. OVERHEAD DOOR SILL DETAIL

Scale: 1 1/2" = 1'-0" (SECTION DETAIL)

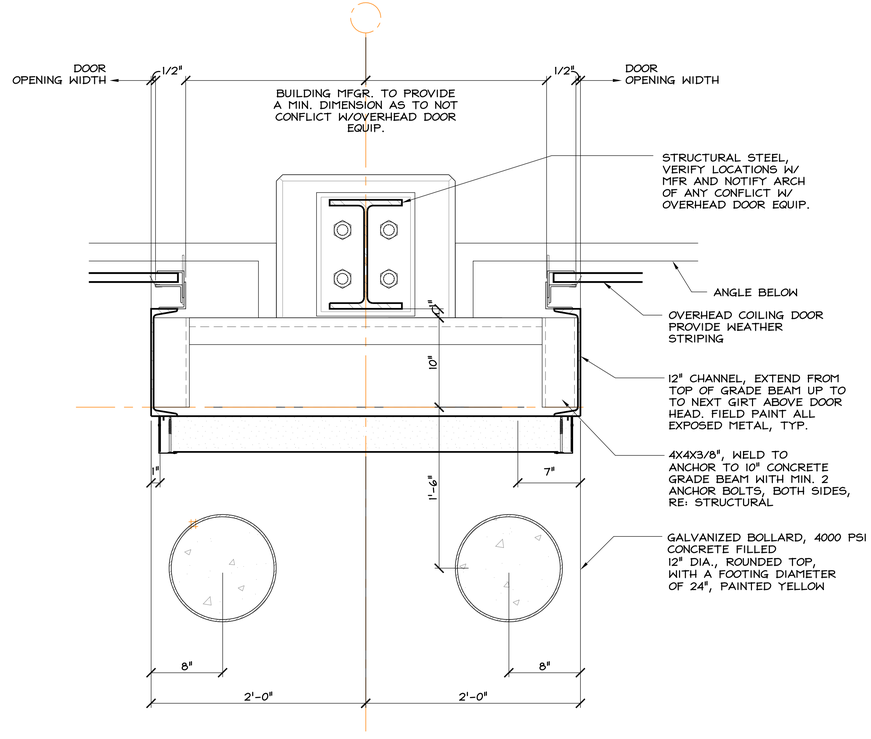

4 A902 OVERHEAD DOOR JAMB DETAIL

Scale: 1 1/2" = 1'-0"

This drawing is copyrighted and is subject to copyright protection as an "architectural work" under 17 U. S. C. Sec. 101 et seq. The protection includes but is not limited to the overall form as well as the arrangement and composition of spaces, materials, color and elements in the design. Under such protection, unauthorized use of this drawing may result in the cessation of construction or buildings being seized and/or monetary compensation being awarded to The Robinson Green Beretta Corporation (RGB).

Any reproduction, possession, or use of this drawing or any part thereof without the express written permission of RGB, is prohibited. Violators will be prosecuted to the full extent of the law.

© RGB 2019

Certification

Drawn by TPL

Checked by RJJ, DLD

Revised on

50 Holden Street
Providence, Rhode Island 02908

Phone: (401) 272-1730
Fax: (401) 273-7156

E-mail: rgbinfo@rgb.net
www.rgb.net

RGB ARCHITECTS

Architecture · Project Management · Interior Design

Project

FORT ADAMS MAINTENANCE BUILDING

RIDEM / DIVISION OF PARKS & RECREATION

STATE OF RHODE ISLAND AND PROVIDENCE PLANTATIONS

FORT ADAMS STATE PARK, NEWPORT, RI

Drawing Status

ISSUED FOR CONSTRUCTION

Issued On MAY 29, 2019

Sheet Contents

OVERHEAD DOOR DETAILS

Project Number. 6380

Drawing No.

A902

Sheet of

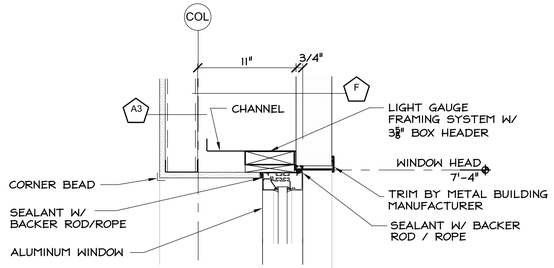

1 / A910 ALUM. WINDOW HEAD DETAIL

Scale: 1 1/2" = 1'-0"

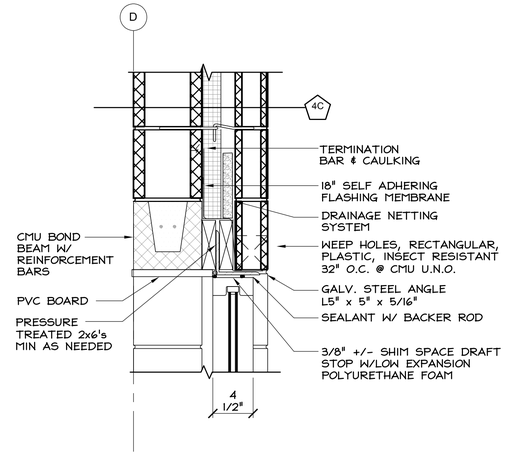

4 / A910 WINDOW HEAD DETAIL

Scale: 1 1/2" = 1'-0"

WINDOW SCHEDULE						
		DETAIL				
MARK	SIZE	HEAD	JAMB	SILL	MULL	REMARKS
A	4'-0"H x 3'-4"W	1/A910	3/A910	2/A910	--	--
A.1	4'-0"H x 3'-4"W	4/A910	6/A910	5/A910	--	--
A.2	4'-0"H x 3'-4"W	1/A910	3/A910	11/A910	--	--
B	2'-0"H x 12'-8"W	8/A910	9/A910	8/A910	--	--

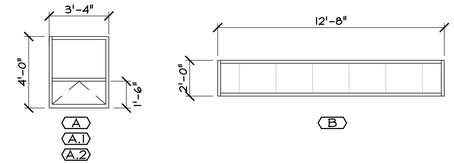

7 / A910 ELEVATION WINDOW TYPES

Scale: 1/4" = 1'-0"

WINDBORNE DEBRIS ZONE LARGE MISSILE IMPACT RATED

STOREFRONT FRAMING - EFCO 526 SERIES OR EQUAL
ENTRANCE DOORS - D518 DURASTILE WIDE STILE DOOR OR EQUAL
OPERABLE WINDOWS - EFCO 321X PROJECT OUT OR EQUAL
GLAZING - 1 5/16" INSULATED GLASS, OUTER LITE 1/4" THICK TEMPERED LOW E GLASS WITH COATING ON THE #2 SURFACE (PPG SOLARBAN 60 OR GUARDIAN SN68 OR VIRACON VEI-2M) AIR SPACE 1/2" ARGON GAS FILLED, INNER LITE 9/16" LAMINATED GLASS CONSISTING OF 2 LITES OF 1/4" CLEAR ANNEALED GLASS WITH A .060 PVB INTERLAYER.

NOTE, THE D518 DOORS ONLY ACCEPT UP TO 1 1/6" GLASS THICKNESS, SO THE AIR SPACE FOR THE DOOR GLAZING WILL BE CHANGED FROM 1/2" TO 1/4".

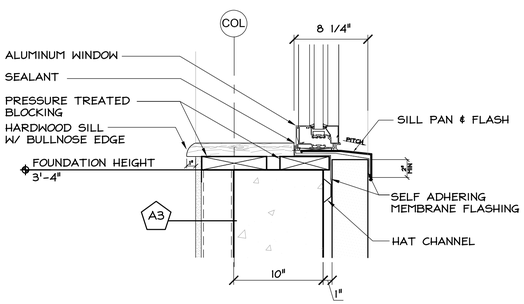

2 / A910 ALUM. WINDOW SILL DETAIL

Scale: 1 1/2" = 1'-0"

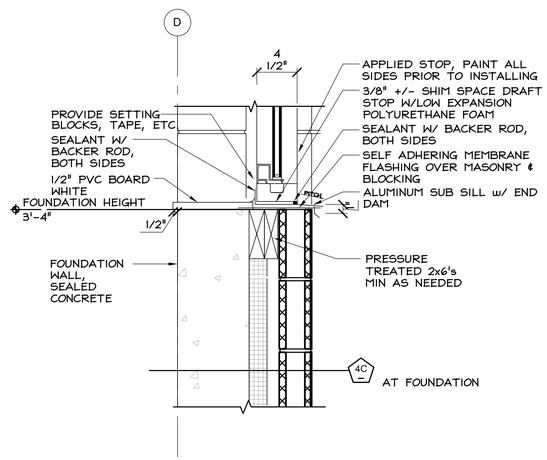

5 / A910 WINDOW SILL DETAIL

Scale: 1 1/2" = 1'-0"

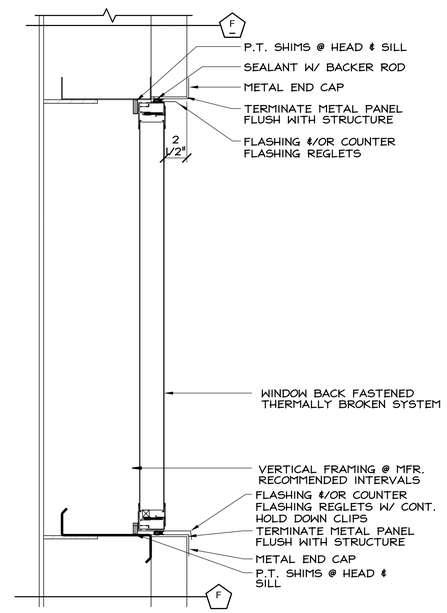

8 / A910 TRANSLUCENT WINDOW HEAD & SILL

Scale: 1 1/2" = 1'-0"

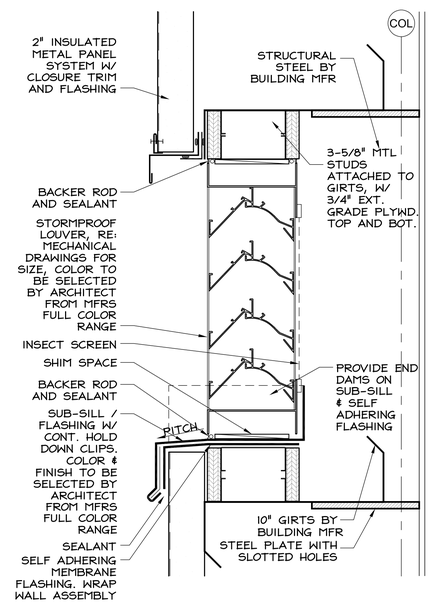

10 / A910 LOUVER DETAIL

Scale: 3" = 1'-0"

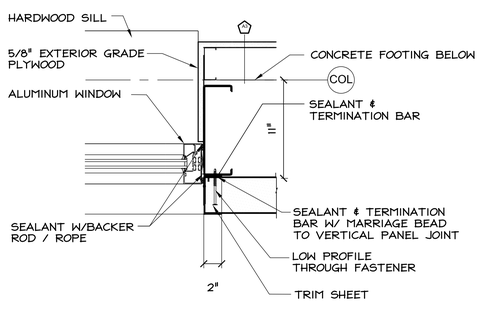

3 / A910 ALUM. WINDOW JAMB DETAIL

Scale: 1 1/2" = 1'-0"

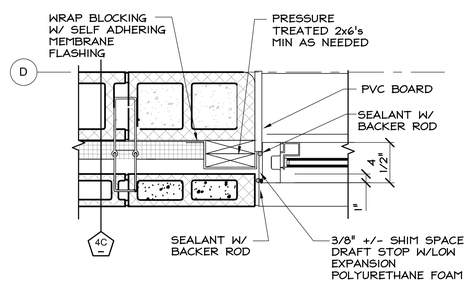

6 / A910 WINDOW JAMB DETAIL

Scale: 1 1/2" = 1'-0"

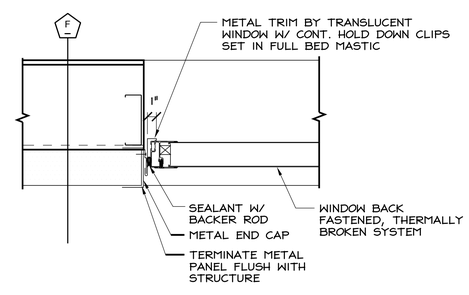

9 / A910 TRANSLUCENT WINDOW JAMB

Scale: 1 1/2" = 1'-0"

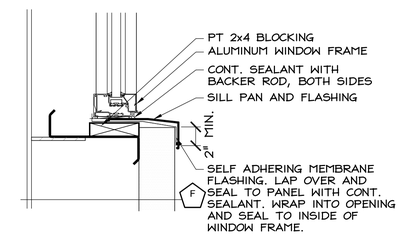

11 / A910 ALUM. WINDOW SILL DETAIL

Scale: 1 1/2" = 1'-0"

This drawing is copyrighted and is subject to copyright protection as an "architectural work" under 17 U. S. C. Sec. 101 et seq. The protection includes but is not limited to the overall form as well as the arrangement and composition of spaces, materials, color and elements in the design. Under such protection, unauthorized use of this drawing may result in the cessation of construction or buildings being seized and/or monetary compensation being awarded to The Robinson Green Beretta Corporation (RGB).

Any reproduction, possession, or use of this drawing or any part thereof without the express written permission of RGB, is prohibited. Violators will be prosecuted to the full extent of the law.

© RGB 2019

Certification

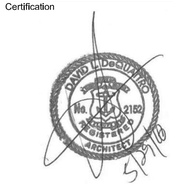

Drawn by TPL

Checked by RJJ, DLD

Revised on

50 Holden Street
Providence, Rhode Island 02908

Phone: (401) 272-1730
Fax: (401) 273-7156

E-mail: rgbinfo@rgb.net
www.rgb.net

RGB PROVIDENCE

Architecture · Project Management · Interior Design

Project

FORT ADAMS MAINTENANCE BUILDING

RIDEM / DIVISION OF PARKS & RECREATION

STATE OF RHODE ISLAND AND PROVIDENCE PLANTATIONS

FORT ADAMS STATE PARK, NEWPORT, RI

Drawing Status

ISSUED FOR CONSTRUCTION

Issued On MAY 29, 2019

Sheet Contents

WINDOW SCHEDULE AND DETAILS

Project Number. 6380

Drawing No.

A910

Sheet of

GENERAL NOTES

DESIGN LOADS: DESIGN IS IN ACCORDANCE WITH, AND CONSTRUCTION SHALL CONFORM TO REQUIREMENTS OF THE 2013 RHODE ISLAND STATE BUILDING CODE SBC–1 (2012 INTERNATIONAL BUILDING CODE W/ RI AMENDMENTS)

BUILDING USE:	VEHICLE GARAGE / OFFICE
RISK CATEGORY:	II
LIVE LOADS –	
CEILING LOAD OF OFFICE (LIGHT STORAGE)	125 PSF
TYP. FLOOR LOAD	250 PSF
GROUND SNOW	30 PSF
FLAT ROOF SNOW	30 PSF
IMPORTANCE FACTOR (SNOW)	1.0
MIN. ROOF LIVE LOAD	20 PSF
FROST DEPTH :	3'–4"
PRESUMED SOIL BEARING CAPACITY :	3000 PSF

LATERAL FORCE RESISTING SYSTEM TO BE DESIGNED BY METAL BUILDING MANUFACTURER.

ANCHOR BOLT SIZE, QUANTITY AND LOCATION AS SPECIFIED BY METAL BUILDING MANUFACTURER.

FOUNDATION MUST BE CHECKED FOR LOADS PROVIDED BY METAL BUILDING MANUFACTURER BEFORE CONSTRUCTION BEGINS.

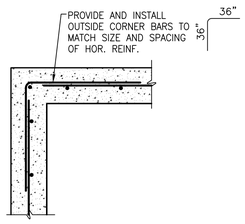

1 S100 TYP. CONC. WALL CORNER
SCALE: NONE

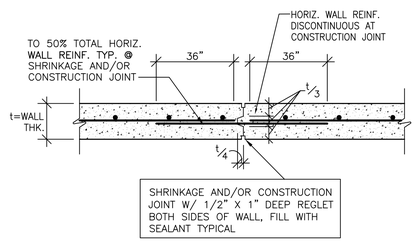

NOTE: MAXIMUM SPACING OF SHRINKAGE AND/OR CONST. JOINTS NOT TO EXCEED 60 FEET.

2 S100 TYP. WALL SHRINKAGE AND/OR CONSTRUCTION JOINT
SCALE: NONE

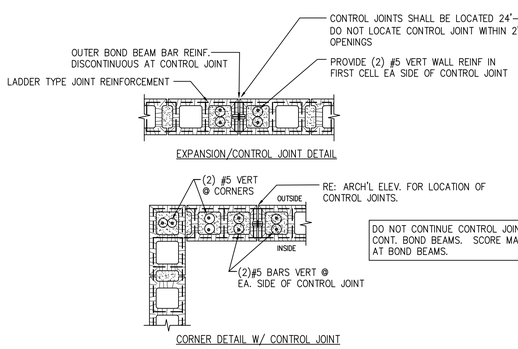

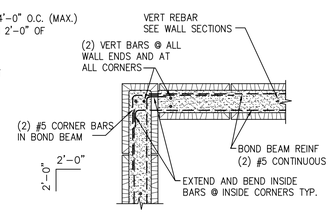

1. PROVIDE CORNER BARS TO MATCH AND LAP WITH BOND BEAM REINF OR PROVIDE 90° HOOK.
2. EXTEND HORIZ JOINT REINF TO END OF WALL IN BOTH DIRECTIONS SO THAT IT LAPS AT THE CORNER.

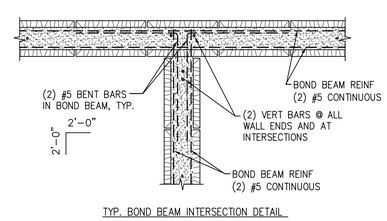

3 S100 TYP. CMU DETAILS
SCALE: NONE

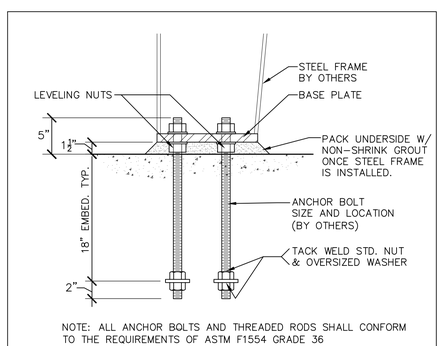

ANCHOR BOLT DETAIL

NOTE:
BASE PLATES ARE SUPPLIED BY STEEL BUILDING MANUFACTURER. SEE STEEL BUILDING DRAWINGS FOR BASE PLATE SIZE, THICKNESS AND PLATE ORIENTATION, AND COLUMN SIZE.

GENERAL NOTES

FOUNDATION NOTES:

1. ALL SOIL CONTAINING ORGANIC OR UNSUITABLE BEARING MATERIAL SHALL BE CLEARED FROM THE BUILDING FOOTPRINT.
2. ALL SOIL SUPPORTED FOOTINGS AND SLABS SHALL BE FOUNDED UPON COMPACTED NATURAL SUBGRADE OR COMPACTED BANK RUN GRAVEL FILL WITH A SAFE BEARING CAPACITY OF NOT LESS THAN 3000 PSF (ASSUMED). COORDINATE SITE SPECIFIC SUBGRADE PREPARATION REQUIREMENTS WITH OWNERS GEOTECHNICAL REPORT.
3. ROCK SHALL BE EXCAVATED A MINIMUM OF 12" BELOW BOTTOM OF FOOTING ELEVATION AND COVERED WITH A LAYER OF COMPACTED GRAVEL.
4. A MODIFIED PROCTOR TEST SHALL BE PERFORMED BY A SOILS TESTING LAB ON EACH TYPE OF SOIL TO BE COMPACTED.
5. SOIL SHALL BE COMPACTED TO NOT LESS THAN 95% OF MAXIMUM DRY DENSITY PER ASTM D1557 IN LIFTS NOT TO EXCEED 6" LOOSE DEPTH.
6. FIELD DENSITY TESTS SHALL BE PERFORMED BY AN INDEPENDENT SOILS TESTING LAB TO VERIFY COMPACTION. A COPY OF ALL TEST REPORTS SHALL BE FILED WITH THE ENGINEER.
7. BACKFILL SYMMETRICALLY AGAINST ALL FOUNDATION WALLS IN INCREMENTS NOT TO EXCEED 2 FEET MAXIMUM DIFFERENTIAL.
8. SEE PLUMBING AND ELECTRICAL DRAWINGS FOR UNDER FLOOR SYSTEMS AND SPECIAL GRANULAR FILL MATERIAL REQUIREMENTS.
9. NO FOOTINGS OR SLABS SHALL BE POURED INTO OR AGAINST SUBGRADE CONTAINING FREE WATER OR ICE.
10. ALL SLABS–ON–GRADE SHALL BE PLACED ON A 15 MIL. VAPOR BARRIER OVER A MIN. 8" COMPACTED STRUCTURAL FILL LAYER. COORDINATE ADDITIONAL SUBGRADE PREPARATION REQUIREMENTS WITH OWNERS GEOTECHNICAL REPORT.

CONCRETE NOTES:

1. ALL CONCRETE SHALL HAVE A COMPRESSIVE STRENGTH OF NOT LESS THAN 4000 PSI AT 28 DAYS.
2. ALL CONCRETE WALLS, FOOTINGS AND CONCRETE EXPOSED TO THE WEATHER SHALL CONTAIN AN APPROVED AIR ENTRAINING ADMIXTURE. AIR CONTENT SHALL BE 4 1/2% TO 7%.
3. ALL CONCRETE SHALL CONTAIN AN APPROVED WATER–REDUCING ADMIXTURE.
4. A SET OF FOUR (4) CONCRETE TEST CYLINDERS SHALL BE TAKEN BY AN INDEPENDENT CONCRETE TESTING LAB ON EACH DAY WHEN CONCRETE PLACEMENT EXCEEDS 5 CUBIC YARDS. ONE CYLINDER SHALL BE BROKEN AT 7 DAYS, TWO AT 28 DAYS, AND ONE AT 56 DAYS. A COPY OF ALL TEST REPORTS SHALL BE FILED WITH THE ARCHITECT.
5. NO CALCIUM CHLORIDE SHALL BE USED IN ANY CONCRETE.
6. A MIX DESIGN SHALL BE SUBMITTED FOR APPROVAL FOR EACH TYPE OF CONCRETE.
7. ALL REINFORCING BARS SHALL BE ASTM A–615 GRADE 60 (U.N.O.).
8. THE CONTRACTOR SHALL SUBMIT SHOP DRAWINGS FOR APPROVAL PRIOR TO FABRICATION, SHOWING REINFORCING DETAILS, STEEL SIZES, SPACING AND PLACEMENT OF REINFORCING.
9. ALL REINFORCING BAR SPLICES SHALL CONFORM TO REQUIREMENTS OF ACI 318, BUT IN NO CASE SHALL THEY BE LESS THAN 2'–0".
10. DOWELS SHALL MATCH SIZE AND SPACING OF MAIN REINFORCING.
11. CONSTRUCTION JOINTS IN ALL WALLS SHALL BE NOT FURTHER APART THAN 60 FEET IN ANY DIRECTION. SEE PLAN FOR LOCATION OF SLAB CONSTRUCTION AND/OR SHRINKAGE JOINTS.
12. ALL WELDED WIRE FABRIC SHALL CONFORM TO ASTM A–185, Fy=60 KSI.
13. ALL WELDED WIRE FABRIC SHALL BE LAPPED TWO (2) FULL MESH PANELS AT SIDES AND ENDS AND BE SECURELY WIRED TOGETHER.
14. SEE ARCHITECTURAL DRAWINGS FOR TYPE AND LOCATION OF ALL FLOOR FINISHES, FLOOR DEPRESSIONS AND CUT OUTS.
15. COORDINATE ALL FOUNDATION PENETRATIONS WITH ARCHITECT, PLUMBING, MECHANICAL, ELECTRICAL CONTRACTORS AND LOCAL AGENCIES.

GENERAL NOTES

MASONRY NOTES:

1. MASONRY WALLS ARE DESIGNED IN ACCORDANCE WITH NCMA "SPECIFICATIONS FOR THE CONSTRUCTION OF LOAD BEARING CONCRETE MASONRY", AND ACI BUILDING CODE ACI 530–11.
2. MASONRY SHALL BE HOLLOW CONCRETE UNITS CONFORMING TO ASTM C90 GRADE N–1, WITH AN AVERAGE NET AREA COMPRESSIVE STRENGTH OF 1900 PSI.
3. MORTAR SHALL CONFORM TO ASTM C270, TYPE S (LIME), AND BE PROPORTIONED TO YIELD A COMPRESSIVE STRENGTH OF 1800 PSI AT 28 DAYS BY THE PROPERTY METHOD. COMPRESSIVE STRENGTH RESULTS OF FIELD SAMPLED MORTAR IS TO BE USED TO EVALUATE MORTAR CONSISTENCY ONLY AND IS NOT A BASIS FOR REJECTING MORTAR QUALITY.
4. GROUT FOR REINFORCED MASONRY SHALL CONFORM TO ASTM C476, TYPE PL, AND HAVE A MINIMUM COMPRESSIVE STRENGTH OF 2000 PSI AT 28 DAYS WHEN FIELD TESTED IN ACCORDANCE WITH ASTM C1019.
5. MASONRY WALLS CONSTRUCTED AND TESTED IN ACCORDANCE WITH THESE PROCEDURES SHALL YIELD A NET AREA COMPRESSIVE STRENGTH OF f'm = 1900 PSI.
6. UNITS IN WALLS SHALL BE LAID IN FACE SHELL BED AND HEAD JOINTS.
7. PRIOR TO GROUTING CELLS, BARS AND CELLS SHALL BE INSPECTED BY THE TESTING AGENCY/ENGINEER. THE BASE OF EACH CELL IN WHICH A BAR IS PLACED MUST HAVE A CLEANOUT HOLE. THE DESIGN OF REINFORCED MASONRY CONSTRUCTION IS BASED ON ALLOWABLE STRESSES PREDICATED WITH INSPECTION PROVISIONS REQUIRING QUALIFIED MASONRY INSPECTION TO TAKE PLACE ON A CONTINUOUS BASIS WHENEVER MASONRY IS BEING PLACED.
8. REINFORCED MASONRY WALLS SHALL HAVE BOND BEAMS AT TOP OF WALL FOR ALL WALLS. BOND BEAMS SHALL BE REINFORCED WITH 2–#5 HORIZONTAL BARS. BOND BEAM REINFORCING SHALL BE EXTENDED INTO AND BE CONTINUOUS WITH ALL INTERSECTING BOND BEAMS. MASONRY OPENINGS ABOVE 16" WIDE REQUIRE APPROVED LINTELS OR AS INDICATED ON THE DRAWINGS.
9. MASONRY BLOCK CELLS CONTAINING VERTICAL REINFORCING, MASONRY LINTEL BLOCKS, AND MASONRY BOND BEAMS CONTAINING HORIZONTAL REINFORCING SHALL BE GROUTED SOLID. FILLING CELLS WITH MORTAR IS UNACCEPTABLE.
10. PROVIDE (2)–#5 VERTICAL REINFORCING BARS ADJACENT TO WINDOWS AND DOOR OPENINGS AND AT ALL CORNERS AND DISCONTINUOUS EDGES, UNLESS NOTED OTHERWISE.
11. UNLESS NOTED OTHERWISE, ALL MASONRY WALLS SHALL BE REINFORCED VERTICALLY WITH MINIMUM #5 VERTICAL BARS AT 24" O.C.
12. STARTER COURSES OF ALL CMU WALLS SHALL BE GROUTED SOLID.
13. MINIMUM HORIZONTAL JOINT REINFORCING SHALL BE 9 GAGE GALVANIZED LADDER TYPE AT 16" O.C.
14. STANDARD LOW LIFT AND HIGH LIFT GROUTING PROCEDURES AS OUTLINED IN ACI–530–11 SHALL BE STRICTLY ADHERED TO.
15. THE MASONRY CONTRACTOR SHALL CLEAN EXPOSED MASONRY SURFACES OF ALL STAINS, EFFLORESCENCE, MORTAR OR GROUT DROPPINGS, AND DEBRIS.
16. COVER TOP OF UNFINISHED MASONRY WORK TO PROTECT IT FROM THE WEATHER.
17. COLD WEATHER CONSTRUCTION PRACTICES SHALL BE FOLLOWED WHEN AMBIENT AIR TEMPERATURE FALLS BELOW 40 DEGREES FOR THE TEMPERATURE OF MASONRY UNITS IS BELOW 40 DEGREES F. COLD WEATHER PRACTICE SHALL BE IN CONFORMANCE WITH THE SPECIFICATION FOR MASONRY STRUCTURES ACI 530.1–11/ASCE 6–11/TMS 602–11.
18. HOT WEATHER CONSTRUCTION PRACTICES SHALL BE FOLLOWED WHEN AMBIENT AIR TEMPERATURE EXCEEDS 100 DEGREES F. OR 90 DEGREES F. WITH A WIND VELOCITY GREATER THAN 8 MPH. HOT WEATHER PRACTICE SHALL BE IN CONFORMANCE WITH THE SPECIFICATION FOR MASONRY STRUCTURES ACI 530.1–11/ASCE 6–11/TMS 602–11.

LIGHT GAGE STEEL FRAMING NOTES:

1. ALL DESIGN, DETAILING, FABRICATION, AND ERECTION OF LIGHT GAGE FRAMING SHALL BE IN ACCORDANCE WITH AMERICAN IRON AND STEEL INSTITUTE "SPECIFICATIONS FOR THE DESIGN OF COLD–FORMED STEEL STRUCTURAL MEMBERS", LATEST EDITION, AND THE MANUFACTURER'S DETAILS AND SPECIFICATIONS.
2. FOR STUD DESIGN PROPERTIES REFER TO MARINO/WARE INDUSTRIES, INC.

This drawing is copyrighted and is subject to copyright protection as an "architectural work" under 17 U. S. C. Sec. 101 et seq. The protection includes but is not limited to the overall form as well as the arrangement and composition of spaces, materials, color and elements in the design. Under such protection, unauthorized use of this drawing may result in the cessation of construction or buildings being seized and/or monetary compensation being awarded to The Robinson Green Beretta Corporation (RGB).

Any reproduction, possession, or use of this drawing or any part thereof without the express written permission of RGB, is prohibited. Violators will be prosecuted to the full extent of the law.

© RGB 2018

Certification

THOMAS P. GRAFE
No. 4735
REGISTERED PROFESSIONAL ENGINEER

Drawn by AG
Checked by JM

Revised on

Consultants

C.A. PRETZER ASSOCIATES INC.
STRUCTURAL ENGINEERS
50 Freeway Drive
Cranston, R.I. 02930
TEL. 401–785–2690 FAX: 401–461–9360
DESIGN, CONSULTATION, INVESTIGATION

50 Holden Street
Providence, Rhode Island 02908

Phone: (401) 272-1730
Fax: (401) 273-7156

E-mail: rgbinfo@rgb.net
www.rgb.net

RGB
Architecture · Engineering · Interior Design

Project

FORT ADAMS MAINTENANCE BUILDING

RIDEM / DIVISION OF PARKS & RECREATION

STATE OF RHODE ISLAND AND PROVIDENCE PLANTATIONS

FORT ADAMS STATE PARK, NEWPORT, RI

Drawing Status

ISSUED FOR CONSTRUCTION

Issued On MAY 29, 2019

Sheet Contents

GENERAL NOTES AND MASONRY DETAILS

Project Number. 6110

Drawing No.

S100

Sheet of

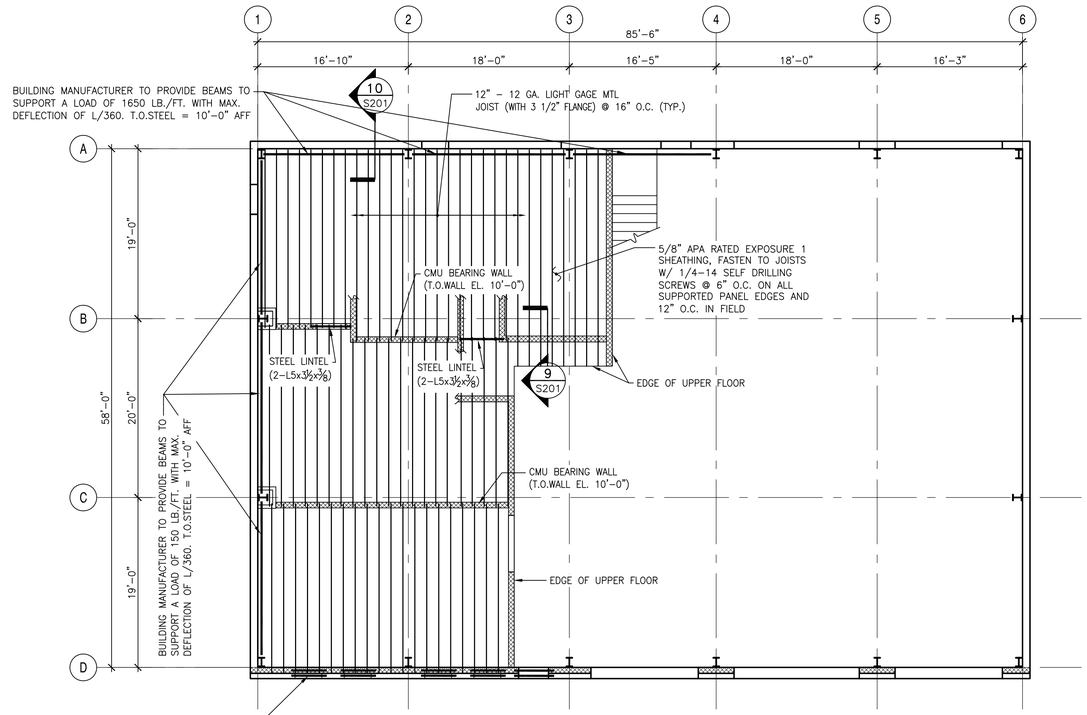

UPPER FLOOR FRAMING PLAN

SCALE: 1/8"=1'-0"

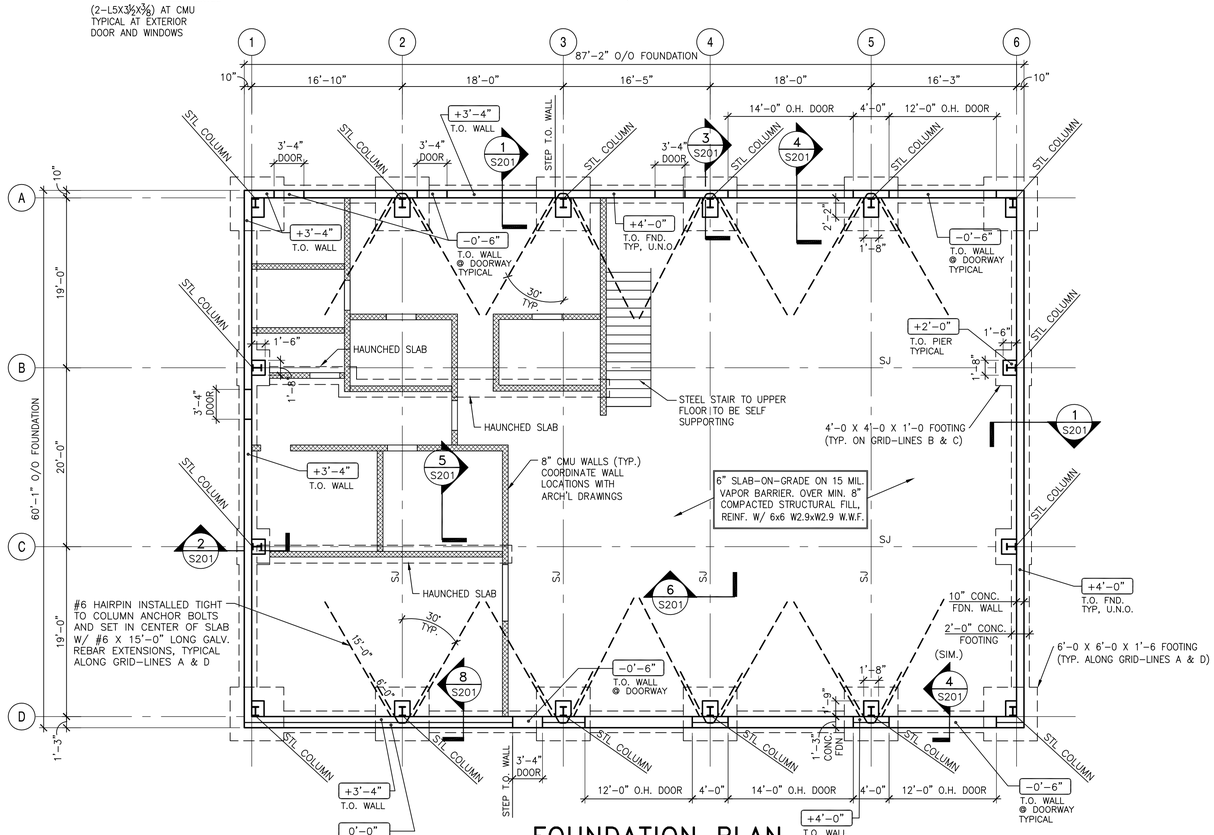

FOUNDATION PLAN

SCALE: 1/8"=1'-0"

This drawing is copyrighted and is subject to copyright protection as an "architectural work" under 17 U. S. C. Sec. 101 et seq. The protection includes but is not limited to the overall form as well as the arrangement and composition of spaces, materials, color and elements in the design. Under such protection, unauthorized use of this drawing may result in the cessation of construction or buildings being seized and/or monetary compensation being awarded to The Robinson Green Beretta Corporation (RGB).

Any reproduction, possession, or use of this drawing or any part thereof without the express written permission of RGB, is prohibited. Violators will be prosecuted to the full extent of the law.

© RGB 2018

Certification

THOMAS P. GRAFE
No. 4735
REGISTERED PROFESSIONAL ENGINEER

Drawn by AG

Checked by JM

Revised on

Consultants

C.A. PRETZER ASSOCIATES INC.
STRUCTURAL ENGINEERS
50 Freeway Drive
Cranston, R.I. 02930
TEL. 401-785-2690 FAX: 401-461-9360
DESIGN, CONSULTATION, INVESTIGATION

50 Holden Street
Providence, Rhode Island 02908

Phone: (401) 272-1730
Fax: (401) 273-7156

E-mail: rgbinfo@rgb.net
www.rgb.net

RGB
Architecture · Engineering · Interior Design

Project

FORT ADAMS MAINTENANCE BUILDING

RIDEM / DIVISION OF PARKS & RECREATION

STATE OF RHODE ISLAND AND PROVIDENCE PLANTATIONS

FORT ADAMS STATE PARK, NEWPORT, RI

Drawing Status

ISSUED FOR CONSTRUCTION

Issued On MAY 29, 2019

Sheet Contents

FOUNDATION PLAN AND UPPER FLOOR FRAMING PLAN

Project Number. 6110

Drawing No.

S101

Sheet of

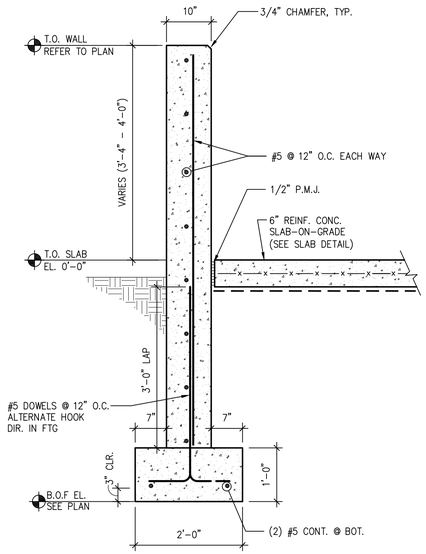

1 S201 FDN SECTION
SCALE: 3/4" = 1'-0"

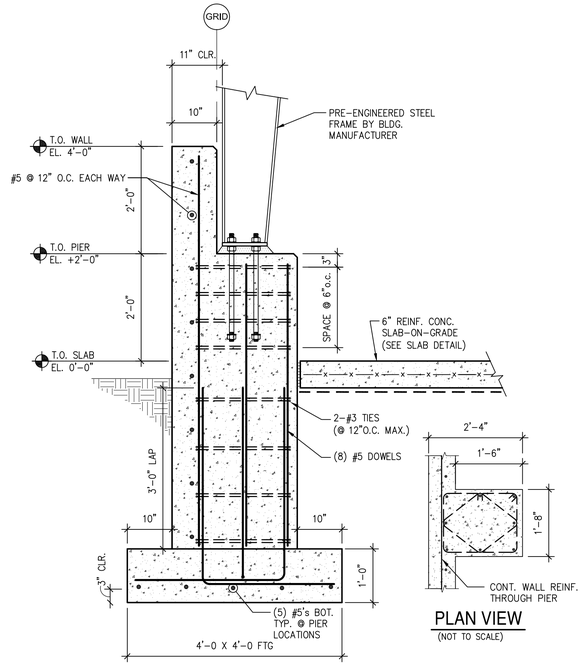

2 S201 FDN SECTION @ PIER (GRID-LINES B & C)
SCALE: 3/4" = 1'-0"

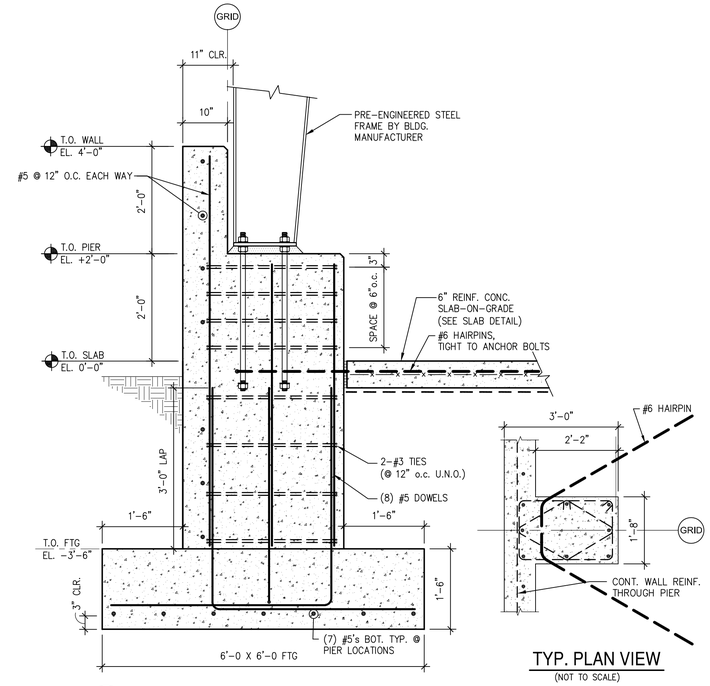

3 S201 FDN SECTION @ PIER, TYP. @ GRID-LINE A AND GRID-LINE D
SCALE: 3/4" = 1'-0"

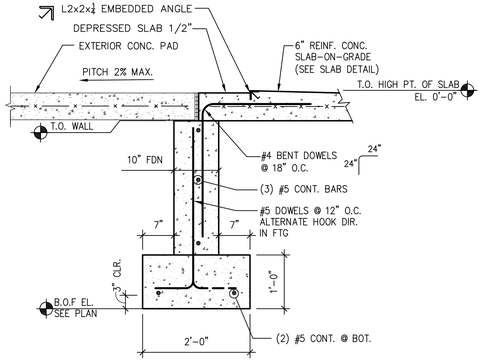

4 S201 FDN SECTION @ O.H. DOORWAYS

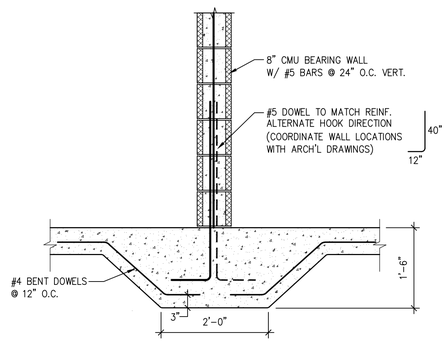

5 S201 THICKENED SLAB AT BEARING WALLS

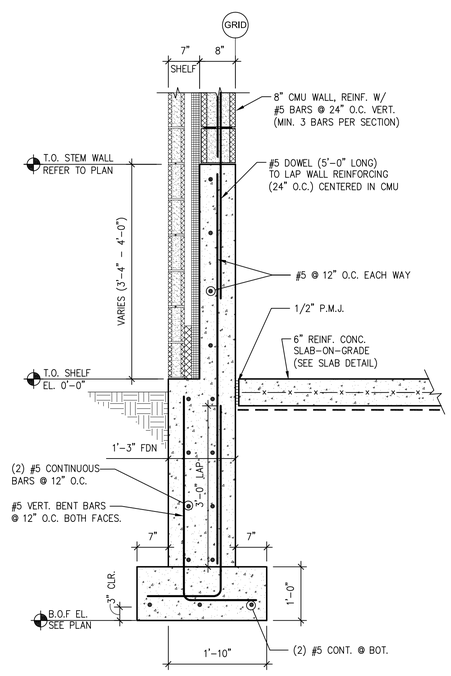

8 S201 FDN W/ BRICK SHELF SECTION
SCALE: 3/4" = 1'-0"

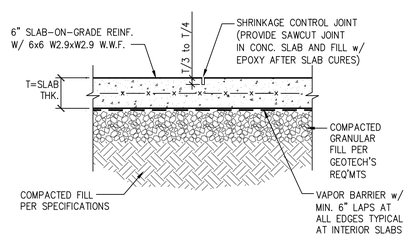

NOTES:

1. SAWCUT SHRINKAGE CONTROL JOINTS SHALL BE PROVIDED WITHIN 12 HRS. OF SLAB PLACEMENT, AS SOON AS CONCRETE IS CAPABLE OF SUPPORTING SAWCUTTING EQUIPMENT.
2. LOCATE SHRINKAGE CONTROL JOINTS AS INDICATED ON SLAB PLAN.
3. OPTIONALLY, THE SHRINKAGE CONTROL MAY SUBSTITUTE PREFABRICATED PLASTIC STRIPS INSTEAD OF SAWCUTTING. SUBMIT CATALOG CUTS FOR APPROVAL PRIOR TO USING.

6 S201 TYP. SLAB DETAIL
SCALE: NONE

7 S201 NOT USED

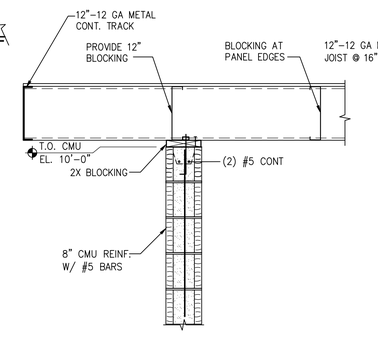

9 S201 MASONRY WALL SECTION
SCALE: 3/4" = 1'-0"

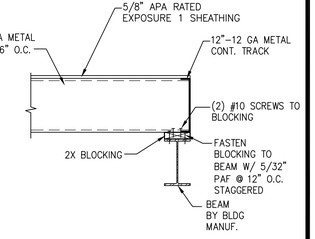

10 S201 CEILING SUPPORT
SCALE: 3/4" = 1'-0"

This drawing is copyrighted and is subject to copyright protection as an "architectural work" under 17 U. S. C. Sec. 101 et seq. The protection includes but is not limited to the overall form as well as the arrangement and composition of spaces, materials, color and elements in the design. Under such protection, unauthorized use of this drawing may result in the cessation of construction or buildings being seized and/or monetary compensation being awarded to The Robinson Green Beretta Corporation (RGB).

Any reproduction, possession, or use of this drawing or any part thereof without the express written permission of RGB, is prohibited. Violators will be prosecuted to the full extent of the law.

© RGB 2018

Certification

THOMAS P. GRAFE
No. 4735
REGISTERED PROFESSIONAL ENGINEER

Drawn by AG

Checked by JM

Revised on

Consultants

C.A. PRETZER ASSOCIATES INC.
STRUCTURAL ENGINEERS
50 Freeway Drive
Cranston, R.I. 02930
TEL. 401-785-2690 FAX: 401-461-9360
DESIGN, CONSULTATION, INVESTIGATION

50 Holden Street
Providence, Rhode Island 02908

Phone: (401) 272-1730
Fax: (401) 273-7156

E-mail: rgbinfo@rgb.net
www.rgb.net

RGB
Architecture · Engineering · Interior Design

Project

FORT ADAMS MAINTENANCE BUILDING

RIDEM / DIVISION OF PARKS & RECREATION

STATE OF RHODE ISLAND AND PROVIDENCE PLANTATIONS

FORT ADAMS STATE PARK, NEWPORT, RI

Drawing Status

ISSUED FOR CONSTRUCTION

Issued On MAY 29, 2019

Sheet Contents

FOUNDATION DETAILS

Project Number. 6110

Drawing No.

S201

Sheet of

EXPANSION TANK SCHEDULE

SYMBOL	MANUFACTURER	MODEL #	CAPACITY	MAX. ACCEPT. FACTOR	CW SUPPLY	REMARKS
ET-1	AMTROL	ST-12	4.4 GALLONS	0.73	3/4"	THERM-X-TROL, IN-LINE, ASME, MAX. OPERATING TEMPERATURE – 200°F, MAX. WORKING PRESSURE – 150 PSIG, 55 PSIG-PRECHARGE, CHARGE TO CITY WATER PRESSURE.

NOTES:
INSTALL PER ALL RI CODE AND MANUFACTURER'S INSTALLATION REQUIREMENTS.

PUMP SCHEDULE

SYMBOL	MANUFACTURER	MODEL	GPM	HEAD	ELECTRICAL CHARACTERISTICS					REMARKS
					HP	FLA	VOLT	PHASE	RPM	
RP-1	TACO	005	9	6'	1/35	0.52	115	1	3250	STAINLESS STEEL CIRCULATOR, STAINLESS STEEL CARTRIDGE, FLANGED, LOW LEAD COMPLIANT.

NOTES:
INSTALL PER ALL STATE & LOCAL CODES AND MANUFACTURER'S INSTALLATION REQUIREMENTS. COORDINATE EXACT LOCATION WITH ARCHITECT & OWNER PRIOR TO INSTALLATION.

THERMOSTATIC MIXING VALVE SCHEDULE

SYMBOL	MANUFACTURER	MODEL #	FLOW RATE	WATER SUPPLY		REMARKS
				INLETS	OUTLET	
TMV-1	LEONARD	TM-26-LF	10 GPM	1"	1"	HIGH-LOW, LEAD-FREE, SET TEMPERATURE TO 120°F, MAX DIFF. PRESSURE = 5 PSI. PROVIDE WALL MOUNTING BRACKET.

NOTE: INSTALL PER RI CODE AND MANUFACTURER'S REQUIREMENTS.

WATER HEATER SCHEDULE

SYMBOL	MODEL #	MANUFACTURER	CAPACITY	RECOVERY		WATER SUPPLY		GAS	ELECTRICAL				REMARKS
				GPM	ΔT	CW	HW	CFH	KW	VOLTS	PHASE	HZ	
GWH-1	SUF60 120NE	STATE	60 GALLON	138	100°	1"	1"	120	–	120	1	60	CONDENSING HIGH EFFICIENCY GAS FIRED TANK TYPE WATER HEATER, SEALED COMBUSTION, ASME, 96% EFFICIENCY, 1"GAS CONNECTION, 3.5"WC, 4" INTAKE & EXHAUST FLUES. PIPE DRAIN LINE TO DRAIN PUMP. COORDINATE EXACT LOCATION WITH ARCHITECT.

NOTES:
INSTALL PER ALL RI CODE AND MANUFACTURER'S INSTALLATION REQUIREMENTS. PROVIDE CONDENSATE ACID NEUTRALIZATION KIT #100112381.

DRAIN SCHEDULE

SYMBOL	TYPE	MANUFACTURER	MODEL	OUTLET	STRAINER	REMARKS
FD-1	FLOOR DRAIN	J.R. SMITH	2005Y-A-NB	2"	6"ø NICKEL BRONZE	CAST IRON BODY, NO-HUB, ADJUSTABLE STRAINER, SEDIMENT BUCKET.
FD-2	FLOOR DRAIN	J.R. SMITH	2110Y-B-NB	4"	8½"ø NICKEL BRONZE	CAST IRON BODY, NO-HUB, CAST IRON GRATE, SEDIMENT BUCKET.

NOTES: ALL FLOOR DRAINS & TRENCH DRAINS SHALL HAVE TRAP SEAL GASKETS EQUAL TO "SURE SEAL".
COORDINATE FINAL FLOOR DRAIN LOCATIONS WITH ARCHITECT AND GC PRIOR TO INSTALLATION.

PLUMBING FIXTURE SCHEDULE

SYMBOL	DESCRIPTION	FIXTURE				FIXTURE			SERVICES					REMARKS
		MANUFACTURER	MODEL	TYPE	SIZE	MANUFACTURER	MODEL	TYPE	S/W	V	CW	HW	TW	
P-1	WATER CLOSET – ADA	AMERICAN STANDARD	3461.528	FLOOR MOUNTED	1.28 GPF	AMERICAN STANDARD	6065.121	SENSOR FLUSH VALVE	4"	2"	1"	–	–	VITREOUS CHINA, ELONGATED, LOW CONSUMPTION. AMERICAN STANDARD 5901.100 OPEN FRONT SEAT. BARRIER FREE, ADA COMPLIANT
P-2A	LAVATORY – ADA	AMERICAN STANDARD	0356.421	WALL HUNG	20½"x18¾"	CHICAGO	EQ-A11A-12ABCP	SENSOR	2"	1-1/2"	1/2"	1/2"	–	VITREOUS CHINA, SINGLE HOLE, 0.5 GPM SENSOR FAUCET. PROVIDE GRID DRAIN ASSEMBLY. PROVIDE CHROME PLATED HEAVY DUTY OFFSET P-TRAP, SUPPLIES & STOPS. PROVIDE WALL CARRIER. BARRIER FREE, ADA COMPLIANT.
P-3	SINK – ADA	ELKAY	LRADQ172065	COUNTER MOUNTED	17"x20"x6½"	SYMMONS	SPP-3510-1.5	MANUAL	2"	1-1/2"	1/2"	1/2"	–	STAINLESS STEEL, DROP-IN, 6⅝" DEEP, 1-HOLE, DECK PLATE, 1.5 GPM LEVER FAUCET. PROVIDE CHROME PLATED HEAVY DUTY P-TRAP W/ CLEANOUT, SUPPLIES & STOPS. BARRIER FREE, ADA COMPLIANT
P-4	SHOWER – ADA	(TILED)	–	–	–	SYMMONS	96-500-B30-L-V-X	MANUAL	2"	1-1/2"	1/2"	1/2"	–	TILED SHOWER. TEMPTROL PRESSURE-BALANCING MIXING VALVE W/ ADJUSTABLE STOP SCREW TO LIMIT HANDLE TURN. 1.5 GPM, SHOWER HEAD W/ ARM & FLANGE. PROVIDE FLOOR DRAIN FD-1. ADA COMPLIANT
P-5	WATER COOLER	HALSEY TAYLOR	HTHB-HACG8SS-WF	WALL MOUNTED	–	–	–	MANUAL	1-1/2"	1-1/2"	1/2"	–	–	BOTTLE FILLING STATION WATER COOLER, FILTERED 8 GPH, STAINLESS. BARRIER FREE, ADA COMPLIANT.
P-6	SERVICE SINK	FIAT	MSB2424	FLOOR MOUNTED	24"x24"x12"	CHICAGO	540-LD897SGCCP	MANUAL	3"	2"	1/2"	1/2"	–	FLOOR MOUNTED, WALL MOUNTED CHROME PLATED LEVER FAUCET, VACUUM BREAKER. PROVIDE SPLASH GUARD, MOP & HOSE BRACKETS.
HB-1	HOSE BIBB	JR SMITH	5670-H-CP	WALL MOUNTED	3½"x2¾"	–	–	–	–	–	1/2"	–	–	BRASS BODY, VACUUM BREAKER AND REMOVABLE WHEEL HANDLE.
WH-1	EXTERIOR WALL HYDRANT	JR SMITH	5509QT-WC-NB	WALL MOUNTED	7"x7"	–	–	–	–	–	3/4"	–	–	BRONZE NICKEL PLATED, NON-FREEZE WALL HYDRANT WITH INTEGRAL VACUUM BREAKER, ADJUSTABLE WALL CLAMP AND STAINLESS STEEL RECESSED LOCKABLE BOX.

NOTES:
1. ALL ADA FIXTURES SHALL BE INSTALLED PER ADA REQUIREMENTS.
2. ALL PLUMBING FIXTURES, EQUIPMENT & ACCESSORIES SHALL BE INSTALLED MANUFACTUER'S REQUIREMENTS.

GENERAL NOTES

1. GENERAL NOTES, SYMBOLS LIST AND DETAILS ARE APPLICABLE TO ALL PLUMBING DRAWINGS.
2. DRAWINGS ARE DIAGRAMMATIC: DETERMINE LOCATIONS OF SYSTEMS AND COMPONENTS IN FIELD. DO NOT SCALE DRAWINGS.
3. NEITHER ACCURACY NOR COMPLETION OF UTILITY LOCATIONS SHOWN ON DRAWINGS IS GUARANTEED. DETERMINE EXACT LOCATIONS OF EXISTING UTILITIES IN FIELD, WHETHER OR NOT SHOWN ON DRAWINGS. EXERCISE CAUTION AND IDENTIFY LOCATIONS OF UNMARKED UTILITY LINES AS NECESSARY TO PERFORM WORK OF THIS SECTION.
4. ALL PLUMBING WORK SHALL BE IN ACCORDANCE WITH THE PRESIDING PLUMBING CODE AND ALL APPLICABLE LOCAL CODES.
5. IT SHALL BE THE RESPONSIBILITY OF THIS CONTRACTOR TO COORDINATE WORK WITH THAT OF ALL OTHER TRADES, INCLUDING (BUT NOT LIMITED TO), ELECTRICAL, HVAC, FIRE PROTECTION, STRUCTURAL AND GENERAL ARCHITECTURE.
6. ANY INTERFERENCE SHALL BE BROUGHT TO THE ATTENTION OF THE CONSTRUCTION MANAGER, GENERAL CONTRACTOR, AND/OR THE OWNER'S REPRESENTATIVE, AND RESOLVED PRIOR TO THE INSTALLATION OF THE WORK INVOLVED.
7. ALL PIPING PENETRATING CEILINGS AND WALLS SHALL BE INSTALLED WITH CHROME (STAINLESS WHERE NOTED) PLATED ESCUTCHEONS AT THE PENETRATION. ALL PIPING PENETRATING EXTERIOR WALLS AND ROOFS SHALL BE FLASHED AS REQUIRED AND SHALL BE SEALED WEATHERTIGHT. PIPING PENETRATING FIRE RATED PARTITIONS SHALL BE PROTECTED WITH UL LISTED SEALS OF EQUAL RATING.
8. MANUFACTURERS' MODEL NUMBERS ARE SPECIFIED TO ESTABLISH STANDARDS OF QUALITY FOR PERFORMANCE AND MATERIALS.
9. ALL PRODUCT INSTALLATION SHALL ADHERE TO THE MANUFACTURERS' RECOMMENDATIONS.
10. PROVIDE ACCESS PANELS FOR ALL EQUIPMENT THAT REQUIRES PERIODIC SERVICE AND FOR ALL VALVES.
11. TOPS OF ALL FLOOR DRAINS AND CLEANOUTS SHALL BE SET FLUSH WITH FINISHED FLOOR. ALL PIPING ABOVE GRADE SHALL BE PROPERLY SUPPORTED BY THE BUILDING STRUCTURE AND SHALL NOT REST ON CEILING TILES OR CEILING STRUCTURE.
12. CONTRACTOR SHALL COORDINATE ELECTRICAL CHARACTERISTICS AND REQUIREMENTS OF ALL PLUMBING EQUIPMENT WITH THE ELECTRICAL DRAWINGS, AND SHALL FURNISH EQUIPMENT WIRED FOR THE VOLTAGES SHOWN HEREIN.
13. ALL PLUMBING EQUIPMENT, PIPING, INSULATION, ETC., INSTALLED IN HVAC PLENUM SPACES SHALL MEET CODE REQUIREMENTS FOR SMOKE AND COMBUSTIBILITY.
14. PROVIDE SHUTOFF VALVES ON ALL BRANCH PIPING AND SUPPLIES TO INDIVIDUAL FIXTURES AND EQUIPMENT. PROVIDE BALL VALVES ON ALL WATER MAIN BRANCHES IN CORRIDORS AND WHERE INDICATED ON DRAWINGS. ALL VALVES SHALL BE ACCESSIBLE.
15. ALL SLEEVES THROUGH CONCRETE FLOORS AND ALL CORE DRILLING OF CONCRETE FLOORS SHALL BE BY THIS CONTRACTOR. CONCRETE PADS AND PLATFORMS FOR WORK OF THIS SECTION WILL BE PROVIDED BY GENERAL CONTRACTOR. PROVIDE INFORMATION AS NECESSARY TO COORDINATE WORK.
16. RUN PIPING CONCEALED WHERE POSSIBLE, UNLESS SPECIFIED OTHERWISE.
17. PROVIDE CLAMPS, OFFSETS, EXPANSION JOINTS, ANCHORS AND GUIDES AS NECESSARY TO PREVENT STRESS ON PIPING.
18. PROVIDE BALANCING VALVES AT SYSTEM LOOP RETURNS AND AT RETURN RISERS, PROVIDE SHUTOFF VALVES AT SYSTEM LOOP SUPPLIES AND SUPPLY RISERS.
19. PROVIDE VENTS AT HIGH POINTS IN PIPING SYSTEMS AND DRAIN VALVES AT LOW POINTS.
20. PROVIDE GAUGE FITTINGS AND THERMOMETER WELLS AT HOT WATER SUPPLY AND RETURN BRANCHES AND AT PUMP INLETS AND OUTLETS.
21. VERIFY EXACT SIZES, LOCATIONS, INVERTS AND ELEVATIONS PRIOR TO RUNNING ANY PIPING. REFER TO ARCHITECTURAL DRAWINGS FOR EXACT LOCATIONS OF ALL FIXTURES AND EQUIPMENT.
22. PIPE SUPPORTS FOR PLUMBING IN BUILDING SHAFTS ARE BY THIS CONTRACTOR. CAREFULLY COORDINATE WITH PLACEMENT OF STEEL GRATE SUPPORT BEAMS. SHAFT PIPE SUPPORT SHALL BEAR FROM WALL AND FROM FLOOR SUPPORT BEAMS.
23. OBTAIN GAS PERMITS AND DEFRAY ALL COSTS INCIDENTAL TO THE GAS PIPING SYSTEM. CONTRACTORS WORK SHALL COMMENCE ON THE HOUSE SIDE OF THE UTILITY COMPANY METER.
24. A SUITABLE DRIP OF CONDENSATE POCKET SHALL BE INSTALLED AT THE BOTTOM OF ALL GAS RISERS.
25. ALL GAS PIPING TO COMPLY WITH LOCAL AND STATE CODES.
26. GAS PIPING AND SAFETY DEVICES SHALL CONFORM TO REQUIREMENTS OF NFPA 54 AND SHALL BE SUBJECT TO THE INSPECTION AND APPROVAL OF THE AUTHORITY HAVING JURISDICTION.
27. PROVIDE A SUITABLE GAS COCK VALVE AT HOUSE SIDE OF METER AND EACH BRANCH RUNOUT FROM THE MAIN SERVING GAS OUTLETS AND INDIVIDUAL GAS FIXTURES.
28. GAS PIPING SHALL BE TESTED ACCORDING TO THE STATE FUEL GAS CODE AND NATIONAL CODE PROVISIONS OF THE LOCAL PLUMBING INSPECTOR. IF INSPECTION OF THE TEST SHOWS DEFECTS, SUCH DEFECTIVE WORK AND MATERIAL SHALL BE REPLACED AND INSPECTION AND TEST SHALL BE REDONE.
29. PLUMBING CONTRACTOR IS RESPONSIBLE FOR EXTENDING ALL REGULATOR VENTS TO ATMOSPHERE. REGULATORS ARE PART OF EQUIPMENT GAS TRAIN. PIPE ALL GAS TRAN VENTS FROM HVAC BOILERS TO ATMOSPHERE.
30. ALL EXTERIOR GAS PIPING SHALL BE PAINTED WITH TWO(2) COATS OF EPOXY BASED PAINT. COLOR TO MATCH EXISTING.
31. NO PIPING SHALL RUN OVER ELECTRICAL PANELS.
32. ALL PIPING THAT PENETRATES FLOORS OR FIRE RATED WALLS SHALL BE FIRE STOPPED W/ HILTI CAULKING PER MANUFACTURERS RECOMMENDATIONS.
33. ELECTRICAL SUB CONTRACTOR IS RESPONSIBLE FOR PROVIDING POWER TO ALL EQUIPMENT AND CONTROLS WITHIN THE PLUMBING SYSTEMS FOR THIS PROJECT.

PLUMBING LEGEND

V&C	VALVE & CAP
CW	COLD WATER
HW	HOT WATER
HWR	HOT WATER RECIRCULATION
S or W	SOIL OR WASTE
S/W	SOIL OR WASTE BELOW FLOOR OR BURIED
V	VENT
V OR (V)	VENT BELOW FLOOR OR BURIED
EV	EXHAUST VENT (WATER HEATER)
AI	AIR INTAKE (WATER HEATER)
G	NATURAL GAS
G	NATURAL GAS BELOW FLOOR OR BURIED
	SHUT-OFF VALVE
CV	CHECK VALVE
BVA	BALANCING VALVE ASSEMBLY
W&T	WASTE & TRAP
CO	CLEANOUT PLUG
FCO	FLUSH FLOOR CLEANOUT
WCO	WALL CLEANOUT
	CAPPED PIPE
	ARROW INDICATES DIRECTION OF FLOW
.01	ARROW INDICATES DIRECTION OF SLOPE
	UNION
HB	HOSE BIBB
WH	EXTERIOR WALL HYDRANT
FD	FLOOR DRAIN
WM	WATER METER
GM	GAS METER
TMV	MIXING VALVE
	CIRCULATION PUMP
DN	DOWN
DR	DROP/RISE
VTR	VENT THRU ROOF
INV/IE	INVERT ELEVATION
TYP	TYPICAL
VIF	VERIFY SIZE, ROUTING & INVERT IN FIELD
NTS	NOT TO SCALE
W&V	WASTE AND VENT
S&V	SOIL AND VENT
NC	NORMALLY CLOSED
AFF	ABOVE FINISHED FLOOR
FFE	FINSHED FLOOR ELEVATION
LPC	LIMIT OF PLUMBING CONTRACT
NIPC	NOT IN PLUMBING CONTRACT
GC	GENERAL CONTRACTOR
FPC	FIRE PROTECTION CONTRACTOR
PC	PLUMBING CONTRACTOR
EC	ELECTRICAL CONTRACTOR
HVAC	HVAC CONTRACTOR
S=.01	SLOPE = 1/8" PER FOOT
S=.02	SLOPE = 1/4" PER FOOT

This drawing is copyrighted and is subject to copyright protection as an "architectural work" under 17 U. S. C. Sec. 101 et seq. The protection includes but is not limited to the overall form as well as the arrangement and composition of spaces, materials, color and elements in the design. Under such protection, unauthorized use of this drawing may result in the cessation of construction or buildings being seized and/or monetary compensation being awarded to The Robinson Green Beretta Corporation (RGB).

Any reproduction, possession, or use of this drawing or any part thereof without the express written permission of RGB, is prohibited. Violators will be prosecuted to the full extent of the law.

© RGB 2017

Certification

STEVEN A. KARAN
No. 6537
REGISTERED PROFESSIONAL ENGINEER (MECHANICAL)

Drawn by AG
Checked by ARV

Revised on

B|E|R
BUILDING ENGINEERING RESOURCES, INC.
66 Main Street
N. Easton, MA 02356
T 508.230.0260
F 508.230.0265
100 Midway Road - Suite 23
Cranston, RI 02920
T 401.942.3500
F 401.228.6205
ber@ber-engineering.com
www.ber-engineering.com

50 Holden Street
Providence, Rhode Island 02908

Phone: (401) 272-1730
Fax: (401) 273-7156

E-mail: rgbinfo@rgb.net
www.rgb.net

RGB ARCHITECTS

Architecture L Project Management L Interior Design

Project

FORT ADAMS MAINTENANCE BUILDING

RIDEM / DIVISION OF PARKS & RECREATION

STATE OF RHODE ISLAND AND PROVIDENCE PLANTATIONS

FORT ADAMS STATE PARK, NEWPORT, RI

Drawing Status

ISSUED FOR CONSTRUCTION

Issued On MAY 29, 2019

Sheet Contents

PLUMBING - LEGEND, NOTES & SCHEDULES

Project Number.

Drawing No.

P001

Sheet of

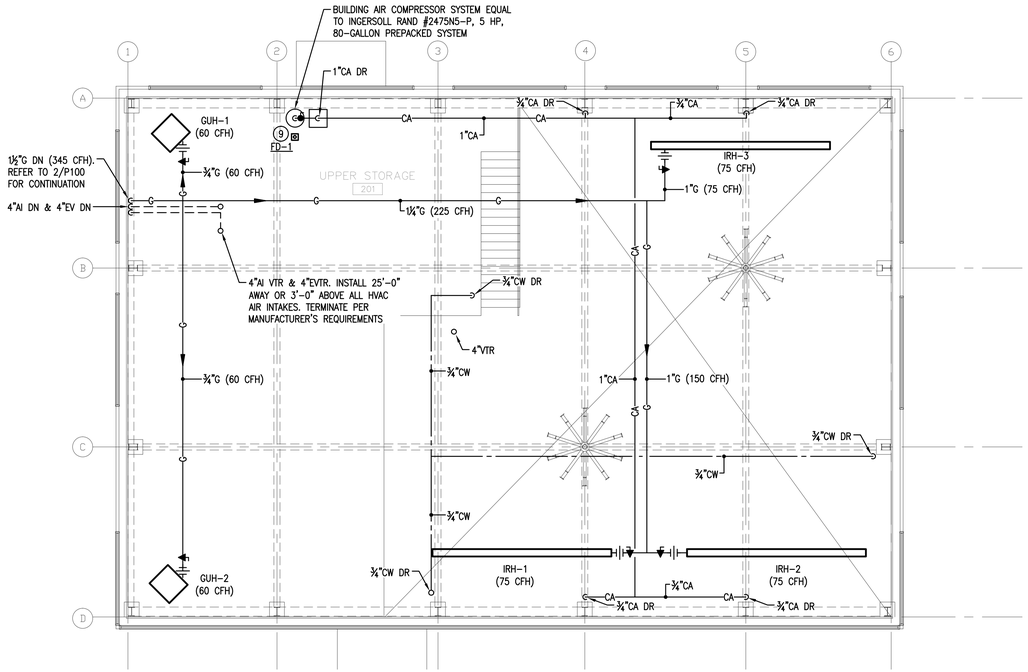

3 / P100 UPPER LEVEL PLAN

Scale: 1/8" = 1'-0"

PLUMBING KEYED NOTES

1. NEW FLOOR MOUNTED FLUSH VALVE WATERCLOSET: 1"CW DR, 4"S DN & 2"V DR
2. NEW WALL MOUNTED LAVATORY & FAUCET: 1/2"CW DR, 1/2"HW DR, 1½"W DN, 1½"V DR
3. NEW COUNTER MOUNTED SINK & FAUCET: 1/2"CW DR, 1/2"HW DR, 2"W DN, 2"V DR
4. NEW SHOWER ENCLOSURE & VALVE SYSTEM: 1/2"CW DR, 1/2"HW DR, 2"W DN, 2"V DR
5. NEW WALL MOUNTED WATER COOLER: 1/2"CW DR, 1½"W DN, 1½"V DR
6. NEW FLOOR MOUNTED SERVICE SINK & FAUCET: ½"CW DR, ½"HW DR, 3"W DN, 2"V DR
7. NEW WALL MOUNTED HOSE BIBB: 1/2"CW DR
8. NEW EXTERIOR WALL HYDRANT: 3/4"CW DR
9. NEW 2" FLOOR DRAIN: 2"W DN, 2"V DN
10. NEW 4" FLOOR DRAIN: 4"W DN, 2"V DN
11. NEW GAS-FIRED WATER HEATER: 1"CW DR, 1"HW DR, 1"G DR, 4"AI DR, 4"GV DR
12. NEW WALL MOUNTED THERMOSTATIC MIXING VALVE: 1"CW DR, 1"HW DR

NOTE:
CONNECT ALL NEW DOMESTIC WATER, SANITARY, KITCHEN, WASTE & VENT AND NATURAL GAS SUPPLY PIPING FROM NEW FIXTURES & EQUIPMENT TO EXISTING RESPECTIVE MAIN LINES. VERIFY EXACT LOCATIONS IN FIELD. TRENCH PIPING AS REQUIRED.

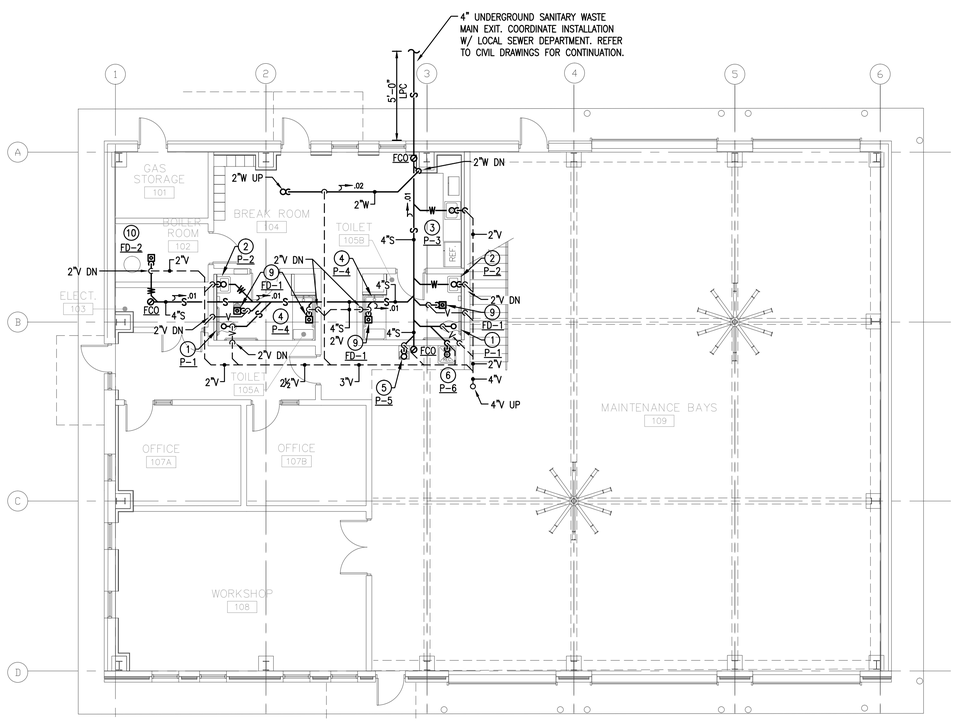

1 / P100 LOWER LEVEL PLAN – WASTE & VENT

Scale: 1/8" = 1'-0"

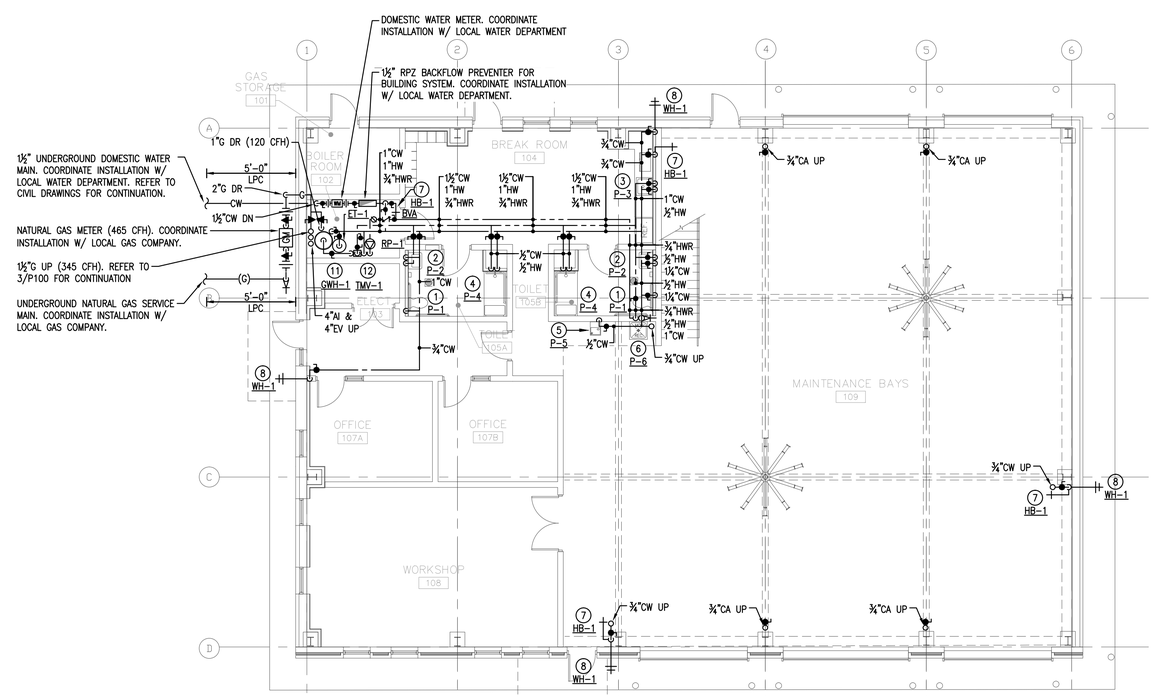

2 / P100 LOWER LEVEL PLAN – WATER & GAS

Scale: 1/8" = 1'-0"

This drawing is copyrighted and is subject to copyright protection as an "architectural work" under 17 U. S. C. Sec. 101 et seq. The protection includes but is not limited to the overall form as well as the arrangement and composition of spaces, materials, color and elements in the design. Under such protection, unauthorized use of this drawing may result in the cessation of construction or buildings being seized and/or monetary compensation being awarded to The Robinson Green Beretta Corporation (RGB).

Any reproduction, possession, or use of this drawing or any part thereof without the express written permission of RGB, is prohibited. Violators will be prosecuted to the full extent of the law.

© RGB 2017

Certification

STEVEN A. KARAN
No. 6537
REGISTERED PROFESSIONAL ENGINEER (MECHANICAL)

Drawn by AG

Checked by ARV

Revised on

B|E|R
BUILDING ENGINEERING RESOURCES, INC.
66 Main Street
N. Easton, MA 02356
T 508.230.0260
F 508.230.0265
100 Midway Road - Suite 23
Cranston, RI 02920
T 401.942.3500
F 401.228.6205
ber@ber-engineering.com
www.ber-engineering.com

50 Holden Street
Providence, Rhode Island 02908

Phone: (401) 272-1730
Fax: (401) 273-7156

E-mail: rgbinfo@rgb.net
www.rgb.net

RGB architects

Architecture | Project Management | Interior Design

Project

FORT ADAMS MAINTENANCE BUILDING

RIDEM / DIVISION OF PARKS & RECREATION

STATE OF RHODE ISLAND AND PROVIDENCE PLANTATIONS

FORT ADAMS STATE PARK, NEWPORT, RI

Drawing Status

ISSUED FOR CONSTRUCTION

Issued On MAY 29, 2019

Sheet Contents

PLUMBING FLOOR PLANS

Project Number.

Drawing No.

P100

Sheet of

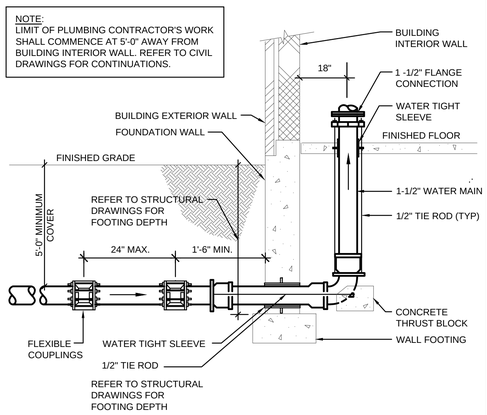

1 WATER ENTRANCE ENTRANCE THRU FLOOR NTS

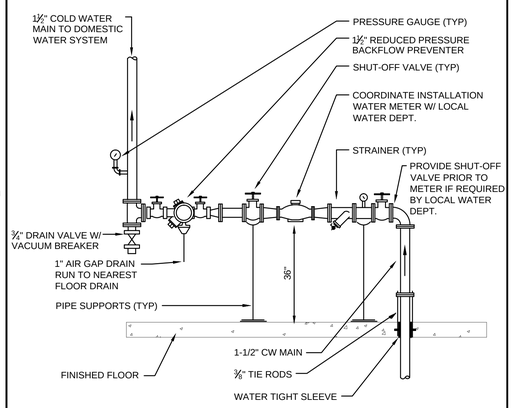

2 DOMESTIC WATER SERVICE NTS

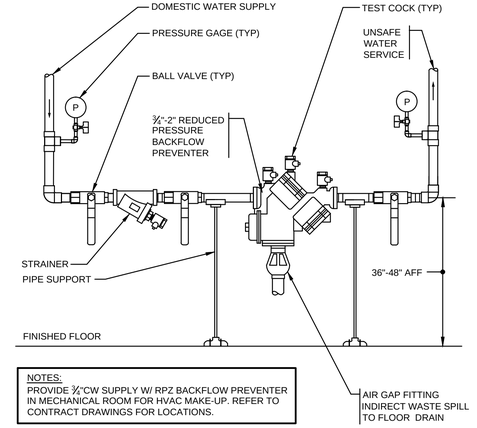

NOTES:
PROVIDE ¾"CW SUPPLY W/ RPZ BACKFLOW PREVENTER IN MECHANICAL ROOM FOR HVAC MAKE-UP. REFER TO CONTRACT DRAWINGS FOR LOCATIONS.

3 REDUCED PRESSURE BACKFLOW PREVENTER NTS

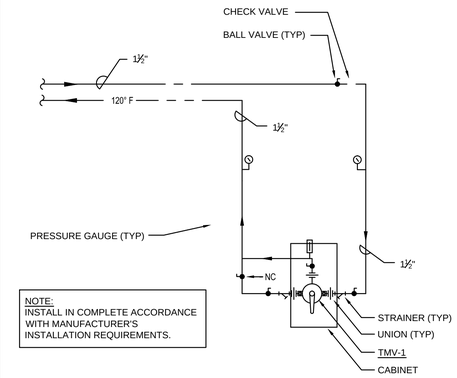

NOTE:
INSTALL IN COMPLETE ACCORDANCE WITH MANUFACTURER'S INSTALLATION REQUIREMENTS.

2 THERMOSTATIC MIXING VALVE ASSEMBLY NTS

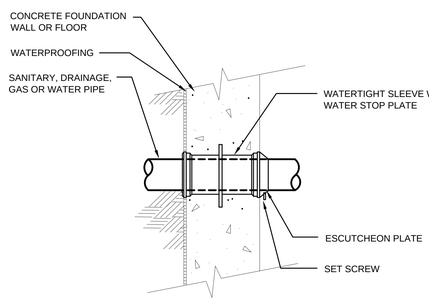

4 EXTERIOR WALL WATER TIGHT SLEEVE NTS

NOTE:
FIRESTOP SEALANTS AND PIPING PENETRATIONS THROUGH FIRE RATED ASSEMBLIES SHALL COMPLY WITH THE UL FIRE RESISTANCE DIRECTORY.

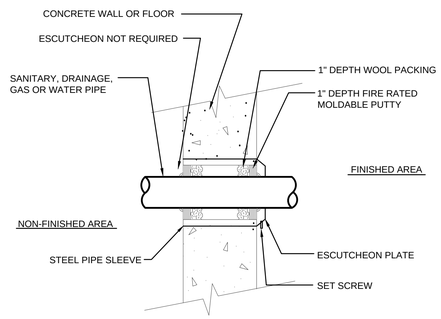

5 MASONRY WALL FIRE RATED SLEEVE NTS

NOTE:
FIRESTOP SEALANTS AND PIPING PENETRATIONS THROUGH FIRE RATED ASSEMBLIES SHALL COMPLY WITH THE UL FIRE RESISTANCE DIRECTORY.

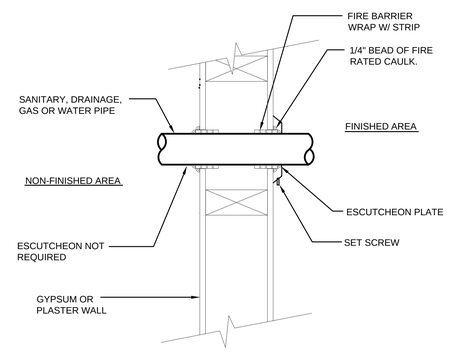

6 STUD WALL FIRE RATED SLEEVE NTS

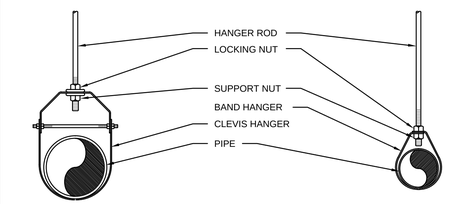

HANGER ROD SCHEDULE	
PIPE SIZE	ROD SIZE
UP TO 2"	3/8" DIA.
2 1/2" & 3"	1/2" DIA.
4" AND 5"	5/8"
6" - 8"	3/4"
10 & 12"	7/8"

HANGER ROD SPACING	
PIPE SIZE	MAX. ALLOWABLE SPACING
1"	7'
1 1/4"	8'
1 1/2"	9'
2"	10'
2 1/2"	11'
3" - 12"	12'

7 CLEVIS-BAND HANGER/ROD INSTALLATION NTS

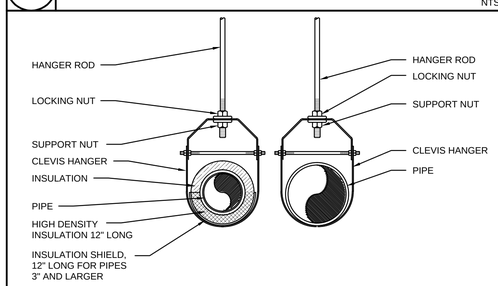

HANGER ROD SCHEDULE	
PIPE SIZE	ROD SIZE
UP TO 2"	3/8" DIA.
2 1/2" THRU 3"	1/2" DIA.
4" AND 5"	5/8"
6" & 8"	3/4"
10" & 12"	7/8"

HANGER ROD SPACING	
PIPE SIZE	MAX. ALLOWABLE SPACING
1"	7'
1 1/4"	8'
1 1/2"	9'
2"	10'
2 1/2"	11'
3"-12"	12'

INSULATED AND NON INSULATED PLUMBING SYSTEMS

8 CLEVIS PIPE HANGER/ROD INSTALLATION NTS

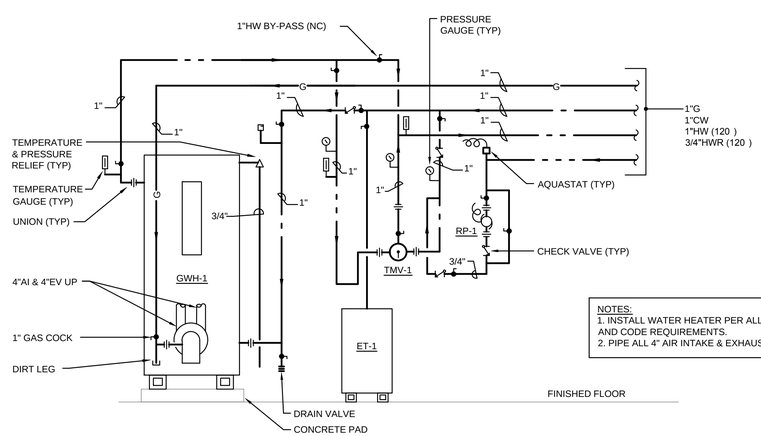

NOTES:
1. INSTALL WATER HEATER PER ALL MANUFACTURER'S AND CODE REQUIREMENTS.
2. PIPE ALL 4" AIR INTAKE & EXHAUST VENT LINES THRU ROOF.

9 GAS FIRED WATER HEATER DIAGRAM NTS

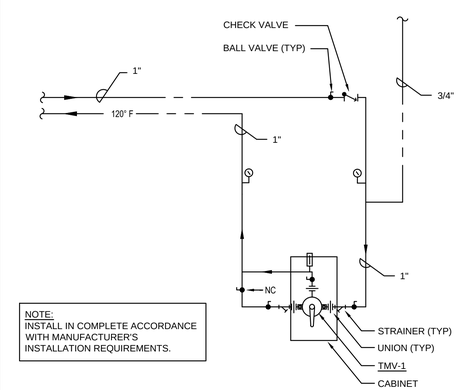

NOTE:
INSTALL IN COMPLETE ACCORDANCE WITH MANUFACTURER'S INSTALLATION REQUIREMENTS.

10 THERMOSTATIC MIXING VALVE ASSEMBLY NTS

This drawing is copyrighted and is subject to copyright protection as an "architectural work" under 17 U. S. C. Sec. 101 et seq. The protection includes but is not limited to the overall form as well as the arrangement and composition of spaces, materials, color and elements in the design. Under such protection, unauthorized use of this drawing may result in the cessation of construction or buildings being seized and/or monetary compensation being awarded to The Robinson Green Beretta Corporation (RGB).

Any reproduction, possession, or use of this drawing or any part thereof without the express written permission of RGB, is prohibited. Violators will be prosecuted to the full extent of the law.

© RGB 2017

Certification

STEVEN A. KARAN
No. 6537
REGISTERED PROFESSIONAL ENGINEER (MECHANICAL)

Drawn by AG

Checked by ARV

Revised on

B|E|R
BUILDING ENGINEERING RESOURCES, INC.
66 Main Street
N. Easton, MA 02356
T 508.230.0260
F 508.230.0265
ber@ber-engineering.com
100 Midway Road - Suite 23
Cranston, RI 02920
T 401.942.3500
F 401.228.6205
www.ber-engineering.com

50 Holden Street
Providence, Rhode Island 02908
Phone: (401) 272-1730
Fax: (401) 273-7156
E-mail: rgbinfo@rgb.net
www.rgb.net
RGB architects
Architecture L Project Management L Interior Design

Project

FORT ADAMS MAINTENANCE BUILDING

RIDEM / DIVISION OF PARKS & RECREATION

STATE OF RHODE ISLAND AND PROVIDENCE PLANTATIONS

FORT ADAMS STATE PARK, NEWPORT, RI

Drawing Status

ISSUED FOR CONSTRUCTION

Issued On MAY 29, 2019

Sheet Contents

PLUMBING DETAILS

Project Number.

Drawing No.

P200

Sheet of

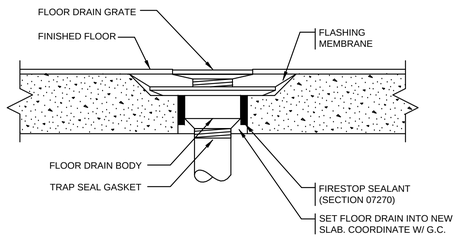

1 FLOOR DRAIN INSTALLATION - NEW SLAB NTS

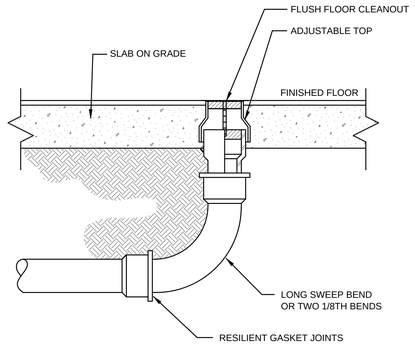

2 END OF RUN FCO INSTALLATION NTS

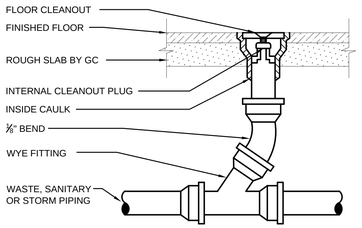

NOTE:
REFER TO CONTRACT SPECIFICATIONS FOR CLEANOUT TYPE

3 IN THE RUN CLEANOUT NTS

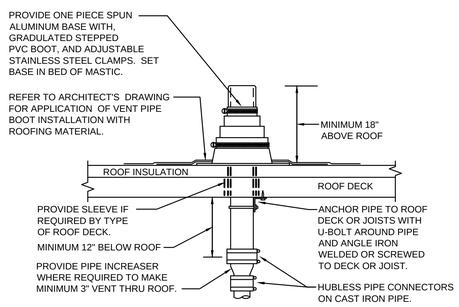

NOTE:
REFER TO PLANS FOR VTR PIPE SIZES AND LOCATIONS. LOCATE VENT THRU ROOF MINIMUM 10-FEET AWAY AND 2-FEET VERTICAL ABOVE ANY BUILDING OPENING OR FRESH AIR INTAKE, AND ONE FOOT FROM ANY VERTICAL SURFACE. PROVIDE 1" FIBERGLASS INSULATION WITH ALL-SERVICE JACKET ON VENT PIPE INSIDE BUILDING WITHIN SIX FEET OF VENT THRU ROOF LOCATION. VERIFY FLASHING AND COUNTER FLASHING WITH ROOFING CONTRACTOR.

4 VENT THRU ROOF DETAIL NTS

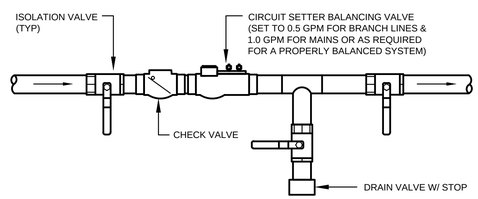

NOTE:
PROVIDE AND INSTALL A BALANCING VALVE ASSEMBLY (BVA) AT EACH DOMESTIC HOT WATER RETURN BRANCH LINE PRIOR TO THE CONNECTION TO THE DOMESTIC HOT WATER RETURN MAIN.

5 BALANCING VALVE ASSEMBLY DETAIL NTS

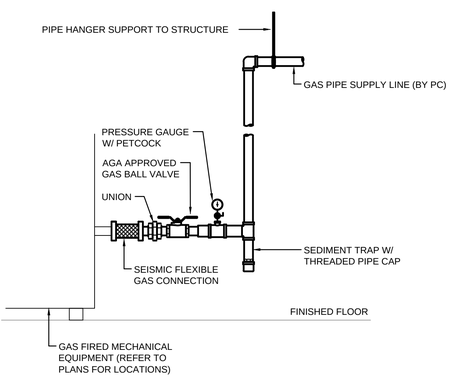

6 GAS FIRED EQUIPMENT PIPING DIAGRAM NTS

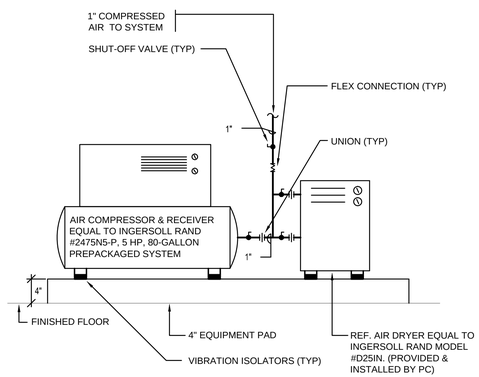

7 AIR COMPRESSOR DIAGRAM NTS

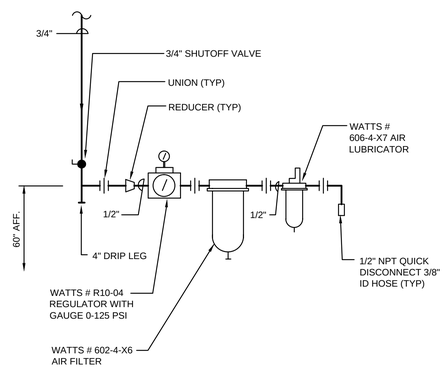

NOTE:
AIR DROPS SHALL BE INSTALLED AT ALL COMPRESSED AIR DROPS. REFER TO PLUMBING PLANS FOR LOCATIONS.

8 AIR DROP DIAGRAM NTS

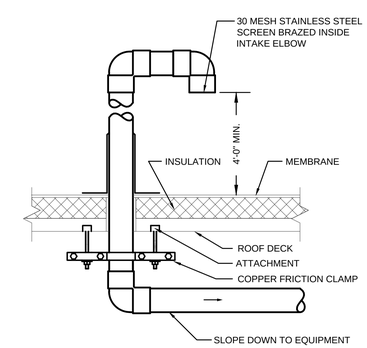

NOTE:
REFER TO EQUIPMENT MANUFACTURER'S INSTALLATION INSTRUCTIONS FOR ADDITIONAL INSTALLATION REQUIREMENTS.

9 FRESH AIR INTAKE THROUGH ROOF NTS

This drawing is copyrighted and is subject to copyright protection as an "architectural work" under 17 U. S. C. Sec. 101 et seq. The protection includes but is not limited to the overall form as well as the arrangement and composition of spaces, materials, color and elements in the design. Under such protection, unauthorized use of this drawing may result in the cessation of construction or buildings being seized and/or monetary compensation being awarded to The Robinson Green Beretta Corporation (RGB).

Any reproduction, possession, or use of this drawing or any part thereof without the express written permission of RGB, is prohibited. Violators will be prosecuted to the full extent of the law.

© RGB 2017

Certification

Drawn by AG

Checked by ARV

Revised on

B|E|R
BUILDING ENGINEERING RESOURCES, INC.
66 Main Street
N. Easton, MA 02356
T 508.230.0260
F 508.230.0265
ber@ber-engineering.com
100 Midway Road - Suite 23
Cranston, RI 02920
T 401.942.3500
F 401.228.6205
www.ber-engineering.com

50 Holden Street
Providence, Rhode Island 02908

Phone: (401) 272-1730
Fax: (401) 273-7156

E-mail: rgbinfo@rgb.net
www.rgb.net

RGB ARCHITECTS

Architecture L Project Management L Interior Design

Project

FORT ADAMS MAINTENANCE BUILDING

RIDEM / DIVISION OF PARKS & RECREATION

STATE OF RHODE ISLAND AND PROVIDENCE PLANTATIONS

FORT ADAMS STATE PARK, NEWPORT, RI

Drawing Status

ISSUED FOR CONSTRUCTION

Issued On MAY 29, 2019

Sheet Contents

PLUMBING DETAILS

Project Number.

Drawing No.

P201

Sheet of

PLUMBING SPECIFICATIONS

I GENERAL

A. GENERAL: THE WORK COVERED CONSISTS OF FURNISHING ALL LABOR AND MATERIALS NECESSARY TO INSTALL, COMPLETE AND READY FOR CONTINUOUS OPERATION, THE PLUMBING SYSTEMS, APPARATUS AND EQUIPMENT FOR THE RIDEM FORT ADAMS MAINTENANCE GARAGE, NEWPORT RI.

B. SHOP DRAWINGS: SHOP DRAWINGS FOR ALL SPECIFIED FIXTURES, EQUIPMENT AND APPARATUS SHALL BE SUBMITTED TO THE ARCHITECT FOR APPROVAL.

C. CODES: ALL EQUIPMENT AND MATERIALS FURNISHED UNDER THE PLUMBING SUB–CONTRACT AND LABOR AND TESTING PERFORMED HEREIN SHALL BE IN COMPLETE ACCORDANCE WITH THE LOCAL & STATE BUILDING, FUEL GAS, PLUMBING CODES, LOCAL ORDINANCES AND REGULATIONS OF THE CITY OR TOWN OF NEWPORT NATIONAL FIRE PROTECTION ASSOCIATION AND INSURANCE REGULATIONS AND REQUIREMENTS GOVERNING SUCH WORK.

D. PERMITS: ANY AND ALL PERMITS REQUIRED FOR INSTALLATION OF ANY MATERIAL SHALL BE OBTAINED AS PART OF THE WORK OF THIS SPECIFICATION INCLUDING ALL FEES OR EXPENSES INCURRED.

E. INSTRUCTIONS: DURING THE ASSEMBLY AND INSTALLATION OF ALL PLUMBING SYSTEMS, THE OWNER'S OPERATING PERSONNEL SHALL BE INSTRUCTED REGARDING ITS OPERATION AND MAINTENANCE. A TWO (2) HOUR INSTRUCTION PERIOD SHALL BE PROVIDED AFTER COMPLETION OF PROJECT. OPERATION AND MAINTENANCE MANUALS SHALL BE REQUIRED.

F. GUARANTEE: ALL MATERIALS AND EQUIPMENT FURNISHED AND INSTALLED UNDER THIS SPECIFICATION SHALL BE GUARANTEED IN WRITING FOR ONE (1) YEAR FROM THE DATE OF ACCEPTANCE OF THE BUILDING BY THE OWNER.

G. RECORD DRAWINGS: THE PLUMBING SUBCONTRACTOR SHALL MAINTAIN AT THE JOB, AT ALL TIMES, A COMPLETE AND SEPARATE SET OF BLACKLINE PRINTS OF THE PLUMBING DRAWINGS OF HIS TRADE ON WHICH HE SHALL MARK CLEARLY, NEATLY, ACCURATELY, AND PROMPTLY AS THE WORK PROGRESSES. TWO CADD DISKS, AUTOCADD RELEASE 14 OR COMPATIBLE SYSTEM AS WELL AS REPRODUCIBLE AS–BUILTS SHALL BE FURNISHED BY THE PLUMBING SUBCONTRACTOR AT THE JOB COMPLETION.

H. INSPECTION: ALL WORK SHALL BE SUBJECT TO THE INSPECTION OF THE OWNER, THE ARCHITECT AND SUCH OTHER INSPECTORS HAVING JURISDICTION. A PROPERLY EXECUTED CERTIFICATE OF INSPECTION SHALL BE PROVIDED.

I. EXAMINATION OF SITE: THE PLUMBING SUBCONTRACTOR, BEFORE SUBMITTING PRICES OR BEGINNING WORK, SHALL THOROUGHLY EXAMINE THE SITE AND CONTRACT DOCUMENTS. NO CLAIM FOR EXTRA COMPENSATION WILL BE RECOGNIZED IF DIFFICULTIES WHICH AN EXAMINATION OF SITE CONDITIONS AND CONTRACT DOCUMENTS PRIOR TO EXECUTING CONTRACT WOULD HAVE REVEALED.

J. COORDINATION: COORDINATE ALL WORK INSTALLED UNDER THIS SPECIFICATION WITH THAT OF ALL OTHER TRADES.

K. PROTECTION OF PROPERTY: PROTECT ALL NEW AND EXISTING WORK BEFORE, DURING AND AFTER INSTALLATION.

L. DISINFECTION: ALL DOMESTIC WATER SYSTEMS SHALL BE DISINFECTED IN ACCORDANCE WITH THE LOCAL PUBLIC HEALTH AND PLUMBING CODE REQUIREMENTS.

M. TESTS: THE PLUMBING SUBCONTRACTOR SHALL PERFORM ALL TESTS AT THE COMPLETION OF THE WORK, AND THE RESULTS FURNISHED TO THE OWNER AND ARCHITECT IN WRITING.

N. CERTIFICATES OF APPROVAL: UPON COMPLETION OF ALL WORK, THE PLUMBING SUBCONTRACTOR SHALL FURNISH, IN DUPLICATE, CERTIFICATES OF INSPECTIONS FROM ALL INSPECTORS AND AUTHORITIES HAVING JURISDICTION, NOTARIZED LETTERS FROM THE MANUFACTURERS STATING THAT AUTHORIZED FACTORY ENGINEERS HAVE INSPECTED AND TESTED THE INSTALLATION OF THEIR RESPECTIVE SYSTEMS AND FOUND SAME TO BE IN PERFECT OPERATING CONDITION.

O. CONTRACT DRAWINGS: THE CONTRACT DRAWINGS ARE DIAGRAMMATIC AND INDICATE ONLY THE GENERAL ARRANGEMENTS OF WORK. IT IS NOT THE INTENT OF THESE DRAWINGS TO SHOW EVERY PIPE, RISE, DROP, ELBOW, ETC. ANY ADDITIONAL WORK NOT SHOWN AND REQUIRED TO INSTALL THE PLUMBING SYSTEMS SHALL BE INCLUDED AS PART OF THIS CONTRACT.

P. REMOVAL WORK: PARTICULAR CARE SHALL BE TAKEN TO AVOID CREATING HAZARDS ON THE SITE OR CAUSING DISRUPTION OF SERVICE IN THE BUILDING. ALL EXISTING EQUIPMENT TO BE REMOVED SHALL BE DONE IN A NEAT AND WORKMANLIKE MANNER. ALL EXISTING EQUIPMENT TO BE TURNED OVER TO THE OWNER SHALL BE PRESENTED TO THE OWNER IN GOOD CONDITION AT A LOCATION DESIGNATED BY THE OWNER. ALL OTHER EQUIPMENT SHALL BE REMOVED FROM THE PREMISES. REMOVE ALL ABANDONED PIPING AND EQUIPMENT NOT BUILT INTO BUILDING CONSTRUCTION. WHERE CEILING OR WALLS ARE REMOVED, ALL ABANDONED PIPING SHALL BE REMOVED AND ENDS OF LIVE SERVICES CAPPED. ABANDONED ELEMENTS BUILT INTO WALLS OR LOCATED ABOVE EXISTING INACCESSIBLE CEILINGS SHALL REMAIN AND ENDS CAPPED AND MARKED ABANDONED.

Q. CONTINUITY OF SERVICES: SERVICES SHALL BE MAINTAINED IN ALL AREAS WHICH WILL BE OCCUPIED DURING THE CONSTRUCTION PERIOD. WHEN AN INTERRUPTION OF SERVICE BECOMES NECESSARY, SUCH SHALL BE MADE ONLY UPON CONSENT OF THE OWNER AT A TIME OUTSIDE NORMAL WORKING HOURS AS HE SHALL DESIGNATE. REFER TO THE OVERALL SCHEDULING OF THE WORK OF THE PROJECT. SCHEDULE WORK TO CONFORM TO THIS SCHEDULE AND INSTALL WORK TO NOT DELAY NOR INTERFERE WITH THE PROGRESS OF THE PROJECT.

R. SEISMIC RESTRAINTS: INSTALLATION OF PLUMBING EQUIPMENT, ACCESSORIES AND COMPONENTS SHALL BE IN ACCORDANCE WITH THE SEISMIC REQUIREMENTS IDENTIFIED IN THE RHODE ISLAND STATE BUILDING CODE, LATEST EDITION.

II. SCOPE

A. THE WORK OF THIS SECTION CONSISTS OF ALL LABOR, MATERIALS AND EQUIPMENT REQUIRED TO PROVIDE ALL PLUMBING WORK COMPLETE, IN PLACE, AS SHOWN ON THE DRAWINGS, SPECIFIED HEREIN AND AS NECESSARY FOR A PROPER INSTALLATION.
B. THE EXTENT OF THE PLUMBING WORK SHALL INCLUDE, BUT NOT BE LIMITED TO THE FOLLOWING:

1. DOMESTIC COLD WATER SYSTEM.
2. DOMESTIC HOT WATER SUPPLY AND HOT WATER RECIRCULATION SYSTEM.
3. NON–POTABLE COLD WATER SYSTEM.
4. NON–POTABLE HOT WATER SUPPLY AND RECIRCULATION SYSTEM.
5. SANITARY WASTE AND VENT SYSTEM.
6. A COMPLETE GAS SYSTEM. THIS SYSTEM SHALL EXTEND AND CONNECT TO THE HOUSE SIDE OF THE METER PROVIDED BY THE UTILITY COMPANY.
7. ALTERATIONS, ADDITIONS AND/OR REMOVAL OF EXISTING PLUMBING SYSTEMS AND FIXTURES WITHIN THE RENOVATED AREA IN ORDER TO CONFORM TO NEW SPACE REQUIREMENTS.
8. INSTALLATION OF TOILET ROOM ACCESSORIES.
9. CORE DRILLING.
10. INSULATION OF ALL COLD WATER, HOT WATER, HOT WATER RECIRCULATION AND CONDUCTORS SYSTEMS PIPING, VALVES AND FITTINGS. WHEN CONNECTING TO EXISTING INSULATED SYSTEMS PROVIDE NEW INSULATION FOR THREE FEET ON EITHER SIDE OF THE NEW CONNECTION.
11. FURNISHING OF ACCESS PANELS.

III RELATED WORK

A. THE FOLLOWING EQUIPMENT ITEMS AND WORK SHALL BE THE RESPONSIBILITY OF OTHERS:
1. CUTTING AND PATCHING
2. TEMPORARY WATER, HEAT, FIRE PROTECTION AND TOILET FACILITIES
3. TEMPORARY POWER AND LIGHTING
4. EXCAVATION AND BACKFILL
5. CONCRETE AND MASONRY SUPPORTS AND EQUIPMENT BASES
6. FLASHING AND CAULKING
7. FINISH PAINTING
8. HEATING, VENTILATING AND AIR CONDITIONING
9. FIRE PROTECTION
10. ELECTRICAL POWER AND WIRING
11. FURNISHING OF TOILET ROOM ACCESSORIES
12. INSTALLATION OF ACCESS PANELS
13. FOUNDATIONS AND TRENCHING
14. ELECTRIC HEAT TRACING

IV MATERIALS

A. PIPE AND FITTINGS

1. TYPE A: (EXTERIOR WATER SERVICE, 2" AND SMALLER)

TYPE K SOFT ANNEALED COPPER TUBING, ONE (1) PIECE WITH NO JOINTS BETWEEN THE CONNECTION TO THE EXTERIOR WATER SUPPLY AND THE FIRST FITTING WITHIN THE BUILDING. FITTINGS SHALL BE WROUGHT COPPER JOINED WITH A SILVER BRAZING FILLER.

2. TYPE B: (COLD WATER INSIDE BURIED)

TYPE K HARD DRAWN COPPER TUBING WITH WROUGHT COPPER SWEAT FITTINGS JOINED WITH APPROVED 95/5 LEAD FREE TIN ANTIMONY SOLDER.

3. TYPE C: (POTABLE AND NON–POTABLE WATER)

TYPE L HARD DRAWN COPPER TUBING WITH WROUGHT COPPER SWEAT FITTINGS JOINED WITH APPROVED 95/5 LEAD FREE TIN ANTIMONY SOLDER.

4. TYPE D: (SANITARY, WASTE AND VENT, STORM)

NO HUB CAST IRON SOIL PIPE AND FITTINGS JOINED WITH APPROVED STAINLESS STEEL MECHANICAL COUPLINGS WITH NEOPRENE GASKETS.

5. TYPE E: (SANITARY, WASTE AND VENT, STORM, INSIDE BURIED)

SERVICE WEIGHT BELL AND SPIGOT CAST IRON SOIL PIPE AND FITTINGS JOINED WITH OIL FREE OAKUM AND LEAD.

6. TYPE F: (SANITARY, WASTE AND VENT, STORM, INSIDE BURIED)

SERVICE WEIGHT BELL AND SPIGOT CAST IRON SOIL PIPE AND FITTINGS JOINED WITH NEOPRENE RESILIENT GASKETS.

7. TYPE G: (WASTE AND VENT SMALLER THAN 2")

TYPE DWV HARD DRAWN SEAMLESS COPPER TUBING WITH WROUGHT COPPER DRAINAGE FITTINGS JOINED WITH 95/5 LEAD FREE TIN ANTIMONY SOLDER.

8. TYPE H: (VENTS)

SCHEDULE 40 GALVANIZED STEEL PIPE WITH GALVANIZED CAST IRON DRAINAGE FITTINGS JOINED WITH THREADED CONNECTIONS.

9. TYPE I: (GAS 2" AND SMALLER)

SCHEDULE 40 BLACK STEEL PIPE WITH STANDARD WEIGHT MALLEABLE IRON FITTINGS JOINED WITH THREADED CONNECTIONS.

10. TYPE J: (SANITARY, WASTE AND VENT, STORM)

SOLID CORE SCHEDULE 40 DWV PVC PLASTIC PIPE AND FITTINGS JOINED BY SOLVENT WELDING IF APPROVED BY OWNER. CELLULAR (FOAM) CORE PVC PIPING SHALL NOT BE INSTALLED.

11. TYPE K: (AIR INTAKE & EXHAUST VENT)

COMPONENTS COMING IN DIRECT CONTACT WITH PRODUCTS OF COMBUSTION SHALL CARRY TO APPROPRIATE UL OR ULC. PVC, CPVC, PPS POLYPROPYLENE SHALL BE ULC–S636 CERTIFIED AND CODE APPROVED FOR USE AS A FLUE GAS VENT SYSTEM.

12. TYPE L: (COMPRESSED AIR)

TYPE L HARD DRAWN COPPER TUBING WITH WROUGHT COPPER SWEAT FITTINGS JOINED WITH APPROVED 95/5 LEAD FREE TIN ANTIMONY SOLDER.

13. URINAL BRANCH AND FIXTURES WASTES SHALL BE OF SERVICE WEIGHT CAST IRON SOIL PIPE AND FITTINGS WITH CAULKED JOINTS, THREADED CAST IRON PIPE WITH CAST IRON DRAINAGE FITTINGS, OR IRON SIZE COPPER OR BRASS PIPE WITH CAST BRASS DRAINAGE FITTINGS. RESILIENT GASKETS SHALL NOT BE USED ON URINAL WASTES.

14. PIPE AND FITTINGS SHALL BE IN ACCORDANCE WITH THE FOLLOWING:

a. EXTERIOR WATER SERVICE TYPE A
b. COLD WATER INSIDE BURIED TYPE B
c. COLD WATER TYPE C
d. HOT WATER SUPPLY TYPE C
e. TEMPERED WATER TYPE C
f. SANITARY WASTE AND VENT INSIDE BURIED TYPE E & F
g. SANITARY WASTE AND VENT TYPE D, E & F
h. WASTE AND VENT SMALLER THAN 2" TYPE D, G & H
i. GAS 2" AND SMALLER TYPE I
j. WATER HEATER RELIEF VALVE DISCHARGE TYPE G
k. WATER HEATER SAFE PAN DISCHARGE TYPE G
l. SANITARY FROM LAST BUILDING CLEANOUT TO 10'–0" BEYOND FOUNDATION WALL TYPE
m. GAS VENTS TYPE K
n. AIR INTAKE PIPING TYPE K
o. EXHAUST VENT TYPE K
p. COMPRESSED AIR TYPE L

B. INSULATION

1. ALL DOMESTIC COLD AND HOT WATER SUPPLY AND RECIRCULATION PIPE, FITTINGS AND VALVES SHALL BE INSULATED WITH HEAVY DENSITY RIGID FIBERGLASS WITH A VAPOR BARRIER AND ALL PURPOSE JACKET WITH SELF–SEALING LAP JOINT. VALVES AND FITTINGS SHALL BE INSULATED WITH ZESTON HI–LO INSULATION AND COVERED WITH 25/50 RATED PVC COVERS SECURED WITH VAPOR RETARDER MASTIC.
2. ALL HORIZONTAL ROOF DRAINAGE PIPE, ROOF DRAIN BODIES AND THE BEND INTO VERTICAL POSITION SHALL BE INSULATED IN THE MANNER DESCRIBED FOR COLD AND HOT WATER.
3. WASTE, COLD WATER AND HOT WATER BENEATH HANDICAPPED LAVATORIES SHALL BE INSULATED WITH BROCAR PRODUCTS SERIES 500 INSULATION KIT FOR P TRAP ASSEMBLY AND HOT WATER AND COLD WATER ANGLE VALVE ASSEMBLY. KIT SHALL BE WHITE FLEXIBLE VINYL INSULATION SECURED WITH NYLON FASTENERS SUPPLIED, FOAM INSERTS, ANTIMICROBIAL.
4. INSULATION THICKNESS SHALL BE AS FOLLOWS:

COLD WATER = ½"
HOT WATER SUPPLY UP TO 4" = 1"
HOT WATER SUPPLY LARGER THAN 4" = 1–1/2"

C. PIPE SLEEVES, HANGERS AND SUPPORTS

1. ALL PIPING SHALL BE PROPERLY SUPPORTED FROM THE BUILDING STRUCTURE IN ACCORDANCE WITH LOCAL CODES AND MANUFACTURER'S RECOMMENDATIONS. HANGERS FOR INSULATED PIPING SHALL BE OVERSIZED AND FURNISHED WITH A SHEETMETAL INSULATION SHIELD TO ALLOW THE INSULATION TO PASS THROUGH UNCUT. PROVIDE SCHEDULE 40 PIPE SLEEVES, EXTEND 1 INCH ABOVE FLOOR, MAKE WATERTIGHT AND PACK WITH MATERIAL THAT SHALL MAINTAIN FIRE RATING. PROVIDE CORE DRILLING WHERE REQUIRED AND PROVIDE FIRE RATED LINK SEAL PENETRATION CLOSURES.

D. VALVES

1. ALL SHUT OFF VALVES ON COLD WATER, HOT WATER, AND HOT WATER RECIRCULATION PIPING FROM ¾ INCH UP TO AND INCLUDING 2 INCH SHALL BE APOLLO SERIES 77–200, SOLDER END, BRONZE BODY BALL VALVE, CHROME–PLATED BRONZE BALL, 600 PSI WOG, FULL PORT BALL VALVE.
2. ALL SHUT OFF VALVES ON COLD WATER, HOT WATER AND HOT WATER RECIRCULATION PIPING ½ INCH, 2–1/2 INCH AND 3 INCH SHALL BE APOLLO SERIES 70–200, SOLDER END, BRONZE BODY BALL VALVE, CHROME–PLATED BRONZE BALL, 600 PSI WOG.
3. ALL SHUT OFF VALVES ON COLD WATER, HOT WATER AND HOT WATER RECIRCULATION PIPING LARGER THAN THREE INCHES SHALL BE NIBCO FIGURE NO. F–617–O, FLANGED ENDS, IRON BODY BRONZE MOUNTED, SOLID WEDGE, INSIDE SCREW, NON–RISING STEM, 200 PSI WOG.
4. ALL CHECK VALVES ON COLD WATER, HOT WATER AND HOT WATER RECIRCULATION PIPING THREE INCHES AND LESS IN SIZE SHALL BE NIBCO FIGURE NO. S–413–W, SOLDER END, BRONZE BODY SWING CHECK, BRONZE DISC, 200 PSI WOG.
5. ALL DRAIN VALVES SHALL BE ½ INCH APOLLO MODEL 78–103 WITH WATTS NO. 8A HOSE CONNECTION VACUUM BREAKER, CAP WITH CHAIN OF LENGTH AS REQUIRED.
6. ALL SHUT–OFF VALVES ON NATURAL GAS SYSTEM 2 INCHES AND SMALLER SHALL BE APOLLO SERIES 70–100–07 MASSACHUSETTS APPROVED, THREADED BRONZE BALL VALVE, 600 PSI WOG. ALL SHUTOFF VALVES ON NATURAL GAS SYSTEMS 2–1/2 INCHES AND LARGER SHALL BE ROCKWELL FIG. 143, SEMI–STEEL, LUBRICATED PLUG VALVES, FLANGED ENDS, WRENCH OPERATED, 200 PSI WOG.
7. ALL GATE (AIR) VALVES 2–1/2 INCHES AND SMALLER SHALL BE 125# CLASS, ALL BRONZE, RISING STEM, SOLID DISC, SOLDERED BONNET, SOLID DISC, SOLDER END MILWAUKEE 148, JENKINS. ALL GATE (AIR) VALVES 3 INCHES AND LARGER SHALL BE 125# CLASS, IRON BODY, OS&Y BRONZE MOUNTED, FLANGED ENDS. MILWAUKEE F–2885–M, JENKINS 651–C. ALL CHECK (AIR) VALVES 2–1/2 INCHES AND SMALLER SHALL BE 200 PSI WORKING PRESSURE, ALL BRONZE, BRONZE DISC, SOLDER ENDS, MILWAUKEE 509, JENKINS 4093, STOCKHAM B–309. ALL CHECK (AIR) VALVES 3 INCHES AND LARGER SHALL BE 200 PSI WORKING PRESSURE, IRON BODY, BRONZE MOUNTED, FLANGED. MILWAUKEE F–2974–M, JENKINS 624–C, STOCKHAM G–931. ALL BALL (AIR) VALVES 2–1/2 INCHES AND SMALLER SHALL BE 3–PIECE, ALL BRONZE, FULL PORT, PTFE SEATS THREAD END, 4–BOLT 600 PSI CW WORKING PRESSURE. MILWAUKEE BA–300, APOLLO 82–200, WATTS B–6801. ALL BALL (AIR) VALVES 3 INCHES AND LARGER SHALL BE 150# CLASS, CARBON STEEL BODY, STAINLESS STEEL BALL AND STEM, TEFLON SEAT AND SEAL, FLANGED. JAMESBURY 5150–31–22. ALL DRAIN (AIR) VALVES SHALL BE 600 WOG BRONZE BALL VALVE, SWT x ¾" HOSE, WITH GASKETED CAP AND CHAIN. MILWAUKEE BA–100–4, APOLLO 78–100–01.
8. ALL BALL VALVES FOR INSTALLATION IN INSULATED PIPING SHALL HAVE VALVE EXTENSIONS TO SUIT INSULATION THICKNESS.
9. BACKFLOW PREVENTERS 2 INCHES AND SMALLER SHALL BE REDUCED PRESSURE PRINCIPLE, ALL BRONZE, WATTS SERIES U–009–QTS FOR COLD WATER AND HOT WATER INCLUDING BRONZE STRAINER, VALVES, AIR GAP FITTINGS TEST COCKS AND SPARE PARTS KIT. BACKFLOW PREVENTER LARGER THAN 2 INCHES SHALL BE WATTS SERIES 909 OR SERIES 909HW INCLUDING STRAINER, VALVES, AIR GAP FITTINGS TEST COCKS AND SPARE PARTS KIT. EACH BACKFLOW PREVENTER AND SHUTOFF VALVES SHALL BE INSTALLED BETWEEN 3 AND 4 FEET ABOVE THE FLOOR AND A MINIMUM OF 12 INCHES FROM ANY WALL. SUPPORT THE ASSEMBLY FROM THE FLOOR OR THE WALL. RUN VENT TO NEAREST FLOOR DRAIN OR SIMILAR OPEN RECEPTOR. PRESSURE GAUGES SHALL BE INSTALLED ON THE SUPPLY AND DISCHARGE SIDE OF EACH BACKFLOW PREVENTER ASSEMBLY. EACH PRESSURE GAUGE ASSEMBLY SHALL INCLUDE TRERICE 600–C GAUGE, 0–160 PSI DIAL RANGE, 735–2 VALVE AND 872–1 SNUBBER. FURNISH TO THE OWNER ONE WATTS TK–9 MODEL A TEST KIT. THIS CONTRACTOR SHALL ACT AS THE OWNER'S AGENT IN SEEKING APPROVAL FROM THE DEPARTMENT OF ENVIRONMENTAL PROTECTION OR THEIR DESIGNEE. THIS CONTRACTOR SHALL SUBMIT ALL PLANS, SPECIFICATIONS, AND APPLICATIONS REQUIRED FOR APPROVAL AND SHALL PAY ALL FEES. APPROVALS SHALL BE SECURED PRIOR TO THE PURCHASE AND INSTALLATION OF BACKFLOW PREVENTERS. TEST AND CERTIFY BACKFLOW PREVENTER.

E. FLOOR DRAINS

1. FLOOR DRAINS SHALL BE CAST IRON BODY WITH WEEPHOLES AND FLASHING COLLAR. GRATES SHALL BE POLISHED CHROME–PLATED BRASS IN FINISHED AREAS AND COATED CAST IRON IN UNFINISHED AREAS.

F. WALL HYDRANTS

1. WALL HYDRANTS SHALL BE ALL BRONZE, NON–FREEZE TYPE, POLISHED BRASS FACE, LOOSE KEY OPERATED WITH INTEGRAL VACUUM BREAKER BACKFLOW PREVENTER.
2. HYDRANTS SHALL BE SET 18 INCHES ABOVE OUTSIDE GRADE AND NOT MORE THAN 100 FEET APART.

G. WATER HEATER

1. GWH–1: PROVIDE EQUIPMENT MANUFACTURED BY STATE, A.O. SMITH, HTP OR OWNER APPROVED EQUAL WHICH MEETS ALL SPECIFICATIONS AS FOLLOWS:

a. GENERAL: NATURAL GAS WATER HEATER SHALL BE STATE SUF60 120 NE OR EQUAL, MINIMUM 95% THERMAL EFFICIENCY, A STORAGE CAPACITY OF 60 GALLONS, AN RATING OF 120,000 BTUS PER HOUR, A RECOVERY RATING OF 138 GALLONS PER HOUR (GPH) AT 100°F RISE AND A MAXIMUM HYDROSTATIC WORKING PRESSURE OF 160 PSI. WATER HEATER(S) SHALL:

1. MODULATING GAS BURNER THAT AUTOMATICALLY ADJUSTS THE INPUT BASED ON DEMAND;
2. POWERED ANODES THAT ARE NON SACRIFICIAL AND MAINTENANCE FREE;
3. HAVE SEAMLESS GLASS–LINED STEEL TANK CONSTRUCTION, WITH GLASS LINING APPLIED TO ALL WATER–SIDE SURFACES AFTER THE TANK HAS BEEN ASSEMBLED AND WELDED;
4. MEETS THE THERMAL EFFICIENCY AND/OR STANDBY LOSS REQUIREMENTS OF THE U. S. DEPARTMENT OF ENERGY AND CURRENT EDITION OF ASHRAE/IES 90.1;
5. HAVE FOAM INSULATION AND A CSA CERTIFIED AND ASME RATED T&P RELIEF VALVE;
6. HAVE A DOWN–FIRED POWER BURNER DESIGNED FOR PRECISE MIXING OF AIR AND GAS FOR OPTIMUM EFFICIENCY, REQUIRING NO SPECIAL CALIBRATION ON START–UP;
7. BE APPROVED FOR 0" CLEARANCE TO COMBUSTIBLES ON SIDES AND REAR AND 1 1/2" ON TOP.

b. THE CONTROL SHALL BE AN INTEGRATED SOLID–STATE TEMPERATURE AND IGNITION CONTROL DEVICE WITH INTEGRAL DIAGNOSTICS, GRAPHICAL USER INTERFACE, FAULT HISTORY DISPLAY, AND SHALL HAVE DIGITAL TEMPERATURE READOUT.

c. ALL MODELS ARE DESIGN CERTIFIED BY UNDERWRITERS LABORATORIES (UL), INC., ACCORDING TO ANSI Z21.10.3 – CSA 4.3 STANDARDS GOVERNING STORAGE TYPE WATER HEATERS; 2. MEET THE THERMAL EFFICIENCY AND STANDBY LOSS REQUIREMENTS OF THE U. S. DEPARTMENT OF ENERGY AND CURRENT EDITION ASHRAE/IES 90.1. COMPLIES WITH SCAQMD RULE 1146.2 AND OTHER AIR QUALITY MANAGEMENT DISTRICTS WITH SIMILAR REQUIREMENTS FOR LOW NOX EMISSIONS.

d. FOR STANDARD POWER VENTING: WATER HEATER(S) SHALL BE SUITABLE FOR STANDARD POWER VENTING USING A 4" DIAMETER APPROVED PIPE FOR A TOTAL DISTANCE OF 120 FT. EQUIVALENT FEET OF VENT PIPING. FOR POWER DIRECT VENTING: WATER HEATER(S) SHALL BE SUITABLE FOR POWER DIRECT VENTING USING A 4" DIAMETER APPROVED PIPE.

e. INSTALL ALL EQUIPMENT IN STRICT ACCORDANCE WITH MANUFACTURER'S INSTALLATION INSTRUCTIONS SHIPPED WITH THE EQUIPMENT AND/ OR CONTAINED IN THE INSTALLATION BROCHURES AND SUBMITTAL DATA. ALL INSTALLATION SHEETS SHALL BE SAVED AND MADE AVAILABLE TO THE ENGINEER AND OWNER FOR INSPECTION PURPOSES. AT THE END OF THE JOB, INCLUDE THESE SHEETS IN ONE OF THE MAINTENANCE MANUALS.

f. INSTALL ALL ACCESSORIES SHIPPED WITH THE EQUIPMENT IN LIKE MANNER AS ABOVE. PROVIDE ALL NECESSARY INCIDENTALS REQUIRED FOR PROPER INSTALLATION AS MAY BE REQUIRED BY THE MANUFACTURER FOR THEIR GUARANTEES.

H. PLUMBING FIXTURES

1. REFER TO PLUMBING FIXTURE SCHEDULE ON P001 FOR DETAILS.

2. IN GENERAL, ALL PLUMBING FIXTURES SHALL BE WALL HUNG, WHITE VITREOUS CHINA WITH CHROME–PLATED FAUCETS, STOPS AND TRAPS. ALL SUPPLY STOP VALVES SHALL BE BRASS BODY AND STEM AND HAVE THREADED OR SWEAT SOLDER INLET. PROVIDE WALL ESCUTCHEONS. FIXTURES AND TRIM SHALL BE OF THE SAME MANUFACTURER SIMILAR TO TOTO, ELJER OR AMERICAN STANDARD.

3. FIXTURES DESIGNATED FOR BARRIER FREE USE SHALL BE MOUNTED IN ACCORDANCE WITH THE AMERICANS WITH DISABILITIES ACT (ADA) AS WELL AS STATE AND LOCAL CODES. WATER CLOSET FLUSH VALVES SHALL BE MOUNTED ON THE WIDE SIDE OF THE TOILET AREAS.

4. ALL LAVATORY CONTROLS, WHERE APPLICABLE, SHALL BE ADJUSTED BY INSTALLING PLUMBER PRIOR TO THE FINAL INSPECTION. CONTROLS SHALL BE SET TO DELIVER WATER AT A MAXIMUM TEMPERATURE OF 110 DEGREES F. PROVIDE POINT–OF–USE MIXING VALVE AS REQUIRED TO MEET CODE.

I. PIPE IDENTIFICATION AND VALVE TAGS

1. ALL PLUMBING SYSTEMS SHALL BE LABELED AT EACH VALVE, AT EACH BRANCH, AT EACH PIPE PASSAGE THROUGH WALL AND AT INTERVALS OF NOT MORE THAN 20 FEET WITH COLOR CODED SEMI–RIGID SETMARK PIPE MARKERS WITH ARROWS INDICATING THE DIRECTION OF FLOW. ALL VALVES SHALL BE TAGGED WITH 1–1/2 INCH DIAMETER BRASS TAGS AND NUMBERED IN SEQUENCE FROM POINT OF ORIGIN. VALVE CHARTS SHALL BE PLACED UNDER GLASS, FRAMED AND PRESENTED TO THE OWNER.

J. CLEANOUTS

1. CLEANOUTS SHALL BE IRON BODY WITH HEAVY BRASS PLUG AND RAISED NUT, SAME SIZE AS PIPE FOR PIPING UP TO FOUR INCHES AND NOT LESS THAN FOUR INCHES IN SIZE FOR PIPING LARGER THAN FOUR INCHES AND CLOSED GAS TIGHT. FLOOR CLEANOUTS IN CARPETED AREAS SHALL HAVE CARPET CLEANOUT MARKERS. FLOOR CLEANOUTS SHALL NOT BE LOCATED BENEATH PARTITIONS, CASEWORK, NON–PORTABLE EQUIPMENT OR SIMILAR INSTALLATION CONDITIONS. END CLEANOUTS ON NO HUB CAST IRON SHALL BE JOSAM SERIES 58900–20. END CLEANOUTS ON COPPER WASTE SHALL BE NIBCO 816. FLUSH FLOOR CLEANOUT SHALL BE JOSAM SERIES 56000–2–22–41 IN CONCRETE FLOORS. THE LAST FLUSH FLOOR CLEANOUT BEFORE EXITING THE BUILDING SHALL BE JOSAM SERIES 56010–2–22–41. EXPOSED DANDY CLEANOUTS ON NO HUB CAST IRON SHALL BE JOSAM SERIES 58910–20. WALL CLEANOUTS AND CONCEALED DANDY CLEANOUTS ON NO HUB CAST IRON SHALL BE JOSAM SERIES 58910–19 WITH SERIES 58890 CLEANOUT PLUG WITH CENTER SCREW LENGTH AS REQUIRED. END CLEANOUTS ON POLYPROPYLENE PIPING SHALL BE FUSEAL FITTING CLEANOUT ADAPTER WITH THREADED PLUG.

K. WATER HAMMER ARRESTORS (SHOCK ABSORBERS)

1. MAINTENANCE–FREE WATER HAMMER ARRESTORS SHALL BE FURNISHED AND INSTALLED IN ACCESSIBLE LOCATIONS AT ALL LOCATIONS IN THE WATER SYSTEMS WHERE QUICK ACTING VALVES ARE INSTALLED AS WELL AS WHEREVER HAMMER MAY OCCUR.
2. WATER HAMMER ARRESTORS SHALL BE SIMILAR TO THE FOLLOWING JAY R. SMITH MODEL NUMBERS. SIZING AND PLACEMENT SHALL BE IN ACCORDANCE WITH PDI STANDARD PDI–WH–201 AND THE MANUFACTURER'S RECOMMENDATIONS.

TYPE	FIXTURE UNIT RATINGS	MODEL
SA–A	1–11	JAY R. SMITH 5005
SA–B	12–32	JAY R. SMITH 5010
SA–C	33–60	JAY R. SMITH 5020

L. ACCESS PANELS

FURNISH ACCESS PANELS FOR ACCESS TO ALL CONCEALED PARTS OF THE PLUMBING SYSTEMS THAT REQUIRE ACCESSIBILITY FOR THE PROPER OPERATION AND MAINTENANCE OF THE SYSTEM. SIZE SHALL BE SUFFICIENT FOR THE PURPOSE, BUT NO LESS THAN 12 INCHES BY 18 INCHES. ACCESS DOORS SHALL BE PRIME COATED OF RUST INHIBITIVE PAINT, CONTINUOUS HINGE AND MANUFACTURED BY INLAND STEEL PRODUCTS COMPANY MILCOR.

This drawing is copyrighted and is subject to copyright protection as an "architectural work" under 17 U. S. C. Sec. 101 et seq. The protection includes but is not limited to the overall form as well as the arrangement and composition of spaces, materials, color and elements in the design. Under such protection, unauthorized use of this drawing may result in the cessation of construction or buildings being seized and/or monetary compensation being awarded to The Robinson Green Beretta Corporation (RGB).

Any reproduction, possession, or use of this drawing or any part thereof without the express written permission of RGB, is prohibited. Violators will be prosecuted to the full extent of the law.

© RGB 2017

Certification

STEVEN A. KARAN
No. 6537
REGISTERED PROFESSIONAL ENGINEER (MECHANICAL)

Drawn by AG
Checked by ARV

Revised on

BER
BUILDING ENGINEERING RESOURCES, INC.
66 Main Street
N. Easton, MA 02356
T 508.230.0260
F 508.230.0265
ber@ber-engineering.com
100 Midway Road - Suite 23
Cranston, RI 02920
T 401.942.3500
F 401.228.6205
www.ber-engineering.com

50 Holden Street
Providence, Rhode Island 02908
Phone: (401) 272-1730
Fax: (401) 273-7156
E-mail: rgbinfo@rgb.net
www.rgb.net
RGB architects
Architecture L Project Management L Interior Design

Project

FORT ADAMS MAINTENANCE BUILDING

RIDEM / DIVISION OF PARKS & RECREATION

STATE OF RHODE ISLAND AND PROVIDENCE PLANTATIONS

FORT ADAMS STATE PARK, NEWPORT, RI

Drawing Status

ISSUED FOR CONSTRUCTION

Issued On MAY 29, 2019

Sheet Contents

PLUMBING SPECIFICATIONS

Project Number.

Drawing No.

P300

Sheet of

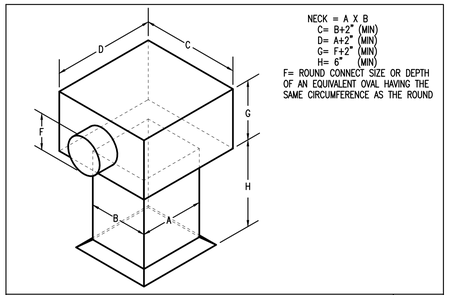

NECK = A X B
C= B+2" (MIN)
D= A+2" (MIN)
G= F+2" (MIN)
H= 6" (MIN)
F= ROUND CONNECT SIZE OR DEPTH OF AN EQUIVALENT OVAL HAVING THE SAME CIRCUMFERENCE AS THE ROUND

SPQUARE DIFFUSER CONNECTION BOOT DETAIL | NTS

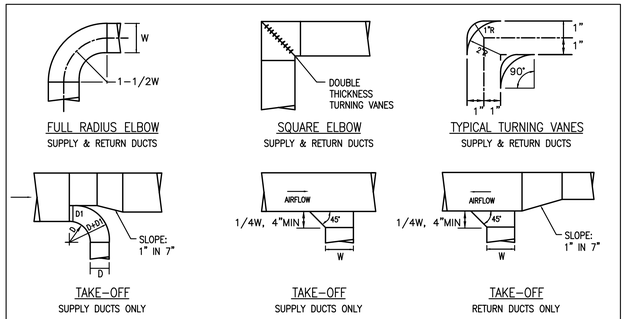

TYPICAL DUCT ELBOWS AND TAKE-OFFS DETAIL | NTS

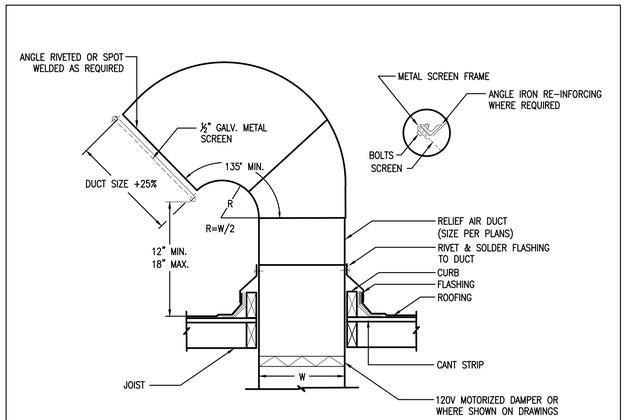

GOOSENECK DETAIL | NTS

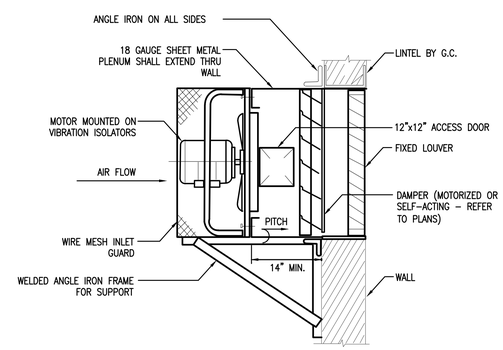

SIDEWALL PROPELLER FAN DETAIL | NTS

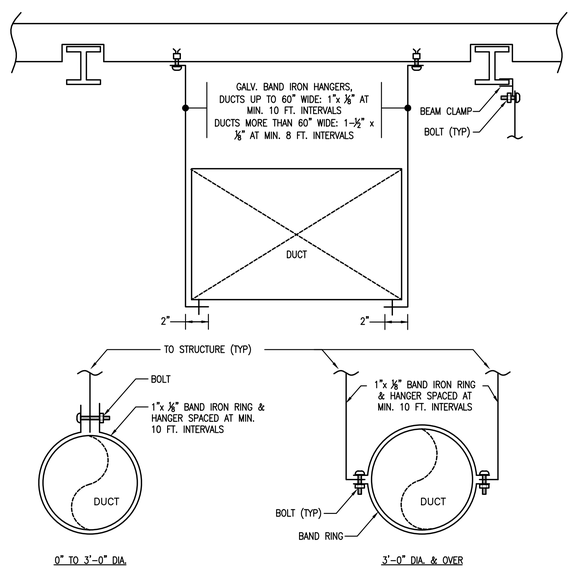

STANDARD DUCTWORK HANGING DETAIL | NTS

GENERAL MECHANICAL NOTES

1. MECHANICAL EQUIPMENT AND SUCH OTHER APPARATUS AS MAY REQUIRE MAINTENANCE AND OPERATION FROM TIME TO TIME SHALL BE MADE EASILY ACCESSIBLE. ALTHOUGH THE EQUIPMENT MAY BE SHOWN ON THE DRAWINGS IN CERTAIN LOCATIONS, THE CONSTRUCTION MAY DISCLOSE THAT SUCH LOCATIONS DO NOT MAKE ITS POSITION READILY ACCESSIBLE. IN SUCH CASES, THE OWNER OR HIS REPRESENTATIVE SHALL BE NOTIFIED BEFORE ADVANCING THE CONSTRUCTION TO A STAGE WHERE A CHANGE WILL REFLECT ADDITIONAL EXPENSE.

2. THE DRAWINGS SHOW THE LAYOUT OF THE MECHANICAL SYSTEMS AND INDICATE THE APPROXIMATE LOCATIONS OF DUCTWORK, PIPING, BRANCHES AND ELBOWS, AND EQUIPMENT. THE RUNS AND QUANTITY OF DUCTWORK, PIPING, OFFSETS AND ELBOWS AS SHOWN ON THE DRAWINGS ARE DIAGRAMMATIC ONLY. THE EXACT ROUTING OF QUANTITY DUCTWORK, PIPING, OFFSETS AND ELBOWS SHALL BE DETERMINED BY THE STRUCTURAL CONDITIONS, POSSIBLE OBSTRUCTIONS AND COORDINATION DRAWINGS. THIS SHALL NOT BE CONSTRUED TO MEAN THAT THE DESIGN OF THE SYSTEMS MAY BE CHANGED, BUT REFERS ONLY TO EXACT RUNS BETWEEN GIVEN POINTS.

3. IT SHALL BE THE RESPONSIBILITY OF THE HVAC CONTRACTOR TO STUDY ALL DRAWINGS AND DETAILS SO THAT THE INSTALLATION OF ALL NEW WORK CAN BE FULLY COORDINATED. COORDINATE WITH ALL TRADES TO AVOID INTERFERENCE OF EQUIPMENT.

4. HVAC WORK IS INDICATED DIAGRAMMATICALLY. EXACT LOCATION OF ALL COMPONENTS ARE TO BE DETERMINED IN THE FIELD AND BY THE ACTUAL BUILDING CONDITIONS. EQUIPMENT, DUCTS OR PIPES INTERFERING WITH OTHER INSTALLATIONS SHALL BE RELOCATED AS REQUIRED.

5. HVAC CONTRACTOR SHALL COORDINATE ALL WALL, CEILING, FLOOR, ROOF AND BEAM PENETRATIONS WITH ARCHITECT AND STRUCTURAL ENGINEER.

6. PRODUCTS REQUIRED BY CONSTRUCTION BUT NOT SPECIFICALLY DESCRIBED HEREIN SHALL BE AS SELECTED BY THE CONTRACTOR SUBJECT TO THE APPROVAL OF THE A/E.

7. PROVIDE ALL MATERIALS, LABOR, AND ACCESSORIES FOR A COMPLETE AND OPERABLE SYSTEMS AND AS REQUIRED BY THE EQUIPMENT MANUFACTURER'S INSTALLATION INSTRUCTIONS.

8. INSTALL ALL MATERIALS, ACCESSORIES AND EQUIPMENT ACCORDING TO MANUFACTURER'S INSTALLATION INSTRUCTIONS FOR A COMPLETE AND OPERABLE SYSTEMS AS INDICATED ON THE DRAWINGS MANUFACTURERS INSTRUCTIONS.

9. ALL MISCELLANEOUS STRUCTURAL SUPPORTS REQUIRED FOR HVAC EQUIPMENT INSTALLATION SHALL BE PROVIDED BY MECHANICAL CONTRACTOR.

10. INSTALL ALL PIPING BELOW DUCTWORK UNLESS CLEARANCE CONDITION REQUIRES PIPING TO BE ABOVE.

11. WHERE DUCTWORK PENETRATES ANY SMOKE AND/OR FIRE RATED PARTITIONS PROVIDE UL LISTED DYNAMIC FIRE AND/OR SMOKE DAMPERS PER NFPA GUIDELINES. INSTALL DAMPER PER MANUFACTURE INSTRUCTIONS.

12. ALL CEILING MOUNTED EQUIPMENT SHALL BE INSTALLED IN SUCH A WAY THAT LIGHTS, PIPING, AND DUCTWORK DO NOT BLOCK ACCESS TO UNITS AND RELATED ACCESSORIES.

13. EXACT ELEVATION FOR SIDE WALL DIFFUSERS, REGISTERS AND GRILLES SHALL BE APPROVED BY THE ARCHITECT BEFORE INSTALLATION.

14. INSTALL ROOM THERMOSTATS OR SENSORS 54" (MAXIMUM) ABOVE FINISHED FLOOR OR AS OTHERWISE DIRECTED BY THE ARCHITECT.

TAG LEGEND

EQUIPMENT (REQUIRING POWER)	EQUIPMENT DESIGNATION NUMBER
REGISTERS, GRILLES & DIFFUSERS	SIZE DESIGNATION BALANCE TO CFM INDICATED

DUCTWORK PLAN LEGEND

SYMBOL	DESCRIPTION
	DUCTWORK (DOUBLE LINE)
	DUCTWORK WITH ACOUSTICAL LINING (DOUBLE LINE)
	DUCTWORK (SINGLE LINE)
	DUCTWORK WITH ACOUSTICAL LINING (SINGLE LINE)
	RECTANGULAR SUPPLY AIR DUCTWORK UP
	RECTANGULAR RETURN AIR DUCTWORK UP
	RECTANGULAR EXHAUST AIR DUCTWORK UP
	RECTANGULAR SUPPLY AIR DUCTWORK DOWN
	RECTANGULAR RETURN AIR DUCTWORK DOWN
	RECTANGULAR EXHAUST AIR DUCTWORK DOWN
	ROUND SUPPLY AIR DUCTWORK UP
	ROUND RETURN AIR DUCTWORK UP
	ROUND EXHAUST AIR DUCTWORK UP
	ROUND SUPPLY AIR DUCTWORK DOWN
	ROUND RETURN AIR DUCTWORK DOWN
	ROUND EXHAUST AIR DUCTWORK DOWN
	VOLUME DAMPER
	CONTROL DAMPER
	AIR ENTERING OPENING
	AIR LEAVING OPENING
	UNDERCUT DOOR
C	SMART SENSE CONTROLLER
CO	CO2 SENSOR
H	RELATIVE HUMIDITY SENSOR
P	PRESSURE SENSOR - DUCT MOUNTED
SD	SMOKE DETECTOR - DUCT MOUNTED
S	SWITCH
T	THERMOSTAT OR TEMPERATURE SENSOR
T	THERMOSTAT GUARD w/ KEY LOCK
	CONTROL CONNECTION

This drawing is copyrighted and is subject to copyright protection as an "architectural work" under 17 U. S. C. Sec. 101 et seq. The protection includes but is not limited to the overall form as well as the arrangement and composition of spaces, materials, color and elements in the design. Under such protection, unauthorized use of this drawing may result in the cessation of construction or buildings being seized and/or monetary compensation being awarded to The Robinson Green Beretta Corporation (RGB).

Any reproduction, possession, or use of this drawing or any part thereof without the express written permission of RGB, is prohibited. Violators will be prosecuted to the full extent of the law.

© RGB 2017

Certification

Drawn by JPK
Checked by GAA

Revised on

B|E|R
BUILDING ENGINEERING RESOURCES, INC.
66 Main Street
N. Easton, MA 02356
T 508.230.0260
F 508.230.0265
ber@ber-engineering.com
100 Midway Road - Suite 23
Cranston, RI 02920
T 401.942.2800
F 401.228.6205
www.ber-engineering.com

50 Holden Street
Providence, Rhode Island 02908

Phone: (401) 272-1730
Fax: (401) 273-7156

E-mail: rgbinfo@rgb.net
www.rgb.net

RGB architects

Architecture ÂProject Management ÂInterior Design

Project

FORT ADAMS MAINTENANCE BUILDING

RIDEM / DIVISION OF PARKS & RECREATION

STATE OF RHODE ISLAND AND PROVIDENCE PLANTATIONS

FORT ADAMS STATE PARK, NEWPORT, RI

Drawing Status

ISSUED FOR CONSTRUCTION

Issued On MAY 29, 2019

Sheet Contents

MECHANICAL LEGENDS, NOTES AND DETAILS

Project Number.

Drawing No.

M100

Sheet of

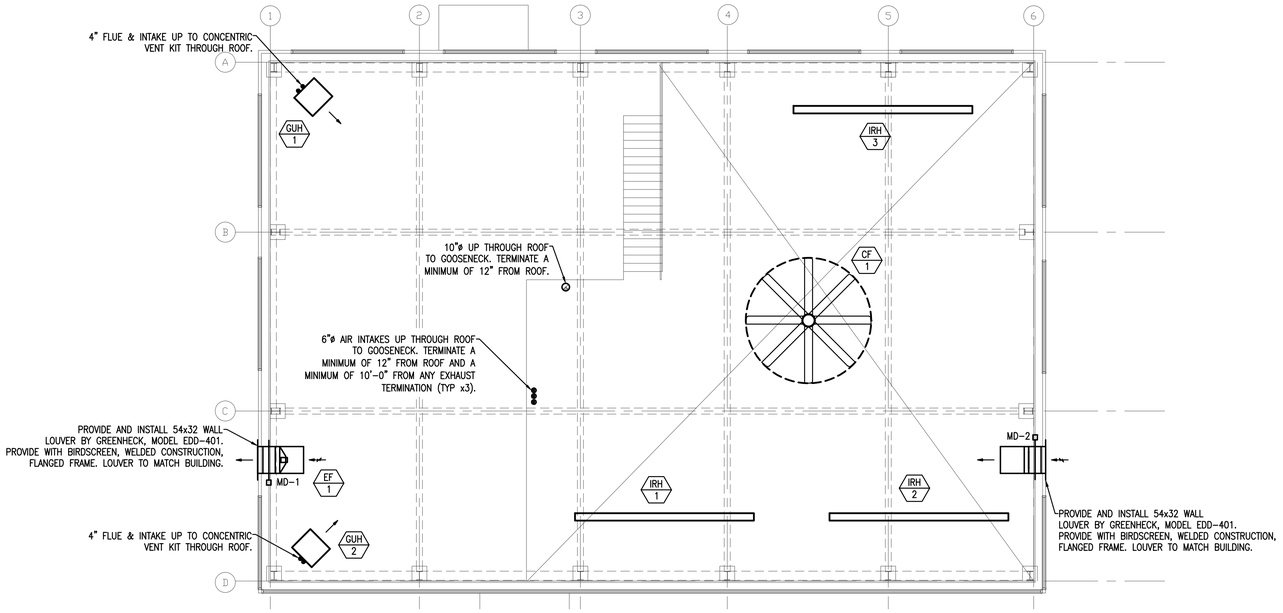

1 M101 UPPER LEVEL PLAN

Scale: 1/8" = 1'-0"

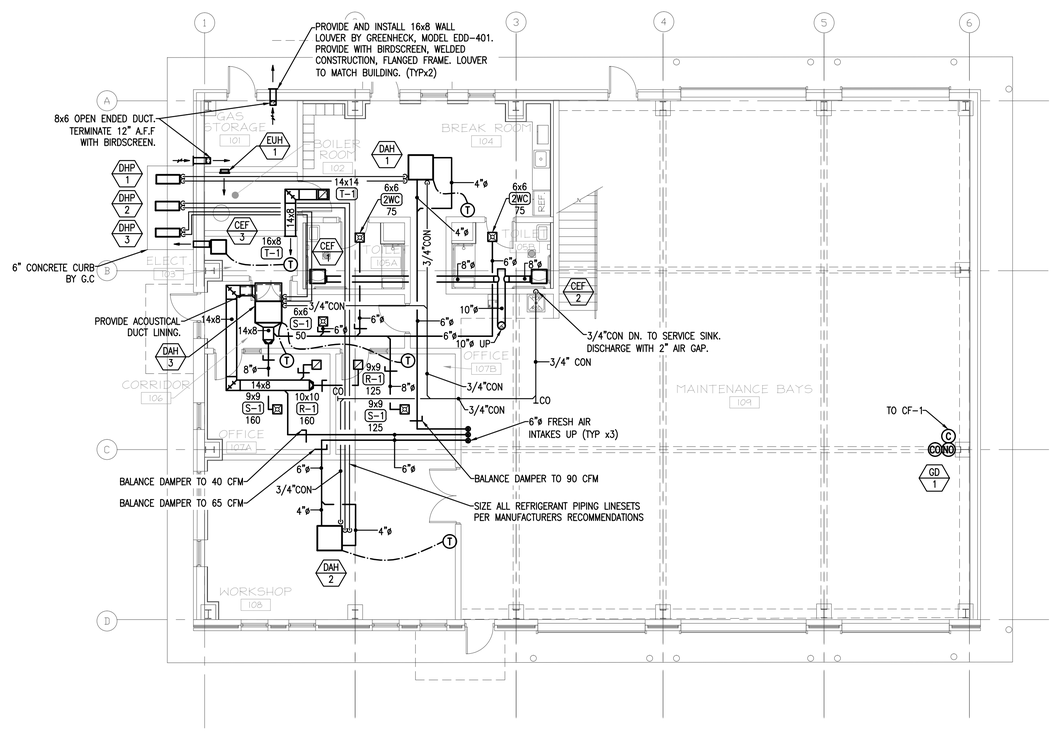

2 M101 LOWER LEVEL PLAN

Scale: 1/8" = 1'-0"

This drawing is copyrighted and is subject to copyright protection as an "architectural work" under 17 U. S. C. Sec. 101 et seq. The protection includes but is not limited to the overall form as well as the arrangement and composition of spaces, materials, color and elements in the design. Under such protection, unauthorized use of this drawing may result in the cessation of construction or buildings being seized and/or monetary compensation being awarded to The Robinson Green Beretta Corporation (RGB).

Any reproduction, possession, or use of this drawing or any part thereof without the express written permission of RGB, is prohibited. Violators will be prosecuted to the full extent of the law.

© RGB 2017

Certification

STEVEN A. KARAN
No. 6537
REGISTERED PROFESSIONAL ENGINEER (MECHANICAL)

Drawn by JPK

Checked by GAA

Revised on

B|E|R
BUILDING ENGINEERING RESOURCES, INC.
66 Main Street
N. Easton, MA 02356
T 508.230.0260
F 508.230.0265
ber@ber-engineering.com
100 Midway Road - Suite 23
Cranston, RI 02920
T 401.942.8500
F 401.228.6205
www.ber-engineering.com

50 Holden Street
Providence, Rhode Island 02908
Phone: (401) 272-1730
Fax: (401) 273-7156
E-mail: rgbinfo@rgb.net
www.rgb.net
RGB architects
Architecture ÂProject Management ÂInterior Design

Project

FORT ADAMS MAINTENANCE BUILDING

RIDEM / DIVISION OF PARKS & RECREATION

STATE OF RHODE ISLAND AND PROVIDENCE PLANTATIONS

FORT ADAMS STATE PARK, NEWPORT, RI

Drawing Status

ISSUED FOR CONSTRUCTION

Issued On MAY 29, 2019

Sheet Contents

LOWER & UPPER FLOOR PLANS - MECHANICAL

Project Number.

Drawing No.

M101

Sheet of

GAS DETECTOR SCHEDULE

GD-1:
PROVIDE AND INSTALL VENTILATION CONTROL CO/NO2 MONITOR GAS DETECTOR SYSTEM
MANUFACTURED BY TOXALERT MODEL GVJ-3, WITH:
AUDIBLE ALARM, SILENCE SWITCH, POWER/FAN ON INDICATOR, HIGH GAS CONCENTRATION INDICATOR.
INSTALL PER MANUFACTURERS INSTRUCTION AND INTERLOCK WITH EF-1 AND INTAKE MOTORIZED DAMPER MD-2

DIFFUSER AND GRILLE SCHEDULE

GENERAL	PHYSICAL		REMARKS		
TAG	BLOW PATTERN	MANUFACTURER MODEL	TYPE	FEATURES	INSTALL
S-1	4-WAY	PRICE AMX	1	1 2	1 2 3
2WC	2 WAY CORNER	PRICE AMX	1	1 2	1 2 3
R-1 T-1	-	PRICE 635	2	1 3	1 2

1 LOUVERED HIGH INDUCTION DIRECTIONAL CEILING DIFFUSER, SQUARE/RECTANGULAR NECK & FACE, ALUMINUM CONSTRUCTION, WHITE FINISH.

2 RETURN/EXHAUST/TRANSFER GRILLE, 45° FIXED BLADES ON 1/2" CENTERS, BLADES PARALLEL TO LONG DIMENSION, CONCEALED FASTENING SCREWS, ALUMINUM CONSTRUCTION, WHITE FINISH.

1 REFER TO ARCHITECTURAL DRAWINGS FOR MOUNTING TYPE.
2 INSULATED BACK PANEL
3 INSULATED PLENUM BOX

TAG LEGEND
0x0 — SIZE (IN.)
XXX — TAG: S=SUPPLY R=RETURN E=EXHAUST
000 — CFM

1 *REFER TO ARCHITECTURAL DRAWINGS TO CONFIRM MOUNTING TYPE OF ALL GRILLES AND DIFFUSERS PRIOR TO ORDERING

2 PROVIDE A DUCT MOUNTED VOLUME DAMPER AT EACH BRANCH DUCT CONNECTED TO A DIFFUSER OR GRILLE. EXCEPTIONS:
- TRANSFER AIR APPLICATIONS (GRILLE IS NOT CONNECTED BY A DUCTWORK SYSTEM TO A FAN)
- EXHAUST AND RETURN GRILLES WHERE ONLY ONE GRILLE SERVES THE FAN/AIR HANDLING SYSTEM
- GRILLES CONNECTED TO RELIEF AIR HOODS AND RELIEF AIR LOUVERS

3 REFER DETAIL

FAN SCHEDULE

GENERAL		PERFORMANCE				ELECTRICAL			PHYSICAL		REMARKS			
TAG	SERVICE	CFM	ESP (IN WG)	RPM	SONES	HP	VOLTAGE	PHASE	WEIGHT (LBS)	MANUFACTURER MODEL	TYPE	RATINGS	FEATURES	INSTALL
CEF-1	BATHROOM 105A	125	0.25	1135	0.8	–	120	1	20	GREENHECK SP-A190	1	1 2	5 6 7 8	1
CEF-2	BATHROOM 105B	125	0.25	1135	0.8	–	120	1	20	GREENHECK SP-A190	1	1 2	5 6 7 8	1
CEF-3	ELECTRIC ROOM 103	500	0.25	826	2.5	–	115	1	43	GREENHECK SP-A700	1	1 2	5 6 7 8 9	1
EF-1	GARAGE EXHAUST	4,000	0.25	1160	19.5	1/3	208	3	152	GREENHECK SCE3-24-417-B3	2	1	1 2 3 4	1 2
CF-1	AIR CIRCULATION	–	–	118	–	1.5	208	1	254	BIG ASS POWERFOIL PFX3-14	3	3	10 11 12	1

1 CEILING CABINET EXHAUST FAN
2 SIDEWALL DIRECT DRIVE EXHAUST FAN
3 INDUSTRIAL CEILING FAN

1 SOUND PERFORMANCE CERTIFIED IN ACCORDANCE TO AMCA 301
2 ENERGY STAR RATED
3 UL 507 & CSA C22.2

1 OSHPD SIESMIC CERTIFIED
2 DAMPER w/ ACTUATOR (MATCH FAN VOLTAGE)
3 PERMATECTOR COATING
4 NON-FUSED DISCONNECT SWITCH
5 SOLID STATE SPEED CONTROLLER
6 BACKDRAFT DAMPER
7 ALUMINUM GRILLE
8 ISOLATION KIT
9 REVERSE ACTING THERMOSTAT
10 MOUNTING KIT (VERIFY TYPE FIELD)
11 HARD WIRED SMARTS SENSE CONTROLLER
12 FAN COLORS TO BE CHOSEN BY ARCHITECT

1 PER MANUFACTURES INSTRUCTIONS
2 INTERLOCK FAN OPERATION WITH GAS DETECTION SYSTEM

GAS FIRED UNIT HEATER SCHEDULE

GENERAL		PERFORMANCE									ELECTRICAL				PHYSICAL		REMARKS			
		FURNACE					FAN													
TAG	LOCATION	INPUT MBH	OUTPUT MBH	EFFICIENCY (%)	LAT (°F)	STAGES	CFM	ESP (IN WG)	RPM	SPEED	HP	AMPS	VOLTAGE	PHASE	MOUNTING HEIGHT (FT)	MANUFACTURER MODEL	TYPE	RATINGS	FEATURES	INSTALL
GUH-1	UPPER STORAGE 201	60	49	82	115	2	740	–	1050	HIGH	1/12	2.60	208	1	12.0	STERLING GG-060	1	–	1 2 3	1
GUH-2	UPPER STORAGE 201	60	49	82	115	2	740	–	1050	HIGH	1/12	2.60	208	1	12.0	STERLING GG-060	1	–	1 2 3	1

1 GAS FIRED UNIT HEATER

1 –

1 ALUMINIZED HEAT EXCHANGER
2 2 STAGE GAS VALVE
3 CONCENTRIC VENT KIT

1 PER INSTALL MANUFACTURES RECOMMENDATIONS

ELECTRIC UNIT HEATER SCHEDULE

GENERAL		PERFORMANCE						ELECTRICAL			PHYSICAL	REMARKS			
TAG	LOCATION	KW	STAGES	MBH	CFM	FAN SPEED	LAT (°F)	AMPS	VOLTAGE	PHASE	MANUFACTURER MODEL	TYPE	RATINGS	FEATURES	INSTALL
EUH-1	BOILER ROOM 102	1.0	1	3,413	65	HIGH	–	8.4	120	1	OMARK CWH1101DSAG	1	1	1 2 3 4	1

1 WALL MOUNTED

1 UL LISTED

1 INTEGRAL THERMOSTAT
2 RECESS MOUNTED TRIM KIT
3 DISCONNECT SWITCH

4 THERMAL OVERLOAD PROTECTION

1 PER INSTALL MANUFACTURES RECOMMENDATIONS

DUCTLESS SPLIT AIR CONDITIONING SYSTEM AIR HANDLER SCHEDULE

GENERAL			PERFORMANCE							ELECTRICAL				PHYSICAL	REMARKS			
						FAN												
TAG	LOCATION	MATCHED COND. UNIT	NOMINAL TONS	TOTAL COOLING MBH	TOTAL HEATING MBH	CFM	ESP (IN WG)	SPEED	SOUND PRESSURE DBA	MCA	MOP	VOLTAGE	PHASE	MANUFACTURER MODEL	TYPE	RATINGS	FEATURES	INSTALL
DAH-1	BREAKROOM 104	DHP-1	1.5	18.0	19.0	600	–	HIGH	–	–	–	208	1	MITSUBISHI PLA-A18BA6	1	1	1 2 3	1 2
DAH-2	WORKSHOP 108	DHP-2	1.5	18.0	19.0	600	–	HIGH	–	–	–	208	1	MITSUBISHI PLA-A18BA6	1	1	1 2 3	1 2
DAH-3	CORRIDOR 106	DHP-3	1.0	12.0	14.0	454	–	HIGH	–	–	–	208	1	MITSUBISHI PEAD-A12AA7	2	1	1 2	1 2

1 SINGLE ZONE DUCTLESS SYSTEM
2 MULTI-ZONE ZONE DUCTLESS SYSTEM

1 RATED PER AHRI

1 HARD WIRED WALL MOUNTED PROGRAMMABLE THERMOSTAT
2 BUILT-IN CONDENSATE PUMP
3 PROVIDE UNIT WITH MULTIFUNCTION CASEMENT FOR MULTIPLE OUTDOOR AIR CONNECTIONS

1 REFRIGERANT PIPING, CONDENSATE PIPING, CONTROL WIRING AND CONDUIT, POWER WIRING AND CONDUIT, RELAYS AND OTHER DEVICES SHALL BE CONCEALED.. LOCATE DEVICES REQUIRING ACCESS IN ACCESSIBLE LOCATIONS. COORDINATE LOCATIONS WITH ARCHITECT AND PROVIDE ACESS PANELS WHERE REQUIRED.

2 INDOOR AIR HANDLING UNITS POWERED FROM OUTDOOR UNIT.

GAS FIRED INFRARED HEATER SCHEDULE

GENERAL		PERFORMANCE				ELECTRICAL			PHYSICAL					REMARKS			
TAG	LOCATION	INPUT MBH	OUTPUT MBH	EFFICIENCY (%)	LAT (°F)	AMPS	VOLTAGE	PHASE	TUBE QUANTITY	TUBE LENGTH (FT)	MOUNTING HEIGHT (FT)	SYSTEM WEIGHT (LBS)	MANUFACTURER MODEL	TYPE	RATINGS	FEATURES	INSTALL
IRH-1	MAINTENANCE BAYS 109	75	50	66.0	–	1.74	120	1	3	10	13	–	STERLING RSS-75	1	–	–	1 2
IRH-2	MAINTENANCE BAYS 109	75	50	66.0	–	1.74	120	1	3	10	13	–	STERLING RSS-75	1	–	–	1 2
IRH-3	MAINTENANCE BAYS 109	75	50	66.0	–	1.74	120	1	3	10	13	–	STERLING RSS-75	1	–	–	1 2

1 NATURAL GAS FIRED, INFRARED TUBE HEATER

1 ##F EAT

1 TWO STAGE GAS VALVE

1 INSTALL PER MANUFACTURERS INSTRUCTIONS
2 MAINTAIN MANUFACTURERS CLEARANCE REQUIREMENTS

DUCTLESS SPLIT AIR CONDITIONING & HEAT PUMP SYSTEM SCHEDULE

GENERAL			PERFORMANCE		ELECTRICAL					PHYSICAL		REMARKS			
TAG	LOCATION	MATCHED AIR HANDLER	NOMINAL TONS	EER	MCA	MOP	VOLTAGE	PHASE	WEIGHT (LBS)	MANUFACTURER MODEL	TYPE	RATINGS	FEATURES	INSTALL
DHP-1	GRADE	DAH-1	1.5	9.3	13	20	208	1	91	MITSUBISHI PUZ-A18NHA6	1	1	1	1
DHP-2	GRADE	DAH-2	1.5	9.3	13	20	208	1	91	MITSUBISHI PUZ-A18NHA6	1	1	1	1
DHP-3	GRADE	DAH-3	1.0	13.0	11	15	208	1	93	MITSUBISHI PUZ-A12NKA7	2	1	1	1

1 SINGLE INDOOR UNIT HEAT PUMP SYSTEM (R-410A)
2 MULT-ZONE HEAT PUMP SYSTEM (R-410A)
1 COOLING OPERATION BASED ON AHRI CONDITIONS: 95°F ODB AND INDOOR: 80°F EDB, 67°F EWB

1 WIND BAFFLE (LOW AMBIENT COOLING DOWN TO 0 DEGREES)

1 PROVIDE SPLIT SYSTEM REFRIGERANT PIPING BETWEEN AIR HANDLER AND MATCHED CONDENSING UNIT, SIZED AND CONFIGURED PER THE MANUFACTURER'S RECOMMENDATIONS, ROUTE PIPING CONCEALED TO THE GREATEST EXTENT POSSIBLE. SEAL PIPING PENETRATIONS WATERTIGHT.

This drawing is copyrighted and is subject to copyright protection as an "architectural work" under 17 U. S. C. Sec. 101 et seq. The protection includes but is not limited to the overall form as well as the arrangement and composition of spaces, materials, color and elements in the design. Under such protection, unauthorized use of this drawing may result in the cessation of construction or buildings being seized and/or monetary compensation being awarded to The Robinson Green Beretta Corporation (RGB).

Any reproduction, possession, or use of this drawing or any part thereof without the express written permission of RGB, is prohibited. Violators will be prosecuted to the full extent of the law.

© RGB 2017

Certification

STEVEN A. KARAN
No. 6537
REGISTERED PROFESSIONAL ENGINEER (MECHANICAL)

Drawn by JPK

Checked by GAA

Revised on

B|E|R
BUILDING ENGINEERING RESOURCES, INC.
66 Main Street
N. Easton, MA 02356
T 508.230.0260
F 508.230.0265
ber@ber-engineering.com
100 Midway Road - Suite 23
Cranston, RI 02920
T 401.942.3800
F 401.228.6205
www.ber-engineering.com

50 Holden Street
Providence, Rhode Island 02908

Phone: (401) 272-1730
Fax: (401) 273-7156

E-mail: rgbinfo@rgb.net
www.rgb.net

RGB architects

Architecture AProject Management AInterior Design

Project

FORT ADAMS MAINTENANCE BUILDING

RIDEM / DIVISION OF PARKS & RECREATION

STATE OF RHODE ISLAND AND PROVIDENCE PLANTATIONS

FORT ADAMS STATE PARK, NEWPORT, RI

Drawing Status

ISSUED FOR CONSTRUCTION

Issued On MAY 29, 2019

Sheet Contents

MECHANICAL SCHEDULES

Project Number.

Drawing No.

M201

Sheet of

PART 1 – GENERAL

1.00 GENERAL REQUIREMENTS:

A. Include all labor, materials, equipment, appliances and services necessary to furnish, fabricate and install all work specified herein. refer to the drawings for further definition of location, extent and details of the work.

B. Where the specifications refer to three (3) products, by name, catalog number and/or manufacturer, it is the intent of the specification that the contractor shall submit one (1) to the Engineer for approval.

C. Where the specifications refer to less than three (3) products by name, catalog number and/or manufacturer, unless otherwise specified, the intent is to establish a standard of quality and not be construed as limiting competition; in such cases, the contractor may, with the permission of the Engineer, submit detailed information to the architect for his review. If, in the judgment of the Engineer, the submission is acceptable, the Engineer will transmit his approval in writing to the contractor.

1.01 WORK INCLUDED:

A. The intention of the specifications and plans is to provide for furnished systems, properly tested, balanced and ready for operation, including necessary minor details and accessories required to make the work complete, even though such items may not be expressly shown or specified.

B. The work covered by this section of the specification includes the furnishing of all labor and materials and in performing all operations in connection with the installation of the HVAC work shown on the drawings and as described herein and shall be interpreted as work to be done by this contractor. Work to be performed by other trades will always be specifically referenced to a particular contractor and/or section.

C. Contractor, prior to submitting bid shall visit the project site to become familiar with all existing conditions and to inspect that all provisions have been made for all aspects of this project. If discrepancies exist between drawings and/or site conditions, the HVAC contractor shall notify the engineer and the owner prior to signing of contract. Requests for compensation for extra work, which would have been evident by compliance with the previous statement, will not be considered.

1.02 REGULATORY REQUIREMENTS, CODES, ORDINANCES AND PERMITS

A. All work performed under this section of the specifications shall be done in accordance with the applicable national, state and local codes, laws and ordinances.

B. All materials and work provided shall be in accordance with, but not limited to, the following:

1. Associated Air Balance Council (AABC)
2. Air Movement and Control Association
3. American National Standards Institute (ANSI)
4. Air Conditioning and Refrigeration Institute (ARI)
5. American Society of Heating, Refrigeration and Air Conditioning Engineers (ASHRAE)
6. American Society of Mechanical Engineers (ASME)
7. American Society for Testing and Materials (ASTM)
8. International Mechanical Code (IMC)
9. National Electrical Code (NEC)
10. National Electrical Manufacturer's Association (NEMA)
11. National Environmental Balancing Bureau (NEBB)
12. National Fire Protection Association (NFPA)
13. Occupational Safety and Health Act (OSHA)
14. Sheet Metal and Air Conditioning Contractors National Association (SMACNA)
15. Underwriters Laboratories, INC. (UL)
16. Facility Guidelines Institute for Hospitals and Outpatient Facilities Guidelines (FGI)

C. Where code references are given, the latest issue of that code in effect at the time of bidding shall be used.

D. This contractor shall be responsible for providing and filing all plans, specifications and other documents, pay all requisite fees and secure all permits, inspections and approvals necessary for the legal installation and operation of the system and/or equipment furnished under this section of the specifications.

E. This contractor shall frame under glass all permits, secured by him, adjacent to the respective system and/or equipment and required to be displayed by code, law and ordinance. Those permits secured but not required to be displayed shall be included in the owner's maintenance manual.

1.03 DEFINITIONS

A. General Contractor – Shall mean contractor or contractors as designated by the contract documents as responsible to perform work as referred under this section, as well as other sections of the specifications.

B. This Contractor – Shall mean specifically the HVAC contractor providing work under this respective section of the specifications.

C. Provide – Shall mean the furnishing and installing of materials and/or equipment.

D. Concealed – Shall mean in walls, in chases, above ceilings, within enclosed cabinets, underground, in trenches or otherwise enclosed.

E. Exposed – Shall mean in closets, in finished rooms, under counters, behind and/or under equipment and/or otherwise visible.

1.04 SUBMITTALS:

A. Provide shop drawings for all equipment and record drawings for all work provided under this contract to the Architect/Engineer for his review and approval prior to ordering, fabricating or installing.

1.05 COORDINATION:

A. Work shall be performed in cooperation with other trades on the project and so scheduled as to allow speedy and efficient completion of the work.

B. Furnish to other trades advance information on locations and sizes of all frames, boxes, sleeves and openings needed for their work, and also furnish information and shop drawings necessary to permit trades affected by the work to install same properly and without delay.

C. If any HVAC work has been installed before coordination with other trades so as to cause interference with the work of such trades, all necessary adjustments and corrections shall be made by the HVAC trades involved without extra cost to the owner.

D. Protect all materials and work of other trades from damage which may be caused by the HVAC work, and repair all damages without extra cost to the owners.

E. This contractor, prior to submitting bid shall visit the project site to become familiar with all existing conditions and to inspect that all provisions have been made for all aspects of this project. If discrepancies exist between drawings and/or site conditions, the HVAC contractor shall notify the engineer and the owner prior to signing of contract. Requests for compensation for extra work, which would have been evident by compliance with the previous statement, will not be considered.

F. Mechanical equipment and such other apparatus as may require maintenance and operation from time to time shall be made easily accessible. Although the equipment may be shown on the drawings in certain locations, the construction may disclose that such locations do not make its position readily accessible. In such cases, the owner or his representative shall be notified before advancing the construction to a stage where a change will reflect additional expense.

G. It shall be the responsibility of the HVAC contractor to study all drawings and details so that the installation of all new work can be fully coordinated. Coordinate with all trades to avoid interference of equipment.

H. HVAC work is indicated diagrammatically. Exact location of all components are to be determined in the field and by the actual building conditions. Equipment, ducts or pipes interfering with other installations shall be relocated as required at no additional cost to the owner. HVAC contractor shall coordinate all wall, ceiling, floor, roof and beam penetrations with Architect and Structural Engineer.

I. This contractor shall obtain detailed printed information from the manufacturer of equipment which he is to provide for the proper methods of installation. He shall also obtain all information from the general contractor and other contractors which may be necessary to facilitate his work and the completion of the whole project. All equipment shall be installed in strict accordance with manufacturer's recommendations.

J. The work to be accomplished under this section includes work within existing areas adjacent to the site of new construction. Continuity of services within existing areas shall be maintained. Any interruption of services necessary to accomplish the work shall be made only with the consent of the general contractor and at such time(s) as the owner designates.

K. This contractor shall not unnecessarily disturb or interfere with the owner's use of the facilities associated with or adjacent to this contract. When interference is necessary, permission shall be obtained from the general contractor before any operation or service line is disturbed or disconnected.

L. This contractor shall include under coordination work the installation of all systems in conformance with governing codes. This contractor is advised that no piping, ducts or equipment foreign to the electrical equipment shall be permitted to be installed in, enter or pass through such spaces or rooms provided for switchboards and panelboards in accordance with Article 384 of the national electrical code.

M. Diffusers, grilles and registers located in the ceiling shall be located as shown on the architectural reflected ceiling plan and coordinated with ceiling grid, lights, speakers, etc. Items shown on the HVAC drawings, but not located on the reflected ceiling plan shall be coordinated to be located as indicated on the HVAC drawings.

1.06 COORDINATION DRAWINGS

A. Coordination Drawings:

1. The Sheetmetal Subcontractor shall prepare a complete set of electronic drawings at a scale not less than 3/8' equals 1'–0', showing structure and other information as needed for coordination. He shall show sheetmetal layout thereon. These will be the Coordination Drawings.

2. The main paths of egress and for equipment removal, from main Mechanical and Electrical rooms must be clearly shown on the Coordination Drawings. All fire and smoke partitions must be highlighted on the Coordination Drawings for appropriate coordination.

3. Each of the below specialty trades shall add its work to these background drawings with appropriate elevations and grid dimensions. Specialty trade information is required for fan rooms and mechanical rooms, horizontal exits from duct shafts, crossovers, and for spaces in and above ceilings where congestion of work may occur such as corridors, and even entire floors. Drawings shall indicate horizontal and vertical dimensions, to avoid interference with structural framing, ceilings, partitions, and other services.
   a. Specialty Trades:
      1) New & Existing Plumbing System.
      2) New & Existing HVAC Piping and Associated Control System.
      3) New & Existing Electrical.
      4) New & Existing Sheet Metal Work.
      5) New & Existing Sprinkler System.

4. Each specialty trade shall sign and date each electronic Coordination Drawing. Return Drawings to the Sheetmetal Subcontractor, who shall route them sequentially to all specialty trades.

5. Where conflicts occur with placement of materials of various trades, the Sheetmetal Subcontractor will be responsible to coordinate the available space to accommodate all trades. Any resulting adjustments shall be initialed and dated by the specialty trade. The Sheetmetal Subcontractor shall then final date and sign each Coordination Drawing. If he cannot resolve conflicts, the decision of the General Contractor shall be final, subject to the approval of the Architect.

6. A Subcontractor who fails to promptly review and incorporate his work on the Coordination Drawings shall assume full responsibility of any installation conflicts affecting his work and of any schedule ramifications.

7. The Sheetmetal Subcontractor shall make electronic copies of all Coordination Drawings. Fabrication shall not start until such electronic Drawings are received by the Architect/Engineer and have been reviewed.

8. Review of Coordination Drawings shall not diminish responsibility under this Contract for final coordination of installation and maintenance clearances of all systems and equipment with Architectural, Structural, Mechanical, and Electrical Contractors.

1.07 MECHANICAL AND ELECTRICAL COORDINATION:

A. Heating, Ventilating, and Air conditioning Subcontractor shall furnish and install various electrical items relating to the HVAC equipment and control apparatus. The Electrical Subcontractor shall be required to connect power wiring to this equipment unless noted otherwise.

B. The HVAC and Electrical Subcontractor shall coordinate their respective portions of the work, as well as the electrical characteristics of the HVAC equipment.

C. All power wiring and local disconnect switches will be provided by the Electrical Subcontractor for the line voltage power. All control and interlocking wiring shall be the responsibility of the HVAC Subcontractor.

D. 120V power wiring sources extended and connected to heating and ventilating control panels, transformers and switches shall be the responsibility of the Electrical Subcontractor. All low voltage thermostat, zone valve and any switch wiring shall be the responsibility of the HVAC Subcontractor.

E. All electrical work shall conform to the requirements of the Electrical Division.

F. All starters shall be furnished and installed under the Electrical Division except those furnished as an integral part of packaged equipment.

1.08 INSTALLATION REQUIREMENTS:

A. The arrangement of all HVAC work shown on the drawings is diagrammatic only and indicates the minimum requirements of the work. Conditions at the building including actual measurements shall determine the details of the installation.

B. Install all materials, accessories and equipment according to manufacturer's installation instructions for a complete and operable systems as indicated on the drawings and manufacturers instructions.

C. All miscellaneous structural supports required for HVAC equipment installation shall be provided by mechanical contractor. Install all piping below ductwork unless clearance condition requires piping to be above.

D. Where ductwork penetrates any smoke and/or fire rated partitions provide UL listed dynamic fire and/or smoke dampers per NFPH guidelines. Install per manufactures instructions. Coordinate with electrical contractor to provide 120v power and to tie into fire alarm system for all motorized smoke dampers.

E. Contractor shall drain the existing glycol chilled water and heating hot water system as required to perform new work and connections. Once work is complete the contractor shall flush, fill, test and balance all systems. The chilled water system shall be re–filled with glycol to the current concentration percentage.

F. Piping, ductwork and equipment Identification: Provide and install identification manufactured by Seton, Brady or Brimar. Where air or hydronic systems have been balanced, the contractor shall permanently mark, on the device, the correct balancing settling of each valve, damper, or similar device. For piping, use black laminated phenolic tags 2" in diameter with incised letters 3/8" high, use brass "S" hooks and/or brass chain to attach to valve, use printing 1/8" high for charts, place charts in metal frame with non–glare glass. Use black laminated phenolic nameplates 6" long x 3" high with white incised lettering ½" high for equipment. Attach to equipment with stainless steel or brass screws, or rivets. For ductwork identification, use stencils and spray pain ductwork identification on all ductwork above ceiling.

1.09 RECORD DRAWINGS

A. Provide record As–Built drawings. The contractor shall keep daily updated accurate records of all deviations in work as actually installed from work indicated on the contract drawings. When work is completed this contractor shall provide to the owner one complete set of marked–up original prints, updated cad drawings and a CD with cad files.

1.10 GUARANTEE/WARRANTY

A. All new materials, items or equipment and workmanship furnished under this section shall carry standard warranty against all defects in material and workmanship for a period of not less than one (1) year from the date of substantial completion of work. Any fault due to defective or improper material, equipment, workmanship or manufacturing design which may develop within that period shall be made good, forthwith, by and at the expense of this contractor, including all other damages done to areas, materials and other systems resulting from this failure.

B. This contractor shall guarantee that all new elements of the systems meet the specified performance requirements as set forth herein or as indicated on the drawings.

PART 2 – GENERAL

2.01 REFRIGERANT PIPING

A. The contractor shall furnish and install any necessary refrigerant piping, fittings, vibration eliminators, line valves, solenoid valves, hot gas bypass valves, crankcase pressure regulating valves, thermostatic expansion valves, dehydrators, strainers, sight glasses, moisture indicators, refrigerant, oil, filters, insulation and all fittings and accessories necessary to make a complete installation unless otherwise specified, together with all labor required to complete the installation and perform the service covered by this specification.

B. Unless otherwise specified, all refrigeration piping shall be refrigeration grade Type "ACR" hard drawn sealed copper tubing.

C. Extreme care shall be taken to keep all refrigerant piping clean and dry. it shall be kept sealed except when cutting or fabricating. each length shall be inspected and swabbed with a cloth soaked in refrigeration oil if any dirt, filings, or visible moisture are present.

D. All sweat–type fittings shall be wrought copper or forged brass. all elbows and return bends shall be of the long radius type. if flare fittings are required, they shall be of the frost proof type (except on connections not subject to condensation), and constructed of forged brass. soldered joints are preferred and shall be used wherever practical.

E. Piping shall be brazed with phoson–6%, using nitrogen purge while brazing.

F. Systems shall be pressure tested with nitrogen at 300 psi. for a period of 24 hours and then leak tested.

G. Evacuate system down to 500 microns for a period of 24 hours before charging system with refrigerant.

H. All pipe hangers shall not be over 8'–0" apart. all systems to be brought to desired temperatures over a 24 hour period.

I. A certified licensed refrigeration mechanic familiar with the installation shall be made available for an 8 hour period to familiarize and instruct owner's representative of the operation and maintenance of all equipment. System shall be field charged with proper refrigerant in strict accordance with manufacturer's required quantities and instructions.

2.02 PIPE INSULATION

A. Refrigerant Piping: 1" Armaflex with PVC jacket.

2.03 DUCTWORK:

A. Ductwork: Galvanized steel sheets, reinforcing and companion angles, hangers, metal specifications, gauges and construction of seams, joints and reinforcing shall be according to the latest SMACNA publication – "hvac duct construction standards".
1. Unless otherwise specified or shown on the drawings, supply and return ductwork construction shall meet 2" classification. 1" classification for exhaust ductwork
2. All rectangular sheet defined as all ductwork, unless otherwise specified, shall be constructed with pittsburgh longitudinal seams.
3. Transverse joints shall be made up with pocket locks and corner closures.
4. Duct dimensions indicated on drawings are clear inside dimension. Ductwork size shall increase to to allow for internal duct liner thickness.
5. Provide all required offsets, elbows and transition as required. when making offsets and transformations necessary to accommodate Structural conditions, piping or equipment, preserve full cross–sectional area of ductwork shown on drawings.
6. Ducts wider than 19" with more than 10 square feet of un–braced panel shall be beaded or cross–broken.
7. Internal stiffening struts shall only be used upon prior written approval of the architect.
8. Make changes in duct size with tapered connections as required by SMACNA. Changes shall not exceed 30° from line to airflow.
9. Take–offs to the diffusers shall be 45 leading edge type or bellmouth type.

B. Flexible ductwork:

1. Flexible ductwork, connecting to un–insulated or unlined duct, shall be polyester core with corrosion–resistant helical wire reinforcing. The polyester core shall be minimum two–ply and shall have a minimum thickness of 0.0017". Flex duct shall be ul rated for 6" wc positive pressure, 2" wc negative pressure with a maximum velocity of 4000 fpm. Flex duct must be listed as a class 1 connector according to ul 181 and shall meet the requirements of nfpa 90a – maximum astm e–84 fire–hazard rating shall be 25 flame spread, 50 fuel contributed and 50 smoke developed. Un–insulated flexible duct shall be equivalent to wiremold, type wb, or flexmaster types 2 and 4 (not type 9).

C. Flexible connections: The flexible connections shall be vent–glass constructed of neoprene coated type as manufactured by ventfabrics, inc. or approved equal. the flexible connections shall be tightly secured with metal bands. A minimum 4 inch space and a 1 inch slack shall be allowed for the flexible connection and the connection shall not be stretched tight. A flexible connection shall be installed on the suction and discharge connection of air handling units, fan coil units and exhaust fans.

D. Duct sealing: All transverse seams, joints and where ducts connect shall be made air tight by generously coating with duct sealant as manufactured by Minnesota mining and manufacturing, Dow Corning, Bostik construction products or approved equal. The maximum allowable duct leakage shall be 5% of the respective system total air quantity.

E. Duct insulation

General
1. Insulation shall be Knaff, Certain–Teed, Johns Manville or Owens Corning. install insulation, mastics, adhesives, coatings, covers, etc. as required by manufacturer's recommendations. materials shall meet requirements of adhesive and sealant council standards and SMACNA.
2. Apply insulation after systems have been tested, proved tight and approved by architect. remove dirt, scale, oil, rust and other foreign matter prior to installation of insulation.
3. Leaks in vapor barrier or voids in insulation will not be accepted.
4. ASTM E–84 minimum fire hazard ratings shall be 25 flame–spread, 50 fuel contributed and 50 smoke developed.
5. Where ducts are insulated, flexible connections to ducts shall be insulated.
6. Insulate standing seams with same material and thickness as duct.
7. Insulation shall be continuous through wall and ceiling openings and in sleeves.
8. Transmission rates of vapor barriers shall not exceed 0.02 perms.

Rectangular and circular ductwork
1. Insulate all supply air ducts in concealed spaces with 1 ½" (r–8) thick fiberglass duct wrap with foil–kraft flame resistant vapor barrier.
2. Insulation density shall be ¾ lb. per cubic foot and maximum k–factor shall be 0.3 at 75ƒ mean temperature.
3. Cover breaks in vapor material with patches of same material, secured with adhesive and staples. seal staples with matching foil face type.

This drawing is copyrighted and is subject to copyright protection as an "architectural work" under 17 U. S. C. Sec. 101 et seq. The protection includes but is not limited to the overall form as well as the arrangement and composition of spaces, materials, color and elements in the design. Under such protection, unauthorized use of this drawing may result in the cessation of construction or buildings being seized and/or monetary compensation being awarded to The Robinson Green Beretta Corporation (RGB).

Any reproduction, possession, or use of this drawing or any part thereof without the express written permission of RGB, is prohibited. Violators will be prosecuted to the full extent of the law.

© RGB 2017

Certification

STEVEN A. KARAN
No. 6537
REGISTERED PROFESSIONAL ENGINEER (MECHANICAL)

Drawn by JPK

Checked by GAA

Revised on

B|E|R
BUILDING ENGINEERING RESOURCES, INC.
66 Main Street
N. Easton, MA 02356
T 508.230.0260
F 508.230.0265
ber@ber-engineering.com
100 Midway Road - Suite 23
Cranston, RI 02920
T 401.942.3500
F 401.228.6205
www.ber-engineering.com

50 Holden Street
Providence, Rhode Island 02908

Phone: (401) 272-1730
Fax: (401) 273-7156

E-mail: rgbinfo@rgb.net
www.rgb.net

RGB architects

Architecture ÂProject Management ÂInterior Design

Project

FORT ADAMS MAINTENANCE BUILDING

RIDEM / DIVISION OF PARKS & RECREATION

STATE OF RHODE ISLAND AND PROVIDENCE PLANTATIONS

FORT ADAMS STATE PARK, NEWPORT, RI

Drawing Status

ISSUED FOR CONSTRUCTION

Issued On MAY 29, 2019

Sheet Contents

MECHANICAL SPECIFICATIONS

Project Number.

Drawing No.

M301

Sheet of

F. Acoustical duct lining:
1. Provide 1-1/2" (r-6) thick acoustical lining by certain-teed, knauf, owens corning or manville for the following ductwork:
a) Supply and return ductwork, including plenums for minimum of 20 feet from rooftop or air handling units (or to sound attenuate if attenuator is located further than 20 feet from fan).
b) Other ductwork indicated as lined on the drawings.
2. Increase duct dimensions to accomodate lining while maintaining inside clear dimensions shown on the drawings.
3. Lining shall be as follows:
a) Low-pressure ductwork (below 4" s.p.): shall be black, mat-faced, 2 lb. density, flexible glass type with min. nrc value of 0.75 and max. k-factor at 75f mean of 0.24.
b) Medium and high pressure ductwork (above 4" s.p.): shall be black, mat-faced, 3 lb. density, rigid board type with min. nrc value of 0.75 and maximum k-factor at 75f mean of 0.23.
4. For all lined ductwork at the inlets and outlets of fans over 1 hp, and for all lined medium and high pressure ductwork (including plenums) within 20 feet from rtu's and ahu's provide a perforated aluminum (24 gauge) or galvanized liner (min. 28 gauge), with 28% min. free area on the side of the liner exposed to the moving airstream. metal line shall be held in place by welded pins spaced no more than 12" o.c.
5. Material and installation shall meet all applicable codes and standards.
6. Duct liner shall be installed without interruptions or gaps, using 100% coverage of adhesive and mechanical fasteners. Mechanical fasteners shall be welded or secured mechanically to duct on 12" max. centers.
7. Cut liner to ensure overlapped and compressed longitudinal joints at corners. transverse joints in liner shall abut precisely. seal joints against fiber entrainment with approved adhesive, as recommended by manufacturer. use sheetmetal nosing at beginning of lining (in direction of flow) to prevent erosion.
8. The contractor shall ensure the integrity of acoustical lining when slip-in duct heaters are installed; loose lining shall not flap about in the airstream. secure edges of lining with sheetmetal nosing, where liner is interrupted to make room for slip in heaters.
9. Friction coefficient correction factor at 1000 fpm shall be no greater than 1.1.
10. Any cut liner due to duct take-offs and branches shall be totally sealed at edges (with sheetmetal nose pieces) to prevent entrainment of loose fibers.
11. Do not insulate lined ducts.

2.04 Registers, Grilles and Diffusers:

A. Registers, grilles and diffusers shall be of steel construction in the model size and capacity scheduled on the drawings. Equipment shall be as manufactured by Price, Metal Aire or Titus.

B. Coordinate grilles with mounted type on ceiling or wall construction. Refer to architectural drawings for exact location, ceiling type and wall construction prior to ordering and installation of equipment.

2.05 Automatic temperature control

A. General: furnish and install control components for a complete control system as specified herein and as shown on the plans. The system shall include all thermostats, sensor, controllers, damper and damper actuators, and other accessories required for a complete installation, and electrical work incidental to the operation of the control system. Power sources will be provided by the electrical subcontractor as specified herein.

B. Wiring: furnish and install all electrical work including interlock and control wiring necessary for the control system interface wiring with the unit operation. Any step down voltage transformers shall be furnished. all interlock wiring shall be provided by this contractor. The wiring and raceway system shall comply to the requirements of "NEC" and electrical specifications.

C. Power sources by electrical contractor: For use by the control manufacturer, the electrical subcontractor will furnish and install power sources as follows: 120/1/60 phase power with 24 volt transformer at each unit control panel location. Mechanical contractor shall coordinate power requirement with the electrical contractor.

PART 3 - EXECUTION

3.00 MATERIALS AND WORKMANSHIP:

A. All materials installed in this work shall be new, unless noted for reuse, without damaged functional or aesthetic components. All equipment finished shall be touched up with matching finishes where slight scratches occur. Equipment or material subject to severe deterioration shall be completely refinished or replaced as directed by the Owner, Architect or the Engineer.

B. All labor utilized in the installation of work shall be experienced in the respective trade required. The installation of exposed finished materials shall be neatly done flush, straight and/or plumb, without distortion, meeting the building finished surfaces.

C. All hvac materials and equipment shall conform to the standards listed within this section of the specifications and wherever such standards have been established, items shall bear its respective label.

D. Where labor to be furnished must meet specific code requirements, only individuals certified to do such shall be used.

E. All equipment shall be installed in accordance with the manufacturer's instructions and recommendations with adequate clearance for access for maintenance.

3.01 COORDINATION:

A. This contractor shall give full cooperation to other trades and to the general contractor and shall furnish any information necessary to permit the work of all trades to be installed satisfactorily and with least possible interference or delay. if this contractor installs his work before coordinating with other trades, he shall make the necessary changes in his work to correct the condition, without extra charge. In areas, if due to construction conditions, more than one (1) trade is required to use common openings in beams, conduits, etc., This contractor must plan and locate the positions of the items of piping, ducts, conduits, etc., which are under the scope of his contract with that of items under the scope of other contractors, in order that all items are properly located and may be accommodated within the space available. location and positioning shall be done prior to installation and to the satisfaction of the architect and/or engineer.

3.02 HOISTING, SCAFFOLDING, STAGING, AND PLANKING

A. Provide, set-up and maintain all required derricks, hoisting machinery, scaffolds and staging, planking; and perform all hoisting required to complete the work of this Filed Sub-Bid as indicated and specified.

B. Scaffolds shall have solid backs and floors to prevent dropping materials there from to the floors or ground.

3.03 SYSTEM START-UP AND OPERATION:

A. This contractor shall provide all labor and materials and services necessary for the initial startup and operation of all systems and equipment furnished and installed under this section of the specifications.

B. Balance systems and system components to within 10% of specified values shown on drawings. provide balancing reports for each system and individual system component under each system.

C. This contractor shall provide the services of qualified factory representatives for all major equipment pre-start setup, startup and initial operation. Such periods shall be sufficient to insure proper operation of systems and equipment.

3.04 TESTING AND BALANCING

A. Total system balance shall be performed in accordance with AABC National Standards for Field Measurement and Instrumentation, Total System Balance or ASHRAE Systems Handbook.

B. Provide the following:
1. Before commencing work, verify that systems are complete and operable. Ensure the following:
   a. Equipment is operable and in a safe and normal condition.
   b. Temperature control systems are installed complete and operable.
   c. Proper thermal overload protection is in place for electrical equipment.
   d. Final filters are clean and in place. If required, install temporary media in addition to final filters.
   e. Duct systems are clean of debris.
   f. Correct fan rotation.
   g. Fire and volume dampers are in place and open.
   h. Access doors are closed and duct end caps are in place.
   i. Air outlets are installed and connected.
   j. Duct system leakage has been minimized.
2. Report any defects or deficiencies noted during performance of services to the Designer.
3. Promptly report abnormal conditions in mechanical systems or conditions which prevent system balance.
4. If, for design reasons, system cannot be properly balanced, report as soon as observed.
5. Beginning of work means acceptance of existing conditions.
6. Provide additional balancing devices as required.
7. Adjust air handling systems to plus or minus 5 percent for supply systems and plus or minus 10 percent for return and exhaust systems from figures indicated.
8. Recorded data shall represent actually measured, or observed condition.
9. After adjustment, take measurements to verify balance has not been disrupted or that such disruption has been rectified.
10. Leave systems in proper working order, replacing belt guards, closing access doors, closing doors to electrical switch boxes, and restoring thermostats to specified settings.
11. At final inspection, recheck random selections of data recorded in report. Recheck points or areas as selected and witnessed by the Owner.
12. Adjust air handling and distribution systems to provide required or design supply, return, and exhaust air quantities.
13. Make air quantity measurements in ducts by Pitot tube traverse of entire cross sectional area of duct.
14. Measure air quantities at air inlets and outlets.
15. Adjust distribution system to obtain uniform space temperatures free from objectionable drafts and noise.
16. Use volume control devices to regulate air quantities only to extent that adjustments do not create objectionable air motion or sound levels. Effect volume control by duct internal devices such as dampers.
17. Vary total system air quantities by adjustment of fan speeds. Provide drive changes required. Vary branch air quantities by damper regulation.
18. Measure static air pressure conditions on air supply units, including filter and coil pressure drops, and total pressure across the fan. Make allowances for 50 percent loading of filters.

3.05 OPERATING AND MAINTENANCE MANUALS:

A. This contractor shall provide a complete set of operating and maintenance manuals and a CD with the complete owners manual in PDF format to the owner prior to the operating instruction period. maintenance manuals shall be submitted for approval. The receipt of approved maintenance manuals by the owner shall be a prerequisite to system acceptance. Each manual shall include the following:
1. A complete set of shop drawings arranged in accordance with their appearance in the specifications. drawing shall be folded and included in envelopes and bound into the manual.
2. A complete set of operational and servicing instructions for each piece of equipment, bound into the manual adjacent to the corresponding shop drawing.
3. A complete listing of all equipment suppliers, together with local agent's names, addresses and telephone numbers.
4. Copies of all service contracts provided for the guarantee period.
5. Copies of all equipment and system warranties.

3.06 OPERATING INSTRUCTIONS:

A. This contractor shall provide competent representatives of his firm and also qualified representatives for his major equipment to instruct owner-designated personnel on the startup, operation, shutdown, and servicing of all equipment and systems furnished and installed under this section. No less than ten (10) days notice shall be given to the owner for the beginning of the instruction period to permit scheduling of owner personnel. The instruction period shall be a prerequisite to system acceptance.

B. At the conclusion of the operating instructions, this contractor shall have the owner's personnel sign-off stating they have received the required instruction. Separate statements shall be required for each piece of equipment and system. these statements shall include date, names of owner's representative, name of instructor, and brief description of equipment or system.

3.07 PROTECTION AND CLEAN-UP:

A. This contractor shall be responsible for maintenance and protection of all materials and equipment furnished by him during the construction period from loss, damage or deterioration until final acceptance by the owner. All materials and equipment on the jobsite shall be stored and protected from the weather. All piping and equipment openings shall be temporarily closed during construction to prevent obstruction and damage.

B. All equipment with damaged finished surfaces shall be cleaned and repainted with the same paints as were factory applied.

C. Cleaning:
1. Keep the jobsite free from the accumulation of waste materials and rubbish daily. At completion of the work, remove all rubbish, construction equipment and surplus materials from the site and leave the premises in a clean condition.
2. Upon completion all sheetmetal work specified under this Section is to be cleaned. All equipment is to be cleaned, all trim installed, all protective oil, tape or other materials used to protect work are to be removed.
3. All ducts, fans, and equipment shall be thoroughly cleaned inside and outside and blown out to prevent any debris from damaging fan shields or debris hanging through registers or diffusers when systems are placed in operation. All temporary connections required for blowing out the systems, cheesecloth for all duct openings, and any other equipment or labor for cleaning, shall be provided by the HVAC Contractor. The entire HVAC system shall be kept clean until final acceptance. Any damage to ceilings by the HVAC Contractor shall be rectified
   by him at no additional charge to the Owner, to the satisfaction of the Designer.
4. Replace all filters in all air handling units and ERVs with MERV-13 prior to final acceptance by the Owner.

This drawing is copyrighted and is subject to copyright protection as an "architectural work" under 17 U. S. C. Sec. 101 et seq. The protection includes but is not limited to the overall form as well as the arrangement and composition of spaces, materials, color and elements in the design. Under such protection, unauthorized use of this drawing may result in the cessation of construction or buildings being seized and/or monetary compensation being awarded to The Robinson Green Beretta Corporation (RGB).

Any reproduction, possession, or use of this drawing or any part thereof without the express written permission of RGB, is prohibited. Violators will be prosecuted to the full extent of the law.

© RGB 2017

Certification

STEVEN A. KARAN
No. 6537
REGISTERED PROFESSIONAL ENGINEER (MECHANICAL)

Drawn by JPK

Checked by GAA

Revised on

B|E|R
BUILDING ENGINEERING RESOURCES, INC.
66 Main Street
N. Easton, MA 02356
T 508.230.0260
F 508.230.0265
ber@ber-engineering.com

100 Midway Road - Suite 23
Cranston, RI 02920
T 401.942.3500
F 401.228.6205
www.ber-engineering.com

50 Holden Street
Providence, Rhode Island 02908

Phone: (401) 272-1730
Fax: (401) 273-7156

E-mail: rgbinfo@rgb.net
www.rgb.net

RGB architects

Architecture ÂProject Management ÂInterior Design

Project

FORT ADAMS MAINTENANCE BUILDING

RIDEM / DIVISION OF PARKS & RECREATION

STATE OF RHODE ISLAND AND PROVIDENCE PLANTATIONS

FORT ADAMS STATE PARK, NEWPORT, RI

Drawing Status

ISSUED FOR CONSTRUCTION

Issued On MAY 29, 2019

Sheet Contents

MECHANICAL SPECIFICATIONS

Project Number.

Drawing No.

M302

Sheet of

LEGEND

- MOUNTING HEIGHTS SHALL BE AS INDICATED UNLESS SHOWN OTHERWISE ON ELECTRICAL DRAWINGS OR ARCHITECTURAL ELEVATIONS
- ALL SYMBOLS MAY NOT BE SHOWN ON PLANS

RACEWAYS AND WIRING

P4–1,3,5 — SINGLE PHASE HOMERUNS TO PANELBOARD. "P4" DENOTES PANEL, "1,3,5" DENOTES CIRCUIT NUMBERS, [(3) 20A, 1P CIRCUITS] NUMBER OF SLASH MARKS DENOTES NUMBER OF #12AWG CONDUCTORS IN MINIMUM 3/4"C. NO SLASH MARKS INDICATE 2#12 & 1#12G–3/4"C UNLESS INDICATED OTHERWISE.

P4–2 20/3 — MULTI–POLE HOMERUN TO PANELBOARD. "P4" DENOTES PANEL, "2" DENOTES CIRCUIT NUMBER, 20 AMP 3 POLE C/B. NUMBER OF SLASH MARKS DENOTES NUMBER OF #12AWG CONDUCTORS IN MINIMUM 3/4"C.

NOTES:
1. GREEN GROUND CONDUCTOR NOT INDICATED BUT SHALL BE INCLUDED IN EACH RACEWAY. SIZE SHALL BE #12AWG UNLESS INDICATED OTHERWISE.

- E — 2#10,#10G EMERGENCY ONLY WIRING
- P — PRIMARY CONDUIT DUCT BANK
- S — SECONDARY CONDUIT DUCT BANK
- T — TELEPHONE SERVICE CONDUIT DUCT BANK
- CATV — CABLE TELEVISION CONDUIT DUCT BANK

LIGHTING FIXTURES (REFER TO LIGHTING FIXTURE SCHEDULE FOR EXACT FIXTURE TYPE)

- A 2a — LIGHTING FIXTURE CEILING OR RECESSED MOUNTED. "A" DENOTES FIXTURE TYPE, "2" DENOTES CIRCUIT NUMBER, "a" DENOTES SWITCH CONTROL,
- LIGHT FIXTURE WIRED TO CONSTANT–ON OR NORMAL EMERGENCY CIRCUIT
- STRIP LIGHTING FIXTURE
- ROUND RECESSED LIGHTING FIXTURE
- WALL MOUNTED LIGHTING FIXTURE
- WALL WASH OR DIRECTIONAL LIGHTING FIXTURE
- CEILING MOUNTED ILLUMINATED EXIT SIGN. SINGLE OR DOUBLE FACE, WITH OR WITHOUT ARROWS AS INDICATED ON DRAWINGS
- WALL MOUNTED ILLUMINATED EXIT SIGN – SHADING INDICATES FACE PLATE(S)
- EB — SELF–CONTAINED EMERGENCY LIGHTING UNIT
- WP — REMOTE EMERGENCY LIGHTING HEADS – SINGLE OR DOUBLE AS SHOWN. "WP" DENOTES WEATHERPROOF

LIGHTING CONTROL DEVICES

- Soc ab, Svs ab — SINGLE POLE TOGGLE SWITCH. "a" DENOTES FIXTURE CONTROL. "oc" DENOTES INTEGRAL OCCUPANCY SENSOR, "vs" DENOTES INTEGRAL VACANCY SENSOR
- S3 — THREE WAY TOGGLE SWITCH
- S4 — FOUR WAY TOGGLE SWITCH
- SD — DIMMER SWITCH
- OC — CEILING MOUNTED OCCUPANCY SENSOR FOR LIGHTING CONTROL. REFER TO LIGHTING PLANS FOR EXACT CATALOG NUMBER
- VS — CEILING MOUNTED VACANCY SENSOR FOR LIGHTING CONTROL. REFER TO LIGHTING PLANS FOR EXACT CATALOG NUMBER

RECEPTACLES (MOUNTED 18" AFF OR AS INDICATED ON ARCHITECTURAL PLANS)

- IG 2 GFI WP — DUPLEX RECEPTACLE, "2" DENOTES CIRCUIT NUMBER, "GFI" DENOTES GROUND FAULT CIRCUIT INTERRRUPTER TYPE DEVICE, "IG" DENOTES ISOLATED GROUND TYPE DEVICE, "WP" DENOTES WEATHER PROOF COVER
- DUPLEX RECEPTACLE MOUNTED 6" ABOVE COUNTER TOP OR AS INDICATED ON ARCHITECTURAL PLANS
- DOUBLE DUPLEX RECEPTACLE MOUNTED 6" ABOVE COUNTER TOP OR AS INDICATED ON THE ARCHITECTURAL PLANS
- DOUBLE DUPLEX RECEPTACLE
- DUPLEX RECEPTACLE ONE HALF SWITCH CONTROLLED
- EWC — GFI DUPLEX RECEPTACLE FOR ELECTRIC WATER COOLER
- L6–30 — SPECIAL PURPOSE RECEPTACLE, "L6–30" DENOTES TYPE, SEE POWER PLANS FOR EXACT TYPES USED

TELECOMMUNICATIONS (MOUNTED 18" AFF)

- TELEPHONE OUTLET
- W — TELEPHONE OUTLET MOUNTED 54"AFF
- TELEPHONE OUTLET FLOOR MOUNTED
- COMPUTER SYSTEM OUTLET
- COMPUTER SYSTEM OUTLET, FLOOR MOUNTED
- COMBINATION TELEPHONE/DATA OUTLET

NOTE: E.C. SHALL PROVIDE A DOUBLE GANG BACK BOX WITH SINGLE GANG REDUCER, 1" CONDUIT AND PULLSTRING STUBBED OUT ABOVE ACCESSIBLE CEILING AT ALL LOCATIONS.

POWER DISTRIBUTION EQUIPMENT

- DISTRIBUTION PANEL
- PANELBOARD, SURFACE MOUNTED
- PANELBOARD, FLUSH MOUNTED
- J — JUNCTION BOX, SIZED PER NEC
- 2 — MOTOR, "2" DENOTES HORSEPOWER
- MAGNETIC MOTOR STARTER WITH ENCLOSURE, MINIMUM SIZE NEMA 1
- P — MANUAL MOTOR STARTER WITH THERMAL OVERLOAD. "P" DENOTES PILOT LIGHT
- 30/3 — NON–FUSED DISCONNECT SWITCH: "30/3" DENOTES 30 AMP/3 POLE SWITCH
- 30/20/3 — FUSED DISCONNECT SWITCH: "30/20/3" DENOTES 30 AMP/3 POLE SWITCH, 20 AMP FUSES
- COMBINATION MAGNETIC STARTER AND FUSED DISCONNECT SWITCH. SIZE OF STARTER, SWITCH AND FUSE AS REQUIRED
- T — PAD MOUNTED TRANSFORMER
- GROUND

MISCELLANEOUS

- J — JUNCTION BOX WITH FLEXIBLE CONNECTION TO EQUIPMENT
- EF — EXHAUST FAN
- CP — CONTROL PANEL
- PB — PULL BOX – SIZED PER NEC FOR CONDUITS ENTERING AND LEAVING
- FIRE RATED POKE–THRU WITH FLUSH MOUNTED DEVICES AS INDICATED
- T/D — FIRE RATED POKE–THRU WITH FLEXIBLE CONNECTION TO FURNITURE SYSTEM "T/D" DENOTES TEL/DATA SYSTEM DEVICE
- TV — CABLE TELEVISION OUTLET, WALL MOUNTED. E.C. SHALL PROVIDE 3/4" EMPTY CONDUIT WITH PULL STRING TO NEAREST ACCESSIBLE CEILING. PROVIDE FACEPLATE WITH TYPE "F" CONNECTOR AT BOX.
- PC — PHOTO–CELL
- TC — TIME CLOCK

MECHANICAL EQUIPMENT TAG ABBREVIATIONS

- AH — DENOTES EQUIPMENT TYPE
- 1 — DENOTES UNIT NUMBER

ACC	AIR–COOLED CONDENSER
AHU	AIR HANDLING UNIT
B	BOILER
CH	CHILLER
CUH	CABINET UNIT HEATER
EBB	ELECTRIC BASEBOARD
EF	EXHAUST FAN
EH	EXHAUST HOOD
EWH	ELECTRIC WALL HEATER
FC	FAN COIL
HP	HEAT PUMP
MAU	MAKE–UP AIR UNIT
P	PUMP
RTU	ROOF TOP UNIT
UH	UNIT HEATER
VAV	VARIABLE AIR VOLUME BOX
WH	ELECTRIC WATER HEATER

ABBREVIATIONS

3R	NEMA 3R RATING
4X	NEMA 4X RATING
A	AMPERES
AFF	ABOVE FINISHED FLOOR
AFG	ABOVE FINISHED GRADE
AIC	AMPERE INTERRUPTING CAPACITY
ARCH	ARCHITECT
ATS	AUTOMATIC TRANSFER SWITCH
AWG	AMERICAN WIRE GAUGE
C	CONDUIT
C/B	CIRCUIT BREAKER
C.T.	CURRENT TRANSFORMER
CAT	CATALOG
CKT	CIRCUIT
CU	COPPER
DWG	DRAWING
E	WIRED ON EMERGENCY CIRCUIT
EC	ELECTRICAL CONTRACTOR
EM	EMERGENCY
ETD	EXISTING TO BE DEMOLISHED
ETR	EXISTING TO REMAIN
ETRL	EXISTING TO BE RELOCATED
ETRP	EXISTING TO BE REPLACED
G	GROUND
GC	GENERAL CONTRACTOR
GFI	GROUND FAULT INTERRUPTER
HVAC	HEATING, VENTILATION, AIR CONDITIONING CONTRACTOR
IG	ISOLATED GROUND
KCMIL	ONE THOUSAND CIRCULAR MILS
KVA	KILOVOLT–AMPERES
KVAR	KILOVOLT–AMPERES REACTIVE
KW	KILOWATTS
MCB	MAIN CIRCUIT BREAKER
MCC	MOTOR CONTROL CENTER
MD	MOTORIZED DAMPER
MLO	MAIN LUGS ONLY
NC	NORMALLY CLOSED
NEC	NATIONAL ELECTRICAL CODE
NL	NIGHT LIGHT
NO	NORMALLY OPEN
NTS	NOT TO SCALE
ø	PHASE
P	POLE
PC	PLUMBING CONTRACTOR
P.T.	POTENTIAL TRANSFORMER
PVC	POLYVINYL CHLORIDE
RL	NEW LOCATION OF RELOCATED DEVICE
SM	SURFACE MOUNT
ST	SHUNT TRIP
T/D	TEL/DATA
TEL	TELEPHONE
UG	UNDERGROUND
UNO	UNLESS NOTED OTHERWISE
V	VOLT
VIF	VERIFY IN FIELD
W	WATT
WP	WEATHERPROOF
XFMR	TRANSFORMER

LIGHTING FIXTURE SCHEDULE

TYPE	DESCRIPTION	MANUFACTURER & CATALOG NUMBER	LAMPS TYPE	LAMPS VOLTS	LAMPS WATTS	REMARKS
A	2' X 4' LED HIGH BAY	DAY–BRITE# FBX08L–L–40–UNV–MD360	LED	120	61	PROVIDE WITH INTEGRAL OCCUPANCY SENSOR
B	2' X 4' LED TROFFER	DAY–BRITE# 2FGG38L835–4–DS–UNV–DIM	LED	120	31.8	– –
C	2' X 2' LED TROFFER	DAY–BRITE# 2FGG38L835–2–DS–UNV–DIM	LED	120	27.1	– –
D	6" RECESSED LED DOWNLIGHT	LIGHTOLIER# P6RDB–35–VB–	LED	120	20.7	– –
F	8' LED STRIP	DAY–BRITE# FSI830L835–UNV–DIM	LED	120	58	– –
G	4' LED STRIP	DAY–BRITE# FS14840UNV	LED	120	31	– –
J	EXPLOSION PROOF LED DOWNLITE	INDATECH LIGHTING# HALIX–CM–50W–U–40K	LED	120	50	– –
K	FULL CUTOFF WALLPACK	DAY–BRITE# 1223–35LA–NW	LED	120	35	– –
L	6" RECESSED LED SHOWER DOWNLIGHT	LIGHTOLIER# L3–08–90–35–S–CW	LED	120	12	– –
	LED EXIT SIGN WITH INTEGRAL BATTERY BACK–UP	MULE LIGHTING# MXBRUUSA	LED	120	.5	– –
EB	EMERGENCY BATTERY UNIT	MULE LIGHTING# MRDR–6–12–W–(WP–DC)	LED	120	6.6	– –
WP	REMOTE EMERGENCY FIXTURE	MULE LIGHTING# ASRLED2–WP	LED	120	3.6	– –

LIGHTING FIXTURE NOTES:

1. PROVIDE ACCESSORIES AND MOUNTING HARDWARE FOR ALL FIXTURES.
2. COLORS SHALL BE AS SELECTED BY ARCHITECT.
3. COORDINATE EXACT LOCATION WITH ARCHITECT PRIOR TO ROUGH–IN.
4. E.C. SHALL ENSURE THAT ALL PROPOSED SWITCHES AND DIMMER SWITCHES ARE COMPATIBLE WITH THE LIGHT FIXTURE(S) INDICATED TO BE CONTROLLED. INSTALL ALL SWITCHES AND DIMMER SWITCHES PER MANUFACTURER'S RECOMMENDATIONS AND REQUIREMENTS.

DEMOLITION AND REMOVAL WORK

A. REMOVE ALL ELECTRICAL EQUIPMENT, WIRING, AND OTHER ELECTRICAL WORK AS REQUIRED. DISCONNECT LOAD AND LINE END OF CONDUCTORS FEEDING DEVICES WHICH ARE TO BE REMOVED OR ABANDONED, REMOVE CONDUCTORS NO LONGER IN USE. CUT BACK TO FLOOR, WALL, OR CEILING AND PLUG BOTH ENDS OF CONCEALED CONDUITS MADE OBSOLETE BY THIS ALTERATION. REMOVE EXPOSED OR ABANDONED CIRCUITS AND OUTLETS. REMOVE MATERIAL AND EQUIPMENT AND DISPOSE OF AS DIRECTED.

B. WHEREVER IT IS REQUIRED TO DISCONNECT OR REMOVE ANY PART OF AN EXISTING CIRCUIT, IMMEDIATELY RECONNECT THAT CIRCUIT OR REESTABLISH SERVICE IN THE REMAINING PORTION OF THE CIRCUIT.

C. THE WORK SHALL ALSO INCLUDE THE REMOVAL OF MATERIALS AS DIRECTED. PRIOR TO REMOVING EQUIPMENT AND MATERIAL FROM PROJECT SITE, THE BUILDING MANAGER OR OWNER WILL INSPECT AND ADVISE WHICH ITEMS WILL BE STORED.

D. WHERE EXISTING RECEPTACLES AND/OR SWITCHES ARE LOCATED IN COLUMNS AND/OR EXTERIOR WALLS, AND ARE NOT TO BE REUSED, REMOVE RECEPTACLE AND CAP OUTLET BOX. RECEPTACLES SHOWN ON PARTITIONS TO BE REMOVED SHALL HAVE ALL WIRING AND CONDUIT REMOVED AS WELL.

E. WHERE PRESENT WORK IS DAMAGED IN THE EXECUTION OF THIS CONTRACT, OR WHERE OPENINGS ARE LEFT DUE TO THE REMOVAL OF CONDUITS, EQUIPMENT, OR APPARATUS, THE SAME SHALL BE REPAIRED OR CLOSED UP TO CORRESPOND IN MATERIAL, QUALITY, SHAPE, AND FINISH WITH THAT OR SIMILAR AND ADJOINING WORK, UNLESS OTHERWISE CALLED FOR.

F. SHOULD ANY DAMAGE DUE TO THE EXECUTION OF THIS CONTRACT OCCUR TO THE FURNITURE, FIXTURES, OR ANY OTHER EQUIPMENT OR APPARATUS, SUCH DAMAGES SHALL BE PROPERLY REPAIRED WITH THE SUPPLY OF NEW ARTICLES AND MADE GOOD WITHOUT EXTRA CHARGE.

G. WHERE REMOVAL OF EXISTING ELECTRICAL EQUIPMENT WILL RESULT IN OUTAGES IN AREA NOT TO BE DEMOLISHED, THIS CONTRACTOR SHALL COORDINATE IN ADVANCE AND OBTAIN THE APPROVAL OF THE BUILDING MANAGER OR OWNER.

BRANCH CIRCUIT WIRING NOTES:

1. WIRING IS SHOWN ON DRAWINGS ONLY FOR SPECIFIC ROUTES OR SPECIAL CONDITIONS.
2. WIRING AND CONDUIT SHALL BE REQUIRED BETWEEN ALL OUTLETS INDICATED WITH CIRCUIT NUMBERS AND PANEL DESIGNATIONS.
3. ALL SWITCH CONTROLS SHALL BE PROVIDED WITH WIRING AND CONDUIT AS REQUIRED.
4. ALTHOUGH ALL BRANCH CIRCUIT WIRING AND CONDUIT IS NOT SHOWN, IT IS THE INTENT OF THESE DOCUMENTS THAT A COMPLETE BRANCH CIRCUIT WIRING SYSTEM BE INSTALLED.
5. A GREEN GROUNDING CONDUCTOR SHALL BE RUN WITH ALL CIRCUITS. VERIFY CONDUIT SIZE TO ENSURE IT CAN ACCOMMODATE ALL PHASE, NEUTRAL AND GROUND CONDUCTORS.
6. PROVIDE A NEUTRAL CONDUCTOR TO ALL NEW LIGHTING SWITCH BOXES PER NEC ARTICLE 404.2.
7. WHERE EXISTING SWITCHES AND RECEPTACLES ARE INDICATED TO REMAIN, THIS CONTRACTOR SHALL REPLACE SAID DEVICE(S) AND DEVICE PLATE(S) WITH NEW TO MATCH THE NEW CONSTRUCTION. WHERE THEY ARE INDICATED AS RELOCATED, EXTEND BRANCH CIRCUIT WIRING TO NEW LOCATION AND PROVIDE NEW DEVICE AND DEVICE PLATE TO MATCH NEW CONSTRUCTION.
8. ALL SELF CONTAINED EMERGENCY LIGHTING UNITS AND EXIT LIGHTING IN THE BUILDING SHALL BE CONNECTED TO THE NEAREST UNSWITCHED LIGHTING CIRCUIT IN THE AREA WITH 2 #12, #12G, 3/4" CONDUIT UNLESS OTHERWISE NOTED.

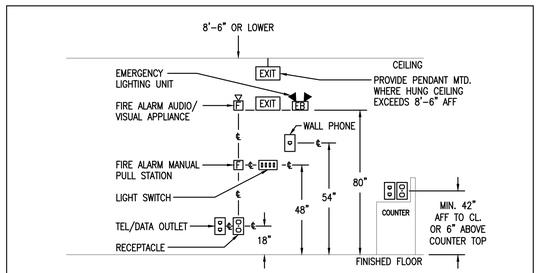

NOTES:
1. INSTALL DEVICES ON ONE COMMON VERTICAL CENTERLINE.
2. INSTALL DEVICES AT THIS HEIGHT WHEREVER APPLICABLE.

DETAIL OF TYPICAL DEVICE MOUNTING HEIGHTS | NTS

This drawing is copyrighted and is subject to copyright protection as an "architectural work" under 17 U. S. C. Sec. 101 et seq. The protection includes but is not limited to the overall form as well as the arrangement and composition of spaces, materials, color and elements in the design. Under such protection, unauthorized use of this drawing may result in the cessation of construction or buildings being seized and/or monetary compensation being awarded to The Robinson Green Beretta Corporation (RGB).

Any reproduction, possession, or use of this drawing or any part thereof without the express written permission of RGB, is prohibited. Violators will be prosecuted to the full extent of the law.

© RGB 2017

Certification

MARC R. PLANTE
No. 6397
REGISTERED PROFESSIONAL ENGINEER ELECTRICAL

Drawn by NM

Checked by DEC

Revised on

B|E|R
BUILDING ENGINEERING RESOURCES, INC.
66 Main Street
N. Easton, MA 02356
T 508.230.0260
F 508.230.0265
ber@ber-engineering.com
100 Midway Road - Suite 23
Cranston, RI 02920
T 401.942.3500
F 401.228.6205
www.ber-engineering.com

50 Holden Street
Providence, Rhode Island 02908

Phone: (401) 272-1730
Fax: (401) 273-7156

E-mail: rgbinfo@rgb.net
www.rgb.net

RGB architects

Architecture ÂProject Management ÂInterior Design

Project

FORT ADAMS MAINTENANCE BUILDING

RIDEM / DIVISION OF PARKS & RECREATION

STATE OF RHODE ISLAND AND PROVIDENCE PLANTATIONS

FORT ADAMS STATE PARK, NEWPORT, RI

Drawing Status

ISSUED FOR CONSTRUCTION

Issued On MAY 29, 2019

Sheet Contents

ELECTRICAL - LEGEND, SCHEDULE, & NOTES

Project Number.

Drawing No.

E001

Sheet of

ELECTRICAL SPECIFICATIONS

PART 1 – GENERAL

1.01 GENERAL REQUIREMENTS

A. THESE SPECIFICATIONS AND DRAWINGS ARE INTENDED TO SERVE JOINTLY AS A BASIS UPON WHICH THE CONTRACTOR SHALL SUBMIT A PRICE FOR MATERIAL AND LABOR PROVISIONS.

B. IT IS NOT INTENDED THAT THE PLANS OR SPECIFICATION SHOW OR STATE EVERY DETAILED REQUIREMENT OF THE WORK, BUT RATHER THAT THEY FURNISH ADEQUATE INFORMATION FOR AN EXPERIENCED CONTRACTOR TO PROVIDE A COMPLETELY ACCEPTABLE INSTALLATION. THE GENERAL CONDITIONS FORM A PART OF THESE SPECIFICATIONS WHETHER ATTACHED HERETO OR NOT, SHALL BE CAREFULLY EXAMINED BEFORE SUBMITTING A PROPOSAL. WHERE GENERAL CONDITIONS CLAUSES ARE REPEATED IN THIS SECTION, IT SHALL BE UNDERSTOOD AS CALLING SPECIAL ATTENTION TO THEM, OR AS A FURTHER QUALIFICATION, AND SHALL NOT BE ASSUMED AS OMITTING ANY OTHER CLAUSES. NO GENERAL CONDITIONS REFERRING TO THE WORK INCLUDED HEREIN SHALL BE CONSIDERED AS WAIVED UNLESS SPECIFICALLY STATED HEREIN.

C. BEFORE SUBMITTING PROPOSAL, EXAMINE ALL PLANS RELATING TO THIS WORK, VERIFY ALL GOVERNING CONDITIONS AT THE SITE, BECOME FULLY INFORMED AS TO THE EXTENT AND CHARACTER OF THE WORK REQUIRED AND ITS RELATION TO THE WORK OF OTHER TRADES. SUBMISSION OF A COST PROPOSAL (BID) WILL BE JUDGED AS EVIDENCE THAT THE SITE EXAMINATION HAS BEEN MADE. NO CONSIDERATION WILL BE GRANTED FOR ANY ALLEGED MISUNDERSTANDING OF THE MATERIALS TO BE FURNISHED FOR WORK TO BE DONE. IT BEING UNDERSTOOD THAT THE SUBMISSION OF A PROPOSAL IS AN AGREEMENT TO ALL CONDITIONS REFERRED TO HEREIN OR INDICATED ON THE PLANS.

D. PROPOSAL MUST INCLUDE EVERYTHING REQUIRED TO PROVIDE A COMPLETE INSTALLATION AS CONTEMPLATED IN A SPECIFICATIONS AND PLANS, WHETHER SPECIFICALLY SHOWN OR SPECIFIED OR NOT. INCLUDED ARE LABOR, MATERIALS, EQUIPMENT, LIGHTS, TOOLS, SCAFFOLDING, ETC. NECESSARY TO COMPLETE INSTALLATION OF EVERYTHING DESCRIBED, SHOWN OR REASONABLY IMPLIED.

E. ANY DISCREPANCIES BETWEEN THESE SPECIFICATIONS AND THE ACCOMPANYING PLANS, OR THESE SPECIFICATIONS AND PLANS AND THE SPECIFICATIONS OF OTHER TRADES, SHALL BE BROUGHT TO THE ATTENTION OF THE ARCHITECT PRIOR TO THE SUBMISSION OF THE BID. FAILURE TO COMPLY WITH THE ABOVE SHALL ALLOW THE ARCHITECT TO MAKE A FINAL AND BINDING DECISION AT A LATER DATE AND NO ALLOWANCE WILL BE GIVEN IF THE MORE EXPENSIVE OF THE ITEM IN QUESTION IS SELECTED.

F. THE WORK CALLED FOR IN THESE PLANS AND SPECIFICATIONS SHALL BE COORDINATED WITH THE STRUCTURE, WORK OF ALL RELATED TRADES, AND SHALL BE SO ARRANGED THAT THERE WILL BE NO DELAY IN THE PROPER INSTALLATION AND COMPLETION OF ANY PART OF EACH RESPECTIVE WORK. WHEREIN IT MAY BE INTERRELATED WITH THIS CONTRACT ALL WORK CAN PROCEED IN ITS NATURAL SEQUENCE WITHOUT UNNECESSARY DELAY. THE CONTRACTOR IS RESPONSIBLE FOR ANY ADDITIONAL COST AND DELAYS IN THE WORK RESULTING FROM SUBSTITUTION UNDER THIS DIVISION: INCLUDING, BUT NOT LIMITED TO, ANY CHANGES, INDECISION, INSTALLATION OR THE WORK OF OTHER TRADES.

G. ELECTRICAL DRAWINGS ARE DIAGRAMMATIC (EXCEPT WHERE DIMENSIONED) AND INDICATE THE GENERAL ARRANGEMENT OF SYSTEM AND WORK. FOLLOW ARCHITECTURAL, STRUCTURAL, AND MANUFACTURER'S SHOP DRAWINGS FOR GREATER ACCURACY. CONSULT ENGINEER IN CASE OF DOUBT OR CONFLICT, UNLESS, NOTED, FIXED DIMENSIONS ARE BASED ON THE PRODUCT OF ONE MANUFACTURER, VERIFY DIMENSIONS WITH THE SHOP DRAWINGS OF THE MATERIAL ACTUALLY APPROVED OR PURCHASED.

H. EXACT LOCATION OF ALL EQUIPMENT, PANELS, PULL BOXES, FEEDERS, FIXTURES, ETC., SHALL BE APPROVED BY THE ARCHITECT, AND OWNER PRIOR TO THE INSTALLATION OF THE SAME.

I. CONTRACTOR SHALL FURNISH ALL NECESSARY OUTLETS, SUPPORTS, FITTINGS, AND ACCESSORIES TO FULFILL APPLICABLE CODES, REGULATIONS, AND THE BEST PRACTICES OF THE TRADE FOR INSTALLATION OF ALL ELECTRICAL WORK.

J. EXPOSED CONDUITS CAN BE INSTALLED BUT IN NO CASE SHALL BE INSTALLED LESS THAN NINE FEET ABOVE THE FINISHED FLOOR OR AS NOTED. CONDUITS INSTALLED IN THE AREA WHERE HUNG CEILING OR OTHER FURRED SPACES ARE INDICATED SHALL BE INSTALLED CONCEALED. SHOULD ANY WORK REQUIRE SUBSEQUENT MODIFICATION OR RELOCATION TO AVOID INTERFERENCE OR CONFLICTS WITH OTHER WORK, SUCH CHANGES SHALL BE MADE WITHOUT ADDITIONAL COST TO THE OWNER.

K. ANY NECESSARY ELECTRICAL SERVICE INTERRUPTIONS SHALL BE AT A TIME CONVENIENT TO THE BUILDING OWNER.

L. ALL PENETRATIONS THROUGH SLABS AND FIRE RATED PARTITIONS SHALL BE FIRE STOPPED USING APPROVED METHOD TO MAINTAIN THE FIRE RESISTANCE RATING.

M. THE E.C. SHALL CALL FOR A FINAL PUNCH-LIST WHEN ALL ELECTRICAL WORK IS COMPLETE. IN THE EVENT REPRESENTATIVES OF THIS OFFICE ARRIVE AT THE SITE AND DEEM WORK IS NOT SUFFICIENTLY COMPLETE, NO REVIEW/PUNCH-LIST WILL OCCUR. THE E.C. WILL BE RESPONSIBLE FOR ALL COSTS ASSOCIATED WITH RESCHEDULING THE PUNCH-LIST.

1.02 SCOPE OF WORK

A. WITHOUT INTENDING TO LIMIT AND/OR RESTRICT THE SCOPE OF WORK REQUIRED AND SOLELY FOR THE CONVENIENCE OF THE CONTRACTOR, THE WORK OF THIS DIVISION SHALL, IN GENERAL COMPRISE THE FOLLOWING:

1. INSTALLATION OF NEW ELECTRICAL DISTRIBUTION SYSTEM AND PANELS.
2. FURNISHING AND INSTALLING NEW LIGHTING FIXTURES AND LAMPS.
3. FURNISHING AND INSTALLING NEW FEEDERS, CONDUITS, BRANCH CIRCUIT WIRING, ETC.
4. FURNISHING AND INSTALLING NEW RACEWAYS, OUTLET BOXES, WIRING AND CONNECTIONS FOR LIGHTING FIXTURES, SWITCHES, AND RECEPTACLES.
5. PROVIDE CONNECTIONS TO ALL ELECTRICAL EQUIPMENT FURNISHED BY OTHER TRADES OR BY THE OWNER.
6. POWER WIRING FOR ALL MOTORS, INCLUDING INSTALLING ALL REQUIRED DISCONNECT SWITCHES AND MOUNTING OF STARTERS.
7. FURNISHING AND INSTALLING ALL TELEPHONE/DATA SYSTEM CONDUITS, SLEEVES AND BOXES.
8. TEMPORARY LIGHT AND POWER.
9. GROUNDING.
10. CUTTING, CHANNELING, AND PATCHING.
11. FIRE ALARM SYSTEM MODIFICATIONS.
12. REMOVAL OF ELECTRICAL SYSTEM AS REQUIRED AND AS INDICATED ON PLANS.

1.03 WORK NOT INCLUDED

A. FURNISHING MOTORS, MOTOR STARTER AND CONTROL DEVICES CONNECTED TO EQUIPMENT FURNISHED UNDER OTHER DIVISIONS OF THE SPECIFICATIONS. HOWEVER, ELECTRICAL CONTRACTOR WILL ERECT AND WIRE SAME, FURNISH AUXILIARY MOTOR DISCONNECTS AS REQUIRED BY DRAWINGS OR CODE.

B. FINISH PAINTING.

C. TELEPHONE/DATA WIRING AND DEVICES.

1.04 CODES, PERMITS, AND INSPECTIONS

A. ELECTRICAL WORK SHALL COMPLY WITH THE APPLICABLE REQUIREMENTS OF THE STATE ELECTRICAL CODE, LOCAL ORDINANCES, AND OTHER AUTHORITIES EXERCISING JURISDICTION OVER ALL ELECTRICAL CONSTRUCTION WORK AND THE PROJECT.

B. NOTHING CONTAINED IN THESE SPECIFICATIONS OR PLANS SHALL BE SO CONSTRUED AS TO CONFLICT WITH ANY LOCAL, MUNICIPAL, AND NATIONAL BOARD OF THE FIRE UNDERWRITERS REGULATIONS GOVERNING THE INSTALLATION OF WORK SPECIFIED HEREIN. ALL SUCH LAWS, ORDINANCES, AND REGULATIONS, WHERE THEY APPLY TO THIS WORK, ARE HEREBY INCORPORATED INTO AND MADE A PART OF THE SPECIFICATIONS. ALL SUCH REQUIREMENTS SHALL BE SATISFIED AT NO ADDITIONAL EXPENSE TO THE OWNER.

C. ALL REQUIRED PERMITS AND INSPECTION CERTIFICATES SHALL BE OBTAINED, PAID FOR, AND MADE AVAILABLE AT THE COMPLETION OF THE WORK.

D. COORDINATE ALL SERVICE WORK WITH THE LOCAL UTILITY COMPANIES. ALL WORK INCLUDING BUT NOT LIMITED TO, PRIMARY ELECTRIC DUCT BANKS, TRANSFORMER PADS, MANHOLES/ PULL BOXES, METERING, PROTECTION BOLLARDS AND TELEPHONE/CABLE TV SERVICE DUCT BANKS SHALL BE PROVIDED IN ACCORDANCE WITH THE LATEST REQUIREMENTS OF THE LOCAL UTILITY COMPANIES.

1.05 GUARANTEES AND CERTIFICATIONS

A. ALL WORK SHALL BE GUARANTEED TO BE FREE FROM DEFECTS, DEFECTIVE MATERIALS OR WORKMANSHIP, AS WELL AS DAMAGE TO THE WORK OF ANY/ALL TRADES RESULTING FROM THE SAME, SHALL BE REPLACED OR REPAIRED AS DIRECTED FOR DURATION OF ONE YEAR, FROM THE DATE OF ACCEPTANCE.

B. THE DATE OF ACCEPTANCE SHALL BE THE DATE OF THE FINAL PAYMENT FOR THE WORK OR THE DATE OF A FORMAL NOTICE OF ACCEPTANCE, WHATEVER IS EARLIER.

C. NON-DURABLE ITEMS, SUCH AS ELECTRIC LAMPS, SHALL BE REPLACED UP TO THE DATE OF ACCEPTANCE, SUCH THAT THEY SHALL HAVE HAD NO MORE THAN 100 HOURS USE PRIOR TO THIS DATE.

1.06 SHOP DRAWINGS AND EQUIPMENT SUBMISSIONS

A. PRIOR TO PURCHASING ANY EQUIPMENT OR MATERIAL, A LIST OF THEIR MANUFACTURERS SHALL BE SUBMITTED FOR APPROVAL.

B. PRIOR TO ASSEMBLING OR INSTALLING THE WORK, CATALOG INFORMATION AND FACTORY ASSEMBLY DRAWINGS, AS REQUIRED FOR A COMPLETE EXPLANATION AND DESCRIPTION OF ALL FIXTURES, DEVICES, DEVICES AND ITEMS OF EQUIPMENT, SHALL BE SUBMITTED FOR APPROVAL.

C. FIELD INSTALLATION DRAWINGS AS REQUIRED TO EXPLAIN FULLY ALL PROCEDURES INVOLVED IN ERECTING, MOUNTING AND CONNECTING ALL ITEMS OF EQUIPMENT.

D. NO EQUIPMENT SHALL BE FABRICATED, DELIVERED, ERECTED, OR RECONNECTED THAN FROM DRAWINGS APPROVED BY THE ENGINEER. SHOP DRAWING IN THE NUMBER DIRECTED SHALL BE SUBMITTED FOR THE FOLLOWING:

1. LIGHTING FIXTURES.
2. WIRING DEVICES AND PLATES.
3. CONDUIT, BOXES, AND FITTINGS.
4. WIRE AND CABLE
5. PANEL BOARDS AND CIRCUIT BREAKERS
6. SAFETY SWITCHES AND MOTOR STARTERS
7. FIRE ALARM SYSTEM INCLUDING BATTERY CALCULATIONS AND WIRING DIAGRAMS.

E. IT SHALL BE UNDERSTOOD THAT APPROVAL OF DRAWINGS WILL NOT BIND THE ENGINEER OR THE OWNER TO THE FINAL ACCEPTANCE OF SUCH EQUIPMENT AS THE COMPLETED INSTALLATION AND TEST OF EQUIPMENT AS A WHOLE MUST BE PROVIDED AND GUARANTEED HEREIN AS SPECIFIED.

1.07 SAMPLES

A. UPON REQUEST BY ARCHITECT OR OWNER, SUBMIT FOR APPROVAL ONE SAMPLE OF EACH OF THE FOLLOWING:

1. EACH TYPE OF LIGHTING FIXTURE.
2. EACH TYPE OF WIRING DEVICE.
3. EACH TYPE OF WIRING DEVICE PLATE.

1.08 AS-BUILT DRAWINGS

A. THE CONTRACTOR SHALL, WITHIN 15 DAYS OF THE COMPLETION OF THE PROJECT AND PRIOR TO REQUESTING FINAL PAYMENT, SUBMIT AS-BUILT DRAWINGS OF THE ACTUAL INSTALLATION OF THE ELECTRICAL WORK. THREE (3) PAPER SETS OF DRAWINGS, SAME SCALE AS THE DESIGN SET UNLESS OTHERWISE INDICATED IN THE SPECIFICATIONS, AND THREE (3) CD DISKS WITH AutoCAD 2007 OR LATER VERSIONS OF THE AS-BUILTS ARE REQUIRED FOR SUBMISSION TO THE ARCHITECT ENGINEER.

1.09 TESTS

A. BEFORE AN APPLICATION FOR THE FINAL ACCEPTANCE OF THE WORK WILL BE CONSIDERED, ALL TESTS DEEMED NECESSARY BY THE ARCHITECT TO SHOW PROPER EXECUTION OF THE WORK SHALL HAVE BEEN PERFORMED AND COMPLETED IN THE PRESENCE OF AN ARCHITECT'S REPRESENTATIVE. SCHEDULE OF ALL TESTING PROCEDURES SHALL BE ARRANGED TO SUIT THE CONVENIENCE OF THE ARCHITECT.

B. ANY DEFECTS OR DEFICIENCIES DISCOVERED IN ANY OF THE ELECTRICAL WORK SHALL BE CORRECTED.

1.10 IDENTIFICATION

A. ELECTRICAL CONTRACTOR SHALL FURNISH AND INSTALL TYPEWRITTEN DIRECTORIES BEHIND TRANSPARENT PLASTIC COVERS IN METAL FRAMES, IN ALL NEW AND EXISTING PANELS INDICATING TYPE AND LOCATION OF LOAD BEING SERVED BY INDIVIDUAL CIRCUIT BREAKERS.

B. ALL PARTS OF EQUIPMENT, SUCH AS PANELS, JUNCTION BOXES, SAFETY SWITCHES, MOTOR STARTER, CIRCUIT BREAKERS, CONDUCTORS AND SIMILAR ITEMS SHALL BE IDENTIFIED BY NAME, AT SUPPLY END, "LOAD SUPPLIED", AND AT LOAD END "LOAD SUPPLIED FROM".

PART 2 – PRODUCTS

2.01 EQUIPMENT AND MATERIALS

A. ALL EQUIPMENT AND MATERIALS FOR PERMANENT INSTALLATION SHALL BE THE PRODUCTS OF RECOGNIZED MANUFACTURERS AND SHALL BE NEW.

B. NEW EQUIPMENT AND MATERIALS SHALL:

1. WHERE NORMALLY SUBJECTED TO UNDERWRITER'S LABORATORY INC. LISTING OR LABELING SERVICES, BE SO LISTED OR LABELED.
2. BE WITHOUT BLEMISH OR DEFECT.
3. NOT TO BE USED FOR TEMPORARY LIGHT AND POWER PURPOSES WITHOUT ARCHITECT'S AUTHORIZATION.
4. BE IN ACCORDANCE WITH THE LATEST APPLICABLE N.E.M.A. STANDARD.
5. BE APPROVED BY BUILDING MANAGER OR OWNER.

C. FOR ITEMS WHICH ARE TO BE INSTALLED BUT NOT PURCHASED AS PART OF THE ELECTRICAL WORK, THE ELECTRICAL WORK SHALL INCLUDE:

1. THE COORDINATION OF THEIR DELIVERY.
2. THEIR FIELD MAKE-UP AND INTERNAL WIRING AS MAY BE NECESSARY FOR THEIR OPERATION.

D. ELECTRICAL RACEWAY AND SUPPORTING SYSTEMS SHALL BE FURNISHED AND INSTALLED COMPLETE, WITH ALL MATERIALS, FITTINGS, CONNECTIONS AND ACCESSORIES NECESSARY TO PROVIDE IN EACH INSTANCE A COMPLETE OPERATING INSTALLATION, AS DESCRIBED HEREIN, AS INDICATED ON THE DRAWINGS, AND/OR AS APPROVED BY THE BUILDING MANAGER OR OWNER.

E. THE DRAWINGS ARE DIAGRAMMATIC AND GENERALLY INDICATIVE OF THE WORK TO BE INSTALLED, BUT DO NOT SHOW ALL BENDS, FITTINGS, AND BOXES WHICH MAY BE REQUIRED. THE CONTRACTOR SHALL CAREFULLY INVESTIGATE THE JOB CONDITIONS INCLUDING STRUCTURAL AND FINISH CONDITIONS AFFECTING ALL HIS WORK AND ARRANGE THE SAME ACCORDINGLY, FURNISHING SUCH FITTINGS, BOXES AND SIMILAR ITEMS AS MAY BE REQUIRED TO MEET SUCH CONDITIONS.

2.02 WIRING MATERIALS

A. WIRE AND CABLE SHALL BE COPPER, RATED FOR 600 VOLTS, TYPE THHN FOR BRANCH CIRCUITS AND XHHW FOR FEEDERS.

B. WIRE #10 AWG AND SMALLER SHALL BE SOLID, WIRE #8 AWG AND LARGER SHALL BE STRANDED.

C. WIRING SHALL BE CONSISTENTLY COLOR CODED THROUGHOUT. FOR 120/208 VOLT SYSTEMS, UTILIZE RED, BLUE, BLACK FOR LINE (PHASE) CONDUCTORS AND WHITE FOR NEUTRAL CONDUCTOR, SWITCH LEG SHALL BE SEPARATELY IDENTIFIED. GROUND CONDUCTOR SHALL BE GREEN. FOR 277/480V SYSTEMS, UTILIZE BROWN, ORANGE, YELLOW FOR LINE (PHASE) CONDUCTORS, AND GREY FOR NEUTRAL CONDUCTOR. GROUND CONDUCTOR SHALL BE GREEN WITH YELLOW TRACER.

D. MINIMUM SIZE:

1. LIGHTING AND POWER: #12 AWG, UNLESS OTHERWISE INDICATED.
2. CONTROL: #14 AWG.
3. 120 VOLT CIRCUITS OVER 100 FEET IN LENGTH AND 277 VOLT CIRCUITS OVER 200 FEET IN LENGTH FROM THE POINT OF SUPPLY TO THE FIRST OUTLET SHALL BE #10 AWG.

E. SPLICES IN BRANCH CIRCUIT WORK SHALL BE MADE BY MEANS OF TYPE 'R' "SCOTCHLOCK" ELECTRICAL TYPE.

F. ELECTRICAL INSULATION TAPE SHALL BE VINYL PLASTIC TYPE WITH PRESSURE ADHESIVE "SCOTCH" ELECTRICAL TYPE.

G. BRANCH CIRCUITRY NUMBERS INDICATED ON THE DRAWINGS ON MULTI-CIRCUIT HOMERUNS ARE FOR IDENTIFICATION OF DEVICES OR EQUIPMENT THEY ARE CONNECTED TO AND DO NOT NECESSARILY REFER TO PANELBOARD CIRCUIT NUMBERS. ASSIGNMENT OF BRANCH CIRCUIT NUMBERS SHALL BE PART OF THIS WORK AND INDICATED ON PANEL DIRECTORIES. BRANCH CIRCUITS SHALL BE CONNECTED TO CIRCUITS ON PANELBOARDS SO AS TO SECURE A REASONABLE BALANCE ON THE THREE PHASES. WHERE MORE THAN ONE CIRCUIT WITH A COMMON NEUTRAL IS INSTALLED IN THE SAME CONDUIT, EACH PHASE WIRE SHALL BE CONNECTED TO A DIFFERENT LEG OF THE SYSTEM.

H. ALL CONDUCTORS SHALL BE COLOR CODED THROUGHOUT AND NUMBERED AND TAGGED AT EACH JUNCTION BOX, PULL BOX, PANEL, AND DEVICE WITH SUITABLE FIREPROOF TAGS OR ADHESIVE IDENTIFICATION BANDS.

2.03 CONDUITS AND RACEWAYS

A. LIQUID TIGHT FLEXIBLE, GALVANIZED STEEL CONDUIT WITH CONTINUOUS COPPER BONDING CONDUCTOR, SHALL BE USED FOR CONNECTIONS TO MOTORS AND AT OTHER LOCATIONS WHERE VIBRATION MOVEMENT IS ENCOUNTERED.

B. UNLESS OTHERWISE INDICATED OR SPECIFIED ALL WIRING SHALL BE INSTALLED CONCEALED IN CEILINGS, WALLS, SLABS, PIPE CHASES AND FURRED SPACES WHENEVER POSSIBLE.

C. CONDUIT AND FITTINGS SHALL CONFORM TO LATEST ACCEPTABLE STATE CODE AND ALL OTHER CODES HAVING JURISDICTION.

D. CONDUIT SHALL BE 3/4" TRADE SIZE MINIMUM. UNLESS OTHERWISE INDICATED OR SPECIFIED.

E. ALL CONDUITS WHICH ARE TO REMAIN EMPTY FOR FUTURE INTRODUCTION OF CONDUCTORS SHALL BE PROVIDED WITH A PULL LINE WITH IDENTIFICATION BAND AT BOTH ENDS.

F. STEEL JACKETED METAL CLAD CABLE CAN BE USED FOR LIGHTING AND APPLIANCE BRANCH CIRCUITRY IN VOIDS OF CEILING AND PARTITIONS, PROVIDED THAT THIS TYPE OF WIRING IS ACCEPTABLE TO THE LOCAL BUILDING OFFICIAL OR HIS REPRESENTATIVE.

G. RIGID GALVANIZED STEEL (RGS) CONDUIT SHALL CONFORM TO UL 6. FITTINGS SHALL BE THREADED.

H. INTERMEDIATE METALLIC CONDUIT (IMC) SHALL CONFORM TO UL 1242. FITTINGS SHALL BE THREADED.

I. ELECTRICAL METALLIC TUBING (EMT) SHALL CONFORM TO UL 797. FITTINGS SHALL BE GLAND AND RING COMPRESSION TYPE.

J. FLEXIBLE METALLIC CONDUIT SHALL CONFORM TO UL1. LIQUIDTIGHT FLEXIBLE METAL CONDUIT SHALL CONFORM TO UL 360.

K. ALL CONDUIT FITTINGS AND CONNECTORS SHALL BE STEEL WITH INSULATED THROATS. DIE-FORMED ZINC FITTINGS ARE NOT ACCEPTABLE. BUSHINGS SHALL BE PROVIDED AT ALL CONDUIT TERMINATIONS. BUSHINGS LARGER THAN 1" SHALL BE GROUNDING TYPE. PVC BUSHINGS MAY BE UTILIZED ONLY FOR 3/4" BRANCH CIRCUIT CONDUITS TERMINATING AT PANELBOARDS.

2.04 JUNCTION BOXES

A. JUNCTION BOX AND PULL BOXES SHALL BE PROVIDED WHERE INDICATED OR SPECIFIED AND WHERE NECESSARY TO FACILITATE THE INSTALLATION OF EQUIPMENT OR WIRING.

B. ALL BOXES SHALL BE SIZED IN ACCORDANCE WITH NATIONAL ELECTRIC CODE.

2.05 OUTLET BOXES

A. OUTLET, PULL AND JUNCTION BOXES SHALL BE FABRICATED FROM STEEL AND CONFORM TO UL 50, UL 514, AND NEMA OS1. BOXES FOR INTERIOR LOCATIONS SHALL BE CODE GAUGE, GALVANIZED SHEET STEEL.

B. BOXES SHALL CONTAIN SUITABLE KNOCKOUTS. BARRIERS SHALL BE FURNISHED AS REQUIRED BY CODE.

C. BOXES SHALL BE SIZED AS REQUIRED BY CODE FOR NUMBER AND GAUGE OF CONDUCTORS THEREIN, EXCEPT WHERE NOTED TO BE LARGER, THE MINIMUM BOX SIZE SHALL BE 4" SQUARE BE 1 1/2" DEEP. COVERS GREATER THAN 50LBS. SHALL BE DIVIDED INTO MULTIPLE SECTIONS.

D. WHERE REQUIRED AND APPROVED BY THE ENGINEER, EXTRA DEEP OR EXTRA SHALLOW OUTLET BOXES SHALL BE USED TO FACILITATE THE INSTALLATION OF THE CONDUIT SYSTEM.

2.06 FASTENINGS, SUPPORTS, AND HANGERS

A. ALL PARTS OF THE ELECTRICAL INSTALLATION SHALL BE ADEQUATELY SUPPORTED FROM THE BUILDING CONSTRUCTION USING APPROVED CLAMP SCREWS WITH THE INSERTS OF EXPANSION ANCHORS, EXPANSION BOLTS AND TOGGLE BOLTS. "IN NO CASE SHALL THE HUNG CEILING MEMBERS OR WIRES BE USED TO SUPPORT CONDUIT".

B. ALL FASTENING, SUPPORTS, CLAMPS, ANCHORS, AND SIMILAR ITEMS SHALL BE OF TYPE SUITABLE FOR THE PURPOSE.

2.07 WIRING DEVICES

A. ALL DEVICES SHALL BE SPECIFICATION GRADE, U.L. APPROVED.

B. SINGLE POLE SWITCH, 20 AMP, 120/277 VOLTS. HUBBELL OR APPROVED EQUAL.

C. RECEPTACLE, 20 AMP, 2 POLE, 3 WIRE DUPLEX, 125 VOLT, GROUND TYPE. HUBBELL OR APPROVED EQUAL.

D. COLOR AND TYPE OF ALL DEVICE PLATES SHALL BE APPROVED BY ARCHITECT PRIOR TO PURCHASE/INSTALLATION.

E. THE E.C. SHALL PROGRAM ALL OCCUPANCY SENSORS TO THE SATISFACTION OF THE TENANT. AS A MINIMUM, THE E.C. SHALL PROVIDE (4) HOURS OF TRAINING TO THE TENANT. ALL OCCUPANCY SENSORS SHALL BE FULLY PROGRAMMED AT TIME OF FINAL PUNCH-LIST.

2.08 GROUNDING

A. ALL ENCLOSURES AND NON CURRENT CARRYING METALLIC PARTS OF ELECTRICAL EQUIPMENT, RACEWAY SYSTEMS AND EQUIPMENT GROUND BUSES SHALL BE EFFECTIVELY GROUNDED TO THE BUILDING GROUNDING SYSTEMS THROUGH THE SYSTEM GROUND CONDUCTORS. METALLIC CONDUITS AND OTHER RACEWAYS AND ENCLOSURES FOR CONDUCTORS SHALL BE METALLIC ALLOY JOINED TOGETHER INTO A CONTINUOUS ELECTRICAL CONDUCTOR, AS TO PROVIDE EFFECTIVE ELECTRICAL CONTINUITY.

B. GROUND CONTINUITY SHALL BE MAINTAINED THROUGHOUT.

2.09 LIGHTING FIXTURES

A. ALL LIGHTING FIXTURES SHALL COMPLY WITH THE STATE ELECTRIC CODE AND SHALL BE U.L. APPROVED.

B. ALL LIGHTING FIXTURES SHALL BE APPROVED PRIOR TO PURCHASE.

C. ALL LIGHTING FIXTURES SHALL BE FURNISHED AND INSTALLED COMPLETE WITH NECESSARY COMPONENTS, ACCESSORIES, AND LAMPS OF CORRECT TYPE AND RATING AS INDICATED ON ELECTRICAL DRAWINGS.

D. FIXTURES SHALL BE CAREFULLY SUPPORTED AND ALIGNED WITH NECESSARY HANGERS, SUPPORTING MEMBERS, AND FRAMES FOR PROPER INSTALLATION, ALL AS REQUIRED AND AS APPROVED.

E. ALL FIXTURES SHALL BE PROPERLY WIRED AND CONNECTED TO BRANCH CIRCUITS, TESTED AND LEFT READY FOR OPERATION.

F. FOR TYPE, MAKE, AND QUANTITIES OF LIGHTING FIXTURES REQUIRED, SEE ELECTRICAL DRAWINGS AND SPECIFICATIONS.

G. FIXTURES AND/OR FIXTURE OUTLET BOXES SHALL BE PROVIDED WITH HANGERS TO ADEQUATELY SUPPORT THE COMPLETE WEIGHT OF THE FIXTURE. PROVIDE SUPPLEMENTAL SUPPORTS PER ALL LOCAL AND STATE CODES.

H. ALL FLUORESCENT LIGHTING FIXTURES SHALL HAVE ENERGY SAVING LAMPS AND SOLID STATE ELECTRONIC ENERGY SAVING CLASS "P" BALLASTS.

2.10 TELEPHONE SYSTEM

A. PROVIDE EMPTY CONDUIT WITH PULL LINE 3/4" MINIMUM AT EACH TEL/DATA OUTLET LOCATION. EXTEND IT UP TO 12" ABOVE HUNG CEILING AND TERMINATE WITH PLASTIC BUSHING.

B. PROVIDE 5/8" THICK, 4'-0" WIDE AND 8'-0" HIGH FIRE RETARDANT PLYWOOD BACKBOARD IN TELEPHONE CLOSET. COORDINATE SIZE WITH OWNER'S TELEPHONE SYSTEM VENDOR.

C. ALL TELEPHONE/DATA WIRING, JACKS, COVERPLATES, PUNCH DOWN BLOCKS, ETC., ARE FURNISHED AND INSTALLED BY OWNER'S PRIVATE VENDOR.

2.11 PANEL BOARDS

A. PANEL BOARDS SHALL CONSIST OF FACTORY COMPLETED DEADFRONT ASSEMBLIES OF BACK PANS, MAIN BUSSES, OVER CURRENT AND SWITCHING UNITS, SHEET METAL CABINETS AND TRIMS. THEY SHALL BE SO DESIGNED THAT SWITCHING AND OVER CURRENT DEVICES CAN BE REPLACED WITHOUT DISTURBING ADJACENT UNITS AND WITHOUT REMOVING THE MAIN BUS CONNECTORS, SO THAT CIRCUITS MAY BE CHANGED WITHOUT MACHINING, DRILLING, OR TAPPING.

B. BUS BARS FOR THEIR MAINS SHALL BE OF COPPER HAVING CURRENT CAPACITIES AS INDICATED AND SIZED FOR SUCH CAPACITIES IN ACCORDANCE WITH UNDERWRITER LABORATORY STANDARDS. UNLESS OTHERWISE NOTED, FULL SIZE NEUTRAL BARS SHALL BE INCLUDED. BUS BAR TAPS FOR PANELS WITH SINGLE POLE BRANCHES SHALL BE ARRANGED FOR SEQUENCE PHASING OF THE BRANCH CIRCUIT DEVICES. BUSSING SHALL BE BRACED THROUGHOUT TO CONFORM TO INDUSTRY STANDARD PRACTICE GOVERNING SHORT CIRCUIT STRESSES IN PANELBOARDS. PHASE BUSSING SHALL BE FULL HEIGHT WITHOUT REDUCTION.

C. A GROUND BUS SHALL BE PROVIDED FOR EACH PANEL. EACH GROUND BUS SHALL BE OF THE SAME MATERIAL AS THE PHASE AND NEUTRAL BUSES.

D. PANEL BOARDS SHALL COMPLY WITH THE FOLLOWING INDUSTRY STANDARDS:

1. UL STANDARDS
   a. PANEL BOARDS – UL67
   b. CABINET & BOXES – UL50
2. NEMA STANDARD – PB1

E. CIRCUIT BREAKERS FOR PANEL OR INDIVIDUAL MOUNTING SHALL BE MOLDED CASE TYPE, QUICK-MAKE, QUICK-BREAK, OR MANUAL OR AUTOMATIC OPERATION.

F. AMPERE RATING AND NUMBER OF POLES SHALL BE AS INDICATED ON THE DRAWINGS.

G. BREAKERS SHALL BE TYPE AS MANUFACTURED BY SQUARE D OR APPROVED EQUAL. MINIMUM CIRCUIT BREAKER INTERRUPTING CAPACITY SHALL MATCH EXISTING SYSTEM, BUT IN NO CASE SHALL BE LESS THAN 22,000 SYM RMS AMPERES.

2.12 FIRESTOPPING, SMOKEPROOFING AND WATERPROOFING

A. PROVIDE FIRESTOP OR SMOKESTOP BETWEEN SLEEVES AND CONDUIT MANUFACTURED BY BIO FIRE SHIELD, INC., OR DOW CORNING CORP. AS FOLLOWS:

1. DOW CORNING SILICONE RTV FOAM.
2. DOW CORNING 96-081 RTV SILICONE ADHESIVE SEALANT.
3. MINERAL FIBER BOARD, MATTING AND PUTTY.

B. PROVIDE WATERPROOFING OF ALL MATERIALS WHICH PENETRATE A FLOOR, EXTERIOR WALL SLAB OR ROOF. ALL SLEEVES SHALL EXTEND A MINIMUM OF 3 INCHES ABOVE FLOOR OR ROOF.

This drawing is copyrighted and is subject to copyright protection as an "architectural work" under 17 U. S. C. Sec. 101 et seq. The protection includes but is not limited to the overall form as well as the arrangement and composition of spaces, materials, color and elements in the design. Under such protection, unauthorized use of this drawing may result in the cessation of construction or buildings being seized and/or monetary compensation being awarded to The Robinson Green Beretta Corporation (RGB).

Any reproduction, possession, or use of this drawing or any part thereof without the express written permission of RGB, is prohibited. Violators will be prosecuted to the full extent of the law.

© RGB 2017

Certification

MARC R. PLANTE
No. 6397
REGISTERED PROFESSIONAL ENGINEER ELECTRICAL

Drawn by NM

Checked by DEC

Revised on

BER
BUILDING ENGINEERING RESOURCES, INC.
66 Main Street
N. Easton, MA 02356
T 508.230.0260
F 508.230.0265
ber@ber-engineering.com
100 Midway Road - Suite 23
Cranston, RI 02920
T 401.942.3500
F 401.228.6205
www.ber-engineering.com

50 Holden Street
Providence, Rhode Island 02908

Phone: (401) 272-1730
Fax: (401) 273-7156

E-mail: rgbinfo@rgb.net
www.rgb.net

RGB ARCHITECTS

Architecture ÂProject Management Ãinterior Design

Project

FORT ADAMS MAINTENANCE BUILDING

RIDEM / DIVISION OF PARKS & RECREATION

STATE OF RHODE ISLAND AND PROVIDENCE PLANTATIONS

FORT ADAMS STATE PARK, NEWPORT, RI

Drawing Status

ISSUED FOR CONSTRUCTION

Issued On MAY 29, 2019

Sheet Contents

ELECTRICAL - SPECIFICATIONS

Project Number.

Drawing No.

E002

Sheet of

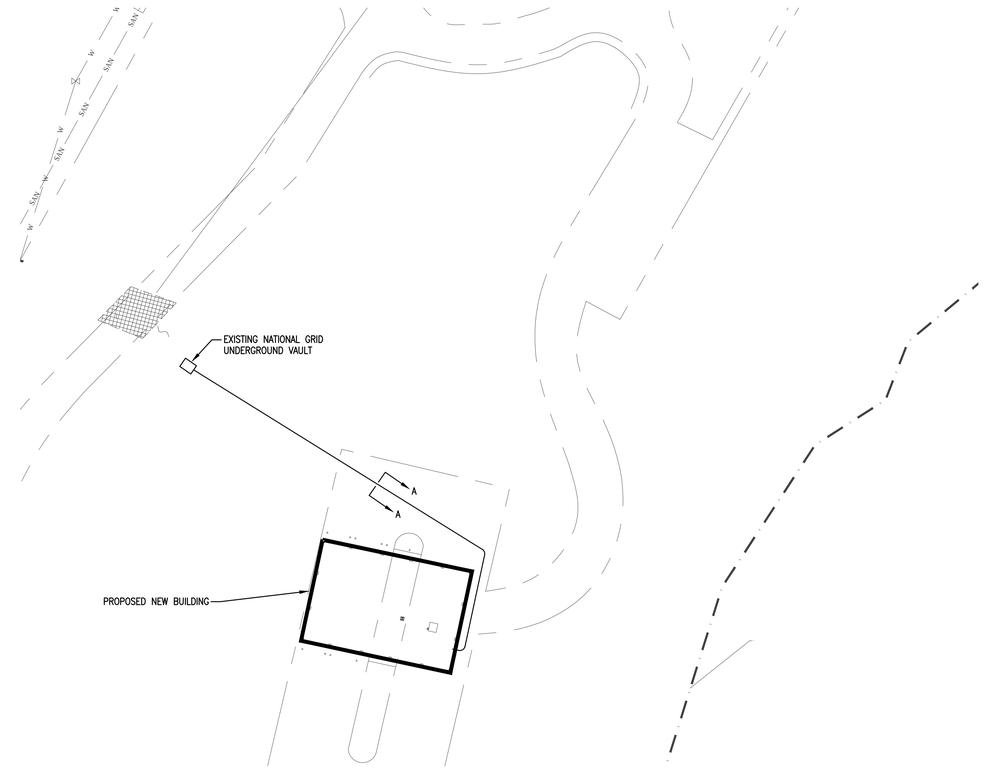

1 SITE PLAN
E003 Scale: 1" = 40'-0"

PANELBOARD SCHEDULE																										
PANEL DESIGNATION	VOLTS	PHASE	WIRES	MAINS MLO: MAIN LUGS ONLY MCB: MAIN CKT. BKR.			BRANCH DEVICES									TOTAL POLES *	MOUNTING S: SURFACE F: FLUSH	GROUND BUS	ADDITIONAL BRANCH C.B.'S	REMARKS
				BUS SIZE	OVERCURRENT DEVICE		BKR. POLES	BREAKER AMPS												
					FRAME AMPS	TRIP AMPS		15	20	25	30	40	50	60	70					
P1	120/208	3	4	200	150	150	1			36						84	S	✓	–	–
							2	1	2		1		1							
							3	1	5			1								

* INCLUDES SPACES

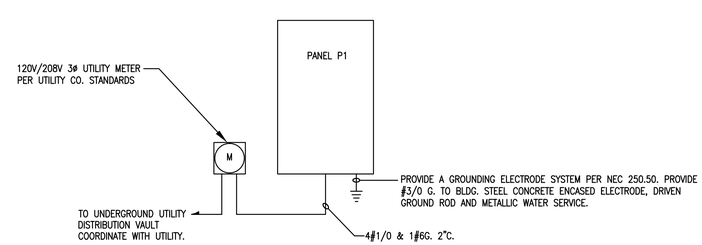

2 POWER RISER DIAGRAM
E003 Scale: NTS

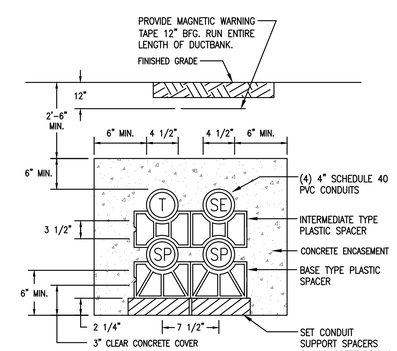

DUCTBANK DETAIL "A-A"
SCALE: NOT TO SCALE

NOTE:
1. PROVIDE PULL ROPE IN EACH CONDUIT.
2. CONCRETE ENCASEMENT IS REQUIRED ONLY UNDER PAVED AREAS.

This drawing is copyrighted and is subject to copyright protection as an "architectural work" under 17 U. S. C. Sec. 101 et seq. The protection includes but is not limited to the overall form as well as the arrangement and composition of spaces, materials, color and elements in the design. Under such protection, unauthorized use of this drawing may result in the cessation of construction or buildings being seized and/or monetary compensation being awarded to The Robinson Green Beretta Corporation (RGB).

Any reproduction, possession, or use of this drawing or any part thereof without the express written permission of RGB, is prohibited. Violators will be prosecuted to the full extent of the law.

© RGB 2017

Certification

MARC R. PLANTE
No. 6397
REGISTERED
PROFESSIONAL ENGINEER
ELECTRICAL

Drawn by NM

Checked by DEC

Revised on

B|E|R
BUILDING ENGINEERING RESOURCES, INC.
66 Main Street
N. Easton, MA 02356
T 508.230.0260
F 508.230.0265
ber@ber-engineering.com
100 Midway Road - Suite 23
Cranston, RI 02920
T 401.942.3500
F 401.228.6205
www.ber-engineering.com

50 Holden Street
Providence, Rhode Island 02908

Phone: (401) 272-1730
Fax: (401) 273-7156

E-mail: rgbinfo@rgb.net
www.rgb.net

RGB ARCHITECTS

Architecture ÂProject Management Ânterior Design

Project

FORT ADAMS MAINTENANCE BUILDING

RIDEM / DIVISION OF PARKS & RECREATION

STATE OF RHODE ISLAND AND PROVIDENCE PLANTATIONS

FORT ADAMS STATE PARK, NEWPORT, RI

Drawing Status

ISSUED FOR CONSTRUCTION

Issued On MAY 29, 2019

Sheet Contents

ELECTRICAL - SITE PLAN

Project Number.

Drawing No.

E003

Sheet of

SCHEDULE OF MECHANICAL EQUIPMENT

TAG NAME	DESCRIPTION	CHARACTERISTICS/LOAD	VOLT	PH	PANEL CIRCUIT	CIRCUIT BREAKER	FEEDER	CONNECTIONS REQUIRED								REMARKS
CF 1	CEILING FAN	HP: 1.5	208	1	P1-38	30A/2P	2#12 & 1#12G. 1/2"C.	✓				✓				
EF 1	EXHAUST FAN	HP: 1/3	208	3	P1-32	15A/3P	3#12 & 1#12G. 1/2"C.			✓		✓				
CEF 1	CEILING EXHAUST FAN	FLA 1.3	120	1	P1-19	15A/2P	2#12 & 1#12G. 1/2"C.			✓		✓				
CEF 2	CEILING EXHAUST FAN	FLA 1.3	120	1			2#12 & 1#12G. 1/2"C.			✓		✓				
CEF 3	CEILING EXHAUST FAN	FLA 3.2	115	1			2#12 & 1#12G. 1/2"C.			✓		✓				
IRH 1	GAS FIRED INFRARED HEATER	MCA: 1.74	120	1	P1-45	20A/1P	2#12 & 1#12G. 1/2"C.	✓				✓				
IRH 2	GAS FIRED INFRARED HEATER	MCA: 1.74	120	1			2#12 & 1#12G. 1/2"C.	✓				✓				
IRH 3	GAS FIRED INFRARED HEATER	MCA: 1.74	120	1			2#12 & 1#12G. 1/2"C.	✓				✓				
GUH 1	GAS FIRED UNIT HEATER	MCA:1.8	120	1	P1-43	20A/1P	2#12 & 1#12G. 1/2"C.	✓				✓				
GUH 2	GAS FIRED UNIT HEATER	MCA:1.8	120	1			2#12 & 1#12G. 1/2"C.	✓				✓				
EUH 1	ELECTRIC UNIT HEATER	MCA: 8.4	120	1	P1-44	20A/1P	2#12 & 1#12G. 1/2"C.			✓		✓				
DHP 1	DUCTLESS HEAT PUMP	MCA: 13 MOP: 20	208	1	P1-46	20A/2P	2#12 & 1#12G. 1/2"C.			✓		✓				
DHP 2	DUCTLESS HEAT PUMP	MCA: 13 MOP: 20	208	1	P1-50	20A/2P	2#12 & 1#12G. 1/2"C.			✓		✓				
DHP 3	DUCTLESS HEAT PUMP	MCA: 11 MOP: 15	208	1	P1-54	15A/2P	2#12 & 1#12G. 1/2"C.			✓		✓				

NOTES:

1. DUCT SMOKE DETECTORS SHALL BE PROVIDED FOR ALL MECHANICAL UNITS OVER 2000CFM, PROVIDE REMOTE TEST STATION WITH EACH DETECTOR. LOCATION OF TEST STATION SHALL BE ACCESSIBLE, COORDINATE WITH ARCHITECT.
2. PROVIDE FLEXIBLE CONNECTION TO EQUIPMENT, REFER TO SPECIFICATIONS.
3. FOR SINGLE MOTOR LOADS, REFER TO MOTOR BRANCH CIRCUIT SCHEDULES FOR CIRCUIT INFORMATION. FOR SINGLE POINT MIXED LOADS OR NON-MOTOR LOADS REFER TO CIRCUIT SIZE SCHEDULE FOR CIRCUIT INFORMATION.
4. CONTROLLERS AND DISCONNECT DEVICES SHALL BE NRTL RATED FOR USE WITH A DESIGN E MOTOR, WITH A HORSE POWER RATING NOT LESS THAN 1.4 TIMES THE MOTOR HORSE POWER. (REFER TO ELECTRIC CODE ARTICLE 430)
5. TWO SPEED MOTORS SHALL HAVE TWO MOTOR BRANCH CIRCUITS AND SIX POLE DISCONNECTS.
6. WHERE INDICATED PROVIDE WEATHERPROOF DUPLEX RECEPTACLES AT MECHANICAL EQUIPMENT. PROVIDE 3/4"C. WITH 3#12AWG TO NEAREST PANEL AND CONNECT TO 20A.,1P. RECEPTACLE, UNLESS OTHERWISE INDICATED.

KEY NOTES:

1. COORDINATE OUTLET LOCATIONS WITH ARCHITECTURAL ELEVATIONS OF BREAK ROOM MILLWORK.
2. PROVIDE RED LOCK OUT BREAKER HANDLE ON FACP CIRCUIT.
3. ALL CONDUITS DEVICES, FIXTURES IN ROOM 101 SHALL BE EXPLOSION PROOF PER NEC ARTICLE 500, CLASS 1 DIVISION 2.

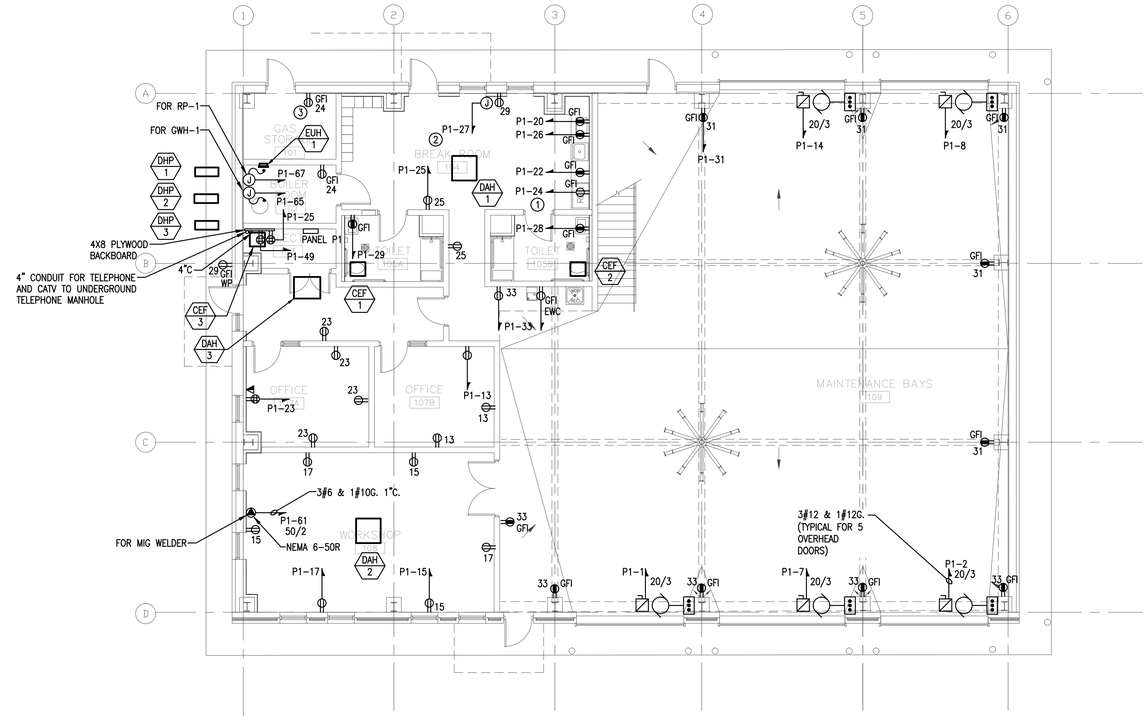

1 E100 LOWER LEVEL POWER PLAN

Scale: 1/8" = 1'-0"

Installation of illuminated exit sign & emerg. lighting at exit door including exterior of bldg.

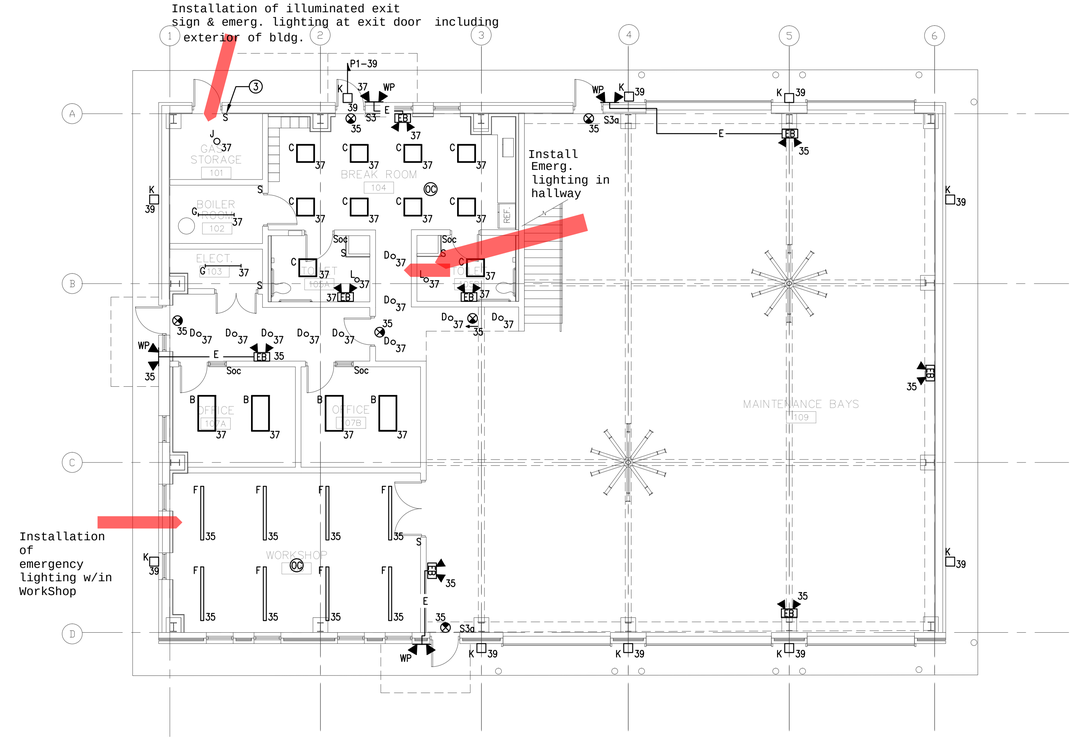

2 E100 LOWER LEVEL LIGHTING PLAN

Scale: 1/8" = 1'-0"

This drawing is copyrighted and is subject to copyright protection as an "architectural work" under 17 U. S. C. Sec. 101 et seq. The protection includes but is not limited to the overall form as well as the arrangement and composition of spaces, materials, color and elements in the design. Under such protection, unauthorized use of this drawing may result in the cessation of construction or buildings being seized and/or monetary compensation being awarded to The Robinson Green Beretta Corporation (RGB).

Any reproduction, possession, or use of this drawing or any part thereof without the express written permission of RGB, is prohibited. Violators will be prosecuted to the full extent of the law.

© RGB 2017

Certification

MARC R. PLANTE
No. 6397
REGISTERED PROFESSIONAL ENGINEER ELECTRICAL

Drawn by NM

Checked by DEC

Revised on

B|E|R
BUILDING ENGINEERING RESOURCES, INC.
66 Main Street
N. Easton, MA 02356
T 508.230.0260
F 508.230.0265
100 Midway Road - Suite 23
Cranston, RI 02920
T 401.942.3500
F 401.228.6205
ber@ber-engineering.com
www.ber-engineering.com

50 Holden Street
Providence, Rhode Island 02908

Phone: (401) 272-1730
Fax: (401) 273-7156

E-mail: rgbinfo@rgb.net
www.rgb.net

RGB architects

Architecture Project Management Interior Design

Project

FORT ADAMS MAINTENANCE BUILDING

RIDEM / DIVISION OF PARKS & RECREATION

STATE OF RHODE ISLAND AND PROVIDENCE PLANTATIONS

FORT ADAMS STATE PARK, NEWPORT, RI

Drawing Status

ISSUED FOR CONSTRUCTION

Issued On MAY 29, 2019

Sheet Contents

ELECTRICAL - LOWER LEVEL PLAN

Project Number.

Drawing No.

E100

Sheet of

Installation of illuminated Exit signs & including
Emergency lighting at (2) exit stairways including exterior of
building

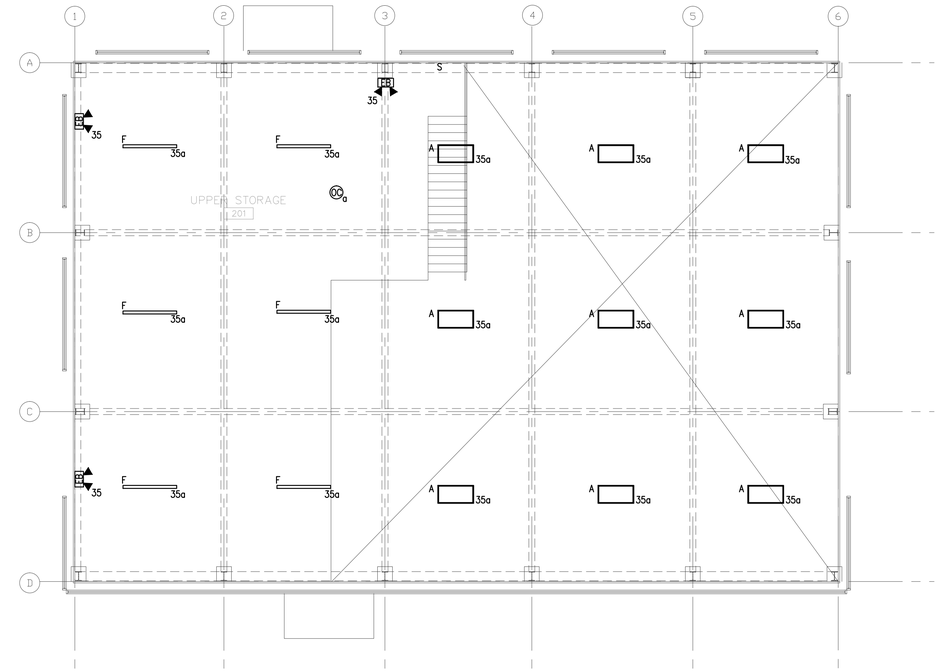

1 / E200 UPPER LEVEL LIGHTING PLAN

Scale: 1/8" = 1'-0"

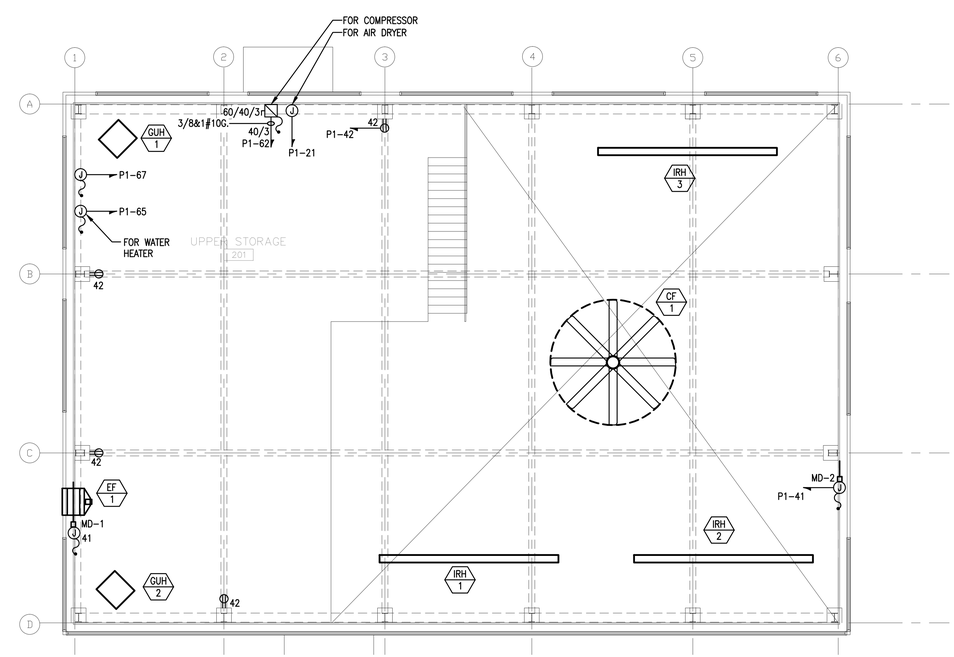

2 / E200 UPPER LEVEL POWER PLAN

Scale: 1/8" = 1'-0"

This drawing is copyrighted and is subject to copyright protection as an "architectural work" under 17 U. S. C. Sec. 101 et seq. The protection includes but is not limited to the overall form as well as the arrangement and composition of spaces, materials, color and elements in the design. Under such protection, unauthorized use of this drawing may result in the cessation of construction or buildings being seized and/or monetary compensation being awarded to The Robinson Green Beretta Corporation (RGB).

Any reproduction, possession, or use of this drawing or any part thereof without the express written permission of RGB, is prohibited. Violators will be prosecuted to the full extent of the law.

© RGB 2017

Certification

Drawn by NM

Checked by DEC

Revised on

B|E|R

BUILDING ENGINEERING RESOURCES, INC.

66 Main Street
N. Easton, MA 02356
T 508.230.0260
F 508.230.0265

100 Midway Road - Suite 23
Cranston, RI 02920
T 401.942.3500
F 401.228.6205

ber@ber-engineering.com
www.ber-engineering.com

50 Holden Street
Providence, Rhode Island 02908

Phone: (401) 272-1730
Fax: (401) 273-7156

E-mail: rgbinfo@rgb.net
www.rgb.net

RGB ARCHITECTS

Architecture ÂProject Management ÂInterior Design

Project

FORT ADAMS MAINTENANCE BUILDING

RIDEM / DIVISION OF PARKS & RECREATION

STATE OF RHODE ISLAND AND PROVIDENCE PLANTATIONS

FORT ADAMS STATE PARK, NEWPORT, RI

Drawing Status

ISSUED FOR CONSTRUCTION

Issued On MAY 29, 2019

Sheet Contents

ELECTRICAL - UPPER LEVEL PLAN

Project Number.

Drawing No.

E200

Sheet of

FIRE ALARM SYSTEM

F	MANUAL PULL STATION MOUNTED 48" AFF
M F	AUDIO/VISUAL ALARM MOUNTED 80" AFF. "M" DENOTES MINI-UNIT
V	VISUAL ONLY UNIT MOUNTED 80" AFF.
I SD	PHOTOELECTRIC SMOKE DETECTOR: "I" DENOTES IONIZATION SMOKE DETECTOR
SS SD	SINGLE STATION 120V SMOKE DETECTOR
SD	SYSTEM SMOKE DETECTOR WITH SOUNDER BASE
HD 190°	135° FIXED TEMPERATURE HEAT DETECTOR. "190°" INDICATES 190°F FIXED TEMPERATURE
TS	SPRINKLER TAMPER SWITCH FURNISHED AND INSTALLED BY THE FIRE PROTECTION SUBCONTRACTOR, WIRED BY THE ELECTRICAL SUBCONTRACTOR. PROVIDE FIRE ALARM MONITOR MODULE AND CONNECTION TO FIRE ALARM SYSTEM.
FS	SPRINKLER WATER FLOW SWITCH FURNISHED AND INSTALLED BY THE FIRE PROTECTION SUBCONTRACTOR, WIRED BY THE ELECTRICAL SUBCONTRACTOR. PROVIDE FIRE ALARM MONITOR MODULE AND CONNECTION TO FIRE ALARM SYSTEM.
DH	MAGNETIC DOOR HOLD OPEN DEVICE
M	FIRE ALARM MASTER BOX
SD	DUCT MOUNTED SMOKE DETECTOR WITH SAMPLING TUBE
RTS	REMOTE TEST STATION FOR DUCT SMOKE DETECTOR WITH NAMEPLATE LABELED ACCORDINGLY
RAI	REMOTE ALARM INDICATOR
FACP	FIRE ALARM CONTROL PANEL
FAA	FIRE ALARM REMOTE ANNUNCIATOR
CM	ADDRESSABLE CONTROL MODULE
MM	ADDRESSABLE MONITOR MODULE
	EXTERIOR FIRE ALARM BEACON
K	FIRE DEPARTMENT KEY REPOSITORY BOX

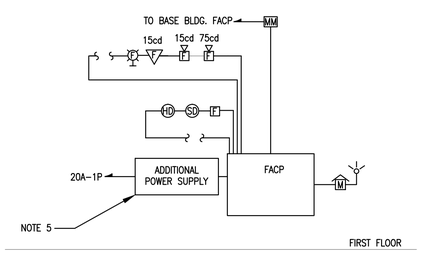

BUILDING FIRE ALARM RISER

N.T.S.

FIRE ALARM RISER NOTES:

1. REFER TO FLOOR PLANS FOR EXACT QUANTITIES AND LOCATIONS OF ALL DEVICES.
2. THE FIRE ALARM SYSTEM SHALL CONFORM WITH THE REQUIREMENTS OF THE RHODE ISLAND FIRE SAFETY CODE AND THE CITY OF NEWPORT FIRE DEPARTMENT. SHOP DRAWINGS SHALL BE SUBMITTED TO THE FIRE DEPARTMENT FOR APPROVAL.
3. PROVIDE A NEW ADDRESSABLE FIRE ALARM SYSTEM AS MANUFACTURED BY FCI OR APPROVED EQUAL. THE PANEL SHALL BE E3 SERIES. ALL DEVICES SHALL BE NEW AND MANUFACTURED BY FCI OR APPROVED EQUAL. ALL FIRE ALARM WIRING SHALL BE CLASS A PER FCI OR APPROVED EQUAL RECOMMENDATIONS AND SHALL BE INSTALLED IN MINIMUM 3/4" EMT CONDUIT.
4. ALL FIRE ALARM WORK SHALL BE IN ACCORDANCE WITH THE LATEST EDITIONS OF NFPA, STATE, AND LOCAL BUILDING CODES AND THE AMERICANS WITH DISABILITIES ACT (ADA).
5. PROVIDE REMOTE BOOSTER POWER SUPPLY PANELS AS REQUIRED.
6. PROVIDE FAULT ISOLATION MODULES ON THE SIGNAL LINE CIRCUIT TO PROTECT THE SYSTEM FROM LINE TO LINE FAULTS. MODULES SHALL BE PROVIDED AS REQUIRED, WITH A MINIMUM OF (1) MODULE PER EVERY 25 DEVICES.

Dual action manual pull station shall be installed at each exit from the upper level of the building as required by NFPA 72.

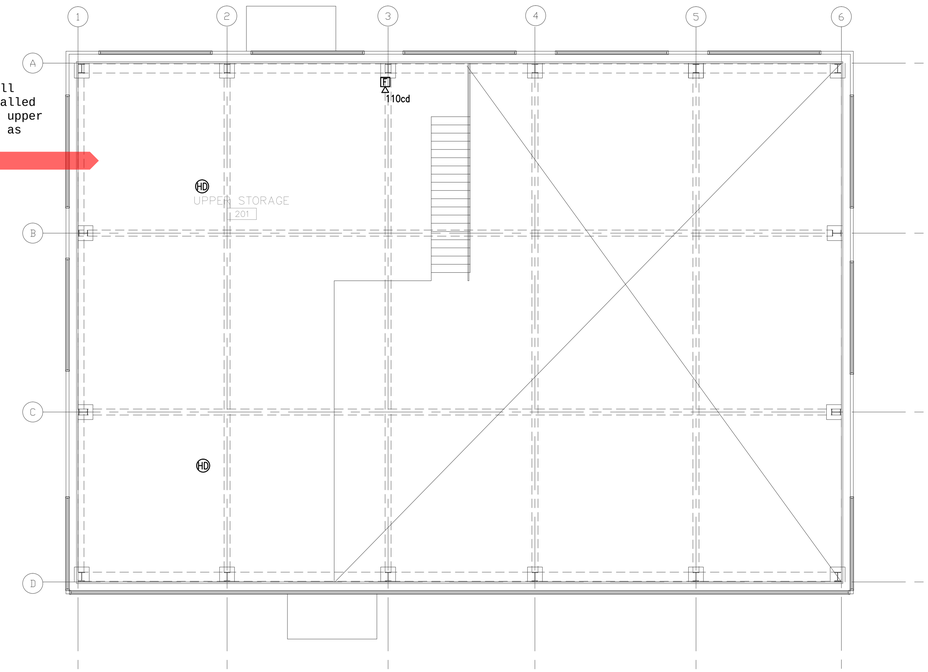

2 FA100 UPPER LEVEL PLAN

Scale: 1/8" = 1'-0"

Installation of a notification device in Workshop

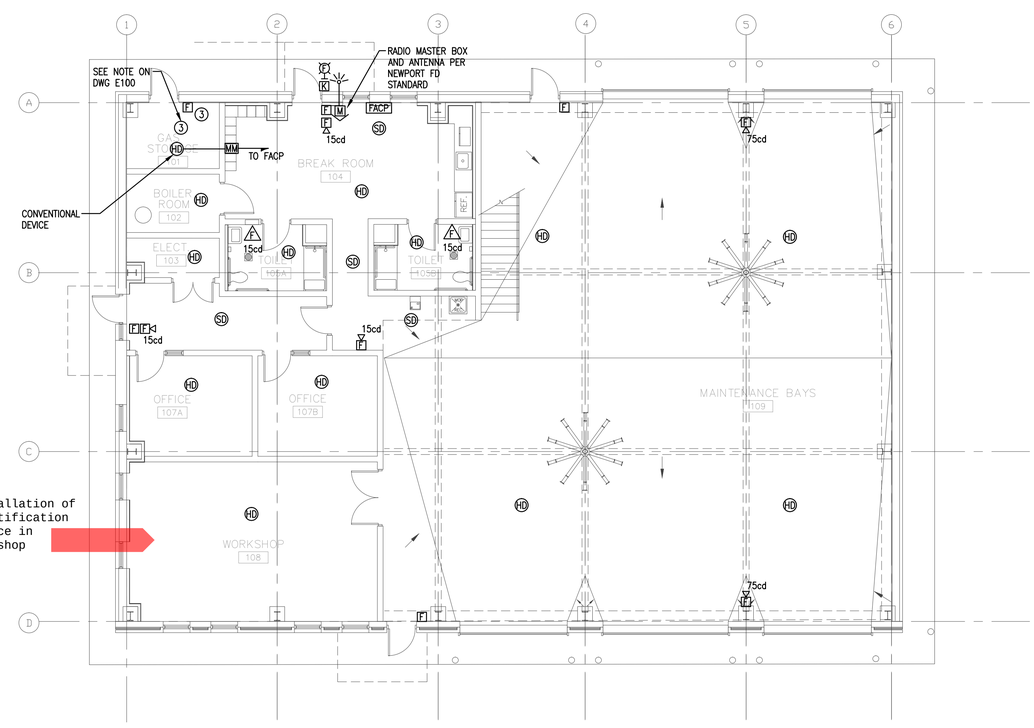

1 FA100 LOWER LEVEL PLAN

Scale: 1/8" = 1'-0"

This drawing is copyrighted and is subject to copyright protection as an "architectural work" under 17 U. S. C. Sec. 101 et seq. The protection includes but is not limited to the overall form as well as the arrangement and composition of spaces, materials, color and elements in the design. Under such protection, unauthorized use of this drawing may result in the cessation of construction or buildings being seized and/or monetary compensation being awarded to The Robinson Green Beretta Corporation (RGB).

Any reproduction, possession, or use of this drawing or any part thereof without the express written permission of RGB, is prohibited. Violators will be prosecuted to the full extent of the law.

© RGB 2017

Certification

MARC R. PLANTE
No. 6397
REGISTERED PROFESSIONAL ENGINEER ELECTRICAL

Drawn by NM

Checked by DEC

Revised on

B|E|R

BUILDING ENGINEERING RESOURCES, INC.

66 Main Street
N. Easton, MA 02356
T 508.230.0260
F 508.230.0265
ber@ber-engineering.com

100 Midway Road - Suite 23
Cranston, RI 02920
T 401.942.3500
F 401.228.6205
www.ber-engineering.com

50 Holden Street
Providence, Rhode Island 02908

Phone: (401) 272-1730
Fax: (401) 273-7156

E-mail: rgbinfo@rgb.net
www.rgb.net

RGB ARCHITECTS

Architecture ĀProject Management ĀInterior Design

Project

FORT ADAMS MAINTENANCE BUILDING

RIDEM / DIVISION OF PARKS & RECREATION

STATE OF RHODE ISLAND AND PROVIDENCE PLANTATIONS

FORT ADAMS STATE PARK, NEWPORT, RI

Drawing Status

ISSUED FOR CONSTRUCTION

Issued On MAY 29, 2019

Sheet Contents

FIRE ALARM - PLAN

Project Number.

Drawing No.

FA100

Sheet of

2.17 FIRE ALARM SYSTEM

A. DESCRIPTION:

1. THE ELECTRICAL CONTRACTOR SHALL FURNISH, INSTALL AND PLACE IN OPERATING CONDITION, A COMPLETE FIRE ALARM SYSTEM AS SPECIFIED IN THIS SECTION, TO INCLUDE THE FURNISHING OF ALL LABOR, EQUIPMENT, MATERIALS AND THE PERFORMANCE OF ALL OPERATIONS ASSOCIATED WITH THE INSTALLATION OF THE FIRE ALARM SYSTEM, AS SHOWN ON THE CONTRACT DRAWINGS AND HEREIN SPECIFIED.

2. THE COMPLETE SYSTEM INSTALLATION SHALL BE IN ACCORDANCE WITH THE APPLICABLE SECTIONS OF THE NATIONAL FIRE SAFETY CODE, THE (ADA) AMERICAN DISABILITIES ACT, THE NATIONAL ELECTRICAL CODE, REQUIREMENTS, AND ALL THE REQUIREMENTS OF THE LOCAL FIRE DEPARTMENT.

3. THE REQUIREMENTS OF THE GENERAL CONDITIONS AND THE SUPPLEMENTARY CONDITIONS OF THE CONTRACT DOCUMENTS SHALL APPLY TO ALL WORK SPECIFIED IN THIS SECTION.

4. THE WORK COVERED UNDER THIS SECTION OF THE CONTRACT SPECIFICATIONS SHALL BE COORDINATED WITH ALL OTHER WORK SPECIFIED IN THE OTHER SECTIONS OF THE CONTRACT SPECIFICATIONS.

5. EQUIPMENT SHALL BE MANUFACTURED BY GAMEWELL-FCI, NOTIFIER, OR EDWARDS (UTC).

6. THE FIRE ALARM SYSTEM DESCRIBED HEREIN AND AS SHOWN ON THE PLANS; SHALL BE WIRED, CONNECTED, TESTED AND LEFT IN FIRST CLASS OPERATING CONDITION. THE ELECTRICAL CONTRACTOR SHALL PROVIDE THE PROPER CONTROL EQUIPMENT, CONTROL INTERFACE ANNUNCIATORS, ALARM INITIATING DEVICES, ALARM NOTIFICATION APPLIANCES, WIRING, TERMINATIONS, ELECTRICAL BOXES, AND ALL OTHER NECESSARY MATERIALS FOR A COMPLETE OPERATING SYSTEM.

7. THE FIRE ALARM SYSTEM SHALL BE A MICROPROCESSOR - BASED SYSTEM ALLOWING FOR EDITING OF THE SOFTWARE PROGRAM FOR CHANGES IN SYSTEM OPERATION. THE SYSTEM SHALL BE CAPABLE OF ON-SITE PROGRAMMING TO ACCOMMODATE SYSTEM CHANGES AND/OR SYSTEM EXPANSIONS. ALL SOFTWARE OPERATIONS SHALL BE STORED IN NON-VOLATILE, FLASH PROM MEMORY. LOSS OF THE SYSTEM'S PRIMARY AND/OR SECONDARY POWER SOURCES SHALL NOT RESULT IN A LOSS OF THE SYSTEM SOFTWARE PROGRAMS. FIELD PROGRAMMING SHALL NOT BE LOST IN THE EVENT OF MAIN AND/OR BATTERY POWER LOSS.

8. FULL FLEXIBILITY FOR SELECTIVE INPUT-OUTPUT CONTROL FUNCTIONS BASED ON ANDING, ORING, NOTING, TIMING, AND SPECIAL CODED OPERATIONS SHALL ALSO BE INCORPORATED IN THE RESIDENT SOFTWARE PROGRAM OF THE SYSTEM.

B. SYSTEM OPERATION

1. THE SYSTEM OPERATION SUBSEQUENT TO THE ACTIVATION OF ANY MANUAL OR AUTOMATIC ALARM INITIATING DEVICE SHALL BE AS FOLLOWS:

   A. ALL AUDIBLE VISUAL ALARM INDICATING APPLIANCES SHALL SOUND AT THE NEW FIRE ALARM PANEL AND AT THE REMOTE ANNUNCIATOR UNTIL SILENCED BY THE ALARM SILENCE SWITCH.

   B. THE ALARM SHALL BE DISPLAYED ON AN 80-CHARACTER LCD DISPLAY. THE TOP LINE OF 40 CHARACTERS SHALL BE THE POINT LABEL, AND THE SECOND LINE SHALL BE THE DEVICE TYPE IDENTIFIER. THE SYSTEM ALARM LED SHALL FLASH ON THE CONTROL PANEL UNTIL THE ALARM HAS BEEN ACKNOWLEDGED. ONCE ACKNOWLEDGED, THIS SAME LED SHALL LATCH ON. A SUBSEQUENT ALARM RECEIVED FROM ANOTHER ZONE SHALL FLASH THE SYSTEM ALARM LED ON THE CONTROL PANEL. THE LCD DISPLAY SHALL SHOW THE NEW ALARM INFORMATION, AT THE CONTROL PANEL.

   C. TRANSMIT A SIGNAL FROM THE CONTROL PANEL VIA AN RS232 SERIAL PORT, TO PRINT THE SYSTEM STATUS CHANGES ON THE REMOTE SYSTEM PRINTER.

   D. ACTIVATE THE MUNICIPAL CONNECTION VIA THE RADIO MASTER BOX.

   E. ACTIVATE CONTROL RELAYS LOCATED WITHIN AN EXTERNAL CONTROL CABINET LOCATED NEXT TO THE FIRE ALARM CONTROL PANEL SPECIFIED. IN ADDITION TO BUILDING EVACUATION THE FOLLOWING AUXILIARY CONTROL AND INTERFACE FUNCTIONS SHALL BE PROVIDED BY THE SPECIFIED SYSTEM.

      1. SELECTIVE AUTOMATIC HVAC FAN SHUTDOWN AND MANUAL (HOA) OVERRIDE.
      2. RELEASE OF MAGNETIC DOOR HOLDER.
      3. CAPTURE AN ALTERNATE FLOOR RECALL OF SPECIFIED ELEVATORS.

C. SYSTEM SUPERVISION:

1. THE SYSTEM SHALL BE PROVIDED WITH STYLE 6 (SLC) ADDRESSABLE DEVICE COMMUNICATION CIRCUITS, STYLE D (IDC) INITIATING DEVICE CIRCUITS AND (STYLE Z) NOTIFICATION APPLIANCE CIRCUITS. ALL SYSTEM FAULTS SHALL BE INDICATED AND DISPLAYED AT THE CONTROL PANEL.

2. THE SYSTEM SHALL BE PROVIDED WITH A STANDBY BATTERY SET OR SETS, WITH SUFFICIENT CAPACITY TO OPERATE THE ENTIRE SYSTEM UPON LOSS OF NORMAL OPERATING POWER, FOR A TIME PERIOD OF (60) HOURS IN SUPERVISORY MODE, WITH (15) MINUTES OF ALARM AT THE END OF THE (60) HOUR TIME PERIOD. THE STANDBY BATTERY SET SHALL BE CHARGED, LOAD TESTED AND MONITORED FOR EITHER A DISCONNECTED OR LOW BATTERY STATUS CONDITION BY THE SYSTEM. ANY FAULT DETECTED WITH THE STANDBY BATTERIES SHALL BE INDICATED AND DISPLAYED AT THE CONTROL PANEL.

D. FIRE ALARM CONTROL PANEL

1. CONTROL PANEL SHALL HAVE SOLID STATE, MICROPROCESSOR BASED ELECTRONICS USING SURFACE MOUNT TECHNOLOGY. THROUGH-PUT TECHNOLOGY WILL NOT BE ALLOWED. IT SHALL DISPLAY ONLY THOSE PRIMARY CONTROLS AND DISPLAYS ESSENTIAL TO OPERATION DURING A FIRE ALARM CONDITION. KEYBOARDS OR KEYPADS SHALL NOT BE REQUIRED TO OPERATE THE SYSTEM DURING THE FIRE ALARM CONDITIONS. THE UNIT SHALL HAVE 9 AMP POWER SUPPLY MINIMUM.

2. A LOCAL AUDIBLE DEVICE SHALL SOUND DURING ALARM, TROUBLE OR SUPERVISORY CONDITIONS. THIS AUDIBLE DEVICE SHALL SOUND DIFFERENTLY DURING EACH CONDITION TO DISTINGUISH ONE CONDITION FROM ANOTHER WITHOUT HAVING A VIEW THE PANEL. THIS AUDIBLE DEVICE SHALL ALSO SOUND DURING EACH KEY PRESS TO PROVIDE AN AUDIBLE FEEDBACK TO ENSURE THAT THE KEY HAS BEEN PRESSED PROPERLY.

3. THE FOLLOWING PRIMARY CRYSTAL DISPLAYS:

   A. INDIVIDUAL RED SYSTEM ALARM LED
   B. INDIVIDUAL YELLOW SUPERVISORY SERVICE LED
   C. INDIVIDUAL YELLOW TROUBLE LED
   D. GREEN "POWER ON" LED
   E. ALARM ACKNOWLEDGE KEY
   F. TROUBLE ACKNOWLEDGE KEY
   G. ALARM SILENCE KEY
   H. SYSTEM RESET KEY

4. PRIMARY, KEYS, LED'S AND LCD DISPLAY.

5. THE CONTROL PANEL SHALL HAVE A 2-LINE X 40 CHARACTER LIQUID CRYSTAL DISPLAY WHICH SHALL BE BACK LIGHTED FOR ENHANCED READABILITY. SO AS TO CONSERVE BATTERY STANDBY, POWER IT SHALL NOT BE LIT DURING AN AC POWER FAILURE, UNLESS AN ALARM CONDITION OCCURS OR THERE IS KEYPAD ACTIVITY.

6. THE DISPLAY SHALL SUPPORT BOTH UPPER AND LOWER CASE LETTERS. LOWER CASE LETTERS SHALL BE USED FOR SHORT TITLES AND PROMPTING THE USER. UPPERCASE LETTERS SHALL BE USED FOR SYSTEM STATUS INFORMATION. A CURSOR SHALL BE VISIBLE WHEN ENTERING INFORMATION. SYSTEMS USING UPPERCASE LETTERS ONLY WILL NOT OFFER CLEAR DISTINCTION BETWEEN ALARMS AND PROGRAMMING AND ARE NOT ACCEPTABLE.

7. ANY SUPPLEMENTAL NOTIFICATION CONTROL PANELS SHALL BE CAPABLE OF OPERATING ALL CONNECTED NOTIFICATION APPLIANCE DEVICES THROUGHOUT THE BUILDING, AND 25 % SPARE CAPACITY FOR VISUAL AND THE HORN CIRCUITS. THEY SHALL HAVE AT A MINIMUM 12 AMPS OF AVAILABLE NAC POWER.

E. ISOLATE MODULES

1. PROVIDE FIELD MOUNTED ISOLATE MODULES FOR EVERY 20 DEVICES TO PROTECT CIRCUIT INTEGRITY IN THE EVENT OF A WIRING FAULT & ENSURE STYLE 6 WIRING CONVENTIONS.

F. RESET SYSTEM

1. THE SYSTEM RESET BUTTON SHALL BE USED TO RETURN THE SYSTEM TO ITS NORMAL STATE AFTER AND ALARM CONDITION HAS BEEN REMEDIED. THE LCD DISPLAY SHALL STEP THE USER THROUGH THE RESET PROCESS WITH SIMPLE ENGLISH LANGUAGE MESSAGES. MESSAGE "SYSTEM RESET IN PROGRESS" WILL FIRST BE DISPLAYED, FOLLOWED BY THE MESSAGE "SYSTEM RESET COMPLETED," AND FINALLY "SYSTEM IS NORMAL." SHOULD ALL ALARM CONDITIONS BE CLEARED. IN ORDER TO MAINTAIN CONSISTENCY WITH OTHER EXISTING PANELS, NO DEVIATION FROM THESE MESSAGES CAN BE ACCEPTED.

2. SHOULD AN ALARM CONDITION CONTINUE TO EXIST, THE MESSAGE "SYSTEM RESET IN PROGRESS" WILL BE FOLLOWED BY THE MESSAGE "SYSTEM RESET ABORTED," AND THE SYSTEM WILL REMAIN IN AN ABNORMAL STATE. SYSTEM CONTROL RELAYS SHALL NOT RESET. THE SONALERT AND THE ALARM LED WILL BE ON. THE DISPLAY WILL INDICATE THE TOTAL NUMBER OF ALARMS AND TROUBLES PRESENT IN THE SYSTEM, ALONG WITH A PROMPT TO USE THE ACK KEYS TO REVIEW THE POINTS. THESE POINTS WILL NOT REQUIRE ACKNOWLEDGMENT IF THEY WERE PREVIOUSLY ACKNOWLEDGED.

G. H.O.A. SWITCHTES

1. PROVIDE KEY PAD POSITION SWITCH AS SHOWN ON CONTRACT DRAWINGS.

H. SILENT WALKTEST WITH HISTORY LOGGING

1. THE SYSTEM SHALL BE CAPABLE OF BEING TESTED BY ONE PERSON. WHILE IN THE TESTING MODE, THE ALARM ACTIVATION OF AN INITIATING DEVICE CIRCUIT SHALL BE SILENTLY LOGGED AS AN ALARM CONDITION IN THE HISTORICAL DATA FILE. THE PANEL SHALL AUTOMATICALLY RESET ITSELF AFTER LOGGING OF THE ALARM. THE SYSTEM SHALL SIGNAL THE DEVICE ZONE NUMBER THROUGH THE BUILDING AUDIBLE UNITS, FOR IMMEDIATE VERIFICATION BY THE TEST TECHNICIAN. DUE TO THE CRITICAL NATURE OF THE TEST PROCEDURES, NO DEVIATION FROM THIS SECTION CAN BE ACCEPTED.

I. LED SUPERVISION

1. ALL SLAVE MODULE LEDS SHALL BE SUPERVISED FOR BURNOUT OR DISARRANGEMENT. SHOULD A PROBLEM OCCUR, THE LCD SHALL DISPLAY THE MODULE AND LED LOCATION NUMBERS TO FACILITATE LOCATION OF THE LED. DUE TO THE CRITICAL NATURE OF THE PANEL LCD FUNCTIONS, NO DEVIATION FROM THIS REQUIREMENT CAN BE ACCEPTED.

J. SYSTEM TROUBLE REMINDER

1. SHOULD A TROUBLE CONDITION BE PRESENT WITHIN THE SYSTEM AND THE AUDIBLE TROUBLE SIGNAL SILENCED, THE TROUBLE SIGNAL SHALL RESOUND AT PREPROGRAMMED TIME INTERVALS TO ACT AS REMINDER THAT THE FIRE ALARM SYSTEM IS NOT 100% OPERATIONAL. BOTH THE TIME INTERVAL AND THE TROUBLE REMINDER SIGNALS SHALL BE IN ACCORDANCE WITH THE LATEST EDITION OF THE BUILDING CODE AND NFPA 72 AS REFERENCED.

K. MULTIPLE ADDRESSABLE PERIPHERAL NETWORK

1. PROVIDE ADDRESSABLE CIRCUITS FOR COMMUNICATION WITH ADDRESSABLE DEVICES. SYSTEM SHALL HAVE AN INDEPENDENT ISOLATED ADDRESSABLE LOOPS, UP TO 318 ADDRESSABLE DEVICES.

2. THE SYSTEM MUST PROVIDE COMMUNICATION WITH INITIATING AND CONTROL DEVICES INDIVIDUALLY. ALL OF THESE DEVICES WILL BE INDIVIDUALLY ANNUNCIATED AT THE CONTROL PANEL.

3. ANNUNCIATION SHALL INCLUDE THE FOLLOWING CONDITIONS FOR EACH POINT.

   A. ALARM
   B. TROUBLE
   C. OPEN
   D. SHORT
   E. DEVICE MISSING/FAILED

4. ALL ADDRESSABLE DEVICES SHALL HAVE THE CAPABILITY OF BEING DISABLED OR ENABLED INDIVIDUALLY.

5. UP TO 318 ADDRESSABLE DEVICES ON A CLASS A CIRCUIT. SYSTEMS THAT REQUIRE FACTORY RE-PROGRAMMING TO ADD OR DELETE SERVICES ARE UNACCEPTABLE.

6. IDENTIFICATION OF ADDRESSABLE DEVICES.

L. PHOTOELECTRIC DETECTOR HEAD

1. PROVIDE PHOTOELECTRIC TYPE DETECTORS. WHERE INDICATED OR REQUIRED. THEY SHALL BE A PLUG-IN UNIT WHICH MOUNTS TO A TWISTLOCK BASE, AND SHALL BE UL APPROVED.

2. THE DETECTORS SHALL BE OF THE SOLID STATE PHOTOELECTRIC TYPE AND SHALL CONTAIN NO RADIOACTIVE MATERIAL. THEY WILL USE A REFRACTED INFRARED LED LIGHT SOURCE AND BE SEALED AGAINST REAR AIR FLOW ENTRY.

3. THE DETECTOR SHALL FIT INTO A BASE THAT IS COMMON WITH BOTH THE HEAT DETECTOR AND IONIZATION TYPE DETECTOR AND SHALL BE COMPATIBLE WITH OTHER ADDRESSABLE DETECTORS, ADDRESSABLE MANUAL STATIONS, AND ADDRESSABLE ZONE ADAPTER MODULES ON THE SAME CIRCUIT. DEVICE ADDRESSES SHALL BE CONTAINED IN THE BASE OF THE DETECTOR. THOSE SYSTEMS WHICH PROVIDE ADDRESSING IN THE HEAD, SHALL PROVIDE AN ADDRESSABLE MONITOR MODULE AND A CONVENTIONAL DETECTOR ASSEMBLY TO ALLOW THE OWNER TO REPLACE A DETECTOR HEAD WITHOUT THE NEED OF VERIFYING DETECTOR ADDRESS.

4. THERE SHALL BE NO LIMIT TO THE NUMBER OF DETECTORS OR ZONE ADAPTER MODULES WHICH MAY BE ACTIVATED OR "IN ALARM" SIMULTANEOUSLY.

5. DUE TO THE REQUIREMENT FOR IMMEDIATE CHANGE OUT OF DETECTOR HEADS ADDRESS SETTING SWITCHES, JUMPERS ETC., MAY BE PROVIDED IN THE HEAD OR BEHIND THE DETECTOR BASE. DETECTORS WHICH USE DIP SWITCHES ARE NOT ACCEPTABLE.

6. PROVIDE A DUCT HOUSING WITH SENSOR, WITH RELAY. THE RELAY SHALL BE SOFTWARE PROGRAMMABLE TO ALLOW THE UNIT IN WHICH THE DETECTOR IS MOUNTED IN TO BE SHUT DOWN, OR ANY OTHER DEVICE TO BE CONTROLLED BY THIS PROGRAMMABLE RELAY. THE RELAY MAY BE A SEPARATE UNIT FROM THE DUCT HOUSING TO ALLOW FOR TROUBLESHOOTING AND DISCONNECTS.

7. PROVIDE SAMPLING TUBE AS REQUIRED FOR UNIT SIZE.

8. PROVIDE A REMOTE TEST UNIT FOR EACH DUCT SMOKE DETECTOR WITH LED ALARM INDICATOR AND TEST KEY SWITCH.

M. LCD ANNUNCIATOR

1. PROVIDE A VGA COLOR TOUCH SCREEN LCD ANNUNCIATOR AND STATIC GRAPHIC PLOT PLAN AS SHOWN ON THE CONTRACT DRAWINGS. SUBMIT A LAYOUT OF THIS UNIT TO THE ENGINEER FOR APPROVAL.

2. PROVIDE CITY CONNECTIONS TO THE LOCAL FIRE DEPARTMENT.

N. ADDRESSABLE THERMAL DETECTOR HEAD

1. PROVIDE THERMAL DETECTOR HEADS WHERE INDICATED OR REQUIRED.

2. THERMAL DETECTOR HEADS MUST BE UL LISTED. SHALL BE A COMBINATION RATE-OF-USE AND FIXED TEMPERATURE (135 F) TYPE, AUTOMATICALLY RESTORABLE.

3. PROVIDE REMOTE LED ALARM INDICATORS, AS INDICATED ON PLANS.

O. ADDRESSABLE PULL STATIONS

1. PROVIDE ADDRESSABLE PULL STATIONS WHICH CONTAIN ELECTRONICS THAT COMMUNICATE THE STATION'S STATUS (ALARM, NORMAL) TO THE CONTROL PANEL OVER ONE TWISTED PAIR. THE ADDRESS WILL SET ON THE STATION. THEY WILL BE MANUFACTURED FROM HIGH IMPACT RED LEXAN. STATION WILL MECHANICALLY LATCH UPON OPERATION AND REMAIN SO UNTIL MANUALLY RESET BY OPENING WITH A KEY COMMON TO ALL SYSTEM LOCKS. PULL STATIONS WILL BE DOUBLE ACTION AND AS IDENTIFIED BY A SCHEDULE ON THE PRINTS.

2. THE FRONT OF THE STATION IS TO BE HINGED TO A BACKPLATE ASSEMBLY AND MUST BE OPENED WITH A KEY TO RESET THE STATION. THE KEY SHALL BE COMMON WITH THE CONTROL PANELS. STATIONS WHICH USE ALLEN WRENCHES OR SPECIAL TOOLS TO RESET WILL NOT BE ACCEPTED. THE STATION SHALL CONSIST OF HIGH IMPACT LEXAN PLASTIC, RED IN COLOR.

3. THE ADDRESSABLE MANUAL STATION SHALL BE CAPABLE OF FIELD PROGRAMMING OF ITS "ADDRESSABLE" LOCATION ON AN ADDRESSABLE INITIATING CIRCUIT.

4. THERE SHALL BE NO LIMIT TO THE NUMBER OF STATIONS, DETECTORS OR ZONE ADAPTER MODULES, WHICH MAY BE ACTIVATED OR "IN ALARM" SIMULTANEOUSLY.

5. THE ADDRESSABLE MANUAL STATION SHALL BE UNDERWRITER'S LABORATORIES INC. LISTED.

6. PROVIDE PROTECTIVE COVERS, EQUAL TO STOPPEE II, WHERE REQUIRED BY THE AHJ.

P. ZONE ADAPTER MODULES

1. ZONE ADAPTER MODULES SHALL BE USED FOR MONITORING OF WATERFLOW, VALVE TAMPER, HALON CONTROL PANELS, NON-ADDRESSABLE DETECTORS, AND FOR CONTROL OF EVACUATION INDICATING APPLIANCES AND AHU SYSTEMS.

2. AN ADDRESSABLE INTERFACE MODULE SHALL BE PROVIDED FOR INTERFACING NORMALLY OPEN DIRECT CONTACT DEVICES TO AN ADDRESSABLE INITIATING CIRCUIT.

3. ADDRESSABLE MODULES WILL BE CAPABLE OF MOUNTING IN A STANDARD ELECTRIC OUTLET BOX. ZAMS WILL INCLUDE COVER PLATES TO ALLOW SURFACE OR FLUSH MOUNTING. ZAMS WILL RECEIVE THEIR 24 VDC POWER FROM A SEPARATE TWO WIRE PAIR RUNNING FROM AN APPROPRIATE POWER.

4. THERE SHALL BE TWO TYPES OF DEVICES:
   TYPE 1: MONITOR MODULE
   TYPE 2: CONTROL MODULE

5. ADDRESSABLE DEVICE SUPERVISION.

   A. ALL DEVICES SHALL BE SUPERVISED FOR TROUBLE CONDITION. THE SYSTEM CONTROL PANEL WILL BE CAPABLE OF DISPLAYING THE TYPE OF TROUBLE CONDITION (OPEN, SHORT, DEVICE MISSING/FAILED). SHOULD A DEVICE FAIL, IT WILL NOT HINDER THE OPERATION OF OTHER DEVICES.

6. SPRINKLER FLOW, AND TAMPER SWITCHES ARE TO BE SUPPLIED AND INSTALLED BY THE SPRINKLER CONTRACTOR AND WIRED BY THE ELECTRICAL CONTRACTOR AS REQUIRED BY THE LOCAL FIRE DEPARTMENT. EACH DEVICE SHALL BE AN ADDRESS ON THE FIRE ALARM PANEL, SO THAT THEY MAY BE PROGRAMMED AS EITHER ALARMS OR TROUBLES. PROGRAM ALL AS ALARMS ON THIS PROJECT.

Q. AUDIBLE/VISUAL UNIT (XENON STROBE)

1. PROVIDE MULTI-CANDELA HORN/STROBE UNITS COMPRISED OF A HORN AND XENON FLASH TUBE ENTIRELY SOLID STATE. THE UNIT TO CONFORM TO ITS REQUIREMENTS.

2. VISUAL FLASHING LAMPS (XENON STROBE)

3. VISUAL INDICATING APPLIANCES SHALL BE COMPRISED OF A XENON FLASH TUBE AND BE ENTIRELY SOLID STATE. THIS UNIT SHALL MOUNT TO A SINGLE GANG BOX AND PLATE FOR SURFACE MOUNT. MINIMUM OF 75 CD LIGHT OUTPUT TO CONFORM TO A.D.A. ALL STROBES SHALL BE SYNCHRONIZED.

R. MINI-HORNS

1. PROVIDE RED, MINI HORN WHERE INDICATED ON CONTRACT DRAWINGS. THE UNIT SHALL MOUNT TO A SINGLE, DEEP GANG BOX.

S. STROBE LIGHT

1. PROVIDE A MULTI-CANDELA STROBE APPLIANCE.

T. MAGNETIC DOOR HOLDERS

1. PROVIDE SEMI-FLUSH WALL MOUNTED, 120 V.A.C AND 24 V.D.C. WITH LONG CATCH PLATE.

U. BATTERIES AND BATTERY CABINET

1. PROVIDE MAINTENANCE - FREE BATTERIES.

V. RELAY MODULE

1. PROVIDE ADDRESSABLE RELAY TO PROVIDE SUPERVISED CONTROL OF AUXILIARY CIRCUITS (AHU's, DOOR HOLDER's, ETC) VIA SLC ADDRESSABLE LOOP. RELAY SHALL PROVIDE SUPERVISED OUTLET FOR 3AMPS @ 30VDC OR 0.5AMPS AT 120VAC. WHERE CURRENT EXCEEDS LIMITATIONS PROVIDE ISOLATION RELAY RATED FOR REQUIRED LOAD.

W. INSTALLATION FIRE ALARM WIRING

1. ALL FIRE ALARM WIRING SHALL CONFORM TO THE APPLICABLE STATE AND LOCAL FIRE SAFETY CODES.

2. WIRING SHOWN ON DRAWINGS IS FOR ESTIMATING PURPOSED ONLY. THE FINAL WIRING REQUIREMENTS SHALL BE PER THE EQUIPMENT MANUFACTURER'S WIRING DIAGRAMS AND NO INCREASE IN CONTRACT PRICE WILL BE ALLOWED FOR ANY ADDITIONAL WIRES THAT MAY BE SHOWN ON THE MANUFACTURER'S DRAWINGS.

3. DETAILED ONE-LINE SCHEMATIC WIRING DIAGRAMS OF EACH SPECIFIED DEVICE BETWEEN ALL SYSTEMS. THESE CONNECTION DRAWINGS ARE TO INDICATE ROUTING OF CONDUCTORS VIA THE FLOOR TERMINAL BOXES.

X. SHUTDOWNS OF ANY EXISTING SYSTEMS

1. THIS CONTRACTOR SHALL COORDINATE ALL REQUIRED SHUTDOWNS OF THE EXISTING FIRE ALARM SYSTEM DURING THE DURATION OF THIS CONTRACT. ALL SYSTEM SHALL BE COORDINATED WITH THE OWNER AND THE FIRE DEPARTMENT. THE FIRE ALARM SYSTEMS SHALL BE RETURNED TO A NORMAL MODE OF OPERATION BY THE END OF EACH WORKDAY. THIS CONTRACTOR SHALL BE RESPONSIBLE FOR ANY AND ALL COSTS INCURRED FOR A FIRE WATCH IF THE SYSTEM IS NOT OPERATIONAL AT THE END OF A WORKDAY.

Y. PROGRAMMING OF SYSTEM

1. THIS CONTRACTOR SHALL BE RESPONSIBLE TO OBTAIN APPROVED ZONE AND DEVICE CUSTOM LABELS, THAT WILL BE PROGRAMMED INTO THE SYSTEM FOR ZONE AND DEVICE IDENTIFICATION PURPOSES. THE SUBJECT CUSTOM LABELS SHALL BE APPROVED BY OWNERS REPRESENTATIVE AND THE FIRE DEPT. BEFORE THEY ARE PROGRAMMED INTO THE SYSTEM.

Z. TRAINING:

1. THE ELECTRICAL CONTRACTOR AND SYSTEM MANUFACTURER SHALL PROVIDE A MINIMUM OF ONE (1) ON-SITE TRAINING SESSIONS FOR THE OWNER'S REPRESENTATIVES. EACH SESSION SHALL BE A MINIMUM OF 1 HOUR.

2. DUE TO THE CRITICAL NATURE OF PROPER SYSTEM OPERATION, TRAINING MUST BE CONDUCTED BY PERSONNEL IN THE DIRECT EMPLOY OF THE MANUFACTURER OF THE FIRE ALARM CONTROL PANEL. A THIRD PARTY INSTRUCTOR IS NOT ACCEPTABLE.

AA. WARRANTY:

1. THE CONTRACTOR SHALL WARRANT THE COMPLETE FIRE ALARM SYSTEM WIRING AND EQUIPMENT TO BE FREE FROM INHERENT MECHANICAL AND ELECTRICAL DEFECTS FOR A PERIOD OF (3) THREE YEARS FROM THE DATE OF THE COMPLETED AND CERTIFIED TEST OR FROM THE DATE OF FIRST BENEFICIAL USE.

2. THE EQUIPMENT MANUFACTURE SHALL MAKE AVAILABLE TO THE OWNER A MAINTENANCE CONTRACT PROPOSAL TO PROVIDE A MINIMUM OF TWO (2) INSPECTIONS AND TEST PER YEAR IN COMPLIANCE WITH NFPA-72H GUIDELINES.

BB. SUBMITTALS

1. PROVIDE COMPLETE SETS OF DOCUMENTATION TO INCLUDE THE FOLLOWING:

   A. A COMPLETE POINT TO POINT RISER DIAGRAM OF THE FIRE ALARM SYSTEM SHOWING ALL DEVICES AND EQUIPMENT AND SIZE, TYPE AND NUMBERS OF ALL CONDUCTORS.

   B. BATTERY STANDBY AND POWER SUPPLY CALCULATIONS SHOWING TOTAL POWER REQUIRED TO MEET THE SPECIFIED SYSTEM REQUIREMENTS INCLUDING SPARE CAPACITY ALLOWANCES. CALCULATIONS SHALL INCLUDE A COMPLETE LIST OF CURRENT REQUIREMENTS DURING NORMAL, SUPERVISORY, TROUBLE AND ALARM CONDITIONS. CALCULATIONS SHALL ALSO DEMONSTRATE PROPER CONSIDERATION OF CURRENT REQUIREMENTS, WIRE SIZE, WIRE LENGTH AND VOLTAGE DROP CHARACTERISTICS.

   C. MANUFACTURER'S ORIGINAL CATALOG DATA SHEETS SHALL BE SUPPLIED FOR ALL OF THE EQUIPMENT TO BE SUPPLIED. ALL EQUIPMENT SHALL BE SUBJECT TO APPROVAL BY THE ENGINEER AND NO EQUIPMENT SHALL BE ORDERED WITHOUT PRIOR APPROVAL.

   D. LARGE SCALE DRAWINGS OF THE MAIN CONTROL PANEL AND EACH REMOTE PANEL DEPICTING OVERALL MECHANICAL DIMENSIONS, LAYOUT INCLUDING FUTURE ALLOWANCES, AND FIELD WIRING IN FULL DETAIL.

   E. DOCUMENTATION OF THE SUPPLIER'S QUALIFICATIONS INDICATING YEARS IN BUSINESS SERVICE POLICIES, WARRANTY DEFINITIONS, AND A LIST OF SIMILAR INSTALLATIONS IN THE LOCAL MUNICIPALITY.

   F. PROVIDE A COMPLETE DETAILED DESCRIPTION OF THE SYSTEM OPERATION.

   G. ADDRESSES FOR ALL FIELD DEVICES SHALL BE SHOWN ON FLOOR PLANS SUPPLIED WITH THIS SUBMITTAL.

CC. DOCUMENTATION:

1. AT THE COMPLETION OF THE PROJECT A COMPLETE SET OF OPERATING/MAINTENANCE MANUALS, THE FIRE ALARM SUBMITTAL BOOK, POINT-TO-POINT WIRING DIAGRAMS, A TERMINAL STRIP CABINET CONNECTION POINT DIAGRAM FOR EACH TERMINAL CABINET, A COMPLETE POINT ADDRESS LISTING BY DEVICE, AND A FINAL TEST REPORT SHALL BE GIVEN TO THE OWNER.

This drawing is copyrighted and is subject to copyright protection as an "architectural work" under 17 U. S. C. Sec. 101 et seq. The protection includes but is not limited to the overall form as well as the arrangement and composition of spaces, materials, color and elements in the design. Under such protection, unauthorized use of this drawing may result in the cessation of construction or buildings being seized and/or monetary compensation being awarded to The Robinson Green Beretta Corporation (RGB).

Any reproduction, possession, or use of this drawing or any part thereof without the express written permission of RGB, is prohibited. Violators will be prosecuted to the full extent of the law.

© RGB 2017

Certification

MARC R. PLANTE
No. 6397
REGISTERED PROFESSIONAL ENGINEER ELECTRICAL

Drawn by NM

Checked by DEC

Revised on

BER
BUILDING ENGINEERING RESOURCES, INC.
66 Main Street
N. Easton, MA 02356
T 508.230.0260
F 508.230.0265
ber@ber-engineering.com
100 Midway Road - Suite 23
Cranston, RI 02920
T 401.942.8500
F 401.228.6205
www.ber-engineering.com

50 Holden Street
Providence, Rhode Island 02908

Phone: (401) 272-1730
Fax: (401) 273-7156

E-mail: rgbinfo@rgb.net
www.rgb.net

RGB architects

Architecture ÂProject Management ÂInterior Design

Project

FORT ADAMS MAINTENANCE BUILDING

RIDEM / DIVISION OF PARKS & RECREATION

STATE OF RHODE ISLAND AND PROVIDENCE PLANTATIONS

FORT ADAMS STATE PARK, NEWPORT, RI

Drawing Status

ISSUED FOR CONSTRUCTION

Issued On MAY 29, 2019

Sheet Contents

FIRE ALARM SPECIFICATION

Project Number.

Drawing No.

FA200

Sheet of