PLUMBING FIXTURE SCHEDULE

SYMBOL	DESCRIPTION	CONNECTIONS WASTE	CONNECTIONS VENT	CONNECTIONS HOT WATER	CONNECTIONS COLD WATER	FIXTURE	FITTINGS	REMARKS
P1	GEOLOGY LAB SINK	2"	2"	1/2"	1/2"	BY FURNITURE VENDOR	BY FURNITURE VENDOR	STRAINER AND FAUCET TO BE SUPPLIED WITH SINK. PROVIDE MCGUIRE HEAVY DUTY SUPPLIES AND STOPS. PROVIDE "P" TRAP 17 GA. WITH CLEAN-OUT. PROVIDE WASTE AND VENT PIPING. PROVIDE HOT AND COLD WATER TPIPING. ALL COMPNENTS AR TO MEET LEAD FREE REQUIREMENTS.
P2	PHYSICS LAB SINK	2"	2"	1/2"	1/2"	BY FURNITURE VENDOR	BY FURNITURE VENDOR	STRAINER AND FAUCET TO BE SUPPLIED WITH SINK. PROVIDE MCGUIRE HEAVY DUTY SUPPLIES AND STOPS. PROVIDE "P" TRAP 17 GA. WITH CLEAN-OUT. PROVIDE WASTE AND VENT PIPING. PROVIDE HOT AND COLD WATER TPIPING. ALL COMPNENTS AR TO MEET LEAD FREE REQUIREMENTS.
P3	PHYSICS SUPPORT SINK	2"	2"	1/2"	1/2"	BY FURNITURE VENDOR	BY FURNITURE VENDOR	STRAINER AND FAUCET TO BE SUPPLIED WITH SINK. PROVIDE MCGUIRE HEAVY DUTY SUPPLIES AND STOPS. PROVIDE "P" TRAP 17 GA. WITH CLEAN-OUT. PROVIDE WASTE AND VENT PIPING. PROVIDE HOT AND COLD WATER TPIPING. ALL COMPNENTS AR TO MEET LEAD FREE REQUIREMENTS.
P4	ENGINEERING SUPPORT SINK	2"	2"	1/2"	1/2"	BY FURNITURE VENDOR	BY FURNITURE VENDOR	STRAINER AND FAUCET TO BE SUPPLIED WITH SINK. PROVIDE MCGUIRE HEAVY DUTY SUPPLIES AND STOPS. PROVIDE "P" TRAP 17 GA. WITH CLEAN-OUT. PROVIDE WASTE AND VENT PIPING. PROVIDE HOT AND COLD WATER TPIPING. ALL COMPNENTS AR TO MEET LEAD FREE REQUIREMENTS.
P5	BOTTLE FILLING STATION ELECTRIC WATER COOLER - ADA	1 1/2"	1 1/2"	-	1/2"	ELKAY MODEL #LZ8WSLP	-	PROVIDE ADA ALL STAINLESS STEEL UNIT WITH #4 SATIN FINISH, COMPLETE WITH BOTTLE FILLER. PROVIDE CONCEALED TRAP SUPPLY AND STOP SIMIILAR TO P1. PROVIDE 2x6 WOOD BACKING IN WALL FOR MOUNTING FRAME TO SUIT UNIT. PROVIDE UNIT COMPLETE WITH SIX (6) SPARE WATER FILTERS. UNIT IS TO MEET LEAD-FREE REQUIREMENTS. INSTALLATION IS TO BE IN STRICT ACCORDANCE WITH ADA REQUIREMENTS.

PLUMBING FIXTURE NOTES:

PLUMBING CONTRACTOR IS TO COORDINATE THE LOCATION AND SIZE OF ALL HOLES NECESSARY TO SUIT THE INSTALLATION OF THE SPECIFIED FIXTURE TRIM LOCATED IN THE PROPOSED STAINLESS STEEL FIXTURES WITH EACH OF THE SPECIFIC FIXTURE MANUFACTURER'S PRIOR TO ORDERING OF EQUIPMENT. ALL HOLES NECESSARY TO SUIT TRIM INSTALLATION AFTER THE FIXTURES HAVE BEEN ORDERED AND/OR DELIVERED TO THE SITE ARE TO BE PROVIDED AT NO ADDITIONAL COST TO OWNER. PLUMBING CONTRACTOR IS TO VERIFY WITH EACH SPECIFIC MANUFACTURER THE PROCEDURE NECESSARY TO ADD ADDITIONAL HOLES IF NONE ARE PROVIDED.

PLUMBING GENERAL NOTES

1. PROVIDE ALL LABOR, MATERIAL, AND EQUIPMENT FOR COMPLETE PLUMBING SYSTEMS INCLUDING BUT NOT LIMITED TO THE FOLLOWING:
   A. INSTALL PIPING, VALVES, FIXTURES, DRAINS, EQUIPMENT, ETC.
   B. RATED ACCESS PANELS
   C. INSTALL FIXTURES AND TRIM.
   D. CORING, CUTTING.
   E. PIPE INSULATION
   F. SLEEVING & FIRE STOPPING, FIRESTOP ALL PIPING PENETRATIONS THROUGH FLOORS AND WALLS.
   G. CONNECTIONS TO ALL EQUIPMENT FURNISHED BY OTHERS.
   H. REMOVAL AND PROPER DISPOSAL OF ALL EXISTING PIPING, PLUMBING FIXTURES, HANGERS, INSULATION, ETC. AS INDICATED ON DRAWINGS.
2. DO NOT SCALE THESE DRAWINGS. REVIEW ARCHITECTURAL DRAWINGS FOR ROOM TYPES, LOCATIONS, NOTES AND DIMENSIONS BEFORE BIDDING AND PLUMBING WORK IS STARTED. QUESTIONS REGARDING THE ABOVE SHALL BE SUBMITTED IN WRITING TO THE ARCHITECT PRIOR TO BIDDING FOR CLARIFICATION. FAILURE TO DO SO WILL NOT ENTITLE THEM TO ANY ADDITIONAL COMPENSATION FOR PROVIDING A COMPLETE AND APPROVED SYSTEM.

3. PIPE ROUTING SHOWN IS SCHEMATIC AND IS NOT INTENDED TO INDICATE EXACT ROUTING OR LOCATION OF PIPING. ADDITIONAL OFFSETS AND FITTINGS REQUIRED FOR PROPER INSTALLATION AND TO MAINTAIN PROPER CLEARANCES SHALL BE PROVIDED AND INSTALLED BY THIS CONTRACTOR. OFFSET PIPING AS REQUIRED TO AVOID FIXED EQUIPMENT, PIPING & STRUCTURAL MEMBERS. CONTRACTOR SHALL LOCATE ALL CONCRETE AND STEEL BEAMS BEFORE INSTALLING ANY PIPING. DO NOT PENETRATE ANY BEAMS WITHOUT VERIFICATION AND APPROVAL FROM STRUCTURAL ENGINEER. STRUCTURAL MEMBERS SHALL NOT BE COMPROMISED.

4. ALL PLUMBING WORK SHALL BE PERFORMED BY A STATE LICENSED PLUMBER IN STRICT ACCORDANCE WITH AHJ, STATE & LOCAL CODES AND REQUIREMENTS.

5. PLUMBING FIXTURE ROUGHING AND MOUNTING HEIGHTS ARE TO BE IN STRICT ACCORDANCE WITH STATE & LOCAL CODES AND ADA REQUIREMENTS. THIS CONTRACTOR SHALL COORDINATE INDICATED WORK WITH ARCHITECTURAL DRAWINGS PRIOR TO INSTALLATION.

6. THIS CONTRACTOR SHALL PROVIDE AND INSTALL ALL PIPING, APPURTENANCES & FINAL CONNECTIONS REQUIRED TO LEAVE ALL NEW PLUMBING SYSTEMS IN A SAFE AND OPERATIONAL CONDITION AT THE COMPLETION OF THE PROJECT. APPURTENANCES INCLUDE, BUT ARE NOT LIMITED TO: SHUT-OFF VALVES, FLEXIBLE RISERS, ANGLE STOPS, TAILPIECES, VACUUM BREAKERS, ESCUTCHEONS, TRAPS, PIPE SLEEVES, CLEANOUTS ETC.

7. THIS CONTRACTOR SHALL OBTAIN AND PAY FOR ALL REQUIRED PERMITS AND INSPECTIONS. PROVIDE INSURANCE CERTIFICATES AS MAY BE REQUIRED BY THE CONSTRUCTION MANAGER AND OWNER.

8. PLUMBING CONTRACTOR SHALL BE RESPONSIBLE TO ENSURE THAT ALL REQUIRED PIPING IS INSULATED. INSULATE ALL PIPING UNDER SINKS WITH TRAP WRAP AS SPECIFIED.

9. FIRESTOP ALL PENETRATIONS BETWEEN CEILINGS & FIRE RATED WALLS WITH APPROVED FIRE STOPPING ASSEMBLIES AS MANUFACTURED BY 3M INDUSTRY, HILTI OR APPROVED EQUAL. THE ASSEMBLIES SHALL COMPLY WITH THE LATEST APPLICABLE REQUIREMENTS OF THE: BUILDING CODE, NFPA STANDARDS AND OWNERS INSURANCE COMPANY. PROPOSED APPLICABLE ASSEMBLIES SHALL BE UL LISTED AND SHALL BE PART OF THE PLUMBING EQUIPMENT SUBMITTAL.

10. ALL PIPING SHALL BE CONCEALED INSIDE WALLS, BELOW FLOORS, OR ABOVE CEILINGS UNLESS INDICATED OTHERWISE.

11. REFER TO ARCHITECTURAL DRAWINGS FOR PLUMBING FIXTURE LOCATIONS AND MOUNTING HEIGHTS. INSTALLATION SHALL BE IN STRICT ACCORDANCE WITH STATE CODES AND ADA REQUIREMENTS. THIS CONTRACTOR SHALL COORDINATE WORK INDICATED ON PLUMBING DRAWINGS WITH ARCHITECTURAL DRAWINGS AS WELL AS FIELD CONDITIONS PRIOR TO INSTALLATION. FINAL LOCATION SHALL BE AS DIRECTED BY ARCHITECT.

12. THIS CONTRACTOR SHALL LOCATE VALVES, WATER HAMMER ARRESTORS AND TRAPS IN ACCESSIBLE LOCATIONS. PROVIDE 12"x12" STAINLESS STEEL ACCESS PANELS WITH HINGED DOORS AND RATED WHERE REQUIRED. FINAL LOCATIONS OF ACCESS PANELS SHALL BE APPROVED BY THE ARCHITECT PRIOR TO INSTALLATION. CONTRACTOR SHALL PROVIDE ACCESS PANELS IN SOLID & NON-REMOVABLE CEILINGS, WALLS AND ANY OTHER ENCLOSURES TO PROVIDE ACCESS TO SHUT-OFF VALVES. SELECTION OF ACCESS PANEL TYPE, COLOR ETC. SHALL MATCH THAT OF SURROUNDING CEILING, WALL OR ENCLOSURE.

13. ALL PIPING AND EQUIPMENT SHALL BE PROPERLY SUPPORTED FROM STRUCTURE. PROVIDE SUPPLEMENTARY STEEL AND SUPPORTS AS REQUIRED OR DIRECTED.

14. LOCATE PIPING AND EQUIPMENT TO CLEAR ALL SERVICES AND WORK OF ALL TRADES. LOCATE ALL PIPING AS HIGH AS POSSIBLE TO STRUCTURE UNLESS OTHERWISE NOTED.

15. ALL WATER PIPING EQUIPMENT, VALVES, PIPING AND MATERIALS ARE TO MEET NSF 61/ANSI STANDARD FOR LEAD-FREE REQUIREMENTS.

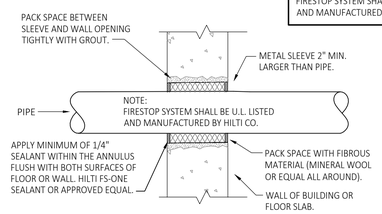

PIPING INSTALLATION NOTES:

1. FIRESTOP SYSTEMS ARE NOT REQUIRED FOR PENETRATIONS THROUGH WALLS WHICH DO NOT HAVE A FIRE RESISTANCE RATING. REFER TO ARCHITECTURAL DRAWINGS FOR LOCATION OF WALLS WHICH HAVE A FIRE-RESISTANCE RATING. ALL VOIDS IN AND AROUND PIPE SLEEVES IN NON-RATED WALLS SHALL BE FILLED WITH MINERAL WOOL TO PREVENT THE MOVEMENT OF SMOKE.
2. THIS CONTRACTOR SHALL BE RESPONSIBLE FOR PROVIDING CLEARANCE AROUND ALL PIPING FOR SEISMIC PROTECTION AND PIPE SLEEVES WITH FIRESTOP MATERIALS.
3. PIPE SLEEVES SHALL HAVE A NOMINAL DIAMETER 2" LARGER THAN THE NOMINAL DIAMETER OF THE PIPE FOR PIPE SIZES 1" THROUGH 3".
4. PIPE SLEEVES SHALL HAVE A NOMINAL DIAMETER 4" LARGER THAN THE NOMINAL DIAMETER OF THE PIPE FOR PIPE SIZES 4" AND LARGER.
5. FLEXIBLE COUPLINGS ARE ACCEPTABLE ON EACH SIDE OF WALL. THE NOMINAL DIAMETER OF THE SLEEVE SHALL BE ONE PIPE SIZE LARGER THAN THE DIAMETER OF THE PIPE WHEN FLEXIBLE COUPLINGS ARE USED.
6. REFER TO SPECIFICATIONS FOR FIRESTOP MATERIALS TO BE USED. ALL SYSTEMS SHALL BE U.L. LISTED.
7. SLEEVES THROUGH LOAD BEARING WALLS SHALL BE SCHEDULE 40 BLACK STEEL PIPE. OTHER PIPE SLEEVE MATERIALS ARE ACCEPTABLE PROVIDED THEY HAVE BEEN TESTED AS PART OF THE FIRE RATED ASSEMBLY. ALL PIPE SLEEVES THROUGH EXTERIOR WALLS SHALL BE GALVANIZED STEEL.
8. INSTALL AIR RELEASE VALVES AT ALL HIGH POINTS IN PIPING SYSTEM AND DRAIN VALVES AT ALL LOW POINTS.
9. PLUMBING CONTRACTOR SHALL CONSIDER THE ELECTRICAL, MECHANICAL, STRUCTURAL, ARCHITECTURAL AND CIVIL DRAWINGS AS AN INTEGRAL PART OF HIS BID PACKAGE AND SHALL REVIEW ALL ASSOCIATED DRAWINGS AND DETAILS DURING THE BID PROCESS.

1 WALL PENETRATION DETAIL

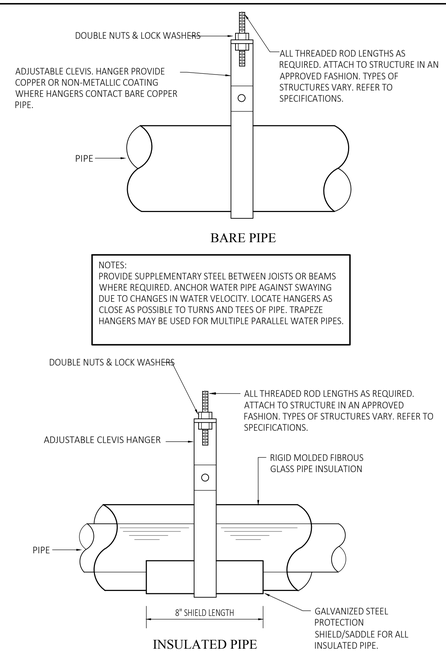

2 CLEVIS TYPE HANGAR DETAILS

PLUMBING LEGEND

SYMBOL	ABV.	DESCRIPTION
	W	NEW WASTE PIPE ABOVE FLOOR SLAB
	W	EXISTING WASTE PIPE ABOVE FLOOR SLAB
	V	NEW VENT PIPE ABOVE FLOOR SLAB
	V	EXISTING VENT PIPE ABOVE FLOOR SLAB
	CW	NEW COLD WATER PIPE
	CW	EXISTING COLD WATER PIPE
	HW	NEW HOT WATER PIPE
	HW	EXISTING HOT WATER PIPE
	HWR	NEW HOT WATER RETURN PIPE
	HWR	EXISTING HOT WATER RETURN PIPE
CA CA	CA	EXISTING COMPRESSED AIR PIPE
CA CA	CA	NEW COMPRESSED AIR PIPE
AW AW	AW	NEW ACID WASTE PIPING
AV AV	AV	NEW ACID VENT PIPING
		DIRECTION OF FLOW
		PIPING TO BE DEMOLISHED
P1		PLUMBING FIXTURE DESIGNATION - SEE SCHEDULE
	SV	SHUTOFF VALVE
		UNION
		TEE OFF TOP
		TEE OFF BOTTOM
		DROP AND RUN
		DROP AND TURN
		TEE UP
		TEE DOWN
		PIPE CAP
	UP	PIPE UP AND / OR RISE
	DR/DN	PIPE DROP / DN
	W&T	WASTE & TRAP
		PIPE CONTINUATION
	RL	RAIN LEADER
	STK	STACK
	CTE	CONNECT TO EXISTING
	FD	FLOOR DRAIN
	VB	VACUUM BREAKER
	T&P	TEMPERATURE AND PRESSURE RELIEF VALVE
	NTS	NOT TO SCALE
	EC	ELECTRICAL CONTRACTOR
	PC	PLUMBING CONTRACTOR
	CO	CLEANOUT
	TYP	TYPICAL
	NTS	NOT TO SCALE
	RE	REMOVE EXISTING
	EX	EXISTING
	ETR	EXISTING TO REMAIN
	VIF	VERIFY LOCATION, SIZE & DIRECTIONAL FLOW IN FIELD
		PIPE CAP
	DW	DISTILLED WATER
	WCO	WALL CLEANOUT
	AAV	AIR ADMITTANCE VALVE
	AW	ACID WASTE

WILLIAM STARCK ARCHITECTS, INC.
126 COVE STREET
FALL RIVER, MASSACHUSETTS 02720
10 DORRANCE STREET, SUITE 700
PROVIDENCE, RI 02903
T: 508.679.5733
F: 508.672.8556
WWW.STARCKARCHITECTS.COM

CREATIVE ENVIRONMENT CORP.
CONSULTING ENGINEERS
CEC#20170110
Cranston Springfield Braintree
MECHANICAL | ELECTRICAL | PLUMBING
FIRE PROTECTION | TELECOM | SECURITY
P. 401-438-7733 | www.cec-engineering.com

These plans, drawings, designs, specifications and other components on this sheet are and shall remain the property of William Starck Architects. No part thereof shall be copied, disclosed to others, or used in connection with any work, other than the specified project for which they have been prepared and developed, without the express knowledge and written consent of William Starck Architects.

2nd FLOOR LAB RENOVATIONS
AT THE
C.C.R.I. KNIGHT CAMPUS
400 EAST AVENUE
WARWICK, R.I. 02886

REVISIONS:

SCALE:	As Noted
DATE:	7November2019
DRAWN BY:	DCE
JOB NUMBER:	17-144

DRAWING NAME:
PLUMBING LEGEND, NOTES, SCHEDULES & DETALIS

DRAWING NUMBER:
P0.0

COMMENTS:
PERMIT SET

KEYED SHEET NOTES

1. EXISTING SINK AND FAUCET TO BE REMOVED.
2. EXISTING WASTE AND VENT PIPING TO REMAIN. MODIFY AS REQUIRED TO ACCEPT NEW FIXTURE. DUE TO CMU WALL CONSTRUCTION, UNABLE TO VERIFY VENT PIPING.
3. EXISTING HOT AND COLD WATER PIPING TO REMAIN. MODIFY AS REQUIRED TO ACCEPT NEW FIXTURE.
4. EXISTING DRINKING FOUNTAIN TO BE REMOVED. PROVIDE NEW COLD WATER AND WASTE PIPING TO ACCOMMODATE THE NEW DRINKING FOUNTAIN.
5. REMOVE AND RELOCATE THE EXISTING THREADED GAS PIPING AS REQUIRED TO ALLOW FOR THE NEW HVAC DUCTWORK.
6. REMOVE AND RELOCATE/RAISE THE EXISTING HOT AND COLD WATER AND GAS PIPING AS REQUIRED TO ACCOMMODATE THE NEW HVAC DUCTWORK.
7. EXISTING ACID WASTE PIPING TO REMAIN.
8. EXISTING ACID WASTE PIPING TO BE REMOVED TO ACCOMMODATE NEW HVAC DUCTWORK. THE ACID WASTE PIPING MUST BE RE-ROUTED PRIOR TO ANY DEMOLITION OF THE EXISTING PIPING IN ORDER AS NOT TO DISRUPT THE OPERATION OF THE COLLEGE. THE ACID WASTE PIPING IS IN USE DURING FIRST AND SECOND SHIFTS ON THE THIRD FLOOR AND CANNOT BE TAKEN OUT OF OPERATION.
9. REMOVE AND RELOCATE A PORTION OF THE EXISTING COMPRESSED AIR PIPING TO ACCOMMODATE NEW HVAC DUCTWORK. REMOVE AND RELOCATE THE EXISTING COMPRESSED AIR HOSE REEL TO ACCOMMODATE NEW HVAC DUCTWORK. COORDINATE WITH THE GC AND THE HVAC CONTRACTOR.
10. REMOVE AND RELOCATE/RAISE THE EXISTING ACID WASTE PIPING AS REQUIRED TO ACCOMMODATE THE NEW HVAC DUCTWORK.
11. EXISTING EJECTOR PUMP, BASIN AND PIPING TO REMAIN.

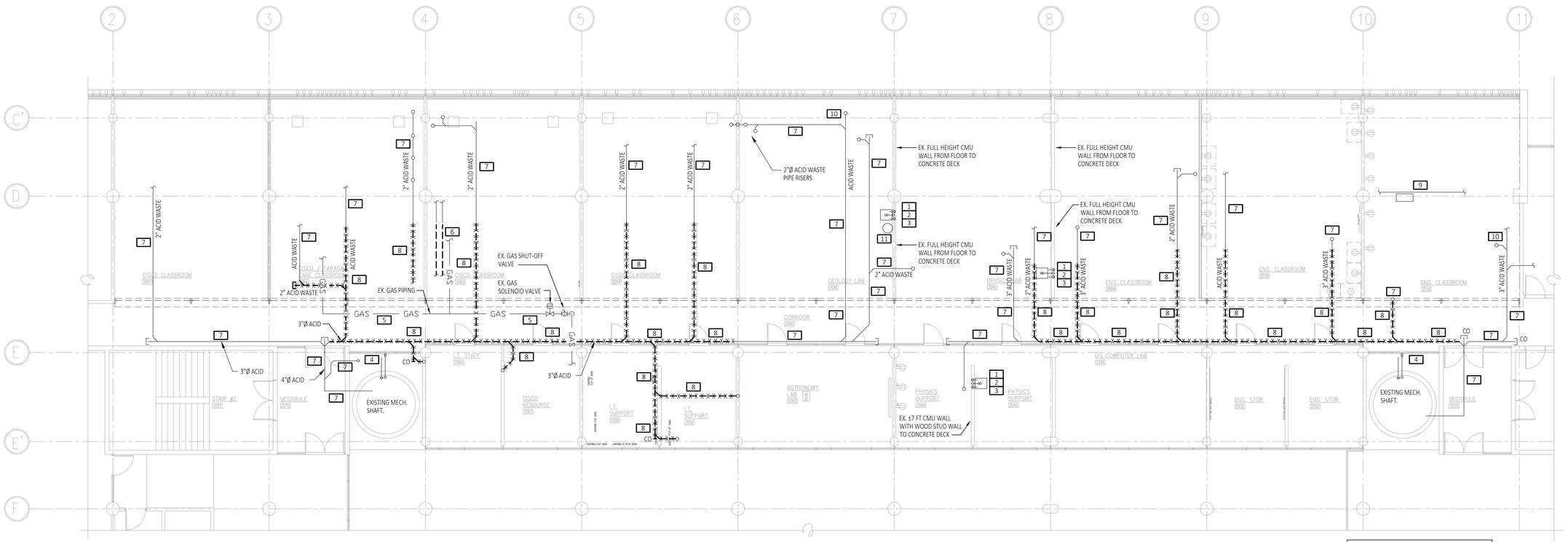

NOTE:
ALL OF THE EXISTING COMPRESSED AIR PIPING, VALVES, PRESSURE REGULATORS, HOSE REELS AND QUICK DISCONNECTS ARE TO REMAIN AS IS.

1 PLUMBING - DEMO FLOOR PLAN
SCALE: 1/8" = 1'-0"

WILLIAM STARCK ARCHITECTS, INC.
126 COVE STREET
FALL RIVER, MASSACHUSETTS 02720
10 DORRANCE STREET, SUITE 700
PROVIDENCE, RI 02903
T: 508.679.5733
F: 508.672.8556
WWW.STARCKARCHITECTS.COM

CREATIVE ENVIRONMENT CORP.
CONSULTING ENGINEERS
CEC#20170110
Cranston | Springfield | Braintree
MECHANICAL | ELECTRICAL | PLUMBING
FIRE PROTECTION | TELECOM | SECURITY
P. 401-438-7733 | www.cec-engineering.com

2nd FLOOR LAB RENOVATIONS
AT THE
C.C.R.I. KNIGHT CAMPUS
400 EAST AVENUE
WARWICK, R.I. 02886

REVISIONS:

SCALE:	As Noted
DATE:	7November2019
DRAWN BY:	DCE
JOB NUMBER:	17-144

DRAWING NAME:
PLUMBING DEMO FLOOR PLAN

DRAWING NUMBER:
P1.0

COMMENTS:
PERMIT SET

These plans, drawings, designs, specifications and other components on this sheet are and shall remain the property of William Starck Architects. No part thereof shall be copied, disclosed to others, or used in connection with any work or project, other than the specified project for which they have been prepared and developed, without the express knowledge and written consent of William Starck Architects.

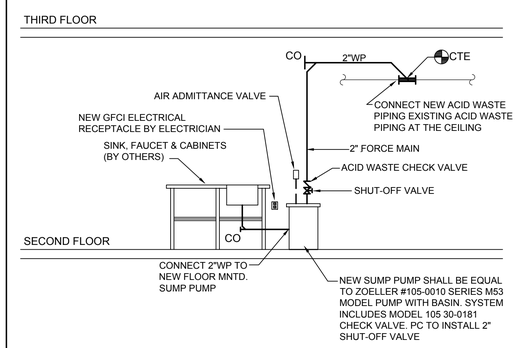

1 SUMP PUMP AND BASIN DETAIL
NOT TO SCALE

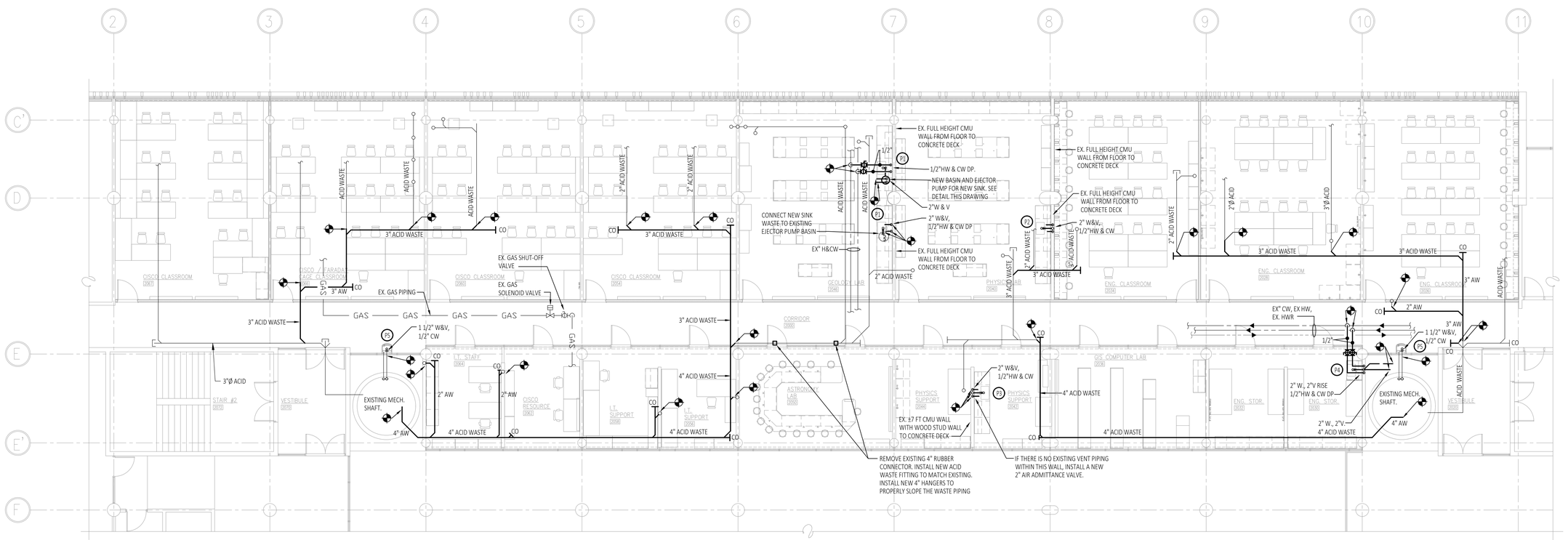

NOTE:
ALL OF THE EXISTING COMPRESSED AIR PIPING, VALVES, PRESSURE REGULATORS, HOSE REELS AND QUICK DISCONNECTS ARE TO REMAIN AS IS.

1 PLUMBING - NEW WORK FLOOR PLAN
SCALE: 1/8" = 1'-0"
0 8'-0" 16'-0" 24'-0"

WILLIAM STARCK ARCHITECTS, INC.
126 COVE STREET
FALL RIVER, MASSACHUSETTS 02720
10 DORRANCE STREET, SUITE 700
PROVIDENCE, RI 02903
T: 508.679.5733
F: 508.672.8556
WWW.STARCKARCHITECTS.COM

CREATIVE ENVIRONMENT CORP.
CONSULTING ENGINEERS
CEC#20170110
Cranston | Springfield | Braintree
MECHANICAL | ELECTRICAL | PLUMBING
FIRE PROTECTION | TELECOM | SECURITY
P. 401-438-7733 | www.cec-engineering.com

These plans, drawings, designs, specifications and other components as the same are and shall remain the property of William Starck Architects. No part thereof shall be copied, disclosed to others, or used in connection with any work or project, other than the specified project for which they have been prepared and developed, without the express knowledge and written consent of William Starck Architects.

2nd FLOOR LAB RENOVATIONS
AT THE
C.C.R.I. KNIGHT CAMPUS
400 EAST AVENUE
WARWICK, R.I. 02886

REVISIONS:

SCALE:	As Noted
DATE:	7November2019
DRAWN BY:	DCE
JOB NUMBER:	17-144

DRAWING NAME:
PLUMBING NEW WORK FLOOR PLAN

DRAWING NUMBER:
P2.0

COMMENTS:
PERMIT SET

MAXIMUM DISTANCE BETWEEN HANGERS

NOMINAL PIPE SIZE (in.)	1""	1"-1"/4"	1"-1"/2"	2"	2-1"/2"	3""	4"	6"
STEEL PIPE EXCEPT THREADED LIGHTWALL	1"2-0	1"2-0	1"5-0	1"5-0	1"5-0	1"5-0	1"5-0	1"5-0

1 HANGER SPACING

NOT TO SCALE

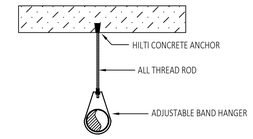

2 HANGER DETAIL #1"

NOT TO SCALE

FIRE PROTECTION LEGEND

THE FOLLOWING DESIGNATIONS SHALL APPLY TO ALL FIRE PROTECTION SYMBOLS; UNLESS OTHERWISE NOTED:

N = NEW.
EX = EXISTING.
ETR = EXISTING TO REMAIN.
RE = REMOVE EXISTING.
DN = DOWN.
RSC = REMOVE SPRINKLER AND CAP PIPING.
CTE = CONNECT TO EXISTING.

NEW WET SPRINKLER PIPING.

EXISTING WET SPRINKLER PIPING TO REMAIN

EXISTING WET SPRINKLER PIPING TO BE REMOVED

PIPE RISER UP (& DOWN)

PIPE DROP

PIPE TEE DROP

PIPE DROP & RUN

PIPE TEE OFF TOP

CONNECT TO EXISTING

SPRINKLER DESIGN CRITERIA

MODIFY THE EXISTING WET PIPE SPRINKLER SYSTEM FOR AREAS INDICATED ON DRAWINGS. SEE DESIGN NOTES BELOW FOR FURTHER INSTALLATION INFORMATION. THE AUTOMATIC WET PIPE SPRINKLER SYSTEM SHALL BE MODIFIED PER NFPA 13, 2010 STANDARDS & THE STATE BUILDING & FIRE CODES.

CODES AND AUTHORITIES:

CITY OF WARWICK FIRE DEPARTMENT AND STATE OF RHODE ISLAND FIRE CODE. SUBMIT SHOP DRAWINGS TO THE STATE FIRE MARSHAL'S OFFICE. THE STATE FIRE MARSHAL'S OFFICE SHALL REVIEW AND APPROVE THE FIRE SPRINKLER DRAWINGS.

HAZARD CLASSIFICATION:

LIGHT HAZARD - 0.10 GPM OVER 1,500 SQ. FT. - OFFICES, CORRIDORS, ETC.

ORDINARY HAZARD GROUP 1 - 0.15 GPM OVER 1,500 SQ. FT. - MECHANICAL ROOMS, JANITORS CLOSETS, ETC.

ORDIANRY HAZARD GROUP 2- 0.20 GPM OVER 1,500 SQ. FT. - STORAGE CLOSETS.

COVERAGE PER SPRINKLER:

LIGHT HAZARD OCCUPANCY - 225 SQ. FT. - STANDARD COVERAGE MAXIMUM

ORDINARY HAZARD GROUP 1 & 2 - 130 SQ. FT. - STANDARD COVERAGE MAXIMUM.

HOSE DEMAND REQUIREMENTS:
LIGHT HAARD - 100 GPM FOR 60 MIN
ORDINARY HAZARD GROUP 1 & 2 - 250 GPM FOR 60 MIN

MINIMUM PRESSURES AND FLOWS PER SPRINKLER SHALL BE BASED ON SPRINKLER MANUFACTIRER REQUIREMENTS.

INSTALLATION REQUIREMENTS:

1. WHEN LOCATING NEW SPRINKLERS, PAY CLOSE ATTENTION TO ALL ASSOCIATED ARCHITECTURAL, STRUCTURAL, MECHANICAL AND ELECTRICAL DRAWINGS. REFLECTED CEILING PLANS SHALL BE LOCATED ON THE SPRINKLER SHOP DRAWINGS AND SPRINKLERS SHALL BE LOCATED ACCORDING TO FACTORY MUTUAL STANDARDS. INSTALL SPRINKLERS IN THE CENTER OF EACH TILE (BOTH WAYS).
2. ANY CONFLICTS FOUND BY THE CONTRACTOR SHALL BE BROUGHT TO THE ARCHITECTS ATTENTION, DO NOT PROCEED WITH WORK IN AREA OF CONFLICT UNTIL A RESOLUTION HAS BEEN AGREED UPON BETWEEN ALL PARTIES INVOLVED AND NOTIFICATION HAS BEEN RECEIVED FROM ARCHITECT.
3. THE CONTRACTOR SHALL RECEIVE WRITTEN APPROVAL AND STAMPED DRAWINGS FROM THE AUTHORITY HAVING JURISDICTION AND FACTORY MUTUAL BEFORE ORDERING AND INSTALLING ANY PIPING.

SPRINKLER SYSTEM NOTES

1. PER DIRECTIVE FROM CCRI FACILITIES MANAGEMENT, THE FIRE SPRINKLER WORK REQUIRED FOR THIS PROJECT SHALL BE PERFORMED BY FIRE SYSTEMS INC. (FSI).
2. THE CONTRACTOR SHALL REVIEW ALL CONSTRUCTION DOCUMENTS FOR THIS PROJECT PRIOR TO SUBMITTAL OF PROPOSAL AND THOROUGHLY FAMILIARIZE THEMSELVES WITH CONDITIONS THAT WILL AFFECT THE PERFORMANCE OF THE WORK. FAILURE TO DO SO WILL NOT ENTITLE THEM TO ANY ADDITIONAL COMPENSATION FOR PROVIDING A COMPLETE AND APPROVED SPRINKLER SYSTEM.
3. COORDINATE WORK WITH ALL TRADES PRIOR TO INSTALLATION. COORDINATE NEW SPRINKLER LOCATIONS WITH ALL LIGHTS, DUCTWORK, DIFFUSERS & REGISTERS, STRUCTURAL BEAMS AND ELECTRICAL EQUIPMENT. ADJUST LOCATIONS AS REQUIRED TO COMPLY WITH THE OBSTRUCTIONS RULES OF NFPA 1"3", 201"0.
4. THE DRAWINGS SHOW PREFERRED HEAD AND PIPE LOCATIONS IN AREAS DEEMED CRITICAL FOR COORDINATION. THE NUMBER AND LOCATION OF HEADS, AND THE ROUTING AND SIZE OF PIPES IS NOT INTENDED TO FURNISH A FINISHED LAYOUT. THE CONTRACTOR SHALL PROVIDE COMPLETE SPRINKLER COVERAGE FOR ALL AREAS OF THE BUILDING IN ACCORDANCE WITH THE PERFORMANCE SPECIFICATION OF THE PROJECT MANUAL. ALL PIPE AND HEAD LOCATIONS SHALL BE COORDINATED BY THIS CONTRACTOR WITH THE WORK OF OTHER TRADES. SUBMIT WORKING DRAWINGS TO THE AHJ FOR REVIEW AND APPROVAL. INCORPORATE ALL COMMENTS.
5. COORDINATE THE STYLE AND LOCATIONS OF ALL CEILING TYPES AND HEIGHTS WITH THE ARCHITECTURAL DRAWINGS. INSTALL PENDENT SPRINKLERS IN ALL DROPPED CEILINGS ON CENTER OF TILES BOTH WAYS.
6. COORDINATE NEW SPRINKLER LOCATIONS WITH LIGHTS, DIFFUSERS & REGISTERS AND ALL CEILING MOUNTED FIXTURES. ADJUST LOCATION AS REQUIRED TO COMPLY WITH FM STANDARDS.
7. INSTALL UPRIGHT SPRINKLERS ABOVE ALL SUSPENDED CEILINGS WHERE COMBUSTIBLE MATERIALS ARE PRESENT AS REQUIRED PER FM STANDARDS. OWNER MUST MAINTAIN A TEMP. OF 40"F OR HIGHER FOR WET SPRINKLER SYSTEM IN THE FLOOR/CEILING SPACE.
8. SPRINKLERS SHALL BE INSTALLED UNDER FIXED OBSTRUCTIONS OVER 4'-0" WIDE SUCH AS DUCTS, AND MECHANICAL EQUIPMENT (PER FM STANDARDS).
9. INSTALL INTERMEDIATE TEMPERATURE SPRINKLERS WHERE SPRINKLERS ARE PLACED NEAR UNIT HEATERS, IN ALL MECHANICAL ROOMS AND AS REQUIRED PER FM STANDARDS COORDINATE WITH HVAC DRAWINGS

SPRINKLER SYSTEM DEMOLITION NOTES

1. THE CONTRACTOR SHALL REVIEW ALL CONSTRUCTION DOCUMENTS FOR THIS PROJECT PRIOR TO SUBMITTAL OF PROPOSAL AND THOROUGHLY FAMILIARIZE THEMSELVES WITH CONDITIONS THAT WILL AFFECT THE PERFORMANCE OF THE WORK. FAILURE TO DO SO WILL NOT ENTITLE THEM TO ANY ADDITIONAL COMPENSATION FOR PROVIDING A COMPLETE AND APPROVED SPRINKLER SYSTEM.
2. THIS CONTRACTOR SHALL COORDINATE SYSTEM SHUT DOWN WITH THE GENERAL CONTRACTOR AND THE BUILDING MAINTENANCE PERSONNEL. PROVIDE A FIRE WATCH FOR THE DURATION OF THE SYSTEM SHUT DOWN.
3. THIS DRAWING INDICATES THE APPROXIMATE LOCATION OF THE EXISTING SPRINKLERS. REMOVE EXISTING SPRINKLERS WITHIN THE AREA OF THIS PHASE OF DEMOLITION. THE EXISTING PIPE DROPS CAN BE MODIFIED AS REQUIRED.
4. EXISTING MAINS AND BRANCH LINES TO REMAIN.
5. REMOVE AND DISPOSE OF ALL DEMOLISHED PIPING, SPRINKLERS AND HANGERS.
6. ALL DROPS THAT ARE DEMOLISHED SHALL BE TAKEN BACK TO POINT OF CONNECTION AT MAIN OR BRANCH LINE PIPING AT PLUGGED.
7. PROVIDE FIRE WATCH WHILE SPRINKLER SYSTEM IS SHUT DOWN AND WORK BEING PERFORMED. SYSTEM SHALL BE PUT BACK IN SERVICE AT THE END OF EACH DAY WITH TEMPORARY PROTECTION IN AREAS NOT FINISHED.

WILLIAM STARCK ARCHITECTS, INC.
126 COVE STREET
FALL RIVER, MASSACHUSETTS 02720
10 DORRANCE STREET, SUITE 700
PROVIDENCE, RI 02903
T: 508.679.5733
F: 508.672.8556
WWW.STARCKARCHITECTS.COM

CREATIVE ENVIRONMENT CORP.
CONSULTING ENGINEERS
CEC#20170110
Cranston | Springfield | Braintree
MECHANICAL | ELECTRICAL | PLUMBING
FIRE PROTECTION | TELECOM | SECURITY
P. 401-438-7733 | www.cec-engineering.com

2nd FLOOR LAB RENOVATIONS
AT THE
C.C.R.I. KNIGHT CAMPUS
400 EAST AVENUE
WARWICK, R.I. 02886

REVISIONS:

SCALE:	As Noted
DATE:	7November2019
DRAWN BY:	DCE
JOB NUMBER:	17-144

DRAWING NAME:
FIRE PROTECTION LEGEND, NARRATIVE AND DETAILS

DRAWING NUMBER:
FP0.0

COMMENTS:
PERMIT SET

These plans, drawings, designs, specifications and other components on this sheet are and shall remain the property of William Starck Architects. No part thereof shall be copied, disclosed to others, or used in connection with any work or project other than the specified project for which they have been prepared and developed, without the express knowledge and written consent of William Starck Architects.

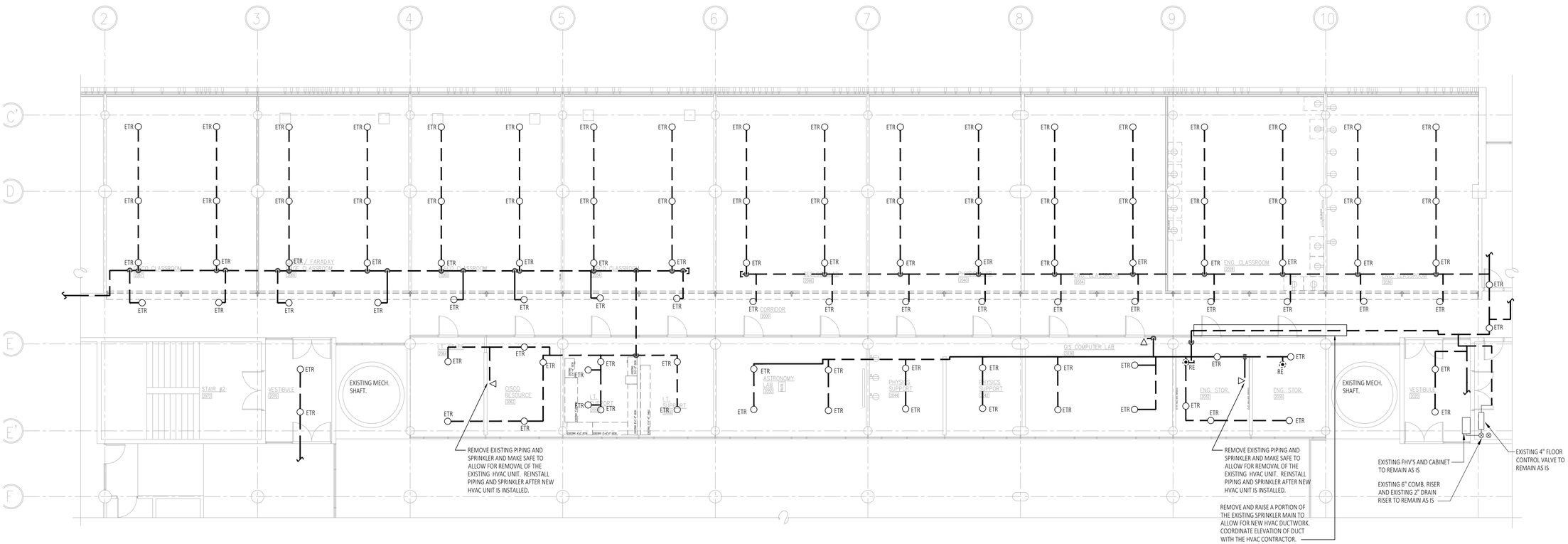

1" FIRE PROTECTION - DEMO FLOOR PLAN
SCALE: 1"/8" = 1"-0"
0 8'-0" 1"6'-0" 24'-0"

Sprinkler Head Schedule					
Symbol	Count	Thread	K–Factor	Description	Note
○	–	1/2"	5.6	EXISTING UPRIGHT	
⊙	–	1/2"	5.6	EXISTING PENDENT	ON DROP
◁	–	1/2"	5.6	EXISTING SIDEWALL	
ETR = EXISTING TO REMAIN RE = REMOVE EXISTING					

WILLIAM STARCK ARCHITECTS, INC.
126 COVE STREET
FALL RIVER, MASSACHUSETTS 02720
10 DORRANCE STREET, SUITE 700
PROVIDENCE, RI 02903
T: 508.679.5733
F: 508.672.8556
WWW.STARCKARCHITECTS.COM

CREATIVE ENVIRONMENT CORP.
CONSULTING ENGINEERS
CEC#20170110
Cranston Springfield Braintree
MECHANICAL | ELECTRICAL | PLUMBING
FIRE PROTECTION | TELECOM | SECURITY
P. 401-438-7733 | www.cec-engineering.com

2nd FLOOR LAB RENOVATIONS
AT THE
C.C.R.I. KNIGHT CAMPUS
400 EAST AVENUE
WARWICK, R.I. 02886

REVISIONS:

SCALE:	As Noted
DATE:	7November2019
DRAWN BY:	DCE
JOB NUMBER:	17-144

DRAWING NAME:
FIRE PROTECTION DEMO FLOOR PLAN

DRAWING NUMBER:
FP1.0

COMMENTS:
PERMIT SET

These plans, drawings, designs, specifications and other components on this sheet are and shall remain the property of William Starck Architects. No part hereof shall be copied, disclosed to others, or used in connection with any work or project, other than the specified project for which they have been prepared and developed, without the express knowledge and written consent of William Starck Architects.

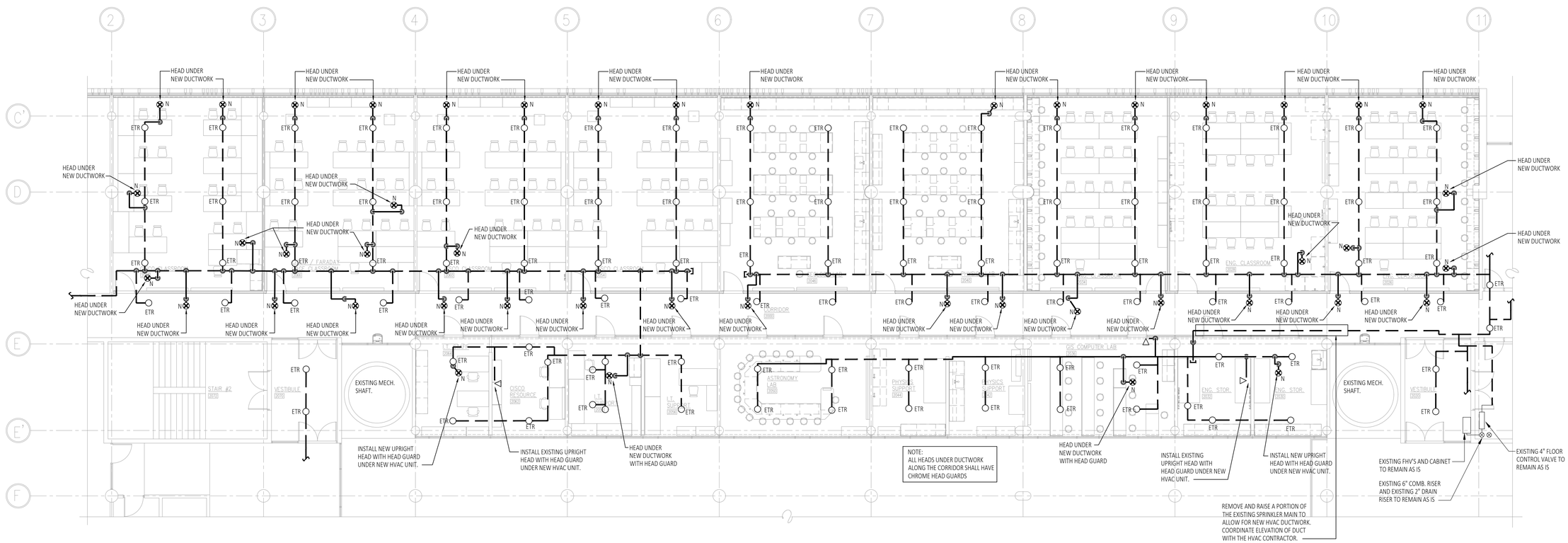

1" FIRE PROTECTION - NEW WORK FLOOR PLAN
SCALE: 1"/8" = 1'-0"
0 8'-0" 16'-0" 24'-0"

Sprinkler Head Schedule					
Symbol	Count	Thread	K–Factor	Description	Note
○	–	1/2"	5.6	HEAD2	
⊛	–	1/2"	5.6	EXISTING PENDENT	ON DROP
⊗	–	1/2"	5.6	V2704 1/2 QR 155 BRASS UPRIGHT	
◁	–	1/2"	5.6	EXISTING SIDEWALL	
ETR = EXISTING TO REMAIN N = NEW					

WILLIAM STARCK ARCHITECTS, INC.
126 COVE STREET
FALL RIVER, MASSACHUSETTS 02720
10 DORRANCE STREET, SUITE 700
PROVIDENCE, RI 02903
T: 508.679.5733
F: 508.672.8556
WWW.STARCKARCHITECTS.COM

CREATIVE ENVIRONMENT CORP.
CONSULTING ENGINEERS
Cranston Springfield Braintree
CEC#20170110
MECHANICAL | ELECTRICAL | PLUMBING
FIRE PROTECTION | TELECOM | SECURITY
P. 401-438-7733 | www.cec-engineering.com

2nd FLOOR LAB RENOVATIONS
AT THE
C.C.R.I. KNIGHT CAMPUS
400 EAST AVENUE
WARWICK, R.I. 02886

REVISIONS:

SCALE:	As Noted
DATE:	7November2019
DRAWN BY:	DCE
JOB NUMBER:	17-144

DRAWING NAME:
FIRE PROTECTION NEW WORK FLOOR PLAN

DRAWING NUMBER:
FP2.0

COMMENTS:
PERMIT SET

These plans, drawings, details, specifications and other components in this sheet are and shall remain the property of William Starck Architects. No part thereof shall be copied, disclosed to others, or used in connection with any work or project, other than the specified project for which they have been prepared and developed, without the express knowledge and written consent of William Starck Architects.

GENERAL LEGEND

	EQUIPMENT TO BE REMOVED
NEW / EXISTING	POINT TO CONNECT NEW TO EXISTING. VERIFY SIZE AND LOCATION IN FIELD PRIOR TO INSTALLATION
S	SWITCH
S	TEMPERATURE SENSOR
T	WALL THERMOSTAT
ERU 1	UNIT TYPE DESIGNATION AND UNIT NUMBER
S-4W 150 20H	DEVICE TYPE AND DIRECTIONAL BLOW CFM EXISTING / SIZE OF DEVICE

DUCTWORK LEGEND

	SUPPLY DUCT UP
	SUPPLY DUCT DOWN
	RETURN/EXHAUST DUCT UP
	RETURN/EXHAUST DUCT DN.
D R	ROUND ELBOWS 90° LONG RADIUS (R/D=1.5)
D R	ROUND ELBOWS 90° SHORT RADIUS (R/D=1.25)
	ROUND ELBOWS 45° LONG RADIUS
	ROUND ELBOWS 45° SHORT RADIUS
	ROUND DUCT DROP
	ROUND DUCT RISER UP
	HORIZONTAL OFFSET
24x12 / 24x12	LINED DUCT - SIZE INDICATES INSIDE DIMENSION
24x12 / 24x12	RECTANGULAR DUCT - FIRST FIGURE IS SIDE SHOWN
26Ø	SPIRAL DUCTWORK
	VOLUME DAMPER (OPPOSED BLADE TYPE)
MD / MD	MOTORIZED CONTROL DAMPER
	WELDED DUCT
	EXISTING DUCT TO REMAIN (SHOWN LIGHT)
	EXISTING DUCT TO BE REMOVED (SHOWN DARK)
	TRANSITION – ECCENTRIC
	TRANSITION – CONCENTRIC
	RECTANGULAR TO ROUND TRANSITION
	EXHAUST/RETURN/INTAKE FLOW ARROW
	SUPPLY AIR FLOW DIRECTION

ABBREVIATIONS

ALL ABBREVIATIONS SHOWN ARE NOT NECESSARILY USED ON THIS PROJECT

AC	AIR CONDITIONING UNIT
AD	ACCESS DOOR
AFF	ABOVE FINISHED FLOOR
AF	AIR FILTER
AHU	AIR HANDLING UNIT
AP	ACCESS PANEL
ARCH	ARCHITECT
ATC	AUTOMATIC TEMPERATURE CONTROL
AS	AIR SEPARATOR
AV	AIR VENT
BB	BASEBOARD
BD	BAROMETRIC DAMPER(COUNTER BALANCED)
BDD	BACKDRAFT DAMPER
BHP	BRAKE HORSEPOWER
BMS	BUILDING MANAGEMENT SYSTEM (DDC)
BLDG	BUILDING
BOD	BOTTOM OF DUCT
BTU	BRITISH THERMAL UNITS
BTUH	BTU PER HOUR
BV	BALL VALVE
B	BOILER
CB	CHILLER BOILER
CC	COOLING COIL
CEF	CEILING EXHAUST FAN
CFM	CUBIC FEET PER MINUTE
CH	CEILING HEATER
CH	CHILLER
CHW	CHILLED WATER
CHWR	CHILLED WATER RETURN
CHWS	CHILLED WATER SUPPLY
CP	CONDENSATE PUMP
CP	CONTROL PANEL
CO	CLEAN OUT
C02	CARBON DIOXIDE
COP	CENTER OF PIPE
CR	CONDENSATE RECEIVER
CRP	CONDENSATE RETURN PUMP
CT	COOLING TOWER
CUH	CABINET UNIT HEATER
CTWP	COOLING TOWER WATER PUMP
CWP	CHILLED WATER PUMP
CWS	CONDENSING WATER SUPPLY
CWR	CONDENSING WATER RETURN
CV	CONVECTOR
CU	CONDENSING UNIT
DDC	DIRECT DIGITAL CONTROL
DB	DRY BULB
DIA	DIAMETER
DIFF	DIFFUSER
DN	DOWN
DX	DIRECT EXPANSION
DP	DEW POINT
DWG	DRAWING
DHE	DOMESTIC WATER HEATER EXCHANGER
E	EXISTING
EAT	ENTERING AIR TEMPERATURE
EBB	ELECTRIC BASEBOARD
EFF	EFFICIENCY
EF	EXHAUST FAN
EH	ELECTRIC HUMIDIFIER
ELEC	ELECTRICAL
ELV	ELEVATION
ERV	ENERGY RECOVERY UNIT
ESP	EXTERNAL STATIC PRESSURE
ET	EXPANSION TANK
ETR	EXISTING TO REMAIN
EUH	ELECTRIC UNIT HEATER
EWT	ENTERING WATER TEMPERATURE
EXH	EXHAUST
EXP	EXPANSION
°F	DEGREES FAHRENHEIT
FA	FRESH AIR
FA	FREE AREA
FBT	FLAT BOTTOM TRANSITION
FCU	FAN COIL UNIT
FD	FIRE DAMPER
FLA	FULL LOAD AMPS
FLEX	FLEXIBLE
FMS	FLOW MEASURING STATION
FPI	FINS PER INCH
FPM	FEET PER MINUTE
FOS	FUEL OIL SUPPLY
FOR	FUEL OIL RETURN
FTR	FINNED TUBE RADIATION
FTT	FLAT TOP TRANSITION
FT	FEET
GAL	GALLONS
GALV	GALVANIZED
GC	GENERAL CONTRACTOR
GPM	GALLONS PER MINUTE
GV	GATE VALVE
HC	HEATING COIL
HP	HEAT PUMP
HP	HORSEPOWER
HVAC	HEATING, VENTILATION, AND AIR CONDITIONING
HV	HEATING & VENTILATING UNIT
HHE	HEATING WATER HEAT EXCHANGER
HE	HEAT EXCHANGER
HWP	HOT WATER PUMP
HW	HOT WATER
HWR	HOT WATER RETURN
HWS	HOT WATER SUPPLY
HZ	HERTZ
IN	INCHES
IRV	INTAKE ROOF VENT
KEF	KITCHEN EXHAUST FAN
KW	KILOWATT
LAT	LEAVING AIR TEMPERATURE
LD	LINEAR DIFFUSER
LF	LINEAR FEET
LPH	LOUVERED PENTHOUSE
LPS	LOW PRESSURE STEAM
LRA	LOCKED ROTOR AMPS
LWT	LEAVING WATER TEMPERATURE
MAU	MAKE-UP AIR UNIT
MAX	MAXIMUM
MBH	THOUSANDS OF BTU'S PER HOUR
MCA	MINIMUM CIRCUIT AMPS
MD	MOTORIZED DAMPER
MECH	MECHANICAL
MIN	MINIMUM
MOCP	MAXIMUM OVER CURRENT PROTECTION
MTD	MOUNTED
N/A	NOT APPLICABLE
NC	NORMALLY CLOSED
NEZV	NON-ELECTRIC ZONE VALVE
NIC	NOT IN CONTRACT
NO	NORMALLY OPEN
NTS	NOT TO SCALE
OA	OUTSIDE AIR
OAT	OUTSIDE AIR TEMPERATURE
OBD	OPPOSED BLADE DAMPER
OD	OUTSIDE DIAMETER
P	PUMP
PD	PRESSURE DROP
PSI	POUNDS PER SQUARE INCH GA.
PR	PANEL RADIATOR
PRV	PRESSURE REDUCING VALVE
PTAC	PACKAGED TERMINAL AIR CONDITIONER
R	RETURN
RA	RETURN AIR
REF	ROOF EXHAUST FAN
REQ'D.	REQUIRED
RG	RETURN GRILLE
RH	RELATIVE HUMIDITY
RH	REHEAT COIL
RLA	RATED LOAD AMPS
RM	ROOM
RPM	REVOLUTIONS PER MINUTE
RTU	ROOF TOP UNIT
RVD	REMOTE CONTROLLED VOLUME DAMPER
S	SUPPLY
SA	SUPPLY AIR
SA	SOUND ATTENUATOR
SAT	SUPPLY AIR TEMPERATURE
SCT	SATURATED CONDENSING TEMPERATURE
SD	SMOKE DAMPER
SF	SQUARE FEET
SH	STEAM HUMIDIFIER
SFD	SMOKE/FIRE DAMPER
SP	STATIC PRESSURE
SQ	SQUARE
SST	SATURATED SUCTION TEMPERATURE
STL	STEEL
T	THERMOSTAT
T.B.D.	TO BE DEMOLISHED
TU	TERMINAL UNIT
TYP.	TYPICAL
UC	UNDERCUT DOOR 3/4" (MIN.)
UH	UNIT HEATER
UV	UNIT VENTILATOR
VAV	VARIABLE AIR VOLUME
VD	VOLUME DAMPER
VFD	VARIABLE FREQUENCY DRIVE
W/	WITH
W/O	WITHOUT
WB	WET BULB TEMPERATURE
WG	WATER GAUGE
WMS	WIRE MESH SCREEN
ZV	ZONE VALVE
WH	WATER HEATER

GENERAL NOTES

1. SCOPE OF WORK SHALL INCLUDE ALL LABOR, MATERIALS, TOOLS, EQUIPMENT, TRANSPORTATION, HOISTING, RIGGING, INSURANCE, ETC., TO PERFORM THE WORK AS INDICATED ON THE DRAWINGS AND HEREIN SPECIFIED FOR A COMPLETE AND FULLY OPERABLE INSTALLATION. ALL WORK SHALL BE IN ACCORDANCE WITH NATIONAL, STATE AND LOCAL CODES AND ORDINANCES HAVING JURISDICTION, AS INTERPRETED BY THE ARCHITECT/ENGINEER.

2. MECHANICAL EQUIPMENT AND SUCH OTHER APPARATUS AS MAY REQUIRE MAINTENANCE AND OPERATION FROM TIME TO TIME SHALL BE MADE EASILY ACCESSIBLE. ALTHOUGH THE EQUIPMENT MAY BE SHOWN ON THE DRAWINGS IN CERTAIN LOCATIONS, THE CONSTRUCTION MAY DISCLOSE THAT SUCH LOCATIONS DO NOT MAKE ITS POSITION READILY ACCESSIBLE. IN SUCH CASES, THE OWNER OR HIS REPRESENTATIVE SHALL BE NOTIFIED BEFORE ADVANCING THE CONSTRUCTION TO A STAGE WHERE A CHANGE WILL REFLECT ADDITIONAL EXPENSE.

3. THE DRAWINGS SHOW THE LAYOUT OF THE MECHANICAL SYSTEMS AND INDICATE THE APPROXIMATE LOCATIONS OF DUCTWORK, FITTINGS, AND EQUIPMENT. THE RUNS AND QUANTITY OF DUCTWORK, OFFSETS AND ELBOWS AS SHOWN ON THE DRAWINGS ARE DIAGRAMMATIC ONLY. THE EXACT ROUTING OF QUANTITY DUCTWORK, PIPING, OFFSETS AND ELBOWS SHALL BE DETERMINED BY THE STRUCTURAL CONDITIONS, POSSIBLE OBSTRUCTIONS AND COORDINATION DRAWINGS. THIS SHALL NOT BE CONSTRUED TO MEAN THAT THE DESIGN OF THE SYSTEMS MAY BE CHANGED, BUT REFERS ONLY TO EXACT ROUTING BETWEEN GIVEN POINTS.

4. IT SHALL BE THE RESPONSIBILITY OF THE HVAC CONTRACTOR TO STUDY ALL DRAWINGS AND DETAILS SO THAT THE INSTALLATION OF ALL NEW WORK CAN BE FULLY COORDINATED. COORDINATE WITH ALL TRADES TO AVOID INTERFERENCE BETWEEN THE HVAC INSTALLATION AND THE SYSTEMS AND EQUIPMENT OF OTHER TRADES.

5. HVAC WORK IS INDICATED DIAGRAMMATICALLY. EXACT LOCATION OF ALL COMPONENTS ARE TO BE DETERMINED IN THE FIELD AND BY THE ACTUAL BUILDING AND CONSTRUCTION SITE CONDITIONS. EQUIPMENT OR DUCTWORK INTERFERING WITH OTHER INSTALLATIONS SHALL BE RELOCATED AS REQUIRED AT NO ADDITIONAL COST.

6. HVAC CONTRACTOR SHALL COORDINATE ALL WALL, CEILING, FLOOR, ROOF AND BEAM PENETRATIONS WITH ARCHITECT AND STRUCTURAL ENGINEER.

7. PRODUCTS REQUIRED BY CONSTRUCTION BUT NOT SPECIFICALLY DESCRIBED HEREIN SHALL BE AS SELECTED BY THE CONTRACTOR SUBJECT TO THE APPROVAL OF THE OWNER/ENGINEER.

8. PROVIDE AND INSTALL ALL MATERIALS, LABOR, EQUIPMENT, AND ACCESSORIES FOR COMPLETE AND OPERABLE SYSTEMS AND AS REQUIRED BY THE EQUIPMENT MANUFACTURER'S INSTALLATION INSTRUCTIONS AND AS INDICATED ON THE DRAWINGS.

9. INSTALLATION OF THE HVAC SYSTEM SHALL PERMIT ACCESSIBILITY FOR SERVICE AND/OR REPLACEMENT OF EQUIPMENT.

10. ALL MISCELLANEOUS STRUCTURAL SUPPORTS REQUIRED FOR HVAC EQUIPMENT INSTALLATION SHALL BE PROVIDED BY MECHANICAL CONTRACTOR.

11. EXACT ELEVATION AND COLOR/FINISH FOR SIDE WALL DIFFUSERS, REGISTERS AND GRILLES SHALL BE APPROVED BY THE ARCHITECT BEFORE INSTALLATION.

12. ALL CEILING MOUNTED EQUIPMENT SHALL BE INSTALLED IN SUCH A WAY THAT LIGHTS AND DUCTWORK DO NOT BLOCK ACCESS TO UNITS AND RELATED ACCESSORIES.

13. INSTALL ROOM THERMOSTATS OR SENSORS 48" (MAXIMUM) ABOVE FINISHED FLOOR OR AS OTHERWISE DIRECTED BY THE ARCHITECT.

14. THE MECHANICAL CONTRACTOR MUST COORDINATE THE COMPONENTS AND PROGRAMMING OF THEIR EQUIPMENT VENDORS AND THEIR ATC SUBCONTRACTOR. CONTROL SEQUENCES SHALL BE TESTED AND CORRECTED TO THE SATISFACTION OF THE COMMISSIONING AGENT (CXA) IF APPLICABLE AND ENGINEER.

15. THE MECHANICAL CONTRACTOR SHALL INCLUDE IN HIS BID AND SECURE THE SERVICES OF THE PROJECT ELECTRICAL CONTRACTOR FOR INCIDENTAL LINE VOLTAGE REQUIRED FOR AUTOMATIC TEMPERATURE CONTROLS.

16. ALL MOTORS SHALL BE PREMIUM EFFICIENCY.

17. THE MECHANICAL CONTRACTOR SHALL COORDINATE THE COMPONENTS AND INTERFACE BETWEEN THE THERMOSTATS AND EQUIPMENT AS REQUIRED.

18. THE MECHANICAL CONTRACTOR MUST INCLUDE COMPLETE TESTING, ADJUSTING AND BALANCING OF EVERY COMPONENT. EVERY AIR SYSTEM MUST BE TESTED, ADJUSTED AND BALANCED. CFM FLOW WILL BE MEASURED. CFM AIRFLOW AT EACH DIFFUSER AND REGISTER SHALL BE MEASURED AT EACH DEVICE AND ADJUSTMENTS MADE. INITIAL, ADJUSTED AND FINAL READINGS SHALL BE RECORDED. DOCUMENT ALL PROBLEMS FOUND OR CONDITIONS WHICH IMPACT RESULTS OF BALANCING. MARK ALL BALANCED SETTINGS IN PERMANENT INK ON THE VOLUME DAMPER.

19. AHU UNIT ACCESS PANELS SHALL BE FURNISHED AND INSTALLED WITH THE UNIT OR BY THE MECHANICAL CONTRACTOR TO PROVIDE ACCESS FOR PIPING, CONTROL PANEL, CONTROLS, AND RETURN AIR FILTERS. REAR DUCT CONNECTIONS FOR ALL AC UNITS SHALL BE CONSTRUCTED TO PROVIDE FOR EASY ACCESS AND REMOVAL OF THE AIR FILTER MESH.

SHEET LIST

SHEET NUMBER	SHEET NAME
M0.0	HVAC LEGEND
M1.0	HVAC DEMO PLAN
M1.1	HVAC RENOVATION PLAN
M1.2	HVAC RENOVATION PLAN PIPING
M2.0	HVAC SCHEDULES AND DETAILS
M2.1	HVAC DETAILS

WILLIAM STARCK ARCHITECTS, INC.
126 COVE STREET
FALL RIVER, MASSACHUSETTS 02720
10 DORRANCE STREET, SUITE 700
PROVIDENCE, RI 02903
T: 508.679.5733
F: 508.672.8556
WWW.STARCKARCHITECTS.COM

CREATIVE ENVIRONMENT CORP.
CONSULTING ENGINEERS
CEC#20170110
Cranston Springfield Braintree
MECHANICAL | ELECTRICAL | PLUMBING
FIRE PROTECTION | TELECOM | SECURITY
P. 401-438-7733 | www.cec-engineering.com

2nd FLOOR LAB RENOVATIONS
AT THE
C.C.R.I. KNIGHT CAMPUS
400 EAST AVENUE
WARWICK, R.I. 02886

REVISIONS:

SCALE: As Noted
DATE: 7November2019
DRAWN BY: TEP
JOB NUMBER: 17-144
DRAWING NAME:
HVAC LEGEND

DRAWING NUMBER:
M0.0

COMMENTS:
PERMIT SET

These plans, drawings, designs, specifications and other components on this sheet are and shall remain the property of William Starck Architects. No part thereof shall be copied, disclosed to others, or used in connection with any work or project, other than the specified project for which they have been prepared and developed, without the express knowledge and written consent of William Starck Architects.

GENERAL SHEET NOTES

1. THE GC SHALL ASSUME RESPONSIBILITY FOR MAINTAINING THE HEATING AND COOLING OF OTHER ROOMS AND AREAS OF THE BLDG NOT AFFECTED BY THE LIMITS OF DISTURBANCE OF THIS PROJECT AS REQUIRED.
2. GC AND MECHANICAL CONTRACTOR SHALL REVIEW EXISTING CONDITIONS PRIOR TO STARTING WORK. ALL NEW DUCTWORK SHALL BE INSTALLED AROUND EXISTING CONDITIONS AS BEST POSSIBLE.
3. THE EXISTING DUCTWORK IN THE MAIN CORRIDOR SHALL BE REMOVED AND REPLACED COMPLETE AS PART OF THIS PROJECT. IT IS THE INTENT OF THIS DESIGN THAT THE NEW DUCTWORK BE INSTALLED IN THE SAME FOOTPRINT AREA AS THE EXISTING TO MINIMIZE THE POTENTIAL INTERFERENCES WITH THE EXISTING SYSTEMS INSTALLED IN THIS CORRIDOR. THE BRANCH DUCTS INTO THE CLASSROOMS SHALL BE INSTALLED IN THE SAME GENERAL AREA AS THE PREVIOUS BRANCH DUCTS SINCE THESE AREAS ARE ALREADY CLEAR OF OTHER EXISTING SYSTEM PIPING AND CONDUIT.
4. EXISTING ACID WASTE PIPING IS BEING REROUTED IN DIFFERENT AREAS TO FACILITATE THE INSTALLATION OF THE NEW DUCTWORK AS PART OF THE RENOVATION PHASE. THE GC SHALL ASSUME COMPLETE RESPONSIBILITY TO COORDINATE THE ACTIVITIES OF THE MECHANICAL AND PLUMBING CONTRACTORS TO ACCOMPLISH THESE PIPING REVISIONS AND NEW DUCTWORK INSTALLATIONS. SEE PLUMBING DWGS FOR ACID WASTE PIPING REVISIONS.
5. EXISTING ATC SYSTEM SPACE SENSOR CONTROLS SHALL BE REMOVED AND SHALL BE REPLACED WITH NEW IN-KIND SENSORS AS PART OF THE RENOVATION PHASE.
6. EXISTING HOT WATER COILS SHALL BE REMOVED AND SHALL BE REPLACED LATER AS PART OF THE RENOVATION PHASE. EXISTING HOT WATER REHEAT COIL VALVING SHALL BE REMOVED AND BE REPLACED WITH NEW LATER IN THE SAME ARRANGEMENT AND CONFIGURATION AS PART OF THE RENOVATION PHASE.

KEYED SHEET NOTES

1. ALL EXISTING AIR-HANDLING UNIT TRUNK DUCTWORK, BRANCH DUCTWORK, REHEAT COILS AND ASSOCIATED PIPING, DAMPERS, GRILLES, HANGERS AND SUPPORTS SHALL BE REMOVED COMPLETE.
2. EXISTING AIR-HANDLING UNIT AND ALL ASSOCIATED DUCTWORK, HANGERS AND SUPPORTS SHALL BE REMOVED COMPLETE. EXISTING PIPING SHALL BE TEMPORARILY REMOVED AND CAPPED TO BE RECONNECTED TO NEW UNIT DURING RENOVATION PHASE.
3. EXISTING REHEAT COIL TEMPERATURE SENSOR SHALL BE REMOVED AND BE REPLACED AS PART OF THE RENOVATION PHASE. CONTRACTOR SHALL MARK THE CONDUCTORS PRIOR TO DISCONNECTING AND PROPERLY LABEL THE CONDUCTORS TO BE CONNECTED TO NEW SENSOR LATER. NEW TEMPERATURE CONTROL WALL SENSOR SHALL BE A DIRECT REPLACEMENT FOR THE EXISTING SENSOR AND CONNECTED TO THE EXISTING CONTROL CIRCUIT. THE NEW SENSOR SHALL OPERATE WITH THE SAME CONTROL STAGING CONFIGURATION AS THE EXISTING SENSOR.
4. EXISTING HOT WATER REHEAT SUPPLY AND RETURN PIPING SHALL BE TEMPORARILY REMOVED AND CAPPED TO FACILITATE THE INSTALLATION OF NEW TOP CONNECTION BRANCH DUCTWORK. NEW PIPING TO THE NEW REHEAT COILS SHALL BE INSTALLED AS PART OF THE RENOVATION PHASE.
5. SOUND ATTENUATOR SHALL BE TEMPORARILY REMOVED AND BE STORED IN A SAFE AND SECURE LOCATION TO BE REINSTALLED DURING THE RENOVATION PHASE.
6. EXISTING PERIMETER FIN-TUBE SHALL REMAIN IN PLACE AND BE REUSED UNDER THE CURRENT BMS CONTROL SEQUENCING.

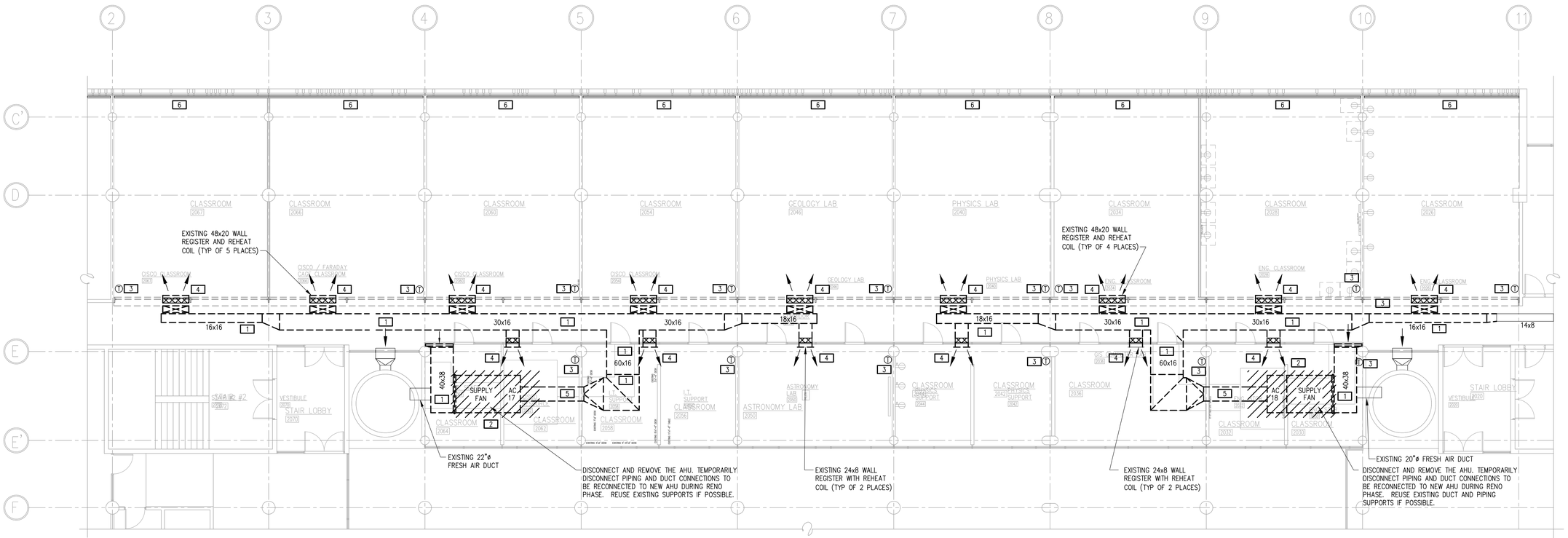

1 MECHANICAL - HVAC DEMO FLOOR PLAN

SCALE: 1/8" = 1'-0"

0 8'-0" 16'-0" 24'-0"

WILLIAM STARCK ARCHITECTS, INC.
126 COVE STREET
FALL RIVER, MASSACHUSETTS 02720
10 DORRANCE STREET, SUITE 700
PROVIDENCE, RI 02903
T: 508.679.5733
F: 508.672.8556
WWW.STARCKARCHITECTS.COM

CREATIVE ENVIRONMENT CORP.
CONSULTING ENGINEERS
CEC#20170110
Cranston Springfield Braintree
MECHANICAL | ELECTRICAL | PLUMBING
FIRE PROTECTION | TELECOM | SECURITY
P. 401-438-7733 | www.cec-engineering.com

These plans, drawings, designs, specifications and other components as the same are and shall remain the property of William Starck Architects. No part thereof shall be copied, disclosed to others, or used in connection with any work or project, other than the specified project for which they have been prepared and developed, without the express knowledge and written consent of William Starck Architects.

2nd FLOOR LAB RENOVATIONS

AT THE

C.C.R.I. KNIGHT CAMPUS

400 EAST AVENUE

WARWICK, R.I. 02886

REVISIONS:

SCALE:	As Noted
DATE:	7November2019
DRAWN BY:	TEP
JOB NUMBER:	17-144

DRAWING NAME:

HVAC DEMO PLAN

DRAWING NUMBER:

M1.0

COMMENTS:

PERMIT SET

GENERAL SHEET NOTES

1. THE GC SHALL ASSUME RESPONSIBILITY FOR MAINTAINING THE HEATING AND COOLING OF OTHER ROOMS AND AREAS OF THE BLDG NOT AFFECTED BY THE LIMITS OF DISTURBANCE OF THIS PROJECT AS REQUIRED.
2. GC AND MECHANICAL CONTRACTOR SHALL REVIEW EXISTING CONDITIONS PRIOR TO STARTING WORK. ALL NEW DUCTWORK SHALL BE INSTALLED AROUND EXISTING CONDITIONS AS BEST POSSIBLE.
3. ALL NEW DUCTWORK SHALL BE INSTALLED AS HIGH AS POSSIBLE WITHIN THE SPACES BEING SERVED. EXACT DUCTWORK ROUTINGS SHALL BE DETERMINED IN THE FIELD TO AVOID EXISTING PIPING AND CONDUIT AS BEST POSSIBLE.
4. NEW DUCTWORK SHALL BE CONSTRUCTED UNDER SMACNA MEDIUM PRESSURE CONSTRUCTION STANDARDS.
5. THE EXISTING DUCTWORK IN THE MAIN CORRIDOR SHALL BE REMOVED AND REPLACED COMPLETE AS PART OF THIS PROJECT. IT IS THE INTENT OF THIS DESIGN THAT THE NEW DUCTWORK BE INSTALLED IN THE SAME FOOTPRINT AREA AS THE EXISTING TO MINIMIZE THE POTENTIAL INTERFERENCES WITH THE EXISTING SYSTEMS INSTALLED IN THIS CORRIDOR. THE BRANCH DUCTS INTO THE CLASSROOMS SHALL BE INSTALLED IN THE SAME GENERAL AREA AS THE PREVIOUS BRANCH DUCTS SINCE THESE AREAS ARE ALREADY CLEAR OF OTHER EXISTING SYSTEM PIPING AND CONDUIT. WHERE THE NEW DUCTWORK IS NOT REPLACING AN EXISTING BRANCH RUN, THE GC SHALL COORDINATE THE REWORK OF THE PIPING AND CONDUIT TO FACILITATE THE INSTALLATION OF THE NEW DUCTWORK.
6. EXISTING ACID WASTE PIPING IS BEING REROUTED IN DIFFERENT AREAS TO FACILITATE THE INSTALLATION OF THE NEW DUCTWORK. THE GC SHALL ASSUME COMPLETE RESPONSIBILITY TO COORDINATE THE ACTIVITIES OF THE MECHANICAL AND PLUMBING CONTRACTORS TO ACCOMPLISH THESE PIPING REVISIONS AND NEW DUCTWORK INSTALLATIONS. SEE PLUMBING DWGS FOR ACID WASTE PIPING REVISIONS.
7. EXISTING ATC SYSTEM SPACE SENSOR CONTROLS SHALL BE REMOVED AND BE REPLACED WITH NEW IN-KIND SENSORS. THE ATC CONTROLS SYSTEM SHALL BE REVISED TO ACCEPT THE CONTROL FOR THE NEW HOT WATER COILS BEING INSTALLED AS PART OF THIS PROJECT.
8. ALL NEW AND EXISTING HVAC CONTROLS SHALL BE TIED INTO THE CCRI BMS SYSTEM. THE ATC CONTRACTOR SHALL BE RESPONSIBLE TO CONNECT ALL CONTROLS IN THE PROJECT AREA TO THE CCRI BMS SYSTEM AND TO REVISE THE SYSTEM GRAPHICS AS REQUIRED FOR ALL UNITS AND DEVICES BEING CONTROLLED AS PART OF THIS PROJECT.
9. EXISTING HOT WATER COILS SHALL BE REMOVED AND BE REPLACED WITH NEW. EXISTING HOT WATER REHEAT COIL VALVING SHALL BE REMOVED AND BE REPLACED WITH NEW IN THE SAME ARRANGEMENT AND CONFIGURATION. EXISTING CONTROLS SHALL BE CONNECTED TO THE NEW CONTROL VALVES. THE NEW BRANCH DUCTS SERVING THE SPACES SHALL BE CONNECTED TO THE EXISTING BMS SYSTEM WITH NEW CONTROLS CONNECTED TO THE NEW CONTROL VALVES. ALL REHEAT COIL VALVING SHALL BE INSTALLED TO BE READILY ACCESSIBLE FOR INSPECTION AND SERVICING.
10. ALL NEW AND EXISTING BRANCH DUCT TAKEOFFS SHALL BE INSTALLED WITH MANUAL VOLUME CONTROL DAMPER FOR BALANCING.
11. ALL SUPPLY AND RETURN AIR DEVICES WITH A CFM SYMBOL NOTED SHALL BE ADJUSTED TO THIS NEW CFM BY A LICENSED PROFESSIONAL AIR BALANCE CONTRACTOR.

KEYED SHEET NOTES

1. CONTRACTOR SHALL FURNISH AND INSTALL NEW AIR-HANDLING UNIT AND ALL ASSOCIATED VIBRATION ISOLATION HANGERS AND SUPPORTS. UNIT SHALL BE RECONNECTED TO THE EXISTING PIPING THAT WAS TEMPORARILY REMOVED DURING THE DEMO PHASE. UNIT SHALL BE INSTALLED AS HIGH AS POSSIBLE IN THE SPACE.
2. EXISTING I.T. CABLE RACK SHALL BE MOVED BY OTHERS AS REQUIRED TO ACCOMMODATE NEW RETURN AIR DUCT. CONTRACTOR SHALL COORDINATE THE REQUIRED CHANGES WITH THE ELECTRICAL CONTRACTOR.
3. FURNISH AND INSTALL ALL NEW SUPPLY AND RETURN AIR DUCTWORK TO INCLUDE HANGERS, SUPPORTS, GRILLES, AND REGISTERS.
4. DUCT SHALL BE INSTALLED TO AVOID INTERFERENCE WITH EXISTING SPRINKLER PIPE.
5. DUCT SHALL BE ROUTED UP AND OVER THE TOP OF EXISTING CONDUIT RACK TO AVOID INTERFERENCE WITH SEVERAL ELECTRICAL CONDUIT ROUTED THRU THIS AREA.
6. DUCT SHALL NOT BE ROUTED ABOVE ELECTRICAL PANELS MOUNTED ON THIS WALL.
7. DUCT SHALL BE ROUTED TO AVOID EXISTING ACID WASTE PIPING IN THIS AREA.
8. REINSTALL SOUND ATTENUATOR DUCT SECTION THAT WAS REMOVED AND STORED DURING THE DEMOLITION PHASE.
9. RETURN AIR DUCT SHALL PENETRATE THE CORRIDOR WALL AT THE SAME ELEVATION AS THE SUPPLY AIR DUCT WHICH IS SLIGHTLY ABOVE THE TOP ELEVATION OF THE CORRIDOR ELECTRICAL CABLE TRAY. PRIOR TO INSTALLING THE DUCT ON TOP OF THE TRAY THE ELECTRICAL CONTRACTOR SHALL BE ALLOWED TO CUT THE TOP COVER OF THE TRAY ON EACH SIDE OF THE DUCT FOR FUTURE ACCESS. COORDINATE WITH THE E.C AND G.C AS REQUIRED.
10. CONNECT NEW 8"Ø 150 CFM SUPPLY AIR DUCT TO EXISTING VAV BOX SERVING THE ADJACENT SPACE OUT OF THE PROJECT AREA. INSTALL TRANSITION TO EXISTING DUCTWORK AND RECONNECT.
11. COORDINATE DUCT ROUTING AND PROPOSED ACID WASTE PIPE REROUTE IN THIS AREA WITH THE GC AND THE PLUMBING CONTRACTOR PRIOR TO INSTALLATION.
12. PROVIDE TWO VOLUME DAMPERS TO PROVIDE 2-STEP TRANSITION FROM MEDIUM PRESSURE RETURN AIR DUCT AND THE LOW PRESSURE RETURN AIR DUCT.
13. COORDINATE DUCT ELEVATION AND ROUTING WITH GC AND PLUMBING CONTRACTOR TO AVOID INTERFERENCE WITH EXISTING 3/4" DOMESTIC WATER PIPES AND 3/4" NATURAL GAS PIPE.
14. DUCT SHALL BE INSTALLED IN THIS LOCATION AFTER THE ELECTRICAL / IT RACK IS REMOVED UNDER THE ELECTRICAL DEMO PHASE.
15. EXISTING PERIMETER FIN-TUBE SHALL REMAIN IN PLACE AND BE REUSED.
16. EXISTING DUCT REHEAT COIL SPACE SENSOR SHALL BE REMOVED DURING THE DEMO PHASE WITH THE CONDUCTORS BEING PROPERLY LABELED AND COILED IN THE CEILING SPACE. THE NEW SPACE SENSOR SHALL BE A DIRECT REPLACEMENT FOR THE EXISTING SENSOR AND BE CONNECTED TO THE EXISTING CONTROL CIRCUIT. THE NEW SENSOR SHALL OPERATE WITH THE SAME CONTROL STAGING CONFIGURATION AS THE EXISTING SENSOR. NEW SPACE SENSORS SERVING NEW REHEAT COILS SHALL BE OF THE SAME TYPE AS THE NEW REPLACEMENT SENSORS. ATC CONTRACTOR SHALL TIE THE NEW SENSORS INTO THE EXISTING CCRI BMS CONTROL SYSTEM AND MAKE THE APPROPRIATE CHANGES TO THE BMS SYSTEM GRAPHICS TO REFLECT THE NEW DEVICES.

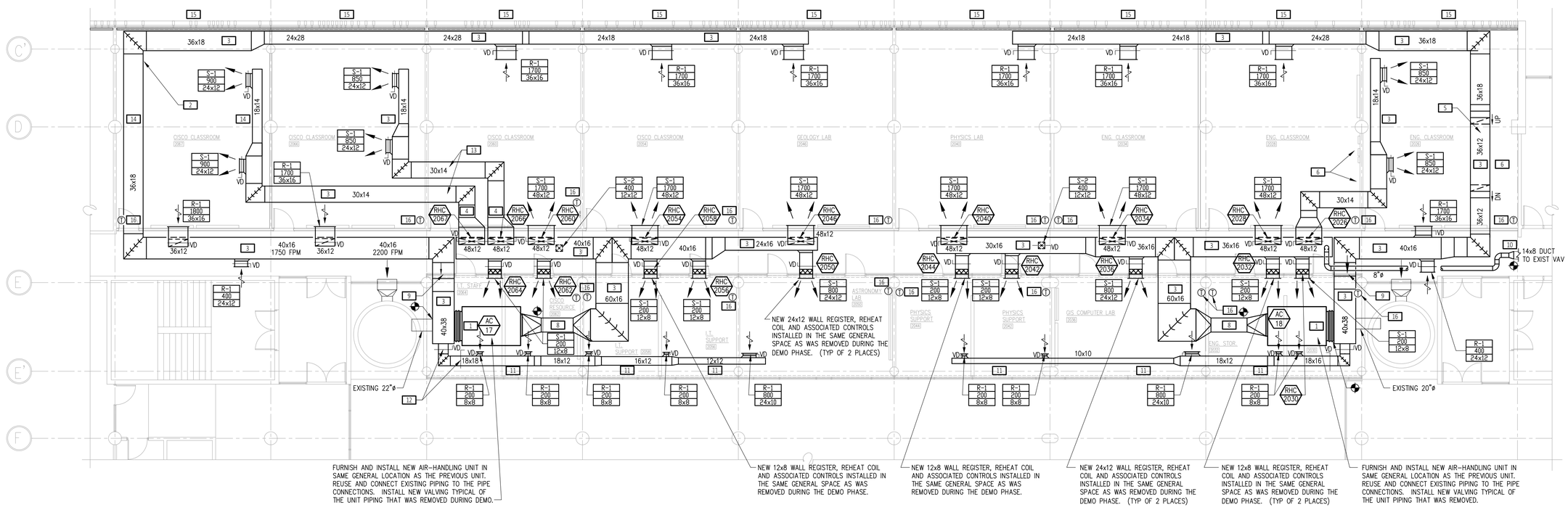

1 MECHANICAL - HVAC RENOVATION PLAN
SCALE: 1/8" = 1'-0"

WILLIAM STARCK ARCHITECTS, INC.
126 COVE STREET
FALL RIVER, MASSACHUSETTS 02720
10 DORRANCE STREET, SUITE 700
PROVIDENCE, RI 02903
T: 508.679.5733
F: 508.672.8556
WWW.STARCKARCHITECTS.COM

CREATIVE ENVIRONMENT CORP.
CONSULTING ENGINEERS
CEC#20170110
Cranston Springfield Braintree
MECHANICAL | ELECTRICAL | PLUMBING
FIRE PROTECTION | TELECOM | SECURITY
P. 401-438-7733 | www.cec-engineering.com

These plans, drawings, designs, specifications and other components to the plant are and shall remain the property of William Starck Architects. No part thereof shall be copied, disclosed to others, or used in connection with any work or project, other than the specified project for which they have been prepared and developed, without the express knowledge and written consent of William Starck Architects.

2nd FLOOR LAB RENOVATIONS
AT THE
C.C.R.I. KNIGHT CAMPUS
400 EAST AVENUE
WARWICK, R.I. 02886

REVISIONS:

SCALE:	As Noted
DATE:	7November2019
DRAWN BY:	TEP
JOB NUMBER:	17-144

DRAWING NAME:
HVAC RENOVATION PLAN

DRAWING NUMBER:
M1.1

COMMENTS:
PERMIT SET

KEYED SHEET NOTES

1. EXTEND THE 1-1/2" PIPING FURTHER DOWN THE CORRIDOR TO SERVE THE FIRST FIVE REHEAT COILS. TIE INTO THE 1" PIPE FURTHER DOWN THE CORRIDOR.
2. EXISTING HOT WATER PIPING SHALL BE REWORKED AS REQUIRED AROUND NEW DUCT TAKEOFFS TO AVOID INTERFERENCES.
3. NEW AHU PIPING CONNECTIONS SHALL BE CONFIRMED WITH THE NEW UNIT BEING FURNISHED. PIPING SHALL BE ADJUSTED AND EXTENDED AS REQUIRED TO ACCOMMODATE THE AHU BEING SUBMITTED.
4. EXISTING FIN-TUBE HOT WATER HEATING UNITS SHALL REMAIN IN PLACE AND BE REUSED. THE BMS CONTROL OF THESE UNITS SHALL BE IN THE SAME CONFIGURATION AS THE EXISTING WITH NO CHANGES.
5. EXISTING DUCT REHEAT COIL SPACE SENSOR SHALL BE REMOVED DURING THE DEMO PHASE WITH THE CONDUCTORS BEING PROPERLY LABELED AND COILED IN THE CEILING SPACE. THE NEW SPACE SENSOR SHALL BE A DIRECT REPLACEMENT FOR THE EXISTING SENSOR AND BE CONNECTED TO THE EXISTING CONTROL CIRCUIT. THE NEW SENSOR SHALL OPERATE WITH THE SAME CONTROL STAGING CONFIGURATION AS THE EXISTING SENSOR. NEW SPACE SENSORS SERVING NEW REHEAT COILS SHALL BE OF THE SAME TYPE AS THE NEW REPLACEMENT SENSORS. ATC CONTRACTOR SHALL TIE THE NEW SENSORS INTO THE EXISTING CCRI BMS CONTROL SYSTEM AND MAKE THE APPROPRIATE CHANGES TO THE BMS SYSTEM GRAPHICS TO REFLECT THE NEW DEVICES.

GENERAL SHEET NOTES

1. GC AND MECHANICAL CONTRACTOR SHALL REVIEW EXISTING CONDITIONS PRIOR TO STARTING WORK. ALL NEW PIPING SHALL BE INSTALLED AROUND EXISTING CONDITIONS AS BEST POSSIBLE.
2. ALL NEW PIPING SHALL BE INSTALLED AS HIGH AS POSSIBLE WITHIN THE SPACES BEING SERVED. EXACT PIPING ROUTINGS SHALL BE DETERMINED IN THE FIELD TO AVOID INTERFERENCES WITH EXISTING DUCTWORK, ELECTRICAL DEVICES, AND CONDUIT.
3. THE PREFERRED CONFIGURATION OF THE REHEAT COILS SERVING THE LARGE CLASSROOMS IS TO BE INSTALLED DIRECTLY ABOVE THE MAIN DUCT IN A HORIZONTAL ORIENTATION. THIS SHALL ALLOW THE MOST ACCESSIBLE LOCATION TO THE COIL AND ALSO TO THE ASSOCIATED VALVING.
4. THE EXISTING DUCTWORK AND HOT WATER REHEAT COILS IN THE MAIN CORRIDOR SHALL BE REMOVED AND REPLACED COMPLETE AS PART OF THIS PROJECT. IT IS THE INTENT OF THIS DESIGN THAT THE NEW PIPING BE INSTALLED IN THE SAME GENERAL FOOTPRINT AREA AS THE EXISTING TO MINIMIZE THE POTENTIAL INTERFERENCES WITH THE EXISTING SYSTEMS INSTALLED IN THIS CORRIDOR. THE BRANCH DUCTS WITH THE ASSOCIATED REHEAT COILS SERVING THE CLASSROOMS AND OFFICES SHALL BE INSTALLED IN THE SAME GENERAL AREA AS THE PREVIOUS BRANCH DUCTS SINCE THESE AREAS ARE ALREADY CLEAR OF OTHER EXISTING SYSTEM PIPING AND CONDUIT. WHERE THE NEW DUCTWORK IS NOT REPLACING AN EXISTING BRANCH RUN, THE GC SHALL COORDINATE THE REWORK OF THE PIPING, DUCTWORK, AND CONDUIT TO FACILITATE THE INSTALLATION OF THE NEW PIPING AND REHEAT COILS.
5. CONTRACTOR SHALL CONFIRM PIPE SIZES AND PIPE FLOW DIRECTIONS (HWS AND HWR) IN THE FIELD PRIOR TO STARTING ANY WORK ON THE PIPING SYSTEM. THE EXISTING HOT WATER PIPING SHALL BE REROUTED AS REQUIRED TO AVOID INTERFERENCES WITH THE NEW DUCTWORK BRANCH RUN TAKEOFFS AND ANY OTHER EXISTING CONDITIONS.
6. EXISTING HOT WATER COILS SHALL BE REMOVED AND BE REPLACED WITH NEW AS NOTED ON THE PLAN. EXISTING HOT WATER REHEAT COIL VALVING SHALL BE REMOVED AND BE REPLACED WITH NEW IN THE SAME ARRANGEMENT, STAGING FOR CONTROL SEQUENCING, AND CONFIGURATION. THE NEW SPACE SENSOR SHALL OPERATE WITH THE SAME CONTROL STAGING CONFIGURATION AS THE EXISTING SENSOR. NEW SPACE SENSORS SERVING NEW REHEAT COILS SHALL BE OF THE SAME TYPE AS THE NEW REPLACEMENT SENSORS. ATC CONTRACTOR SHALL TIE THE NEW SENSORS INTO THE EXISTING CCRI BMS CONTROL SYSTEM AND MAKE THE APPROPRIATE CHANGES TO THE BMS SYSTEM GRAPHICS TO REFLECT THE NEW DEVICES.
7. ALL REHEAT COILS AND ASSOCIATED VALVING SHALL BE INSTALLED TO BE READILY ACCESSIBLE FOR INSPECTION AND SERVICING.
8. EXISTING HOT WATER FIN-TUBE SHALL REMAIN IN PLACE AND BE REUSED.

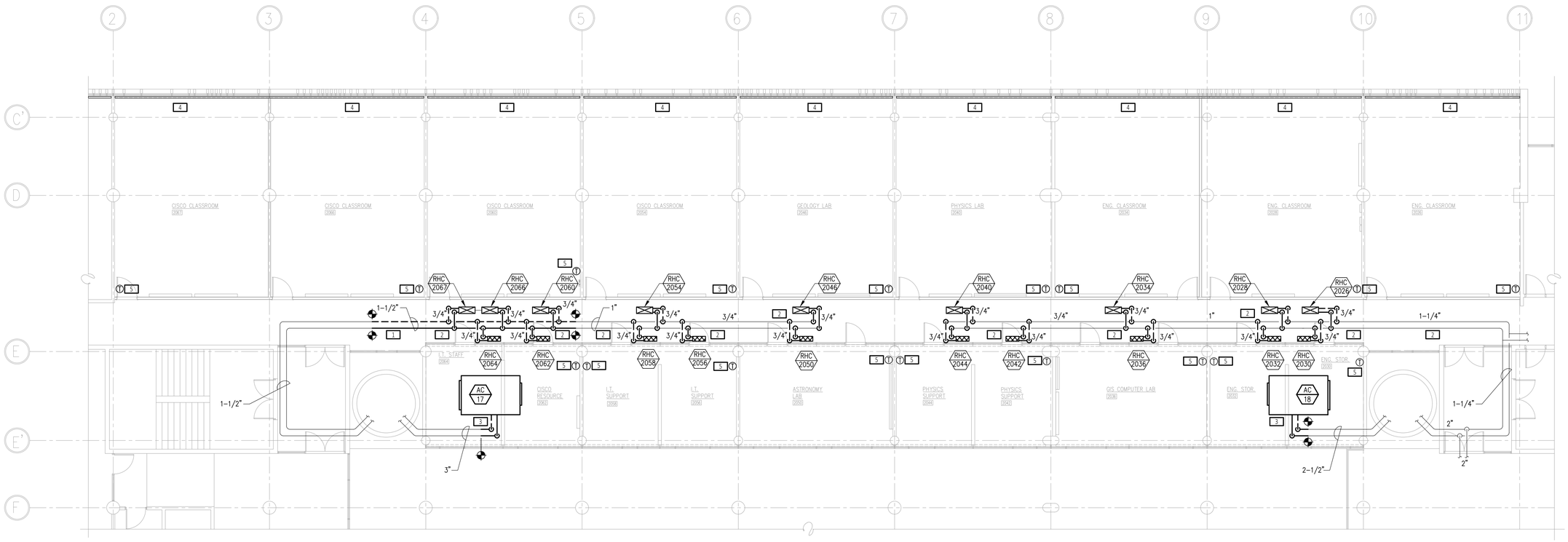

1 MECHANICAL - HVAC PIPING RENOVATION PLAN
SCALE: 1/8" = 1'-0"
0 8'-0" 16'-0" 24'-0"

WILLIAM STARCK ARCHITECTS, INC.
126 COVE STREET
FALL RIVER, MASSACHUSETTS 02720
10 DORRANCE STREET, SUITE 700
PROVIDENCE, RI 02903
T: 508.679.5733
F: 508.672.8556
WWW.STARCKARCHITECTS.COM

CREATIVE ENVIRONMENT CORP.
CONSULTING ENGINEERS
CEC#2017010110
Cranston | Springfield | Braintree
MECHANICAL | ELECTRICAL | PLUMBING
FIRE PROTECTION | TELECOM | SECURITY
P. 401-438-7733 | www.cec-engineering.com

2nd FLOOR LAB RENOVATIONS
AT THE
C.C.R.I. KNIGHT CAMPUS
400 EAST AVENUE
WARWICK, R.I. 02886

REVISIONS:

SCALE:	As Noted
DATE:	7November2019
DRAWN BY:	TEP
JOB NUMBER:	17-144

DRAWING NAME:
HVAC RENOVATION PLAN - PIPING

DRAWING NUMBER:
M1.2

COMMENTS:
PERMIT SET

These plans, drawings, designs, specifications and other components to the plans are and shall remain the property of William Starck Architects. No part thereof shall be copied, disclosed to others, or used in connection with any work or project, other than the specified project for which they have been prepared and developed, without the express knowledge and written consent of William Starck Architects.

AIR HANDLING UNIT SCHEDULE

AHU –

TAG NO.	LOCATION	TYPE	CFM		SUPPLY FAN						COOLING COIL									ELECTRICAL DATA					WEIGHT (LBS)	MANUFACTURER MODEL NUMBER	REMARKS
			TOTAL	OA	CFM	TSP IN WC	ESP IN WC	QTY	MAX BHP (EA)	MOTOR HP (EA)	CAPACITY (MBH)	GPM	ROWS	EAT (DB/WB °F)	LAT (DB/WB °F)	EWT (DB °F)	LWT (DB °F)	WPD (FT)	APD (IN WC)	V	PH	HZ	MCA	MOCP			
17	CLASSROOMS	HORIZONTAL	10600	3500	10600	4.63	3.0	2	-	8	450	81	8	80/67	58/55	45	55	11.38	0.6	460	3	60	26.25	45	2187	TRANE CSAA021	1,2,3,4,5
18	CLASSROOMS	HORIZONTAL	8950	3500	8950	4.79	3.0	2	-	8	380	69	8	80/67	58/55	45	55	8.95	0.6	460	3	60	26.25	45	1969	TRANE CSAA017	1,2,3,4,5

REMARKS:

1. PROVIDE MERV 8 FILTER BOX AND FILTERS. UNIT SHALL BE CONSTRUCTED WITH GALVANIZED SIDE PANELS WITH 2" FOAM INJECTED R–13 WITH THERMAL BREAK. BASE SHALL BE 2–1/2" FRAME.
2. UNIT SHALL BE FURNISHED WITH 6 ROW CHILLED WATER COIL, 1/2" ALUMINUM TUBES WITH ALUMINUM FINS. MOTORS SHALL BE DIRECT DRIVE ECM VFD.
3. PROVIDE THE FOLLOW TERMINALS FOR CONTROL INTERFACE: COMMON, FANS ENABLE, CLOGGED FILTER, PROOF OF AIRFLOW.
4. UNIT SHALL BE SUPPORTED FROM THE STRUCTURE ABOVE AND BE HUNG AS HIGH AS POSSIBLE IN THE CONCRETE PAN SPACE. FURNISH WITH VIBRATION ISOLATORS WITH 1" DEFLECTION.
5. UNIT SHALL BE CONNECTED TO THE EXISTING SYSTEM PIPING. CONTRACTOR SHALL DETERMINE PROPER RH OR LH ORIENTATION PRIOR TO ORDERING.

DUCT REHEAT COIL SCHEDULE

RHC –

COIL NO.	LOCATION	SIZE	MBH	AIR				WATER						MANUFACTURER MODEL NUMBER	REMARKS
				CFM	EAT (°F)	LAT (°F)	APD (IN WC)	% GLYCOL	GPM	EWT (°F)	LWT (°F)	WPD (FT)	ROWS		
2026	ENG. CLASSROOM	48x12	12.1	1700	61	67.2	.56	0	2.0	105	92.9	.07	1	TRANE D5WB12048	1,2,3,4,5
2028	ENG. CLASSROOM	48x12	12.1	1700	61	67.2	.56	0	2.0	105	92.9	.07	1	TRANE D5WB12048	1,2,3,4,5
2030	ENG .STORAGE	12x6	2.25	200	54	64.4	.06	0	.5	105	96.0	.03	1	TRANE DT0B06012	1,2,3,4,5
2032	ENG. STORAGE	12x6	2.25	200	54	64.4	.06	0	.5	105	96.0	.03	1	TRANE DT0B06012	1,2,3,4,5
2034	ENG. CLASSROOM	48x12	12.1	1700	61	67.2	.56	0	2.0	105	92.9	.07	1	TRANE D5WB12048	1,2,3,4,5
2036	GIS COMPUTER LAB	24x12	8.68	800	54	64	.06	0	2.0	105	96.3	.06	1	TRANE D5WB12024	1,2,3,4,5
2040	PHYSICS LAB	48x12	12.1	1700	61	67.2	.56	0	2.0	105	92.9	.07	1	TRANE D5WB12048	1,2,3,4,5
2042	PHYSICS SUPPORT	12x6	2.25	200	54	64.4	.06	0	.5	105	96.0	.03	1	TRANE DT0B06012	1,2,3,4,5
2044	PHYSICS SUPPORT	12x6	2.25	200	54	64.4	.06	0	.5	105	96.0	.03	1	TRANE DT0B06012	1,2,3,4,5
2046	GEOLOGY LAB	48x12	12.1	1700	61	67.2	.56	0	2.0	105	92.9	.07	1	TRANE D5WB12048	1,2,3,4,5
2050	ASTRONOMY LAB	24x12	8.68	800	54	64	.06	0	2.0	105	96.3	.06	1	TRANE D5WB12024	1,2,3,4,5
2054	CISCO CLASSROOM	48x12	12.1	1700	61	67.2	.56	0	2.0	105	92.9	.07	1	TRANE D5WB12048	1,2,3,4,5
2056	IT SUPPORT	12x6	2.25	200	54	64.4	.06	0	.5	105	96.0	.03	1	TRANE DT0B06012	1,2,3,4,5
2058	IT SUPPORT	12x6	2.25	200	54	64.4	.06	0	.5	105	96.0	.03	1	TRANE DT0B06012	1,2,3,4,5
2060	CISCO CLASSROOM	48x12	12.1	1700	61	67.2	.56	0	2.0	105	92.9	.07	1	TRANE D5WB12048	1,2,3,4,5
2062	CISCO RESOURCE	12x6	2.25	200	54	64.4	.06	0	.5	105	96.0	.03	1	TRANE DT0B06012	1,2,3,4,5
2064	IT STAFF	12x6	2.25	200	54	64.4	.06	0	.5	105	96.0	.03	1	TRANE DT0B06012	1,2,3,4,5
2066	CISCO CLASSROOM	48x12	12.1	1700	61	67.2	.56	0	2.0	105	92.9	.07	1	TRANE D5WB12048	1,2,3,4,5
2067	CISCO CLASSROOM	48x12	12.1	1800	61	67.2	.56	0	2.0	105	92.9	.07	1	TRANE D5WB12048	1,2,3,4,5

REMARKS:

1. PROVIDE WITH FLANGES NOT SLIP–IN.
2. MECHANICAL CONTRACTOR SHALL FURNISH ALL NEW VALVING AND DUPLICATE EXISTING PIPING ARRANGEMENT.
3. PIPING SHALL BE INSTALLED TO BE READILY ACCESSIBLE FOR INSPECTION AND MAINTENANCE.
4. REHEAT COIL SHALL BE SUPPORTED INDEPENDENTLY FROM STRUCTURE AND SHALL BEAR NO WEIGHT ON THE ATTACHED DUCTWORK.
5. UNIT SHALL BE CONNECTED TO THE EXISTING SYSTEM PIPING. CONTRACTOR SHALL DETERMINE PROPER RH OR LH ORIENTATION PRIOR TO ORDERING.

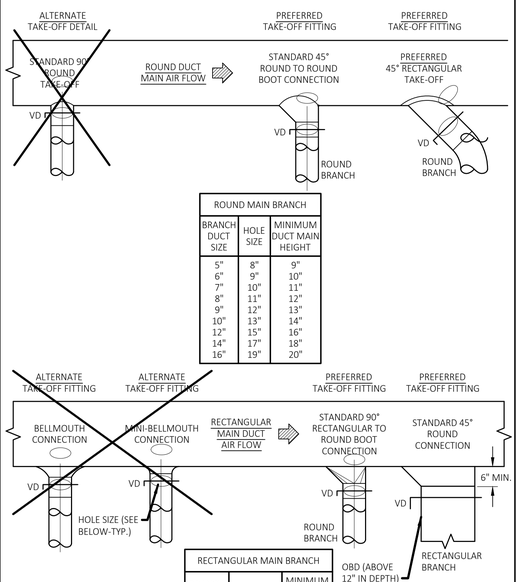

ROUND MAIN BRANCH		
BRANCH DUCT SIZE	HOLE SIZE	MINIMUM DUCT MAIN HEIGHT
5"	8"	9"
6"	9"	10"
7"	10"	11"
8"	11"	12"
9"	12"	13"
10"	13"	14"
12"	15"	16"
14"	17"	18"
16"	19"	20"

RECTANGULAR MAIN BRANCH		
BRANCH DUCT SIZE	HOLE SIZE	MINIMUM DUCT MAIN HEIGHT
6 x 4	1.5 x 5.5	7.5
10 x 4	11.5 x 5.5	7.5
16 x 4	17.5 x 5.5	7.5
24 x 4	25.5 x 5.5	7.5
6 x 5	7.5 x 6.5	8.5
10 x 5	11.5 x 6.5	8.5
16 x 5	17.5 6.5	8.5
24 x 5	25.5 x 6.5	8.5
6 x 6	7.5 x 7.5	9.5
10 x 6	11.5 x 7.5	9.5
16 x 6	17.5 x 7.5	9.5
24 x 6	25.5 x 7.5	9.5
8 x 8	9.5 x 9.5	11.5
16 x 8	17.5 x 9.5	11.5
24 x 8	25.5 9.5	11.5
10 x 10	11.5 x 11.5	13.5
16 x 10	17.5 x 11.5	13.5
24 x 10	25.5 x 11.5	13.5

NOTES:

1. ALL ROUND AND RECTANGULAR TAKEOFF FITTINGS SHALL BE INCLUDED WITH THE FOLLOWING STANDARD FEATURES:
   A. NEOPRENE GACKET TO MINIMIZE AIR LEAKAGE.
   B. PRE-DRILLED HOLES FOR QUICK MOUNTING.
   C. CONSTRUCTED OF HEAVY DUTY GALVANIZED STEEL.
   D. 26 GAUGE GALV. QUADRANT VOLUME DAMPER W/TIGHT FITTING GASKETING TO MINIMIZE LEAKAGE AT DAMPER PIVOT POINTS
   E. HEAVY DUTY HARDWARE IS AVAILABLE FOR APPLICATIONS WITH INCREASED STATIC PRESSURE.
2. ALTERNATE FITTINGS SHALL BE USED WHEN DUCT HEIGHT DOES NOT PERMIT THE USE OF THE PREFERRED FULL IZE TAKE OFF SUBMIT FITTINGS FOR REVIEW BY ENGINEER PRIOR TO INSTALLATION.
3. THIS DETAIL APPLIES TO SINGLE TAKEOFFS TO DIFFUSERS AS WELL AS BRANCH TAKEOFFS. IT ALSO APPLIES IF TAKEOFFS IN THE HORIZONTAL AS WELL AS THE VERTICAL DIRECTION.
4. SEE PLAN FOR DUCT SIZES.

1 DUCTWORK TAKEOFF DETAIL

NOT TO SCALE

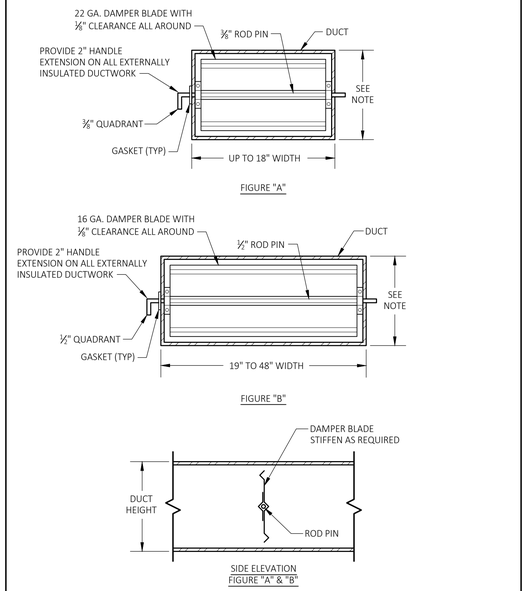

NOTE:

1. MAX HEIGHT FOR SINGLE BLADE DAMPER AS REQUIRED BY MANUFACTURER. FOR GREATER HEIGHT USE MULTI-BLADE CONTROL DAMPER.

2 VOLUME DAMPER DETAIL

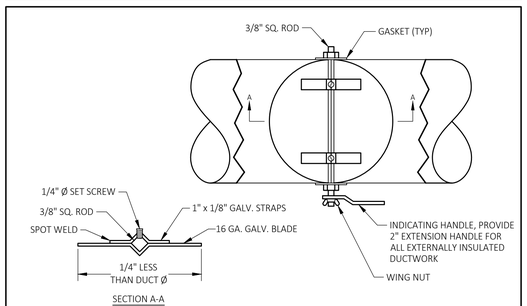

3 ROUND VOLUME DAMPER - UP TO 14"Ø

DIFFUSER / REGISTER / GRILLE SCHEDULE

S-00 ←MARK
000 ←CFM
0x0 ←SIZE

SUPPLY DIFFUSERS / GRILLE

MARK	TYPE & MODEL	THROW/DEFLECTION	ACCESSORIES/NOTES	MOUNTING SURFACE	SYMBOL
S-1	SUPPLY REGISTER TITUS - 300FL	DOUBLE DEFLECTION FRONT LOUVER BLADES PARALLEL TO LONG SIDE	- OPPOSED BLADE AG95 VOLUME CONTROL DAMPER ADJUSTABLE FROM FRONT OF THE DEVICE	GYP OR BLOCK WALL / DUCT	

R-00 ←MARK
000 ←CFM
0x0 ←SIZE

RETURN / EXHAUST GRILLES

MARK	TYPE & MODEL	THROW/DEFLECTION	ACCESSORIES/NOTES	MOUNTING SURFACE	SYMBOL
R-1 / E-1	WALL / DUCT REGISTER TITUS - 350RL ALUMINUM	30" EXTENDED VANES	- OPPOSED BLADE AG95 VOLUME CONTROL DAMPER ADJUSTABLE FROM FRONT OF THE DEVICE	GYP OR BLOCK WALL / DUCT	

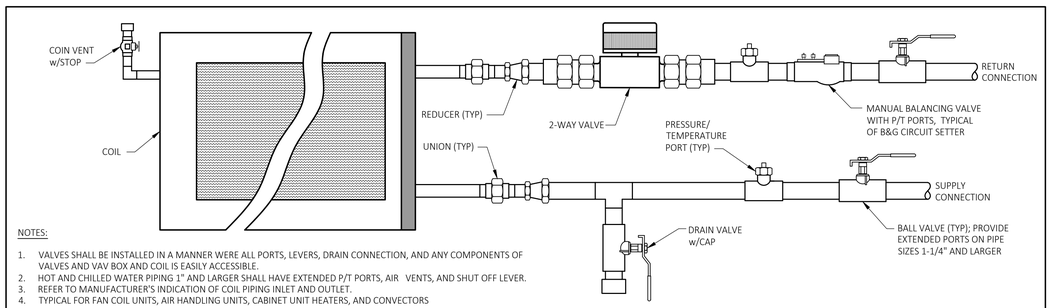

NOTES:

1. VALVES SHALL BE INSTALLED IN A MANNER WERE ALL PORTS, LEVERS, DRAIN CONNECTION, AND ANY COMPONENTS OF VALVES AND VAV BOX AND COIL IS EASILY ACCESSIBLE.
2. HOT AND CHILLED WATER PIPING 1" AND LARGER SHALL HAVE EXTENDED P/T PORTS, AIR VENTS, AND SHUT OFF LEVER.
3. REFER TO MANUFACTURER'S INDICATION OF COIL PIPING INLET AND OUTLET.
4. TYPICAL FOR FAN COIL UNITS, AIR HANDLING UNITS, CABINET UNIT HEATERS, AND CONVECTORS

4 TYPICAL HOT WATER REHEAT COIL PIPING DIAGRAM

NOT TO SCALE

WILLIAM STARCK ARCHITECTS, INC.
126 COVE STREET
FALL RIVER, MASSACHUSETTS 02720
10 DORRANCE STREET, SUITE 700
PROVIDENCE, RI 02903
T: 508.679.5733
F: 508.672.8556
WWW.STARCKARCHITECTS.COM

CREATIVE ENVIRONMENT CORP.
CONSULTING ENGINEERS
Cranston Springfield Braintree
CEC#20170110
MECHANICAL | ELECTRICAL | PLUMBING
FIRE PROTECTION | TELECOM | SECURITY
P. 401-438-7733 | www.cec-engineering.com

These plans, drawings, designs, specifications and other components on this sheet are and shall remain the property of William Starck Architects. No part thereof shall be copied, disclosed to others, or used in connection with any work or project, other than the specified project for which they have been prepared and developed, without the express knowledge and written consent of William Starck Architects.

2nd FLOOR LAB RENOVATIONS
AT THE
C.C.R.I. KNIGHT CAMPUS
400 EAST AVENUE
WARWICK, R.I. 02886

REVISIONS:

SCALE:	As Noted
DATE:	7November2019
DRAWN BY:	TEP
JOB NUMBER:	17-144

DRAWING NAME:

HVAC SCHEDULES AND DETAILS

DRAWING NUMBER:

M2.0

COMMENTS:

PERMIT SET

DIMENSION OF LONGEST SIDE-INCHES	SHEET METAL GAGE (ALL FOUR SIDES)	MINIMUM REINFORCING ANGLE SIZE & MAXIMUM LONGITUDINAL SPACING BETWEEN TRANSVERSE JOINTS &/OR INTERMEDIATE REINFORCING	MIN. "H" DIM. IN.	DRIVE SLIP / PLAIN "S" SLIP	HEMMED "S" SLIP	ALTERNATE BAR SLIP	REINFORCED BAR SLIP	BAR SLIP / ANGLE SLIP		STAND. SEAM / ANGLE REINFORCED STAND. SEAM		POCKET LOCK / ANGLE REINFORCED POCKET LOCK	
				RECOMMENDED GAGE	RECOMMENDED GAGE	RECOMMENDED GAGE	RECOMMENDED GAGE	RECOM-MENDED GAGE	REINFORCED ANGLE SIZE	REINFORCED ANGLE SIZE	RECOM-MENDED GAGE	REINFORCED ANGLE SIZE
UP THRU 12	26	NON REQUIRED	1	26	26	24	24	24	NOT REQUIRED	NOT REQUIRED	24	13 - 18
13 - 18	24	NON REQUIRED	1	24	24	24	24	24	NOT REQUIRED	NOT REQUIRED	24	13 - 18
19 - 30	24	1 x 1 x $\frac{1}{8}$ @ 60 "	1	-	24	24	24	24	NOT REQUIRED	NOT REQUIRED	24	19 - 30
31 - 42	22	1 x 1 x $\frac{1}{8}$ @ 60 "	1	-	-	22	22	22	NOT REQUIRED	NOT REQUIRED	22	31 - 42
43 - 54	22	$1\frac{1}{2}$ x $1\frac{1}{2}$ x $\frac{1}{8}$ @ 60"	$1\frac{1}{2}$	-	-	22	22	22	$1\frac{1}{2}$ x $1\frac{1}{2}$ x $\frac{1}{8}$	NOT REQUIRED	22	43 - 54
55 - 60	20	$1\frac{1}{2}$ x $1\frac{1}{2}$ x $\frac{1}{8}$ @ 60"	$1\frac{1}{2}$	-	-	-	22	22	$1\frac{1}{2}$ x $1\frac{1}{2}$ x $\frac{1}{8}$	NOT REQUIRED	22	55 -60
61 - 84	20	$1\frac{1}{2}$ x $1\frac{1}{2}$ x $\frac{1}{8}$ @ 30"	$1\frac{1}{2}$	-	-	-	22	22	$1\frac{1}{2}$ x $1\frac{1}{2}$ x $\frac{1}{8}$	$1\frac{1}{2}$ x $1\frac{1}{2}$ x $\frac{1}{8}$	22	$1\frac{1}{2}$ x $1\frac{1}{2}$ x $\frac{1}{8}$

TRANSVERSE REINFORCING SIZE IS DETERMINED BY DIMENSION OF SIDE TO WHICH ANGLE IS APPLIED

1 DUCT CONSTRUCTION DETAIL
NOT TO SCALE

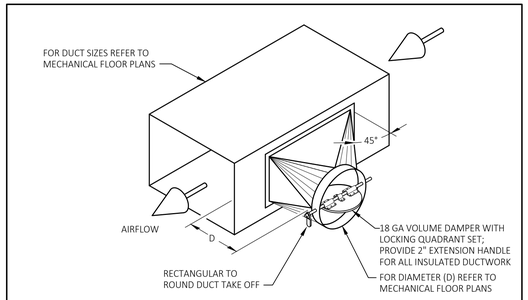

2 RECTANGLE-TO-ROUND DUCTWORK TAKE OFF DETAIL
NOT TO SCALE

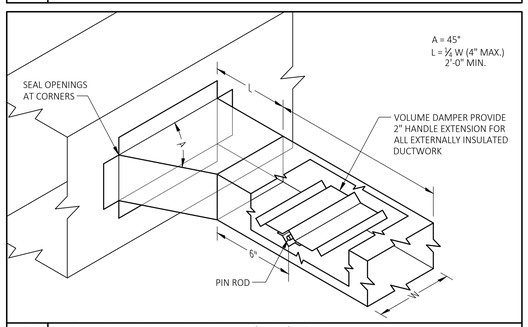

3 BRANCH CONNECTION (45°) DETAIL
NOT TO SCALE

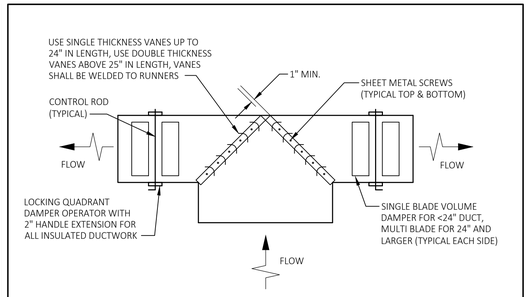

4 TYPICAL MAIN BRANCH CONNECTION DETAIL
NOT TO SCALE

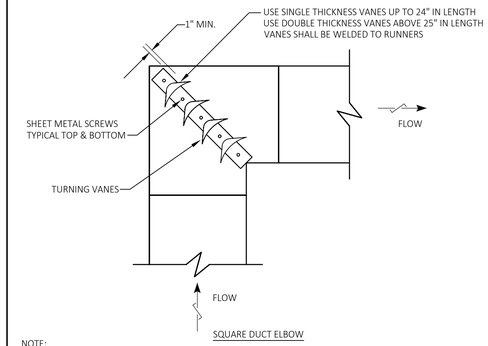

SQUARE DUCT ELBOW

NOTE:

1. SQUARE THROAT - ROUND HEEL ELBOWS ARE NOT ALLOWED

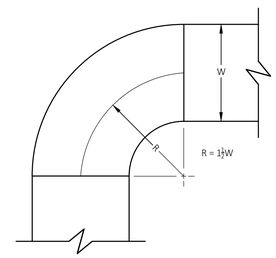

ROUND DUCT ELBOW

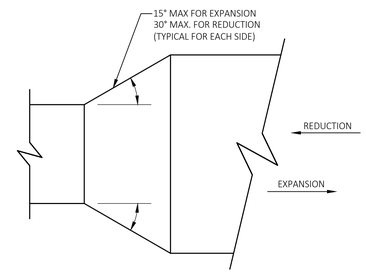

TRANSITION

5 DUCTWORK ELBOW AND TRANSITION DETAILS
NOT TO SCALE

WILLIAM STARCK ARCHITECTS, INC.
126 COVE STREET
FALL RIVER, MASSACHUSETTS 02720
10 DORRANCE STREET, SUITE 700
PROVIDENCE, RI 02903
T: 508.679.5733
F: 508.672.8556
WWW.STARCKARCHITECTS.COM

CREATIVE ENVIRONMENT CORP.
CONSULTING ENGINEERS
CEC#20170110
Cranston Springfield Braintree
MECHANICAL | ELECTRICAL | PLUMBING
FIRE PROTECTION | TELECOM | SECURITY
P. 401-438-7733 | www.cec-engineering.com

2nd FLOOR LAB RENOVATIONS
AT THE
C.C.R.I. KNIGHT CAMPUS
400 EAST AVENUE
WARWICK, R.I. 02886

REVISIONS:

SCALE:	As Noted
DATE:	7November2019
DRAWN BY:	TEP
JOB NUMBER:	17-144

DRAWING NAME:
HVAC DETAILS

DRAWING NUMBER:
M2.1

COMMENTS:
PERMIT SET

These plans, drawings, designs, specifications and other components on this sheet are and shall remain the property of William Starck Architects. No part thereof shall be copied, disclosed to others, or used in connection with any work or project, other than the specified project for which they have been prepared and developed, without the express knowledge and written consent of William Starck Architects.

GENERAL DEMOLITION NOTES

1. PRIOR TO SUBMITTING BID, VISIT SITE AND IDENTIFY EXISTING CONDITIONS AND DIFFICULTIES THAT WILL AFFECT WORK OF THIS SECTION. RENOVATION WORK WILL REQUIRE CAREFUL SITE EXAMINATION PRIOR TO BIDDING. NO COMPENSATION WILL BE GRANTED FOR ADDITIONAL WORK CAUSED BY UNFAMILIARITY WITH SITE CONDITIONS THAT ARE VISIBLE OR READILY CONSTRUED BY AN EXPERIENCED OBSERVER. FIELD VERIFY MEASUREMENTS AND CIRCUITING ARRANGEMENTS THAT ARE AS SHOWN ON DRAWINGS.
2. FIELD VERIFY THAT ABANDONED WIRING AND EQUIPMENT SERVE ONLY ABANDONED FACILITIES.
3. DEMOLITION DRAWINGS ARE BASED ON CASUAL FIELD OBSERVATION AND EXISTING RECORD DOCUMENTS. REPORT DISCREPANCIES TO ARCHITECT/ENGINEER BEFORE DISTURBING EXISTING INSTALLATIONS. THESE DRAWINGS HAVE BEEN COMPILED FROM THE BEST AVAILABLE INFORMATION AND ARE NOT INTENDED TO LIMIT THE SCOPE OF THE WORK. THE ELECTRICAL CONTRACTOR MAY ENCOUNTER HIDDEN OR COVERED CONDITIONS, NOT INDICATED IN THESE DOCUMENTS, REQUIRING THE ELECTRICAL CONTRACTOR TO PROVIDE ADDITIONAL WORK FOR THE COMPLETION OF HIS OR HER CONTRACT. IT WILL BE ASSUMED THAT THE CONTRACTOR HAS INSPECTED THE SITE PRIOR TO BIDDING AND VERIFIED THE INFORMATION SUPPLIED HEREIN AND ADDITIONAL WORK REQUIRED. BEGINNING OF DEMOLITION MEANS THE CONTRACTOR ACCEPTS EXISTING CONDITIONS. REFER TO ALL CONSTRUCTION DOCUMENTS TO GAIN A COMPLETE UNDERSTANDING OF THE DEMOLITION WORK REQUIRED.
4. CUT, REMOVE AND LEGALLY DISPOSE OF SELECTED ELECTRICAL EQUIPMENT, COMPONENTS AND MATERIALS AS INDICATED, INCLUDING, BUT NOT LIMITED TO, REMOVAL OF ELECTRICAL ITEMS INDICATED TO BE REMOVED AND ITEMS MADE OBSOLETE BY THE WORK. DISCONNECT AND REMOVE ALL FIXTURES, WIRING DEVICES, CONDUIT AND FITTINGS, WIRING AND CABLE, FIRE ALARM DEVICES/COMPONENTS, HANGERS, SUPPORTS, WIREWAYS, AND ALL OTHER ELECTRICAL COMPONENTS MADE OBSOLETE BY THIS PROJECT. THE OWNER RESERVES THE OPTION OF SALVAGE RIGHTS TO DEMOLISHED MATERIAL AND REMOVED EQUIPMENT. THE CONTRACTOR SHALL COORDINATE WITH THE OWNER'S REPRESENTATIVE TO OBTAIN A LIST OF MATERIALS AND REMOVED EQUIPMENT TO BE TURNED OVER TO THE OWNER. ALL OTHER MATERIAL AND REMOVED EQUIPMENT NOT BEING SALVAGED BY THE OWNER SHALL BE DISPOSED OF BY THE CONTRACTOR. PLACE ALL DEMOLISHED ELECTRICAL MATERIALS EXCEPT HAZARDOUS MATERIALS (PCB LIGHTING BALLASTS, FLUORESCENT LAMPS, ETC.) AS DETERMINED BY THE AUTHORITY HAVING JURISDICTION IN GENERAL CONTRACTOR'S DUMPSTER. ALL HAZARDOUS ELECTRICAL MATERIALS SHALL BE LEGALLY DISPOSED OF BY THE ELECTRICAL SUBCONTRACTOR.
5. DISCONNECT ELECTRICAL SYSTEMS IN WALLS, FLOORS, AND CEILINGS SCHEDULED FOR REMOVAL.
6. MAINTAIN ACCESS TO EXISTING ELECTRICAL INSTALLATIONS WHICH REMAIN ACTIVE. MODIFY INSTALLATION OR PROVIDE ACCESS PANELS AS APPROPRIATE. TEMPORARY WALL OPENINGS AND/OR MODIFICATIONS REQUIRED FOR REMOVAL/INSTALLATION OF EQUIPMENT SHALL BE PROVIDED AS NEEDED AND COORDINATED WITH THE GENERAL CONTRACTOR. ALL HVAC, PLUMBING AND FIRE PROTECTION EQUIPMENT SCHEDULED TO BE REMOVED OR RELOCATED SHALL BE DONE SO BY THE HVAC AND PLUMBING CONTRACTOR RESPECTIVELY. THE ELECTRICAL CONTRACTOR SHALL REMOVE STARTERS, DISCONNECT SWITCHES, WIRING, AND CONDUIT FOR SAID EQUIPMENT. REFER TO HVAC AND PLUMBING DRAWINGS FOR SCOPE OF WORK.
7. PROVIDE TEMPORARY WIRING AND CONNECTIONS TO MAINTAIN EXISTING SYSTEMS IN SERVICE DURING CONSTRUCTION. WHEN WORK MUST BE PERFORMED ON ENERGIZED EQUIPMENT OR CIRCUITS USE PERSONNEL EXPERIENCED IN SUCH OPERATIONS.
8. EXISTING FIRE ALARM SYSTEM: MAINTAIN THE EXISTING SYSTEM IN SERVICE UNTIL THE MODIFIED/EXPANDED SYSTEM IS TESTED AND ACCEPTED BY THE FIRE DEPARTMENT. DISABLE SYSTEM ONLY TO MAKE SWITCHOVERS AND CONNECTIONS. NOTIFY OWNER, ARCHITECT/ENGINEER AND LOCAL FIRE DEPARTMENT AT LEAST TEN DAYS BEFORE PARTIALLY OR COMPLETELY DISABLING SYSTEM. MINIMIZE OUTAGE DURATION. MAKE TEMPORARY CONNECTIONS TO MAINTAIN SERVICE IN AREAS ADJACENT TO WORK AREA AS REQUIRED OR PROVIDE A "FIRE-WATCH" SYSTEM COORDINATED WITH THE LOCAL FIRE DEPARTMENT.
9. EXTEND EXISTING ELECTRICAL INSTALLATIONS AS CALLED FOR ON THE DRAWINGS.
10. REMOVE, RELOCATE, AND EXTEND EXISTING INSTALLATIONS TO ACCOMMODATE NEW CONSTRUCTION.
11. REMOVE ABANDONED WIRING TO SOURCE OF SUPPLY.
12. REMOVE EXPOSED ABANDONED CONDUIT, INCLUDING ABANDONED CONDUIT ABOVE ACCESSIBLE CEILING FINISHES. CUT CONDUIT FLUSH WITH WALLS AND FLOORS, AND PATCH SURFACES.
13. DISCONNECT ABANDONED OUTLETS AND REMOVE DEVICES. REMOVE ABANDONED OUTLETS IF CONDUIT SERVICING THEM IS ABANDONED AND REMOVED. PROVIDE BLANK COVER FOR ABANDONED OUTLETS WHICH ARE NOT REMOVED.
14. DISCONNECT AND REMOVE ELECTRICAL DEVICES AND EQUIPMENT SERVING UTILIZATION EQUIPMENT THAT HAS BEEN REMOVED.
15. DISCONNECT AND REMOVE ABANDONED LIGHTING FIXTURES. REMOVE BRACKETS, STEMS, HANGERS, AND OTHER ACCESSORIES.
16. DISCONNECT AND REMOVE OTHER SYSTEMS AND EQUIPMENT WITHIN THE WORK AREA MADE OBSOLETE BY THIS WORK.
17. PROTECT ALL EXISTING WALLS, FLOORS, CEILINGS, LIGHT FIXTURES, ETC. WHICH ARE TO REMAIN AND TO PREVENT DAMAGE DURING ALL CONSTRUCTION PHASES. REPAIR ADJACENT CONSTRUCTION AND FINISHES DAMAGED DURING DEMOLITION AND EXTENSION WORK. PROVIDE AND MAINTAIN TEMPORARY PARTITIONS OR DUST BARRIERS ADEQUATE TO PREVENT THE SPREAD OF DUST AND DIRT TO ADJACENT AREAS. PROTECT THE STRUCTURE, FURNISHINGS, FINISHES, AND ADJACENT MATERIALS NOT INDICATED OR SCHEDULED TO BE REMOVED. PROTECT THE ELECTRICAL WORK AND THE WORK OF OTHERS IN A MANNER BEST SUITED TO THE PARTICULAR CASE. CORRECT ANY DAMAGE DONE TO ANY WORK AT NO ADDITIONAL COST.
18. EXTEND EXISTING INSTALLATIONS USING MATERIALS AND METHODS COMPATIBLE WITH EXISTING ELECTRICAL INSTALLATIONS, OR AS SPECIFIED.
19. CLEAN AND REPAIR EXISTING MATERIALS AND EQUIPMENT WHICH REMAIN OR ARE TO BE REUSED.
20. PANELBOARDS: CLEAN EXPOSED SURFACES AND CHECK TIGHTNESS OF ELECTRICAL CONNECTIONS. REPLACE DAMAGED CIRCUIT BREAKERS AND PROVIDE CLOSURE PLATES FOR VACANT POSITIONS. PROVIDE TYPED CIRCUIT DIRECTORY SHOWING REVISED CIRCUITING ARRANGEMENT.
21. LIGHTING FIXTURES: EXISTING LIGHTING FIXTURES SCHEDULED FOR REUSE SHALL BE REMOVED FOR CLEANING. USE MILD DETERGENT TO CLEAN ALL EXTERIOR AND INTERIOR SURFACES; RINSE WITH CLEAN WATER AND WIPE DRY. REPLACE LAMPS, BALLASTS AND BROKEN ELECTRICAL PARTS.
22. EXISTING ELECTRICAL EQUIPMENT AND WIRING NOT SHOWN ON DOCUMENTS OR ADDRESSED BY NOTES ABOVE SHALL BE CONSIDERED EXISTING TO REMAIN.

GENERAL NEW WORK NOTES

1. USE #10 CONDUCTORS FOR ALL HOMERUNS OVER 100 FEET IN LENGTH.
2. LOCATIONS SHOWN FOR CONNECTIONS TO EQUIPMENT ARE DIAGRAMMATIC. INSTALL FOR EASE OF MAINTENANCE AND TO SUIT EQUIPMENT.
3. PROVIDE ALL REQUIRED PULL BOXES, JUNCTION BOXES, AND DISCONNECT SWITCHES.
4. DO NOT INSTALL OUTLET BOXES BACK TO BACK.
5. COLOR CODE ALL WIRING.
6. PROVIDE CONDUIT SLEEVES AS REQUIRED. THROUGH FIRE RATED SEPARATIONS, FIRE SEAL AFTER WIRING IS COMPLETE.
7. SUPPORT EACH LIGHTING FIXTURE INDEPENDENTLY OF THE SUSPENDED CEILING SYSTEM AND COORDINATE LOCATIONS WITH REFLECTED CEILING PLAN AND OTHER TRADES TO AVOID CONFLICT.
8. PROVIDE A NYLON PULL CORD IN ALL EMPTY CONDUITS.
9. VERIFY ALL CEILING TYPES AND MATERIALS BEFORE ORDERING ANY LIGHTING FIXTURES.
10. THE LOCATIONS OF HVAC EQUIPMENT SHOWN ON THESE DRAWINGS ARE APPROXIMATE. FOR EXACT LOCATIONS REFER TO HVAC DRAWINGS AND SHOP DRAWINGS.
11. CONCEAL ALL WIRING UNLESS OTHERWISE NOTED.
12. PROVIDE ALL GROUNDING INCLUDING GREEN EQUIPMENT GROUND IN ALL RACEWAYS. GROUND BUILDING SERVICE ACCORDING TO NEC AND ALSO TO STREET SIDE OF WATER METER AND TO APPROVED GROUND ROD.
13. CIRCUIT NUMBERS INDICATE PANEL AND CIRCUIT BREAKER FOR EQUIPMENT CONNECTIONS. IT SHALL BE THE CONTRACTORS RESPONSIBILITY TO INSTALL ALL REQUIRED WIRING PER NATIONAL ELECTRIC CODE AND PROJECT SPECIFICATIONS TO PROPERLY ENERGIZE THE ELECTRICAL SYSTEM. ALL WIRING SHALL BE RUN IN A NEAT AND ORDERLY MANNER.
14. WIRING SHALL NOT BE LAID ON, OR ATTACHED TO THE SUSPENDED CEILING OR ITS SUPPORT WIRES. ALL CABLES SHALL BE RUN PARALLEL OR PERPENDICULAR TO WALLS. DO NOT RUN CABLES DIAGONALLY THROUGH ANY SPACE.
15. WHERE THE NUMBER OF CURRENT CARRYING CONDUCTORS IN A RACEWAY OR CABLE EXCEEDS THREE, THE ALLOWABLE AMPACITY SHALL BE REDUCED PER NATIONAL ELECTRIC CODE TABLE BASED ON NO DIVERSITY. CONSIDER NEUTRALS TO BE CURRENT CARRYING CONDUCTORS.
16. DO NOT COMBINE CIRCUITS OR USE COMMON NEUTRALS
17. LABEL ("BROTHER P-TOUCH LABELING SYSTEM" OR APPROVED EQUAL) OR ENGRAVE EACH RECEPTACLE PLATE WITH PANEL DESIGNATION AND CIRCUIT NUMBER.
18. PROVIDE GROUNDING AND BONDING BUSHINGS FOR SERVICE RACEWAYS PER NEC. SIZE THE BONDING JUMPER PER NEC.
19. GROUND ALL TRANSFORMERS ACCORDING TO NEC HANDBOOK (GROUNDING ELECTRODE CONDUCTOR CONNECTION AT TRANSFORMER). SIZE BONDING JUMPER PER NEC.
20. CONTRACTOR SHALL VISIT THE SITE AND FAMILIARIZE HIMSELF WITH THE EXISTING CONDITIONS. NO CLAIM FOR EXTRA COMPENSATION SHALL BE ENTERTAINED FOR WORK WHICH A PRELIMINARY EXAMINATION WOULD HAVE REVEALED. THE SUBMISSION OF A BID WILL BE CONSIDERED AS ACKNOWLEDGMENT ON THE PART OF THE BIDDER OF HIS VISITATION TO THE SITE.
21. OBTAIN ALL NECESSARY PERMITS AND CERTIFICATES. PRESENT SATISFACTORY PROOF OF FINAL INSPECTION AND APPROVAL BY AUTHORITIES HAVING JURISDICTION.
22. MAINTAIN CORRECT PHASE SEQUENCE OF ALL FEEDERS AND CIRCUITS BY ESTABLISHING PHASE IDENTIFICATION AND MAINTAINING CORRECT RELATIONSHIP THROUGHOUT THE SYSTEM. PROVIDE LINE BALANCE WITHIN 10% OF NORMAL LOADS.
23. SEE AUDIO/VISUAL DRAWINGS FOR ADDITIONAL SCOPE OF WORK. PROVIDE ALL ASSOCIATED POWER CONNECTIONS AND EMPTY RACEWAY SYSTEM AND BOXES. PROVIDE PLASTIC END BUSHINGS AND PULLSTRINGS IN ALL CONDUITS.

POWER OUTLETS & DEVICES LEGEND

ALL ITEMS SHOWN ARE NOT NECESSARILY USED ON THIS PROJECT

POWER RECEPTACLES:
ALL RECEPTACLES SHALL BE MOUNTED AT 18" A.F.F. TO CENTER, UNLESS OTHERWISE NOTED. THE FOLLOWING DESIGNATIONS SHALL APPLY TO ALL RECEPTACLES TYPES:

C = MOUNTED AT 6" ABOVE BACK SPLASH TO BOTTOM, REFER TO ARCHITECTURAL ELEVATIONS FOR COORDINATION.
CLG = CEILING MOUNTED.
EWC = ELECTRIC WATER COOLER.
M = MICROWAVE.
MF = MOUNTED IN FURNITURE; REFER TO ARCHITECTURAL ELEVATIONS FOR COORDINATION.
TL = TWIST LOCK.
WP = WEATHERPROOF.

- SINGLE RECEPTACLE ON NORMAL CIRCUIT.
- DUPLEX RECEPTACLE ON NORMAL CIRCUIT.
- DOUBLE DUPLEX RECEPTACLE ON NORMAL CIRCUIT.
- GROUND FAULT CIRCUIT INTERRUPTER RECEPTACLE ON NORMAL CIRCUIT.
- DOUBLE GROUND FAULT CIRCUIT INTERRUPTER RECEPTACLE ON NORMAL CIRCUIT.
- XX-XXR — SPECIAL PURPOSE RECEPTACLE WITH NEMA CONFIGURATION TO MATCH EQUIPMENT.
- J — JUNCTION BOX.
- CR — INDUSTRIAL CORD AND REEL, WITH 12/3. 50' SO CORD, AND TWO DUPLEX RECEPTACLES ON END; EQUAL TO K&H INDUSTRIES #ORF3-7DDD-B12K (BLACK)
- U2 — DUPLEX RECEPTACLE (TAMPER RESISTANT) W/ (1) USB TYPE A PORT AND (1) USB TYPE C PORT.
- U4 — DUPLEX RECEPTACLE (TAMPER RESISTANT) W/ (2) USB TYPE A PORTS AND (2) USB TYPE C PORTS.
- PT # — FIRE RATED POKE-THRU; REFER TO POKE-THRU DEVICE SCHEDULE FOR ADDITIONAL INFORMATION.
- FF # — FURNITURE FEED DEVICE; REFER TO FURNITURE FEED DEVICE SCHEDULE FOR ADDITIONAL INFORMATION.
- PE # — PROJECTOR CEILING ENCLOSURE; REFER TO PROJECTOR CEILING ENCLOSURE SCHEDULE FOR ADDITIONAL INFORMATION.
- SURFACE METAL RACEWAY, EQUAL TO WIREMOLD SERIES 3000. PROVIDE WITH RECEPTACLES AS INDICATED ON PLANS WITH ACCESSORIES (ELBOWS, COVERS, COUPLINGS, ETC.) FOR A CONTINUOUS, COMPLETE INSTALLATION. COLOR BY ARCHITECT, IVORY OR GRAY.
- SURFACE METAL RACEWAY, EQUAL TO WIREMOLD SERIES 4000. PROVIDE WITH RECEPTACLES AND TECHNOLOGY OUTLETS AS INDICATED ON PLANS WITH ACCESSORIES (ELBOWS, COVERS, COUPLINGS, DIVIDERS, ETC.) FOR A CONTINUOUS, COMPLETE INSTALLATION. COLOR BY ARCHITECT, IVORY OR GRAY.
- PLUGMOLD.
- EMGB — ELECTRICAL MAIN GROUNDING BUSBAR.
- EGB — ELECTRICAL GROUNDING BUSBAR.
- SPD — SURGE PROTECTIVE DEVICE.
- C — CONTACTOR.
- PB — PULL BOX.
- E — RED EMERGENCY POWER-OFF MUSHROOM BUTTON WALL PLATE STATION WITH CLEAR PROTECTIVE COVER.
- FPS — FESTO LABVOLT ADVANCED POWER STATION

POWER DISTRIBUTION LEGEND

ALL ITEMS SHOWN ARE NOT NECESSARILY USED ON THIS PROJECT

- 208Y/120 VOLT PANELBOARD, SURFACE MOUNTED, REFER TO SCHEDULE OF PANELBOARDS.
- 208Y/120 VOLT PANELBOARD, FLUSH MOUNTED, REFER TO SCHEDULE OF PANELBOARDS.
- 480Y/277 VOLT PANELBOARD, SURFACE MOUNTED, REFER TO SCHEDULE OF PANELBOARDS.
- 480Y/277 VOLT PANELBOARD, FLUSH MOUNTED, REFER TO SCHEDULE OF PANELBOARDS.
- T3 — DRY TYPE TRANSFORMER. "T3" INDICATES kVA RATING OF TRANSFORMER. REFER TO DRY TYPE TRANSFORMER SCHEDULE.
- ENCLOSED CIRCUIT BREAKER.

MOTOR AND CONTROLS LEGEND

- S_T — SINGLE POLE MOTOR RATED SWITCH WITH OVERLOAD HEATER (MANUAL MOTOR STARTER).
- UN-FUSED DISCONNECT SWITCH WITH RATINGS.
  30/3/1
  - NEMA RATING. "WP" INDICATES RAINTIGHT
  - NUMBER OF POLES
  - SWITCH SIZE
- FUSED DISCONNECT SWITCH WITH RATINGS.
  30/20/3/DE/1
  - NEMA RATING. "WP" INDICATES RAINTIGHT
  - INDICATES DUAL ELEMENT FUSES
  - NUMBER OF POLES
  - FUSE SIZE. "NF" INDICATES NON FUSED
  - SWITCH SIZE
- FUSED STARTER\DISCONNECT SWITCH WITH RATINGS.
  30/20/3/DE/1
  - NEMA RATING. "WP" INDICATES RAINTIGHT
  - INDICATES DUAL ELEMENT FUSES
  - NUMBER OF POLES
  - FUSE SIZE. "NF" INDICATES NON FUSED
  - SWITCH SIZE
- XXX / XX — EQUIPMENT TAG, REFER TO MECHANICAL EQUIPMENT SCHEDULE FOR MORE INFORMATION.

ABBREVIATIONS

ALL ABBREVIATIONS SHOWN ARE NOT NECESSARILY USED ON THIS PROJECT

A/AMP	AMPERE	KW	KILOWATT
AC	ALTERNATING CURRENT	KWH	KILOWATT HOURS
ADA	AMERICAN WITH DISABILITIES ACT	LAN	LOCAL AREA NETWORK
AF	AMPERE FRAME	LTG	LIGHTING
AFF	ABOVE FINISHED FLOOR	LV	LOW VOLTAGE
AFG	ABOVE FINISHED GRADE	MAX	MAXIMUM
AHJ	AUTHORITY HAVING JURISDICTION	MCB	MAIN CIRCUIT BREAKER
AIC	AMPERE INTERRUPTING CAPACITY	M/G	MOTOR/GENERATOR SET
ALCS	AUTOMATED LIGHTING CONTROL SYSTEM	MH	MANHOLE
AL	ALUMINUM	MIN	MINIMUM
AT	AMPERE TRIP	MLO	MAIN LUG ONLY
ATS	AUTOMATIC TRANSFER SWITCH	MTD	MOUNTED
AWG	AMERICAN WIRE GAUGE	MTG	MOUNTING
AV	AUDIO VISUAL	N	NEUTRAL
B	BURIED	NA	NOT APPLICABLE
BFG	BELOW FINISHED GRADE	NC	NORMALLY CLOSED CONTACT
BOF	BOTTOM OF FIXTURE	NEC	NATIONAL ELECTRICAL CODE
C	CONDUIT	NF	NOT FUSIBLE
CA	CABLE	NG	NATIONAL GRID (ELECTRIC UTILITY)
CAT	CATALOG	NL	NIGHT LIGHT
CATV	CABLE TELEVISION	NIC	NOT IN CONTRACT
CCTV	CLOSED CIRCUIT TELEVISION SYSTEM	NO	NORMALLY OPEN CONTACT
CB	CIRCUIT BREAKER	NTS	NOT TO SCALE
CBA	COLOR BY ARCHITECT	OPD	OVER CURRENT PROTECTION DEVICE
CD	CANDELA	P	POLE
CKT	CIRCUITS	PH	PHASE
CPU	CENTRAL PROCESSING UNIT	POS	PROVIDED UNDER OTHER SECTIONS
CONT.	CONTINUATION	POTS	PLAIN ORDINARY TELEPHONE
CU	COPPER	PVC	POLYVINYL CHLORIDE
\℄	CENTERLINE	PWR	POWER
dB	DECIBEL	RGS	RIGID GALVANIZED STEEL
DC	DIRECT CURRENT	RIEC	RHODE ISLAND ELECTRICAL CODE
DN	DOWN	RMS	ROOT MEAN SQUARE VALUE
DWG	DRAWING	RPM	REVOLUTIONS PER MINUTE
EC	ELECTRICAL CONTRACTOR	SN	SOLID NEUTRAL
ECPS	EMPTY CONDUIT WITH PULLSTRING	SS	SECURITY
EG	EQUIPMENT GROUND	SWBD	SWITCHBOARD
ELEV	ELEVATION	TTB	TELEPHONE TERMINAL BOARD
EMT	ELECTRIC METALLIC TUBING	TEL	TELEPHONE
F	FAHRENHEIT	TML	TERMINAL
FA	FIRE ALARM	TSP	TWISTED SHIELDED-PAIR
FACP	FIRE ALARM CONTROL PANEL	TVSS	TRANSIENT VOLTAGE SURGE SUPPRESSER
FBA	FINISH BY ARCHITECT		
FDR	FEEDER	TYP	TYPICAL
FLA	FULL LOAD AMPERES	UG	UNDERGROUND
FLMT	FLEXIBLE LIQUID TIGHT METALLIC TUBING	UL	UNDERWRITERS LABORATORIES
FREQ	FREQUENCY	UNO	UNLESS NOTED OTHERWISE
G	GROUND	UON	UNLESS OTHERWISE NOTED
GEC	GROUNDING ELECTRODE CONDUCTOR	UPS	UNINTERRUPTIBLE POWER SUPPLY
GFCI	GROUND FAULT CIRCUIT INTERRUPTER	UTP	UNSHIELDED TWISTED-PAIR
GND	GROUND	V	VOLTS
HH	HANDHOLE	VA	VOLT-AMPERE
HP	HORSEPOWER	VO	TELEPHONE
HVAC	HEATING, VENTILATION, AND AIR CONDITIONING	VFD	VARIABLE FREQUENCY DRIVE
		VSD	VARIABLE SPEED DRIVE
HZ	HERTZ	W	WATTS
IG	ISOLATED GROUND	W/	WITH
JB	JUNCTION BOX	WP	WEATHERPROOF
KVA	KILOVOLT-AMPERE	XFMR/T	TRANSFORMER

CIRCUITING LEGEND

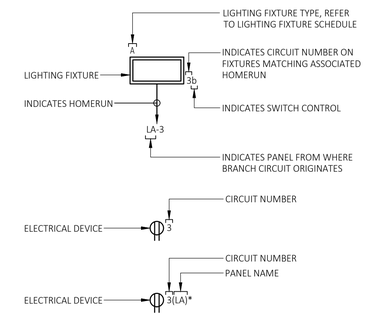

*BRANCH CIRCUIT SOURCE PANELBOARD INDICATED IN PARENTHESIS FOR REFERENCE WHERE HOMERUN IS NOT VISIBLE ON PLAN.

GENERAL NOTES:
1. WIRING AND CONDUIT SHALL BE REQUIRED BETWEEN ALL LIGHTING FIXTURES, RECEPTACLES, OUTLETS, ETC. INDICATED WITH CIRCUIT NUMBERS AND PANEL DESIGNATIONS. REFER TO SPECIFICATIONS FOR APPLICABLE MEANS AND METHODS.
2. ALTHOUGH ALL BRANCH CIRCUIT WIRE AND CONDUIT IS NOT SHOWN, IT IS THE INTENT OF THESE DOCUMENTS THAT A COMPLETE BRANCH CIRCUIT WIRING SYSTEM BE INSTALLED.
3. WIRING SHALL BE 2#12+#12G IN 3/4"C MINIMUM.

BRANCH CIRCUIT & FEEDER LEGEND

ALL ITEMS SHOWN ARE NOT NECESSARILY USED ON THIS PROJECT

- BRANCH CIRCUIT OR FEEDER CONCEALED IN FINISHED AREAS.
- BRANCH CIRCUIT OR FEEDER CONCEALED IN OR UNDER FLOOR SLAB.
- BRANCH CIRCUIT OR FEEDER TURNING UP TOWARDS OBSERVER.
- BRANCH CIRCUIT OR FEEDER TURNING DOWN AWAY FROM OBSERVER.
- CONDUIT STUBBED ABOVE CEILING.
- R22A-1,3,5 — BRANCH CIRCUIT HOME RUN TICKS INDICATE QUANTITY OF CONDUCTORS, GROUND CONDUCTORS ARE NOT INDICATED, NO TICKS INDICATES 2#12+#12-3/4"C MINIMUM. "R22A/1,3,5" INDICATES PANEL AND CIRCUIT DESIGNATION FROM WHICH HOMERUN SHALL ORIGINATE. EACH CIRCUIT SHALL BE 20A/1P (20 AMP/SINGLE POLE); UNLESS OTHERWISE NOTED.
- R22A-1,3,5 100A/3P — FEEDER HOMERUN. REFER TO LEGEND OF FEEDER SIZES FOR CONDUCTOR AND RACEWAY REQUIREMENTS DESIGNATED INSIDE TAG. "R22A/1,3,5" INDICATES PANEL AND CIRCUIT NUMBER DESIGNATION FORM WHICH HOME RUN SHALL ORIGINATE, 100A/3P INDICATES 100 AMPERE, 3 POLE CIRCUIT BREAKER.
- 1 — FLEXIBLE CONNECTION TO EQUIPMENT. RACEWAY AND CONDUCTOR RATING TO MATCH ASSOCIATED BRANCH CIRCUIT OR FEEDER.

FIRE ALARM LEGEND

ALL ITEMS SHOWN ARE NOT NECESSARILY USED ON THIS PROJECT

FIRE ALARM DEVICES:
ALL FIRE ALARM NOTIFICATION DEVICES SHALL BE MOUNTED AT 80" A.F.F. TO BOTTOM OF STROBE LENS, UNLESS OTHERWISE NOTED. ALL FIRE ALARM PULL STATIONS SHALL BE MOUNTED AT 48" A.F.F. TO CENTER OF DEVICE. REMOTE TEST SWITCHES SHALL BE MOUNTED AT 7'-0" A.F.F. IN CORRIDOR BELOW DUCT SMOKE DETECTOR. THE FOLLOWING DESIGNATIONS SHALL APPLY TO ALL FIRE ALARM DEVICES; UNLESS OTHERWISE NOTED:

WP = WEATHERPROOF.
CLG = CEILING MOUNTED.
K = KEY OPERATED TEST SWITCH.
WG = WIRE GUARD.
SC = STOPPER COVER.

- M — FIRE ALARM MULTI-SENSOR DETECTOR.
- SD — FIRE ALARM SMOKE DETECTOR.
- RR — FIRE ALARM HEAT DETECTOR, COMBINATION RATE-OF-RISE AND ONE HUNDRED THIRTY-FIVE DEGREES (135°) F FIXED TEMPERATURE.
- CSD — FIRE ALARM DUCT MOUNTED SMOKE DETECTOR, INSTALLED BY MECHANICAL CONTRACTOR, WIRED AND FURNISHED BY ELECTRICAL CONTRACTOR.
- V — SPEAKER ONLY.
- VS — SPEAKER/STROBE COMBINATION. CANDELA RATING SHALL BE 15, UNLESS OTHERWISE NOTED.
- V — SPEAKER ONLY; CEILING MOUNTED.
- VS — SPEAKER/STROBE COMBINATION; CEILING MOUNTED. CANDELA RATING SHALL BE 15, UNLESS OTHERWISE NOTED.
- FACP — FIRE ALARM CONTROL PANEL.
- FARA — FIRE ALARM REMOTE ANNUNCIATOR.
- FAPS — FIRE ALARM POWER SUPPLY UNIT FOR NOTIFICATION APPLIANCES.
- RTS — FIRE ALARM KEYED DUCT SMOKE REMOTE TEST STATION.
- SYN — FIRE ALARM SYNCHRONIZATION MODULE.
- F — FIRE ALARM PULL STATION.
- IM — FIRE ALARM ISOLATION MODULE.
- MN — FIRE ALARM MONITOR MODULE.
- CM — FIRE ALARM CONTROL MODULE. PROVIDE AN INTERMEDIATE RELAY TO SUIT LOAD.
- R — INTERMEDIATE RELAY, PROVIDE AS NEEDED.

MISCELLANEOUS LEGEND

ALL ITEMS SHOWN ARE NOT NECESSARILY USED ON THIS PROJECT

- 2 — SLEEVE THRU WALL; NUMBER INDICATES SIZE IN INCHES.
- CT — CABLE TRAY.
- TELECOMMUNICATION TERMINAL BOARD, PROVIDE GRADE "A", 3/4" PLYWOOD COMPLETELY PAINTED WITH FIREPROOF PAINT AS REQUIRED PER CODE.
- # / E### — PARTIAL PLAN/DETAIL CALL OUT TAG; TOP NUMBER INDICATES PLAN/DETAIL AND BOTTOM NUMBER INDICATES SHEET CONTAINING PLAN/DETAIL.
- # / E### — ELEVATION PLAN CALL OUT TAG; TOP NUMBER INDICATES PLAN/DETAIL AND BOTTOM NUMBER INDICATES SHEET CONTAINING PLAN/DETAIL.

CIRCUIT TRACING NOTE

ELECTRICAL CONTRACTOR SHALL UPDATE ALL EXISTING PANELBOARD DIRECTORIES TO REFLECT ALL CIRCUITS MADE SPARE FROM DEMOLITION. ALL EXISTING CIRCUIT BREAKERS IN ALL EXISTING PANELBOARDS SHOWN ON THE DRAWINGS SHALL BE TRACED OUT AND LABELED IN PANELBOARD OF ORIGIN. ALL CIRCUITS THAT ARE NO LONGER IN USE SHALL BE PULLED BACK TO PANEL OF ORIGIN. ALL CIRCUIT BREAKERS NOT BEING UTILIZED SHALL BE LABELED AS SPARE AND PUT IN THE OPEN (OFF) POSITION.

SHEET LIST

SHEET NUMBER	SHEET NAME
E0.1	LEGEND
E0.2	LEGEND (CONT.)
ED1.1	DEMOLITION FLOOR PLAN - LIGHTING & FIRE ALARM
ED1.2	DEMOLITION FLOOR PLAN - POWER & TELECOM
E1.1	FLOOR PLAN - LIGHTING
E2.1	FLOOR PLAN - POWER & SYSTEMS
E3.1	FLOOR PLAN - FIRE ALARM
E7.1	SCHEDULES
E7.2	SCHEDULES (CONT.)
E8.1	DETAILS
E8.2	DETAILS (CONT.)
E8.3	DETAILS (CONT.)

WILLIAM STARCK ARCHITECTS, INC.
126 COVE STREET
FALL RIVER, MASSACHUSETTS 02720
10 DORRANCE STREET, SUITE 700
PROVIDENCE, RI 02903
T: 508.679.5733
F: 508.672.8556
WWW.STARCKARCHITECTS.COM

CREATIVE ENVIRONMENT CORP.
CONSULTING ENGINEERS
CEC#2017011O
Cranston Springfield Braintree
MECHANICAL | ELECTRICAL | PLUMBING
FIRE PROTECTION | TELECOM | SECURITY
P. 401-438-7733 | www.cec-engineering.com

2nd FLOOR LAB RENOVATIONS
AT THE
C.C.R.I. KNIGHT CAMPUS
400 EAST AVENUE
WARWICK, R.I. 02886

These plans, drawings, designs, specifications and other components of this work are and shall remain the property of William Starck Architects. No part thereof shall be copied, disclosed to others, or used in connection with any work or project, other than the specified project for which they have been prepared and developed, without the express knowledge and written consent of William Starck Architects.

REVISIONS:

SCALE:	As Noted
DATE:	7November2019
DRAWN BY:	NG
JOB NUMBER:	17-144

DRAWING NAME:
LEGEND

DRAWING NUMBER:
E0.1

COMMENTS:
PERMIT SET

TELECOMMUNICATION LEGEND

TELECOMMUNICATION OUTLETS:
ALL OUTLETS SHALL BE MOUNTED AT 18" A.F.F. TO CENTER, UNLESS OTHERWISE NOTED. THE FOLLOWING DESIGNATIONS SHALL APPLY TO ALL OUTLET TYPES:

C = INDICATES MOUNTED AT 6" ABOVE BACK SPLASH TO BOTTOM, REFER TO ARCHITECTURAL ELEVATIONS.
F = INDICATES FLOOR MOUNTED.
P = INDICATES MOUNTED AT 47" A.F.F.
W = INDICATES MOUNTED AT 54" A.F.F.
H = INDICATES MOUNTED AT 82" A.F.F.
D = INDICATES DATA.
V = INDICATES VOICE.
# = INDICATES NUMBER OF DROPS (CABLES). NO NUMBER INDICATES SINGLE DROP.

#D/#V — TELECOMMUNICATIONS OUTLET, REFER TO TELECOMMUNICATIONS FACEPLATE DETAIL FOR ADDITIONAL INFORMATION.

— VOICE OUTLET, REFER TO TELECOMMUNICATIONS FACEPLATE DETAIL FOR ADDITIONAL INFORMATION.

— DATA OUTLET, REFER TO TELECOMMUNICATIONS FACEPLATE DETAIL FOR ADDITIONAL INFORMATION.

-# — WIRELESS ACCESS POINT. CEILING OR WALL MOUNTED. REFER TO TELECOMMUNICATIONS FACEPLATE DETAIL FOR ADDITIONAL INFORMATION.

TMGB — MAIN TELECOMMUNICATIONS GROUND BAR.

TGB — TELECOMMUNICATIONS GROUND BAR.

AUDIO/VISUAL LEGEND

AUDIO/VISUAL OUTLETS:
ALL OUTLETS SHALL BE MOUNTED AT 18" A.F.F. TO CENTER, UNLESS OTHERWISE NOTED. THE FOLLOWING DESIGNATIONS SHALL APPLY TO ALL OUTLET TYPES:

C = INDICATES MOUNTED AT 6" ABOVE BACK SPLASH TO BOTTOM, REFER TO ARCHITECTURAL ELEVATIONS.
F = INDICATES FLOOR MOUNTED.
P = INDICATES MOUNTED AT 47" A.F.F.
W = INDICATES MOUNTED AT 54" A.F.F.
H = INDICATES MOUNTED AT 82" A.F.F.

DB — DISPLAY OUTLET BOX; REFER TO DISPLAY OUTLET DEVICE SCHEDULE FOR ADDITIONAL INFORMATION.

AV # AV H — AUDIO/VISUAL OUTLET. NUMBER INDICATES DESIGNATED OUTLET DETAIL. REFER TO AUDIO VISUAL FACEPLATE DETAIL FOR ADDITIONAL INFORMATION.

S S H — SPEAKER. CEILING OR WALL MOUNTED.

ED — ELECTRONIC DISPLAY; REFER TO ELECTRONIC DISPLAY SCHEDULE FOR ADDTIONAL INFORMATION.

LIGHTING FIXTURE LEGEND

ALL ITEMS SHOWN ARE NOT NECESSARILY USED ON THIS PROJECT

A a — LIGHT FIXTURE (LUMINAIRE) AND OUTLET ON NORMAL CIRCUIT. LETTER INDICATES TYPE. SUBSCRIPT INDICATES CONTROL AND CIRCUIT NUMBER.

B b — LIGHT FIXTURE (LUMINAIRE) AND OUTLET ON NORMAL CIRCUIT. LETTER INDICATES TYPE. SUBSCRIPT INDICATES CONTROL AND CIRCUIT NUMBER.

C c — LIGHT FIXTURE (LUMINAIRE) AND OUTLET ON NORMAL CIRCUIT. LETTER INDICATES TYPE. SUBSCRIPT INDICATES CONTROL AND CIRCUIT NUMBER.

D d — LIGHT FIXTURE (LUMINAIRE) AND OUTLET ON NORMAL CIRCUIT. LETTER INDICATES TYPE. SUBSCRIPT INDICATES CONTROL AND CIRCUIT NUMBER.

E e — LIGHT FIXTURE (LUMINAIRE) AND OUTLET ON NORMAL CIRCUIT. LETTER INDICATES TYPE. SUBSCRIPT INDICATES CONTROL AND CIRCUIT NUMBER.

F f — LIGHT FIXTURE (LUMINAIRE) AND OUTLET ON NORMAL CIRCUIT. LETTER INDICATES TYPE. SUBSCRIPT INDICATES CONTROL AND CIRCUIT NUMBER.

A a — LIGHT FIXTURE (LUMINAIRE) AND OUTLET ON LIFE SAFETY OR EMERGENCY CIRCUIT. LETTER INDICATES TYPE. SUBSCRIPT INDICATES CONTROL AND CIRCUIT NUMBER.

B b — LIGHT FIXTURE (LUMINAIRE) AND OUTLET ON LIFE SAFETY OR EMERGENCY CIRCUIT. LETTER INDICATES TYPE. SUBSCRIPT INDICATES CONTROL AND CIRCUIT NUMBER.

C c — LIGHT FIXTURE (LUMINAIRE) AND OUTLET ON LIFE SAFETY OR EMERGENCY CIRCUIT. LETTER INDICATES TYPE. SUBSCRIPT INDICATES CONTROL AND CIRCUIT NUMBER.

D d — LIGHT FIXTURE (LUMINAIRE) AND OUTLET ON LIFE SAFETY OR EMERGENCY CIRCUIT. LETTER INDICATES TYPE. SUBSCRIPT INDICATES CONTROL AND CIRCUIT NUMBER.

E e — LIGHT FIXTURE (LUMINAIRE) AND OUTLET ON LIFE SAFETY OR EMERGENCY CIRCUIT. LETTER INDICATES TYPE. SUBSCRIPT INDICATES CONTROL AND CIRCUIT NUMBER.

F f — LIGHT FIXTURE (LUMINAIRE) AND OUTLET ON LIFE SAFETY OR EMERGENCY CIRCUIT. LETTER INDICATES TYPE. SUBSCRIPT INDICATES CONTROL AND CIRCUIT NUMBER.

X — EXIT SIGN, ONE OR TWO FACED. ARROWS DENOTE DIRECTION. SHADING DENOTES NUMBER AND ORIENTATION OF SIGN FACE(S).

EB — EMERGENCY LIGHTING BATTERY UNIT WITH EMERGENCY LIGHTS

LIGHTING CONTROL LEGEND

ALL ITEMS SHOWN ARE NOT NECESSARILY USED ON THIS PROJECT

S_a — SINGLE POLE SWITCH. SUBSCRIPT INDICATES LIGHT FIXTURE CONTROL.

L_a — ALCS LOCAL SWITCHING/DIMMING STATION; 3 BUTTON

VS E — ALCS CEILING MOUNTED VACANCY SENSOR. MOUNT AT LEAST 6'-0" FROM A SUPPLY REGISTER. "E" LETTER INDICATES EXTENDED RANGE. TIME DELAY SHALL BE 20 MINUTES.

POE — ALCS POWER OVER ETHERNET (POE) NETWORK SWITCH.

WLC — ALCS WIRELESS TRANSMITTER; CEILING MOUNTED.

WILLIAM STARCK ARCHITECTS, INC.
126 COVE STREET
FALL RIVER, MASSACHUSETTS 02720
10 DORRANCE STREET, SUITE 700
PROVIDENCE, RI 02903
T: 508.679.5733
F: 508.672.8556
WWW.STARCKARCHITECTS.COM

CREATIVE ENVIRONMENT CORP.
CONSULTING ENGINEERS
CEC#2017011O
Cranston Springfield Braintree
MECHANICAL | ELECTRICAL | PLUMBING
FIRE PROTECTION | TELECOM | SECURITY
P. 401-438-7733 | www.cec-engineering.com

2nd FLOOR LAB RENOVATIONS
AT THE
C.C.R.I. KNIGHT CAMPUS
400 EAST AVENUE
WARWICK, R.I. 02886

These plans, drawings, designs, specifications and other components on this sheet are and shall remain the property of William Starck Architects. No part thereof shall be copied, disclosed to others, or used in connection with any work or project, other than the specified project for which they have been prepared and developed, without the express knowledge and written consent of William Starck Architects.

REVISIONS:

SCALE:	As Noted
DATE:	7November2019
DRAWN BY:	KD
JOB NUMBER:	17-144

DRAWING NAME:
LEGEND (CONT.)

DRAWING NUMBER:
E0.2

COMMENTS:
PERMIT SET

KEYED SHEET NOTES

1. CEILING MOUNTED PROJECTOR TO BE REMOVED COMPLETELY AND TURNED OVER TO OWNER.
2. EXISTING SWITCHING TO BE REMOVED; PROVIDE BLANK PLATE OVER EXISTING BOXES FLUSH IN EXISTING WALLS.
3. MAINTAIN EXISTING CLASSROOM/OFFICE/LAB NORMAL LIGHTING BRANCH CIRCUITING IN SPACE FOR RE-USE IN NEW SCOPE.
4. MAINTAIN EXISTING NORMAL CORRIDOR LIGHTING BRANCH CIRCUITING IN SPACE FOR RE-USE IN NEW SCOPE.
5. MAINTAIN EXISTING CORRIDOR LIGHTING LIFE SAFETY BRANCH CIRCUITING IN SPACE FOR RE-USE IN NEW SCOPE.
6. EXISTING TO REMAIN KEYED SWITCHES FOR HALLWAY LIGHTS.

EXISTING ELECTRICAL EQUIPMENT LEGEND

ALL ITEMS SHOWN ARE NOT NECESSARILY USED ON THIS PROJECT

- EXISTING ELECTRICAL EQUIPMENT WITHOUT A DESIGNATION IS TO REMAIN.
- "XE" INDICATES EXISTING ELECTRICAL EQUIPMENT WHICH IS TO BE REMOVED. PULL BACK WIRING AND CONDUIT BACK TO NEXT ACTIVE OUTLET OR POWER SOURCE.
- "XR" INDICATES EXISTING ELECTRICAL EQUIPMENT TO BE REMOVED AND RELOCATED. EXISTING CIRCUIT SHALL BE EXTENDED TO NEW LOCATION OF RELOCATED EXISTING ELECTRICAL EQUIPMENT.
- "XN" INDICATES NEW LOCATION OF RELOCATED EXISTING ELECTRICAL EQUIPMENT.
- "XD" INDICATES EXISTING EQUIPMENT/DEVICE TO REMAIN. EXISTING CIRCUIT/WIRING SHALL BE REMOVED. PULL BACK WIRING AND CONDUIT BACK TO NEXT ACTIVE OUTLET OR POWER SOURCE. ALL HVAC/PLUMBING INTERLOCKING WIRING SHALL REMAIN. REFER TO RENOVATION PLANS FOR NEW CIRCUIT INFORMATION.
- "XW" INDICATES EXISTING EQUIPMENT/DEVICE TO BE REMOVED. EXISTING CIRCUIT/WIRING AND BACK BOX SHALL REMAIN. NEW DEVICE SHALL BE LOCATED IN PLACE. EXTEND CIRCUIT/WIRING TO NEW ELECTRICAL EQUIPMENT/DEVICE.

GENERAL NOTES:

1. DOTTED SYMBOLS INDICATE EXISTING ELECTRICAL EQUIPMENT.
2. REFER TO SPECIFICATIONS FOR ADDITIONAL INFORMATION.
3. ELECTRICAL CONTRACTOR SHALL BE RESPONSIBLE FOR ENSURING THE CONTINUITY OF ALL EXISTING CIRCUITS WHICH ARE REMAINING.

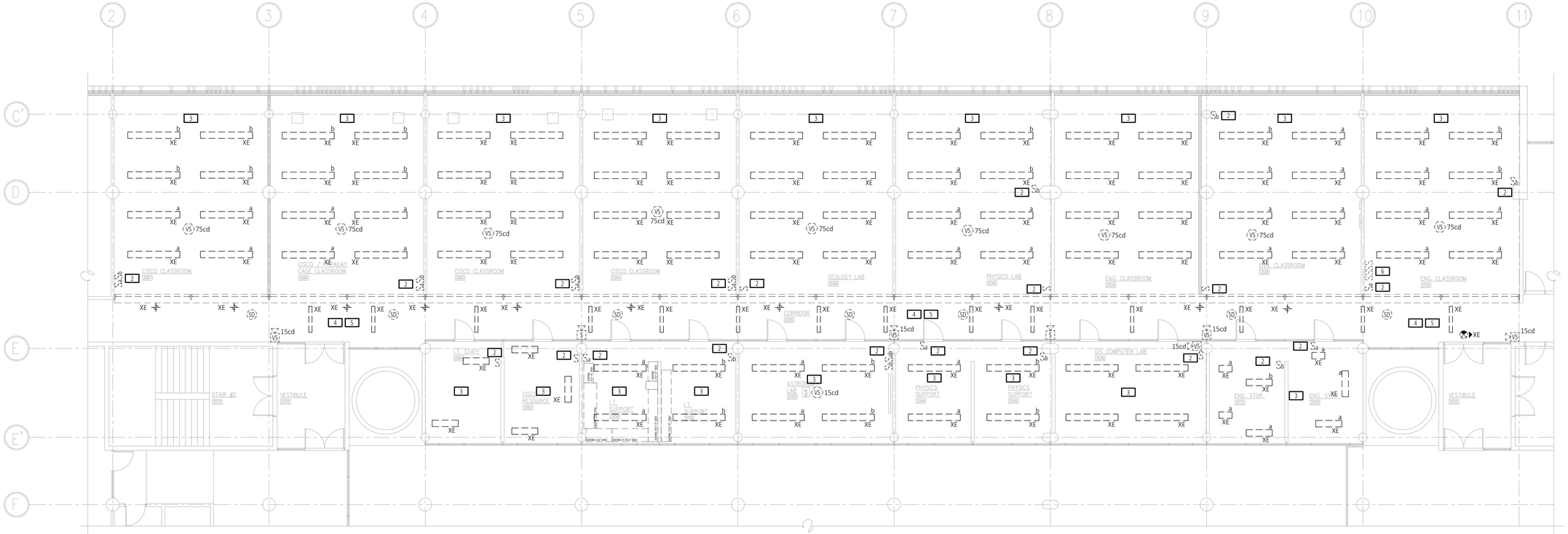

1 FLOOR PLAN - DEMOLITION LIGHTING & FIRE ALARM
SCALE: 1/8" = 1'-0"

0 8'-0" 16'-0" 24'-0"

SECOND FLOOR KEY PLAN SCALE 1/128 =1' 0"

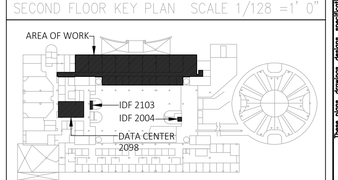

WILLIAM STARCK ARCHITECTS, INC.
126 COVE STREET
FALL RIVER, MASSACHUSETTS 02720
10 DORRANCE STREET, SUITE 700
PROVIDENCE, RI 02903
T: 508.679.5733
F: 508.672.8556
WWW.STARCKARCHITECTS.COM

CREATIVE ENVIRONMENT CORP.
CONSULTING ENGINEERS
CEC#2017011O
Cranston Springfield Braintree
MECHANICAL | ELECTRICAL | PLUMBING
FIRE PROTECTION | TELECOM | SECURITY
P. 401-438-7733 | www.cec-engineering.com

2nd FLOOR LAB RENOVATIONS
AT THE
C.C.R.I. KNIGHT CAMPUS
400 EAST AVENUE
WARWICK, R.I. 02886

REVISIONS:

SCALE:	As Noted
DATE:	7November2019
DRAWN BY:	NG
JOB NUMBER:	17-144

DRAWING NAME:
DEMOLITION FLOOR PLAN - LIGHTING & FIRE ALARM

DRAWING NUMBER:
ED1.1

COMMENTS:
PERMIT SET

These plans, drawings, details, specifications and other components on this sheet are and shall remain the property of William Starck Architects. No part thereof shall be copied, disclosed to others, or used in connection with any work or project, other than the specified project for which they have been prepared and developed, without the express knowledge and written consent of William Starck Architects.

KEYED SHEET NOTES

1. CISCO LABS 2 POST RACK(S) TO BE KEPT SAFE DURING CONSTRUCTION. ALL ELECTRICAL CONNECTIONS (FOUR RAIL MOUNTED DOUBLE DUPLEX RECEPTACLES) SHALL BE REMOVED IN ITS ENTIRETY.
2. CEILING MOUNTED PROJECTOR TO BE REMOVED COMPLETELY AND TURNED OVER TO OWNER.
3. RECEPTACLE MOUNTED UNDER MILLWORK FOR ADVANCE POWER TEACH STATION DEVICE; FEED FROM FLOOR SURFACE RACEWAY. TURN ADVANCE POWER TEACHER STATION OVER TO OWNER.
4. LAB BENCH WITH (4) LAB BENCH MOUNTED ADVANCED POWER STATIONS TO BE TURNED OVER TO OWNER.
5. WIRELESS ACCESS CONTROL ACCESS POINT TO REMAIN ACTIVE DURING CONSTRUCTION.
6. EXISTING ELECTRICAL PENETRATIONS, JUNCTION BOXES AND CONDUIT FITTINGS SERVICING FLOOR ABOVE TO BE REWORKED TO ACCOMMODATE NEW WALLS BEING CONSTRUCTED. REFER TO NEW PLANS FOR ADDITIONAL INFORMATION.
7. EXISTING WIRELESS ACCESS POINTS AND MOUNTING HARDWARE TO BE TURNED OVER TO OWNER; CABLING SHALL BE REMOVED.

EXISTING ELECTRICAL EQUIPMENT LEGEND

ALL ITEMS SHOWN ARE NOT NECESSARILY USED ON THIS PROJECT

- EXISTING ELECTRICAL EQUIPMENT WITHOUT A DESIGNATION IS TO REMAIN.
- "XE" INDICATES EXISTING ELECTRICAL EQUIPMENT WHICH IS TO BE REMOVED. PULL BACK WIRING AND CONDUIT BACK TO NEXT ACTIVE OUTLET OR POWER SOURCE.
- "XR" INDICATES EXISTING ELECTRICAL EQUIPMENT TO BE REMOVED AND RELOCATED. EXISTING CIRCUIT SHALL BE EXTENDED TO NEW LOCATION OF RELOCATED EXISTING ELECTRICAL EQUIPMENT.
- "XN" INDICATES NEW LOCATION OF RELOCATED EXISTING ELECTRICAL EQUIPMENT.
- "XD" INDICATES EXISTING EQUIPMENT/DEVICE TO REMAIN. EXISTING CIRCUIT/WIRING SHALL BE REMOVED. PULL BACK WIRING AND CONDUIT BACK TO NEXT ACTIVE OUTLET OR POWER SOURCE. ALL HVAC/PLUMBING INTERLOCKING WIRING SHALL REMAIN. REFER TO RENOVATION PLANS FOR NEW CIRCUIT INFORMATION.
- "XW" INDICATES EXISTING EQUIPMENT/DEVICE TO BE REMOVED. EXISTING CIRCUIT/WIRING AND BACK BOX SHALL REMAIN. NEW DEVICE SHALL BE LOCATED IN PLACE. EXTEND CIRCUIT/WIRING TO NEW ELECTRICAL EQUIPMENT/DEVICE.

GENERAL NOTES:

1. DOTTED SYMBOLS INDICATE EXISTING ELECTRICAL EQUIPMENT.
2. REFER TO SPECIFICATIONS FOR ADDITIONAL INFORMATION.
3. ELECTRICAL CONTRACTOR SHALL BE RESPONSIBLE FOR ENSURING THE CONTINUITY OF ALL EXISTING CIRCUITS WHICH ARE REMAINING.

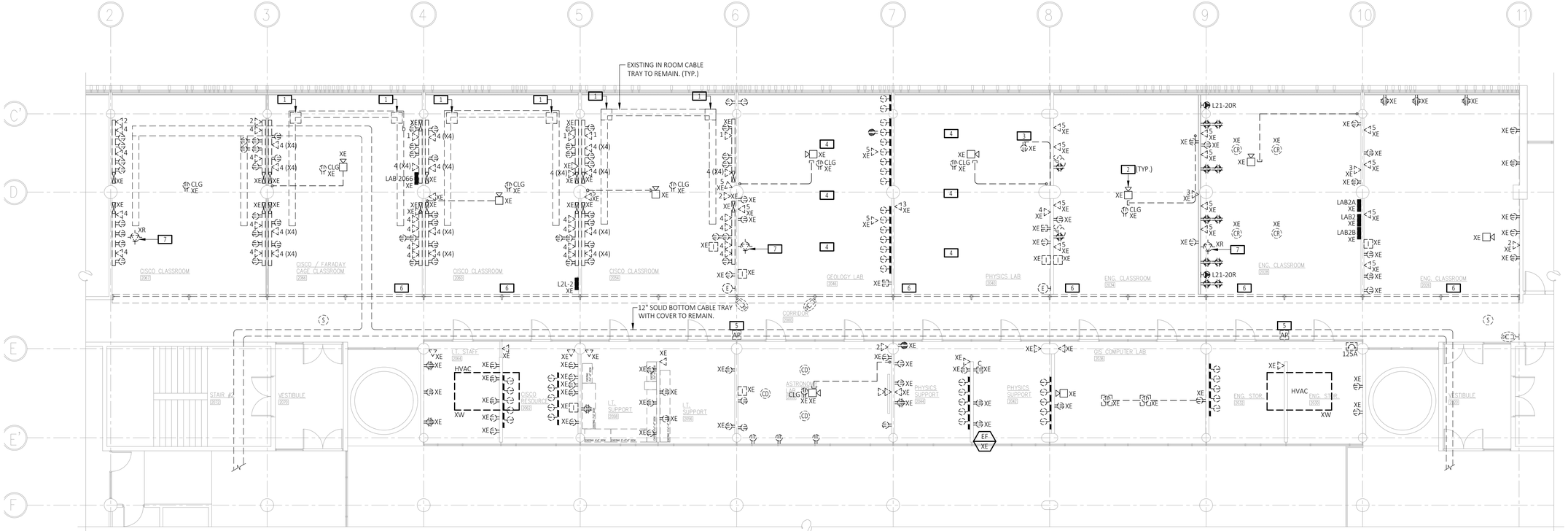

1 FLOOR PLAN - DEMOLITION POWER & TELECOM
SCALE: 1/8" = 1'-0"
0 8'-0" 16'-0" 24'-0"

SECOND FLOOR KEY PLAN SCALE 1/128 =1' 0"

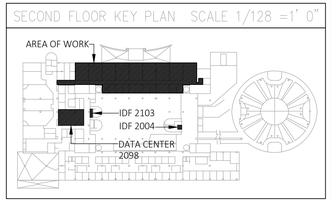

WILLIAM STARCK ARCHITECTS, INC.
126 COVE STREET
FALL RIVER, MASSACHUSETTS 02720
10 DORRANCE STREET, SUITE 700
PROVIDENCE, RI 02903
T: 508.679.5733
F: 508.672.8556
WWW.STARCKARCHITECTS.COM

CREATIVE ENVIRONMENT CORP.
CONSULTING ENGINEERS
CEC#2017011O
Cranston Springfield Braintree
MECHANICAL | ELECTRICAL | PLUMBING
FIRE PROTECTION | TELECOM | SECURITY
P. 401-438-7733 | www.cec-engineering.com

2nd FLOOR LAB RENOVATIONS
AT THE
C.C.R.I. KNIGHT CAMPUS
400 EAST AVENUE
WARWICK, R.I. 02886

REVISIONS:

SCALE:	As Noted
DATE:	7November2019
DRAWN BY:	NG
JOB NUMBER:	17-144

DRAWING NAME:
DEMOLITION FLOOR PLAN - POWER & TELECOM

DRAWING NUMBER:
ED1.2

COMMENTS:
PERMIT SET

These plans, drawings, designs, specifications and other components on this sheet are and shall remain the property of William Starck Architects. No part hereof shall be copied, disclosed to others, or used in connection with any work or project, other than the specified project for which they have been prepared and developed, without the express knowledge and written consent of William Starck Architects.

KEYED SHEET NOTES

1. CONNECT NEW LIGHTING TO EXISTING CLASSROOM/OFFICE/LAB NORMAL LIGHTING CIRCUIT AND PROVIDE CONTROL INDICATED.
2. CONNECT NEW CORRIDOR LIGHTING TO EXISTING CORRIDOR NORMAL LIGHTING CIRCUIT AND MAINTAIN EXISTING CONTROL.
3. CONNECT NEW CORRIDOR EGRESS LIGHTING TO EXISTING CORRIDOR LIFE SAFETY BRANCH CIRCUIT AND MAINTAIN EXISTING CONTROL WITH EMERGENCY BYPASS.
4. SENSOR CLOSEST TO EXTERIOR GLAZING SHALL PROVIDE DAYLIGHT HARVESTING SIGNAL TO FIRST TWO ROWS OF LIGHTS FROM EXTERIOR GLAZING; TECHNICIAN TO ESTABLISH PROPORTIONAL CONTROL OF SECOND ROW RELATIVE TO FIRST.
5. MOUNT CORRIDOR LIGHTING WITH BOTTOM LENS EVEN WITH BOTTOM OF MAIN HVAC DUCT WORK TRUNK; COORDINATE IN FIELD.
6. COORDINATE EXACT LOCATION IN FIELD.

GENERAL SHEET NOTES

1. EXACT LOCATIONS OF ALL FIXTURES AND DEVICES SHALL BE FULLY COORDINATED WITH ARCHITECTURAL PLANS, ELEVATIONS, SECTIONS, AND THE WORK OF OTHER TRADES PRIOR TO ROUGH-IN.
2. WIRING AND CONDUIT OR MC ABLE SHALL BE REQUIRED BETWEEN ALL LIGHTING FIXTURES, SWITCHES, SENSORS, POWER PACKS, RELAYS, AND OTHER AUXILIARY DEVICES. WIRING AND CONDUIT OR MC CABLE IS SHOWN ON DRAWINGS ONLY FOR SPECIFIC ROUTES OR SPECIAL CONDITIONS. IT IS THE INTENT OF THESE DOCUMENTS THAT A COMPLETE BRANCH CIRCUIT AND CONTROL WIRING SYSTEM BE INSTALLED.
3. ALL BRANCH CIRCUIT CONDUCTORS SHALL BE 98% CONDUCTIVITY, COPPER MINIMUM #12 AWG SIZE, THWN/THHN INSULATION, 600 VOLTS RATED UNLESS OTHERWISE NOTED.
4. METAL ROOF DECKS SHALL NOT BE TAPPED FOR SUPPORT OF ANY LIGHTING FIXTURES OR ELECTRICAL EQUIPMENT. PROVIDE UNISTRUT OR OTHER SUPPLEMENTAL SUPPORT FITTINGS TO BE ATTACHED TO BUILDING STRUCTURAL FRAMING AS REQUIRED FOR SUPPORT OF ALL LIGHTING FIXTURES AND ELECTRICAL EQUIPMENT.
5. LOCATIONS OF ALL SWITCHES SHALL COMPLY WITH ADA CRITERIA.
6. REFER TO ARCHITECTURAL DRAWINGS FOR FIRE AND SMOKE RATED WALLS AND PROVIDE PROPER METHOD OF PENETRATION FOR EACH.

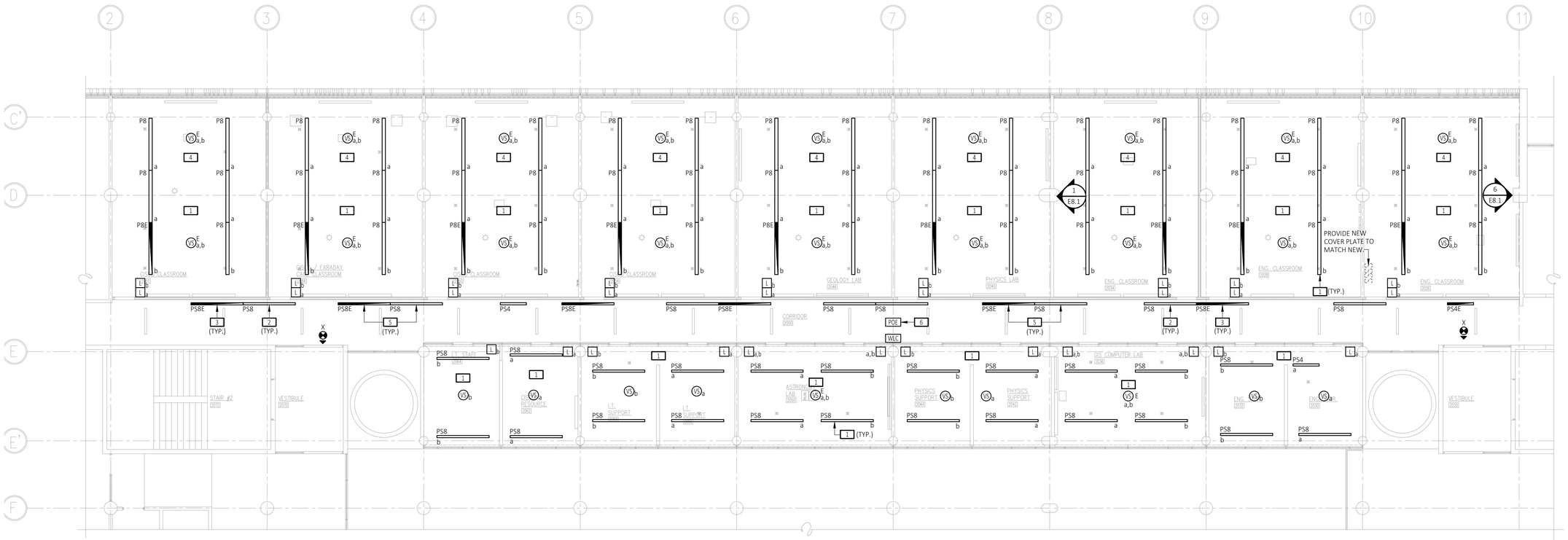

1 FLOOR PLAN - LIGHTING
SCALE: 1/8" = 1'-0"
0 8'-0" 16'-0" 24'-0"

SECOND FLOOR KEY PLAN SCALE 1/128 =1' 0"

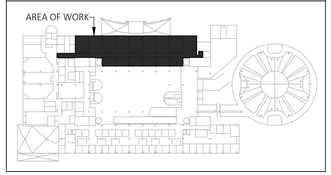

WILLIAM STARCK ARCHITECTS, INC.
126 COVE STREET
FALL RIVER, MASSACHUSETTS 02720
10 DORRANCE STREET, SUITE 700
PROVIDENCE, RI 02903
T: 508.679.5733
F: 508.672.8556
WWW.STARCKARCHITECTS.COM

CREATIVE ENVIRONMENT CORP.
CONSULTING ENGINEERS
CEC#2017 0110
Cranston Springfield Braintree
MECHANICAL | ELECTRICAL | PLUMBING
FIRE PROTECTION | TELECOM | SECURITY
P. 401-438-7733 | www.cec-engineering.com

These plans, drawings, designs, specifications and other components on this sheet are and shall remain the property of William Starck Architects. No part thereof shall be copied, disclosed to others, or used in connection with any work or project, other than the specified project for which they have been prepared and developed, without the express knowledge and written consent of William Starck Architects.

2nd FLOOR LAB RENOVATIONS
AT THE
C.C.R.I. KNIGHT CAMPUS
400 EAST AVENUE
WARWICK, R.I. 02886

REVISIONS:

SCALE:	As Noted
DATE:	7November2019
DRAWN BY:	NG
JOB NUMBER:	17-144

DRAWING NAME:
FLOOR PLAN - LIGHTING

DRAWING NUMBER:
E1.1

COMMENTS:
PERMIT SET

KEYED SHEET NOTES

1. NEW DUCT WORK TO BE INSTALLED TIGHT TO TOP OF EXISTING CABLE TRAY. COORDINATE ACCESS COVER MODIFICATIONS IN FIELD WITH MECHANICAL CONTRACTOR AND CCRI I.T. PRIOR TO ROUGH-IN.
2. EXISTING IN ROOM CABLE TRAY TO BE RELOCATED TO ACCOMMODATE NEW DUCT WORK.
3. PROVIDE (4) FESTO LABVOLT ADVANCED POWER STATIONS #585672. PROVIDE (1) SIMPLEX RECEPTACLE CONCEALED WITHIN MILLWORK; UTILIZE ONE OF THE FOUR INDICATED CIRCUITS FOR EACH SIMPLEX. COORDINATE INSTALLATION WITH ARCHITECT AND MILLWORK VENDOR PRIOR TO ROUGH-IN.
4. USB DUPLEX RECEPTACLE MOUNTED WITHIN MILLWORK; COORDINATE INSTALLATION WITH ARCHITECT AND MILLWORK VENDOR PRIOR TO ROUGH-IN.
5. TEACHER STATION POKE THRU; LOCATE UNDER TEACHER STATION AND READILY ACCESSIBLE FOR CONNECTING AND DISCONNECTING OF DEVICES. COORDINATE INSTALLATION WITH ARCHITECT AND MILLWORK VENDOR PRIOR TO ROUGH-IN.
6. EXISTING CISCO RACKS AND EQUIPMENT TO REMAIN. ALL NEW CISCO LAB ROOM/AREA DATA CABLING SHALL BE TERMINATED ON NEW PATCH PANELS WITHIN EXISTING RACKS AS INDICATED.
7. FOR CEILING MOUNTED PROJECTOR; COORDINATE EXACT LOCATION IN FIELD.
8. MOUNTED ON CISCO RACKS; FIELD COORDINATE EXACT LOCATION WITH CCRI PRIOR TO ROUGH-IN.
9. DATA AND OUTLETS IN THIS ROOM/AREA SHALL BE SERVED BY SURFACE RACEWAY EQUAL TO PANDUIT# T-70 SERIES. INSTALLATION METHOD SHALL MATCH THE EXISTING THAT IS BEING REMOVED. PROVIDE ALL REQUIRED ACCESSORIES FOR A COMPLETE INSTALLATION.
10. ALL SURFACE MOUNTED POWER IN THE ROOM/AREA SHALL BE SERVED BY SURFACE MOUNTED RACEWAY EQUAL TO WIREMOLD #700 SERIES. PROVIDE ALL REQUIRED ACCESSORIES FOR A COMPLETE INSTALLATION.
11. THIS ROOM IS CONSIDERED A FARADAY CAGE AND IS SHIELDED BY A "EMF" PAINT. GENERAL CONTRACTOR SHALL PROVIDE ALL REQUIRED MATERIALS AND ACCESSORIES FOR PROPER INSTALLATION AND GROUNDING OF THE FARADAY CAGE SYSTEM. ELECTRICAL CONTRACTOR SHALL BOND FARADAY CAGE SYSTEM TO BUILDINGS GROUNDING SYSTEM.

GENERAL SHEET NOTES

1. ALL BRANCH CIRCUIT CONDUCTORS SHALL BE TYPE MC 98% CONDUCTIVITY, COPPER MINIMUM #12 AWG SIZE THWN/THHN INSULATION, 600 VOLTS RATED UNLESS OTHERWISE NOTED.
2. COORDINATE EXACT LOCATION OF ALL DEVICES.
3. WIRING IS SHOWN ON DRAWINGS ONLY FOR SPECIFIC ROUTES OR SPECIAL CONDITIONS.
4. WIRING AND CONDUIT SHALL BE REQUIRED BETWEEN ALL OUTLETS INDICATED WITH CIRCUIT NUMBERS AND PANEL DESIGNATIONS.
5. ALTHOUGH ALL BRANCH CIRCUIT WIRE AND CONDUIT IS NOT SHOWN, IT IS THE INTENT OF THESE DOCUMENTS THAT A COMPLETE BRANCH CIRCUIT WIRING SYSTEM BE INSTALLED.
6. TYPICALLY REFER TO ARCHITECTURAL ELEVATIONS FOR DEVICE LOCATIONS PRIOR TO ROUGH-IN.
7. COORDINATE MOUNTING HEIGHT OF ALL TECHNOLOGY DEVICES WITH TECHNOLOGY CONTRACTOR PRIOR TO ROUGH-IN.
8. REFER TO ARCHITECTURAL DRAWINGS FOR FIRE AND SMOKE RATED WALLS AND PROVIDE PROPER METHOD OF PENETRATION FOR EACH.

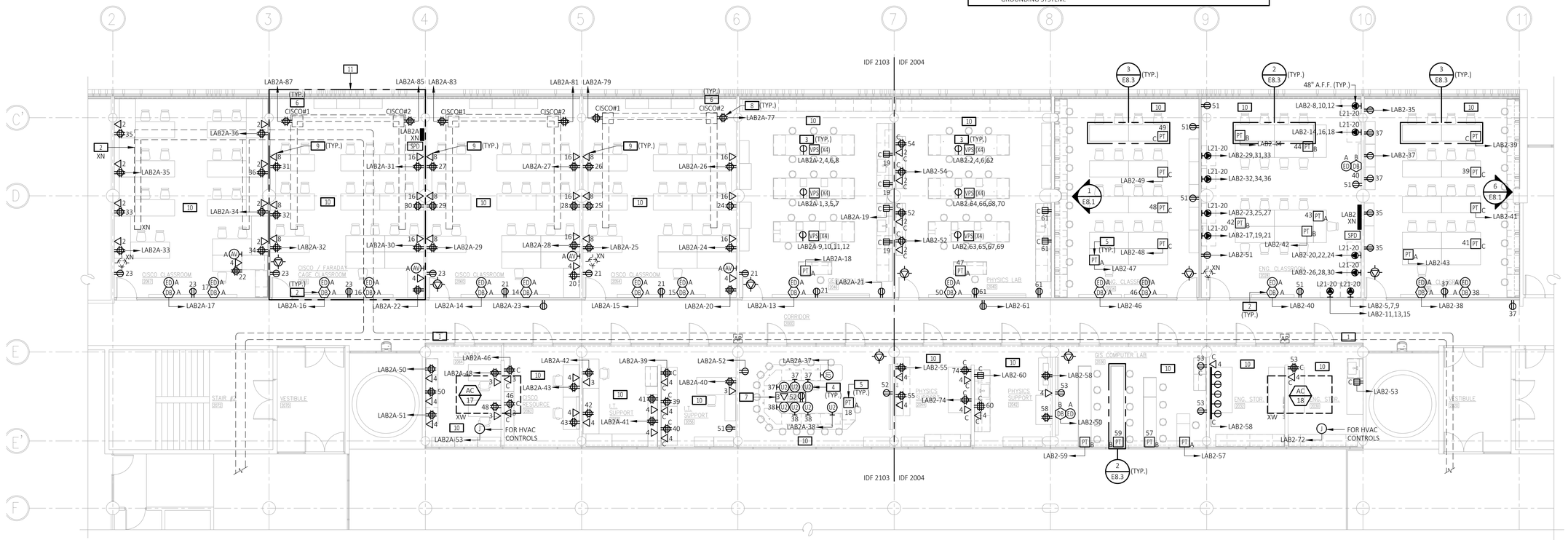

1 FLOOR PLAN - POWER AND SYSTEMS
SCALE: 1/8" = 1'-0"
0 8'-0" 16'-0" 24'-0"

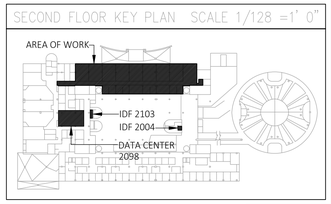

WILLIAM STARCK ARCHITECTS, INC.
126 COVE STREET
FALL RIVER, MASSACHUSETTS 02720
10 DORRANCE STREET, SUITE 700
PROVIDENCE, RI 02903
T: 508.679.5733
F: 508.672.8556
WWW.STARCKARCHITECTS.COM

CREATIVE ENVIRONMENT CORP.
CONSULTING ENGINEERS
Cranston Springfield Braintree
CEC#2017011O
MECHANICAL | ELECTRICAL | PLUMBING
FIRE PROTECTION | TELECOM | SECURITY
P. 401-438-7733 | www.cec-engineering.com

These plans, drawings, designs, specifications and other components on this sheet are and shall remain the property of William Starck Architects. No part thereof shall be copied, disclosed to others, or used in connection with any work or project, other than the specified project for which they have been prepared and developed, without the express knowledge and written consent of William Starck Architects.

2nd FLOOR LAB RENOVATIONS
AT THE
C.C.R.I. KNIGHT CAMPUS
400 EAST AVENUE
WARWICK, R.I. 02886

REVISIONS:

SCALE:	As Noted
DATE:	7November2019
DRAWN BY:	NG
JOB NUMBER:	17-144

DRAWING NAME:
FLOOR PLAN - POWER & SYSTEMS

DRAWING NUMBER:
E2.1

COMMENTS:
PERMIT SET

KEYED SHEET NOTES

1 FIRE ALARM IS EXISTING TO REMAIN. ALL NEW WORK SHALL BE DONE BY CCRI'S FIRE ALARM CONTRACTOR. WORK IS SHOWN FOR REFERENCE ONLY.

GENERAL SHEET NOTES

1. E.C. SHALL REFER TO SPECIFICATIONS AND DRAWINGS FOR QUANTITY OF DEVICES, SPARE CAPACITY, PARTS, ETC.
2. E.C. SHALL REFER TO HVAC DRAWINGS FOR EXACT LOCATION OF HVAC UNITS AND FOR LOCATIONS OF DUCT MOUNTED SMOKE DETECTORS. DUCT DETECTORS FURNISHED AND WIRED BY E.C.; INSTALLED BY HVAC.
3. PROVIDE EACH FIRE ALARM TERMINAL CABINET AND FIRE ALARM CONTROL PANEL WITH AN ADA POWER SUPPLY TO SERVE ALL HORN/STROBE UNITS.
4. TYPICALLY FIRE ALARM SYSTEM POWER CONDUCTORS SHALL BE #14 AWG, TYPE THHN SOLID. ALL WIRING SHALL BE INSTALLED IN CONDUIT OR SURFACE METAL RACEWAY. MC CABLE IS ALLOWED WHERE CONCEALED & ALLOWED BY CODE.
5. TYPICALLY ALL HORN/STROBE UNITS SHALL BE WIRED IN A FASHION THAT THE HORN AND THE STROBE CAN BE SILENCED SIMULTANEOUSLY.
6. TYPICALLY REFER TO DOOR HARDWARE, SCHEDULES & DRAWINGS FOR LOCATIONS & QUANTITIES OF HARDWARE EQUIPMENT AFFECTING THIS SECTION. PROVIDE ALL WORK AS REQUIRED.
7. REFER TO ARCHITECTURAL DRAWINGS FOR FIRE AND SMOKE RATED WALLS AND PROVIDE PROPER METHOD OF PENETRATION FOR EACH.

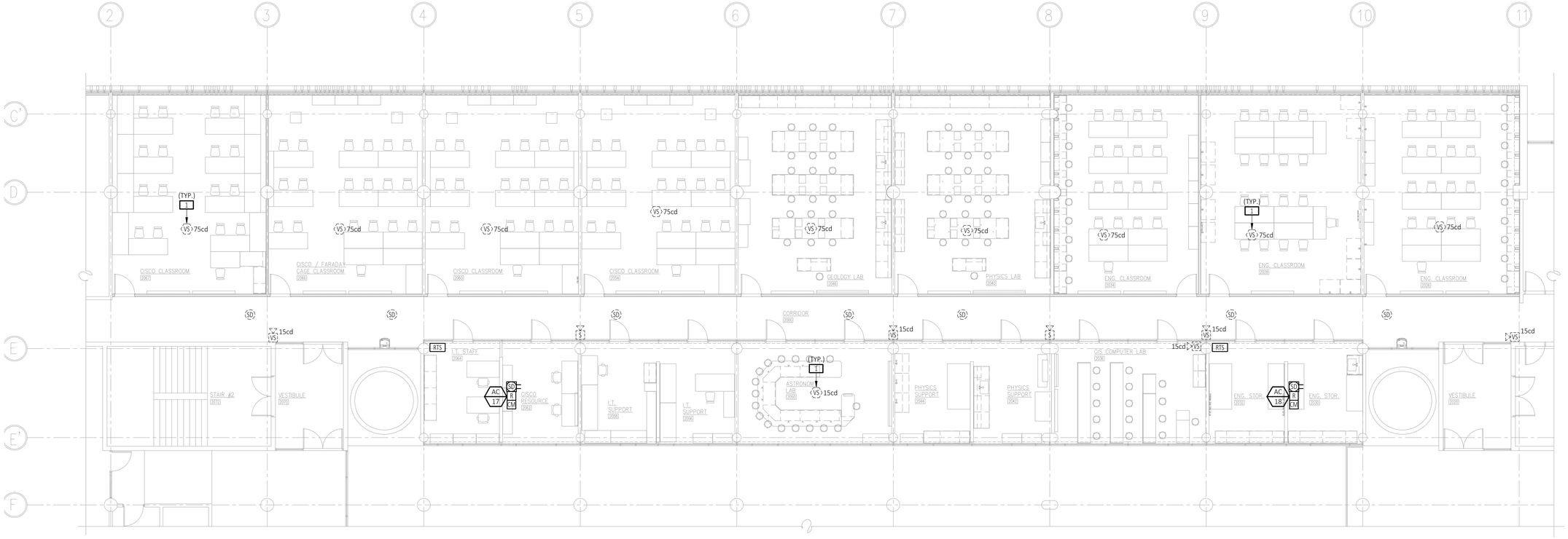

1 FLOOR PLAN - FIRE ALARM
SCALE: 1/8" = 1'-0"
0 8'-0" 16'-0" 24'-0"

SECOND FLOOR KEY PLAN SCALE 1/128 =1' 0"

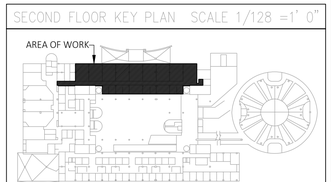

WILLIAM STARCK ARCHITECTS, INC.
126 COVE STREET
FALL RIVER, MASSACHUSETTS 02720
10 DORRANCE STREET, SUITE 700
PROVIDENCE, RI 02903
T: 508.679.5733
F: 508.672.8556
WWW.STARCKARCHITECTS.COM

CREATIVE ENVIRONMENT CORP.
CONSULTING ENGINEERS
Cranston Springfield Braintree
CEC#20170110
MECHANICAL | ELECTRICAL | PLUMBING
FIRE PROTECTION | TELECOM | SECURITY
P. 401-438-7733 | www.cec-engineering.com

These plans, drawings, details, specifications and other components on this sheet are and shall remain the property of William Starck Architects. No part hereof shall be copied, disclosed to others, or used in connection with any work or project, other than the specified project for which they have been prepared and developed, without the express knowledge and written consent of William Starck Architects.

2nd FLOOR LAB RENOVATIONS
AT THE
C.C.R.I. KNIGHT CAMPUS
400 EAST AVENUE
WARWICK, R.I. 02886

REVISIONS:

SCALE:	As Noted
DATE:	7November2019
DRAWN BY:	NG
JOB NUMBER:	17-144

DRAWING NAME:
FLOOR PLAN - FIRE ALARM

DRAWING NUMBER:
E3.1

COMMENTS:
PERMIT SET

LIGHTING FIXTURE SCHEDULE

TYPICAL LIGHTING NOTES:
1. MOUNTING ABBREVIATIONS, "G" = RECESSED IN GRID, "F" = RECESSED IN FLANGE, "S" = SURFACE, "W" = WALL, "P" = PENDANT, "GR" = GROUND, "U" = UNIVERSAL, "T" = TRACK.
2. LIGHTING FIXTURES SHALL BE FURNISHED COMPLETE WITH ALL HARDWARE, HANGERS, ACCESSORIES, ETC. FOR A COMPLETE AND PROPER INSTALLATION. VERIFY ROOM SURFACE CONSTRUCTION/FINISH TYPES PRIOR TO THE RELEASE OF ANY LIGHTING FIXTURES TO ENSURE PROPER MOUNTING PROVISIONS AND FIXTURES FITTINGS. REFER TO ARCHITECTURAL DRAWINGS/ELEVATIONS.
3. VERIFY ALL LIGHTING FIXTURE MOUNTING HEIGHTS AND LOCATIONS WITH ARCHITECTURAL DRAWINGS/ELEVATIONS PRIOR TO THE START OF ROUGHING. PENDANT FIXTURES SHALL BE MINIMUM 19" FROM TOP OF FIXTURE TO CEILING UNLESS OTHERWISE NOTED.
4. ALL LED SOURCES, DRIVERS, AND CONTROLS SHALL MEET THE LATEST UTILITY CO. INCENTIVE REQUIREMENTS. REFER TO THE LATEST PROGRAM REQUIREMENTS DOCUMENTATION AND COORDINATE WITH UTILITY CO. TO ENSURE COMPLIANCE.
5. EXIT SIGNS SHALL BE TYPICALLY MOUNTED ON CEILINGS WHERE VISIBLE OR ON WALL WHERE CEILING MOUNTING IS NOT PRACTICAL. PRIOR TO ROUGHING COORDINATE WITH ARCHITECTURAL DRAWINGS/ELEVATIONS FOR SPECIFIC MOUNTING DIRECTION AND FOR LOCATION.
6. WHEN SUBMITTING TO ENGINEER FOR REVIEW THE LIGHTING FIXTURE SUBMITTALS SHALL CONSIST OF THE FOLLOWING: LIGHTING FIXTURE CUT SHEET, LIGHTING FIXTURE DRIVER CUT SHEET, AND LIGHTING FIXTURE LAMP/LED CUT SHEET FOR EACH FIXTURE. GROUPED CUT SHEETS WILL NOT BE ALLOWED. WHEN SUBMITTING ON LED PRODUCTS PROVIDE LIGHTING FACTS, LM-79, AND LM-80 TEST REPORTS FOR REVIEW.
7. FOR LIGHTING IN MECHANICAL ROOMS AND BACK OF HOUSE AREAS PROVIDE LIGHTING GENERALLY AS SHOWN. LIGHTING SHALL BE SHIFTED AS REQUIRED AT MECHANICAL EQUIPMENT THAT REQUIRES SPACE FOR FILTERS, ETC. MOUNT LIGHTING AT 9'-0" MAXIMUM UNLESS DUCTWORK AND PIPING CANT BE AVOIDED WHERE A FIXTURE IS NEEDED. IN THIS INSTANCE, RAISE OR LOWER THE FIXTURE AS REQUIRED. (NOT LESS THAN 7'-6"). LIGHTING IN THE MECHANICAL ROOM SHALL BE SUSPENDED BY AIRCRAFT CABLE. ALLOW (3') OF SLACK AIRCRAFT CABLE AND FEEDER AT EACH FIXTURE TO PERMIT FUTURE ADJUSTMENT. DO NOT SUPPORT LIGHT FIXTURES FROM DUCT OR PIPING. PROVIDE UNISTRUT BELOW DUCTS WHERE FIXTURE LOCATIONS COINCIDE WITH DUCT RUNS. PROVIDE THREADED RODS FROM STRUCTURAL MEMBERS TO SUPPORT UNISTRUT.
8. LIGHTING FIXTURE PACKAGE SUBMITTALS SHALL BE FULLY COORDINATED BETWEEN THE ELECTRICAL CONTRACTOR, LIGHTING FIXTURE REPRESENTATIVE(S), AND LIGHTING MANUFACTURERS TO ENSURE ALL PRODUCT, INSTALLATION, AND CONTROL REQUIREMENTS ARE MET PRIOR TO SUBMISSION FOR REVIEW. IT IS THE ELECTRICAL CONTRACTORS RESPONSIBILITY TO PROVIDE A PACKAGE MEETING ALL REQUIREMENTS OF THE PROJECT FOR A COMPLETE AND FULLY FUNCTIONAL LIGHTING SYSTEM.
9. PROVIDE ALCS ADDRESSABLE INPUT/OUTPUT (I/O) MODULE FOR EACH FIXTURE UNLESS OTHERWISE NOTED. APPLICATIONS NOT REQUIRING INDIVIDUAL CONTROL (ONLY WHERE SPECIFICALLY NOTED ON PLANS) SHALL BE PROVIDED WITH I/O MODULES ON A FIXTURE GROUPING BASIS. WHERE FIXTURES ARE LOCATED IN HARD CEILING AREAS THE I/O MODULE SHALL BE REMOTE MOUNTED IN ACCESSIBLE AREA MODULE FOR EACH CIRCUIT SHALL BE LOCATED OUTDOORS THE I/O MODULE FOR EACH CIRCUIT SHALL BE LOCATED IN THE MAIN ELECTRICAL ROOM ADJACENT TO THE PANEL SERVING THE LIGHTING. REFER TO "AUTOMATED LIGHTING CONTROL SYSTEM - TYPICAL ONE-LINE DIAGRAM" AND SPECIFICATIONS FOR FURTHER INFORMATION.
10. UNLESS OTHERWISE INDICATED, ALL FINISHES SHALL BE SELECTED BY THE ARCHITECT FROM STANDARD FINISH OPTIONS OR RAL FINISH PALETTE (DENOTED AS *FBA*).

TYPE	DESCRIPTION	MANUFACTURER	MODEL / SERIES	VOLTAGE	MTG.	SOURCE						DIMMING PROTOCOL	FINISH / MATERIAL	NOTES	ALTERNATE MANUFACTURERS
						TYPE	INPUT WATTAGE	INITIAL LUMENS	LUMEN MAINTENANANCE	CRI	COLOR / TEMP.				
P8	8FT EXTRUDED ALUMINUM DIRECT/INDIRECT PENDENT FIXTURE	PINNACLE	L6D1-A-70-935VHO-8-ACST-U-EE1-N-0-W-NLIGHT	UNV	P	LED	11.7/ FT	1250/FT	L70@ 175,000HRS	90	3500K	0-10V	WHITE	- - -	N/A TO MATCH 3RD FLOOR
P8E	SAME AS TYPE "P8" EXCEPT PROVIDED WITH EMERGENCY DRIVER.	PINNACLE	L6D1-A-70-935VHO-8-ACST-U-EE1-N-0-W-NLIGHT-1-1PL	UNV	P	LED	11.7/ FT	1250/FT	L70@ 175,000HRS	90	3500K	0-10V	WHITE	10W INTEGRAL EMERGENCY DRIVER W/ INTEGRAL TEST SWITCH.	N/A TO MATCH 3RD FLOOR
PS4	4FT SLIM EXTRUDED ALUMINUM DIRECT/INDIRECT PENDANT	PINNACLE	EX3D1-A-HE-935HO-935-4-ACST-U-EE1-N-0-W-NLIGHT	UNV	P	LED	9.7/LF	750/LF	L70@ 136,200HRS	90	3500K	0-10V	WHITE	- - -	N/A TO MATCH 3RD FLOOR
PS4E	SAME AS TYPE "PS4" EXCEPT PROVIDED WITH EMERGENCY DRIVER.	PINNACLE	EX3D1-A-HE-935HO-935-4-ACST-U-EE1-N-0-W-NLIGHT-1-1PL	UNV	P	LED	9.7/LF	750/LF	L70@ 136,200HRS	90	3500K	0-10V	WHITE	10W INTEGRAL EMERGENCY DRIVER W/ INTEGRAL TEST SWITCH.	N/A TO MATCH 3RD FLOOR
PS8	8FT SLIM EXTRUDED ALUMINUM DIRECT/INDIRECT PENDANT	PINNACLE	EX3D1-A-HE-935HO-935-8-ACST-U-EE1-N-0-W-NLIGHT	UNV	P	LED	9.7/LF	750/LF	L70@ 136,200HRS	90	3500K	0-10V	WHITE	- - -	N/A TO MATCH 3RD FLOOR
PS8E	SAME AS TYPE "PS8" EXCEPT PROVIDED WITH EMERGENCY DRIVER.	PINNACLE	EX3D1-A-HE-935HO-935-8-ACST-U-EE1-N-0-W-NLIGHT-1-1PL	UNV	P	LED	9.7/LF	750/LF	L70@ 136,200HRS	90	3500K	0-10V	WHITE	10W INTEGRAL EMERGENCY DRIVER W/ INTEGRAL TEST SWITCH.	N/A TO MATCH 3RD FLOOR
UC	CONTINUOUS LINEAR UNDERCABINET FIXTURE WITH REMOTE 0-10V DIMMING DRIVER	DIODE LED	DI-12V-DB35-8009/DI-CPCHB-SQC20-ACC	277	S	LED	5.75/FT	530/FT	L70@ 50,000HRS	>80	3500K	0-10V	*FBA*	FURNISH W/ NLIGHT AIR RPP20 / RPP20ER POWER PACK W/ 0-10V DIMMING AS REQUIRED BY THE APPLICATION	-
X	LOW PROFILE THERMOPLASTIC EXIT SIGN.	EVEN LIGHT	TLX-AC-RU-W	UNV	U	LED	2W	N/A	N/A	N/A	RED	N/A	WHITE	- - -	-

BRANCH CIRCUIT PANELS SCHEDULE

NOTES:
1. NOTES 2 & 3 APPLY TO ALL PANEL BOARDS.
2. PROVIDE WITH LUGS TO ACCOMMODATE CONDUCTOR SIZES AS IDENTIFIED ON THE RISER DIAGRAM FOR SUPPLY AND ALL LOADS. (THIS NOTE APPLICABLE TO ALL TERMINATIONS.)
3. PANEL SHALL BE FULLY RATED UNLESS NOTE 5 REFERENCED IN THE NOTES SECTION.
4. NOTES 5-10 ARE OPTIONS WHICH SHALL BE SPECIFICALLY INDICATED IN NOTES SECTION FOR INCLUSION.
5. INTERRUPTING CAPABILITY BY UL LISTED SERIES RATED SYSTEM. PROVIDE NAMEPLATES IN ACCORDANCE WITH NEC REQUIREMENTS IDENTIFYING SERIES RATING APPLICATION.
6. PROVIDE WITH 120V SHUNT TRIP MAIN CIRCUIT BREAKER.
7. BRANCH GROUND FAULT CIRCUIT INTERRUPTER BREAKER RATED FOR 4-6 ma FOR PERSONAL PROTECTION; QTY. AND RATING IN PARENTHESIS. I.E.: 7 (4-20/1)
8. BRANCH GROUND FAULT EARTH LEAKAGE BREAKER RATED FOR 30 ma FOR EQUIPMENT PROTECTION; QTY. AND RATING IN PARENTHESIS. I.E.: 8 (2-30/1)
9. BRANCH SHUNT TRIP BREAKER (120V COIL); QTY. AND RATING IN PARENTHESIS. I.E.: 9 (3-60/1)
10. BRANCH ARC FAULT CIRCUIT INTERRUPTER BREAKER; QTY. AND RATING IN PARENTHESIS. I.E.: 10 (8-20/1)

DESIGNATION	LOCATION	MTG.	ELECTRICAL CHARACTERISTICS							200% NEUTRAL BUS	ISOLATED GROUND BUS	FEED THRU LUGS	SURGE PROTECTIVE DEVICE	TOTAL POLES	BRANCH CIRCUIT BREAKERS																								NOTES
			BUS AMPS	MAIN		VOLTAGE	PHASE	WIRE	AIC						1 POLE							2 POLE							3 POLE									
				MCB	MLO										15	20	25	30	35	40	45	50	60	15	20	25	30	35	40	45	50	60	15	20	25	30	35	40	45	50	60	
LAB2	2028	SURFACE	225	225	-	120/208	3	4	10K	NO	NO	YES	YES	120	-	67	-	-	-	-	-	-	-	-	-	-	-	-	-	-	-	1	-	10	-	-	-	-	-	-	1	ALL EXISTING TO REMAIN CIRCUITS SHALL BE CAPTURED AND RE-TERMINATED TO MATCH EXISTING.
LAB2A	2066	SURFACE	225	225	-	120/208	3	4	10K	NO	NO	NO	YES	84	-	75	-	-	-	-	-	-	-	-	-	-	-	-	-	-	-	1	-	-	-	-	-	-	-	-	1	ALL EXISTING TO REMAIN CIRCUITS SHALL BE CAPTURED AND RE-TERMINATED TO MATCH EXISTING.

ELECTRICAL CONNECTION SCHEDULE FOR MECHANICAL EQUIPMENT

MECHANICAL EQUIPMENT NOTES:
1. BRANCH CIRCUIT WIRING METHODS SHALL BE AS NOTED ON THE DRAWINGS AND/OR SPECIFICATIONS FOR THE APPLICABLE LOCATION.
2. "FLEX" DENOTES FINAL THREE FEET (MAXIMUM) OF RACEWAY SHALL BE FLEXIBLE METAL OR LIQUIDTIGHT METAL CONDUIT.
3. "CP" DENOTES FINAL CONNECTION TO BOX OR CONTROL PANEL PREWIRED TO THE EQUIPMENT.
4. "REC" PROVIDE RECEPTACLE IN THE NEMA CONFIGURATION NOTED. PROVIDE GFCI TYPE AT OUTDOOR LOCATIONS, KITCHEN AREAS, OR WITHIN 6'-0" OF A SINK.
5. "WP" INDICATES PROVIDE WEATHERPROOF INSTALLATION OF RACEWAY SYSTEM.
6. MOTOR-RATED SWITCH SHALL HAVE THERMAL OVERLOAD ELEMENTS SIZED PER THE MANUFACTURER'S RECOMMENDATIONS.
7. NOTES 8 ON ARE OPTIONS WHICH SHALL BE SPECIFICALLY NOTED IN REMARKS FOR INCLUSION.
8. DISCONNECT PROVIDED INTEGRAL (PREWIRED) TO EQUIPMENT BY OTHERS.

XXX / XX TAG#	DESCRIPTION	EQUIPMENT CHARACTERISTICS								PANEL/ CIRCUIT	CIRCUIT BREAKER SIZE	FEEDER AND CONDUIT	EQUIPMENT LOCATION	CONNECTION									NOTES
		VOLTS	PHASE	FLA	MCA	MOCP	HP	KVA	CFM					FLEX	CP	REC.	S_T	DISCONNECT SWITCH				WP	
																		SIZE	FUSE	POLE	NEMA		
AC-17	AIR HANDLING UNIT	480	3	-	26.25	45	-	-	10200	REUSE EXISTING FEED	45A/3P	3#6+1#10G IN 3/4"C	I.T. STAFF 2064	X	-	-	-	60	45	3	1	-	-
AC-18	AIR HANDLING UNIT	480	3	-	26.25	45	-	-	8550	REUSE EXISTING FEED	45A/3P	3#6+1#10G IN 3/4"C	STORAGE	X	-	-	-	60	45	3	1	-	-

SURGE PROTECTION LEGEND

NOTES:
1. MANUFACTURER OF SPD DEVICE SHALL MATCH THE SWITCHBOARD AND PANELBOARD MANUFACTURER.
2. PROVIDE 4#6+1#10G IN 1"C. VIA 60A-3P TO EACH SPD.
3. EXTERNAL SPD'S MAY BE INTERNAL TYPE, ONLY IF POLE SPACE IS NOT SACRIFICED.
4. EXACT LOCATION SHALL BE DETERMINED IN THE FIELD. PROVIDE WORKING CLEARANCES IN ACCORDANCE WITH THE NEC.

SURGE SUPPRESSION DEVICE	EXPOSURE LEVEL	INTERNAL	EXTERNAL	MANUFACTURER	MODEL NUMBER
SPD	LOW - 80KA	-	X	EATON	SPD-80-2-K

WILLIAM STARCK ARCHITECTS, INC.
126 COVE STREET
FALL RIVER, MASSACHUSETTS 02720
10 DORRANCE STREET, SUITE 700
PROVIDENCE, RI 02903
T: 508.679.5733
F: 508.672.8556
WWW.STARCKARCHITECTS.COM

CREATIVE ENVIRONMENT CORP.
CONSULTING ENGINEERS
Cranston Springfield Braintree
CEC#2017011O
MECHANICAL | ELECTRICAL | PLUMBING
FIRE PROTECTION | TELECOM | SECURITY
P. 401-438-7733 | www.cec-engineering.com

These plans, drawings, designs, specifications and other components in this set are and shall remain the property of William Starck Architects. No part thereof shall be copied, disclosed to others, or used in connection with any work or project, other than the specified project for which they have been prepared and developed, without the express knowledge and written consent of William Starck Architects.

2nd FLOOR LAB RENOVATIONS
AT THE
C.C.R.I. KNIGHT CAMPUS
400 EAST AVENUE
WARWICK, R.I. 02886

REVISIONS:

SCALE: As Noted
DATE: 7November2019
DRAWN BY: NG
JOB NUMBER: 17-144
DRAWING NAME: **SCHEDULES**
DRAWING NUMBER: **E7.1**
COMMENTS: PERMIT SET

POKE-THRU DEVICE SCHEDULE

NOTES:
1. FINISH SHALL BE BY ARCHITECT; PROVIDE BLACK FINISH AT MINIMUM.
2. ALL FACEPLATE OPENINGS SHALL BE CLOSED OFF WITH MANUFACTURER BLANK OFF PLATES IF THEY ARE NOT USED, TO MAINTAIN THE FIRE RATING OF THE DEVICE (TYP).
3. CORE DRILL HOLE IN CONCRETE SLAB FOR POKE-THRU DEVICE AS REQUIRED. VERIFY EXACT LOCATIONS WITH OWNER PRIOR TO ANY INSTALLATION INSTRUCTIONS PRIOR TO ANY WORK (TYP).
4. REFER TO THE MANUFACTURERS INSTALLATION INSTRUCTIONS PRIOR TO ANY WORK (TYP).
5. PROVIDE ALL NECESSARY COMPONENTS FOR A COMPLETE INSTALLATION (TYP).
6. REFER TO SPECIFICATIONS FOR ADDITIONAL INFORMATION.
7. E.C. TO COORDINATE WITH FLOOR INSTALLER PRIOR TO FLOOR INSTALLATION AND FLANGE INSTALLATION.
8. PROVIDE SUITABLE FITTINGS TO ACCOMMODATE EXPANSION AND DEFLECTION WHERE CONDUIT CROSSES SEISMIC, CONTROL AND EXPANSION JOINTS.
9. THE ELECTRICAL CONTRACTOR SHALL COORDINATE ALL FIRE RATED POKE-THRU'S, FLOOR BOXES, ACCESSORIES AND FITTINGS NEEDED FOR A COMPLETE INSTALLATION WITH THE MANUFACTURER PRIOR TO BID. DETAILS SHOWN ON ALL DRAWINGS ARE SUBJECTED TO REVIEW AND COORDINATION WITH MANUFACTURER.
10. COORDINATE COVER TYPE WITH ARCHITECT AND FLOOR FINISHES/TYPES PRIOR TO SUBMITTING.

TYPE	MANUFACTURER	SERIES	CORE	POWER	CONDUIT SIZE	TELECOMMUNICATIONS	CONDUIT SIZE	AUDIO/VISUAL & MISC	CONDUIT SIZE	NOTES
A	LEGRAND	EVOLUTION 8AT	8"	(2)DUPLEX	3/4"	(1)GANG; (1) 4	1"	(1) GANG; (1) B AV H	1.5"	1-10
B	LEGRAND	EVOLUTION 6AT	6"	(2)DUPLEX	3/4"	(1)GANG; (1) 6	1.25"	N/A	N/A	1-10
C	LEGRAND	EVOLUTION 6AT	6"	(2)DUPLEX	3/4"	N/A	N/A	N/A	N/A	1-10

ELECTRONIC DISPLAY SCHEDULE

NOTES:
1. DISPLAY SPECIFICATION IS PER CCRI'S STANDARDS.
2. PROVIDE ALL REQUIRED ACCESSORIES AND MOUNTING HARDWARE FOR A COMPLETE OPERATIONAL SYSTEM.
3. PROVIDE ALL REQUIRED PROGRAMMING AND CONFIGURATIONS PER CCRI; PROVIDE (2) HOURS PER DISPLAY AT A MINIMUM.

TYPE	MANUFACTURER	MODEL #	SIZE	RESOLUTION	MOUNT TYPE	MANUFACTURER	PART #	NOTES
A	DELL	C8618QT	86"	4K UHD (2160P)	FIXED	CHIEF	6T3DR	1

DISPLAY OUTLET DEVICE SCHEDULE

NOTES:
1. FINISH SHALL BE BY ARCHITECT; PROVIDE WHITE FINISH AT MINIMUM.
2. PROVIDE BLANK COVER PLATES AS NEEDED.
3. TELECOMMUNICATIONS CONDUITS SHALL STUB INTO EXISTING CORRIDOR CABLE TRAY.
4. AV CONDUIT SHALL BE RUN TO NEAREST TEACHER STATION POKE-THRU DEVICE OR WALL MOUNTED TEACHER STATION AV DEVICE.

TYPE	MANUFACTURER	SERIES	GANG QUANTITY	POWER	CONDUIT SIZE	TELECOMMUNICATIONS	CONDUIT SIZE	AUDIO/VISUAL & MISC	CONDUIT SIZE	NOTES
A	LEGRAND	EFSB4	4	(2)DUPLEX	3/4"	(1)GANG; (1) 2	1"	(1) GANG; (1) A AV H	1.5"	1-4
B	SURFACE MOUNTED RACEWAY			(2)DUPLEX	3/4"	(1)GANG; (1) 2	1"	(1) GANG; (1) A AV H	1.5"	1-4

TELECOMMUNICATIONS CABLING SCHEDULE

NOTES:
1. COORDINATE COLOR CODING SCHEME WITH OWNER'S IT DEPARTMENT PRIOR TO ORDERING.
2. PROVIDE FACTORY MADE PATCH CORDS THAT MATCH THE COLOR, MANUFACTURER AND CATEGORY OF HORIZONTAL CABLING IN WHICH IT IS PATCHING. PROVIDE (1) 5 FOOT CABLE FOR EACH CONNECTOR WITHIN EACH IDF 2004,2103 AND (1) 6 FOOT CABLE AT EACH WORK AREA OUTLET. PROVIDE 20 PERCENT SPARE ATTIC STOCK FOR EACH TYPE. COORDINATE EXACT LENGTHS WITH CCRI PRIOR TO SUBMITTING.
3. PROVIDE FACTORY MADE PATCH CORDS THAT MATCH THE COLOR, MANUFACTURER AND CATEGORY OF HORIZONTAL CABLING IN WHICH IT IS PATCHING. PROVIDE (1) 5 FOOT CABLE FOR EACH CONNECTOR WITHIN EACH CISCO RACK. AT WORKSTATION OUTLET 25PERCENT OF THE PATCH CORDS SHALL BE 6 FOOT, 10FT, 14FT AND 18FT. PROVIDE 20 PERCENT SPARE ATTIC STOCK FOR EACH TYPE. COORDINATE EXACT LENGTHS WITH CCRI PRIOR TO SUBMITTING.

TYPE	MANUFACTURER	PART #	CATEGORY	FLAME RATING	SHIELDING	COLOR	NOTES	ALTERNATE MANUFACTURER
COPPER								
AV	GENERAL	71418**	6A	CMP	UTP	ORANGE	1, 2	NONE
DATA	GENERAL	71418**	6A	CMP	UTP	BLUE	1, 2	NONE
WAP	GENERAL	71418**	6A	CMP	UTP	GREEN	1, 2	NONE
CISCO 1	GENERAL	71418**	6A	CMP	UTP	RED	1, 3	NONE
CISCO 2	GENERAL	71418**	6A	CMP	UTP	YELLOW	1, 3	NONE
CISCO 3	GENERAL	71418**	6A	CMP	UTP	BLUE	1, 3	NONE
CISCO 4	GENERAL	71418**	6A	CMP	UTP	GREEN	1, 3	NONE
FIBER								
FIBER-1	PANDUIT	FOPPX12Y	OM3	OFCP	ARMORED	AQUA	1	NONE

TELECOMMUNICATIONS CONNECTOR SCHEDULE

NOTES:
1. REFER TO TELECOMMUNICATIONS FACEPLATE DETAIL FOR ADDITIONAL INFORMATION.
2. ALL TELECOMMUNICATIONS CONNECTORS SHALL BE PER COMMUNITY COLLEGE OF RHODE ISLAND INFORMATION TECHNOLOGY STANDARDS.
3. TERMINATED ON ROOM/AREA CISCO#1 RACK.
4. TERMINATED ON ROOM/AREA CISCO#2 RACK.

TYPE	MANUFACTURER	PART #	CATEGORY	CONNECTOR	COLOR	NOTES	ALTERNATE MANUFACTURER
AV	PANDUIT	CJ6X88TG**	6A	8P8C	ORANGE	1,2	NONE
DATA	PANDUIT	CJ6X88TG**	6A	8P8C	BLUE	1,2	NONE
WAP	PANDUIT	CJ6X88TG**	6A	8P8C	GREEN	1,2	NONE
CISCO 1	PANDUIT	CJ6X88TG**	6A	8P8C	RED	1,2,3	NONE
CISCO 2	PANDUIT	CJ6X88TG**	6A	8P8C	YELLOW	1,2,3	NONE
CISCO 3	PANDUIT	CJ6X88TG**	6A	8P8C	BLUE	1,2,4	NONE
CISCO 4	PANDUIT	CJ6X88TG**	6A	8P8C	GREEN	1,2,4	NONE

TELECOMMUNICATIONS PATCH PANEL SCHEDULE

NOTES:
1. REFER TO TELECOMMUNICATIONS CONNECTOR SCHEDULE FOR ADDITIONAL INFORMATION.
2. FIELD LOAD PATCH PANELS WITH CONNECTORS TO MATCH FACEPLATE CONNECTORS. REFER TO TELECOMMUNICATIONS CONNECTOR SCHEDULE FOR ADDITIONAL INFORMATION.
3. TERMINATE TYPE "WAP" CABLING ON TYPE "DATA" PATCH PANELS.

TYPE	MANUFACTURER	PART #	CATEGORY	SHIELDING	PORT COUNT	CONNECTOR	NOTES	ALTERNATE MANUFACTURER
COPPER								
DATA	PANDUIT	CPPA48FMWBLY	6A	DIELECTRIC	48	8P8C	1-3	NONE
CISCO	PANDUIT	CPP48FMWBLY	6A	DIELECTRIC	48	8P8C	1,2	NONE
FIBER								
FIBER 1U A	PANDUIT	(1) FRME1U, (3) FAP6WAQDLCZ	OM3	TIGHT BUFFER	18(36)	LC	1	NONE
FIBER 1U B	PANDUIT	(1) FRME1U, (1) FAP6WAQDLCZ	OM3	TIGHT BUFFER	6(12)	LC	1	NONE

TELECOMMUNICATIONS FACEPLATE SCHEDULE

NOTES:
1. REFER TO TELECOMMUNICATIONS FACEPLATE DETAIL FOR ADDITIONAL INFORMATION.
2. ALL TELECOMMUNICATIONS FACEPLATES SHALL BE PER COMMUNITY COLLEGE OF RHODE ISLAND INFORMATION TECHNOLOGY STANDARDS.

TYPE	GANG	MANUFACTURER	PART #	FINISH	NOTES	ALTERNATE MANUFACTURER
4 PORT	SINGLE	PANDUIT	CFPL4EIY	ELECTRIC IVORY	1,2	NONE
6 PORT	SINGLE	PANDUIT	CFPL6EIY	ELECTRIC IVORY	1,2	NONE

WILLIAM STARCK ARCHITECTS, INC.
126 COVE STREET
FALL RIVER, MASSACHUSETTS 02720
10 DORRANCE STREET, SUITE 700
PROVIDENCE, RI 02903
T: 508.679.5733
F: 508.672.8556
WWW.STARCKARCHITECTS.COM

CREATIVE ENVIRONMENT CORP.
CONSULTING ENGINEERS
Cranston Springfield Braintree
CEC#2017011O
MECHANICAL | ELECTRICAL | PLUMBING
FIRE PROTECTION | TELECOM | SECURITY
P. 401-438-7733 | www.cec-engineering.com

2nd FLOOR LAB RENOVATIONS
AT THE
C.C.R.I. KNIGHT CAMPUS
400 EAST AVENUE
WARWICK, R.I. 02886

REVISIONS:

SCALE: As Noted
DATE: 7November2019
DRAWN BY: NG
JOB NUMBER: 17-144
DRAWING NAME:
SCHEDULES (CONT.)

DRAWING NUMBER:
E7.2

COMMENTS:
PERMIT SET

These plans, drawings, designs, specifications and other instruments on this sheet are and shall remain the property of William Starck Architects. No part hereof shall be copied, disclosed to others, or used in connection with any work or project, other than the specified project for which they have been prepared and developed, without the express knowledge and written consent of William Starck Architects.

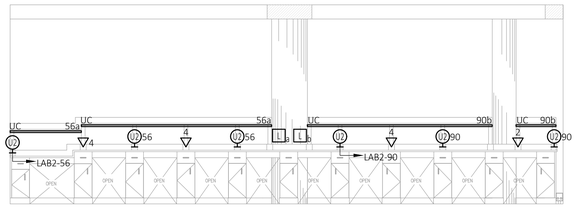

NOTES:
1. POWER, DATA, AND LIGHTING SHALL BE FEED FROM BELOW CONCEALED WITHIN MILLWORK. COORDINATE WITH ARCHITECT AND MILLWORK VENDOR PRIOR TO ROUGH-IN.

1 CLASSROOM 2034 - WEST ELEVATION

1/4" = 1'-0"

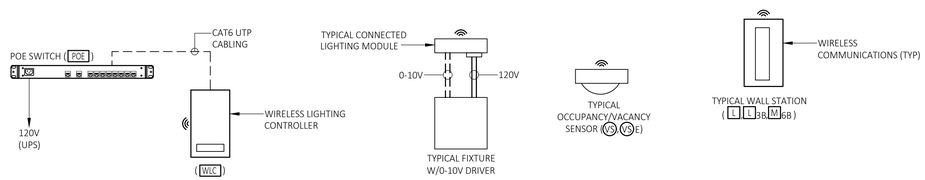

NOTES:
1. PROVIDE SWITCHING AND 0-10V DIMMING CONTROL FOR ALL LIGHTING WITH PRESETS.
2. PROVIDE ALL SYSTEM COMPONENTS (AND WARRANTIES) FROM A SINGLE MANUFACTURER.
3. PROVIDE GANGED MASTER AND LOCAL SWITCHES AT LOCATION AS INDICATED FOR USER CONTROL OF LIGHTING (UNDER COMMON MULTI-GANG PLATE).ALL SWITCHES SHALL BE PROVIDED WITH ENGRAVED LABELS ON PLATES DESIGNATING THEIR FUNCTION. FILL FOR ENGRAVED LETTERING SHALL BE AS DIRECTED BY THE ARCHITECT.
4. THE SYSTEM SHALL BE AS TYPICALLY INDICATED ABOVE INCLUDING, BUT NOT LIMITED TO, THE FOLLOWING SYSTEM COMPONENTS:

WIRELESS SIX BUTTON STATION:	#RPOB-2P-DX-WH-G2
WIRELESS THREE BUTTON STATION:	#RPOB-2P-WH-G2
WIRELESS TWO BUTTON STATION:	#RPOB-DX-WH-G2
WIRELESS OCCUPANCY/VACANCY SENSOR:	#RCMS-PDT-9
WIRELESS OCCUPANCY/VACANCY SENSOR (EXTENDED):	#RCMS-PDT-10
WIRELESS POWER PACK W/ 0-10V DIMMING:	#RPP20-D/RPP20-D-ER
WIRELESS LIGHTING CONTROLLER:	#NECY-MVOLT-BAC-GFXX/ NECY-ENC

5. REFER TO THE "ALCS METHODS OF OPERATION NOTES" FOR SYSTEM SETUP REQUIREMENTS.

ZONING & PRESET LEVELS:
1. INTERIOR SPACES SHALL BE PROGRAMMED FOR 50% AND 100% DIMMING LEVELS TO BE ACTIVATED VIA LOCAL SWITCH STATIONS. LEVELS MAY BE ADJUSTED OUTSIDE OF THESE PRESETS VIA THE LOCAL WALL STATION. HOWEVER, WHERE PHOTOSENSORS ARE PRESENT THE LIGHTING SHALL NOT BE ALLOWED TO EXCEED THE FOOT-CANDLE LEVEL ESTABLISHED BY THE SPACE'S PHOTOSENSOR BASED ON AVAILABLE DAYLIGHT CONTRIBUTION AT ANY GIVEN TIME.
2. LIGHTING WITHIN THE DAYLIGHT ZONE ADJACENT TO OPENINGS TO THE EXTERIOR SUCH AS WINDOWS AND SKYLIGHTS (DEPTH OF EACH DAYLIGHT ZONE RELATIVE TO THE DAYLIGHT OPENING SHALL BE AS DEFINED BY THE COMMONWEALTH OF MASSACHUSETTS ENERGY CODE) SHALL BE PROGRAMMED TO ALLOW FOR CONTROL SEPARATE FROM THE REMAINDER OF THE SPACE.
3. INTERIOR PATHS OF EGRESS SHALL BE PROGRAMMED TO ACTIVATE AT 50% LEVELS UPON RECEIPT OF AN OCCUPANCY SIGNAL FROM ANY SENSOR.
4. EXACT ZONING AND LEVEL PROGRAMMING SHALL BE COORDINATED WITH THE OWNER OR THEIR REPRESENTATIVE PRIOR TO SYSTEM SETUP AND PROGRAMMING OF THE SYSTEM. ALL PROGRAMMING SHALL BE CONFIRMED AND COMPLETED PRIOR TO COMMISSIONING. NO OWNER REQUESTED PROGRAMMING SHALL BE ALLOWED. WHICH WILL VIOLATE BUILDING, ELECTRICAL, AND ENERGY CODES OR ANY CODES. REFERENCED THEREIN.

SENSOR OPERATIONS:
1. INTERIOR PHOTOSENSORS (INTEGRAL TO OCCUPANCY/VACANCY SENSORS): EACH SENSOR SHALL BE PROGRAMMED TO MAINTAIN FOOT-CANDLE SETPOINTS ESTABLISHED FOR EACH SPACE DURING SYSTEM SETUP AND COMMISSIONING. DIMMING DEADBANDS AND FADE/RISE RATES SHALL BE ESTABLISHED TO PROVIDE SMOOTH, NON-INTRUSIVE, CHANGES IN SPACE LIGHT LEVELS IN RESPONSE TO CHANGING DAYLIGHT CONTRIBUTIONS AT ANY GIVEN TIME.
2. OCCUPANCY/VACANCY SENSORS (PROGRAMMABLE FOR FUNCTION): EACH SENSOR SHALL BE PROGRAMMED TO OPERATE IN A "VACANCY" MODE UNLESS OTHERWISE NOTED (CORRIDORS AND ALL PORTIONS OF THE EGRESS PATH ARE GENERAL EXCEPTIONS) SO THAT MANUAL ACTIVATION OF THE LIGHTING VIA LOCAL SWITCH STATIONS IS REQUIRED. SENSORS SHALL MAINTAIN LIGHTING AT SELECTED LEVELS LEVELS FOR AS LONG AS OCCUPANCY IS DETECTED. ABSENCE OF OCCUPANCY DETECTION FOR 20 MINUTES SHALL INITIATE "OFF" SIGNAL. FADE/RISE RATES SHALL BE ESTABLISHED TO PROVIDE SMOOTH, NON-INTRUSIVE, CHANGES IN SPACE LIGHT LEVELS. OCCUPANCY DETECTED AT ANYTIME PRIOR TO THE 20 MINUTE FULL TIME-OUT SHALL RETURN THE LIGHTING TO THE SELECTED LEVEL.
3. SENSOR ADJUSTMENTS FOR ALL FUNCTIONS SHALL BE TURNED TO THE MINIMUM ON EACH DEVICE AND ADJUSTED SOLELY THROUGH THE SYSTEM SOFTWARE.

2 AUTOMATED LIGHTING CONTROL SYSTEM (ALCS) ONE - LINE DIAGRAM (ACUITY NLIGHT AIR)

NOT TO SCALE

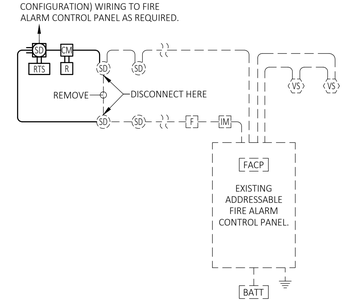

FIRE ALARM RISER NOTES:
1. ALL NEW AND EXISTING STROBES WITHIN THE SAME FIELD OF VIEW SHALL BE SYNCHRONIZED. EXACT METHOD FOR SYNCHRONIZATION SHALL BE SPECIFIC TO EACH FIRE ALARM MANUFACTURER. PROVIDE EVIDENCE OF SYNCHRONIZATION IN FIRE ALARM SUBMITTAL.
2. PROVIDE #14 MINIMUM WIRE SIZE AND 3/4" MINIMUM CONDUIT SIZE.
3. EXACT WIRING SHALL BE PER THE MANUFACTURER'S RECOMMENDATIONS. WHERE CONNECTING TO EXISTING LOOP, VERIFY THAT EXISTING LOOPS ARE NOT MAXED OUT PRIOR TO WORK.
4. ELECTRICAL CONTRACTOR SHALL PROVIDE REPROGRAMMING AS REQUIRED. UPDATE WITH NEW NOUN NAMES IN THE GRAPHIC MODULE AND FIRE ALARM CONTROL PANEL(S). UPDATE GRAPHIC MODULE AND FIRE ALARM AS-BUILT DRAWINGS AS REQUIRED.

3 PARTIAL FIRE ALARM SYSTEM (VOICE EVACUATION)

NOT TO SCALE

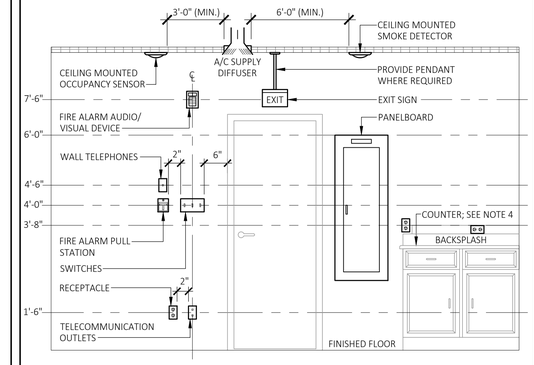

NOTES:
1. DEVICE LOCATIONS AND MOUNTING HEIGHTS SHALL BE CHECKED AGAINST THE ARCHITECTURAL PLANS AND ELEVATIONS PRIOR TO ROUGH-IN IN ORDER TO AVOID INTERFACES WITH CASEWORK, FURNITURE, WINDOWS, MIRRORS, EQUIPMENT, ETC.
2. LOCATIONS OF OUTLETS AND EQUIPMENT AS INDICATED ON THE DRAWINGS ARE APPROXIMATE. THE EXACT CENTER OF ALL OUTLETS SHALL BE PLACED IN COOPERATION WITH THE GENERAL CONTRACTOR AND ARCHITECT. CONTRACTOR SHALL EXAMINE ALL THE EXTERIOR DETAILS OF HE CONSTRUCTION DRAWINGS FOR OUTLET LOCATIONS NOT CONFORMING TO THE DETAIL ABOVE. WHERE DETAILED TO SPECIFIC LOCATIONS, THE ARCHITECTURAL DRAWINGS SHALL TAKE PRECEDENCE. IF AN OUTLET IS INSTALLED IN SUCH A LOCATION AS TO BE OUT OF PROPER RELATION TO BE CORRECTED BY AT THE EXPENSE OF THE CONTRACTOR UNDER THE DIRECTION OF THE ARCHITECT OR ENGINEER.
3. DEVICES SHALL BE CENTERED IN A COMMON VERTICAL PLANE. HEIGHT SHALL BE MEASURED FROM FINISHED FLOOR TO CENTERLINE OF DEVICE EXCEPT EXIT SIGNS, AND FIRE ALARM SIGNALS. COORDINATE LOCATIONS WITH MATERIALS SUCH AS MASONRY UNITS.
4. REFER TO THE ARCHITECTS ELEVATION DETAILS FOR EXACT MOUNTING HEIGHT AND LENGTH OF SURFACE RACEWAYS. RECEPTACLE MOUNTING HEIGHT ABOVE COUNTERS SHALL BE COORDINATED WITH CASEWORK HEIGHTS.

4 TYPICAL DEVICE MOUNTING HEIGHTS DETAIL

NOT TO SCALE

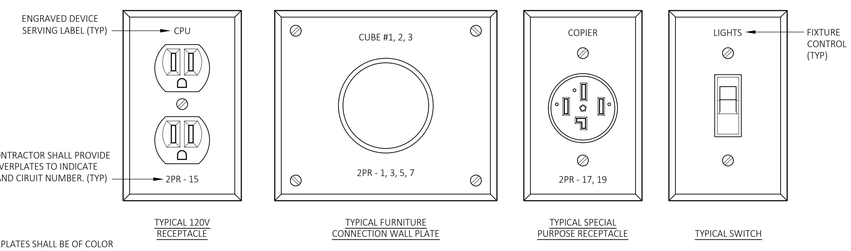

NOTE:
1. GENERAL RECEPTACLES AND COVERPLATES SHALL BE OF COLOR AS SELECTED BY ARCHITECT, UNLESS OTHERWISE INDICATED.

5 TYPICAL LABELING SYSTEM FOR DEVICE PLATES DETAIL

NOT TO SCALE

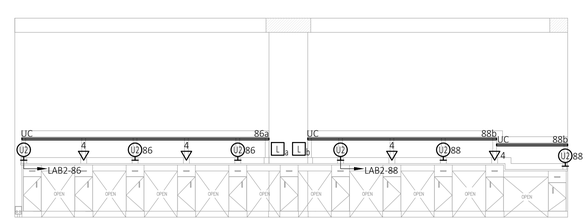

NOTES:
1. POWER, DATA, AND LIGHTING SHALL BE FEED FROM BELOW CONCEALED WITHIN MILLWORK. COORDINATE WITH ARCHITECT AND MILLWORK VENDOR PRIOR TO ROUGH-IN.

6 CLASSROOM 2026 - EAST ELEVATION

1/4" = 1'-0"

WILLIAM STARCK ARCHITECTS, INC.
126 COVE STREET
FALL RIVER, MASSACHUSETTS 02720
10 DORRANCE STREET, SUITE 700
PROVIDENCE, RI 02903
T: 508.679.5733
F: 508.672.8556
WWW.STARCKARCHITECTS.COM

CREATIVE ENVIRONMENT CORP.
CONSULTING ENGINEERS
Cranston Springfield Braintree
CEC#2017011O
MECHANICAL | ELECTRICAL | PLUMBING
FIRE PROTECTION | TELECOM | SECURITY
P. 401-438-7733 | www.cec-engineering.com

2nd FLOOR LAB RENOVATIONS
AT THE
C.C.R.I. KNIGHT CAMPUS
400 EAST AVENUE
WARWICK, R.I. 02886

These plans, drawings, designs, specifications and other instruments as this sheet are and shall remain the property of William Starck Architects. No part hereof shall be copied, disclosed to others, or used in connection with any work or project, other than the specified project, for which they have been prepared and developed, without the express knowledge and written consent of William Starck Architects.

REVISIONS:

SCALE:	As Noted
DATE:	7November2019
DRAWN BY:	NG
JOB NUMBER:	17-144

DRAWING NAME:
DETAILS

DRAWING NUMBER:
E8.1

COMMENTS:
PERMIT SET

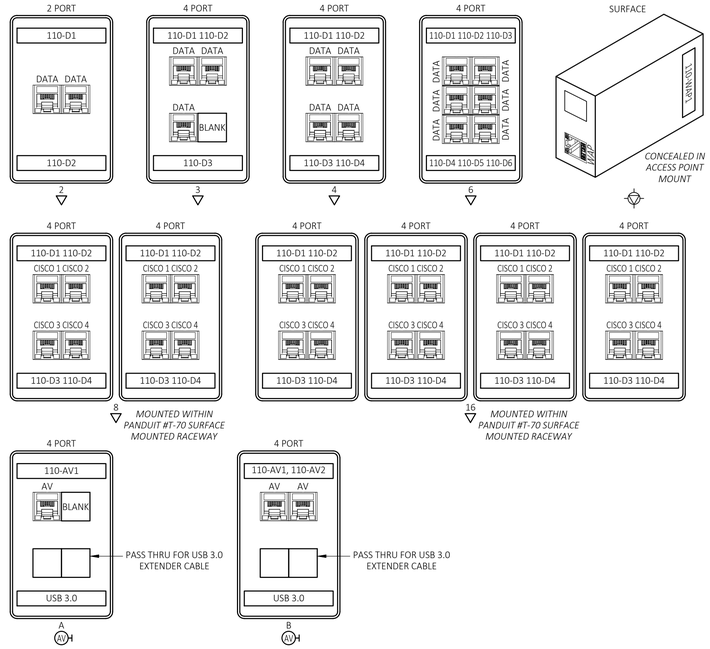

NOTES:

1. REFER TO TELECOMMUNICATIONS ROUGH-IN DETAIL FOR ADDITIONAL INFORMATION.
2. REFER TO TELECOMMUNICATIONS CONNECTOR SCHEDULE FOR ADDITIONAL INFORMATION.
3. REFER TO TELECOMMUNICATIONS CABLING SCHEDULE FOR ADDITIONAL INFORMATION.
4. REFER TO TELECOMMUNICATIONS FACEPLATE SCHEDULE FOR ADDITIONAL INFORMATION.
5. PROVIDE A 10FT SERVICE COIL ON ALL WIRELESS ACCESS POINT (WAP) CABLES; CONCEAL COIL.
6. COORDINATE ALL FACEPLATE FINISH SELECTIONS WITH CCRI PRIOR TO ORDERING.
7. WIRELESS ACCESS POINTS ARE TO BE FURNISHED BY CCRI IT (ACCESS POINTS AND MOUNTS); LOW VOLTAGE CONTRACTOR SHALL INSTALL ALL ACCESS POINTS.
8. ALL TELECOMMUNICATIONS AND AV CABLING SHALL BE CONCEALED; PROVIDE 1" CONDUIT AT A MINIMUM.

1 TELECOMMUNICATIONS FACEPLATE DETAIL

NOT TO SCALE

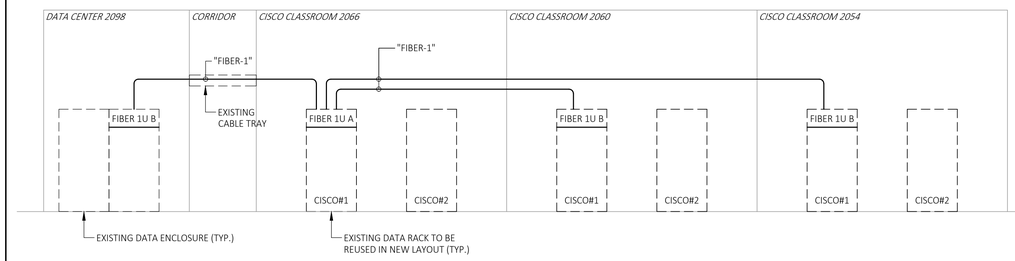

NOTES:

1. COORDINATE IN FIELD WITH COMMUNITY COLLEGE OF RHODE ISLANDS INFORMATION TECHNOLOGY DEPARTMENT ON EXACT DATA ENCLOSURE TO TERMINATE NEW FIBER CABLING IN DATA CENTER 2098.
2. CABLING SHALL BE RAN IN EXISTING AND NEW CABLE TRAYS.
3. ALL CABLING, CONNECTORS AND ENCLOSURES SHALL BE LABELED PER COMMUNITY COLLEGE OF RHODE ISLAND INFORMATION TECHNOLOGY DEPARTMENTS STANDARDS.
4. PROVIDE ALL REQUIRED LC FIBER EQUIPMENT JUMPERS; COORDINATE EXACT LENGTH WITH CCRI IT DEPARTMENT PRIOR TO ORDERING. PROVIDE 5FT AT A MINIMUM.
5. REWORK EXISTING RACKS/ENCLOSURES TO ACCOMMODATE NEW FIBER ENCLOSURES.

2 CISCO CLASSROOM BACK BONE ONE-LINE DIAGRAM

NOT TO SCALE

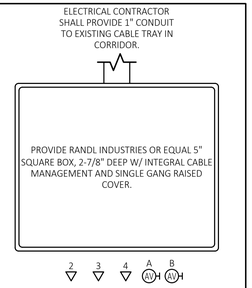

NOTES:

1. REFER TO TELECOMMUNICATIONS FACEPLATE DETAIL FOR ADDITIONAL INFORMATION.
2. ELECTRICAL CONTRACTOR SHALL PROVIDE A FULL TELECOMMUNICATIONS INDUSTRY ASSOCIATION (TIA) COMPLIANT RACEWAY SYSTEM.
3. ELECTRICAL CONTRACTOR SHALL PROVIDE PULL LINE IN ALL EMPTY CONDUITS/RACEWAYS AND BUSHED ENDS AT THE END OF EACH TERMINATED CONDUIT.
4. ELECTRICAL CONTRACTOR SHALL COORDINATE EXACT RACEWAY REQUIREMENTS WITH TELECOMMUNICATIONS CONTRACTOR PRIOR TO ORDERING.

3 TELECOMMUNICATIONS ROUGH-IN DETAIL (RECESSED)

NOT TO SCALE TC-02

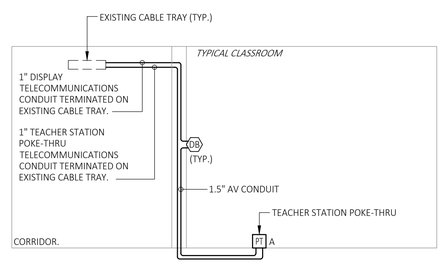

NOTES:

1. REFER TO TELECOMMUNICATIONS ROUGH-IN DETAIL FOR ADDITIONAL INFORMATION.
2. REFER TO TELECOMMUNICATIONS CONNECTOR SCHEDULE FOR ADDITIONAL INFORMATION.
3. REFER TO TELECOMMUNICATIONS CABLING SCHEDULE FOR ADDITIONAL INFORMATION.
4. REFER TO TELECOMMUNICATIONS FACEPLATE SCHEDULE FOR ADDITIONAL INFORMATION.

4 TELECOMMUNICATIONS AND AV CONDUIT DETAIL

NOT TO SCALE AV-69

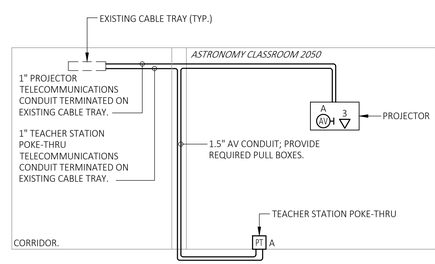

NOTES:

1. REFER TO TELECOMMUNICATIONS ROUGH-IN DETAIL FOR ADDITIONAL INFORMATION.
2. REFER TO TELECOMMUNICATIONS CONNECTOR SCHEDULE FOR ADDITIONAL INFORMATION.
3. REFER TO TELECOMMUNICATIONS CABLING SCHEDULE FOR ADDITIONAL INFORMATION.
4. REFER TO TELECOMMUNICATIONS FACEPLATE SCHEDULE FOR ADDITIONAL INFORMATION.

5 TELECOMMUNICATIONS AND AV CONDUIT DETAIL - ASTRONOMY 2050

NOT TO SCALE AV-69

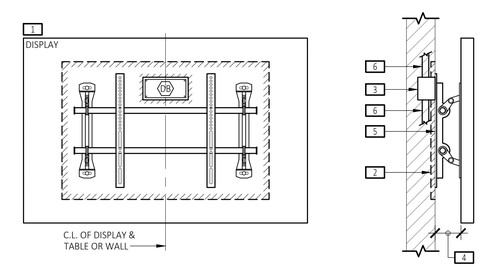

KEYED DETAIL NOTES:

1. DISPLAY AND DISPLAY MOUNT SHALL BE PROVIDED BY THE AUDIO VISUAL CONTRACTOR.
2. G.C. TO PROVIDE BACKING - FIRE-RATED PLYWOOD OR STEEL STRAPS TO COVER FOOTPRINT OF MOUNT. FINISH EXPOSED BACKING TO MATCH ADJACENT FINISHES.
3. DISPLAY BOXES SHALL BE CENTERED, READILY ACCESSIBLE AND FULLY CONCEALED BEHIND DISPLAY.
4. PROVIDE 2" TO 3" CLEARANCE AROUND DISPLAY FOR VENTILATION.
5. PROVIDE STRUCTURALLY SUITABLE ANCHORS FOR DISPLAY MOUNT.
6. TELECOMMUNICATIONS AND AV CONDUIT SERVING DISPLAY BOX

6 WALL MOUNTED DISPLAY DETAIL

NOT TO SCALE AV-03

WILLIAM STARCK ARCHITECTS, INC.
126 COVE STREET
FALL RIVER, MASSACHUSETTS 02720
10 DORRANCE STREET, SUITE 700
PROVIDENCE, RI 02903
T: 508.679.5733
F: 508.672.8556
WWW.STARCKARCHITECTS.COM

CREATIVE ENVIRONMENT CORP.
CONSULTING ENGINEERS
CEC#2017011O
Cranston Springfield Braintree
MECHANICAL | ELECTRICAL | PLUMBING
FIRE PROTECTION | TELECOM | SECURITY
P. 401-438-7733 | www.cec-engineering.com

2nd FLOOR LAB RENOVATIONS

AT THE

C.C.R.I. KNIGHT CAMPUS

400 EAST AVENUE
WARWICK, R.I. 02886

REVISIONS:

SCALE:	As Noted
DATE:	7November2019
DRAWN BY:	NG
JOB NUMBER:	17-144

DRAWING NAME:

DETAILS (CONT.)

DRAWING NUMBER:

E8.2

COMMENTS:

PERMIT SET

These plans, drawings, designs, specifications and other components of this set are and shall remain the property of William Starck Architects. No part thereof shall be copied, disclosed to others, or used in connection with any work or project, other than the specified project for which they have been prepared and developed, without the express knowledge and written consent of William Starck Architects.

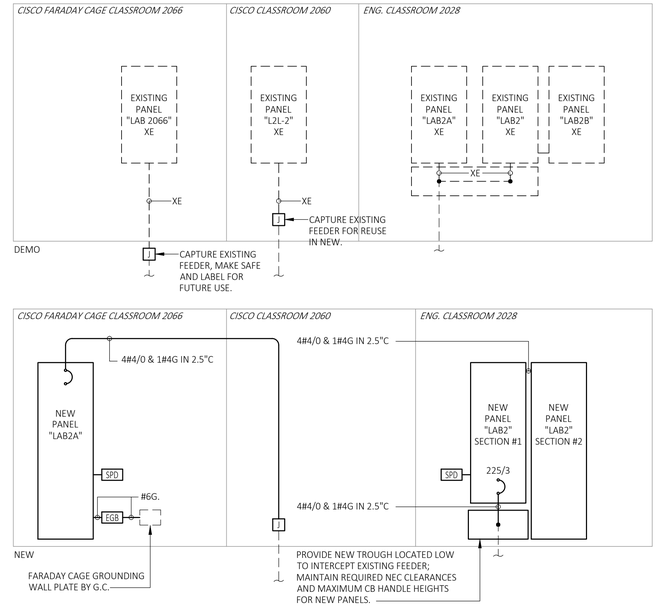

1 POWER RISER DIAGRAM

NOT TO SCALE

DETAIL KEYED NOTES:

1. PANDUIT PAN-WAY LD-10 SURFACE MOUNTED RACEWAY, OUTLET BOXES AND ALL REQUIRED ACCESSORIES; FASTENED TO BACK OF LAB BENCHES. DATA CABLING WITHIN RACEWAY SHALL BE TERMINATED ON PANDUIT #TX6A FIELD TERMINATED PLUG AT POKE-THRU END AND SPECIFIED JACK AND FACEPLATE AT DEVICE END.
2. PROVIDE BLACK MESH BRAIDED CABLE SOCK TO CONNECT LD-10 TO POKE-THRU; MESH SHALL BE FIRE RETARDANT.
3. SURFACE MOUNTED PLUGMOLD WITH FACTORY NEMA 5-20P POWER CORD FASTENED TO BACK OF LAB BENCH. POWER CORD SHALL BE NEATLY FASTENED TO SIDE OF LAB BENCH TERMINATING AT SERVING POKE-THRU.

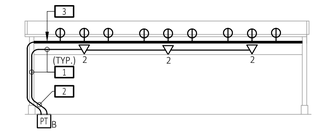

NOTES:

1. COORDINATE EXACT MOUNTING LOCATIONS WITH ARCHITECT AND MILLWORK VENDOR PRIOR TO ROUGH-IN.
2. DEVICE AND RACEWAY FINISHES SHALL BE COORDINATED WITH ARCHITECT PRIOR TO SUBMITTING. PROVIDE CUSTOM FINISH AS REQUIRED.

2 TYPICAL LAB BENCH POWER AND DATA DETAIL

NOT TO SCALE

DETAIL KEYED NOTES:

1. SURFACE MOUNTED PLUGMOLD WITH FACTORY NEMA 5-20P POWER CORD FASTENED TO BACK OF LAB BENCH. POWER CORD SHALL BE NEATLY FASTENED TO SIDE OF LAB BENCH TERMINATING AT SERVING POKE-THRU.

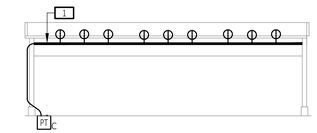

NOTES:

1. COORDINATE EXACT MOUNTING LOCATIONS WITH ARCHITECT AND MILLWORK VENDOR PRIOR TO ROUGH-IN.
2. DEVICE AND RACEWAY FINISHES SHALL BE COORDINATED WITH ARCHITECT PRIOR TO SUBMITTING. PROVIDE CUSTOM FINISH AS REQUIRED.

3 TYPICAL LAB BENCH POWER DETAIL

NOT TO SCALE

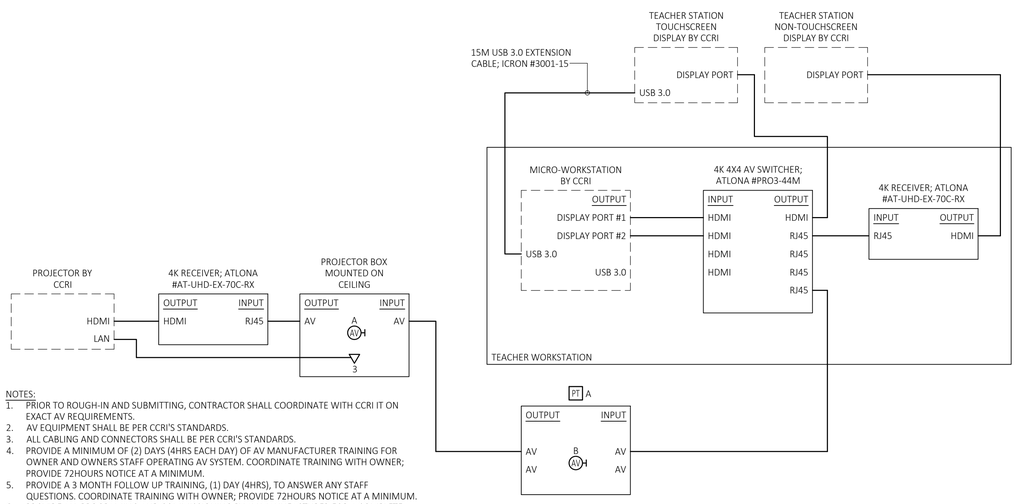

NOTES:

1. PRIOR TO ROUGH-IN AND SUBMITTING, CONTRACTOR SHALL COORDINATE WITH CCRI IT ON EXACT AV REQUIREMENTS.
2. AV EQUIPMENT SHALL BE PER CCRI'S STANDARDS.
3. ALL CABLING AND CONNECTORS SHALL BE PER CCRI'S STANDARDS.
4. PROVIDE A MINIMUM OF (2) DAYS (4HRS EACH DAY) OF AV MANUFACTURER TRAINING FOR OWNER AND OWNERS STAFF OPERATING AV SYSTEM. COORDINATE TRAINING WITH OWNER; PROVIDE 72HOURS NOTICE AT A MINIMUM.
5. PROVIDE A 3 MONTH FOLLOW UP TRAINING, (1) DAY (4HRS), TO ANSWER ANY STAFF QUESTIONS. COORDINATE TRAINING WITH OWNER; PROVIDE 72HOURS NOTICE AT A MINIMUM.
6. PROVIDE ALL PROGRAMING AND COMMISSIONING BY AV MANUFACTURER FOR A COMPLETE OPERATIONAL SYSTEM.
7. REFER TO DISPLAY OUTLET DEVICE SCHEDULE FOR ADDITIONAL INFORMATION.
8. REFER TO ELECTRICAL DISPLAY SCHEDULE FOR ADDITIONAL INFORMATION.
9. REFER TO AV FACEPLATE DETAIL FOR ADDITIONAL INFORMATION.
10. REFER TO TELECOMMUNICATION CABLING SCHEDULE FOR ADDITIONAL INFORMATION.
11. PROVIDE A FULL TIA COMPLIANT CABLING PATHWAYS.
12. ALL WIRING SHALL BE CONCEALED AND INSTALLED IN A MINIMUM OF WIREMOLD #700 SERIES OR EQUAL; UNLESS OTHERWISE NOTED. PAINT ALL EXPOSED RACEWAYS TO MATCH SURROUNDING OBJECTS.
13. PROVIDE ALL MANUFACTURER POWER SUPPLIES AS REQUIRED.

4 AUDIO VISUAL ONE-LINE DIAGRAM - ASTRONOMY 2050

NOT TO SCALE

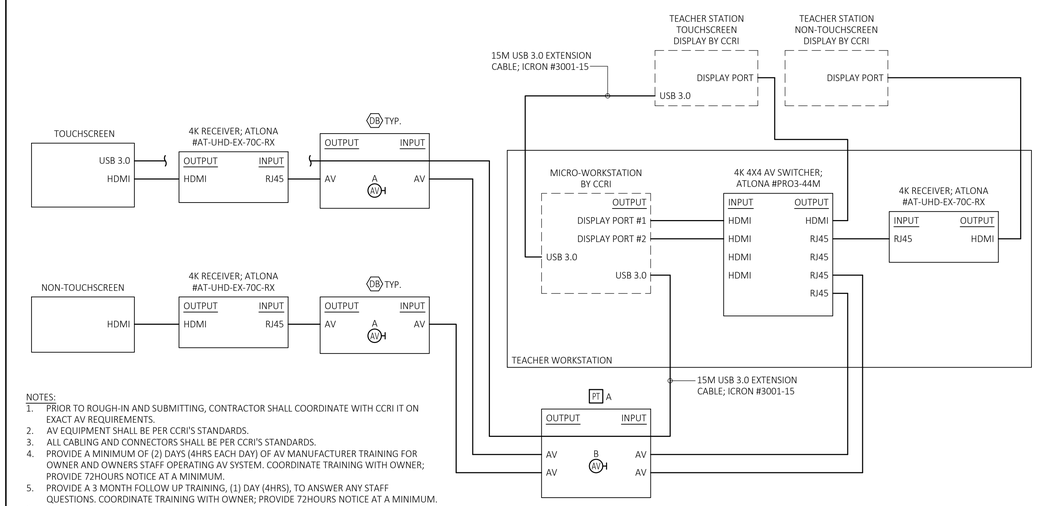

NOTES:

1. PRIOR TO ROUGH-IN AND SUBMITTING, CONTRACTOR SHALL COORDINATE WITH CCRI IT ON EXACT AV REQUIREMENTS.
2. AV EQUIPMENT SHALL BE PER CCRI'S STANDARDS.
3. ALL CABLING AND CONNECTORS SHALL BE PER CCRI'S STANDARDS.
4. PROVIDE A MINIMUM OF (2) DAYS (4HRS EACH DAY) OF AV MANUFACTURER TRAINING FOR OWNER AND OWNERS STAFF OPERATING AV SYSTEM. COORDINATE TRAINING WITH OWNER; PROVIDE 72HOURS NOTICE AT A MINIMUM.
5. PROVIDE A 3 MONTH FOLLOW UP TRAINING, (1) DAY (4HRS), TO ANSWER ANY STAFF QUESTIONS. COORDINATE TRAINING WITH OWNER; PROVIDE 72HOURS NOTICE AT A MINIMUM.
6. PROVIDE ALL PROGRAMING AND COMMISSIONING BY AV MANUFACTURER FOR A COMPLETE OPERATIONAL SYSTEM.
7. REFER TO DISPLAY OUTLET DEVICE SCHEDULE FOR ADDITIONAL INFORMATION.
8. REFER TO ELECTRICAL DISPLAY SCHEDULE FOR ADDITIONAL INFORMATION.
9. REFER TO AV FACEPLATE DETAIL FOR ADDITIONAL INFORMATION.
10. REFER TO TELECOMMUNICATION CABLING SCHEDULE FOR ADDITIONAL INFORMATION.
11. PROVIDE A FULL TIA COMPLIANT CABLING PATHWAYS.
12. ALL WIRING SHALL BE CONCEALED AND INSTALLED IN A MINIMUM OF WIREMOLD #700 SERIES OR EQUAL; UNLESS OTHERWISE NOTED. PAINT ALL EXPOSED RACEWAYS TO MATCH SURROUNDING OBJECTS.
13. PROVIDE ALL MANUFACTURER POWER SUPPLIES AS REQUIRED.

5 AUDIO VISUAL ONE-LINE DIAGRAM - TYPICAL CLASSROOM

NOT TO SCALE

WILLIAM STARCK ARCHITECTS, INC.
126 COVE STREET
FALL RIVER, MASSACHUSETTS 02720
10 DORRANCE STREET, SUITE 700
PROVIDENCE, RI 02903
T: 508.679.5733
F: 508.672.8556
WWW.STARCKARCHITECTS.COM

CREATIVE ENVIRONMENT CORP.
CONSULTING ENGINEERS
Cranston Springfield Braintree
CEC#2017011O
MECHANICAL | ELECTRICAL | PLUMBING
FIRE PROTECTION | TELECOM | SECURITY
P. 401-438-7733 | www.cec-engineering.com

These plans, drawings, designs, specifications and other components as to be used are and shall remain the property of William Starck Architects. No part thereof shall be copied, disclosed to others, or used in connection with any work or project, other than the specified project for which they have been prepared and developed, without the express knowledge and written consent of William Starck Architects.

2nd FLOOR LAB RENOVATIONS

AT THE

C.C.R.I. KNIGHT CAMPUS

400 EAST AVENUE

WARWICK, R.I. 02886

REVISIONS:

SCALE:	As Noted
DATE:	7November2019
DRAWN BY:	NG
JOB NUMBER:	17-144

DRAWING NAME:

DETAILS (CONT.)

DRAWING NUMBER:

E8.3

COMMENTS:

PERMIT SET