RHODE ISLAND COLLEGE

RECREATION CENTER POOL REPAIRS

600 Mt. Pleasant Avenue, Providence, RI 02908

ARCHITECT:
BREWSTER THORNTON GROUP
ARCHITECTS, LLP
317 IRON HORSE WAY, SUITE 202
PROVIDENCE, RI 02908

POOL CONSULTANT:
COUNSILMAN HUNSAKER
10733 SUNSET OFFICE DRIVE, SUITE 400
ST. LOUIS, MO 63127

LOCUS MAP

CAMPUS MAP

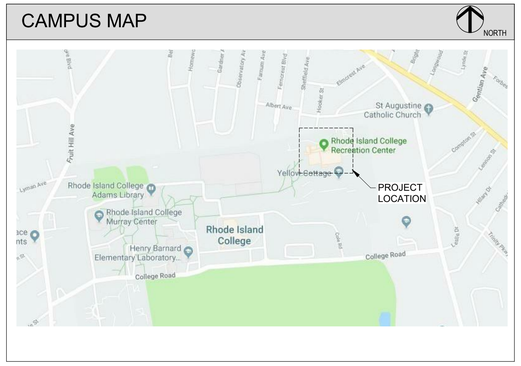

G0.0

BREWSTER THORNTON GROUP ARCHITECTS LLP

10/18/19

BTGA # **1908**

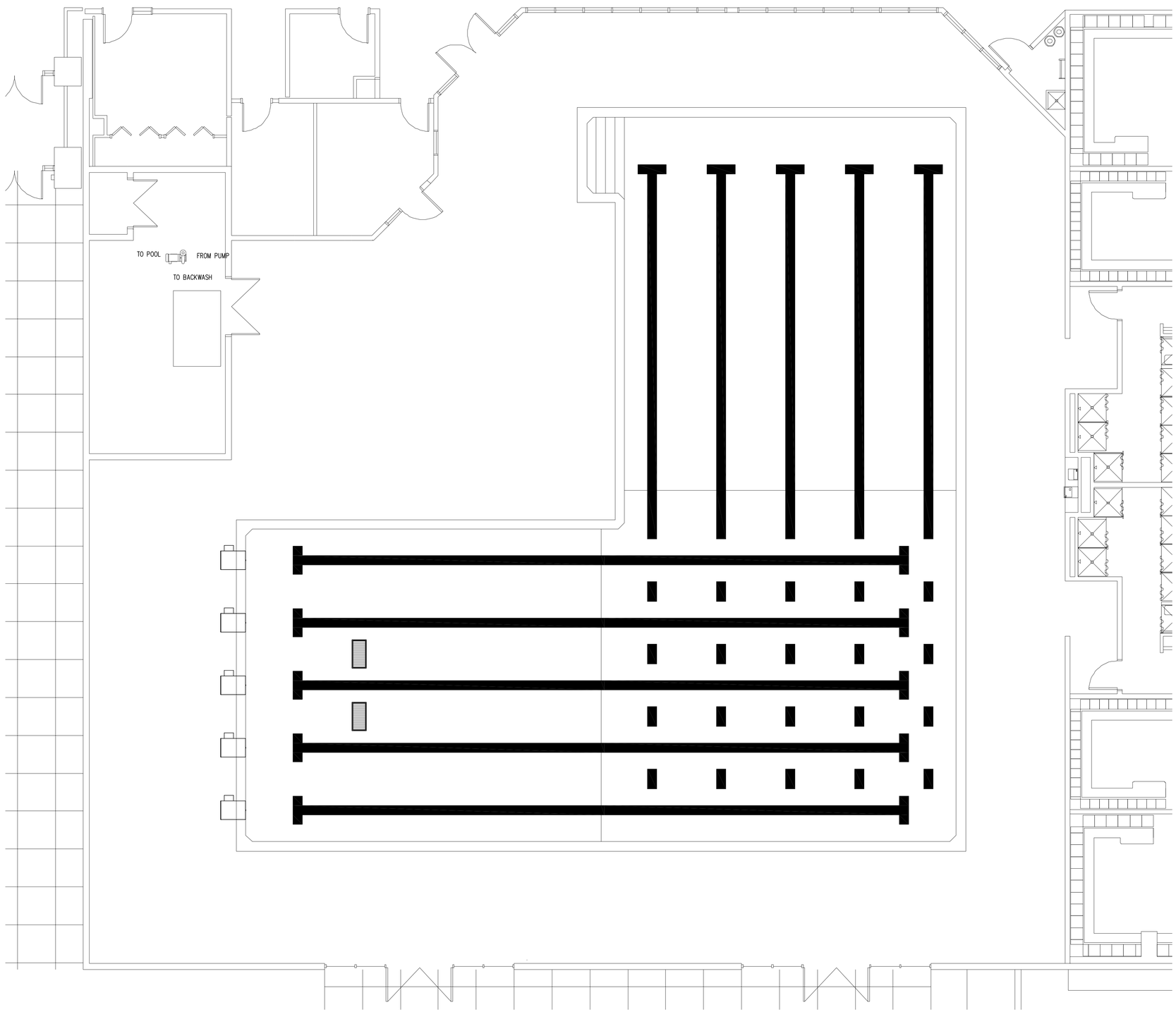

1 SP0.0 POOL REFERENCE PLAN
3/16" = 1'-0"

DESIGN DATA

	UNITS	POOL
LENGTH	FT.	VARIES
WIDTH	FT.	VARIES
WATER SURFACE AREA	SQ. FT.	4,570
PERIMETER	FT.	308
VOLUME	GALLON	170,000
CIRCULATION SYSTEM & FILTERS		
POOL TURNOVER RATE	HOUR	6.16
RECIRCULATION RATE	GPM	460
FILTRATION RATE (ACTUAL)	GPM/SQ. FT.	13.9
FILTRATION AREA (ACTUAL)	SQ. FT.	33.2
FILTER BACKWASH RATE	GPM/SQ. FT.	15
BACKWASH FLOW RATE (PER FILTER)	GPM	498
BATHER LOAD	PERSON	327

BASE BID APPROXIMATE COVERAGE AREAS:
PLASTER – 5,187 SF
CERAMIC TILE – 707 SF

ADD ALTERNATE TILE FINISH APPROXIMATE COVERAGE AREA:
CERAMIC TILE – 5,187 SF

GENERAL POOL NOTES

1. ⊕ DENOTES WATER DEPTH FROM WATER LEVEL.
2. POOL FINISH SHALL BE A MARCITE PLASTER WITH SPECIALTY CERAMIC TILE FOR THE STAIR NOSING, POOL JOINTS, AND THE 5'-0" WATER DEPTH CONTOUR.
3. ALL STAIR TREADS SHALL HAVE A SLIP RESISTANT FINISH.
4. TYPICAL POOL DIMENSIONS SHOWN ARE FROM INSIDE FINISHED POOL WALL.
5. THE JUNCTION BETWEEN THE SWIMMING POOL WALL AND THE FLOOR SHALL BE COVED.
6. ALL PROPRIETARY NAMES MENTIONED ARE TO DESIGNATE PERFORMANCE STANDARDS. EQUIVALENT PRODUCTS SHALL BE SUBMITTED FOR APPROVAL.
7. ELECTRICAL INSPECTOR SHALL APPROVE INSTALLATION OF BONDING GRID FOR POOL REINFORCING AND ALL POOL EMBEDS PRIOR TO PLACEMENT OF CONCRETE.
8. NO GROUND WATER SHALL BE ALLOWED TO RISE ABOVE ANY PORTION OF THE POOL BOTTOM DURING CONSTRUCTION.
9. ALL POOL REINFORCING STEEL, METAL FITTINGS, EQUIPMENT WITHIN 5'-0" OF POOL EDGE AND ANY METAL PARTS OF POOL EQUIPMENT IN CONTACT WITH POOL RECIRCULATION SYSTEM SHALL BE BONDED PER NEC 680. REFER:

DRAWING INDEX

SHEET	DESCRIPTION
SP0.0	EXISTING POOL REFERENCE PLAN
SP0.1	POOL DEMOLITION PLAN
SP1.0	POOL PIPING PLAN
SP2.0	POOL & MECHANICAL DETAILS
SP3.0	POOL STRUCTURAL DETAILS

POOL ALTERNATES

ADD ALTERNATE #1 – PROVIDE AN ALL 2"X2" CERAMIC TILE FINISH FOR THE SWIMMING POOL INTERIOR IN LIEU OF MARCITE PLASTER. REFER TO SPECIFICATION SECTION 131103.

ADD ALTERNATE #2 – REPLACE THE EXISTING FILTRATION TANK WITH A NEW VERTICAL SAND FILTRATION SYSTEM WITH MANUAL BACKWASH AND PLUMB INTO THE EXISTING RECIRCULATION LOOP.

COUNSILMAN•HUNSAKER
AQUATICS FOR LIFE
ph: 314.894.1245• www.chh2o.com

RHODE ISLAND COLLEGE
RECREATION CENTER POOL REPAIRS

600 MT PLEASANT AVE
PROVIDENCE, RI 02908

O:\Users\cooper\and\Documents\ARCHIBUS\Bc-Hub\BCTSTUDIO\PROJECTS\JP-STUDIO\JDC-RICRPR.jpg

JOHN DOUGLAS COOK
No. 8789
REGISTERED PROFESSIONAL ENGINEER
10/18/19

JOB NO.	DATE
1908	10/18/19

ISSUE :

NO.	REVISION DESCRIPTION	DATE

SHEET TITLE
EXISTING POOL REFERENCE PLAN

SHEET
SP0.0

REVIT 2018

© 2019 COUNSILMAN•HUNSAKER
Date / Time

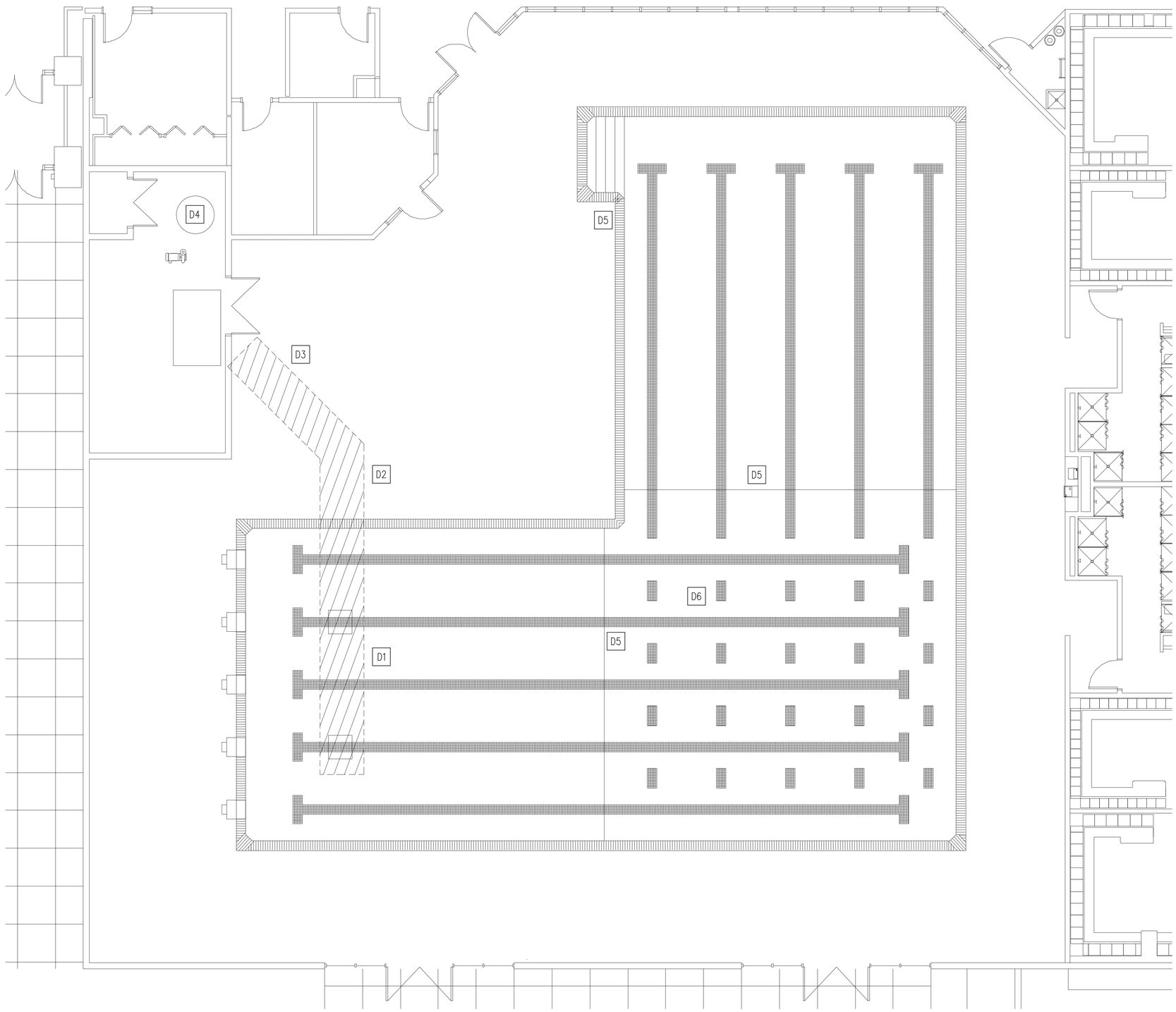

1 SP0.1 POOL DEMOLITION PLAN
3/16" = 1'-0"

GENERAL POOL RENOVATION NOTES

1. PROTECT ALL EXISTING POOL FINISHES, GUTTERS AND ANY OTHER POOL RELATED APPURTENANCES DURING CONSTRUCTION.
2. REFER TO OTHER TRADES FOR COORDINATION OF ANY AND ALL OTHER BELOW GRADE PIPING/UTILITIES TO BE PROTECTED DURING RENOVATION.
3. ELECTRICIAN SHALL VERIFY EXISTING BOND GRID. ALL NEW EMBEDS, REINFORCEMENTS, MECHANICAL EQUIPMENT SHALL BE BONDED PER NEC ARTICLE 680.
4. OWNER HAS FIRST RIGHT OF REFUSAL ON ALL DEMOLITION MATERIALS.
5. THE CONTRACTOR SHALL BE RESPONSIBLE FOR CONTINUOUSLY MONITORING GROUNDWATER LEVELS ON THE SITE DURING ANY AND ALL PERIODS WHEN THE SWIMMING POOL IS NOT FULL OF WATER. PROTECTION OF THE EXISTING POOL STRUCTURE FROM DAMAGE DUE TO HYDROSTATIC PRESSURE IS THE SOLE RESPONSIBILITY OF THE CONTRACTOR.

POOL DEMOLITION KEYNOTES

COORDINATE ALL DEMOLITION PLANS WITH ARCHITECT AND CONSTRUCTION DOCUMENTS PRIOR TO DEMOLITION

D1	REMOVE EXISTING 30" X30" AEGIS MAIN DRAIN COVERS ALONG WITH THE DRAIN SUMP AND HYDROSTATIC RELIEF VALVES. PREPARE BASE FOR NEW CRUSHED STONE LAYER BELOW THE POOL IN THE AREA REMOVED.
D2	REMOVE THE POOL SHELL AND DECK AREA IN THE APPROXIMATE AREA SHOWN AND PREPARE REMAINING CONCRETE TO RECEIVE DOWELS AND CONNECTION TO NEW CONCRETE WORK.
D3	REMOVE THE EXISTING CAST IRON SUCTION PIPING BELOW THE POOL. NOTE THE AREA SHOWN ON THIS DEMOLITION PLAN IS ASSUMING A RELATIVELY STRAIGHT PATH OF THE SHORTEST DISTANCE BETWEEN THE MAIN DRAINS AND THE SURGE TANK. HOWEVER, NO AS-BUILT OR RECORD DRAWINGS OF THE POOL STRUCTURE, FOUNDATION SYSTEM, OR PIPE ROUTING FROM THE POOL'S ORIGINAL CONSTRUCTION IS AVAILABLE.
D4	REMOVE THE EXISTING VERTICAL SAND FILTER AND FACE PIPING AND PREPARE TO RECEIVE NEW (ALTERNATE #2)
D5	REMOVE EXISTING SEALANT IN EXPANSION JOINTS WITHIN THE POOL BASIN AND BELOW/BEHIND THE EXISTING STAINLESS STEEL GUTTER. PREPARE FOR NEW MATERIAL.
D6	REMOVE EXISTING PAINTED POOL FINISH DOWN TO THE ORIGINAL CONCRETE SUBSTRATE. PREPARE FOR NEW FINISH MATERIALS INCLUDING EXAMINATION FOR CONCRETE CRACKS GREATER THAN 1/8" WIDE THAT REQUIRE REMEDIATION PER WATERPROOFING MANUFACTURER'S REQUIREMENTS.

POOL LEGEND

	GUTTER GRATING TO REMAIN
	LANE MARKING PAINT
	DEMOLITION TRENCH
	STARTING BLOCK

RHODE ISLAND COLLEGE
RECREATION CENTER POOL REPAIRS

600 MT PLEASANT AVE
PROVIDENCE, RI 02908

O:\Users*\Local*\Autodesk\AFB\2018\en-US\~RevitDirectory\Temp\RECENTFILES\RC-SPOOL-SD2-R19.rvt

JOHN DOUGLAS COOK
No. 8789
REGISTERED PROFESSIONAL ENGINEER
10/18/19

JOB NO.	DATE
1908	10/18/19

ISSUE :

NO.	REVISION DESCRIPTION	DATE

SHEET TITLE
POOL DEMOLITION PLAN

SHEET
SP0.1

COUNSILMAN•HUNSAKER
AQUATICS FOR LIFE
ph: 314.894.1245• www.chh2o.com

© 2019 COUNSILMAN•HUNSAKER
Date / Time

REVIT 2018

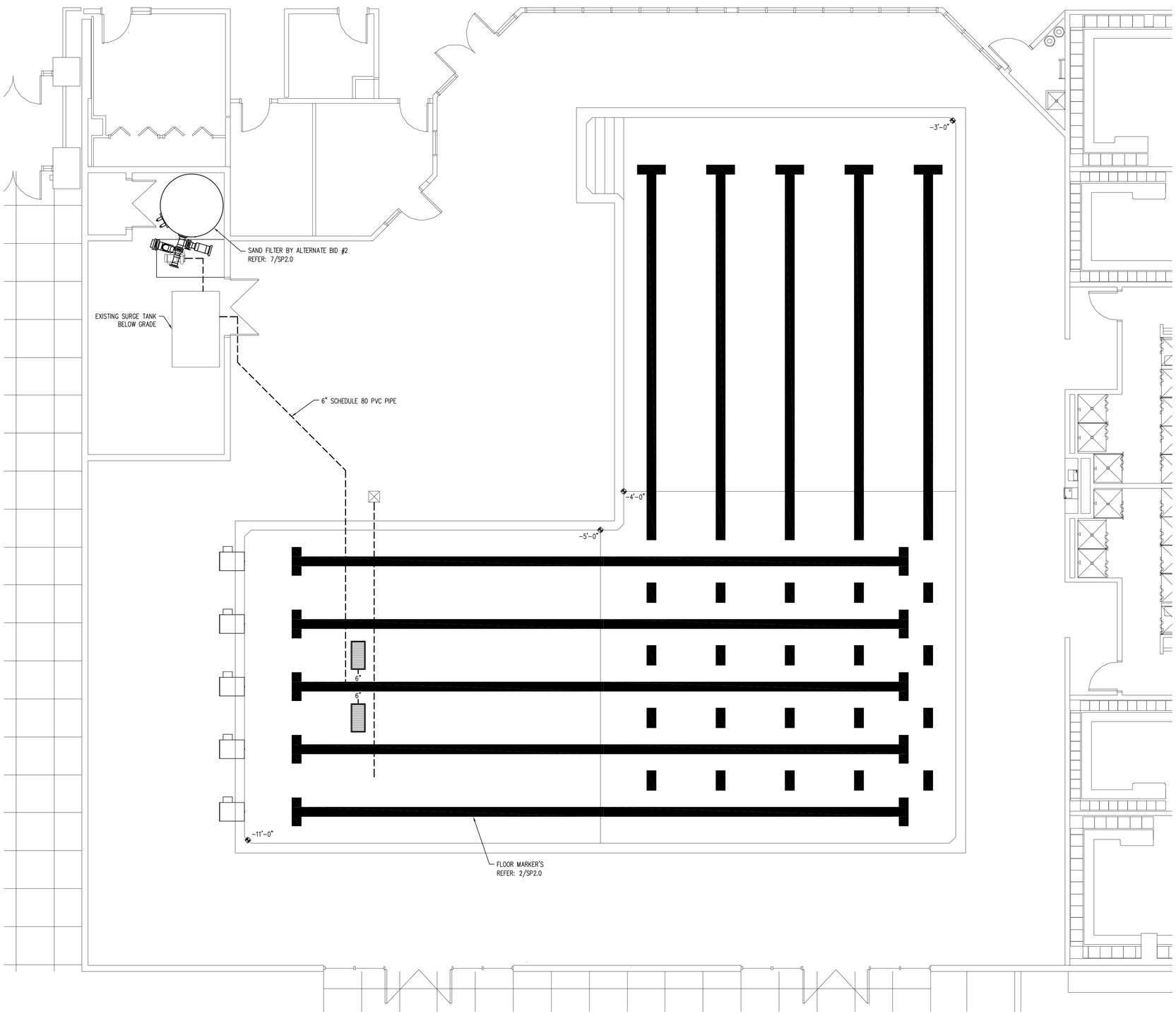

1 SP1.0 POOL PIPING PLAN
3/16" = 1'-0"

GENERAL PIPING NOTES

1. PROVIDE ALL MATERIALS AND EQUIPMENT AND PERFORM ALL LABOR REQUIRED TO INSTALL COMPLETE AND OPERATIONAL PIPING SYSTEMS AS INDICATED ON THE DRAWINGS, AS SPECIFIED AND AS REQUIRED BY CODE.
2. PIPE SIZES INDICATED ARE NOMINAL, I.P.S.
3. UNLESS OTHERWISE NOTED, ALL OVERHEAD PIPING SHALL BE TIGHT TO UNDERSIDE OF STRUCTURE OR SLAB.
4. INSTALL ALL PIPING WITHOUT FORCING OR SPRINGING.
5. ALL PIPING WORK SHALL BE COORDINATED WITH ALL TRADES AND SITE CONDITIONS. OFFSETS, EXPANSION LOOPS, OR TRANSITIONS IN PIPING AROUND OBSTRUCTIONS SHALL BE PROVIDED AT NO ADDITIONAL COST TO THE OWNER.
6. ALL PIPING INDICATED SHALL BE CONSIDERED DIAGRAMMATIC.
7. ALL SWMMING POOL PIPING ROUTED BELOW THE POOL SHELL SHALL BE CONCRETE ENCASED SCHEDULE 40 PVC, OR ALL SCHEDULE 80 PVC, UNLESS OTHERWISE NOTED. REFER: 5/SP2.0
8. ALL UNDERGROUND OR EXPOSED SWMMING POOL PIPING SHALL BE SCHEDULE 80 PVC, UNLESS OTHERWISE NOTED. CONTRACTOR SHALL REFER TO PLANS AND SPECIFICATIONS FOR ANY SPECIFIC REQUIREMENTS REGARDING PLACEMENT AND BACKFILLING OF BELOW GRADE POOL PIPE.
9. ALL DIMENSIONS INDICATED FROM THE FINISH WALL SURFACE AND DO NOT ACCOUNT FOR ANY VARIATIONS IN EITHER GRADE OR SLOPE DISTANCES.
10. ALL PIPE TEES SHALL BE SIZED FOR LARGEST PIPE CONNECTION.

PIPING LEGEND

LEGEND	QTY.	ITEM
⊠	1	SIGHT SUMP REFER: 3/SP2.0
▭	2	MAIN DRAIN REFER: 4/SP2.0
– – – –	N/A	BELOW GRADE PIPING

RHODE ISLAND COLLEGE
RECREATION CENTER POOL REPAIRS

600 MT PLEASANT AVE
PROVIDENCE, RI 02908

JOHN DOUGLAS COOK
No. 8789
REGISTERED PROFESSIONAL ENGINEER
10/18/19

JOB NO.	DATE
1908	10/18/19

ISSUE :

NO.	REVISION DESCRIPTION	DATE

SHEET TITLE
POOL PIPING PLAN

SHEET
SP1.0

COUNSILMAN•HUNSAKER
AQUATICS FOR LIFE
ph: 314.894.1245• www.chh2o.com

© 2019 COUNSILMAN•HUNSAKER
Date / Time

REVIT 2018

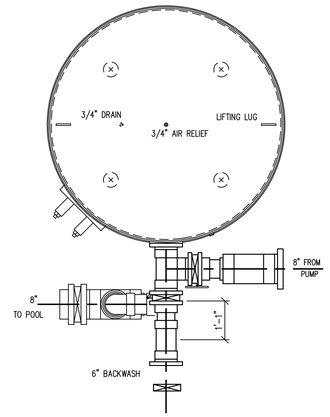

PLAN

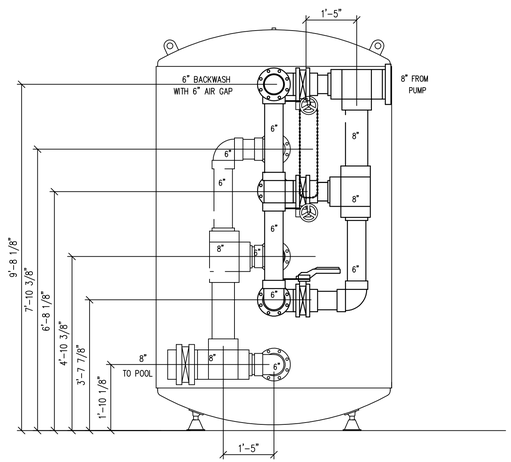

FRONT ELEVATION

7 SP2.0 SAND FILTER BY ALTERNATE BID #2

1/2" = 1'-0"

DRAIN DEPTH SCHEDULE	
STUB SIZE (NPS)	MINIMUM DEPTH
6"	19.5"

NOTE:
1. ALL MAIN DRAINS SHALL BE CONSTRUCTED TO COMPLY WITH THE VIRGINIA GRAEME BAKER ACT & ASME ANSI/APSP-16-2011.
2. MAIN DRAINS MAY USE MULTIPLE VGB COMPLIANT GRATES SECURELY FASTENED PER MANUFACTURER RECOMMENDATIONS.

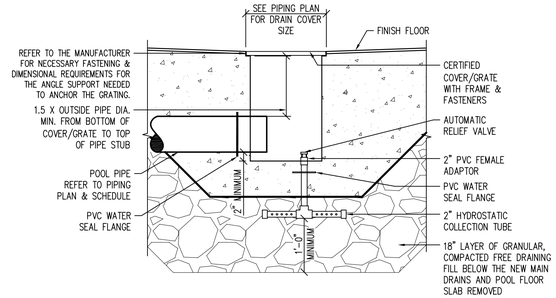

4 SP2.0 MAIN DRAIN

3/4" = 1'-0"

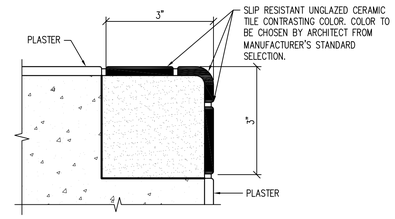

1 SP2.0 CONTRASTING NOSING

6" = 1'-0"

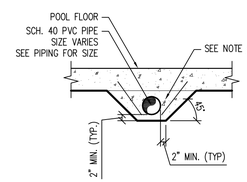

NOTE:
1. THIS IS A MINIMUM ENCASEMENT FOR UNDER POOL PIPING
2. ENCASEMENT MAY BE DONE PRIOR TO THE POUR OF THE POOL FLOOR AND STRUCTURALLY TIED TO THE POOL FLOOR.
3. ALL POOL PIPING NOT LOCATED BENEATH THE POOL FLOOR SHALL BE SCHEDULE 80 PVC.

5 SP2.0 CONCRETE ENCASED PIPE

1/2" = 1'-0"

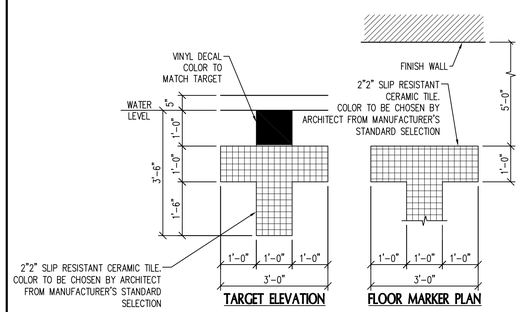

2 SP2.0 WALL TARGETS & FLOOR MARKERS

1/2" = 1'-0"

NOTE:
EXISTING PUMP TO REMAIN. CONTRACTOR TO GLUE NEW 3" TEE OFF THE DISCHARGE PIPING AND PROVIDE A DRAIN LINE WITH THROTTLING VALVE TO SANITARY.

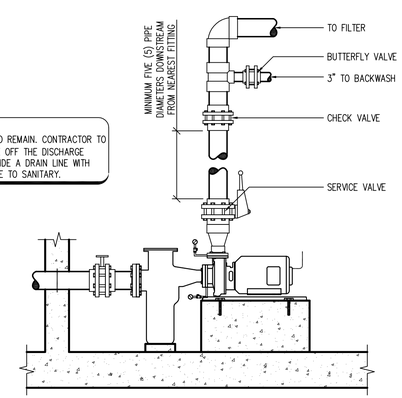

6 SP2.0 EXISTING RECIRCULATION PUMP

1/2" = 1'-0"

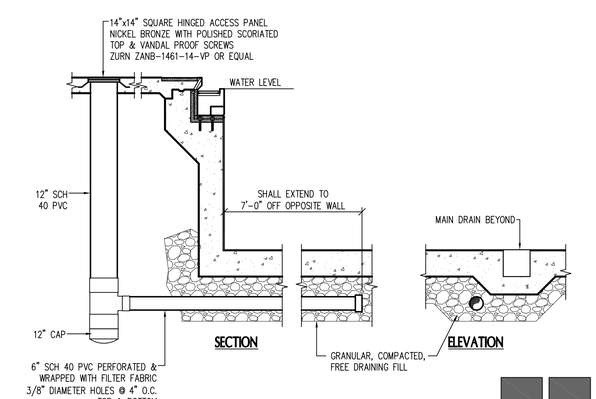

3 SP2.0 SIGHT SUMP

3/8" = 1'-0"

COUNSILMAN•HUNSAKER
AQUATICS FOR LIFE
ph: 314.894.1245• www.chh2o.com

RHODE ISLAND COLLEGE
RECREATION CENTER POOL REPAIRS

600 MT PLEASANT AVE
PROVIDENCE, RI 02908

JOHN DOUGLAS COOK
No. 8789
REGISTERED PROFESSIONAL ENGINEER
10/18/19

JOB NO.	DATE
1908	10/18/19

ISSUE :

NO.	REVISION DESCRIPTION	DATE

SHEET TITLE
POOL & MECHANICAL DETAILS

SHEET
SP2.0

REVIT 2018

© 2019 COUNSILMAN•HUNSAKER
Date / Time

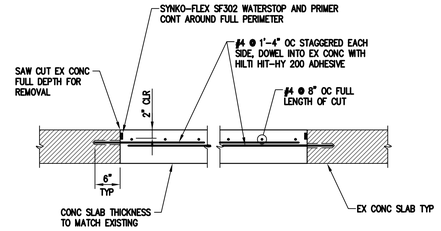

DETAIL APPLIES TO AREAS WHERE POOL SLAB IS TO BE REMOVED FOR INSTALLATION OF NEW PIPING OR APPURTENANCES.

TYP POOL SLAB REPAIR SECTION

1 / SP3.0

SCALE: ¾" = 1'-0"

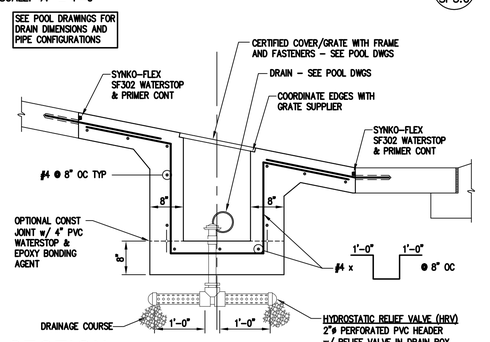

SECTION

2 / SP3.0

SCALE: ¾" = 1'-0"

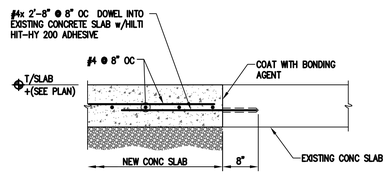

NEW TO EXISTING CONC DECK SLAB

3 / SP3.0

SCALE: NTS

FDN-031

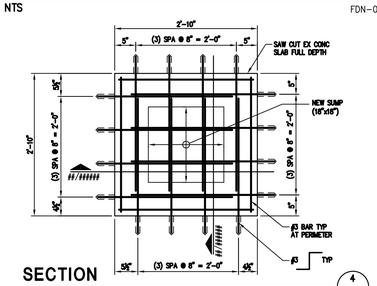

SECTION

4 / SP3.0

SCALE: 1" = 1'-0"

1. Building Codes:
   Model: International Building Code 2012.
   Concrete: American Concrete Institute ACI 318-11.
2. The construction documents indicate design of a completed reinforced concrete structure. The structural details have been prepared based on cast-in-place concrete methods. If alternate means and methods of concrete placement are employed that may alter the completed project, the contractor must submit proposed revisions and signed/sealed calculations to the Architect/Engineer for approval prior to fabrication or construction.
3. The pool structure renovations have been designed to withstand all anticipated loadings under both full and empty conditions in accordance with the criteria of ACI 318.
4. The pool shell renovations have not been designed to withstand any surcharge loading from adjacent structures. Inform engineer immediately if adjacent structures are close to the pool shell.
5. Adequacy of the existing pool shell elements have not been evaluated and are not covered in the scope of these construction documents.

NFORCED CONCRETE NOTES

1. Pool shell renovations to be cast-in-place concrete.
2. All concrete and shotcrete shall be 4000 psi minimum 28 day compressive strength with 6% air entrainment. Limit water to cementitious material ratio (w/c) to 0.42.
3. All reinforcing steel shall be detailed, supplied and placed in accordance with these construction documents and with ACI 318-05, ACI 315-05, and CRSI MSP-1-01.
4. All reinforcing steel shall be shop fabricated to conform to ASTM A615, Grade 60.
5. All pool concrete shall be "wet" cured using hoses and polyethylene covering.
6. Reinforcing clearance: 2" Pool walls, surge tank walls
   2" Pool bottom slabs, surge tank slabs
   3" All surfaces cast or shot against earth

NCRETE REPAIR NOTES

1. Repair finished concrete surfaces containing defects. Surface defects include spalls, popouts, honeycombs, rock pockets, crazing and cracks in excess of 0.01 inch (0.25 mm) wide or that penetrate to reinforcement or completely through unreinforced sections regardless of width, and other objectionable conditions.
2. Repair random cracks and single holes 1 inch (25 mm) or less in diameter with patching mortar. Groove top of cracks and cut out holes to sound concrete and clean off dust, dirt, and loose particles. Dampen cleaned concrete surfaces and apply bonding agent. Place patching mortar before bonding agent has dried. Compact patching mortar and finish to match adjacent concrete. Keep patched area continuously moist for at least 72 hours.
3. Coat exposed reinforcing steel in cracks and repair areas with Sika Armatec 110 EpoCem prior to application of patching mortar per manufacturer's instructions.

RHODE ISLAND COLLEGE

RECREATION CENTER POOL REPAIRS

600 MT PLEASANT AVE
PROVIDENCE, RI 02908

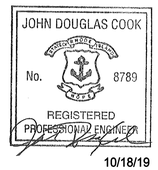

10/18/19

JOB NO.	DATE
1908	10/18/19

ISSUE :

NO.	REVISION DESCRIPTION	DATE

SHEET TITLE
POOL STRUCTURAL DETAILS

SHEET
SP3.0

COUNSILMAN•HUNSAKER
AQUATICS FOR LIFE
ph: 314.894.1245• www.chh2o.com

© 2019 COUNSILMAN•HUNSAKER
Date / Time

REVIT 2018