LEGEND:

- NEW WALL - REFER TO PARTITION TYPE TAG
- EXISTING WALL TO REMAIN
- 2 PARTITION TYPE
- XXX-X DOOR IDENTIFICATION NO.

COORDINATION NOTES:

1. THE CONTRACTOR SHALL COORDINATE THE DELIVERY OF HIS MATERIALS WITH THE OWNER AND WITH MATERIAL DELIVERIES OF OTHER TRADES.
2. THE CONTRACTOR IS CAUTIONED THAT ANY CONSTRUCTION ACTIVITY THAT ADVERSELY EFFECTS OCCUPANTS OF THE BUILDING, WHICH SHALL INCLUDE, BUT NOT BE LIMITED TO, SHUTDOWNS, TIE-INS, SCREW GUN OPERATION AND OTHER NOISE GENERATING WORK, PAINTING, FINISHED FLOORING INSTALLATION AND OTHER ODOR GENERATING WORK, MUST BE DONE DURING NON-BUSINESS HOURS AND/OR ON WEEKENDS.
3. THE CONTRACTOR SHALL COORDINATE THE SCOPE OF WORK NOTES WITH ACTUAL CONDITIONS AND ENSURE THAT ALL SURFACES WITHIN THE SPACE ADDRESSED BY THE SCOPE OF WORK NOTES ARE RENOVATED.

GENERAL NOTES:

1. FILL, PATCH, SAND, AND FINISH EXISTING SURFACES TO REMAIN. REFER TO FINISH PLAN AND SCHEDULE.
2. WHERE DEMOLITION OF EXISTING SURFACE WALL TREATMENTS, SUCH AS WALLCOVERING OR PANELING, HAS DAMAGED THE UNDERLYING WALL FINISH TO REMAIN, SKIM COAT WALLS AS REQUIRED TO PROVIDE A SMOOTH SURFACE SUITABLE FOR PAINTING OR APPLICATION OF OTHER NEW FINISH. REFER TO FINISH PLAN.
3. WHERE NEW WALL/MOUNTED FURNISHINGS ARE SHOWN, SUCH AS CABINETS, COUNTERS, SHELVING, PANELING, CHAIR RAILS, GRAB BARS, RAILINGS, GUARDS, BUMPERS, STOPS, ETC: PROVIDE AND INSTALL FIRE RATED BLOCKING IN THE WALL BEYOND. WHERE THE WALL BEYOND IS EXISTING, PATCH AND REPAIR EXISTING WALL BOARD AND FINISH AFTER INSTALLATION OF BLOCKING.

RENOVATION NOTES:

- 01 FURNISH AND INSTALL NEW BASE AND/OR WALL CABINETS / COUNTERS, AND/OR NEW SHELVING, ASSOCIATED F.T. BLOCKING AS SHOWN.
- 02 FURNISH AND INSTALL NEW CEILING TILE AND/OR GRID AND/OR GYPSUM CEILING. REFER TO REFLECTED CEILING PLAN.
- 03 FURNISH AND INSTALL NEW DOOR, FRAME AND HARDWARE.
- 04 FURNISH AND INSTALL NEW FLOOR FINISH AND/OR BASE. REFER TO FINISH PLAN.
- 05 FURNISH AND INSTALL NEW PLUMBING FIXTURES.
- 06 FURNISH AND INSTALL NEW CHAIR RAIL AND/OR WALL PROTECTION AND/OR CORNER GUARDS AND ASSOCIATED F.T. BLOCKING. REFER TO FINISH PLAN.
- 07 FURNISH AND INSTALL CONDUIT SUPPORT INFRASTRUCTURE FOR LOW VOLTAGE SYSTEMS (SECURITY, TEL/DATA AND WI-FI)
- 08 FLOOR STRUCTURE IN SHALL BE CAPABLE OF SUPPORTING MINIMUM 200 PSI LOAD.
- 09 ANY AND ALL SUPPORTING STRUCTURE SHALL HAVE A MINIMUM 2 HOUR RATING
- 10 ALL WALLS TO HAVE $\frac{3}{4}$" PAINTED PLYWOOD BACKER BOARD.
- 11 FURNISH AND INSTALL NEW DOUBLE TIER PLASTIC LAMINATE LOCKERS
- 12 FURNISH AND INSTALL NEW CLOSET POLE WITH SHELF.
- 13 ISOLATE NEW WALL FROM EXTERIOR - TYPICAL ALL ARCHIVE WALLS.

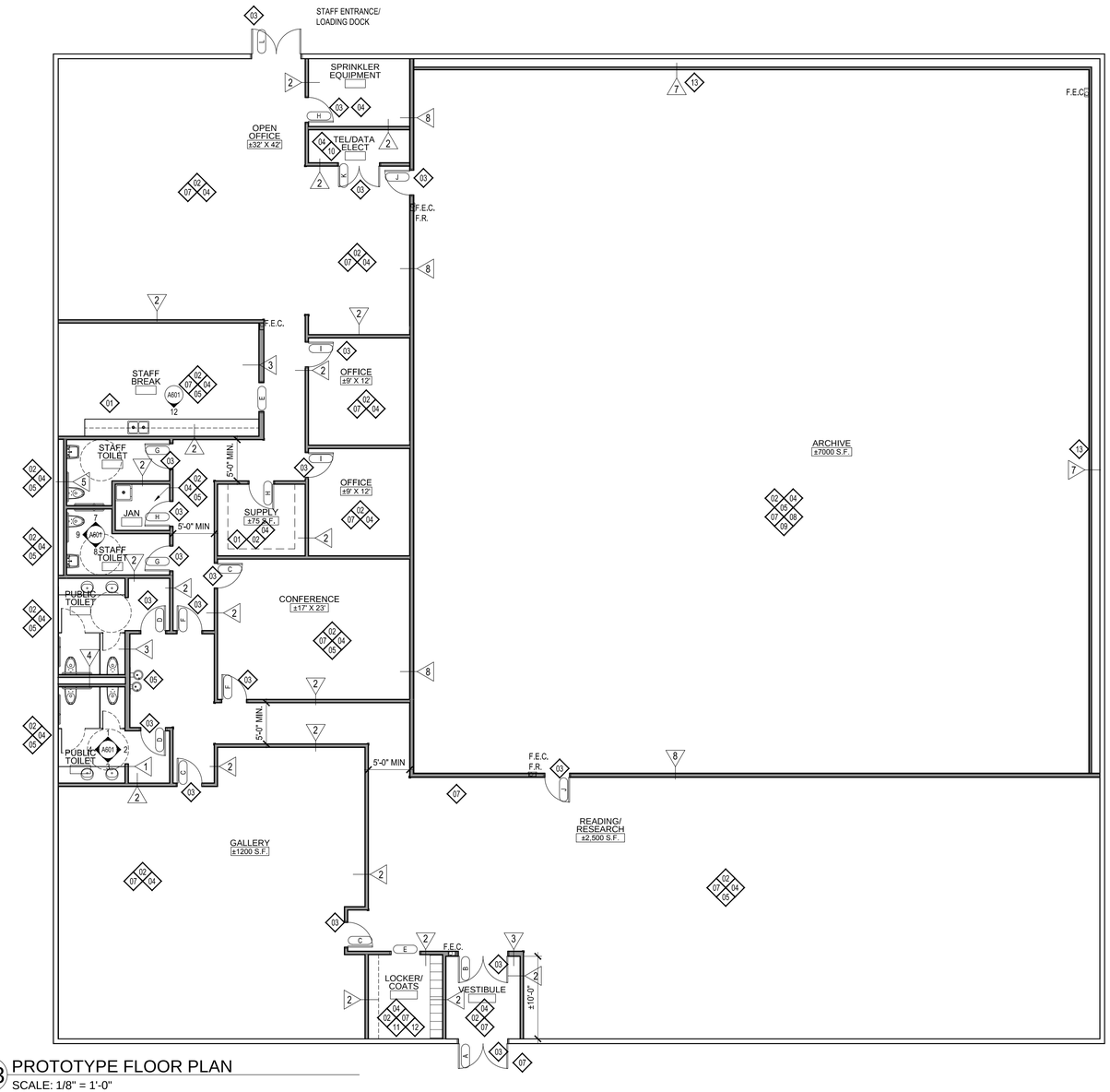

C3 PROTOTYPE FLOOR PLAN
SCALE: 1/8" = 1'-0"

n|e|m|d architects

n|e|m|d architects, inc.
architects | planners | interiors

1 Virginia Avenue | Suite 202
Providence, Rhode Island 02905
T: 401-435-3532 | F: 401-435-3712
www.nemd.com | nemd@nemd.com

PROJECT:

SECRETARY OF STATE ARCHIVE

TITLE:

PROTOTYPE FLOOR PLAN

THIS DRAWING IS THE PROPERTY OF NEMD ARCHITECTS, INC. AND SHALL NOT BE USED OR COPIED WITHOUT ITS CONSENT

ADDENDA / REVISIONS

NO.	DATE	NO.	DATE

PROJ. NO. : 19072
DRAWN BY : AAA
CHKD. BY : BBB
DATE : 00.00.00
SCALE : AS NOTED

DRAWING NO.

A100

DOOR AND HARDWARE SCHEDULE

DOOR NO.	DOOR TYPE	FRAME TYPE	WIDTH	HEIGHT	LABEL	REMARKS	NO HARDWARE REQUIRED	HINGES: FULL MORTISE-HEAVY WEIGHT	HINGES: ELECTRIC	HINGES: CONTINUOUS	LOCKSETS AND DEVICES: LOCKSET FUNCTION	LOCKSETS AND DEVICES: MORTISE LOCKSET	LOCKSETS AND DEVICES: DEADBOLT CYLINDER	LOCKSETS AND DEVICES: ELECTRIFIED MORTISE LOCKSET	LOCKSETS AND DEVICES: FLUSHBOLTS (A/UTO/M/ANUAL	LOCKSETS AND DEVICES: EXIT DEVICE	LOCKSETS AND DEVICES: COORDINATOR	LOCKSETS AND DEVICES: CARD-SWIPE/PROXIMITY ACCESS	LOCKSETS AND DEVICES: ELECTRIFIED STRIKE	LOCKSETS AND DEVICES: DUSTPROOF STRIKE	LOCKSETS AND DEVICES: ASTRAGAL	CLOSER	OVERHEAD STOP (C)ONCEALED	CLOSER W/ HOLD OPEN	PARTITION STOP	FLOOR STOP	PROTECTION: ARMOUR PLATE (HEIGHT)	PROTECTION: KICK PLATE (HEIGHT)	PROTECTION: EDGE GUARDS	SOUND CONTROL: SILENCER	SOUND CONTROL: PERIMETER GASKETING	SOUND CONTROL: DOOR BOTTOM SWEEP	SOUND CONTROL: AUTOMATIC DOOR BOTTOM	SOUND CONTROL: THRESHOLD - FULL WIDTH	DOOR NO.
A	D-5	F-4	PR/3'-0"	7'-0"		IF EXTERIOR DOOR PROVIDE THERMAL		6			EL			X		X		X	X	X			X								X		X	X	A
B	D-5	F-4	PR/3'-0"	7'-0"		PROVIDE SECURITY RELEASE		6			EL			X		X		X	X	X			X								X				B
C	D-2	F-1	3'-0"	7'-0"				3			C	X													X					3					C
D	D-1	F-1	3'-0"	7'-0"		PUSH /PULL HARDWARE		3			P											X			X		32"				X		X	X	D
E	–	F-5	3'-6"	7'-0"		CASED OPENING	X																												E
F	D-2	F-1	3'-0"	7'-0"				3			CR			X				X	X	X					X					3					F
G	D-1	F-1	3'-0"	7'-0"		COAT HOOK		3			R	X										X			X		32"				X		X	X	G
H	D-1	F-1	3'-0"	7'-0"				3			E	X										X			X					3					H
I	D-2	F-1	3'-0"	7'-0"		COAT HOOK		3			O/E	X													X										I
J	D-1	D-2	3'-0"	7'-0"	90 MIN			3			CR			X				X	X			X	X												J
K	D-3	F-1	PR/3'-0"	7'-0"				6			E	X			A		X								X					4					K
L	D-4	F-3	PR/3'-0"	7'-0"		ONE ACTIVE LEAF		6			CR	X		X	A	X	X	X						2X		X	PR/32"				X		X	X	L

NOTES:

1. COORDINATE ALL HARDWARE WITH STATE OF RHODE ISLAND STANDARDS.
2. PROVIDE WIRING AND PREP FRAMES FOR DOORS WITH CARD READERS AND CAMERA RELEASE.
3. ALL OPENINGS HAVE DOUBLE FULL HEIGHT STUDS AT BOTH JAMBS, SECURELY ATTACHED TO STRUCTURE ABOVE.
4. ALL DOORS AND FRAMES SHALL BE REINFORCED FOR HARDWARE
5. PROVIDE ANCHORS AS SPECIFIED AND AS FOLLOWS:
   A. PROVIDE 4 ANCHORS PER JAMB IN ADDITION TO FLOOR ANCHOR CLIPS.
   B. PROVIDE HEADER ANCHORS IN FRAMES OVER 5'-0" WIDE, SPACED 6" FROM ENDS AND NOT MORE THAN 24" O.C.
   C. PROVIDE ANCHORS IN ACCORDANCE WITH THE GYPSUM ASSOCIATION STANDARDS, LATEST EDITION.
5. RETURN ALL EXISTING UNUSED HARDWARE TO LESSOR.
6. KEYING SHALL BE PER OWNER'S STANDARD. VERIFY CYLINDER IS COMPATIBLE WITH LOCKSET DESIGN BEFORE ORDERING. MASTERKEY NEW LOCKS IN EXISTING KEY SYSTEMS AS DIRECTED. COORDINATE WITH OWNER. PROVIDE (3) NON-FERROUS KEYS PER CYLINDER/LOCKSET.
7. SELECT CLOSER MOUNT TO ALLOW MOUNTING ON THE LEAST VISIBLE SIDE OF THE DOOR, TYPICAL.

SUBMITTALS:

1. SUBMIT ELECTRONIC COPIES OF HARDWARE PRODUCT DATA, INCLUDING A COMPLETE LIST OF ALL ITEMS PROPOSED TO BE FURNISHED AND INSTALLED.
2. SUBMIT COMPLETE DOOR SCHEDULE, ELECTRONICALLY, IDENTIFY ALL OPENINGS USING THE ARCHITECT'S MARK FOR NUMBER, LOCATION, SIZE, STYLE, QUANTITY, FINISH AND LABEL. SCHEDULE SHALL BE FULLY COORDINATED WITH METAL DOORS, METAL FRAMES AND WOOD DOORS.
3. SUBMIT (2) PHYSICAL SAMPLES OF HARDWARE FINISHES AS SCHEDULED. PAPER OR ELECTRONIC REPRODUCTIONS WILL NOT BE ACCEPTABLE.
4. SUBMIT (2) PHYSICAL SAMPLES FOR TYPICAL RANGE OF WOOD DOOR VENEER COLOR AND GRAIN WITH FACTORY FINISH , 8"X8" MIN. PAPER OR ELECTRONIC REPRODUCTIONS WILL NOT BE ACCEPTABLE

LOCKSET FUNCTION

C	CLASSROOM
CR	CARD READER
EL	ELECTRIC LOCK + SECURITY CAMERA
O/E	OFFICE/ENTRANCE
MP	MORTISE PASSAGE
P	PASSAGE
R	PRIVACY
E	STOREROOM

ACCEPTABLE MANUFACTURERS

TYPE	MANUFACTURER*	SERIES*
HINGES	STANLEY	BB1279 HEAVY
LOCKSETS	CORBIN RUSSWIN	ML2000
MORTISE CYLINDERS**	RHODE ISLAND STANDARD	
DOOR CLOSERS**	LCN	4010N
DOOR STOPS	IVES	MATCH EXISTING
SILENCERS	IVES	20R
ARMOUR PLATE	BALDWIN	2000
GASKETING	HAGER	864S-X
AUTO. DOOR BOTTOM	PEMKO	411
DOOR BOTTOM SWEEP	N/A	N/A

* OR ARCHITECT-APPROVED EQUIVALENT, U.N.O. TYPICAL FINISH FOR DOOR HARDWARE (U.N.O.): US26D

** NO SUBSTITUTIONS; NO OTHER PRODUCTS WILL BE CONSIDERED.

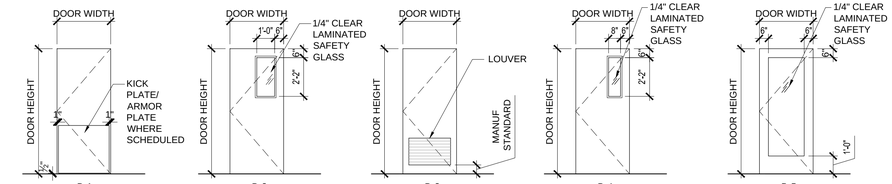

D-1
- SOLID CORE WOOD DOOR WITH PLASTIC LAMINATE FINISH
- RATE AS SCHEDULED TO MATCH WALL .

D-2
- SOLID CORE WOOD DOOR WITH PLASTIC LAMINATE FINISH
- WINDOW LAMINATED SAFETY GLASS, VISION KIT.

D-3
- SOLID CORE WOOD DOOR WITH PLASTIC LAMINATE FINISH
- LOUVERED

D-4
- INSULATED HOLLOW METAL
- INSULATED WINDOW LAMINATED SAFETY GLASS, VISION KIT.
- WEATHER STRIP PERIMETER
- ASTRAGAL AND FLUSH BOLT AT INACTIVE LEAF
- PANIC BAR AT ACTIVE LEAF

D-5
- ALUMINUM ENTRANCE DOOR
- LAMINATED SAFETY GLASS, WEATHER STRIP PERIMETER
- CLEAR ANODIZED FINISH (OR TO MATCH BUILDING STANDARD)

A2 DOOR TYPES

SCALE: 1/4" = 1'-0"

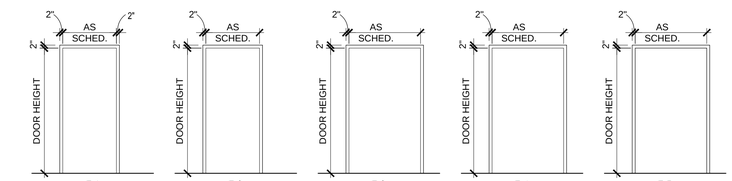

F-1
- HOLLOW METAL FRAME
- EPOXY PAINTED

F-2
- HOLLOW METAL FRAME
- EPOXY PAINTED
- RATE AS SCHEDULED

F-3
- INSULATED HOLLOW METAL FRAME
- THERMALLY BROKEN
- MATCH EXTERIOR FINISH

F-4
- ALUMINUM ENTRANCE FRAME
- THERMALLY BROKEN
- CLEAR ANODIZED FINISH (OR TO MATCH BUILDING STANDARD)

F-5
- CASED OPENING

ALL FRAMES TO BE FULLY WELDED

B2 FRAME TYPES

SCALE: 1/4" = 1'-0"

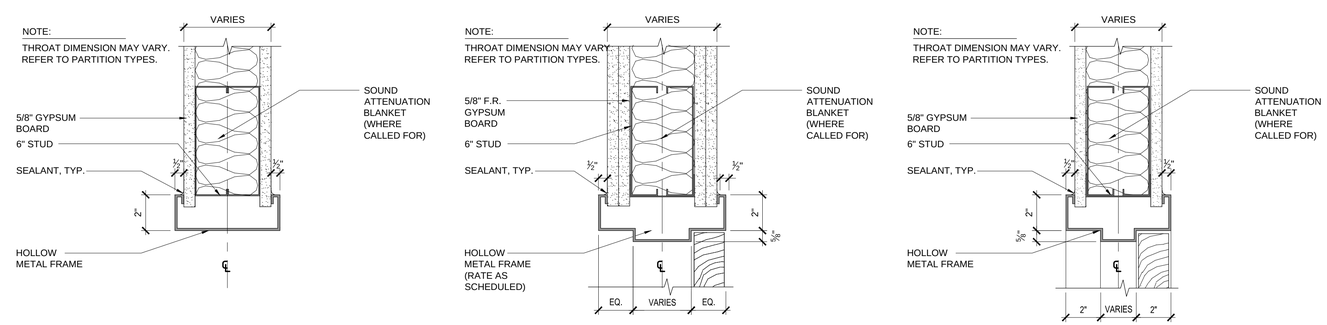

C3 H.M. DOOR HEAD DETAIL

SCALE: 3" = 1'-0"

C2 H.M. DOOR HEAD DETAIL

SCALE: 3" = 1'-0"

C1 H.M. DOOR HEAD DETAIL

SCALE: 3" = 1'-0"

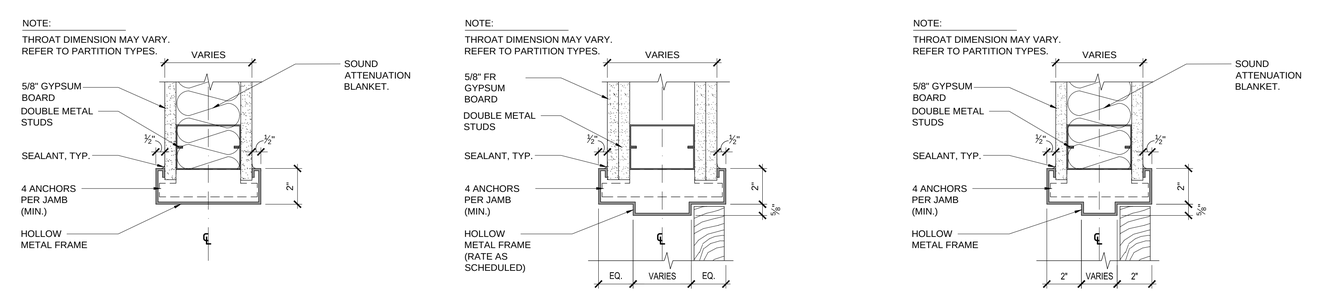

D3 H.M. DOOR JAMB DETAIL

SCALE: 3" = 1'-0"

D2 H.M. DOOR JAMB DETAIL

SCALE: 3" = 1'-0"

D1 H.M. DOOR JAMB DETAIL

SCALE: 3" = 1'-0"

n|e|m|d architects

n|e|m|d architects, inc.
architects | planners | interiors

1 Virginia Avenue | Suite 202
Providence, Rhode Island 02905
T: 401-435-3532 | F: 401-435-3712
www.nemd.com | nemd@nemd.com

PROJECT:

SECRETARY OF STATE ARCHIVE

TITLE:

DOOR, FRAME AND HARDWARE TYPES AND DETAILS

THIS DRAWING IS THE PROPERTY OF NEMD ARCHITECTS, INC. AND SHALL NOT BE USED OR COPIED WITHOUT ITS CONSENT

ADDENDA / REVISIONS

NO.	DATE	NO.	DATE

PROJ. NO. : 19072
DRAWN BY : AAA
CHKD. BY : BBB
DATE : 00.00.00
SCALE : AS NOTED

DRAWING NO.

A120

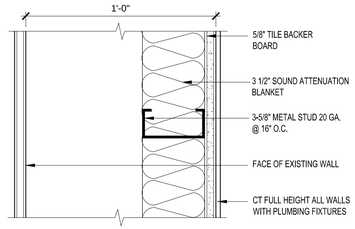

NOTES:
1. PLUMBING CHASE WALL
2. SOUND RATED MODIFIED STC 47

PARTITION TYPE 5
SCALE 3"=1'-0"

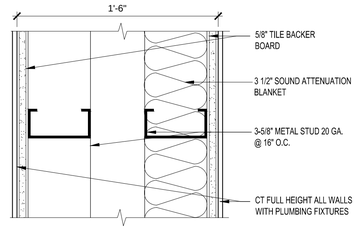

NOTES:
1. PLUMBING CHASE WALL
2. SOUND RATED MODIFIED STC 47

PARTITION TYPE 4
SCALE 3"=1'-0"

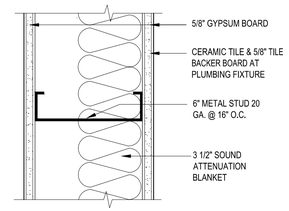

NOTES:
1. SOUND RATED MODIFIED STC 47

PARTITION TYPE 3
SCALE 3"=1'-0"

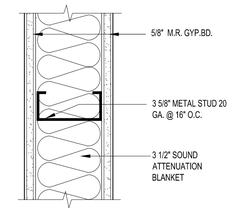

NOTES:
1. NON FIRE RATED PARTITION
2. SOUND RATED MODIFIED STC 47
3. PROVIDE MOISTURE RESISTANT GYPSUM BOARD WITHIN 4' OF ALL PLUMBING FIXTURES

PARTITION TYPE 2
SCALE 3"=1'-0"

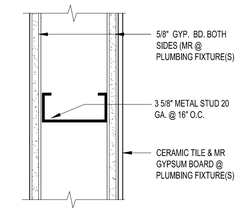

NOTES:
1. NON RATED PARTITION.
2. PROVIDE MOISTURE RESISTANT GYPSUM BOARD WITHIN 4' OF ALL PLUMBING FIXTURES

PARTITION TYPE 1
SCALE 3"=1'-0"

PARTITION NOTES:

1. PROVIDE DOUBLE 20 GA. METAL STUDS AT BOTH SIDES OF ALL DOOR OPENINGS EXTENDING TO AND ANCHORED TO SLAB ABOVE.
2. PROPERLY BRACE ALL PARTITIONS.
3. PROVIDE IN WALL BLOCKING FOR ALL WALL MOUNTED CABINETS AND EQUIPMENT. ALL BLOCKING TO BE PRESSURE TREATED FIRE RATED.
4. CONTRACTOR TO INSPECT ALL DEMISING PARTITIONS FOR HOLES AND SHALL FILL ANY VOIDS IN AN APPROVED MANNER.
5. PROVIDE ALL NECESSARY MOLDINGS, ACCESSORIES AND CAULKING TO INSURE A SANITARY AND WORKMANLIKE INSTALLATION.
6. ALL FIRE RATED, SOUND RATED AND SMOKE RATED PARTITIONS SHALL EXTEND FULL HEIGHT TO UNDERSIDE OF DECK ABOVE.
7. ALL FIRE RATED, SOUND RATED AND SMOKE RATED PARTITIONS SHALL HAVE SEALANT AT PERIMETER WITH ALL PENETRATIONS SEALED, USE ONLY APPROVED SEALANT.
8. ALL SMOKE, SOUND AND U.L. RATED PARTITIONS SHALL BE TAPED AND SPACKLED FOR THEIR FULL HEIGHT

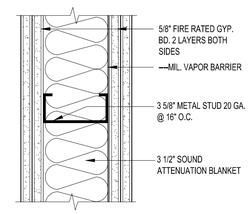

NOTES:
1. TWO HOUR RATED PARTITION. U.L. DESIGN U423 MODIFIED.
2. SOUND RATED MODIFIED ASSUMED STC 47.
3. VAPOR BARRIER TO BE CONTINUOUS

PARTITION TYPE 8
SCALE 3"=1'-0"

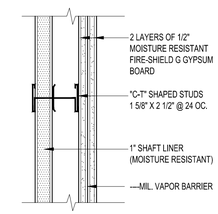

NOTES:
1. TWO HOUR FIRE RATED SHAFTWALL. U.L. DESIGN U428.

PARTITION TYPE 7
SCALE 3"=1'-0"

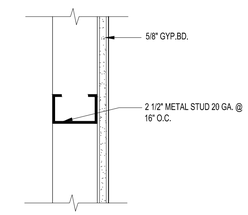

NOTES:
1. NON RATED PARTITION
2. REPLACE 2 1/2" STUDS WITH 3 5/8" STUDS WHERE POSSIBLE

PARTITION TYPE 6
SCALE 3"=1'-0"

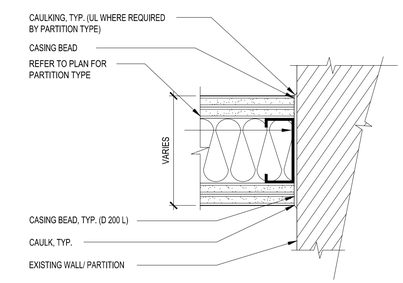

- TYP. JUNCTURE AT NEW & EXISTING PARTITION
0 3" 6" 9" SCALE: 3" = 1'-0"

n|e|m|d architects

n|e|m|d architects, inc.
architects | planners | interiors

1 Virginia Avenue | Suite 202
Providence, Rhode Island 02905
T: 401-435-3532 | F: 401-435-3712
www.nemd.com | nemd@nemd.com

PROJECT:
SECRETARY OF STATE ARCHIVE

TITLE:
WALL TYPES AND DETAILS

THIS DRAWING IS THE PROPERTY OF NEMD ARCHITECTS, INC. AND SHALL NOT BE USED OR COPIED WITHOUT ITS CONSENT

ADDENDA / REVISIONS

NO.	DATE	NO.	DATE

PROJ. NO. : 19072
DRAWN BY : AAA
CHKD. BY : BBB
DATE : 00.00.00
SCALE : AS NOTED

DRAWING NO.
A140

SYMBOL LEGEND:

- SUSPENDED 1 X 8 LIGHT FIXTURE
- RECESS STRIP LIGHT
- 24" x 24" RECESSED W/ DIRECT/INDIRECT BASKET
- 24" x 48" RECESSED W/ DIRECT/INDIRECT BASKET
- RECESSED DOWNLIGHT
- DECORATIVE PENDANT
- LINEAR DIFFUSER
- GYPSUM BOARD PAINTED CEILING/SOFFIT
- RETURN AIR GRILLES
- SUPPLY AIR GRILLES
- SPRINKLER HEAD
- DUAL SPRINKLER SYSTEM REFER TO FIRE PROTECTION DOCUMENTS
- SECURITY CAMERA
- 9'-0" CEILING HEIGHT UNLESS OTHERWISE NOTED
- 2' X 2' ACOUSTICAL CEILING PANEL & GRID SYSTEM
- 2' X 4' CLEAN ROOM CEILING PANEL & GASKETED GRID SYSTEM

HAZARDOUS MATERIALS:

1. HAZARDOUS MATERIALS MAY EXIST IN THE BUILDING. NEITHER THE OWNER NOR THE ARCHITECT WARRANTIES OR GUARANTEES THE AREA OF WORK TO BE FREE OF HAZARDOUS, OR NUISANCE HAZARD MATERIAL. GENERAL CONTRACTOR IS TO REVIEW THE STATUS OF HAZARDOUS MATERIALS ABATEMENT IN ALL AREAS BEFORE THE START OF CONSTRUCTION. SHOULD HAZARDOUS MATERIALS BE ENCOUNTERED, THE CONTRACTOR SHALL STOP WORK, SEAL THE AREA, AND REPORT CONDITION TO THE OWNER AND THE ARCHITECT AND DO NO WORK UNTIL THE CONDITION IS CORRECTED.
2. HAZARDOUS MATERIALS INCLUDE BUT ARE NOT LIMITED TO: ASBESTOS PIPE COVERING (INSULATION), VINYL ASBESTOS TILE, SOME LINOLEUM, LEAD BASED PAINT, AND LATEX DUST.
3. NUISANCE HAZARD MATERIAL INCLUDES FIBERGLASS.

NOTES:

1. WHERE ANY CUT TILES WOULD BE LESS THAN 6" WIDE, TRIM 2'X4' TILE TO FIT.
2. REFER TO MECHANICAL AND ELECTRICAL DRAWINGS FOR LIGHT FIXTURE TYPES AND DIFFUSER SIZES.
3. GENERAL CONTRACTOR TO COORDINATE LOCATION OF CEILING AND LIGHT SUPPORTS. ANY CONFLICTS SHALL BE BROUGHT TO THE ATTENTION OF THE ARCHITECT.
4. ALL LIGHT FIXTURES, DIFFUSERS, SPRINKLERS, SPEAKERS, SMOKE DETECTORS, ETC. TO BE INSTALLED IN THE CENTER OF CEILING TILES.
5. CENTER TILE OR GRID ON ROOM CENTERLINES IN EACH DIRECTION AS REQUIRED TO MATCH LAYOUT SHOWN IN REFLECTED CEILING PLAN, TYPICAL U.N.O.
6. THE CONTRACTOR SHALL INSPECT AREAS BELOW AFFECTED BY PIPING/PLUMBING DRAIN WORK AND CARRY ALL COSTS ASSOCIATED WITH REMEDIAL WORK TO RETURN THOSE SPACES TO ORIGINAL CONDITION.
7. NO PLUMBING OR HVAC EQUIPMENT SHALL BE ALLOWED IN THE CEILING ABOVE THE ARCHIVE ROOM.

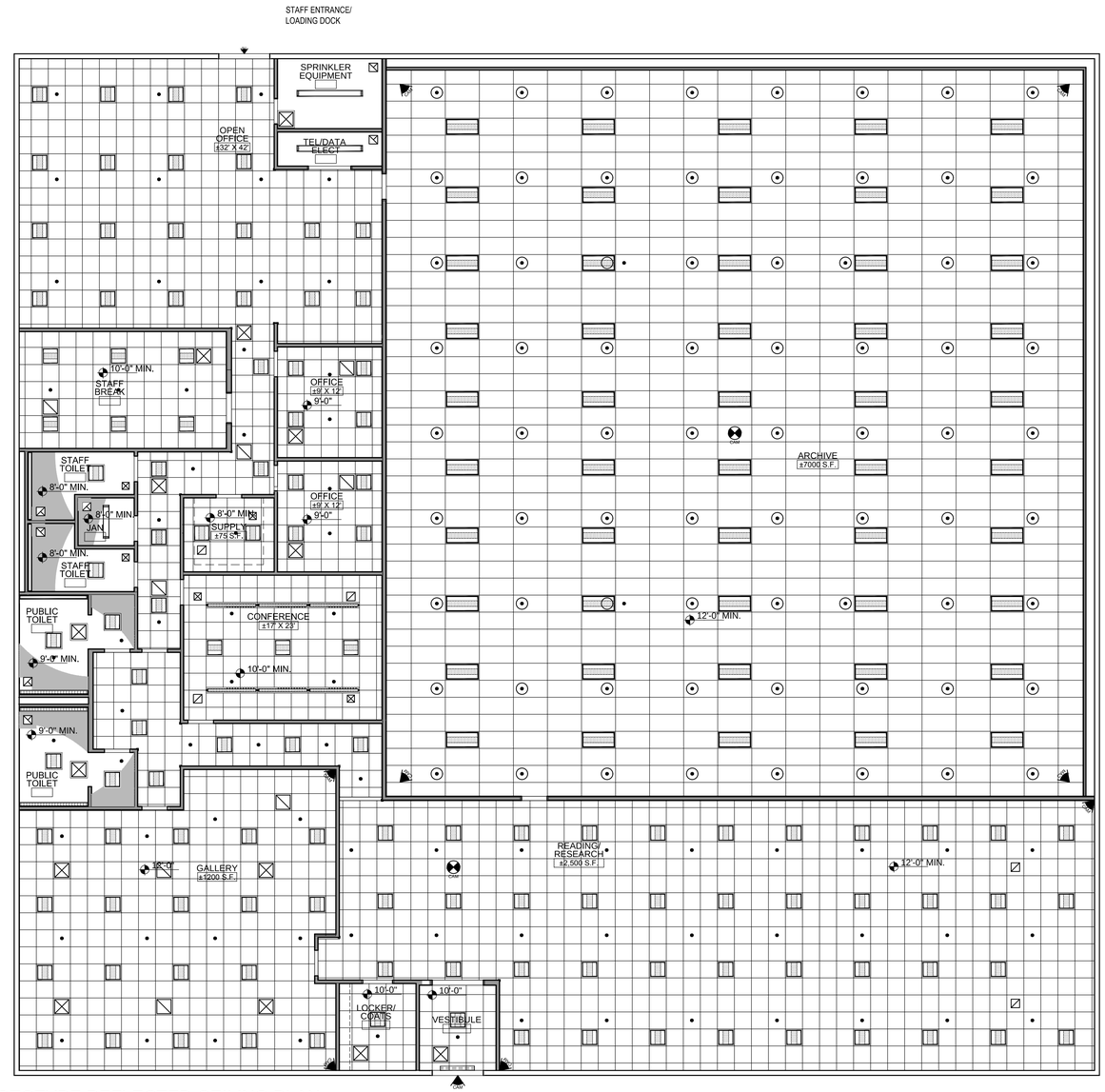

C3 PROTOTYPE REFLECTED CEILING PLAN

SCALE: 1/8" = 1'-0"

n|e|m|d architects

n|e|m|d architects, inc.
architects | planners | interiors

1 Virginia Avenue | Suite 202
Providence, Rhode Island 02905
T: 401-435-3532 | F: 401-435-3712
www.nemd.com | nemd@nemd.com

PROJECT:

SECRETARY OF STATE ARCHIVE

TITLE:

PROTOTYPE REFLECTED CEILING PLAN

THIS DRAWING IS THE PROPERTY OF NEMD ARCHITECTS, INC. AND SHALL NOT BE USED OR COPIED WITHOUT ITS CONSENT

ADDENDA / REVISIONS

NO.	DATE	NO.	DATE

PROJ. NO. : 19072

DRAWN BY : AAA

CHKD. BY : BBB

DATE : 00.00.00

SCALE : AS NOTED

DRAWING NO.

A300

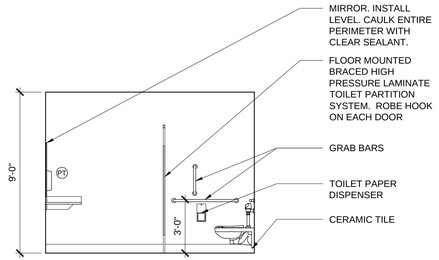

4 PUBLIC TOILET ROOM
SCALE: 1/4"=1'-0"

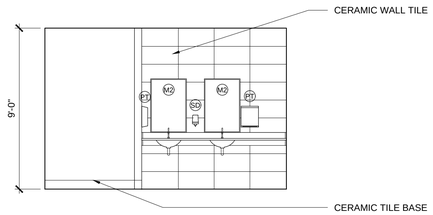

3 PUBLIC TOILET ROOM
SCALE: 1/4"=1'-0"

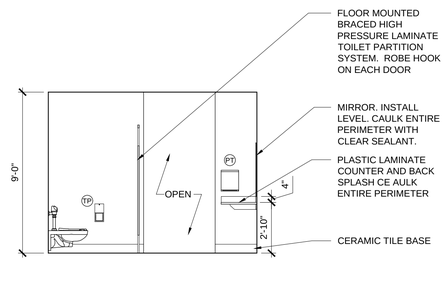

2 PUBLIC TOILET ROOM
SCALE: 1/4"=1'-0"

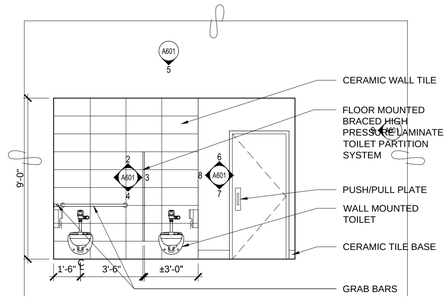

1 PUBLIC TOILET ROOM
SCALE: 1/4"=1'-0"

PUBLIC TOILET ROOM PLANS

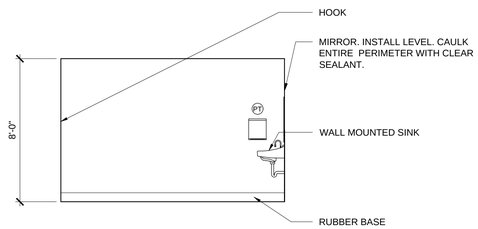

9 STAFF TOILET ROOM
SCALE: 1/4"=1'-0"

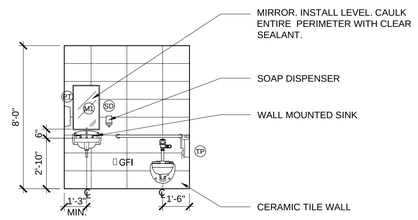

8 STAFF TOILET ROOM
SCALE: 1/4"=1'-0"

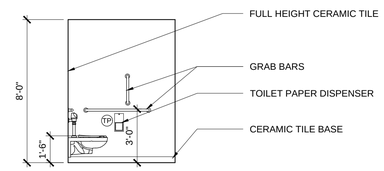

7 STAFF TOILET ROOM
SCALE: 1/4"=1'-0"

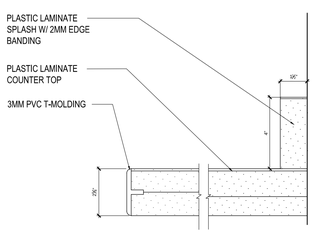

14 TYP. PLASTIC LAMINATE COUNTERTOP DETAIL
SCALE: NTS

GB = GRAB BAR
MI = MIRROR (18" W X 30" H)
M2 = MIRROR (24" W X 36 H)
TP = TOILET PAPER DISPENSER

PT = PAPER TOWEL DISPENSER
SD = SOAP DISPENSER
HS = HAND SANITIZER DISPENSER
HK = COAT / ROBE HOOK

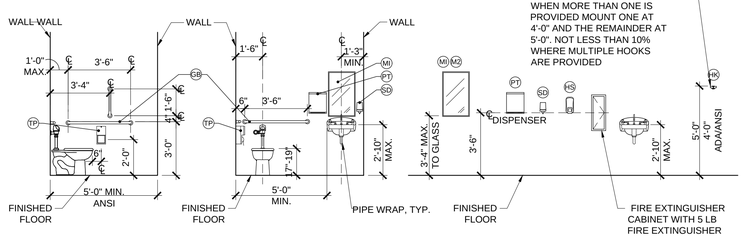

13 TYPICAL MOUNTING LOCATIONS
SCALE: 1/4" = 1'-0"

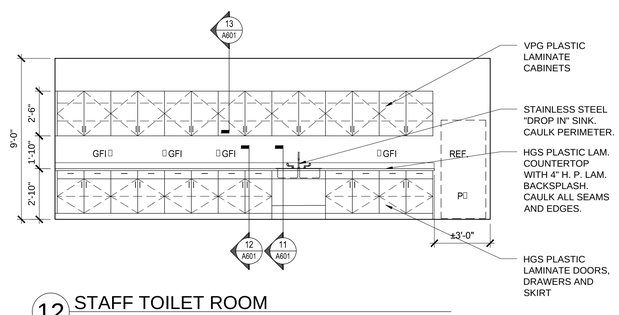

12 STAFF TOILET ROOM
SCALE: 1/4"=1'-0"

GENERAL MILLWORK NOTES

1. GENERAL CONTRACTOR TO FIELD VERIFY ALL DIMENSIONS AND CABINET SIZES PRIOR TO ORDERING ANY CASEWORK. DIMENSIONAL DISCREPANCIES SHALL BE BROUGHT TO THE IMMEDIATE ATTENTION OF THE ARCHITECT.
2. ALL GRAIN (WOOD & WOOD GRAIN PLASTIC LAMINATE) SHALL RUN VERTICALLY. GRAIN SHALL RUN CONTINUOUSLY ACROSS VERTICALLY ADJACENT DOORS / DRAWERS. REFER TO FINISH SCHEDULE.
3. ALIGN UPPER & BASE CABINET DOOR/DRAWER DIVISIONS VERTICALLY UNLESS SPECIFICALLY SHOWN OTHERWISE.
4. UPPER CABINETS SHALL BE 15" DEEP OUTSIDE DIMENSION AT TYPICAL LOCATIONS; WHEN INSTALLED ABOVE WALL-HUNG SINK, THEY SHALL BE 10" DEEP OUTSIDE DIMENSION.
5. GYPSUM BOARD SOFFITS ABOVE UPPER CABINETS SHALL BE FLUSH WITH CABINET BOX; SOFFITS SHALL EXTEND ABOVE CEILING TO ALLOW FASTENING OF GRID EDGE TRACK TO FACE.
6. PROVIDE ½" REVEAL BETWEEN SOFFITS AND CABINETS; REVEAL SHALL BE RECESSED ¼" FROM FACE OF CABINETS AND PAINTED FLAT BLACK.
7. ALL EXPOSED ENDS OF WALL / BASE CABINETS AND WORK COUNTERS SHALL HAVE FINISHED END PANELS.
8. ALL CABINET HARDWARE SHALL MATCH OWNER STANDARD; COORDINATE HARDWARE LOCKING ARRANGEMENTS FOR CABINET DOORS & DRAWERS ON SHOP DRAWINGS WITH ARCHITECT & OWNER
9. PROVIDE FILLER STRIPS AT ALL LOCATIONS WHERE CABINETS ABUT A WALL OR PERPENDICULAR CABINETS; FILLER STRIPS SHALL BE A MINIMUM OF 1½" AND A MAXIMUM OF 3" AND SHALL BE OF SAME MATERIAL / FINISH AS FACE; ALL FILLER STRIPS SHALL BE INSTALLED FLUSH WITH FACE OF CABINET BOX AND SHALL NOT PROTRUDE BEYOND.
10. INTERIOR SHELVES AND SURFACES WITHIN CABINETS SHALL BE WHITE MELAMINE, EXCEPT OPEN CABINETS, WHICH SHALL MATCH CABINET FACE.
11. CABINETS SHALL BE PROVIDED WITH THE QUANTITY OF ADJUSTABLE SHELVES AS SHOWN ON THE ELEVATIONS.
12. PROVIDE COUNTERTOP GROMMETS FOR ACCESS TO POWER / TEL / DATA RECEPTACLES AT LOCATIONS AS DIRECTED IN FIELD BY OWNER.
13. TYPICAL UNDER-COUNTER SUPPORT BRACKET SHALL BE FASTCAP SPEEDBRACE 21X24 (OR SIZED PER COUNTER DEPTH), COLOR - TBD; MAX. SPACING 36 O.C. - NO SUBSTITUTIONS PERMITTED.
14. ALL PLASTIC LAMINATE COUNTERS SHALL HAVE 4" HIGH X ¾" THICK BACK/SIDE SPLASHES AND 1½" PVC T-MOLDING EDGE BAND; MATCH FINISH SCHEDULE.
15. PROVIDE SLOPED VALANCE PANEL BELOW SINKS, WHERE INDICATED; PANELS SHALL BE ADA/MAAB COMPLIANT WHERE NOTED.
16. ALL EXPOSED PIPING BELOW SINKS SHALL BE PROVIDED WITH ADA/MAAB COMPLIANT PIPE WRAP.
17. PROVIDE ¾" FIRE RATED PLYWOOD OR 16 GA. 8" STEEL BLOCKING AT LOCATION OF ALL ATTACHMENTS, SUCH AS, BUT NOT LIMITED TO: CASEWORK, WALL MOUNTED FIRE EXTINGUISHERS, GRAB BARS, HARDWARE, TOILET ACCESSORIES, WALL-MOUNTED SYSTEMS FURNITURE, AND OTHER WALL-MOUNTED ITEMS & EQUIPMENT, WHETHER SUPPLIED BY B.W.H. OR CONTRACTOR.
18. COORDINATE FINAL LOCATION OF ALL POWER & TEL/DATA OUTLETS AND APPLIANCE WATER SUPPLY CONNECTIONS IN FIELD WITH OWNER PRIOR TO INSTALLATION.
19. MILLWORK SUBCONTRACTOR SHALL PROVIDE COMPLETE SHOP DRAWINGS DETAILING CONSTRUCTION OF ALL CABINETRY, COUNTERS, SHELVING, AND ASSOCIATED ATTACHMENTS, HARDWARE, AND ACCESSORIES FOR REVIEW AND APPROVAL BY ARCHITECT & OWNER.; ALL MILLWORK FABRICATION SHALL CONFORM TO AWI STANDARDS, LATEST EDITION.
20. REFER TO FINISH SCHEDULE FOR ALL MILLWORK AND COUNTERTOP MATERIALS.
21. REFER TO PLUMBING DRAWINGS FOR FIXTURES ILLUSTRATED ON ELEVATIONS.

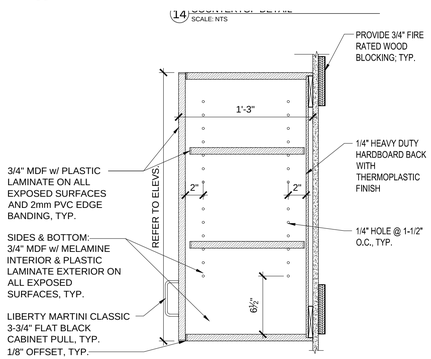

14 TYPICAL. WALL CABINET
SCALE: 1 1/2"= 1'- 0"

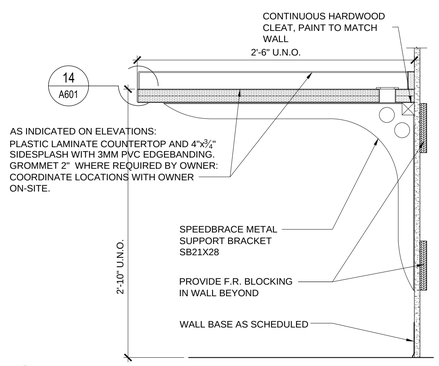

13 TYPICAL COUNTER
SCALE: 1 1/2"=1'-0"

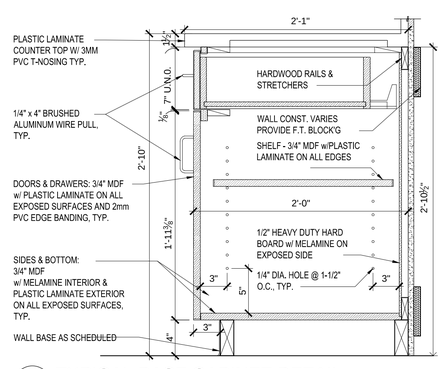

12 TYPICAL BASE CABINET DETAIL
SCALE: 1 1/2"= 1'- 0"

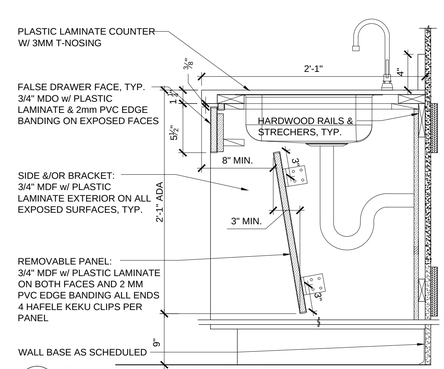

11 SINK BASE CABINET DETAIL
SCALE: 1 1/2"= 1'- 0"

PLAN NORTH

n|e|m|d architects

n|e|m|d architects, inc.
architects | planners | interiors

1 Virginia Avenue | Suite 202
Providence, Rhode Island 02905
T: 401-435-3532 | F: 401-435-3712
www.nemd.com | nemd@nemd.com

PROJECT:

SECRETARY OF STATE ARCHIVE

TITLE:

INTERIOR ELEVATIONS AND DETAILS

THIS DRAWING IS THE PROPERTY OF NEMD ARCHITECTS, INC. AND SHALL NOT BE USED OR COPIED WITHOUT ITS CONSENT

ADDENDA / REVISIONS

NO.	DATE	NO.	DATE

PROJ. NO. : 19072
DRAWN BY : 00
CHKD. BY : JO
DATE : 00.00.00
SCALE : AS NOTED

DRAWING NO.

A601

FINISH SCHEDULE			INSTALLATION NOTES
PAINT:			
P-1:	LOW VOC ACRYLIC LATEX, COLOR #	, FINISH: EGGSHELL	
P-2:	LOW VOC ACRYLIC LATEX, COLOR #	, FINISH: SATIN	TYPICAL ALL H.M. DOOR FRAMES
P-3	LOW VOC ACRYLIC LATEX, COLOR #	, FINISH: EGGSHELL	
P-4	LOW VOC ACRYLIC LATEX, COLOR #	, FINISH: EGGSHELL	
FLOORING			
VCT-1	ARMSTRONG, EXCELON 12" X 12" OR EQUAL, COLOR T.B.D.		
WM-1	WALK-OFF MAT MATS INC. BERBER OR EQUAL, COLOR T.B.D.		
LVT-1	LUXURY VINYL TILE		
LVT-2	LUXURY VINYL TILE		
RF-1	SELF LEVELING POURED EPOXY FLOOR		
CP-1	CARPET TILE		
CP-2	CARPET TILE		
CT-1	CERAMIC TILE		
BASE			
B-1	JOHNSONITE VINYL BASE, 4" RESILIENT (TOE) CB, COLOR #T.B.D.		
B-2	INTEGRAL EPOXY BASE 4" HIGH		
B-3	CERAMIC TILE COVE BASE		
B-4	JOHNSONITE VINYL BASE, 4" RESILIENT (TOELESS), COLOR #T.B.D.		
HIGH PRESSURE DECORATIVE LAMINATE:			
PL-1:	PLASTIC LAMINATE _, (WORKSURFACES) COLOR #		
PL-2:	PLASTIC LAMINATE _, (COUNTER-TOPS) COLOR #		
WALL TILE			
WT-1	TO BE SELECTED BY ARCHITECT FROM FULL MANUFACTURER'S PRODUCT LINE		
WT-2	TO BE SELECTED BY ARCHITECT FROM MANUFACTURER'S FULL PRODUCT LINE		
WALL PROTECTION			
CG-1	IPC VINYL COLOR TO MATCH WALL		
WP-1	WALL PROTECTION PANEL		

GENERAL NOTES:

1. ALL FINISH SELECTION TO BE FINALIZED
2. WHERE DEMOLITION OF EXISTING SURFACE WALL TREATMENTS, SUCH AS WALLCOVERING OR PANELING, HAS DAMAGED THE UNDERLYING WALL FINISH TO REMAIN, SKIM COAT WALLS AS REQUIRED TO PROVIDE A SMOOTH SURFACE SUITABLE FOR PAINTING OR APPLICATION OF OTHER NEW FINISH.
3. WHERE NEW WALL/MOUNTED FURNISHINGS ARE SHOWN, SUCH AS CABINETS, COUNTERS, SHELVING, PANELING, CHAIR RAILS, GRAB BARS, RAILINGS, GUARDS, BUMPERS, STOPS, ETC: PROVIDE AND INSTALL FIRE RATED BLOCKING IN THE WALL BEYOND. WHERE THE WALL BEYOND IS EXISTING, PATCH AND REPAIR EXISTING WALL BOARD AND FINISH AFTER INSTALLATION OF BLOCKING.

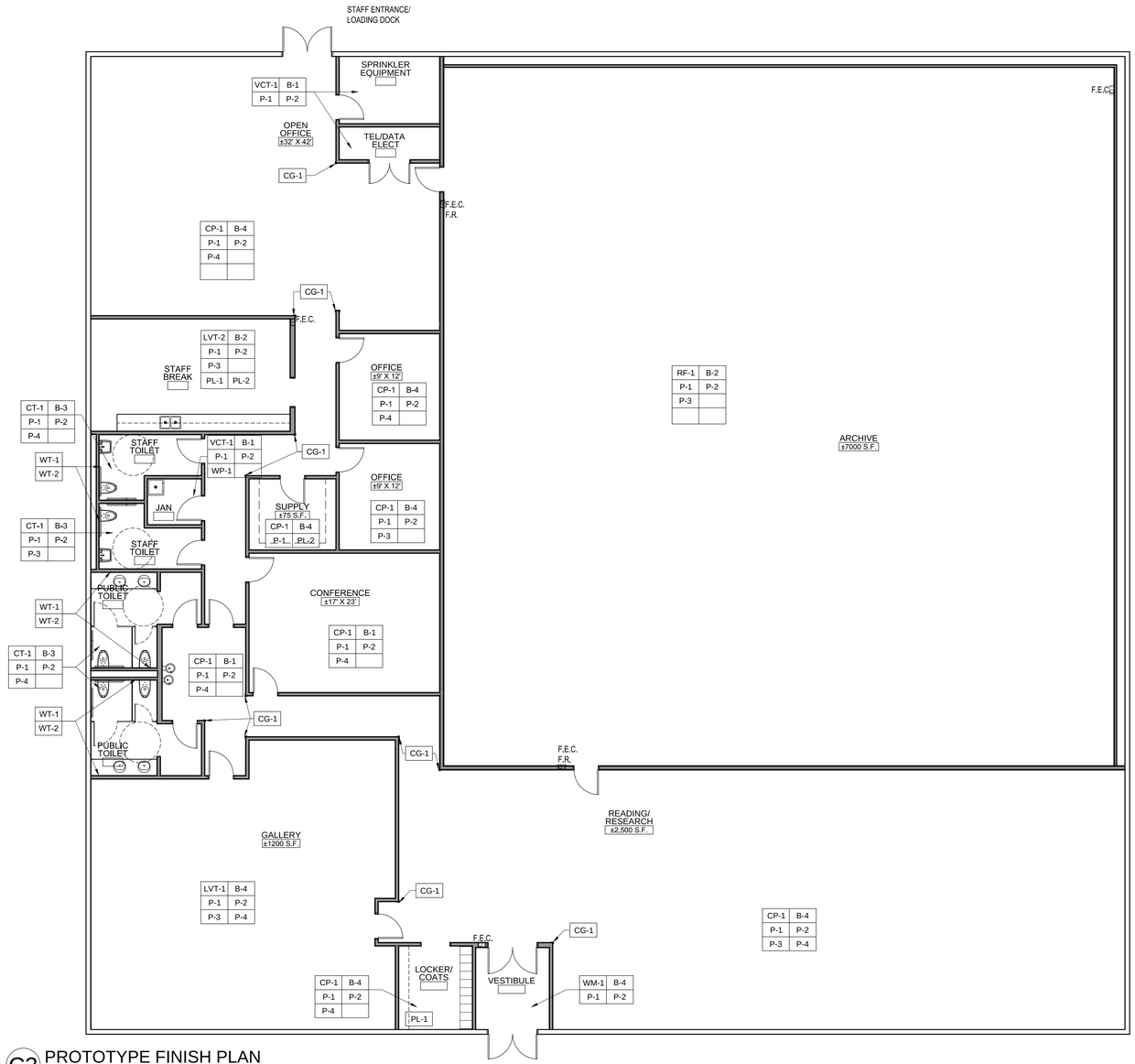

C3 PROTOTYPE FINISH PLAN
SCALE: 1/8" = 1'-0"

n|e|m|d architects

n|e|m|d architects, inc.
architects | planners | interiors

1 Virginia Avenue | Suite 202
Providence, Rhode Island 02905
T: 401-435-3532 | F: 401-435-3712
www.nemd.com | nemd@nemd.com

PROJECT:

SECRETARY OF STATE ARCHIVE

TITLE:

PROTOTYPE FINISH PLAN

THIS DRAWING IS THE PROPERTY OF NEMD ARCHITECTS, INC. AND SHALL NOT BE USED OR COPIED WITHOUT ITS CONSENT

ADDENDA / REVISIONS

NO.	DATE	NO.	DATE

PROJ. NO. : 19072
DRAWN BY : AAA
CHKD. BY : BBB
DATE : 00.00.00
SCALE : AS NOTED

DRAWING NO.

A700

EQUIPMENT SCHEDULE

REF. NO.	ITEM	MANUF.	MODEL	SIZE (INCHES)	FINISH	PROVIDED BY:	INSTALLED BY:	CONNECTION						NOTES
								PLUMB	HVAC	ELEC	TEL	DATA	CATV	
01	TASK CHAIR	TBD				OWNER	OWNER							
02	DESK WITH RETURN	TBD				OWNER	OWNER							
03	SIDE CHAIR	TBD				OWNER	OWNER							
04	DESK	TBD				OWNER	OWNER							
05	FILE CABINET	TBD				OWNER	OWNER							
06	CUBICLE SYSTEMS	TBD				OWNER	OWNER			X	X	X		
07	LAYOUT TABLE	TBD		120" L X 36" H X 30" D		OWNER	OWNER							
08	BREAK ROOM TABLE	TBD		36" X 36"		OWNER	OWNER							
09	COMPUTER	TBD				OWNER	OWNER			X	X	X		
10	CONFERENCE CHAIR	TBD			.	OWNER	OWNER							
11	CONFERENCE TABLE	TBD				OWNER	OWNER							
12	COPIER/PRINTER	EXISTING				OWNER	OWNER			X	X	X		
13	SCANNER	EXISTING				OWNER	OWNER			X	X	X		
14	RECYCLE BIN	TBD				OWNER	OWNER							
15	WALL MOUNTED TV	TBD				OWNER	CONTRACTOR			X			X	
16	CREDENZA	TBD		48" W x 36" H x 20" D		OWNER	CONTRACTOR							
17	FILE FILE	TBD		28" W x 61" H x 68" D		OWNER	OWNER							
18	FILE FILE	TBD		33" W x 44" H x 17" D		OWNER	OWNER							
19	FILE FILE	TBD		39" W x 43" H x 89" D		OWNER	OWNER							
20	FILE FILE	TBD		41.5" W x 23" H x 54" D		OWNER	OWNER							
21	CABINET	TBD		84" W X 58" H X 32" D		OWNER	OWNER							
22	CABINET	TBD		51" W X 54" H X 41" D		OWNER	OWNER							
23	MAP CASE	TBD		52 3/8" X 28"		OWNER	OWNER							
24	WORK TABLE	TBD		48" W X 72" D X ADJUSTABLE HEIGHT		OWNER	OWNER							
25	RESEARCH TABLE	TBD		48" W X 30" H X 72" D		OWNER	OWNER							
26	SHELVING UNIT	EXISTING		48" W X 120" H X 30" D		OWNER	CONTRACTOR							
27	SHELVING UNIT	EXISTING		48" W X 120" H X 15" D		OWNER	CONTRACTOR							
28	FIRE EXTINGUISHER CABINET RECESSED	TBD				CONTRACTOR	CONTRACTOR							
29	FIRE EXT. CAB SEMI RECESS. FIRE RATED	TBD				CONTRACTOR	CONTRACTOR							
30	FIRE EXT. CABINET SURFACE MOUNTED	TBD				CONTRACTOR	CONTRACTOR							
31	MOP HOOK & SHELF	BOBRICK/ BRADLEY/ AMERICAN STANDARD				CONTRACTOR	CONTRACTOR							
32	GRAB BAR WITH PEENED FINISH	BOBRICK/ BRADLEY/ AMERICAN STANDARD		42" X 1.5" DIAM		CONTRACTOR	CONTRACTOR							
33	GRAB BAR WITH PEENED FINISH	BOBRICK/ BRADLEY/ AMERICAN STANDARD		18" X 1.5" DIAM		CONTRACTOR	CONTRACTOR							
34	TOILET PAPER DISPENSER	BOBRICK/ BRADLEY/ AMERICAN STANDARD				CONTRACTOR	CONTRACTOR							
35	MIRROR	BOBRICK/ BRADLEY/ AMERICAN STANDARD		18" W X 30"H UNO		CONTRACTOR	CONTRACTOR							
36	PAPER TOWEL/ HAND DRYER	BOBRICK/ BRADLEY/ AMERICAN STANDARD				CONTRACTOR	CONTRACTOR							
37	CLOSET POLE AND SHELF					CONTRACTOR	CONTRACTOR							
38	LOCKER					OWNER	CONTRACTOR							
39	ROBE HOOK					CONTRACTOR	CONTRACTOR							1 TYPICAL ALL PRIVATE OFFICES AND SINGLE USER TOILET ROOMS

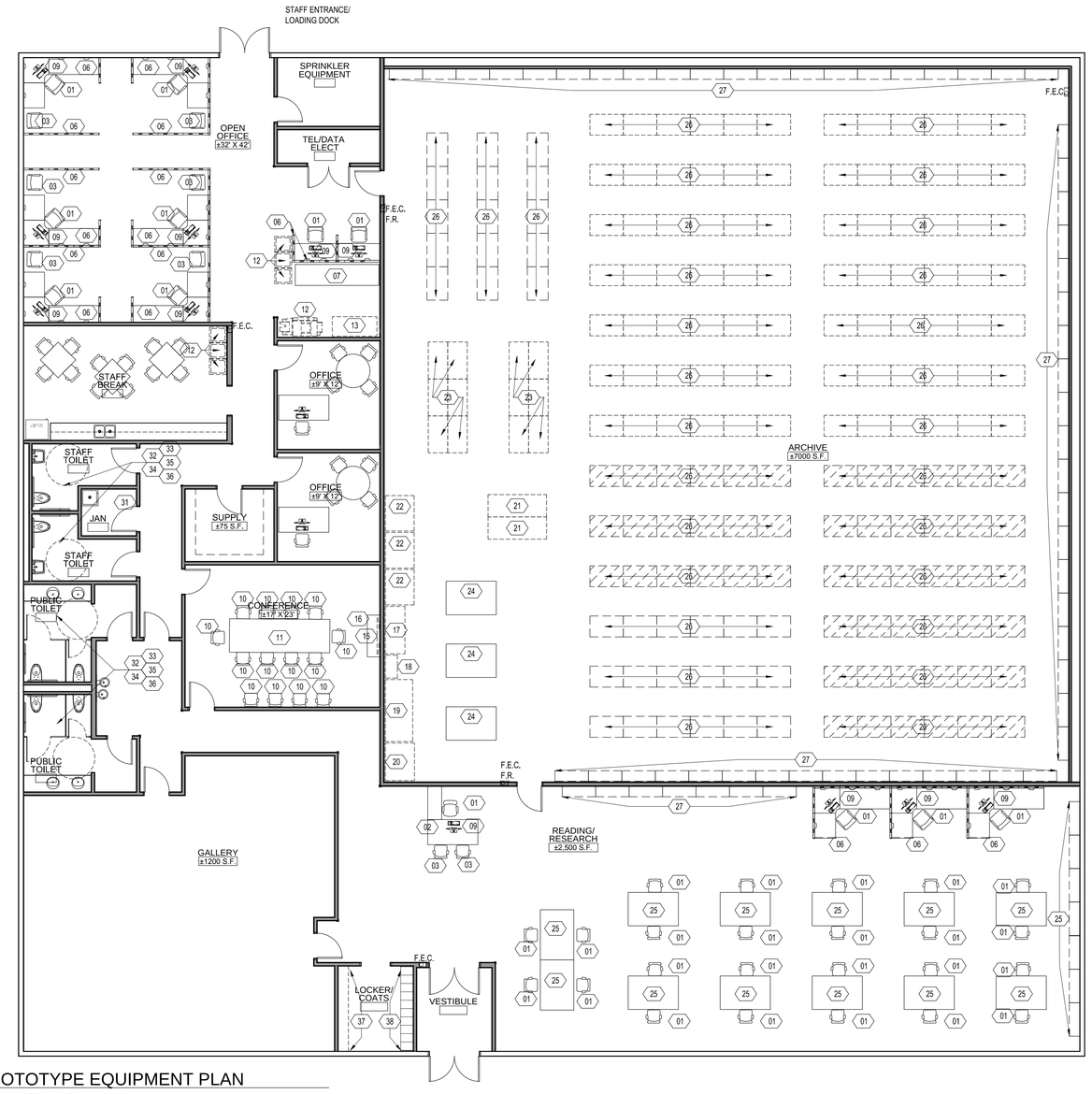

C3 PROTOTYPE EQUIPMENT PLAN
SCALE: 1/8" = 1'-0"

n|e|m|d architects

n|e|m|d architects, inc.
architects | planners | interiors

1 Virginia Avenue | Suite 202
Providence, Rhode Island 02905
T: 401-435-3532 | F: 401-435-3712
www.nemd.com | nemd@nemd.com

PROJECT:

SECRETARY OF STATE ARCHIVE

TITLE:

PROTOTYPE EQUIPMENT PLAN

THIS DRAWING IS THE PROPERTY OF NEMD ARCHITECTS, INC. AND SHALL NOT BE USED OR COPIED WITHOUT ITS CONSENT

ADDENDA / REVISIONS

NO.	DATE	NO.	DATE

PROJ. NO. : 19072
DRAWN BY : AAA
CHKD. BY : BBB
DATE : 00.00.00
SCALE : AS NOTED

DRAWING NO.

A800

ABBREVIATIONS

GENERAL ABBREVIATIONS:

AAV	AUTOMATIC AIR VENT
ADD'L	ADDITIONAL
AFF	ABOVE FINISHED FLOOR
AMS	AIR FLOW MEASURING STATION
ALT	ALTITUDE OR ALTERNATE
AMP	AMPERE
AP	ACCESS PANEL
APD	AIR PRESSURE DROP
ARCH	ARCHITECT
ATC	AUTOMATIC TEMP. CONTROL
ATM	ATMOSPHERE
AVG	AVERAGE
BDD	BACKDRAFT DAMPER
BG	BLAST GATE DAMPER
BHP	BRAKE HORSEPOWER
BI	BACKWARDS INCLINED
BLDG	BUILDING
BMS	BUILDING MANAGEMENT SYSTEM
BOD	BOTTOM OF DUCT
BOP	BOTTOM OF PIPE
BSMT	BASEMENT
BTU	BRITISH THERMAL UNIT
BTH	BTU PER HOUR
CA	COMPRESSED AIR
CDW	CONDENSER WATER
CENT	CENTRIFUGAL
CF	CUBIC FEET
CFM	CUBIC FEET PER MINUTE
CL	CENTERLINE
C.L.	COLUMN LINE
CND	CONDENSATE
CLG	CEILING OR COOLING
C.O.	CLEAN-OUT
CO	CARBON MONOXIDE
CO2	CARBON DIOXIDE
COL	COLUMN
CONN	CONNECTION
CONTR	CONTRACTOR
CV	CONSTANT VOLUME
DB	DRY BULB TEMPERATURE
DEG	DEGREE DIRECT
DDC	DIGITAL CONTROL
DIA	DIAMETER
DIFF	DIFFUSER
DIM	DIMENSION
DN	DOWN
DP	DIFFERENTIAL PRESSURE
DWDI	DOUBLE WIDTH DOUBLE INLET
DX	DIRECT EXPANSION
EA	EACH OR EXHAUST AIR
EAT	ENTERING AIR TEMPERATURE
ECH	ELECTRIC CABINET HEATER
EFF	EFFICIENCY
ELEC	ELECTRICAL
ELEV	ELEVATION
EMER	EMERGENCY
EMS	ENERGY MANAGEMENT SYSTEM
ENT	ENTER
ESP	EXTERNAL STATIC PRESSURE
EWT	ENTERING WATER TEMPERATURE
EXH	EXHAUST
EXIST.	EXISTING
F	FAHRENHEIT OR FAN
FA	FREE AREA
FD	FIRE DAMPER (ACCESS DOOR)
FLA	FULL LOAD AMPS
FLEX	FLEXIBLE
FPM	FEET PER MINUTE
FPS	FEET PER SECOND
FRP	FIBERGLASS REINFORCED PLASTIC
FS	FLOW SWITCH
FT	FEET
FTR	FINNED TUBE RADIATION
G	GAS
GAL	GALLONS
GALV	GALVANIZED
GC	GENERAL CONTRACTOR
GPH	GALLONS PER HOUR
GPM	GALLONS PER MINUTE
GWB	GYPSUM WALL BOARD
HB	HOSE BIBB
HC	HEATING COIL
HEX	HEAT EXCHANGER
HGT	HEIGHT
HP	HORSEPOWER
HR	HOUR
HTG	HEATING
HPS	HIGH PRESSURE STEAM
HW	HOT WATER
HZ	HERTZ
ID	INSIDE DIAMETER
IN	INCHES
KW	KILOWATT
L	LENGTH
LAT	LEAVING AIR TEMPERATURE
LB	POUND
LF	LINEAR FEET
LD	LINEAR DIFFUSER
LPS	LOW PRESSURE STEAM
LRA	LOCKED ROTOR AMPS
LVD	LOUVERED DOOR
LVG	LEAVING
LWT	LEAVING WATER TEMPERATURE
MAX	MAXIMUM
MBH	THOUSAND BTH
MCA	MINIMUM CIRCUIT AMPS
MD	MOTOR OPERATED DAMPER
MECH	MECHANICAL
MEZZ	MEZZANINE
MFR	MANUFACTURER
MIN	MINIMUM
MPS	MEDIUM PRESSURE STEAM
MUA	MAKE-UP AIR
N/A	NOT APPLICABLE
NC	NORMALLY CLOSED
NC	NOISE CRITERIA
NIC	NOT IN CONTRACT
NO	NORMALLY OPEN
No.	NUMBER
NOM	NOMINAL
NTS	NOT TO SCALE
OA	OUTSIDE AIR
OD	OUTSIDE DIAMETER
ODP	OPEN DRIP PROOF
OED	OPEN END DUCT
OV	OUTLET VELOCITY
PD	PRESSURE DROP
PH	PHASE
PHC	PREHEAT COIL
PBG	PLUMBING
POS	PROVIDED BY OTHER SECTION
PSI	POUNDS PER SQUARE INCH
PSIA	PSI ABSOLUTE
PSID	PSI DIFFERENTIAL
PSIG	PSI GAUGE
PVC	POLYVINYL CHLORIDE
PRV	PRESSURE REDUCING VALVE
QTY	QUANTITY
R	RADIUS
RA	RETURN AIR
REG	REGISTER
RET	RETURN
REQD	REQUIRED
RH	RELATIVE HUMIDITY
RLA	RUNNING LOAD AMPS
RLL	REFRIGERANT LIQUID LINE
RM	ROOM
RPM	REVOLUTIONS PER MINUTE
RSL	REFRIGERANT SUCTION LINE
SA	SUPPLY AIR
SCH	SCHEDULE
SD	SMOKE DETECTOR
SEN	SENSIBLE
SHC	SENSIBLE HEAT CAPACITY
SP	STATIC PRESSURE
SPECS	SPECIFICATIONS
SQ	SQUARE
SF	SQUARE FEET
SS	STAINLESS STEEL
STL	STEEL
SUP	SUPPLY
SWSI	SINGLE WITH SINGLE INLET
T	TEMPERATURE
TEL	TELEPHONE
TEFC	TOT. ENCLOSED FAN COOLED
TEMP	TEMPERATURE
TSTAT	THERMOSTAT
TOD	TOP OF DUCT
TON	12,000 BTH
TOP	TOP OF PIPE
TOT	TOTAL
TSP	TOTAL STATIC PRESSURE
TYP	TYPICAL
V	VENT
VB	VACUUM BREAKER
VD	VOLUME DAMPER
V	VOLTS (ELECTRICAL)
VEL	VELOCITY
W	WIDTH OR WATT
W/	WITH
WB	WET BULB TEMPERATURE
WC	WATER COLUMN
WG	WATER GAUGE
WMS	WIRE MESH SCREEN
W/O	WITHOUT
WPD	WATER PRESSURE DROP
WTD	WATER TEMPERATURE DIFF.

CONTROLS ABBREVIATIONS:

ACD	AUTOMATIC CONTROL DAMPER
ACV	AUTOMATIC CONTROL VALVE
AMS	AIR FLOW MEASURING STATION
ALM	ALARM
ATC	AUTOMATIC TEMPERATURE CONTROL
ATS	AIR TEMPERATURE SENSOR
BD	BACKDRAFT DAMPER
BV	BYPASS VALVE
CO2	CARBON DIOXIDE SENSOR
CO	CARBON MONOXIDE SENSOR
CT	CURRENT TRANSFORMER
CV	CONTROL VALVE
DDC	DIRECT DIGITAL CONTROL
DPS	DIFFERENTIAL PRESSURE SWITCH
DPT	DIFFERENTIAL PRESSURE SENSOR
DPV	DIFF. PRESSURE BYPASS VALVE
DSD	DUCT MOUNTED SMOKE DETECTOR
DWDI	DOUBLE WIDTH DOUBLE INLET
ES	END SWITCH
FM	FLOW METER/TRANSMITTER
FZ	FREEZESTAT
H	HUMIDISTAT
H2	HYDROGEN SENSOR
HEPA	HIGH EFF. PARTICULATE AIR FILTER
HGB	HOT GAS BYPASS
HHL	HIGH HUMIDITY LIMIT SENSOR
HOA	HANDS-OFF AUTOMATIC SWITCH
HS	HUMIDITY SENSOR
HZ	HERTZ
LSPS	LOW STATIC PRESSURE SWITCH
LS	LEVEL SENSOR
MD	MOTORIZED DAMPER
NC	NORMALLY CLOSED (POWER LOSS)
NO	NORMALLY OPEN (POWER LOSS)
NOX	NITROGEN OXIDE
OAH	OUTSIDE AIR HUMIDITY SENSOR
OAT	OUTSIDE AIR TEMP. SENSOR
RH	RELATIVE HUMIDITY
S	SWITCH
SP	STATIC PRESSURE SENSOR
SD	SMOKE DETECTOR
SP	STATIC PRESSURE SENSOR
SPD	SPEED CONTROL
S/S	START/STOP
T	THERMOSTAT
TS	TEMPERATURE SENSOR
WTS	WATER TEMPERATURE SENSOR

EQUIPMENT ABBREVIATIONS:

AC	AIR CONDITIONING UNIT
ACU	AC CONDENSING UNIT
AHU	AIR HANDLING UNIT
AS	AIR SEPARATOR
B	BOILER
BB	BASE BOARD
BC	BRANCH CONTROLLER
BFW	BOILER FEED WATER UNIT
BP	BOILER PUMP
BT	BUFFER TANK
CAC	CRITICAL COOLING AC UNIT
CC	COOLING COIL
CCU	CC CONDENSING UNIT
CH	CHILLER
CP	CIRCULATOR PUMP
CT	COOLING TOWER
CUH	CABINET UNIT HEATER
CWC	CHILLED WATER COIL
DC	DRY COOLER
DEF	DISHWASHER EXHAUST FAN
E	EXHAUST GRILLE
EBB	ELECTRIC BASE BOARD
ECH	ELECTRIC CABINET HEATER
ECH	ELECTRIC CEILING HEATER
EF	EXHAUST FAN
ERV	ENERGY RECOVERY VENTILATOR
ET	EXPANSION TANK
EUH	ELECTRIC UNIT HEATER
F	FURNACE
FC	FAN COIL UNIT
FPB	FAN POWERED VAV
FT	FINTUBE
GMS	GLYCOL MAKE-UP SYSTEM
GUH	GAS FIRED UNIT HEATER
H	HUMIDIFIER
HP	HEAT PUMP
HPU	HP CONDENSING UNIT
HV	HEATING & VENTILATING UNIT
HWC	HOT WATER COIL
LV	LOUVER
KEF	KITCHEN EXHAUST FAN
MAU	MAKE-UP AIR UNIT
MCC	MOTOR CONTROL CENTER
P	PUMP
PTAC	PACKAGED TERMINAL AC UNIT
R	RETURN GRILLE
RHP	RADIANT HEATING PANEL
RTU	ROOF TOP UNIT
S	SUPPLY DIFFUSER
SA	SOUND ATTENUATOR
SAC	SPLIT AC UNIT
SHP	SPLIT HEAT PUMP
SF	SUPPLY FAN
T	TRANSFER GRILLE
UH	UNIT HEATER
UV	UNIT VENTILATOR
VAV	VARIABLE AIR VOLUME BOX
VFD	VARIABLE FREQUENCY DRIVE
WSHP	WATER SOURCE HEAT PUMP

GENERAL CONSTRUCTION NOTES:

1. ALL WORK IS TO BE PERFORMED IN STRICT COMPLIANCE WITH LOCAL CODES AND ALL OTHER REGULATIONS GOVERNING WORK OF THIS NATURE.
2. THE CONTRACTOR IS RESPONSIBLE FOR ALL WORK, MATERIALS, AND LABOR TO SATISFY A COMPLETE WORKING SYSTEM WHETHER SPECIFIED OR IMPLIED.
3. THIS CONTRACTOR, PRIOR TO SUBMITTING HIS BID, SHALL VISIT THE PROJECT SITE TO FAMILIARIZE HIMSELF WITH ALL EXISTING CONDITIONS. REQUESTS FOR COMPENSATION FOR EXTRA WORK WHICH WOULD HAVE BEEN EVIDENT BY COMPLIANCE WITH THE PREVIOUS STATEMENT, WILL NOT BE CONSIDERED. THE CONTRACTOR SHALL CONDUCT A THOROUGH FIELD INVESTIGATION TO VERIFY WORK SHOWN ON THE DRAWINGS. THE DRAWINGS REFLECT THE BEST AVAILABLE INFORMATION FROM EXISTING PLANS AND SITE INVESTIGATIONS.
4. THE MECHANICAL PLANS ARE INTENDED TO BE DIAGRAMMATIC AND ARE BASED ON ONE MANUFACTURER'S EQUIPMENT. THEY ARE NOT INTENDED TO SHOW THE EXACT ROUTING OF SYSTEMS OR LOCATION OF COMPONENTS. THE EXACT LOCATIONS, DIMENSIONS AND ALL OTHER DETAILS OF EQUIPMENT ARE THE RESPONSIBILITY OF THIS CONTRACTOR. THIS CONTRACTOR SHALL VERIFY THE ACTUAL DIMENSIONS OF THE EQUIPMENT PROPOSED TO ENSURE THAT THE EQUIPMENT WILL FIT IN THE AVAILABLE SPACE. PROVIDE ALL DUCT AND PIPE TRANSITIONS REQUIRED FOR CONNECTION TO EQUIPMENT.
5. THIS CONTRACTOR SHALL FIELD VERIFY ALL DIMENSIONS AND EXISTING CONDITIONS PRIOR TO PROCEEDING WITH ANY WORK. WHERE DISCREPANCIES OCCUR BETWEEN THESE DOCUMENTS AND EXISTING CONDITIONS, THE DISCREPANCY SHALL BE REPORTED TO THE OWNER AND/OR ENGINEER FOR EXPEDITING AND RESOLVE.
6. ALL WORK SHALL BE PERFORMED IN A CLEAN AND WORKMANLIKE MANNER. CARE SHALL BE EXERCISED TO MINIMIZE ANY INCONVENIENCE OR DISTURBANCE TO OTHER AREAS OF THE BUILDING WHICH ARE TO REMAIN IN OPERATION. ISOLATE WORK AREAS BY MEANS OF TEMPORARY PARTITIONS AND/OR TARPS TO KEEP DUST AND DEBRIS WITHIN THE CONSTRUCTION AREA.
7. CLEAN THE JOB SITE DAILY AND REMOVE FROM THE PREMISES ANY DIRT AND DEBRIS CAUSED BY THE PERFORMANCE OF THE WORK INCLUDED IN THIS CONTRACT.
8. ALL OPENINGS IN WALLS SHALL BE KEPT PROPERLY SEALED AT ALL TIMES, EXCEPT WHEN BEING WORKED ON TO PRECLUDE THE POSSIBILITY OF FLOODING DUE TO STORM OR OTHER CAUSES.
9. THE CONTRACTOR SHALL BE RESPONSIBLE FOR THE SAFEKEEPING OF HIS OWN PROPERTY ON THE JOB SITE. OWNER ASSUMES NO RESPONSIBILITY FOR PROTECTION OF PROPERTIES AGAINST FIRE, THEFT, AND ENVIRONMENTAL CONDITIONS.
10. THIS CONTRACTOR SHALL COORDINATE HIS WORK WITH ALL OTHER TRADES PRIOR TO FABRICATION, PURCHASE AND/OR INSTALLATION OF ALL WORK. ALL OFFSETS IN PIPING AND DUCTS TO AVOID OBSTRUCTIONS SHALL BE PROVIDED AT NO COST TO THE OWNER.
11. CONTRACTOR SHALL REFER TO THE COMPLETE SET OF CONTRACT DOCUMENTS INCLUDING SPECIFICATIONS AND OTHER TRADES FOR A FULL UNDERSTANDING OF ALL WORK REQUIRED.
12. WHERE USED THE TERM "PROVIDE" SHALL MEAN "FURNISH AND INSTALL".
13. PROVIDE ALL REQUIRED RIGGING TO ACCOMMODATE THE REMOVAL & INSTALLATION OF ALL EQUIPMENT.
14. PROVIDE ACCESS PANELS FOR ALL CONCEALED DAMPERS, VALVES, AND EQUIPMENT.
15. ALL EQUIPMENT AND MATERIALS SHALL BE AS SPECIFIED OR "APPROVED EQUAL" BY THE ENGINEER OR ARCHITECT.
16. REFER TO ARCHITECTURAL REFLECTED CEILING PLAN FOR EXACT LOCATION OF REGISTERS, DIFFUSERS, AND GRILLES.
17. CONTRACTOR SHALL SPRAY PAINT INSIDE OF DUCT BLACK, BEHIND ALL GRILLES AND REGISTERS.
18. ALL DUCTWORK AND PIPING SHALL BE INSTALLED AS INDICATED ON THE DRAWINGS IN A NEAT AND WORKMANLIKE MANNER AND BE SUPPORTED AS REQUIRED BY CODES. DUCTWORK AND PIPING SHALL BE SET UP AND DOWN AND OFFSET AS REQUIRED TO SUIT FIELD CONDITIONS. DIELECTRIC COUPLINGS SHALL BE USED WHERE DISSIMILAR METALS ARE JOINED.
19. IF A SECTION OF DUCT OR PIPE IS NOT LABELED FOR SIZE, THEN THE LARGER SIZE INDICATED ON THE DRAWINGS SHALL PREVAIL. SIZE OF DUCT RUN-OUTS TO DIFFUSERS SHALL EQUAL DIFFUSER NECK SIZE UNLESS OTHERWISE NOTED.
20. PROVIDE ALL NECESSARY TEMPORARY OR PERMANENT CAPS OR PLUGS FOR PIPING. DO NOT LEAVE PIPING OPEN ENDED.
21. PROVIDE CONDENSATE PUMPS THROUGHOUT CONDENSATE DRAINAGE SYSTEM AS REQUIRED TO PROPERLY REMOVE CONDENSATE. PROVIDE A PER PUMP LINE-ITEM ALLOWANCE.
22. REFRIGERANT PIPE SIZING SHALL BE PER MANUFACTURER'S RECOMMENDATIONS. LENGTH OF PIPE, ELEVATION CHANGE AND EQUIPMENT ORIENTATION SHALL BE TAKEN INTO ACCOUNT.
23. SUCCESSFULLY PRESSURE TEST ALL REROUTED PIPING SYSTEMS. TEST SHALL BE PERFORMED AT TWICE SYSTEM OPERATING PRESSURES. REPAIR AND RETEST AS REQUIRED UNTIL SYSTEMS PROVE TIGHT.
24. ALL ROOF MOUNTED EQUIPMENT SHALL BE INSTALLED A MINIMUM OF 10' FROM THE ROOF EDGE. EQUIPMENT INSTALLED CLOSER THAN 10' SHALL REQUIRE THE INSTALLATION OF GUARD RAILS.
25. ALL CONCEALED ELECTRICAL CONNECTIONS SHALL BE HARD WIRED. PLUGS SHALL NOT BE USED AS A DISCONNECTING MEANS IN CONCEALED LOCATIONS.
26. CONTRACTOR SHALL PROVIDE ALL TEMPERATURE CONTROLS INCLUDING WIRING, TUBING, AND THERMOSTATS (WITH LOCKING COVERS) AND ALL MISCELLANEOUS APPURTENANCES TO MEET THE INTENT OF THESE DOCUMENTS. THERMOSTATS SHALL BE INSTALLED 48" AFF.
27. DUCT SMOKE DETECTORS SHALL BE FURNISHED BY ELECTRICAL CONTRACTOR, INSTALLED IN THE DUCTWORK BY MECHANICAL CONTRACTOR AND WIRED BY THE ELECTRICAL CONTRACTOR.
28. ALL FRESH AIR INTAKES & DIRECT VENTS SHALL TERMINATE AT LEAST 10' HORIZONTALLY FROM ANY GAS METERS.
29. PROVIDE FIRE/SMOKE DAMPERS AS REQUIRED TO MAINTAIN ALL WALL RATINGS.

MECHANICAL SYMBOL LEGEND

(T)	THERMOSTAT / SENSOR
(H)	HUMIDISTAT / SENSOR
	FIRE / SMOKE DAMPER
HUMID	HUMIDIFIER
	VAV BOX W/ REHEAT
	DUCTWORK DISTRIBUTION

n|e|m|d architects

n|e|m|d architects, inc.
architects | planners | interiors

1 Virginia Avenue | Suite 202
Providence, Rhode Island 02905
T: 401-435-3532 | F: 401-435-3712
www.nemd.com | nemd@nemd.com

ENGINEERING DESIGN SERVICES INCORPORATED
141 Industrial Highway Slatersville, RI 02876
Tel (401) 765-7659 Fax (401) 765-2984

REVIEW ONLY

PROJECT:

SECRETARY OF STATE ARCHIVE

TITLE:

MECHANICAL LEGENDS & NOTES

THIS DRAWING IS THE PROPERTY OF NEMD ARCHITECTS, INC. AND SHALL NOT BE USED OR COPIED WITHOUT ITS CONSENT

ADDENDA / REVISIONS

NO.	DATE	NO.	DATE

PROJ. NO. : 19072
DRAWN BY : KB
CHKD. BY : WM
DATE : 10.30.19
SCALE : AS NOTED
DRAWING NO.

M000

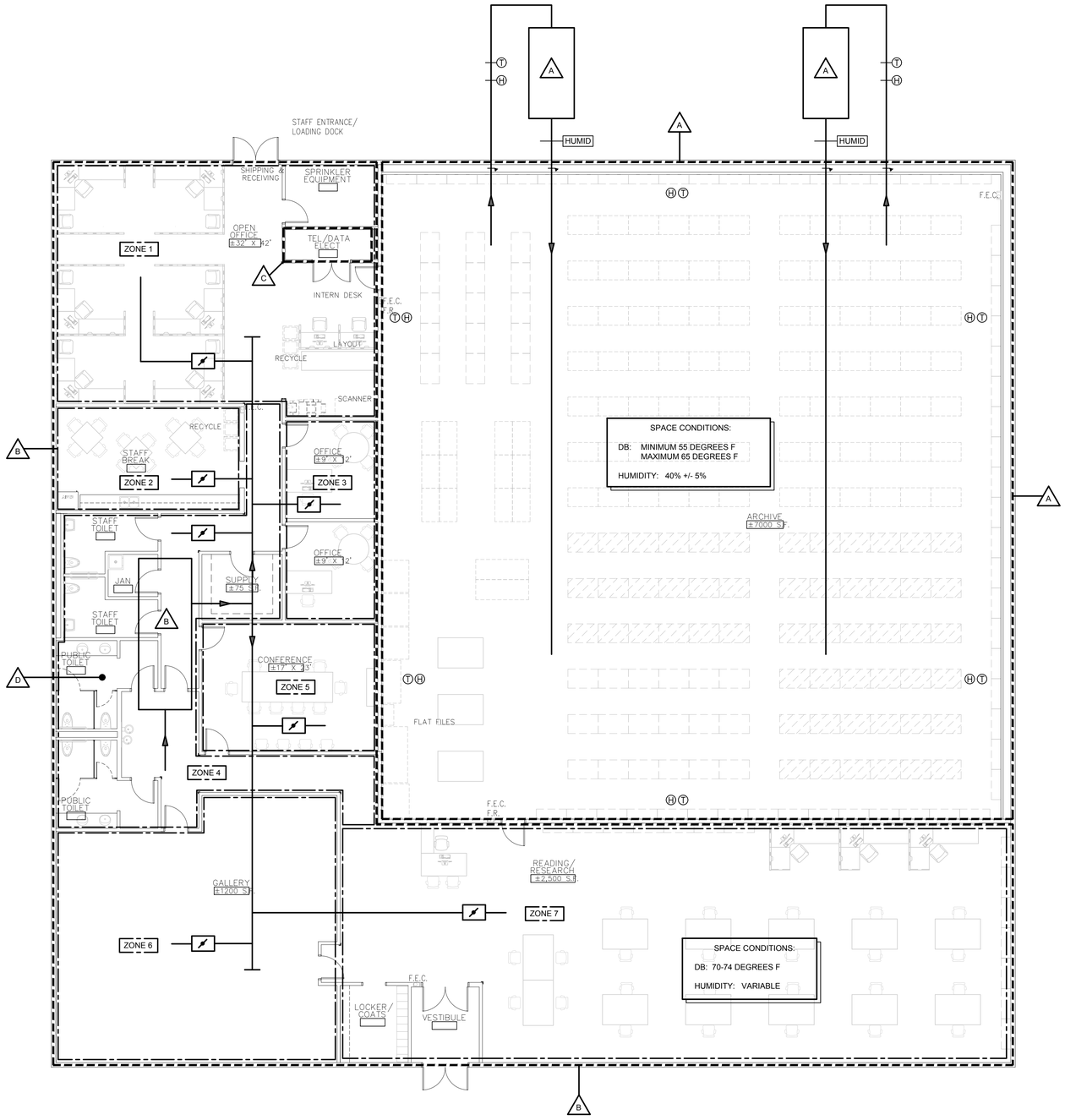

1 M101 FLOOR PLAN
SCALE: 1/8" = 1'-0"

KEYED NOTES:

A. PROVIDE TWO COMPLETE HVAC SYSTEMS TO SERVE THE ARCHIVES VAULT (100% REDUNDANCY). EACH SYSTEM SHALL BE A NOVELAIRE TECHNOLOGIES MODEL DES/DX PACKAGED ROOF MOUNTED DESICCANT DEHUMIDIFIER COMPLETE WITH MECHANICAL DX COOLING, POST HEATING/COOLING TO MAINTAIN SPACE CONDITIONS WITHIN THE ARCHIVES VAULT AS LISTED IN APPENDIX A OF THE STATE ARCHIVES VAULT SPECIFICATIONS. EACH SYSTEM TO BE COMPLETE WITH A HUMIDIFIER AND ALL REQUIRED DUCTWORK DISTRIBUTION COORDINATED WITH THE BUILDING FEATURES AND ROOM LAYOUT. THE HVAC EQUIPMENT MUST NOT BE MOUNTED ON THE ROOF ABOVE OR WITHIN THE ARCHIVES VAULT.

B. PROVIDE A PACKAGED GAS/ELECTRIC VAV ROOFTOP UNIT WITH DUCTWORK DISTRIBUTION AND INDIVIDUAL ZONING WITH REHEATS PER EXPOSURE TO SERVE THE GENERAL BUILDING SPACES. PROVIDE ELECTRIC HEATERS AT VESTIBULE, SPRINKLER ROOM & SHIPPING/RECEIVING ENTRANCE. ZONING SHOWN IS FOR GUIDANCE ONLY.

C. PROVIDE A DEDICATED SPLIT SYSTEM WITH LOW AMBIENT CONTROLS TO SERVE THE TELE/DATA ROOM.

D. THE TOILET ROOMS & GENERAL MECHANICAL SPACES TO BE VENTILATED VIA ERV PER MECHANICAL CODE.

NOTES:
1. PROVIDE FULL DDC SYSTEM FOR CONTROL OF ALL HVAC EQUIPMENT (SEE SPECIFICATIONS)
2. REFER TO APPENDIX A OF THE STATE ARCHIVES VAULT SPECIFICATIONS FOR ADDITIONAL SCOPE REQUIREMENTS.

n|e|m|d architects

n|e|m|d architects, inc.
architects | planners | interiors

1 Virginia Avenue | Suite 202
Providence, Rhode Island 02905
T: 401-435-3532 | F: 401-435-3712
www.nemd.com | nemd@nemd.com

ENGINEERING DESIGN SERVICES INCORPORATED
141 Industrial Highway Slatersville, RI 02876
Tel (401) 765-7659 Fax (401) 765-2984

REVIEW ONLY

PROJECT:
SECRETARY OF STATE ARCHIVE

TITLE:
MECHANICAL FLOOR PLAN

THIS DRAWING IS THE PROPERTY OF NEMD ARCHITECTS, INC. AND SHALL NOT BE USED OR COPIED WITHOUT ITS CONSENT

ADDENDA / REVISIONS

NO.	DATE	NO.	DATE

PROJ. NO. : 19072
DRAWN BY : KB
CHKD. BY : WM
DATE : 10.30.19
SCALE : AS NOTED
DRAWING NO.
M101

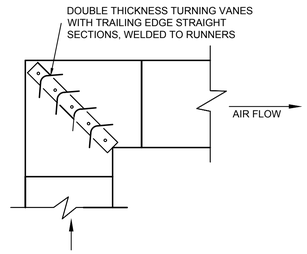

TYPICAL SQUARE ELBOW
NTS

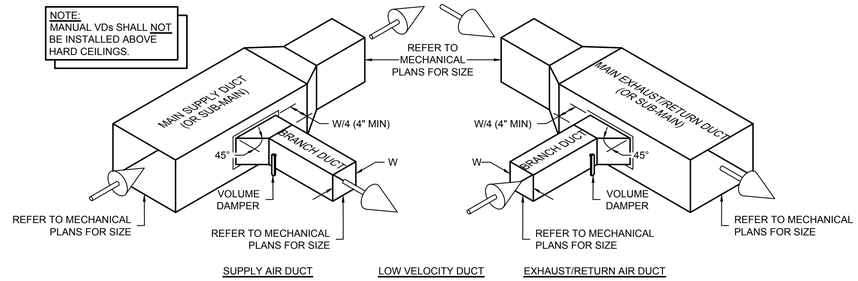

BRANCH DUCT CONNECTIONS
NTS

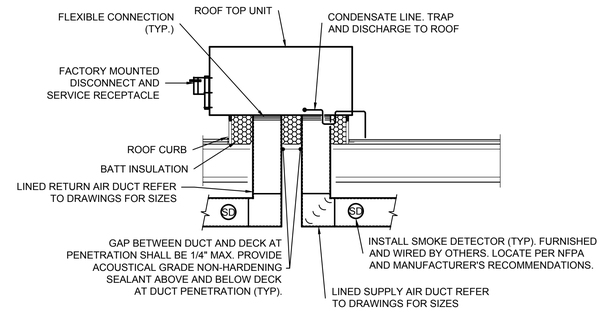

NOTES:
1. INSTALLATION TO BE PER APPROVED ROOFING SYSTEM MANUFACTURER'S REQUIREMENTS.

2. ANY UNITS INSTALLED WITHIN 10 FEET OF A ROOF EDGE. PROVIDE GUARD NOT LESS THAN 30" BEYOND EACH UNIT END. TOP OF GUARD SHALL BE LOCATED NOT LESS THAN 42" ABOVE THE SURFACE. GUARD TO BE FABRICATED & SUPPORTED PER BUILDING CODE. TYPICAL FOR ALL NEW AND EXISTING EQUIPMENT.

3. ALL NEW EQUIPMENT BEING INSTALLED SHALL BE COORDINATED WITH STRUCTURAL ENGINEER AND ARCHITECT.

4. ROOFTOP UNITS SHALL BE SET UPON THE FACTORY ROOFCURB WITH GASKET. STAINLESS STEEL FASTENERS SHALL BE INSTALLED THROUGH THE ROOFTOP UNIT CURB RAIL INTO THE FACTORY ROOFCURB NAILING STRIP AT 12" INTERVALS. ALTERNATIVELY, FACTORY RESTRAINT BRACKETS OR DIRECT BOLTING MAY BE EMPLOYED.

TYPICAL ROOFTOP UNIT DETAIL
NTS

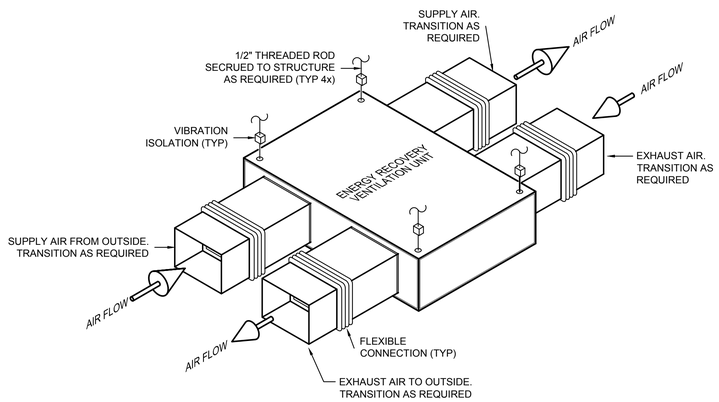

TYPICAL ENERGY RECOVERY VENTILATION UNIT DETAIL
NO SCALE

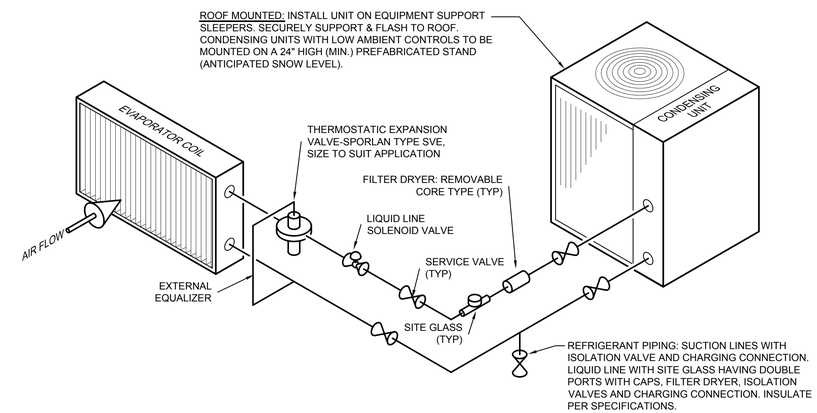

REFRIGERANT PIPING DIAGRAM
NO SCALE

n|e|m|d architects

n|e|m|d architects, inc.
architects | planners | interiors

1 Virginia Avenue | Suite 202
Providence, Rhode Island 02905
T: 401-435-3532 | F: 401-435-3712
www.nemd.com | nemd@nemd.com

ENGINEERING DESIGN SERVICES INCORPORATED
141 Industrial Highway Slatersville, RI 02876
Tel (401) 765-7659 Fax (401) 765-2984

REVIEW ONLY

PROJECT:

SECRETARY OF STATE ARCHIVE

TITLE:

MECHANICAL DETAILS

THIS DRAWING IS THE PROPERTY OF NEMD ARCHITECTS, INC. AND SHALL NOT BE USED OR COPIED WITHOUT ITS CONSENT

ADDENDA / REVISIONS

NO.	DATE	NO.	DATE

PROJ. NO. : 19072
DRAWN BY : KB
CHKD. BY : WM
DATE : 10.30.19
SCALE : AS NOTED
DRAWING NO.

M102

WIRING DEVICE LEGEND

DUPLEX CONVENIENCE OUTLET; 125 VOLT, 20 AMPERE, U-SLOT GROUNDING TYPE.	18" A.F.F.
DUPLEX CONVENIENCE OUTLET; 125 VOLT, 20 AMPERE, U-SLOT GROUNDING TYPE.	42" A.F.F. OR 6" ABOVE COUNTER
DUPLEX CONVENIENCE OUTLET; 125 VOLT, 20 AMPERE, U-SLOT GROUNDING TYPE WITH GROUND FAULT PROTECTION.	18" A.F.F.
DUPLEX CONVENIENCE OUTLET; 125 VOLT, 20 AMPERE, U-SLOT GROUNDING TYPE WITH GROUND FAULT PROTECTION.	42" A.F.F. OR 6" ABOVE COUNTER
SPECIAL NEMA CONFIGUATION OUTLET; VERIFY NEMA TYPE WITH EQUIPMENT TO BE SERVED.	--
SINGLE CONVENIENCE OUTLET; 125 VOLT, 20 AMPERE, U-SLOT GROUNDING TYPE.	18" A.F.F.
QUADRUPLEX CONVENIENCE OUTLET; 125 VOLT, 20 AMPERE, U-SLOT GROUNDING TYPE.	18" A.F.F.
DUPLEX CONVENIENCE OUTLET IN FLOOR BOX; 125 VOLT, 20 AMPERE, U-SLOT GROUNDING TYPE.	FLOOR
DUPLEX CONVENIENCE OUTLET IN CEILING; 125 VOLT, 20 AMPERE, U-SLOT GROUNDING TYPE.	CEILING
QUAD-RUPLEX CONVENIENCE OUTLET IN FLOOR BOX; 125 VOLT, 20 AMPERE, U-SLOT GROUNDING TYPE.	FLOOR
QUAD-RUPLEX CONVENIENCE OUTLET IN CEILING; 125 VOLT, 20 AMPERE, U-SLOT GROUNDING TYPE.	CEILING
JUNCTION BOX; SIZE AS REQUIRED PER CODE.	--
RELAY; REFER TO PLANS FOR RATINGS.	--
CONTACTOR; REFER TO PLANS FOR RATINGS.	--
TIMECLOCK; REFER TO DETAILS ON PLANS.	--
MOTOR; REFER TO PLANS FOR DETAILS.	--
60/50 FUSED DISCONNECT SWITCH. 60/50 INDICATES FRAME SIZE/FUSE SIZE IN THAT ORDER. STARTERS FOR HVAC EQUIPMENT BY MECHANICAL CONTRACTOR.	--
SURFACE MOUNTED PANELBOARD; 208Y/120V, 3-PHASE, 4-WIRE. REFER TO DRAWINGS FOR ADDITIONAL INFORMATION.	MOUNT 6'-6" AFF TO TOP BREAKER.
RECESSED MOUNTED PANELBAORD; 208Y/120V, 3-PHASE, 4-WIRE. REFER TO DRAWINGS FOR ADDITIONAL INFORMATION.	MOUNT 6'-6" AFF TO TOP BREAKER.
SURFACE MOUNTED PANELBOARD; 480Y/1277V, 3-PHASE, 4-WIRE. REFER TO DRAWINGS FOR ADDITIONAL INFORMATION.	MOUNT 6'-6" AFF TO TOP BREAKER.
RECESSED MOUNTED PANELBAORD; 480Y/1277V, 3-PHASE, 4-WIRE. REFER TO DRAWINGS FOR ADDITIONAL INFORMATION.	MOUNT 6'-6" AFF TO TOP BREAKER.
GROUNDING CONDUCTOR / MEANS & METHOD; IN ACCORDANCE WITH THE *"NATIONAL ELECTRIC CODE"*, (NEC). REFER TO PLANS FOR SIZING.	

NOTES:

1. DEVICES WITH THE FOLLOWING SUBSCRIPTS SHALL BE PROVIDED & UL LISTED TO BE INSTALLED / WIRED AS NOTED:
   - H - HOSPITAL GRADE
   - IG - ISOLATED GROUND
   - T - TAMPER RESISTANT
2. THE ELECTRICAL CONTRACTOR SHALL COORDINATE WITH THE G.C. FOR WALLS BEING FURRED-OUT WITH SHEETROCK DRYWALL SO OUTLET BOXES & DEVICES CAN BE INSTALLED FLUSH WITHIN THE WALLS. (TYPICAL)
3. ALL RECEPTACLES SHALL BE PROVIDED WITH AN ADHERED, TYPED LABEL INDICATING PANEL NAME AND CIRCUIT NUMBER. HANDWRITTEN LABELS WILL NOT BE ACCEPTED.
4. ALL RECEPTACLES WITH A DEDICATED CIRCUIT SHALL BE LABELED WITH PANEL NAME AND CIRCUIT NUMBER AS INDICATED IN NOTE #3 AS WELL AS LABELED "DEDICATED".
5. ALL COLORS OF RECEPTACLES AND ASSOCIATED FACEPLATES TO BE CONFIRMED WITH OWNER'S REPRESENTATIVE AND LOCAL (AHJ) PRIOR TO ANY SUBMITTALS, PURCHASE AND/OR INSTALLATION OF EQUIPMENT. THIS REQUIREMENT AS INDICATED IN NOTE #11 SHALL BE CORRECTED AS REQUIRED.
6. ALL TYPES AND LOCATIONS OF RECEPTACLES TO BE CONFIRMED WITH OWNER'S REPRESENTATIVE AND LOCAL (AHJ) PRIOR TO ANY SUBMITTALS, PURCHASE AND/OR INSTALLATION OF EQUIPMENT. FAILURE OF THIS REQUIREMENT AS INDICATED IN NOTE #3 SHALL BE CORRECTED AS REQUIRED.
7. ANY CONFLICT WITH RECEPTACLE LOCATIONS, TYPES OF RECEPTACLES OR COLORS OF RECEPTACLES WITH OWNER'S REPRESENTATIVE OR WILL BE THE RESPONSIBILITY OF THE ELECTRICAL CONTRACTOR, AND GENERAL CONTRACTOR TO PROVIDE ALL ADDITIONAL WORK AND EXPENSES TO REPAIR AND CORRECT. NO ADDITIONAL REIMBURSEMENTS OR TIME OF COMPLETION FOR WORK WILL BE ALLOWED.
8. ALL RECEPTACLES LOCATED WITHIN HEATHCARE FACILITIES SHALL BE PROVIDED WITH AN ILLUMINATED FACE, OR INDICATOR LIGHT.
9. IT SHALL BE THIS CONTRACTOR'S RESPONSIBILITY TO COORDINATE WITH LOCAL (AHJ) FOR ALL INSTALLATIONS AND REQUIREMENTS.

LIGHTING FIXTURE SCHEDULE

TYPE	MANUFACTURER	CATALOG No.	MOUNTING	LAMPING			VOLTAGE	DESCRIPTION / REMARKS
				TYPE	WATTAGE	QUANTITY		
A	(TO BE SELECTED)	(TO BE SUBMITTED FOR REVIEW)	SURFACE	LED	-	1	120/277	2' X 4' RECESSED DIRECT / INDIRECT TROFFER WITH LED MODULE.
AE	(TO BE SELECTED)	(TO BE SUBMITTED FOR REVIEW)	SURFACE	LED	-	1	120/277	2' X 4' RECESSED DIRECT / INDIRECT TROFFER WITH LED MODULE, PROVIDE WITH AN INTEGRAL EMERGENCY BATTERY BALLAST AND TEST SWITCH.
B	(TO BE SELECTED)	(TO BE SUBMITTED FOR REVIEW)	SURFACE	LED	-	1	120/277	2' X 2' RECESSED DIRECT / INDIRECT TROFFER WITH LED MODULE.
BE	(TO BE SELECTED)	(TO BE SUBMITTED FOR REVIEW)	SURFACE	LED	-	1	120/277	2' X 2' RECESSED DIRECT / INDIRECT TROFFER WITH LED MODULE, PROVIDE WITH AN INTEGRAL EMERGENCY BATTERY BALLAST AND TEST SWITCH.
C	(TO BE SELECTED)	(TO BE SUBMITTED FOR REVIEW)	PENDANT	LED	-	1	120/277	DIRECT / INDIRECT PENDANT HUNG LINEAR FIXTURE. PROVIDE WITH ALL COMPONENTS TO INSTALL A COMPLETE LTG. FIXTURE. (VERIFY OVERALL LENGTH)
D	(TO BE SELECTED)	(TO BE SUBMITTED FOR REVIEW)	RECESSED	LED	-	1	120/277	8'-0" RECESSED LINEAR WALL WASH.
E	(TO BE SELECTED)	(TO BE SUBMITTED FOR REVIEW)	SURFACE	LED	-	1	120/277	4'-0" SURFACE STRIP LIGHT.
F	(TO BE SELECTED)	(TO BE SUBMITTED FOR REVIEW)	SURFACE	LED	-	1	120/277	8'-0" SURFACE STRIP LIGHT, PROVIDE WITH AN INTEGRAL EMERGENCY BATTERY BALLAST AND TEST SWITCH.
WP	(TO BE SELECTED)	(TO BE SUBMITTED FOR REVIEW)	SURFACE	LED	-	1	120/277	EXTERIOR WEATHER-PROOF WALL PACK, PROVIDE WITH AN INTEGRAL PHOTOCELL AND EMERGENCY BATTERY BALLAST AND TEST SWITCH.

NOTES:

1. PROVIDE ACCESSORIES AND MOUNTING HARDWARE AS REQUIRED FOR ALL FIXTURES.
2. ALL FIXTURE/ACCESSORY COLORS NOT INDICATED ON DRAWING'S SHALL BE SELECTED BY ARCHITECT.
3. PROVIDE LAMPING FOR ALL FIXTURES UNLESS LAMPING IS INCLUDED WITH FIXTURE AS INDICATED IN SCHEDULE.
4. PROVIDE TYPICAL UNIT MOCK UP FOR LIGHT FIXTURE HANGING HEIGHTS AND EXPOSED ELECTRICAL CONDUIT LAYOUT TO BE REVIEWED BY ARCHITECT.
5. FIXTURE TO BE WIRED TO PHOTO CELL AND TIME CLOCK PROVIDED BY G.C.
6. ALL LIGHT FIXTURES WITH INCANDESCENT LAMPING SHALL BE PROVIDED W/ CFL/LED LAMP IN LIEU OF INCANDESCENT LAMP.
7. CBA = COLOR TO BE SELECTED BY ARCHITECT (THE ELECTRICAL CONTRACTOR SHALL VERIFY COLOR & FINISH WITH ARCHITECT PRIOR TO SUBMITTAL OF SHOP DRAWINGS.
8. CC = CUSTOM COLOR TO BE SELECTED BY ARCHITECT (THE ELECTRICAL CONTRACTOR SHALL VERIFY CUSTOM COLOR & FINISH WITH ARCHITECT PRIOR TO SUBMITTAL OF SHOP DRAWINGS.

SEISMIC RESTRAINT NOTE

A. GENERAL: IT IS THE INTENT OF THIS SEISMIC SPECIFICATION TO KEEP ALL ELECTRIAL BUILDING SYSTEM COMPONENTS IN PLACE DURING A SEISMIC EVENT. ALL ELECTRICAL SYSTEMS MUST BE INSTALLED IN STRICT ACCORDANCE WITH SEISMIC CODES, COMPONENT MANUFACTURER'S AND BUILDING CONSTRUCTION STANDARDS. WHENEVER A CONFLICT OCCURS BETWEEN THE MANUFACTURER'S OR CONSTRUCTION STANDARDS, THE MOST STRINGENT SHALL APPLY.

B. SEISMIC RESTRAINTS SHALL BE DESIGNED IN ACCORDANCE WITH SEISMIC FORCE LEVELS AS DETAILED IN THE APPLICABLE BUILDING CODE.

1. ALL EQUIPMENT, CONDUIT AND PULL BOXES SHALL BE ADEQUATELY RESTRAINED TO RESIST SEISMIC FORCES. RESTRAINT DEVICES SHALL BE DESIGNED AND SELECTED TO MEET SEISMIC REQUIREMENTS AS DEFINED IN THE LATEST ISSUE OF THE BOCA NATIONAL BUILDING CODE IN ACCORDANCE WITH THE APPLICABLE SEISMIC ZONE.
2. ANCHOR BOLT CALCULATORS, SIGNED AND STAMPED BY A REGISTERED PROFESSIONAL ENGINEER, SHALL BE SUBMITTED SHOWING ADEQUACY OF THE BOLT SIZING AND TYPE. STAMPED CALCULATIONS SHALL ALSO BE FURNISHED FOR ANCHORS ON RESTRAINT DEVICES, CABLES, ISOLATORS AND RIGIDLY MOUNTED EQUIPMENT.

TYPICAL FIRE STOPPING NOTES

A. GENERAL: FIRE STOPPING SHALL BE PROVIDED BY THIS CONTRACTOR FOR ALL FLOOR, CEILING AND FIRE RATED WALL PENETRATIONS FOR CONDUIT, SLEEVES AND/OR CABLING AS REQUIRED BY JOB CONDITIONS.

B. THE CONTRACTOR SHALL PROVIDE A FIRE STOP SYSTEM IN ACCORDANCE WITH THE FOLLOWING:

1. THE SYSTEM SHALL CONSIST OF A WATERBASED SEALANT AND SUITABLE DAMMING MATERIALS (WHERE REQUIRED) AND BE INSTALLED PER MANUFACTURER'S REQUIREMENTS.
2. THE SEALANT SUPPLIED SHALL BE A TWO STAGED INTUMESCENT AND CAPABLE OF EXPANDING UP TO 8 TIMES ITS ORIGINAL VOLUME.
3. THE SEALANT SUPPLIED SHALL CONTAIN NO ASBESTOS, NO FIBERGLASS, AND NO SOLVENTS NOT CORROSIVE MINERAL SALTS OF ANY KIND.
4. THE SEALANT SHALL FORM A SURFACE CAPABLE OF BEING SANDED AND PAINTED TO MATCH SURROUNDING SURFACES AND SHALL BE IMPERVIOUS TO WATER WHEN DRY.
5. THE FIRE STOP SYSTEM SHALL BE TESTED TO THE TIME/TEMPERATURE REQUIREMENTS OF ASTM E119 AND SHALL BE UL1479 (ASTM E814) AND CLASSIFIED FOR UP TO 3 HOURS.
6. THE FIRE STOP SEALANT SHALL BE SPECSEAL SEALANT AS MANUFACTURED BY SPECIFIED TECHNOLOGIES, INC. OR APPROVED EQUAL.
7. SPECIAL CARE SHALL BE TAKEN WITH ELECTRICAL SYSTEMS NOT TO COMPROMISE ANY OF THE BUILDING FIRE PARTITIONS, FLOORS, WALLS OR MEMBRANES. PROVIDE ALL FIRESTOPPING REQUIRED TO COMPLY WITH THE BUILDING CODE, THE ELECTRICAL CODE AND THE UL LISTING OF EACH ASSEMBLY. COORDINATE LOCATIONS AND TYPES OF MEMBRANES WITH ARCHITECT.

ABBREVIATIONS

A	AMPERES	F.A.	FIRE ALARM	NAC	F.A. NOTIFICATION APPLIANCE CIRCUIT EXPANDER PANEL
ADA	AMERICANS WITH DISABILITIES ACT	FACP	FIRE ALARM CONTROL PANEL	NEC	NATIONAL ELECTRICAL CODE
AMPS	AMPERES	FLR	FLOOR	NTS	NOT TO SCALE
AFF	ABOVE FINISHED FLOOR	G.C.	GENERAL CONTRACTOR	P	POLE
A/C	AIR CONDITIONING	GFCI	GROUND FAULT CIRCUIT INTERUPTER.	P.C.	PLUMBING CONTRACTOR
AWG	AMERICAN WIRE GAGE	G	GROUND	PNL	PANEL
C	CONDUIT	GND	GROUND	RE	RE-LOCATED DEVICE OR EQUIPMENT SHOWN IN NEW LOCATION
C/B	CIRCUIT BREAKER	HVAC	HEATING, VENTILATING, & & AIR CONDITIONING	TYP	TYPICAL
CF	COMPACT FLUORESCENT	JB	JUNCTION BOX	UL	UNDERWRITERS LABATORY
CLG	CEILING	KVA	KILOVOLT-AMPERES	UON	UNLESS OTHERWISE NOTED
℄	CENTERLINE	KW	KILOWATT	UPS	UNINTERRUPTIBLE POWER SUPPLY
DN	DOWN	LTG	LIGHTING	V	VOLTS
DWG	DRAWING	MAX	MAXIMUM	W	WATTS
E.C.	ELECTRICAL CONTRACTOR	M.C.	MECHANICAL CONTRACTOR	WP	WEATHER-PROOF
EQ	EQUAL	MECH	MECHANICAL		
ETR	EXISTING TO REMAIN	MIN	MINIMUM		
ER	EXISTING TO BE REMOVED	MTD	MOUNTED		
ERL	EXISTING TO BE RE-LOCATED				

n|e|m|d architects

n|e|m|d architects, inc.
architects | planners | interiors

1 Virginia Avenue | Suite 202
Providence, Rhode Island 02905
T: 401-435-3532 | F: 401-435-3712
www.nemd.com | nemd@nemd.com

ENGINEERING DESIGN SERVICES INCORPORATED
141 Industrial Highway Slatersville, RI 02876
Tel (401) 765-7659 Fax (401) 765-2984

REVIEW ONLY

PROJECT:

SECRETARY OF STATE ARCHIVE

TITLE:

ELECTRICAL LEGENDS & NOTES

THIS DRAWING IS THE PROPERTY OF NEMD ARCHITECTS, INC. AND SHALL NOT BE USED OR COPIED WITHOUT ITS CONSENT

ADDENDA / REVISIONS

NO.	DATE	NO.	DATE

PROJ. NO. : 19072
DRAWN BY : T.M.W.
CHKD. BY : R.W.D.
DATE : 10.29.19
SCALE : AS NOTED
DRAWING NO.

E000

TELEPHONE & DATA RACEWAY NOTES

1. NO SECTION OF CONDUIT SHALL BE LONGER THAN 100-FEET BETWEEN PULL POINTS.
2. NO SECTION OF CONDUIT SHALL CONTAIN MORE THAN TWO 90-DEGREE BENDS, OR EQUIVALENT, BETWEEN PULL POINTS (e.g., OUTLET BOXES, TELECOMMUNICATIONS CLOSETS, OR PULL BOXES). IF THERE IS A REVERSE (U-SHAPED) BEND IN THE SECTION, A PULL BOX SHALL BE INSTALLED.
3. THE INSIDE RADIUS OF A BEND IN CONDUIT SHALL BE AT LEAST 6 TIMES THE INTERNAL DIAMETER. BENDS IN THE CONDUIT SHALL NOT CONTAIN ANY KINKS OR OTHER DISCONTINUITIES THAT MAY HAVE A DETRIMENTAL EFFECT ON THE CABLE SHEATH DURING CABLE PULLING OPERATIONS.
4. ANY SINGLE CONDUIT RUN EXTENDING FROM A TELECOMMUNICATIONS CLOSET SHALL NOT SERVE MORE THAN THREE OUTLET BOXES.
5. CONDUITS PROTRUDING / PENETRATING THROUGH THE FLOOR IN THE TELECOMMUNICATIONS CLOSETS SHALL BE TERMINATED 3-INCHES ABOVE THE FLOOR ADJACENT WALLS. PROTRUSIONS / PENETRATIONS SHALL BE LOCATED TO AVOID CREATING A TRIPPING HAZARD WITHIN THE CLOSETS. FIRESTOP ALL PROTRUSIONS / PENETRATIONS.
6. A MINIMUM 3/4-INCH CONDUIT SHALL BE PROVIDED FROM THE TELECOMMUNICATIONS CLOSET TO SERVE EACH WALL-MOUNTED PUBLIC TELEPHONE. IN DISCUSSION WITH THE TELEPHONE PROVIDER, AND WHERE IT IS DESIRABLE TO CONCEAL THE OUTLET BOX DIRECTLY BEHIND THE TELEPHONE, THE CENTER OF THE OUTLET BOX SHALL BE LOCATED 48-INCHES ABOVE THE FINISHED FLOOR. FOR RECESSED APPLICATIONS, THE CONDUIT AND BOX SHALL BE INSTALLED TO SUIT THE SPECIFIC TYPE OF MOUNTING. REFER TO APPLICABLE CODES, ADA GUIDELINES, UNIFORM FEDERAL ACCESSIBILITY STANDARDS, MANUFACTURES SPECIFICATIONS AND ANSI STANDARDS FOR ADDITIONAL REQUIREMENTS.
7. WHERE A TELECOMMUNICATIONS CONDUIT IS TO BE INSTALLED TO A DEVICE EXPOSED TO THE WEATHER, CARE SHALL BE TAKEN TO PREVENT THE INGRESS OF MOISTURE. CARE SHALL ALSO BE TAKEN TO ENSURE THAT MOISTURE WILL NOT COLLECT IN LOW POINTS, FREEZE AND DAMAGE THE CABLE. NONMETALLIC CONDUIT SHALL BE UV RESISTANT AND MARKED ACCORDINGLY.
8. CONDUITS SHALL BE REAMED TO ELIMINATE SHARP EDGES. METALLIC CONDUIT SHALL BE TERMINATED WITH AN INSULATED BUSHING.
9. REFER TO ANSI/TIA/EIA-606 FOR ADMINISTRATION OF THE CONDUIT SYSTEM IDENTIFICATION.
10. ALL CONDUITS SHALL BE PROVIDED WITH PULL STRINGS.
11. OUTLET BOXES SHALL BE NO SMALLER THAN 2-INCHES WIDE, 3-INCHES HIGH AND 2.5-INCHES DEEP. THIS WILL ACCOMODATE ONE OR TWO 3/4-INCH CONDUITS. WHERE A LARGER CONDUIT IS REQUIRED, THE BOX SHALL BE INCREASED ACCORDINGLY. A MAXIMUM 1-1/4-INCH CONDUIT WILL REQUIRE A 4-11/16-INCH x 4-11/16-INCH x 2-1/2-INCH BOX.
12. CONDUIT TYPES SHALL BE ELECTRICAL METALLIC TUBING (EMT) OR RIGID METAL CONDUIT. LOCATIONS SUBJECT TO MOISTURE SHALL BE RIGID PVC. FLEXIBLE CONDUIT SHALL NOT BE USED FOR TELE/DATA RACEWAYS.
13. CONDUIT REQUIREMENTS FOR SUPPORT, END PROTECTION AND CONTINUITY SHALL COMPLY WITH APPROPRIATE ELECTRICAL CODES.
14. CONDUIT AND BOXES FOR TELE/DATA WIRING SHALL BE DEDICATED TO THOSE SYSTEMS. POWER WIRING SHALL BE KEPT OUT OF CONDUIT AND BOXES DEDICATED TO TELE/DATA WIRING.
15. CONDUIT SIZE FOR MAXIMUM NUMBER OF CABLES (SEE TABLE BELOW):

Conduit Trade Size	Maximum number of cables based upon allowable fill									
	Cable Outside Diameter in Inches									
	0.13	0.18	0.22	0.24	0.29	0.31	0.37	0.53	0.62	0.70
1/2"	1	1	0	0	0	0	0	0	0	0
3/4"	6	5	4	3	2	2	1	0	0	0
1"	8	8	7	6	3	3	2	1	0	0
1-1/4"	16	14	12	10	6	4	3	1	1	1
1-1/2"	20	18	16	15	7	6	4	2	1	1
2"	30	26	22	20	14	12	7	4	3	2
2-1/2"	45	40	36	30	17	14	12	6	3	3
3"	70	60	50	40	20	20	17	7	6	6
3-1/2"	-	-	-	-	-	-	22	12	7	6
4"	-	-	-	-	-	-	30	14	12	7

TYPICAL ELECTRICAL NOTES

1. FURNISH LABOR, MATERIALS, EQUIPMENT AND SERVICES NECESSARY FOR THE PROPER AND COMPLETE INSTALLATION OF ALL ELECTRIC WORK SHOWN ON THE DRAWINGS AND HEREIN SPECIFIED.
2. ALL ITEMS NOT SHOWN ON THE DRAWINGS OR CALLED FOR IN THE SPECIFICATIONS, BUT WHICH ARE NECESSARY TO MAKE A COMPLETE ELECTRICAL INSTALLATION, SHALL BE FURNISHED AND INSTALLED AS PART OF THIS PROJECT.
3. ALL ELECTRICAL INSTALLATIONS AND GROUNDING SHALL BE IN STRICT ACCORDANCE WITH THE LATEST REQUIREMENTS OF THE LOCAL, STATE AND NATIONAL CODES.
4. OBTAIN AND PAY FOR ALL REQUIRED PERMITS AND INSPECTIONS.
5. MATERIALS AND WORKMANSHIP SHALL BE THE BEST OF THEIR RESPECTIVE KIND AND IN FULL ACCORDANCE WITH THE MOST MODERN ELECTRICAL CONSTRUCTION STANDARDS. ALL MATERIAL SHALL BE NEW, UNLESS OTHERWISE NOTED AND FREE OF ANY DEFECTS.
6. THE ELECTRICAL CONTRACTOR SHALL CLEAN AT THE END OF EACH DAY ALL AREAS WORKED IN. EMPTY BOXES, RUBBISH, AND OTHER CONSTRUCTION MATERIALS OF NO USE SHALL BE REMOVED FROM THE BUILDING.
7. ALL WORK SEQUENCES SHALL BE COORDINATED WITH THE G.C. AND SHALL BE COORDINATION WITH OTHER BUILDING TRADES AND G.C. BUILDING SCHEDULES.
8. ALL BRANCH CIRCUITS RATED AT 120 VOLTS, 20 AMPERES EXCEEDING 75 FEET SHALL BE MINIMUM #10 AWG.
9. THE ELECTRICAL CONTRACTOR (E.C.) SHALL COORDINATE WITH THE LOCAL UTILITY POWER COMPANY AND PROVIDE ALL MATERIAL & LABOR REQUIRED TO COMPLY WITH THE UTILITY POWER COMPANY'S REQUIREMENTS AND STANDARDS, PRIOR TO ORDERING ANY ELECTRICAL EQUIPMENT, SUCH AS, SWITCHGEAR, PANELS, TRANSFORMERS, DISCONNECT SWITCHES, ETC... E.C. SHALL CONFIRM METERING SEQUENCE (HOT OR COLD) AND MAKE THE APPROPRIATE PROVISIONS FOR THE APPROVED METERING SEQUENCE ARRANGEMENT. A.I.C. RATINGS, GROUNDING, BONDING, RACEWAYS, ETC... SHALL BE IN ACCORDANCE WITH THE UTILITY COMPANY'S STANDARDS.
10. THE ELECTRICAL CONTRACTOR (E.C.) SHALL COORDINATE WITH THE LOCAL TELEPHONE COMPANY AND PROVIDE ALL MATERIAL & LABOR REQUIRED TO COMPLY WITH THE TELEPHONE COMPANY'S REQUIREMENTS AND STANDARDS, PRIOR TO ODERING ANY ELECTRICAL EQUIPMENT, SUCH AS, TERMINAL BOARDS, GROUNDING, RACEWAYS, ETC...
11. ALL RECEPTACLE WITH "WP" DESIGNATION SHALL BE PROVIDED WITH A WEATHER-PROOF WHILE IN-USE ENCLOSURE. (TYPICAL)
12. ELECTRICAL CONTRACTOR TO ALLOW TIME FOR DIRECTIONAL ADJUSTMENT OF ALL LIGHT FIXTURES AS DIRECTED BY OWNER.
13. ALL RECEPTACLES SHALL BE LABELED INDICATING THEIR RESPECTIVE PANEL & CIRCUIT NUMBER.
14. AT EXISTING FLOOR SLABS AND WALLS TO BE CORE-DRILLED OR CUT, THE CONTRACTOR SHALL FIND AND MARK ALL EXISTING REINFORCING, PIPING, CONDUIT & FEEDERS, ETC IN BOTH FACES LOCATED BY MEANS OF X-RAY, PACH-OMETER, OR PROFOMETER. SUBMIT DRAWING SHOWING LOCATIONS OF EXISTING REBAR, PIPING AND/OR CONDUIT AND PROPOSED CORES AND/OR CUTS FOR REVIEW.
15. ALL PENETRATIONS FOR POWER RECEPTACLES, JUNCTION BOXES, TELEPHONE/DATA OUTLETS, SWITCHES, BACKBOXES, ETC.. LOCATED IN EXTERIOR WALLS SHALL BE PROVIDED WITH APPROPRIATE CAULKING AND GASKETS TO SEAL OFF AND PREVENT AIR LEAKAGE. FOLLOW CAULKING AND GASKET MANUFACTURERS INSTALLATION GUIDELINES TO ENSURE CORRECT AND EFFECTIVE INSTALLATION.

COMMUNICATIONS SYMBOL LEGEND

SYMBOL	DESCRIPTION	MOUNTING
	TEL./DATA OUTLET; PROVIDE BACK BOX, DUAL RJ45 JACKS, COVER PLATES AND CABLING (CAT. #6, 2-RUNS) AS INDICATED IN DETAILS ON THIS DRAWING. CABLE TO BE RUN FROM BACKBOX UP WALL IN 3/4" CONDUIT TO ABOVE DROP CEILING AND ONTO CABLE TRAY SYSTEM IN COMMON CORRIDOR AND ONTO DATA RACKS. ALL EQUIPMENT COLORS TO TO BE SELECTED BY ARCHITECT.	18" A.F.F.
	DATA OUTLET; PROVIDE BACK BOX, RJ45 JACK, COVER PLATES AND CABLING (CAT. #6) AS INDICATED IN DETAILS ON THIS DRAWING. CABLE TO BE RUN FROM BACKBOX UP WALL IN 3/4" CONDUIT TO ABOVE DROP CEILING AND ONTO CABLE TRAY SYSTEM IN COMMON CORRIDOR AND ONTO DATA RACKS. ALL EQUIPMENT COLORS TO TO BE SELECTED BY ARCHITECT.	18" A.F.F.
	TELEPHONE OUTLET; PROVIDE BACK BOX, RJ45 JACK, COVER PLATES AND CABLING (CAT. #6) AS INDICATED IN DETAILS ON THIS DRAWING. CABLE TO BE RUN FROM BACKBOX UP WALL IN 3/4" CONDUIT TO ABOVE DROP CEILING AND ONTO CABLE TRAY SYSTEM IN COMMON CORRIDOR AND ONTO DATA RACKS. ALL EQUIPMENT COLORS TO TO BE SELECTED BY ARCHITECT.	18" A.F.F.
WIFI CLG. MTD.	WIFI OUTLET; PROVIDE BACK BOX, RJ45 JACK, COVER PLATES AND CABLING (CAT. #6) AS INDICATED IN DETAILS ON THIS DRAWING. CABLE TO BE RUN FROM BACKBOX ABOVE DROP CEILING TO CABLE TRAY SYSTEM IN COMMON CORRIDOR AND ONTO DATA RACKS. ALL EQUIPMENT COLORS TO TO BE SELECTED BY ARCHITECT.	FLUSH IN CEILING
TV	TELEVISION OUTLET; PROVIDE BACK BOX,COAX JACK, COVER PLATES AND CABLING (COAX CABLE) AS INDICATED IN DETAILS ON THIS DRAWING. CABLE TO BE RUN FROM BACKBOX UP WALL IN 3/4" CONDUIT TO ABOVE DROP CEILING AND ONTO CABLE TRAY SYSTEM IN COMMON CORRIDOR AND ONTO CABLE TELEVISION SERVICE EQUIPMENT. ALL EQUIPMENT COLORS TO TO BE SELECTED BY ARCHITECT.	FLUSH IN WALL, VERFIY HGT. WITH ARCH.
	PENDANT HUNG CABLE TRAY SYSTEM AS MANUFACTURED BY "CABLOFIL" (OR) APPROVED EQUAL. CONTRACTOR SHALL PROVIDE ALL REQUIRED COMPONENTS TO INSTALL A COMPLETE WIRE MANAGEMENT SYSTEM. CABLE TRAY SYSTEM TO BE A MINIMUM OF 12" WIDE BY 2" TALL, CONSTRUCTED OF STEEL / MESH TYPE.	VERIFY
	PLENUM RATED, CAT #6 WIRING. MFG. TELEDATA EXPRESS, CATALOG #101360 (OR) APPROVED EQUAL.	

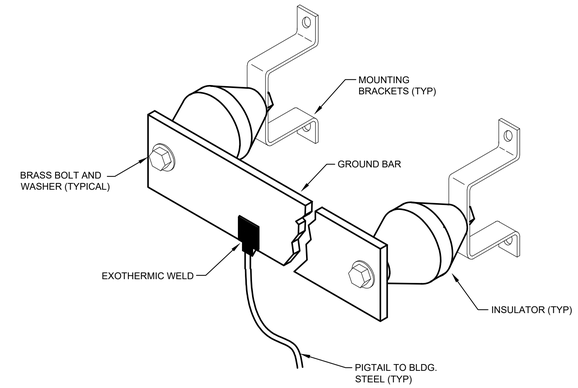

NOTES:

1. PROVIDE GROUND BAR (1/4" X 4" X 12") WITH WALL MOUNTING BRACKETS, INSULATORS AND A 25' EXOTHERMICALLY WELDED PIGTAIL (#6 AWG) IN EACH LAN ROOM & COMMUNICATIONS ROOM.
2. MOUNT GROUND BAR AT THE BOTTOM RIGHT CORNER ON THE PLYWOOD BACKBOARD.
3. GROUND BARS SHALL HAVE CAPACITY FOR NINE (9) GROUNDING LUGS TO BE ATTACHED.
4. CONNECT EXOTHERMICALLY WELDED PIGTAIL TO BUILDING STEEL.
5. GROUND BARS SHALL BE ELECTROLYTIC COPPER AND SHALL BE MOUNTED ON INSULATORS RATED AT 2700 VOLTS.
6. COPPER SURFACES SHALL BE SMOOTH AND WITHOUT MARKS DEEPER THAN 0.010 INCHES.
7. MANUFACTURERS SHALL BE ERICO, HARGER OR APPROVED EQUAL.

TYPICAL GROUND BAR DETAIL

NOT TO SCALE

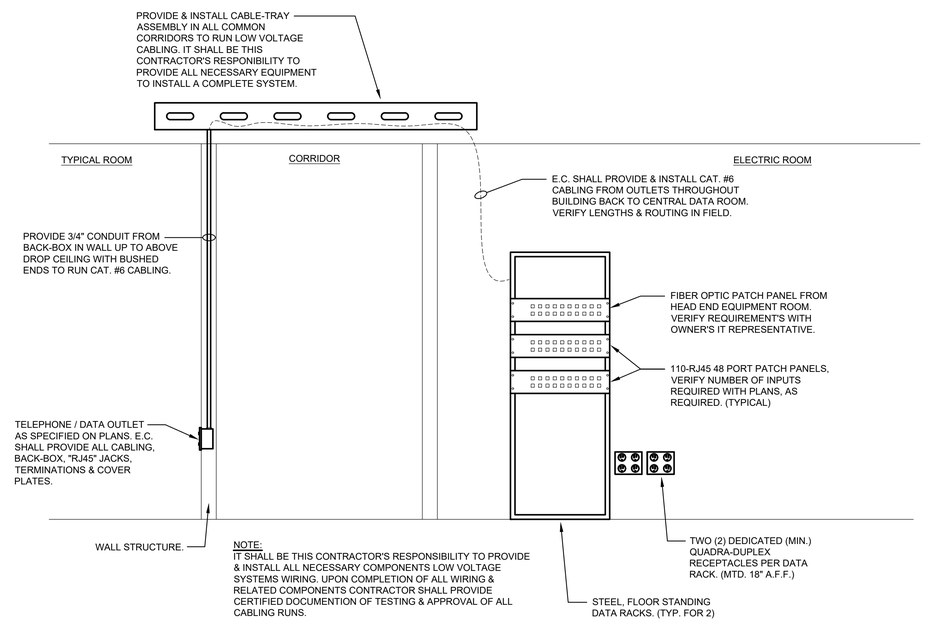

NOTE:
IT SHALL BE THIS CONTRACTOR'S RESPONSIBILITY TO PROVIDE & INSTALL ALL NECESSARY COMPONENTS LOW VOLTAGE SYSTEMS WIRING. UPON COMPLETION OF ALL WIRING & RELATED COMPONENTS CONTRACTOR SHALL PROVIDE CERTIFIED DOCUMENTION OF TESTING & APPROVAL OF ALL CABLING RUNS.

TYPICAL WIRING DIAGRAM FOR COMMUNICATIONS DISTRIBUTION

NOT TO SCALE

n|e|m|d architects

n|e|m|d architects, inc.
architects | planners | interiors

1 Virginia Avenue | Suite 202
Providence, Rhode Island 02905
T: 401-435-3532 | F: 401-435-3712
www.nemd.com | nemd@nemd.com

ENGINEERING DESIGN SERVICES INCORPORATED
141 Industrial Highway Slatersville, RI 02876
Tel (401) 765-7659 Fax (401) 765-2984

REVIEW ONLY

PROJECT:

SECRETARY OF STATE ARCHIVE

TITLE:

ELECTRICAL LEGENDS, DETAILS & NOTES

THIS DRAWING IS THE PROPERTY OF NEMD ARCHITECTS, INC. AND SHALL NOT BE USED OR COPIED WITHOUT ITS CONSENT

ADDENDA / REVISIONS

NO.	DATE	NO.	DATE

PROJ. NO. : 19072
DRAWN BY : T.M.W.
CHKD. BY : R.W.D.
DATE : 10.29.19
SCALE : AS NOTED

DRAWING NO.

E001

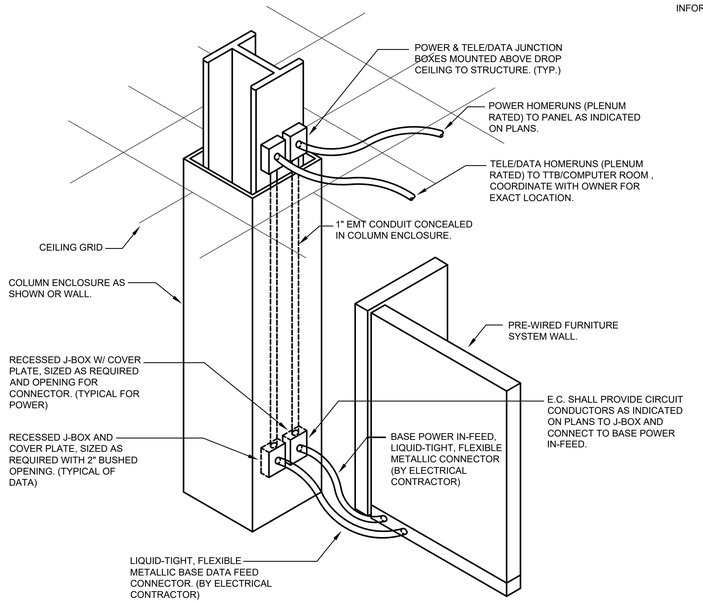

NOTE:
1. DERATE CONDUCTORS PER THE NATIONAL OR IF APPLICABLE STATE/LOCAL ELECTRIC CODE. (TYPICAL)

2. E.C. SHALL INSTALL POWER CIRCUIT CONDUCTORS AFTER FURNITURE SYSTEM SHOP DRAWINGS ARE APPROVED. SIZE & QUANTITY OF CIRCUIT CONDUCTORS SHALL MATCH THE BASE POWER FEED OF THE APPROVED FURNITURE SYSTEM. (TYPICAL)

PREWIRED FURNITURE CONNECTION DETAIL FROM COLUMN OR WALL

NOT TO SCALE

POWER & SIGNAL SCOPE OF WORK NOTES

a. PROVIDE A 400 AMP, 208Y/120 VOLT, 3-PHASE, 4-WIRE INCOMING ELECTRICAL SERVICE TO THE BUILDING AND TERMINATE ON AN EXTERIOR C/T CABINET WITH UTILITY METER AND INTO MAIN ELECTRIC ROOM. REFER TO POWER RISER DIAGRAM FOR ADDITIONAL INFORMATION. NEW SERVICE SHALL BE RUN UNDERGROUND FROM A PAD-MOUNTED UTILITY TRANSFORMER. CONTRACTOR SHALL BE RESPONSIBLE FOR ALL UTILITY COMPANY COORDINATION AND FEES.

b. A NEW INCOMING TELEPHONE / DATA SERVICE SHALL BE BROUGHT TO THE BUILDING AND TERMINATE ON A NEW BACKBOARD AS SPECIFIED IN THIS SPECIFICATION. (LOCATIONS TO BE DETERMINED IN FIELD WITH OWNER). NEW SERVICE SHALL BE RUN UNDERGROUND FROM A UTILITY POLE. CONTRACTOR SHALL BE RESPONSIBLE FOR ALL UTILITY COMPANY COORDINATION AND FEES.

c. PROVIDE POWER FROM PANELS FOR ALL MECHANICAL EQUIPMENT AS SPECIFIED IN THE MECHANICAL SCOPE OF WORK. EACH PIECE OF EQUIPMENT SHALL BE PROVIDED WITH A DEDICATED CIRCUIT, FEEDER, BREAKER AND DISCONNECTING MEANS AT UNIT.

d. PROVIDE POWER FROM PANELS FOR ALL EQUIPMENT (BREAK ROOM / COPIERS / ETC.) AS SPECIFIED IN THE ARCHITECTURAL & OWNER WORK LETTER SCOPE OF WORK (APPENDIX "A"). EACH PIECE OF EQUIPMENT SHALL BE PROVIDED WITH A DEDICATED CIRCUIT, FEEDER, BREAKER AND DISCONNECTING MEANS AT UNIT.

e. PROVIDE AT A MINIMUM DUPLEX RECEPTACLES, THREE (3) PER CLOSED OFFICE / ROOM, ONE (1) PER BATHROOM, EIGHT (8) IN OPEN WORK SPACES, SPREAD EVENLY THOUGH OUT. RECEPTACLES SHALL BE TIED INTO 208/120V PANEL, MAXIMUM OF EIGHT (8) RECEPTACLES PER DEDICATED 120 VOLT, 20 AMP CIRCUIT. RECEPTACLE LAYOUTS ON THESE PLANS ARE FOR GENERAL INTENT ONLY AND SHALL BE USED FOR COMMON LAYOUTS.

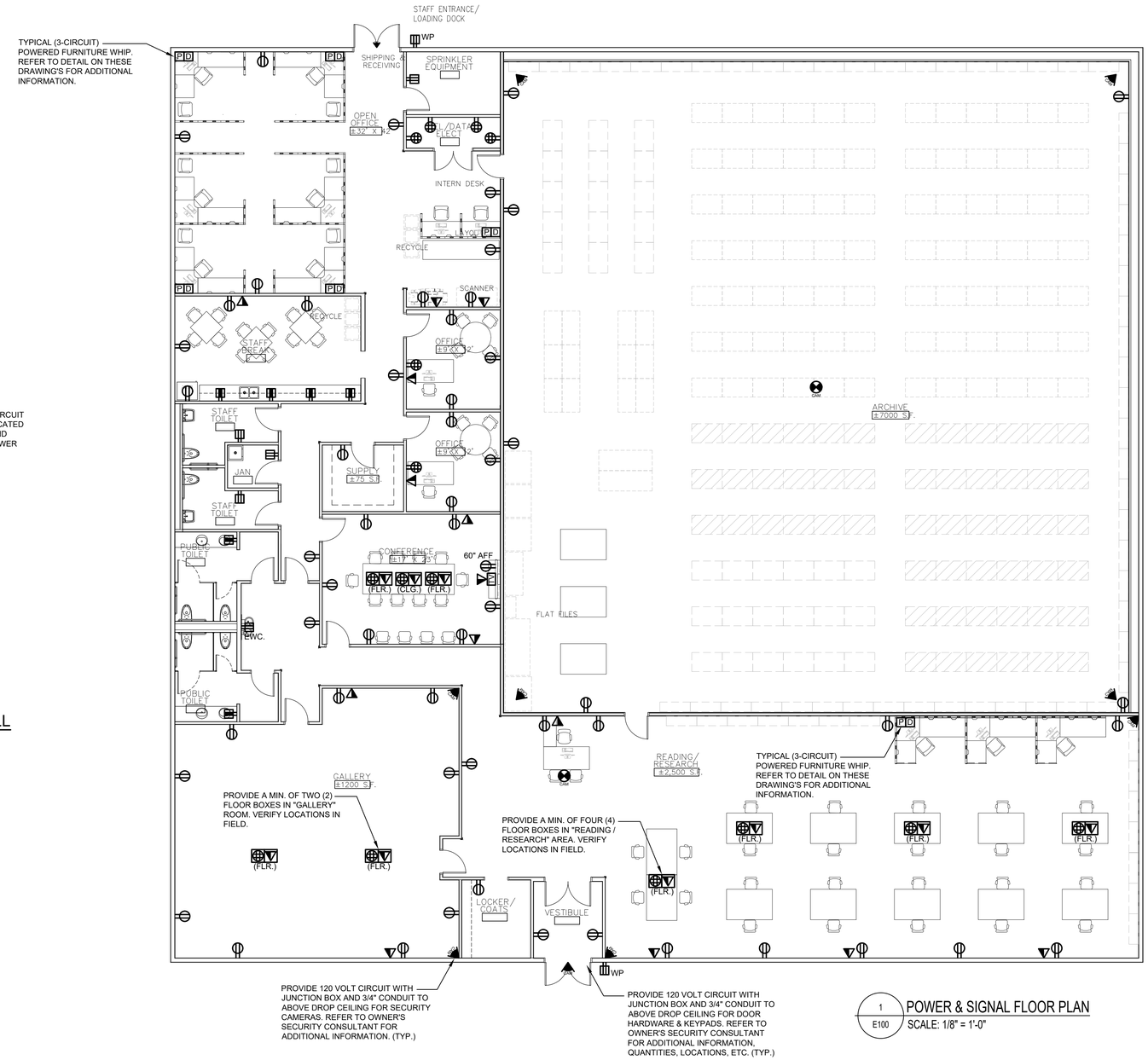

1 / E100 POWER & SIGNAL FLOOR PLAN
SCALE: 1/8" = 1'-0"

n|e|m|d architects

n|e|m|d architects, inc.
architects | planners | interiors

1 Virginia Avenue | Suite 202
Providence, Rhode Island 02905
T: 401-435-3532 | F: 401-435-3712
www.nemd.com | nemd@nemd.com

ENGINEERING DESIGN SERVICES INCORPORATED
141 Industrial Highway Slatersville, RI 02876
Tel (401) 765-7659 Fax (401) 765-2984

REVIEW ONLY

PROJECT:
SECRETARY OF STATE ARCHIVE

TITLE:
ELECTRICAL POWER & SIGNAL FLOOR PLAN

THIS DRAWING IS THE PROPERTY OF NEMD ARCHITECTS, INC. AND SHALL NOT BE USED OR COPIED WITHOUT ITS CONSENT

ADDENDA / REVISIONS

NO.	DATE	NO.	DATE

PROJ. NO. : 19072
DRAWN BY : T.M.W.
CHKD. BY : R.W.D.
DATE : 10.29.19
SCALE : AS NOTED
DRAWING NO.

E100

LIGHTING CONTROL LEGEND

SYMBOL	DESCRIPTION	MOUNTING
SM	MANUAL MOTOR RATED TOGGLE SWITCH WITH THERMAL OVERLOADS.	48" A.F.F.
Sa	SINGLE POLE SWITCH; "a" INDICATES LIGHTING FIXTURES CONTROLLED.	48" A.F.F.
S3a	THREE-WAY SWITCH; "a" INDICATES LIGHTING FIXTURES CONTROLLED.	48" A.F.F.
WS	WALL SWITCH VACANCY SENSOR (MANUAL "ON" AND AUTOMATIC "OFF") INSTALL PER MANUFACTURERS INSTRUCTIONS.	48" A.F.F.
SK	KEYED SWITCH; REFER TO PLANS FOR NUMBER OF POLES AND FIXTURES CONTROLLED	48" A.F.F.
PC	PHOTOCELL	-
MS	ULTRASONIC VACANY SENSOR 360-DEGREES CAPABILITY. PROVIDE POWER PACK & WIRE PER MANUFACTURERS INSTRUCTIONS FOR MANUAL "ON" WITH WALL LOW VOLTAGE SWITCH AND AUTOMATIC "OFF" WITH SENSOR. SET DELAY TIMES FOR 15 MINUTES.	CEILING
PP	POWER PACK FOR "MS" VACANCY SENSORS. WIRE PER MANUFACTURERS INSTRUCTIONS FOR MANUAL "ON" WITH WALL LOW VOLTAGE SWITCH AND AUTOMATIC "OFF" WITH SENSOR.	-
DH	CEILING MOUNTED DAY-LIGHT HARVESTING SENSOR. VERIFY MOUNTING AND LOCATION FOR OPTIMAL CONTROL.	CEILING

NOTES:

- E.C. SHALL FURNISH AND INSTALL ALL DEVICES AND ACCESSORIES FOR A COMPLETE LIGHTING CONTROL INSTALLATION.
- COORDINATE EXACT REQUIREMENTS FOR INSTALLATION WITH LIGHTING CONTROL REPRESENTATIVE.
- PROVIDE ALL LOW VOLTAGE CABLING REQUIRED FOR CONTROLS.

LIGHTING SCOPE OF WORK NOTES

a. PROVIDE 2' X 2' & 2' X 4' RECESSED TROFFERS WITH LED LAMPING, ONE (1) PER 60 SQ./FT. MINIMUM, A 40 FOOT CANDLE AVERAGE ON WORK PLANE SHALL BE MAINTAINED. LIGHTING SHALL BE TIED INTO 208/120V PANEL ON A DEDICATED 120 VOLT, 20 AMP CIRCUITS.

b. ALL LIGHTING SHALL BE CONTROLLED VIA TOGGLE SWITCHES WITH CEILING MOUNTED MOTION DETECTORS IN CLOSED OFFICES / ROOM, WALL-MOUNTED MOTION SENSORS IN BATHROOMS AND 3-WAY SWITCHES AT EACH EGRESS DOOR AS WELL AS CEILING MOUNTED MOTION DETECTORS IN OPEN WORK SPACES. REFER TO WORK LETTER SCOPE OF WORK (APPENDIX "A") FOR ADDITIONAL INFORMATION.

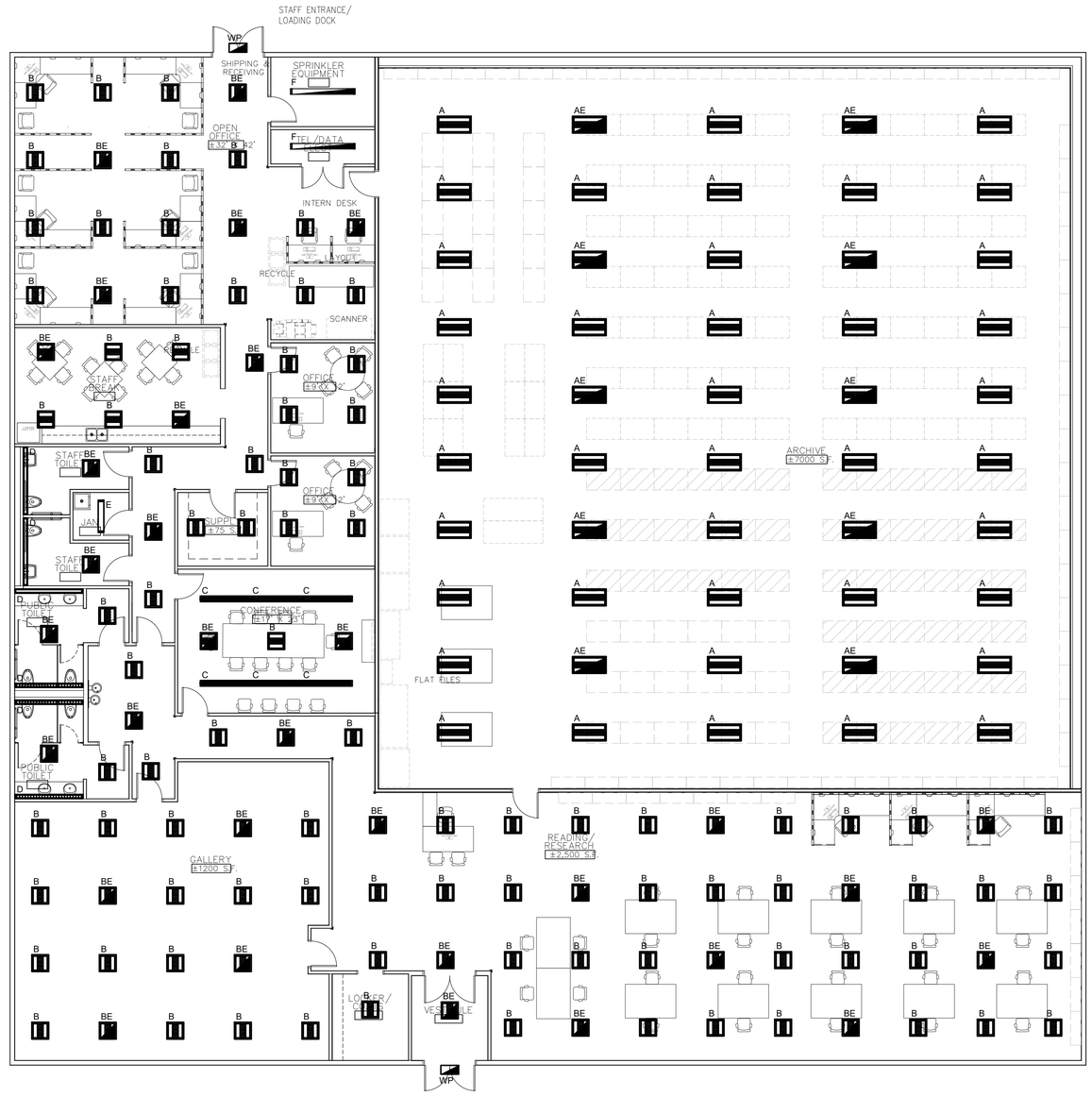

1 E101 LIGHTING FLOOR PLAN
SCALE: 1/8" = 1'-0"

n|e|m|d architects

n|e|m|d architects, inc.
architects | planners | interiors

1 Virginia Avenue | Suite 202
Providence, Rhode Island 02905
T: 401-435-3532 | F: 401-435-3712
www.nemd.com | nemd@nemd.com

ENGINEERING DESIGN SERVICES INCORPORATED
141 Industrial Highway Slatersville, RI 02876
Tel (401) 765-7659 Fax (401) 765-2984

REVIEW ONLY

PROJECT:

SECRETARY OF STATE ARCHIVE

TITLE:

ELECTRICAL LIGHTING FLOOR PLAN

THIS DRAWING IS THE PROPERTY OF NEMD ARCHITECTS, INC. AND SHALL NOT BE USED OR COPIED WITHOUT ITS CONSENT

ADDENDA / REVISIONS

NO.	DATE	NO.	DATE

PROJ. NO. : 19072
DRAWN BY : T.M.W.
CHKD. BY : R.W.D.
DATE : 10.29.19
SCALE : AS NOTED
DRAWING NO.

E101

(EQUIPMENT) SIZING CIRCUIT

AMP / POLE PANEL / SERVICE	POLES	TYPE (XHHW) COPPER CONDUCTORS
15A, 20A	1 (or) 2	2#12 + 1#12 GND. IN 3/4" CONDUIT
15A, 20A	3	3#12 + 1#12 GND. IN 3/4" CONDUIT
25A, 30A	1 (or) 2	2#10 + 1#10 GND. IN 3/4" CONDUIT
25A, 30A	3	3#10 + 1#10 GND. IN 3/4" CONDUIT
35A, 40A	1 (or) 2	2#8 + 1#10 GND. IN 3/4" CONDUIT
35A, 40A	3	3#8 + 1#10 GND. IN 3/4" CONDUIT
45A, 50A, 55A	1 (or) 2	2#6 + 1#10 GND. IN 3/4" CONDUIT
45A, 50A, 55A	3	3#6 + 1#10 GND. IN 3/4" CONDUIT
60A	2	2#4 + 1#10 GND. IN 1" CONDUIT
60A	3	3#4 + 1#10 GND. IN 1" CONDUIT
70A	3	3#4 + 1#8 GND. IN 1" CONDUIT
80A	3	3#3 + 1#8 GND. IN 1-1/4" CONDUIT
90A	3	3#2 + 1#8 GND. IN 1-1/4" CONDUIT
100A, 110A	3	3#1 + 1#6 GND. IN 1-1/4" CONDUIT
125A, 150A	3	3#1/0 + 1#6 GND. IN 1-1/2" CONDUIT
175A	3	3#2/0 + 1#6 GND. IN 2" CONDUIT
200A	3	3#3/0 + 1#4 GND. IN 2" CONDUIT

(PANEL / SWITCHBOARD / SERVICE) FEEDER SIZING

AMPERES	POLES	TYPE (XHHW) COPPER CONDUCTORS
30A	3	4#10 + 1#8 GND. IN 3/4" CONDUIT
60A	2	3#4 + 1#8 GND. IN 1" CONDUIT
60A	3	4#4 + 1#8 GND. IN 1-1/4" CONDUIT
100A	2	3#1 + 1#6 GND. IN 1-1/4" CONDUIT
100A	3	4#1 + 1#6 GND. IN 1-1/2" CONDUIT
125A, 150A	2	3#1/0 + 1#6 GND. IN 1-1/2" CONDUIT
125A, 150A	3	4#1/0 + 1#6 GND. IN 2" CONDUIT
200A	2	3#3/0 + 1#4 GND. IN 2" CONDUIT
200A	3	4#3/0 + 1#4 GND. IN 2" CONDUIT
225A	3	4#4/0 + 1#2 GND. IN 2-1/2" CONDUIT
300A	3	4#350kcmil + 1#2 GND. IN 3" CONDUIT
400A	3	4#600kcmil + 1#1/0 GND. IN 3-1/2" CONDUIT
600A	3	2 SETS OF: (4#350kcmil + 1#2 GND.) IN TWO (2) 3" CONDUITS
800A	3	2 SETS OF: (4#600kcmil + 1#1/0 GND.) IN TWO (2) 3-1/2" CONDUITS
1000A	3	3 SETS OF: (4#400kcmil + 1#1/0 GND.) IN THREE (3) 3" CONDUITS

RECEPTACLE BRANCH CIRCUIT WIRING SCHEDULE

CONDUCTOR AWG.	MAXIMUM CONDUCTOR LENGTH AT 120V	GROUND CONDUCTOR AWG.
#12	100'-0"	#12
#10	165'-0"	#10
#8	255'-0"	#10
#6	405'-0"	#10

RECEPTACLE BRANCH CIRCUIT WIRING SCHEDULE NOTES:

1. BASED ON 20A CIRCUIT LOADED TO 9A USING SINGLE PHASE, 2 WIRE CIRCUITS.
2. THE ABOVE SCHEDULE REPRESENTS MINIMUM CONDUCTOR SIZE BASED FROM PANEL TO CENTER OF LEAD TO OVERCOME VOLTAGE DROP.
3. MAKE PROVISIONS FOR JUNCTION BOX ADJACENT TO OUTLET TO TRANSITION TO #12 WIRE FOR FINAL TERMINATIONS TO DEVICE AS REQUIRED.

LUMINAIRE BRANCH CIRCUIT WIRING SCHEDULE

CONDUCTOR AWG.	MAXIMUM CONDUCTOR LENGTH AT 120V	MAXIMUM CONDUCTOR LENGTH AT 277V	GROUND CONDUCTOR AWG.
#12	75'-0"	175'-0"	#12
#10	120'-0"	285'-0"	#10
#8	190'-0"	445'-0"	#10
#6	300'-0"		#10

LUMINAIRE BRANCH CIRCUIT WIRING SCHEDULE NOTES:

1. BASED ON 20A CIRCUIT LOADED TO 12A USING SINGLE PHASE, 2 WIRE CIRCUITS.
2. THE ABOVE SCHEDULE REPRESENTS MINIMUM CONDUCTOR SIZE BASED FROM PANEL TO CENTER OF LEAD TO OVERCOME VOLTAGE DROP.
3. MAKE PROVISIONS FOR JUNCTION BOX ADJACENT TO OUTLET TO TRANSITION TO #12 WIRE FOR FINAL TERMINATIONS TO DEVICE AS REQUIRED.

DRY-TYPE (INDOOR) STEP-DOWN TRANSFORMER CHART

XFMR. (KVA)	480 VOLT PRIMARY AMPS	208 VOLT SECONDARY AMPS	PRIMARY PROTECTION (O.C.P.)	SECONDARY PROTECTION (O.C.P.)	PRIMARY FEEDERS (3 PHASE CONDUCTORS + GND.)	SECONDARY FEEDERS (3 PHASE CONDUCTORS + NUETRAL + GND.)	PHYSICAL SIZE (BASED ON) "SIEMENS".
6	7.0	17.0	15A/3P	20A/3P	3#12 + 1#2 GND. IN 3/4" C.	4#12 + 1#2 GND. IN 3/4" C.	-
9	11.0	25.0	15A/3P	30A/3P	3#12 + 1#2 GND. IN 3/4" C.	4#10 + 1#0 GND. IN 3/4" C.	-
15	18.0	42.0	30A/3P	60A/3P	3#10 + 1#2 GND. IN 3/4" C.	4#4 + 1#8 GND. IN 1-1/4" C.	-
30	36.0	83.0	50A/3P	100A/3P	3#6 + 1#8 GND. IN 1" C.	4#1 + 1#6 GND. IN 1-1/2" C.	-
45	54.0	125.0	70A/3P	150A/3P	3#4 + 1#8 GND. IN 1-1/4" C.	4#1/0 + 1#6 GND. IN 2" C.	-
75	90.0	208.0	125A/3P	225A/3P	3#1/0 + 1#6 GND. IN 1-1/2" C.	4#4/0 + 1#2 GND. IN 2-1/2" C.	-
112.5	135.0	312.0	175A/3P	400A/3P	3#2/0 + 1#4 GND. IN 2" C.	4#600kcmil + 1#1/0 GND. IN 3-1/2" C.	-
150	180.0	416.0	250A/3P	500A/3P	3#250kcmil + 1#2 GND. IN 2-1/2" C.	2 SETS OF: (4#250kcmil + 1#2 GND.) IN TWO (2) 2-1/2" CONDUITS	-
225	271.0	625.0	350A/3P	800A/3P	3#350kcmil + 1#2 GND. IN 2-1/2" C.	2 SETS OF: (4#600kcmil + 1#1/0 GND.) IN TWO (2) 3-1/2" CONDUITS	-
300	361.0	833.0	500A/3P	1000A/3P	2 SETS OF: (3#250kcmil + 1#2 GND.) IN TWO (2) 2-1/2" CCONDUITS	2 SETS OF: (4#600kcmil + 1#1/0 GND.) IN TWO (2) 3-1/2" CONDUITS	-
500	601.0	1388.0	800A/3P	2000A/3P	2 SETS OF: (3#600kcmil + 1#2 GND.) IN TWO (2) 2-1/2" CONCDUITS	5 SETS OF: (4#600kcmil + 1#1/0 GND.) IN FIVE (5) 3-1/2" CONDUITS	-

NOTES:

1. ALL CONDUCTORS INDICATED ARE BASED ON COPPER.
2. ALL FEEDER SIZES SHOWN, HAVE HAD "VOLTAGE DROP" CALCULATIONS INCORPORATED. (TYPICAL)
3. ALL NEW ELECTRICAL SWITCHGEAR HAS BEEN BASED ON "SIEMENS".

MANUFACTURER CONTACT:
SIEMENS INDUSTRY, INC.
BRIAN KELLEY
1-860-208-8295
EMAIL: briankelley@siemens.com

POWER RISER NOTES

1. FEEDERS ON THE PRIMARY AND SECONDARY SIDE OF THE TRANSFORMER SHALL BE INSTALLED IN A MINIMUM OF 18" OF FLEXIBLE METALLIC RACEWAY AT THE POINT OF CONNECTION TO THE TRANSFORMER.
2. GROUNDING, BONDING AND COPPER GROUNDING ELECTRODE SYSTEM PER NEC 250 AS ADOPTED BY AUTHORITY HAVING JURISDICTION. WHEN BUILDING DOMESTIC WATER SERVICE PIPE IS NON-METALLIC PROVIDE 'UFER' GROUND IN BUILDING FOUNDATION HAVING DIRECT CONTACT WITH EARTH.
3. CONTRACTOR SHALL PROVIDE EMERGENCY GENERATOR DE-RANGEMENT PANEL, MISC. LINE & LOW VOLTAGE GENERATOR WIRING. COORDINATE ALL EQUIPMENT & INSTALLATION REQUIREMENTS. PANEL TO BE LOCATED IN "FIRE COMMAND CENTER"
4. PROVIDE A 100 AMP, 3-POLE LOAD BREAKER AS AN INTEGRAL PART OF THE EMERGENCY GENERATOR. (NON-ESSENTIAL POWER BRANCH)
5. E.C. SHALL PROVIDE A NEW "DIESEL-FIRED", EMERGENCY GENERATOR RATED FOR 60 KW AT 480Y/277 VOLT, 3-PHASE. NEW GENERATOR SHALL BE PROVIDED WITH WEATHER-PROOF ENCLOSURE & 48 HOUR RUN-TIME BASE TANK AND INTEGRAL LOAD-BANK ASSEMBLY. E.C. SHALL PROVIDE FULL SEISMIC RESTRAINT DOCUMENTATION AND DESIGN TO BUILDING DEPARTMENT AND LOCAL FIRE DEPARTMENT, PRIOR TO ANY INSTALLATION. COORDINATE ALL EQUIPMENT & INSTALLATION REQUIREMENTS.
6. PROVIDE AUTOMATIC TRANSFER SWITCH "ATS #1", RATED 100 AMP, 4-POLE AT 480Y/277 VOLT, 3-PHASE TO PROVIDE EMERGENCY BACK-UP POWER TO THE (NON-ESSENTIAL LOADS). COORDINATE ALL EQUIPMENT & INSTALLATION REQUIREMENTS.

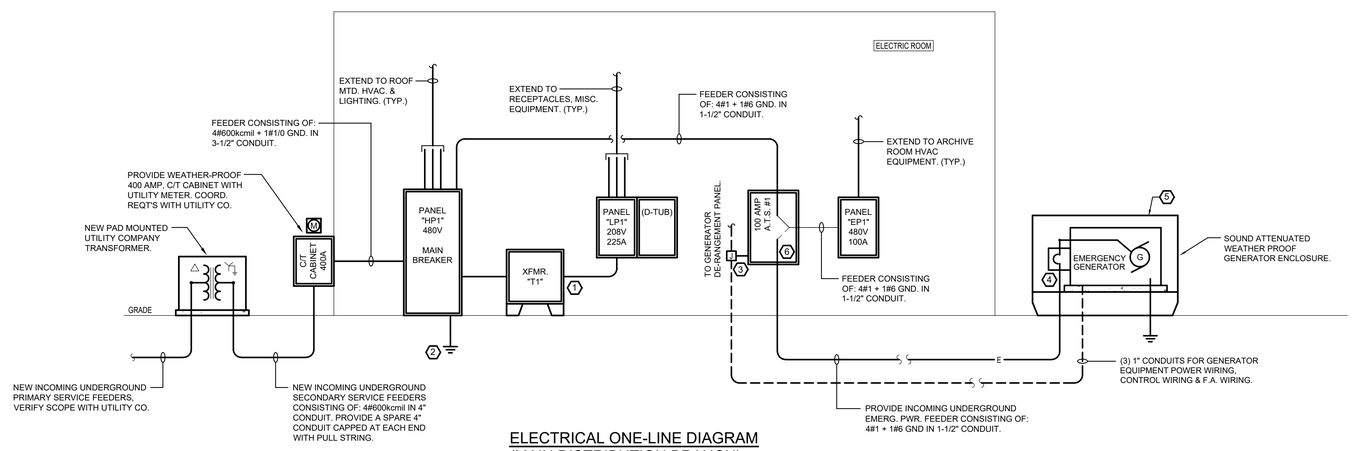

ELECTRICAL ONE-LINE DIAGRAM
(MAIN DISTRIBUTION BRANCH)
NOT TO SCALE

n|e|m|d architects

n|e|m|d architects, inc.
architects | planners | interiors

1 Virginia Avenue | Suite 202
Providence, Rhode Island 02905
T: 401-435-3532 | F: 401-435-3712
www.nemd.com | nemd@nemd.com

ENGINEERING DESIGN SERVICES INCORPORATED
141 Industrial Highway Slatersville, RI 02876
Tel (401) 765-7659 Fax (401) 765-2984

REVIEW ONLY

PROJECT:

SECRETARY OF STATE ARCHIVE

TITLE:

ELECTRICAL POWER RISER, SCHEDULES & NOTES

THIS DRAWING IS THE PROPERTY OF NEMD ARCHITECTS, INC. AND SHALL NOT BE USED OR COPIED WITHOUT ITS CONSENT

ADDENDA / REVISIONS

NO.	DATE	NO.	DATE

PROJ. NO. : 19072
DRAWN BY : T.M.W.
CHKD. BY : R.W.D.
DATE : 10.29.19
SCALE : AS NOTED

DRAWING NO.

E200

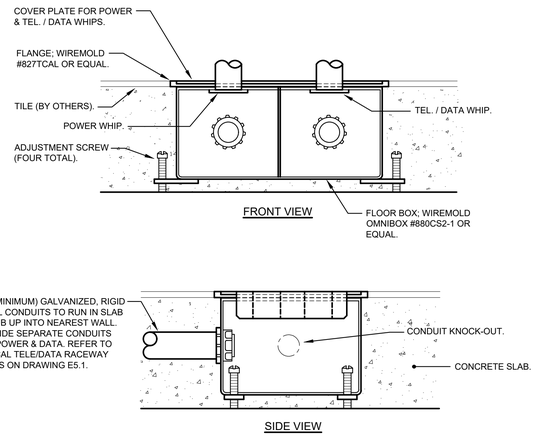

NOTES:

1. TILE FLOOR BY OTHERS. FLOOR BOX FLANGE SHALL BE INSTALLED SO THAT FLANGE AND TILE IS FLUSH AND BUTTED UP AGAINST ONE ANOTHER. E.C. TO COORDINATE WITH FLOOR INSTALLER PRIOR TO FLOOR INSTALLATION AND FLANGE INSTALLATION.

2. PROVIDE SUITABLE FITTINGS TO ACCOMMODATE EXPANSION AND DEFLECTION WHERE CONDUIT CROSSES SEISMIC, CONTROL AND EXPANSION JOINTS.

3. COORDINATE FLOOR BOX TYPE & LOCATION WITH FURNITURE VENDOR CONSULTANT. RON GORDENSTEIN, PH. #413-734-8911, EMAIL: RON@BROADWAYOFFICE.COM, FOR ADDITIONAL INFORMATION.

OUTLET FLOOR BOX DETAIL

NOT TO SCALE

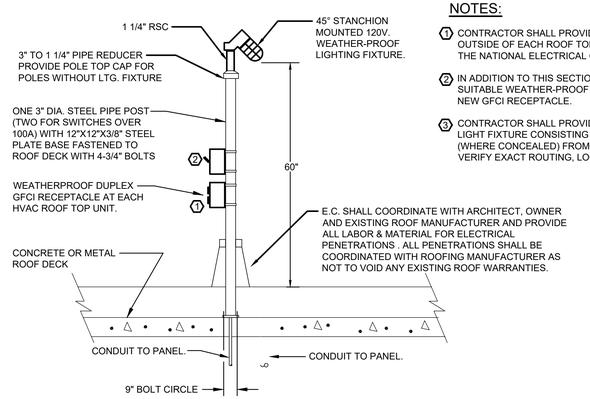

NOTES:

1. CONTRACTOR SHALL PROVIDE A NEW GFCI RECEPTACLE MOUNTED TO THE OUTSIDE OF EACH ROOF TOP UNIT, AS DESCRIBED IN SECTION 210.63 OF THE NATIONAL ELECTRICAL CODE, 2011 EDITION.
2. IN ADDITION TO THIS SECTION THE CONTRACTOR SHALL PROVIDE A SUITABLE WEATHER-PROOF TOGGLE SWITCH TO CUT ALL POWER TO THE NEW GFCI RECEPTACLE.
3. CONTRACTOR SHALL PROVIDE CIRCUITRY FOR GFCI RECEPTACLE AND LIGHT FIXTURE CONSISTING OF 2#12 + GND. IN 3/4" CONDUIT AND/OR MC (WHERE CONCEALED) FROM SWITCH FROM PANEL AS INDICATED. FIELD VERIFY EXACT ROUTING, LOCATION AND LENGTH OF CIRCUITRY. (TYPICAL)

ROOF LIGHTING & RECEPTACLE DETAIL

NOT TO SCALE

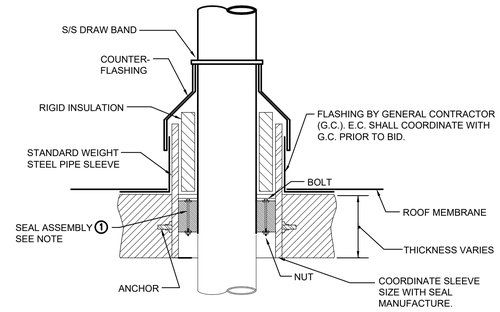

NOTES:

1. SEAL ASSEMBLY SHALL BE MODULAR MECHANICAL TYPE CONSISTING OF INTERLOCKING RUBBER LINK SHAPE TO CON-TENUOUSLY FILL IN THE ANNULAR SPACE BETWEEN PIPE OPENING. PRESSURE PLATES SHALL BE DELRIN PLASTIC. BOLTS AND NUTS SHALL BE 18.8 STAINLESS STEEL. SEALING ELEMENT SHALL BE EPDM RUBBER.
2. E.C. SHALL COORDINATE WITH ARCHITECT, OWNER AND EXISTING ROOF MANUFACTURER (IF APPLICABLE) AND PROVIDE ALL LABOR & MATERIAL FOR ELECTRICAL PENETRATIONS. ALL PENETRATIONS SHALL BE COORDINATED WITH ROOFING MANUFACTURER AS NOT TO VOID ANY EXISTING ROOF WARRANTIES.

CONDUIT THRU ROOF DETAIL

NOT TO SCALE

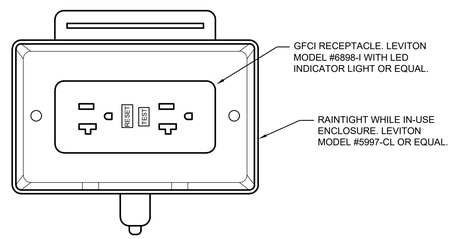

HORIZONTAL MOUNT

WEATHER-PROOF RECEPTACLE DETAIL

NOT TO SCALE

MECHANICAL EQUIPMENT CONNECTION TAG:

REFER TO "MECHANICAL EQUIPMENT ELECTRICAL CONNECTION SCHEDULE" ON DRAWING "E3.1" FOR ALL CIRCUITING INFORMATION, INCLUDING BUT NOT LIMITED TO BRANCH CIRCUITING WIRING AND CONDUIT SIZE, VOLTAGE, PHASE, MOTOR CONTROL, DISC. SWITCH & CIRCUIT BREAKER.

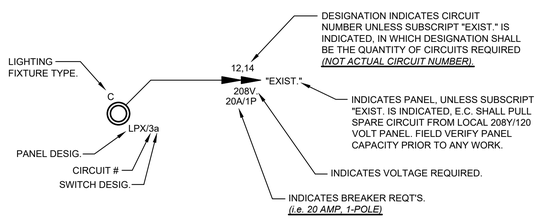

NOTES:

1. DRAWINGS ARE DIAGRAMMATIC AND INDICATE GENERAL ARRANGEMENT OF SYSTEMS AND WORK INCLUDED IN CONTRACT. INFORMATION AND COMPONENTS SHOWN ON RISER DIAGRAMS BUT NOT ON PLANS, AND VICE VERSA, SHALL APPLY OR SHALL BE PROVIDED AS THOUGH EXPRESSLY REQUIRED ON BOTH. IT IS NOT INTENDED THAT EVERY JUNCTION BOX, OFFSET, FITTING OR COMPONENT BE SPECIFIED OR SHOWN ON DRAWINGS; HOWEVER, CONTRACT DOCUMENTS REQUIRE PROVISION OF ALL COMPONENTS AND MATERIALS NECESSARY FOR COMPLETE AND OPERATIONAL ELECTRICAL INSTALLATION, WHETHER OR NOT INDICATED OR SPECIFIED.
2. BRANCH CIRCUIT WIRING MAY NOT BE GRAPHICALLY SHOWN ON DRAWINGS AND MAY BE SHOWN BY CIRCUIT NUMBERS BESIDE FIXTURES, DEVICES AND EQUIPMENT. PROVIDE COMPLETE WIRING SYSTEM WHETHER OR NOT SHOWN GRAPHICALLY. WIRING IS SHOWN BY CONDUIT RUNS ON DRAWINGS WHERE SPECIFIC ROUTING IS REQUIRED OR FOR OTHER SPECIAL REASONS. ONLY ROOMS WITH MULTIPLE SWITCHING HAVE "SWITCH CONTROL LETTERS" ASSIGNED. PROVIDE THHN CONDUCTORS IN AREAS WITH HIGH AMBIENT TEMPERATURES SUCH AS BOILER ROOMS, INCINERATOR ROOMS, MECHANICAL EQUIPMENT ROOMS ETC., FOR SIZES LARGER THAN NO. 10 AWG.

TYPICAL CIRCUITING DETAIL

NOT TO SCALE

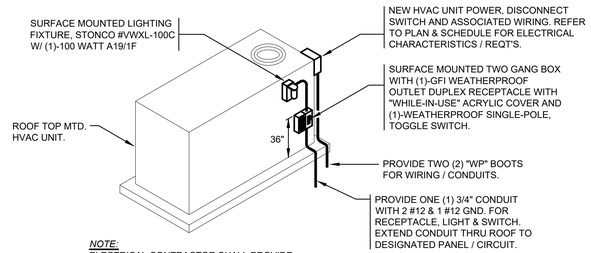

NOTE:
ELECTRICAL CONTRACTOR SHALL PROVIDE ALL MOUNTING HARDWARE TO SECURELY FASTEN LIGHTING FIXTURE AND TWO GANG BOX TO ROOF TOP UNIT.

TYPICAL MOUNTING INSTALLATION - ROOF TOP UNITS

NOT TO SCALE

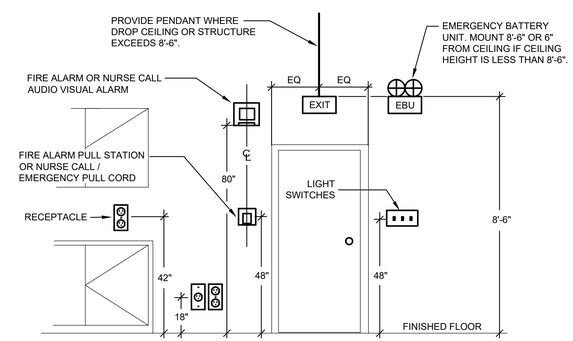

NOTE:
THIS DETAIL INDICATES CENTERLINE FOR FIRE ALARM/PULL STATION SWITCHES AND RECEPTACLES. HOWEVER THIS SAME CENTERLINE PRINCIPLE SHALL BE FOR ALL GROUP MTD. ELECTRICAL DEVICES. IF FIRE ALARM IS ON SAME SIDE OF DOOR AS SWITCHES, PULL STATION SHALL BE HORIZONTALLY SEPARATED BY A MINIMUM OF 18". THIS ELEVATION IS A GENERAL ARRANGEMENT OF OF DEVICES. ARCHITECT PLANS TAKE PRECEDENCE FOR EXACT LOCATIONS.

MOUNTING HEIGHT DETAIL

NOT TO SCALE

n|e|m|d architects

n|e|m|d architects, inc.
architects | planners | interiors

1 Virginia Avenue | Suite 202
Providence, Rhode Island 02905
T: 401-435-3532 | F: 401-435-3712
www.nemd.com | nemd@nemd.com

ENGINEERING DESIGN SERVICES INCORPORATED
141 Industrial Highway Slatersville, RI 02876
Tel (401) 765-7659 Fax (401) 765-2984

REVIEW ONLY

PROJECT:

SECRETARY OF STATE ARCHIVE

TITLE:

ELECTRICAL DETAILS

THIS DRAWING IS THE PROPERTY OF NEMD ARCHITECTS, INC. AND SHALL NOT BE USED OR COPIED WITHOUT ITS CONSENT

ADDENDA / REVISIONS

NO.	DATE	NO.	DATE

PROJ. NO. : 19072
DRAWN BY : T.M.W.
CHKD. BY : R.W.D.
DATE : 10.29.19
SCALE : AS NOTED
DRAWING NO.

E300

FIRE ALARM LEGEND

TYPICAL INDUSTRY SYMBOL	DESCRIPTION / REMARKS	TYPICAL INDUSTRY SYMBOL	DESCRIPTION / REMARKS
FACP	FIRE ALARM SYSTEM CONTROL PANEL.	S	FIRE ALARM SYSTEM, SMOKE DETECTOR.
AMP	AMPLIFIER PACK	S	FIRE ALARM SYSTEM, DUCT SMOKE DETECTOR LOCATED IN THE SUPPLY & RETURN DUCTWORK OF HVAC UNITS WITH 2000 CFM (OR) GREATER.
BATT	BATTERY PACK AND CHARGER - FROM NECA 100, SYMBOL 7.010	RTS	FIRE ALARM SYSTEM, REMOTE TEST STATION WITH SIGNAL / INDICATOR FOR DUCT SMOKE DETECTOR.
WP M	FIRE ALARM SYSTEM, "KING FISHER TRANSMITTER". PROVIDE ALL REQUIRED ACCESSORIES, ANTENNA, CABLE, ETC.	135° H	FIRE ALARM SYSTEM, RATE-OF-RISE TEMPERATURE HEAT DETECTOR, SUB-SCRIPT INDICATES TEMPERATURE RATING. (SUITABLE FOR 50'-0" "ON CENTER" MOUNTING)
WP K	FIRE ALARM SYSTEM, WEATHER-PROOF EAS BOX.	190° FT H	FIRE ALARM SYSTEM, FIXED TEMPERATURE HEAT DETECTOR, SUB-SCRIPT INDICATES TEMPERATURE RATING. (SUITABLE FOR 50'-0" "ON CENTER" MOUNTING)
WP	FIRE ALARM SYSTEM, WEATHER-PROOF "RED" BEACON, LOCATED AT ENTRANCE OF BUILDING MOUNTED DIRECTLY OVER "KNOX-BOX".	AC FT H	FIRE ALARM SYSTEM, FIXED TEMPERATURE HEAT DETECTOR INSTALLED ABOVE DROP CEILING, SUB-SCRIPT INDICATES TEMPERATURE RATING. (SUITABLE FOR 50'-0" "ON CENTER" MOUNTING)
60cd F	FIRE ALARM SYSTEM, HORN / STROBE DEVICE, SUB-SCRIPT INDICATES CANDELA RATING.	F	FIRE ALARM SYSTEM, PULL STATION, PROVIDE WITH STOPPER II PROTECTIVE COVER AND MOUNTED SO THAT THE OPERABLE PART OF THIS DEVICE IS 48" ABOVE FINISHED FLOOR.
WP F	FIRE ALARM SYSTEM, WEATHER-PROOF HORN / STROBE DEVICE, LOCATED ON THE EXTERIOR OF THE BUILDING AT THE ENTRANCE / LOCATION OF FACP.	R	FIRE ALARM SYSTEM, RELAY.
15cd F	FIRE ALARM SYSTEM STROBE. SUB-SCRIPT INDICATES CANDELA RATING.	FS	SPRINKLER SYSTEM FLOW SWITCH BY OTHERS. CONTRACTOR SHALL PROVIDE MONITOR MODULE TO TIE INTO FIRE ALARM SYSTEM. COORD. TIE-IN.
MM	FIRE ALARM MONITOR MODULE.	TS	SPRINKLER SYSTEM TAMPER SWITCH BY OTHERS. CONTRACTOR SHALL PROVIDE MONITOR MODULE TO TIE INTO FIRE ALARM SYSTEM. COORD. TIE-IN.
CM	FIRE ALARM CONTROL MODULE.	PS	SPRINKLER SYSTEM PRESSURE SWITCH BY OTHERS. CONTRACTOR SHALL PROVIDE MONITOR MODULE TO TIE INTO FIRE ALARM SYSTEM. COORD. TIE-IN.

FIRE ALARM NOTES

1. E.C. SHALL PROVIDE CIRCUIT BREAKER LOCK-ON DEVICES FOR FACP AND NAC POWER EXTENDER CIRCUITS.
2. E.C. SHALL FURNISH & INSTALL REMOTE INDICATING LIGHTS/TEST SWITCHES FOR DUCT SMOKE DETECTORS.
3. REFER TO FLOOR PLANS FOR EXACT NUMBER OF DEVICES & CANDELA RATINGS.
4. COLOR CODE PER NFPA, (LATEST EDITION).
5. ALL SPLICES SHALL BE MADE ON SCREW TYPE TERMINAL BLOCKS. NO WIRENUTS WILL BE ALLOWED.
6. RED PAINTED TERMINAL CABINETS & BOXES WITH LOCKABLE COVERS SHALL BE PROVIDED AT ALL JUNCTION POINTS.
7. AFC FIRE ALARM / CONTROL CABLE TYPE MC (UL LISTED) MAY BE USED ABOVE CEILINGS AND IN CONCEALED AREAS WHERE ACCEPTABLE TO THE LOCAL AUTHORITY HAVING JURISDICTION, OTHERWISE WIRING SHALL BE INSTALLED IN EMT CONDUIT. WIRING IN EXPOSED AREAS SHALL BE EMT, E.C. SHALL PROVIDE AN ALTERNATE TO PAINT PER ARCHITECTS DIRECTION.
8. THE CONTRACTOR AT COMPLETION OF THE FIRE ALARM SYSTEM SHALL TEST THE ENTIRE SYSTEM PER THE LOCAL FIRE DEPARTMENTS REQUIREMENTS. THE CONTRACTOR SHALL REPLACES OR FIX ANY PART OF THE SYSTEM NOT PROPERLY WORKING.
9. ALL WIRING SHALL BE PER MANUFACTURER'S RECOMMENDATIONS. E.C. SHALL TAKE INTO ACCOUNT VOLTAGE DROP. (TYPICAL)
10. ALL FIRE ALARM SYSTEM COMPONENTS & MOUNTING HEIGHTS SHALL COMPLY WITH ADA REQUIREMENTS.
11. E.C. SHALL PROVIDE ANY AND ALL AUXILIARY EQUIPMENT IN ORDER TO PROVIDE A COMPLETE, PROPERLY FUNCTIONING SYSTEM. COORDINATE REQUIREMENTS WITH LOCAL MANUFACTURERS REP.
12. ALL FIRE ALARM STROBE SIGNAL DEVICES SHALL BE SYNCHRONIZED TYPE DEVICES AND COMPLY WITH ADA REQUIREMENTS.
13. NO T-TAPPING OF FIRE ALARM WIRING SHALL BE ALLOWED. (TYPICAL)
14. ALL FIRE ALARM WIRING & RACEWAY SHALL BE SUPPORTED BY THE BUILDING STRUCTURE AND SHALL NOT BE LOCATED AS TO BE DAMAGED BY BUILDING USE.
15. FIRE ALARM SYSTEM BATTERIES AND CHARGER SHALL BE PROVIDED FOR STAND-BY BATTERY POWER CAPACITY PER THE STATE'S FIRE LAWS (LATEST EDITION). E.C. SHALL SUBMIT BATTERY CALCULATIONS FOR THE MODIFIED SYSTEM DOCUMENTING CODE COMPLIANCE.
16. NEW NOTIFICATION APPLIANCE CIRCUIT EXPANDER PANELS SHALL BE PROVIDED WITH INTEGRAL BATTERY BACK-UP PER STATE'S FIRE LAWS (LATEST EDITION).

NOTES:

- CONTRACTOR SHALL PROVIDE ADDITIONAL POWER SUPPLIES IN FIRE ALARM CONTROL PANEL AS REQUIRED AS WELL AS NEW NOTIFICATION EXTENDER PANELS (NAC), TO PROVIDE POWER FOR ALL NOTIFICATION DEVICES. COORDINATE REQUIRED EQUIPMENT WITH LOCAL MANUFACTURER'S REPRESENTATIVE. (TYPICAL)
- CONTRACTOR SHALL ACQUIRE ACTUAL DEVICE COUNTS FROM FLOOR PLANS, NOT THIS RISER. THIS RISER DIAGRAM IS FOR WIRING INTENT PURPOSES ONLY.
- FIRE ALARM SYSTEM AND ASSOCIATED EQUIPMENT DESIGN HAS BEEN BASED AROUND EDWARDS SYSTEM TECHNOLOGY, INC. (EST). CONTRACTOR SHALL CONTACT AND COORDINATE WITH LOCAL MANUFACTURER'S REPRESENTATIVE, FOR ALL SPECIFIC INSTALLATION AND EQUIPMENT INFORMATION REQUIRED. (OR EQUAL) FIRE ALARM SYSTEM SHALL BE APPROVED DURING SUBMITTAL REVIEW.

FIRE ALARM RISER NOTES

1. PROVIDE FIRE ALARM ISOLATION MODULE AT THE BEGINNING AND END OF EACH LOOP OF INITIATING DEVICES. ALSO PROVIDE FIRE ALARM ISOLATION MODULE AT A MAXIMUM OF EVERY 25 DEVICES ON LOOP.
2. PROVIDE 20 AMP CIRCUIT (2#12 + 1#12 GND. IN 3/4"C.) FROM SPARE BREAKER IN LOCAL 120/208V PANEL FOR EACH NEW NAC PANEL. PROVIDE BREAKER LOCK-ON DEVICE.
3. GROUND NEW NOTIFICATION APPLIANCE CIRCUIT EXTENDER PANEL, PER LATEST EDITION OF NATIONAL ELECTRICAL CODE.
4. UPON ACTIVATION OF THE SPRINKLER SYSTEM FLOW, TAMPER AND / OR PRESSURE SWITCHES, THE FIRE ALARM SYSTEM SHALL BE SET INTO ALARM VIA A MONITOR MODULE. FIELD VERIFY EXACT WIRING REQT'S.

EMERGENCY LIGHTING SYMBOL LEGEND

SYMBOL	DESCRIPTION	MOUNTING
	SELF-CONTAINED EMERGENCY, WALL MOUNTED LIGHTING FIXTURE WITH DUAL LIGHTING HEADS. COORDINATE WITH E.C. TO PROVIDE ALL NECESSARY ACCESSORIES FOR WIRING DEVICES. MFG. MULE, CAT. #SQ-80-LED-W, (OR) APPROVED EQUAL.	WALL
EBU	SELF-CONTAINED EMERGENCY, WALL MOUNTED LIGHTING FIXTURE WITH DUAL LIGHTING HEADS & SPARE CPACITY FOR REMOTE LIGHTING HEADS. COORDINATE WITH E.C. TO PROVIDE ALL NECESSARY ACCESSORIES FOR WIRING DEVICES. MFG. MULE, CAT. #SQ-80-LED-W-REM, (OR) APPROVED EQUAL.	WALL
WP	WEATHER PROOF WALL MOUNTED LIGHTING FIXTURE WITH INTEGRAL EMERGENCY BATTERY BACK-UP & PHOTOCELL. COORDINATE WITH E.C. TO PROVIDE ALL NECESSARY ACCESSORIES FOR WIRING DEVICES. MFG. MULE, CAT. #MAKO-LED-ACEM-BK-1H, (OR) APPROVED EQUAL.	WALL
X3	COMBINATION SINGLE / DOUBLE FACE LED LIGHTED EXIT SIGN WITH EMERGENCY LIGHTING HEADS, BATTERY BACK-UP & SPARE CAPACITY FOR REMOTE LIGHTING HEADS. MFG. MULE, CAT. #SQC-LED-U-R-WW-REM, (OR) APPROVED EQUAL.. PROVIDE ARROWS AS INDICATED ON PLANS, FIELD VERIFY WALL (OR) CEILING MOUNTING.	WALL / CLG.

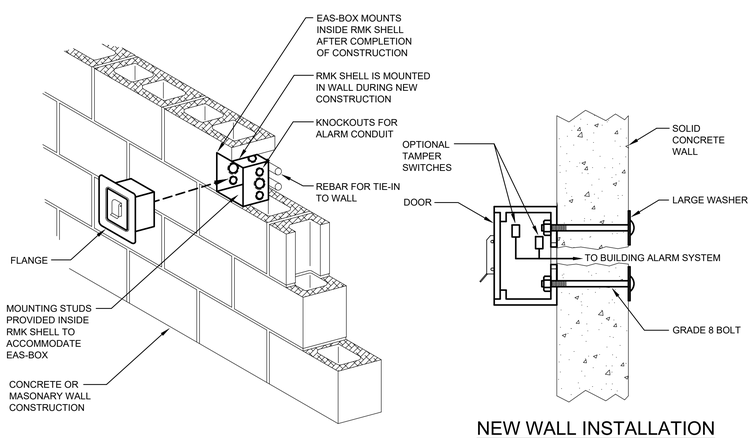

NEW WALL INSTALLATION

FIRE ALARM SYSTEM EAS-BOX DETAIL

NOT TO SCALE

EMERGENCY LIGHTING 6-VOLT SYSTEM VOLTAGE DROP TABLE

TOTAL WATTS ON WIRE RUN	WIRE GAUGE 12	10	8	6
6	94	150	238	379
7	81	129	204	325
8	70	112	179	284
10	56	90	143	227
12	44	70	112	178
14	40	64	102	162
16	33	53	84	134
18	30	47	75	119
20	28	45	71	114
21	27	43	68	108
24	24	38	60	95
25	21	34	54	86
30	19	30	48	76
35	15	25	39	63
40	13	21	33	53
48	11	17	28	44
50	11	17	27	43
75	7	11	18	29
100	5	8	14	21
125	4	7	11	17
150	3	5	9	14
175	3	5	8	12
200	2	4	6	10
225	2	4	6	10
250	2	3	5	9

MAXIMUM LENGTH OF RUN IN FEET

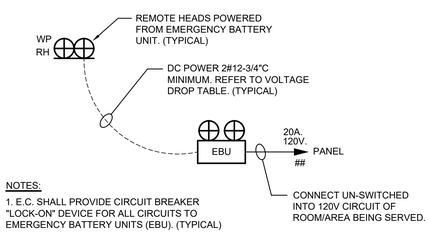

NOTES:

1. E.C. SHALL PROVIDE CIRCUIT BREAKER "LOCK-ON" DEVICE FOR ALL CIRCUITS TO EMERGENCY BATTERY UNITS (EBU). (TYPICAL)
2. DETAIL IS TYPICAL TO ALL DRAWINGS, UON.

TYPICAL EMERGENCY LIGHTING CONNECTION DETAIL

NOT TO SCALE

n|e|m|d architects

n|e|m|d architects, inc.
architects | planners | interiors

1 Virginia Avenue | Suite 202
Providence, Rhode Island 02905
T: 401-435-3532 | F: 401-435-3712
www.nemd.com | nemd@nemd.com

ENGINEERING DESIGN SERVICES INCORPORATED
141 Industrial Highway Slatersville, RI 02876
Tel (401) 765-7659 Fax (401) 765-2984

REVIEW ONLY

PROJECT:

SECRETARY OF STATE ARCHIVE

TITLE:

LIFE SAFETY LEGENDS, DETAILS & NOTES

THIS DRAWING IS THE PROPERTY OF NEMD ARCHITECTS, INC. AND SHALL NOT BE USED OR COPIED WITHOUT ITS CONSENT

ADDENDA / REVISIONS

NO.	DATE	NO.	DATE

PROJ. NO. : 19072
DRAWN BY : T.M.W.
CHKD. BY : R.W.D.
DATE : 10.29.19
SCALE : AS NOTED
DRAWING NO.

LS001

FIRE ALARM NOTE:

R CONTRACTOR SHALL PROVIDE & INSTALL NEW FIRE
S ALARM SYSTEM DUCT-SMOKE DETECTORS IN THE SUPPLY & RETURN DUCTS OF EACH ROOF TOP UNIT WITH A CFM RATIGS OF 2000 OR GREATER, ("RTU-1" THRU "RTU-6") AS WELL AS A FIRE ALARM SYSTEM FAN-SHUTDOWN RELAY. VERIFY WIRING, TIE-IN REQUIREMENTS AND SYSTEM/DEVICE OPERATION IN FIELD WITH LOCAL FIRE DEPARTMENT. (TYPICAL).

LIFE SAFETY SCOPE OF WORK NOTES

a. PROVIDE AN EXIT SIGN WITH INTEGRAL EMERGENCY LIGHTING HEADS AND INTERNAL BATTERY AT EACH EGRESS DOOR AS WELL AS IN ALL EGRESS PATHS. SIGN SHALL BE PROVIDED WITH LED LAMPING. DESIGNATED HALF-SHADED LIGHTING FIXTURES SHALL BE PROVIDED WITH INTEGRAL EMERGENCY BATTERY BALLASTS & INSTALLED THROUGH OUT SPACE, TO PROVIDE A MAINTAINED 1 FOOT CANDLE OF EMERGENCY LIGHTING ILLUMINATION ON ALL EGRESS PATHWAYS. EMERGENCY LIGHTING SHALL BE TIED INTO LOCAL AREA LIGHTING CIRCUIT AHEAD OF ANY SWITCHING.

b. PROVIDE A BASE BUILDING ADDRESSABLE MAIN FIRE ALARM CONTROL PANEL, KNOX BOX AND MASTER-BOX, (LOCATION TO BE DETERMINED BY LOCAL FIRE DEPARTMENT), AS WELL AS FIRE ALARM DEVICES (NOTIFICATION & INITIATING) THOUGH OUT ALL AREA SPACES AS REQUIRED BY NFPA 72 AND RHODE ISLAND FIRE LAWS AND RULES. (LATEST EDITION).

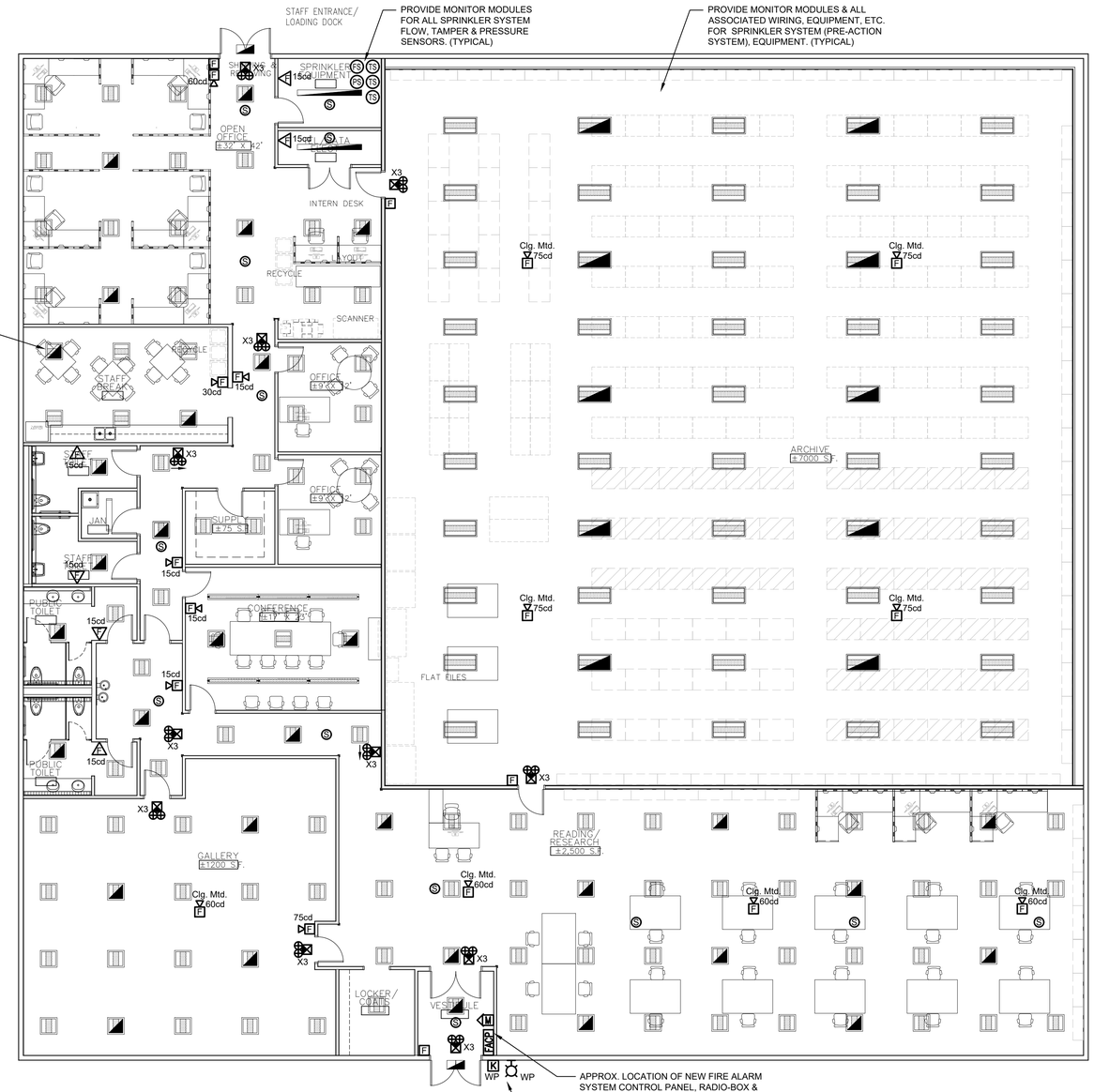

1 LS100 LIFE SAFETY FLOOR PLAN
SCALE: 1/8" = 1'-0"

n|e|m|d architects

n|e|m|d architects, inc.
architects | planners | interiors

1 Virginia Avenue | Suite 202
Providence, Rhode Island 02905
T: 401-435-3532 | F: 401-435-3712
www.nemd.com | nemd@nemd.com

ENGINEERING DESIGN SERVICES INCORPORATED
141 Industrial Highway Slatersville, RI 02876
Tel (401) 765-7659 Fax (401) 765-2984

REVIEW ONLY

PROJECT:

SECRETARY OF STATE ARCHIVE

TITLE:

LIFE SAFETY FLOOR PLAN

THIS DRAWING IS THE PROPERTY OF NEMD ARCHITECTS, INC. AND SHALL NOT BE USED OR COPIED WITHOUT ITS CONSENT

ADDENDA / REVISIONS

NO.	DATE	NO.	DATE

PROJ. NO. : 19072
DRAWN BY : T.M.W.
CHKD. BY : R.W.D.
DATE : 10.29.19
SCALE : AS NOTED
DRAWING NO.

LS100

PLUMBING FIXTURE SCHEDULE

SYMBOL	FIXTURE DESCRIPTION	FIXTURE MANUFACTURER	FIXTURE MODEL	FIXTURE TYPE	FIXTURE SIZE	FITTING MANUFACTURER	FITTING TYPE	FITTING SUPPLY	TRAP	CARRIER	REMARKS
WC-1	WATER CLOSET	TOTO	CT708UC	WALL MOUNTED 1.28 GAL/FLUSH	-	ECO-POWER TET1LA32#CP	SENSOR BATTERY POWERED 1.28GPF	1"CW SUPPLY TO FLUSH VALVE	INTEGRAL	ZURN OR EQUAL	SEAT TOTO SC534 WHITE COMMERCIAL GRADE W/OPEN FRONT
WC-2	ADA WATER CLOSET	TOTO	CT708UC	WALL MOUNTED 1.28 GAL/FLUSH	-	ECO-POWER TET1LA32#CP	SENSOR BATTERY POWERED 1.28GPF	1"CW SUPPLY TO FLUSH VALVE	INTEGRAL	ZURN OR EQUAL	SEAT TOTO SC534 WHITE COMMERCIAL GRADE W/OPEN FRONT
L-1	LAVATORY	TOTO	LT502	COUNTER MOUNT SELF-RIMMING	-	ECO-POWER	SENSOR BATTERY POWERED	SUPPLIES WITH STOPS, LOOSE KEY	1-1/4"x1-1/2"CAST BRASS P-TRAP w/C.O. PLUG	N/A	INCLUDE THERMOSTATIC MIXING VALVE (TMV) SET TO 110°
L-2	LAVATORY	TOTO	LT308	WALL MOUNTED	-	ECO-POWER	SENSOR BATTERY POWERED	SUPPLIES WITH STOPS, LOOSE KEY	1-1/4"x1-1/2"CAST BRASS P-TRAP w/C.O. PLUG	ZURN OR EQUAL	INCLUDE THERMOSTATIC MIXING VALVE (TMV) SET TO 110°
EWC-1	DUAL LEVEL ADA HEIGHT	ELKAY	LZSTL8WSLP W/BOTTLE FILLER	WALL HUNG	-	ELKAY	MANUAL PUSH BAR FOR WATER COOLER SENSOR FOR BOTTLE FILLER	SUPPLY WITH STOPS	1-1/4"x1-1/2"CAST BRASS P-TRAP w/C.O. PLUG	WALL BRACKET	MOUNT AT ADA COMPLIANT HEIGHT
MB-1	MOP BASIN	FIAT	MSB-2424	FLOOR MNTD. MOLDED STONE	24" X 24" X 12"	CHICAGO	MANUAL 897	SUPPLIES WITH STOPS,	3" P-TRAP	N/A	W/FIAT #889-CC MOP HANGER, 1453-BB STRAINER, 832-AA HOSE, E-77-AA GUARD & MSG 2424 WALL GUARD
SK-1	KITCHEN SINK	ELKAY	LRAD33226	COUNTER MNTD. STN. STL.	33" X 22" X 6"	ELKAY	MANUAL SINGLE PUSH LEVER	SUPPLIES WITH STOPS, LOOSE KEY	(2) 1-1/4"x1-1/2"CAST BRASS P-TRAP w/C.O. PLUG	N/A	

ALL FIXTURES TO COMPLY WITH A.D.A. APPLY SILICONE SEALANT WHERE FIXTURES MEET FLOOR AND WALLS.

CLEANOUT, FLOOR, ROOF DRAIN SCHEDULE

SYMBOL	TYPE	MFGR	MODEL	OUTLET	MATERIAL	REMARKS
FCO	FLOOR CLEANOUT (FINISHED AREAS)	JAY R SMITH	4026C	CAULK	NICKEL BRONZE TOP BRONZE PLUG	FINISHED AREAS - PEDESTRIAN TRAFFIC(PROVIDE CARPET MARKER IN CARPETED AREAS)
FCO	FLOOR CLEAN OUT (UNFINISHED AREAS W/MEDIUM DUTY WHEELED TRAFFIC)	JAY R SMITH	4046C	CAULK	CAST IRON BRONZE PLUG	SLAB ON GRADE, MEDIUM-DUTY MEDIUM LOAD WHEELED TRAFFIC
WCO	WALL CLEANOUT	JAY R SMITH	4422-PB	-	POLISHED BRONZE COVER	FINISHED AREAS
FD-1	FLOOR DRAIN	JAY R SMITH	2005-P050	CAULK	NICKEL BRONZE TOP BRONZE PLUG	INSTALL TRAP PRIMER VALVES FOR ALL FLOOR DRAINS OR INSTALL "SURE-SEAL" OR "PRO-SET" TRAP SEAL NEOPRENE DUCKBILL FLAPPER TO PREVENT EVAPORATION
RD	ROOF DRAIN	ZURN	Z-100-DP	CAULK	LOW PROFILE DOME STRAINER	INCLUDE UNDER DECK CLAMP AND ALL REQUIRED SUPPORTING HARDWARE. INSULATE DRAIN BODY
ORD	ROOF DRAIN	ZURN	Z-100-DP-WP	CAULK	LOW PROFILE DOME STRAINER	INCLUDE 2" INTERNAL WATER DAM. INCLUDE UNDER DECK CLAMP AND ALL REQUIRED SUPPORTING HARDWARE. INSULATE DRAIN BODY

NOTE: ALL FLOOR DRAINS THAT DO NOT RECEIVE INDIRECT WASTE DISCHARGE SHALL BE TRAP SEAL PROTECTED WITH TRAP PRIMER VALVES, BELOW SLAB PIPING AND DISTRIBUTION UNITS OR INSTALL "SURE-SEAL" OR "PRO-SET" NEOPRENE DUCKBILL FLAPPER DEVICE TO PREVENT TRAP SEAL EVAPORATION.
INSTALL MEDIUM DUTY CLEANOUT COVERS ON ALL FLOOR CLEANOUTS IN ALL MAIN TRAFFIC CORRIDORS.

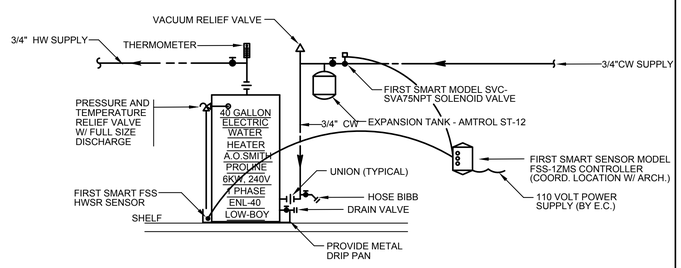

1 ELECTRIC WATER HEATER (EWH) PIPING DIAGRAM
SCALE: NONE

PLUMBING GENERAL NOTES

1. BIDDERS SHALL UTILIZE A COMPLETE SET OF PLUMBING BIDDING DOCUMENTS IN PREPARING OF BID INCLUDING DRAWINGS AND SPECIFICATIONS. THE ENGINEER ASSUMES NO RESPONSIBILITY FOR ERRORS OR MISINTERPRETATIONS RESULTING FROM THE USE OF INCOMPLETE SETS OF PLUMBING BIDDING DOCUMENTS.
   THESE PLUMBING BIDDING DOCUMENTS SHALL INCLUDE:
   DRAWINGS
   P000 PLUMBING - LEGEND, SCHEDULES & NOTES
   P101 PLUMBING FLOOR PLAN
   SPECIFICATIONS
   PLUMBING SECTION 220000
2. THE WORK COVERED CONSISTS OF FURNISHING ALL LABOR AND MATERIALS NECESSARY TO INSTALL, COMPLETE AND READY FOR CONTINUOUS OPERATION, THE PLUMBING SYSTEMS, APPARATUS AND EQUIPMENT FOR THIS PROJECT.
3. ALL EQUIPMENT AND MATERIALS FURNISHED UNDER THE PLUMBING SUB-CONTRACT, LABOR AND TESTING PERFORMED HEREIN SHALL BE IN COMPLETE ACCORDANCE WITH THE STATE BUILDING CODE, AND PLUMBING CODES, ALL LOCAL CODES AND REGULATIONS, NATIONAL FIRE PROTECTION ASSOCIATION, INSURANCE REGULATIONS AND REQUIREMENTS GOVERNING SUCH WORK.
4. ANY AND ALL PERMITS REQUIRED FOR INSTALLATION OF ANY MATERIAL SHALL BE OBTAINED AS PART OF THE WORK OF THE SPECIFICATION INCLUDING ALL FEES OR EXPENSES INCURRED.
5. WHERE WATER PIPING IS SHOWN DROPPING INTO PLUMBING CHASES WITH SIZES NOTED, THAT SIZE SHALL BE CARRIED FULL LENGTH THROUGH THE CHASE.
6. UNLESS OTHERWISE NOTED, ALL HORIZONTAL SANITARY, WASTE PIPING WHICH IS 2" OR LESS IN DIAMETER SHALL PITCH AT NOT LESS THAN 1/4" PER FOOT AND ALL HORIZONTAL WASTE PIPING WHICH IS 3" OR LARGER IN DIAMETER SHALL PITCH OF NOT LESS THAN 1/8" PER FOOT.
7. REFER TO ARCHITECTURAL PLANS FOR EXACT LOCATION AND MOUNTING HGTS. OF ALL PLUMBING FIXTURES.
8. ACCESSIBLE FIXTURES SHALL BE IN ACCORDANCE WITH THE AMERICANS WITH DISABILITIES ACT ACCESSIBILITY GUIDELINES FOR BUILDINGS AND FACILITIES AND ANSI A117.1 STANDARD ON ACCESSIBLE USABLE BUILDINGS AND FACILITIES.
9. SHOCK ABSORBERS SHALL BE INSTALLED BEHIND ALL FIXTURES WITH QUICK CLOSING FAUCETS OR VALVES. SHALL BE INSTALLED DIRECTLY BEFORE THE DEVICE TO ENABLE THE REPLACEMENT WITHOUT HAVING TO SHUT DOWN THE ENTIRE BRANCH OR MAIN. PROVIDE 12"X12" STAINLESS STEEL ACCESS PANELS WHERE REQUIRED.
10. MISCELLANEOUS DISCREPANCIES OR OMISSIONS WHICH MIGHT APPEAR ON THE PLANS OR SPECIFICATIONS WILL NOT RELIEVE THE PLUMBING SUB-CONTRACTOR OF CODE COMPLIANCE.
11. COMPLY WITH ALL RULES AND REGULATIONS OF THE CITY OR TOWN'S WATER DEPARTMENT AND THE CITY OR TOWN'S PLUMBING INSPECTOR'S OFFICE.

SHOCK ABSORBER SCHEDULE

SYMBOL	A	B	C	D	E
FIXTURE UNITS	1-11	12-32	33-60	61-113	114-154
JOSAM	75001	75002	75003	75004	75005
SMITH	5005	5010	5020	5030	5040
ZURN *	1700-100	1700-200	1700-300	1700-400	1700-500

PLUMBING LEGEND

PIPING

SYMBOL	ABBREVIATION	DESCRIPTION
		NEW WORK (ABOVE GROUND) (PERTAINS TO ALL SYSTEM)
	ETR	EXISTING WORK TO REMAIN (ABOVE GROUND) (PERTAINS TO ALL SYSTEM)
	CW	COLD WATER
	HW	HOT WATER 140°F
	S or W	SOIL OR WASTE
		BELOW SLAB WASTE OR VENT PIPING

VALVES

SYMBOL	ABBREVIATION	DESCRIPTION
	BV	BALANCING VALVE
	CV	CHECK VALVE
	DV-A	DRAIN VALVE TYPE WITH HOSE THREADS
	HB-A	HOSE BIBB TYPE WITH HOSE THREADS
		SHUTOFF VALVE

GENERAL

SYMBOL	ABBREVIATION	DESCRIPTION
	FCO	CLEANOUT (FLUSH FLOOR)
	CTE	CONNECT TO EXISTING
	FD-A	DRAIN (FLOOR DRAIN & TYPE)
	DN	DOWN (PENETRATES LEVEL BELOW)
		DROP (BUT DOES NOT PENETRATE LEVEL BELOW)
	P-1	FIXTURE DESIGNATION
		INDICATES DIRECTION OF FLOW
		INDICATES DIRECTION OF SLOPE DOWN
	INV	INVERT ELEVATION
		RISE (BUT DOES NOT PENETRATE LEVEL ABOVE)
	SA	SHOCK ABSORBER
	S=.01	SLOPE = 1/8" PER FOOT
	S=.02	SLOPE = 1/4" PER FOOT
	S=.05	SLOPE = 1/2" PER FOOT
	UP	UP (PENETRATES LEVEL ABOVE)
	VTR	VENT THROUGH ROOF
	WH	WALL HYDRANT
	W & T	WASTE & TRAP

n|e|m|d architects

n|e|m|d architects, inc.
architects | planners | interiors

1 Virginia Avenue | Suite 202
Providence, Rhode Island 02905
T: 401-435-3532 | F: 401-435-3712
www.nemd.com | nemd@nemd.com

ENGINEERING DESIGN SERVICES INCORPORATED
141 Industrial Highway Slatersville, RI 02876
Tel (401) 765-7659 Fax (401) 765-2984

REVIEW ONLY

PROJECT:
SECRETARY OF STATE ARCHIVE

TITLE:
PLUMBING LEGENDS & NOTES

THIS DRAWING IS THE PROPERTY OF NEMD ARCHITECTS, INC. AND SHALL NOT BE USED OR COPIED WITHOUT ITS CONSENT

ADDENDA / REVISIONS

NO.	DATE	NO.	DATE

PROJ. NO. : 19072
DRAWN BY : WCB
CHKD. BY : GGM
DATE : 10.30.19
SCALE : AS NOTED
DRAWING NO.
P000

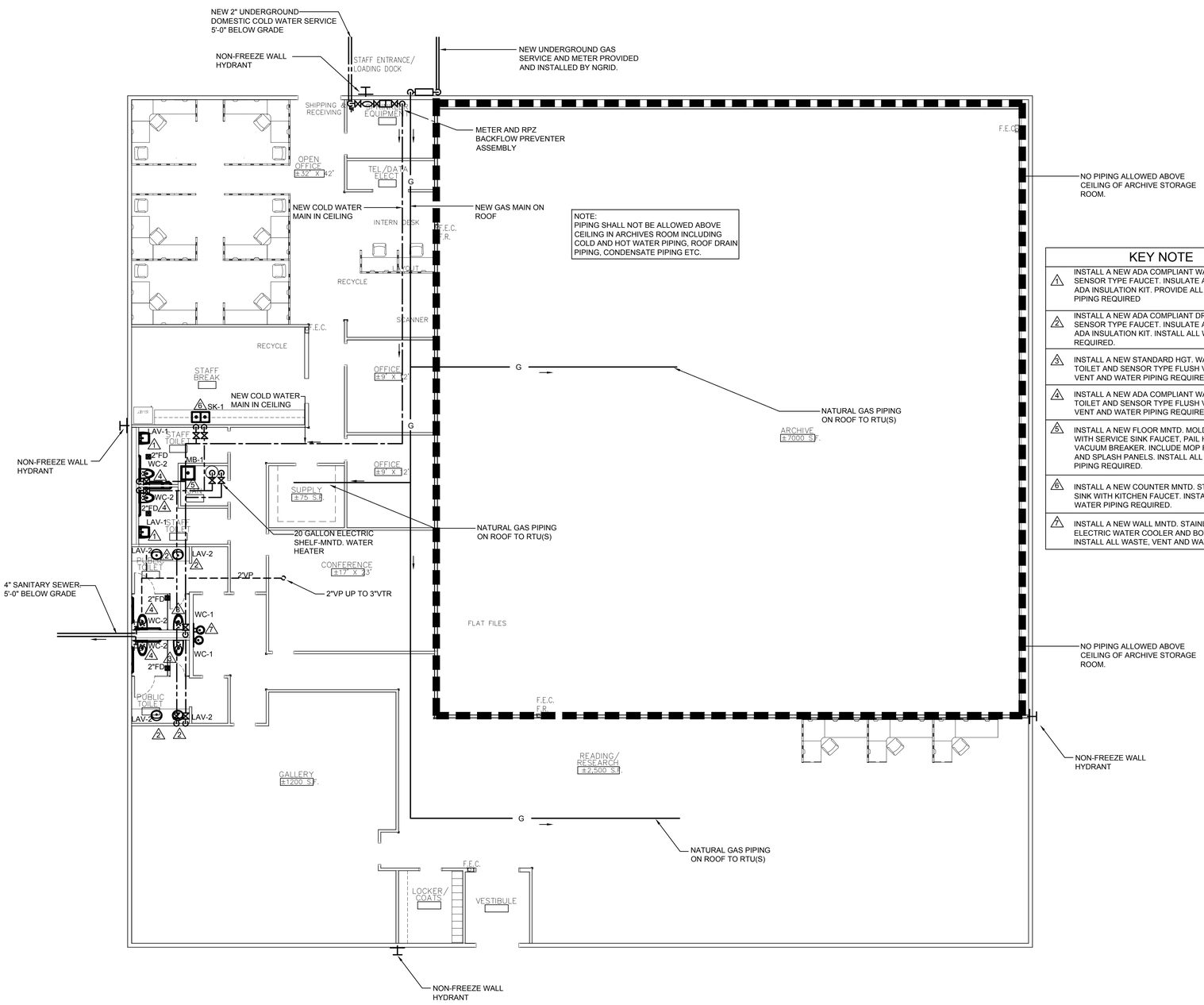

1 P101 FLOOR PLAN
SCALE: 1/8" = 1'-0"

KEY NOTE

1	INSTALL A NEW ADA COMPLIANT WALL HUNG LAVATORY AND SENSOR TYPE FAUCET. INSULATE ALL PIPING UNDER SINK WITH ADA INSULATION KIT. PROVIDE ALL WASTE, VENT AND WATER PIPING REQUIRED
2	INSTALL A NEW ADA COMPLIANT DROP-IN LAVATORY AND SENSOR TYPE FAUCET. INSULATE ALL PIPING UNDER SINK WITH ADA INSULATION KIT. INSTALL ALL WASTE, VENT AND WATER PIPING REQUIRED.
3	INSTALL A NEW STANDARD HGT. WALL MOUNTED FLUSH VALVE TOILET AND SENSOR TYPE FLUSH VALVE. INSTALL ALL WASTE, VENT AND WATER PIPING REQUIRED.
4	INSTALL A NEW ADA COMPLIANT WALL MOUNTED FLUSH VALVE TOILET AND SENSOR TYPE FLUSH VALVE. INSTALL ALL WASTE, VENT AND WATER PIPING REQUIRED.
5	INSTALL A NEW FLOOR MNTD. MOLDED STONE MOP RECEPTOR WITH SERVICE SINK FAUCET, PAIL HOOK, WALL BRACE AND VACUUM BREAKER. INCLUDE MOP RACK, HOSE CLIP, BUMPERS AND SPLASH PANELS. INSTALL ALL WASTE, VENT AND WATER PIPING REQUIRED.
6	INSTALL A NEW COUNTER MNTD. STAINLESS STEEL KITCHEN SINK WITH KITCHEN FAUCET. INSTALL ALL WASTE, VENT AND WATER PIPING REQUIRED.
7	INSTALL A NEW WALL MNTD. STAINLESS STEEL DUAL LEVEL ELECTRIC WATER COOLER AND BOTTLE FILLING STATION. INSTALL ALL WASTE, VENT AND WATER PIPING REQUIRED.

n|e|m|d architects

n|e|m|d architects, inc.
architects | planners | interiors

1 Virginia Avenue | Suite 202
Providence, Rhode Island 02905
T: 401-435-3532 | F: 401-435-3712
www.nemd.com | nemd@nemd.com

ENGINEERING DESIGN SERVICES INCORPORATED
141 Industrial Highway Slatersville, RI 02876
Tel (401) 765-7659 Fax (401) 765-2984

REVIEW ONLY

PROJECT:

SECRETARY OF STATE ARCHIVE

TITLE:

PLUMBING FLOOR PLAN

THIS DRAWING IS THE PROPERTY OF NEMD ARCHITECTS, INC. AND SHALL NOT BE USED OR COPIED WITHOUT ITS CONSENT

ADDENDA / REVISIONS

NO.	DATE	NO.	DATE

PROJ. NO. : 19072
DRAWN BY : WCB
CHKD. BY : GGM
DATE : 10.30.19
SCALE : AS NOTED
DRAWING NO.

P101

PRODUCT LEGEND
1 INLET NIPPLE (1" MPT)
2 NUT
3 ISOLATION RING
4 COLLAR / WELD FITTING
5 STAINLESS STEEL FLEXIBLE BRAIDED HOSE (1" NOMINAL DIAMETER) (LENGTHS AVAILABLE 31", 36", 48", 60", & 72")
6 COLLAR / WELD FITTING
7 NUT
8 REDUCING OUTLET (AVAILABLE 1/2" OR 3/4" FMPT)
9 HOSE BRACKET ASSEMBLY
10 SQUARE BAR (AVAILABLE IN 24" AND 48" LENGTHS)
11 END BRACKET ASSEMBLY
12 SHEET METAL SCREW
13 VIC MECHANICAL-T OUTLET STYLE 922 FIRELOCK (1" FMPT)
SEE VICTAULIC SUBMITTAL NUMBER 10.85

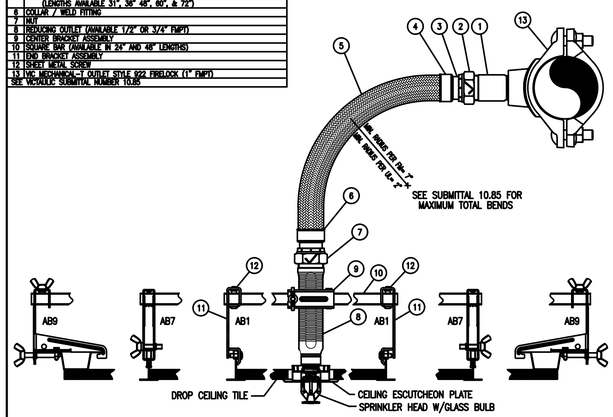

BRAIDED VICFLEX FLEXIBLE HOSE SPRINKLER ASSEMBLIES FOR STANDARD PENDENT SPRINKLERS

VERIFY WITH AHJ THAT FLEXIBLE CONNECTIONS ARE APPROVED.

C UL US LISTED FM

NOTES:
1. REFER TO VICTAULIC SUBMITTAL 10.85 FOR ADDITIONAL DETAILS.

Victaulic — CONSTRUCTION PIPING SERVICES DIVISION

PROJECT: BRAIDED VICFLEX HOSE ASSEMBLIES		PROJ.#:	
CUSTOMER:		P.O.#:	
SYSTEM: VICFLEX SERIES AQB FOR STANDARD PENDENT SPRINKLERS			
REF. DWG.: VICTAULIC SUBMITTAL 10.85			#011
DRN.BY: RGS	DATE: 07/20/12	DRAWING NUMBER	REV.
CHK.BY: .	DATE: .	VICFLEX-B-SP	0

FLEXIBLE SPRINKLER DETAIL
SCALE: NONE

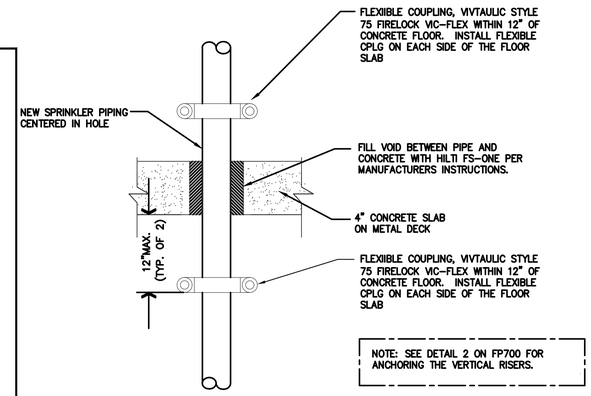

NOTE: SEE DETAIL 2 ON FP700 FOR ANCHORING THE VERTICAL RISERS.

NOTES:

1. THIS CONTRACTOR SHALL BE RESPONSIBLE FOR PROVIDING CLEARANCE AROUND ALL PIPING FOR SEISMIC PROTECTION AND FIRESTOP MATERIALS.
2. INSTALL GROOVED FLEXIBLE COUPLINGS ON EACH SIDE OF FLOOR.
3. INSTALL HILTI FS-ONE FIRESTOPPING IN ALL FLOOR PENETRATIONS.

CONCRETE FLOOR PENETRATION DETAIL
SCALE: NONE

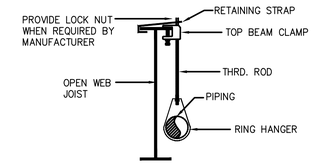

HANGER DETAIL #1
SCALE: NONE

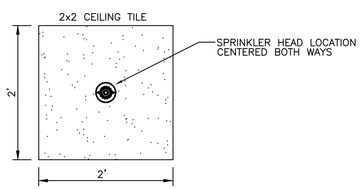

LOCATION OF SPRINKLER HEAD IN CEILING PANEL
SCALE: NONE

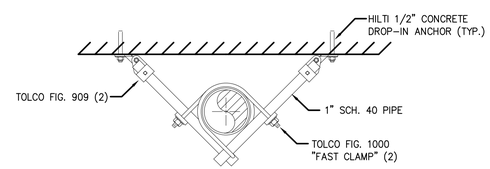

TOP OF RISER DETAIL
SCALE: NONE

MAXIMUM DISTANCE BETWEEN HANGERS

NOMINAL PIPE SIZE (in.)	1"	1-1/4"	1-1/2"	2"	2-1/2"	3"	4"	5"	6"
SCH. 10 STEEL PIPE	N/A	12-0	15-0	15-0	15-0	15-0	15-0	15-0	15-0
SCH. 40 THREADED PIPE	12-0	12-0	12-0	12-0	12-0	12-0	N/A	N/A	N/A

FIRE PROTECTION LEGEND

SYMBOL	ABBREVIATION	DESCRIPTION
		ABOVE FLOOR PIPING (INDICATED AS SINGLE LINEWORK)
		BELOW FLOOR PIPING (INDICATED AS DOUBLE LINEWORK)
		NEW WORK (INDICATED AS HEAVY LINEWORK)
F	F	FIRE PROTECTION SERVICE MAIN
WS	WS	WET SPRINKLER SYSTEM
PA	PA	DOUBLE INTERLOCKED SYSTEM
CA	CA	CLEAN AGENT FIRE PROTECTION SYSTEM
	UP	UP (PENETRATES LEVEL ABOVE)
		RISE (BUT DOES NOT PENETRATE LEVEL ABOVE)
	DN	DOWN (PENETRATES LEVEL BELOW)
		DROP (BUT DOES NOT PNETRATE LEVEL BELOW)
		DIRECTION OF FLOW
.01		DIRECTION & DESIGNATION OF SLOPE (IN FT/FT)
	HT&I	HEAT TRACE & INSULATE
SS		SHUTOFF VALVE (OUTSIDE SCREW AND YOKE WITH SUPERVISORY SWITCH)
	FDV	FIRE DEPARTMENT VALVE
	PRV	PRESSURE REDUCING VALVE
	RV	RELIEF VALVE
	CV	CHECK VALVE
	DV	DRAIN VALVE WITH HOSE THREADS
	DCVA	DOUBLE CHECK VALVE ASSEMBLY
	WACV	WET ALARM CHECK VALVE
	DACV	DRY ALARM CHECK VALVE
	PACV	PRE-ACTION ALARM CHECK VALVE
	UN	UNION
	ST	STRAINER
	SL	SLEEVE
	SS	SUPERVISORY SWITCH
	FS	FLOW SWITCH
	PS	PRESSURE SWITCH
	PG	PRESSURE GAUGE
	ABD	AUTOMATIC BALL DRIP
	ITC	INSPECTORS TEST CONNECTION
	FDC	FIRE DEPARTMENT CONNECTION
	RM	ROOF MANIFOLD
	FHC	FIRE HOSE CABINET
	FE	FIRE EXTINGUISHER
	FC	FLUSHING CONNECTION
	NIFPC	NOT IN FIRE PROTECTION CONTRACT
	FPC	FIRE PROTECTION CONTRACTOR
	AP	ACCESS PANEL
	ETR	EXISTING TO REMAIN
	CTE	CONNECT TO EXISTING
	NO	NORMALLY OPEN
	NC	NORMALLY CLOSED
	INV	INVERT ELEVATION
	VIV	VALVE IN VERTICAL
	OED	OPEN END DRAIN
	CC	CAPPED CONNECTION
1 / FP-		FIRE PROTECTION RISER DIAGRAM (INDICATES LETTER AND REFERENCE DRAWING)
1 / FP-		DIAGRAM NUMBER (INDICATES LETTER AND REFERENCE DRAWING)
1 / FP-		SECTION NUMBER (INDICATES LETTER AND REFERENCE DRAWING)

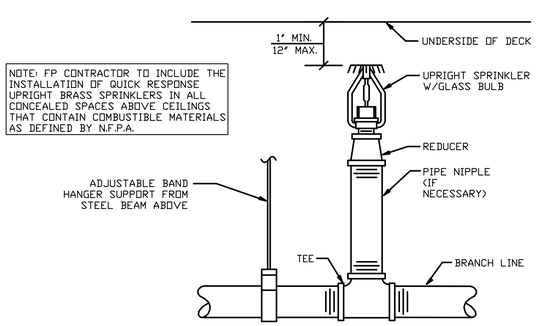

NOTE: FP CONTRACTOR TO INCLUDE THE INSTALLATION OF QUICK RESPONSE UPRIGHT BRASS SPRINKLERS IN ALL CONCEALED SPACES ABOVE CEILINGS THAT CONTAIN COMBUSTIBLE MATERIALS AS DEFINED BY N.F.P.A.

UPRIGHT SPRINKLER DETAIL
SCALE: NONE

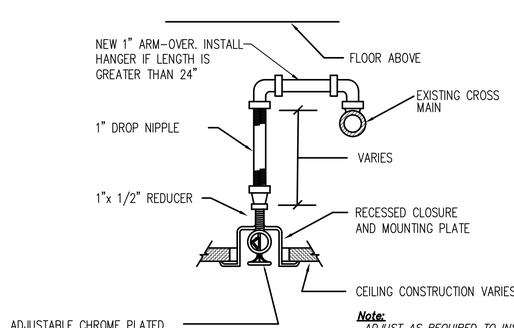

Note:
ADJUST AS REQUIRED TO INSTALL ACCORDING TO ARCHITECTURAL REFLECTED CEILING PLANS IN ROOMS & CORRIDORS. COLOR OF PLATE TO MATCH ARCHITECTURAL BACKGROUND.

PENDANT SPRINKLER DETAIL
SCALE: NONE

n|e|m|d architects

n|e|m|d architects, inc.
architects | planners | interiors

1 Virginia Avenue | Suite 202
Providence, Rhode Island 02905
T: 401-435-3532 | F: 401-435-3712
www.nemd.com | nemd@nemd.com

ENGINEERING DESIGN SERVICES INCORPORATED
141 Industrial Highway Slatersville, RI 02876
Tel (401) 765-7659 Fax (401) 765-2984

REVIEW ONLY

PROJECT:
SECRETARY OF STATE ARCHIVE

TITLE:
FIRE PROTECTION LEGENDS & NOTES

THIS DRAWING IS THE PROPERTY OF NEMD ARCHITECTS, INC. AND SHALL NOT BE USED OR COPIED WITHOUT ITS CONSENT

ADDENDA / REVISIONS

NO.	DATE	NO.	DATE

PROJ. NO. :	19072
DRAWN BY :	WCB
CHKD. BY :	GGM
DATE :	10.30.19
SCALE :	AS NOTED
DRAWING NO.	

FP000

FIRE PROTECTION CONTRACTOR SHALL BE REQUIRED TO ARRANGE FOR A CURRENT HYDRANT FLOW TEST. TEST SHALL SHOW THE FOLLOWING:

1. TIME AND DATE OF TEST
2. LOCATION AND ELEVATION OF STATIC AND RESIDUAL HYDRANTS
3. WHO CONDUCTED AND WITNESSED THE TEST
4. PORT SIZE AND HOW MANY PORTS FLOWED
5. PITOT TUBE PRESSURE IN PSI
6. STATIC PRESSURE IN PSI
7. RESIDUAL PRESSURE IN PSI
8. SIZE AND AGE OF MUNICIPAL MAIN

SPRINKLERS MAY BE OMITTED FROM ELECTRICAL ROOMS IF THE FOLLOWING CONDITIONS ARE MET:

1. THE ROOM IS DEDICATED TO ELECTRICAL EQUIPMENT ONLY.
2. ONLY DRY-TYPE ELECTRICAL EQUIPMENT IS USED. EQUIPMENT IS INSTALLED IN A 2-HOUR FIRE RATED ENCLOSURE INCLUDING PROTECTION FOR PENETRATIONS.

DESIGN INTENT FOR A NEW SAPPHIRE NOVEC 1230 CLEAN AGENT SYSTEM:
PROVIDE AND INSTALL A TOTAL FLOODING NOVEC 1230 CLEAN AGENT SYSTEM FOR ABOVE AND BELOW CEILING. SYSTEM SHALL INCLUDE BUT NOT BE LIMITED TO: PRIMARY STORAGE AND BACK-UP BOTTLES, SMOKE DETECTORS (BOTH PHOTO-ELECTRIC AND IONIZATION TYPE), RELEASING PANEL, WIRING, PIPING AND NOZZLES TO PROVIDE FULL COVERAGE OVER THE ENTIRE DATA CENTER ROOM AND CEILING SPACE ACCORDING TO NFPA 2001 "CLEAN AGENT FIRE EXTINGUISHING SYSTEMS". REFER TO SPECIFICATIONS FOR ADDITIONAL REQUIREMENTS.

DESIGN INTENT FOR NEW NOVEC 1230 CLEAN AGENT SYSTEM:
SEQUENCE OF OPERATION

I. ACTIVATION OF A SMOKE DETECTOR WILL CAUSE THE FOLLOWING TO OCCUR:
a. THE ALARM LED WILL BE ANNUNCIATED ON THE RELEASING PANEL
b. THE ALARMED DETECTOR'S RED STATUS LAMP WILL LIGHT
c. THE ALARM BELL WILL OPERATE
d. AN ALARM SIGNAL WILL BE SENT TO THE BUILDING'S FIRE ALARM SYSTEM
e. THE NOVEC 1230 SYSTEM WILL BE PRE-ALARMED

2. ACTIVATION OF A SECOND SMOKE DETECTOR WILL CAUSE THE FOLLOWING TO OCCUR:
a. THE PRE-DISCHARGE LED WILL BE ANNUNCIATED ON THE RELEASING PANEL
b. THE ALARMED DETECTORS STATUS LIGHT WILL LIGHT
c. THE HORN STROBE WILL OPERATE
d. THE 30 SECOND PRE-DISCHARGE TIME DELAY WILL BEGIN
e. UPON EXPIRATION OF THE TIME DELAY THE FOLLOWING WILL OCCUR:
1. THE NOVEC 1230 SYSTEM WILL DISCHARGE INTO THE SPACE AND ABOVE THE CEILING
2. THE STROBE LIGHTS OUTSIDE THE ROOM WILL ACTIVATE
3. THE RELEASE LED WILL BE ANNUNCIATED ON THE RELEASING PANEL

3. ACTIVATION OF ELECTRIC RELEASE STATION WILL CAUSE THE SAME AS 1 AND 2 TO OCCUR EXCEPT THE TIME DELAY WILL BE BYPASSED.

NOTE: 1. AN ABORT CAN BE PUSHED AND HELD IN TO PREVENT THE NOVEC 1230 SYSTEM FROM DISCHARGING UNTIL THE PANEL CAN BE RESET. THE ELECTRIC RELEASE STATION WILL OVERRIDE THE ABORT. ACTIVATION OF THE ABORT WILL CAUSE A TROUBLE CONDITION TO OCCUR ON THE RELEASING PANEL.

2. SHOULD A TROUBLE CONDITION OCCUR ON THE RELEASING PANEL A TROUBLE SIGNAL WILL BE SENT TO THE BUILDING FIRE ALARM PANEL.

3. BEFORE ACTIVATION OF SYSTEM OCCURS ALL HVAC AIR SYSTEMS SHALL BE SHUT DOWN INCLUDING THE CLOSING OF ALL DAMPERS SUPPLYING AND OR EXHAUSTING AIR TO DATA CENTER. REFER TO HVAC PLANS FOR COORDINATION. PROVIDE AND INSTALL ALL CONTROLS AND CONTROL WIRING.

SMOKE DETECTOR NOTE:
SMOKE DETECTORS SHALL BE COMPATIBLE WITH SYSTEM. THE NUMBER AND SPACING OF SMOKE DETECTORS ABOVE AND BELOW CEILING SHALL BE IN ACCORDANCE WITH NFPA 2001 AND NFPA 72. PROVIDE AND INSTALL ALL WIRING BACK TO AUTO-PULSE RELEASING PANEL.

FIRE PROTECTION BIDDERS NOTE:
FIRE PROTECTION CONTRACTORS BIDDING THIS PROJECT SHALL BE RESPONSIBLE TO INCLUDE, BUT NOT BE LIMITED TO, THE FOLLOWING REQUIREMENTS AS PART OF THEIR SUBMITTED BID:

1. FINAL TESTING AND APPROVAL OF ALL PIPING AND COMPONENTS AS WELL AS THE FIRE ALARM SEQUENCING OF EVENTS TO THE OWNERS SATISFACTION.
2. PROGRAMMING OF THE INSTALLED APPROVED SYSTEM INTO THE EXISTING BUILDING MANAGEMENT SYSTEM (IF APPLICABLE)COORDINATE WITH OWNER FOR SPECIFIC REQUIREMENTS.
3. THE NEW NOVEC CLEAN AGENT SYSTEM SHALL BE TIED INTO THE EXISTING BUILDING FIRE ALARM SYSTEM. (IF APPLICABLE)

REFER TO SPECIFICATIONS FOR ADDITIONAL REQUIREMENTS TO INCLUDE AS PART OF BID.

PROVIDE AND INSTALL ALL WIRING FROM AUDIBLE & VISUAL ALARMS, ABORT BUTTON AND PULL STATIONS BACK TO AUTO-PULSE RELEASING PANEL

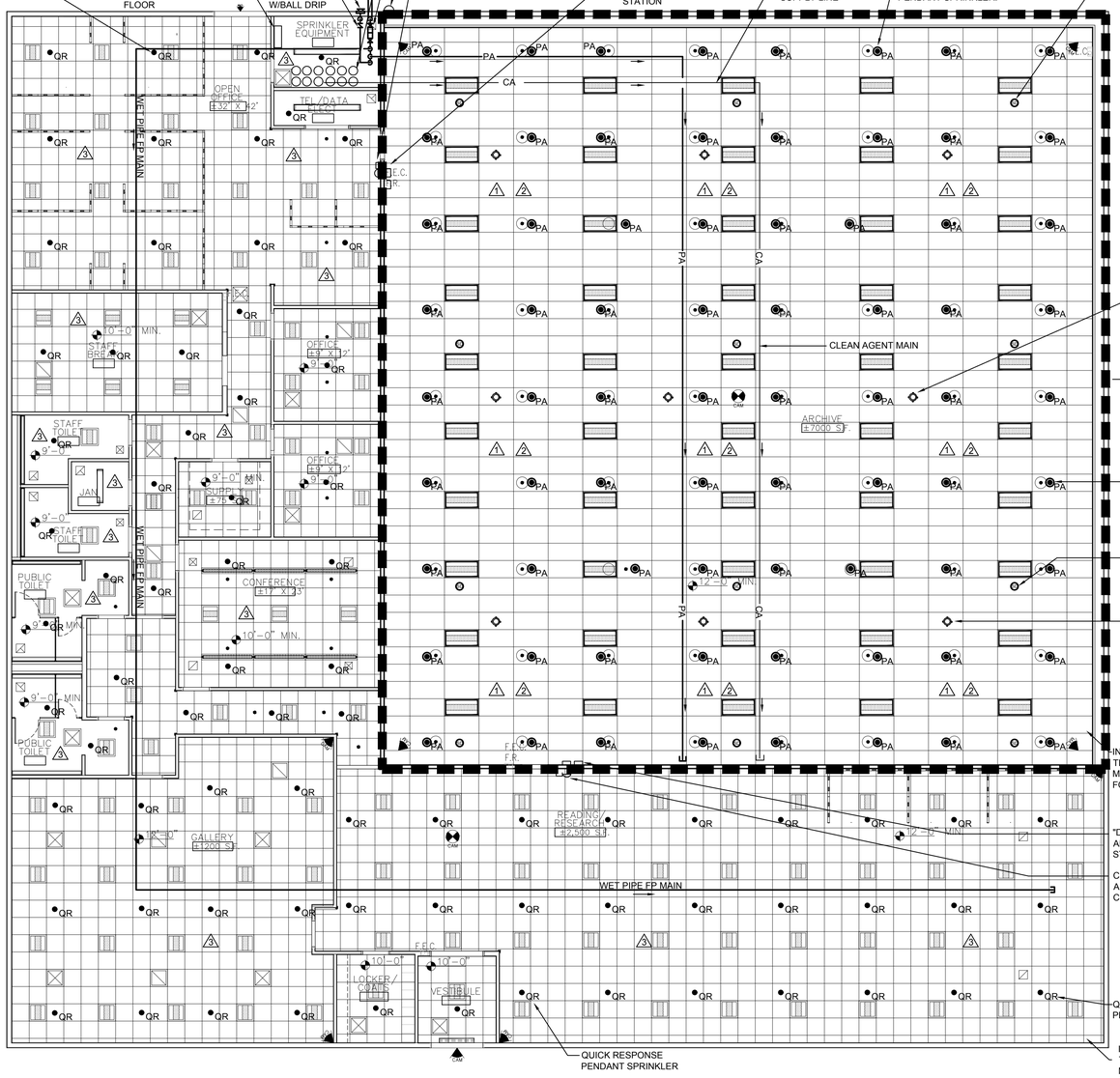

1 FP101 FLOOR PLAN
SCALE: 1/8" = 1'-0"

KEY NOTES

1. INSTALL A NEW DOUBLE-INTERLOCKED PRE-ACTION SPRINKLER SYSTEM THROUGHOUT ARCHIVE STORAGE ROOM. COMPLY WITH ALL NFPA 13 RULES AND CRITERIA FOR SPRINKLER SPACING AND OBSTRUCTIONS. SEE FP SPECIFICATION AND APPENDIX "A" FOR FURTHER INFORMATION.
2. INSTALL A NEW NOVEC 1230 TOTAL FLOODING CLEAN AGENT SYSTEM THROUGHOUT ARCHIVE STORAGE ROOM. COMPLY WITH ALL NFPA 2001 RULES AND CRITERIA FOR DISCHARGE NOZZLE SPACING AND OBSTRUCTIONS. SEE FP SPECIFICATION AND APPENDIX "A" FOR FURTHER INFORMATION.
3. INSTALL A NEW WET-PIPE SPRINKLER SYSTEM THROUGHOUT ALL ARES EXCEPT ARCHIVE STORAGE ROOM. COMPLY WITH ALL NFPA NFPA 13 RULES AND CRITERIA FOR DISCHARGE NOZZLE SPACING AND OBSTRUCTIONS.SEE FP SPECIFICATION AND APPENDIX "A" FOR FURTHER INFORMATION.

n|e|m|d architects

n|e|m|d architects, inc.
architects | planners | interiors

1 Virginia Avenue | Suite 202
Providence, Rhode Island 02905
T: 401-435-3532 | F: 401-435-3712
www.nemd.com | nemd@nemd.com

ENGINEERING DESIGN SERVICES INCORPORATED
141 Industrial Highway Slatersville, RI 02876
Tel (401) 765-7659 Fax (401) 765-2984

REVIEW ONLY

PROJECT:
SECRETARY OF STATE ARCHIVE

TITLE:
TRADE FLOOR PLAN

THIS DRAWING IS THE PROPERTY OF NEMD ARCHITECTS, INC. AND SHALL NOT BE USED OR COPIED WITHOUT ITS CONSENT

ADDENDA / REVISIONS

NO.	DATE	NO.	DATE

PROJ. NO. : 19072
DRAWN BY : WCB
CHKD. BY : GGM
DATE : 10.30.19
SCALE : AS NOTED
DRAWING NO.

FP101