October 17, 2019

STATE OF RHODE ISLAND AND PROVIDENCE PLANTATION
DEPARTMENT OF ADMINISTRATION

DIVISION OF PURCHASES BID NO. 7598948

RHODE ISLAND DEPARTMENT OF TRANSPORTATION

RHODE ISLAND CONTRACT NO.2019-CH-032

FEDERAL-AID PROJECT NO. FAP Nos: STP-RESF(406)

Rt 44 - Taunton Ave (Rt 1A/114 - Mass S/L)

East of Pawtucket Ave. to the Massachusetts State Line

CITY/TOWN OF East Providence

COUNTY OF PROVIDENCE

NOTICE TO PROSPECTIVE BIDDERS

ADDENDUM NO. 4 Prospective bidders and all concerned are hereby notified of the following changes in the Plans, Specifications, Proposal and Distribution of Quantities for this contract. These changes shall be incorporated in the Plans, Specifications, Proposal and Distribution of Quantities, and shall become an integral part of the Contract Documents.

A. Other Contract Changes

1. DOQ

   For Item 203.9951, Unit of Measure has been updated to "EA" and Only Acceptable Bid price equals $1.00.

B. Plans

1. Sheet No. 11 Typical Details - 1

   Delete Sheet No. 11 in its entirety and replace with the revised Sheet No. 11 (R-1), attached to this Addendum No. 4. A Steel Bollard detail has been added.

2. Sheet No. 13 Typical Details - 3

   Delete Sheet No. 13 in its entirety and replace with the revised Sheet No. 13 (R-1), attached to this Addendum No. 4. The Outlet Control Structure detail has been revised.

3. Sheet No. 20 General Plan - 7

   Delete Sheet No. 20 in its entirety and replace with the revised Sheet No. 20 (R-1), attached to this Addendum No. 4. Additional notes have been added.

4. Sheet No. 23 Drainage and Utility Plans - 1

   Delete Sheet No. 23 in its entirety and replace with the revised Sheet No. 23 (R-1), attached to this Addendum No. 4. A Hydrant Relocation detail has been added, a utility pole relocation has been changed to a removal, callouts have been updated, and project information has been updated.

5. Sheet No. 28 Drainage and Utility Plans - 6

   Delete Sheet No. 28 in its entirety and replace with the revised Sheet No. 28 (R-1), attached to this Addendum No. 4. Outlet Control Structure (OCS-1) location has changed, inverts have been revised, and pipe lengths have been updated.

6. Sheet No. 29 Bioretention Basin Detail - 1

   Delete Sheet No. 29 in its entirety and replace with the revised Sheet No. 29 (R-1), attached to this Addendum No. 4. Outlet Control Structure (OCS-1) location has changed, inverts have been revised, pipe lengths have been updated, and notes have been added.

C. Contract Documents

1. Specifications - Job Specific

   a. JS-ii – Job Specific Index

      Delete Page JS-ii in its entirety and replace with revised JS-ii (R-3), attached to this Addendum No. 4. The Index has been revised.

   b. Page JS-42

      Delete Page JS-42 in its entirety and replace with revised JS-42 (R-1), attached to this Addendum No. 4. Item 902.9901 has been revised.

   c. Page JS-49

      Delete Page JS-49 in its entirety and replace with revised JS-49 (R-2), attached to this Addendum No. 4. Base prices have been revised.

   d. Page JS-69

      Include Page JS-69 (R-1) attached to this Addendum No. 4. Item 203.9951 has been revised.

   e. Page JS-73

      Include Page JS-73 attached to this Addendum No. 4. Item 702.9906 has been included in the contract.

   f. Pages JS-74 to JS-81

      Include Pages JS-74 to JS-81 attached to this Addendum No. 4. Item 714.8163 has been included in the contract.

D. Distribution of Quantities

1. Assembly Summary Pages 1-17 (R-1)

   Delete Assembly Summary Pages 1-17 (R-1) in their entirety and replace with revised Assembly Summary Pages 1-17 (R-2), attached to this Addendum No. 4. Assemblies 2GRCC, 3GRTC, 4MHWE, 6GRTC, GRANC, RASTC, RASTS, and RHHGC have been revised.

ATTACHMENTS

2. Assembly Summary Page 18 (R-2)

   Delete Assembly Summary Page 18 (R-2) in its entirety and replace with revised Assembly Summary Pages 18 (R-3), attached to this Addendum No. 4. Assembly RHHGC has been revised.

3. Index Pages 1-4 (R-2)

   Delete Index Pages 1-4 (R-2) in their entirety and replace with revised Index Pages 1-4 (R-3), attached to this Addendum No. 4. The Index Pages have been revised.

4. Pages 34-37 (R-1)

   Delete Pages 34-37 (R-1) in their entirety and replace with revised Pages 34-37 (R-2), attached to this Addendum No. 4. Item Code 603.1000 has been revised.

5. Page 41 (R-1)

   Delete Page 41 (R-1) in its entirety and replace with revised Page 41 (R-2), attached to this Addendum No. 4. Item Code 701.8003 has been revised.

6. Page 44 (R-1)

   Delete Page 44 (R-1) in its entirety and replace with revised Page 44 (R-2), attached to this Addendum No. 4. Item Code 702.0522 has been revised.

7. Page 48 (R-1)

   Delete Page 48 (R-1) in its entirety and replace with revised Page 48 (R-2), attached to this Addendum No. 4. Item Code 702.9905 has been revised.

8. Pages 53-54a (R-1)

   Delete Pages 53-54a (R-1) in their entirety and replace with revised Paged 53-54a (R-2), attached to this Addendum No. 4. Item Codes 708.9042, 713.8268, and 713.8269 have been revised and Page 54a (R-1) has been repaginated.

9. Page 79 (R-1)

   Delete Page 79 (R-1) in its entirety and replace with revised Page 79 (R-2), attached to this Addendum No. 4. Item Code 701.8100 has been revised.

10. Page 79a

    Insert Page 79a attached to this Addendum No. 4. New page added for pagination.

11. Page 80 (R-2)

    Delete Page 80 (R-2) in its entirety and replace with revised Page 80 (R-3), attached to this Addendum No. 4. Item Code 906.0120 has been revised.

12. Page 81

    Delete Page 81 in its entirety and replace with revised Page 81 (R-1), attached to this Addendum No. 4. Item Code 601.0300 has been added.

13. Pages 82-85

    Insert new Pages 82-85, attached to this Addendum No. 4. Item Codes 601.0300, 701.5206, 701.8106, 701.8170, and 702.9906 have been added.

RI Department of Transportation

Manager of Project Management

ATTACHMENTS

FED. ROAD DIV. NO.	STATE	FEDERAL AID PROJECT NO.	FISCAL YEAR	SHEET NO.	TOTAL SHEETS
	RI	STP-RESF(406)		11	47

R-1

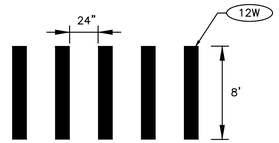

NOTES: REFER TO THE JOB SPECIFIC PAVEMENT MARKING NOTES.
ADJUST BAR PLACEMENT TO AVOID VEHICLE TIRE TRACK

TYPICAL CROSSWALK MARKING DETAIL

NOT TO SCALE

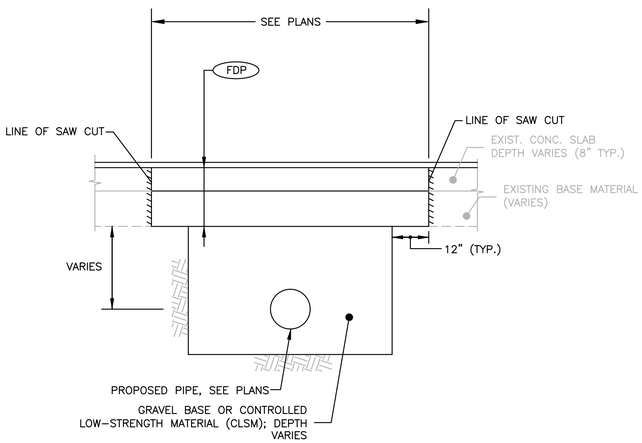

FULL DEPTH RECONSTRUCTION TRENCH REPAIR (FDR)

NOT TO SCALE

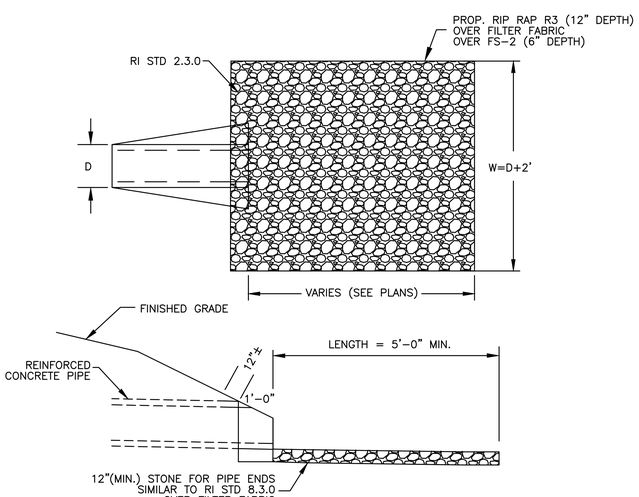

MODIFIED STONE FOR PIPE ENDS

NOT TO SCALE

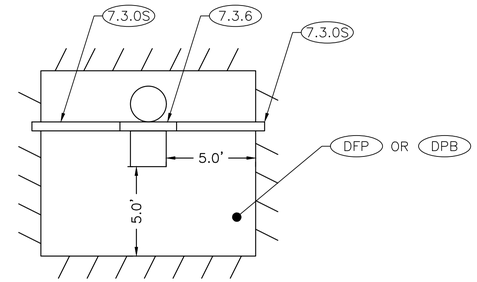

LIMITS FOR CATCH BASIN RECONSTRUCTION

NOT TO SCALE

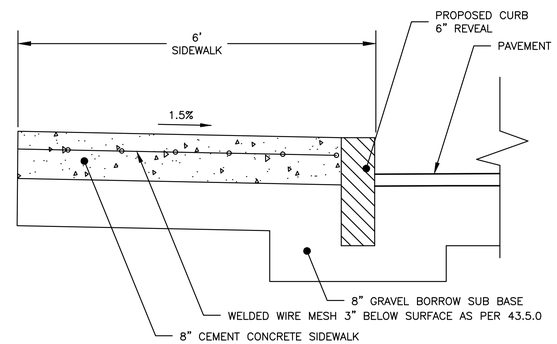

SEE PLANS FOR LOCATIONS

REINFORCED SIDEWALK (RSW)

NOT TO SCALE

NOTES:
1. SHALL BE IN ACCORDANCE WITH SECTION 905 OF THE R.I. STANDARD SPECIFICATIONS
2. FOR CURB SETTING DETAIL REFERENCE R.I. STANDARD 7.6.0
3. 8" CEMENT CONCRETE WITH WELDED WIRE MESH TO BE PAID UNDER R.I. STANDARD 43.5.0

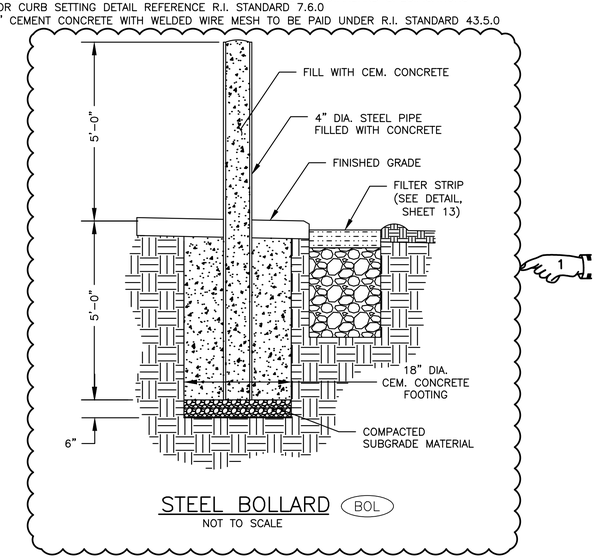

STEEL BOLLARD (BOL)

NOT TO SCALE

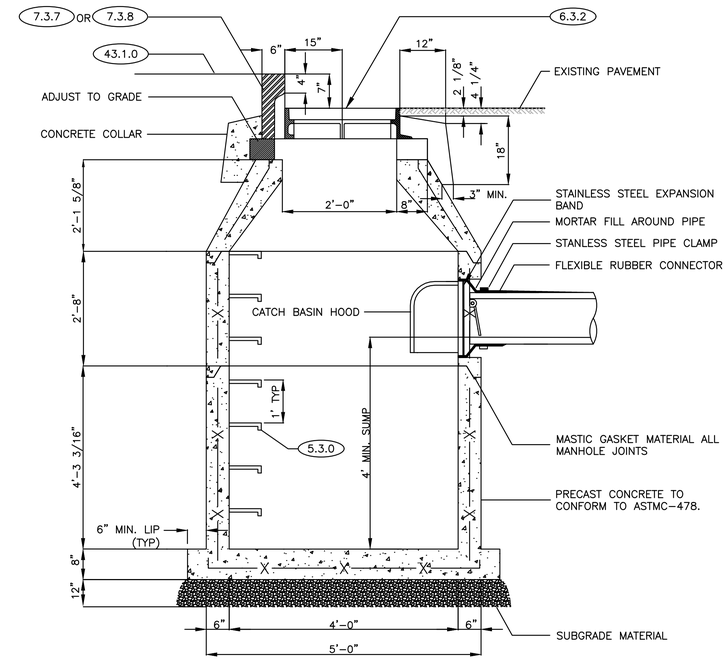

TYPICAL PRECAST CATCH BASIN DETAIL

NOT TO SCALE

NOTES:
1. SHALL BE IN ACCORDANCE WITH SECTION 702 OF THE R.I. STANDARD SPECIFICATIONS.
2. SEE TABLE 1 OF STD. 4.4.0 FOR STEEL REINFORCEMENT REQUIREMENTS.
3. STEPS SHALL CONFORM TO STD 5.3.0 AND SHALL BE INSTALLED AT THE CASTING PLANT.
4. ONE POUR MONOLITHIC BASE SECTION.
5. ANY NECESSARY ADJUSTMENTS DURING CONSTRUCTION WILL BE DONE BY SAW-CUTTING AND/OR CORING ONLY. NO JACKHAMMERS, HAMMERS AND CHISELS OR PNEUMATIC TOOLS WILL BE ALLOWED.
6. CORBEL MADE OF RED CLAY BRICK WILL BE PERMITTED FOR THE "CONE SECTION" OF THE CATCH BASIN
7. FOR CATCH BASIN TYPES "D" AND "F" STEPS MUST BE INSTALLED ON THE CURB SIDE OF THE STRUCTURE (SEE STD. 4.4.0 FOR DIAGRAMS OF CATCH BASIN TYPES).
8. THE CENTERLINE OF THE OPENING MUST BE WITHIN 2'-0" FROM THE STEPS.
9. ALTERNATE TOP SLAB IS STEEL REINFORCED TO MEET OR EXCEED H-25 LOADING (SEE STD. 4.7.2)
10. ALTERNATE TOP SLAB IS ONLY FOR USE WHEN REDUCING SECTION DOES NOT FIT BECAUSE OF STRUCTURE DEPTH.
11. REFER TO STD. 5.2.0 FOR MAXIMUM PIPE SIZES.
12. UNLESS OTHERWISE INDICATED, SUMP DEPTH SHALL BE 4'

REVISIONS		
NO.	DATE	BY
1	10/11/19	CL

RHODE ISLAND
DEPARTMENT OF TRANSPORTATION

IMPROVEMENTS TO
TAUNTON AVENUE

EAST PROVIDENCE, RHODE ISLAND

TYPICAL DETAILS - 1

GREEN INTERNATIONAL AFFILIATES, INC.
Civil and Structural Engineers

CHECKED BY DATE SCALE 1"=20'

ADDENDUM NO. 4

0076R_V1_011_TYPICALDETAILS

FED. ROAD DIV. NO.	STATE	FEDERAL AID PROJECT NO.	FISCAL YEAR	SHEET NO.	TOTAL SHEETS
	RI	STP–RESF(406)		13	47

R–1

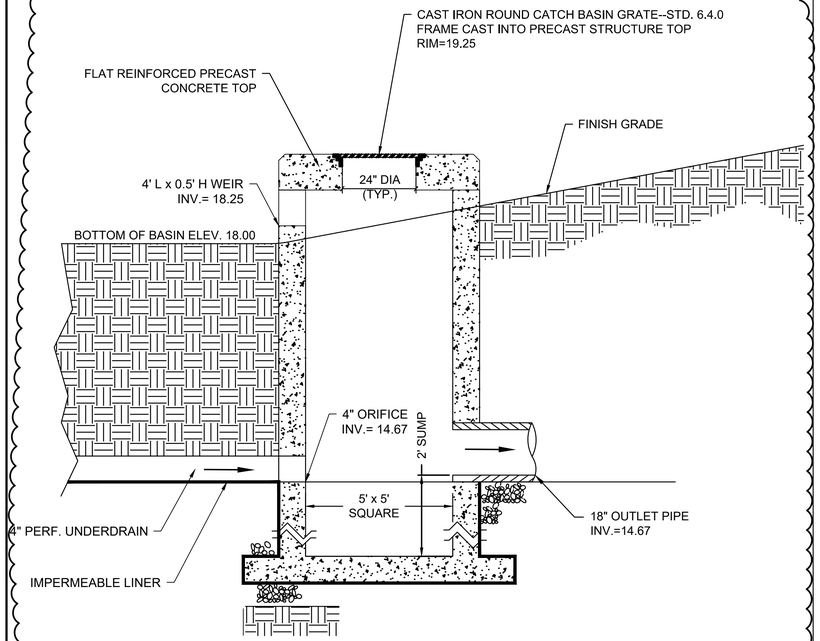

OUTLET CONTROL STRUCTURE (OCS)

NOT TO SCALE

STA. 95+40 – 67' LT

NOTES:
1. PAID FOR UNDER ITEM CODE 702.9906

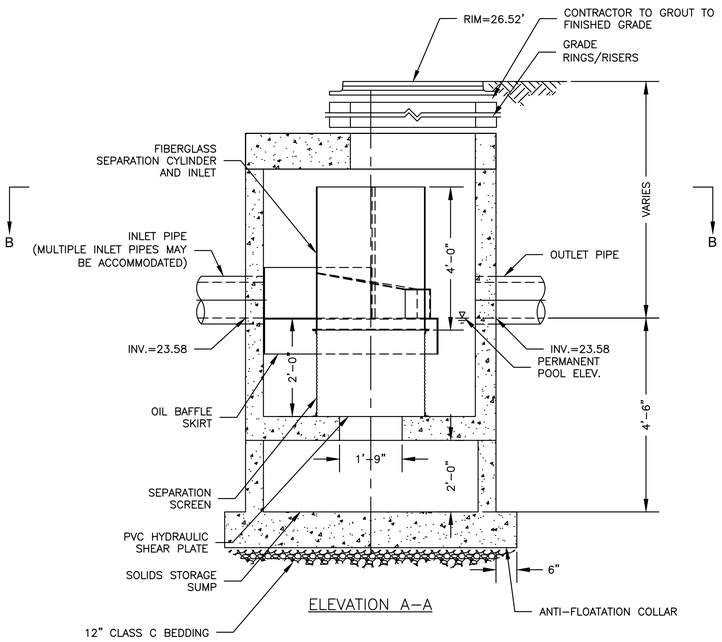

ELEVATION A–A

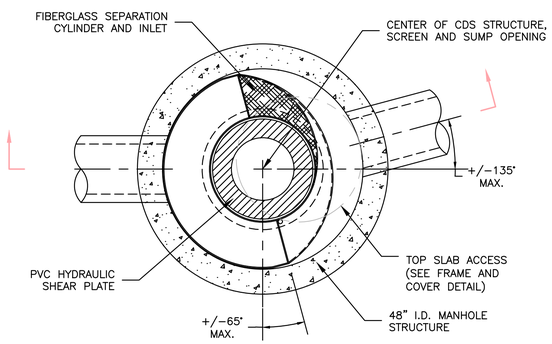

PLAN VIEW B–B

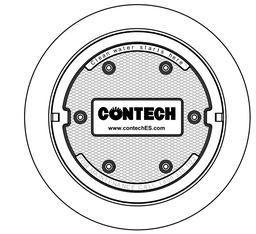

FRAME AND COVER
(DIAMETER VARIES)

GENERAL NOTES
1. CONTECH TO PROVIDE ALL MATERIALS UNLESS NOTED OTHERWISE.
2. DIMENSIONS MARKED WITH ( ) ARE REFERENCE DIMENSIONS. ACTUAL DIMENSIONS MAY VARY.
3. FOR FABRICATION DRAWINGS WITH DETAILED STRUCTURE DIMENSIONS AND WEIGHTS, PLEASE CONTACT YOUR CONTECH ENGINEERED SOLUTIONS LLC REPRESENTATIVE. www.ContechES.com
4. CDS WATER QUALITY STRUCTURE SHALL BE IN ACCORDANCE WITH ALL DESIGN DATA AND INFORMATION CONTAINED IN THIS DRAWING.
5. STRUCTURE SHALL MEET AASHTO HS20 AND CASTINGS SHALL MEET HS20 (AASHTO M 306) LOAD RATING.
6. PVC HYDRAULIC SHEAR PLATE IS PLACED ON SHELF AT BOTTOM OF SCREEN CYLINDER. REMOVE AND REPLACE AS NECESSARY DURING MAINTENANCE CLEANING.

INSTALLATION NOTES
A. ANY SUB–BASE, BACKFILL DEPTH, AND/OR ANTI–FLOTATION PROVISIONS ARE SITE–SPECIFIC DESIGN CONSIDERATIONS AND SHALL BE SPECIFIED BY ENGINEER OF RECORD.
B. CONTRACTOR TO PROVIDE EQUIPMENT WITH SUFFICIENT LIFTING AND REACH CAPACITY TO LIFT AND SET THE CDS MANHOLE STRUCTURE (LIFTING CLUTCHES PROVIDED).
C. CONTRACTOR TO ADD JOINT SEALANT BETWEEN ALL STRUCTURE SECTIONS, AND ASSEMBLE STRUCTURE.
D. CONTRACTOR TO PROVIDE, INSTALL, AND GROUT PIPES. MATCH PIPE INVERTS WITH ELEVATIONS SHOWN.
E. CONTRACTOR TO TAKE APPROPRIATE MEASURES TO ASSURE UNIT IS WATER TIGHT, HOLDING WATER TO FLOWLINE INVERT MINIMUM. IT IS SUGGESTED THAT ALL JOINTS BELOW PIPE INVERTS ARE GROUTED.

WATER QUALITY STRUCTURE CDS2015–4–C (STU–1)

NOT TO SCALE

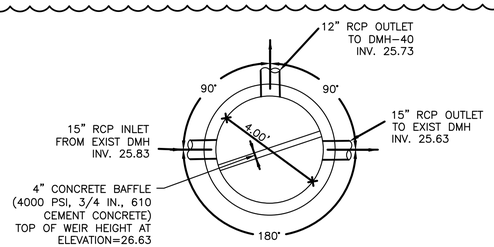

PLAN

BYPASS MANHOLE (BMH–1)

NOT TO SCALE

STA. 90+97 – 25' LT

NOTES:
1. PAID FOR UNDER ITEM CODE 702.9905

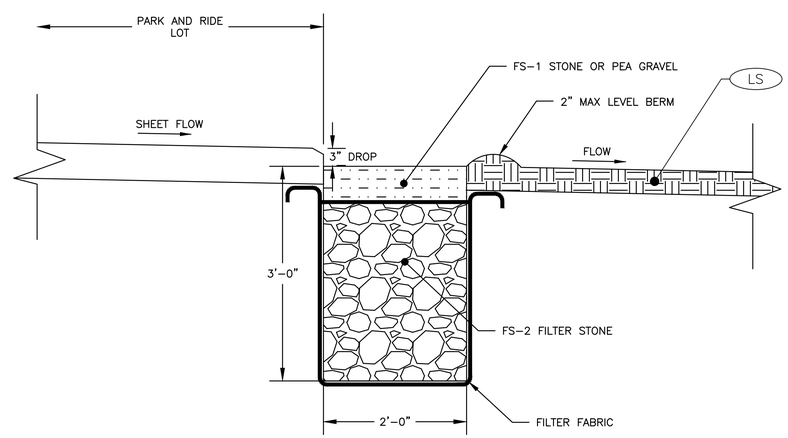

FILTER STRIP (FSTR)

NOT TO SCALE

REVISIONS		
NO.	DATE	BY
1	10/10/19	CL

RHODE ISLAND
DEPARTMENT OF TRANSPORTATION

IMPROVEMENTS TO TAUNTON AVENUE

EAST PROVIDENCE, RHODE ISLAND

TYPICAL DETAILS - 3

GREEN INTERNATIONAL AFFILIATES, INC.
Civil and Structural Engineers

CHECKED BY DATE SCALE 1"=20'

ADDENDUM NO. 4

0076R_V1_013_TYPICALDETAILS

FED. ROAD DIV. NO.	STATE	FEDERAL AID PROJECT NO.	FISCAL YEAR	SHEET NO.	TOTAL SHEETS
	RI	STP-RESF(406)	2019	20	47

R-1

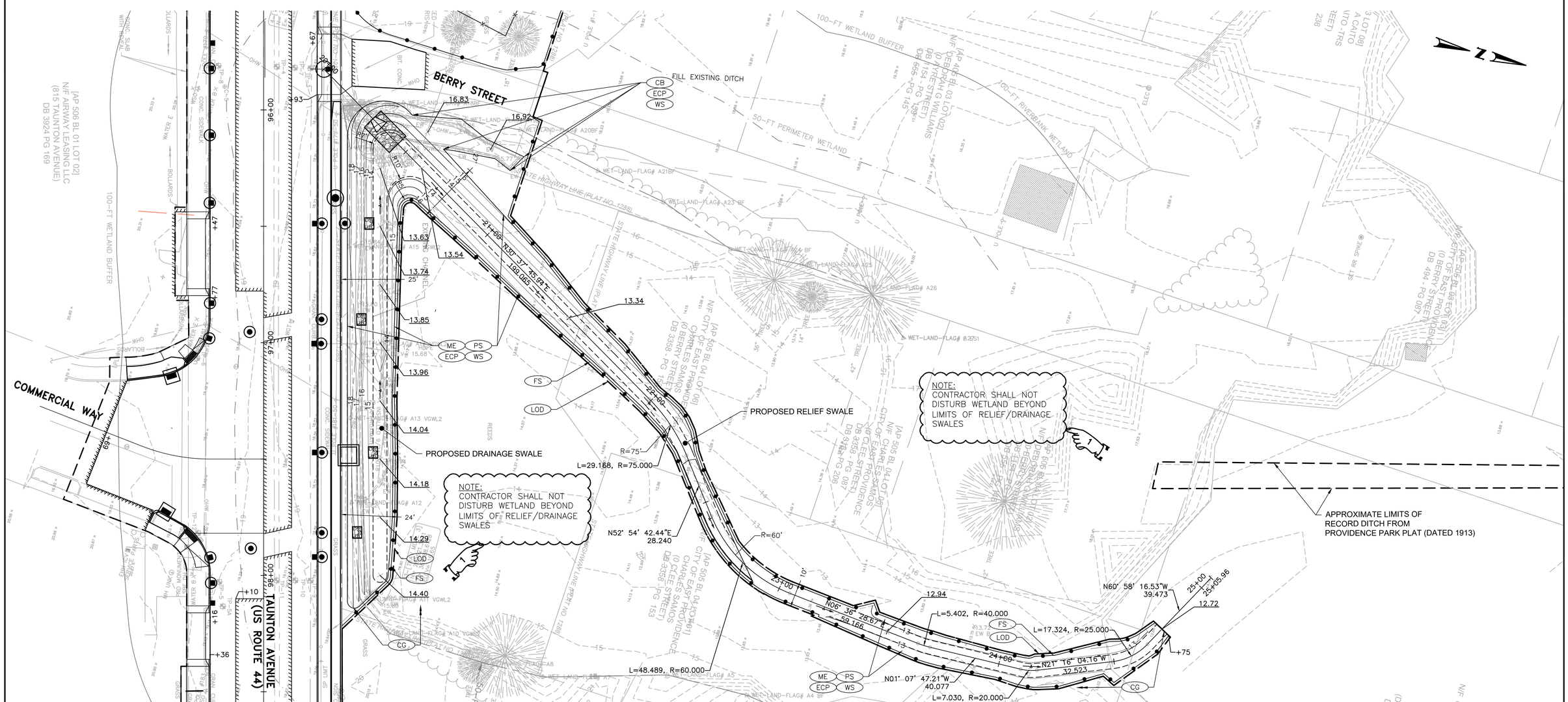

SCALE IN FEET

0 20 50 100 FEET

HORZ. 1"=20'

REVISIONS		
NO.	DATE	BY
1	10/11/19	CL

RHODE ISLAND
DEPARTMENT OF TRANSPORTATION

IMPROVEMENTS TO
TAUNTON AVENUE

EAST PROVIDENCE, RHODE ISLAND

GENERAL PLAN - 7

GREEN INTERNATIONAL AFFILIATES, INC.
Civil and Structural Engineers

CHECKED BY _____ DATE _____ SCALE 1"=20'

ADDENDUM NO. 4

0076R_V1_020_GENERAL

FED. ROAD DIV. NO.	STATE	FEDERAL AID PROJECT NO.	FISCAL YEAR	SHEET NO.	TOTAL SHEETS
	RI	STP-RESF(406)		23	47

R-1

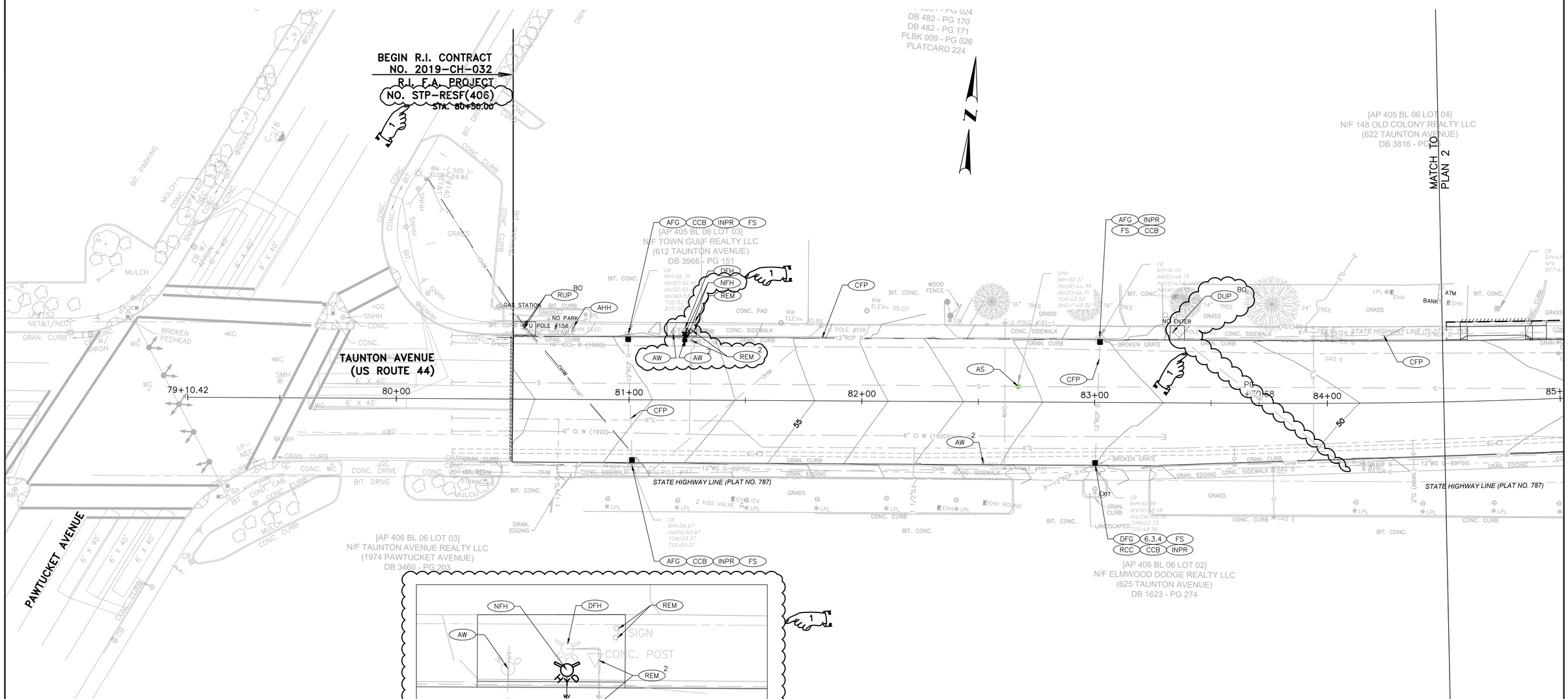

HYDRANT RELOCATION*
APPROX. STA. 81+23 LT
SCALE 1"=4'

*NOTE:
FOR ADDITIONAL DETAIL, REFER TO JOB SPECIFIC SPECIFICATION 714.8163

SCALE IN FEET
0 20 50 100 FEET
HORZ. 1"=20'

REVISIONS		
NO.	DATE	BY
1	10/11/19	CL

RHODE ISLAND
DEPARTMENT OF TRANSPORTATION

IMPROVEMENTS TO
TAUNTON AVENUE

EAST PROVIDENCE, RHODE ISLAND

DRAINAGE AND
UTILITY PLANS - 1

CHECKED BY _____ DATE _____ SCALE 1"=20'

GREEN INTERNATIONAL AFFILIATES, INC.
Civil and Structural Engineers

ADDENDUM NO. 4

0076R_V1_023_DRAINUTIL

FED. ROAD DIV. NO.	STATE	FEDERAL AID PROJECT NO.	FISCAL YEAR	SHEET NO.	TOTAL SHEETS
	RI		2019	28	47

R-1

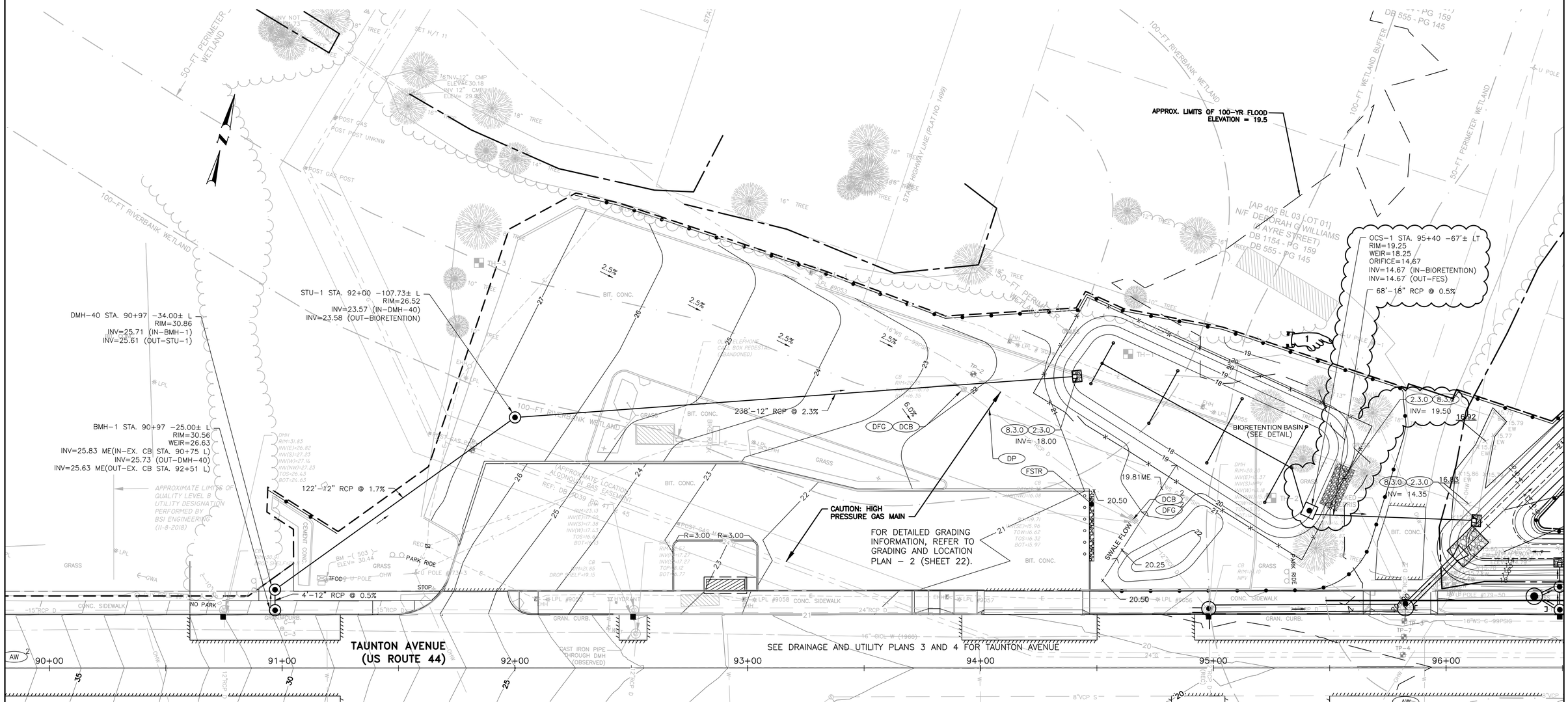

NOTE:

ALL PROPOSED CATCHBASINS (RI STD. 3.4.1, 3.5.2, AND 4.4.0) SHALL INCLUDE A DEEP SUMP (4 FEET) AND A HOOD. SEE ITEM CODE 702.9900. COSTS SHALL BE INCIDENTAL TO THE STANDARD CATCHBASIN PAY ITEMS.

SCALE IN FEET

0 20 50 100 FEET

HORZ. 1"=20'

GREEN INTERNATIONAL AFFILIATES, INC.
Civil and Structural Engineers

REVISIONS		
NO.	DATE	BY
1	10/11/19	CL

RHODE ISLAND
DEPARTMENT OF TRANSPORTATION

IMPROVEMENTS TO
TAUNTON AVENUE

EAST PROVIDENCE, RHODE ISLAND

DRAINAGE AND
UTILITY PLANS - 6

CHECKED BY _____ DATE _____ SCALE 1"=20'

ADDENDUM NO. 4

0076R_V1_028_DRAINUTIL

FED. ROAD DIV. NO.	STATE	FEDERAL AID PROJECT NO.	FISCAL YEAR	SHEET NO.	TOTAL SHEETS
	RI	STP–RESF(406)	2019	29	47

R–1

TEST HOLE DATA
TH–1
GROUNDWATER AT 3'

TH–2
GROUNDWATER AT 2'

CAUTION: HIGH PRESSURE GAS MAIN

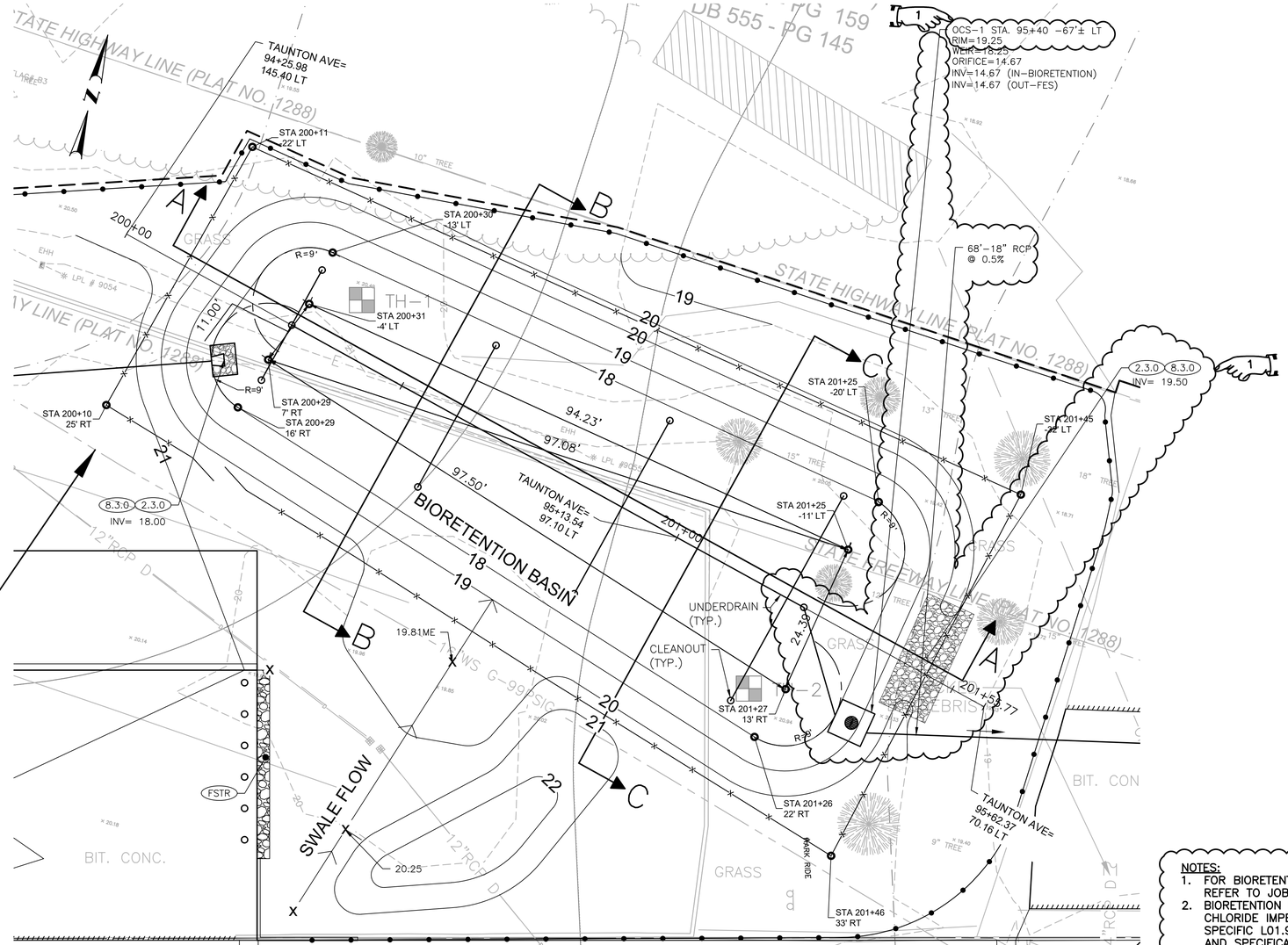

BIORETENTION BASIN PLAN

FOR SECTIONS, SEE NEXT SHEET

SCALE IN FEET

0 10 25 50 FEET

HORZ. 1"=10'

NOTES:
1. FOR BIORETENTION SOIL MIX SPECIFICATIONS, REFER TO JOB SPECIFIC L01.9901.
2. BIORETENTION BASIN TO INCLUDE POLYVINYL CHLORIDE IMPERMEABLE LINER. REFER TO JOB SPECIFIC L01.9901 FOR LINER PARAMETERS AND SPECIFICATIONS.

REVISIONS		
NO.	DATE	BY
1	10/10/19	CL

RHODE ISLAND
DEPARTMENT OF TRANSPORTATION

IMPROVEMENTS TO
TAUNTON AVENUE

EAST PROVIDENCE, RHODE ISLAND

BIORETENTION BASIN
DETAIL - 1

GREEN INTERNATIONAL AFFILIATES, INC.
Civil and Structural Engineers

CHECKED BY _____ DATE _____ SCALE N/A

ADDENDUM NO. 4

0076R_V1_029_BIODETAIL

Code	Title	Page
L02.1000	Seeding	JS-57
L06.1000	Planting	JS-58
T09.9901	Service Pedestal and Lighting System Modifications	JS-59
203.9901	Dewatering	JS-60
203.9951	Treatment of Contaminated Groundwater	JS-66
702.9906	Precast Outlet Control Structure	JS-73
714.8163	Post Type Hydrant	JS-74

JOB SPECIFIC

CODE 902.9901
STEEL BOLLARD

DESCRIPTION: This work consists of furnishing and installing concrete filled steel bollards at the locations shown on the plans and/or as directed by the Engineer.

MATERIALS AND CONSTRUCTION METHODS: The installation of the steel bollards shall conform to the Rhode Island Standard Specifications for Road and Bridge Construction, Amended March 2018 and all revisions. The steel bollards shall be galvanized or treated as approved by the Engineer. The steel bollard pipes shall be installed by the Contractor according to the Steel Bollard detail at the locations shown on the Plans and/or as directed by the Engineer. The bollard pipes shall be set plumb in a concrete footing, filled with concrete, and neatly finished as approved by the Engineer.

METHOD OF MEASUREMENT: "Steel Bollard" shall be measured by the unit "Each" for the number of units actually installed and accepted by the Engineer.

BASIS OF PAYMENT: "Steel Bollard" shall be paid for at the contract unit price per "Each" as listed in the Proposal, which price shall constitute full compensation for all labor, materials, gravel, compaction, excavation, saw cutting, backfill, steel bollard pipe, concrete, equipment and incidental costs required to complete the work in place and accepted by the Engineer.

JOB SPECIFIC
R.I. CONTRACT NO. 2019-CH-032

CODE 938.1000
PRICE ADJUSTMENTS

DESCRIPTION.

a. Liquid Asphalt Cement.* The Base Price of Liquid Asphalt Cement as required to implement **Subsection 938.03.1** of the Standard Specifications is $545.00 per ton as of 9/23/2019.

* In the case of modified asphalt binder, this price adjustment provision shall only apply to the neat liquid asphalt component. This provision shall not apply to the modifier component, manufacture, storage, transportation or other associated costs.

b. Diesel Fuel. The Base Price of Diesel Fuel as required to implement **Subsection 938.03.2** of the Standard Specifications is $2.0651 per gallon as of 9/23/2019.

F:\Projects\2016\16062\16062.01X_0076R Taunton Ave\SPECS\00_Current Design\JS Pages\938.1000.docx

The Contractor shall replace treatment vessels and or treatment media whenever concentrations of contaminants exceed applicable discharge standards. When change outs are necessary additional granular activated carbon will be supplied by the Contractor at no additional cost to RIDOT. In addition, should on site regeneration occur, the contractor shall obtain approval from RIDEM, at no additional cost to RIDOT. Contractor shall prepare and submit the status reports, as required, and a construction dewatering summary report to the Engineer at the project's completion, as required by RIPDES RGP.

METHOD OF MEASUREMENT

Item Code 203.9951, Treatment of Contaminated Groundwater will be calculated for payment by the actual cost, verified by the force account records for all groundwater treatment system locations for the treatment and discharge of contaminated groundwater that is required for work in accordance with the Plans and Specifications and/or as directed by the ENGINEER.

BASIS OF PAYMENT

Item Code 203.9951, Treatment of Contaminated Groundwater will be paid for at the actual amount expended to treat and discharge the groundwater for the entire contract. The amount shall constitute full and complete compensation for all labor, materials, RIDEM RGP or other permits, East Providence permits, all permit fees, and equipment required for treating contaminated groundwater, temporary storage of pumped contaminated groundwater, fractionation tanks, on-site treatment, calculations, sampling and analysis as required by the permits, recycling/disposal of used granular activated carbon and change-out of granular activated carbon and replacements as necessary throughout the project, cleaning of temporary storage tanks, preparation of summary report and discharge monitoring reports, and for all other incidentals required to finish the work, complete and accepted by the ENGINEER. Treatment of contaminated groundwater, in accordance with these specifications, generated from roadway construction/reconstruction, installation of storm water drainage systems, and utility installations shall be considered part of the costs for this item. The estimated dollar figure for this item of work is established by the Department at 20,000 units at $1.00 each and is inserted in the proposal as an authorized lump sum amount from which payments will be drawn. The costs for multiple treatment systems, if needed to meet these requirements, shall be included in this item.

F:\Projects\2016\16062\16062.01X_0076R Taunton Ave\SPECS\00_Current Design\JS Pages\203 9951Contdewater Add 4.docx

JOB SPECIFIC

CODE 702.9906
PRECAST OUTLET CONTROL STRUCTURE

DESCRIPTION: This work item shall consist of constructing the outlet structure as shown on the Plans and/or as directed by the Engineer and shall conform to the Rhode Island Department of Transportation Standard Details and sections 701 and 702 of the Rhode Island Standard Specifications for Road and Bridge Construction, Amended 2018 and all revisions and as follows.

CONSTRUCTION METHODS: The Contractor shall install the outlet control structure with the orifice and weir at the locations shown on the Plans and/or as directed by the Engineer. The weirs shall be cast in place with a crest elevation as shown on the plans.

The elevations of frame and grate, proposed pipes, orifices, and precast structure shall be set based on the inverts as shown in the plans and as directed by the Engineer.

The 4" perforated underdrain and 18" outlet pipe shall be securely inserted into the precast outlet control structure, and the joints shall be mortared with care being taken to maintain a smooth inside pipe surface.

The frame shall be cast into the top of the structure as shown on the schematic detail.

METHOD OF MEASUREMENT: "Precast Outlet Control Structure" shall be measured by the number of units actually installed in accordance with the Plans and/or as directed by the Engineer.

BASIS OF PAYMENT: The accepted quantity of "Precast Outlet Control Structure" shall be paid for at the contract unit price per "Each" per section 702.05.1 and as listed in the proposal. The price so stated constitutes full and complete compensation for all labor, material, equipment including weirs, ladder rungs, excavation, excavation support, dewatering, bedding material, placing and compacting backfill, and all other incidentals required to complete the work, complete in place and accepted by the Engineer.

F:\Projects\2016\16062\16062.01X_0076R Taunton Ave\SPECS\00_Current Design\JS Pages\702.9906 Precast Out Ctrl Strct.docx

JOB SPECIFIC

CODE 714.8163
POST TYPE HYDRANT

DESCRIPTION: This specification is supplemental to item code 714.8163 and shall consist of the installation of a City of East Providence, Water Division hydrant at the locations shown on the plans. This item shall conform to the requirements of Section 714 of the RIDOT Standard Specifications and the following:

MATERIALS: The materials used shall conform to the attached standards provided by City of East Providence, Water Division.

CONSTRUCTION METHODS:
The construction methods shall conform to the attached standards provided by City of East Providence, Water Division.

METHODS OF MEASUREMENT: Item Code 714.8163 "Post Type Hydrant" shall be measured for payment per "EACH" hydrant installed.

BASIS OF PAYMENT: Item Code 714.8163 "Post Type Hydrant" will be paid for at the unit price bid per "EACH". Said price shall include full and complete compensation for the hydrant, stem, Geotech fabric, crushed stone, thrust block and all materials, excavation, backfill, labor, tools, equipment, and all other incidentals necessary to complete the work and accepted by the Engineer. Removal of the adjacent concrete post/bollard shall be considered incidental to this item. The 6-inch ductile iron pipe will be paid separately under Item Code 701.5206. Tapping sleeve, valve, and fittings will be paid for separately under their respective items.

F:\Projects\2016\16062\16062.01X_0076R Taunton Ave\SPECS\00_Current Design\JS Pages\714.8163 Post Type Hydrant.docx

SECTION 02644 – FIRE HYDRANTS

PART 1 – GENERAL

1.01 DESCRIPTION

A. Scope of Work:

The work covered under this section of the Specifications consists of furnishing all labor, materials, equipment and appurtenances, and performing all operations in connection with the installation of Fire Hydrants, at the locations and to the details indicated, and/or as directed by the Owner including removal of designated existing fire hydrants and delivery of same to the City of East Providence, Water Division, and all other related appurtenant work, complete, in-place and accepted.

B. Related Work Described Elsewhere:

1. Earth Trench Excav. & Backfill	Section 02211
2. Ductile Iron Water Mains and Appurtenances	Section 02615
3. Gate Valves, Tapping Sleeves and Valves, Valve Boxes and appurtenances	Section 02640
4. Test and Disinfect Water Mains	Section 02710
5. Install Water Pipeline Systems	Section 02713

C. References:

All fire hydrants shall conform to the requirements of AWWA Specification C502, latest revision and to the additional requirements specified herein. Manufacturer shall supply complete maintenance data drawings for approval, and certificates of compliance in accordance with Section 1 of AWWA Specifications.

PART 2 – PRODUCTS

2.01 MATERIALS

A. All hydrants shall be American-made in accordance with ARRA requirements. All hydrants shall be of the dry barrel, compression shut off type closing with pressure, with National Standard Thread. For purposes of standardization, hydrants shall be the Super Centurion 250 Model No. A423, as manufactured by Mueller Company, Decatur, Illinois, American Darling B-

84-B-5 as manufactured by American Flow Control, Birmingham Alabama or AVK Series 2780 Nostalgic Style Dry Barrel, American AVK Co, Minden Neveda. The drain valve shall operate automatically when the hydrant is operated, to provide drainage of the barrel. Bronze to bronze seating is standard.

The valve drainway shall be all bronze. Pressure seals in the main valve area shall be o-rings. Hydrants shall conform to the additional requirements specified herein.

1. Hydrants shall be equipped with the following features:

   a. Type of Hydrant: Traffic type with safety stem coupling and safety flange.

   b. Bury Length: Typically 5'-6" with extension sections available in 6-inch increments to 2'-0" (Exact bury is to be determined in the field by the Contractor prior to ordering the hydrant or prior to the pre-construction meeting).

   c. Number of hose and pumper outlets:

      Two – 2 ½-inch Hose Outlets
      One – 4 ½-inch Pumper Outlet

   d. Joint Type: Mechanical Joints

   e. Type of Outlet Nozzle Threads:

      2 ½-inch Hose outlets to have National Standard Thread (Field Replaceable).

      4 ½-inch Pumper Outlets to have National Standard Thread (Field Replaceable)

   f. Type Construction:

      Upper Valve Plate – Bronze

      Seat Ring – Bronze

      Drain Ring – Bronze

      Operating Nut – Bronze

      Nozzles – Bronze

g. Size of Hydrant (Nominal Diameter of Main Valve opening): 5 ¼-inches

h. Direction of operating Nut Opening Rotation: **Left**

i. Stem type: Dual O-ring

2. The foot piece, or elbow design, shall have smooth transitional contours for maximum flow, and shall be coated with approved epoxy. It shall have blocking pads for easier setting, and two (2) lugs for strapping. Inlet connection shall be standard 6-inch mechanical joint.

3. Hydrants shall conform to the Torque requirements specified in AWWA Specification C502, latest revision, regardless of bury length.

4. The opening between the wrench nut and top of the hydrant bonnet shall be protected from rain and dirt by an acceptable weather cap. Open left with arrow shall be on weather cap.

5. All nozzles shall be provided with heavy cast iron caps, screwed on and attached to the upper barrel by non-kinking chains with connector ring. Chain loop shall permit free turning of the cap. All nozzles shall be fitted with gaskets. The operating nuts on nozzle caps shall be exactly the same size as that on top of the main stem. The operating nuts on nozzle caps and on top of the main stem shall be 1 ½ inch pentagonal nuts. Hose and steamer nozzles shall be secured to the upper barrel by thread or quarter turn lock-type nozzles and locked into place for easy field replacement.

6. Hydrant top section shall receive two shop coats of primer. Finish coat to be 2 shop coats of enamel **Chrome Yellow (Caution Yellow).**

B. Gate Valves and Valve Boxes for Fire Hydrants are specified under section 02640 "GATE VALVES, VALVE BOXES, AND APPURTENANCES" of the Specifications, and separate payment will be made under that Item as listed in the Bid.

C. Ductile iron pipe for Fire Hydrants is specified under Section 02615 "DUCTILE IRON WATER MAINS AND APPURTENANCES" of the Specifications, and separate payment will be made under that Item as listed in the Bid.

D. Crushed processed gravel fill around Hydrants is specified in Section 02211 "EARTH TRENCH EXCAVATION AND BACKFILL" OF THE Specifications. One and one-half inch stone bedding for hydrant drainage shall be provided from off-site sources in the quantities required for

completion of the work, shall be as approved by the Owner and shall be paid for under the Item for "Crushed Processed Gravel". Stone Bedding shall consist of clean, sound tough, durable rock free from loam, clay, organic matter, and shall not contain more than 1 per cent crusher dust by weight. It shall, in general, be as specified by the "Standard Specifications for Road and Bridge Construction" OF THE State of Rhode Island, Article M.01.09, Crushed Stone. Crushed Stone shall conform to the following limits:

U.S. Standard Sieve Size	Percent Passing By Weight
2 ¼ inch	100
2 inch	90-100
1 ½ inch	30-55
1 ¼ inch	0-25
1 inch	0-5

E. Class B Cement Concrete for thrust blocks and restraints as shown on the Drawings shall be as specified in Section 03310 MISCELLANEOUS CONCRETE WORK", and separate payment will be made under that Item as listed in the Bid.

PART 3 – EXECUTION

3.01 INSPECTION

A. All hydrants shall be carefully inspected by the Contractor for defects before installation and all defective, unsound or damaged materials shall be rejected.

3.02 PREPARATION

A. Proper implements, tools and facilities, satisfactory to the Owner shall be provided by the Contractor for the proper and satisfactory execution of the work.

B. The interior of new hydrants shall be thoroughly cleaned of foreign matter before being lowered into the trench and shall be kept clean during laying operations.

C. The trench bottom and bedding shall be shaped and compacted and a flat rock or block shall be placed beneath the hydrant to give substantially uniform unyielding support to the hydrant.

D. Hydrants and accessories shall be handled, stored, installed, jointed and protected by the Contractor in strict accordance with the printed recommendations of the manufacturer.

3.03 INSTALLATION

A. Installation of Fire Hydrants shall be in conformance with the requirements of AWWA Specification C600, latest revision, and as indicated by drawings and as directed by the Owner.

B. Resetting of existing fire hydrants shall be accomplished by the removal of the existing hydrant, hydrant service pipe and gate valve, and removal of main branch tee, reinstallation of the existing hydrant, a new swivel hydrant tee, a new 6-inch ductile iron hydrant service pipe, a new 6-inch gate valve a new valve box, new main line tee and thrust block. The new hydrant service pipe shall be of one piece, if possible, between the hydrant and the gate valve and be restrained with Mega-Lug joint restraints. The existing hydrant shall be reconnected to the new hydrant service tee and street main according to details provided on the Drawings and as directed by the Owner. If in the event that the reset hydrant or new hydrant is in need of an extension (flange nuts below grade) the proper barrel extension will be provided by the City of East Providence Water Division and is to be properly installed by the Contractor at no additional cost to the Owner. Vertical bends will not be permitted in the hydrant branch.

3.04 METHOD OF MEASUREMENT

A. Fire Hydrants will be measured for payments as units "Each" complete, in-place, as specified, and as shown on the Drawings

B. Resetting of fire hydrants will be measured for payment as units "Each" complete, in-place, as specified, and as shown on the Drawings.

3.07 BASIS OF PAYMENT

A. Fire Hydrants measured for payment as specified above, will be paid for at the unit price bid for "FURNISH AND INSTALL FIRE HYDRANT", AS LISTED IN THE Bid, which shall constitute full compensation for furnishing and installing all hydrants, tie rods, jointing materials, and accessories, and all incidentals necessary to complete the work as specified, indicated on the Drawings, or as directed by the Owner. Payment for pipe, fittings and valves shall be made under the appropriate pay items.

B. Resetting of fire hydrants measured for payment as specified above, will be paid for at the unit price bid for "RESET EXISTING FIRE HYDRANT", as listed in the Bid, which shall constitute full compensation for furnishing and installing all hydrants, tie rods, jointing materials, and accessories, and all incidentals necessary to complete the work as specified, indicated on the Drawings, or as directed by the Owner, including installation of City of East

Providence Water Division supplied barrel extensions. Payment for pipe, fittings, valves, and valve boxes shall be made under the appropriate pay items.

END OF SECTION

CITY OF EAST PROVIDENCE
DEPARTMENT OF PUBLIC WORKS
ENGINEERING DIVISION
STANDARD DETAIL

W-01

TYPICAL HYDRANT DETAIL

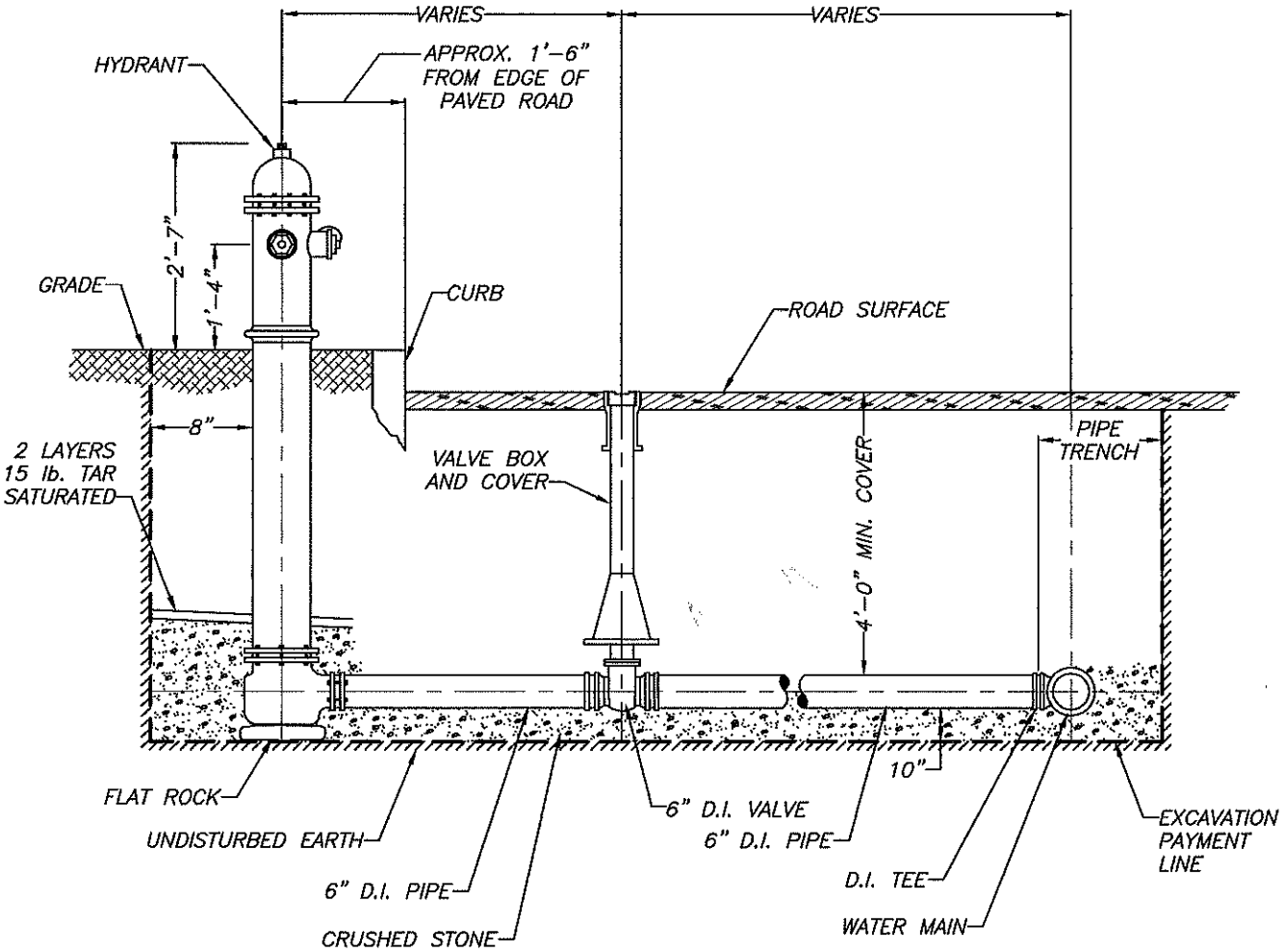

NOTE:
FLANGES TO BE CONNECTED W/ MEGALUGS

REV. BY	DATE	REV. BY	DATE	DRAWN BY: E. GERMANI IV	DATE: 3/17/99
				APPROVED BY: STEPHEN H. COUTU, P.E. CITY ENGINEER/DEPUTY D.P.W.	DATE: 3/17/99
					SCALE: NTS

R - 2

Assembly Summary

Project Name: Rt 44 - Taunton Ave (Rt 1A/114 - Mass S/L)

Estimate Name: Addendum 4

R.I. Contract No.: 2019-CH-032

FAP Nos.:STP-RESF(406)

Item Code	Description	Depth	Factor	Qty
Assembly: 2' GRANITE CURB CORNER STD 7.3.4 (2GRCC) (Unit: EACH Default Quantity: 3.00)				
204.0100	TRIMMING AND FINE GRADING		0.26556	
302.0100	GRAVEL BORROW SUBBASE COURSE	6"	0.04426	
401.4003	CLASS 4.75 HMA FOR PATCHING	2"	0.02874	
601.0300	CLASS A PORTLAND CEMENT CONCRETE	10"	0.06185	
906.0116	GRANITE CURB, QUARRY SPLIT 2 FOOT CORNERS, STANDARD 7.3.4		1.00000	
	TAUNTON AVE (2GRCC)			
	97+10 RT (2GRCC)			1.00
	200+40 LT (2GRCC)			1.00
	97+79 RT (2GRCC)			1.00
Assembly: 3' GRANITE TRANSITION CURB STD 7.3.1 (3GRTC) (Unit: EACH Default Quantity: 44.00)				
204.0100	TRIMMING AND FINE GRADING		0.16667	
302.0100	GRAVEL BORROW SUBBASE COURSE	6 INCHES	0.05556	
401.4003	CLASS 4.75 HMA FOR PATCHING	2 INCHES	0.04310	
601.0300	CLASS A PORTLAND CEMENT CONCRETE	10 INCHES	0.09259	
906.0119	3' GRANITE TRANSITION CURB STANDARD 7.3.1		1.00000	
	TAUNTON AVE (3GRTC)			
	84+59 LT (3GRTC)			1.00
	84+87 LT (3GRTC)			1.00
	85+30 LT (3GRTC)			1.00
	85+58 LT (3GRTC)			1.00
	87+10 RT (3GRTC)			1.00
	87+33 RT (3GRTC)			1.00
	88+40 RT (3GRTC)			1.00
	88+64 RT (3GRTC)			1.00
	89+08 RT (3GRTC)			1.00
	89+48 RT (3GRTC)			1.00
	89+30 LT (3GRTC)			1.00
	89+65 LT (3GRTC)			1.00
	91+95 RT (3GRTC)			1.00
	92+28 RT (3GRTC)			1.00
	92+52 RT (3GRTC)			1.00
	92+75 RT (3GRTC)			1.00
	92+96 RT (3GRTC)			1.00

R - 2

Assembly Summary

Project Name:

Estimate Name:

R.I. Contract No.:

FAP Nos.:

Item Code	Description	Depth	Factor	Qty
	93+20 RT (3GRTC)			1.00
	93+34 RT (3GRTC)			1.00
	93+65 RT (3GRTC)			1.00
	94+33 RT (3GRTC)			1.00
	94+66 RT (3GRTC)			1.00
	95+08 RT (3GRTC)			1.00
	95+41 RT (3GRTC)			1.00
	95+66 LT (3GRTC)			1.00
	95+95 LT (3GRTC)			1.00
	98+65 LT (3GRTC)			1.00
	98+85 LT (3GRTC)			1.00
	99+24 RT (3GRTC)			1.00
	99+57 RT (3GRTC)			1.00
	99+54 LT (3GRTC)			1.00
	99+80 LT (3GRTC)			1.00
	101+87 RT (3GRTC)			1.00
	102+17 RT (3GRTC)			1.00
	102+33 RT (3GRTC)			1.00
	102+60 RT (3GRTC)			1.00
	102+40 LT (3GRTC)			1.00
	102+77 LT (3GRTC)			1.00
	91+87 LT (3GRTC)			1.00
	92+01 LT (3GRTC)			1.00
	92+11 LT (3GRTC)			1.00
	93+51 LT (3GRTC)			1.00
	94+01 LT (3GRTC)			1.00
	94+58 LT (3GRTC)			1.00

R - 2

Assembly Summary

Project Name:

Estimate Name:

R.I. Contract No.:

FAP Nos.:

Item Code	Description	Depth	Factor	Qty
Assembly: 4 FOOT DRAINAGE MANHOLE STRUCTURE (4DMHS) (Unit: EACH Default Quantity: 8.00)				
701.8003	PIPE BEDDING CLASS C	12 INCHES	0.68000	
702.0522	FRAME AND COVER STANDARD 6.2.1		1.00000	
702.0630	PRECAST MANHOLE 4' DIAMETER STANDARD 4.2.0		1.00000	
708.9042	CLEANING MANHOLES ALL TYPES AND SIZES		1.00000	
	TAUNTON AVE (4DMHS)			
	96+49 LT (4DMHS)			1.00
	96+95 RT (4DMHS)			1.00
	96+90 LT (4DMHS)			1.00
	97+82 LT (4DMHS)			1.00
	97+88 RT (4DMHS)			1.00
	99+00 RT (4DMHS)			1.00
	98+99 LT (4DMHS)			1.00
	90+97 LT (4DMHS)			1.00
Assembly: 4' DRAIN MANHOLE W WEIR (4MHWE) (Unit: EACH Default Quantity: 3.00)				
701.8003	PIPE BEDDING CLASS C	12 INCHES	0.68000	
702.0522	FRAME AND COVER STANDARD 6.2.1		1.00000	
702.9905	PRECAST MANHOLE 4’ DIAMETER STANDARD 4.2.0 WITH WEIR		1.00000	
708.9042	CLEANING MANHOLES ALL TYPES AND SIZES		1.00000	
	TAUNTON AVE (4MHWE)			
	96+90 LT (4MHWE)			1.00
	97+82 LT (4MHWE)			1.00
	90+97 LT (4MHWE)			1.00
Assembly: 6 FOOT DRAINAGE MANHOLE STRUCTURE (6DMHS) (Unit: EACH Default Quantity: 1.00)				
701.8003	PIPE BEDDING CLASS C	12 INCHES	1.49000	
702.0522	FRAME AND COVER STANDARD 6.2.1		1.00000	
702.0640	PRECAST MANHOLE 6' DIAMETER STANDARD 4.2.2		1.00000	
708.9042	CLEANING MANHOLES ALL TYPES AND SIZES		1.00000	
	TAUNTON AVE (6DMHS)			
	95+83 LT (ECCENTRIC) (6DMHS)			1.00

R - 2

Assembly Summary

Project Name:

Estimate Name:

R.I. Contract No.:

FAP Nos.:

Item Code	Description	Depth	Factor	Qty
Assembly: 6' GRANITE TRANSITION CURB STD 7.3.2 (6GRTC) (Unit: EACH Default Quantity: 2.00)				
204.0100	TRIMMING AND FINE GRADING		0.33333	
302.0100	GRAVEL BORROW SUBBASE COURSE	6 INCHES	0.11111	
401.4003	CLASS 4.75 HMA FOR PATCHING		0.08620	
601.0300	CLASS A PORTLAND CEMENT CONCRETE	10 INCHES	0.18519	
906.0118	6' GRANITE TRANSITION CURB, QUARRY SPLIT SPECIAL TRANSITION STANDARD 7.3.2		1.00000	
	TAUNTON AVE (6GRTC)			
	86+57 RT (6GRTC)			1.00
	86+88 RT (6GRTC)			1.00
Assembly: ADJUST BASIN, FRAME AND GRATE TO GRADE (ABFGG) (Unit: EACH Default Quantity: 10.00)				
206.0301	COMPOST FILTER SOCK		5.00000	
707.1100	ADJUST CATCH BASINS		1.00000	
707.2000	ADJUST FRAME AND GRATE TO GRADE		1.00000	
708.9041	CLEANING CATCH BASINS ALL TYPES AND SIZES		1.00000	
	TAUNTON AVE (ABFGG)			
	81+00 LT (ABFGG)			1.00
	81+02 RT (ABFGG)			1.00
	83+02 LT (ABFGG)			1.00
	86+00 LT (ABFGG)			1.00
	86+01 RT (ABFGG)			1.00
	89+00 LT (ABFGG)			1.00
	89+00 RT (ABFGG)			1.00
	90+75 LT (ABFGG)			1.00
	90+75 RT (ABFGG)			1.00
	92+49 RT (ABFGG)			1.00
Assembly: ADJUST MANHOLE TO GRADE (ADMHG) (Unit: EACH Default Quantity: 2.00)				
707.0900	ADJUST MANHOLES TO GRADE		2.00000	
707.1900	ADJUST FRAME & COVER TO GRADE		2.00000	
708.9042	CLEANING MANHOLES ALL TYPES AND SIZES		1.00000	
	TAUNTON AVE (ADMHG)			
	86+00 LT (ADMHG)			1.00
	92+52 LT (ADMHG)			1.00

R - 2

Assembly Summary

Project Name:

Estimate Name:

R.I. Contract No.:

FAP Nos.:

Item Code	Description	Depth	Factor	Qty
Assembly: BITUMINOUS PAVEMENT APRON (APRON) (Unit: SY Default Quantity: 215.89)				
201.0409	REMOVE AND DISPOSE FLEXIBLE PAVEMENT		1.00000	
204.0100	TRIMMING AND FINE GRADING		1.00000	
302.0100	GRAVEL BORROW SUBBASE COURSE	8 INCHES	0.22222	
401.3100	MODIFIED CLASS 9.5 HMA	4 INCHES	0.24425	
	TAUNTON AVE (APRON)			
	84+60 - 84+89 LT (APRON)			9.38
	85+27 - 85+61 LT (APRON)			11.33
	86+60 - 86+84 RT (APRON)			19.12
	87+10 - 87+32 RT (APRON)			9.48
	89+31 - 89+64 LT (APRON)			49.94
	92+54 - 92+74 RT (APRON)			4.47
	92+95 - 93+26 RT (APRON)			13.80
	94+32 - 94+68 RT (APRON)			16.00
	95+07 - 95+43 RT (APRON)			11.80
	95+67 - 95+93 LT (APRON)			12.83
	96+44 - 96+80 RT (APRON)			20.00
	98+64 - 98+87 LT (APRON)			5.11
	99+52 - 99+81 LT (APRON)			12.89
	101+86 - 102+19 RT (APRON)			7.33
	102+36 - 102+58 RT (APRON)			12.41
Assembly: BUS SHELTER SLAB (BSLAB) (Unit: SY Default Quantity: 14.00)				
204.0100	TRIMMING AND FINE GRADING		1.00000	
302.0100	GRAVEL BORROW SUBBASE COURSE	8 INCHES	0.22222	
905.9901	BUS SHELTER SLAB	12 INCHES	0.33333	
	TAUNTON AVE (BSLAB)			
	PARK AND RIDE (BSLAB)			14.00
Assembly: PRECAST CATCH BASIN 4' DIAMETER (CB4FT) (Unit: EACH Default Quantity: 2.00)				
701.8003	PIPE BEDDING CLASS C	12"	0.68000	
702.0516	FRAME AND GRATE, HIGH CAPACITY, STANDARD 6.3.4		1.00000	
702.0605	PRECAST CATCH BASIN 4' DIAMETER STANDARD 4.4.0		1.00000	
	TAUNTON AVE (CB4FT)			
	96+99 RT (CB4FT)			1.00
	97+92 RT (CB4FT)			1.00

R - 2

Assembly Summary

Project Name:

Estimate Name:

R.I. Contract No.:

FAP Nos.:

Item Code	Description	Depth	Factor	Qty
Assembly: PRECAST CATCH BASIN 4' DIAMETER WITH GRANITE INLET STONE 38" (CBG38) (Unit: EACH Default Quantity: 8.00)				
206.0301	COMPOST FILTER SOCK		5.00000	
701.8003	PIPE BEDDING CLASS C	12 INCHES	0.68000	
702.0516	FRAME AND GRATE, HIGH CAPACITY, STANDARD 6.3.4		1.00000	
702.0541	GRANITE INLET STONE 38" STANDARD 7.3.6		1.00000	
702.0605	PRECAST CATCH BASIN 4' DIAMETER STANDARD 4.4.0		1.00000	
	TAUNTON AVE (CBG38)			
	94+98 RT (CBG38)			1.00
	96+40 RT (CBG38)			1.00
	95+82 RT (CBG38)			1.00
	96+87 RT (CBG38)			1.00
	96+11 RT (CBG38)			1.00
	98+03 RT (CBG38)			1.00
	99+00 RT (CBG38)			1.00
	99+94 RT (CBG38)			1.00
Assembly: CATCH BASIN WITH GRANITE GUTTER INLET STRUCTURE (CBGGI) (Unit: EACH Default Quantity: 7.00)				
206.0301	COMPOST FILTER SOCK		5.00000	
701.8003	PIPE BEDDING CLASS C	12 INCHES	0.73000	
702.0516	FRAME AND GRATE, HIGH CAPACITY, STANDARD 6.3.4		1.00000	
702.0521	FRAME AND COVER STANDARD 6.2.0		1.00000	
702.0541	GRANITE INLET STONE 38" STANDARD 7.3.6		1.00000	
702.0705	CATCH BASIN W/GUTTER INLET STANDARD 3.4.1		1.00000	
	TAUNTON AVE (CBGGI)			
	97+92 LT (CBGGI)			1.00
	96+49 LT (CBGGI)			1.00
	94+98 LT (CBGGI)			1.00
	97+00 LT (CBGGI)			1.00
	99+88 LT (CBGGI)			1.00
	97+47 LT (CBGGI)			1.00
	99+10 LT (CBGGI)			1.00
Assembly: PORTLAND CEMENT SIDEWALK STD 43.1.0 (CCSWK) (Unit: SY Default Quantity: 1459.83)				
201.0403	REMOVE AND DISPOSE SIDEWALKS		1.00000	
204.0100	TRIMMING AND FINE GRADING		1.00000	

R - 2

Assembly Summary

Project Name:

Estimate Name:

R.I. Contract No.:

FAP Nos.:

Item Code	Description	Depth	Factor	Qty
302.0100	GRAVEL BORROW SUBBASE COURSE	8 INCHES	0.22222	
905.0110	PORTLAND CEMENT SIDEWALK MONOLITHIC STANDARD 43.1.0	4 INCHES	0.11111	
	TAUNTON AVE (CCSWK)			
	86+91 - 87+08 RT (CCSWK)			16.55
	92+30 - 92+51 RT (CCSWK)			22.22
	92+77 - 92+94 RT (CCSWK)			17.89
	95+43 - 96+44 RT (CCSWK)			106.61
	PARK AND RIDE (CCSWK)			82.83
	84+32 - 84+58 LT (CCSWK)			3.70
	84+89 - 84+95 LT (CCSWK)			3.70
	85+23 - 85+29 LT (CCSWK)			3.70
	85+59 - 85+65 LT (CCSWK)			3.70
	86+48 - 86+54 RT (CCSWK)			5.00
	87+34 - 87+40 RT (CCSWK)			5.70
	88+32 - 88+38 RT (CCSWK)			6.40
	88+66 - 88+72 RT (CCSWK)			6.30
	89+01 - 89+07 RT (CCSWK)			6.30
	89+22 - 89+29 LT (CCSWK)			3.70
	89+50 - 89+56 RT (CCSWK)			6.30
	89+67 - 89+73 LT (CCSWK)			3.67
	91+33 - 91+39 LT (CCSWK)			3.70
	91+88 - 91+94 RT (CCSWK)			6.30
	92+08 - 93+72 LT (CCSWK)			172.10
	93+22 - 93+33 RT (CCSWK)			11.10
	93+67 - 93+72 RT (CCSWK)			4.80
	93+89 - 93+99 LT (CCSWK)			10.50
	93+89 - 93+95 RT (CCSWK)			2.80
	94+26 - 94+32 RT (CCSWK)			5.70
	94+47 - 95+64 LT (CCSWK)			124.00
	94+68 - 95+07 RT (CCSWK)			36.70
	95+96 - 98+64 LT (CCSWK)			168.10
	96+80 - 97+09 RT (CCSWK)			37.20
	98+87 - 99+52 LT (CCSWK)			69.20
	99+59 - 100+12 RT (CCSWK)			56.30

R - 2

Assembly Summary

Project Name:

Estimate Name:

R.I. Contract No.:

FAP Nos.:

Item Code	Description	Depth	Factor	Qty
	99+81 - 99+95 LT (CCSWK)			14.40
	101+15 - 101+22 LT (CCSWK)			8.86
	101+76 - 101+85 LT (CCSWK)			7.16
	101+80 - 101+86 RT (CCSWK)			6.30
	102+19 - 102+31 RT (CCSWK)			13.30
	102+33 - 102+39 LT (CCSWK)			4.80
	102+61 - 102+67 RT (CCSWK)			3.70
	102+79 - 102+90 LT (CCSWK)			9.00
	93+72 - 93+90 RT (CCSWK)			17.00
	93+72 - 93+90 LT (CCSWK)			19.00
	80+50 - 80+60 LT (CCSWK)			6.20
	81+16 - 81+29 LT (CCSWK)			8.10
	83+32 - 83+38 LT (CCSWK)			3.90
	85+65 - 86+11 LT (CCSWK)			24.78
	85+68 - 86+12 RT (CCSWK)			23.00
	88+72 - 89+01 RT (CCSWK)			30.56
	89+56 - 91+25 RT (CCSWK)			178.11
	90+60 - 91+25 LT (CCSWK)			39.33
	93+95 - 94+26 RT (CCSWK)			29.56

R - 2

Assembly Summary

Project Name:

Estimate Name:

R.I. Contract No.:

FAP Nos.:

Item Code	Description	Depth	Factor	Qty
Assembly: PORTLAND CEMENT DRIVEWAY STD 43.5.0 (CEMDW) (Unit: SY Default Quantity: 717.64)				
201.0403	REMOVE AND DISPOSE SIDEWALKS		1.00000	
204.0100	TRIMMING AND FINE GRADING		1.00000	
302.0100	GRAVEL BORROW SUBBASE COURSE	8 INCHES	0.22222	
905.0115	PORTLAND CEMENT CONCRETE DRIVEWAY STANDARD 43.5.0	8 INCHES	0.22222	
	TAUNTON AVE (CEMDW)			
	84+58 - 84+89 LT (CEMDW)			20.33
	85+29 - 85+59 LT (CEMDW)			19.67
	86+54 - 86+91 RT (CEMDW)			34.32
	87+08 - 87+34 RT (CEMDW)			25.67
	88+38 - 88+66 RT (CEMDW)			31.00
	89+07 - 89+50 RT (CEMDW)			47.44
	89+29 - 89+67 LT (CEMDW)			25.00
	91+94 - 92+30 RT (CEMDW)			39.67
	92+51 - 92+77 RT (CEMDW)			28.56
	92+94 - 93+22 RT (CEMDW)			30.78
	93+33 - 93+67 RT (CEMDW)			37.44
	94+32 - 94+68 RT (CEMDW)			35.67
	95+07 - 95+42 RT (CEMDW)			39.60
	95+64 - 95+96 LT (CEMDW)			35.22
	96+44 - 96+80 RT (CEMDW)			39.66
	98+13 - 98+39 RT (CEMDW)			28.56
	98+64 - 98+87 LT (CEMDW)			25.22
	99+23 - 99+59 RT (CEMDW)			39.68
	99+52 - 99+81 LT (CEMDW)			31.87
	101+86 - 102+19 RT (CEMDW)			36.37
	102+32 - 102+61 RT (CEMDW)			31.52
	102+39 - 102+79 LT (CEMDW)			34.39

R - 2

Assembly Summary

Project Name:

Estimate Name:

R.I. Contract No.:

FAP Nos.:

Item Code	Description	Depth	Factor	Qty
Assembly: DOUBLE GRATE CATCH BASIN INSTALLATION (DGCBI) (Unit: EACH Default Quantity: 2.00)				
206.0301	COMPOST FILTER SOCK		7.00000	
701.8003	PIPE BEDDING CLASS C	12 INCHES	0.55000	
702.0516	FRAME AND GRATE, HIGH CAPACITY, STANDARD 6.3.4		2.00000	
702.0542	GRANITE APRON STONE 5FT. STANDARD 7.3.7		1.00000	
702.0725	SOLID BLOCK SHALLOW DOUBLE GRATE CATCH BASIN STANDARD 3.5.2		1.00000	
	COMMERCIAL WAY (DGCBI)			
	200+51 LT (DGCBI)			1.00
	200+37 RT (DGCBI)			1.00
Assembly: DROP INLET STRUCTURE WITH GRANITE INLET STONE (DISGI) (Unit: EACH Default Quantity: 5.00)				
206.0301	COMPOST FILTER SOCK		5.00000	
701.8003	PIPE BEDDING CLASS C	12 INCHES	0.34000	
702.0516	FRAME AND GRATE, HIGH CAPACITY, STANDARD 6.3.4		1.00000	
702.0541	GRANITE INLET STONE 38" STANDARD 7.3.6		1.00000	
702.0714	PRECAST CONCRETE DROP INLET WITH APRON STONE STANDARD 4.5.2		1.00000	
	TAUNTON AVE (DISGI)			
	95+71 RT (DISGI)			1.00
	98+12 RT (DISGI)			1.00
	100+05 RT (DISGI)			1.00
	98+89 RT (DISGI)			1.00
	99+88 RT (DISGI)			1.00

R - 2

Assembly Summary

Project Name:

Estimate Name:

R.I. Contract No.:

FAP Nos.:

Item Code	Description	Depth	Factor	Qty
Assembly: FULL DEPTH RECONSTRUCTION (FDRPD) (Unit: SY Default Quantity: 1988.24)				
201.0407	REMOVE AND DISPOSE PAVEMENT AND RIGID BASE		1.00000	
202.0100	EARTH EXCAVATION	8 INCHES	0.22222	
204.0100	TRIMMING AND FINE GRADING		1.00000	
302.0100	GRAVEL BORROW SUBBASE COURSE	8 INCHES	0.22222	
401.1000	CLASS 19.0 HMA	8 INCHES	0.48850	
401.3100	MODIFIED CLASS 9.5 HMA	3 INCHES (2 LIFTS)	0.18678	
403.0300	ASPHALT EMULSION TACK COAT	2 COATS	2.00000	
	TAUNTON AVE (FDRPD)			
	85+70 - 86+06 LT (FDRPD)			45.99
	85+70 - 86+07 RT (FDRPD)			46.10
	90+60 - 91+25 LT (FDRPD)			78.90
	89+50 - 91+25 RT (FDRPD)			214.20
	94+92 - 99+94 LT (FDRPD)			613.90
	95+50 - 100+11 RT (FDRPD)			612.90
	96+87 - 97+01 (FDRPD)			27.04
	97+79 - 97+95 (FDRPD)			27.32
	98+94 - 99+04 (FDRPD)			26.66
	92+45 - 92+57 LT (FDRPD)			14.67
	93+92 - 94+50 LT (FDRPD)			71.00
	101+15 - 101+85 LT (FDRPD)			179.00
	94+82 - 95+07 RT (FDRPD)			30.56

R - 2

Assembly Summary

Project Name:

Estimate Name:

R.I. Contract No.:

FAP Nos.:

Item Code	Description	Depth	Factor	Qty
Assembly: GRANITE CURB, CIRCULAR STANDARD 7.3.0 (GRANC) (Unit: LF Default Quantity: 55.00)				
204.0100	TRIMMING AND FINE GRADING		0.27800	
302.0100	GRAVEL BORROW SUBBASE COURSE	6"	0.04600	
601.0300	CLASS A PORTLAND CEMENT CONCRETE		0.03700	
906.0111	GRANITE CURB, QUARRY SPLIT CIRCULAR, STANDARD 7.3.0		1.00000	
	TAUNTON AVE (GRANC)			
	101+27 - 101+32 LT (GRANC)			5.50
	101+63 - 101+69 LT (GRANC)			6.00
	200+44 - 200+49 RT (GRANC)			4.00
	200+55 - 200+57 RT (GRANC)			3.00
	91+49 - 91+57 LT (GRANC)			8.50
	92+02 - 92+07 LT (GRANC)			5.50
	96+90 - 96+99 RT (GRANC)			9.50
	97+00 - 97+05 RT (GRANC)			4.00
	97+82 - 97+90 RT (GRANC)			6.00
	97+96 - 97+99 RT (GRANC)			3.00

R - 2

Assembly Summary

Project Name:

Estimate Name:

R.I. Contract No.:

FAP Nos.:

Item Code	Description	Depth	Factor	Qty
Assembly: LOAM AND SEED AREA (LMSDA) (Unit: SY Default Quantity: 2689.10)				
204.0100	TRIMMING AND FINE GRADING		1.00000	
L01.0102	LOAM BORROW 4 INCHES DEEP		1.00000	
L02.0102	RESIDENTIAL SEEDING (TYPE 2)		1.00000	
	TAUNTON AVE (LMSDA)			
	PARK AND RIDE (LMSDA)			2500.00
	84+52 - 84+60 LT (LMSDA)			1.30
	84+88 - 84+95 LT (LMSDA)			1.40
	86+48 - 86+60 RT (LMSDA)			3.10
	87+33 - 87+40 RT (LMSDA)			3.50
	88+32 - 88+40 RT (LMSDA)			3.90
	88+64 - 88+72 RT (LMSDA)			1.90
	89+00 - 89+07 RT (LMSDA)			1.30
	89+23 - 89+32 LT (LMSDA)			2.50
	89+64 - 89+73 LT (LMSDA)			2.50
	91+33 - 91+68 LT (LMSDA)			14.70
	95+96 - 98+55 LT (LMSDA)			116.30
	98+39 - 98+96 RT (LMSDA)			15.80
	86+85 - 87+11 RT (LMSDA)			6.20
	89+50 - 89+56 RT (LMSDA)			1.30
	91+88 - 91+97 RT (LMSDA)			1.90
	92+30 - 92+54 RT (LMSDA)			5.20
	92+74 - 92+94 RT (LMSDA)			4.80
	93+27 - 93+32 RT (LMSDA)			1.50

R - 2

Assembly Summary

Project Name:

Estimate Name:

R.I. Contract No.:

FAP Nos.:

Item Code	Description	Depth	Factor	Qty
Assembly: MICRO MILLING AND PAVEMENT OVERLAY (MMPOL) (Unit: SY Default Quantity: 12188.63)				
401.3100	MODIFIED CLASS 9.5 HMA	3 INCHES (2 LIFTS)	0.18678	
403.0300	ASPHALT EMULSION TACK COAT		1.00000	
931.0110	CLEANING AND SWEEPING PAVEMENT		0.02000	
935.0400	REMOVING BITUMINOUS PAVEMENT BY MICRO MILLING		1.00000	
	TAUNTON AVE (MMPOL)			
	80+50 - 85+50 (MMPOL)			2905.18
	85+50 - 90+50 (MMPOL)			2559.81
	90+50 - 95+50 (MMPOL)			2555.56
	95+50 - 103+00 (MMPOL)			3861.10
	COMMERCIAL WAY (MMPOL)			
	200+26 - 200+69 (MMPOL)			306.98
Assembly: PAVING PARK & RIDE (POPKR) (Unit: SY Default Quantity: 1441.90)				
202.0100	EARTH EXCAVATION	6 INCHES	0.16667	
204.0100	TRIMMING AND FINE GRADING		1.00000	
302.0100	GRAVEL BORROW SUBBASE COURSE	6 INCHES	0.16667	
401.3100	MODIFIED CLASS 9.5 HMA	3 INCHES (2 LIFTS)	0.18678	
	TAUNTON AVE (POPKR)			
	PARK AND RIDE (POPKR)			1375.00
	BERRY STREET (POPKR)			66.90
Assembly: GRANITE WHEELCHAIR RAMP STONE CIRCULAR 7.3.9 (RASTC) (Unit: EACH Default Quantity: 4.00)				
204.0100	TRIMMING AND FINE GRADING		0.27778	
302.0100	GRAVEL BORROW SUBBASE COURSE	6 INCHES	0.04630	
401.4003	CLASS 4.75 HMA FOR PATCHING		0.07184	
601.0300	CLASS A PORTLAND CEMENT CONCRETE	10 INCHES	0.15432	
906.0131	GRANITE RAMP STONE CIRCULAR STANDARD 7.3.9		1.00000	
942.0200	DETECTABLE WARNING PANEL STANDARD 48.1.0		8.00000	
	TAUNTON AVE (RASTC)			
	97+07 RT (RASTC)			2.00
	97+82 RT (RASTC)			2.00

R - 2

Assembly Summary

Project Name:

Estimate Name:

R.I. Contract No.:

FAP Nos.:

Item Code	Description	Depth	Factor	Qty
Assembly: GRANITE WHEELCHAIR RAMP STONE STRAIGHT 7.3.9 (RASTS) (Unit: EACH Default Quantity: 4.00)				
204.0100	TRIMMING AND FINE GRADING		0.27778	
302.0100	GRAVEL BORROW SUBBASE COURSE	6 INCHES	0.04630	
401.4003	CLASS 4.75 HMA FOR PATCHING		0.07184	
601.0300	CLASS A PORTLAND CEMENT CONCRETE	10 INCHES	0.15432	
906.0130	GRANITE RAMP STONE STRAIGHT STANDARD 7.3.9		1.00000	
942.0200	DETECTABLE WARNING PANEL STANDARD 48.1.0		8.00000	
	TAUNTON AVE (RASTS)			
	93+77 RT (RASTS)			2.00
	93+77 LT (RASTS)			2.00
Assembly: RECONSTRUCT CATCH BASIN/CORBEL CONE AND NEW FRAME AND GRATE, HIGH CAPACITY, STANDARD 6.3.4 (RCNFG) (Unit: EACH Default Quantity: 2.00)				
201.0428	REMOVE AND DISPOSE FRAME AND GRATE OR FRAME AND COVER		1.00000	
206.0301	COMPOST FILTER SOCK		5.00000	
702.0516	FRAME AND GRATE, HIGH CAPACITY, STANDARD 6.3.4		1.00000	
704.0100	RECONSTRUCT CATCH BASIN/CORBEL CONES		1.00000	
708.9041	CLEANING CATCH BASINS ALL TYPES AND SIZES		1.00000	
	TAUNTON AVE (RCNFG)			
	83+01 RT (RCNFG)			1.00
	92+51 LT (RCNFG)			1.00
Assembly: REMOVE AND DISPOSE CATCH BASIN W/ GUTTER INLET (RDCBG) (Unit: EACH Default Quantity: 5.00)				
201.0411	REMOVE AND DISPOSE CATCH BASIN AND GUTTER INLETS		1.00000	
201.0428	REMOVE AND DISPOSE FRAME AND GRATE OR FRAME AND COVER		1.00000	
	TAUNTON AVE (RDCBG)			
	94+98 RT (RDCBG)			1.00
	94+98 LT (RDCBG)			1.00
	97+00 LT (RDCBG)			1.00
	98+99 LT (RDCBG)			1.00
	99+00 RT (RDCBG)			1.00

R - 2

Assembly Summary

Project Name:

Estimate Name:

R.I. Contract No.:

FAP Nos.:

Item Code	Description	Depth	Factor	Qty
Assembly: REMOVE AND DISPOSE CATCH BASIN (RDSCB) (Unit: EACH Default Quantity: 5.00)				
201.0410	REMOVE AND DISPOSE CATCH BASINS		1.00000	
201.0428	REMOVE AND DISPOSE FRAME AND GRATE OR FRAME AND COVER		1.00000	
	TAUNTON AVE (RDSCB)			
	96+99 RT (RDSCB)			1.00
	97+85 RT (RDSCB)			1.00
	94+66 LT (RDSCB)			2.00
	93+93 LT (RDSCB)			1.00
Assembly: REMOVE AND DISPOSE MANHOLE (RDSMH) (Unit: EACH Default Quantity: 2.00)				
201.0412	REMOVE AND DISPOSE MANHOLE		1.00000	
201.0428	REMOVE AND DISPOSE FRAME AND GRATE OR FRAME AND COVER		1.00000	
	TAUNTON AVE (RDSMH)			
	94+99 RT (RDSMH)			1.00
	95+83 LT (RDSMH)			1.00
Assembly: REINFORCED PORTLAND CEMENT SIDEWALK (RECSW) (Unit: SY Default Quantity: 127.90)				
201.0403	REMOVE AND DISPOSE SIDEWALKS		1.00000	
204.0100	TRIMMING AND FINE GRADING		1.00000	
302.0100	GRAVEL BORROW SUBBASE COURSE	8 INCHES	0.22222	
905.0115	PORTLAND CEMENT CONCRETE DRIVEWAY STANDARD 43.5.0	8 INCHES	0.22222	
	TAUNTON AVE (RECSW)			
	97+78 -98+16 RT (RECSW)			39.40
	98+39 - 99+23 RT (RECSW)			88.50
Assembly: REMOVE, HANDLE, HAUL, TRIM, RESET CURB (RHHGC) (Unit: LF Default Quantity: 1207.00)				
401.4003	CLASS 4.75 HMA FOR PATCHING	2 INCHES	0.01437	
601.0300	CLASS A PORTLAND CEMENT CONCRETE	10 INCHES	0.03087	
906.0700	REMOVE, HANDLE, HAUL TRIM RESET CURB EDGING, STRAIGHT, CIRCULAR ALL TYPES		1.00000	
	TAUNTON AVE (RHHGC)			
	84+52 - 84+58 LT (RHHGC)			6.00
	84+89 - 84+95 LT (RHHGC)			6.00
	85+23 - 85+29 LT (RHHGC)			6.00
	85+59 - 85+65 LT (RHHGC)			6.00
	86+48 - 86+54 RT (RHHGC)			6.00
	86+91 - 87+08 RT (RHHGC)			17.50

R - 2

Assembly Summary

Project Name:

Estimate Name:

R.I. Contract No.:

FAP Nos.:

Item Code	Description	Depth	Factor	Qty
	87+34 - 87+40 RT (RHHGC)			6.00
	88+32 - 88+38 RT (RHHGC)			6.00
	88+66 - 88+72 RT (RHHGC)			6.00
	89+01 - 89+07 RT (RHHGC)			6.00
	89+23 - 89+29 LT (RHHGC)			6.00
	89+50 - 89+56 RT (RHHGC)			6.00
	89+67 - 89+73 LT (RHHGC)			6.00
	91+33 - 91+39 LT (RHHGC)			6.00
	91+88 - 91+94 RT (RHHGC)			6.00
	92+09 - 93+72 LT (RHHGC)			162.00
	92+30 - 92+50 RT (RHHGC)			20.50
	92+76 - 92+94 RT (RHHGC)			18.00
	93+22 - 93+33 RT (RHHGC)			10.50
	93+67 - 93+71 RT (RHHGC)			4.00
	93+89 - 93+98 LT (RHHGC)			10.00
	93+89 - 93+95 RT (RHHGC)			6.00
	94+26 - 94+32 RT (RHHGC)			6.00
	94+68 - 95+07 RT (RHHGC)			38.00
	94+47 - 95+64 LT (RHHGC)			117.50
	95+43 - 96+44 RT (RHHGC)			101.00
	95+96 - 98+64 LT (RHHGC)			267.50
	97+96 - 98+13 RT (RHHGC)			17.00
	98+39 - 99+23 RT (RHHGC)			84.00
	98+87 - 99+52 LT (RHHGC)			65.50
	99+59 - 100+12 RT (RHHGC)			53.00
	99+81 - 99+95 LT (RHHGC)			14.00
	101+17 - 101+23 LT (RHHGC)			6.00
	101+76 - 101+82 LT (RHHGC)			6.00
	101+80 - 101+86 RT (RHHGC)			6.00
	102+19 - 102+32 RT (RHHGC)			12.50
	102+33 - 102+39 LT (RHHGC)			6.00
	102+61 - 102+67 RT (RHHGC)			6.00
	97+09 - 97+16 RT (RHHGC)			28.00
	102+79 - 102+90 LT (RHHGC)			11.50

R - 3

Assembly Summary

Project Name:

Estimate Name:

R.I. Contract No.:

FAP Nos.:

Item Code	Description	Depth	Factor	Qty
	80+50 - 80+60 LT (RHHGC)			10.00
	81+16 - 81+29 LT (RHHGC)			13.00
	83+32 - 83+38 LT (RHHGC)			6.00
Assembly: RIP RAP BEDDING STD 8.3.0 (RIPRP) (Unit: SY Default Quantity: 46.93)				
920.0070	DUMPED STONE RIPRAP R-3, R-4, 4-5 STANDARD 8.3.0	12 INCHES	0.33333	
920.0150	BEDDING FOR RIPRAP FS-2 STANDARD 8.3.0	8 INCHES	0.22222	
	TAUNTON AVE (RIPRP)			
	94+40 - 94+44 LT (RIPRP)			2.19
	96+00 - 96+18 LT (RIPRP)			16.90
	96+11 - 96+15 LT (RIPRP)			2.19
	96+46 - 96+51 LT (RIPRP)			2.19
	96+87 - 96+93 LT (RIPRP)			2.19
	97+43 - 97+50 LT (RIPRP)			2.19
	97+79 - 97+84 LT (RIPRP)			2.19
	201+40 - 201+48 (RIPRP)			16.89

Table of Contents - Distribution of Quantities

Project Name - Rt 44 - Taunton Ave (Rt 1A/114 - Mass S/L)
Estimate Name - Addendum 4
R.I. Contract No. - 2019-CH-032
FAP Nos: STP-RESF(406)

ItemCode	Description	Page
201.0301	CUTTING AND DISPOSING ISOLATED TREES AND STUMPS (4"- 24")	1
201.0305	COMPLETE REMOVAL AND DISPOSAL OF ISOLATED STUMPS (6'' TO 24'')	1
201.0321	CLEARING AND GRUBBING	1
201.0401	REMOVE AND DISPOSE GRANITE CURB	1
201.0402	REMOVE AND DISPOSE CONCRETE CURB	2
201.0403	REMOVE AND DISPOSE SIDEWALKS	2
201.0407	REMOVE AND DISPOSE PAVEMENT AND RIGID BASE	4
201.0409	REMOVE AND DISPOSE FLEXIBLE PAVEMENT	5
201.0410	REMOVE AND DISPOSE CATCH BASINS	6
201.0411	REMOVE AND DISPOSE CATCH BASIN AND GUTTER INLETS	6
201.0412	REMOVE AND DISPOSE MANHOLE	6
201.0414	REMOVE AND DISPOSE PIPE - ALL SIZES	6
201.0418	REMOVE AND DISPOSE HYDRANT	7
201.0423	REMOVE AND DISPOSE HANDHOLE	7
201.0428	REMOVE AND DISPOSE FRAME AND GRATE OR FRAME AND COVER	7
201.0610	REMOVE AND DISPOSE DIRECTIONAL, WARNING, REGULATORY, SERVICE, AND STREET SIGNS	8
201.0613	REMOVE AND STOCKPILE LIGHT STANDARDS	9
201.0616	REMOVE AND DISPOSE LIGHT STANDARD FOUNDATIONS	9
201.0720	LOAD AND HAUL SOLID WASTE	9
201.0730	DISPOSE SOLID WASTE	9
202.0100	EARTH EXCAVATION	10
202.0400	MUCK EXCAVATION	10
202.0700	COMMON BORROW	11
202.0800	GRAVEL BORROW	11
202.9910	**** ITEM DELETED ****	**11**
202.9914	LOAD AND HAUL CONTAMINATED SOIL, TYPE 1	11
202.9915	DISPOSAL OF CONTAMINATED SOIL, TYPE 1	12
202.9916	LOAD AND HAUL CONTAMINATED SOIL, TYPE 2	12
202.9917	DISPOSAL OF CONTAMINATED SOIL, TYPE 2	12
202.9918	LOAD, HAUL, AND DISPOSE CONTAMINATED SOIL, TYPE 3	12
202.9919	SOIL SAMPLING	12
203.0530	**** ITEM DELETED ****	**13**
204.0100	**TRIMMING AND FINE GRADING**	**13**
206.0220	SILT FENCE STANDARD 9.2.0	18
206.0301	**COMPOST FILTER SOCK**	**19**
206.9901	ROLLED EROSION CONTROL PRODUCT	20
207.0300	COMPOST FILTER SOCK DITCH AND SWALE EROSION CHECK	20
208.0100	DEWATERING BASIN STANDARD 9.7.0	20
209.0200	SACK INSERT CATCH BASIN INLET PROTECTION	21
211.0100	CONSTRUCTION ACCESSES STANDARD 9.9.0	22
212.2100	MAINTENANCE AND CLEANING OF EROSION AND POLLUTION CONTROLS	23
302.0100	**GRAVEL BORROW SUBBASE COURSE**	**23**
303.9901	CRUSHED STONE PARKING APRON	28
401.1000	CLASS 19.0 HMA	28
401.3100	MODIFIED CLASS 9.5 HMA	29
401.4003	**CLASS 4.75 HMA FOR PATCHING**	**30**
403.0300	ASPHALT EMULSION TACK COAT	33
502.1000	FULL DEPTH CLEANING AND SEALING OF JOINTS AND CRACKS 2-1/2" NOM. WIDTH OR LESS IN PCC PAVEMENT	34
603.1000	**CONTROLLED LOW STRENGTH MATERIAL**	**34**
701.0412	REINFORCED CONCRETE PIPE M 170 CLASS III 12 INCH	37

Table of Contents - Distribution of Quantities

Project Name - Rt 44 - Taunton Ave (Rt 1A/114 - Mass S/L)
Estimate Name - Addendum 4
R.I. Contract No. - 2019-CH-032
FAP Nos: STP-RESF(406)

ItemCode	Description	Page
701.0424	REINFORCED CONCRETE PIPE M 170 CLASS III 24 INCH	38
701.0612	REINFORCED CONCRETE PIPE M 170 CLASS V 12 INCH	38
701.0618	REINFORCED CONCRETE PIPE M 170 CLASS V 18 INCH	38
701.0636	REINFORCED CONCRETE PIPE M 170 CLASS V 36 INCH	38
701.6012	12 INCH DUCTILE IRON SEWER SAFE PIPE CLASS 52	39
701.6018	18 INCH DUCTILE IRON SEWER SAFE PIPE CLASS 52	39
701.6024	24 INCH DUCTILE IRON SEWER SAFE PIPE CLASS 52	40
701.7712	12 INCH REINFORCED CONCRETE PIPE END SECTION STANDARD 2.3.0	40
701.7718	18 INCH REINFORCED CONCRETE PIPE END SECTION STANDARD 2.3.0	40
701.7724	24 INCH REINFORCED CONCRETE PIPE END SECTION STANDARD 2.3.0	40
701.7736	36 INCH REINFORCED CONCRETE PIPE END SECTION STANDARD 2.3.0	40
701.8003	**PIPE BEDDING CLASS C**	**41**
702.0511	FRAME AND COVER STANDARD 6.1.0	42
702.0516	**FRAME AND GRATE, HIGH CAPACITY, STANDARD 6.3.4**	**42**
702.0517	FRAME AND GRATE, STANDARD 6.3.2	43
702.0521	FRAME AND COVER STANDARD 6.2.0	44
702.0522	**FRAME AND COVER STANDARD 6.2.1**	**44**
702.0541	**GRANITE INLET STONE 38'' STANDARD 7.3.6**	**44**
702.0542	GRANITE APRON STONE 5FT. STANDARD 7.3.7	45
702.0605	**PRECAST CATCH BASIN 4' DIAMETER STANDARD 4.4.0**	**46**
702.0630	PRECAST MANHOLE 4' DIAMETER STANDARD 4.2.0	46
702.0640	PRECAST MANHOLE 6' DIAMETER STANDARD 4.2.2	46
702.0705	CATCH BASIN W/GUTTER INLET STANDARD 3.4.1	47
702.0714	PRECAST CONCRETE DROP INLET WITH APRON STONE STANDARD 4.5.2	47
702.0725	SOLID BLOCK SHALLOW DOUBLE GRATE CATCH BASIN STANDARD 3.5.2	47
702.9901	STORMWATER TREATMENT UNIT (JFF-1)	47
702.9902	STORMWATER TREATMENT UNIT (JFF-2)	48
702.9903	WATER QUALITY STRUCTURE (CDS)	48
702.9905	**PRECAST MANHOLE 4′ DIAMETER STANDARD 4.2.0 WITH WEIR**	**48**
702.9999	MISCELLANEOUS DRAINAGE REPAIRS	48
704.0100	RECONSTRUCT CATCH BASIN/CORBEL CONES	48
704.0300	RECONSTRUCT CATCH BASIN/VERTICAL WALLS	49
704.0400	RECONSTRUCT MANHOLE/VERTICAL WALLS	49
706.9000	PLUG AND CAP PIPE ALL SIZES	49
707.0900	ADJUST MANHOLES TO GRADE	49
707.1000	ADJUST SANITARY MANHOLE	50
707.1100	ADJUST CATCH BASINS	50
707.1900	ADJUST FRAME & COVER TO GRADE	50
707.2000	ADJUST FRAME AND GRATE TO GRADE	51
708.9040	CLEANING AND FLUSHING PIPE ALL SIZES	51
708.9041	CLEANING CATCH BASINS ALL TYPES AND SIZES	52
708.9042	**CLEANING MANHOLES ALL TYPES AND SIZES**	**52**
712.0100	WATER GATE BOX	53
712.0200	GAS GATE BOX	53
713.8268	**ADJUST CURB STOP BOX TO GRADE**	**54**
713.8269	**ADJUST WATER GATE BOXES TO GRADE**	**54**
713.8300	ADJUST GAS GATE BOXES TO GRADE	54
714.8163	POST TYPE HYDRANT	55

Table of Contents - Distribution of Quantities

Project Name - Rt 44 - Taunton Ave (Rt 1A/114 - Mass S/L)
Estimate Name - Addendum 4
R.I. Contract No. - 2019-CH-032
FAP Nos: STP-RESF(406)

ItemCode	Description	Page
902.9901	STEEL BOLLARD	55
903.0206	CHAIN LINK FENCE 6' STD 31.2.0	55
903.0231	DOUBLE GATE, CHAIN LINK 6' STANDARD 31.2.0	55
905.0110	PORTLAND CEMENT SIDEWALK MONOLITHIC STANDARD 43.1.0	55
905.0115	PORTLAND CEMENT CONCRETE DRIVEWAY STANDARD 43.5.0	57
905.9901	BUS SHELTER SLAB	58
906.0110	GRANITE CURB, QUARRY SPLIT STRAIGHT, STANDARD 7.3.0	58
906.0118	6' GRANITE TRANSITION CURB, QUARRY SPLIT SPECIAL TRANSITION STANDARD 7.3.2	58
906.0119	3' GRANITE TRANSITION CURB STANDARD 7.3.1	59
906.0130	**GRANITE RAMP STONE STRAIGHT STANDARD 7.3.9**	**60**
906.0131	GRANITE RAMP STONE CIRCULAR STANDARD 7.3.9	60
906.0602	BITUMINOUS BERM STANDARD 7.5.1	61
906.0700	REMOVE, HANDLE, HAUL TRIM RESET CURB EDGING, STRAIGHT, CIRCULAR ALL TYPES	61
907.0100	WATER FOR DUST CONTROL	62
907.0200	CALCIUM CHLORIDE FOR DUST CONTROL (PROJECT WIDE)	62
914.5010	FLAGPERSONS	63
914.5020	FLAGPERSONS - OVERTIME	63
919.0101	TEST PITS	63
919.9901	TEST PITS - EXCAVATION	63
920.0070	**DUMPED STONE RIPRAP R-3, R-4, 4-5 STANDARD 8.3.0**	**63**
920.0150	**BEDDING FOR RIPRAP FS-2 STANDARD 8.3.0**	**64**
920.9901	FILTER STRIP	64
922.0100	TEMPORARY CONSTRUCTION SIGNS STANDARD 29.1.0 AND 27.1.1	64
923.0105	DRUM BARRICADE STANDARD 26.2.0	65
923.0125	PLASTIC PIPE TYPE III BARRICADE STANDARD 26.3.1	65
923.0200	FLUORESCENT TRAFFIC CONES STANDARD 26.1.0	65
924.0113	ADVANCE WARNING ARROW PANEL	65
925.0112	PORTABLE CHANGEABLE MESSAGE SIGN	65
929.0110	FIELD OFFICE	66
931.0110	CLEANING AND SWEEPING PAVEMENT	66
932.0200	FULL-DEPTH SAWCUT OF BITUMINOUS PAVEMENT	66
932.0210	FULL DEPTH SAWCUT OF BITUMINOUS PAVEMENT AND RIGID BASE	67
932.0230	FULL DEPTH SAWCUT OF PORTLAND CEMENT CONCRETE SIDEWALK/DRIVEWAY	68
935.0400	REMOVING BITUMINOUS PAVEMENT BY MICRO MILLING	69
936.0100	MOBILIZATION AND DEMOBILIZATION	69
937.0200	MAINTENANCE AND MOVEMENT TRAFFIC PROTECTION	69
942.0200	**DETECTABLE WARNING PANEL STANDARD 48.1.0**	**69**
999.9901	REMOVE AND STOCKPILE BUS SHELTER (PARK AND RIDE)	70
999.9902	REMOVE AND REPLACE BUS SHELTER (SIDEWALK)	70
L01.0102	LOAM BORROW 4 INCHES DEEP	70
L01.0104	PLANTABLE SOIL 4 INCHES DEEP	71
L01.9901	BIORETENTION BASIN	71
L02.0102	RESIDENTIAL SEEDING (TYPE 2)	71
L02.0105	WETLAND SEED MIX (TYPE 5)	72
L11.0104	DRIP-LINE TREE PROTECTION DEVICE STANDARD 51.1.1	72
T05.1030	ADJUST HANDHOLE TO GRADE	73
T15.0100	DIRECTIONAL REGULATORY AND WARNING SIGNS	73
T15.1000	STREET SIGN ASSEMBLY STD. 24.6.1	74
T20.0704	4 INCH WHITE WATERBORNE PAINT PAVEMENT MARKINGS	75

Table of Contents - Distribution of Quantities

Project Name - Rt 44 - Taunton Ave (Rt 1A/114 - Mass S/L)
Estimate Name - Addendum 4
R.I. Contract No. - 2019-CH-032
FAP Nos: STP-RESF(406)

ItemCode	Description	Page
T20.0706	6 INCH WHITE WATERBORNE PAINT PAVEMENT MARKINGS	75
T20.0712	12 INCH WHITE WATERBORNE PAINT PAVEMENT MARKINGS	75
T20.0904	4 INCH YELLOW WATERBORNE PAINT PAVEMENT MARKINGS	76
T20.0912	12 INCH YELLOW WATERBORNE PAINT PAVEMENT MARKINGS	76
T20.1401	WATERBORNE PAINT PAVEMENT MARKING SYMBOL - ARROW (STRAIGHT, LEFT, RIGHT OR COMBINED) STANDARD 20.1.0	76
T20.2404	4 INCH WHITE FINAL EPOXY RESIN PAVEMENT MARKINGS	76
T20.2406	6 INCH WHITE FINAL EPOXY RESIN PAVEMENT MARKINGS	77
T20.2412	12 INCH WHITE FINAL EPOXY RESIN PAVEMENT MARKINGS	77
T20.2804	4 INCH YELLOW FINAL EPOXY RESIN PAVEMENT MARKINGS	77
T20.2812	12 INCH YELLOW FINAL EPOXY RESIN PAVEMENT MARKINGS	78
T20.4506	REMOVE PAVEMENT MARKING LINE - LESS THAN OR EQUAL TO 6 INCHES WIDE	78
T20.4508	REMOVE PAVEMENT MARKING LINE - GREATER THAN 6 INCHES WIDE	78
202.9911	HANDLING AND STOCKPILING CONTAMINATED SOILS	79
701.8100	**FURNISH AND INSTALL DUCTILE IRON FITTINGS**	**79**
906.0111	GRANITE CURB, QUARRY SPLIT CIRCULAR, STANDARD 7.3.0	79
906.0116	GRANITE CURB, QUARRY SPLIT 2 FOOT CORNERS, STANDARD 7.3.4	79
906.0120	**GRANITE WHEELCHAIR RAMP CURB STANDARDS 7.3.3, 43.3.0 AND 43.3.1**	**80**
T09.9901	SERVICE PEDESTAL AND LIGHTING SYSTEM MODIFICATIONS	80
203.9901	DEWATERING	80
203.9951	TREATMENT OF CONTAMINATED GROUNDWATER	80
920.0200	FILTER FABRIC FOR RIP-RAP	81
601.0300	**CLASS A PORTLAND CEMENT CONCRETE**	**81**
701.5206	**6 INCH DUCTILE IRON WATER PIPE CLASS 52, RESTRAINED JOINT**	**85**
701.8106	**6 INCH GATE VALVE AND BOX**	**85**
701.8170	**8X6 TAPPING SLEEVE & TAPPING VALVE WITH GATE BOX**	**85**
702.9906	**PRECAST OUTLET CONTROL STRUCTURE**	**85**

Distribution of Quantities

Project Name - Rt 44 - Taunton Ave (Rt 1A/114 - Mass S/L)
Estimate Name - Addendum 4
R.I. Contract No. - 2019-CH-032
FAP Nos: STP-RESF(406)

Item No.	Item Code	Description	UM	Qty.	Pay Code	Seq. No.
047	**403.0300 Cont.**	97+79 - 97+95 (FDRPD)		54.64	0004	01
		98+94 - 99+04 (FDRPD)		53.32	0004	01
		TAUNTON AVE (MMPOL)				
		80+50 - 85+50 (MMPOL)		2,905.18	0004	01
		85+50 - 90+50 (MMPOL)		2,559.81	0004	01
		90+50 - 95+50 (MMPOL)		2,555.56	0004	01
		95+50 - 103+00 (MMPOL)		3,861.10	0004	01
		Item 403.0300 Total:		**16,165.12**		
048	**502.1000**	**FULL DEPTH CLEANING AND SEALING OF JOINTS AND CRACKS 2-1/2" NOM. WIDTH OR LESS IN PCC PAVEMENT**	**LF**			
		COMMERCIAL WAY				
		200+69		47.70	0004	01
		TAUNTON AVE				
		102+97		44.90	0004	01
		80+50		54.40	0004	01
		Item 502.1000 Total:		**147.00**		
049	**603.1000**	**CONTROLLED LOW STRENGTH MATERIAL**	**CY**			
		TAUNTON AVE				
		PIPE TRENCHES		93.30	0004	01
		ROUND UP		0.10	0004	01
		TAUNTON AVE (2GRCC)				
		200+40 LT (2GRCC)			0004	01
		97+10 RT (2GRCC)			0004	01
		97+79 RT (2GRCC)			0004	01
		TAUNTON AVE (3GRTC)				
		101+87 RT (3GRTC)			0004	01
		102+17 RT (3GRTC)			0004	01
		102+33 RT (3GRTC)			0004	01
		102+40 LT (3GRTC)			0004	01
		102+60 RT (3GRTC)			0004	01

Distribution of Quantities

Project Name - Rt 44 - Taunton Ave (Rt 1A/114 - Mass S/L)
Estimate Name - Addendum 4
R.I. Contract No. - 2019-CH-032
FAP Nos: STP-RESF(406)

Item No.	Item Code	Description	UM	Qty.	Pay Code	Seq. No.
049	603.1000 Cont.	102+77 LT (3GRTC)			0004	01
		84+59 LT (3GRTC)			0004	01
		84+87 LT (3GRTC)			0004	01
		85+30 LT (3GRTC)			0004	01

Distribution of Quantities

Project Name - Rt 44 - Taunton Ave (Rt 1A/114 - Mass S/L)
Estimate Name - Addendum 4
R.I. Contract No. - 2019-CH-032
FAP Nos: STP-RESF(406)

Item No.	Item Code	Description	UM	Qty.	Pay Code	Seq. No.
049	603.1000 Cont.	85+58 LT (3GRTC)			0004	01
		87+10 RT (3GRTC)			0004	01
		87+33 RT (3GRTC)			0004	01
		88+40 RT (3GRTC)			0004	01
		88+64 RT (3GRTC)			0004	01
		89+08 RT (3GRTC)			0004	01
		89+30 LT (3GRTC)			0004	01
		89+48 RT (3GRTC)			0004	01
		89+65 LT (3GRTC)			0004	01
		91+87 LT (3GRTC)			0004	01
		91+95 RT (3GRTC)			0004	01
		92+01 LT (3GRTC)			0004	01
		92+11 LT (3GRTC)			0004	01
		92+28 RT (3GRTC)			0004	01
		92+52 RT (3GRTC)			0004	01
		92+75 RT (3GRTC)			0004	01
		92+96 RT (3GRTC)			0004	01
		93+20 RT (3GRTC)			0004	01
		93+34 RT (3GRTC)			0004	01
		93+51 LT (3GRTC)			0004	01
		93+65 RT (3GRTC)			0004	01
		94+01 LT (3GRTC)			0004	01
		94+33 RT (3GRTC)			0004	01
		94+58 LT (3GRTC)			0004	01
		94+66 RT (3GRTC)			0004	01
		95+08 RT (3GRTC)			0004	01
		95+41 RT (3GRTC)			0004	01
		95+66 LT (3GRTC)			0004	01
		95+95 LT (3GRTC)			0004	01
		98+65 LT (3GRTC)			0004	01
		98+85 LT (3GRTC)			0004	01
		99+24 RT (3GRTC)			0004	01
		99+54 LT (3GRTC)			0004	01

Distribution of Quantities

Project Name - Rt 44 - Taunton Ave (Rt 1A/114 - Mass S/L)
Estimate Name - Addendum 4
R.I. Contract No. - 2019-CH-032
FAP Nos: STP-RESF(406)

Item No.	Item Code	Description	UM	Qty.	Pay Code	Seq. No.
049	603.1000 Cont.	99+57 RT (3GRTC)			0004	01
		99+80 LT (3GRTC)			0004	01
		TAUNTON AVE (6GRTC)				
		86+57 RT (6GRTC)			0004	01
		86+88 RT (6GRTC)			0004	01
		TAUNTON AVE (GRANC)				
		101+27 - 101+32 LT (GRANC)			0004	01
		101+63 - 101+69 LT (GRANC)			0004	01
		200+44 - 200+49 RT (GRANC)			0004	01
		200+55 - 200+57 RT (GRANC)			0004	01
		91+49 - 91+57 LT (GRANC)			0004	01
		92+02 - 92+07 LT (GRANC)			0004	01
		96+90 - 96+99 RT (GRANC)			0004	01
		97+00 - 97+05 RT (GRANC)			0004	01
		97+82 - 97+90 RT (GRANC)			0004	01
		97+96 - 97+99 RT (GRANC)			0004	01
		TAUNTON AVE (RASTC)				
		97+07 RT (RASTC)			0004	01
		97+82 RT (RASTC)			0004	01
		TAUNTON AVE (RASTS)				
		101+35 LT (RASTS)		0.30	0004	01
		101+63 LT (RASTS)		0.30	0004	01
		93+77 LT (RASTS)			0004	01
		93+77 RT (RASTS)			0004	01
		TAUNTON AVE (RHHGC)				
		101+17 - 101+23 LT (RHHGC)			0004	01
		101+76 - 101+82 LT (RHHGC)			0004	01
		101+80 - 101+86 RT (RHHGC)			0004	01
		102+19 - 102+32 RT (RHHGC)			0004	01
		102+33 - 102+39 LT (RHHGC)			0004	01
		102+61 - 102+67 RT (RHHGC)			0004	01
		102+79 - 102+90 LT (RHHGC)			0004	01
		80+50 - 80+60 LT (RHHGC)			0004	01

Distribution of Quantities

Project Name - Rt 44 - Taunton Ave (Rt 1A/114 - Mass S/L)
Estimate Name - Addendum 4
R.I. Contract No. - 2019-CH-032
FAP Nos: STP-RESF(406)

Item No.	Item Code	Description	UM	Qty.	Pay Code	Seq. No.
049	603.1000 Cont.	81+16 - 81+29 LT (RHHGC)			0004	01
		83+32 - 83+38 LT (RHHGC)			0004	01
		84+52 - 84+58 LT (RHHGC)			0004	01
		84+89 - 84+95 LT (RHHGC)			0004	01
		85+23 - 85+29 LT (RHHGC)			0004	01
		85+59 - 85+65 LT (RHHGC)			0004	01
		86+48 - 86+54 RT (RHHGC)			0004	01
		86+91 - 87+08 RT (RHHGC)			0004	01
		87+34 - 87+40 RT (RHHGC)			0004	01
		88+32 - 88+38 RT (RHHGC)			0004	01
		88+66 - 88+72 RT (RHHGC)			0004	01

Distribution of Quantities

Project Name - Rt 44 - Taunton Ave (Rt 1A/114 - Mass S/L)
Estimate Name - Addendum 4
R.I. Contract No. - 2019-CH-032
FAP Nos: STP-RESF(406)

Item No.	Item Code	Description	UM	Qty.	Pay Code	Seq. No.
049	603.1000 Cont.	89+01 - 89+07 RT (RHHGC)			0004	01
		89+23 - 89+29 LT (RHHGC)			0004	01
		89+50 - 89+56 RT (RHHGC)			0004	01
		89+67 - 89+73 LT (RHHGC)			0004	01
		91+33 - 91+39 LT (RHHGC)			0004	01
		91+88 - 91+94 RT (RHHGC)			0004	01
		92+09 - 93+72 LT (RHHGC)			0004	01
		92+30 - 92+50 RT (RHHGC)			0004	01
		92+76 - 92+94 RT (RHHGC)			0004	01
		93+22 - 93+33 RT (RHHGC)			0004	01
		93+67 - 93+71 RT (RHHGC)			0004	01
		93+89 - 93+95 RT (RHHGC)			0004	01
		93+89 - 93+98 LT (RHHGC)			0004	01
		94+26 - 94+32 RT (RHHGC)			0004	01
		94+47 - 95+64 LT (RHHGC)			0004	01
		94+68 - 95+07 RT (RHHGC)			0004	01
		95+43 - 96+44 RT (RHHGC)			0004	01
		95+96 - 98+64 LT (RHHGC)			0004	01
		97+09 - 97+16 RT (RHHGC)			0004	01
		97+96 - 98+13 RT (RHHGC)			0004	01
		98+39 - 99+23 RT (RHHGC)			0004	01
		98+87 - 99+52 LT (RHHGC)			0004	01
		99+59 - 100+12 RT (RHHGC)			0004	01
		99+81 - 99+95 LT (RHHGC)			0004	01
		Item 603.1000 Total:		**93.40**		
050	**701.0412**	**REINFORCED CONCRETE PIPE M 170 CLASS III 12 INCH**	**LF**			
		TAUNTON AVE				
		90+87 - 91+98 LT		137.20	0004	01
		92+02 - 94+39 LT		224.80	0004	01
		94+98 LT		4.00	0004	01
		94+99 RT		4.00	0004	01

Distribution of Quantities

Project Name - Rt 44 - Taunton Ave (Rt 1A/114 - Mass S/L)
Estimate Name - Addendum 4
R.I. Contract No. - 2019-CH-032
FAP Nos: STP-RESF(406)

Item No.	Item Code	Description	UM	Qty.	Pay Code	Seq. No.
061	701.7736 Cont.	96+00 LT		1.00	0004	01
		Item 701.7736 Total:		**1.00**		
062	701.8003	**PIPE BEDDING CLASS C**	**CY**			
		COMMERCIAL WAY (DGCBI)				
		200+37 RT (DGCBI)		0.55	0004	01
		200+51 LT (DGCBI)		0.55	0004	01
		PROJECT WIDE				
		ROUND UP		0.64	0004	01
		TAUNTON AVE		100.00	0004	01
		TAUNTON AVE (4DMHS)				
		90+97 LT (4DMHS)		0.68	0004	01
		96+49 LT (4DMHS)		0.68	0004	01
		96+90 LT (4DMHS)		0.68	0004	01
		96+95 RT (4DMHS)		0.68	0004	01
		97+82 LT (4DMHS)		0.68	0004	01
		97+88 RT (4DMHS)		0.68	0004	01
		98+99 LT (4DMHS)		0.68	0004	01
		99+00 RT (4DMHS)		0.68	0004	01
		TAUNTON AVE (4MHWE)				
		90+97 LT (4MHWE)		0.68	0004	01
		95+45 LT (4MHWE)			0004	01
		96+90 LT (4MHWE)		0.68	0004	01
		97+82 LT (4MHWE)		0.68	0004	01
		TAUNTON AVE (6DMHS)				
		95+83 LT (ECCENTRIC) (6DMHS)		1.49	0004	01
		TAUNTON AVE (CB4FT)				
		96+99 RT (CB4FT)		0.68	0004	01
		97+92 RT (CB4FT)		0.68	0004	01
		TAUNTON AVE (CBG38)				
		94+98 RT (CBG38)		0.68	0004	01
		95+82 RT (CBG38)		0.68	0004	01
		96+11 RT (CBG38)		0.68	0004	01

Distribution of Quantities

Project Name - Rt 44 - Taunton Ave (Rt 1A/114 - Mass S/L)
Estimate Name - Addendum 4
R.I. Contract No. - 2019-CH-032
FAP Nos: STP-RESF(406)

Item No.	Item Code	Description	UM	Qty.	Pay Code	Seq. No.
065	**702.0517 Cont.**	**Item 702.0517 Total:**		**2.00**		
066	**702.0521**	**FRAME AND COVER STANDARD 6.2.0**	**EACH**			
		TAUNTON AVE (CBGGI)				
		94+98 LT (CBGGI)		1.00	0004	01
		96+49 LT (CBGGI)		1.00	0004	01
		97+00 LT (CBGGI)		1.00	0004	01
		97+47 LT (CBGGI)		1.00	0004	01
		97+92 LT (CBGGI)		1.00	0004	01
		99+10 LT (CBGGI)		1.00	0004	01
		99+88 LT (CBGGI)		1.00	0004	01
		Item 702.0521 Total:		**7.00**		
067	**702.0522**	**FRAME AND COVER STANDARD 6.2.1**	**EACH**			
		TAUNTON AVE (4DMHS)				
		90+97 LT (4DMHS)		1.00	0004	01
		96+49 LT (4DMHS)		1.00	0004	01
		96+90 LT (4DMHS)		1.00	0004	01
		96+95 RT (4DMHS)		1.00	0004	01
		97+82 LT (4DMHS)		1.00	0004	01
		97+88 RT (4DMHS)		1.00	0004	01
		98+99 LT (4DMHS)		1.00	0004	01
		99+00 RT (4DMHS)		1.00	0004	01
		TAUNTON AVE (4MHWE)				
		90+97 LT (4MHWE)		1.00	0004	01
		95+45 LT (4MHWE)			0004	01
		96+90 LT (4MHWE)		1.00	0004	01
		97+82 LT (4MHWE)		1.00	0004	01
		TAUNTON AVE (6DMHS)				
		95+83 LT (ECCENTRIC) (6DMHS)		1.00	0004	01
		Item 702.0522 Total:		**12.00**		
068	**702.0541**	**GRANITE INLET STONE 38'' STANDARD**	**EACH**			

Distribution of Quantities

Project Name - Rt 44 - Taunton Ave (Rt 1A/114 - Mass S/L)
Estimate Name - Addendum 4
R.I. Contract No. - 2019-CH-032
FAP Nos: STP-RESF(406)

Item No.	Item Code	Description	UM	Qty.	Pay Code	Seq. No.
076	**702.9901 Cont.**	TAUNTON AVE				
		96+39 Lt		1.00	0004	01
		Item 702.9901 Total:		**1.00**		
077	**702.9902**	**STORMWATER TREATMENT UNIT (JFF-2)**	**EACH**			
		TAUNTON AVE				
		97+48 Lt		1.00	0004	01
		Item 702.9902 Total:		**1.00**		
078	**702.9903**	**WATER QUALITY STRUCTURE (CDS)**	**EACH**			
		TAUNTON AVE				
		92+00 Lt		1.00	0004	01
		Item 702.9903 Total:		**1.00**		
079	**702.9905**	**PRECAST MANHOLE 4′ DIAMETER STANDARD 4.2.0 WITH WEIR**	**EACH**			
		TAUNTON AVE (4MHWE)				
		90+97 LT (4MHWE)		1.00	0004	01
		95+45 LT (4MHWE)			0004	01
		96+90 LT (4MHWE)		1.00	0004	01
		97+82 LT (4MHWE)		1.00	0004	01
		Item 702.9905 Total:		**3.00**		
080	**702.9999**	**MISCELLANEOUS DRAINAGE REPAIRS**	**LS**			
		PROJECT WIDE				
		PROJECT WIDE		1.00	0004	01
		Item 702.9999 Total:		**1.00**		
081	**704.0100**	**RECONSTRUCT CATCH BASIN/CORBEL CONES**	**EACH**			
		TAUNTON AVE				
		101+75 LT		1.00	0004	01
		CONTINGENCY		2.00	0004	01

Distribution of Quantities

Project Name - Rt 44 - Taunton Ave (Rt 1A/114 - Mass S/L)
Estimate Name - Addendum 4
R.I. Contract No. - 2019-CH-032
FAP Nos: STP-RESF(406)

Item No.	Item Code	Description	UM	Qty.	Pay Code	Seq. No.
092	**708.9042 Cont.**	90+97 LT (4DMHS)		1.00	0004	01
		96+49 LT (4DMHS)		1.00	0004	01
		96+90 LT (4DMHS)		1.00	0004	01
		96+95 RT (4DMHS)		1.00	0004	01
		97+82 LT (4DMHS)		1.00	0004	01
		97+88 RT (4DMHS)		1.00	0004	01
		98+99 LT (4DMHS)		1.00	0004	01
		99+00 RT (4DMHS)		1.00	0004	01
		TAUNTON AVE (4MHWE)				
		90+97 LT (4MHWE)		1.00	0004	01
		95+45 LT (4MHWE)			0004	01
		96+90 LT (4MHWE)		1.00	0004	01
		97+82 LT (4MHWE)		1.00	0004	01
		TAUNTON AVE (6DMHS)				
		95+83 LT (ECCENTRIC) (6DMHS)		1.00	0004	01
		TAUNTON AVE (ADMHG)				
		86+00 LT (ADMHG)		1.00	0004	01
		92+52 LT (ADMHG)		1.00	0004	01
		Item 708.9042 Total:		**15.00**		
093	**712.0100**	**WATER GATE BOX**	**EACH**			
		TAUNTON AVE				
		101+50 LT		1.00	0004	01
		89+67 LT		1.00	0004	01
		96+95 LT		1.00	0004	01
		CONTINGENCY		7.00	0004	01
		Item 712.0100 Total:		**10.00**		
094	**712.0200**	**GAS GATE BOX**	**EACH**			
		TAUNTON AVE				
		97+90 LT		1.00	0004	01
		CONTINGENCY		4.00	0004	01
		Item 712.0200 Total:		**5.00**		

Distribution of Quantities

Project Name - Rt 44 - Taunton Ave (Rt 1A/114 - Mass S/L)
Estimate Name - Addendum 4
R.I. Contract No. - 2019-CH-032
FAP Nos: STP-RESF(406)

Item No.	Item Code	Description	UM	Qty.	Pay Code	Seq. No.
095	**713.8268**	**ADJUST CURB STOP BOX TO GRADE**	**EACH**			
		TAUNTON AVE				
		81+19 LT		1.00	0004	01
		85+80 LT		1.00	0004	01
		91+20 RT		1.00	0004	01
		94+00 RT		1.00	0004	01
		99+84 LT		1.00	0004	01
		Item 713.8268 Total:		**5.00**		
096	**713.8269**	**ADJUST WATER GATE BOXES TO GRADE**	**EACH**			
		TAUNTON AVE				
		100+63 LT		2.00	0004	01
		101+42 LT		2.00	0004	01
		101+46 LT		2.00	0004	01
		102+63 LT		2.00	0004	01
		102+74 LT		2.00	0004	01
		81+23 LT		2.00	0004	01
		82+52 RT		2.00	0004	01
		89+63 LT		2.00	0004	01
		89+67 LT		2.00	0004	01
		92+40 LT		2.00	0004	01
		92+93 RT		1.00	0004	01
		95+91 RT		1.00	0004	01
		96+91 LT		2.00	0004	01
		97+28 LT		1.00	0004	01
		97+99 LT		2.00	0004	01
		98+50 RT		1.00	0004	01
		99+48 LT		1.00	0004	01
		Item 713.8269 Total:		**29.00**		
097	**713.8300**	**ADJUST GAS GATE BOXES TO GRADE**	**EACH**			
		TAUNTON AVE				
		101+56 LT		2.00	0004	01

Distribution of Quantities

Project Name - Rt 44 - Taunton Ave (Rt 1A/114 - Mass S/L)
Estimate Name - Addendum 4
R.I. Contract No. - 2019-CH-032
FAP Nos: STP-RESF(406)

Item No.	Item Code	Description	UM	Qty.	Pay Code	Seq. No.
097	**713.8300 Cont.**	85+84 LT		1.00	0004	01
		89+03 RT		1.00	0004	01
		89+15 RT		1.00	0004	01
		91+94 RT		1.00	0004	01
		92+64 RT		1.00	0004	01
		94+05 RT		1.00	0004	01

Distribution of Quantities

Project Name - Rt 44 - Taunton Ave (Rt 1A/114 - Mass S/L)
Estimate Name - Addendum 4
R.I. Contract No. - 2019-CH-032
FAP Nos: STP-RESF(406)

Item No.	Item Code	Description	UM	Qty.	Pay Code	Seq. No.
160	**202.9911**	**HANDLING AND STOCKPILING CONTAMINATED SOILS**	**CY**			
		BIORETENTION BASIN				
		BIORETENTION BASIN		1,113.00	0004	01
		RELIEF SWALE				
		20+75 - 25+00		141.88	0004	01
		TAUNTON AVE				
		96+00 - 98+75		105.12	0004	01
		Item 202.9911 Total:		**1,360.00**		
161	**701.8100**	**FURNISH AND INSTALL DUCTILE IRON FITTINGS**	**LBS**			
		TAUNTON AVE				
		81+24 LT		150.00	0004	01
		96+86 - 96+96 RT		500.00	0004	01
		Item 701.8100 Total:		**650.00**		
162	**906.0111**	**GRANITE CURB, QUARRY SPLIT CIRCULAR, STANDARD 7.3.0**	**LF**			
		TAUNTON AVE (GRANC)				
		101+27 - 101+32 LT (GRANC)		5.50	0004	01
		101+63 - 101+69 LT (GRANC)		6.00	0004	01
		200+44 - 200+49 RT (GRANC)		4.00	0004	01
		200+55 - 200+57 RT (GRANC)		3.00	0004	01
		91+49 - 91+57 LT (GRANC)		8.50	0004	01
		92+02 - 92+07 LT (GRANC)		5.50	0004	01
		96+90 - 96+99 RT (GRANC)		9.50	0004	01
		97+00 - 97+05 RT (GRANC)		4.00	0004	01
		97+82 - 97+90 RT (GRANC)		6.00	0004	01
		97+96 - 97+99 RT (GRANC)		3.00	0004	01
		Item 906.0111 Total:		**55.00**		
163	**906.0116**	**GRANITE CURB, QUARRY SPLIT 2 FOOT**	**EACH**			

Distribution of Quantities

Project Name - Rt 44 - Taunton Ave (Rt 1A/114 - Mass S/L)
Estimate Name - Addendum 4
R.I. Contract No. - 2019-CH-032
FAP Nos: STP-RESF(406)

Item No.	Item Code	Description	UM	Qty.	Pay Code	Seq. No.
163	**906.0116**	**Cont. CORNERS, STANDARD 7.3.4**				

Distribution of Quantities

Project Name - Rt 44 - Taunton Ave (Rt 1A/114 - Mass S/L)
Estimate Name - Addendum 4
R.I. Contract No. - 2019-CH-032
FAP Nos: STP-RESF(406)

Item No.	Item Code	Description	UM	Qty.	Pay Code	Seq. No.
163	**906.0116 Cont.**	TAUNTON AVE (2GRCC)				
		200+40 LT (2GRCC)		1.00	0004	01
		97+10 RT (2GRCC)		1.00	0004	01
		97+79 RT (2GRCC)		1.00	0004	01
		Item 906.0116 Total:		**3.00**		
164	**906.0120**	**GRANITE WHEELCHAIR RAMP CURB STANDARDS 7.3.3, 43.3.0 AND 43.3.1**	**EACH**			
		TAUNTON AVE				
		101+23 - 101+27 RT		1.00	0004	01
		101+69 - 101+72 RT		1.00	0004	01
		91+39 - 91+45 RT		2.00	0004	01
		92+07 - 92+10 RT		1.00	0004	01
		93+71 - 93+75 LT		1.00	0004	01
		93+71 -93+75 RT		1.00	0004	01
		97+00 - 97+03 RT		1.00	0004	01
		97+90 - 97+96 RT		2.00	0004	01
		Item 906.0120 Total:		**10.00**		
165	**T09.9901**	**SERVICE PEDESTAL AND LIGHTING SYSTEM MODIFICATIONS**	**LS**			
		TAUNTON AVE				
		PARK AND RIDE		1.00	0004	01
		Item T09.9901 Total:		**1.00**		
166	**203.9901**	**DEWATERING**	**LS**			
		TAUNTON AVE				
		PROJECT LIMITS		1.00	0004	01
		Item 203.9901 Total:		**1.00**		
167	**203.9951**	**TREATMENT OF CONTAMINATED GROUNDWATER**	**EACH**			
		TAUNTON AVE				

Distribution of Quantities

Project Name - Rt 44 - Taunton Ave (Rt 1A/114 - Mass S/L)
Estimate Name - Addendum 4
R.I. Contract No. - 2019-CH-032
FAP Nos: STP-RESF(406)

Item No.	Item Code	Description	UM	Qty.	Pay Code	Seq. No.
167	**203.9951 Cont.**	PROJECT LIMITS		20,000.00	0004	01
		Item 203.9951 Total:		**20,000.00**		
168	**920.0200**	**FILTER FABRIC FOR RIP-RAP**	**SY**			
		TAUNTON AVE				
		201+40 - 201+48		16.89	0004	01
		94+40 - 94+44 LT		2.19	0004	01
		96+00 - 96+18 LT		16.90	0004	01
		96+11 - 96+15 LT		2.19	0004	01
		96+46 - 96+51 LT		2.19	0004	01
		96+87 - 96+93 LT		2.19	0004	01
		97+43 - 97+50 LT		2.19	0004	01
		97+79 - 97+84 LT		2.19	0004	01
		Item 920.0200 Total:		**46.93**		
169	**601.0300**	**CLASS A PORTLAND CEMENT CONCRETE**	**CY**			
		TAUNTON AVE				
		101+23 - 101+27 RT		0.09	0004	01
		101+69 - 101+72 RT		0.09	0004	01
		91+39 - 91+45 RT		0.18	0004	01
		92+07 - 92+10 RT		0.09	0004	01
		93+71 - 93+75 LT		0.09	0004	01
		93+71 -93+75 RT		0.09	0004	01
		97+00 - 97+03 RT		0.09	0004	01
		97+90 - 97+96 RT		0.18	0004	01
		ROUND UP		0.96	0004	01
		TAUNTON AVE (2GRCC)				
		200+40 LT (2GRCC)		0.06	0004	01
		97+10 RT (2GRCC)		0.06	0004	01
		97+79 RT (2GRCC)		0.06	0004	01
		TAUNTON AVE (3GRTC)				
		101+87 RT (3GRTC)		0.09	0004	01
		102+17 RT (3GRTC)		0.09	0004	01

Distribution of Quantities

Project Name - Rt 44 - Taunton Ave (Rt 1A/114 - Mass S/L)
Estimate Name - Addendum 4
R.I. Contract No. - 2019-CH-032
FAP Nos: STP-RESF(406)

Item No.	Item Code	Description	UM	Qty.	Pay Code	Seq. No.
169	**601.0300 Cont.**	102+33 RT (3GRTC)		0.09	0004	01
		102+40 LT (3GRTC)		0.09	0004	01
		102+60 RT (3GRTC)		0.09	0004	01
		102+77 LT (3GRTC)		0.09	0004	01
		84+59 LT (3GRTC)		0.09	0004	01
		84+87 LT (3GRTC)		0.09	0004	01
		85+30 LT (3GRTC)		0.09	0004	01
		85+58 LT (3GRTC)		0.09	0004	01
		87+10 RT (3GRTC)		0.09	0004	01
		87+33 RT (3GRTC)		0.09	0004	01
		88+40 RT (3GRTC)		0.09	0004	01
		88+64 RT (3GRTC)		0.09	0004	01
		89+08 RT (3GRTC)		0.09	0004	01
		89+30 LT (3GRTC)		0.09	0004	01
		89+48 RT (3GRTC)		0.09	0004	01
		89+65 LT (3GRTC)		0.09	0004	01
		91+87 LT (3GRTC)		0.09	0004	01
		91+95 RT (3GRTC)		0.09	0004	01
		92+01 LT (3GRTC)		0.09	0004	01
		92+11 LT (3GRTC)		0.09	0004	01
		92+28 RT (3GRTC)		0.09	0004	01
		92+52 RT (3GRTC)		0.09	0004	01
		92+75 RT (3GRTC)		0.09	0004	01
		92+96 RT (3GRTC)		0.09	0004	01
		93+20 RT (3GRTC)		0.09	0004	01
		93+34 RT (3GRTC)		0.09	0004	01
		93+51 LT (3GRTC)		0.09	0004	01
		93+65 RT (3GRTC)		0.09	0004	01
		94+01 LT (3GRTC)		0.09	0004	01
		94+33 RT (3GRTC)		0.09	0004	01
		94+58 LT (3GRTC)		0.09	0004	01
		94+66 RT (3GRTC)		0.09	0004	01
		95+08 RT (3GRTC)		0.09	0004	01

Distribution of Quantities

Project Name - Rt 44 - Taunton Ave (Rt 1A/114 - Mass S/L)
Estimate Name - Addendum 4
R.I. Contract No. - 2019-CH-032
FAP Nos: STP-RESF(406)

Item No.	Item Code	Description	UM	Qty.	Pay Code	Seq. No.
169	**601.0300 Cont.**	95+41 RT (3GRTC)		0.09	0004	01
		95+66 LT (3GRTC)		0.09	0004	01
		95+95 LT (3GRTC)		0.09	0004	01
		98+65 LT (3GRTC)		0.09	0004	01
		98+85 LT (3GRTC)		0.09	0004	01
		99+24 RT (3GRTC)		0.09	0004	01
		99+54 LT (3GRTC)		0.09	0004	01
		99+57 RT (3GRTC)		0.09	0004	01
		99+80 LT (3GRTC)		0.09	0004	01
		TAUNTON AVE (6GRTC)				
		86+57 RT (6GRTC)		0.19	0004	01
		86+88 RT (6GRTC)		0.19	0004	01
		TAUNTON AVE (GRANC)				
		101+27 - 101+32 LT (GRANC)		0.20	0004	01
		101+63 - 101+69 LT (GRANC)		0.22	0004	01
		200+44 - 200+49 RT (GRANC)		0.15	0004	01
		200+55 - 200+57 RT (GRANC)		0.11	0004	01
		91+49 - 91+57 LT (GRANC)		0.31	0004	01
		92+02 - 92+07 LT (GRANC)		0.20	0004	01
		96+90 - 96+99 RT (GRANC)		0.35	0004	01
		97+00 - 97+05 RT (GRANC)		0.15	0004	01
		97+82 - 97+90 RT (GRANC)		0.22	0004	01
		97+96 - 97+99 RT (GRANC)		0.11	0004	01
		TAUNTON AVE (RASTC)				
		97+07 RT (RASTC)		0.31	0004	01
		97+82 RT (RASTC)		0.31	0004	01
		TAUNTON AVE (RASTS)				
		93+77 LT (RASTS)		0.31	0004	01
		93+77 RT (RASTS)		0.31	0004	01
		TAUNTON AVE (RHHGC)				
		101+17 - 101+23 LT (RHHGC)		0.19	0004	01
		101+76 - 101+82 LT (RHHGC)		0.19	0004	01
		101+80 - 101+86 RT (RHHGC)		0.19	0004	01

Distribution of Quantities

Project Name - Rt 44 - Taunton Ave (Rt 1A/114 - Mass S/L)
Estimate Name - Addendum 4
R.I. Contract No. - 2019-CH-032
FAP Nos: STP-RESF(406)

Item No.	Item Code	Description	UM	Qty.	Pay Code	Seq. No.
169	**601.0300 Cont.**	102+19 - 102+32 RT (RHHGC)		0.39	0004	01
		102+33 - 102+39 LT (RHHGC)		0.19	0004	01
		102+61 - 102+67 RT (RHHGC)		0.19	0004	01
		102+79 - 102+90 LT (RHHGC)		0.36	0004	01
		80+50 - 80+60 LT (RHHGC)		0.31	0004	01
		81+16 - 81+29 LT (RHHGC)		0.40	0004	01
		83+32 - 83+38 LT (RHHGC)		0.19	0004	01
		84+52 - 84+58 LT (RHHGC)		0.19	0004	01
		84+89 - 84+95 LT (RHHGC)		0.19	0004	01
		85+23 - 85+29 LT (RHHGC)		0.19	0004	01
		85+59 - 85+65 LT (RHHGC)		0.19	0004	01
		86+48 - 86+54 RT (RHHGC)		0.19	0004	01
		86+91 - 87+08 RT (RHHGC)		0.54	0004	01
		87+34 - 87+40 RT (RHHGC)		0.19	0004	01
		88+32 - 88+38 RT (RHHGC)		0.19	0004	01
		88+66 - 88+72 RT (RHHGC)		0.19	0004	01
		89+01 - 89+07 RT (RHHGC)		0.19	0004	01
		89+23 - 89+29 LT (RHHGC)		0.19	0004	01
		89+50 - 89+56 RT (RHHGC)		0.19	0004	01
		89+67 - 89+73 LT (RHHGC)		0.19	0004	01
		91+33 - 91+39 LT (RHHGC)		0.19	0004	01
		91+88 - 91+94 RT (RHHGC)		0.19	0004	01
		92+09 - 93+72 LT (RHHGC)		5.00	0004	01
		92+30 - 92+50 RT (RHHGC)		0.63	0004	01
		92+76 - 92+94 RT (RHHGC)		0.56	0004	01
		93+22 - 93+33 RT (RHHGC)		0.32	0004	01
		93+67 - 93+71 RT (RHHGC)		0.12	0004	01
		93+89 - 93+95 RT (RHHGC)		0.19	0004	01
		93+89 - 93+98 LT (RHHGC)		0.31	0004	01
		94+26 - 94+32 RT (RHHGC)		0.19	0004	01
		94+47 - 95+64 LT (RHHGC)		3.63	0004	01
		94+68 - 95+07 RT (RHHGC)		1.17	0004	01
		95+43 - 96+44 RT (RHHGC)		3.12	0004	01

Distribution of Quantities

Project Name - Rt 44 - Taunton Ave (Rt 1A/114 - Mass S/L)
Estimate Name - Addendum 4
R.I. Contract No. - 2019-CH-032
FAP Nos: STP-RESF(406)

Item No.	Item Code	Description	UM	Qty.	Pay Code	Seq. No.
169	**601.0300 Cont.**	95+96 - 98+64 LT (RHHGC)		8.26	0004	01
		97+09 - 97+16 RT (RHHGC)		0.86	0004	01
		97+96 - 98+13 RT (RHHGC)		0.52	0004	01
		98+39 - 99+23 RT (RHHGC)		2.59	0004	01
		98+87 - 99+52 LT (RHHGC)		2.02	0004	01
		99+59 - 100+12 RT (RHHGC)		1.64	0004	01
		99+81 - 99+95 LT (RHHGC)		0.43	0004	01
		Item 601.0300 Total:		**47.00**		
170	**701.5206**	**6 INCH DUCTILE IRON WATER PIPE CLASS 52, RESTRAINED JOINT**	**LF**			
		TAUNTON AVE				
		81+24 LT		10.00	0004	01
		Item 701.5206 Total:		**10.00**		
171	**701.8106**	**6 INCH GATE VALVE AND BOX**	**EACH**			
		TAUNTON AVE				
		81+24 LT		1.00	0004	01
		Item 701.8106 Total:		**1.00**		
172	**701.8170**	**8X6 TAPPING SLEEVE & TAPPING VALVE WITH GATE BOX**	**EACH**			
		TAUNTON AVE				
		81+24 LT		1.00	0004	01
		Item 701.8170 Total:		**1.00**		
173	**702.9906**	**PRECAST OUTLET CONTROL STRUCTURE**	**EACH**			
		TAUNTON AVE				
		95+40 LT		1.00	0004	01
		Item 702.9906 Total:		**1.00**		