PROJECT MANUAL

RHODE ISLAND DEPARTMENT OF TRANSPORATION

EAST PROVIDENCE SALT SHED FACILITY

Warren Ave.
East Providence, RI 02914

RGB #6456
July 2019

50 Holden Street · Providence, RI 02908 · Tel: (401) 272-1730 · www.rgb.net
Architecture · Project Management · Interior Design
RGB architects

This Contract Has An MBE Goal of 10%

PROCUREMENT AND CONTRACTING DOCUMENTS GROUP

DIVISION 00 - PROCUREMENT AND CONTRACTING REQUIREMENTS

00 04 10 .....BID FORM..... 2
00 07 00 .....SUPPLEMENTARY CONDITIONS 8
00 52 00 .....AGREEMENT FORM 1
.....AIA A101 7
00 61 00 .....PERFORMANCE BOND; PAYMENT BOND..... 1
.....AIA A312 8
00 70 00 .....GENERAL CONDITIONS 1
.....AIA A201 – 2007 40
00 82 00 .....PREVAILING WATE RATES 1

SPECIFICATIONS GROUP

DIVISION 01 - GENERAL REQUIREMENTS

01 02 10 .....ALLOWANCES 2
01 10 00 .....SUMMARY OF THE WORK 7
01 20 00 .....PROJECT MEETINGS 3
01 22 00 .....UNIT PRICES 2
01 25 00 .....SUBSTITUTION PROCEDURES 4
01 26 00 .....CONTRACT MODIFICATION PROCEDURES……..... 3
01 31 00 .....PROJECT MANAGEMENT AND COORDINATION..... 10
01 33 00 .....SUBMITTAL PROCEDURES 10
01 40 00 .....QUALITY REQUIREMENTS..... 11
01 42 00 .....REFERENCES 5
01 50 00 .....TEMPORARY FACILITIES AND CONTROLS 11
01 60 00…….PRODUCT REQUIREMENTS ……. 5
01 71 00…….CLEANING..... 3
01 73 00 .....EXECUTION 10
01 74 20 .....CONSTRUCTION WASTE MANAGEMENT AND DISPOSAL 7
01 77 00 .....CLOSEOUT PROCEDURES..... 6
01 78 20 .....OPERATION AND MAINTENANCE DATA 8
01 78 30 .....PROJECT RECORD DOCUMENTS 5

DIVISION 03 – CONCRETE

033000 .....CAST-IN-PLACE CONCRETE 13

DIVISION 13 – SPECIAL CONSTRUCTION

13 12 10 .....FRAME SUPPORTED MEMBRANE STRUCTURE..... 5

DIVISION 26 – ELECTRICAL – Refer to Electrical Drawing

DIVISION 30 – ENVIRONMENTAL (LOCATED IN APPENDIX - SOILS MANAGEMENT PLAN)

30 01 20 .....HEALTH AND SAFETY REQUIREMENTS..... 3
30 01 55 .....DISPOSAL OF SOLID WASTE 1
30 01 71 .....DISPOSAL OF LIQUID WASTE 2
30 02 05 .....CONTAMINATED SOIL EXCAVATION..... 4

© THE ROBINSON GREEN BERETTA CORPORATION – 6456

30 02 25 .....LOAD, HAUL, AND DISPOSE CONTAMINATED SOIL..... 4
30 04 10 .....ANALYTICAL TESTING REQUIREMENTS FOR INPORTED SOIL..... 6
30 04 51 .....DEWATERING AND TREATMENT-AREAS WITH CONTAMINATED GROUNDWATER..... 11
30 04 75 .....SOIL STOCKPILE – WET CONTAMINATED SOIL 3
30 04 82 .....HANDLING, HAULING, AND STOCKPILING OF WET CONTAMINATED SOIL 2
31 15 00 .....CATCH BASIN INLET PROTECTION..... 2

DIVISION 31 – EARTHWORK
31 10 00 .....SITE CLEARING..... 2
31 20 00 .....EARTHWORK..... 3
31 25 00 .....EROSION AND SEDIMENT CONTROL 2
31 25 10 .....DUST CONTROL..... 2
31 32 00 .....AGGREGATE PIERS 11

DIVISION 32 – EXTERIOR IMPROVEMENTS
32 12 16 .....ASPHALT PAVEMENT..... 2

ADDENDUM

1. **RIPDES REMEDIATION GENERAL PERMIT NOTICE OF INTENT COVER LETTER**
2. **RIPDES REMEDIATION GENERAL PERMIT NOTICE OF INTENT DOCUMENTS SUBMITTAL**
3. **RIDEM REMEDIAL APPROVAL LETTER**
4. **2019 CONSTRUCTION SOILS MANAGEMENT PLAN**
5. **RIDEM RIPDES APPLICATION No. RIG85G040 APPROVAL LETTER**
6. **GEOTECH REPORT – GEISSER ENGINEERING APRIL 22, 2019**

Required Forms - To Be Filled Out and Submitted With Bid Offer

END TABLE OF CONTENTS

© THE ROBINSON GREEN BERETTA CORPORATION – 6456

Solicitation #: 7598903
Solicitation Title: East Providence Salt Shed

BID FORM

To: The State of Rhode Island Department of Administration
Division of Purchases, 2nd Floor
One Capitol Hill, Providence, RI 02908-5855

Bidder: _____
Legal name of entity

_____
Address (street/city/state/zip)

_____
Contact name Contact email

_____
Contact telephone Contact fax

1. BASE BID PRICE

The Bidder submits this bid proposal to perform all of the work (including labor and materials) described in the solicitation for this Base Bid Price (*including the costs for all Allowances, Bonds, and Addenda)*:

$_____
(base bid price *in figures* printed electronically, typed, or handwritten legibly in ink)

_____
(base bid price *in words* printed electronically, typed, or handwritten legibly in ink)

- **Allowances**

The Base Bid Price ***includes*** the costs for the following Allowances:

Allowances are specified in Division 1 of the specifications.

No. 1: Load Haul, & Dispose Contaminated Soil 150 tons @ $50/ton $ 7,500.00

No. 2: Disposal of Liquid Waste, 100 gallons @ $10/gal $ 1,000.00

Solicitation #: 7598903
Solicitation Title: East Providence Salt Shed

No. 3: Disposal of Liquid Waste in excess of 100 Gallons @ $10/gal	$ 1,000.00
No. 4: Handling Hauling & Stockpile Management Of Wet Contaminated Soil initial 300 cy @ $25.25/cy	$ 7,575.00
No. 5: Handling Hauling & Stockpile Management Of Wet Contaminated Soil in excess of Initial 300 sy @ $25.25/cy	$ 1,525.00
No. 6: Unforeseen Conditions requiring remedial work	$ 7,500.00
No. 7: Police Detail	$ 5,000.00
Total Allowances:	**$ 31,100.00**

- **Bonds**

  The Base Bid Price ***includes*** the costs for all Bid and Payment and Performance Bonds required by the solicitation.

- **Addenda**

  The Bidder has examined the entire solicitation (including the following Addenda), and the Base Bid Price ***includes*** the costs of any modifications required by the Addenda.

  All Addenda must be acknowledged.

  Addendum No. 1 dated: _____

  Addendum No. 2 dated: _____

  Addendum No. 3 dated: _____

  Addendum No. 4 dated: _____

Solicitation #: 7598903
Solicitation Title: East Providence Salt Shed

Addendum No. 5 dated: _____

Addendum No. 6 dated: _____

2. ALTERNATES (*Additions/Subtractions* to Base Bid Price) No ALTERNATES REQUIRED

3. UNIT PRICES –

The Bidder submits these predetermined Unit Prices as the basis for any change orders approved in advance by the State. These Unit Prices include ***all*** costs, including labor, materials, services, regulatory compliance, overhead, and profit.
For reductions in the work (lesser quantities), 88% of the prices will apply.

Unit Price No. 1	Disposal of Liquid Waste per Section 30 01 71	
	Unit of Measurement: Gallons	$, .

Unit Price No. 2	Dewatering and Treatment – Areas with Contaminated Groundwater per Section 300451	
	Unit of Measurement: Gallons	$ . .

Unit Price No. 3	Load, Haul Dry Contaminated Soil Type 2 per Section 300225	
	Unit of Measurement: Tons	$, .

Unit Price No. 4	Disposal of Dry Contaminated Soil Type 2 per Section 300225	
	Unit of Measurement: Tons	$, .

Solicitation #: 7598903
Solicitation Title: East Providence Salt Shed

Unit Price No. 5	Handling, Hauling, and Stockpiling of Soil greater than 4-feet below grade per Section 300225	
	Unit of Measurement: C.Y.	$, .
Unit Price No. 6	Load and Haul Contaminated Soil greater than 4-feet below grade per Section 300225	
	Unit of Measurement: Tons	, .
Unit Price No. 7	Disposal of Contaminated Soil Greater than 4-feet below grade	
	Unit of Measurement: Tons	$, .
Unit Price No. 8	Handling, Hauling, and Stockpile Management of Wet Contaminated Soil per Section 300482	
	Unit of Measurement: Greater than 295 Cubic Yards	$, .
Unit Price No. 9	Furnish and install 4" deep loam and grass seed	
	Unit of Measurement: per Section 012200, 3.1 Schedule of Unit Prices. 1 SY (Square Yard)	$, .
Unit Price No. 10	Furnish and install compacted "gravel fill" as specified	
	Unit of Measurement: per Section 012200, 3.1 Schedule of Unit Prices. 1 CY (Cubic Yard)	$, .
Unit Price No. 11	Furnish and install Type I-1 bituminous concrete (1.5" binder & 1.5" surface course) over 8" compacted gravel base including all preparation work	
	Unit of Measurement: per Section 012200, 3.1 Schedule of Unit Prices. 1 SY (Square Yard)	$, .

Solicitation #: 7598903
Solicitation Title: East Providence Salt Shed

Unit Price No. 12	Furnish and install new 4" thick concrete sidewalk or pad including excavation, 8" gravel base, formwork, reinforcing, finishing & striping										
	Unit of Measurement: per Section 012200, 3.1 Schedule of Unit Prices. 1 SY (Square Yard)	$			,				.		

Unit Price No. 13	Furnish and install 10'-0" length of precast concrete curbing including excavation										
	Unit of Measurement: per Section 012200, 3.1 Schedule of Unit Prices. Ea. (Each)	$			,				.		

Unit Price No. 14	Furnish and install 2' precast concrete radius corners (RI Standard 7.16) including excavation										
	Unit of Measurement: per Section 012200, 3.1 Schedule of Unit Prices. Ea. (Each)	$			,				.		

Unit Price No. 15	Installation of concrete encased electrical duct bank. Price includes furnishing and placing of all required materials as well as other incidental work										
	Unit of Measurement: per Section 012200, 3.1 Schedule of Unit Prices. 1 LF (Linear foot)	$			,				.		

Any and all material(s) quantities due to excessive amount(s) using units prices will be able to be negotiated due to the volume.

4. CONTRACT TIME

The Bidder offers to perform the work in accordance with the timeline specified below:

- Start of construction: Upon Notice To Proceed (NTP)
- Substantial completion: September 30, 2020
- Final completion: November 15, 2020

Solicitation #: 7598903
Solicitation Title: East Providence Salt Shed

5. LIQUIDATED DAMAGES

The successful bidder awarded a contract pursuant to this solicitation shall be liable for and pay the State, as liquidated damages and not as a penalty, the following amount for each calendar day of delay beyond the date for substantial completion, as determined in the sole discretion of the State: $ 1,200.00.

– – – – – – –

This bid proposal is irrevocable for 60 days from the bid proposal submission deadline.

If the Bidder is determined to be the successful bidder pursuant to this solicitation, the Bidder will promptly: (i) comply with each of the requirements of the Tentative Letter of Award; and (ii) commence and diligently pursue the work upon issuance and receipt of the purchase order from the State and authorization from the user agency.

The person signing below certifies that he or she has been duly authorized to execute and submit this bid proposal on behalf of the Bidder.

BIDDER

Date:_____

_____
Name of Bidder

_____
Signature in ink

_____
Printed name and title of person signing on behalf of Bidder

#_____
Bidder's Contractor Registration Number

SECTION 000700 - SUPPLEMENTARY CONDITIONS

A. INTRODUCTION

The following supplements modify the "General Conditions of the Contract for Construction, AIA Document A201-1997. Where a portion of the General Conditions is modified or deleted by the Supplementary Conditions, the unaltered portions shall remain in effect.

B. OTHER CONDITIONS

Should additional conditions be required for the work of this Project, they shall be included in that portion of this Project Manual directly following these Supplementary Conditions; and with their inclusion become a part of the Contract for this work.

C. REFERENCE TO DIVISION 1

Where provisions of the General Conditions relate to project administrative or work-related requirements of the Contract, those paragraphs are deleted from General Conditions, and are specified in Division 1, "General Requirements" of the Specifications. The deleted paragraphs are:

3.4	3.8	3.12	3.15
3.6	3.10	3.13	9.2
3.7	3.11	3.14	

ARTICLE 1 - GENERAL PROVISIONS

Add the following sub-paragraphs to 1.1:

1.1.8 Miscellaneous Definitions.

1.1.8.1 The term "product" includes materials, systems and equipment.

1.1.8.2 Where "as shown", "as indicated", "as detailed", or words of similar import are used, it shall be understood that references to the drawings accompanying this specification is made, unless otherwise stated. Where "as directed", "as required", "as permitted", "approved", "acceptance", or words of similar import are used, it shall be understood that the direction, requirement, permission, approval or acceptance of the Architect is intended, unless stated otherwise. As used herein, "provide" shall be understood to mean "provide complete in place" that is, "furnish and install".

ARTICLE 2 - OWNER

2.2 Information and Services Required of the Owner.

2.2.5 Change to read:

"Prior to the start of construction, the Contractor will be furnished, free of charge, one set of transparencies of the Drawings and one copy of the Project Manual, complete with all Addendum, to make copies of the documents as necessary for execution of the Work. In addition, these documents shall be used for preparation of "Record Documents" as specified in Section 01300."

ARTICLE 3 - CONTRACTOR

Add the following sub-paragraphs to 3.2:

© THE ROBINSON GREEN BERETTA CORPORATION - 6456

3.2.4 In case of an inconsistency between Drawings and Specifications or within either Document not clarified by addendum, provide the better quality or greater quantity of Work in accordance with the Architect's interpretation.

3.2.5 Omissions from the drawings and specifications of items obviously needed to perform the work, such as attachments, bolts, hangers, and other fastening devices shall not relieve the Contractor from furnishing and installing same. It shall be the duty of the Contractor to procure from the Architect all necessary interpretations of the designs, drawings and specifications.

3.4 Delete Paragraph 3.4, LABOR AND MATERIALS, in its entirety.

Refer to Specification Section entitled, SUMMARY OF THE WORK, for provisions on the subject. References to Section 3.4 elsewhere in the Contract Documents shall read as referring to that Section of the Specifications.

3.6 Delete Paragraph 3.6, TAXES, in its entirety.

Refer to Specification Section entitled, SUMMARY OF THE WORK, for provisions on the subject. References to Section 3.6 elsewhere in the Contract Documents shall read as referring to that Section of the Specifications.

3.7 Delete Paragraph 3.7, PERMITS, FEES AND NOTICES, in its entirety.

Refer to Specification Section entitled, SUMMARY OF THE WORK, for provisions on the subject. References to Section 3.7 elsewhere in the Contract Documents shall read as referring to that Section of the Specifications.

3.8 Delete Paragraph 3.8, ALLOWANCES, in its entirety.

Refer to Specification Section entitled, ALLOWANCES, for provisions on the subject. References to Section 3.8 elsewhere in the Contract Documents shall read as referring to that Section of the Specifications.

3.9 Add the following to Paragraph 3.9, SUPERINTENDENT:

3.9.2 Employ a project superintendent acceptable to the Owner and Architect. Prior to the assignment or replacement of a superintendent, submit a resume to the Architect for acceptance review.

3.10 Delete Paragraph 3.10, CONTRACTOR'S CONSTRUCTION SCHEDULES, in its entirety.

Refer to Specification Section entitled, SUBMITTALS, for provisions on the subject. References to Section 3.10 elsewhere in the Contract Documents shall read as referring to that Section of the Specifications.

3.11 Delete Paragraph 3.11, DOCUMENTS AND SAMPLES AT THE SITE, in its entirety.

Refer to Specification Section entitled, SUMMARY OF THE WORK, for provisions on the subject. References to Section 3.11 elsewhere in the Contract Documents shall read as referring to that Section of the Specifications.

3.12 Delete Paragraph 3.12, SHOP DRAWINGS, PRODUCT DATA AND SAMPLES, in its entirety.

Refer to Specification Section entitled, SUBMITTALS, for provisions on the subject. References to Section 3.12 elsewhere in the Contract Documents shall read as referring to that Section of the Specifications.

© THE ROBINSON GREEN BERETTA CORPORATION - 6456

3.13 Delete Paragraph 3.13, USE OF SITE, in its entirety.

Refer to Specification Section entitled, SUMMARY OF THE WORK, for provisions on the subject. References to Section 3.13 elsewhere in the Contract Documents shall read as referring to that Section of the Specifications.

3.14 Delete Paragraph 3.14, CUTTING AND PATCHING, in its entirety.

Refer to Specification Section entitled, SUMMARY OF THE WORK, for provisions on the subject. References to Section 3.14 elsewhere in the Contract Documents shall read as referring to that Section of the Specifications.

3.15 Delete Paragraph 3.15, CLEANING UP, in its entirety.

Refer to Specification Section entitled, CONTRACT CLOSEOUT, for provisions on the subject. References to Section 3.15 elsewhere in the Contract Documents shall read as referring to that Section of the Specifications.

ARTICLE 7 - CHANGES IN THE WORK

7.1 Changes.

Add new sub-paragraphs:

7.1.4 The amount of credit to be allowed by the Contractor to the Owner for any deletion or change which results in a net decrease in the Contract Sum will be the amount of the actual net cost as confirmed by the Architect. When both additions and credits covering related Work or substitutions are involved in any one change, the allowance for overhead and profit shall be figured on the basis of the net increase, if any, with respect to that change.

7.1.5 The reasonable (as stated herein) allowance for overhead and profit combined, included in the total cost to the Owner, shall be based upon the following schedule:

For the Contractor, for any work performed by his own forces, 10% of the cost;

For each Sub-Contractor involved, work performed by his own forces, 10% of the cost;

For the Contractor, for work performed by his sub-contractor, 5% of the amount due the sub-contractor.

7.1.6 Subsequent to the approval of a Change Order, whether involving a change in Contract Sum, contract time or both, no additional claim related to that matter will be considered by the Owner. A change incorporated into a Change Order is therefore, all inclusive, and includes such factors as project impact, schedule "ripple" effect or other items which may pertain to such change.

ARTICLE 8 - TIME

8.3 Delays and Extensions of Time

Add new sub-paragraphs:

8.3.5 When designated by the Architect, additional time of one month will be allowed for the principal purpose of removing materials and equipment from the site and for the final cleaning up operations.

© THE ROBINSON GREEN BERETTA CORPORATION - 6456

ARTICLE 9 - PAYMENTS AND COMPLETION

9.2 Delete Paragraph 9.2, SCHEDULE OF VALUES, in its entirety.

Refer to Specification Section entitled, SUBMITTALS, for provisions on the subject. References to Section 9.2 elsewhere in the Contract Documents shall read as referring to that Section of the Specifications.

9.3 Applications for Payment

9.3.1 Add the following sentence:

The form of Application for Payment shall be AIA Document G702, APPLICATION AND CERTIFICATION FOR PAYMENT, supported by AIA Document G702A, Continuation Sheet. Prior to the submission of the completed (typed) application, submit a draft copy for review by the Architect.

9.4 Certificates for Payment

Add new sub-paragraphs:

9.4.3 First Certificate for Payment - The Architect will process this Certificate, only after he has received (1) the information required of Article 7 of the Instructions to Bidders, (2) Certification that the Contractor is currently maintaining Record Drawings, (3) decisions on options indicated in Section 01010 (if any), (4) submissions required in Section 01300, and (5) is adhering to the requirements of Article 3 of the General Conditions and Supplementary Conditions.

9.4.4 Second and Subsequent Certificates for Payment - The Architect will process the second certificate only after receipt of (1) Certificates that contractor is currently maintaining record drawings, (2) Release of Liens, (3) Certification of foundation and building layout survey data if specified in Section 01010, and (4) all proposed materials and color samples have been submitted for Architect's approval and color selections. Certification as to maintenance of Record Drawings and Releases of Lien will accompany subsequent applications, otherwise the Architect will not process the respective Certificate for Payment.

9.6 Progress Payments.

9.6.1 Add the following to 9.6.1:

The Owner shall make payments on account of this Contract as provided herein as follows: On or about the 15th day of each month, 90 percent of the value, based on the Contract prices for labor and materials incorporated in the work and of materials suitably stored at the site thereof or at some other location agreed upon, in writing, by the parties up to the first day of that month, as estimated by the Architect, less the aggregate of previous payments; and upon substantial completion of the entire work, a sum sufficient to increase the total payments to 95% of the Contract Price. If, after 50% of the work is completed, to the satisfaction of the Architect, he may recommend to the Owner that the retainage be decreased to 5%. Such reduction shall occur upon the Owner's approval and after receipt of AIA Document G707A (Consent of Surety to Reduction).

9.8 Substantial Completion.

9.8.1 Add the following to 9.8.1:

© THE ROBINSON GREEN BERETTA CORPORATION - 6456

Prior to issuance of a Certificate of Substantial Completion, and in addition to the requirements herein, the Contractor and his sub-contractors shall submit: (1) their respective certificates of contract document compliance; (2) warranties and guarantees; (3) bonds; (4) certificates and affidavits; (5) operating manuals, report of Owner instructions and test results; (6) project record documents, including record drawings; (7) extra materials and samples (as specified) required for Owner; and (8) Occupancy Permit, if required.

9.10 FINAL COMPLETION AND FINAL PAYMENT

9.10.1 Add the following to 9.10.1:

Prior to final inspection, and in addition to the requirements herein, submit: (1) Contractor's Affidavits (AIA Document G706 and G706A); and Consent of Surety (AIA Document G707).

Add new sub-paragraphs:

9.11 Releases of Lien.

9.11.1 The Contractor shall submit Releases of Lien from all sub-contractors and material suppliers indicating payment(s) received from the previous applications. Certificates for Payment will not be processed unless these releases are included therewith.

9.11.2 Immediately satisfy any lien or encumbrance which, because of any act or default of the Contractor is filed against the premises, and indemnify and save the Owner harmless against all resulting loss and expenses, including attorney's fees. In addition, moneys due under this Contract, as may be considered necessary by the Owner, may be retained by the Owner until all such suits, claims for damages or expenses as aforesaid shall been settled and paid.

9.11.3 The statement on the Standard AIA Form G702, Certificate for Payment, which certifies that "all bills are paid for which previous certificates for payment were issued" shall be notarized by a Notary Public currently licensed to practice in the State in which the Project is located.

9.12 Liquidated Damages.

9.12.1 The Owner will suffer financial loss if the Project is not completed (Substantial and Final) on the dates set forth in the Contract Documents. The Contractor (and his Surety) shall be liable for and shall pay to the Owner the sums stipulated in the Bid Form as fixed, agreed, and liquidated damages for each calendar day of delay until the Work is Completed.

ARTICLE 11 - INSURANCE AND BONDS

11.1 Contractor's Liability Insurance

Add new sub-paragraph:

11.1.1.9 Liability insurance shall include all major divisions of coverage and be on a comprehensive general liability basis including:

Premises-Operations (including (X-C-U)
Independent contractor's protective
Blanket contractual
Owned, non-owned and hired motor vehicles
Broad form property coverage (including explosion, collapse and underground)

Add the following Clause 11.1.2.1 to 11.1.2:

© THE ROBINSON GREEN BERETTA CORPORATION - 6456

11.1.2.1 The insurance required by sub-paragraph 11.1.1 shall be written for not less than the following, or greater if required by law:

Worker's Compensation:

State and Federal (where applicable) - Statutory
Employer's Liability - $500,000.

Comprehensive General Liability (including Premises-Operation; Independent Contractors' Protective; Products and Completed Operations; Broad Form Property Damages; Contractual and Personal Injury)

Bodily Injury/Property Damage:

$1,000,000. - Each Occurrence
$2,000,000. - Annual Aggregate

Products and Completed Operations to be maintained for two (2) years after final payment.

Property Damage Liability Insurance will provide X, C or U coverage as applicable.

Comprehensive Automobile Liability:

Bodily Injury/Property Damage:

$1,000,000. - Each Occurrence

Add the following Clause 11.1.3.1 to 11.1.3:

11.1.3.1 The Contractor shall furnish one copy each of Certificates of Insurance herein required for each copy of the Agreement which shall be specifically set forth evidence of all coverage required by sub-paragraphs 11.1.1, 11.1.2 and 11.1.3. The form of the Certificate shall be AIA Document G705. The Contractor shall furnish to the Owner copies of any endorsements that are subsequently issued amending coverage or limits.

11.2 Owner's Liability Insurance.

Change sub-paragraph 11.2.1 to read:

11.2.1 The Contractor shall furnish the Owner, through the Architect, an insurance certificate providing Owner's Protective Liability extended to include the interests of the Architect, and to protect the Owner and the Architect, The Robinson Green Beretta Corporation, from any liability which might be incurred against them as result of any operation of the Contractor or his sub-contractors or their employees. Such insurance shall be written for the same limits as the Contractor's Liability Insurance, and shall include the same coverage.

11.4 Property Insurance.

Change sub-paragraph 11.4.1 to read:

11.4.1 The Contractor shall purchase and maintain property insurance upon the entire Work at the site to the full insurable value thereof. Such insurance shall be in a company or companies against which the Owner has no reasonable objection. This insurance company shall include the interests

© THE ROBINSON GREEN BERETTA CORPORATION - 6456

of the Owner, the Contractor, Sub-contractors and Sub-subcontractors in the Work and shall insure against the perils of fire and extended coverage and shall include "all risk" insurance for physical loss or damage including, without duplication of coverage, theft, vandalism, and malicious mischief. If not covered under all risk insurance or otherwise provided in the Contract Documents, the Contractor shall effect and maintain similar property insurance on portions of the Work stored off the site or in transit when such portions of the Work are to be included in an application for Payment under Sub-paragraph 9.3.2.

11.4.1.1 The form of policy for this coverage shall be completed value.

11.4.1.2 If by the terms of this insurance any mandatory deductibles are required, or if the Contractor should elect, with concurrence of the Owner, to increase the mandatory deductible amounts, the Contractor shall be responsible for payment of the amount of the deductible in the event of a paid claim.

11.4.4 Delete this sub-paragraph in its entirety.

Change sub-paragraph 11.4.6 to read:

11.4.6 Before an exposure to loss may occur, the Contractor shall file with the Owner two certified copies of the policy or policies providing this Property Insurance coverage, each containing those endorsements specifically related to the Project. Each policy shall contain a provision that the policy will not be canceled or allowed to expire until at least thirty (30) days' prior written notice has been given to the Contractor.

ARTICLE 13 - MISCELLANEOUS PROVISIONS

13.5 Tests and Inspections:

13.5.1 Change the last sentence to read:

Refer to Specification Section 01400 for the extent of other inspection and testing services to be included as part of this Contract.

Add the following:

ARTICLE 15 - EQUAL OPPORTUNITY

15.1 The Contractor shall maintain policies of employment as follows:

15.1.1 The Contractor and all Sub-contractors shall not discriminate against any employee or applicant for employment because of race, religion, color, sex, national origin or age. The Contractor shall take affirmative action to insure that applicants are employed, and that employees are treated during employment without regard to their race, religion, color, sex, national origin or age. Such action shall include, but not be limited to the following: employment, upgrading, demotion or transfer; recruitment or recruitment advertising; layoff or termination; rates of pay or other forms of compensation; and selection for training, including apprenticeship. The Contractor agrees to post in conspicuous places, available to employees and applicants for employment, notices setting forth the policies of non-discrimination.

15.1.2 The Contractor and all Sub-contractors shall, in all solicitations or advertisements for employees placed by them on their behalf, state that all qualified applicants will receive consideration for employment without regard to race, religion, color, sex, national origin or age.

© THE ROBINSON GREEN BERETTA CORPORATION - 6456

END OF SECTION 000700

© THE ROBINSON GREEN BERETTA CORPORATION - 6456

SECTION 00 52 00 - AGREEMENT FORM

AIA Document A101 Standard Form of Agreement Between Owner and Contractor for a Project where the basis of payment is a Stipulated Sum, and as amended, forms the basis of Contract between the Owner and the Contractor, and is included, following this page, as an integral part of the Bid Documents. Provisions which are not so amended or supplemented remain in full force and effect.

END OF SECTION 00 52 00

© THE ROBINSON GREEN BERETTA CORPORATION - 6456

Agency Conditions of Use:

I. **AIA contract templates are not to be edited, altered, revised or modified by the agency or vendors without the prior written approval of the Division of Legal Services (401/222-8880).**

II. **Agencies are responsible to ensure proper use of the appropriate AIA contract template(s) on State public works projects.**

DRAFT AIA® Document A101™ – 2017 Standard Form of Agreement Between Owner and Contractor where the basis of payment is a Stipulated Sum

ADDITIONS AND DELETIONS: The author of this document has added information needed for its completion. The author may also have revised the text of the original AIA standard form. An *Additions and Deletions Report* that notes added information as well as revisions to the standard form text is available from the author and should be reviewed.

This document has important legal consequences. Consultation with an attorney is encouraged with respect to its completion or modification.

The parties should complete A101™–2017, Exhibit A, Insurance and Bonds, contemporaneously with this Agreement. AIA Document A201™–2017, General Conditions of the Contract for Construction, is adopted in this document by reference. Do not use with other general conditions unless this document is modified.

ELECTRONIC COPYING of any portion of this AIA® Document to another electronic file is prohibited and constitutes a violation of copyright laws as set forth in the footer of this document.

AGREEMENT made as of the « » day of « » in the year « »
(In words, indicate day, month and year.)

BETWEEN the Owner:
(Name, legal status, address, telephone and facsimile numbers, and website)

«State of Rhode Island, acting by and through the Department of Administration, Division of Purchases, on behalf of the User Agency»
«One Capitol Hill, Second Floor»
«Providence, Rhode Island 02908-5855»
«401.578.8100 (telephone); 401.574.8387 (facsimile)»
«www.ridop.ri.gov»

on behalf of the User Agency:
(Name, legal status, address, telephone and facsimile numbers, and website)

« »
« »
« »
« »
« »

and the Contractor:
(Name, legal status, address, telephone and facsimile numbers, and website)

« »
« »
« »
« »
« »

for the following Project:
(Name, location and detailed description)

« »
« »

AIA Document A101™ – 2017. Copyright © 1915, 1918, 1925, 1937, 1951, 1958, 1961, 1963, 1967, 1974, 1977, 1987, 1991, 1997, 2007 and 2017 by The American Institute of Architects. **All rights reserved. WARNING: This AIA® Document is protected by U.S. Copyright Law and International Treaties. Unauthorized reproduction or distribution of this AIA® Document, or any portion of it, may result in severe civil and criminal penalties, and will be prosecuted to the maximum extent possible under the law.** This draft was produced by AIA software at 14:36:14 on 10/05/2018 under Order No. 0710989945 which expires on 07/31/2019, and is not for resale.
User Notes: A101- 2017 template revision date 6/13/2019 (3B9ADA24)

« »

The Design Agent:
(Name, legal status, address, telephone and facsimile numbers, and website)

« »
« »
« »
« »
« »

The Owner and Contractor agree as follows.

DRAFT

AIA Document A101™ – 2017. Copyright © 1915, 1918, 1925, 1937, 1951, 1958, 1961, 1963, 1967, 1974, 1977, 1987, 1991, 1997, 2007 and 2017 by The American Institute of Architects. **All rights reserved. WARNING: This AIA® Document is protected by U.S. Copyright Law and International Treaties. Unauthorized reproduction or distribution of this AIA® Document, or any portion of it, may result in severe civil and criminal penalties, and will be prosecuted to the maximum extent possible under the law.** This draft was produced by AIA software at 14:36:14 on 10/05/2018 under Order No. 0710989945 which expires on 07/31/2019, and is not for resale.
User Notes: (3B9ADA24)

TABLE OF ARTICLES

1 THE CONTRACT DOCUMENTS

2 THE WORK OF THIS CONTRACT

3 DATE OF COMMENCEMENT AND SUBSTANTIAL COMPLETION

4 CONTRACT SUM

5 PAYMENTS

6 DISPUTE RESOLUTION

7 TERMINATION OR SUSPENSION

8 MISCELLANEOUS PROVISIONS

9 ENUMERATION OF CONTRACT DOCUMENTS

EXHIBIT A INSURANCE AND BONDS

ARTICLE 1 THE CONTRACT DOCUMENTS

The Contract Documents consist of this Agreement, Conditions of the Contract (General Conditions, Supplementary Conditions (if any), and other Conditions), Drawings, Specifications, Addenda issued prior to execution of this Agreement, other documents listed in this Agreement, and Modifications issued after execution of this Agreement, all of which form the Contract, and are as fully a part of the Contract as if attached to this Agreement or repeated herein. The Contract represents the entire and integrated agreement between the parties hereto and supersedes prior negotiations, representations, or agreements, either written or oral. An enumeration of the Contract Documents, other than a Modification, appears in Article 9.

ARTICLE 2 THE WORK OF THIS CONTRACT

The Contractor shall fully execute the Work described in the Contract Documents, except as specifically indicated in the Contract Documents to be the responsibility of others. No part of the Work shall be performed by Subcontractors without the Owner's prior written consent.

ARTICLE 3 DATE OF COMMENCEMENT AND SUBSTANTIAL COMPLETION

§ 3.1 The date of commencement of the Work shall be the later of: (i) the issuance of the Purchase Order by the Owner; and (ii) the date set forth in a notice to proceed issued by the User Agency.

§ 3.2 The Contract Time shall be measured from the date of commencement of the Work.

§ 3.3 Substantial Completion

§ 3.3.1 Subject to adjustments of the Contract Time as provided in the Contract Documents, the Contractor shall achieve Substantial Completion of the entire Work:
(Check one of the following boxes and complete the necessary information.)

[« »] Not later than « » (« ») calendar days from the date of commencement of the Work.

[« »] By the following date: « »

§ 3.3.2 Subject to adjustments of the Contract Time as provided in the Contract Documents, if portions of the Work are to be completed prior to Substantial Completion of the entire Work, the Contractor shall achieve Substantial Completion of such portions by the following dates:

AIA Document A101™ – 2017. Copyright © 1915, 1918, 1925, 1937, 1951, 1958, 1961, 1963, 1967, 1974, 1977, 1987, 1991, 1997, 2007 and 2017 by The American Institute of Architects. **All rights reserved. WARNING: This AIA® Document is protected by U.S. Copyright Law and International Treaties. Unauthorized reproduction or distribution of this AIA® Document, or any portion of it, may result in severe civil and criminal penalties, and will be prosecuted to the maximum extent possible under the law.** This draft was produced by AIA software at 14:36:14 on 10/05/2018 under Order No. 0710989945 which expires on 07/31/2019, and is not for resale.
User Notes: (3B9ADA24)

Portion of Work	Substantial Completion Date
« »	

§ 3.3.3 If the Contractor fails to achieve Substantial Completion as provided in this Section 3.3, liquidated damages, if any, shall be assessed as set forth in Section 4.5.

ARTICLE 4 CONTRACT SUM

§ 4.1 The Owner shall pay the Contractor the Contract Sum in current funds for the Contractor's performance of the Contract. Subject to additions and deductions as provided in the Contract Documents, the Contract Sum shall be: $_____.

§ 4.2 Alternates

§ 4.2.1 Alternates, if any, included in the Contract Sum:

Item	Price
« »	

§ 4.2.2 Subject to the conditions noted below, the following alternates may be accepted by the Owner following execution of this Agreement. Upon acceptance, the Owner shall issue a Modification to this Agreement.
(Insert below each alternate and the conditions that must be met for the Owner to accept the alternate.)

Item	Price	Conditions for Acceptance
« »		

§ 4.3 Allowances, if any, are specified in the Bid Proposal Form and are included in the Contract Sum.

§ 4.4 Unit prices, if any, are specified in the Bid Proposal Form and include all costs, including without limitation, labor, materials, services, regulatory compliance, overhead, and profit necessary for the completion of the Work. Unit prices shall be used for both additions to, and deletions from the Work.

§ 4.5 Liquidated damages, if any:
(Insert terms and conditions for liquidated damages, if any.)

«.1 In the event that there is one date for Substantial Completion of the Work, the Contractor shall pay the Owner the sum stipulated in this Section 4.5.1 as liquidated damages, and not as a penalty, for each calendar day of delay until the Work is substantially complete: $_____.

.2 In the event that the Project is scheduled to be completed in phases, and there is more than one date for Substantial Completion of the Work, the Contractor shall pay the Owner an aggregate amount equal to the sums stipulated in this Section 4.5.2 as liquidated damages, and not as a penalty, for each calendar day of delay until the Work for each phase is substantially complete:

Phase	**Liquidated Damages Sum**

.3 The Owner and the Contractor have reasonably determined the sums set forth in this Section 4.5 to be a fair estimate of the Owner' actual damages which are difficult to ascertain in the event of delay.»

§ 4.6 Other:

The Owner shall not be liable to the Contractor or any Subcontractor for claims or damages of any nature caused by or arising out of any delays. The sole remedy against the Owner for delays shall be the allowance of additional time for completion of the Work.

AIA Document A101™ – 2017. Copyright © 1915, 1918, 1925, 1937, 1951, 1958, 1961, 1963, 1967, 1974, 1977, 1987, 1991, 1997, 2007 and 2017 by The American Institute of Architects. **All rights reserved. WARNING: This AIA® Document is protected by U.S. Copyright Law and International Treaties. Unauthorized reproduction or distribution of this AIA® Document, or any portion of it, may result in severe civil and criminal penalties, and will be prosecuted to the maximum extent possible under the law.** This draft was produced by AIA software at 14:36:14 on 10/05/2018 under Order No. 0710989945 which expires on 07/31/2019, and is not for resale.
User Notes: (3B9ADA24)

ARTICLE 5 PAYMENTS

§ 5.1 Progress Payments

§ 5.1.1 Based upon Applications for Payment submitted to the Design Agent by the Contractor and Certificates for Payment issued by the Design Agent and approved by the Owner in writing, the Owner shall make progress payments on account of the Contract Sum to the Contractor as provided below and elsewhere in the Contract Documents.

§ 5.1.2 The period covered by each Application for Payment shall be one calendar month ending on the last day of the month.

§ 5.1.3 The Owner shall make payment of the certified amount, less retainage, to the Contractor not later than the 30th working day following written approval by the Owner.

§ 5.1.4 Each Application for Payment shall be based on the most recent schedule of values submitted by the Contractor and approved by the Design Agent and the Owner in accordance with the Contract Documents. The schedule of values shall allocate the entire Contract Sum among the various portions of the Work. The schedule of values shall be prepared in such form, and supported by such data to substantiate its accuracy, as the Design Agent and the Owner may require. This schedule of values shall be used as a basis for reviewing the Contractor's Applications for Payment.

§ 5.1.5 Applications for Payment shall show the percentage of completion of each portion of the Work as of the end of the period covered by the Application for Payment.

§ 5.1.6 In accordance with AIA Document A201™–2007, General Conditions of the Contract for Construction as modified by the Owner, and subject to other provisions of the Contract Documents, the amount of each progress payment shall be computed as follows:

§ 5.1.6.1 The amount of each progress payment shall first include:

.1 That portion of the Contract Sum properly allocable to completed Work;

.2 That portion of the Contract Sum properly allocable to materials and equipment delivered and suitably stored at the site for subsequent incorporation in the completed construction, or, if approved in advance by the Owner, suitably stored off the site at a location agreed upon in writing; and

.3 That portion of Construction Change Directives that the Design Agent determines, in the Design Agent's professional judgment, to be reasonably justified.

§ 5.1.6.2 The amount of each progress payment shall then be reduced by:

.1 The aggregate of any amounts previously paid by the Owner;

.2 The amount, if any, for Work that remains uncorrected and for which the Design Agent has previously withheld a Certificate for Payment as provided in Article 9 of AIA Document A201–2007 as modified by the Owner;

.3 For Work performed or defects discovered since the last payment application, any amount for which the Design Agent may withhold payment, or nullify a Certificate of Payment in whole or in part, as provided in Article 9 of AIA Document A201–2007 as modified by the Owner; and

.4 Retainage withheld pursuant to Section 5.1.7.

§ 5.1.7 Retainage

§ 5.1.7.1 For each progress payment made prior to Substantial Completion of the Work, the Owner may withhold the following amount, as retainage, from the payment otherwise due: five (5%) percent.

§ 5.1.7.1.1 **Deleted.**

§ 5.1.7.2 **Deleted.**

§ 5.1.7.3 Except as set forth in this Section 5.1.7.3, upon Substantial Completion of the Work, the Contractor may submit an Application for Payment that includes the retainage withheld from prior Applications for Payment pursuant to this Section 5.1.7. The Application for Payment submitted at Substantial Completion shall not include retainage as follows:

AIA Document A101™ – 2017. Copyright © 1915, 1918, 1925, 1937, 1951, 1958, 1961, 1963, 1967, 1974, 1977, 1987, 1991, 1997, 2007 and 2017 by The American Institute of Architects. **All rights reserved. WARNING: This AIA® Document is protected by U.S. Copyright Law and International Treaties. Unauthorized reproduction or distribution of this AIA® Document, or any portion of it, may result in severe civil and criminal penalties, and will be prosecuted to the maximum extent possible under the law.** This draft was produced by AIA software at 14:36:14 on 10/05/2018 under Order No. 0710989945 which expires on 07/31/2019, and is not for resale.
User Notes: (3B9ADA24)

The amount of five (5%) percent shall be retained by the Owner through the date of Substantial Completion of the Work and then after the date of Substantial Completion of the Work in accordance with R.I. Gen. Laws § 37-12-10.1.

§ 5.1.8 If final completion of the Work is materially delayed through no fault of the Contractor, the Owner shall pay the Contractor any additional amounts in accordance with Article 9 of AIA Document A201–2007 as modified by the Owner.

§ 5.1.9 Except with the Owner's prior written approval, the Contractor shall not make advance payments to suppliers for materials or equipment which have not been delivered and stored at the site.

§ 5.1.10 Within 10 working days of receipt of any progress payment from the Owner, the Contractor must pay its Subcontractors the full amount included for each such Subcontractor within the Contractor's Application for Payment in accordance with the provisions of AIA A201 – 2007, General Conditions of the Contract for Construction as modified by the Owner.

§ 5.2 Final Payment

§ 5.2.1 Final payment, constituting the entire unpaid balance of the Contract Sum, less the amount withheld pursuant to § 5.1.7.3, shall be made by the Owner to the Contractor when:

.1 the Contractor has fully performed the Contract except for the Contractor's responsibility to correct Work as provided in Article 12 of AIA Document A201–2007 as modified by the Owner, and to satisfy other requirements, if any, which extend beyond final payment; and

.2 a final Certificate for Payment has been issued by the Design Agent and approved in writing by the Owner;

.3 the Contractor has submitted its final release and final releases from all of its Subcontractors and suppliers in a form acceptable to the Owner; and

4 the Contractor has submitted to the Owner all close-out documents, including without limitation, all as-built plans, warranties, manuals, and other materials set forth in the Contract Documents.

§ 5.2.2 The Owner's final payment to the Contractor shall be made no later than 30 working days after the issuance of the Design Agent's final Certificate for Payment and written approval by the Owner.

§ 5.3 Interest

Payments due and unpaid under the Contract shall bear interest from the date payment is due in accordance with the provisions of "Prompt Payment by Department of Administration," R.I. Gen. Laws §§ 42-11.1-1 et seq.

§ 5.4 Owner's Rights

§ 5.4.1 The Owner shall have the right to deduct from any payments due to the Contractor the amount of any unpaid obligations owed to the State of Rhode Island by the Contractor, including without limitation, any and all unpaid taxes, the amount of any claim against the Contractor arising out of this Agreement, or any amount on account of any other reason permitted by applicable law.

§ 5.5 Pursuant to R.I. Gen. Laws § 44-1-6, the Owner shall withhold payment from the Contractor if the Contractor does not maintain a regular place of business in Rhode Island in the amount of three (3%) percent of the Contract Sum until 30 calendar days after Final Completion and compliance by the Contractor with the requirements of such section. The three (3%) percent withheld pursuant to R.I. Gen. Laws § 44-1-6 is not considered retainage which is held pursuant to § 5.1.7.

ARTICLE 6 DISPUTE RESOLUTION

§ 6.1 Initial Decision Maker

Claims shall be referred to the Initial Decision Maker for initial decision. The Purchasing Agent appointed pursuant to the provisions of the "State Purchases Act," R.I. Gen. Laws § 37-2-1 et seq., will serve as the Initial Decision Maker in accordance with the provisions of the State Purchases Act, State of Rhode Island Procurement Regulations, and this Section 6.1. An initial decision shall be required as a condition precedent to binding dispute resolution pursuant to Section 6.3 of any Claim arising prior to the date final payment is due.

AIA Document A101™ – 2017. Copyright © 1915, 1918, 1925, 1937, 1951, 1958, 1961, 1963, 1967, 1974, 1977, 1987, 1991, 1997, 2007 and 2017 by The American Institute of Architects. **All rights reserved. WARNING: This AIA® Document is protected by U.S. Copyright Law and International Treaties. Unauthorized reproduction or distribution of this AIA® Document, or any portion of it, may result in severe civil and criminal penalties, and will be prosecuted to the maximum extent possible under the law.** This draft was produced by AIA software at 14:36:14 on 10/05/2018 under Order No. 0710989945 which expires on 07/31/2019, and is not for resale.
User Notes: (3B9ADA24)

§ 6.2 Mediation

For any Claim not resolved by the Initial Decision Maker procedures set forth in Section 6.1, and prior to the implementation of the binding dispute resolution procedures set forth in Section 6.3, the Contractor shall have the option to pursue mediation, exercisable by written notice to the Owner within 30 calendar days of an Initial Decision. In the event of the exercise of such option by the Contractor, the Owner and the Contractor shall attempt to select a mediator, and in the event that the Owner and the Contractor cannot agree on a mediator, either party may apply in writing to the Presiding Justice of the Providence County Superior Court, with a copy to the other, with a request for the court to appoint a mediator, and the costs of the mediator shall be borne equally by both parties.

§ 6.3 Binding Dispute Resolution

For any Claim not resolved by the Initial Decision Maker procedures set forth in Section 6.1, or mediation at the option of the Contractor pursuant to Section 6.2, the method of binding dispute resolution shall be determined in accordance with the provisions of the "Public Works Arbitration Act," R.I. Gen. Laws §§ 37-16-1 et seq.

ARTICLE 7 TERMINATION OR SUSPENSION

§ 7.1 The Contract may be terminated by the Owner or the Contractor as provided in Article 14 of AIA Document A201–2007, as modified by the Owner. The Contract may also be terminated by the Owner: (i) in the event of the unavailability of appropriated funds; (ii) in the absence of a determination of continued need; or (iii) as otherwise provided in the State of Rhode Island Procurement Regulations General Conditions of Purchase or other applicable law.

§ 7.1.1 **Deleted.**

§ 7.2 The Work may be suspended by the Owner as provided in: (i) the State of Rhode Island General Conditions of Purchase Regulation or other applicable law; or (ii) Article 14 of AIA Document A201–2007 as modified by the Owner.

ARTICLE 8 MISCELLANEOUS PROVISIONS

§ 8.1 Where reference is made in this Agreement to a provision of AIA Document A201–2007 or another Contract Document, the reference refers to: (i) the AIA Document A201 – 2007 or other Contract Document as modified by the Owner; and (ii) that provision in the AIA Document A201 – 2007 as modified by the Owner or other Contract Document as amended or supplemented by other provisions of the Contract Documents.

§ 8.2 Representatives for the Owner

§ 8.2.1 The Owner's representative:

(Name, title, address, email address, and other information for the preferred methods of contact)

« »
« »
« »
« »
« »
« »

§ 8.2.2 The User Agency's representative:

(Name, title, address, email address, and other information for the preferred methods of contact)

« »
« »
« »
« »
« »
« »

§ 8.2.3 The Design Agent's representative:

(Name, title, address, email address, and other information for the preferred methods of contact)

AIA Document A101™ – 2017. Copyright © 1915, 1918, 1925, 1937, 1951, 1958, 1961, 1963, 1967, 1974, 1977, 1987, 1991, 1997, 2007 and 2017 by The American Institute of Architects. **All rights reserved. WARNING: This AIA® Document is protected by U.S. Copyright Law and International Treaties. Unauthorized reproduction or distribution of this AIA® Document, or any portion of it, may result in severe civil and criminal penalties, and will be prosecuted to the maximum extent possible under the law.** This draft was produced by AIA software at 14:36:14 on 10/05/2018 under Order No. 0710989945 which expires on 07/31/2019, and is not for resale.
User Notes: (3B9ADA24)

« »
« »
« »
« »
« »
« »

§ 8.3 The Contractor's representative:
(Name, title, address, email address, and other information for the preferred methods of contact)

« »
« »
« »
« »
« »
« »

§ 8.4 Neither the Owner's nor the Contractor's representative nor the Design Agent's representative shall be changed without 10 working days' prior notice to the other party.

§ 8.5 Insurance and Bonds
§ 8.5.1 The Owner and the Contractor shall purchase and maintain insurance as set forth in the Solicitation and elsewhere in the Contract Documents.

§ 8.5.2 The Contractor shall provide bonds as set forth in the Solicitation and elsewhere in the Contract Documents.

§ 8.6 **Deleted.**

§ 8.7 Other provisions:
§ 8.7.1 The Contractor represents and warrants to the Owner, in addition to any other representations and warranties of the Contractor elsewhere in the Contract Documents:

.1 The Contractor and its Subcontractors are each financially solvent, able to pay their debts as they mature, and possess sufficient working capital to perform their obligations under the Contract Documents.
.2 The Contractor and its Subcontractors are each able to furnish the tools, materials, equipment, and labor required to complete the Project as required under the Contract Documents.
.3 The Contractor and each Subcontractor are authorized to do business in the State of Rhode Island and are properly licensed by all necessary governmental authorities having jurisdiction over them and over the Work and the Project.
.4 The execution of this Agreement and its performance is within its duly authorized powers.
.5 The Contractor has visited the site of the Project, familiarized itself with the local and special conditions under which the Work is to be performed, and correlated its observations with the requirements of the Contract Documents.
.6 The Contractor possesses the requisite level of experience and expertise in the business administration, construction, and superintendence of projects of the size, complexity, and nature of the Project, and it will perform the Work with the care, skill, and diligence of a contractor possessing such experience and expertise.

§ 8.7.2 The representations and warranties of the Contractor in this Section 8.7 and elsewhere in the Contract Documents will survive the execution and delivery of this Agreement, any termination of this Agreement, and the final completion of the Work.

§ 8.7.3 Any Change Orders or other Modifications must be approved in writing by the Owner.

§ 8.7.4 The Owner is the State of Rhode Island, acting by and through its Department of Administration, Division of Purchases, and therefore, pursuant to the provisions of R.I. Gen. Laws § 34-28-31, mechanics liens may not be placed against the Project.

AIA Document A101™ – 2017. Copyright © 1915, 1918, 1925, 1937, 1951, 1958, 1961, 1963, 1967, 1974, 1977, 1987, 1991, 1997, 2007 and 2017 by The American Institute of Architects. **All rights reserved. WARNING: This AIA® Document is protected by U.S. Copyright Law and International Treaties. Unauthorized reproduction or distribution of this AIA® Document, or any portion of it, may result in severe civil and criminal penalties, and will be prosecuted to the maximum extent possible under the law.** This draft was produced by AIA software at 14:36:14 on 10/05/2018 under Order No. 0710989945 which expires on 07/31/2019, and is not for resale.
User Notes: (3B9ADA24)

ARTICLE 9 ENUMERATION OF CONTRACT DOCUMENTS

§ 9.1 This Agreement is comprised of the following documents:

.1 AIA Document A101™–2017, Standard Form of Agreement Between Owner and Contractor, as modified by the Owner

.2 **Deleted.**

.3 AIA Document A201™–2007, General Conditions of the Contract for Construction, as modified by the Owner.

.4 **Deleted.**

.5 Drawings

The Drawings are included in the Solicitation and are available on the Division of Purchases website at www.ridop.ri.gov.

.6 Specifications

The Specifications are included in the Solicitation and are available on the Division of Purchases website at www.ridop.ri.gov.

.7 Addenda, if any, issued pursuant to the Solicitation form a part of the Solicitation and are available on the Division of Purchases website at www.ridop.ri.gov.

.8 Supplementary and other Conditions of the Contract, including without limitation, the State of Rhode Island General Conditions of Purchase Regulation.

.9 Other documents listed below:

.1 The Solicitation, issued by the Owner, including without limitation, the Invitation to Bid, the Instructions to Bidders, the Specifications and Drawings, any Addenda, and the Bid Checklist.

.2 The Bid Proposal, including without limitation, the Bid Form and the Bidder Certification Cover Form.

.3 The Purchase Order issued by the Owner.

§ 9.2 This Agreement and the Contract Documents are subject to, and governed by, the laws of the State of Rhode Island, including all procurement statutes and regulations (available at www.ridop.ri.gov), and applicable federal and local law, all of which are fully incorporated into this Agreement by this reference.

§ 9.3 In the event of any conflict between or among the Contract Documents, or any Contract Documents and any provision of the State of Rhode Island Procurement Regulations and/or any other provision of the Rhode Island General Laws, the State of Rhode Island Procurement Regulations and the Rhode Island General Laws shall control.

ARTICLE 10 BENEFITS OF AGREEMENT

§ 10.1 The User Agency is a disclosed third-party beneficiary of this Agreement and shall have all of the rights and benefits hereunder to which such a party is entitled. Nothing contained in this Agreement shall create a contractual relationship with, or a cause of action in favor of, any other third party against the Owner or the User Agency.

§ 10.2 This Agreement shall be binding on the Contractor and its successors and assigns; provided, however, that the Contractor may not assign its rights nor delegate its responsibilities under this Agreement without the Owner's prior written consent.

This Agreement is entered into as of the day and year first written above; provided, however, that this Agreement shall not become a valid, binding, and enforceable contract unless and until the Owner shall have issued a Purchase Order.

AIA Document A101™ – 2017. Copyright © 1915, 1918, 1925, 1937, 1951, 1958, 1961, 1963, 1967, 1974, 1977, 1987, 1991, 1997, 2007 and 2017 by The American Institute of Architects. **All rights reserved. WARNING: This AIA® Document is protected by U.S. Copyright Law and International Treaties. Unauthorized reproduction or distribution of this AIA® Document, or any portion of it, may result in severe civil and criminal penalties, and will be prosecuted to the maximum extent possible under the law.** This draft was produced by AIA software at 14:36:14 on 10/05/2018 under Order No. 0710989945 which expires on 07/31/2019, and is not for resale.
User Notes: (3B9ADA24)

«**THE STATE OF RHODE ISLAND, acting by and through its Department of Administration, Division of Purchases**»	« »
OWNER *(Signature)*	CONTRACTOR *(Signature)*
« »« »	« »« »
(Printed name and title)	*(Printed name and title)*

DRAFT

AIA Document A101™ – 2017. Copyright © 1915, 1918, 1925, 1937, 1951, 1958, 1961, 1963, 1967, 1974, 1977, 1987, 1991, 1997, 2007 and 2017 by The American Institute of Architects. **All rights reserved. WARNING: This AIA® Document is protected by U.S. Copyright Law and International Treaties. Unauthorized reproduction or distribution of this AIA® Document, or any portion of it, may result in severe civil and criminal penalties, and will be prosecuted to the maximum extent possible under the law.** This draft was produced by AIA software at 14:36:14 on 10/05/2018 under Order No. 0710989945 which expires on 07/31/2019, and is not for resale.
User Notes: (3B9ADA24)

Agency Conditions of Use:

I. **AIA contract templates are not to be edited, altered, revised or modified by the agency or vendors without the prior written approval of the Division of Legal Services (401/222-8880).**

II. **Agencies are responsible to ensure proper use of the appropriate AIA contract template(s) on State public works projects.**

DRAFT

AIA® Document A201™ – 2007

General Conditions of the Contract for Construction

ADDITIONS AND DELETIONS: The author of this document has added information needed for its completion. The author may also have revised the text of the original AIA standard form. An *Additions and Deletions Report* that notes added information as well as revisions to the standard form text is available from the author and should be reviewed.

This document has important legal consequences. Consultation with an attorney is encouraged with respect to its completion or modification.

for the following PROJECT:
(Name and location or address)

« »
« »

THE OWNER:
(Name, legal status and address)

The State of Rhode Island, acting by and through the Department of Administration
Division of Purchases, on behalf of the User Agency
One Capitol Hill, Second Floor
Providence, Rhode Island 02908-5855
(401) 574-8100 (telephone)
(401 574-8387 (facsimile)
www.ridop.ri.gov

THE USER AGENCY

(Name, address, telephone and facsimile numbers, and web address)

»« »
« »

THE Design Agent:
(Name, legal status, address, telephone and facsimile numbers, and web address)

« »« »
« »

TABLE OF ARTICLES

1 GENERAL PROVISIONS

2 OWNER

3 CONTRACTOR

4 DESIGN AGENT

5 SUBCONTRACTORS

6 CONSTRUCTION BY OWNER OR BY SEPARATE CONTRACTORS

ELECTRONIC COPYING of any portion of this AIA® Document to another electronic file is prohibited and constitutes a violation of copyright laws as set forth in the footer of this document.

7 CHANGES IN THE WORK

8 TIME

9 PAYMENTS AND COMPLETION

10 PROTECTION OF PERSONS AND PROPERTY

11 INSURANCE AND BONDS

12 UNCOVERING AND CORRECTION OF WORK

13 MISCELLANEOUS PROVISIONS

14 TERMINATION OR SUSPENSION OF THE CONTRACT

15 CLAIMS AND DISPUTES

DRAFT

AIA Document A201™ – 2007. Copyright © 1911, 1915, 1918, 1925, 1937, 1951, 1958, 1961, 1963, 1966, 1970, 1976, 1987, 1997 and 2007 by The American Institute of Architects. **All rights reserved. WARNING: This AIA® Document is protected by U.S. Copyright Law and International Treaties. Unauthorized reproduction or distribution of this AIA® Document, or any portion of it, may result in severe civil and criminal penalties, and will be prosecuted to the maximum extent possible under the law.** This draft was produced by AIA software at 14:02:42 ET on 11/16/2018 under Order No.1973475587 which expires on 02/21/2019, and is not for resale.
User Notes: (1870164535)

ARTICLE 1 GENERAL PROVISIONS

§ 1.1 BASIC DEFINITIONS

§ 1.1.1 THE CONTRACT DOCUMENTS

The Contract Documents are enumerated in the Agreement between the Owner and Contractor (the Agreement) and consist of the Agreement (and the documents enumerated therein), Conditions of the Contract (General Conditions, Supplementary Conditions, if any, and other Conditions), Drawings, Specifications, Addenda issued prior to execution of the Contract, other documents listed in the Agreement and Modifications issued after execution of the Contract. A Modification is (1) a written amendment to the Contract signed by both parties, (2) a Change Order, (3) a Construction Change Directive or (4) a written order for a minor change in the Work issued by the Design Agent.

§ 1.1.2 THE CONTRACT

The Contract Documents form the Contract for Construction. The Contract represents the entire and integrated agreement between the parties hereto and supersedes prior negotiations, representations or agreements, either written or oral. The Contract may be amended or modified only by a Modification. The Contract Documents shall not be construed to create a contractual relationship of any kind (1) between the Contractor and the Design Agent or the Design Agent's consultants, (2) between the Owner and a Subcontractor or a Sub-subcontractor, (3) between the Owner and the Design Agent or the Design Agent's consultants or (4) between any persons or entities other than the Owner and the Contractor. The Design Agent shall, however, be entitled to performance and enforcement of obligations under the Contract intended to facilitate performance of the Design Agent's duties.

§ 1.1.3 THE WORK

The term "Work" means the construction and services required by the Contract Documents, whether completed or partially completed, and includes all other labor, materials, equipment and services provided or to be provided by the Contractor to fulfill the Contractor's obligations. The Work may constitute the whole or a part of the Project.

§ 1.1.4 THE PROJECT

The Project is the total construction of which the Work performed under the Contract Documents may be the whole or a part and which may include construction by the Owner and by separate contractors.

§ 1.1.5 THE DRAWINGS

The Drawings are the graphic and pictorial portions of the Contract Documents showing the design, location, and dimensions of the Work, generally including plans, elevations, sections, details, schedules, and diagrams.

§ 1.1.6 THE SPECIFICATIONS

The Specifications are that portion of the Contract Documents consisting of the written requirements for materials, equipment, systems, standards and workmanship for the Work, and performance of related services.

§ 1.1.7 INSTRUMENTS OF SERVICE

Instruments of Service are representations, in any medium of expression now known or later developed, of the tangible and intangible creative work performed by the Design Agent and the Design Agent's consultants under their respective professional services agreements. Instruments of Service may include, without limitation, studies, surveys, models, sketches, drawings, specifications, and other similar materials.

§ 1.1.8 INITIAL DECISION MAKER

The Initial Decision Maker is the person identified in the Agreement to render initial decisions on Claims in accordance with Section 15.2 and certify termination of the Agreement under Section 14.2.2.

§ 1.2 CORRELATION AND INTENT OF THE CONTRACT DOCUMENTS

§ 1.2.1 The intent of the Contract Documents is to include all items and services necessary for the proper execution and completion of the Work by the Contractor. The Contract Documents are complementary, and what is required by one shall be as binding as if required by all; the Contractor shall perform all work reasonably inferable from the Contract Documents as being necessary to produce the indicated results.

§ 1.2.2 Organization of the Specifications into divisions, sections and articles, and arrangement of Drawings shall not control the Contractor in dividing the Work among Subcontractors or in establishing the extent of Work to be performed by any trade.

AIA Document A201™ – 2007. Copyright © 1911, 1915, 1918, 1925, 1937, 1951, 1958, 1961, 1963, 1966, 1970, 1976, 1987, 1997 and 2007 by The American Institute of Architects. **All rights reserved. WARNING: This AIA® Document is protected by U.S. Copyright Law and International Treaties. Unauthorized reproduction or distribution of this AIA® Document, or any portion of it, may result in severe civil and criminal penalties, and will be prosecuted to the maximum extent possible under the law.** This draft was produced by AIA software at 14:02:42 ET on 11/16/2018 under Order No.1973475587 which expires on 02/21/2019, and is not for resale.
User Notes: (1870164535)

§ 1.2.3 Unless otherwise stated in the Contract Documents, words that have well-known technical or construction industry meanings are used in the Contract Documents in accordance with such recognized meanings.

§ 1.2.4 In the event of any conflicts or discrepancies among the Contract Documents, the provisions of the Contract Documents will be interpreted in the following order of priority:

.1 Written modifications (if any).
.2 The Purchase Order.
.3 The AIA Documents, as modified by the Owner.
.4 The Supplementary Conditions (if any).
.5 The Bid Proposal.
.6 The Solicitation, including any Addenda, and the Specifications and Drawings

§ 1.2.5 In the event of any conflicts or discrepancies between the Contract Documents and the State of Rhode Island Procurement Regulations or any provision of the Rhode Island General Laws, the State of Rhode Island Procurement Regulations and the Rhode Island General Laws will control.

§ 1.2.6 In the event of any inconsistency between the Drawings and Specifications, the better quality or greater quantity of Work shall be provided.

§ 1.2.7 The Owner will be the final decision maker for any and all interpretations.

§ 1.3 CAPITALIZATION
Terms capitalized in these General Conditions include those that are (1) specifically defined, (2) the titles of numbered articles or (3) the titles of other documents published by the American Institute of Architects.

§ 1.4 INTERPRETATION
In the interest of brevity the Contract Documents frequently omit modifying words such as “all” and “any” and articles such as “the” and “an,” but the fact that a modifier or an article is absent from one statement and appears in another is not intended to affect the interpretation of either statement.

§ 1.5 OWNERSHIP AND USE OF DRAWINGS, SPECIFICATIONS AND OTHER INSTRUMENTS OF SERVICE
§ 1.5.1 The Owner and the User Agency shall have a perpetual license to utilize the Drawings, Specifications, and other documents, including electronic or digital documents, prepared by the Design Agent and the Design Agent’s consultants, for the execution of the Project and shall have and retain all rights to use them and reproduce them for the production and maintenance of the Work described therein. The Contractor, Subcontractors, Sub-subcontractors, and material or equipment suppliers shall not own or claim a copyright in the Instruments of Service. Submittal or distribution to meet official regulatory requirements or for other purposes in connection with this Project is not to be construed as publication in derogation of the Design Agent’s or Design Agent’s consultants’ reserved rights.

§ 1.5.2 The Contractor, Subcontractors, Sub-subcontractors and material or equipment suppliers are authorized to use and reproduce the Instruments of Service provided to them solely and exclusively for execution of the Work. All copies made under this authorization shall bear the copyright notice, if any, shown on the Instruments of Service. The Contractor, Subcontractors, Sub-subcontractors, and material or equipment suppliers may not use the Instruments of Service on other projects or for additions to this Project outside the scope of the Work without the specific written consent of the Owner, Design Agent and the Design Agent’s consultants.

§ 1.6 TRANSMISSION OF DATA IN DIGITAL FORM
If the parties intend to transmit Instruments of Service or any other information or documentation in digital form, they shall endeavor to establish necessary protocols governing such transmissions, unless otherwise already provided in the Agreement or the Contract Documents.

ARTICLE 2 OWNER
§ 2.1 GENERAL
§ 2.1.1 The Owner is the person or entity identified as such in the Agreement and is referred to throughout the Contract Documents as if singular in number. The Owner shall designate in writing a representative who shall have express authority to bind the Owner with respect to all matters requiring the Owner’s approval or authorization.

AIA Document A201™ – 2007. Copyright © 1911, 1915, 1918, 1925, 1937, 1951, 1958, 1961, 1963, 1966, 1970, 1976, 1987, 1997 and 2007 by The American Institute of Architects. **All rights reserved. WARNING: This AIA® Document is protected by U.S. Copyright Law and International Treaties. Unauthorized reproduction or distribution of this AIA® Document, or any portion of it, may result in severe civil and criminal penalties, and will be prosecuted to the maximum extent possible under the law.** This draft was produced by AIA software at 14:02:42 ET on 11/16/2018 under Order No.1973475587 which expires on 02/21/2019, and is not for resale.
User Notes: (1870164535)

Except as otherwise provided in Section 4.2.1, the Design Agent does not have such authority. The term "Owner" means the Owner or the Owner's authorized representative.

§ 2.1.2 **Deleted.**

§ 2.2 INFORMATION AND SERVICES REQUIRED OF THE OWNER

§ 2.2.1 **Deleted.**

§ 2.2.2 The Contractor shall secure and pay for permits and fees, necessary approvals, easements, assessments and charges required for construction, use or occupancy of permanent structures or for permanent changes in existing facilities.

§ 2.2.3 If required for the Work in the discretion of the Owner, the Owner shall furnish surveys describing physical characteristics, legal limitations and utility locations for the site of the Project, and a legal description of the site. The Contractor shall be entitled to rely on the accuracy of any information furnished by the Owner but shall exercise proper precautions relating to the safe performance of the Work.

§ 2.2.4 The Owner shall furnish information or services required of the Owner by the Contract Documents with reasonable promptness. The Owner shall also furnish any other information or services under the Owner's control and relevant to the Contractor's performance of the Work with reasonable promptness after receiving the Contractor's written request for such information or services.

§ 2.2.5 Deleted.

§ 2.3 OWNER'S RIGHT TO STOP THE WORK

If the Contractor fails to correct Work that is not in accordance with the requirements of the Contract Documents as required by Section 12.2 or repeatedly fails to carry out Work in accordance with the Contract Documents, the Owner may issue a written order to the Contractor to stop the Work, or any portion thereof, until the cause for such order has been eliminated; however, the right of the Owner to stop the Work shall not give rise to a duty on the part of the Owner to exercise this right for the benefit of the Contractor or any other person or entity, except to the extent required by Section 6.1.3.

§ 2.4 OWNER'S RIGHT TO CARRY OUT THE WORK

If the Contractor defaults or neglects to carry out the Work in accordance with the Contract Documents and fails within a 10 working-day period after receipt of written notice from the Owner to commence and continue correction of such default or neglect with diligence and promptness, the Owner may, without prejudice to other remedies the Owner may have, correct such deficiencies. In such case an appropriate Change Order shall be issued deducting from payments then or thereafter due the Contractor the reasonable cost of correcting such deficiencies, including Owner's expenses and compensation for the Design Agent's additional services made necessary by such default, neglect, or failure. Such action by the Owner and amounts charged to the Contractor are both subject to prior approval of the Design Agent. If payments then or thereafter due the Contractor are not sufficient to cover such amounts, the Contractor shall pay the difference to the Owner.

ARTICLE 3 CONTRACTOR

§ 3.1 GENERAL

§ 3.1.1 The Contractor is the person or entity identified as such in the Agreement and is referred to throughout the Contract Documents as if singular in number. The Contractor shall be lawfully licensed. The Contractor shall designate in writing a representative who shall have express authority to bind the Contractor with respect to all matters under this Contract. The term "Contractor" means the Contractor or the Contractor's authorized representative.

§ 3.1.2 The Contractor shall perform the Work in accordance with the Contract Documents.

§ 3.1.3 The Contractor shall not be relieved of obligations to perform the Work in accordance with the Contract Documents either by activities or duties of the Design Agent, or by tests, inspections, or approvals required or performed by persons or entities other than the Contractor.

AIA Document A201™ – 2007. Copyright © 1911, 1915, 1918, 1925, 1937, 1951, 1958, 1961, 1963, 1966, 1970, 1976, 1987, 1997 and 2007 by The American Institute of Architects. **All rights reserved. WARNING: This AIA® Document is protected by U.S. Copyright Law and International Treaties. Unauthorized reproduction or distribution of this AIA® Document, or any portion of it, may result in severe civil and criminal penalties, and will be prosecuted to the maximum extent possible under the law.** This draft was produced by AIA software at 14:02:42 ET on 11/16/2018 under Order No.1973475587 which expires on 02/21/2019, and is not for resale.
User Notes: (1870164535)

§ 3.2 REVIEW OF CONTRACT DOCUMENTS AND FIELD CONDITIONS BY CONTRACTOR

§ 3.2.1 Execution of the Contract by the Contractor is a representation that the Contractor has visited the site, become generally familiar with local conditions under which the Work is to be performed and correlated personal observations with requirements of the Contract Documents.

§ 3.2.2 Because the Contract Documents are complementary, the Contractor shall, before starting each portion of the Work, carefully study and compare the various Contract Documents relative to that portion of the Work, as well as the information furnished by the Owner pursuant to Section 2.2.3, shall take field measurements of any existing conditions related to that portion of the Work, and shall observe any conditions at the site affecting it. These obligations are for the purpose of facilitating coordination and construction by the Contractor and are not for the purpose of discovering errors, omissions, or inconsistencies in the Contract Documents; however, the Contractor shall promptly report to the Owner and the Design Agent any errors, inconsistencies, or omissions discovered by or made known to the Contractor or additional Drawings, Specifications, or instructions required to define the Work in greater detail to permit the proper progress of the Work as a request for information in such form as the Design Agent may require. It is recognized that the Contractor's review is made in the Contractor's capacity as a contractor and not as a licensed design professional, unless otherwise specifically provided in the Contract Documents.

§ 3.2.3 The Contractor is not required to ascertain that the Contract Documents are in accordance with applicable laws, statutes, ordinances, codes, rules and regulations, or lawful orders of public authorities, but the Contractor shall promptly report to the Design Agent and the Owner any nonconformity discovered by or made known to the Contractor as a request for information in such form as the Design Agent or Owner may require.

§ 3.2.3.1 Omissions from the Drawings and Specifications of items obviously needed to perform the Work properly, such as attachments, bolts, hangers, and other fastening devices, shall not relieve the Contractor from the obligation to furnish and install such items.

§ 3.2.4 If the Contractor believes that additional cost or time is involved because of clarifications or instructions the Design Agent issues in response to the Contractor's notices or requests for information pursuant to Sections 3.2.2 or 3.2.3, the Contractor shall make Claims as provided in Article 15. If the Contractor fails to perform the obligations of Sections 3.2.2, 3.2.3, or 3.2.3.1, the Contractor shall pay such costs and damages to the Owner as would have been avoided if the Contractor had performed such obligations. If the Contractor performs those obligations, the Contractor shall not be liable to the Owner or Design Agent for damages resulting from errors, inconsistencies, or omissions in the Contract Documents, for differences between field measurements or conditions and the Contract Documents, or for nonconformities of the Contract Documents to applicable laws, statutes, ordinances, codes, rules and regulations, and lawful orders of public authorities.

§ 3.2.4.1 The Contractor shall not make any changes without prior written authorization from the Design Agent and the Owner.

§ 3.2.5 The Owner is entitled to reimbursement from the Contractor for amounts paid to the Design Agent for evaluating and responding to the Contractor's requests for information that are not prepared in accordance with the Contract Documents or where the requested information is available to the Contractor from a careful study and comparison of the Contract Documents, field conditions, other Owner-provided information, Contractor-prepared coordination drawings, or prior Project correspondence or documentation.

§ 3.3 SUPERVISION AND CONSTRUCTION PROCEDURES

§ 3.3.1 The Contractor shall supervise and direct the Work, using the Contractor's best skill and attention. The Contractor shall be solely responsible for, and have control over, construction means, methods, techniques, sequences and procedures and for coordinating all portions of the Work under the Contract, unless the Contract Documents give other specific instructions concerning these matters. If the Contract Documents give specific instructions concerning construction means, methods, techniques, sequences or procedures, the Contractor shall evaluate the jobsite safety thereof and, except as stated below, shall be fully and solely responsible for the jobsite safety of such means, methods, techniques, sequences or procedures. If the Contractor determines that such means, methods, techniques, sequences or procedures may not be safe, the Contractor shall give timely written notice to the Owner and Design Agent and shall not proceed with that portion of the Work without further written instructions from the Design Agent. If the Contractor is then instructed to proceed with the required means, methods, techniques, sequences or procedures without acceptance of changes proposed by the Contractor, the Owner shall be solely

AIA Document A201™ – 2007. Copyright © 1911, 1915, 1918, 1925, 1937, 1951, 1958, 1961, 1963, 1966, 1970, 1976, 1987, 1997 and 2007 by The American Institute of Architects. **All rights reserved. WARNING: This AIA® Document is protected by U.S. Copyright Law and International Treaties. Unauthorized reproduction or distribution of this AIA® Document, or any portion of it, may result in severe civil and criminal penalties, and will be prosecuted to the maximum extent possible under the law.** This draft was produced by AIA software at 14:02:42 ET on 11/16/2018 under Order No.1973475587 which expires on 02/21/2019, and is not for resale.
User Notes: (1870164535)

responsible for any loss or damage arising solely from those Owner-required means, methods, techniques, sequences or procedures.

§ 3.3.2 The Contractor shall be responsible to the Owner for acts and omissions of the Contractor's employees, Subcontractors and their agents and employees, and other persons or entities performing portions of the Work for, or on behalf of, the Contractor or any of its Subcontractors.

§ 3.3.3 The Contractor shall be responsible for inspection of portions of Work already performed to determine that such portions are in proper condition to receive subsequent Work.

§ 3.4 LABOR AND MATERIALS

§ 3.4.1 Unless otherwise provided in the Contract Documents, the Contractor shall provide and pay for labor, materials, equipment, tools, construction equipment and machinery, water, heat, utilities, transportation, and other facilities and services necessary for proper execution and completion of the Work, whether temporary or permanent and whether or not incorporated or to be incorporated in the Work. Whenever the Contractor has an obligation to provide labor and materials under the Agreement, the Contractor, at a minimum, shall provide the labor for, and furnish and install and place in operation all items, including without limitation, all proper connections.

§ 3.4.2 Except in the case of minor changes in the Work authorized by the Design Agent in accordance with Sections 3.12.8 or 7.4, the Contractor may make substitutions only with the consent of the Owner, after evaluation by the Design Agent and in accordance with a Change Order or Construction Change Directive.

§ 3.4.3 The Contractor shall enforce strict discipline and good order among the Contractor's employees and other persons carrying out the Work. The Contractor shall not permit employment of unfit persons or persons not properly skilled in tasks assigned to them.

§ 3.5 WARRANTY

The Contractor warrants to the Owner and the Design Agent that materials and equipment furnished under the Contract will be of first quality, prime manufacture, and new unless the Contract Documents require or permit otherwise. The Contractor further warrants that the Work will conform to the requirements of the Contract Documents and will be free from defects, except for those inherent in the quality of the Work the Contract Documents require or permit. Work, materials, or equipment not conforming to these requirements, including substitutions not properly authorized, may be considered defective. The Contractor's warranty excludes remedy for damage or defect caused by abuse, alterations to the Work not executed by the Contractor, improper or insufficient maintenance, improper operation, or normal wear and tear and normal usage. If required by the Design Agent, the Contractor shall furnish satisfactory evidence as to the kind and quality of materials and equipment.

§ 3.6 TAXES

§ 3.6.1 The Contractor shall pay sales, consumer, use and similar taxes for the Work provided by the Contractor that are legally enacted when bids are received or negotiations concluded, whether or not yet effective or merely scheduled to go into effect.

§ 3.6.2 The State of Rhode Island is exempt from payment of any federal or state excise, transportation, or sales tax. The Rhode Island Department of Administration Division of Purchases will furnish Exemption Certificates upon request.

§ 3.7 PERMITS, FEES, NOTICES AND COMPLIANCE WITH LAWS

§ 3.7.1 Unless otherwise provided in the Contract Documents, the Contractor shall secure and pay for the building permit as well as for other permits, fees, licenses, and inspections required by the Rhode Island State Building Code necessary for proper execution and completion of the Work that are customarily secured after execution of the Contract and legally required at the time bids are received or negotiations concluded. The Contractor shall be responsible for obtaining the Certificate of Occupancy from the appropriate governmental authorities.

§ 3.7.2 The Contractor shall comply with and give notices required by applicable laws, statutes, ordinances, codes, rules and regulations, and lawful orders of public authorities applicable to performance of the Work.

AIA Document A201™ – 2007. Copyright © 1911, 1915, 1918, 1925, 1937, 1951, 1958, 1961, 1963, 1966, 1970, 1976, 1987, 1997 and 2007 by The American Institute of Architects. **All rights reserved. WARNING: This AIA® Document is protected by U.S. Copyright Law and International Treaties. Unauthorized reproduction or distribution of this AIA® Document, or any portion of it, may result in severe civil and criminal penalties, and will be prosecuted to the maximum extent possible under the law.** This draft was produced by AIA software at 14:02:42 ET on 11/16/2018 under Order No.1973475587 which expires on 02/21/2019, and is not for resale.
User Notes: (1870164535)

§ 3.7.3 The Contractor shall promptly notify the Design Agent and the Owner if the Contractor becomes aware that the Contract Documents are not in accordance with applicable laws, statutes, ordinances, codes, rules and regulations, or lawful orders of public authorities. If the Contractor performs Work knowing it to be contrary to applicable laws, statutes, ordinances, codes, rules and regulations, or lawful orders of public authorities, the Contractor shall assume appropriate responsibility for such Work and shall bear the costs attributable to correction.

§ 3.7.4 **Concealed or Unknown Conditions.** If the Contractor encounters conditions at the site that are (1) subsurface or otherwise concealed physical conditions that differ materially from those indicated in the Contract Documents or (2) unknown physical conditions of an unusual nature, that differ materially from those ordinarily found to exist and generally recognized as inherent in construction activities of the character provided for in the Contract Documents, the Contractor shall promptly provide notice to the Owner and the Design Agent before conditions are disturbed and in no event later than 21 working days after first observance of the conditions. The Design Agent will promptly investigate such conditions and, if the Design Agent determines that they differ materially and cause an increase or decrease in the Contractor's cost of, or time required for, performance of any part of the Work, will recommend an equitable adjustment in the Contract Sum or Contract Time, or both. If the Design Agent determines that the conditions at the site are not materially different from those indicated in the Contract Documents and that no change in the terms of the Contract is justified, the Design Agent shall promptly notify the Owner and Contractor in writing, stating the reasons. If either party disputes the Design Agent's determination or recommendation, that party may proceed as provided in Article 15.

§ 3.7.5 If, in the course of the Work, the Contractor encounters human remains or recognizes the existence of burial markers, archaeological sites or wetlands not indicated in the Contract Documents, the Contractor shall immediately suspend any operations that would affect them and shall notify the Owner and Design Agent. Upon receipt of such notice, the Owner shall promptly take any action necessary to obtain governmental authorization required to resume the operations. The Contractor shall continue to suspend such operations until otherwise instructed by the Owner but shall continue with all other operations that do not affect those remains or features. Requests for adjustments in the Contract Sum and Contract Time arising from the existence of such remains or features may be made as provided in Article 15.

§ 3.8 ALLOWANCES

§ 3.8.1 The Contractor shall include in the Contract Sum all allowances stated in the Contract Documents. Items covered by allowances shall be supplied for such amounts and by such persons or entities as the Owner may direct, but the Contractor shall not be required to employ persons or entities to whom the Contractor has reasonable objection.

§ 3.8.2 Unless otherwise provided in the Contract Documents,

.1 Allowances shall cover the cost to the Contractor of materials and equipment delivered at the site and all required taxes, less applicable trade discounts;

.2 Contractor's costs for unloading and handling at the site, labor, installation costs, overhead, profit and other expenses contemplated for stated allowance amounts shall be included in the Contract Sum but not in the allowances; and

.3 Whenever costs are more than or less than allowances, the Contract Sum shall be adjusted accordingly by Change Order. The amount of the Change Order shall reflect (1) the difference between actual costs and the allowances under Section 3.8.2.1 and (2) changes in Contractor's costs under Section 3.8.2.2.

§ 3.8.3 Materials and equipment under an allowance shall be selected by the Owner with reasonable promptness.

§ 3.9 SUPERINTENDENT

§ 3.9.1 The Contractor shall employ a competent superintendent and necessary assistants who shall be in attendance at the Project site during performance of the Work. The superintendent shall represent the Contractor, and communications given to the superintendent shall be as binding as if given to the Contractor.

§ 3.9.2 The Contractor, as soon as practicable after award of the Contract, shall furnish in writing to the Owner through the Design Agent the name and qualifications of a proposed superintendent. The Design Agent may reply within 14 working days to the Contractor in writing stating (1) whether the Owner or the Design Agent has reasonable objection to the proposed superintendent or (2) that the Design Agent requires additional time to review.

AIA Document A201™ – 2007. Copyright © 1911, 1915, 1918, 1925, 1937, 1951, 1958, 1961, 1963, 1966, 1970, 1976, 1987, 1997 and 2007 by The American Institute of Architects. **All rights reserved. WARNING: This AIA® Document is protected by U.S. Copyright Law and International Treaties. Unauthorized reproduction or distribution of this AIA® Document, or any portion of it, may result in severe civil and criminal penalties, and will be prosecuted to the maximum extent possible under the law.** This draft was produced by AIA software at 14:02:42 ET on 11/16/2018 under Order No.1973475587 which expires on 02/21/2019, and is not for resale.
User Notes: (1870164535)

Failure of the Design Agent to reply within the 14 working-day period shall constitute notice of no reasonable objection.

§ 3.9.3 The Contractor shall not employ a proposed superintendent to whom the Owner or Design Agent has made reasonable and timely objection. The Contractor shall not change the superintendent without the Owner's consent, which shall not unreasonably be withheld or delayed.

§ 3.10 CONTRACTOR'S CONSTRUCTION SCHEDULES

§ 3.10.1 The Contractor, within 20 working days after the issuance of the Purchase Order, shall prepare and submit for the Owner's and Design Agent's information a Contractor's construction schedule for the Work. The schedule shall not exceed time limits current under the Contract Documents, shall be revised at appropriate intervals, not less frequently than monthly, as required by the conditions of the Work and Project, shall be related to the entire Project to the extent required by the Contract Documents, and shall provide for expeditious and practicable execution of the Work. The Contractor shall certify on the initial schedule and all revised schedules that they comply with the Contract Documents.

§ 3.10.2 The Contractor shall prepare a submittal schedule, within 20 working days after the issuance of the Purchase Order, and thereafter as necessary to maintain a current submittal schedule, and shall submit the schedule(s) for the Owner's and the Design Agent's approval. The Owner's and the Design Agent's approval shall not unreasonably be delayed or withheld. The submittal schedule shall (1) be coordinated with the Contractor's construction schedule, and (2) allow the Owner and the Design Agent reasonable time to review submittals. If the Contractor fails to submit a submittal schedule, the Contractor shall not be entitled to any increase in Contract Sum or extension of Contract Time based on the time required for review of submittals.

§ 3.10.3 The Contractor shall perform the Work in general accordance with the most recent schedules submitted to the Owner and Design Agent.

§ 3.11 DOCUMENTS AND SAMPLES AT THE SITE

The Contractor shall maintain at the site for the Owner one copy of the Drawings, Specifications, Addenda, Change Orders and other Modifications, in good order and marked currently to indicate field changes and selections made during construction, and one copy of approved Shop Drawings, Product Data, Samples and similar required submittals. These shall be available to the Design Agent and shall be delivered to the Design Agent for submittal to the Owner upon completion of the Work as a record of the Work as constructed.

§ 3.12 SHOP DRAWINGS, PRODUCT DATA AND SAMPLES

§ 3.12.1 Shop Drawings are drawings, diagrams, schedules and other data specially prepared for the Work by the Contractor or a Subcontractor, Sub-subcontractor, manufacturer, supplier or distributor to illustrate some portion of the Work.

§ 3.12.2 Product Data are illustrations, standard schedules, performance charts, instructions, brochures, diagrams and other information furnished by the Contractor to illustrate materials or equipment for some portion of the Work.

§ 3.12.3 Samples are physical examples that illustrate materials, equipment or workmanship and establish standards by which the Work will be judged.

§ 3.12.4 Shop Drawings, Product Data, Samples and similar submittals are not Contract Documents. Their purpose is to demonstrate the way by which the Contractor proposes to conform to the information given and the design concept expressed in the Contract Documents for those portions of the Work for which the Contract Documents require submittals. Review by the Design Agent is subject to the limitations of Section 4.2.7. Informational submittals upon which the Design Agent is not expected to take responsive action may be so identified in the Contract Documents. Submittals that are not required by the Contract Documents may be returned by the Design Agent without action.

§ 3.12.5 The Contractor shall review for compliance with the Contract Documents, approve and submit to the Design Agent Shop Drawings, Product Data, Samples and similar submittals required by the Contract Documents in accordance with the submittal schedule approved by the Owner and the Design Agent or, in the absence of an

AIA Document A201™ – 2007. Copyright © 1911, 1915, 1918, 1925, 1937, 1951, 1958, 1961, 1963, 1966, 1970, 1976, 1987, 1997 and 2007 by The American Institute of Architects. **All rights reserved. WARNING: This AIA® Document is protected by U.S. Copyright Law and International Treaties. Unauthorized reproduction or distribution of this AIA® Document, or any portion of it, may result in severe civil and criminal penalties, and will be prosecuted to the maximum extent possible under the law.** This draft was produced by AIA software at 14:02:42 ET on 11/16/2018 under Order No.1973475587 which expires on 02/21/2019, and is not for resale.
User Notes: (1870164535)

approved submittal schedule, with reasonable promptness and in such sequence as to cause no delay in the Work or in the activities of the Owner or of separate contractors.

§ 3.12.6 By submitting Shop Drawings, Product Data, Samples and similar submittals, the Contractor represents to the Owner and Design Agent that the Contractor has (1) reviewed and approved them, (2) determined and verified materials, field measurements and field construction criteria related thereto, or will do so and (3) checked and coordinated the information contained within such submittals with the requirements of the Work and of the Contract Documents.

§ 3.12.7 The Contractor shall perform no portion of the Work for which the Contract Documents require submittal and review of Shop Drawings, Product Data, Samples or similar submittals until the respective submittal has been approved by the Design Agent.

§ 3.12.8 The Work shall be in accordance with approved submittals except that the Contractor shall not be relieved of responsibility for deviations from requirements of the Contract Documents by the Design Agent's approval of Shop Drawings, Product Data, Samples or similar submittals unless the Contractor has specifically informed the Design Agent in writing of such deviation at the time of submittal and (1) the Design Agent has given written approval to the specific deviation as a minor change in the Work, or (2) a Change Order or Construction Change Directive has been issued authorizing the deviation. The Contractor shall not be relieved of responsibility for errors or omissions in Shop Drawings, Product Data, Samples or similar submittals by the Design Agent's approval thereof.

§ 3.12.9 The Contractor shall direct specific attention, in writing or on resubmitted Shop Drawings, Product Data, Samples or similar submittals, to revisions other than those requested by the Design Agent on previous submittals. In the absence of such written notice, the Design Agent's approval of a resubmission shall not apply to such revisions.

§ 3.12.10 The Contractor shall not be required to provide professional services that constitute the practice of architecture or engineering unless such services are specifically required by the Contract Documents for a portion of the Work or unless the Contractor needs to provide such services in order to carry out the Contractor's responsibilities for construction means, methods, techniques, sequences and procedures. The Contractor shall not be required to provide professional services in violation of applicable law. If professional design services or certifications by a design professional related to systems, materials or equipment are specifically required of the Contractor by the Contract Documents, the Owner and the Design Agent will specify all performance and design criteria that such services must satisfy. The Contractor shall cause such services or certifications to be provided by a properly licensed design professional, whose signature and seal shall appear on all drawings, calculations, specifications, certifications, Shop Drawings and other submittals prepared by such professional. Shop Drawings and other submittals related to the Work designed or certified by such professional, if prepared by others, shall bear such professional's written approval when submitted to the Design Agent. The Owner and the Design Agent shall be entitled to rely upon the adequacy, accuracy and completeness of the services, certifications, and approvals performed or provided by such design professionals, provided the Owner and Design Agent have specified to the Contractor all performance and design criteria that such services must satisfy. Pursuant to this Section 3.12.10, the Design Agent will review, approve, or take other appropriate action on submittals only for the limited purpose of checking for conformance with information given and the design concept expressed in the Contract Documents. The Contractor shall not be responsible for the adequacy of the performance and design criteria specified in the Contract Documents.

§ 3.12.11 The Owner shall be entitled to reimbursement from the Contractor for amounts paid to the Design Agent for evaluation of resubmittals.

§ 3.13 USE OF SITE

The Contractor shall confine operations at the site to areas permitted by applicable laws, statutes, ordinances, codes, rules and regulations, and lawful orders of public authorities, and any restrictions imposed by the User Agency or the Owner, and the Contract Documents and shall not unreasonably encumber the site with materials or equipment.

AIA Document A201™ – 2007. Copyright © 1911, 1915, 1918, 1925, 1937, 1951, 1958, 1961, 1963, 1966, 1970, 1976, 1987, 1997 and 2007 by The American Institute of Architects. **All rights reserved. WARNING: This AIA® Document is protected by U.S. Copyright Law and International Treaties. Unauthorized reproduction or distribution of this AIA® Document, or any portion of it, may result in severe civil and criminal penalties, and will be prosecuted to the maximum extent possible under the law.** This draft was produced by AIA software at 14:02:42 ET on 11/16/2018 under Order No.1973475587 which expires on 02/21/2019, and is not for resale.
User Notes: (1870164535)

§ 3.14 CUTTING AND PATCHING

§ 3.14.1 The Contractor shall be responsible for cutting, fitting or patching required to complete the Work or to make its parts fit together properly. All areas requiring cutting, fitting and patching shall be restored to the condition existing prior to the cutting, fitting and patching, unless otherwise required by the Contract Documents.

§ 3.14.2 The Contractor shall not damage or endanger a portion of the Work or fully or partially completed construction of the Owner or separate contractors by cutting, patching or otherwise altering such construction, or by excavation. The Contractor shall not cut or otherwise alter such construction by the Owner or a separate contractor except with written consent of the Owner and of such separate contractor; such consent shall not be unreasonably withheld. The Contractor shall not unreasonably withhold from the Owner or a separate contractor the Contractor's consent to cutting or otherwise altering the Work.

§ 3.15 CLEANING UP

§ 3.15.1 The Contractor shall keep the premises and surrounding area free from accumulation of waste materials or rubbish caused by operations under the Contract. At completion of the Work, the Contractor shall remove waste materials, rubbish, the Contractor's tools, construction equipment, machinery and surplus materials from and about the Project.

§ 3.15.2 If the Contractor fails to clean up as provided in the Contract Documents, the Owner may do so and Owner shall be entitled to reimbursement from the Contractor.

§ 3.16 ACCESS TO WORK

The Contractor shall provide the Owner and Design Agent access to the Work in preparation and progress wherever located.

§ 3.17 ROYALTIES, PATENTS AND COPYRIGHTS

The Contractor shall pay all royalties and license fees. The Contractor shall defend suits or claims for infringement of copyrights and patent rights and shall hold the Owner and Design Agent harmless from loss on account thereof, but shall not be responsible for such defense or loss when a particular design, process or product of a particular manufacturer or manufacturers is required by the Contract Documents, or where the copyright violations are contained in Drawings, Specifications or other documents prepared by the Owner or Design Agent. However, if the Contractor has reason to believe that the required design, process or product is an infringement of a copyright or a patent, the Contractor shall be responsible for such loss unless such information is promptly furnished to the Design Agent and the Owner.

§ 3.18 INDEMNIFICATION

§ 3.18.1 To the fullest extent permitted by law the Contractor shall indemnify and hold harmless the Owner, the State of Rhode Island, its elected and appointed officials, members, employees, and agents, the Design Agent, the Design Agent's Consultants, Subconsultants, and Subcontractors, and agents and employees and any of them from and against any and all claims, demands, damages, liabilities, judgments, losses and expenses, including but not limited to reasonable attorneys' fees and costs of mediation, arbitration, and/or litigation, arising out of or resulting from performance of the Work, and/or the obligations of the under the Contract Documents, but only to the extent caused by willful misconduct and/or negligent acts or omissions of the Contractor, a Subcontractor, anyone directly or indirectly employed by them or anyone for whose acts they may be liable, regardless of whether or not any such claim, demand, damage, liability, judgment, loss or expense is caused in part by a party indemnified hereunder. Such obligation shall not be construed to negate, abridge, or reduce other rights or obligations of indemnity that would otherwise exist as to a party or person described in this Section 3.18.

§ 3.18.2 In claims against any person or entity indemnified under this Section 3.18 by an employee of the Contractor, a Subcontractor, anyone directly or indirectly employed by them or anyone for whose acts they may be liable, the indemnification obligation under Section 3.18.1 shall not be limited by a limitation on amount or type of damages, compensation or benefits payable by or for the Contractor or a Subcontractor under workers' compensation acts, disability benefit acts or other employee benefit acts.

§ 3.18.3 Without limiting the generality of the foregoing, the defense and indemnity set forth in this Section 3.18 includes, without limitation, all liabilities, damages, losses, claims, demands, and actions on account of bodily injury, death, or property loss to a person or entity indemnified hereunder or any other persons or entities, whether

AIA Document A201™ – 2007. Copyright © 1911, 1915, 1918, 1925, 1937, 1951, 1958, 1961, 1963, 1966, 1970, 1976, 1987, 1997 and 2007 by The American Institute of Architects. **All rights reserved. WARNING: This AIA® Document is protected by U.S. Copyright Law and International Treaties. Unauthorized reproduction or distribution of this AIA® Document, or any portion of it, may result in severe civil and criminal penalties, and will be prosecuted to the maximum extent possible under the law.** This draft was produced by AIA software at 14:02:42 ET on 11/16/2018 under Order No.1973475587 which expires on 02/21/2019, and is not for resale.
User Notes: (1870164535)

based upon statutory (including, without limitation, workers compensation), contractual, tort, or other liability of any person or entity so indemnified.

§ 3.18.4 The remedies set forth herein shall not deprive any person indemnified hereunder of any other indemnity action, right, or remedy otherwise available to any such person or entity at common law or otherwise.

§ 3.18.5 The Contractor will include the indemnity set forth in this Section 3.18, without modification, in each Subcontract with any Subcontractor.

§ 3.18.6 Notwithstanding any other language in the Contract Documents to the contrary, the indemnity hereunder shall survive Final Completion of the Work and final payment under the Agreement and shall survive any termination of the Agreement.

ARTICLE 4 DESIGN AGENT

§ 4.1 GENERAL

§ 4.1.1 The Design Agent is the person lawfully licensed to practice his or her profession in the State of Rhode Island or an entity lawfully practicing its profession in the State of Rhode Island and identified in the Contract Documents as the Design Agent. The term "Design Agent" means the Design Agent or the Design Agent's authorized representative.

§ 4.1.2 Duties, responsibilities and limitations of authority of the Design Agent as set forth in the Contract Documents shall not be restricted, modified or extended without written consent of the Owner, Contractor and Design Agent. Consent shall not be unreasonably withheld.

§ 4.1.3 If the employment of the Design Agent is terminated, the Owner shall employ a successor Design Agent as to whom the Contractor has no reasonable objection and whose status under the Contract Documents shall be that of the Design Agent.

§ 4.2 ADMINISTRATION OF THE CONTRACT

§ 4.2.1 The Owner with assistance from the Design Agent will provide administration of the Contract as described in the Contract Documents and will be an Owner's representative during construction through the date the Design Agent issues the final Certificate for Payment and continuing until the expiration of the one-year period following Final Completion. The Design Agent will have authority to act on behalf of the Owner only to the extent provided in the Contract Documents.

§ 4.2.2 The Design Agent will visit the site at intervals appropriate to the stage of construction, or as otherwise agreed with the Owner, to become generally familiar with the progress and quality of the portion of the Work completed, and to determine in general if the Work observed is being performed in a manner indicating that the Work, when fully completed, will be in accordance with the Contract Documents. However, the Design Agent will not be required to make exhaustive or continuous on-site inspections to check the quality or quantity of the Work. The Design Agent will not have control over, charge of, or responsibility for, the construction means, methods, techniques, sequences or procedures, or for the safety precautions and programs in connection with the Work, since these are solely the Contractor's rights and responsibilities under the Contract Documents, except as provided in Section 3.3.1.

§ 4.2.2.1 The Owner is entitled to reimbursement from the Contractor for amounts paid to the Design Agent for site visits made necessary by the fault of the Contractor or by defects and deficiencies in the Work.

§ 4.2.3 On the basis of the site visits, the Design Agent will keep the Owner reasonably informed about the progress and quality of the portion of the Work completed, and report to the Owner (1) known deviations from the Contract Documents and from the most recent construction schedule submitted by the Contractor, and (2) defects and deficiencies observed in the Work. The Design Agent will not be responsible for the Contractor's failure to perform the Work in accordance with the requirements of the Contract Documents. The Design Agent will not have control over or charge of and will not be responsible for acts or omissions of the Contractor, Subcontractors, or their agents or employees, or any other persons or entities performing portions of the Work.

AIA Document A201™ – 2007. Copyright © 1911, 1915, 1918, 1925, 1937, 1951, 1958, 1961, 1963, 1966, 1970, 1976, 1987, 1997 and 2007 by The American Institute of Architects. **All rights reserved. WARNING: This AIA® Document is protected by U.S. Copyright Law and International Treaties. Unauthorized reproduction or distribution of this AIA® Document, or any portion of it, may result in severe civil and criminal penalties, and will be prosecuted to the maximum extent possible under the law.** This draft was produced by AIA software at 14:02:42 ET on 11/16/2018 under Order No.1973475587 which expires on 02/21/2019, and is not for resale.
User Notes: (1870164535)

§ 4.2.4 COMMUNICATIONS FACILITATING CONTRACT ADMINISTRATION
Except as otherwise provided in the Contract Documents or when direct communications have been specially authorized, the Owner and Contractor shall endeavor to communicate with each other through the Design Agent about matters arising out of or relating to the Contract. Communications by and with the Design Agent's consultants shall be through the Design Agent. Communications by and with Subcontractors and material suppliers shall be through the Contractor. Communications by and with separate contractors shall be through the Owner.

§ 4.2.5 Based on the Design Agent's evaluations of the Contractor's Applications for Payment, the Design Agent will review and certify the amounts due the Contractor and will issue Certificates for Payment in such amounts.

§ 4.2.6 The Design Agent has authority to reject Work that does not conform to the Contract Documents. Whenever the Design Agent considers it necessary or advisable, the Design Agent will have authority to require inspection or testing of the Work in accordance with Sections 13.5.2 and 13.5.3, whether or not such Work is fabricated, installed or completed. However, neither this authority of the Design Agent nor a decision made in good faith either to exercise or not to exercise such authority shall give rise to a duty or responsibility of the Design Agent to the Contractor, Subcontractors, material and equipment suppliers, their agents or employees, or other persons or entities performing portions of the Work.

§ 4.2.7 The Design Agent will review and approve, or take other appropriate action upon, the Contractor's submittals such as Shop Drawings, Product Data and Samples, but only for the limited purpose of checking for conformance with information given and the design concept expressed in the Contract Documents. The Design Agent's action will be taken in accordance with the submittal schedule approved by the Design Agent or, in the absence of an approved submittal schedule, with reasonable promptness while allowing sufficient time in the Design Agent's professional judgment to permit adequate review. Review of such submittals is not conducted for the purpose of determining the accuracy and completeness of other details such as dimensions and quantities, or for substantiating instructions for installation or performance of equipment or systems, all of which remain the responsibility of the Contractor as required by the Contract Documents. The Design Agent's review of the Contractor's submittals shall not relieve the Contractor of the obligations under Sections 3.3, 3.5 and 3.12. The Design Agent's review shall not constitute approval of safety precautions or, unless otherwise specifically stated by the Design Agent, of any construction means, methods, techniques, sequences or procedures. The Design Agent's approval of a specific item shall not indicate approval of an assembly of which the item is a component.

§ 4.2.8 The Design Agent will prepare Change Orders and Construction Change Directives, and may authorize minor changes in the Work as provided in Section 7.4. The Design Agent will investigate and make determinations and recommendations regarding concealed and unknown conditions as provided in Section 3.7.4.

§ 4.2.9 The Design Agent will conduct inspections to determine the date or dates of Substantial Completion and the date of final completion; issue Certificates of Substantial Completion pursuant to Section 9.8; receive and forward to the Owner, for the Owner's review and records, written warranties and related documents required by the Contract and assembled by the Contractor pursuant to Section 9.10; and issue a final Certificate for Payment pursuant to Section 9.10.

§ 4.2.10 If the Owner and Design Agent agree, the Design Agent will provide one or more project representatives to assist in carrying out the Design Agent's responsibilities at the site. The duties, responsibilities and limitations of authority of such project representatives shall be as set forth in an exhibit to be incorporated in the Contract Documents.

§ 4.2.11 The Design Agent will interpret and decide matters concerning performance under, and requirements of, the Contract Documents on written request of either the Owner or Contractor. The Design Agent's response to such requests will be made in writing within any time limits agreed upon or otherwise with reasonable promptness.

§ 4.2.12 Interpretations and decisions of the Design Agent will be consistent with the intent of, and reasonably inferable from, the Contract Documents and will be in writing or in the form of drawings. When making such interpretations and decisions, the Design Agent will endeavor to secure faithful performance by both Owner and Contractor, will not show partiality to either and will not be liable for results of interpretations or decisions rendered in good faith.

AIA Document A201™ – 2007. Copyright © 1911, 1915, 1918, 1925, 1937, 1951, 1958, 1961, 1963, 1966, 1970, 1976, 1987, 1997 and 2007 by The American Institute of Architects. **All rights reserved. WARNING: This AIA® Document is protected by U.S. Copyright Law and International Treaties. Unauthorized reproduction or distribution of this AIA® Document, or any portion of it, may result in severe civil and criminal penalties, and will be prosecuted to the maximum extent possible under the law.** This draft was produced by AIA software at 14:02:42 ET on 11/16/2018 under Order No.1973475587 which expires on 02/21/2019, and is not for resale.
User Notes: (1870164535)

§ 4.2.13 The Design Agent's decisions on matters relating to aesthetic effect will be final if consistent with the intent expressed in the Contract Documents and approved by the Owner.

§ 4.2.14 The Design Agent will review and respond to requests for information about the Contract Documents. The Design Agent's response to such requests will be made in writing within any time limits agreed upon or otherwise with reasonable promptness. If appropriate, the Design Agent will prepare and issue supplemental Drawings and Specifications in response to the requests for information.

ARTICLE 5 SUBCONTRACTORS

§ 5.1 DEFINITIONS

§ 5.1.1 A Subcontractor is a person or entity who has a direct contract with the Contractor to perform a portion of the Work at the site. The term "Subcontractor" is referred to throughout the Contract Documents as if singular in number and means a Subcontractor or an authorized representative of the Subcontractor. The term "Subcontractor" does not include a separate contractor or subcontractors of a separate contractor.

§ 5.1.2 A Sub-subcontractor is a person or entity who has a direct or indirect contract with a Subcontractor to perform a portion of the Work at the site. The term "Sub-subcontractor" is referred to throughout the Contract Documents as if singular in number and means a Sub-subcontractor or an authorized representative of the Sub-subcontractor.

§ 5.2 AWARD OF SUBCONTRACTS AND OTHER CONTRACTS FOR PORTIONS OF THE WORK

§ 5.2.1 Unless otherwise stated in the Contract Documents or the bidding requirements, the Contractor, as soon as practicable after award of the Contract, shall furnish in writing to the Owner and the Design Agent the names of persons or entities (including those who are to furnish materials or equipment fabricated to a special design) proposed for each portion of the Work. The Owner may reply within 14 working days to the Contractor in writing stating (1) whether the Owner or the Design Agent has reasonable objection to any such proposed person or entity or (2) that the Owner or Design Agent requires additional time for review.

§ 5.2.2 The Contractor shall not contract with a proposed person or entity to whom the Owner or Design Agent has made reasonable and timely objection. The Contractor shall not be required to contract with anyone to whom the Contractor has made reasonable objection.

§ 5.2.3 If the Owner or Design Agent has reasonable objection to a person or entity proposed by the Contractor, the Contractor shall propose another to whom the Owner or Design Agent has no reasonable objection. If the proposed but rejected Subcontractor was reasonably capable of performing the Work, the Contract Sum and Contract Time shall be increased or decreased by the difference, if any, occasioned by such change, and an appropriate Change Order shall be issued before commencement of the substitute Subcontractor's Work. However, no increase in the Contract Sum or Contract Time shall be allowed for such change unless the Contractor has acted promptly and responsively in submitting names as required.

§ 5.2.4 The Contractor shall not substitute a Subcontractor, person or entity previously selected if the Owner or Design Agent makes reasonable objection to such substitution.

§ 5.2.5 MANUFACTURERS AND FABRICATORS

§ 5.2.5.1 Not later than 10 working days after the date of commencement of the Work, the Contractor shall furnish in writing to the Owner and the Design Agent the names of the manufacturers or fabricators for certain products, equipment, and systems identified in the Specifications and, where applicable, the name of the installing Subcontractor. The Owner may reply within 14 working days to the Contractor in writing, stating: (i) whether the Owner or the Design Agent has reasonable objection to any such proposed person manufacturer or fabricator; or (ii) whether the Owner or Design Agent requires additional time to review.

§ 5.2.5.2 The Contractor shall not contract with a proposed manufacturer, fabricator, or Subcontractor to whom the Owner or Design Agent has made reasonable and timely objection. The Contractor shall not be required to contract with anyone to whom the Contractor has made reasonable objection.

AIA Document A201™ – 2007. Copyright © 1911, 1915, 1918, 1925, 1937, 1951, 1958, 1961, 1963, 1966, 1970, 1976, 1987, 1997 and 2007 by The American Institute of Architects. **All rights reserved. WARNING: This AIA® Document is protected by U.S. Copyright Law and International Treaties. Unauthorized reproduction or distribution of this AIA® Document, or any portion of it, may result in severe civil and criminal penalties, and will be prosecuted to the maximum extent possible under the law.** This draft was produced by AIA software at 14:02:42 ET on 11/16/2018 under Order No.1973475587 which expires on 02/21/2019, and is not for resale.
User Notes: (1870164535)

§ 5.2.5.3 If the Owner or Design Agent has an objection to a manufacturer, fabricator, or Subcontractor proposed by the Contractor, the Contractor shall propose another to whom the Owner or Design Agent has no objection.

§ 5.2.5.4 The Contractor shall not substitute a manufacturer, fabricator, or Subcontractor previously selected if the Owner or Design Agent makes reasonable objection to such substitution.

§ 5.3 SUBCONTRACTUAL RELATIONS

By appropriate written agreement, the Contractor shall require each Subcontractor, to the extent of the Work to be performed by the Subcontractor, to be bound to the Contractor by terms of the Contract Documents, and to assume toward the Contractor all the obligations and responsibilities, including the responsibility for safety of the Subcontractor's Work, which the Contractor, by these Documents, assumes toward the Owner and Design Agent. Upon the request of the User Agency and/or the Owner, the Contractor shall provide the User Agency and/or the Owner with copies of each subcontract agreement. Each subcontract agreement shall preserve and protect the rights of the Owner and Design Agent under the Contract Documents with respect to the Work to be performed by the Subcontractor so that subcontracting thereof will not prejudice such rights, and shall allow to the Subcontractor, unless specifically provided otherwise in the subcontract agreement, the benefit of all rights, remedies and redress against the Contractor that the Contractor, by the Contract Documents, has against the Owner. Where appropriate, the Contractor shall require each Subcontractor to enter into similar agreements with Sub-subcontractors. The Contractor shall make available to each proposed Subcontractor, prior to the execution of the subcontract agreement, copies of the Contract Documents to which the Subcontractor will be bound, and, upon written request of the Subcontractor, identify to the Subcontractor terms and conditions of the proposed subcontract agreement that may be at variance with the Contract Documents. Subcontractors will similarly make copies of applicable portions of such documents available to their respective proposed Sub-subcontractors.

§ 5.4 CONTINGENT ASSIGNMENT OF SUBCONTRACTS

§ 5.4.1 Each subcontract agreement for a portion of the Work is assigned by the Contractor to the Owner, provided that

.1 assignment is effective only after termination of the Contract by the Owner for cause pursuant to Section 14.2 and only for those subcontract agreements that the Owner accepts by notifying the Subcontractor and Contractor in writing; and

.2 assignment is subject to the prior rights of the surety, if any, obligated under bond relating to the Contract.

§ 5.4.2 Upon such assignment, if the Work has been suspended for more than 30 working days, the Subcontractor's compensation shall be equitably adjusted for increases in cost resulting from the suspension.

§ 5.4.3 Upon such assignment to the Owner under this Section 5.4, the Owner may further assign the subcontract to a successor contractor or other entity.

ARTICLE 6 CONSTRUCTION BY OWNER OR BY SEPARATE CONTRACTORS

§ 6.1 OWNER'S RIGHT TO PERFORM CONSTRUCTION AND TO AWARD SEPARATE CONTRACTS

§ 6.1.1 The Owner reserves the right to perform construction or operations related to the Project with the Owner's own forces, and to award separate contracts in connection with other portions of the Project or other construction or operations on the site under Conditions of the Contract identical or substantially similar to these including those portions related to insurance and waiver of subrogation.

§ 6.1.2 When separate contracts are awarded for different portions of the Project or other construction or operations on the site, the term "Contractor" in the Contract Documents in each case shall mean the Contractor who executes each separate Owner-Contractor Agreement.

§ 6.1.3 The Owner shall provide for coordination of the activities of the Owner's own forces and of each separate contractor with the Work of the Contractor, who shall cooperate with them. The Contractor shall participate with other separate contractors and the Owner in reviewing their construction schedules. The Contractor shall make any revisions to the construction schedule deemed necessary after a joint review and mutual agreement. The construction schedules shall then constitute the schedules to be used by the Contractor, separate contractors and the Owner until subsequently revised.

AIA Document A201™ – 2007. Copyright © 1911, 1915, 1918, 1925, 1937, 1951, 1958, 1961, 1963, 1966, 1970, 1976, 1987, 1997 and 2007 by The American Institute of Architects. **All rights reserved. WARNING: This AIA® Document is protected by U.S. Copyright Law and International Treaties. Unauthorized reproduction or distribution of this AIA® Document, or any portion of it, may result in severe civil and criminal penalties, and will be prosecuted to the maximum extent possible under the law.** This draft was produced by AIA software at 14:02:42 ET on 11/16/2018 under Order No.1973475587 which expires on 02/21/2019, and is not for resale.
User Notes: (1870164535)

§ 6.1.4 Unless otherwise provided in the Contract Documents, when the Owner performs construction or operations related to the Project with the Owner's own forces, the Owner shall be deemed to be subject to the same obligations and to have the same rights that apply to the Contractor under the Conditions of the Contract, including, without excluding others, those stated in Article 3, this Article 6 and Articles 10, 11 and 12.

§ 6.2 MUTUAL RESPONSIBILITY

§ 6.2.1 The Contractor shall afford the Owner and separate contractors reasonable opportunity for introduction and storage of their materials and equipment and performance of their activities, and shall connect and coordinate the Contractor's construction and operations with theirs as required by the Contract Documents.

§ 6.2.2 If part of the Contractor's Work depends for proper execution or results upon construction or operations by the Owner or a separate contractor, the Contractor shall, prior to proceeding with that portion of the Work, promptly report to the Design Agent apparent discrepancies or defects in such other construction that would render it unsuitable for such proper execution and results. Failure of the Contractor so to report shall constitute an acknowledgment that the Owner's or separate contractor's completed or partially completed construction is fit and proper to receive the Contractor's Work, except as to defects not then reasonably discoverable.

§ 6.2.3 The Contractor shall reimburse the Owner for costs the Owner incurs that are payable to a separate contractor because of the Contractor's delays, improperly timed activities or defective construction. The Owner shall be responsible to the Contractor for costs the Contractor incurs because of a separate contractor's delays, improperly timed activities, damage to the Work or defective construction.

§ 6.2.4 The Contractor shall promptly remedy damage the Contractor wrongfully causes to completed or partially completed construction or to property of the Owner or separate contractors as provided in Section 10.2.5.

§ 6.2.5 The Owner and each separate contractor shall have the same responsibilities for cutting and patching as are described for the Contractor in Section 3.14.

§ 6.3 OWNER'S RIGHT TO CLEAN UP

If a dispute arises among the Contractor, separate contractors and the Owner as to the responsibility under their respective contracts for maintaining the premises and surrounding area free from waste materials and rubbish, the Owner may clean up and allocate the cost among those responsible.

ARTICLE 7 CHANGES IN THE WORK

§ 7.1 GENERAL

§ 7.1.1 Changes in the Work may be accomplished after execution of the Contract, and without invalidating the Contract, by Change Order, Construction Change Directive or order for a minor change in the Work, subject to the limitations stated in this Article 7 and elsewhere in the Contract Documents.

§ 7.1.2 A Change Order shall be based upon agreement between the Owner and the Contractor; a Construction Change Directive requires agreement by the Owner and may or may not be agreed to by the Contractor; an order for a minor change in the Work may be issued by the Design Agent alone.

§ 7.1.3 Changes in the Work shall be performed under applicable provisions of the Contract Documents, and the Contractor shall proceed promptly, unless otherwise provided in the Change Order, Construction Change Directive or order for a minor change in the Work.

§ 7.2 CHANGE ORDERS

§ 7.2.1 A Change Order is a written instrument prepared by the Contractor and signed by the Owner, Contractor and Design Agent stating their agreement upon all of the following:

.1 The change in the Work;
.2 The amount of the adjustment, if any, in the Contract Sum; and
.3 The extent of the adjustment, if any, in the Contract Time.

§ 7.2.2 Subsequent to the approval of a Change Order as provided in § 7.1.2, whether such Change Order changes the Contract Sum or Contract Time or both, no additional claim related to such Change Order will be considered by

AIA Document A201™ – 2007. Copyright © 1911, 1915, 1918, 1925, 1937, 1951, 1958, 1961, 1963, 1966, 1970, 1976, 1987, 1997 and 2007 by The American Institute of Architects. **All rights reserved. WARNING: This AIA® Document is protected by U.S. Copyright Law and International Treaties. Unauthorized reproduction or distribution of this AIA® Document, or any portion of it, may result in severe civil and criminal penalties, and will be prosecuted to the maximum extent possible under the law.** This draft was produced by AIA software at 14:02:42 ET on 11/16/2018 under Order No.1973475587 which expires on 02/21/2019, and is not for resale.
User Notes: (1870164535)

the Owner. Any change, once incorporated into a Change Order, is all inclusive, and includes all factors that could have been considered at the time of the Change Order such as Project impact or schedule "ripple" effect.

§ 7.3 CONSTRUCTION CHANGE DIRECTIVES

§ 7.3.1 A Construction Change Directive is a written order prepared by the Design Agent and signed by the Owner, directing a change in the Work prior to agreement on adjustment, if any, in the Contract Sum or Contract Time, or both. The Owner may by Construction Change Directive, without invalidating the Contract, order changes in the Work within the general scope of the Contract consisting of additions, deletions or other revisions, the Contract Sum and Contract Time being adjusted accordingly.

§ 7.3.2 A Construction Change Directive shall be used in the absence of total agreement on the terms of a Change Order.

§ 7.3.3 If the Construction Change Directive provides for an adjustment to the Contract Sum, the adjustment shall be based on one of the following methods:

.1 Mutual acceptance of a lump sum properly itemized and supported by sufficient substantiating data to permit evaluation;
.2 Unit prices stated in the Contract Documents or subsequently agreed upon;
.3 Cost to be determined in a manner agreed upon by the parties and a mutually acceptable fixed or percentage fee; or
.4 As provided in Section 7.3.7.

§ 7.3.4 **Deleted.**

§ 7.3.5 Upon receipt of a Construction Change Directive, the Contractor shall promptly proceed with the change in the Work involved and advise the Design Agent of the Contractor's agreement or disagreement with the method, if any, provided in the Construction Change Directive for determining the proposed adjustment in the Contract Sum or Contract Time.

§ 7.3.6 A Construction Change Directive signed by the Contractor indicates the Contractor's agreement therewith, including adjustment in Contract Sum and Contract Time or the method for determining them. Such agreement shall be effective immediately and shall be recorded as a Change Order.

§ 7.3.7 If the Contractor does not respond promptly or disagrees with the method for adjustment in the Contract Sum, the Design Agent shall determine the method and the adjustment on the basis of reasonable expenditures and savings of those performing the Work attributable to the change, including, in case of an increase in the Contract Sum, an amount for overhead and profit as set forth in Section 7.3.1. In such case, and also under Section 7.3.3.3, the Contractor shall keep and present, in such form as the Design Agent may prescribe, an itemized accounting together with appropriate supporting data. Unless otherwise provided in the Contract Documents, costs for the purposes of this Section 7.3.7 shall be limited to the following:

.1 Costs of labor, including social security, old age and unemployment insurance, fringe benefits required by agreement or custom, and workers' compensation insurance;
.2 Costs of materials, supplies and equipment, including cost of delivery;
.3 Rental costs of machinery and equipment, exclusive of hand tools; or
.4 Costs of premiums for all bonds and insurance and permit fees related to the Work..

§ 7.3.8 The amount of credit to be allowed by the Contractor to the Owner for a deletion or change that results in a net decrease in the Contract Sum shall be actual net cost as confirmed by the Design Agent. When both additions and credits covering related Work or substitutions are involved in a change, the allowance for overhead and profit shall be figured on the basis of net increase, if any, with respect to that change.

§ 7.3.9 Pending final determination of the total cost of a Construction Change Directive to the Owner, the Contractor may request payment for Work completed under the Construction Change Directive in Applications for Payment. The Design Agent will make an interim determination for purposes of monthly certification for payment for those costs and certify for payment the amount that the Design Agent determines, in the Design Agent's professional judgment, to be reasonably justified. The Design Agent's interim determination of cost shall adjust the Contract

AIA Document A201™ – 2007. Copyright © 1911, 1915, 1918, 1925, 1937, 1951, 1958, 1961, 1963, 1966, 1970, 1976, 1987, 1997 and 2007 by The American Institute of Architects. **All rights reserved. WARNING: This AIA® Document is protected by U.S. Copyright Law and International Treaties. Unauthorized reproduction or distribution of this AIA® Document, or any portion of it, may result in severe civil and criminal penalties, and will be prosecuted to the maximum extent possible under the law.** This draft was produced by AIA software at 14:02:42 ET on 11/16/2018 under Order No.1973475587 which expires on 02/21/2019, and is not for resale.
User Notes: (1870164535)

Sum on the same basis as a Change Order, subject to the right of either party to disagree and assert a Claim in accordance with Article 15.

§ 7.3.10 When the Owner and Contractor agree with a determination made by the Design Agent concerning the adjustments in the Contract Sum and Contract Time, or otherwise reach agreement upon the adjustments, such agreement shall be effective immediately and the Contractor will prepare a Change Order. Change Orders may be issued for all or any part of a Construction Change Directive.

§ 7.3.11 The combined overhead and profit included in the total cost to the Owner for a change in the Work shall be based on the following schedule:

.1 For the Contractor, for work performed by the Contractor's own forces, an amount not to exceed ten (10%) percent of the cost.

.2 For the Contractor, for work performed by the Contractor's Subcontractors, an amount not to exceed five (5%) of the amount due to the Subcontractors.

.3 For each Subcontractor, for work performed by the Subcontractor's own forces, an amount not to exceed ten (10%) percent of the cost.

.4 Where the Work represents both additions and deletions and results in a net increase, the allowable overhead and profit shall be in accordance with this Section 7.3.11, but in no event shall the amount exceed fifteen (15%) percent of the net increase in the cost of the Work.

§ 7.3.12 All proposals with an aggregate cost equal to or in excess of $500.00 shall be accompanied by a detailed itemization of costs, including labor, materials (quantities and prices), and Subcontracts, in a form acceptable to the Owner. In no event will a change order request reflecting an aggregate cost equal to or in excess of $500.00 be approved without such itemization.

§ 7.4 MINOR CHANGES IN THE WORK

The Design Agent with the prior written approval of the Owner has authority to order minor changes in the Work not involving adjustment in the Contract Sum or extension of the Contract Time and not inconsistent with the intent of the Contract Documents. Such changes will be affected by written order signed by the Design Agent and shall be binding on the Owner and Contractor.

ARTICLE 8 TIME

§ 8.1 DEFINITIONS

§ 8.1.1 Unless otherwise provided, Contract Time is the period of time, including authorized adjustments, allotted in the Contract Documents for Substantial Completion of the Work.

The date of commencement of the Work is the date established in Section 3.1 of the Agreement..

§ 8.1.3 The date of Substantial Completion is the date certified by the Design Agent in accordance with Section 9.8.

§ 8.1.4 **Deleted.**

§ 8.2 PROGRESS AND COMPLETION

§ 8.2.1 Time limits stated in the Contract Documents are of the essence of the Contract. By executing the Agreement the Contractor confirms that the Contract Time is a reasonable period for performing the Work.

§ 8.2.2 The Contractor shall not except by agreement or instruction of the Owner in writing, prematurely commence operations on the site or elsewhere prior to the effective date of insurance required by Article 11 to be furnished by the Contractor and Owner. The date of commencement of the Work shall not be changed by the effective date of such insurance.

§ 8.2.3 The Contractor shall proceed expeditiously with adequate forces and shall achieve Substantial Completion within the Contract Time.

§ 8.3 DELAYS AND EXTENSIONS OF TIME

§ 8.3.1 If the Contractor is delayed at any time in the commencement or progress of the Work by an act or neglect of the Owner or Design Agent, or of an employee of either, or of a separate contractor employed by the Owner; or by

AIA Document A201™ – 2007. Copyright © 1911, 1915, 1918, 1925, 1937, 1951, 1958, 1961, 1963, 1966, 1970, 1976, 1987, 1997 and 2007 by The American Institute of Architects. **All rights reserved. WARNING: This AIA® Document is protected by U.S. Copyright Law and International Treaties. Unauthorized reproduction or distribution of this AIA® Document, or any portion of it, may result in severe civil and criminal penalties, and will be prosecuted to the maximum extent possible under the law.** This draft was produced by AIA software at 14:02:42 ET on 11/16/2018 under Order No.1973475587 which expires on 02/21/2019, and is not for resale.
User Notes: (1870164535)

changes ordered in the Work; or by labor disputes, fire, unusual delay in deliveries, unavoidable casualties or other causes beyond the Contractor's control, then the Contract Time shall be extended by Change Order for such reasonable time as the Owner may determine.

§ 8.3.2 Claims relating to time shall be made in accordance with applicable provisions of Article 15.

§ 8.3.3 This Section 8.3 does not preclude recovery of damages for delay by either party under other provisions of the Contract Documents.

ARTICLE 9 PAYMENTS AND COMPLETION

§ 9.1 CONTRACT SUM

The Contract Sum is stated in the Agreement and, including authorized adjustments, is the total amount payable by the Owner to the Contractor for performance of the Work under the Contract Documents.

§ 9.2 SCHEDULE OF VALUES

Within 20 working days of the issuance of the Purchase Order, and promptly if revision is necessary from time to time as a result of a Change Order, the Contractor shall submit to the Owner, before the first Application for Payment, a schedule of values allocating the entire Contract Sum to the various portions of the Work and prepared in such form and supported by such data to substantiate its accuracy as the Design Agent and the Owner may require. This schedule, if and when approved by the Design Agent and the Owner in writing, shall be used as a basis for reviewing the Contractor's Applications for Payment.

§ 9.3 APPLICATIONS FOR PAYMENT

§ 9.3.1 At least 10 working days before the date established for each progress payment, the Contractor shall submit to the Design Agent and the Owner for approval an itemized Application for Payment prepared in accordance with the schedule of values for completed portions of the Work. Such application shall be notarized, if required, and supported by such data substantiating the Contractor's right to payment as the Owner or the Design Agent may require, such as copies of requisitions from Subcontractors and material suppliers, and shall reflect retainage if provided for in the Contract Documents.

§ 9.3.1.1 All Applications for Payment for Change Orders must be accompanied by a Notice of Change in Purchase Order issued by the Owner, and if directed by the Owner, by the User Agency.

§ 9.3.1.2 Applications for Payment shall not include requests for payment for portions of the Work for which the Contractor does not intend to pay a Subcontractor or material supplier, unless such Work has been performed by others whom the Contractor intends to pay.

§ 9.3.1.3 The form of Application for Payment shall be AIA Document G702, Application and Certification for Payment, supported by AIA Document G702A, Continuation Sheet.

§ 9.3.1.4 Until Substantial Completion, the Owner shall pay ninety-five (95%) percent of the amount due the Contract on account of progress payments.

§ 9.3.2 Unless otherwise provided in the Contract Documents, payments shall be made on account of materials and equipment delivered and suitably stored at the site for subsequent incorporation in the Work. If approved in advance by the Owner, payment may similarly be made for materials and equipment suitably stored off the site at a location agreed upon in writing. Payment for materials and equipment stored on or off the site shall be conditioned upon compliance by the Contractor with procedures satisfactory to the Owner to establish the Owner's title to such materials and equipment or otherwise protect the Owner's interest, and shall include the costs of applicable insurance, storage and transportation to the site for such materials and equipment stored off the site.

§ 9.3.3 The Contractor warrants that title to all Work covered by an Application for Payment will pass to the Owner no later than the time of payment. The Contractor further warrants that upon submittal of an Application for Payment all Work for which Certificates for Payment have been previously issued and payments received from the Owner shall be free and clear of liens, claims, security interests or encumbrances in favor of the Contractor, Subcontractors, material suppliers, or other persons or entities making a claim by reason of having provided labor, materials and equipment relating to the Work. The Contractor shall immediately satisfy any lien, claim, or

AIA Document A201™ – 2007. Copyright © 1911, 1915, 1918, 1925, 1937, 1951, 1958, 1961, 1963, 1966, 1970, 1976, 1987, 1997 and 2007 by The American Institute of Architects. **All rights reserved. WARNING: This AIA® Document is protected by U.S. Copyright Law and International Treaties. Unauthorized reproduction or distribution of this AIA® Document, or any portion of it, may result in severe civil and criminal penalties, and will be prosecuted to the maximum extent possible under the law.** This draft was produced by AIA software at 14:02:42 ET on 11/16/2018 under Order No.1973475587 which expires on 02/21/2019, and is not for resale.
User Notes: (1870164535)

encumbrance against the site where the Project is located and indemnify the Owner from and against all resulting costs and expenses, including without limitation, attorneys' fees.

§ 9.4 CERTIFICATES FOR PAYMENT

§ 9.4.1 The Design Agent will, within 7 working days after receipt of the Contractor's Application for Payment, either issue to the Owner a Certificate for Payment, with a copy to the Contractor, for such amount as the Design Agent determines is properly due, or notify the Contractor and Owner in writing of the Design Agent's reasons for withholding certification in whole or in part as provided in Section 9.5.1.

§ 9.4.2 The issuance of a Certificate for Payment will constitute a representation by the Design Agent to the Owner, based on the Design Agent's evaluation of the Work and the data comprising the Application for Payment, that, the Work has progressed to the point indicated and that the quality of the Work is in accordance with the Contract Documents. The foregoing representations are subject to an evaluation of the Work for conformance with the Contract Documents upon Substantial Completion, to results of subsequent tests and inspections, to correction of minor deviations from the Contract Documents prior to completion and to specific qualifications expressed by the Design Agent. The issuance of a Certificate for Payment will further constitute a representation that the Contractor is entitled to payment in the amount certified. However, the issuance of a Certificate for Payment will not be a representation that the Design Agent has (1) made exhaustive or continuous on-site inspections to check the quality or quantity of the Work, (2) reviewed construction means, methods, techniques, sequences or procedures, (3) reviewed copies of requisitions received from Subcontractors and material suppliers and other data requested by the Owner to substantiate the Contractor's right to payment, or (4) made examination to ascertain how or for what purpose the Contractor has used money previously paid on account of the Contract Sum.

§ 9.4.3 The Contractor must submit all product literature, material and color samples with each Application for Payment, or as otherwise required by the Owner.

§ 9.5 DECISIONS TO WITHHOLD CERTIFICATION

§ 9.5.1 The Design Agent will withhold a Certificate for Payment in whole or in part, to the extent reasonably necessary to protect the Owner, if in the Design Agent's opinion the representations to the Owner required by Section 9.4.2 cannot be made. If the Design Agent is unable to certify payment in the amount of the Application, the Design Agent will notify the Contractor and Owner as provided in Section 9.4.1. If the Contractor and Design Agent cannot agree on a revised amount, the Design Agent will promptly issue a Certificate for Payment for the amount for which the Design Agent is able to make such representations to the Owner. The Design Agent may also withhold a Certificate for Payment or, because of subsequently discovered evidence, may nullify the whole or a part of a Certificate for Payment previously issued, to such extent as may be necessary in the Design Agent's opinion to protect the Owner from loss for which the Contractor is responsible, including loss resulting from acts and omissions described in Section 3.3.2, because of:

.1 defective Work not remedied;
.2 third party claims filed or reasonable evidence indicating probable filing of such claims unless security acceptable to the Owner is provided by the Contractor;
.3 failure of the Contractor to make payments properly to Subcontractors or for labor, materials or equipment;
.4 reasonable evidence that the Work cannot be completed for the unpaid balance of the Contract Sum;
.5 damage to the Owner or a separate contractor;
.6 reasonable evidence that the Work will not be completed within the Contract Time, and that the unpaid balance would not be adequate to cover actual or liquidated damages for the anticipated delay;
.7 failure to carry out the Work in accordance with the Contract Documents; or
.8 any other failure to comply with the obligations of the Contractor under the Contract Documents.

§ 9.5.2 When the above reasons for withholding certification are removed, certification will be made for amounts previously withheld.

§ 9.5.3 The Owner may, at its sole option, issue joint checks to the Contractor and to any Subcontractor or material or equipment suppliers to whom the Contractor failed to make payment for Work properly performed or material or equipment suitably delivered. If the Owner makes payments by joint check, the Owner shall notify the Design Agent and the Design Agent will reflect such payment on the next Certificate for Payment.

AIA Document A201™ – 2007. Copyright © 1911, 1915, 1918, 1925, 1937, 1951, 1958, 1961, 1963, 1966, 1970, 1976, 1987, 1997 and 2007 by The American Institute of Architects. **All rights reserved. WARNING: This AIA® Document is protected by U.S. Copyright Law and International Treaties. Unauthorized reproduction or distribution of this AIA® Document, or any portion of it, may result in severe civil and criminal penalties, and will be prosecuted to the maximum extent possible under the law.** This draft was produced by AIA software at 14:02:42 ET on 11/16/2018 under Order No.1973475587 which expires on 02/21/2019, and is not for resale.
User Notes: (1870164535)

§ 9.6 PROGRESS PAYMENTS

§ 9.6.1 After the Design Agent has issued a Certificate for Payment and the Owner has approved the Certificate for Payment in writing, the Owner shall make payment in the manner and within the time provided in the Contract Documents, and shall so notify the Design Agent.

§ 9.6.2 The Contractor shall pay each Subcontractor no later than 10 working days after receipt of payment from the Owner the amount to which the Subcontractor is entitled, reflecting percentages actually retained from payments to the Contractor on account of the Subcontractor's portion of the Work. The Contractor shall, by appropriate agreement with each Subcontractor, require each Subcontractor to make payments to Sub-subcontractors in a similar manner.

§ 9.6.3 The Design Agent will, on request, furnish to a Subcontractor, if practicable, information regarding percentages of completion or amounts applied for by the Contractor and action taken thereon by the Design Agent and Owner on account of portions of the Work done by such Subcontractor.

§ 9.6.4 The Owner has the right to request written evidence from the Contractor that the Contractor has properly paid Subcontractors and material and equipment suppliers amounts paid by the Owner to the Contractor for subcontracted Work. If the Contractor fails to furnish such evidence within 7 working days, the Owner shall have the right to contact Subcontractors to ascertain whether they have been properly paid. The Owner shall have the right to withhold payment(s) to the Contractor in the event that any Subcontractors or material and equipment suppliers have not been properly paid. Neither the Owner nor Design Agent shall have an obligation to pay or to see to the payment of money to a Subcontractor, except as may otherwise be required by law.

§ 9.6.5 Contractor payments to material and equipment suppliers shall be treated in a manner similar to that provided in Sections 9.6.2, 9.6.3 and 9.6.4.

§ 9.6.6 A Certificate for Payment, a progress payment, or partial or entire use or occupancy of the Project by the Owner shall not constitute acceptance of Work not in accordance with the Contract Documents.

§ 9.6.7 Unless the Contractor provides the Owner with a payment bond in the full penal sum of the Contract Sum, payments received by the Contractor for Work properly performed by Subcontractors and suppliers shall be held by the Contractor for those Subcontractors or suppliers who performed Work or furnished materials, or both, under contract with the Contractor for which payment was made by the Owner. Nothing contained herein shall require money to be placed in a separate account and not commingled with money of the Contractor, shall create any fiduciary liability or tort liability on the part of the Contractor for breach of trust or shall entitle any person or entity to an award of punitive damages against the Contractor for breach of the requirements of this provision.

§ 9.7 FAILURE OF PAYMENT

If the Design Agent does not issue a Certificate for Payment, through no fault of the Contractor, within 7 working days after receipt of the Contractor's Application for Payment, or if the Owner does not pay the Contractor within 7 working days after the date established in the Contract Documents the amount certified by the Design Agent or awarded by binding dispute resolution, then the Contractor may, upon 7 additional working days' written notice to the Owner and Design Agent, make a claim for payment as provided under the provisions of applicable law.

.

§ 9.8 SUBSTANTIAL COMPLETION

§ 9.8.1 Substantial Completion is the stage in the progress of the Work when the Work or designated portion thereof is sufficiently complete in accordance with the Contract Documents so that the Owner can occupy or utilize the Work for its intended use.

§ 9.8.2 When the Contractor considers that the Work, or a portion thereof which the Owner agrees to accept separately, is substantially complete, the Contractor shall prepare and submit to the Design Agent a comprehensive list of items to be completed or corrected prior to final payment. Failure to include an item on such list does not alter the responsibility of the Contractor to complete all Work in accordance with the Contract Documents.

§ 9.8.3 Upon receipt of the Contractor's list, the Design Agent will make an inspection to determine whether the Work or designated portion thereof is substantially complete. If the Design Agent's inspection discloses any item, whether or not included on the Contractor's list, which is not sufficiently complete in accordance with the Contract

AIA Document A201™ – 2007. Copyright © 1911, 1915, 1918, 1925, 1937, 1951, 1958, 1961, 1963, 1966, 1970, 1976, 1987, 1997 and 2007 by The American Institute of Architects. **All rights reserved. WARNING: This AIA® Document is protected by U.S. Copyright Law and International Treaties. Unauthorized reproduction or distribution of this AIA® Document, or any portion of it, may result in severe civil and criminal penalties, and will be prosecuted to the maximum extent possible under the law.** This draft was produced by AIA software at 14:02:42 ET on 11/16/2018 under Order No.1973475587 which expires on 02/21/2019, and is not for resale.
User Notes: (1870164535)

Documents so that the Owner can occupy or utilize the Work or designated portion thereof for its intended use, the Contractor shall, before issuance of the Certificate of Substantial Completion, complete or correct such item upon notification by the Design Agent. In such case, the Contractor shall then submit a request for another inspection by the Design Agent to determine Substantial Completion. The Design Agent will perform no more than 2 inspections to determine whether the Work or a designated portion thereof has attained Substantial Completion in accordance with the Contract Documents. The Owner is entitled to reimbursement from the Contractor for amounts paid to the Design Agent for any additional inspections.

§ 9.8.4 When the Work or designated portion thereof is substantially complete, the Design Agent will prepare a Certificate of Substantial Completion that shall establish the date of Substantial Completion, shall establish responsibilities of the Owner and Contractor for security, maintenance, heat, utilities, damage to the Work and insurance, and shall fix the time within which the Contractor shall finish all items on the list accompanying the Certificate.

§ 9.8.5 The Certificate of Substantial Completion shall be submitted to the Owner and Contractor for their written acceptance of responsibilities assigned to them in such Certificate. Upon such acceptance and consent of surety, if any, the Owner shall make payment less the amount of five (5%) percent to be retained by the Owner in accordance with R.I. Gen. Laws § 37-12-10.1. Such payment shall be adjusted for Work that is incomplete or not in accordance with the requirements of the Contract Documents.

§ 9.9 PARTIAL OCCUPANCY OR USE

§ 9.9.1 The Owner may occupy or use any completed or partially completed portion of the Work at any stage when such portion is designated by separate agreement with the Contractor, provided such occupancy or use is consented to by the insurer as required under Section 11.3.1.5 and authorized by public authorities having jurisdiction over the Project. Such partial occupancy or use may commence whether or not the portion is substantially complete, provided the Owner and Contractor have accepted in writing the responsibilities assigned to each of them for payments, retainage, if any, security, maintenance, heat, utilities, damage to the Work and insurance, and have agreed in writing concerning the period for correction of the Work and commencement of warranties required by the Contract Documents. When the Contractor considers a portion substantially complete, the Contractor shall prepare and submit a list to the Design Agent as provided under Section 9.8.2. Consent of the Contractor to partial occupancy or use shall not be unreasonably withheld. The stage of the progress of the Work shall be determined by written agreement between the Owner and Contractor or, if no agreement is reached, by decision of the Design Agent.

§ 9.9.2 Immediately prior to such partial occupancy or use, the Owner, Contractor and Design Agent shall jointly inspect the area to be occupied or portion of the Work to be used in order to determine and record the condition of the Work.

§ 9.9.3 Unless otherwise agreed upon, partial occupancy or use of a portion or portions of the Work shall not constitute acceptance of Work not complying with the requirements of the Contract Documents.

§ 9.10 FINAL COMPLETION AND FINAL PAYMENT

§ 9.10.1 Upon receipt of the Contractor's written notice that the Work is ready for final inspection and acceptance and upon receipt of a final Application for Payment, the Design Agent will promptly make such inspection and, when the Design Agent finds the Work acceptable under the Contract Documents and the Contract fully performed, the Design Agent will promptly issue a final Certificate for Payment stating that to the best of the Design Agent's knowledge, information and belief, and on the basis of the Design Agent's on-site visits and inspections, the Work has been completed in accordance with terms and conditions of the Contract Documents and that the entire balance found to be due the Contractor and noted in the final Certificate is due and payable. The Design Agent's final Certificate for Payment will constitute a further representation that conditions listed in Section 9.10.2 as precedent to the Contractor's being entitled to final payment have been fulfilled. The Design Agent will perform no more than 2 inspections to determine whether the Work or a designated portion thereof has attained Final Completion in accordance with the Contract Documents. The Owner is entitled to reimbursement from the Contractor for amounts paid to the Design Agent for any additional inspections.

§ 9.10.2 Neither final payment nor any remaining retained percentage shall become due until the Contractor submits to the Design Agent (1) an affidavit that payrolls, bills for materials and equipment, and other indebtedness connected with the Work for which the Owner or the Owner's property might be responsible or encumbered (less

AIA Document A201™ – 2007. Copyright © 1911, 1915, 1918, 1925, 1937, 1951, 1958, 1961, 1963, 1966, 1970, 1976, 1987, 1997 and 2007 by The American Institute of Architects. **All rights reserved. WARNING: This AIA® Document is protected by U.S. Copyright Law and International Treaties. Unauthorized reproduction or distribution of this AIA® Document, or any portion of it, may result in severe civil and criminal penalties, and will be prosecuted to the maximum extent possible under the law.** This draft was produced by AIA software at 14:02:42 ET on 11/16/2018 under Order No.1973475587 which expires on 02/21/2019, and is not for resale.
User Notes: (1870164535)

amounts withheld by Owner) have been paid or otherwise satisfied, (2) a certificate evidencing that insurance required by the Contract Documents to remain in force after final payment is currently in effect and will not be canceled or allowed to expire until at least 30 working days' prior written notice has been given to the Owner, (3) a written statement that the Contractor knows of no substantial reason that the insurance will not be renewable to cover the period required by the Contract Documents, (4) consent of surety, if any, to final payment, (5), if required by the Owner, other data establishing payment or satisfaction of obligations, such as receipts, releases and waivers of liens, claims, security interests or encumbrances arising out of the Contract, to the extent and in such form as may be designated by the Owner, and (6) all other close-out documents required by the Owner, including without limitation, all as-built plans, warranties, manuals, and other materials set forth in the Contract Documents. If a Subcontractor refuses to furnish a release or waiver required by the Owner, the Contractor may furnish a bond satisfactory to the Owner to indemnify the Owner against such lien. If such lien remains unsatisfied after payments are made, the Contractor shall refund to the Owner all money that the Owner may be compelled to pay in discharging such lien, including all costs and reasonable attorneys' fees.

§ 9.10.3 If, after Substantial Completion of the Work, final completion thereof is materially delayed through no fault of the Contractor or by issuance of Change Orders affecting final completion, and the Design Agent so confirms, the Owner shall, upon application by the Contractor and certification by the Design Agent, and without terminating the Contract, make payment of the balance due for that portion of the Work fully completed and accepted. If the remaining balance for Work not fully completed or corrected is less than retainage stipulated in the Contract Documents, and if bonds have been furnished, the written consent of surety to payment of the balance due for that portion of the Work fully completed and accepted shall be submitted by the Contractor to the Design Agent prior to certification of such payment. Such payment shall be made under terms and conditions governing final payment, except that it shall not constitute a waiver of claims.

§ 9.10.4 The making of final payment shall constitute a waiver of Claims by the Owner except those arising from:

.1 liens, Claims, security interests, or encumbrances arising out of the Contract and unsettled;
.2 failure of the Work to comply with the requirements of the Contract Documents;
.3 terms of special warranties required by the Contract Documents; or
.4 claims permitted under the State of Rhode Island General Conditions of Purchase Regulation.

§ 9.10.5 Acceptance of final payment by the Contractor, a Subcontractor or material supplier shall constitute a waiver of claims by that payee except those previously made in writing and identified by that payee as unsettled at the time of final Application for Payment.

§ 9.11 The Contractor and the Contractor's surety shall be liable for and shall pay the Owner as liquidated damages the sums specified in the Solicitation and Bid Form, or if completed, the amount set forth in Section 3.4 of the Agreement.

§ 9.12 Warranties required by the Contract Documents shall commence on the date of Final Completion of the Work.

ARTICLE 10 PROTECTION OF PERSONS AND PROPERTY

§ 10.1 SAFETY PRECAUTIONS AND PROGRAMS

The Contractor shall be responsible for initiating, maintaining and supervising all safety precautions and programs in connection with the performance of the Contract.

§ 10.2 SAFETY OF PERSONS AND PROPERTY

§ 10.2.1 The Contractor shall take reasonable precautions for safety of, and shall provide reasonable protection to prevent damage, injury or loss to:

.1 employees on the Work and other persons who may be affected thereby;
.2 the Work and materials and equipment to be incorporated therein, whether in storage on or off the site, under care, custody or control of the Contractor or the Contractor's Subcontractors or Sub-subcontractors; and
.3 other property at the site or adjacent thereto, such as trees, shrubs, lawns, walks, pavements, roadways, structures and utilities not designated for removal, relocation or replacement in the course of construction.

AIA Document A201™ – 2007. Copyright © 1911, 1915, 1918, 1925, 1937, 1951, 1958, 1961, 1963, 1966, 1970, 1976, 1987, 1997 and 2007 by The American Institute of Architects. **All rights reserved. WARNING: This AIA® Document is protected by U.S. Copyright Law and International Treaties. Unauthorized reproduction or distribution of this AIA® Document, or any portion of it, may result in severe civil and criminal penalties, and will be prosecuted to the maximum extent possible under the law.** This draft was produced by AIA software at 14:02:42 ET on 11/16/2018 under Order No.1973475587 which expires on 02/21/2019, and is not for resale.
User Notes: (1870164535)

§ 10.2.2 The Contractor shall comply with and give notices required by applicable laws, statutes, ordinances, codes, rules and regulations, and lawful orders of public authorities bearing on safety of persons or property or their protection from damage, injury or loss.

§ 10.2.3 The Contractor shall erect and maintain, as required by existing conditions and performance of the Contract, reasonable safeguards for safety and protection, including posting danger signs and other warnings against hazards, promulgating safety regulations and notifying owners and users of adjacent sites and utilities.

§ 10.2.4 When use or storage of explosives or other hazardous materials or equipment or unusual methods are necessary for execution of the Work, the Contractor shall exercise utmost care and carry on such activities under supervision of properly qualified personnel and in consultation with the appropriate governmental authorities.

§ 10.2.4.1 When use or storage of explosives, or other hazardous materials, substances or equipment, or unusual methods are necessary for execution of the Work, the Contractor shall give the User Agency and the Owner reasonable advance notice.

§ 10.2.4.2 If the Contract Documents require the Contractor to handle materials or substances that under certain circumstances may be designated as hazardous, the Contractor shall handle such materials in an appropriate manner.

§ 10.2.5 The Contractor shall promptly remedy damage and loss (other than damage or loss insured under property insurance required by the Contract Documents) to property referred to in Sections 10.2.1.2 and 10.2.1.3 caused in whole or in part by the Contractor, a Subcontractor, a Sub-subcontractor, or anyone directly or indirectly employed by any of them, or by anyone for whose acts they may be liable and for which the Contractor is responsible under Sections 10.2.1.2 and 10.2.1.3, except damage or loss attributable to acts or omissions of the Owner or Design Agent or anyone directly or indirectly employed by either of them, or by anyone for whose acts either of them may be liable, and not attributable to the fault or negligence of the Contractor. The foregoing obligations of the Contractor are in addition to the Contractor's obligations under Section 3.18.

§ 10.2.6 The Contractor shall designate a responsible member of the Contractor's organization at the site whose duty shall be the prevention of accidents. This person shall be the Contractor's superintendent unless otherwise designated by the Contractor in writing to the Owner and Design Agent.

§ 10.2.7 The Contractor shall not permit any part of the construction or site to be loaded so as to cause damage or create an unsafe condition.

§ 10.2.8 INJURY OR DAMAGE TO PERSON OR PROPERTY
If either party suffers injury or damage to person or property because of an act or omission of the other party, or of others for whose acts such party is legally responsible, written notice of such injury or damage, whether or not insured, shall be given to the other party within a reasonable time. The notice shall provide sufficient detail to enable the other party to investigate the matter.

§ 10.3 HAZARDOUS MATERIALS
§ 10.3.1 The Contractor is responsible for compliance with any requirements included in the Contract Documents regarding hazardous materials. If the Contractor encounters a hazardous material or substance not addressed in the Contract Documents and if reasonable precautions will be inadequate to prevent foreseeable bodily injury or death to persons resulting from a material or substance, including but not limited to asbestos or polychlorinated biphenyl (PCB), encountered on the site by the Contractor, the Contractor shall, upon recognizing the condition, immediately stop Work in the affected area and report the condition to the Owner and Design Agent in writing.

§ 10.3.2 Upon receipt of the Contractor's written notice, the Owner shall obtain the services of a licensed laboratory to verify the presence or absence of the material or substance reported by the Contractor and, in the event such material or substance is found to be present, to cause it to be rendered harmless. Unless otherwise required by the Contract Documents, the Owner shall furnish in writing to the Contractor and Design Agent the names and qualifications of persons or entities who are to perform tests verifying the presence or absence of such material or substance or who are to perform the task of removal or safe containment of such material or substance. The Contractor and the Design Agent will promptly reply to the Owner in writing stating whether or not either has reasonable objection to the persons or entities proposed by the Owner. If either the Contractor or Design Agent has

AIA Document A201™ – 2007. Copyright © 1911, 1915, 1918, 1925, 1937, 1951, 1958, 1961, 1963, 1966, 1970, 1976, 1987, 1997 and 2007 by The American Institute of Architects. **All rights reserved. WARNING: This AIA® Document is protected by U.S. Copyright Law and International Treaties. Unauthorized reproduction or distribution of this AIA® Document, or any portion of it, may result in severe civil and criminal penalties, and will be prosecuted to the maximum extent possible under the law.** This draft was produced by AIA software at 14:02:42 ET on 11/16/2018 under Order No.1973475587 which expires on 02/21/2019, and is not for resale.
User Notes: (1870164535)

an objection to a person or entity proposed by the Owner, the Owner shall propose another to whom the Contractor and the Design Agent have no reasonable objection. When the material or substance has been rendered harmless, Work in the affected area shall resume upon written agreement of the Owner and Contractor. By Change Order, the Contract Time shall be extended appropriately and the Contract Sum shall be increased in the amount of the Contractor's reasonable additional costs of shut-down, delay and start-up.

§ 10.3.3 To the extent permitted by the provisions of R.I. Gen. Laws §§ 9-31-1 et seq., the Owner shall indemnify and hold harmless the Contractor, Subcontractors, Design Agent, Design Agent's consultants and agents and employees of any of them from and against claims, damages, losses and expenses, including but not limited to attorneys' fees, arising out of or resulting from performance of the Work in the affected area if in fact the material or substance presents the risk of bodily injury or death as described in Section 10.3.1 and has not been rendered harmless, provided that such claim, damage, loss or expense is attributable to bodily injury, sickness, disease or death, or to injury to or destruction of tangible property (other than the Work itself), except to the extent that such damage, loss or expense is due to the fault or negligence of the party seeking indemnity.

§ 10.3.4 The Owner shall not be responsible under this Section 10.3 for materials or substances the Contractor brings to the site unless such materials or substances are required by the Contract Documents. The Owner shall be responsible for materials or substances required by the Contract Documents, except to the extent of the Contractor's fault or negligence in the use and handling of such materials or substances.

§ 10.3.5 The Contractor shall indemnify the Owner for the cost and expense the Owner incurs (1) for remediation of a material or substance the Contractor brings to the site and negligently handles, or (2) where the Contractor fails to perform its obligations under Section 10.3.1, except to the extent that the cost and expense are due to the Owner's fault or negligence.

§ 10.3.6 If, without negligence on the part of the Contractor, the Contractor is held liable by a government agency for the cost of remediation of a hazardous material or substance solely by reason of performing Work as required by the Contract Documents, the Owner shall indemnify the Contractor for all cost and expense thereby incurred.

§ 10.4 EMERGENCIES

In an emergency affecting safety of persons or property, the Contractor shall act, at the Contractor's discretion, to prevent threatened damage, injury or loss. Additional compensation or extension of time claimed by the Contractor on account of an emergency shall be determined as provided in Article 15 and Article 7.

ARTICLE 11 INSURANCE AND BONDS

§ 11.1 CONTRACTOR'S LIABILITY INSURANCE

§ 11.1.1 The Contractor shall purchase from and maintain in a company or companies lawfully authorized to do business in the jurisdiction in which the Project is located such insurance as is specified in the Solicitation and as will protect the Contractor from claims set forth below which may arise out of or result from the Contractor's operations and completed operations under the Contract and for which the Contractor may be legally liable, whether such operations be by the Contractor or by a Subcontractor or by anyone directly or indirectly employed by any of them, or by anyone for whose acts any of them may be liable:

- .1 Claims under workers' compensation, disability benefit and other similar employee benefit acts that are applicable to the Work to be performed;
- .2 Claims for damages because of bodily injury, occupational sickness or disease, or death of the Contractor's employees;
- .3 Claims for damages because of bodily injury, sickness or disease, or death of any person other than the Contractor's employees;
- .4 Claims for damages insured by usual personal injury liability coverage;
- .5 Claims for damages, other than to the Work itself, because of injury to or destruction of tangible property, including loss of use resulting therefrom;
- .6 Claims for damages because of bodily injury, death of a person or property damage arising out of ownership, maintenance or use of a motor vehicle;
- .7 Claims for bodily injury or property damage arising out of completed operations; and
- .8 Claims involving contractual liability insurance applicable to the Contractor's obligations under Section 3.18.

AIA Document A201™ – 2007. Copyright © 1911, 1915, 1918, 1925, 1937, 1951, 1958, 1961, 1963, 1966, 1970, 1976, 1987, 1997 and 2007 by The American Institute of Architects. **All rights reserved. WARNING: This AIA® Document is protected by U.S. Copyright Law and International Treaties. Unauthorized reproduction or distribution of this AIA® Document, or any portion of it, may result in severe civil and criminal penalties, and will be prosecuted to the maximum extent possible under the law.** This draft was produced by AIA software at 14:02:42 ET on 11/16/2018 under Order No.1973475587 which expires on 02/21/2019, and is not for resale.
User Notes: (1870164535)

§ 11.1.1.2 The Contractor's liability insurance shall include all major coverages and be on a comprehensive general liability basis.

§ 11.1.2 The insurance required by Section 11.1.1 shall be written for not less than limits of liability specified in the Contract Documents or required by law, whichever coverage is greater. Coverages, whether written on an occurrence or claims-made basis, shall be maintained without interruption from the date of commencement of the Work until the date of final payment and termination of any coverage required to be maintained after final payment, and, with respect to the Contractor's completed operations coverage, until the expiration of the period for correction of Work or for such other period for maintenance of completed operations coverage as specified in the Contract Documents.

§ 11.1.3 Certificates of insurance as specified in the Solicitation and as otherwise acceptable to the Owner shall be filed with the Owner and the User Agency prior to commencement of the Work and thereafter upon renewal or replacement of each required policy of insurance. These certificates and the insurance policies required by this Section 11.1 shall contain a provision that coverages afforded under the policies will not be canceled or allowed to expire until at least 30 working days' prior written notice has been given to the Owner and the User Agency. An additional certificate evidencing continuation of liability coverage, including coverage for completed operations, shall be submitted with the final Application for Payment as required by Section 9.10.2 and thereafter upon renewal or replacement of such coverage until the expiration of the time required by Section 11.1.2. Information concerning reduction of coverage on account of revised limits or claims paid under the General Aggregate, or both, shall be furnished by the Contractor with reasonable promptness.

§ 11.1.4 The Contractor shall cause the commercial liability coverage required by the Contract Documents to include (1) the Owner, the User Agency, and their elected and appointed officials, members, employees, and agents, the Design Agent and the Design Agent's consultants as additional insureds for claims caused in whole or in part by the Contractor's acts or omissions during the Contractor's operations; and (2) the Owner, the User Agency, and their elected and appointed officials, members, employees, and agents, as additional insureds for claims caused in whole or in part by the Contractor's negligent acts or omissions during the Contractor's completed operations.

§ 11.1.5 The Contractor shall be responsible for the prompt payment to the Owner of any deductible amounts under any insurance policies required under the Contract Documents for claims made pursuant to such policies.

§ 11.2 OWNER'S LIABILITY INSURANCE.

§ 11.2.1 The Contractor shall furnish the Owner and the User Agency, through the Design Agent, an insurance certificate providing Owner's Protective Liability extended to include the interests of the Design Agent, and to protect the Owner, User Agency, and Design Agent from any liability which might be incurred against any of them as a result of any operation of the Contractor or Subcontractors or their employees or anyone for whom either the Contractor or Subcontractors are responsible. Such insurance shall be written for the same limits as the Contractor's commercial general liability insurance and shall include the same coverage.

§ 11.2.2 If the Owner engages separate contractors to perform work for, or in or around, the Project, it shall require in its contracts with each separate contractor that Contractor and its officers, directors, partners, members, employees, and agents shall be: (i) named as additional insureds on a primary, noncontributory basis to any commercial general liability, pollution liability, and excess liability insurance policies; and (ii) provided a waiver of subrogation on all workers compensation and professional liability insurance policies.

§ 11.3 PROPERTY INSURANCE

§ 11.3.1 The Contractor shall purchase and maintain, in a company or companies lawfully authorized to do business in the state of Rhode Island, property insurance written on a builder's risk "all-risk" or equivalent policy form in the amount of the initial Contract Sum, plus value of subsequent Contract Modifications and cost of materials supplied or installed by others, comprising total value for the entire Project at the site on a replacement cost basis without optional deductibles. Such property insurance shall be maintained, unless otherwise provided in the Contract Documents or otherwise agreed in writing by all persons and entities who are beneficiaries of such insurance, until final payment has been made as provided in Section 9.10 or until no person or entity other than the Owner has an insurable interest in the property required by this Section 11.3 to be covered, whichever is later. This insurance shall include interests of the Owner, the User Agency, the Contractor, Subcontractors and Sub-subcontractors in the

AIA Document A201™ – 2007. Copyright © 1911, 1915, 1918, 1925, 1937, 1951, 1958, 1961, 1963, 1966, 1970, 1976, 1987, 1997 and 2007 by The American Institute of Architects. **All rights reserved. WARNING: This AIA® Document is protected by U.S. Copyright Law and International Treaties. Unauthorized reproduction or distribution of this AIA® Document, or any portion of it, may result in severe civil and criminal penalties, and will be prosecuted to the maximum extent possible under the law.** This draft was produced by AIA software at 14:02:42 ET on 11/16/2018 under Order No.1973475587 which expires on 02/21/2019, and is not for resale.
User Notes: (1870164535)

Project. If the Owner and/or the User Agency incur any damages by failure of the Contractor to maintain such insurance, then the Contractor shall bear all reasonable cost resulting from such failure.

§ 11.3.1.1 Property insurance shall be on an "all-risk" or equivalent policy form and shall include, without limitation, insurance against the perils of fire (with extended coverage) and physical loss or damage including, without duplication of coverage, theft, vandalism, malicious mischief, collapse, earthquake, flood, windstorm, falsework, testing and startup, temporary buildings and debris removal including demolition occasioned by enforcement of any applicable legal requirements, and shall cover reasonable compensation for Design Agent's and Contractor's services and expenses required as a result of such insured loss.

§ 11.3.1.2 **Deleted.**

§ 11.3.1.3 If the property insurance requires deductibles, the Owner shall pay costs not covered because of such deductibles.

§ 11.3.1.4 This property insurance shall cover portions of the Work stored off the site, and also portions of the Work in transit.

§ 11.3.1.5 Partial occupancy or use in accordance with Section 9.9 shall not commence until the insurance company or companies providing property insurance have consented to such partial occupancy or use by endorsement or otherwise. The Contractor shall take reasonable steps to obtain consent of the insurance company or companies and shall, without mutual written consent, take no action with respect to partial occupancy or use that would cause cancellation, lapse or reduction of insurance.

§ 11.3.2 **Deleted**.

§ 11.3.3 **Deleted.**

§ 11.3.4 **Deleted.**

§ 11.3.5 If during the Project construction period the Owner insures properties, real or personal or both, at or adjacent to the site by property insurance under policies separate from those insuring the Project, or if after final payment property insurance is to be provided on the completed Project through a policy or policies other than those insuring the Project during the construction period, the Owner shall waive all rights in accordance with the terms of Section 11.3.7 for damages caused by fire or other causes of loss covered by this separate property insurance. All separate policies shall provide this waiver of subrogation by endorsement or otherwise.

§ 11.3.6 Before an exposure to loss may occur, the Contractor shall file with the Owner a copy of each policy that includes insurance coverages required by this Section 11.3. Each policy shall contain all generally applicable conditions, definitions, exclusions and endorsements related to this Project. Each policy shall contain a provision that the policy will not be canceled or allowed to expire, and that its limits will not be reduced, until at least 30 working days' prior written notice has been given to the Owner and the User Agency.

§ 11.3.7 WAIVERS OF SUBROGATION

The Contractor waives all rights against the Owner and the User Agency and any of their subcontractors, sub-subcontractors, agents and employees, and (2) the Design Agent, Design Agent's consultants, separate contractors described in Article 6, if any, and any of their subcontractors, sub-subcontractors, agents and employees, for damages caused by fire or other causes of loss to the extent covered by property insurance obtained pursuant to this Section 11.3 or other property insurance applicable to the Work, except such rights as they have to proceeds of such insurance held by the Owner as fiduciary. The Owner or Contractor, as appropriate, shall require of the Design Agent, Design Agent's consultants, separate contractors described in Article 6, if any, and the subcontractors, sub-subcontractors, agents and employees of any of them, by appropriate agreements, written where legally required for validity, similar waivers each in favor of other parties enumerated herein. The policies shall provide such waivers of subrogation by endorsement or otherwise. A waiver of subrogation shall be effective as to a person or entity even though that person or entity would otherwise have a duty of indemnification, contractual or otherwise, did not pay the insurance premium directly or indirectly, and whether or not the person or entity had an insurable interest in the property damaged.

AIA Document A201™ – 2007. Copyright © 1911, 1915, 1918, 1925, 1937, 1951, 1958, 1961, 1963, 1966, 1970, 1976, 1987, 1997 and 2007 by The American Institute of Architects. **All rights reserved. WARNING: This AIA® Document is protected by U.S. Copyright Law and International Treaties. Unauthorized reproduction or distribution of this AIA® Document, or any portion of it, may result in severe civil and criminal penalties, and will be prosecuted to the maximum extent possible under the law.** This draft was produced by AIA software at 14:02:42 ET on 11/16/2018 under Order No.1973475587 which expires on 02/21/2019, and is not for resale.
User Notes: (1870164535)

§ 11.3.8 A loss insured under this property insurance shall be adjusted by the Contractor as fiduciary and made payable to the Owner as fiduciary for the insureds, as their interests may appear, subject to requirements of any applicable mortgagee clause and of Section 11.3.10. The Contractor shall pay Subcontractors their just shares of insurance proceeds received by the Contractor, and by appropriate agreements, written where legally required for validity, shall require Subcontractors to make payments to their Sub-subcontractors in similar manner.

§ 11.3.9 If required in writing by a party in interest, the Owner as fiduciary shall, upon occurrence of an insured loss, give bond for proper performance of the Contractor's duties. The cost of required bonds shall be charged against proceeds received as fiduciary. The Contractor shall deposit in a separate account proceeds so received, which the Contractor shall distribute in accordance with such agreement as the parties in interest may reach, or as determined in accordance with the method of binding dispute resolution selected in the Agreement between the Owner and Contractor. If after such loss no other special agreement is made and unless the Owner terminates the Contract for convenience, replacement of damaged property shall be performed by the Contractor after notification of a Change in the Work in accordance with Article 7.

§ 11.3.10 The Contractor as fiduciary shall have power to adjust and settle a loss with insurers unless one of the parties in interest shall object in writing within 5 working days after occurrence of loss to the Contractor's exercise of this power; if such objection is made, the dispute shall be resolved in the manner selected by the Owner and Contractor as the method of binding dispute resolution in the Agreement.

§ 11.4 PERFORMANCE BOND AND PAYMENT BOND

§ 11.4.1 The Contractor shall furnish bonds covering faithful performance of the Contract and payment of obligations arising thereunder as stipulated in the Solicitation.

§ 11.4.2 Upon the request of any person or entity appearing to be a potential beneficiary of bonds covering payment of obligations arising under the Contract, the Contractor shall promptly furnish a copy of the bonds or shall authorize a copy to be furnished.

ARTICLE 12 UNCOVERING AND CORRECTION OF WORK

§ 12.1 UNCOVERING OF WORK

§ 12.1.1 If a portion of the Work is covered contrary to the Design Agent's request or to requirements specifically expressed in the Contract Documents, it must, if requested in writing by the Design Agent, be uncovered for the Design Agent's examination and be replaced at the Contractor's expense without change in the Contract Time.

§ 12.1.2 If a portion of the Work has been covered that the Design Agent has not specifically requested to examine prior to its being covered, the Design Agent may request to see such Work and it shall be uncovered by the Contractor. If such Work is in accordance with the Contract Documents, costs of uncovering and replacement shall, by appropriate Change Order, be at the Owner's expense. If such Work is not in accordance with the Contract Documents, such costs and the cost of correction shall be at the Contractor's expense unless the condition was caused by the Owner or a separate contractor in which event the Owner shall be responsible for payment of such costs.

§ 12.2 CORRECTION OF WORK

§ 12.2.1 BEFORE OR AFTER SUBSTANTIAL COMPLETION

The Contractor shall promptly correct Work rejected by the Design Agent or failing to conform to the requirements of the Contract Documents, whether discovered before or after Substantial Completion and whether or not fabricated, installed or completed. Costs of correcting such rejected Work, including additional testing and inspections, the cost of uncovering and replacement, and compensation for the Design Agent's services and expenses made necessary thereby, shall be at the Contractor's expense.

§ 12.2.2 AFTER SUBSTANTIAL COMPLETION

§ 12.2.2.1 In addition to the Contractor's obligations under Section 3.5, if, within one year after the date of Final Completion of the Work or designated portion thereof or after the date for commencement of warranties established under Section 9.9.1, or by terms of an applicable special warranty required by the Contract Documents, any of the Work is found to be not in accordance with the requirements of the Contract Documents, the Contractor shall correct it promptly after receipt of written notice from the Owner to do so unless the Owner has previously given the

AIA Document A201™ – 2007. Copyright © 1911, 1915, 1918, 1925, 1937, 1951, 1958, 1961, 1963, 1966, 1970, 1976, 1987, 1997 and 2007 by The American Institute of Architects. **All rights reserved. WARNING: This AIA® Document is protected by U.S. Copyright Law and International Treaties. Unauthorized reproduction or distribution of this AIA® Document, or any portion of it, may result in severe civil and criminal penalties, and will be prosecuted to the maximum extent possible under the law.** This draft was produced by AIA software at 14:02:42 ET on 11/16/2018 under Order No.1973475587 which expires on 02/21/2019, and is not for resale.
User Notes: (1870164535)

Contractor a written acceptance of such condition. The Owner shall give such notice promptly after discovery of the condition. If the Contractor fails to correct nonconforming Work within a reasonable time after receipt of notice from the Owner or Design Agent, the Owner may correct it in accordance with Section 2.4.

§ 12.2.2.2 The one-year period for correction of Work shall be extended with respect to portions of Work first performed after Substantial Completion by the period of time between Substantial Completion and the actual completion of that portion of the Work.

§ 12.2.2.3 The one-year period for correction of Work shall not be extended by corrective Work performed by the Contractor pursuant to this Section 12.2.

§ 12.2.2.4 Upon request by the Owner and prior to the expiration of one year from the date of Final Completion, the Design Agent will conduct and the Contractor shall attend 2 meetings with the Owner to review the facility operations and performance.

§ 12.2.3 The Contractor shall remove from the site portions of the Work that are not in accordance with the requirements of the Contract Documents and are neither corrected by the Contractor nor accepted by the Owner.

§ 12.2.4 The Contractor shall bear the cost of correcting destroyed or damaged construction, whether completed or partially completed, of the Owner or separate contractors caused by the Contractor's correction or removal of Work that is not in accordance with the requirements of the Contract Documents.

§ 12.2.5 Nothing contained in this Section 12.2 shall be construed to establish a period of limitation with respect to other obligations the Contractor has under the Contract Documents. Establishment of the one-year period for correction of Work as described in Section 12.2.2 relates only to the specific obligation of the Contractor to correct the Work, and has no relationship to the time within which the obligation to comply with the Contract Documents may be sought to be enforced, nor to the time within which proceedings may be commenced to establish the Contractor's liability with respect to the Contractor's obligations other than specifically to correct the Work.

§ 12.3 ACCEPTANCE OF NONCONFORMING WORK

If the Owner prefers to accept Work that is not in accordance with the requirements of the Contract Documents, the Owner may do so instead of requiring its removal and correction, in which case the Contract Sum will be reduced as appropriate and equitable. Such adjustment shall be effected whether or not final payment has been made.

ARTICLE 13 MISCELLANEOUS PROVISIONS

§ 13.1 GOVERNING LAW

The Contract shall be governed by the law of the State of Rhode Island.

§ 13.2 SUCCESSORS AND ASSIGNS

§ 13.2.1 The Owner and Contractor respectively bind themselves, their successors, assigns and legal representatives to covenants, agreements and obligations contained in the Contract Documents. Except as provided in Section 13.2.2, neither party to the Contract shall assign the Contract as a whole without written consent of the other. If either party attempts to make such an assignment without such consent, that party shall nevertheless remain legally responsible for all obligations under the Contract.

§ 13.2.2 The Owner may, without consent of the Contractor, assign the Contract to any executive, legislative, judicial, regulatory, or administrative body of the state, or any political subdivision thereof, including without limitation, any department, division, agency, commission, board, office, bureau, authority, school, water, or fire district, or other agency of Rhode Island state or local government that exercises governmental functions, any other governmental authority, and any quasi-public corporation and/or body corporate and politic. The Contractor shall execute all consents reasonably required to facilitate such assignment.

§ 13.3 WRITTEN NOTICE

Written notice shall be deemed to have been duly served if delivered in person to the individual, to a member of the firm or entity, or to an officer of the corporation for which it was intended; or if delivered at, or sent by registered or certified mail or by courier service providing proof of delivery to, the last business address known to the party

AIA Document A201™ – 2007. Copyright © 1911, 1915, 1918, 1925, 1937, 1951, 1958, 1961, 1963, 1966, 1970, 1976, 1987, 1997 and 2007 by The American Institute of Architects. **All rights reserved. WARNING: This AIA® Document is protected by U.S. Copyright Law and International Treaties. Unauthorized reproduction or distribution of this AIA® Document, or any portion of it, may result in severe civil and criminal penalties, and will be prosecuted to the maximum extent possible under the law.** This draft was produced by AIA software at 14:02:42 ET on 11/16/2018 under Order No.1973475587 which expires on 02/21/2019, and is not for resale.
User Notes: (1870164535)

giving notice, or when received, if manually delivered or transmitted by electronic mail or facsimile to the last such address known to the party giving notice.

§ 13.4 RIGHTS AND REMEDIES

§ 13.4.1 Duties and obligations imposed by the Contract Documents and rights and remedies available thereunder shall be in addition to and not a limitation of duties, obligations, rights and remedies otherwise imposed or available by law.

§ 13.4.2 No action or failure to act by the Owner, Design Agent or Contractor shall constitute a waiver of a right or duty afforded them under the Contract, nor shall such action or failure to act constitute approval of or acquiescence in a breach there under, except as may be specifically agreed in writing.

§ 13.5 TESTS AND INSPECTIONS

§ 13.5.1 Tests, inspections and approvals of portions of the Work shall be made as required by the Contract Documents and by applicable laws, statutes, ordinances, codes, rules and regulations or lawful orders of public authorities. Unless otherwise provided, the Contractor shall make arrangements for such tests, inspections and approvals with an independent testing laboratory or entity acceptable to the Owner, or with the appropriate public authority, and shall bear all related costs of tests, inspections and approvals. The Contractor shall give the Design Agent timely notice of when and where tests and inspections are to be made so that the Design Agent may be present for such procedures. The Owner shall bear costs of (1) tests, inspections or approvals that do not become requirements until after bids are received or negotiations concluded, and (2) tests, inspections or approvals where building codes or applicable laws or regulations prohibit the Owner from delegating their cost to the Contractor.

§ 13.5.2 If the Design Agent, Owner or public authorities having jurisdiction determine that portions of the Work require additional testing, inspection or approval not included under Section 13.5.1, the Design Agent will, upon written authorization from the Owner, instruct the Contractor to make arrangements for such additional testing, inspection or approval by an entity acceptable to the Owner, and the Contractor shall give timely notice to the Design Agent of when and where tests and inspections are to be made so that the Design Agent may be present for such procedures. Such costs, except as provided in Section 13.5.3, shall be at the Owner's expense.

§ 13.5.3 If such procedures for testing, inspection or approval under Sections 13.5.1 and 13.5.2 reveal failure of the portions of the Work to comply with requirements established by the Contract Documents, all costs made necessary by such failure including those of repeated procedures and compensation for the Design Agent's services and expenses shall be at the Contractor's expense.

§ 13.5.4 Required certificates of testing, inspection or approval shall, unless otherwise required by the Contract Documents, be secured by the Contractor and promptly delivered to the Design Agent.

§ 13.5.5 If the Design Agent is to observe tests, inspections or approvals required by the Contract Documents, the Design Agent will do so promptly and, where practicable, at the normal place of testing.

§ 13.5.6 Tests or inspections conducted pursuant to the Contract Documents shall be made promptly to avoid unreasonable delay in the Work.

§ 13.6 INTEREST

No interest shall be due or payable on account of any payment due or unpaid under the Contract Documents except in accordance with the provisions of "Prompt Payment by Department of Administration," R.I. Gen. Laws §§ 42-11.1-1 et seq.

§ 13.7 TIME LIMITS ON CLAIMS

The Owner and Contractor shall commence all claims and causes of action, whether in contract, tort, breach of warranty or otherwise, against the other arising out of or related to the Contract in accordance with the requirements of the final dispute resolution method selected in the Agreement within the time period specified by applicable law. The Owner and Contractor waive all claims and causes of action not commenced in accordance with this Section 13.7.

AIA Document A201™ – 2007. Copyright © 1911, 1915, 1918, 1925, 1937, 1951, 1958, 1961, 1963, 1966, 1970, 1976, 1987, 1997 and 2007 by The American Institute of Architects. **All rights reserved. WARNING: This AIA® Document is protected by U.S. Copyright Law and International Treaties. Unauthorized reproduction or distribution of this AIA® Document, or any portion of it, may result in severe civil and criminal penalties, and will be prosecuted to the maximum extent possible under the law.** This draft was produced by AIA software at 14:02:42 ET on 11/16/2018 under Order No.1973475587 which expires on 02/21/2019, and is not for resale.
User Notes: (1870164535)

ARTICLE 14 TERMINATION OR SUSPENSION OF THE CONTRACT

§ 14.1 TERMINATION BY THE CONTRACTOR

§ 14.1.1 The Contractor may terminate the Contract if the Work is stopped for a period of 30 calendar days through no act or fault of the Contractor or a Subcontractor, Sub-subcontractor or their agents or employees or any other persons or entities performing portions of the Work under direct or indirect contract with the Contractor, for any of the following reasons:

.1 Issuance of an order of a court or other public authority having jurisdiction that requires all Work to be stopped;

.2 An act of government, such as a declaration of national emergency that requires all Work to be stopped; or

.3 Because the Design Agent has not issued a Certificate for Payment and has not notified the Contractor of the reason for withholding certification as provided in Section 9.4.1

§ 14.1.2 **Deleted.**

§ 14.1.3 If one of the reasons described in Section 14.1.1 exists, the Contractor may, upon 7 working days' written notice to the Owner and Design Agent, terminate the Contract and recover from the Owner payment for Work executed.

§ 14.1.4 If the Work is stopped for a period of 60 calendar days through no act or fault of the Contractor or a Subcontractor or their agents or employees or any other persons performing portions of the Work under contract with the Contractor because the Owner has repeatedly failed to fulfill the Owner's obligations under the Contract Documents with respect to matters important to the progress of the Work, the Contractor may, upon 7 additional days' written notice to the Owner and the Design Agent, terminate the Contract and recover from the Owner as provided in Section 14.1.3.

§ 14.2 TERMINATION BY THE OWNER FOR CAUSE

§ 14.2.1 The Owner may terminate the Contract if the Contractor:

.1 refuses or fails to supply enough properly skilled workers or proper materials;

.2 fails to make payment to Subcontractors for materials or labor in accordance with the respective agreements between the Contractor and the Subcontractors;

.3 disregards or fails to comply with applicable laws, statutes, ordinances, codes, rules and regulations, or lawful orders of a public authority;

.4 otherwise is guilty of breach of a provision of the Contract Documents; or

.5 cancels or the Contractor or the Owner receives notice of cancellation or nonrenewal of any insurance required under the Contract Documents.

§ 14.2.2 When any of the above reasons exist, the Owner, upon certification by the Initial Decision Maker that sufficient cause exists to justify such action, may without prejudice to any other rights or remedies of the Owner and after giving the Contractor and the Contractor's surety, if any, 7 working days' written notice, terminate employment of the Contractor and may, subject to any prior rights of the surety:

.1 Exclude the Contractor from the site and take possession of all materials, equipment, tools, and construction equipment and machinery thereon owned by the Contractor;

.2 Accept assignment of subcontracts pursuant to Section 5.4; and

.3 Finish the Work by whatever reasonable method the Owner may deem expedient. Upon written request of the Contractor, the Owner shall furnish to the Contractor a detailed accounting of the costs incurred by the Owner in finishing the Work.

§ 14.2.3 When the Owner terminates the Contract for one of the reasons stated in Section 14.2.1, the Contractor shall not be entitled to receive further payment until the Work is finished.

§ 14.2.4 If the unpaid balance of the Contract Sum exceeds costs of finishing the Work, including compensation for the Design Agent's services and expenses made necessary thereby, and other damages incurred by the Owner and not expressly waived, such excess shall be paid to the Contractor. If such costs and damages exceed the unpaid balance, the Contractor shall pay the difference to the Owner. The amount to be paid to the Contractor or Owner, as the case may be, shall be certified by the Initial Decision Maker, upon application, and this obligation for payment shall survive termination of the Contract.

AIA Document A201™ – 2007. Copyright © 1911, 1915, 1918, 1925, 1937, 1951, 1958, 1961, 1963, 1966, 1970, 1976, 1987, 1997 and 2007 by The American Institute of Architects. **All rights reserved. WARNING: This AIA® Document is protected by U.S. Copyright Law and International Treaties. Unauthorized reproduction or distribution of this AIA® Document, or any portion of it, may result in severe civil and criminal penalties, and will be prosecuted to the maximum extent possible under the law.** This draft was produced by AIA software at 14:02:42 ET on 11/16/2018 under Order No.1973475587 which expires on 02/21/2019, and is not for resale.
User Notes: (1870164535)

§ 14.3 SUSPENSION BY THE OWNER FOR CONVENIENCE

§ 14.3.1 The Owner may, without cause, order the Contractor in writing to suspend, delay or interrupt the Work in whole or in part for such period of time as the Owner may determine.

§ 14.3.2 The Owner shall not be liable to the Contractor or any Subcontractor for claims or damages of any nature caused by or arising out of any delays. The sole remedy against the Owner for delays shall be the allowance of additional time for completion of the Work in accordance with the provisions of Section 8.3.1.

§ 14.4 TERMINATION BY THE OWNER FOR CONVENIENCE

§ 14.4.1 The Owner may, at any time, terminate the Contract for the Owner's convenience and without cause.

§ 14.4.2 Upon receipt of written notice from the Owner of such termination for the Owner's convenience, the Contractor shall:

.1 cease operations as directed by the Owner in the notice;

.2 take actions necessary, or that the Owner may direct, for the protection and preservation of the Work; and

.3 except for Work directed to be performed prior to the effective date of termination stated in the notice, terminate all existing subcontracts and purchase orders and enter into no further subcontracts and purchase orders.

§ 14.4.3 In case of such termination for the Owner's convenience, the Contractor shall be entitled to receive payment for Work executed, and costs incurred by reason of such termination.

ARTICLE 15 CLAIMS AND DISPUTES

§ 15.1 CLAIMS

§ 15.1.1 DEFINITION

A Claim is a demand or assertion by one of the parties seeking, as a matter of right, payment of money, or other relief with respect to the terms of the Contract. The term "Claim" also includes other disputes and matters in question between the Owner and Contractor arising out of or relating to the Contract. The responsibility to substantiate Claims shall rest with the party making the Claim.

§ 15.1.2 NOTICE OF CLAIMS

Claims by either the Owner or Contractor must be initiated by written notice to the other party. Such notice shall be provided in writing to the designated representative of the party to whom the notice is addressed and shall be deemed to have been duly serviced if delivered in person, by mail, by courier, or by electronic transmission. Claims by either party must be initiated within 21 working days after occurrence of the event giving rise to such Claim or within 21 working days after the claimant first recognizes the condition giving rise to the Claim, whichever is later.

§ 15.1.3 CONTINUING CONTRACT PERFORMANCE

Pending final resolution of a Claim, except as otherwise agreed in writing or as provided in Section 9.7 and Article 14, the Contractor shall proceed diligently with performance of the Contract and the Owner shall continue to make payments in accordance with the Contract Documents. The Design Agent will prepare Change Orders and issue Certificates for Payment in accordance with the decisions of the Initial Decision Maker.

§ 15.1.4 CLAIMS FOR ADDITIONAL COST

If the Contractor wishes to make a Claim for an increase in the Contract Sum, written notice as provided herein shall be given before proceeding to execute the Work. Prior notice is not required for Claims relating to an emergency endangering life or property arising under Section 10.4.

§ 15.1.5 CLAIMS FOR ADDITIONAL TIME

§ 15.1.5.1 If the Contractor wishes to make a Claim for an increase in the Contract Time, written notice as provided herein shall be given. The Contractor's Claim shall include an estimate of cost and of probable effect of delay on progress of the Work. In the case of a continuing delay, only one Claim is necessary.

AIA Document A201™ – 2007. Copyright © 1911, 1915, 1918, 1925, 1937, 1951, 1958, 1961, 1963, 1966, 1970, 1976, 1987, 1997 and 2007 by The American Institute of Architects. **All rights reserved. WARNING: This AIA® Document is protected by U.S. Copyright Law and International Treaties. Unauthorized reproduction or distribution of this AIA® Document, or any portion of it, may result in severe civil and criminal penalties, and will be prosecuted to the maximum extent possible under the law.** This draft was produced by AIA software at 14:02:42 ET on 11/16/2018 under Order No.1973475587 which expires on 02/21/2019, and is not for resale.
User Notes: (1870164535)

§ 15.1.5.2 If adverse weather conditions are the basis for a Claim for additional time, such Claim shall be documented by data substantiating that weather conditions were abnormal for the period of time, could not have been reasonably anticipated and had an adverse effect on the scheduled construction.

§ 15.1.5.3 Claims for increase in the Contract Time shall set forth in detail the circumstances that form the basis for the Claim, the date upon which each cause of delay began to affect the progress of the Work, the date upon which each cause of delay ceased to affect the progress of the Work and the number of days' increase in the Contract Time claimed as a consequence of each such cause of delay. The Contractor shall provide such supporting documentation as the Owner may require including, where appropriate, a revised construction schedule indicating all the activities affected by the circumstances forming the basis of the Claim.

§ 15.1.5.4 The Contractor shall not be entitled to a separate increase in the Contract Time for each one of the number of causes of delay which may have concurrent or interrelated effects on the progress of the Work, or for concurrent delays due to the fault of the Contractor.

§ 15.1.6 The Contractor waives Claims against the Owner for consequential damages arising out of or relating to this Contract. This waiver includes damages incurred by the Contractor for principal office expenses, including the compensation of personnel stationed there, for losses of financing, business and reputation, and for loss of profit. This waiver is applicable, without limitation, to all consequential damages due to the Contractor's termination in accordance with Article 14. Nothing in this Section 15.1.6 shall be deemed to preclude an award of liquidated damages, when applicable, in accordance with the requirements of the Contract Documents.

§ 15.2 INITIAL DECISION

§ 15.2.1 Claims shall be referred to the Initial Decision Maker for initial decision. The Purchasing Agent appointed pursuant to the provisions of the "State Purchases Act," R.I. Gen. Laws § 37-2-1 et seq., will serve as the Initial Decision Maker in accordance with the provisions of the State Purchases Act, State of Rhode Island Procurement Regulations, and this Section 15.2.1. An initial decision shall be required as a condition precedent to binding dispute resolution pursuant to Section 15.3.1 of any Claim arising prior to the date final payment is due.

§ 15.2.2 **Deleted.**

§ 15.2.3 **Deleted.**

§ 15.2.4 **Deleted.**

§ 15.2.5 **Deleted.**

§ 15.2.6 **Deleted.**

§ 15.2.6.1 **Deleted.**

§ 15.2.7 **Deleted.**

§ 15.2.8 **Deleted.**

§ 15.3 MEDIATION

§ 15.3.1 For any Claim not resolved by the Initial Decision Maker procedures set forth in Section 15.2.1, and prior to the implementation of the binding dispute resolution procedures set forth in Section 15.4.1, the Contractor or the Design Agent shall have the option to pursue mediation, exercisable by written notice to the Owner within 30 calendar days of an Initial Decision. In the event of the exercise of such option by the Contractor or the Design Agent, the Owner and the Contractor or the Design Agent shall attempt to select a mediator, and in the event that the Owner and the Contractor or the Design Agent cannot agree on a mediator, either party may apply in writing to the Presiding Justice of the Providence County Superior Court, with a copy to the other, with a request for the court to appoint a mediator, and the costs of the mediator shall be borne equally by both parties.

§ 15.3.2 **Deleted.**

AIA Document A201™ – 2007. Copyright © 1911, 1915, 1918, 1925, 1937, 1951, 1958, 1961, 1963, 1966, 1970, 1976, 1987, 1997 and 2007 by The American Institute of Architects. **All rights reserved. WARNING: This AIA® Document is protected by U.S. Copyright Law and International Treaties. Unauthorized reproduction or distribution of this AIA® Document, or any portion of it, may result in severe civil and criminal penalties, and will be prosecuted to the maximum extent possible under the law.** This draft was produced by AIA software at 14:02:42 ET on 11/16/2018 under Order No.1973475587 which expires on 02/21/2019, and is not for resale.
User Notes: (1870164535)

§ 15.3.3 **Deleted.**

§ 15.4 BINDING DISPUTE RESOLUTION

§ 15.4.1 For any Claim not resolved by the Initial Decision Maker procedures set forth in Section 15.2.1, or mediation at the option of the Contractor pursuant to Section 15.3.1, the method of binding dispute resolution shall be determined in accordance with the provisions of the "Public Works Arbitration Act," R.I. Gen. Laws §§ 37-16-1 et seq.

§ 15.4.4 **Deleted.**

§ 15.4.4.1 **Deleted.**

§ 15.4.4.2 **Deleted.**

§ 15.4.4.3 **Deleted.**

§ 16 COMPLIANCE WITH APPLICABLE LAW

The Contractor and its Subcontractors shall comply with all applicable federal, state, and local laws.

DRAFT

AIA Document A201™ – 2007. Copyright © 1911, 1915, 1918, 1925, 1937, 1951, 1958, 1961, 1963, 1966, 1970, 1976, 1987, 1997 and 2007 by The American Institute of Architects. **All rights reserved. WARNING: This AIA® Document is protected by U.S. Copyright Law and International Treaties. Unauthorized reproduction or distribution of this AIA® Document, or any portion of it, may result in severe civil and criminal penalties, and will be prosecuted to the maximum extent possible under the law.** This draft was produced by AIA software at 14:02:42 ET on 11/16/2018 under Order No.1973475587 which expires on 02/21/2019, and is not for resale.
User Notes: (1870164535)

SECTION 00 82 00 - PREVAILING WAGE RATES

PREVAILING WAGES

The State of Rhode Island Department of Labor and Training, Prevailing Wage Laws, Rules and Regulations is an integral part of the Bid Documents for use in fulfilling the prevailing wage rate requirements. A copy is available at the web site of the State of Rhode Island Department of Labor and Training

Web Site address: http://www.dlt.ri.gov/pw/PWlaws.htm

(Click on “Current Wage Determinations”.)

END OF SECTION 00 82 00

© THE ROBINSON GREEN BERETTA CORPORATION - 6456

SECTION 01 02 10 - ALLOWANCES

PART 1 - GENERAL

1.1 RELATED DOCUMENTS

A. The General Conditions, Supplementary Conditions and applicable portions of Division 1 of the specification are a part of this Section, which shall consist of all labor, equipment and materials necessary to complete all allowance work indicated on the drawings and herein specified.

1.2 OTHER CASH ALLOWANCES

A. Should allowances be included in other Sections of these specifications, follow the procedures of this Section, but include the cost of same under the respective Sections.

1.3 CASH ALLOWANCES DEFINITION

A. Amount of each allowance includes:
   1. Net cost of product and/or service.
   2. Delivery and unloading at site.
   3. All soft costs, such as engineering, design, drafting, etc.

B. Include in the Base Bid amount, and not part of the amounts of the allowances, the costs for;
   1. Handling at the site, including uncrating and storage.
   2. Protection from elements and from damage.
   3. Labor, installation and finishing.
   4. Other expenses, including incidental/appurtenant materials and labor required to complete the installation.
   5. Overhead and profit.

1.4 PROCEDURES

A. Selection of Materials:
   1. Assist Architect and Owner in determining qualified suppliers.
   2. Obtain proposals from suppliers when requested by Architect and Owner.
   3. Make appropriate recommendations for consideration by Architect and Owner.
   4. Notify Architect and Owner of any effect anticipated by selection of product or supplier under consideration on:
      a. Construction Schedule.
      b. Contract Sum.
      c. Facility operations.
      d. Impact on Owner furnished items.
   5. On notification of selection, enter into purchase agreement with designated supplier.

B. Delivery:
   1. Arrange for delivery and unloading.
   2. Promptly inspect products for damage or defects.
   3. Submit claims for transportation damages.

C. Installation:

© THE ROBINSON GREEN BERETTA CORPORATION - 6456

1. Comply with the requirements of the referenced specification section.

D. Adjustment of Costs:
   1. Should actual purchase cost to be than specified amount of allowance, Contract Sum will be adjusted by Change Order equal to amount of difference, provided accounting of expenditures is current, and accurate.

END OF SECTION 01 02 10

© THE ROBINSON GREEN BERETTA CORPORATION - 6456

SECTION 01 10 00 - SUMMARY OF THE WORK

PART 1 - GENERAL

1.1 RELATED DOCUMENTS

A. The General Conditions, Supplementary Conditions and applicable portions of Division 1 of the Specification are a part of this Section, which shall consist of all labor, materials, equipment, tools, construction equipment and machinery, water, heat, utilities, transportation and other facilities and services necessary for the proper execution and completion of the work, whether temporary or permanent and whether or not incorporated or to be incorporated in the work; and as related to the project or projects defined in the Bidding Requirements.

B. The specification format used herein is in accordance with MASTERFORMAT, CSI (2004 Format) and in no way intends to restrict this Contractor from expediting his work as he sees fit, nor is there any intention of segregating the units of work as related to specific trades involving jurisdictional problems.

1.2 WORK COVERED BY CONTRACT DOCUMENTS

A. Project Identification: East Providence RI DPW Salt Shed

1. Project Location: Warren Ave, East Providence RI 02914

B. Owner: RIDOT

C. Owner's Representative: To be determined.

D. Architect: The Robinson Green Beretta Corporation, (RGB) 50 Holden Street, Providence, RI

E. Contractor: To be determined.

1.3 SUMMARY OF THE WORK

A. One structure, measuring 145’-6” x 105’ Salt shed with a new fabric cover on new structural framework. The work includes but is not limited to site work, including; concrete work, foundations, footing, etc., new fabric structure and frame. The Contractor is responsible for shop drawings review and coordination, delivery, installation and coordination of all work and warranties.

1.4 CONTRACTOR'S DUTIES

A. The Contractor is responsible for all personnel involved in the work, including those of his direct employ, his sub-contractors and suppliers of materials and equipment and/or labor. The Technical Specifications have been divided for convenience only to cover the scope of work, and where reference to a particular contractor is noted, it is for convenience only. The Owner and Architect only recognize one Contractor as party to this Contract.

B. As it is impractical to enumerate every piece of equipment, device and/or accessory required for proper operation of the indicated systems specified within their respective Sections or Divisions

© THE ROBINSON GREEN BERETTA CORPORATION – 6456

of the Project Manual; it is intended that all materials, systems, and/or equipment, required to insure proper operation of the equipment, device, and/or accessory, be provided as a part of the Work of this Project so the specified work or system functions, and/or performs as required by the specification. To infer the intent is otherwise, is to render the specified work or system less than required.

C. Except as specifically noted, provide and pay for:
   1. Labor, materials and equipment.
   2. Tools, construction equipment and machinery.
   3. Water, heat and utilities required for construction.
   4. Other facilities and services necessary for proper execution and completion of the Work.

D. Pay sales, consumer, use and similar taxes for the Work or portions thereof.

E. Secure and pay for, as necessary for proper execution and completion of the Work, and as applicable at time of receipt of Bids:
   1. Permits.
   2. Government fees.
   3. Licenses.

F. Give required notices for operations which may disturb the functions of adjacent facilities.

G. Comply with codes, ordinances, rules, regulations, orders and other legal requirements of public authorities which bear on the performance of the Work.

H. Promptly submit written notice, within five business days of discovery, to the Architect of observed variance of Contract Documents from legal requirements.

I. Lay out all work and be responsible for all lines, elevations, measurements of the building, utilities and site work executed under the Contract. Verify the figures shown before laying out the Work and be responsible for any error resulting from failure to do so. Employ a competent registered engineer or registered land surveyor, approved by the Architect and Owner, for establishing all lines, levels and dimensions, and place at the disposal of the Architect, as required for checking purposes.

J. Enforce strict discipline and good order among employees. Do not employ persons not skilled in assigned task.

K. Notify all trades, sub-contractors and suppliers of all designated alternatives and be responsible for their coordination.

L. At your option, certain indicated materials and/or procedures are specified herein to be used in lieu of other indicated materials and/or procedures, at no change in Contract Price. Such options should be analyzed and coordinated during the bidding period, so that the selection of any may immediately be brought to the Architect's attention, once the Contract is awarded (within thirty days thereafter).

1.5 HEALTH AND SAFETY PRECAUTIONS

A. OSHA:
   1. These construction documents, and the joint and several phases of construction hereby contemplated, are to be governed, at all times, by the applicable portions of the Federal Laws, including but not limited to, the latest amendments of the following:
      a. Williams-Steiger Occupational Safety and Health Act of 1970, Public Law 91-956;

© THE ROBINSON GREEN BERETTA CORPORATION – 6456

b. Part 1910 - Occupational Safety and Health Standards, Title 29, Code of Federal Regulations, as amended to date;
c. Part 1926 - Safety and Health Regulations for Construction, Title 29, Code of Federal Regulations, as amended to date.

2. This Project, the Contractor and his sub-contractors shall, at all times, be governed by applicable Chapters of Title 29, Code of Federal Regulations, Part 1926 - Safety and Health Regulations for Construction, as amended to date.
   a. Note: Furnish the Owner and Architect copies of all accident reports.

B. Dig Safe:
1. All excavations near underground public utility facilities shall be performed in accordance with Rhode Island State law, Title 39, Amended July 1, 1984 (Chapter 39-1.2).

C. Emergencies:
1. Should tornado, hurricane, gale or heavy wind warnings be issued, take precautions to minimize the danger to persons, to the work, and to the adjacent property. Damage caused to any part of the work shall be rectified or replaced to the complete satisfaction of the Architect and Owner and at no expense to the Owner. Injury to personnel or damage to adjacent property because of the work shall be the complete responsibility of the Contractor, and he accepts exclusive responsibility for same.

D. Loading:
1. Do not load any part of the existing work involved in this Contract, during construction, with a load greater than it is calculated to carry with safety. Should any accidents or damage occur through any violation of this requirement, the Contractor shall be held responsible under his Contract and Bond. When, in the opinion of the Architect, portions of the existing areas appear to be overloaded, it shall be the Contractor's responsibility to prove otherwise, or the Contractor shall follow the instructions of the Architect in connection with reduction of the loads.
2. Contractor to review existing site conditions and survey to determine location of underground utility systems and structures. Protect systems from damage. Repair, replace any existing to remain systems, unless noted otherwise.

1.6 PROJECT RECORD DOCUMENTS

A. Maintain at job site, one copy of:
1. Contract Drawings.
2. Specifications.
3. Addenda.
4. Reviewed Shop Drawings.
5. Record Drawings.
6. Change Orders.
7. Other modifications to Contract.
8. Field Test Reports.
9. Approved materials, samples and colors.

B. Store documents in approved field construction office, apart from documents used for construction.

C. Provide files and racks for storage of documents.
1. Provide red pen or pencil for all marking.

D. File documents in accordance with Project Filing Format of MASTERFORMAT.

E. Maintain documents in clean, dry, legible condition.

F. Do not use record documents for construction purposes.

G. Make documents available at all times for inspection by Architect and Owner.

H. Recording changes:
   1. Keep record documents current.
   2. Do not permanently conceal any work until required information has been recorded.
   3. Contract Drawings: Legibly mark to record actual construction and the following:
      a. Record various elements of foundations in relation to lowest floor elevation.
      b. Reference horizontal and vertical location of underground utilities and appurtenances to permanent surface improvements.
      c. Reference location of internal utilities and appurtenances concealed in construction to visible and accessible features of structure.
      d. Record field changes of dimensions and details.
      e. Record changes made by Change Order or Field Order.
      f. Record details not on original Contract Drawings.
   4. Specifications and Addenda: Legibly mark up each Section to record the following:
      a. Manufacturer, trade name, catalog number, and supplier of each product and item of equipment actually installed.
      b. Changes made by Change Order and Field Order.
      c. Other matters and materials not previously specified.
   5. Shop Drawings: Maintain as record documents; legibly annotate drawings to record changes after review.

1.7 TRANSPORTATION AND HANDLING

A. Transport all materials and equipment on legally approved conveyances as required or recommended by the respective manufacturer or supplier.
   1. Obtain permits, as required.

B. Receive and handle all materials and equipment, at the project site, by conveyances or methods as recommended by the respective manufacturer or supplier.

C. Coordinate delivery of equipment and materials when two or more trades, contractors or suppliers are involved.

D. Remove from the site any material or item of equipment damaged during the transportation or handling process, and immediately replace at no additional cost to the Owner.

1.8 STORAGE AND PROTECTION

A. Store all materials and equipment as recommended by the respective manufacturer or supplier, including the following minimum requirements.

B. Upon receipt of such materials and equipment, check, distribute, store and safeguard in a clean, dry, ventilated location.

C. Elevate off the ground, items which can be stored in exterior locations, and completely cover with approved tarpaulins. Protect against the elements at all times.

D. Maintain all storage areas in a clean and orderly condition at all times.

© THE ROBINSON GREEN BERETTA CORPORATION – 6456

E. Immediately replace any material or item of equipment damaged, due to inadequate storage protection, at no additional cost to the Owner.

1.9 CUTTING AND PATCHING

A. Execute cutting, including excavating, fitting or patching work required to:
   1. Make several parts fit properly.
   2. Uncover work to provide for installation of ill-timed work.
   3. Remove and replace defective work.
   4. Remove and replace work not conforming to the Contract Documents.
   5. Remove samples of installed work, as specified, for testing.
   6. Install specified work in existing construction.

B. In addition to the Contract requirements, upon written instructions from Architect:
   1. Uncover work to provide for Architect's observation of covered work, as required by General Conditions.
   2. Remove samples of installed materials for testing; as required by the General Conditions.

C. Do not endanger any work by cutting or altering work, or any part of it.

D. Do not cut or alter work of another Contractor without written permission of the Architect.

E. Prior to cutting which affects structural safety of Project, or work of another Contractor, submit written notice to Architect requesting consent to proceed with cutting.

F. Prior to cutting and patching, done on instruction of the Architect, submit written cost estimate.

G. Should conditions of work, or schedule, indicate change of materials or methods, submit written recommendations to the Architect and Owner including:
   1. Conditions indicating change.
   2. Recommendations for alternative materials or methods.
   3. Submittals required for Substitutions.
   4. Impact on operations and maintenance, both long and short term.

H. Submit written notice, to the Architect and Owner, designating time work will be uncovered, to provide for observation.

I. Payment for costs caused by ill-timed or defective work, or work not conforming to the Contract Documents, including costs for additional services of Architect or other costs to the Owner will be borne by the Contractor.

J. Contractor Inspection:
   1. Inspect existing conditions of work, including existing underground structures and elements subject to movement or damage during:
      a. Cutting and patching.
   2. After uncovering work, inspect conditions affecting installation of new products.

K. Preparation: (prior to cutting)
   1. Provide shoring, bracing and support as required to maintain structural integrity of the Project.
   2. Provide appropriate protection to fully protect other portions of the Project from dust, fumes, humidity, etc.
   3. Provide protection from the elements.

© THE ROBINSON GREEN BERETTA CORPORATION – 6456

L. Performance: Perform all work of fitting, adjustment, cutting, patching, finishing, and restoration to perfectly match the quality as specified throughout these specifications by trade persons skilled in the work being performed.

1.10 OWNER-FURNISHED PRODUCTS

A. Where Owner furnished and/or Owner Vendor furnished equipment is specified, the Contractor is responsible to verify and coordinate, with the Owner, the extent of the Work under this Contract, associated with such product or equipment.

B. Owner's duties:
1. Schedule delivery date, with supplier, in accordance with the Construction Schedule, as developed with both the Architect and Owner in regards to furnished products.
2. Obtain installation drawings and instructions.

C. Contractor's duties:
1. Designate required delivery date for each product in accordance with the Construction Schedule, as developed with both the Architect and Owner in regards to furnished products.
2. Promptly inspect delivered products, report damaged or defective products.
3. Handle at site, including uncrating and storage.
4. Protect from exposure to elements and from damage.
5. The Contractor shall endeavor to work with the Owner in their schedule to accommodate the work. It is expected that work will include, but not be limited to: Furnishings, Communications, Security, Audio-Visual and Technology.
6. Repair or replace items damaged as a result of Contractor's operations.
7. Refer to the drawings for additional responsibilities

1.11 CONTRACTOR USE OF PREMISES

A. Confine operations at site to areas permitted by:
1. Law.
2. Ordinances.
3. Permits.
4. Contract Documents.

B. Do not unreasonably encumber the site with materials and equipment.

C. Do not load structure with weight that will endanger structure.

D. Assume full responsibility for protection and safekeeping of products stored on the premises.

E. Move any stored products which interfere with operations of Owner or other Contractor.

F. Obtain and pay for use of additional storage or work areas needed for operations.

G. Limit use of site for work and storage within confines of the Project Limit Line.

H. Use of Site: Limit use of Project site to work in areas or areas within the Contract limits indicated. Do not disturb portions of Project site beyond areas in which the work is indicated.
1. Limits: Confine construction operations to construction areas indicated on drawings and allowed by the Owner.

© THE ROBINSON GREEN BERETTA CORPORATION – 6456

2. Driveways, Walkways and Entrances: Keep driveways, loading areas and entrances serving premises clear and available to Owner, Owner's employees, and emergency vehicles at all times. Do not use these areas for parking or storage of materials.
   a. Schedule deliveries to minimize use of driveways and entrances by construction operations.

1.12 WORK RESTRICTIONS

A. Work Restrictions, General: Comply with restrictions on construction operations.
   1. Comply with limitations on use of public streets and with other requirements of authorities having jurisdiction.

B. Existing Utility Interruptions: Do not interrupt utilities serving facilities occupied by Owner or others unless permitted under the following conditions and then only after providing temporary utility services according to requirements indicated:
   1. Notify Owner not less than two days in advance of proposed utility interruptions.
   2. Obtain Owner's written permission before proceeding with utility interruptions.

C. Noise, Vibration, and Odors: Coordinate operations that may result in high levels of noise and vibration, odors, or other disruption to Owner occupancy with Owner.
   1. Notify Owner not less than two days in advance of proposed disruptive operations.
   2. Obtain Owner's written permission before proceeding with disruptive operations.

D. Nonsmoking Building: Smoking is not permitted within the building or within 25 feet of entrances, operable windows, or outdoor-air intakes.

E. Controlled Substances: Use of tobacco products and other controlled substances within the existing building and/or on Project site is not permitted.

PART 2 - PRODUCTS (Not Used)

PART 3 - EXECUTION (Not Used)

END OF SECTION 01 01 00

© THE ROBINSON GREEN BERETTA CORPORATION – 6456

SECTION 01 20 00 - PROJECT MEETINGS

PART 1 - GENERAL

1.1 RELATED DOCUMENTS

A. The General Conditions, Supplementary Conditions and applicable portions of Division 1 of the specification are a part of this Section, which shall consist of all labor, equipment and materials necessary to complete all project meeting work indicated on the drawings and herein specified.

1.2 RELATED REQUIREMENTS SPECIFIED ELSEWHERE

A. Summary of the Work: Section 01 01 00.

B. Construction Schedules: Section 01 30 00.

C. Progress Reports: Section 01 30 00.

D. Shop Drawings, Project Data and Samples: Section 01 30 00.

1.3 PRE-INSTALLATION MEETINGS:

A. Concrete Slab Pre-Installation Meeting: Division 03.

B. Masonry Construction Pre-Installation Meeting: Division 04.

C. Masonry Water Repellent Sealer Pre-Installation Meeting: Division 07

D. Roofing Pre-Installation Meeting: Division 07.

E. Caulking and Sealant Pre-Installation Meeting: Division 07.

F. Builders' Hardware Pre-Installation Meeting: Division 08

G. Drywall Pre-Installation Meeting: Division 09.

H. Painting Pre-Installation Meeting: Division 09.

I. Metal Building erection Pre-Installation Meeting: Division 13.

J. Other additional Pre-Installation Meetings required by other Division Sections where noted/ required.

1.4 PRECONSTRUCTION MEETING

A. Scheduled, by the General Contractor, within fifteen days after Notice to Proceed.
   1. Pre-construction meetings to be held for the following materials and installation:
      a. Foundation
      b. Sheds - Wood and Fabric
      c. Electrical Raceways – Coordinate with Technology

© THE ROBINSON GREEN BERETTA CORPORATION - 6456

d. Roofing

B. Attendance:

1. Owner or Representatives.
2. Architect and his Consultants.
3. Contractor.
4. Major Sub-contractors.
5. Safety Representative.

C. Minimum Agenda:

1. Distribution and discussion of:

a. List of Major Sub-contractors.
b. Tentative Construction Schedule.

2. Critical work sequencing.
3. Relation and coordination of Contractors.
4. Designation of responsible personnel.
5. Processing of field decisions and Change Orders.
6. Adequacy of distribution of Contract Documents.
7. Submittal of shop drawings, project data and samples.
8. Procedures for maintaining record documents.
9. Use of Premises:

a. Office and storage areas.
b. Owner's requirements.

10. Major equipment deliveries and priorities.
11. Housekeeping procedures.
12. Procedures for Project Closeout, including "punch list" preparation and "Substantial Completion" requirements.

1.5 PROGRESS MEETINGS

A. Scheduled, agendas prepared and administered by the Contractor.

1. Distribute written notice and agendas of Regular and Called Meetings, three days in advance of meeting date.
2. Make physical arrangements for meetings.
3. Preside at meetings.
4. Record minutes, including significant proceedings and decisions.
5. Distribute copies to all attendees, within three days after meeting.

B. Architect will attend meetings to ascertain that Work is expedited consistent with Construction Schedule and with the Contract Documents.

C. Schedule Regular Meetings on a day and time agreeable to all parties.

D. Hold Called Meetings as progress of the Work dictates.

E. Location of meetings, as indicated in the Notice.

© THE ROBINSON GREEN BERETTA CORPORATION - 6456

F. Attendance:

1. Owner or Representatives, when required.
2. Architect and his Consultants, as required.
3. Contractor.
4. Sub-contractors, as pertinent to agenda.
5. Safety Representative.

G. Minimum Agenda:

1. Review and approve minutes of previous meeting.
2. Review Work progress since last meeting.
3. Note field observations, problems and decisions.
4. Identify problems which impede planned progress.
5. Review off-site fabrication problems.
6. Develop corrective measures and procedures to regain planned schedule.
7. Revise Construction Schedule as required.
8. Plan progress during next work period.
9. Coordinate projected progress with other Contractors.
10. Review submittal schedules, expedite as required to maintain schedule.
11. Maintaining of quality and work standards.
12. Review changes proposed by Owner for:

    a. Effect on Construction Schedule.
    b. Effect on Completion Schedule.

13. Complete other current business.
14. Review Project Closeout procedure.

PART 2 - PRODUCTS (Not Used)

PART 3 - EXECUTION (Not Used)

END OF SECTION 012000

© THE ROBINSON GREEN BERETTA CORPORATION - 6456

UNIT PRICES:

SECTION 01 22 00 - UNIT PRICES

PART 1 - GENERAL

1.1 RELATED DOCUMENTS

A. Drawings and general provisions of the Contract, including General and Supplementary Conditions and other Division 01 Specification Sections, apply to this Section.

1.2 SUMMARY

A. Section includes administrative and procedural requirements for unit prices.

B. Related Requirements:

1. Division 01 Section "Contract Modification Procedures" for procedures for submitting and handling Change Orders.
2. Division 01 Section "Quality Requirements" for general testing and inspecting requirements.

1.3 DEFINITIONS

A. Unit price is an amount incorporated in the Agreement, applicable during the duration of the Work as a price per unit of measurement for materials, equipment, or services, or a portion of the Work, added to or deducted from the Contract Sum by appropriate modification, if the scope of Work or estimated quantities of Work required by the Contract Documents are increased or decreased.

1.4 PROCEDURES

A. Unit prices include all necessary material, plus cost for delivery, installation, insurance, applicable taxes (when required), overhead, and profit.

B. Measurement and Payment: See individual Specification Sections for work that requires establishment of unit prices. Methods of measurement and payment for unit prices are specified in those Sections.

C. Owner reserves the right to reject Contractor's measurement of work-in-place that involves use of established unit prices and to have this work measured, at Owner's expense, by an independent surveyor acceptable to Contractor.

D. List of Unit Prices: A schedule of unit prices is included in Part 2. Specification Sections referenced in the schedule contain requirements for materials described under each unit price.

© THE ROBINSON GREEN BERETTA CORPORATION - 6456

PART 2

2.1 SCHEDULE

See Bid Form Form For Submission of Prices

The undersigned agrees that the following unit prices are applicable for additional or deductive work from that as specified or shown on the Contract Documents. The prices herein established are for additional work and include the net cost plus overhead and profit. For reductions in the work (lesser quantities), 88% of the prices will apply.
The following Unit Prices will constitute basis for additions and deductions to Contract as may be required during the life of the Contract:

Unit Price No. 1	Disposal of Liquid Waste per Section 30 01 71	
	Unit of Measurement: Gallons	$, .
Unit Price No. 2	Dewatering and Treatment – Areas with Contaminated Groundwater per Section 300451	
	Unit of Measurement: Gallons	$ . .
Unit Price No. 3	Load, Haul Dry Contaminated Soil Type 2 per Section 300225	
	Unit of Measurement: Tons	$, .
Unit Price No. 4	Disposal of Dry Contaminated Soil Type 2 per Section 300225	
	Unit of Measurement: Tons	$, .
Unit Price No. 5	Handling, Hauling, and Stockpiling of Soil greater than 4-feet below grade per Section 300225	
	Unit of Measurement: C.Y.	$, .
Unit Price No. 6	Load and Haul Contaminated Soil greater than 4-feet below grade per Section 300225	
	Unit of Measurement: Tons	, .
Unit Price No. 7	Disposal of Contaminated Soil Greater than 4-feet below grade	
	Unit of Measurement: Tons	$, .
Unit Price No. 8	Handling, Hauling, and Stockpile Management of Wet Contaminated Soil per Section 300482	
	Unit of Measurement: Greater than 295 Cubic Yards	$,

UNIT PRICE

									.		

Unit Price No.9	Furnish and install 4” deep loam and grass seed										
	Unit of Measurement: per Section 012200, 3.1 Schedule of Unit Prices. 1 SY (Square Yard)	$			,				.		

Unit Price No.10	Furnish and install compacted “gravel fill” as specified										
	Unit of Measurement: per Section 012200, 3.1 Schedule of Unit Prices. 1 CY (Cubic Yard)	$			,				.		

Unit Price No.11	Furnish and install Type I-1 bituminous concrete (1.5” binder & 1.5” surface course) over 8” compacted gravel base including all preparation work										
	Unit of Measurement: per Section 012200, 3.1 Schedule of Unit Prices. 1 SY (Square Yard)	$			,				.		

Unit Price No.12	Furnish and install new 4” thick concrete sidewalk or pad including excavation, 8” gravel base, formwork, reinforcing, finishing & striping										
	Unit of Measurement: per Section 012200, 3.1 Schedule of Unit Prices. 1 SY (Square Yard)	$			,				.		

Unit Price No.13	Furnish and install 10’-0” length of precast concrete curbing including excavation										
	Unit of Measurement: per Section 012200, 3.1 Schedule of Unit Prices. Ea. (Each)	$			,				.		

Unit Price No.14	Furnish and install 2’ precast concrete radius corners (RI Standard 7.16) including excavation										
	Unit of Measurement: per Section 012200, 3.1 Schedule of Unit Prices. Ea. (Each)	$			,				.		

Unit Price No15.	Installation of concrete encased electrical duct bank. Price includes furnishing and placing of all required materials as well as other incidental work										
	Unit of Measurement: per Section 012200, 3.1 Schedule of Unit Prices. 1 LF (Linear foot)	$			,				.		

Any and all material(s) quantities due to excessive amount(s) using units prices will be able to be negotiated due to the volume.

© THE ROBINSON GREEN BERETTA CORPORATION - 6456

SECTION 01 25 00 - SUBSTITUTION PROCEDURES

PART 1 - GENERAL

1.1 RELATED DOCUMENTS

A. Drawings and general provisions of the Contract, including General and Supplementary Conditions and other Division 01 Specification Sections, apply to this Section.

1.2 SUMMARY

A. Section includes administrative and procedural requirements for substitutions.

B. Related Requirements:

1. Division 01 Section "Product Requirements" for requirements for submitting comparable product submittals for products by listed manufacturers.
2. Division 01 Section “Alternates” for products selected under an alternate.
3. Divisions 02 through 32 Sections for specific requirements and limitations for substitutions.

1.3 DEFINITIONS

A. Substitutions: Changes in products, materials, equipment, and methods of construction from those required by the Contract Documents and proposed by Contractor.

1. Substitutions for Cause: Changes proposed by Contractor that are required due to changed Project conditions, such as unavailability of product, regulatory changes, or unavailability of required warranty terms.
2. Substitutions for Convenience: Changes proposed by Contractor or Owner that are not required in order to meet other Project requirements but may offer advantage to Contractor or Owner.

1.4 ACTION SUBMITTALS

A. Substitution Requests: Submit three copies of each request for consideration. Identify product or fabrication or installation method to be replaced. Include Specification Section number and title and Drawing numbers and titles.

1. Substitution Request Form: Use CSI Form 13.1A and/or facsimile of form provided in Project Manual.
2. Documentation: Show compliance with requirements for substitutions and the following, as applicable:

a. Statement indicating why specified product or fabrication or installation cannot be provided, if applicable.

© THE ROBINSON GREEN BERETTA CORPORATION – 6456

b. Coordination information, including a list of changes or revisions needed to other parts of the Work and to construction performed by Owner and separate contractors, that will be necessary to accommodate proposed substitution.
c. Detailed comparison of significant qualities of proposed substitution with those of the Work specified. Include annotated copy of applicable Specification Section. Significant qualities may include attributes such as performance, weight, size, durability, visual effect, sustainable design characteristics, warranties, and specific features and requirements indicated. Indicate deviations, if any, from the Work specified.
d. Product Data, including drawings and descriptions of products and fabrication and installation procedures.
e. Samples, where applicable or requested.
f. Certificates and qualification data, where applicable or requested.
g. List of similar installations for completed projects with project names and addresses and names and addresses of architects and owners.
h. Material test reports from a qualified testing agency indicating and interpreting test results for compliance with requirements indicated.
i. Research reports evidencing compliance with building code in effect for Project, from ICC-ES.
j. Detailed comparison of Contractor's construction schedule using proposed substitution with products specified for the Work, including effect on the overall Contract Time. If specified product or method of construction cannot be provided within the Contract Time, include letter from manufacturer, on manufacturer's letterhead, stating date of receipt of purchase order, lack of availability, or delays in delivery.
k. Cost information, including a proposal of change, if any, in the Contract Sum.
l. Contractor's certification that proposed substitution complies with requirements in the Contract Documents except as indicated in substitution request, is compatible with related materials, and is appropriate for applications indicated.
m. Contractor's waiver of rights to additional payment or time that may subsequently become necessary because of failure of proposed substitution to produce indicated results.

3. Architect's Action: If necessary, Architect will request additional information or documentation for evaluation within seven days of receipt of a request for substitution. Architect will notify Contractor through Construction Manager of acceptance or rejection of proposed substitution within 15 days of receipt of request, or seven days of receipt of additional information or documentation, whichever is later.

a. Forms of Acceptance: Change Order, Construction Change Directive, or Architect's Supplemental Instructions for minor changes in the Work.
b. Use product specified if Architect does not issue a decision on use of a proposed substitution within time allocated.

1.5 QUALITY ASSURANCE

A. Compatibility of Substitutions: Investigate and document compatibility of proposed substitution with related products and materials. Engage a qualified testing agency to perform compatibility tests recommended by manufacturers.

1.6 PROCEDURES

A. Coordination: Revise or adjust affected work as necessary to integrate work of the approved substitutions.

© THE ROBINSON GREEN BERETTA CORPORATION – 6456

PART 2 - PRODUCTS

2.1 SUBSTITUTIONS

A. Substitutions for Cause: Submit requests for substitution immediately on discovery of need for change, but not later than 15 days prior to time required for preparation and review of related submittals.

1. Conditions: Architect will consider Contractor's request for substitution when the following conditions are satisfied. If the following conditions are not satisfied, Architect will return requests without action, except to record noncompliance with these requirements:

a. Requested substitution is consistent with the Contract Documents and will produce indicated results.
b. Substitution request is fully documented and properly submitted.
c. Requested substitution will not adversely affect Contractor's construction schedule.
d. Requested substitution has received necessary approvals of authorities having jurisdiction.
e. Requested substitution is compatible with other portions of the Work.
f. Requested substitution has been coordinated with other portions of the Work.
g. Requested substitution provides specified warranty.
h. If requested substitution involves more than one contractor, requested substitution has been coordinated with other portions of the Work, is uniform and consistent, is compatible with other products, and is acceptable to all contractors involved.

B. Substitutions for Convenience: Generally not allowed unless otherwise indicated.

C. Substitutions for Convenience: Architect will consider requests for substitution if received within 60 days after the Notice to Proceed and/or the Notice of Award. Requests received after that time may be considered or rejected at discretion of Architect.

1. Conditions: Architect will consider Contractor's request for substitution when the following conditions are satisfied. If the following conditions are not satisfied, Architect will return requests without action, except to record noncompliance with these requirements:

a. Requested substitution offers Owner a substantial advantage in cost, time, energy conservation, or other considerations, after deducting additional responsibilities Owner must assume. Owner's additional responsibilities may include compensation to Architect for redesign and evaluation services, increased cost of other construction by Owner, and similar considerations.
b. Requested substitution does not require extensive revisions to the Contract Documents.
c. Requested substitution is consistent with the Contract Documents and will produce indicated results.
d. Substitution request is fully documented and properly submitted.
e. Requested substitution will not adversely affect Contractor's construction schedule.
f. Requested substitution has received necessary approvals of authorities having jurisdiction.
g. Requested substitution is compatible with other portions of the Work.
h. Requested substitution has been coordinated with other portions of the Work.
i. Requested substitution provides specified warranty.

© THE ROBINSON GREEN BERETTA CORPORATION – 6456

j. If requested substitution involves more than one contractor, requested substitution has been coordinated with other portions of the Work, is uniform and consistent, is compatible with other products, and is acceptable to all contractors involved.

PART 3 - EXECUTION (Not Used)

END OF SECTION 01 25 00

© THE ROBINSON GREEN BERETTA CORPORATION – 6456

SECTION 01 26 00 - CONTRACT MODIFICATION PROCEDURES

PART 1 - GENERAL

1.1 RELATED DOCUMENTS

A. Drawings and general provisions of the Contract, including General and Supplementary Conditions and other Division 01 Specification Sections, apply to this Section.

1.2 SUMMARY

A. Section includes administrative and procedural requirements for handling and processing Contract modifications.

B. Related Requirements:

1. Division 01 Section "Substitution Procedures" for administrative procedures for handling requests for substitutions made after the Contract award.

1.3 PROPOSAL REQUESTS

A. Owner-Initiated Proposal Requests: Architect will issue a detailed description of proposed changes in the Work that may, or may not, require adjustment to the Contract Sum or the Contract Time. If necessary, the description will include supplemental or revised Drawings and Specifications.

1. Work Change Proposal Requests issued by Architect are not instructions either to stop work in progress or to execute the proposed change.
2. Within 15 days, when not otherwise specified, after receipt of Proposal Request, submit a quotation estimating cost adjustments to the Contract Sum and the Contract Time necessary to execute the change.

a. Include a list of quantities of products required or eliminated and unit costs, with total amount of purchases and credits to be made. If requested, furnish survey data to substantiate quantities.
b. Indicate applicable taxes, delivery charges, equipment rental, and amounts of trade discounts.
c. Include costs of labor and supervision directly attributable to the change.
d. Include an updated Contractor's construction schedule that indicates the effect of the change, including, but not limited to, changes in activity duration, start and finish times, and activity relationship. Use available total float before requesting an extension of the Contract Time.
e. Quotation Form: Use CSI Form 13.6D, "Proposal Worksheet Summary," and Form 13.6C, "Proposal Worksheet Detail" or a form acceptable to the Owner and Architect.

B. Contractor-Initiated Proposals: If latent or changed conditions require modifications to the Contract, Contractor may initiate a claim by submitting a request for a change to the Architect.

© THE ROBINSON GREEN BERETTA CORPORATION – 6456

1. Include a statement outlining reasons for the change and the effect of the change on the Work. Provide a complete description of the proposed change. Indicate the effect of the proposed change on the Contract Sum and the Contract Time.
2. Include a list of quantities of products required or eliminated and unit costs, with total amount of purchases and credits to be made. If requested, furnish survey data to substantiate quantities.
3. Indicate applicable taxes, delivery charges, equipment rental, and amounts of trade discounts.
4. Include costs of labor and supervision directly attributable to the change.
5. Include an updated Contractor's construction schedule that indicates the effect of the change, including, but not limited to, changes in activity duration, start and finish times, and activity relationship. Use available total float before requesting an extension of the Contract Time.
6. Comply with requirements in Division 01 Section "Substitution Procedures" if the proposed change requires substitution of one product or system for product or system specified.
7. Proposal Request Form: Use a form acceptable to Architect.

1.4 ADMINISTRATIVE CHANGE ORDERS

A. Allowance Adjustment: See Division 01 Section "Allowances" for administrative procedures for preparation of Change Order Proposal for adjusting the Contract Sum to reflect actual costs of allowances.

B. Unit-Price Adjustment: See Division 01 Section "Unit Prices" for administrative procedures for preparation of Change Order Proposal for adjusting the Contract Sum to reflect measured scope of unit-price work.

1.5 CHANGE ORDER PROCEDURES

A. On Owner's approval of a Work Changes Proposal Request, the Contractor will issue a Change Order for signatures of Owner and Contractor on **AIA Document G701**.

1.6 CONSTRUCTION CHANGE DIRECTIVE

A. Construction Change Directive: Architect may issue a Construction Change Directive on AIA Document G714. Construction Change Directive instructs Contractor to proceed with a change in the Work, for subsequent inclusion in a Change Order.

1. Construction Change Directive contains a complete description of change in the Work. It also designates method to be followed to determine change in the Contract Sum or the Contract Time.

B. Documentation: Maintain detailed records on a time and material basis of work required by the Construction Change Directive.

1. After completion of change, submit an itemized account and supporting data necessary to substantiate cost and time adjustments to the Contract.

© THE ROBINSON GREEN BERETTA CORPORATION – 6456

PART 2 - PRODUCTS (Not Used)

PART 3 - EXECUTION (Not Used)

END OF SECTION 01 26 00

© THE ROBINSON GREEN BERETTA CORPORATION – 6456

SECTION 01 31 00 - PROJECT MANAGEMENT AND COORDINATION

PART 1 - GENERAL

1.1 RELATED DOCUMENTS

A. Drawings and general provisions of the Contract, including General and Supplementary Conditions and other Division 01 Specification Sections, apply to this Section.

1.2 SUMMARY

A. Section includes administrative provisions for coordinating construction operations on Project including, but not limited to, the following:

1. General coordination procedures.
2. Coordination drawings.
3. Requests for Information (RFIs).
4. Project Web site.
5. Project meetings.

B. Each contractor shall participate in coordination requirements. Certain areas of responsibility are assigned to a specific contractor.

C. Related Requirements:
1. Division 01 Section "Project Management and Coordination" for preparing and submitting Contractor's construction schedule.
2. Division 01 Section "Execution" for procedures for coordinating general installation and field-engineering services, including establishment of benchmarks and control points.
3. Division 01 Section "Closeout Procedures" for coordinating closeout of the Contract.

1.3 DEFINITIONS

A. RFI: Request from Owner, Architect, or Contractor seeking information required by or clarifications of the Contract Documents.

1.4 INFORMATIONAL SUBMITTALS

A. Subcontract List: Prepare a written summary identifying individuals or firms proposed for each portion of the Work, including those who are to furnish products or equipment fabricated to a special design. Use an industry standard form that include the following information in tabular form:

1. Name, address, and telephone number of entity performing subcontract or supplying products.
2. Number and title of related Specification Section(s) covered by subcontract.
3. Drawing number and detail references, as appropriate, covered by subcontract.

© THE ROBINSON GREEN BERETTA CORPORATION – 6456

B. Key Personnel Names: Within 15 days of starting construction operations, submit a list of key personnel assignments, including superintendent and other personnel in attendance at Project site. Identify individuals and their duties and responsibilities; list addresses and telephone numbers, including home, office, and cellular telephone numbers and e-mail addresses. Provide names, addresses, and telephone numbers of individuals assigned as alternates in the absence of individuals assigned to Project.

1. Post copies of list in project meeting room, in temporary field office, on Project Web site, and by each temporary telephone. Keep list current at all times.

1.5 GENERAL COORDINATION PROCEDURES

A. Coordination: Coordinate construction operations included in different Sections of the Specifications to ensure efficient and orderly installation of each part of the Work. Coordinate construction operations, included in different Sections that depend on each other for proper installation, connection, and operation.

1. Schedule construction operations in sequence required to obtain the best results where installation of one part of the Work depends on installation of other components, before or after its own installation.
2. Coordinate installation of different components to ensure maximum performance and accessibility for required maintenance, service, and repair.
3. Make adequate provisions to accommodate items scheduled for later installation.

B. Coordination: Each contractor shall coordinate its construction operations with those of other contractors and entities to ensure efficient and orderly installation of each part of the Work. Each contractor shall coordinate its operations with operations, included in different Sections that depend on each other for proper installation, connection, and operation.

1. Schedule construction operations in sequence required to obtain the best results where installation of one part of the Work depends on installation of other components, before or after its own installation.
2. Coordinate installation of different components with other contractors to ensure maximum performance and accessibility for required maintenance, service, and repair.
3. Make adequate provisions to accommodate items scheduled for later installation.

C. Prepare memoranda for distribution to each party involved, outlining special procedures required for coordination. Include such items as required notices, reports, and list of attendees at meetings.

1. Prepare similar memoranda for Owner and separate contractors if coordination of their Work is required.

D. Administrative Procedures: Coordinate scheduling and timing of required administrative procedures with other construction activities and activities of other contractors when appropriate and/or required, to avoid conflicts and to ensure orderly progress of the Work. Such administrative activities include, but are not limited to, the following:

1. Preparation of Contractor's construction schedule.
2. Preparation of the schedule of values.
3. Installation and removal of temporary facilities and controls.
4. Delivery and processing of submittals.
5. Progress meetings.
6. Preinstallation conferences.

© THE ROBINSON GREEN BERETTA CORPORATION – 6456

7. Project closeout activities.
8. Startup and adjustment of systems.

E. Conservation: Coordinate construction activities to ensure that operations are carried out with consideration given to conservation of energy, water, and materials. Coordinate use of temporary utilities to minimize waste.

1. Salvage materials and equipment involved in performance of, but not actually incorporated into, the Work. See other Sections for disposition of salvaged materials that are designated as Owner's property.

1.6 COORDINATION DRAWINGS

A. Coordination Drawings, General: Prepare coordination drawings, at a scale not less than 1/4" = 1'-0", according to requirements in individual Sections, and additionally where installation is not completely shown on Shop Drawings, where limited space availability necessitates coordination, or if coordination is required to facilitate integration of products and materials fabricated or installed by more than one entity.

1. Content: Project-specific information, drawn accurately to a scale large enough to indicate and resolve conflicts. Do not base coordination drawings on standard printed data. Include the following information, as applicable:

a. Use applicable Drawings as a basis for preparation of coordination drawings. Prepare sections, elevations, and details as needed to describe relationship of various systems and components.
b. Coordinate the addition of trade-specific information to the coordination drawings by multiple contractors in a sequence that best provides for coordination of the information and resolution of conflicts between installed components before submitting for review.
c. Indicate functional and spatial relationships of components of architectural, structural, civil, mechanical, and electrical systems.
d. Indicate space requirements for routine maintenance and for anticipated replacement of components during the life of the installation.
e. Show location and size of access doors required for access to concealed dampers, valves, and other controls.
f. Indicate required installation sequences.
g. Indicate dimensions shown on the Drawings. Specifically note dimensions that appear to be in conflict with submitted equipment and minimum clearance requirements. Provide alternate sketches to Architect indicating proposed resolution of such conflicts. Minor dimension changes and difficult installations will not be considered changes to the Contract.

B. Coordination Drawing Organization: Organize coordination drawings as follows:

1. Floor Plans and Reflected Ceiling Plans: Show architectural and structural elements, and mechanical, plumbing, fire-protection, fire-alarm, and electrical Work. Show locations of visible ceiling-mounted devices relative to acoustical ceiling grid. Supplement plan drawings with section drawings where required to adequately represent the Work.
2. Plenum Space: Indicate subframing for support of ceiling and wall systems, mechanical and electrical equipment, and related Work. Locate components within ceiling plenum to accommodate layout of light fixtures indicated on Drawings. Indicate areas of conflict between light fixtures and other components.

© THE ROBINSON GREEN BERETTA CORPORATION – 6456

3. Mechanical Rooms: Provide coordination drawings for mechanical rooms showing plans and elevations of mechanical, plumbing, fire-protection, fire-alarm, and electrical equipment.
4. Structural Penetrations: Indicate penetrations and openings required for all disciplines.
5. Slab Edge and Embedded Items: Indicate slab edge locations and sizes and locations of embedded items for metal fabrications, sleeves, anchor bolts, bearing plates, angles, door floor closers, slab depressions for floor finishes, curbs and housekeeping pads, and similar items.
6. Mechanical and Plumbing Work: Show the following:

    a. Sizes and bottom elevations of ductwork, piping, and conduit runs, including insulation, bracing, flanges, and support systems.
    b. Dimensions of major components, such as dampers, valves, diffusers, access doors, cleanouts and electrical distribution equipment.
    c. Fire-rated enclosures around ductwork.

7. Electrical Work: Show the following:

    a. Runs of vertical and horizontal conduit 1-1/4 inches (32 mm) in diameter and larger.
    b. Light fixture, exit light, emergency battery pack, smoke detector, and other fire-alarm locations.
    c. Panel board, switch board, switchgear, transformer, busway, generator, and motor control center locations.
    d. Location of pull boxes and junction boxes, dimensioned from column center lines.

8. Fire-Protection System: Show the following:

    a. Locations of standpipes, mains piping, branch lines, pipe drops, and sprinkler heads.

9. U.L. fire-rated walls shall be indicated.
10. Review: Architect will review coordination drawings to confirm that the Work is being coordinated, but not for the details of the coordination, which are Contractor's responsibility. If Architect determines that coordination drawings are not being prepared in sufficient scope or detail, or are otherwise deficient, Architect will so inform Contractor, who shall make changes as directed and resubmit.
11. Coordination Drawing Prints: Prepare coordination drawing prints according to requirements in Division 01 Section "Submittal Procedures."

C. Coordination Digital Data Files: Prepare coordination digital data files according to the following requirements:

1. File Preparation Format: Same digital data software program, version, and operating system as original Drawings.
2. File Preparation Format: DWG, Version ACAD 2009, operating in Microsoft Windows operating system.
3. File Submittal Format: Submit or post coordination drawing files using format same as file preparation format and Portable Data File (PDF) format.

1.7 REQUESTS FOR INFORMATION (RFIs)

A. General: Immediately on discovery of the need for additional information or interpretation of the Contract Documents, Contractor shall prepare and submit an RFI in the form specified.

© THE ROBINSON GREEN BERETTA CORPORATION – 6456

1. Architect will return RFIs submitted to Architect by other entities controlled by Contractor with no response.
2. Coordinate and submit RFIs in a prompt manner so as to avoid delays in Contractor's work or work of subcontractors.

B. Content of the RFI: Include a detailed, legible description of item needing information or interpretation and the following:

1. Project name.
2. Project number.
3. Date.
4. Name of Contractor.
5. Name of Architect (and Construction Manager when identified).
6. RFI number, numbered sequentially.
7. RFI subject.
8. Specification Section number and title and related paragraphs, as appropriate.
9. Drawing number and detail references, as appropriate.
10. Field dimensions and conditions, as appropriate.
11. Contractor's suggested resolution. If Contractor's suggested resolution impacts the Contract Time or the Contract Sum, Contractor shall state impact in the RFI.
12. Contractor's signature.
13. Attachments: Include sketches, descriptions, measurements, photos, Product Data, Shop Drawings, coordination drawings, and other information necessary to fully describe items needing interpretation.

    a. Include dimensions, thicknesses, structural grid references, and details of affected materials, assemblies, and attachments on attached sketches.

C. RFI Forms: Contractors standard AIA form or AIA Document G716, Software-generated form with substantially the same content as indicated above, acceptable to Architect.

1. Attachments shall be electronic files in Adobe Acrobat PDF format.

D. Architect's Action: Architect and Construction Manager will review each RFI, determine action required, and respond. Allow seven working days for Architect's response for each RFI. RFIs received by Architect after 1:00 p.m. will be considered as received the following working day.

1. The following Contractor-generated RFIs will be returned without action:

    a. Requests for approval of submittals.
    b. Requests for approval of substitutions.
    c. Requests for approval of Contractor's means and methods.
    d. Requests for coordination information already indicated in the Contract Documents.
    e. Requests for adjustments in the Contract Time or the Contract Sum.
    f. Requests for interpretation of Architect's actions on submittals.
    g. Incomplete RFIs or inaccurately prepared RFIs.

2. Architect's action may include a request for additional information, in which case Architect's time for response will date from time of receipt of additional information.
3. Architect's action on RFIs that may result in a change to the Contract Time or the Contract Sum may be eligible for Contractor to submit Change Proposal according to Division 01 Section "Contract Modification Procedures."

© THE ROBINSON GREEN BERETTA CORPORATION – 6456

a. If Contractor believes the RFI response warrants change in the Contract Time or the Contract Sum, notify Architect in writing within 7 days of receipt of the RFI response.

E. RFI Log: Prepare, maintain, and submit a tabular log of RFIs organized by the RFI number. Submit log weekly. Use forms and/or Software log that is part of a Project Web based site with not less than the following:

1. Project name.
2. Name and address of Contractor.
3. Name and address of Architect (and Construction Manager when required).
4. RFI number including RFIs that were returned without action or withdrawn.
5. RFI description.
6. Date the RFI was submitted.
7. Date Architect's (and Construction Manager's) response was received.

F. On receipt of Architect's (and Construction Manager's) action, update the RFI log and immediately distribute the RFI response to affected parties. Review response and notify Architect (and Construction Manager) within five (5) days if Contractor disagrees with response.

1. Identification of related Minor Change in the Work, Construction Change Directive, and Proposal Request, as appropriate.
2. Identification of related Field Order, Work Change Directive, and Proposal Request, as appropriate.

1.8 PROJECT MEETINGS

A. General: Schedule and conduct meetings and conferences at Project site unless otherwise indicated.

1. Attendees: Inform participants and others involved, and individuals whose presence is required, of date and time of each meeting. Notify Owner and Architect of scheduled meeting dates and times.
2. Agenda: Prepare the meeting agenda. Distribute the agenda to all invited attendees.
3. Minutes: Entity responsible for conducting meeting will record significant discussions and agreements achieved. Distribute the meeting minutes to everyone concerned, including Owner, Construction Manager, and Architect, within three (3) days of the meeting.

B. Preconstruction Conference: Schedule and conduct a preconstruction conference before starting construction, at a time convenient to Owner and Architect, but no later than ten (10) days after execution of the Agreement.

1. Conduct the conference to review responsibilities and personnel assignments.
2. Attendees: Authorized representatives of Owner, Owner's Commissioning Authority, Architect, and their consultants; Contractor and its superintendent; major subcontractors; suppliers; and other concerned parties shall attend the conference. Participants at the conference shall be familiar with Project and authorized to conclude matters relating to the Work.
3. Agenda: Discuss items of significance that could affect progress, including the following:

a. Tentative construction schedule.
b. Phasing.
c. Critical work sequencing and long-lead items.
d. Designation of key personnel and their duties.

© THE ROBINSON GREEN BERETTA CORPORATION – 6456

e. Lines of communications.
f. Procedures for processing field decisions and Change Orders.
g. Procedures for RFIs.
h. Procedures for testing and inspecting.
i. Procedures for processing Applications for Payment.
j. Distribution of the Contract Documents.
k. Submittal procedures.
l. Preparation of record documents.
m. Use of the premises and/or and existing building.
n. Work restrictions.
o. Working hours.
p. Owner's occupancy requirements.
q. Responsibility for temporary facilities and controls.
r. Procedures for moisture and mold control.
s. Procedures for disruptions and shutdowns.
t. Construction waste management and recycling.
u. Parking availability.
v. Office, work, and storage areas.
w. Equipment deliveries and priorities.
x. First aid.
y. Security.
z. Progress cleaning.

4. Minutes: Entity responsible for conducting meeting will record and distribute meeting minutes.

C. Preinstallation Conferences: Conduct a preinstallation conference at Project site before each construction activity that requires coordination with other construction.

1. Attendees: Installer and representatives of manufacturers and fabricators involved in or affected by the installation and its coordination or integration with other materials and installations that have preceded or will follow, shall attend the meeting. Advise Architect , and Owner's Commissioning Authority of scheduled meeting dates.
2. Agenda: Review progress of other construction activities and preparations for the particular activity under consideration, including requirements for the following:

a. Contract Documents.
b. Options.
c. Related RFIs.
d. Related Change Orders.
e. Purchases.
f. Deliveries.
g. Submittals.
h. Review of mockups.
i. Possible conflicts.
j. Compatibility requirements.
k. Time schedules.
l. Weather limitations.
m. Manufacturer's written instructions.
n. Warranty requirements.
o. Compatibility of materials.
p. Acceptability of substrates.
q. Temporary facilities and controls.
r. Space and access limitations.
s. Regulations of authorities having jurisdiction.

© THE ROBINSON GREEN BERETTA CORPORATION – 6456

t. Testing and inspecting requirements.
u. Installation procedures.
v. Coordination with other work.
w. Required performance results.
x. Protection of adjacent work.
y. Protection of construction and personnel.

3. Record significant conference discussions, agreements, and disagreements, including required corrective measures and actions.
4. Reporting: Distribute minutes of the meeting to each party present and to other parties requiring information.
5. Do not proceed with installation if the conference cannot be successfully concluded. Initiate whatever actions are necessary to resolve impediments to performance of the Work and reconvene the conference at earliest feasible date.

D. Project Closeout Conference: Schedule and conduct a project closeout conference, at a time convenient to Owner and Architect, but no later than 90 days prior to the scheduled date of Substantial Completion.

1. Conduct the conference to review requirements and responsibilities related to Project closeout.
2. Attendees: Authorized representatives of Owner, Owner's Commissioning Authority, Architect, and their consultants; Contractor and its superintendent; major subcontractors; suppliers; and other concerned parties shall attend the meeting. Participants at the meeting shall be familiar with Project and authorized to conclude matters relating to the Work.
3. Agenda: Discuss items of significance that could affect or delay Project closeout, including the following:

a. Preparation of record documents.
b. Procedures required prior to inspection for Substantial Completion and for final inspection for acceptance.
c. Submittal of written warranties.
d. Requirements for preparing operations and maintenance data.
e. Requirements for delivery of material samples, attic stock, and spare parts.
f. Requirements for demonstration and training.
g. Preparation of Contractor's punch list.
h. Procedures for processing Applications for Payment at Substantial Completion and for final payment.
i. Submittal procedures.
j. Coordination of separate contracts.
k. Owner's partial occupancy requirements.
l. Installation of Owner's furniture, fixtures, and equipment.
m. Responsibility for removing temporary facilities and controls.

4. Minutes: Entity conducting meeting will record and distribute meeting minutes.

E. Progress Meetings: Conduct progress meetings at weekly and/or regular intervals.

1. Coordinate dates of meetings with preparation of payment requests.
2. Attendees: In addition to representatives of Owner, Owner's Commissioning Authority, Construction Manager, and Architect, each contractor, subcontractor, supplier, and other entity concerned with current progress or involved in planning, coordination, or performance of future activities shall be represented at these meetings. All participants

© THE ROBINSON GREEN BERETTA CORPORATION – 6456

at the meeting shall be familiar with Project and authorized to conclude matters relating to the Work.

3. Agenda: Review and correct or approve minutes of previous progress meeting. Review other items of significance that could affect progress. Include topics for discussion as appropriate to status of Project.

   a. Contractor's Construction Schedule: Review progress since the last meeting. Determine whether each activity is on time, ahead of schedule, or behind schedule, in relation to Contractor's construction schedule. Determine how construction behind schedule will be expedited; secure commitments from parties involved to do so. Discuss whether schedule revisions are required to ensure that current and subsequent activities will be completed within the Contract Time.

      1) Review schedule for next period.

   b. Review present and future needs of each entity present, including the following:

      1) Interface requirements.
      2) Sequence of operations.
      3) Resolution of BIM component conflicts.
      4) Status of submittals.
      5) Deliveries.
      6) Off-site fabrication.
      7) Access.
      8) Site utilization.
      9) Temporary facilities and controls.
      10) Progress cleaning.
      11) Quality and work standards.
      12) Status of correction of deficient items.
      13) Field observations.
      14) Status of RFIs.
      15) Status of proposal requests.
      16) Pending changes.
      17) Status of Change Orders.
      18) Pending claims and disputes.
      19) Documentation of information for payment requests.

4. Minutes: Entity responsible for conducting the meeting will record and distribute the meeting minutes to each party present and to parties requiring information.

   a. Schedule Updating: Revise Contractor's construction schedule after each progress meeting where revisions to the schedule have been made or recognized. Issue revised schedule concurrently with the report of each meeting.

F. Coordination Meetings: Conduct Project coordination meetings at weekly and/or regular intervals. Project coordination meetings are in addition to specific meetings held for other purposes, such as progress meetings and preinstallation conferences.

1. Attendees: In addition to representatives of Owner, Owner's Commissioning Authority, Construction Manager, and Architect, each contractor, subcontractor, supplier, and other entity concerned with current progress or involved in planning, coordination, or performance of future activities shall be represented at these meetings. All participants at the meetings shall be familiar with Project and authorized to conclude matters relating to the Work.

© THE ROBINSON GREEN BERETTA CORPORATION – 6456

2. Agenda: Review and correct or approve minutes of the previous coordination meeting. Review other items of significance that could affect progress. Include topics for discussion as appropriate to status of Project.

   a. Combined Contractor's Construction Schedule: Review progress since the last coordination meeting. Determine whether each contract is on time, ahead of schedule, or behind schedule, in relation to combined Contractor's construction schedule. Determine how construction behind schedule will be expedited; secure commitments from parties involved to do so. Discuss whether schedule revisions are required to ensure that current and subsequent activities will be completed within the Contract Time.
   b. Schedule Updating: Revise combined Contractor's construction schedule after each coordination meeting where revisions to the schedule have been made or recognized. Issue revised schedule concurrently with report of each meeting.
   c. Review present and future needs of each contractor present, including the following:

      1) Interface requirements.
      2) Sequence of operations.
      3) Resolution of component conflicts.
      4) Status of submittals.
      5) Deliveries.
      6) Off-site fabrication.
      7) Access.
      8) Site utilization.
      9) Temporary facilities and controls.
      10) Work hours.
      11) Hazards and risks.
      12) Progress cleaning.
      13) Quality and work standards.
      14) Change Orders.

3. Reporting: Record meeting results and distribute copies to everyone in attendance and to others affected by decisions or actions resulting from each meeting.

PART 2 - PRODUCTS (Not Used)

PART 3 - EXECUTION (Not Used)

END OF SECTION 01 31 00

© THE ROBINSON GREEN BERETTA CORPORATION – 6456

SECTION 01 33 00 - SUBMITTAL PROCEDURES

PART 1 - GENERAL

1.1 RELATED DOCUMENTS

A. Drawings and general provisions of the Contract, including General and Supplementary Conditions and other Division 01 Specification Sections, apply to this Section.

1.2 SUMMARY

A. Section includes requirements for the submittal schedule and administrative and procedural requirements for submitting Shop Drawings, Product Data, Samples, and other submittals.

B. Related Requirements:

1. Division 01 Section "Payment Procedures" for submitting Applications for Payment and the schedule of values.
2. Division 01 Section “Project Management and Coordination” for submitting and distributing meeting and conference minutes and for submitting Coordination Drawings.
3. Division 01 Section “Quality Requirements” for submitting test and inspection reports and for mockup requirements.
4. Division 01 Section “Closeout Procedures” for submitting warranties.
5. Division 02 through 32 Sections for specific requirements for submittals in those Sections.

1.3 DEFINITIONS

A. Action Submittals: Written and graphic information and physical samples that require Architect's responsive action. Action submittals are those submittals indicated in individual Specification Sections as "action submittals."

B. Informational Submittals: Written and graphic information and physical samples that do not require Architect's responsive action. Submittals may be rejected for not complying with requirements. Informational submittals are those submittals indicated in individual Specification Sections as "informational submittals."

C. File Transfer Protocol (FTP): Communications protocol that enables transfer of files to and from another computer over a network and that serves as the basis for standard Internet protocols. An FTP site is a portion of a network located outside of network firewalls within which internal and external users are able to access files.

D. Portable Document Format (PDF): An open standard file format licensed by Adobe Systems used for representing documents in a device-independent and display resolution-independent fixed-layout document format.

© THE ROBINSON GREEN BERETTA CORPORATION – 6456

1.4 ACTION SUBMITTALS

A. Submittal Schedule: Submit a schedule of submittals, arranged in chronological order by dates required by construction schedule. Include time required for review, ordering, manufacturing, fabrication, and delivery when establishing dates. Include additional time required for making corrections or revisions to submittals noted by Architect and additional time for handling and reviewing submittals required by those corrections.

1. Coordinate submittal schedule with list of subcontracts, the schedule of values, and Contractor's construction schedule.
2. Initial Submittal: Submit concurrently with startup construction schedule. Include submittals required during the first 60 days of construction. List those submittals required to maintain orderly progress of the Work and those required early because of long lead time for manufacture or fabrication.
3. Final Submittal: Submit concurrently with the first complete submittal of Contractor's construction schedule.

a. Submit revised submittal schedule to reflect changes in current status and timing for submittals.

4. Format: Arrange the following information in a tabular format:

a. Scheduled date for first submittal.
b. Specification Section number and title.
c. Submittal category: Action; informational.
d. Name of subcontractor.
e. Description of the Work covered.
f. Scheduled date for Architect's final release or approval.
g. Scheduled date of fabrication.
h. Scheduled dates for purchasing.
i. Scheduled dates for installation.
j. Activity or event number.

B. Waste Management Plan Submittals: comply with requirements specified in Section 01 74 20 – “Construction Waste and Disposal.”

1.5 SUBMITTAL ADMINISTRATIVE REQUIREMENTS

A. Architect's Digital Data Files: Electronic digital data files of the Contract Drawings will be provided by Architect for Contractor's use in preparing submittals.

1. Architect will furnish Contractor one set of digital data drawing files of the Contract Drawings for use in preparing Shop Drawings and Project record drawings.

a. Architect makes no representations as to the accuracy or completeness of digital data drawing files as they relate to the Contract Drawings.
b. Digital Drawing Software Program: The Contract Drawings are available in AutoCAD 2008.
c. Contractor shall execute a data licensing agreement in the form of AIA Document C106, Digital Data Licensing Agreement.
d. The following digital data files will by furnished for each appropriate discipline:

1) Floor plans.
2) Reflected ceiling plans.

© THE ROBINSON GREEN BERETTA CORPORATION – 6456

B. Coordination: Coordinate preparation and processing of submittals with performance of construction activities.

1. Coordinate each submittal with fabrication, purchasing, testing, delivery, other submittals, and related activities that require sequential activity.
2. Submit all submittal items required for each Specification Section concurrently unless partial submittals for portions of the Work are indicated on approved submittal schedule.
3. Submit action submittals and informational submittals required by the same Specification Section as separate packages under separate transmittals.
4. Coordinate transmittal of different types of submittals for related parts of the Work so processing will not be delayed because of need to review submittals concurrently for coordination.

    a. Architect reserves the right to withhold action on a submittal requiring coordination with other submittals until related submittals are received.

C. Processing Time: Allow time for submittal review, including time for resubmittals, as follows. Time for review shall commence on Architect's receipt of submittal. No extension of the Contract Time will be authorized because of failure to transmit submittals enough in advance of the Work to permit processing, including resubmittals.

1. Initial Review: Allow 15 days for initial review of each submittal. Allow additional time if coordination with subsequent submittals is required. Architect will advise Contractor when a submittal being processed must be delayed for coordination.
2. Intermediate Review: If intermediate submittal is necessary, process it in same manner as initial submittal.
3. Resubmittal Review: Allow 15 days for review of each resubmittal.
4. Sequential Review: Where sequential review of submittals by Architect's consultants, Owner, or other parties is indicated, allow 21 days for initial review of each submittal.
5. Concurrent Consultant Review: Where the Contract Documents indicate that submittals may be transmitted simultaneously to Architect and to Architect's consultants, allow 15 days for review of each submittal. Submittal will be returned to Architect before being returned to Contractor.

D. Electronic Submittals: Identify and incorporate information in each electronic submittal file as follows:

1. Assemble complete submittal package into a single indexed file incorporating submittal requirements of a single Specification Section and transmittal form with links enabling navigation to each item.
2. Name file with submittal number or other unique identifier, including revision identifier.

    a. File name shall use project identifier and Specification Section number followed by a decimal point and then a sequential number (e.g., LNHS-061000.01). Resubmittals shall include an alphabetic suffix after another decimal point (e.g., LNHS-061000.01.A).

3. Provide means for insertion to permanently record Contractor's review and approval markings and action taken by Architect.
4. Transmittal Form for Electronic Submittals: Use electronic form acceptable to Owner, containing the following information:

    a. Project name.
    b. Date.
    c. Name and address of Architect.

© THE ROBINSON GREEN BERETTA CORPORATION – 6456

d. Name of Contractor.
e. Name of firm or entity that prepared submittal.
f. Names of subcontractor, manufacturer, and supplier.
g. Category and type of submittal.
h. Submittal purpose and description.
i. Specification Section number and title.
j. Specification paragraph number or drawing designation and generic name for each of multiple items.
k. Drawing number and detail references, as appropriate.
l. Location(s) where product is to be installed, as appropriate.
m. Related physical samples submitted directly.
n. Indication of full or partial submittal.
o. Transmittal number, numbered consecutively.
p. Submittal and transmittal distribution record.
q. Other necessary identification.
r. Remarks.

5. Metadata: Include the following information as keywords in the electronic submittal file metadata:

a. Project name.
b. Number and title of appropriate Specification Section.
c. Manufacturer name.
d. Product name.

E. Options: Identify options requiring selection by Architect.

F. Deviations and Additional Information: On an attached separate sheet, prepared on Contractor's letterhead, record relevant information, requests for data, revisions other than those requested by Architect on previous submittals, and deviations from requirements in the Contract Documents, including minor variations and limitations. Include same identification information as related submittal.

G. Resubmittals: Make resubmittals in same form and number of copies as initial submittal.

1. Note date and content of previous submittal.
2. Note date and content of revision in label or title block and clearly indicate extent of revision.
3. Resubmit submittals until they are marked with approval notation from Architect's action stamp.

H. Distribution: Furnish copies of final submittals to manufacturers, subcontractors, suppliers, fabricators, and installers, authorities having jurisdiction, and others as necessary for performance of construction activities. Show distribution on transmittal forms.

I. Use for Construction: Retain complete copies of submittals on Project site. Use only final action submittals that are marked with approval notation from Architect's action stamp.

© THE ROBINSON GREEN BERETTA CORPORATION – 6456

PART 2 - PRODUCTS

2.1 SUBMITTAL PROCEDURES

A. General Submittal Procedure Requirements: Prepare and submit submittals required by individual Specification Sections. Types of submittals are indicated in individual Specification Sections.

1. Submit electronic submittals via email as PDF electronic files.

a. Architect will return annotated file. Annotate and retain one copy of file as an electronic Project record document file.

2. Certificates and Certifications Submittals: Provide a statement that includes signature of entity responsible for preparing certification. Certificates and certifications shall be signed by an officer or other individual authorized to sign documents on behalf of that entity.

a. Provide a digital signature with digital certificate on electronically submitted certificates and certifications where indicated.
b. Provide a notarized statement on original paper copy certificates and certifications where indicated.

B. Product Data: Collect information into a single submittal for each element of construction and type of product or equipment.

1. If information must be specially prepared for submittal because standard published data are not suitable for use, submit as Shop Drawings, not as Product Data.
2. Mark each copy of each submittal to show which products and options are applicable.
3. Include the following information, as applicable:

a. Manufacturer's catalog cuts.
b. Manufacturer's product specifications.
c. Standard color charts.
d. Statement of compliance with specified referenced standards.
e. Testing by recognized testing agency.
f. Application of testing agency labels and seals.
g. Notation of coordination requirements.
h. Availability and delivery time information.

4. For equipment, include the following in addition to the above, as applicable:

a. Wiring diagrams showing factory-installed wiring.
b. Printed performance curves.
c. Operational range diagrams.
d. Clearances required to other construction, if not indicated on accompanying Shop Drawings.

5. Submit Product Data before or concurrent with Samples.
6. Submit Product Data in the following format:

a. PDF electronic file.

C. Shop Drawings: Prepare Project-specific information, drawn accurately to scale.

© THE ROBINSON GREEN BERETTA CORPORATION – 6456

1. Preparation: Fully illustrate requirements in the Contract Documents. Include the following information, as applicable:

    a. Identification of products.
    b. Schedules.
    c. Compliance with specified standards.
    d. Notation of coordination requirements.
    e. Notation of dimensions established by field measurement.
    f. Relationship and attachment to adjoining construction clearly indicated.
    g. Seal and signature of professional engineer if specified.

2. Sheet Size: Except for templates, patterns, and similar full-size drawings, submit Shop Drawings on sheets at least 8-1/2 by 11 inches, but no larger than 30 by 42 inches .
3. Submit Shop Drawings in the following format:

    a. PDF electronic file.

D. Samples: Submit Samples for review of kind, color, pattern, and texture for a check of these characteristics with other elements and for a comparison of these characteristics between submittal and actual component as delivered and installed.

1. Transmit Samples that contain multiple, related components such as accessories together in one submittal package.
2. Identification: Attach label on unexposed side of Samples that includes the following:

    a. Generic description of Sample.
    b. Product name and name of manufacturer.
    c. Sample source.
    d. Number and title of applicable Specification Section.
    e. Specification paragraph number and generic name of each item.

3. For projects where electronic submittals are required, provide corresponding electronic submittal of Sample transmittal, digital image file illustrating Sample characteristics, and identification information for record.
4. Disposition: Maintain sets of approved Samples at Project site, available for quality-control comparisons throughout the course of construction activity. Sample sets may be used to determine final acceptance of construction associated with each set.

    a. Samples that may be incorporated into the Work are indicated in individual Specification Sections. Such Samples must be in an undamaged condition at time of use.
    b. Samples not incorporated into the Work, or otherwise designated as Owner's property, are the property of Contractor.

5. Samples for Initial Selection: Submit manufacturer's color charts consisting of units or sections of units showing the full range of colors, textures, and patterns available.

    a. Number of Samples: Submit one full set(s) of available choices where color, pattern, texture, or similar characteristics are required to be selected from manufacturer's product line. Architect will return submittal with options selected.

6. Samples for Verification: Submit full-size units or Samples of size indicated, prepared from same material to be used for the Work, cured and finished in manner specified, and physically identical with material or product proposed for use, and that show full range of color and texture variations expected. Samples include, but are not limited to, the

following: partial sections of manufactured or fabricated components; small cuts or containers of materials; complete units of repetitively used materials; swatches showing color, texture, and pattern; color range sets; and components used for independent testing and inspection.

a. Number of Samples: Submit three sets of Samples. Architect will retain two Sample sets; remainder will be returned.

1) Submit a single Sample where assembly details, workmanship, fabrication techniques, connections, operation, and other similar characteristics are to be demonstrated.
2) If variation in color, pattern, texture, or other characteristic is inherent in material or product represented by a Sample, submit at least three sets of paired units that show approximate limits of variations.

E. Product Schedule: As required in individual Specification Sections, prepare a written summary indicating types of products required for the Work and their intended location. Include the following information in tabular form:

1. Type of product. Include unique identifier for each product indicated in the Contract Documents or assigned by Contractor if none is indicated.
2. Manufacturer and product name, and model number if applicable.
3. Number and name of room or space.
4. Location within room or space.
5. Submit product schedule in the following format:

a. PDF electronic file.

F. Coordination Drawing Submittals: Comply with requirements specified in Division 01 Section "Project Management and Coordination."

G. Contractor's Construction Schedule: Comply with requirements specified in Division 01 Section "Construction Progress Documentation."

H. Application for Payment and Schedule of Values: Comply with requirements specified in Division 01 Section "Payment Procedures."

I. Test and Inspection Reports and Schedule of Tests and Inspections Submittals: Comply with requirements specified in Division 01 Section "Quality Requirements."

J. Closeout Submittals and Maintenance Material Submittals: Comply with requirements specified in Division 01 Section "Closeout Procedures."

K. Maintenance Data: Comply with requirements specified in Division 01 Section "Operation and Maintenance Data."

L. Qualification Data: Prepare written information that demonstrates capabilities and experience of firm or person. Include lists of completed projects with project names and addresses, contact information of architects and owners, and other information specified.

M. Welding Certificates: Prepare written certification that welding procedures and personnel comply with requirements in the Contract Documents. Submit record of Welding Procedure Specification and Procedure Qualification Record on AWS forms. Include names of firms and personnel certified.

© THE ROBINSON GREEN BERETTA CORPORATION – 6456

N. Installer Certificates: Submit written statements on manufacturer's letterhead certifying that Installer complies with requirements in the Contract Documents and, where required, is authorized by manufacturer for this specific Project.

O. Manufacturer Certificates: Submit written statements on manufacturer's letterhead certifying that manufacturer complies with requirements in the Contract Documents. Include evidence of manufacturing experience where required.

P. Product Certificates: Submit written statements on manufacturer's letterhead certifying that product complies with requirements in the Contract Documents.

Q. Material Certificates: Submit written statements on manufacturer's letterhead certifying that material complies with requirements in the Contract Documents.

R. Material Test Reports: Submit reports written by a qualified testing agency, on testing agency's standard form, indicating and interpreting test results of material for compliance with requirements in the Contract Documents.

S. Product Test Reports: Submit written reports indicating that current product produced by manufacturer complies with requirements in the Contract Documents. Base reports on evaluation of tests performed by manufacturer and witnessed by a qualified testing agency, or on comprehensive tests performed by a qualified testing agency.

T. Research Reports: Submit written evidence, from a model code organization acceptable to authorities having jurisdiction, that product complies with building code in effect for Project. Include the following information:

1. Name of evaluation organization.
2. Date of evaluation.
3. Time period when report is in effect.
4. Product and manufacturers' names.
5. Description of product.
6. Test procedures and results.
7. Limitations of use.

U. Preconstruction Test Reports: Submit reports written by a qualified testing agency, on testing agency's standard form, indicating and interpreting results of tests performed before installation of product, for compliance with performance requirements in the Contract Documents.

V. Compatibility Test Reports: Submit reports written by a qualified testing agency, on testing agency's standard form, indicating and interpreting results of compatibility tests performed before installation of product. Include written recommendations for primers and substrate preparation needed for adhesion.

W. Field Test Reports: Submit written reports indicating and interpreting results of field tests performed either during installation of product or after product is installed in its final location, for compliance with requirements in the Contract Documents.

X. Design Data: Prepare and submit written and graphic information, including, but not limited to, performance and design criteria, list of applicable codes and regulations, and calculations. Include list of assumptions and other performance and design criteria and a summary of loads. Include load diagrams if applicable. Provide name and version of software, if any, used for calculations. Include page numbers.

2.2 DELEGATED-DESIGN SERVICES

A. Performance and Design Criteria: Where professional design services or certifications by a design professional are specifically required of Contractor by the Contract Documents, provide products and systems complying with specific performance and design criteria indicated.

1. If criteria indicated are not sufficient to perform services or certification required, submit a written request for additional information to Architect.

B. Delegated-Design Services Certification: In addition to Shop Drawings, Product Data, and other required submittals, submit digitally signed PDF electronic file and three paper copies of certificate, signed and sealed by the responsible design professional, for each product and system specifically assigned to Contractor to be designed or certified by a design professional.

1. Indicate that products and systems comply with performance and design criteria in the Contract Documents. Include list of codes, loads, and other factors used in performing these services.

PART 3 - EXECUTION

3.1 CONTRACTOR'S REVIEW

A. Action and Informational Submittals: Review each submittal and check for coordination with other Work of the Contract and for compliance with the Contract Documents. Note corrections and field dimensions. Mark with approval stamp before submitting to Architect.

B. Project Closeout and Maintenance Material Submittals: See requirements in Division 01 Section "Closeout Procedures."

C. Approval Stamp: Stamp each submittal with a uniform, approval stamp. Include Project name and location, submittal number, Specification Section title and number, name of reviewer, date of Contractor's approval, and statement certifying that submittal has been reviewed, checked, and approved for compliance with the Contract Documents.

3.2 ARCHITECT'S ACTION

A. Action Submittals: Architect will review each submittal, make marks to indicate corrections or revisions required, and return it. Architect will stamp each submittal with an action stamp and will mark stamp appropriately to indicate action.

B. Informational Submittals: Architect will review each submittal and will not return it, or will return it if it does not comply with requirements. Architect will forward each submittal to appropriate party.

C. Partial submittals prepared for a portion of the Work will be reviewed when use of partial submittals has received prior approval from Architect.

D. Incomplete submittals are unacceptable, will be considered nonresponsive, and will be returned for resubmittal without review.

E. Submittals not required by the Contract Documents may be returned by the Architect without action.

© THE ROBINSON GREEN BERETTA CORPORATION – 6456

END OF SECTION 01 33 00

© THE ROBINSON GREEN BERETTA CORPORATION – 6456

SECTION 01 40 00 - QUALITY REQUIREMENTS

PART 1 - GENERAL

1.1 RELATED DOCUMENTS

A. Drawings and general provisions of the Contract, including General and Supplementary Conditions and other Division 01 Specification Sections, apply to this Section.

1.2 SUMMARY

A. Section includes administrative and procedural requirements for quality assurance and quality control.

B. Testing and inspecting services are required to verify compliance with requirements specified or indicated. These services do not relieve Contractor of responsibility for compliance with the Contract Document requirements.

1. Specific quality-assurance and -control requirements for individual construction activities are specified in the Sections that specify those activities. Requirements in those Sections may also cover production of standard products.
2. Specified tests, inspections, and related actions do not limit Contractor's other quality-assurance and -control procedures that facilitate compliance with the Contract Document requirements.
3. Requirements for Contractor to provide quality-assurance and -control services required by Architect, Owner, Commissioning Authority and/or Construction Manager, or authorities having jurisdiction are not limited by provisions of this Section.

C. Related Requirements:

1. Division 01 Section "Allowances" for testing and inspecting allowances.
2. Divisions 02 through 32 Sections for specific test and inspection requirements.

1.3 DEFINITIONS

A. Quality-Assurance Services: Activities, actions, and procedures performed before and during execution of the Work to guard against defects and deficiencies and substantiate that proposed construction will comply with requirements.

B. Quality-Control Services: Tests, inspections, procedures, and related actions during and after execution of the Work to evaluate that actual products incorporated into the Work and completed construction comply with requirements. Services do not include contract enforcement activities performed by Architect and/or or Construction Manager.

C. Mockups: Full-size physical assemblies that are constructed on-site. Mockups are constructed to verify selections made under Sample submittals; to demonstrate aesthetic effects and, where indicated, qualities of materials and execution; to review coordination, testing, or operation; to show interface between dissimilar materials; and to demonstrate compliance with specified installation tolerances. Mockups are not Samples. Unless otherwise indicated, approved mockups establish the standard by which the Work will be judged.

© THE ROBINSON GREEN BERETTA CORPORATION – 6456

1. Integrated Exterior Mockups: Mockups of the exterior envelope erected separately from the building but on Project site, consisting of multiple products, assemblies, and subassemblies.

D. Preconstruction Testing: Tests and inspections performed specifically for Project before products and materials are incorporated into the Work, to verify performance or compliance with specified criteria.

E. Product Testing: Tests and inspections that are performed by an NRTL, an NVLAP, or a testing agency qualified to conduct product testing and acceptable to authorities having jurisdiction, to establish product performance and compliance with specified requirements.

F. Source Quality-Control Testing: Tests and inspections that are performed at the source, e.g., plant, mill, factory, or shop.

G. Field Quality-Control Testing: Tests and inspections that are performed on-site for installation of the Work and for completed Work.

H. Testing Agency: An entity engaged to perform specific tests, inspections, or both. Testing laboratory shall mean the same as testing agency.

I. Installer/Applicator/Erector: Contractor or another entity engaged by Contractor as an employee, Subcontractor, or Sub-subcontractor, to perform a particular construction operation, including installation, erection, application, and similar operations.

1. Use of trade-specific terminology in referring to a trade or entity does not require that certain construction activities be performed by accredited or unionized individuals, or that requirements specified apply exclusively to specific trade(s).

J. Experienced: When used with an entity or individual, "experienced" means having successfully completed a minimum of five previous projects similar in nature, size, and extent to this Project; being familiar with special requirements indicated; and having complied with requirements of authorities having jurisdiction.

1.4 CONFLICTING REQUIREMENTS

A. Referenced Standards: If compliance with two or more standards is specified and the standards establish different or conflicting requirements for minimum quantities or quality levels, comply with the most stringent requirement. Refer conflicting requirements that are different, but apparently equal, to Architect for a decision before proceeding.

B. Minimum Quantity or Quality Levels: The quantity or quality level shown or specified shall be the minimum provided or performed. The actual installation may comply exactly with the minimum quantity or quality specified, or it may exceed the minimum within reasonable limits. To comply with these requirements, indicated numeric values are minimum or maximum, as appropriate, for the context of requirements. Refer uncertainties to Architect for a decision before proceeding.

1.5 ACTION SUBMITTALS

A. Shop Drawings: For integrated exterior mockups, provide plans, sections, and elevations, indicating materials and size of mockup construction.

© THE ROBINSON GREEN BERETTA CORPORATION – 6456

1. Indicate manufacturer and model number of individual components.
2. Provide axonometric drawings for conditions difficult to illustrate in two dimensions.

1.6 INFORMATIONAL SUBMITTALS

A. Contractor's Quality-Control Plan: For quality-assurance and quality-control activities and responsibilities.

B. Qualification Data: For Contractor's quality-control personnel.

C. Contractor's Statement of Responsibility: When required by authorities having jurisdiction, submit copy of written statement of responsibility sent to authorities having jurisdiction before starting work on the following systems:

1. Seismic-force-resisting system, designated seismic system, or component listed in the designated seismic system quality-assurance plan prepared by Architect.
2. Main wind-force-resisting system or a wind-resisting component listed in the wind-force-resisting system quality-assurance plan prepared by Architect.

D. Testing Agency Qualifications: For testing agencies specified in "Quality Assurance" Article to demonstrate their capabilities and experience. Include proof of qualifications in the form of a recent report on the inspection of the testing agency by a recognized authority.

E. Schedule of Tests and Inspections: Prepare in tabular form and include the following:

1. Specification Section number and title.
2. Entity responsible for performing tests and inspections.
3. Description of test and inspection.
4. Identification of applicable standards.
5. Identification of test and inspection methods.
6. Number of tests and inspections required.
7. Time schedule or time span for tests and inspections.
8. Requirements for obtaining samples.
9. Unique characteristics of each quality-control service.

1.7 CONTRACTOR'S QUALITY-CONTROL PLAN

A. Quality-Control Plan, General: Submit quality-control plan within 10 days of Notice to Proceed, and not less than five days prior to preconstruction conference. Submit in format acceptable to Architect. Identify personnel, procedures, controls, instructions, tests, records, and forms to be used to carry out Contractor's quality-assurance and quality-control responsibilities. Coordinate with Contractor's construction schedule.

B. Quality-Control Personnel Qualifications: Engage qualified full-time personnel trained and experienced in managing and executing quality-assurance and quality-control procedures similar in nature and extent to those required for Project.

1. Project quality-control manager may also serve as Project superintendent for small or limited projects.
2. Project quality control manager shall not have other project responsibilities for large and/or complex projects.

© THE ROBINSON GREEN BERETTA CORPORATION – 6456

C. Submittal Procedure: Describe procedures for ensuring compliance with requirements through review and management of submittal process. Indicate qualifications of personnel responsible for submittal review.

D. Indoor Air Quality Program Plan: Submit a plan that addresses the LEED indoor air quality requirements and includes the following criteria:
   1. Overall cleanliness of the job site and frequent housekeeping of all areas to eliminate dust and other debris in cavities and other areas to be enclosed during the Work.
   2. Daily cleanup of all dust and other construction debris.
   3. Assure that all products (i.e. drywall, insulation, carpet and etc.) are not installed prior to proper weather protection, and are fully protected from any sources of moisture throughout the entire construction process including receipt of the product.
   4. Promptly and thoroughly clean spills of materials that can be absorbed into the building substrate. Clearly Document areas, of such spills in the record drawings. The Owner reserves the right to have those materials removed in the event of a potential health risk.
   5. Accelerate emissions of wet products by using high ventilation.
   6. Delay installation of adsorbent (fleecy) materials such as carpet, furniture, wall treatment, or ceiling tiles until emissions from other construction contaminants (e.g. wet product emissions) have dissipated. Otherwise, these materials will adsorb the contaminants and later release them during occupancy.
   7. Do not unnecessarily cut materials such as but not limited to lumber, wood based sheet goods, ceiling tiles, gypsum, ceramic tile, and any other materials that create dust and other fine debris once the finish process has commenced in a specific area.
   8. Provide dust control:
      a. Use dust recovery systems during sanding and other finishing processes to minimize dust.
      b. Provide positive means to prevent air-borne dust from dispersing into the atmosphere.
      c. Fully comply with all applicable sections of the latest version of the Clean Air Act as enforced by the Environmental Protection Agency, The Rhode Island Department of Environmental Management, the Rhode Island Department of Health, OSHA, and any other agencies involved in its enforcement. Additionally the Contractor shall fully comply with rules, regulations, laws, and standards governed at the state and local level that are related to the Clean Air Act and/or are otherwise extensions of the enforcement of the Clean Air Act. These acts are considered to be part of this Contract as if written in full and attached herein. The Contractor is responsible for and shall plan accordingly for any and all costs associated with the enforcement of these requirements.
   9. No smoking shall be permitted.
   10. Properly dispose of food throughout the construction process at all times. Do not allow food or beverages to accumulate on floors at any time and under no circumstances shall food and drink be permitted to be disposed of in walls and other building cavities.
   11. Protect ducts from construction dust and debris. Keep ducts clean at all times.
   12. Continue high ventilation rates for a significant period after occupancy.
   13. Provide an adequate "bake out" period for each space to be occupied. This period shall be considered and evaluated as part of the project schedule to maintain the schedule as presented in the Contractors Milestone Construction Schedule.
   14. Establish a complete physical enclosure to any construction zone and or/ activity to protect any finished work when addressing punch lists and/or other corrective work.
   15. Seal all return ducts to insure that contaminants do not enter the HVAC system.
   16. Monitor pressure relationships to insure that the containment zone is under significant negative pressure, and that the construction zone beyond the containment area is under negative pressure relative to all surrounding occupied spaces on the same and on adjacent floors.
   17. Insure that exhausted contaminants do not re-enter the building through open windows or the air intake of the HVAC system.

© THE ROBINSON GREEN BERETTA CORPORATION – 6456

E. Testing and Inspection: In quality-control plan, include a comprehensive schedule of Work requiring testing or inspection, including the following:

1. Contractor-performed tests and inspections including subcontractor-performed tests and inspections. Include required tests and inspections and Contractor-elected tests and inspections.
2. Special inspections required by authorities having jurisdiction and indicated on the "Statement of Special Inspections."
3. Owner-performed tests and inspections indicated in the Contract Documents, including tests and inspections indicated to be performed by the Commissioning Authority.

F. Continuous Inspection of Workmanship: Describe process for continuous inspection during construction to identify and correct deficiencies in workmanship in addition to testing and inspection specified. Indicate types of corrective actions to be required to bring work into compliance with standards of workmanship established by Contract requirements and approved mockups.

G. Monitoring and Documentation: Maintain testing and inspection reports including log of approved and rejected results. Include work Architect has indicated as nonconforming or defective. Indicate corrective actions taken to bring nonconforming work into compliance with requirements. Comply with requirements of authorities having jurisdiction.

1.8 REPORTS AND DOCUMENTS

A. Test and Inspection Reports: Prepare and submit certified written reports specified in other Sections. Include the following:

1. Date of issue.
2. Project title and number.
3. Name, address, and telephone number of testing agency.
4. Dates and locations of samples and tests or inspections.
5. Names of individuals making tests and inspections.
6. Description of the Work and test and inspection method.
7. Identification of product and Specification Section.
8. Complete test or inspection data.
9. Test and inspection results and an interpretation of test results.
10. Record of temperature and weather conditions at time of sample taking and testing and inspecting.
11. Comments or professional opinion on whether tested or inspected Work complies with the Contract Document requirements.
12. Name and signature of laboratory inspector.
13. Recommendations on retesting and reinspecting.

B. Manufacturer's Technical Representative's Field Reports: Prepare written information documenting manufacturer's technical representative's tests and inspections specified in other Sections. Include the following:

1. Name, address, and telephone number of technical representative making report.
2. Statement on condition of substrates and their acceptability for installation of product.
3. Statement that products at Project site comply with requirements.
4. Summary of installation procedures being followed, whether they comply with requirements and, if not, what corrective action was taken.

© THE ROBINSON GREEN BERETTA CORPORATION – 6456

5. Results of operational and other tests and a statement of whether observed performance complies with requirements.
6. Statement whether conditions, products, and installation will affect warranty.
7. Other required items indicated in individual Specification Sections.

C. Factory-Authorized Service Representative's Reports: Prepare written information documenting manufacturer's factory-authorized service representative's tests and inspections specified in other Sections. Include the following:

1. Name, address, and telephone number of factory-authorized service representative making report.
2. Statement that equipment complies with requirements.
3. Results of operational and other tests and a statement of whether observed performance complies with requirements.
4. Statement whether conditions, products, and installation will affect warranty.
5. Other required items indicated in individual Specification Sections.

D. Permits, Licenses, and Certificates: For Owner's records, submit copies of permits, licenses, certifications, inspection reports, releases, jurisdictional settlements, notices, receipts for fee payments, judgments, correspondence, records, and similar documents, established for compliance with standards and regulations bearing on performance of the Work.

1.9 QUALITY ASSURANCE

A. General: Qualifications paragraphs in this article establish the minimum qualification levels required; individual Specification Sections specify additional requirements.

B. Manufacturer Qualifications: A firm experienced in manufacturing products or systems similar to those indicated for this Project and with a record of successful in-service performance, as well as sufficient production capacity to produce required units.

C. Fabricator Qualifications: A firm experienced in producing products similar to those indicated for this Project and with a record of successful in-service performance, as well as sufficient production capacity to produce required units.

D. Installer Qualifications: A firm or individual experienced in installing, erecting, or assembling work similar in material, design, and extent to that indicated for this Project, whose work has resulted in construction with a record of successful in-service performance.

E. Professional Engineer Qualifications: A professional engineer who is legally qualified to practice in jurisdiction where Project is located and who is experienced in providing engineering services of the kind indicated. Engineering services are defined as those performed for installations of the system, assembly, or product that are similar in material, design, and extent to those indicated for this Project.

F. Specialists: Certain Specification Sections require that specific construction activities shall be performed by entities who are recognized experts in those operations. Specialists shall satisfy qualification requirements indicated and shall be engaged for the activities indicated.

1. Requirements of authorities having jurisdiction shall supersede requirements for specialists.

G. Testing Agency Qualifications: An NRTL, an NVLAP, or an independent agency with the experience and capability to conduct testing and inspecting indicated, as documented according

© THE ROBINSON GREEN BERETTA CORPORATION – 6456

to ASTM E 329; and with additional qualifications specified in individual Sections; and, where required by authorities having jurisdiction, that is acceptable to authorities.

1. NRTL: A nationally recognized testing laboratory according to 29 CFR 1910.7.
2. NVLAP: A testing agency accredited according to NIST's National Voluntary Laboratory Accreditation Program.

H. Manufacturer's Technical Representative Qualifications: An authorized representative of manufacturer who is trained and approved by manufacturer to observe and inspect installation of manufacturer's products that are similar in material, design, and extent to those indicated for this Project.

I. Factory-Authorized Service Representative Qualifications: An authorized representative of manufacturer who is trained and approved by manufacturer to inspect installation of manufacturer's products that are similar in material, design, and extent to those indicated for this Project.

J. Preconstruction Testing: Where testing agency is indicated to perform preconstruction testing for compliance with specified requirements for performance and test methods, comply with the following:

1. Contractor responsibilities include the following:

   a. Provide test specimens representative of proposed products and construction.
   b. Submit specimens in a timely manner with sufficient time for testing and analyzing results to prevent delaying the Work.
   c. Provide sizes and configurations of test assemblies, mockups, and laboratory mockups to adequately demonstrate capability of products to comply with performance requirements.
   d. Build site-assembled test assemblies and mockups using installers who will perform same tasks for Project.
   e. Build laboratory mockups at testing facility using personnel, products, and methods of construction indicated for the completed Work.
   f. When testing is complete, remove test specimens, assemblies, and mockups, and laboratory mockups; do not reuse products on Project.

2. Testing Agency Responsibilities: Submit a certified written report of each test, inspection, and similar quality-assurance service to Architect and Commissioning Authority, with copy to Contractor. Interpret tests and inspections and state in each report whether tested and inspected work complies with or deviates from the Contract Documents.

K. Mockups: Before installing portions of the Work requiring mockups, build mockups for each form of construction and finish required to comply with the following requirements, using materials indicated for the completed Work:

1. Build mockups in location and of size indicated or, if not indicated, as directed by Architect.
2. Notify Architect seven days in advance of dates and times when mockups will be constructed.
3. Employ supervisory personnel who will oversee mockup construction. Employ workers that will be employed during the construction at Project.
4. Demonstrate the proposed range of aesthetic effects and workmanship.
5. Obtain Architect's approval of mockups before starting work, fabrication, or construction.

   a. Allow seven days for initial review and each re-review of each mockup.

© THE ROBINSON GREEN BERETTA CORPORATION – 6456

6. Maintain mockups during construction in an undisturbed condition as a standard for judging the completed Work.
7. Demolish and remove mockups when directed unless otherwise indicated.

L. Integrated Exterior Mockups: Construct integrated exterior mockup according to approved Shop Drawings and/or as indicated on Drawings. Coordinate installation of exterior envelope materials and products for which mockups are required in individual Specification Sections, along with supporting materials.

1. Exterior wall assembly complete with water mitigation management components; air and vapor barrier assembly; opening returns, etc. Minimum size of 8’x6’, unless noted otherwise.

M. Laboratory Mockups: Comply with requirements of preconstruction testing and those specified in individual Specification Sections in Divisions 02 through 33.

1.10 QUALITY CONTROL

A. Owner Responsibilities: Where quality-control services are indicated as Owner's responsibility, Owner will engage a qualified testing agency to perform these services.

1. Owner will furnish Contractor with names, addresses, and telephone numbers of testing agencies engaged and a description of types of testing and inspecting they are engaged to perform.
2. Payment for these services will be made from testing and inspecting allowances, as authorized by Change Orders.
3. Costs for retesting and reinspecting construction that replaces or is necessitated by work that failed to comply with the Contract Documents will be charged to Contractor, and the Contract Sum will be adjusted by Change Order.

B. Contractor Responsibilities: Tests and inspections not explicitly assigned to Owner are Contractor's responsibility. Perform additional quality-control activities required to verify that the Work complies with requirements, whether specified or not.

1. Unless otherwise indicated, provide quality-control services specified and those required by authorities having jurisdiction. Perform quality-control services required of Contractor by authorities having jurisdiction, whether specified or not.
2. Where services are indicated as Contractor's responsibility, engage a qualified testing agency to perform these quality-control services.

   a. Contractor shall not employ same entity engaged by Owner, unless agreed to in writing by Owner.

3. Notify testing agencies at least 24 hours in advance of time when Work that requires testing or inspecting will be performed.
4. Where quality-control services are indicated as Contractor's responsibility, submit a certified written report, in duplicate, of each quality-control service.
5. Testing and inspecting requested by Contractor and not required by the Contract Documents are Contractor's responsibility.
6. Submit additional copies of each written report directly to authorities having jurisdiction, when they so direct.

C. Manufacturer's Field Services: Where indicated, engage a factory-authorized service representative to inspect field-assembled components and equipment installation, including

© THE ROBINSON GREEN BERETTA CORPORATION – 6456

service connections. Report results in writing as specified in Division 01 Section "Submittal Procedures."

D. Manufacturer's Technical Services: Where indicated, engage a manufacturer's technical representative to observe and inspect the Work. Manufacturer's technical representative's services include participation in preinstallation conferences, examination of substrates and conditions, verification of materials, observation of Installer activities, inspection of completed portions of the Work, and submittal of written reports.

E. Retesting/Reinspecting: Regardless of whether original tests or inspections were Contractor's responsibility, provide quality-control services, including retesting and reinspecting, for construction that replaced Work that failed to comply with the Contract Documents.

F. Testing Agency Responsibilities: Cooperate with Architect and Contractor in performance of duties. Provide qualified personnel to perform required tests and inspections.

1. Notify Architect and Contractor promptly of irregularities or deficiencies observed in the Work during performance of its services.
2. Determine the location from which test samples will be taken and in which in-situ tests are conducted.
3. Conduct and interpret tests and inspections and state in each report whether tested and inspected work complies with or deviates from requirements.
4. Submit a certified written report, in duplicate, of each test, inspection, and similar quality-control service through Contractor.
5. Do not release, revoke, alter, or increase the Contract Document requirements or approve or accept any portion of the Work.
6. Do not perform any duties of Contractor.

G. Associated Services: Cooperate with agencies performing required tests, inspections, and similar quality-control services, and provide reasonable auxiliary services as requested. Notify agency sufficiently in advance of operations to permit assignment of personnel. Provide the following:

1. Access to the Work.
2. Incidental labor and facilities necessary to facilitate tests and inspections.
3. Adequate quantities of representative samples of materials that require testing and inspecting. Assist agency in obtaining samples.
4. Facilities for storage and field curing of test samples.
5. Delivery of samples to testing agencies.
6. Preliminary design mix proposed for use for material mixes that require control by testing agency.
7. Security and protection for samples and for testing and inspecting equipment at Project site.

H. Coordination: Coordinate sequence of activities to accommodate required quality-assurance and -control services with a minimum of delay and to avoid necessity of removing and replacing construction to accommodate testing and inspecting.

1. Schedule times for tests, inspections, obtaining samples, and similar activities.

I. Schedule of Tests and Inspections: Prepare a schedule of tests, inspections, and similar quality-control services required by the Contract Documents as a component of Contractor's quality-control plan. Coordinate and submit concurrently with Contractor's construction schedule. Update as the Work progresses.

© THE ROBINSON GREEN BERETTA CORPORATION – 6456

1. Distribution: Distribute schedule to Owner, Architect, testing agencies, and each party involved in performance of portions of the Work where tests and inspections are required.

1.11 SPECIAL INSPECTIONS

A. Special Inspections: Owner will engage a qualified Coordinator of Special Inspection to conduct State Building Code special inspections and/testing program required by authorities having jurisdiction as the responsibility of Owner, as indicated in Statement of Special Inspections.

B. Special Inspections and/or Testing: Conducted by a qualified testing agency and/or special inspector as required by authorities having jurisdiction, as indicated in individual Specification Sections and in Statement of Special Inspections attached to this Section, and as follows:

1. Verifying that manufacturer maintains detailed fabrication and quality-control procedures and reviews the completeness and adequacy of those procedures to perform the Work.
2. Notifying Architect, Commissioning Authority, Construction Manager, and Contractor promptly of irregularities and deficiencies observed in the Work during performance of its services.
3. Submitting a certified written report of each test, inspection, and similar quality-control service to Architect and Commissioning Authority, and Construction Manager, with copy to Contractor and to authorities having jurisdiction.
4. Submitting a final report of special tests and inspections at Substantial Completion; this includes a list of unresolved deficiencies.
5. Interpreting tests and inspections and stating in each report whether tested and inspected work complies with or deviates from the Contract Documents.
6. Retesting and reinspecting corrected work.

PART 2 - PRODUCTS (Not Used)

PART 3 - EXECUTION

3.1 ACCEPTABLE TESTING AGENCIES

A. Firms acceptable to perform designated tests and inspections are:

1. Geisser Engineering Corporation, 227 Wampanoag Trail, Riverside, RI 02915
2. Briggs Engineering & Testing, 100 Weymouth Street, Rockland, MA 02370
3. Theilsch Engineering, 195 Frances Ave, Cranston, RI 02910
4. Other firms as approved by architect

3.2 TEST AND INSPECTION LOG

A. Test and Inspection Log: Prepare a record of tests and inspections. Include the following:

1. Date test or inspection was conducted.
2. Description of the Work tested or inspected.
3. Date test or inspection results were transmitted to Architect.
4. Identification of testing agency or special inspector conducting test or inspection.

© THE ROBINSON GREEN BERETTA CORPORATION – 6456

B. Maintain log at Project site. Post changes and revisions as they occur. Provide access to test and inspection log for Architect's, Commissioning Authority's, and Construction Manager's reference during normal working hours.

3.3 REPAIR AND PROTECTION

A. General: On completion of testing, inspecting, sample taking, and similar services, repair damaged construction and restore substrates and finishes.

1. Provide materials and comply with installation requirements specified in other Specification Sections or matching existing substrates and finishes. Restore patched areas and extend restoration into adjoining areas with durable seams that are as invisible as possible. Comply with the Contract Document requirements for cutting and patching in Division 01 Section "Execution."

B. Protect construction exposed by or for quality-control service activities.

C. Repair and protection are Contractor's responsibility, regardless of the assignment of responsibility for quality-control services.

END OF SECTION 01 40 00

© THE ROBINSON GREEN BERETTA CORPORATION – 6456

SECTION 01 42 00 - REFERENCES

PART 1 - GENERAL

1.1 RELATED DOCUMENTS

A. Drawings and general provisions of the Contract, including General and Supplementary Conditions and other Division 01 Specification Sections, apply to this Section.

1.2 DEFINITIONS

A. General: Basic Contract definitions are included in the Conditions of the Contract.

B. "Approved": When used to convey Architect's action on Contractor's submittals, applications, and requests, "approved" is limited to Architect's duties and responsibilities as stated in the Conditions of the Contract.

C. "Directed": A command or instruction by Architect. Other terms including "requested," "authorized," "selected," "required," and "permitted" have the same meaning as "directed."

D. "Indicated": Requirements expressed by graphic representations or in written form on Drawings, in Specifications, and in other Contract Documents. Other terms including "shown," "noted," "scheduled," and "specified" have the same meaning as "indicated."

E. "Regulations": Laws, ordinances, statutes, and lawful orders issued by authorities having jurisdiction, and rules, conventions, and agreements within the construction industry that control performance of the Work.

F. "Furnish": Supply and deliver to Project site, ready for unloading, unpacking, assembly, installation, and similar operations.

G. "Install": Operations at Project site including unloading, temporarily storing, unpacking, assembling, erecting, placing, anchoring, applying, working to dimension, finishing, curing, protecting, cleaning, and similar operations.

H. "Provide": Furnish and install, complete and ready for the intended use.

I. "Project Site": Space available for performing construction activities. The extent of Project site is shown on Drawings and may or may not be identical with the description of the land on which Project is to be built.

1.3 INDUSTRY STANDARDS

A. Applicability of Standards: Unless the Contract Documents include more stringent requirements, applicable construction industry standards have the same force and effect as if bound or copied directly into the Contract Documents to the extent referenced. Such standards are made a part of the Contract Documents by reference.

B. Publication Dates: Comply with standards in effect as of date of the Contract Documents unless otherwise indicated.

© THE ROBINSON GREEN BERETTA CORPORATION – 6456

C. Copies of Standards: Each entity engaged in construction on Project should be familiar with industry standards applicable to its construction activity. Copies of applicable standards are not bound with the Contract Documents.

1. Where copies of standards are needed to perform a required construction activity, obtain copies directly from publication source.

1.4 ABBREVIATIONS AND ACRONYMS

A. Industry Organizations: Where abbreviations and acronyms are used in Specifications or other Contract Documents, they shall mean the recognized name of the entities indicated in Thomson Gale's "Encyclopedia of Associations" or in Columbia Books' "National Trade & Professional Associations of the U.S."

B. Industry Organizations: Where abbreviations and acronyms are used in Specifications or other Contract Documents, they shall mean the recognized name of the entities in the following list. Names, telephone numbers, and Web sites are subject to change and are believed to be accurate and up-to-date as of the date of the Contract Documents.

C. Code Agencies: Where abbreviations and acronyms are used in Specifications or other Contract Documents, they shall mean the recognized name of the entities in the following list. Names, telephone numbers, and Web sites are subject to change and are believed to be accurate and up-to-date as of the date of the Contract Documents.

DIN	www.din.de	
IAPMO	International Association of Plumbing and Mechanical Officials	(909) 472-4100
ICC	International Code Council www.iccsafe.org	(888) 422-7233
ICC-ES	ICC Evaluation Service, Inc. www.icc-es.org	(800) 423-6587 (562) 699-0543

D. Federal Government Agencies: Where abbreviations and acronyms are used in Specifications or other Contract Documents, they shall mean the recognized name of the entities in the following list. Names, telephone numbers, and Web sites are subject to change and are believed to be accurate and up-to-date as of the date of the Contract Documents.

COE	Army Corps of Engineers www.usace.army.mil	
CPSC	Consumer Product Safety Commission www.cpsc.gov	(800) 638-2772 (301) 504-7923
DOC	Department of Commerce www.commerce.gov	(202) 482-2000
DOD	Department of Defense http://dodssp.daps.dla.mil	(215) 697-6257
DOE	Department of Energy	(202) 586-9220

	www.energy.gov	
EPA	Environmental Protection Agency	(202) 272-0167
FAA	Federal Aviation Administration www.faa.gov	(866) 835-5322
FCC	Federal Communications Commission www.fcc.gov	(888) 225-5322
FDA	www.fda.gov	
GSA	General Services Administration	(800) 488-3111
HUD	Department of Housing and Urban Development www.hud.gov	(202) 708-1112
LBL	Lawrence Berkeley National Laboratory www.lbl.gov	(510) 486-4000
NCHRP	(See TRB)	
NIST	National Institute of Standards and Technology	(301) 975-6478
OSHA	Occupational Safety & Health Administration www.osha.gov	(800) 321-6742 (202) 693-1999
PBS	Public Buildings Service (See GSA)	
PHS	http://www.hhs.gov/ophs/	
RUS	Rural Utilities Service	(202) 720-9540
SD	State Department www.state.gov	(202) 647-4000
TRB	Transportation Research Board http://gulliver.trb.org	(202) 334-2934
USDA	www.usda.gov	
USP	U.S. Pharmacopeia	(800) 227-8772
USPS	Postal Service www.usps.com	(202) 268-2000

E. Standards and Regulations: Where abbreviations and acronyms are used in Specifications or other Contract Documents, they shall mean the recognized name of the standards and regulations in the following list. Names, telephone numbers, and Web sites are subject to change and are believed to be accurate and up-to-date as of the date of the Contract Documents.

ADAAG	Americans with Disabilities Act (ADA) Architectural Barriers Act (ABA) Accessibility Guidelines for Buildings and Facilities	(202) 272-0080

	Available from U.S. Access Board www.access-board.gov	
CFR	Code of Federal Regulations Available from Government Printing Office www.gpoaccess.gov/cfr/index.html	(866) 512-1800 (202) 512-1800
DOD	Department of Defense Military Specifications and Standards Available from Department of Defense Single Stock Point http://dodssp.daps.dla.mil	(215) 697-2664
DSCC	Defense Supply Center Columbus (See FS)	
FED-STD	Federal Standard (See FS)	
FS	Available from Department of Defense Single Stock Point http://dodssp.daps.dla.mil/ www.dsp.dla.mil	
	Available from General Services Administration	(202) 619-8925
	Available from National Institute of Building Sciences www.wbdg.org/ccb	(202) 289-7800
FTMS	Federal Test Method Standard (See FS)	
MIL		
MIL-STD	(See MILSPEC)	
MILSPEC	Available from Department of Defense Single Stock Point http://dodssp.daps.dla.mil	
UFAS	Available from Access Board www.access-board.gov	(202) 272-0080

F. State Government Agencies: Where abbreviations and acronyms are used in Specifications or other Contract Documents, they shall mean the recognized name of the entities in the following list. Names, telephone numbers, and Web sites are subject to change and are believed to be accurate and up-to-date as of the date of the Contract Documents.

CBHF	www.dca.ca.gov/bhfti	(916) 574-2041
CCR	California Code of Regulations	(916) 323-6815
CDHS	California Department of Health Services www.dhcs.ca.gov	(916) 445-4171
CDPH	California Department of Public Health, Indoor Air Quality Section www.cal-iaq.org	
CPUC	www.cpuc.ca.gov	
TFS	Texas Forest Service	

http://txforestservice.tamu.edu

PART 2 - PRODUCTS (Not Used)

PART 3 - EXECUTION (Not Used)

END OF SECTION 01 42 00

© THE ROBINSON GREEN BERETTA CORPORATION – 6456

SECTION 01 50 00 - TEMPORARY FACILITIES AND CONTROLS

PART 1 - GENERAL

1.1 RELATED DOCUMENTS

A. Drawings and general provisions of the Contract, including General and Supplementary Conditions and other Division 01 Specification Sections, apply to this Section.

1.2 SUMMARY

A. Section includes requirements for temporary utilities, support facilities, and security and protection facilities.

B. Related Requirements:

1. Division 01 Section "Summary" for work restrictions and limitations on utility interruptions.

1.3 USE CHARGES

A. General: Installation and removal of and use charges for temporary facilities shall be included in the Contract Sum unless otherwise indicated. Allow other entities to use temporary services and facilities without cost, including, but not limited to, Owner's agent/representative, Architect, testing agencies, and authorities having jurisdiction.

B. Sewer Service: Pay sewer-service use charges for sewer usage by all entities for construction operations.

C. Water Service: Pay water-service use charges for water used by all entities for construction operations.

D. Electric Power Service: Pay electric-power-service use charges for electricity used by all entities for construction operations.

1.4 INFORMATIONAL SUBMITTALS

A. Site Plan: Show temporary facilities, utility hookups, staging areas, and parking areas for construction personnel.

B. Erosion- and Sedimentation-Control Plan: Show compliance with requirements of EPA Construction General Permit or authorities having jurisdiction, whichever is more stringent.

C. Fire-Safety Program: Show compliance with requirements of NFPA 241 and authorities having jurisdiction. Indicate Contractor personnel responsible for management of fire-prevention program.

D. Moisture-Protection Plan: Describe procedures and controls for protecting materials and construction from water absorption and damage.

© THE ROBINSON GREEN BERETTA CORPORATION – 6456

1. Describe delivery, handling, and storage provisions for materials subject to water absorption or water damage.
2. Indicate procedures for discarding water-damaged materials, protocols for mitigating water intrusion into completed Work, and replacing water-damaged Work.
3. Indicate sequencing of work that requires water, such as sprayed fire-resistive materials, plastering, and terrazzo grinding, and describe plans for dealing with water from these operations. Show procedures for verifying that wet construction has dried sufficiently to permit installation of finish materials.

E. Dust- and HVAC-Control Plan: Submit coordination drawing and narrative that indicates the dust- and HVAC-control measures proposed for use, proposed locations, and proposed time frame for their operation. Identify further options if proposed measures are later determined to be inadequate. Include the following:

1. Locations of dust-control partitions at each phase of work.
2. HVAC system isolation schematic drawing.
3. Location of proposed air-filtration system discharge.
4. Waste handling procedures.
5. Other dust-control measures.

1.5 QUALITY ASSURANCE

A. Electric Service: Comply with NECA, NEMA, and UL standards and regulations for temporary electric service. Install service to comply with NFPA 70.

B. Tests and Inspections: Arrange for authorities having jurisdiction to test and inspect each temporary utility before use. Obtain required certifications and permits.

C. Accessible Temporary Egress: Comply with applicable provisions in the U.S. Architectural & Transportation Barriers Compliance Board's ADA-ABA Accessibility Guidelines and ICC/ANSI A117.1].

1.6 PROJECT CONDITIONS

A. Temporary Use of Permanent Facilities: Engage Installer of each permanent service to assume responsibility for operation, maintenance, and protection of each permanent service during its use as a construction facility before Owner's acceptance, regardless of previously assigned responsibilities.

PART 2 - PRODUCTS

2.1 MATERIALS

A. Chain-Link Fencing: Minimum 2-inch, 0.148-inch thick, galvanized-steel, chain-link fabric fencing; minimum 6 feet high with galvanized-steel pipe posts; minimum 2-3/8-inch- (60-mm-) OD line posts and 2-7/8-inch- (73-mm-) OD corner and pull posts, with 1-5/8-inch- (42-mm-) OD top rails.

B. Portable Chain-Link Fencing: Minimum 2-inch, 0.148-inch thick, galvanized-steel, chain-link fabric fencing; minimum 6 feet high with galvanized-steel pipe posts; minimum 2-3/8-inch OD

© THE ROBINSON GREEN BERETTA CORPORATION – 6456

line posts and 2-7/8-inch OD corner and pull posts, with 1-5/8-inch- OD top and bottom rails. Provide **concrete or galvanized-steel** based for supporting posts.

C. Polyethylene Sheet: Reinforced, fire-resistive sheet, 10-mil minimum thickness, with flame-spread rating of 15 or less per ASTM E 84 and passing NFPA 701 Test Method 2.

D. Dust-Control Adhesive-Surface Walk-off Mats: Provide mats minimum 36 by 60 inches.

E. Insulation: Unfaced mineral-fiber blanket, manufactured from glass, slag wool, or rock wool; with maximum flame-spread and smoke-developed indexes of 25 and 50, respectively.

2.2 TEMPORARY FACILITIES

A. Field Offices, General: Prefabricated or mobile units with serviceable finishes, temperature controls, and foundations adequate for normal loading; of sufficient size to accommodate needs of Owner, Architect and construction personnel office activities and to accommodate Project meetings specified in other Division 01 Sections. Keep office clean and orderly. Furnish and equip offices as follows:

1. Furniture required for Project-site documents including file cabinets, plan tables, plan racks, and bookcases.
2. Conference room of sufficient size to accommodate meetings of 12 individuals. Provide electrical power service and 120-V ac duplex receptacles, with no fewer than one receptacle on each wall. Furnish room with conference table, chairs, and 4-foot- square tack and marker boards.
3. Drinking water and private toilet.
4. Heating and cooling equipment necessary to maintain a uniform indoor temperature of 68 to 72 deg F.
5. Lighting fixtures capable of maintaining average illumination of 20 fc at desk height.

B. Storage and Fabrication Sheds: Provide sheds sized, furnished, and equipped to accommodate materials and equipment for construction operations.

1. Store combustible materials apart from building.

2.3 EQUIPMENT

A. Fire Extinguishers: Portable, UL rated; with class and extinguishing agent as required by locations and classes of fire exposures.

B. HVAC Equipment: Unless Owner authorizes use of permanent HVAC system, provide vented, self-contained, liquid-propane-gas or fuel-oil heaters with individual space thermostatic control.

1. Use of gasoline-burning space heaters, open-flame heaters, or salamander-type heating units is prohibited.
2. Heating Units: Listed and labeled for type of fuel being consumed, by a qualified testing agency acceptable to authorities having jurisdiction, and marked for intended location and application.
3. Permanent HVAC System: If Owner authorizes use of permanent HVAC system for temporary use during construction, provide filter with MERV of 8 at each return-air grille in system and remove at end of construction and clean HVAC system as required in Division 01 Section "Closeout Procedures."

© THE ROBINSON GREEN BERETTA CORPORATION – 6456

C. Air-Filtration Units: Primary and secondary HEPA-filter-equipped portable units with four-stage filtration. Provide single switch for emergency shutoff. Configure to run continuously.

PART 3 - EXECUTION

3.1 INSTALLATION, GENERAL

A. Locate facilities where they will serve Project adequately and result in minimum interference with performance of the Work. Relocate and modify facilities as required by progress of the Work.

1. Locate facilities to limit site disturbance as specified in Division 01 Section "Summary."

B. Provide each facility ready for use when needed to avoid delay. Do not remove until facilities are no longer needed or are replaced by authorized use of completed permanent facilities.

3.2 TEMPORARY UTILITY INSTALLATION

A. General: Install temporary service or connect to existing service.

1. Arrange with utility company, Owner, and existing users for time when service can be interrupted, if necessary, to make connections for temporary services.

B. Sewers and Drainage: Provide temporary utilities to remove effluent lawfully.

1. Connect temporary sewers to municipal system as directed by authorities having jurisdiction.

C. Water Service: Install water service and distribution piping in sizes and pressures adequate for construction.

D. Sanitary Facilities: Provide temporary toilets, wash facilities, and drinking water for use of construction personnel. Comply with requirements of authorities having jurisdiction for type, number, location, operation, and maintenance of fixtures and facilities.

E. Heating and Cooling: Provide temporary heating and cooling required by construction activities for curing or drying of completed installations or for protecting installed construction from adverse effects of low temperatures or high humidity. Select equipment that will not have a harmful effect on completed installations or elements being installed.

F. Isolation of Work Areas in Occupied Facilities: Prevent dust, fumes, and odors from entering occupied areas.

1. Prior to commencing work, isolate the HVAC system in area where work is to be performed according to coordination drawings.

a. Disconnect supply and return ductwork in work area from HVAC systems servicing occupied areas.
b. Maintain negative air pressure within work area using HEPA-equipped air-filtration units, starting with commencement of temporary partition construction, and continuing until removal of temporary partitions is complete.

© THE ROBINSON GREEN BERETTA CORPORATION – 6456

2. Maintain dust partitions during the Work. Use vacuum collection attachments on dust-producing equipment. Isolate limited work within occupied areas using portable dust-containment devices.
3. Perform daily construction cleanup and final cleanup using approved, HEPA-filter-equipped vacuum equipment.

G. Ventilation and Humidity Control: Provide temporary ventilation required by construction activities for curing or drying of completed installations or for protecting installed construction from adverse effects of high humidity. Select equipment that will not have a harmful effect on completed installations or elements being installed. Coordinate ventilation requirements to produce ambient condition required and minimize energy consumption.

1. Provide dehumidification systems when required to reduce substrate moisture levels to level required to allow installation or application of finishes.

H. Electric Power Service: Coordinate with local electrical power company for electric power service. Maintain equipment in a condition acceptable to local power company. Pay all power costs.

I. Electric Power Service: Provide electric power service and distribution system of sufficient size, capacity, and power characteristics required for construction operations.

1. Install electric power service overhead or underground unless otherwise indicated.
2. Connect temporary service to the local power company's power source, as directed by the local power company.

J. Lighting: Provide temporary lighting with local switching that provides adequate illumination for construction operations, observations, inspections, and traffic conditions.

1. Install and operate temporary lighting that fulfills security and protection requirements without operating entire system.
2. Install lighting for Project identification sign.

K. Telephone Service: Provide temporary telephone service in common-use facilities for use by all construction personnel. Install one telephone line(s) for each field office.

1. Provide additional telephone lines for the following:

   a. Provide a dedicated telephone line for each facsimile machine in each field office.

2. At each telephone, post a list of important telephone numbers.

   a. Police and fire departments.
   b. Ambulance service.
   c. Contractor's home office.
   d. Contractor's emergency after-hours telephone number.
   e. Architect's office.
   f. Engineers' offices.
   g. Owner's office.
   h. Principal subcontractors' field and home offices.

3. Provide superintendent with cellular telephone or portable two-way radio for use when away from field office.

© THE ROBINSON GREEN BERETTA CORPORATION – 6456

L. Electronic Communication Service: Provide a desktop computer in the primary field office adequate for use by Architect and Owner to access Project electronic documents and maintain electronic communications. Equip computer with not less than the following minimum requirements:

1. Processor: Intel Pentium D or Intel CoreDuo, 3.0 GHz processing speed.
2. Memory: 4 gigabyte.
3. Disk Storage: 500 gigabyte hard-disk drive and combination DVD-RW/CD-RW drive.
4. Display: 22-inch LCD monitor with 256-Mb dedicated video RAM.
5. Full-size keyboard and mouse.
6. Network Connectivity: 10/100BaseT Ethernet.
7. Operating System: Current Microsoft Windows XP Professional or Microsoft Windows Vista Business.
8. Productivity Software:

   a. Microsoft Office Professional, XP or higher, including Word, Excel, and Outlook.
   b. Adobe Reader 9.0 or higher.
   c. WinZip 10.0 or higher.

9. Printer: "All-in-one" unit equipped with printer server, combining color printing, photocopying, scanning, and faxing, or separate units for each of these three functions.
10. Internet Service: Broadband modem, router and ISP, equipped with hardware firewall, providing minimum 384 Kbps upload and 1 Mbps download speeds at each computer.
11. Internet Security: Integrated software, providing software firewall, virus, spyware, phishing, and spam protection in a combined application.
12. Backup: External hard drive, minimum 40 gigabyte, with automated backup software providing daily backups.

3.3 SUPPORT FACILITIES INSTALLATION

A. General: Comply with the following:

1. Provide construction for temporary offices, shops, and sheds located within construction area or within 30 feet of building lines that is noncombustible according to ASTM E 136. Comply with NFPA 241.
2. Maintain support facilities until Architect schedules Substantial Completion inspection. Remove before Substantial Completion. Personnel remaining after Substantial Completion will be permitted to use permanent facilities, under conditions acceptable to Owner.

B. Temporary Roads and Paved Areas: Construct and maintain temporary roads and paved areas adequate for construction operations. Locate temporary roads and paved areas as indicated and/or within construction limits indicated on Drawings.

1. Provide dust-control treatment that is nonpolluting and nontracking. Reapply treatment as required to minimize dust.

C. Temporary Use of Permanent Roads and Paved Areas: Locate temporary roads and paved areas in same location as permanent roads and paved areas. Construct and maintain temporary roads and paved areas adequate for construction operations. Extend temporary roads and paved areas, within construction limits indicated, as necessary for construction operations.

© THE ROBINSON GREEN BERETTA CORPORATION – 6456

1. Coordinate elevations of temporary roads and paved areas with permanent roads and paved areas.
2. Prepare subgrade and install subbase and base for temporary roads and paved areas according to Division 31 Section "Earth Moving."
3. Recondition base after temporary use, including removing contaminated material, regrading, proofrolling, compacting, and testing.
4. Delay installation of final course of permanent hot-mix asphalt pavement until immediately before Substantial Completion. Repair hot-mix asphalt base-course pavement before installation of final course according to Division 32 Section "Asphalt Paving."

D. Traffic Controls: Comply with requirements of authorities having jurisdiction.

1. Protect existing site improvements to remain including curbs, pavement, and utilities.
2. Maintain access for fire-fighting equipment and access to fire hydrants.

E. Parking: Provide temporary parking areas for construction personnel. Parking in the adjacent Park & Ride is not permitted.

F. Dewatering Facilities and Drains: Comply with requirements of authorities having jurisdiction. Maintain Project site, excavations, and construction free of water.

1. Dispose of rainwater in a lawful manner that will not result in flooding Project or adjoining properties or endanger permanent Work or temporary facilities.
2. Remove snow and ice as required to minimize accumulations.

G. Project Signs: Provide Project signs as indicated. Unauthorized signs are not permitted.

1. Identification Signs: Provide Project identification signs as indicated on Drawings.
2. Temporary Signs: Provide other signs as indicated and as required to inform public and individuals seeking entrance to Project.

   a. Provide temporary, directional signs for construction personnel and visitors.

3. Maintain and touchup signs so they are legible at all times.

H. Waste Disposal Facilities: Comply with requirements specified in Division 01 Section "Construction Waste Management and Disposal."

I. Waste Disposal Facilities: Provide waste-collection containers in sizes adequate to handle waste from construction operations. Comply with requirements of authorities having jurisdiction. Comply with progress cleaning requirements in Division 01 Section "Execution."

J. Lifts and Hoists: Provide facilities necessary for hoisting materials and personnel.

1. Truck cranes and similar devices used for hoisting materials are considered "tools and equipment" and not temporary facilities.

K. Temporary Stairs: Until permanent stairs are available, provide temporary stairs where ladders are not adequate.

© THE ROBINSON GREEN BERETTA CORPORATION – 6456

3.4 SECURITY AND PROTECTION FACILITIES INSTALLATION

A. Protection of Existing Facilities: Protect existing vegetation, equipment, structures, utilities, and other improvements at Project site and on adjacent properties, except those indicated to be removed or altered. Repair damage to existing facilities.

B. Environmental Protection: Provide protection, operate temporary facilities, and conduct construction as required to comply with environmental regulations and that minimize possible air, waterway, and subsoil contamination or pollution or other undesirable effects.

1. Comply with work restrictions specified in Division 01 Section "Summary."

C. Temporary Erosion and Sedimentation Control: Comply with requirements of 2003 EPA Construction General Permit or authorities having jurisdiction, whichever is more stringent and requirements specified in Division 31 Section "Site Clearing."

D. Temporary Erosion and Sedimentation Control: Provide measures to prevent soil erosion and discharge of soil-bearing water runoff and airborne dust to undisturbed areas and to adjacent properties and walkways, according to erosion- and sedimentation-control Drawings requirements of 2003 EPA Construction General Permit or authorities having jurisdiction, whichever is more stringent.

1. Verify that flows of water redirected from construction areas or generated by construction activity do not enter or cross tree- or plant- protection zones.
2. Inspect, repair, and maintain erosion- and sedimentation-control measures during construction until permanent vegetation has been established.
3. Clean, repair, and restore adjoining properties and roads affected by erosion and sedimentation from Project site during the course of Project.
4. Remove erosion and sedimentation controls and restore and stabilize areas disturbed during removal.

E. Stormwater Control: Comply with requirements of authorities having jurisdiction. Provide barriers in and around excavations and subgrade construction to prevent flooding by runoff of stormwater from heavy rains.

F. Tree and Plant Protection: Comply with requirements specified in Division 01 Section "Temporary Tree and Plant Protection."

G. Tree and Plant Protection: Install temporary fencing located as indicated or outside the drip line of trees to protect vegetation from damage from construction operations. Protect tree root systems from damage, flooding, and erosion.

H. Pest Control: Engage pest-control service to recommend practices to minimize attraction and harboring of rodents, roaches, and other pests and to perform extermination and control procedures at regular intervals so Project will be free of pests and their residues at Substantial Completion. Perform control operations lawfully, using environmentally safe materials.

I. Site Enclosure Fence: Before construction operations begin and prior to commencing earthwork, furnish and install site enclosure fence in a manner that will prevent people and animals from easily entering site except by entrance gates.

1. Extent of Fence: As required to enclose entire Project site or portion determined sufficient to accommodate construction operations and as indicated on Drawings.
2. Maintain security by limiting number of keys and restricting distribution to authorized personnel. Furnish one set of keys to Owner when required by Owner.

© THE ROBINSON GREEN BERETTA CORPORATION – 6456

J. Security Enclosure and Lockup: Install temporary enclosure around partially completed areas of construction. Provide lockable entrances to prevent unauthorized entrance, vandalism, theft, and similar violations of security. Lock entrances at end of each work day.

K. Barricades, Warning Signs, and Lights: Comply with requirements of authorities having jurisdiction for erecting structurally adequate barricades, including warning signs and lighting.

L. Temporary Egress: Maintain temporary egress from existing occupied facilities as indicated and as required by authorities having jurisdiction.

M. Covered Walkway: Erect protective, covered walkway for passage of individuals through or adjacent to Project site. Coordinate with entrance gates, other facilities, and obstructions. Comply with regulations of authorities having jurisdiction and requirements indicated on Drawings.

1. Construct covered walkways using scaffold or shoring framing.
2. Provide overhead decking, protective enclosure walls, handrails, barricades, warning signs, exit signs, lights, safe and well-drained walkways, and similar provisions for protection and safe passage.
3. Paint and maintain appearance of walkway for duration of the Work.

N. Temporary Enclosures: Provide temporary enclosures for protection of construction, in progress and completed, from exposure, foul weather, other construction operations, and similar activities. Provide temporary weathertight enclosure for building exterior.

1. Where heating or cooling is needed and permanent enclosure is incomplete, insulate temporary enclosures.

O. Temporary Partitions: Provide floor-to-ceiling dustproof partitions to limit dust and dirt migration and to separate areas occupied by Owner and/or tenants from fumes and noise.

1. Construct dustproof partitions with gypsum wallboard with joints taped on occupied side, and fire-retardant-treated plywood on construction operations side.
2. Construct dustproof partitions with two layers of 6-mil polyethylene sheet on each side. Cover floor with two layers of 6-mil polyethylene sheet, extending sheets 18 inches up the sidewalls. Overlap and tape full length of joints. Cover floor with fire-retardant-treated plywood.

   a. Construct vestibule and airlock at each entrance through temporary partition with not less than 48 inches between doors. Maintain water-dampened foot mats in vestibule.

3. Where fire-resistance-rated temporary partitions are indicated or are required by authorities having jurisdiction, construct partitions according to the rated assemblies.
4. Insulate partitions to control noise transmission to occupied areas.
5. Seal joints and perimeter. Equip partitions with gasketed dustproof doors and security locks where openings are required.
6. Protect air-handling equipment.
7. Provide walk-off mats at each entrance through temporary partition.

P. Temporary Fire Protection: Install and maintain temporary fire-protection facilities of types needed to protect against reasonably predictable and controllable fire losses. Comply with NFPA 241; manage fire-prevention program.

1. Prohibit smoking in construction areas.

© THE ROBINSON GREEN BERETTA CORPORATION – 6456

2. Supervise welding operations, combustion-type temporary heating units, and similar sources of fire ignition according to requirements of authorities having jurisdiction.
3. Develop and supervise an overall fire-prevention and -protection program for personnel at Project site. Review needs with local fire department and establish procedures to be followed. Instruct personnel in methods and procedures. Post warnings and information.

3.5 MOISTURE AND MOLD CONTROL

A. Contractor's Moisture-Protection Plan: Avoid trapping water in finished work. Document visible signs of mold that may appear during construction.

B. Exposed Construction Phase: Before installation of weather barriers, when materials are subject to wetting and exposure and to airborne mold spores, protect as follows:

1. Protect porous materials from water damage.
2. Protect stored and installed material from flowing or standing water.
3. Keep porous and organic materials from coming into prolonged contact with concrete.
4. Remove standing water from decks.
5. Keep deck openings covered or dammed.

C. Partially Enclosed Construction Phase: After installation of weather barriers but before full enclosure and conditioning of building, when installed materials are still subject to infiltration of moisture and ambient mold spores, protect as follows:

1. Do not load or install drywall or other porous materials or components, or items with high organic content, into partially enclosed building.
2. Keep interior spaces reasonably clean and protected from water damage.
3. Periodically collect and remove waste containing cellulose or other organic matter.
4. Discard or replace water-damaged material.
5. Do not install material that is wet.
6. Discard, replace, or clean stored or installed material that begins to grow mold.
7. Perform work in a sequence that allows any wet materials adequate time to dry before enclosing the material in drywall or other interior finishes.

D. Controlled Construction Phase of Construction: After completing and sealing of the building enclosure but prior to the full operation of permanent HVAC systems, maintain as follows:

1. Control moisture and humidity inside building by maintaining effective dry-in conditions.
2. Use permanent HVAC system to control humidity.
3. Comply with manufacturer's written instructions for temperature, relative humidity, and exposure to water limits.

    a. Hygroscopic materials that may support mold growth, including wood and gypsum-based products, that become wet during the course of construction and remain wet for 48 hours are considered defective.
    b. Measure moisture content of materials that have been exposed to moisture during construction operations or after installation. Record readings beginning at time of exposure and continuing daily for 48 hours. Identify materials containing moisture levels higher than allowed. Report findings in writing to Architect.
    c. Remove materials that can not be completely restored to their manufactured moisture level within 48 hours.

© THE ROBINSON GREEN BERETTA CORPORATION – 6456

3.6 OPERATION, TERMINATION, AND REMOVAL

A. Supervision: Enforce strict discipline in use of temporary facilities. To minimize waste and abuse, limit availability of temporary facilities to essential and intended uses.

B. Maintenance: Maintain facilities in good operating condition until removal.

1. Maintain operation of temporary enclosures, heating, cooling, humidity control, ventilation, and similar facilities on a 24-hour basis where required to achieve indicated results and to avoid possibility of damage.

C. Operate Project-identification-sign lighting daily from dusk until 12:00 midnight.

D. Temporary Facility Changeover: Do not change over from using temporary security and protection facilities to permanent facilities until Substantial Completion.

E. Termination and Removal: Remove each temporary facility when need for its service has ended, when it has been replaced by authorized use of a permanent facility, or no later than Substantial Completion. Complete or, if necessary, restore permanent construction that may have been delayed because of interference with temporary facility. Repair damaged Work, clean exposed surfaces, and replace construction that cannot be satisfactorily repaired.

1. Materials and facilities that constitute temporary facilities are property of Contractor. Owner reserves right to take possession of Project identification signs.
2. Remove temporary roads and paved areas not intended for or acceptable for integration into permanent construction. Where area is intended for landscape development, remove soil and aggregate fill that do not comply with requirements for fill or subsoil. Remove materials contaminated with road oil, asphalt and other petrochemical compounds, and other substances that might impair growth of plant materials or lawns. Repair or replace street paving, curbs, and sidewalks at temporary entrances, as required by authorities having jurisdiction.
3. At Substantial Completion, repair, renovate, and clean permanent facilities used during construction period. Comply with final cleaning requirements specified in Division 01 Section "Closeout Procedures."

END OF SECTION 01 50 00

© THE ROBINSON GREEN BERETTA CORPORATION – 6456

SECTION 01 60 00 - PRODUCT REQUIREMENTS

PART 1 - GENERAL

1.1 RELATED DOCUMENTS

A. Drawings and general provisions of the Contract, including General and Supplementary Conditions and other Division 01 Specification Sections, apply to this Section.

1.2 SUMMARY

A. Section includes administrative and procedural requirements for selection of products for use in Project; product delivery, storage, and handling; manufacturers' standard warranties on products; special warranties; and comparable products.

B. Related Requirements:

.

1. Division 01 Section "Substitution Procedures" for requests for substitutions.

1.3 DEFINITIONS

A. Products: Items obtained for incorporating into the Work, whether purchased for Project or taken from previously purchased stock. The term "product" includes the terms "material," "equipment," "system," and terms of similar intent.

1. Named Products: Items identified by manufacturer's product name, including make or model number or other designation shown or listed in manufacturer's published product literature,that is current as of date of the Contract Documents.
2. New Products: Items that have not previously been incorporated into another project or facility. Products salvaged or recycled from other projects are not considered new products.
3. Comparable Product: Product that is demonstrated and approved through submittal process to have the indicated qualities related to type, function, dimension, in-service performance, physical properties, appearance, and other characteristics that equal or exceed those of specified product.

B. Basis-of-Design Product Specification: A specification in which a specific manufacturer's product is named and accompanied by the words "basis-of-design product," including make or model number or other designation, to establish the significant qualities related to type, function, dimension, in-service performance, physical properties, appearance, and other characteristics for purposes of evaluating comparable products of additional manufacturers named in the specification.

1.4 ACTION SUBMITTALS

A. Comparable Product Requests: Submit request for consideration of each comparable product. Identify product or fabrication or installation method to be replaced. Include Specification Section number and title and Drawing numbers and titles.

© THE ROBINSON GREEN BERETTA CORPORATION – 6456

1. Include data to indicate compliance with the requirements specified in "Comparable Products" Article.
2. Architect's Action: If necessary, Architect will request additional information or documentation for evaluation within one week of receipt of a comparable product request. Architect will notify Contractor of approval or rejection of proposed comparable product request within 15 days of receipt of request, or seven days of receipt of additional information or documentation, whichever is later.

    a. Form of Approval: As specified in Division 01 Section "Submittal Procedures."
    b. Use product specified if Architect does not issue a decision on use of a comparable product request within time allocated.

B. Basis-of-Design Product Specification Submittal: Comply with requirements in Division 01 Section "Submittal Procedures." Show compliance with requirements.

1.5 QUALITY ASSURANCE

A. Compatibility of Options: If Contractor is given option of selecting between two or more products for use on Project, select product compatible with products previously selected, even if previously selected products were also options.

1. Each contractor is responsible for providing products and construction methods compatible with products and construction methods of other contractors.
2. If a dispute arises between contractors over concurrently selectable but incompatible products, Architect will determine which products shall be used.

1.6 PRODUCT DELIVERY, STORAGE, AND HANDLING

A. Deliver, store, and handle products using means and methods that will prevent damage, deterioration, and loss, including theft and vandalism. Comply with manufacturer's written instructions.

B. Delivery and Handling:

1. Schedule delivery to minimize long-term storage at Project site and to prevent overcrowding of construction spaces.
2. Coordinate delivery with installation time to ensure minimum holding time for items that are flammable, hazardous, easily damaged, or sensitive to deterioration, theft, and other losses.
3. Deliver products to Project site in an undamaged condition in manufacturer's original sealed container or other packaging system, complete with labels and instructions for handling, storing, unpacking, protecting, and installing.
4. Inspect products on delivery to determine compliance with the Contract Documents and to determine that products are undamaged and properly protected.

C. Storage:

1. Store products to allow for inspection and measurement of quantity or counting of units.
2. Store materials in a manner that will not endanger Project structure.
3. Store products that are subject to damage by the elements, under cover in a weathertight enclosure above ground, with ventilation adequate to prevent condensation.
4. Protect foam plastic from exposure to sunlight, except to extent necessary for period of installation and concealment.

© THE ROBINSON GREEN BERETTA CORPORATION – 6456

5. Comply with product manufacturer's written instructions for temperature, humidity, ventilation, and weather-protection requirements for storage.
6. Protect stored products from damage and liquids from freezing.
7. Provide a secure location and enclosure at Project site for storage of materials and equipment by Owner's construction forces. Coordinate location with Owner.

1.7 PRODUCT WARRANTIES

A. Warranties specified in other Sections shall be in addition to, and run concurrent with, other warranties required by the Contract Documents. Manufacturer's disclaimers and limitations on product warranties do not relieve Contractor of obligations under requirements of the Contract Documents.

1. Manufacturer's Warranty: Written warranty furnished by individual manufacturer for a particular product and specifically endorsed by manufacturer to Owner.
2. Special Warranty: Written warranty required by the Contract Documents to provide specific rights for Owner.

B. Special Warranties: Prepare a written document that contains appropriate terms and identification, ready for execution.

1. Manufacturer's Standard Form: Modified to include Project-specific information and properly executed.
2. Specified Form: When specified forms are included with the Specifications, prepare a written document using indicated form properly executed.
3. See Divisions 02 through 33 Sections for specific content requirements and particular requirements for submitting special warranties.

C. Submittal Time: Comply with requirements in Division 01 Section "Closeout Procedures."

PART 2 - PRODUCTS

2.1 PRODUCT SELECTION PROCEDURES

A. General Product Requirements: Provide products that comply with the Contract Documents, are undamaged and, unless otherwise indicated, are new at time of installation.

1. Provide products complete with accessories, trim, finish, fasteners, and other items needed for a complete installation and indicated use and effect.
2. Standard Products: If available, and unless custom products or nonstandard options are specified, provide standard products of types that have been produced and used successfully in similar situations on other projects.
3. Owner reserves the right to limit selection to products with warranties not in conflict with requirements of the Contract Documents.
4. Where products are accompanied by the term "as selected," Architect will make selection.
5. Descriptive, performance, and reference standard requirements in the Specifications establish salient characteristics of products.
6. Or Equal: For products specified by name and accompanied by the term "or equal," or "or approved equal," or "or approved," comply with requirements in "Comparable Products" Article to obtain approval for use of an unnamed product.

© THE ROBINSON GREEN BERETTA CORPORATION – 6456

B. Product Selection Procedures:

1. Product: Where Specifications name a single manufacturer and product, provide the named product that complies with requirements. Comparable products or substitutions for Contractor's convenience will not be considered.
2. Manufacturer/Source: Where Specifications name a single manufacturer or source, provide a product by the named manufacturer or source that complies with requirements. Comparable products or substitutions for Contractor's convenience will not be considered.
3. Products:

   a. Restricted List: Where Specifications include a list of names of both manufacturers and products, provide one of the products listed that complies with requirements. Comparable products or substitutions for Contractor's convenience will not be considered unless otherwise indicated.
   b. Nonrestricted List: Where Specifications include a list of names of both available manufacturers and products, provide one of the products listed, or an unnamed product, that complies with requirements. Comply with requirements in "Comparable Products" Article for consideration of an unnamed product.

4. Manufacturers:

   a. Restricted List: Where Specifications include a list of manufacturers' names, provide a product by one of the manufacturers listed that complies with requirements. Comparable products or substitutions for Contractor's convenience may be considered unless otherwise indicated.
   b. Nonrestricted List: Where Specifications include a list of available manufacturers, provide a product by one of the manufacturers listed, or a product by an unnamed manufacturer, that complies with requirements. Comply with requirements in "Comparable Products" Article for consideration of an unnamed manufacturer's product.

5. Basis-of-Design Product: Where Specifications name a product, or refer to a product indicated on Drawings, and include a list of manufacturers, provide the specified or indicated product or a comparable product by one of the other named manufacturers. Drawings and Specifications indicate sizes, profiles, dimensions, and other characteristics that are based on the product named. Comply with requirements in "Comparable Products" Article for consideration of an unnamed product by one of the other named manufacturers.

C. Visual Matching Specification: Where Specifications require "match Architect's sample", provide a product that complies with requirements and matches Architect's sample. Architect's decision will be final on whether a proposed product matches.

1. If no product available within specified category matches and complies with other specified requirements, comply with requirements in Division 01 Section "Substitution Procedures" for proposal of product.

D. Visual Selection Specification: Where Specifications include the phrase "as selected by Architect from manufacturer's full range" or similar phrase, select a product that complies with requirements. Architect will select color, gloss, pattern, density, or texture from manufacturer's product line that includes both standard and premium items.

© THE ROBINSON GREEN BERETTA CORPORATION – 6456

2.2 COMPARABLE PRODUCTS

A. Conditions for Consideration: Architect will consider Contractor's request for comparable product when the following conditions are satisfied. If the following conditions are not satisfied, Architect may return requests without action, except to record noncompliance with these requirements:

1. Evidence that the proposed product does not require revisions to the Contract Documents, which is consistent with the Contract Documents and will produce the indicated results, and that it is compatible with other portions of the Work.
2. Detailed comparison of significant qualities of proposed product with those named in the Specifications. Significant qualities include attributes such as performance, weight, size, durability, visual effect, and specific features and requirements indicated.
3. Evidence that proposed product provides specified warranty.
4. List of similar installations for completed projects with project names and addresses and names and addresses of architects and owners, if requested.
5. Samples, if requested.

PART 3 - EXECUTION (Not Used)

END OF SECTION 01 60 00

© THE ROBINSON GREEN BERETTA CORPORATION – 6456

SECTION 01 71 00 - CLEANING

PART 1 - GENERAL

1.1 REQUIREMENTS INCLUDED

A. Execute cleaning, during progress of the work, and at completion of the work, as required by General Conditions.

1.2 RELATED REQUIREMENTS

A. Conditions of the contract.

B. Each Specification Section: Cleaning for specific products or work.

1.3 DISPOSAL REQUIREMENTS

A. Conduct cleaning and disposal operations to comply with all local codes, ordinances, regulations and anti-pollution laws.

PART 2 - PRODUCTS

2.1 MATERIALS

A. Use only those cleaning materials which will not create hazards to health or property, and which will not damage surfaces.

B. Use only those cleaning materials and methods recommended by manufacturer of the surface material to be cleaned.

C. Use cleaning materials only on surfaces recommended by cleaning material manufacturer.

PART 3 - EXECUTION

3.1 DURING CONSTRUCTION

A. Execute periodic cleaning, not less than weekly, to keep the work, the site and adjacent properties free from accumulations of waste materials, rubbish and windblown debris resulting from construction operations.

B. Provide on-site containers for the collection of waste materials, debris and rubbish per Section 01 50 00.

C. Remove waste materials, debris and rubbish from the site periodically, and dispose of at legal disposal areas away from the site.

© THE ROBINSON GREEN BERETTA CORPORATION - 6456

3.2 DUST CONTROL

A. Clean interior spaces prior to the start of finish painting, and continue cleaning on an as-needed basis until painting is finished.

B. Schedule operations so that dust and other contaminants resulting from cleaning process will not fall on wet or newly coated surfaces.

3.3 PROGRESSIVE CLEANING

A. Cleaning during construction is the responsibility of the Contractor. All areas shall be cleaned in a manner acceptable to Owner's Representative. Two (2) full-time cleaning personnel with tools shall be provided from completion of the flooring, until occupation by Owner's operations, whose primary function shall be cleaning the Facility in a manner acceptable to Owner's representative.

3.4 FINAL CLEANING

A. Final cleaning before final inspection. Interior and exterior areas of the building shall be cleared of all rubbish and thoroughly cleaned by the Contractor, including the following:

1. All construction facilities, debris, and rubbish shall be removed from the Owner's property and legally disposed of.
2. All finished surfaces including floors, walls and ceilings shall be swept, dusted, washed, waxed and polished. This includes cleaning of the work of all finished trades where needed, whether or not cleaning for such trades is included in their respective SECTIONS.
3. Pipe and duct spaces, chases, and furred spaces shall be left thoroughly cleaned.
4. All glass and mirrors shall be washed and polished, both sides, by a Window Cleaning Contractor specializing in such work.
5. All ceilings, wall surfaces, floors, door frames, hardware, metal work, glass, enameled metals, and the like, shall be cleaned.

3.5 VENTILATING SYSTEMS:

A. Replace temporary filters with permanent filters. See Division 23 for requirements regarding disposable filters. Do not operate the fan system unless temporary filters conforming to the requirements of Division 23 are in place.

B. Clean ducts, blowers and coils if units were operated without filters during construction.

C. Replace all HVAC filtration media with new filtration media as indicated above and conduct a flushing out the building at 100% outside air for two weeks after construction ends, and prior to occupancy of the building.

3.6 OTHER CLEANING

A. Broom clean exterior paved surfaces, rake clean other surfaces of the grounds disturbed by construction.

© THE ROBINSON GREEN BERETTA CORPORATION - 6456

B. Prior to final completion or Owner occupancy, Contractor shall conduct an inspection of sight-exposed interior and exterior surfaces, and all work areas, to verify that the entire work is clean.

END OF SECTION 01 71 00

© THE ROBINSON GREEN BERETTA CORPORATION - 6456

SECTION 01 73 00 - EXECUTION

PART 1 - GENERAL

1.1 RELATED DOCUMENTS

A. Drawings and general provisions of the Contract, including General and Supplementary Conditions and other Division 01 Specification Sections, apply to this Section.

1.2 SUMMARY

A. Section includes general administrative and procedural requirements governing execution of the Work including, but not limited to, the following:

1. Construction layout.
2. Field engineering and surveying.
3. Installation of the Work.
4. Cutting and patching.
5. Coordination of Owner-installed products.
6. Progress cleaning.
7. Starting and adjusting.
8. Protection of installed construction.
9. Correction of the Work.

B. Related Requirements:

1. Division 01 Section "Summary of The Work" for limits on use of Project site.
2. Division 01 Section "Submittal Procedures" for submitting surveys.
3. Division 01 Section "Closeout Procedures" for submitting final property survey with Project Record Documents, recording of Owner-accepted deviations from indicated lines and levels, and final cleaning.

1.3 DEFINITIONS

A. Cutting: Removal of in-place construction necessary to permit installation or performance of other work.

B. Patching: Fitting and repair work required to restore construction to original conditions after installation of other work.

1.4 INFORMATIONAL SUBMITTALS

A. Qualification Data: For land surveyor.

B. Certificates: Submit certificate signed by land surveyor certifying that location and elevation of improvements comply with requirements.

C. Cutting and Patching Plan: Submit plan describing procedures at least 10 days prior to the time cutting and patching will be performed. Include the following information:

1. Extent: Describe reason for and extent of each occurrence of cutting and patching.
2. Changes to In-Place Construction: Describe anticipated results. Include changes to structural elements and operating components as well as changes in building appearance and other significant visual elements.
3. Products: List products to be used for patching and firms or entities that will perform patching work.
4. Dates: Indicate when cutting and patching will be performed.
5. Utilities and Mechanical and Electrical Systems: List services and systems that cutting and patching procedures will disturb or affect. List services and systems that will be relocated and those that will be temporarily out of service. Indicate length of time permanent services and systems will be disrupted.

    a. Include description of provisions for temporary services and systems during interruption of permanent services and systems.

D. Landfill Receipts: Submit copy of receipts issued by a landfill facility, licensed to accept hazardous materials, for hazardous waste disposal.

E. Certified Surveys: Submit two copies signed by land surveyor.

F. Final Property Survey: Submit two copies showing the Work performed and record survey data.

1.5 QUALITY ASSURANCE

A. Land Surveyor Qualifications: A professional land surveyor who is legally qualified to practice in jurisdiction where Project is located and who is experienced in providing land-surveying services of the kind indicated.

B. Cutting and Patching: Comply with requirements for and limitations on cutting and patching of construction elements.

1. Structural Elements: When cutting and patching structural elements, notify Architect of locations and details of cutting and await directions from Architect before proceeding. Shore, brace, and support structural elements during cutting and patching. Do not cut and patch structural elements in a manner that could change their load-carrying capacity or increase deflection

2. Operational Elements: Do not cut and patch operating elements and related components in a manner that results in reducing their capacity to perform as intended or that results in increased maintenance or decreased operational life or safety. Operational elements include, but are not limited to, the following:

    a. Primary operational systems and equipment.
    b. Fire separation assemblies.
    c. Air or smoke barriers.
    d. Fire-suppression systems.
    e. Mechanical systems piping and ducts.
    f. Control systems.
    g. Communication systems.
    h. Fire-detection and -alarm systems.
    i. Conveying systems.
    j. Electrical wiring systems.
    k. Operating systems of special construction.

© THE ROBINSON GREEN BERETTA CORPORATION – 6456

3. Other Construction Elements: Do not cut and patch other construction elements or components in a manner that could change their load-carrying capacity, that results in reducing their capacity to perform as intended, or that results in increased maintenance or decreased operational life or safety. Other construction elements include but are not limited to the following:

   a. Water, moisture, or vapor barriers.
   b. Membranes and flashings.
   c. Exterior curtain-wall construction.
   d. Sprayed fire-resistive material.
   e. Equipment supports.
   f. Piping, ductwork, vessels, and equipment.
   g. Noise- and vibration-control elements and systems.

4. Visual Elements: Do not cut and patch construction in a manner that results in visual evidence of cutting and patching. Do not cut and patch exposed construction in a manner that would, in Architect's opinion, reduce the building's aesthetic qualities. Remove and replace construction that has been cut and patched in a visually unsatisfactory manner.

C. Cutting and Patching Conference: Before proceeding, meet at Project site with parties involved in cutting and patching, including mechanical and electrical trades. Review areas of potential interference and conflict. Coordinate procedures and resolve potential conflicts before proceeding.

D. Manufacturer's Installation Instructions: Obtain and maintain on-site manufacturer's written recommendations and instructions for installation of products and equipment.

PART 2 - PRODUCTS

2.1 MATERIALS

A. General: Comply with requirements specified in other Sections.

1. For projects requiring compliance with sustainable design and construction practices and procedures, use products for patching that comply with requirements in Division 01 sustainable design requirements Section.

B. In-Place Materials: Use materials for patching identical to in-place materials. For exposed surfaces, use materials that visually match in-place adjacent surfaces to the fullest extent possible.

1. If identical materials are unavailable or cannot be used, use materials that, when installed, will provide a match acceptable to Architect for the visual and functional performance of in-place materials.

© THE ROBINSON GREEN BERETTA CORPORATION – 6456

PART 3 - EXECUTION

3.1 EXAMINATION

A. Existing Conditions: The existence and location of underground and other utilities and construction indicated as existing are not guaranteed. Before beginning sitework, investigate and verify the existence and location of underground utilities, mechanical and electrical systems, and other construction affecting the Work.

1. Before construction, verify the location and invert elevation at points of connection of sanitary sewer, storm sewer, and water-service piping; underground electrical services, and other utilities.
2. Furnish location data for work related to Project that must be performed by public utilities serving Project site.

B. Examination and Acceptance of Conditions: Before proceeding with each component of the Work, examine substrates, areas, and conditions, with Installer or Applicator present where indicated, for compliance with requirements for installation tolerances and other conditions affecting performance. Record observations.

1. Examine roughing-in for mechanical and electrical systems to verify actual locations of connections before equipment and fixture installation.
2. Examine walls, floors, and roofs for suitable conditions where products and systems are to be installed.
3. Verify compatibility with and suitability of substrates, including compatibility with existing finishes or primers.

C. Written Report: Where a written report listing conditions detrimental to performance of the Work is required by other Sections, include the following:

1. Description of the Work.
2. List of detrimental conditions, including substrates.
3. List of unacceptable installation tolerances.
4. Recommended corrections.

D. Proceed with installation only after unsatisfactory conditions have been corrected. Proceeding with the Work indicates acceptance of surfaces and conditions.

3.2 PREPARATION

A. Existing Utility Information: Furnish information to local utility and Owner that is necessary to adjust, move, or relocate existing utility structures, utility poles, lines, services, or other utility appurtenances located in or affected by construction. Coordinate with authorities having jurisdiction.

B. Field Measurements: Take field measurements as required to fit the Work properly. Recheck measurements before installing each product. Where portions of the Work are indicated to fit to other construction, verify dimensions of other construction by field measurements before fabrication. Coordinate fabrication schedule with construction progress to avoid delaying the Work.

C. Space Requirements: Verify space requirements and dimensions of items shown diagrammatically on Drawings.

© THE ROBINSON GREEN BERETTA CORPORATION – 6456

D. Review of Contract Documents and Field Conditions: Immediately on discovery of the need for clarification of the Contract Documents caused by differing field conditions outside the control of Contractor, submit a request for information to Architect according to requirements in Division 01 Section "Project Management and Coordination."

3.3 CONSTRUCTION LAYOUT

A. Verification: Before proceeding to lay out the Work, verify layout information shown on Drawings, in relation to the property survey and existing benchmarks. If discrepancies are discovered, notify Architect promptly.

B. General: Engage a land surveyor to lay out the Work using accepted surveying practices.

1. Establish benchmarks and control points to set lines and levels at each story of construction and elsewhere as needed to locate each element of Project.
2. Establish limits on use of Project site.
3. Establish dimensions within tolerances indicated. Do not scale Drawings to obtain required dimensions.
4. Inform installers of lines and levels to which they must comply.
5. Check the location, level and plumb, of every major element as the Work progresses.
6. Notify Architect when deviations from required lines and levels exceed allowable tolerances.
7. Close site surveys with an error of closure equal to or less than the standard established by authorities having jurisdiction.

C. Site Improvements: Locate and lay out site improvements, including pavements, grading, fill and topsoil placement, utility slopes, and rim and invert elevations.

D. Building Lines and Levels: Locate and lay out control lines and levels for structures, building foundations, column grids, and floor levels, including those required for mechanical and electrical work. Transfer survey markings and elevations for use with control lines and levels. Level foundations and piers from two or more locations.

E. Record Log: Maintain a log of layout control work. Record deviations from required lines and levels. Include beginning and ending dates and times of surveys, weather conditions, name and duty of each survey party member, and types of instruments and tapes used. Make the log available for reference by Architect.

3.4 FIELD ENGINEERING

A. Identification: Owner will identify existing benchmarks, control points, and property corners.

B. Reference Points: Locate existing permanent benchmarks, control points, and similar reference points before beginning the Work. Preserve and protect permanent benchmarks and control points during construction operations.

1. Do not change or relocate existing benchmarks or control points without prior written approval of Architect. Report lost or destroyed permanent benchmarks or control points promptly. Report the need to relocate permanent benchmarks or control points to Architect before proceeding.
2. Replace lost or destroyed permanent benchmarks and control points promptly. Base replacements on the original survey control points.

© THE ROBINSON GREEN BERETTA CORPORATION – 6456

C. Benchmarks: Establish and maintain a minimum of two permanent benchmarks on Project site, referenced to data established by survey control points. Comply with authorities having jurisdiction for type and size of benchmark.

1. Record benchmark locations, with horizontal and vertical data, on Project Record Documents.
2. Where the actual location or elevation of layout points cannot be marked, provide temporary reference points sufficient to locate the Work.
3. Remove temporary reference points when no longer needed. Restore marked construction to its original condition.

D. Certified Survey: On completion of foundation walls, major site improvements, and other work requiring field-engineering services, prepare a certified survey showing dimensions, locations, angles, and elevations of construction and sitework.

E. Final Property Survey: Engage a land surveyor to prepare a final property survey showing significant features (real property) for Project. Include on the survey a certification, signed by land surveyor that principal metes, bounds, lines, and levels of Project are accurately positioned as shown on the survey.

1. Show boundary lines, monuments, streets, site improvements and utilities, existing improvements and significant vegetation, adjoining properties, acreage, grade contours, and the distance and bearing from a site corner to a legal point.
2. Recording: At Substantial Completion, have the final property survey recorded by or with authorities having jurisdiction as the official "property survey."

3.5 INSTALLATION

A. General: Locate the Work and components of the Work accurately, in correct alignment and elevation, as indicated.

1. Make vertical work plumb and make horizontal work level.
2. Where space is limited, install components to maximize space available for maintenance and ease of removal for replacement.
3. Conceal pipes, ducts, and wiring in finished areas unless otherwise indicated.
4. Maintain minimum headroom clearance of 90 inches (2300 mm) in all spaces.

B. Comply with manufacturer's written instructions and recommendations for installing products in applications indicated.

C. Install products at the time and under conditions that will ensure the best possible results. Maintain conditions required for product performance until Substantial Completion.

D. Conduct construction operations so no part of the Work is subjected to damaging operations or loading in excess of that expected during normal conditions of occupancy.

E. Sequence the Work and allow adequate clearances to accommodate movement of construction items on site and placement in permanent locations.

F. Tools and Equipment: Do not use tools or equipment that produce harmful noise levels.

G. Templates: Obtain and distribute to the parties involved templates for work specified to be factory prepared and field installed. Check Shop Drawings of other work to confirm that

© THE ROBINSON GREEN BERETTA CORPORATION – 6456

adequate provisions are made for locating and installing products to comply with indicated requirements.

H. Attachment: Provide blocking and attachment plates and anchors and fasteners of adequate size and number to securely anchor each component in place, accurately located and aligned with other portions of the Work. Where size and type of attachments are not indicated, verify size and type required for load conditions.

1. Mounting Heights: Where mounting heights are not indicated, mount components at heights directed by Architect.
2. Allow for building movement, including thermal expansion and contraction.
3. Coordinate installation of anchorages. Furnish setting drawings, templates, and directions for installing anchorages, including sleeves, concrete inserts, anchor bolts, and items with integral anchors, that are to be embedded in concrete or masonry. Deliver such items to Project site in time for installation.

I. Joints: Make joints of uniform width. Where joint locations in exposed work are not indicated, arrange joints for the best visual effect. Fit exposed connections together to form hairline joints.

J. Hazardous Materials: Use products, cleaners, and installation materials that are not considered hazardous.

3.6 CUTTING AND PATCHING

A. Cutting and Patching, General: Employ skilled workers to perform cutting and patching. Proceed with cutting and patching at the earliest feasible time, and complete without delay.

1. Cut in-place construction to provide for installation of other components or performance of other construction, and subsequently patch as required to restore surfaces to their original condition.

B. Existing Warranties: Remove, replace, patch, and repair materials and surfaces cut or damaged during installation or cutting and patching operations, by methods and with materials so as not to void existing warranties.

C. Temporary Support: Provide temporary support of work to be cut.

D. Protection: Protect in-place construction during cutting and patching to prevent damage. Provide protection from adverse weather conditions for portions of Project that might be exposed during cutting and patching operations.

E. Adjacent Occupied Areas: Where interference with use of adjoining areas or interruption of free passage to adjoining areas is unavoidable, coordinate cutting and patching according to requirements in Division 01 Section "Summary."

F. Existing Utility Services and Mechanical/Electrical Systems: Where existing services/systems are required to be removed, relocated, or abandoned, bypass such services/systems before cutting to prevent interruption to occupied areas.

G. Cutting: Cut in-place construction by sawing, drilling, breaking, chipping, grinding, and similar operations, including excavation, using methods least likely to damage elements retained or adjoining construction. If possible, review proposed procedures with original Installer; comply with original Installer's written recommendations.

© THE ROBINSON GREEN BERETTA CORPORATION – 6456

1. In general, use hand or small power tools designed for sawing and grinding, not hammering and chopping. Cut holes and slots neatly to minimum size required, and with minimum disturbance of adjacent surfaces. Temporarily cover openings when not in use.
2. Finished Surfaces: Cut or drill from the exposed or finished side into concealed surfaces.
3. Concrete and Masonry: Cut using a cutting machine, such as an abrasive saw or a diamond-core drill.
4. Excavating and Backfilling: Comply with requirements in applicable Division 31 Sections where required by cutting and patching operations.
5. Mechanical and Electrical Services: Cut off pipe or conduit in walls or partitions to be removed. Cap, valve, or plug and seal remaining portion of pipe or conduit to prevent entrance of moisture or other foreign matter after cutting.
6. Proceed with patching after construction operations requiring cutting are complete.

H. Patching: Patch construction by filling, repairing, refinishing, closing up, and similar operations following performance of other work. Patch with durable seams that are as invisible as practicable. Provide materials and comply with installation requirements specified in other Sections, where applicable.

1. Inspection: Where feasible, test and inspect patched areas after completion to demonstrate physical integrity of installation.
2. Exposed Finishes: Restore exposed finishes of patched areas and extend finish restoration into retained adjoining construction in a manner that will minimize evidence of patching and refinishing.

    a. Clean piping, conduit, and similar features before applying paint or other finishing materials.
    b. Restore damaged pipe covering to its original condition.

3. Floors and Walls: Where walls or partitions that are removed extend one finished area into another, patch and repair floor and wall surfaces in the new space. Provide an even surface of uniform finish, color, texture, and appearance. Remove in-place floor and wall coverings and replace with new materials, if necessary, to achieve uniform color and appearance.

    a. Where patching occurs in a painted surface, prepare substrate and apply primer and intermediate paint coats appropriate for substrate over the patch, and apply final paint coat over entire unbroken surface containing the patch. Provide additional coats until patch blends with adjacent surfaces.

4. Ceilings: Patch, repair, or rehang in-place ceilings as necessary to provide an even-plane surface of uniform appearance.
5. Exterior Building Enclosure: Patch components in a manner that restores enclosure to a weathertight condition and ensures thermal and moisture integrity of building enclosure.

I. Cleaning: Clean areas and spaces where cutting and patching are performed. Remove paint, mortar, oils, putty, and similar materials from adjacent finished surfaces.

3.7 OWNER-INSTALLED PRODUCTS

A. Site Access: Provide access to Project site for Owner's construction personnel.

B. Coordination: Coordinate construction and operations of the Work with work performed by Owner's construction personnel.

© THE ROBINSON GREEN BERETTA CORPORATION – 6456

1. Construction Schedule: Inform Owner of Contractor's preferred construction schedule for Owner's portion of the Work. Adjust construction schedule based on a mutually agreeable timetable. Notify Owner if changes to schedule are required due to differences in actual construction progress.
2. Preinstallation Conferences: Include Owner's construction personnel at preinstallation conferences covering portions of the Work that are to receive Owner's work. Attend preinstallation conferences conducted by Owner's construction personnel if portions of the Work depend on Owner's construction.

3.8 PROGRESS CLEANING

A. General: Clean Project site and work areas daily, including common areas. Enforce requirements strictly. Dispose of materials lawfully.

1. Comply with requirements in NFPA 241 for removal of combustible waste materials and debris.
2. Do not hold waste materials more than seven days during normal weather or three days if the temperature is expected to rise above 80 deg F (27 deg C).
3. Containerize hazardous and unsanitary waste materials separately from other waste. Mark containers appropriately and dispose of legally, according to regulations.

    a. Use containers intended for holding waste materials of type to be stored.

4. Coordinate progress cleaning for joint-use areas where Contractor and other contractors are working concurrently.

B. Site: Maintain Project site free of waste materials and debris.

C. Work Areas: Clean areas where work is in progress to the level of cleanliness necessary for proper execution of the Work.

1. Remove liquid spills promptly.
2. Where dust would impair proper execution of the Work, broom-clean or vacuum the entire work area, as appropriate.

D. Installed Work: Keep installed work clean. Clean installed surfaces according to written instructions of manufacturer or fabricator of product installed, using only cleaning materials specifically recommended. If specific cleaning materials are not recommended, use cleaning materials that are not hazardous to health or property and that will not damage exposed surfaces.

E. Concealed Spaces: Remove debris from concealed spaces before enclosing the space.

F. Exposed Surfaces in Finished Areas: Clean exposed surfaces and protect as necessary to ensure freedom from damage and deterioration at time of Substantial Completion.

G. Waste Disposal: Do not bury or burn waste materials on-site. Do not wash waste materials down sewers or into waterways. Comply with waste disposal requirements in Division 01 Section Construction Waste Management and Disposal.

H. During handling and installation, clean and protect construction in progress and adjoining materials already in place. Apply protective covering where required to ensure protection from damage or deterioration at Substantial Completion.

© THE ROBINSON GREEN BERETTA CORPORATION – 6456

I. Clean and provide maintenance on completed construction as frequently as necessary through the remainder of the construction period. Adjust and lubricate operable components to ensure operability without damaging effects.

J. Limiting Exposures: Supervise construction operations to assure that no part of the construction, completed or in progress, is subject to harmful, dangerous, damaging, or otherwise deleterious exposure during the construction period.

3.9 STARTING AND ADJUSTING

A. Start equipment and operating components to confirm proper operation. Remove malfunctioning units, replace with new units, and retest.

B. Adjust equipment for proper operation. Adjust operating components for proper operation without binding.

C. Test each piece of equipment to verify proper operation. Test and adjust controls and safeties. Replace damaged and malfunctioning controls and equipment.

D. Manufacturer's Field Service: Comply with qualification requirements in Division 01 Section "Quality Requirements."

3.10 PROTECTION OF INSTALLED CONSTRUCTION

A. Provide final protection and maintain conditions that ensure installed Work is without damage or deterioration at time of Substantial Completion.

B. Comply with manufacturer's written instructions for temperature and relative humidity.

END OF SECTION 01 73 00

© THE ROBINSON GREEN BERETTA CORPORATION – 6456

SECTION 01 74 20 - CONSTRUCTION WASTE MANAGEMENT AND DISPOSAL

PART 1 - GENERAL

1.1 RELATED DOCUMENTS

A. Drawings and general provisions of the Contract, including General and Supplementary Conditions and other Division 01 Specification Sections, apply to this Section.

1.2 SUMMARY

A. Section includes administrative and procedural requirements for the following:

1. Salvaging nonhazardous demolition and construction waste.
2. Recycling nonhazardous demolition and construction waste.
3. Disposing of nonhazardous demolition and [construction waste.

B. Related Requirements:
1. Division 02 Section "Selective Structure Demolition" for disposition of waste resulting from demolition of site improvements**.**

1.3 DEFINITIONS

A. Construction Waste: Building and site improvement materials and other solid waste resulting from construction, remodeling, renovation, or repair operations. Construction waste includes packaging.

B. Demolition Waste: Building and site improvement materials resulting from demolition or selective demolition operations.

C. Disposal: Removal off-site of demolition and construction waste and subsequent sale, recycling, reuse, or deposit in landfill or incinerator acceptable to authorities having jurisdiction.

D. Recycle: Recovery of demolition or construction waste for subsequent processing in preparation for reuse.

E. Salvage: Recovery of demolition or construction waste and subsequent sale or reuse in another facility.

F. Salvage and Reuse: Recovery of demolition or construction waste and subsequent incorporation into the Work.

1.4 PERFORMANCE REQUIREMENTS

A. General: Achieve end-of-Project rates for salvage/recycling of **75** percent by weight of total non-hazardous solid waste generated by the Work. Practice efficient waste management in the use of materials in the course of the Work. Use all reasonable means to divert construction and

© THE ROBINSON GREEN BERETTA CORPORATION – 6456

demolition waste from landfills and incinerators. Facilitate recycling and salvage of materials, including the following:

1. Demolition Waste (which may include the following when within the project scope):

   a. Asphalt paving.

2. Construction Waste (which may include the following when within the project scope):

   a. Masonry and CMU.
   b. Lumber.
   c. Wood sheet materials.
   d. Wood trim.
   e. Metals.
   f. Roofing.
   g. Insulation.
   h. Carpet and pad.
   i. Gypsum board.
   j. Piping.
   k. Electrical conduit.
   l. Packaging: Regardless of salvage/recycle goal indicated in "General" Paragraph above, salvage or recycle 100 percent of the following uncontaminated packaging materials:

      1) Paper.
      2) Cardboard.
      3) Boxes.
      4) Plastic sheet and film.
      5) Polystyrene packaging.
      6) Wood crates.
      7) Plastic pails.

1.5 ACTION SUBMITTALS

A. Waste Management Plan: Submit plan within 30 days of date established for the Notice to Proceed.

1.6 INFORMATIONAL SUBMITTALS

A. Waste Reduction Progress Reports: Concurrent with each Application for Payment, submit report. Use Form CWM-7 for construction waste and Form CWM-8 for demolition waste. Include the following information:

   1. Material category.
   2. Generation point of waste.
   3. Total quantity of waste in tons).
   4. Quantity of waste salvaged, both estimated and actual in tons.
   5. Quantity of waste recycled, both estimated and actual in tons.
   6. Total quantity of waste recovered (salvaged plus recycled) in tons.
   7. Total quantity of waste recovered (salvaged plus recycled) as a percentage of total waste.

© THE ROBINSON GREEN BERETTA CORPORATION – 6456

B. Waste Reduction Calculations: Before request for Substantial Completion, submit calculated end-of-Project rates for salvage, recycling, and disposal as a percentage of total waste generated by the Work.

C. Records of Donations: Indicate receipt and acceptance of salvageable waste donated to individuals and organizations. Indicate whether organization is tax exempt.

D. Records of Sales: Indicate receipt and acceptance of salvageable waste sold to individuals and organizations. Indicate whether organization is tax exempt.

E. Recycling and Processing Facility Records: Indicate receipt and acceptance of recyclable waste by recycling and processing facilities licensed to accept them. Include manifests, weight tickets, receipts, and invoices.

F. Landfill and Incinerator Disposal Records: Indicate receipt and acceptance of waste by landfills and incinerator facilities licensed to accept them. Include manifests, weight tickets, receipts, and invoices.

G. Qualification Data: For waste management coordinator and recovery technician.

1.7 QUALITY ASSURANCE

A. Waste Management Coordinator Qualifications: Experienced firm, with a record of successful waste management coordination of projects with similar requirements, that employs a LEED-Accredited Professional, certified by the USGBC, as waste management coordinator. Waste management coordinator may also serve as LEED coordinator.

B. Refrigerant Recovery Technician Qualifications: Certified by EPA-approved certification program.

C. Regulatory Requirements: Comply with hauling and disposal regulations of authorities having jurisdiction.

D. Waste Management Conference: Conduct conference at Project site to comply with requirements in Division 01 Section "Project Management and Coordination." Review methods and procedures related to waste management including, but not limited to, the following:

1. Review and discuss waste management plan including responsibilities of waste management coordinator.
2. Review requirements for documenting quantities of each type of waste and its disposition.
3. Review and finalize procedures for materials separation and verify availability of containers and bins needed to avoid delays.
4. Review procedures for periodic waste collection and transportation to recycling and disposal facilities.
5. Review waste management requirements for each trade.

1.8 WASTE MANAGEMENT PLAN

A. General: Develop a waste management plan according to ASTM E 1609 and requirements in this Section. Plan shall consist of waste identification, waste reduction work plan, and cost/revenue analysis. Distinguish between demolition and construction waste. Indicate

© THE ROBINSON GREEN BERETTA CORPORATION – 6456

quantities by weight or volume, but use same units of measure throughout waste management plan.

B. Waste Identification: Indicate anticipated types and quantities of demolition and construction waste generated by the Work. Use Form CWM-1 for construction waste and Form CWM-2 for demolition waste. Include estimated quantities and assumptions for estimates.

C. Waste Reduction Work Plan: List each type of waste and whether it will be salvaged, recycled, or disposed of in landfill or incinerator. Use Form CWM-3 for construction waste and Form CWM-4 for demolition waste. Include points of waste generation, total quantity of each type of waste, quantity for each means of recovery, and handling and transportation procedures.

1. Salvaged Materials for Reuse: For materials that will be salvaged and reused in this Project, describe methods for preparing salvaged materials before incorporation into the Work.
2. Salvaged Materials for Sale: For materials that will be sold to individuals and organizations, include list of their names, addresses, and telephone numbers.
3. Salvaged Materials for Donation: For materials that will be donated to individuals and organizations, include list of their names, addresses, and telephone numbers.
4. Recycled Materials: Include list of local receivers and processors and type of recycled materials each will accept. Include names, addresses, and telephone numbers.
5. Disposed Materials: Indicate how and where materials will be disposed of. Include name, address, and telephone number of each landfill and incinerator facility.
6. Handling and Transportation Procedures: Include method that will be used for separating recyclable waste including sizes of containers, container labeling, and designated location where materials separation will be performed.

D. Cost/Revenue Analysis: Indicate total cost of waste disposal as if there was no waste management plan and net additional cost or net savings resulting from implementing waste management plan. Use Form CWM-5 for construction waste and Form CWM-6 for demolition waste. Include the following:

1. Total quantity of waste.
2. Estimated cost of disposal (cost per unit). Include hauling and tipping fees and cost of collection containers for each type of waste.
3. Total cost of disposal (with no waste management).
4. Revenue from salvaged materials.
5. Revenue from recycled materials.
6. Savings in hauling and tipping fees by donating materials.
7. Savings in hauling and tipping fees that are avoided.
8. Handling and transportation costs. Include cost of collection containers for each type of waste.
9. Net additional cost or net savings from waste management plan.

© THE ROBINSON GREEN BERETTA CORPORATION – 6456

PART 2 - PRODUCTS (Not Used)

PART 3 - EXECUTION

3.1 PLAN IMPLEMENTATION

A. General: Implement approved waste management plan. Provide handling, containers, storage, signage, transportation, and other items as required to implement waste management plan during the entire duration of the Contract.

1. Comply with operation, termination, and removal requirements in Division 01 Section "Temporary Facilities and Controls."

B. Waste Management Coordinator: Engage a waste management coordinator to be responsible for implementing, monitoring, and reporting status of waste management work plan.

C. Training: Train workers, subcontractors, and suppliers on proper waste management procedures, as appropriate for the Work.

1. Distribute waste management plan to everyone concerned within three days of submittal return.
2. Distribute waste management plan to entities when they first begin work on-site. Review plan procedures and locations established for salvage, recycling, and disposal.

D. Site Access and Temporary Controls: Conduct waste management operations to ensure minimum interference with roads, streets, walks, walkways, and other adjacent occupied and used facilities.

1. Designate and label specific areas on Project site necessary for separating materials that are to be salvaged, recycled, reused, donated, and sold.
2. Comply with Division 01 Section "Temporary Facilities and Controls" for controlling dust and dirt, environmental protection, and noise control.

3.2 RECYCLING DEMOLITION AND CONSTRUCTION WASTE, GENERAL

A. General: Recycle paper and beverage containers used by on-site workers.

B. Recycling Receivers and Processors: Use only available recycling receivers and processors licensed to do business in the local area.

C. Recycling Incentives: Revenues, savings, rebates, tax credits, and other incentives received for recycling waste materials shall be shared equally by Owner and Contractor.

D. Preparation of Waste: Prepare and maintain recyclable waste materials according to recycling or reuse facility requirements. Maintain materials free of dirt, adhesives, solvents, petroleum contamination, and other substances deleterious to the recycling process.

E. Procedures: Separate recyclable waste from other waste materials, trash, and debris. Separate recyclable waste by type at Project site to the maximum extent practical according to approved construction waste management plan.

© THE ROBINSON GREEN BERETTA CORPORATION – 6456

1. Provide appropriately marked containers or bins for controlling recyclable waste until removed from Project site. Include list of acceptable and unacceptable materials at each container and bin.

    a. Inspect containers and bins for contamination and remove contaminated materials if found.

2. Stockpile processed materials on-site without intermixing with other materials. Place, grade, and shape stockpiles to drain surface water. Cover to prevent windblown dust.
3. Stockpile materials away from construction area. Do not store within drip line of remaining trees.
4. Store components off the ground and protect from the weather.
5. Remove recyclable waste from Owner's property and transport to recycling receiver or processor.

3.3 RECYCLING DEMOLITION WASTE

A. Asphalt Paving: Grind asphalt to maximum 1-1/2-inch (38-mm) size.

1. Crush asphaltic concrete paving and screen to comply with requirements in Division 31 Section "Earth Moving" for use as general fill.

B. Asphalt Paving: Break up and transport paving to asphalt-recycling facility.

3.4 RECYCLING CONSTRUCTION WASTE

A. Packaging:

1. Cardboard and Boxes: Break down packaging into flat sheets. Bundle and store in a dry location.
2. Polystyrene Packaging: Separate and bag materials.
3. Pallets: As much as possible, require deliveries using pallets to remove pallets from Project site. For pallets that remain on-site, break down pallets into component wood pieces and comply with requirements for recycling wood.
4. Crates: Break down crates into component wood pieces and comply with requirements for recycling wood.

B. Wood Materials:

1. Clean Cut-Offs of Lumber: Grind or chip into small pieces.
2. Clean Sawdust: Bag sawdust that does not contain painted or treated wood.

    a. Comply with requirements in Division 32 Section "Plants." for use of clean sawdust as organic mulch.

C. Gypsum Board: Stack large clean pieces on wood pallets or in container and store in a dry location.

1. Clean Gypsum Board: Grind scraps of clean gypsum board using small mobile chipper or hammer mill. Screen out paper after grinding.

© THE ROBINSON GREEN BERETTA CORPORATION – 6456

a. Comply with requirements in Division 32 Section "Plants." for use of clean ground gypsum board as inorganic soil amendment.

3.5 DISPOSAL OF WASTE

A. General: Except for items or materials to be salvaged, recycled, or otherwise reused, remove waste materials from Project site and legally dispose of them in a landfill or incinerator acceptable to authorities having jurisdiction.

1. Except as otherwise specified, do not allow waste materials that are to be disposed of accumulate on-site.
2. Remove and transport debris in a manner that will prevent spillage on adjacent surfaces and areas.

B. Burning: Do not burn waste materials.

C. Burning: Burning of waste materials is permitted only at designated areas on Owner's property, provided required permits are obtained. Provide full-time monitoring for burning materials until fires are extinguished.

D. Disposal: Remove waste materials and dispose of at designated spoil areas on Owner's property.

E. Disposal: Remove waste materials from Owner's property and legally dispose of them.

3.6 FORMS

A. Form CWM-1 for construction waste identification.

B. Form CWM-2 for demolition waste identification.

C. Form CWM-3 for construction waste reduction work plan.

D. Form CWM-4 for demolition waste reduction work plan.

E. Form CWM-5 cost/revenue analysis of construction waste reduction work plan.

F. Form CWM-6 cost/revenue analysis of demolition waste reduction work plan.

G. Form CWM-7 for construction waste

H. Form CWM-8 for demolition waste.

END OF SECTION 01 74 20

© THE ROBINSON GREEN BERETTA CORPORATION – 6456

SECTION 01 77 00 - CLOSEOUT PROCEDURES

PART 1 - GENERAL

1.1 RELATED DOCUMENTS

A. Drawings and general provisions of the Contract, including General and Supplementary Conditions and other Division 01 Specification Sections, apply to this Section.

1.2 SUMMARY

A. Section includes administrative and procedural requirements for contract closeout, including, but not limited to, the following:

1. Substantial Completion procedures.
2. Final completion procedures.
3. Warranties.
4. Final cleaning.
5. Repair of the Work.

B. Related Requirements:
1. Division 01 Section "Execution" for progress cleaning of Project site.
2. Division 01 Section "Project Record Documents" for submitting record Drawings, record Specifications, and record Product Data.
3. Divisions 02 through 32 Sections for specific closeout and special cleaning requirements for the Work in those Sections.

1.3 ACTION SUBMITTALS

A. Product Data: For cleaning agents.

B. Contractor's List of Incomplete Items: Initial submittal at Substantial Completion.

C. Certified List of Incomplete Items: Final submittal at Final Completion.

1.4 CLOSEOUT SUBMITTALS

A. Certificates of Release: From authorities having jurisdiction.

B. Certificate of Insurance: For continuing coverage.

C. Field Report: For pest control inspection.

1.5 MAINTENANCE MATERIAL SUBMITTALS

A. Schedule of Maintenance Material Items: For maintenance material submittal items specified in other Sections.

© THE ROBINSON GREEN BERETTA CORPORATION – 6456

1.6 SUBSTANTIAL COMPLETION PROCEDURES

A. Contractor's List of Incomplete Items: Prepare and submit a list of items to be completed and corrected (Contractor's punch list), indicating the value of each item on the list and reasons why the Work is incomplete.

B. Submittals Prior to Substantial Completion: Complete the following a minimum of 10 days prior to requesting inspection for determining date of Substantial Completion. List items below that are incomplete at time of request.

1. Certificates of Release: Obtain and submit releases from authorities having jurisdiction permitting Owner unrestricted use of the Work and access to services and utilities. Include occupancy permits, operating certificates, and similar releases.
2. Submit closeout submittals specified in other Division 01 Sections, including project record documents, operation and maintenance manuals, final completion construction photographic documentation, damage or settlement surveys, property surveys, and similar final record information.
3. Submit closeout submittals specified in individual Divisions 02 through 33 Sections, including specific warranties, workmanship bonds, maintenance service agreements, final certifications, and similar documents.
4. Submit maintenance material submittals specified in individual Divisions 02 through 33 Sections, including tools, spare parts, extra materials, and similar items, and deliver to location designated by Architect and/or Construction Manager. Label with manufacturer's name and model number where applicable.

   a. Schedule of Predictive and Preventative Maintenance Material Items: Prepare and submit schedule of maintenance material submittal items, including name and quantity of each item and name and number of related Specification Section. Obtain Owner's signature for receipt of submittals.

5. Submit test/adjust/balance records.
6. Submit changeover information related to Owner's occupancy, use, operation, and maintenance.

C. Procedures Prior to Substantial Completion: Complete the following a minimum of 10 days prior to requesting inspection for determining date of Substantial Completion. List items below that are incomplete at time of request.

1. Advise Owner of pending insurance changeover requirements.
2. Make final changeover of permanent locks and deliver keys to Owner. Advise Owner's personnel of changeover in security provisions.
3. Complete startup and testing of systems and equipment.
4. Perform preventive maintenance on equipment used prior to Substantial Completion.
5. Instruct Owner's personnel in operation, adjustment, and maintenance of products, equipment, and systems. Submit demonstration and training video recordings specified in Division 01 Section "Demonstration and Training."
6. Advise Owner of changeover in heat and other utilities.
7. Participate with Owner in conducting inspection and walkthrough with local emergency responders.
8. Terminate and remove temporary facilities from Project site, along with mockups, construction tools, and similar elements.
9. Complete final cleaning requirements, including touchup painting.
10. Touch up and otherwise repair and restore marred exposed finishes to eliminate visual defects.

© THE ROBINSON GREEN BERETTA CORPORATION – 6456

D. Inspection: Submit a written request for inspection to determine Substantial Completion a minimum of 10 days prior to date the work will be completed and ready for final inspection and tests. On receipt of request, Architect and/or Construction Manager will either proceed with inspection or notify Contractor of unfulfilled requirements. Architect will prepare the Certificate of Substantial Completion after inspection or will notify Contractor of items, either on Contractor's list or additional items identified by Architect, that must be completed or corrected before certificate will be issued.

1. Reinspection: Request reinspection when the Work identified in previous inspections as incomplete is completed or corrected.
2. Results of completed inspection will form the basis of requirements for final completion.

1.7 FINAL COMPLETION PROCEDURES

A. Submittals Prior to Final Completion: Before requesting final inspection for determining final completion, complete the following:

1. Submit a final Application for Payment according to Division 01 Section "Payment Procedures."
2. Certified List of Incomplete Items: Submit certified copy of Architect's Substantial Completion inspection list of items to be completed or corrected (punch list), endorsed and dated by Architect. Certified copy of the list shall state that each item has been completed or otherwise resolved for acceptance.
3. Certificate of Insurance: Submit evidence of final, continuing insurance coverage complying with insurance requirements.
4. Submit pest-control final inspection report.

B. Inspection: Submit a written request for final inspection to determine acceptance a minimum of 10 days prior to date the work will be completed and ready for final inspection and tests. On receipt of request, Architect will either proceed with inspection or notify Contractor of unfulfilled requirements. Architect will prepare a final Certificate for Payment after inspection or will notify Contractor of construction that must be completed or corrected before certificate will be issued.

1. Reinspection: Request reinspection when the Work identified in previous inspections as incomplete is completed or corrected.

1.8 LIST OF INCOMPLETE ITEMS (PUNCH LIST)

A. Organization of List: Include name and identification of each space and area affected by construction operations for incomplete items and items needing correction including, if necessary, areas disturbed by Contractor that are outside the limits of construction.

1. Organize list of spaces in sequential order, starting with exterior areas first and proceeding from lowest floor to highest floor.
2. Organize items applying to each space by major element, including categories for ceiling, individual walls, floors, equipment, and building systems.
3. Include the following information at the top of each page:

    a. Project name.
    b. Date.
    c. Name of Architect and/or Construction Manager.
    d. Name of Contractor.
    e. Page number.

© THE ROBINSON GREEN BERETTA CORPORATION – 6456

4. Submit list of incomplete items in the following format:

   a. MS Excel electronic file. Architect will return annotated file.
   b. Three paper copies. Architect will return two copies.

1.9 SUBMITTAL OF PROJECT WARRANTIES

A. Time of Submittal: Submit written warranties on request of Architect for designated portions of the Work where commencement of warranties other than date of Substantial Completion is indicated, or when delay in submittal of warranties might limit Owner's rights under warranty.

B. Partial Occupancy: Submit properly executed warranties within 15 days of completion of designated portions of the Work that are completed and occupied or used by Owner during construction period by separate agreement with Contractor.

C. Organize warranty documents into an orderly sequence based on the table of contents of Project Manual.

   1. Bind warranties and bonds in heavy-duty, three-ring, vinyl-covered, loose-leaf binders, thickness as necessary to accommodate contents, and sized to receive 8-1/2-by-11-inch paper.
   2. Provide heavy paper dividers with plastic-covered tabs for each separate warranty. Mark tab to identify the product or installation. Provide a typed description of the product or installation, including the name of the product and the name, address, and telephone number of Installer.
   3. Identify each binder on the front and spine with the typed or printed title "WARRANTIES," Project name, and name of Contractor.
   4. Warranty Electronic File: Scan warranties and bonds and assemble complete warranty and bond submittal package into a single indexed electronic PDF file with links enabling navigation to each item. Provide bookmarked table of contents at beginning of document.

D. Provide additional copies of each warranty to include in operation and maintenance manuals.

PART 2 - PRODUCTS

2.1 MATERIALS

A. Cleaning Agents: Use cleaning materials and agents recommended by manufacturer or fabricator of the surface to be cleaned. Do not use cleaning agents that are potentially hazardous to health or property or that might damage finished surfaces.

   1. Use cleaning products that comply with Green Seal's GS-37, or if GS-37 is not applicable, use products that comply with the California Code of Regulations maximum allowable VOC levels.

© THE ROBINSON GREEN BERETTA CORPORATION – 6456

PART 3 - EXECUTION

3.1 FINAL CLEANING

A. General: Perform final cleaning. Conduct cleaning and waste-removal operations to comply with local laws and ordinances and Federal and local environmental and antipollution regulations.

B. Cleaning: Employ experienced workers or professional cleaners for final cleaning. Clean each surface or unit to condition expected in an average commercial building cleaning and maintenance program. Comply with manufacturer's written instructions.

1. Complete the following cleaning operations before requesting inspection for certification of Substantial Completion for entire Project or for a designated portion of Project:

a. Clean Project site, yard, and grounds, in areas disturbed by construction activities, including landscape development areas, of rubbish, waste material, litter, and other foreign substances.
b. Sweep paved areas broom clean. Remove petrochemical spills, stains, and other foreign deposits.
c. Rake grounds that are neither planted nor paved to a smooth, even-textured surface.
d. Remove tools, construction equipment, machinery, and surplus material from Project site.
e. Remove snow and ice to provide safe access to building.
f. Clean exposed exterior and interior hard-surfaced finishes to a dirt-free condition, free of stains, films, and similar foreign substances. Avoid disturbing natural weathering of exterior surfaces. Restore reflective surfaces to their original condition.
g. Remove debris and surface dust from limited access spaces, including roofs, plenums, shafts, trenches, equipment vaults, manholes, attics, and similar spaces.
h. Sweep concrete floors broom clean in unoccupied spaces.
i. Vacuum carpet and similar soft surfaces, removing debris and excess nap; clean according to manufacturer's recommendations if visible soil or stains remain.
j. Clean transparent materials, including mirrors and glass in doors and windows. Remove glazing compounds and other noticeable, vision-obscuring materials. Polish mirrors and glass, taking care not to scratch surfaces.
k. Remove labels that are not permanent.
l. Wipe surfaces of mechanical and electrical equipment, elevator equipment, and similar equipment. Remove excess lubrication, paint and mortar droppings, and other foreign substances.
m. Clean plumbing fixtures to a sanitary condition, free of stains, including stains resulting from water exposure.
n. Replace disposable air filters and clean permanent air filters. Clean exposed surfaces of diffusers, registers, and grills.
o. Clean ducts, blowers, and coils if units were operated without filters during construction or that display contamination with particulate matter on inspection.

1) Clean HVAC system in compliance with NADCA Standard 1992-01. Provide written report on completion of cleaning.

p. Clean light fixtures, lamps, globes, and reflectors to function with full efficiency.
q. Leave Project clean and ready for occupancy.

© THE ROBINSON GREEN BERETTA CORPORATION – 6456

C. Pest Control: Comply with pest control requirements in Division 01 Section "Temporary Facilities and Controls." Prepare written report.

D. Construction Waste Disposal: Comply with waste disposal requirements in Division 01 Section "Temporary Facilities and Controls." Division 01 Section "Construction Waste Management and Disposal."

3.2 REPAIR OF THE WORK

A. Complete repair and restoration operations before requesting inspection for determination of Substantial Completion.

B. Repair or remove and replace defective construction. Repairing includes replacing defective parts, refinishing damaged surfaces, touching up with matching materials, and properly adjusting operating equipment. Where damaged or worn items cannot be repaired or restored, provide replacements. Remove and replace operating components that cannot be repaired. Restore damaged construction and permanent facilities used during construction to specified condition.

1. Remove and replace chipped, scratched, and broken glass, reflective surfaces, and other damaged transparent materials.
2. Touch up and otherwise repair and restore marred or exposed finishes and surfaces. Replace finishes and surfaces that that already show evidence of repair or restoration.

   a. Do not paint over "UL" and other required labels and identification, including mechanical and electrical nameplates. Remove paint applied to required labels and identification.

3. Replace parts subject to operating conditions during construction that may impede operation or reduce longevity.
4. Replace burned-out bulbs, bulbs noticeably dimmed by hours of use, and defective and noisy starters in fluorescent and mercury vapor fixtures to comply with requirements for new fixtures.

END OF SECTION 01 77 00

© THE ROBINSON GREEN BERETTA CORPORATION – 6456

SECTION 01 78 20 - OPERATION AND MAINTENANCE DATA

PART 1 - GENERAL

1.1 RELATED DOCUMENTS

A. Drawings and general provisions of the Contract, including General and Supplementary Conditions and other Division 01 Specification Sections, apply to this Section.

1.2 SUMMARY

A. Section includes administrative and procedural requirements for preparing operation and maintenance manuals, including the following:

1. Operation and maintenance documentation directory.
2. Emergency manuals.
3. Operation manuals for systems, subsystems, and equipment.
4. Product maintenance manuals.
5. Systems and equipment maintenance manuals.

B. Related Requirements:
1. Division 01 Section "Submittal Procedures" for submitting copies of submittals for operation and maintenance manuals.
2. Divisions 02 through 32 Sections for specific operation and maintenance manual requirements for the Work in those Sections.

1.3 DEFINITIONS

A. System: An organized collection of parts, equipment, or subsystems united by regular interaction.

B. Subsystem: A portion of a system with characteristics similar to a system.

1.4 CLOSEOUT SUBMITTALS

A. Manual Content: Operations and maintenance manual content is specified in individual Specification Sections to be reviewed at the time of Section submittals. Submit reviewed manual content formatted and organized as required by this Section.

1. Architect will comment on whether content of operations and maintenance submittals are acceptable.
2. Where applicable, clarify and update reviewed manual content to correspond to revisions and field conditions.

B. Format: Submit operations and maintenance manuals in the following format:

1. PDF electronic file. Assemble each manual into a composite electronically indexed file. Submit on digital media acceptable to Architect.

© THE ROBINSON GREEN BERETTA CORPORATION – 6456

a. Name each indexed document file in composite electronic index with applicable item name. Include a complete electronically linked operation and maintenance directory.
b. Enable inserted reviewer comments on draft submittals.

2. One paper copy for Owner. Include a complete operation and maintenance directory. Enclose title pages and directories in clear plastic sleeves.

C. Initial Manual Submittal: Submit draft copy of each manual at least 30 days before commencing demonstration and training. Architect will comment on whether general scope and content of manual are acceptable.

D. Final Manual Submittal: Submit each manual in final form prior to requesting inspection for Substantial Completion and at least 15 days before commencing demonstration and training. Architect may return copy with comments.

1. Correct or revise each manual to comply with Architect's comments. Submit copies of each corrected manual within 15 days of receipt of Architect's comments and prior to commencing demonstration and training.

PART 2 - PRODUCTS

2.1 OPERATION AND MAINTENANCE DOCUMENTATION DIRECTORY

A. Directory: Prepare a single, comprehensive directory of emergency, operation, and maintenance data and materials, listing items and their location to facilitate ready access to desired information. Include a section in the directory for each of the following:

1. List of documents.
2. List of systems.
3. List of equipment.
4. Table of contents.

B. List of Systems and Subsystems: List systems alphabetically. Include references to operation and maintenance manuals that contain information about each system.

C. List of Equipment: List equipment for each system, organized alphabetically by system. For pieces of equipment not part of system, list alphabetically in separate list.

D. Tables of Contents: Include a table of contents for each emergency, operation, and maintenance manual.

E. Identification: In the documentation directory and in each operation and maintenance manual, identify each system, subsystem, and piece of equipment with same designation used in the Contract Documents. If no designation exists, assign a designation according to ASHRAE Guideline 4, "Preparation of Operating and Maintenance Documentation for Building Systems."

© THE ROBINSON GREEN BERETTA CORPORATION – 6456

2.2 REQUIREMENTS FOR EMERGENCY, OPERATION, AND MAINTENANCE MANUALS

A. Organization: Unless otherwise indicated, organize each manual into a separate section for each system and subsystem, and a separate section for each piece of equipment not part of a system. Each manual shall contain the following materials, in the order listed:

1. Title page.
2. Table of contents.
3. Manual contents.

B. Title Page: Include the following information:

1. Subject matter included in manual.
2. Name and address of Project.
3. Name and address of Owner.
4. Date of submittal.
5. Name and contact information for Contractor.
6. Name and contact information for Construction Manager.
7. Name and contact information for Architect.
8. Name and contact information for Commissioning Authority.
9. Names and contact information for major consultants to the Architect that designed the systems contained in the manuals.
10. Cross-reference to related systems in other operation and maintenance manuals.

C. Table of Contents: List each product included in manual, identified by product name, indexed to the content of the volume, and cross-referenced to Specification Section number in Project Manual.

1. If operation or maintenance documentation requires more than one volume to accommodate data, include comprehensive table of contents for all volumes in each volume of the set.

D. Manual Contents: Organize into sets of manageable size. Arrange contents alphabetically by system, subsystem, and equipment. If possible, assemble instructions for subsystems, equipment, and components of one system into a single binder.

E. Manuals, Electronic Files: Submit manuals in the form of a multiple file composite electronic PDF file for each manual type required.

1. Electronic Files: Use electronic files prepared by manufacturer where available. Where scanning of paper documents is required, configure scanned file for minimum readable file size.
2. File Names and Bookmarks: Enable bookmarking of individual documents based on file names. Name document files to correspond to system, subsystem, and equipment names used in manual directory and table of contents. Group documents for each system and subsystem into individual composite bookmarked files, then create composite manual, so that resulting bookmarks reflect the system, subsystem, and equipment names in a readily navigated file tree. Configure electronic manual to display bookmark panel on opening file.

F. Manuals, Paper Copy: Submit manuals in the form of hard copy, bound and labeled volumes.

1. Binders: Heavy-duty, three-ring, vinyl-covered, loose-leaf binders, in thickness necessary to accommodate contents, sized to hold 8-1/2-by-11-inch (215-by-280-mm)

© THE ROBINSON GREEN BERETTA CORPORATION – 6456

paper; with clear plastic sleeve on spine to hold label describing contents and with pockets inside covers to hold folded oversize sheets.

a. If two or more binders are necessary to accommodate data of a system, organize data in each binder into groupings by subsystem and related components. Cross-reference other binders if necessary to provide essential information for proper operation or maintenance of equipment or system.
b. Identify each binder on front and spine, with printed title "OPERATION AND MAINTENANCE MANUAL," Project title or name, and subject matter of contents, and indicate Specification Section number on bottom of spine. Indicate volume number for multiple-volume sets.

2. Dividers: Heavy-paper dividers with plastic-covered tabs for each section of the manual. Mark each tab to indicate contents. Include typed list of products and major components of equipment included in the section on each divider, cross-referenced to Specification Section number and title of Project Manual.
3. Protective Plastic Sleeves: Transparent plastic sleeves designed to enclose diagnostic software storage media for computerized electronic equipment.
4. Supplementary Text: Prepared on 8-1/2-by-11-inch (215-by-280-mm) white bond paper.
5. Drawings: Attach reinforced, punched binder tabs on drawings and bind with text.

a. If oversize drawings are necessary, fold drawings to same size as text pages and use as foldouts.
b. If drawings are too large to be used as foldouts, fold and place drawings in labeled envelopes and bind envelopes in rear of manual. At appropriate locations in manual, insert typewritten pages indicating drawing titles, descriptions of contents, and drawing locations.

2.3 EMERGENCY MANUALS

A. Content: Organize manual into a separate section for each of the following:

1. Type of emergency.
2. Emergency instructions.
3. Emergency procedures.

B. Type of Emergency: Where applicable for each type of emergency indicated below, include instructions and procedures for each system, subsystem, piece of equipment, and component:

1. Fire.
2. Flood.
3. Gas leak.
4. Water leak.
5. Power failure.
6. Water outage.
7. System, subsystem, or equipment failure.
8. Chemical release or spill.

C. Emergency Instructions: Describe and explain warnings, trouble indications, error messages, and similar codes and signals. Include responsibilities of Owner's operating personnel for notification of Installer, supplier, and manufacturer to maintain warranties.

D. Emergency Procedures: Include the following, as applicable:

© THE ROBINSON GREEN BERETTA CORPORATION – 6456

1. Instructions on stopping.
2. Shutdown instructions for each type of emergency.
3. Operating instructions for conditions outside normal operating limits.
4. Required sequences for electric or electronic systems.
5. Special operating instructions and procedures.

2.4 OPERATION MANUALS

A. Content: In addition to requirements in this Section, include operation data required in individual Specification Sections and the following information:

1. System, subsystem, and equipment descriptions. Use designations for systems and equipment indicated on Contract Documents.
2. Performance and design criteria if Contractor has delegated design responsibility.
3. Operating standards.
4. Operating procedures.
5. Operating logs.
6. Wiring diagrams.
7. Control diagrams.
8. Piped system diagrams.
9. Precautions against improper use.
10. License requirements including inspection and renewal dates.

B. Descriptions: Include the following:

1. Product name and model number. Use designations for products indicated on Contract Documents.
2. Manufacturer's name.
3. Equipment identification with serial number of each component.
4. Equipment function.
5. Operating characteristics.
6. Limiting conditions.
7. Performance curves.
8. Engineering data and tests.
9. Complete nomenclature and number of replacement parts.

C. Operating Procedures: Include the following, as applicable:

1. Startup procedures.
2. Equipment or system break-in procedures.
3. Routine and normal operating instructions.
4. Regulation and control procedures.
5. Instructions on stopping.
6. Normal shutdown instructions.
7. Seasonal and weekend operating instructions.
8. Required sequences for electric or electronic systems.
9. Special operating instructions and procedures.

D. Systems and Equipment Controls: Describe the sequence of operation, and diagram controls as installed.

E. Piped Systems: Diagram piping as installed, and identify color-coding where required for identification.

© THE ROBINSON GREEN BERETTA CORPORATION – 6456

2.5 PRODUCT MAINTENANCE MANUALS

A. Content: Organize manual into a separate section for each product, material, and finish. Include source information, product information, maintenance procedures, repair materials and sources, and warranties and bonds, as described below.

B. Source Information: List each product included in manual, identified by product name and arranged to match manual's table of contents. For each product, list name, address, and telephone number of Installer or supplier and maintenance service agent, and cross-reference Specification Section number and title in Project Manual and drawing or schedule designation or identifier where applicable.

C. Product Information: Include the following, as applicable:

1. Product name and model number.
2. Manufacturer's name.
3. Color, pattern, and texture.
4. Material and chemical composition.
5. Reordering information for specially manufactured products.

D. Maintenance Procedures: Include manufacturer's written recommendations and the following:

1. Inspection procedures.
2. Types of cleaning agents to be used and methods of cleaning.
3. List of cleaning agents and methods of cleaning detrimental to product.
4. Schedule for routine cleaning and maintenance.
5. Repair instructions.

E. Repair Materials and Sources: Include lists of materials and local sources of materials and related services.

F. Warranties and Bonds: Include copies of warranties and bonds and lists of circumstances and conditions that would affect validity of warranties or bonds.

1. Include procedures to follow and required notifications for warranty claims.

2.6 SYSTEMS AND EQUIPMENT MAINTENANCE MANUALS

A. Content: For each system, subsystem, and piece of equipment not part of a system, include source information, manufacturers' maintenance documentation, maintenance procedures, maintenance and service schedules, spare parts list and source information, maintenance service contracts, and warranty and bond information, as described below.

B. Source Information: List each system, subsystem, and piece of equipment included in manual, identified by product name and arranged to match manual's table of contents. For each product, list name, address, and telephone number of Installer or supplier and maintenance service agent, and cross-reference Specification Section number and title in Project Manual and drawing or schedule designation or identifier where applicable.

C. Manufacturers' Maintenance Documentation: Manufacturers' maintenance documentation including the following information for each component part or piece of equipment:

1. Standard maintenance instructions and bulletins.

© THE ROBINSON GREEN BERETTA CORPORATION – 6456

2. Drawings, diagrams, and instructions required for maintenance, including disassembly and component removal, replacement, and assembly.
3. Identification and nomenclature of parts and components.
4. List of items recommended to be stocked as spare parts.

D. Maintenance Procedures: Include the following information and items that detail essential maintenance procedures:

1. Test and inspection instructions.
2. Troubleshooting guide.
3. Precautions against improper maintenance.
4. Disassembly; component removal, repair, and replacement; and reassembly instructions.
5. Aligning, adjusting, and checking instructions.
6. Demonstration and training video recording, if available.

E. Maintenance and Service Schedules: Include service and lubrication requirements, list of required lubricants for equipment, and separate schedules for preventive and routine maintenance and service with standard time allotment.

1. Scheduled Maintenance and Service: Tabulate actions for daily, weekly, monthly, quarterly, semiannual, and annual frequencies.
2. Maintenance and Service Record: Include manufacturers' forms for recording maintenance.

F. Spare Parts List and Source Information: Include lists of replacement and repair parts, with parts identified and cross-referenced to manufacturers' maintenance documentation and local sources of maintenance materials and related services.

G. Maintenance Service Contracts: Include copies of maintenance agreements with name and telephone number of service agent.

H. Warranties and Bonds: Include copies of warranties and bonds and lists of circumstances and conditions that would affect validity of warranties or bonds.

1. Include procedures to follow and required notifications for warranty claims.

PART 3 - EXECUTION

3.1 MANUAL PREPARATION

A. Operation and Maintenance Documentation Directory: Prepare a separate manual that provides an organized reference to emergency, operation, and maintenance manuals.

B. Emergency Manual: Assemble a complete set of emergency information indicating procedures for use by emergency personnel and by Owner's operating personnel for types of emergencies indicated.

C. Product Maintenance Manual: Assemble a complete set of maintenance data indicating care and maintenance of each product, material, and finish incorporated into the Work.

D. Operation and Maintenance Manuals: Assemble a complete set of operation and maintenance data indicating operation and maintenance of each system, subsystem, and piece of equipment not part of a system.

© THE ROBINSON GREEN BERETTA CORPORATION – 6456

1. Engage a factory-authorized service representative to assemble and prepare information for each system, subsystem, and piece of equipment not part of a system.
2. Prepare a separate manual for each system and subsystem, in the form of an instructional manual for use by Owner's operating personnel.

E. Manufacturers' Data: Where manuals contain manufacturers' standard printed data, include only sheets pertinent to product or component installed. Mark each sheet to identify each product or component incorporated into the Work. If data include more than one item in a tabular format, identify each item using appropriate references from the Contract Documents. Identify data applicable to the Work and delete references to information not applicable.

1. Prepare supplementary text if manufacturers' standard printed data are not available and where the information is necessary for proper operation and maintenance of equipment or systems.

F. Drawings: Prepare drawings supplementing manufacturers' printed data to illustrate the relationship of component parts of equipment and systems and to illustrate control sequence and flow diagrams. Coordinate these drawings with information contained in record Drawings to ensure correct illustration of completed installation.

1. Do not use original project record documents as part of operation and maintenance manuals.
2. Comply with requirements of newly prepared record Drawings in Division 01 Section "Project Record Documents."

G. Comply with Division 01 Section "Closeout Procedures" for schedule for submitting operation and maintenance documentation.

END OF SECTION 01 78 20

© THE ROBINSON GREEN BERETTA CORPORATION – 6456

SECTION 01 78 30 - PROJECT RECORD DOCUMENTS

PART 1 - GENERAL

1.1 RELATED DOCUMENTS

A. Drawings and general provisions of the Contract, including General and Supplementary Conditions and other Division 01 Specification Sections, apply to this Section.

1.2 SUMMARY

A. Section includes administrative and procedural requirements for project record documents, including the following:

1. Record Drawings.
2. Record Specifications.
3. Record Product Data.
4. Commissioning documentation
5. Miscellaneous record submittals.

B. Related Requirements:
1. Division 01 Section "Execution" for final property survey.
2. Division 01 Section "Closeout Procedures" for general closeout procedures.
3. Division 01 Section "Operation and Maintenance Data" for operation and maintenance manual requirements.
4. Divisions 02 through 32 Sections for specific requirements for project record documents of the Work in those Sections.

1.3 CLOSEOUT SUBMITTALS

A. Record Drawings: Comply with the following:

1. Number of Copies: Submit one set(s) of marked-up record prints.
2. Number of Copies: Submit copies of record Drawings as follows:

a. Initial Submittal:
1) Submit PDF electronic files of scanned record prints and one Submit record digital data files.
2) Architect will indicate whether general scope of changes, additional information recorded, and quality of drafting are acceptable.

b. Final Submittal:
1) Submit PDF electronic files of scanned record prints and three set(s) of prints.
2) Print each drawing, whether or not changes and additional information were recorded.
3) Submit record digital data files of record digital data file plots.
4) Plot each drawing file, whether or not changes and additional information were recorded.

© THE ROBINSON GREEN BERETTA CORPORATION – 6456

B. Record Specifications: Submit annotated PDF electronic files of Project's Specifications, including addenda and contract modifications.

C. Miscellaneous Record Submittals: See other Specification Sections for miscellaneous record-keeping requirements and submittals in connection with various construction activities.

D. Reports: Submit written report [weekly] indicating items incorporated into project record documents concurrent with progress of the Work, including revisions, concealed conditions, field changes, product selections, and other notations incorporated.

PART 2 - PRODUCTS

2.1 RECORD DRAWINGS

A. Record Prints: Maintain one set of marked-up paper copies of the Contract Drawings and Shop Drawings, incorporating new and revised drawings as modifications are issued.

1. Preparation: Mark record prints to show the actual installation where installation varies from that shown originally. Require individual or entity who obtained record data, whether individual or entity is Installer, subcontractor, or similar entity, to provide information for preparation of corresponding marked-up record prints.

    a. Give particular attention to information on concealed elements that would be difficult to identify or measure and record later.
    b. Accurately record information in an acceptable drawing technique.
    c. Record data as soon as possible after obtaining it.
    d. Record and check the markup before enclosing concealed installations.
    e. Cross-reference record prints to corresponding archive photographic documentation.

2. Content: Types of items requiring marking include, but are not limited to, the following:

    a. Dimensional changes to Drawings.
    b. Revisions to details shown on Drawings.
    c. Depths of foundations below first floor.
    d. Locations and depths of underground utilities.
    e. Revisions to routing of piping and conduits.
    f. Revisions to electrical circuitry.
    g. Actual equipment locations.
    h. Duct size and routing.
    i. Locations of concealed internal utilities.
    j. Changes made by Change Order or Construction Change Directive.
    k. Changes made following Architect's written orders.
    l. Details not on the original Contract Drawings.
    m. Field records for variable and concealed conditions.
    n. Record information on the Work that is shown only schematically.

3. Mark the Contract Drawings and Shop Drawings completely and accurately. Use personnel proficient at recording graphic information in production of marked-up record prints.
4. Mark record sets with erasable, red-colored pencil. Use other colors to distinguish between changes for different categories of the Work at same location.

© THE ROBINSON GREEN BERETTA CORPORATION – 6456

5. Mark important additional information that was either shown schematically or omitted from original Drawings.
6. Note Construction Change Directive numbers, alternate numbers, Change Order numbers, and similar identification, where applicable.

B. Record Digital Data Files: Immediately before inspection for Certificate of Substantial Completion, review marked-up record prints with Architect. When authorized, prepare a full set of corrected digital data files of the Contract Drawings, as follows:

1. Format: Same digital data software program, version, and operating system as the original Contract Drawings.
2. Incorporate changes and additional information previously marked on record prints. Delete, redraw, and add details and notations where applicable.
3. Refer instances of uncertainty to Architect for resolution.
4. Architect will furnish Contractor one set of digital data files of the Contract Drawings for use in recording information.

    a. See Division 01 Section "Submittal Procedures" for requirements related to use of Architect's digital data files.
    b. Architect will provide data file layer information. Record markups in separate layers.

C. Newly Prepared Record Drawings: Prepare new Drawings instead of preparing record Drawings where Architect determines that neither the original Contract Drawings nor Shop Drawings are suitable to show actual installation.

1. New Drawings may be required when a Change Order is issued as a result of accepting an alternate, substitution, or other modification.
2. Consult Architect for proper scale and scope of detailing and notations required to record the actual physical installation and its relation to other construction. Integrate newly prepared record Drawings into record Drawing sets; comply with procedures for formatting, organizing, copying, binding, and submitting.

D. Format: Identify and date each record Drawing; include the designation "PROJECT RECORD DRAWING" in a prominent location.

1. Record Prints: Organize record prints and newly prepared record Drawings into manageable sets. Bind each set with durable paper cover sheets. Include identification on cover sheets.
2. Format: Annotated PDF electronic file with comment function enabled.
3. Record Digital Data Files: Organize digital data information into separate electronic files that correspond to each sheet of the Contract Drawings. Name each file with the sheet identification. Include identification in each digital data file.
4. Identification: As follows:

    a. Project name.
    b. Date.
    c. Designation "PROJECT RECORD DRAWINGS."
    d. Name of Architect.
    e. Name of Contractor.

© THE ROBINSON GREEN BERETTA CORPORATION – 6456

2.2 RECORD SPECIFICATIONS

A. Preparation: Mark Specifications to indicate the actual product installation where installation varies from that indicated in Specifications, addenda, and contract modifications.

1. Give particular attention to information on concealed products and installations that cannot be readily identified and recorded later.
2. Mark copy with the proprietary name and model number of products, materials, and equipment furnished, including substitutions and product options selected.
3. Record the name of manufacturer, supplier, Installer, and other information necessary to provide a record of selections made.
4. For each principal product, indicate whether record Product Data has been submitted in operation and maintenance manuals instead of submitted as record Product Data.
5. Note related Change Orders and record Drawings where applicable.

B. Format: Submit record Specifications as annotated PDF electronic file.

2.3 RECORD PRODUCT DATA

A. Preparation: Mark Product Data to indicate the actual product installation where installation varies substantially from that indicated in Product Data submittal.

1. Give particular attention to information on concealed products and installations that cannot be readily identified and recorded later.
2. Include significant changes in the product delivered to Project site and changes in manufacturer's written instructions for installation.
3. Note related Change Orders and record Drawings where applicable.

B. Format: Submit record Product Data as annotated PDF electronic file.

1. Include record Product Data directory organized by Specification Section number and title, electronically linked to each item of record Product Data.

2.4 MISCELLANEOUS RECORD SUBMITTALS

A. Assemble miscellaneous records required by other Specification Sections for miscellaneous record keeping and submittal in connection with actual performance of the Work. Bind or file miscellaneous records and identify each, ready for continued use and reference.

B. Format: Submit miscellaneous record submittals as PDF electronic file.

1. Include miscellaneous record submittals directory organized by Specification Section number and title, electronically linked to each item of miscellaneous record submittals.

PART 3 - EXECUTION

3.1 RECORDING AND MAINTENANCE

A. Recording: Maintain one copy of each submittal during the construction period for project record document purposes. Post changes and revisions to project record documents as they occur; do not wait until end of Project.

© THE ROBINSON GREEN BERETTA CORPORATION – 6456

B. Maintenance of Record Documents and Samples: Store record documents and Samples in the field office apart from the Contract Documents used for construction. Do not use project record documents for construction purposes. Maintain record documents in good order and in a clean, dry, legible condition, protected from deterioration and loss. Provide access to project record documents for Architect's reference during normal working hours.

END OF SECTION 01 78 30

© THE ROBINSON GREEN BERETTA CORPORATION – 6456

SECTION 03 30 00 – CAST-IN-PLACE CONCRETE

PART 1 - GENERAL

1.1 RELATED DOCUMENTS

A. Drawings and general provisions of the Contract, including General and Supplementary Conditions and Division 1 Specification Sections, apply to this Section. In accordance with Section 601 of the RIDOT Standard Specifications.

1.2 SUMMARY

A. Section includes:

1. Footings.
2. Foundation walls.
3. Piers.

B. Related Sections include the following:

1. Division 2 Section "Earthwork" for drainage fill under slabs-on-grade.
2. Division 2 Section "Cement Concrete Pavement" for concrete pavement and walks.

1.3 SUBMITTALS

A. Product Data: For each type of product indicated.

B. Retain subparagraph below if fly ash, ground granulated blast-furnace slag, silica fume, or other materials are used as portland cement replacements for LEED-NC Credit ID 1.1. To achieve this credit, replacement materials must be substituted for at least 40 percent of the portland cement that would otherwise be used.

C. Steel Reinforcement Shop Drawings: Placing drawings that detail fabrication, bending, and placement. Include bar sizes, lengths, material, grade, bar schedules, stirrup spacing, bent bar diagrams, bar arrangement, splices and laps, mechanical connections, tie spacing, hoop spacing, and supports for concrete reinforcement.

D. Qualification Data: For Installer and manufacturer.

E. Material Test Reports: For the following, from a qualified testing agency, indicating compliance with requirements:

1. Aggregates. Include service record data indicating absence of deleterious expansion of concrete due to alkali aggregate reactivity.

F. Material Certificates: For each of the following, signed by manufacturers:

1. Form-release agents.

2. Steel reinforcement and accessories.
3. Curing compounds.
4. Floor and slab treatments.
5. Bonding agents.
6. Adhesives.
7. Semi rigid joint filler.
8. Joint-filler strips.
9. Repair materials.

G. Field quality-control test and inspection reports.

1.4 QUALITY ASSURANCE

A. Installer Qualifications: A qualified installer who employs on Project personnel qualified as ACI-certified Flatwork Technician and Finisher and a supervisor who is an ACI-certified Concrete Flatwork Technician.

B. Manufacturer Qualifications: A firm experienced in manufacturing ready-mixed concrete products and that complies with ASTM C 94/C 94M requirements for production facilities and equipment. All plants should be RIDOT App

1. Manufacturer certified according to NRMCA's "Certification of Ready Mixed Concrete Production Facilities."

C. Testing Agency Qualifications: An independent agency, acceptable to authorities having jurisdiction, qualified according to ASTM C 1077 and ASTM E 329 for testing indicated, as documented according to ASTM E 548.

1. Personnel conducting field tests shall be certified as ACI Concrete Field Testing Technician, Grade 1, according to ACI CP-01 or an equivalent certification program.
2. Personnel performing laboratory tests shall be ACI-certified Concrete Strength Testing Technician and Concrete Laboratory Testing Technician - Grade I. Testing Agency laboratory supervisor shall be an ACI-certified Concrete Laboratory Testing Technician - Grade II.

D. Source Limitations: Obtain each type or class of cementitious material of the same brand from the same manufacturer's plant, obtain aggregate from one source, and obtain admixtures through one source from a single manufacturer.

E. ACI Publications: Comply with the following unless modified by requirements in the Contract Documents:

1. ACI 301, "Specification for Structural Concrete."
2. ACI 117, "Specifications for Tolerances for Concrete Construction and Materials."

F. Concrete Testing Service: Engage a qualified independent testing agency to perform material evaluation tests.

1.5 DELIVERY, STORAGE, AND HANDLING

A. Steel Reinforcement: Deliver, store, and handle steel reinforcement to prevent bending and damage.

PART 2 - PRODUCTS

2.1 MANUFACTURERS

A. In other Part 2 articles where titles below introduce lists, the following requirements apply to product selection:

1. Available Products: Subject to compliance with requirements, products that may be incorporated into the Work include, but are not limited to, products specified.
2. Available Manufacturers: Subject to compliance with requirements, manufacturers offering products that may be incorporated into the Work include, but are not limited to, manufacturers specified.

2.2 FORM-FACING MATERIALS

A. Rough-Formed Finished Concrete: Plywood, lumber, metal, or another approved material. Provide lumber dressed on at least two edges and one side for tight fit.

B. Form-Release Agent: Commercially formulated form-release agent that will not bond with, stain, or adversely affect concrete surfaces and will not impair subsequent treatments of concrete surfaces.

1. Formulate form-release agent with rust inhibitor for steel form-facing materials.

C. Form Ties: Factory-fabricated, removable or snap-off metal or glass-fiber-reinforced plastic form ties designed to resist lateral pressure of fresh concrete on forms and to prevent spalling of concrete on removal.

1. Furnish units that will leave no corrodible metal closer than 1 inch (25 mm) to the plane of exposed concrete surface.
2. Furnish ties that, when removed, will leave holes no larger than 1 inch (25 mm) in diameter in concrete surface.

2.3 STEEL REINFORCEMENT

A. Reinforcing Bars: ASTM A767 Galvanized.
1. Furnish ties that, when removed, will leave holes no larger than 1 inch (25 mm) in diameter in concrete surface.

2.4 REINFORCEMENT ACCESSORIES

A. Bar Supports: Bolsters, chairs, spacers, and other devices for spacing, supporting, and fastening reinforcing bars and welded wire reinforcement in place. Manufacture bar supports from steel wire, plastic, or precast concrete according to CRSI's "Manual of Standard Practice," of greater compressive strength than concrete and as follows:

1. For concrete surfaces exposed to view where legs of wire bar supports contact forms, use CRSI Class 1 plastic-protected steel wire or CRSI Class 2 stainless-steel bar supports.

2.5 ADMIXTURES

A. Air-Entraining Admixture: ASTM C 260.

B. Chemical Admixtures: Provide admixtures certified by manufacturer to be compatible with other admixtures and that will not contribute water-soluble chloride ions exceeding those permitted in hardened concrete. Do not use calcium chloride or admixtures containing calcium chloride.

1. Water-Reducing Admixture: ASTM C 494/C 494M, Type A.
2. Retarding Admixture: ASTM C 494/C 494M, Type B.
3. Water-Reducing and Retarding Admixture: ASTM C 494/C 494M, Type D.
4. High-Range, Water-Reducing Admixture: ASTM C 494/C 494M.
5. Plasticizing and Retarding Admixture: ASTM C 1017/C 1017M, Type II.
6. Corrosion-Inhibiting Admixture: ASTM C494/C494M.

C. Non-Set-Accelerating Corrosion-Inhibiting Admixture: Commercially formulated, non-set-accelerating, anodic inhibitor or mixed cathodic and anodic inhibitor; capable of forming a protective barrier and minimizing chloride reactions with steel reinforcement in concrete.

1. Available Products

a. BASF Corporation: Rheocrete 222.
b. Euclid Chemical Company; Eucon CIA.
c. SIKA Corporation; FerroGard 901.
d. W.R. Grace & Co.; DCI-S.

D. Granular Fill: Clean mixture of crushed stone or crushed or uncrushed gravel; ASTM D 448, Size 57, with 100 percent passing a 1-1/2-inch (37.5-mm) sieve and 0 to 5 percent passing a No. 8 (2.36-mm) sieve.

2.6 CURING MATERIALS

A. Clear, Membrane-Forming Curing and Sealing Compound:

1. Available Products:
   a. SURTREAT or approved equal.

2.7 RELATED MATERIALS

A. Expansion- and Isolation-Joint-Filler Strips: ASTM D 1751, asphalt-saturated cellulosic fiber.

B. Epoxy Bonding Adhesive: ASTM C 881, two-component epoxy resin, capable of humid curing and bonding to damp surfaces, of class suitable for application temperature and of grade to suit requirements, and as follows:

1. Types IV and V, load bearing, for bonding hardened or freshly mixed concrete to hardened concrete.

2.8 REPAIR MATERIALS

A. Repair Underlayment: Cement-based, polymer-modified, self-leveling product that can be applied in thicknesses from 1/8 inch (3.2 mm) and that can be feathered at edges to match adjacent floor elevations.

1. Cement Binder: ASTM C 150, portland cement or hydraulic or blended hydraulic cement as defined in ASTM C 219.
2. Primer: Product of underlayment manufacturer recommended for substrate, conditions, and application.
3. Aggregate: Well-graded, washed gravel, 1/8 to 1/4 inch (3.2 to 6 mm) or coarse sand as recommended by underlayment manufacturer.
4. Compressive Strength: Not less than 4100 psi (29 MPa) at 28 days when tested according to ASTM C 109/C 109M.

2.9 CONCRETE MIXTURES FOR BUILDING ELEMENTS

A. Exterior Concrete and Concrete Exposed to Freezing Temperatures

1. Minimum Compressive Strength: Class XX ¾”, 4000 psi (27.6 MPa) at 28 days.
2. Maximum Water-Cementitious Materials Ratio: 0.42.
3. Slump Limit: 2” – 9” for Slump per RIDOT Specification
4. Air Content: 5 – 9% entrained air per RIDOT Specifications

2.10 FABRICATING REINFORCEMENT

A. Fabricate steel reinforcement according to CRSI's "Manual of Standard Practice."

2.11 CONCRETE MIXING

A. Ready-Mixed Concrete: Measure, batch, mix, and deliver concrete according to ASTM C 94/C 94M, and furnish batch ticket information.

1. When air temperature is between 85 and 90 deg F (30 and 32 deg C), reduce mixing and delivery time from 1-1/2 hours to 75 minutes; when air temperature is above 90 deg F (32 deg C), reduce mixing and delivery time to 60 minutes.

B. Project-Site Mixing: Measure, batch, and mix concrete materials and concrete according to ASTM C 94/C 94M. Mix concrete materials in appropriate drum-type batch machine mixer.

1. For mixer capacity of 1 cu. yd. (0.76 cu. m) or smaller, continue mixing at least 1-1/2 minutes, but not more than 5 minutes after ingredients are in mixer, before any part of batch is released.
2. For mixer capacity larger than 1 cu. yd. (0.76 cu. m), increase mixing time by 15 seconds for each additional 1 cu. yd. (0.76 cu. m).
3. Provide batch ticket for each batch discharged and used in the Work, indicating Project identification name and number, date, mixture type, mixture time, quantity, and amount of water added. Record approximate location of final deposit in structure.

PART 3 - EXECUTION

3.1 FORMWORK

A. Design, erect, brace, and maintain formwork, according to ACI 301, to support lateral, static, and dynamic loads, and construction loads that might be applied, until structure can support such loads.

B. Construct formwork so concrete members and structures are of size, shape, alignment, elevation, and position indicated, within tolerance limits of ACI 117.

C. Limit concrete surface irregularities, designated by ACI 347R as abrupt or gradual, as follows:

1. Class A, 1/8 inch (3.2 mm) for smooth-formed finished surfaces.
2. Class B, 1/4 inch (6 mm) for rough-formed finished surfaces.

D. Construct forms tight enough to prevent loss of concrete mortar.

E. Fabricate forms for easy removal without hammering or prying against concrete surfaces. Provide crush or wrecking plates where stripping may damage cast concrete surfaces. Provide top forms for inclined surfaces steeper than 1.5 horizontal to 1 vertical.

1. Install keyways, reglets, recesses, and the like, for easy removal.
2. Do not use rust-stained steel form-facing material.

F. Provide temporary openings for cleanouts and inspection ports where interior area of formwork is inaccessible. Close openings with panels tightly fitted to forms and securely braced to prevent loss of concrete mortar. Locate temporary openings in forms at inconspicuous locations.

G. Clean forms and adjacent surfaces to receive concrete. Remove chips, wood, sawdust, dirt, and other debris just before placing concrete.

H. Retighten forms and bracing before placing concrete, as required, to prevent mortar leaks and maintain proper alignment.

I. Coat contact surfaces of forms with form-release agent, according to manufacturer's written instructions, before placing reinforcement.

3.2 EMBEDDED ITEMS

A. Place and secure anchorage devices and other embedded items required for adjoining work that is attached to or supported by cast-in-place concrete. Use setting drawings, templates, diagrams, instructions, and directions furnished with items to be embedded.

1. Install anchor rods, accurately located, to elevations required and complying with tolerances in Section 7.5 of AISC's "Code of Standard Practice for Steel Buildings and Bridges."

3.3 STEEL REINFORCEMENT

A. General: Comply with CRSI's "Manual of Standard Practice" for placing reinforcement.

B. Clean galvanized reinforcement of earth, ice, and other foreign materials that would reduce bond to concrete.

C. Accurately position, support, and secure reinforcement against displacement. Locate and support reinforcement with bar supports to maintain minimum concrete cover. Do not tack weld crossing reinforcing bars.

3.4 CONCRETE PLACEMENT

A. Before placing concrete, verify that installation of formwork, reinforcement, and embedded items is complete and that required inspections have been performed.

B. Do not add water to concrete during delivery, at Project site, or during placement.

C. Before test sampling and placing concrete, water may be added at Project site, subject to limitations of ACI 301.

1. Do not add water to concrete after adding high-range water-reducing admixtures to mixture.

D. Deposit concrete continuously in one layer or in horizontal layers of such thickness that no new concrete will be placed on concrete that has hardened enough to cause seams or planes of weakness. If a section cannot be placed continuously, provide construction joints as indicated. Deposit concrete to avoid segregation.

1. Deposit concrete in horizontal layers of depth to not exceed formwork design pressures and in a manner to avoid inclined construction joints.
2. Consolidate placed concrete with mechanical vibrating equipment according to ACI 301.
3. Do not use vibrators to transport concrete inside forms. Insert and withdraw vibrators vertically at uniformly spaced locations to rapidly penetrate placed layer and at least 6 inches (150 mm) into preceding layer. Do not insert vibrators into lower layers of concrete that have begun to lose plasticity. At each insertion, limit duration of vibration to time necessary to consolidate concrete and complete embedment of reinforcement and other embedded items without causing mixture constituents to segregate.

E. Cold-Weather Placement: Comply with ACI 306.1 and as follows. Protect concrete work from physical damage or reduced strength that could be caused by frost, freezing actions, or low temperatures.

1. When average high and low temperature is expected to fall below 40 deg F (4.4 deg C) for three successive days, maintain delivered concrete mixture temperature within the temperature range required by ACI 301.
2. Do not use frozen materials or materials containing ice or snow. Do not place concrete on frozen subgrade or on subgrade containing frozen materials.
3. Do not use calcium chloride, salt, or other materials containing antifreeze agents or chemical accelerators unless otherwise specified and approved in mixture designs.

F. Hot-Weather Placement: Comply with ACI 301 and as follows:

1. Maintain concrete temperature below 90 deg F (32 deg C) at time of placement. Chilled mixing water or chopped ice may be used to control temperature, provided water equivalent of ice is calculated to total amount of mixing water. Using liquid nitrogen to cool concrete is Contractor's option.
2. Fog-spray forms, steel reinforcement, and subgrade just before placing concrete. Keep subgrade uniformly moist without standing water, soft spots, or dry areas.

3.5 FINISHING FORMED SURFACES

A. Rough-Formed Finish: As-cast concrete texture imparted by form-facing material with tie holes and defects repaired and patched. Remove fins and other projections that exceed specified limits on formed-surface irregularities.

1. Apply to concrete surfaces not exposed to public view.

B. Related Unformed Surfaces: At tops of walls, horizontal offsets, and similar unformed surfaces adjacent to formed surfaces, strike off smooth and finish with a texture matching adjacent formed surfaces. Continue final surface treatment of formed surfaces uniformly across adjacent unformed surfaces, unless otherwise indicated.

3.6 MISCELLANEOUS CONCRETE ITEMS

A. Filling In: Fill in holes and openings left in concrete structures, unless otherwise indicated, after work of other trades is in place. Mix, place, and cure concrete, as specified, to blend with in-place construction. Provide other miscellaneous concrete filling indicated or required to complete the Work.

B. Equipment Bases and Foundations: Provide machine and equipment bases and foundations as shown on Drawings. Set anchor bolts for machines and equipment at correct elevations, complying with diagrams or templates from manufacturer furnishing machines and equipment.

3.7 CONCRETE PROTECTING AND CURING

A. General: Protect freshly placed concrete from premature drying and excessive cold or hot temperatures. Comply with ACI 306.1 for cold-weather protection and ACI 301 for hot-weather protection during curing.

B. Evaporation Retarder: Apply evaporation retarder to unformed concrete surfaces if hot, dry, or windy conditions cause moisture loss approaching 0.2 lb/sq. ft. x h (1 kg/sq. m x h) before and during finishing operations. Apply according to manufacturer's written instructions after placing, screeding, and bull floating or darbying concrete, but before float finishing.

C. Formed Surfaces: Cure formed concrete surfaces, including underside of beams, supported slabs, and other similar surfaces. If forms remain during curing period, moist cure after loosening forms. If removing forms before end of curing period, continue curing for the remainder of the curing period.

D. Unformed Surfaces: Begin curing immediately after finishing concrete. Cure unformed surfaces, including floors and slabs, concrete floor toppings, and other surfaces.

E. Cure concrete according to ACI 308.1, by one or a combination of the following methods:

1. Moisture Curing: Keep surfaces continuously moist for not less than seven days with the following materials:

   a. Water.
   b. Continuous water-fog spray.
   c. Absorptive cover, water saturated, and kept continuously wet. Cover concrete surfaces and edges with 12-inch (300-mm) lap over adjacent absorptive covers.

2. Moisture-Retaining-Cover Curing: Cover concrete surfaces with moisture-retaining cover for curing concrete, placed in widest practicable width, with sides and ends lapped at least 12 inches (300 mm), and sealed by waterproof tape or adhesive. Cure for not less than seven days. Immediately repair any holes or tears during curing period using cover material and waterproof tape.

   a. Moisture cure or use moisture-retaining covers to cure concrete surfaces to receive floor coverings.
   b. Moisture cure or use moisture-retaining covers to cure concrete surfaces to receive penetrating liquid floor treatments.
   c. Cure concrete surfaces to receive floor coverings with either a moisture-retaining cover or a curing compound that the manufacturer certifies will not interfere with bonding of floor covering used on Project..

3. Curing and Sealing Compound: Apply uniformly to floors and slabs indicated in a continuous operation by power spray or roller according to manufacturer's written instructions. Recoat areas subjected to heavy rainfall within three hours after initial application. Repeat process 24 hours later and apply a second coat. Maintain continuity of coating and repair damage during curing period.

3.8 JOINT FILLING

A. Prepare, clean, and install joint filler according to manufacturer's written instructions.

   1. Do not fill joints until construction traffic has permanently ceased.

B. Remove dirt, debris, saw cuttings, curing compounds, and sealers from joints; leave contact faces of joint clean and dry.

C. Install semi rigid joint filler full depth in saw-cut joints and at least 2 inches (50 mm) deep in formed joints. Overfill joint and trim joint filler flush with top of joint after hardening.

3.9 CONCRETE SURFACE REPAIRS

A. Defective Concrete: Repair and patch defective areas with RIDOT Approved products only.

B. Patching Mortar: Mix dry-pack patching mortar, consisting of one part portland cement to two and one-half parts fine aggregate passing a No. 16 (1.18-mm) sieve, using only enough water for handling and placing.

C. Repairing Formed Surfaces: Surface defects include color and texture irregularities, cracks, spalls, air bubbles, honeycombs, rock pockets, fins and other projections on the surface, and stains and other discolorations that cannot be removed by cleaning.

1. Immediately after form removal, cut out honeycombs, rock pockets, and voids more than 1/2 inch (13 mm) in any dimension in solid concrete, but not less than 1 inch (25 mm) in depth. Make edges of cuts perpendicular to concrete surface. Clean, dampen with water, and brush-coat holes and voids with bonding agent. Fill and compact with patching mortar before bonding agent has dried. Fill form-tie voids with patching mortar or cone plugs secured in place with bonding agent.
2. Repair defects on surfaces exposed to view by blending white portland cement and standard portland cement so that, when dry, patching mortar will match surrounding color. Patch a test area at inconspicuous locations to verify mixture and color match before proceeding with patching. Compact mortar in place and strike off slightly higher than surrounding surface.
3. Repair defects on concealed formed surfaces that affect concrete's durability and structural performance as determined by Architect.

D. Repairing Unformed Surfaces: Test unformed surfaces, such as floors and slabs, for finish and verify surface tolerances specified for each surface. Correct low and high areas. Test surfaces sloped to drain for trueness of slope and smoothness; use a sloped template.

1. Repair finished surfaces containing defects. Surface defects include spalls, popouts, honeycombs, rock pockets, crazing and cracks in excess of 0.01 inch (0.25 mm) wide or that penetrate to reinforcement or completely through unreinforced sections regardless of width, and other objectionable conditions.
2. After concrete has cured at least 14 days, correct high areas by grinding.
3. Correct localized low areas during or immediately after completing surface finishing operations by cutting out low areas and replacing with patching mortar. Finish repaired areas to blend into adjacent concrete.
4. Correct other low areas scheduled to receive floor coverings with a repair underlayment. Prepare, mix, and apply repair underlayment and primer according to manufacturer's written instructions to produce a smooth, uniform, plane, and level surface. Feather edges to match adjacent floor elevations.
5. Correct other low areas scheduled to remain exposed with a repair topping. Cut out low areas to ensure a minimum repair topping depth of 1/4 inch (6 mm) to match adjacent floor elevations. Prepare, mix, and apply repair topping and primer according to manufacturer's written instructions to produce a smooth, uniform, plane, and level surface.
6. Repair defective areas, except random cracks and single holes 1 inch (25 mm) or less in diameter, by cutting out and replacing with fresh concrete. Remove defective areas with clean, square cuts and expose steel reinforcement with at least a 3/4-inch (19-mm) clearance all around. Dampen concrete surfaces in contact with patching concrete and apply bonding agent. Mix patching concrete of same materials and mixture as original concrete except without coarse aggregate. Place, compact, and finish to blend with adjacent finished concrete. Cure in same manner as adjacent concrete.
7. Repair random cracks and single holes 1 inch (25 mm) or less in diameter with patching mortar. Groove top of cracks and cut out holes to sound concrete and clean off dust, dirt, and loose particles. Dampen cleaned concrete surfaces and apply bonding agent. Place patching mortar before bonding agent has dried. Compact patching mortar and finish to match adjacent concrete. Keep patched area continuously moist for at least 72 hours.

E. Perform structural repairs of concrete, subject to Architect's approval, using epoxy adhesive and patching mortar.

F. Repair materials and installation not specified above may be used, subject to Architect's approval.

3.10 FIELD QUALITY CONTROL

A. Testing and Inspecting: Engage a qualified testing and inspecting agency to perform tests and inspections and to submit reports.

B. Inspections:

1. Steel reinforcement placement.
2. Steel reinforcement welding.
3. Headed bolts and studs.
4. Verification of use of required design mixture.
5. Concrete placement, including conveying and depositing.
6. Curing procedures and maintenance of curing temperature.
7. Verification of concrete strength before removal of shores and forms from beams and slabs.

C. Concrete Tests: Testing of composite samples of fresh concrete obtained according to ASTM C 172 shall be performed according to the following requirements:

1. Testing Frequency: Obtain one composite sample for each day's pour of each concrete mixture exceeding 5 cu. yd. (4 cu. m), but less than 25 cu. yd. (19 cu. m), plus one set for each additional 50 cu. yd. (38 cu. m) or fraction thereof.

2. Slump: ASTM C 143/C 143M; one test at point of placement for each composite sample, but not less than one test for each day's pour of each concrete mixture. Perform additional tests when concrete consistency appears to change.
3. Air Content: ASTM C 231, pressure method, for normal-weight concrete; one test for each composite sample, but not less than one test for each day's pour of each concrete mixture.
4. Concrete Temperature: ASTM C 1064/C 1064M; one test hourly when air temperature is 40 deg F (4.4 deg C) and below and when 80 deg F (27 deg C) and above, and one test for each composite sample.
5. Unit Weight: Concrete per RIDOT Standards
6. Compression Test Specimens: ASTM C 31/C 31M.

   a. Cast and laboratory cure four standard cylinder specimens for each composite sample.

7. Compressive-Strength Tests: ASTM C 39/C 39M; test one laboratory-cured specimen at 7 days and three specimens at 28 days.
   a. A compressive-strength test shall be the average compressive strength from a set of two specimens obtained from same composite sample and tested at age indicated.

8. When strength of field-cured cylinders is less than 85 percent of companion laboratory-cured cylinders, Contractor shall evaluate operations and provide corrective procedures for protecting and curing in-place concrete.
9. Strength of each concrete mixture will be satisfactory if every average of any three consecutive compressive-strength tests equals or exceeds specified compressive strength and no compressive-strength test value falls below specified compressive strength by more than 500 psi (3.4 MPa).
10. Test results shall be reported in writing to Architect, Structural Engineer, concrete manufacturer, and Contractor within 48 hours of testing. Reports of compressive-strength tests shall contain Project identification name and number, date of concrete placement, name of concrete testing and inspecting agency, location of concrete batch in

Work, design compressive strength at 28 days, concrete mixture proportions and materials, compressive breaking strength, and type of break for both 7- and 28-day tests.

END OF SECTION

©THE ROBINSON GREEN BERETTA CORPORATION – 6456

SECTION 131210 - FRAME SUPPORTED MEMBRANE STRUCTURE

PART 1 – GENERAL

1.1 RELATED DOCUMENTS

A. Drawing and general provisions of Contract, including General and Supplementary Conditions and other Divisions-1 Specification Sections, apply to this Section.

1.2 SUMMARY

This Section specifies the furnishing and installation of a structural frame supported membrane fabric covered roof and wall structure of the type described herein.

This system includes the installation of new structural framing and new fabric membrane at roof and at walls to the extent shown on the project drawings.

1.3 REFERENCES AND STANDARDS

A. The following publications are for the standards listed below but referred to thereafter by basic letter designation only. They form a part of this specification to the extent referenced thereto use latest editions.

1. American Institute of Steel Construction (AISC):

a. M016	Manual of Steel Construction
b. S326	Design, Fabrication and Erection of Structural Steel Buildings
c. S329	Structural Joints Using ASTM A325 or A490

2. American Iron and Steel Institute (AISI):

a. SG 503	Manual of Steel Construction, Ninth Edition

3. American Society for Testing and Materials (ASTM):

a. A36	Structural Steel
b. A 123	Standard Specification for Zinc (Hot Dip Galvanized) Coatings on Iron and Steel Products
c. A 307	Carbon Steel Bolts and Studs, 60,000 psi Tensile Strength
d. A325	High-Strength Bolts for Structural Steel Joints

© THE ROBINSON GREEN BERETTA CORPORATION - 6456

1.3 REFERENCES AND STANDARDS (Cont'd)

e. A 500 Standard Specifications for Cold Formed Welded and Seamless Carbon Steel Structural Tubing in Rounds and Shapes

f. A 563 Rev Carbon and Alloy Steel Nuts

g. A 687 High-Strength Non-Headed Steel Bolts and Studs

4. American Society of Civil Engineers (ASCE):

a. ASCE 7 Minimum Design Loads for Building and Other Structures

5. American Welding Society (AWS):

a. D1.1 Structural Welding Code – Steel

6. National Fire Protection Association (NFPA):

a. 701 Standard Methods of Fire Tests for Flame Resistant Textiles and Films

1.4 GENERAL REQUIREMENTS

A. Scope:

1. This specification covers the design, manufacture, shipping and handling and erection of a relocatable, prefabricated tension membrane structure.

2. The structure membrane shall be tensioned over new framework. The structure shall be rectangular in shape. The side and gable walls of the structure shall be vertical. The interior of the structure below the main arch shall be clear and free of any structural members and shall provide unobstructed floor space.

3. The structure shall also include accessories and items required and necessary for the scope and intended use and as herein specified.
These may include:
   a. Personnel access, industrial roll up and aircraft hangar doors.
   b. Electrical systems including interior lighting.
   c. Ventilation Systems.

DESIGN AND DIMENSION

A. Design Requirements – PVC Coated Membrane Cladding System

1. Continuous, Weather Tight Membrane: The structure membrane shall form a continuous, uninterrupted weather tight shell over the framework. In order to provide for a good finished appearance and to insure weather tightness, the gable wall PVC

© THE ROBINSON GREEN BERETTA CORPORATION - 6456

cladding shall be manufactured so as to be connected in one piece to the adjacent side wall and roof cladding without the use of catenary cables.

2. Cladding Section Joints: Adjacent PVC cladding sections shall either lace together with a minimum ¼" white polyester rope or be provided with a mechanical tensioning system so as to maintain PVC tension along the length of the building. Proper gaps shall be maintained between sections so as to allow sufficient distance to enable full tensioning of the material.

3. Overlap Seams: The membrane system shall be designed such that the PVC cladding panels can be supplied with optional overlap joints to allow adjacent panels to be field heat sealed together.

4. Base Tensioning System: The PVC cladding will be provided with a mechanical tensioning system that allows the PVC to be fully tensioned around the structure perimeter. The system will be designed such that the membrane can be tightly and neatly secured over the structural frame and such that the system has remaining range of adjustment.

5. Membrane Seal at Openings and Base: The structure supplier will provide all materials and methods necessary to fully tension and seal the membrane material around all door, ventilation and other openings as well as around the structure perimeter below the main tensioning system. This seal shall provide a neat finished appearance and eliminate any loose PVC cladding that could otherwise be damaged by flapping or abrasion. When a PVC base skirt is required, this shall be supplied separately from the main PVC cladding and attached at the base perimeter so as to allow a reasonable seal against air and water intrusion.

6. Design Safety Factor: The PVC membrane shall be designed to allow a factor of safety at design loads of at least three (3) times the theoretical design strength of the PVC material.

7. The structure membrane shall not be designed to function as a structural member such that, should any damage to or penetrations of the membrane occur, the integrity of the structural framework shall not be affected.

1.6 OPERATION AND USE

A. The structure shall be designed to provide a minimum of 15 year operational use period, which shall include, if necessary, one installation/disassembly cycle per year with appropriate inspection and maintenance.

B. The structure shall be capable of being assembled, operated and dismantled in all ambient temperatures between -20°F and 120°F.

C. The fabric material shall be designed to withstand a maximum temperature of 150°F when stored in packing containers.

D. The structure shall be designed such that a crew of five persons working with a trained supervisor can unpack and assemble the basic structure at a rate of at least 2,000 square feet of surface area per day (35 square feet of structure surface area per person hour) on a prepared

© THE ROBINSON GREEN BERETTA CORPORATION - 6456

surface. Disassembly shall be accomplished at a rate of at least 2,500 square feet of surface area per day by a similar crew.

E. The structure shall be capable of being erected upon various surfaces such as natural ground, asphalt or concrete and shall also be capable of accepting differential settlement up to 2-1/2% between truss positions.

1.7 ENGINEERING DESIGN CRITERIA

A. The structure shall be designed in accordance with appropriate building code standards using methodology from ASCE 7-05. Primary and secondary framing shall comply with current issues of AISC, AISI, NEMA and ASTM specifications, as applicable. Structural members shall be designed using Allowable Stress Design (ASD) or Load Resistance Factored Design (LRFD) for the design loads given below. Appropriate safety factors to yield and ultimate shall be maintained. Wind load factors and coefficients used in design of structural members must be in accordance with ASCE 7-05 guidelines.

PART 2 - PRODUCTS

2.1 BASIS OF DESIGN MANUFACTURER:

Iron Horse Structures 171 Kearsarge Rd. North Conway, NH. 03860

A. Architect approved equal complying with design intent and all performance and material requirements.

END OF SECTION 131210

© THE ROBINSON GREEN BERETTA CORPORATION - 6456

SECTION 30 01 00 – ENVIRONMENTAL SPECIFICATIONS

PART 1 - GENERAL

1.1 RELATED DOCUMENTS

A. The General Conditions, Supplementary Conditions and applicable portions of Division 1 of the specification are a part of this Section, which shall consist of all labor, equipment and materials necessary to complete all project meeting work indicated on the drawings and herein specified.

B. Construction Soil Management Plan (CSMP), prepared by Gordon R. Archibald, Inc., dated March 2019, as found in the Contract Documents.

1.2 RELATED REQUIREMENTS SPECIFIED ELSEWHERE

A. As part of the East Providence Salt Shed project, Gordon R. Archibald, Inc., submitted the Construction Soil Management Plan (CSMP) to the Rhode Island Department of Environmental Management. The CSMP was submitted for approval with the following environmental related specification sections appended to the report. The approved CSMP, and all appendices are provided as part of the Contract Documents. The CSMP appended specifications shall be followed and implemented as part of the East Providence Salt Shed project.

1. 30 01 20 Health and Safety Requirements
2. 30 01 55 Disposal of Solid Waste
3. 30 01 71 Disposal of Liquid Waste
4. 30 02 05 Contaminated Soil Excavation
5. 30 02 25 Load, Haul, and Dispose Contaminated Soil
6. 30 04 10 Analytical Testing Requirements for Imported Soil
7. 30 04 51 Dewatering and Treatment – Areas with Contaminated Groundwater
8. 30 04 75 Soil Stockpile – Wet Contaminated Soil
9. 30 04 82 Handling, Hauling, and Stockpiling of Wet Contaminated Soil
10. 31 15 00 Cath Basin Inlet Protection

PART 2 - PRODUCTS (Not Used)

PART 3 - EXECUTION (Not Used)

PART 4 - PART 4 – MEASUREMENT (Not Used)

© THE ROBINSON GREEN BERETTA CORPORATION - 6456

PART 5 - PAYMENT

5.1 Basis of Payment.

5.1.1 30 01 20 “Health and Safety Requirements”, 30 01 55 “Disposal of Solid Waste”, 30 03 05 “Contaminated Soil Excavation”, 30 02 25 “Load Haul and Dispose Contaminated Soil”, 30 04 10 “Analytical Testing Requirements for Imported Soil” will not be paid for separately. Payment is included in the **“contract sum”** listed in the Bid Proposal Form. The portion of the **“contract sum”** representing payment for 30 01 20 “Health and Safety Requirements”, 30 01 55 “Disposal of Solid Waste”, 30 03 05 “Contaminated Soil Excavation”, 30 02 25 “Load Haul and Dispose Contaminated Soil”, 30 04 10 “Analytical Testing Requirements for Imported Soil” constitutes full and complete compensation for all labor, materials and equipment for completing the work included in these specifications, and for all other incidentals required to finish this work, complete and accepted by the Engineer.

5.1.2 30 01 71 Disposal of Liquid Waste, 30 04 51 Dewatering and Treatment – Areas with Contaminated Groundwater, 30 04 75 Soil Stockpile – Wet Contaminated Soil, and 30 04 82 Handling, Hauling, and Stockpiling of Wet Contaminated Soil, will be paid for separately as a Contingency.

5.1.3 30 01 71 Disposal of Liquid Waste bid quantity is 100 gallons. Liquid waste disposal shall be paid for at a unit price per gallon. The unit price so-stated constitutes full and complete compensation for all labor, materials, and equipment for implementing the work described in this Section plus all other substantial work and incidentals of whatever nature required to finish the work, complete and accepted by the Engineer.

Final payment for liquid waste disposal will not be made until all disposal documentation including but not limited to manifests and/or bills of ladings and disposal receipts have been submitted and approved by the RIDOT.

5.1.4 30 04 51 Dewatering and Treatment – Areas with Contaminated Groundwater estimated bid quantity is 40,000 gallons. Dewatering and Treatment shall be paid for at a unit price per gallon. The unit price so-stated constitutes full and complete compensation for all labor, materials, and equipment for implementing the work described in this Section plus all other substantial work and incidentals of whatever nature required to finish the work, complete and accepted by the Engineer.

Final payment for dewatering and treatment will not be made until all RIDEM Remediation General Permit documentation including but not limited to discharge monitoring reports, RIDEM permit termination submittal, and RIDEM approval to terminate the permit have been submitted and approved by the RIDOT.

5.1.5 30 04 75 Soil Stockpile – Wet Contaminated Soil shall not be paid separately. Payment for 30 04 75 will be included in payment for 30 04 82 “Handling, Hauling, and Stockpiling of Wet Contaminated Soil.” The prices so-stated constitutes full and complete compensation for all labor, materials, and equipment for implementing the work described in this Section plus all other substantial work and incidentals of whatever nature required to finish the work, complete and accepted by the Engineer.

© THE ROBINSON GREEN BERETTA CORPORATION - 6456

5.1.6 30 04 82 Handling, Hauling, and Stockpiling of Wet Contaminated Soil estimated bid quantity is 325 cubic yards (cy) of wet contaminated soils to be handled, hauled, and stockpiled in the wet soil stockpile. The handling, hauling, and stockpiling of wet contaminated soil will be paid for at their respective contract unit prices respective contract unit price per cubic yard. The prices so-stated constitutes full and complete compensation for all labor, materials, and equipment for implementing the work described in this Section plus all other substantial work and incidentals of whatever nature required to finish the work, complete and accepted by the Engineer.

Final payment for these items will not be made until all recycling/disposal documentation including but not limited to manifests and/or bills of ladings, weight slips and disposal receipts have been submitted and approved by the RIDOT.

END OF SECTION 30 01 00

© THE ROBINSON GREEN BERETTA CORPORATION - 6456

SECTION 31 10 00 SITE CLEARING

PART 1 - GENERAL

1.1 RELATED DOCUMENTS

A. The General Conditions, Supplementary Conditions and applicable portions of Division 1 of the Specification are a part of this Section, which shall consist of all labor, materials, equipment, tools, construction equipment and machinery, water, heat, utilities, transportation and other facilities and services necessary for the proper execution and completion of the work, whether temporary or permanent and whether or not incorporated or to be incorporated in the work; and as related to the project or projects defined in the Bidding Requirements.

1.2 WORK COVERED BY CONTRACT DOCUMENTS

A. Project Location: RIDOT – East Providence, Warren Avenue, East Providence, Rhode Island

B. Owner: Rhode Island Department of Transportation

C. Owner's Representative: To be determined.

D. Architect: The Robinson Green Beretta Corporation, 50 Holden Street, Providence, RI

E. Contractor: To be determined.

1.3 SUMMARY OF WORK:

A. Site Clearing shall consist of all work required to clear and prepare the site for subsequent construction operations. These actions all have a common characteristic; they involve the removal and legal disposal of both designated vegetative materials and man-made objects and facilities. These actions include, but are not limited to, the following: clearing and grubbing; trimming tree roots; removal and disposal of rigid and flexible pavement; chain link fences; miscellaneous items such as signs; and other obstructions or undesirable materials within the limits of disturbance. All such materials, objects and facilities shall be removed and legally disposed of. All work shall be confined to within the Limits of Disturbance (LOD) indicated on the plans.

B. Related Work Specified Elsewhere:

01 01 00 - SUMMARY OF THE WORK
30 02 05 - CONTAMINATED SOIL EXCAVATION
31 20 00 - EARTHWORK
31 25 00 - EROSION CONTROL
31 25 10 - DUST CONTROL
32 12 16 - ASPHALT PAVEMENT

C. Product Data: Not Applicable.

© THE ROBINSON GREEN BERETTA CORPORATION - 6456

1.4 QUALITY ASSURANCE

A. Site clearing shall be done in accordance with Section 201.01.1, Clearing and Grubbing of the R.I. Standard Specifications.

PART 2 - PRODUCTS

2.1 Materials. Not Applicable

PART 3 - EXECUTION

3.1 CONSTRUCTION METHODS

A. The installation and removal of compost filter sock shall conform to Subsection 206.03.4 of the Standard Specifications.

B. Project Specifications: Specifications governing work under this contract for Erosion Control shall be The Rhode Island Standard Specifications for Highway and Bridge Construction, amended 2013 edition with latest revision, complete with recent compilations of approved specifications, Rhode Island Standard Details, 1998 Edition, with all revisions Codes and the Job Specific Specifications, hereinafter referred to as the "Project Specifications".

Methods of Construction: All work shall be done in accordance with the **"Project Specifications"** as referenced above, or as more specifically specified elsewhere in these specifications. In the event of a conflict in the specifications the more stringent specification shall apply.

PART 4 – MEASUREMENT - Not applicable

Part 5 – PAYMENT

5.1 BASIS OF PAYMENT

A. **Site Clearing** will not be paid for separately. Payment is included in the **"contract sum"** listed in the Bid Proposal Form. The portion of the **"contract sum"** representing payment for Site Clearing constitutes full and complete compensation for all labor, materials and equipment for removing and legally disposing of all debris generated by site clearing actions, and for all other incidentals required to finish this work, complete and accepted by the Engineer.

END OF SECTION 31 10 00

© THE ROBINSON GREEN BERETTA CORPORATION - 6456

SECTION 31 20 00 EARTHWORK

PART 1 - GENERAL

1.1 RELATED DOCUMENTS

A. The General Conditions, Supplementary Conditions and applicable portions of Division 1 of the Specification are a part of this Section, which shall consist of all labor, materials, equipment, tools, construction equipment and machinery, water, heat, utilities, transportation and other facilities and services necessary for the proper execution and completion of the work, whether temporary or permanent and whether or not incorporated or to be incorporated in the work; and as related to the project or projects defined in the Bidding Requirements.

1.2 WORK COVERED BY CONTRACT DOCUMENTS

A. Project Identification: DPW Salt Shed

B. Project Location: RIDOT – East Providence, Warren Avenue, East Providence, Rhode Island

C. Owner: Rhode Island Department of Transportation

D. Owner's Representative: To be determined

E. Architect: The Robinson Green Beretta Corporation, 50 Holden Street, Providence, RI

F. Contractor: To be determined.

1.3 SUMMARY OF WORK:

A. Earthwork shall consist of stripping of topsoil, excavation of all other materials necessary to conform to the lines and grades shown on the grading plans, proof-rolling exposed subgrade, trimming and fine grading in preparation for placement of rip rap and finally placing and compacting borrow material in embankments. Suitable excavated material shall be reused on-site. Unsuitable excavated materials r shall be removed from the site. Topsoil stripped from the site may be stockpiled, cleaned of sticks, roots and other debris and reused in areas designate as loam and seed". All earthwork grading shall be in reasonably close conformity with the dimensions and sections indicated on the Plans or as directed by the Engineer.

B. All soil excavation within the project's Limit of Disturbance shall be classified as contaminated soil excavation and be completed in accordance with 30 03 05 Contaminated Soil Excavation.

1.3.1 Stripping. Following Site Clearing, as defined in Section 31100, all topsoil shall be stripped from within the limits of the grass swale drainage area. The surface of the stripped area shall be cleared of roots sticks and debris and back bladed relatively smooth in preparation for placement of rip rap or loam.

Fine graded aggregate shall be removed from the asphalt perimeter as shown on the plans. This material can be reused on-site in areas where it is suitable for use as asphalt pavement subase or as fill material required for finish grading. Excess fine graded aggregate shall be removed from the site.

1.3.2 Earth Excavation. Earth excavation shall include the removal of suitable and unsuitable soils and the removal of boulders, stones, rock fragments and debris from any area within the Limit of Disturbance.

© THE ROBINSON GREEN BERETTA CORPORATION - 6456

Following removal of the asphalt pavement the gravel borrow subbase shall be removed and stockpiled on-site. Gravel borrow subbase stripped for building excavation and regrading shall be reused as subbase material in asphalt paved areas.

1.3.3 Excavation of Unsuitable Soils. Unsuitable materials shall only be excavated as directed by the engineer. Unsuitable soils shall include and are hereby defined as those soils, other than muck, which due to their consolidation properties, degree of saturation, graduation, or other deleterious characteristics will not provide a stable sub-grade and cannot be used to support embankment, or do not otherwise conform to the requirements of these Specifications. Voids created by excavation of unsuitable materials shall be backfilled with Gravel Borrow.

1.3.6 Rip Rap Construction. Rip rap areas shall be constructed to the lines and grades shown on the Grading Plan in all areas exterior of the new salt barn building. Grading required in this area shall be constructed primarily of common borrow from an off-site source and suitable material excavated on site.

C. Related Work Specified Elsewhere

01 01 00 - SUMMARY OF THE WORK
30 02 05 – CONTAMINATED SOIL EXCAVATION
31 10 00 - SITE CLEARING
31 25 00 - EROSION CONTROL
31 25 10 - DUST CONTROL
32 12 16 - ASPHALT PAVEMENT

Submittals:

A. Product Data: Submit manufacturer's product data and installation instructions for each geogrid product proposed for use.

B. Test reports: Submit for approval for each backfill material proposed for use, test reports, list of materials and gradation results.

Quality Assurance:

A. Compaction: Outside paved areas, 90-percent maximum dry density as determined by ASTM D-1557.
B. Compaction: Under paved areas, 95-percent maximum dry density as determined by ASTM D-1557.
C. Grading tolerances: Grading tolerances shall be as specified in SECTION 204 of the R.I. Standard Specifications

PART 2 - PRODUCT

2.1 MATERIALS. The following references to the R.I. Standard Specifications apply:

A. Common Borrow; Subsection M.01.01

B. Gravel Borrow; Subsection M.01.02

C. Rip Rap, Subsection M.10.03

PART 3 – EXECUTION

3.1 CONSTRUCTION METHOD

A. Project Specifications: Specifications governing work under this contract for Erosion Control shall be The Rhode Island Standard Specifications for Highway and Bridge Construction, amended 2013 edition with latest revision, complete with recent compilations of approved specifications, Rhode Island Standard Details, 1998 Edition, with all revisions Codes and the Job Specific Specifications, hereinafter referred to as the "Project Specifications".

B. Methods of Construction: All work shall be done in accordance with the **"Project Specifications"** as referenced above, or as more specifically specified elsewhere in these specifications. In the event of a conflict in the specifications the more stringent specification shall apply.

PART 4 – MEASUREMENT Not applicable

Part 5 – PAYMENT

5.1 BASIS OF PAYMENT

A. **Earthwork** will not be paid for separately. Payment is included in the **"contract sum"** listed in the Bid Proposal Form. The portion of the **"contract sum"** representing payment for Earthwork constitutes full and complete compensation for all labor, materials and equipment for stripping, excavation, trimming and fine grading, proof rolling, placement and compaction of embankments and for all other incidentals required to finish this work, complete and accepted by the Engineer.

END OF SECTION 31 20 00

© THE ROBINSON GREEN BERETTA CORPORATION - 6456

SECTION 31 25 00 EROSION AND SEDIMENT CONTROL

PART 1 GENERAL

1.1 RELATED DOCUMENTS

A. The General Conditions, Supplementary Conditions and applicable portions of Division 1 of the Specification are a part of this Section, which shall consist of all labor, materials, equipment, tools, construction equipment and machinery, water, heat, utilities, transportation and other facilities and services necessary for the proper execution and completion of the work, whether temporary or permanent and whether or not incorporated or to be incorporated in the work; and as related to the project or projects defined in the Bidding Requirements.

1.2 WORK COVERED BY CONTRACT DOCUMENTS

A. Project Identification: DPW Salt Shed

B. Project Location: RIDOT – East Providence, Warren Avenue, East Providence, Rhode Island

C. Owner: Rhode Island Department of Transportation

D. Owner's Representative: To be determined.

E. Architect: The Robinson Green Beretta Corporation, 50 Holden Street, Providence, RI

F. Contractor: To be determined.

1.3 SUMMARY OF WORK:

This work includes the provision of temporary perimeter erosion and sediment controls; and storm drainage protection erosion controls. Also included is the maintenance and cleaning and subsequent removal of all erosion and sediment controls from the site when the project is complete and vegetation has established substantial growth. These controls shall be placed in reasonably close conformity with the layout and details indicated on the Plans, and as directed by the Engineer, all in accordance with these Specifications. The Contractor is advised that a penalty will be incurred if in the judgment of the Owners Representative or the Engineer the erosion control is not installed or maintained in accordance with the plans and specifications. See Section 5.1.2 below.

A. Erosion Controls.

1.3.1. Compost filter sock, consist of 12” diameter filter sock placed as shown on the Plans and held in place with 2” x2” wooden stakes driven at 10-foot intervals.

B. Related Work Specified Elsewhere:

01 01 00 - SUMMARY OF THE WORK
30 02 05 – CONTAMINATED SOIL EXCAVATION
31 10 00 - SITE CLEARING
31 20 00 - EARTHWORK
31 25 10 - DUST CONTROL
32 12 16 - ASPHALT PAVEMENT

© THE ROBINSON GREEN BERETTA CORPORATION -6456

PART 2 - PRODUCT

2.1 Materials: The following references to the R.I. Standard Specifications apply:

A. **Compost Filter Sock.** Materials shall conform to Subsection 206.02.4 of the Standard Specifications (latest revision). Compost filter sock material shall be in accordance with AASHTO Designation MP 9-06 (2007 or latest revision). Compost filter material shall be in accordance with AASHTO Designation: MP 9-06 (2007 or latest revision) and shall also meet all applicable Federal and State Regulations. Wooden stakes shall be 2 inches by 2 inches, at 10-foot intervals on center, and of a length that shall project into the soil a minimum of 1 foot, leaving 3 to 4 inches protruding above the filter sock.

PART 3 – EXECUTION

3.1 CONSTRUCTION METHODS

A. The installation and removal of compost filter sock shall conform to Subsection 206.03.4 of the Standard Specifications.

B. Project Specifications: Specifications governing work under this contract for Erosion Control shall be The Rhode Island Standard Specifications for Highway and Bridge Construction, amended 2018 edition with latest revision, complete with recent compilations of approved specifications, Rhode Island Standard Details, 2018 Edition, with all revisions Codes and the Job Specific Specifications, hereinafter referred to as the "Project Specifications".

Methods of Construction: All work shall be done in accordance with the “Project Specifications” as referenced above, or as more specifically specified elsewhere in these specifications. In the event of a conflict in the specifications the more stringent specification shall apply.

PART 4 – MEASUREMENT Not applicable

Part 5 – PAYMENT

5.1 BASIS OF PAYMENT

A. **Erosion and Sediment Controls** will not be paid for separately. Payment is included in the **“contract sum”** listed in the Bid Proposal Form. The portion of the **“contract sum”** representing payment for Erosion Controls constitutes full and complete compensation for all labor, materials and equipment for providing the various erosion and sediment controls, and for maintaining and cleaning the erosion and sediment controls, and for the subsequent removal of erosion and sediment controls; and for all other incidentals required to finish this work, complete and accepted by the Engineer.

B. **Penalty for Failure to Maintain Erosion and Sediment Pollution Controls**. Subsection 212.03.3 of the RI Standard Specifications requires that a daily charge be deducted from monies due the Contractor in the event the Engineer or the Owner’s Representative decides that erosion and pollution controls are not in place or have not been adequately maintained.

The charge for this Contract will be $ 500.00 per day.

END OF SECTION 31 25 00

© THE ROBINSON GREEN BERETTA CORPORATION - 6456

SECTION 31 25 10 DUST CONTROL

PART 1 GENERAL

1.1 RELATED DOCUMENTS

A. The General Conditions, Supplementary Conditions and applicable portions of Division 1 of the Specification are a part of this Section, which shall consist of all labor, materials, equipment, tools, construction equipment and machinery, water, heat, utilities, transportation and other facilities and services necessary for the proper execution and completion of the work, whether temporary or permanent and whether or not incorporated or to be incorporated in the work; and as related to the project or projects defined in the Bidding Requirements.

1.2 WORK COVERED BY CONTRACT DOCUMENTS

A. Project Identification: DPW Salt Shed

B. Project Location: RIDOT – East Providence, Warren Avenue, East Providence, Rhode Island

C. Owner: Rhode Island Department of Transportation

D. Owner's Representative: To be determined.

E. Architect: The Robinson Green Beretta Corporation, 50 Holden Street, Providence, RI

F. Contractor: To be determined.

1.3 SUMMARY OF WORK:

Except as amended herein, all work associated with this item shall be performed in accordance with Section 907 of the Standard Specifications. Only water shall be used to control dust during construction operations. Dust control shall be employed as required and/or at the discretion of the Engineer.

The Contractor is advised that a penalty will be incurred if in the judgment of the Owners Representative or the Engineer dust control is not applied in accordance with the plans and specifications. See Section 5.1.2 below.

A. Related Work Specified Elsewhere:

01 01 00 - SUMMARY OF THE WORK
30 02 05 – CONTAMINATED SOIL EXCAVATION
31 10 00 - SITE CLEARING
31 20 00 - EARTHWORK
31 25 00 - EROSION CONTROL
32 12 16 - ASPHALT PAVEMENT, CONCRETE PAVEMENT AND STRIPING

PART 2 - PRODUCT

2.1 MATERIALS

A. Water used for dust control shall be fresh and free from injurious amounts of oil, acid, salt, alkali, organic matter, or other deleterious substances. No materials other than water shall be used for dust

© THE ROBINSON GREEN BERETTA CORPORATION - 6456

control without the Engineer's prior approval.

PART 3 – EXECUTION

3.1 CONSTRUCTION METHOD

A. The application of water for dust control shall conform to Subsection 907.03 of the Standard Specifications.

The Contractor shall use water for dust control during site clearing, earthwork and any other operations which will create dust. The exact number of applications and amount of water used shall be based upon field and weather conditions and as directed by the Owners Representative or the Engineer. The sprinkling equipment shall be equipped with adequate on-off controls and shall be approved by the Owners Representative or the Engineer prior to use. Sprinkling and/or spraying equipment shall be kept on site and be available for dust control at all times. The Contractor shall be prepared to perform the work at any time, including Saturday, Sunday and holidays. The work shall be done upon order of the Owners Representative or the Engineer.

The Contractor shall coordinate with the RIDOT and the East Providence Water Utilities Division regarding water supply and installation of a separate water meter for dust control and other items of work on this project. The volume of water measured by this meter shall be used as a basis of payment by the Contractor to the East Providence Water Utilities Division for the water used on this project.

B. **Project Specifications:** Specifications governing work under this contract for Erosion Control shall be The Rhode Island Standard Specifications for Highway and Bridge Construction, amended 2013 edition with latest revision, complete with recent compilations of approved specifications, Rhode Island Standard Details, 1998 Edition, with all revisions Codes and the Job Specific Specifications, hereinafter referred to as the "Project Specifications".

All work shall be done in accordance with the **"Project Specifications"** as referenced above, or as more specifically specified elsewhere in these specifications. In the event of a conflict in the specifications the more stringent specification shall apply.

PART 4 – MEASUREMENT Not applicable

Part 5 – PAYMENT

5.1 BASIS OF PAYMENT

A. Dust Control will not be paid for separately. Payment is included in the **"contract sum"** listed in the Bid Proposal Form. The portion of the **"contract sum"** representing payment for dust control constitutes full and complete compensation for all labor, materials and equipment for providing dust control throughout the entire contract and for all other incidentals required to adequately control dust in accordance with these specifications or as directed by the.

B. **Penalty for Failure to Comply.** Subsection 907.05.3 of the Standard Specifications requires that a daily charge be deducted from monies due the Contractor if in the judgment of the Engineer or the Owner's Representative the Contractor fails to adequately control dust in accordance with this specification, or as directed. The charge for this Contract will be $ 500.00 per day.

END OF SECTION 31 25 10

© THE ROBINSON GREEN BERETTA CORPORATION - 6456

SECTION 31 32 00 – RAMMED AGGREGATE PIERS

PART 1: GENERAL REQUIREMENTS

1.01 Description

Work shall consist of designing, furnishing and installing Rammed Aggregate Pier (RAP) ground improvement to the lines and grades designated on the project foundation plans and as specified herein. RAP elements shall be in a columnar-type configuration and shall be used for support of footing and slab-on-grade loads. RAP elements shall be constructed by either augering a cavity or driving a hollow mandrel to the design depth and vertically ramming lifts of aggregate using the specially designed tamper head and high-energy impact densification equipment to create the compacted aggregate pier.

1.02 Work Included

A. Provision of all equipment, material, labor, and supervision to design and install RAP elements. Design shall rely on subsurface information presented in the project geotechnical report by Geisser Engineering dated 4/16/19. Survey layout of RAP elements, spoil removal (as required), footing excavations, and footing/slab subgrade preparation following RAP installation is not included.

B. The RAP design and installation shall adhere to all methods and standards described in this Specification.

C. Drawings and General Provisions of the Contract, including General and Supplemental Conditions, and Division 1 Specifications, apply to the work in this specification.

1.03 Approved Installers

A. The RAP Installer (the Installer) shall be approved by the Owner's Geotechnical Representative RIDOT prior to bid opening. Without exception, no alternate installer will be accepted unless approved by the Owner's Geotechnical Representative at least two (2) weeks prior to bid opening. The Owner's Geotechnical Representative is hereinafter referred to as "Geotechnical Representative".

B. Installers shall have a minimum of 5 years of experience with the installation of RAP systems, completed at least 50 RAP projects in New England, and completed at least RAP projects in the State of Rhode Island,

C. Installers licensed by the Geopier Foundation Company, Inc. (www.geopier.com) are hereby accepted as approved installers.

1.04 Reference Standards

A. Design

1. "Control of Settlement and Uplift of Structures Using Short Aggregate Piers," by Evert C. Lawton (Assoc. Prof., Dept. of Civil Eng., Univ. of Utah), Nathaniel S. Fox (President, Geopier Foundation Co., Inc.), and Richard L. Handy (Distinguished Prof. Emeritus, Iowa State Univ., Dept. of Civil Eng.), reprinted from *IN-SITU DEEP SOIL IMPROVEMENT, Proceedings of sessions sponsored by the Geotechnical Engineering*

© THE ROBINSON GREEN BERETTA CORPORATION – 6456

Division/ASCE in conjunction with the ASCE National Convention held October 9-13, 1994, Atlanta, Georgia.

2. "Settlement of Structures Supported on Marginal or Inadequate Soils Stiffened with Short Aggregate Piers," by Evert C. Lawton and Nathaniel S. Fox. *Geotechnical Special Publication No. 40: Vertical and Horizontal Deformations of Foundations and Embankments,* ASCE, 2, 962-974.

3. "Technical Bulletin No. 12, Proper Load Testing Procedures to Verify Adequate Design of Geopier-Supported Foundation Systems," by Kord Wissmann and W. Lake Carter, Geopier Foundation Company, Inc. ©2015.

B. Modulus Testing

1. ASTM D 1143 - Pile Load Test Procedures
2. ASTM D 1194 - Spread Footing Load Test

C. Materials and Inspection

1. ASTM D 1241 - Aggregate Quality
2. ASTM D 422 - Gradation of Soils

D. Where specifications and reference documents conflict, the RAP Designer (the Designer) shall make the final determination of the applicable document.

1.05 Certifications and Submittals

A. Qualifications – With reference to Paragraph 1.03.B, the Installer shall submit the following <u>with their proposal</u> to document/demonstrate the minimum experience requirements for this project.

1. Documentation verifying a minimum of 50 previous projects completed in New England including at least 10 successful projects where subsurface conditions included an organic layer (peat or organic silt) and/or soft clay layer thickness of at least 3- to 10-feet-thick within the ground improvement zone. For the minimum 10 projects with organic and/or soft clay layers within the ground improvement zone, the Installer shall submit references with contact information for the Geotechnical Representative and General Contractor.

B. Design Submittal - The Installer shall submit detailed design calculations and construction drawings prepared by the Designer for review and approval by the Geotechnical Representative and the project Structural Engineer. All plans shall be sealed by a Professional Engineer licensed in the State of Rhode Island. The submittal shall include grout/cement mix design as applicable.

C. Professional Liability Insurance - The Designer shall have Errors and Omissions design insurance for the work. The insurance policy should provide a minimum coverage of $3 million per occurrence.

D. Modulus Test Reports - A modulus test(s) shall be performed on a non-production RAP element as required by the Designer to verify the design assumptions. The Installer shall furnish the General Contractor a description of the installation equipment, installation records, complete test data, analysis of the test data and verification of the design parameter values based on the modulus test results. The report shall be prepared under direction of a Registered Professional Engineer licensed in the State of Rhode Island.

© THE ROBINSON GREEN BERETTA CORPORATION – 6456

E. Daily RAP Progress Reports - The Installer shall furnish a complete and accurate record of RAP installation to the General Contractor. The record shall indicate the element location, length, volume of aggregate used or number of lifts, densification forces during installation, and final elevations or depths of the base and top of elements. The record shall also indicate the type and size of the installation equipment used, and the type of aggregate used. The Installer shall immediately report any unusual conditions encountered during installation to the General Contractor, the Designer, and the Geotechnical Representative.

PART 2: MATERIALS

2.01 Aggregate

A. Aggregate used by the Installer for element construction shall be pre-approved by the Designer and shall demonstrate suitable performance during modulus testing. Typical aggregate consists of Type 1 Grade B in accordance with ASTM D-1241-68, No. 57 stone, or other graded aggregate approved by the Designer.

B. Clean, potable water or other suitable source shall be used to mix grout and increase aggregate moisture content where required. The General Contractor shall provide such water to the Installer.

2.02 Grout/Cement

A. For grouted RAP elements, grout shall consist of a homogeneous mixture of Type II Portland Cement and clean, potable water. Documentation for other additives shall be submitted for review.

B. For RAP elements constructed with cement-treated aggregate (CTA), the CTA shall consist of a mixture of Type II Portland Cement and well-graded aggregate. The minimum cement content shall be 6% by weight.

PART 3: DESIGN REQUIREMENTS

3.01 RAP Design

A. The RAP system shall be designed in accordance with locally-accepted engineering practice and the methods described in Section 1 of these Specifications. The design life of the structure shall be 50 years.

B. The design shall meet the following performance criteria:

© THE ROBINSON GREEN BERETTA CORPORATION – 6456

Footings

*Maximum Allowable Bearing Pressure for Footings Supported by RAP Reinforced Soils	XXXX psf
Total Settlement for Footings:	≤ 1-inch
Differential Settlement of Adjacent Footings:	≤ ½-inch

***Note that the maximum allowable bearing pressure already includes a live load reduction. The Designer shall not assume or apply further live load reductions unless specifically approved by the structural engineer prior to submitting a bid proposal.**

Slab-on-Grade

Settlement of Slabs-on-Grade:	≤ 1-inch

C. If fully grouted/cemented elements (Rigid Inclusions) are proposed in lieu of ungrouted/uncemented or partially grouted/cemented RAP elements, then a granular Footing Pad (or "Load Transfer Platform") shall be required below all footings and slabs to be supported by Rigid Inclusions. The system shall be designed and perform to limit penetration (punching) of ground improvement elements into the Footing Pad.

D. If any boring (or other exploration) with the proposed building footprint indicates an organic layer (peat or organic silt) and/or soft clay layer that is ≥ 3-feet-thick within the ground improvement zone, the RAP design submittal for the slab-on-grade shall include a Finite Element Analysis (FEA) to demonstrate that the maximum bending moment and maximum shear stress at the midpoint of the most widely-spaced slab support RAP elements are within tolerances specified by the project Structural Engineer. For the FEA, the minimum RAP stiffness modulus value shall be determined based on modulus testing (see Section 5.02). The stiffness modulus value shall be reduced exponentially for each foot of radial distance away from the edge of the RAP element in accordance with a referenced industry-accepted standard(s).

E. The Rammed Aggregate Pier elements shall be designed using a Rammed Aggregate Pier stiffness modulus to be verified by the results of the modulus test described in Section 5.02.

3.02 Design Submittal

A. The Installer shall submit detailed design calculations, construction drawings, and shop drawings, (the Design Submittal), for review and approval at least 2 week(s) prior to the beginning of construction.

B. The design information shall include, but not be limited to, element configurations, materials, capacity and spacing, details and design of Footing Pads (if Footing Pads are required), bearing capacity analysis, settlement analyses, explanation of soil properties, element installation termination criteria, embedment depth into the bearing stratum, and all other relevant information.

C. With reference to paragraph 5.02.C, the design calculations shall quantify the RAP element's maximum design stress on an individual element (which attracts more stress than the surrounding matrix soil) and is typically at least 3 to 5 times the allowable bearing pressure for footings.

D. A detailed explanation of the design parameters for settlement calculations shall be included in the Design Submittal.

© THE ROBINSON GREEN BERETTA CORPORATION – 6456

E. If Rigid Inclusions or partially grouted/cemented RAP elements are proposed, the Installer shall submit information demonstrating the integrity of the grouted/cemented shaft based on prior or newly proposed full-scale field testing, exhumation of shafts, or similar methods.

F. If Rigid Inclusions (which require Footing Pads) are proposed, the Installer shall submit information demonstrating the performance of the proposed Footing Pad design based on prior or newly proposed full-scale testing, including demonstrating that excessive punching will not occur per paragraph 3.01.C.

G. The quality control test program for the RAP system, meeting the design requirements described herein, shall be submitted.

H. All calculations and drawings shall be prepared and sealed by a Professional Engineer licensed in the State of Rhode Island.

I. Submittals shall be submitted electronically only unless otherwise required by specific submittal instructions.

PART 4: EXECUTION

4.01 Approved Installation Procedures

The following sections provide general criteria for the construction of the RAP elements. Unless otherwise approved by the Designer, the installation method used for RAP element construction shall be that as used in the construction of the successful modulus test. Displacement installation methods are acceptable on this project or displacement methods that do not generate auger spoils are required on this project to help minimize cost premiums associated with offsite soil disposal.

A. General

1. The Installer shall provide a qualified, full-time, solely-dedicated, quality control (QC) person on-site during the installation process. The QC person shall not be dual-purposed as crew laborer or operator. Automated, electronic, and/or remote quality control will not be accepted as a replacement for the QC person. Refer to Section 5.01 for further detail.

2. In addition to peat and organic silt layers, fill with a total organic content (including solid wood or roots component) greater than 10% shall be considered an organic layer.

3. At a minimum, RAP elements must be designed and installed to fully-penetrate through the existing layers and into underlying natural layer in which RAP elements shall terminate. RAP elements terminating within fill or organic soil layers will not be accepted, even if mandrel/probe resistance is demonstrated to be relatively high based on crowd testing or amperage build-up.

4. Vibration levels at existing buildings must be maintained below 2.0 inches per second.

4.02 Plan Location and Elevation of RAP Elements

The as-built center of each RAP element shall be within 6 inches of the locations indicated on the plans.

4.03 Rejected RAP Elements

© THE ROBINSON GREEN BERETTA CORPORATION – 6456

RAP elements installed beyond the maximum allowable tolerances shall be abandoned and replaced with new elements, unless the Designer approves the condition or provides other remedial measures. All material and labor required to replace rejected elements shall be provided at no additional cost to the Owner, unless the cause of rejection is due to an obstruction or mislocation.

PART 5: QUALITY CONTROL

5.01 Quality Control Technician

The Installer shall have a qualified, full-time, solely-dedicated, quality control (QC) person to verify and report all installation procedures. The Installer shall immediately report any unusual conditions encountered during installation to the Designer, the General Contractor, and to the observing Geotechnical Representative. The quality control procedures shall include the preparation of RAP Progress Reports completed during each day of installation containing the following information:

A. Footing and RAP element location.
B. Pre-auger diameter and soil conditions encountered during drilling (if required).
C. RAP element length.
D. Planned and actual RAP element elevations at the top and bottom of the element.
E. Average lift thickness of each RAP element.
F. Volume of aggregate used in each element.
G. Documentation of any unusual conditions encountered.
H. Type and size of densification equipment used.

5.02 Single-Element RAP Modulus Test(s)

A minimum of one single-element RAP Modulus Test shall be performed at a location agreed upon by the Designer and the Geotechnical Representative to verify or modify the RAP design. The modulus tests shall be of the type and installed in a manner specified herein.

A. Modulus test procedures shall utilize appropriate portions of ASTM D 1143 and ASTM D 1194 and comply with Technical Bulletin No. 12 (Wissmann and Carter, 2015).

B. The test plate/cap shall have the same diameter as the RAP element design diameter and shall not extend beyond the edge of the RAP element and over the matrix soil.

C. With reference to Technical Bulletin No. 12 (Wissmann and Carter, 2015), the test element shall be tested to a load equal to the element area times at least 150 percent of the RAP element's maximum design stress (not allowable bearing pressure for footings) to demonstrate that the element exhibits safe response during service loading. The RAP element's maximum design stress is the maximum stress on the individual element (which attracts more stress than the surrounding matrix soil) and is typically at least 3 to 5 times the allowable bearing pressure for footings. Single-element modulus tests that are proposed to be loaded as a function of allowable bearing pressure are not considered standard practice and will not be accepted since the allowable bearing pressure is often only a fraction of the RAP element's maximum design stress. Modulus tests that are proposed to be loaded as a function of allowable bearing pressure shall be performed per Paragraph 5.02.I.

1. If Rigid Inclusions are proposed in lieu of ungrouted/uncemented or partially grouted/cemented RAP elements and subgrade soils at the bottom of the footing (or footing pad) consist of organic soils and/or soft to very soft cohesive soils, then the Rigid Inclusion design capacity shall conservatively be calculated using the total bottom-of-footing load divided by the number of Rigid Inclusions.

2. If Rigid Inclusions are proposed in lieu of ungrouted/uncemented or partially grouted/cemented RAP elements, then the Rigid Inclusion test element shall be tested

© THE ROBINSON GREEN BERETTA CORPORATION – 6456

to at least 200 percent of the Rigid Inclusion design capacity to demonstrate that the element exhibits safe response during service loading.

3. If Rigid Inclusions are proposed in lieu of ungrouted/uncemented or partially grouted/cemented RAP elements, then a granular Footing Pad shall be required below all footings and slabs to be supported by Rigid Inclusions. The Footing Pad shall be designed by the Designer and shall be at least 8-inches-thick.

© THE ROBINSON GREEN BERETTA CORPORATION – 6456

D. ASTM D-1143 general test procedures shall be used as a guide to establishing load increments, load increment duration, and load decrements. As a minimum, the following loading increments, decrements and duration shall be used.

Increment	Approximate Load (percent design)	Minimum Duration (min)	Maximum Duration (min)
Seat	< 9	0	N/A
1	17	15	60
2	33	15	60
3	50	15	60
4	67	15	60
5	83	15	60
6	100	15	60
7	117	60	120
8	133	15	60
9	150	15	60
10	100	N/A	N/A
11	66	N/A	N/A
12	33	N/A	N/A
13	0	N/A	N/A

E. With the exception of the load increment representing approximately 117% of the RAP element maximum design stress, all load increments shall be held for a minimum of 15 minutes. Loads are then maintained until the rate of deflection reduces to 0.01 inch per hour or for the maximum of 1 hour, whichever is occurs first.

F. Creep Test - The load increment that represents approximately 117% of the RAP element maximum design stress shall be held for a minimum of 15 minutes. Loads are then maintained until the rate of deflection reduces to 0.01 inch per hour or for the maximum of 4 hours, whichever is occurs first.

1. If Rigid Inclusions are proposed in lieu of ungrouted/uncemented or partially grouted/cemented RAP elements, then the creep test shall be performed at the load increment that represents approximately 133% of the RAP element maximum design stress.

G. A seating load equal to 5 percent of the total load shall be applied to the loaded steel plate prior to application of load increments and prior to measurement of deflections to compensate for surficial disturbance.

H. Single-element modulus tests that are proposed to be loaded as a function of allowable bearing pressure are not considered standard practice and will not be accepted. Modulus tests that are proposed to be loaded as a function of allowable bearing pressure must consist of full-scale spread footing load tests that include a test footing supported by a minimum of three RAP elements and having a RAP area-replacement ratio ($Area_{RAPs}/Area_{Footing}$) that is representative of the smallest area replacement ratio used in the RAP design. The test spread footing shall be loaded to at least 200 percent of the allowable bearing pressure to demonstrate that the RAP-supported footing exhibits safe response during service loading.

5.03 Bottom Stabilization Testing (BSTs) / Crowd Stabilization Testing (CSTs)

Bottom stabilization testing (BSTs) or Crowd stabilization testing (CSTs) shall be performed by the Quality Control Technician during the installation of the modulus test element. Additional testing as required by the Designer shall be performed on selected production RAP elements to compare results

© THE ROBINSON GREEN BERETTA CORPORATION – 6456

with the modulus test element.

PART 6: OWNER'S QUALITY ASSURANCE

6.01 Owner's Independent Quality Assurance

The Installer shall provide full-time Quality Control monitoring of RAP construction activities. The Owner is responsible for retaining their observing Geotechnical Representative to provide Quality Assurance services.

6.02 Responsibilities of the Owner's Independent Quality Assurance

A. The Geotechnical Representative shall monitor the modulus test element installation and testing. The Installer shall provide and install all dial indicators and other measuring devices.

B. The Geotechnical Representative shall monitor the installation of RAP elements to verify that the production installation practices are similar to those used during the installation of the modulus test element(s).

C. With reference to Paragraph 4.01.A.5, the Geotechnical Representative shall monitor vibrations and immediately report to the Installer and General Contractor if specified tolerances are exceeded.

D. The Geotechnical Representative shall report any discrepancies to the Installer and General Contractor immediately.

E. The Geotechnical Representative shall observe the excavation, compaction and placement of the foundations as described in Section 7.05.

PART 7: RESPONSIBILITIES OF THE GENERAL CONTRACTOR

7.01 Site Preparation and Protection

A. The General Contractor shall locate and protect underground and aboveground utilities and other structures from damage during installation of the RAP elements.

B. Site grade for RAP installation TBD. Ground elevations and bottom of footing elevations shall be provided to the Installer in sufficient detail to estimate installation depth elevations to within 3 inches.

C. The General Contractor will provide site access to the Installer, after site preparation in the area has been completed. A flat and stable working pad subgrade shall be established and maintained by the General Contractor to provide wet weather protection of the subgrade and to provide access for efficient operation of the RAP installation. Preparation of a flat and stable working pad may include placement of crushed stone and geotextile fabric. Any excavation or backfilling that occurs for working pad preparation shall be in accordance with the Designer's submittal.

D. Prior to, during and following RAP installation, the General Contractor shall provide positive drainage to protect the site from wet weather and surface ponding of water.

E. If spoils are generated by RAP installation, spoil removal from the RAP work area in a timely manner to prevent interruption of RAP installation is required.

© THE ROBINSON GREEN BERETTA CORPORATION – 6456

F.

7.02 RAP Layout

The location of individual RAP elements shall be marked in the field using flagged and numbered whiskers at locations shown on the drawings.

7.03 Excavations for Obstructions

A. Should any obstruction be encountered during RAP installation, the General Contractor shall be responsible for promptly removing such obstruction or the element shall be relocated if possible. Obstructions include, but are not limited to, boulders, timbers, concrete, granite blocks, utilities, etc., which shall prevent placing the elements to the required depth, or shall cause the RAP element to drift from the required location.

B. Dense natural rock or weathered rock layers shall not be deemed obstructions, and RAP elements may be terminated short of design lengths on such materials.

7.04 Utility Excavations

The General Contractor shall coordinate all excavations made subsequent to RAP installations so that excavations do not encroach on the elements as shown in the RAP construction drawings. Protection of completed RAP elements is the responsibility of the General Contractor. In the event that excavations are required in close proximity to the installed RAP elements, the General Contractor shall contact the Designer immediately to develop construction solutions to minimize impacts on the installed RAP elements.

7.05 Footing and Slab Subgrade Preparation

A. Excavation and subgrade preparation of all footing and slab subgrades shall be the responsibility of the General Contractor and performed in conformance with the Project Specifications and RAP design submittal.

B. Excavations will expose the tops of RAP elements and shall be made in a workman-like manner that protects the subgrade until structural fill or concrete placement. Procedures and equipment shall be selected to avoid subgrade/RAP element disturbance and exposure to water.

C. All excavations for footing bottoms supported by RAP elements shall be prepared in the following manner by the General Contractor. Recommended procedures for achieving these goals are to:

1. Limit over-excavation below the bottom of the footing to 3-inches (including disturbance from the teeth of the excavation equipment).

2. Compaction of surface soil and top of RAP elements shall be prepared using a motorized impact compactor (“Wacker Packer,” “Jumping Jack,” or similar). Sled-type tamping devices shall only be used in granular soils and when approved by the Designer. Loose or soft surficial soil over the entire footing bottom shall be recompacted or removed, respectively. The surface of the RAP elements shall be recompacted prior to completing footing bottom preparation.

3. Place footing concrete immediately after footing excavation is made and approved, preferably the same day as the excavation. Footing concrete must be placed on the same day if the footing is bearing on moisture-sensitive soils. If same day placement of footing concrete is not possible, open excavations shall be protected from surface water

© THE ROBINSON GREEN BERETTA CORPORATION – 6456

accumulation. A lean concrete mud-mat may be used to accomplish this. Other methods must be pre-approved by the Designer.

D. The following criteria shall apply, and a written inspection report sealed by the project Geotechnical Representative shall be furnished to the Installer to confirm:

1. That water has not been allowed to pond in the footing excavation at any time. Ponded water may soften the unconfined matrix soil between and around the RAP elements, and may have detrimental effects on the supporting capability of the RAP reinforced subgrade.

2. That all RAP elements designed for each footing have been exposed in the footing excavation.

3. That immediately before footing construction, the tops of RAP elements exposed in each footing excavation have been inspected and recompacted as necessary with mechanical compaction equipment.

4. That no excavations or drilled shafts (elevator, etc) have been made after installation of RAP elements within the excavation limits described in the RAP construction drawings, without the written approval of the Installer or Designer.

E. Failure to provide the above inspection and certification by the Geotechnical Representative, which is beyond the responsibility of the Installer, may void any written or implied warranty on the performance of the RAP system.

© THE ROBINSON GREEN BERETTA CORPORATION – 6456

SECTION 32 12 16 ASPHALT PAVEMENT

PART 1 GENERAL

1.1 RELATED DOCUMENTS

A. The General Conditions, Supplementary Conditions and applicable portions of Division 1 of the Specification are a part of this Section, which shall consist of all labor, materials, equipment, tools, construction equipment and machinery, water, heat, utilities, transportation and other facilities and services necessary for the proper execution and completion of the work, whether temporary or permanent and whether or not incorporated or to be incorporated in the work; and as related to the project or projects defined in the Bidding Requirements.

1.2 WORK COVERED BY CONTRACT DOCUMENTS

A. Project Identification: DPW Salt Shed

B. Project Location: RIDOT – East Providence, Warren Avenue, East Providence, Rhode Island

C. Owner: Rhode Island Department of Transportation

D. Owner's Representative: To be determined.

E. Architect: The Robinson Green Beretta Corporation, 50 Holden Street, Providence, RI

F. Contractor: To be determined.

1.3 SUMMARY OF WORK:

A. This work includes providing and installing bituminous concrete pavement on a 12” gravel borrow base in accordance with the lines, grades and details indicated on the drawings and as directed by the Engineer, all accordance with these Specifications. The pavement structure shall consist of the following components:
- 2” Bituminous Surface Course, Modified Class 12.5 Hot Mix Asphalt
- 4 ½” Bituminous Base Course, Class 19.0 Hot Mix Asphalt (in two - 2 ¼” lifts)
- 12” Gravel Borrow Sub-base Course

B. Related Work Specified Elsewhere:

01 01 00 - SUMMARY OF THE WORK
30 02 05 – CONTAMINATED SOIL EXCAVATION
31 10 00 - SITE CLEARING
31 20 00 - EARTHWORK
31 25 00 - EROSION CONTROL
31 25 10 - DUST CONTROL

© THE ROBINSON GREEN BERETTA CORPORATION - 6456

PART 2 - PRODUCT

2.1 MATERIALS:

A. Bituminous Concrete Surface Course: Modified Class 12.5 Hot Mix Asphalt RIDOT HMA Matrix.

B. Bituminous Concrete Base Course: Class 19.0 Hot Mix Asphalt RIDOT HMA Matrix.

C. Gravel Borrow Sub-base Course.

PART 3 – EXECUTION

3.1 CONSTRUCTION METHODS

A. The installation and removal of compost filter sock shall conform to Subsection 206.03.4 of the Standard Specifications.

B. **Project Specifications:** Specifications governing work under this contract for Erosion Control shall be The Rhode Island Standard Specifications for Highway and Bridge Construction, amended 2013 edition with latest revision, complete with recent compilations of approved specifications, Rhode Island Standard Details, 1998 Edition, with all revisions Codes and the Job Specific Specifications, hereinafter referred to as the "Project Specifications".

Methods of Construction: All work shall be done in accordance with the **"Project Specifications"** as referenced above, or as more specifically specified elsewhere in these specifications. In the event of a conflict in the specifications the more stringent specification shall apply.

PART 4 – MEASUREMENT Not applicable

Part 5 – PAYMENT

5.1 BASIS OF PAYMENT

A. Asphalt Paving will not be paid for separately. Payment is included in the **"contract sum"** listed in the Bid Proposal Form. The portion of the lump sum price representing payment for Asphalt constitutes full and complete compensation for all labor, materials and equipment for providing and installing the asphalt pavement, gravel sub-base course, and for all other incidentals required to finish this work, complete and accepted by the Engineer.

END OF SECTION 32 12 16

© THE ROBINSON GREEN BERETTA CORPORATION - 6456

ADDENDUM

1. **RIPDES REMEDIATION GENERAL PERMIT NOTICE OF INTENT COVER LETTER**
2. **RIPDES REMEDIATION GENERAL PERMIT NOTICE OF INTENT DOCUMENTS SUBMITTAL**
3. **RIDEM REMEDIAL APPROVAL LETTER**
4. **2019 CONSTRUCTION SOILS MANAGEMENT PLAN**

GEOTECH REPORT – GEISSER ENGINEERING APRIL 22 2019

© THE ROBINSON GREEN BERETTA CORPORATION - 6456

Department of Transportation
Two Capitol Hill
Providence, RI 02903

Office 401-222-2450
Fax 401-222-3905
www.dot.ri.gov

May 17, 2019

Environmental Management
MAY 21 2019
Permit Application Center

Aaron Mello
Senior Sanitary Engineer
Rhode Island Department of Environmental Management
Office of Water Resources – RIPDES Program
235 Promenade Street
Providence, Rhode Island 02908

Re: RIPDES Remediation General Permit Notice of Intent
Rhode Island Department of Transportation
East Providence Maintenance Facility
Warren Avenue
East Providence, Rhode Island
RIDEM File Number: SR-10-0410
Former File Number: 2003-064

Dear Mr. Mello:

The Rhode Island Department of Transportation (RIDOT) is proposing to construct a salt storage building at its East Providence Maintenance Facility, Warren Avenue, East Providence, Rhode Island. RIDOT is submitting the attached RIPDES Remediation General Permit Notice of Intent for conceptual approval by the Rhode Island Department of Environmental Management – Office of Water Resources – RIPDES Division. Please review the submitted documents and contact us with any questions.

Very truly yours,

David W. Fish

David W. Fish
Administrator of Project Management

Attachments: RIPDES Remediation General Permit Notice of Intent
cc: Fish, Fisette, Zerva file

RIPDES REMEDIATION GENERAL PERMIT

NOTICE OF INTENT AND SUPPORTING DOCUMENTS SUBMITTAL

Rhode Island Department of Transportation

East Providence Salt Shed

691 Warren Avenue

East Providence, Rhode Island

May 2019

Prepared for:

Rhode Island Department of Transportation

Highway & Bridge Maintenance Division

360 Lincoln Avenue

Warwick, Rhode Island

Prepared by:

Gordon R. Archibald, Inc.
200 Main Street
Pawtucket, Rhode Island

RHODE ISLAND POLLUTANT DISCHARGE ELIMINATION SYSTEM (RIPDES) REMEDIATION GENERAL PERMIT

NOTICE OF INTENT (NOI)

(revised 02/19)

DEM USE ONLY
Date Received
Amount Received $
RIPDES# **RIG**
Approval Date
Data Entry Date
Data Entry Initials
Data Group Number: G2A, G2B, G3A

I. OWNER			
Formal Name: Rhode Island Department of Transportation			
Mailing Address: 360 Lincoln Avenue			
City: Warwick	State: RI	Zip: 02888	Phone: (401)734-4805
Contact Person: Matthew Ouellette P.E.		Title: Deputy State Highway Maintenance Operations Engineer	
Email Address of Owner: Matthew.Ouellette@dot.ri.gov			
II. OPERATOR (if different from owner)			
Formal Name:			
Mailing Address:			
City:	State:	Zip:	Phone: ( )
Contact Person:		Title:	
Email Address of Facility Contact Person:			

III. SITE INFORMATION

a. Please include the following items as part of the NOI: brief history of the site, the source of contamination; a description of the proposed remedial and/or dewatering activity creating the discharge; all available analytical data on impacted groundwater; a site plan showing location of monitoring and recovery wells, discharge point, and receiving waters; and an 8.5" x 11" photocopy of a USGS 1:24,000 topographic map depicting site location.

Facility/Site Name: RIDOT East Providence Salt Shed			
Facility/Site: Latitude: 41.8088	Longitude: -71.35148	SIC code(s) — Primary: 9199	Other:
Facility Type of Ownership: ☐ Federal ☒ State ☐ Private ☐ Other Entity (specify):			
Facility Address: 691 Warren Avenue			
City: East Providence	State: RI	Zip: 02914	
Type of Spill or Release:		Approximate Duration of Project: 30 Days	

b. Has a prior NPDES permit been granted for the discharge? Yes __ No X, if yes number:_____

c. Has a prior NPDES application (Form 1 & 2C) ever been filed for the discharge? Yes __ No X, if yes provide date of application and application number if available.

d. Is the site/facility covered by any other DEM permit including: 1. multi-sector storm water general permit, 2. phase I or II construction storm water general permit, 3. Individual RIPDES Permit, if so please list them below:
NO

e. Is the site/facility subject to any other DEM permitting or other action which is causing the generation of the discharge? Yes X or No __

If "Yes" please list the applicable permit numbers and DEM contacts here: RIDEM Office of Waste Management Site Number SR-10-0410.

IV. DISCHARGE INFORMATION

a. Describe the discharge activities for which the owner/applicant is seeking coverage:
Construction dewatering for foundation and utility installation

b. Provide the following information for each discharge:

Number of Discharge Points: 1

Maximum Flow Rate (cubic feet per second): 0.167 Is the maximum flow a design value? Y X N__

Average Flow Rate (cubic feet per second): 0.067

c. Latitude and Longitude of the center of each outfall: pt. 1: lat. 41.816379 _long. -71.3465986, pt.2 lat._____ long. ___, pt.3 lat. __ long. _____, pt.4 lat _____ long _____, pt.5 lat _____ long _____, pt. 6 lat _____ long. _____.

d. If hydrostatic testing, total volume of the discharge (gallons):

e. Is the discharge intermittent x or seasonal___? As needed during construction activities

f. Expected dates of discharge (mm/dd/yy): Start: 06 / 01 / 2019 End: 06 / 01 / 2020

g. Based on the analysis of sample(s) of the untreated influent, the applicant must check the box of the sub-categories that the potential discharge falls within:

☐ A) Gasoline Only, ☐ B) Fuel Oils (and Other Oils) Sites, ☐ C) Petroleum Sites Containing Other Pollutants

☐ D) VOC Only Sites, ☐ E) VOC Sites Containing Other Contaminants ☒ F) Sites Containing Primarily Metals

☒ G) Contaminated Construction Dewatering,

☐ H) Aquifer Pump Testing, Well Development, or Rehabilitation of Contaminated Wells

☐ I) Hydrostatic Testing of Pipelines and Tanks ☐ J) Contaminated Sump Discharge

V. TREATMENT SYSTEM INFORMATION

a. **Attach a complete description of the treatment system including**: a flow schematic depicting all major control points (i.e., alarms, sensors, valves) and treatment units; design calculations on the expected treatment performance (i.e., removal efficiency, carbon consumption calculations) including unit height and surface area; and manufacturers' specifications on major components of the treatment system. Also provide a basis for all design calculations and properly reference all design assumptions in order for calculations to be replicated. Include a discussion on the need for iron treatment to address iron scaling and/or iron bacteria build-up. Plans and specifications on all treatment systems must be signed and certified by a professional engineer registered in the State of Rhode Island.

b. Identify each applicable treatment unit (check all that apply):
☐ Oil/Water Separator, ☒ Granular Activated Carbon, ☐ Air Stripping, ☐ U/V Oxidation, ☒ Iron Treatment,
☒ Filtration, ☐ Ion Exchange, ☒ Bag Filter, ☒ Equalization Tanks, ☐ Air Stripper, ☐Chlorination, ☐ Dechlorination,
☐ Other (please specify): Coagulent and Flocculant
If system consists of GAC or Ion Exchange, provide time to carbon or resin exhaustion (days): 32 days
If system consists of air stripping, provide air/water ratio:

c. Treatment System Design Flow (gpm): 75

d. Treatment System Maximum System Capacity (gpm): 75

e. Average Flow Rate of Treatment System (gpm): 30

f. Chemical and Additive Information:

(1) Indicate the type(s) of chemical or additive that will be applied to effluent prior to discharge or that may otherwise be present in the discharge(s): (check all that apply)

(2) Algaecides/biocides □ Antifoams x Coagulants □ Corrosion/scale inhibitors □ Disinfectants x Flocculants
(3) Neutralizing agents □ Oxidants □ Oxygen □ scavengers □ pH conditioners □ Bioremedial agents, including microbes □ Chlorine or chemicals containing chlorine □ Other; if so, specify:

(2) Provide the following information for each chemical/additive, using attachments, if necessary:
a. Product name, chemical formula, and manufacturer of the chemical/additive;
b. Purpose or use of the chemical/additive or remedial agent;
c. Material Safety Data Sheet (MSDS) and Chemical Abstracts Service (CAS) Registry number for each chemical/additive;
d. The frequency (hourly, daily, etc.), duration (hours, days), quantity (maximum and average), and method of application for the chemical/additive;
e. Any material compatibility risks for storage and/or use including the control measures used to minimize such risks; and
f. If available, the vendor's reported aquatic toxicity (NOAEL and/or LC50 in percent for aquatic organism(s)). SEE ATTACHED SUPPORTING DOCUMENT

VI. RECEIVING WATER INFORMATION

a. Identify the discharge pathway: ☐ Direct, ☐ Indirect, ☒ Storm Drain, ☐ River/brook, ☐ Wetlands,

☐ Other (describe): _____

b. Provide a narrative description of the discharge pathway, including the names of the receiving waters:
Discharge enters storm drain system on Warren Avenue and discharges to unnamed surface watersouth of Rte 195. Flows through storm drain system under Rte 195 to a surface water body north of Rte 195. Flows through a combination of storm drains and surface water bodies prior to entering the headwaters of the Runnins River through an outfall on Commercial Way, East Providence.

c. Attach a detailed map(s) indicating the site location and location of the outfall to the receiving water:

1. For multiple discharges, number the discharges sequentially.

2. For indirect discharges, indicated the location of the discharge to the indirect conveyance and the discharge to surface waters. The map should include the location and distance to the nearest sanitary sewer.

d. Provide the Water Quality Classification of the receiving water: Class B.

e. If the proposed discharge is to freshwaters, provide the reported or calculated seven day-ten year low flow (7Q10) of the receiving water for the point of discharge in cubic feet per second (cfs) 0.19.
Attach any calculation sheets used to support stream flow and dilution calculations.

f. Is the receiving water a listed 303(d) water quality impaired or limited water? X Yes ☐ No, If yes for which pollutant(s)?: Lead, dissolved oxygen, fecal coliform

g. Is there a TMDL? X Yes ☐ No If Yes, for which pollutants? Fecal Coliform

VII. INFLUENT CHARACTERIZATION (attach raw analytical data, include sample date and location)

Pollutant	Believed Absent (Y/N)	Believed Present (Y/N)	Sample Type And Number	Test Method Minimum Level	Average (ug/l)	Max. (ug/l)	Design (ug/l)
Ammonia	Y	N					
Ethanol	Y	N					
Total Suspended Solids	N	Y					
Total Residual Chlorine	Y	N					
Total Petroleum Hydrocarbons	N	Y		ND			
Cyanide	Y	N					
Benzene	Y	N					
Toluene	N	Y	MW-8	5 ug/L	< 5 ug/L	9 ug/L	9 ug/L
Ethylbenzene	N	Y	MW-8	5 ug/L	10 ug/L	61 ug/L	61 ug/L
Total Xylenes (m,p,o)	N	Y	MW-8	5 ug/L	28 ug/L	209 ug/L	209 ug/L
Total BTEX	N	Y	MW-8	5 ug/L	40.5 ug/L	87 ug/L	87 ug/L
Ethylene dibromide	Y	N					
Methyl-t-Butyl Ether (MTBE)							
Tert-Amyl Methyl Ether							
Carbon Tetrachloride							
1,4 Dichlorobenzene							
1,2 Dichlorobenzene							
1,3 Dichlorobenzene							
Total Dichlorobenzene							
1,1 Dichloroethane							
1,2 Dichloroethane							
1,1 Dichloroethylene							
cis - 1,2 Dichloroethylene	N	Y	MW-8	10 ug/L	<10 ug/L	91 ug/L	91 ug/L
Dichloromethane	Y	N					
Tetrachloroethylene							
1,1,1 Trichloroethane							
1,1,2 Trichloroethane							
Trichloroethylene	N	Y	MW-8	10 ug/L	<10 ug/L	140 ug/L	140 ug/L
Vinyl Chloride	N	Y	MW-8	10 ug/L	<10 ug/L	14 ug/L	14ug/L
Acetone	Y	N					
1,4 Dioxane							
Total Phenols							
Pentachlorophenol							
Total Phthalates							

VII. INFLUENT CHARACTERIZATION (attach raw analytical data, include sample date and location)

Pollutant	Believed Absent (Y/N)	Believed Present (Y/N)	Sample Type And Number	Test Method Minimum Level	Average (ug/l)	Max. (ug/l)	Design (ug/l)
Bis (2-Ethylhexyl) Phthalate	Y	N					
Total Group I PAHs							
Benzo (a) Anthracene	Y	N					
Benzo (a) Pyrene							
Benzo (b) Fluoranthene							
Benzo (k) Fluoranthene							
Chrysene							
Dibenzo (a,h) anthracene							
Indeno (1,2,3-cd) Pyrene							
Total Group II PAHs							
Acenaphthene							
Acenaphthylene							
Anthracene							
Benzo (ghi) Perylene							
Fluoranthene							
Fluorene							
Naphthalene	N	Y	MW-3	10 ug/L	34 ug/L	250 ug/L	250 ug/L
Phenanthrene	Y	N					
Pyrene	Y	N					
Total Polychlorinated Biphenyls							
Antimony	N	Y	GRA-2	0.005 mg/L	0.018 mg/L	0.018 mg/L	0.018 mg/L
Arsenic	N	Y	GRA-2	0.01 mg/L	0.03 mg/L	0.03 mg/L	0.03 mg/L
Cadmium	N	Y	GRA-2	0.028 mg/L	0.028 mg/L	0.028 mg/L	0.028 mg/L
Chromium III (trivalent, total recoverable)	Y	N					
Chromium VI (hexavalent, total recoverable)	Y	N					
Copper	N	Y	GRA-2	0.02 mg/L	0.44 mg/L	0.44 mg/L	0.44 mg/L
Lead (total recoverable)	N	Y	GRA-2	0.005 mg/L	3.09 mg/L	3.09 mg/L	3.09 mg/L
Mercury	N	Y	GRA-2	0.0002 mg/L	0.0003 mg/L	0.0003 mg/L	0.0003mg/L
Nickel (total recoverable)	N	Y	GRA-2	0.005 mg/L	0.093 mg/L	0.093 mg/L	0.093 mg/L
Selenium	Y	N					
Silver	N	Y	GRA-2	0.005 mg/L	0.006 mg/L	0.006 mg/L	0.006 mg/L
Zinc (total recoverable)	N	Y	GRA-2	0.02 mg/L	1.50 mg/L	1.50 mg/L	1.50 mg/L
Iron (total recoverable)	N	Y	GRA-2	0.05 mg/L	179 mg/L	179 mg/L	179 mg/L
Other (describe):							

VIII. OWNER/OPERATOR CERTIFICATION

I certify under penalty of law that I have read and understood all terms and conditions of the above-referenced General Permit. I also certify under penalty of law that this document and all attachments were prepared under the direction or supervision in accordance with a system design to assure that qualified personnel properly gather and evaluate the information submitted. Based on my inquiry of the person or persons who manage the system, or those persons directly responsible for gathering the information, the information submitted is, to the best of my knowledge and belief, true, accurate, and complete. I am aware that there are significant penalties for submitting false information, including the possibility of a fine and imprisonment for knowing violations.

Print Owner's Name: Matthew Ouellette P.E.

Print Owner's Title: Deputy State Highway Maintenance Operations Engineer

Signature: _____ Date: _____

Print Operator's Name: _____

Print Operator's Title: _____

Signature: _____ Date: _____

RIPDES REMEDIATION GENERAL PERMIT

SUPPORTING DOCUMENTATION

Rhode Island Department of Transportation

East Providence Salt Shed

East Providence, Rhode Island

May 2019

Prepared for:

Rhode Island Department of Transportation

360 Lincoln Avenue

Warwick, Rhode Island

Prepared by:

Gordon R. Archibald, Inc.
200 Main Street
Pawtucket, Rhode Island

Table of Contents

1.0 Section I Owner 1
2.0 Section II Operator 1
3.0 Section III – Site Information 1
4.0 Section IV. Discharge Information 2
5.0 Section V. Treatment System Information 3
6.0 Section VI. Receiving Water Information 3
7.0 Section VII. Influent Water Characterization 4
8.0 Section VIII. Owner/Operator Certification 4

1.0 Section I Owner

The property is located at 691 Warren Avenue in East Providence and owned by the Rhode Island Department of Transportation (RIDOT).

2.0 Section II Operator

The RIDOT will competitively bid the salt shed construction project. The selected contractor will be responsible for submitting a RIPDES Remediation General Permit (RGP) Notice of Intent (NOI) as the operator of the dewatering treatment system.

3.0 Section III – Site Information

The RIDOT is currently in the final design phase of this project to construct a new salt storage structure at the site. The project will consist of the excavation of unsuitable soils, installation of footings, construction of the new structure and all associated utility work.

The site is located at 691 Warren Avenue in East Providence, Rhode Island and currently operates as a maintenance and salt storage facility for the RIDOT. Historical research and previous subsurface investigations have identified a portion of the Site was utilized as a solid waste landfill. A Remedial Action Work Plan (RAWP) and subsequent RAWP addendums were submitted to the Rhode Island Department of Environmental Management (RIDEM) in 2009 as part of the construction of the existing building and development of the site. The plan detailed the installation of a combined earthen, asphalt and concrete Cap. In addition, a sub-slab ventilation system was installed under the site structures, site access was restricted by fencing the property and a Soil Management Plan (SMP) was prepared.

Cap installation was completed in 2010 during the construction of the RIDOT Maintenance Garage at the site. The active sub-slab and passive sub-pavement ventilation systems were installed in 2010. Groundwater and ventilation system monitoring were started in 2011. Vapor monitoring includes the monitoring of percent methane, carbon dioxide, oxygen and percent lower explosive limit. Previous monitoring was performed on the laterals and soil gas points to evaluate the area around and under the building. Additional vapor monitoring was completed at soil gas points throughout the site.

RIDOT submitted a Construction Soil Management Plan dated March 2019 for the Salt Storage Building Project. The RIDEM-OWM issued a Remedial Approval Letter dated May 10, 2019 approving the soil management methods proposed in the Construction Soil Management Plan.

Groundwater monitoring completed under the previous RAWP indicated no exceedances of the RIDEM GB Groundwater Objective. However, volatile organic compounds (VOCs) were detected in the site groundwater. In addition to VOCs analysis, groundwater samples have been analyzed for total and dissolved metals, semi-volatile organic compounds, polychlorinated biphenyls, total petroleum

hydrocarbons, and salinity. In preparation of this NOI, groundwater analytical results from samples obtained in 2004 and in January 2019 were reviewed to determine the design concentrations for the treatment system.

Based on the planned activities at the site, the appropriate category for discharge is Category G – Contaminated Construction Dewatering Sites Discharging to Non-Class AA receiving waters. A review of the groundwater analytical data indicates concentrations of naphthalene, ethylbenzene, xylenes, cis-1,2 dichloroethylene, trichloroethylene, vinyl chloride, and metals (antimony, arsenic, cadmium, chromium, copper, lead, nickel, silver, zinc) are above the discharge requirements. Previous groundwater analysis also indicates chloride concentrations ranging from 3,600 mg/L to 32,000 mg/L in the planned construction area.

Based on the compounds of concern and the groundwater salinity levels, metals treatment through coagulant and flocculant treatment and filtration will be used for metal removal and granular activated carbon will provide treatment of the volatile organic compounds in the groundwater to meet the RGP discharge limits.

4.0 Section IV. Discharge Information

This RGP NOI is being submitted for project permitting and bidding purposes. RIDOT will competitively bid the Salt Shed construction project. The Contractor shall be required to submit a separate NOI for their proposed dewatering system discharge.

Construction of the new Salt Shed is planned for the southern portion of the site. This includes portions of the former landfill at the site. The entire site has been capped under a Remedial Action approved in the RIDEM Remedial Approval Letter Amended dated April 8, 2010.

The largest dewatering flow will be generated from the foundation excavation. Groundwater in this area has been identified as approximately 8-10 feet below grade. It is anticipated that dewatering may be required from the entire foundation excavation during the construction process. Various construction methods are being evaluated based on geotechnical, environmental, and constructability criteria which may affect the expected flow rate. As the final construction method has not been chosen, a flow rate was calculated to achieve seven feet of drawdown. The flow rates varied from 16 gallons per minute (gpm) to 56 gpm depending on the site permeability. A permeability range of 200 gallons per day per square foot (gpd/sf) to 2,000 gpd/sf were evaluated. To allow for potential variations in the construction operations, GRA has used a 75 gpm as the design flow rate. Design flow calculations are attached to this submittal.

The discharge point will be a storm drain located south of the work zone. The drain line discharges to an onsite storage system and then ultimately discharges to the stormwater system located on Warren Avenue. The ultimate receiving waters will be the Runnins River. The locations is shown on the attached Site Plan.

5.0 Section V. Treatment System Information

The treatment system's design flow rate will be 75 gpm, the expected maximum dewatering rate. It is anticipated that construction activities will be completed in a manner that allows this flow rate to be reduced below the maximum flow rate.

Based on the reviewed laboratory analytical data, volatile organic compounds and metals are present in the groundwater. In addition, previous sampling has indicated elevated levels of salinity in the groundwater at the site which were considered during the treatment system design. The extracted groundwater will be pumped to an 18,000-gallon weir tank to allow for initial settling of any solids. The groundwater will then then be pumped into a 21,000-gallon frac tank. A venturi aerator will recirculate water in this tank to encourage oxidation thus assisting metal removal. A solid coagulant will be located within the aeration tank to assist in metals removal. The planned coagulant is DBP-2100 manufactured by Dober Chemicals. A spec sheet has been attached. The flow will then pass through a filter housing containing a solid flocculant, GelFloc, prior to entering a second weir tank. A spec sheet for GelFloc, also manufactured by Dober Chemicals has been attached. Solids and metal precipitation will occur in the weir tank. The effluent from the weir tank will flow into a 21,000-gallon frac tank and then pumped through 50-micron bag filters and two 2,000-pound granular activated carbon (GAC) vessels for volatile organic treatment prior to final discharge. The specifications for the weir tanks, frac tanks, pumps, filter housings, venturi aerator, and GAC vessels have been attached. A treatment system schematic has also been included.

6.0 Section VI. Receiving Water Information

The dewatering treatment system will discharge to the site's existing stormwater drainage system. Stormwater from the project area flows overland to a paved waterway. The paved waterway discharges to a U-shaped grassed retention basin. The retention basin discharges into a subsurface pipe system that directs the flow through a manhole and then into an on-site subsurface retention system. A weir discharges controls the discharge flow rate into the municipal stormwater drainage system located on Warren Avenue. This stormwater drainage system then discharges to an unnamed wetland area adjacent to Route 195 prior to reentering the stormwater drainage system and flowing north under Route 195. The stormwater then flows through a series of pipes, culverts and unnamed streams prior to ultimately discharging into the tributaries of the Runnins River near Commercial Way in East Providence. The final discharge location is shown on the attached site location map that is attached. A watershed map which indicates the site lies within the Runnins River has been included.

Runnins River (RIDEM Waterbody ID #RI000702R-01) is a Class B surface water body. The river flows south through East Providence and Seekonk, Massachusetts and discharges into the Barrington River, a Class SA surface water body. The Barrington River flows into the Warren River and ultimately upper Narragansett Bay. The Runnins River is an impaired waterbody for lead dissolved oxygen and fecal coliform. The river also has a TMDL for fecal coliform.

The dewatering treatment system will discharge the treated effluent to the manhole as shown on the attached plans.

7.0 Section VII. Influent Water Characterization

Recent and historical groundwater analytical were evaluated in determining the influent groundwater concentrations for the design of the system. A grab groundwater sample was obtained from soil boring GRA-2 on January 25, 2019. The sample was submitted for laboratory analyzed for total and dissolved metals, total petroleum hydrocarbons, polychlorinated biphenyls (PCBs), semi-volatile organic compounds (SVOC), and volatile organic compounds (VOCs). The analytical results indicated concentrations of antimony, arsenic, cadmium, chromium, copper, iron, lead, nickel, silver, zinc, and mercury above laboratory detection levels. No other compounds were detected. These analytical results have been summarized in the attached Table 1.

Recent VOCs and SVOCs analysis indicated no detectable levels from the grab sample from GRA-2 location. However, historical laboratory analysis conducted as part of a RIPDES RGP NOI completed in 2009 and modified in 2010 indicated the presence of VOCs in the groundwater. This RIPDES RGP was to treat construction dewatering during the construction of the maintenance facility at the site. To determine a conservative design influent concentration, the maximum concentrations from the previous submittal or the recent groundwater sampling were used. The recent groundwater analytical reports and previously submitted historical reports have been attached. The groundwater design concentrations have been entered into the RGP NOI table.

8.0 Section VIII. Owner/Operator Certification

RIDOT has signed as the owner. There is no Operator at this time. The operator will be determined after the contract is awarded.

FIGURES

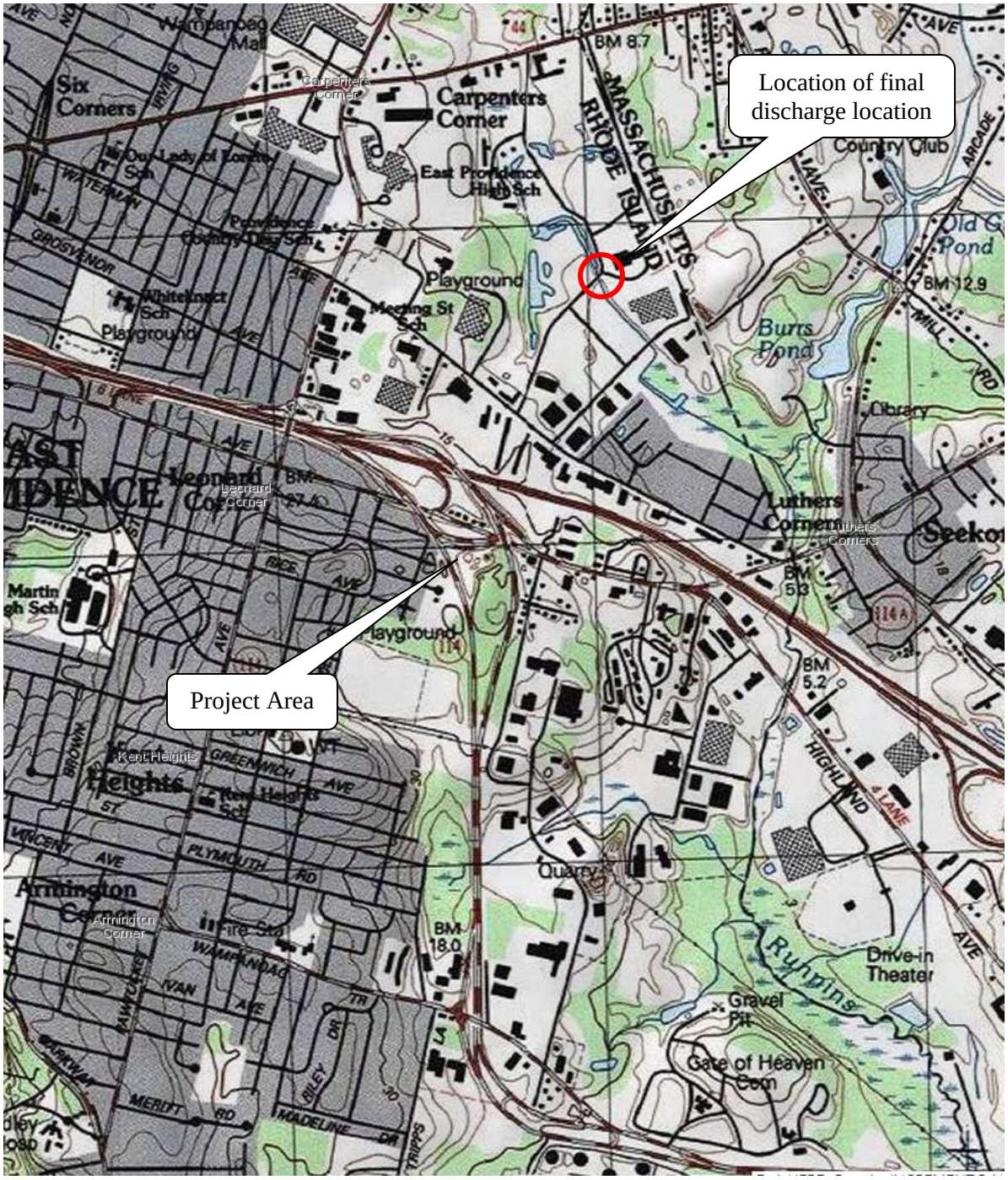

Figure #1: Site Location Map
East Providence Salt Shed
East Providence, Rhode Island

Source: RIDEM Environmental Resource Map
USA Topographic Maps (USGS)

Gordon R. Archibald, Inc.
Civil and Environmental Engineers

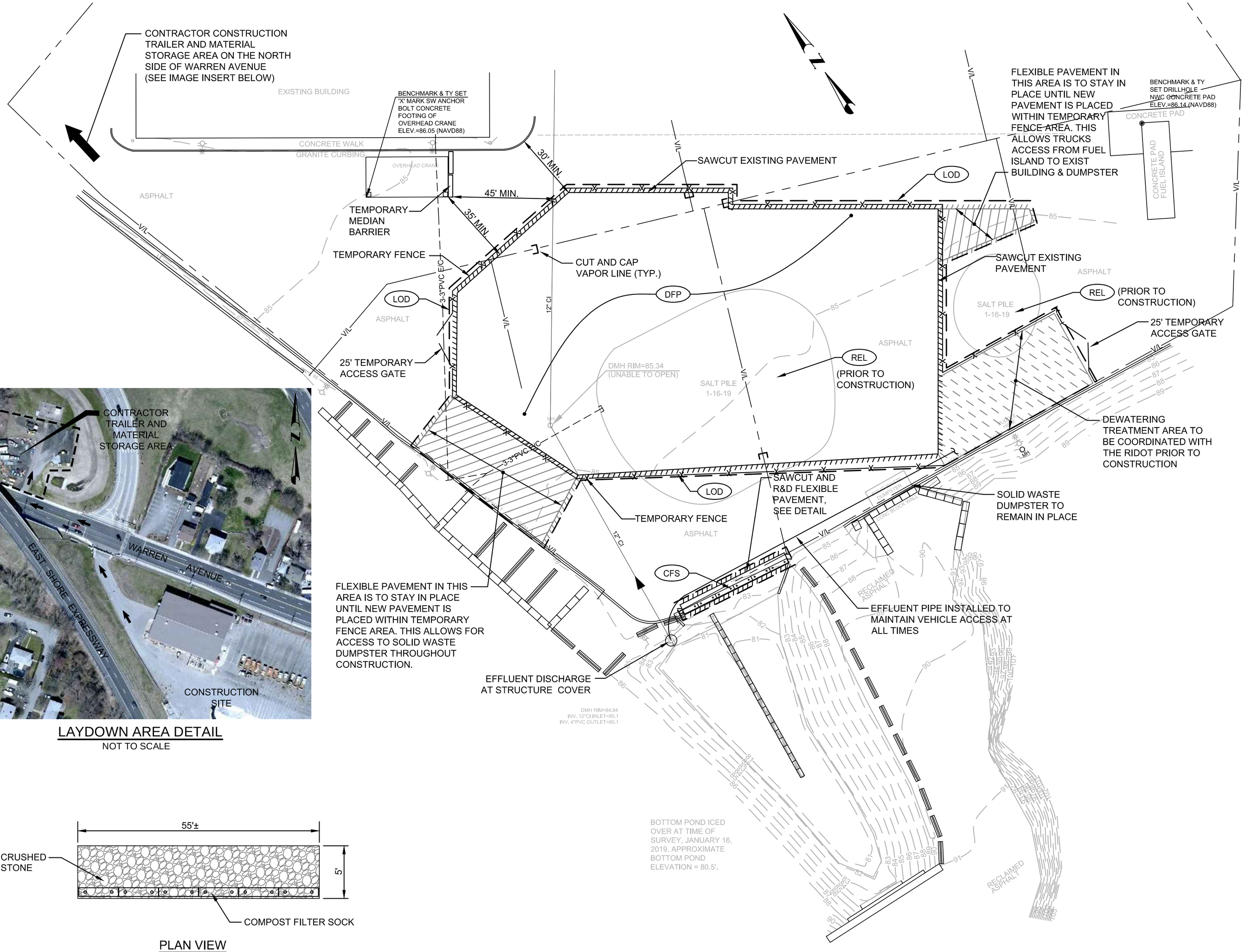

LAYDOWN AREA DETAIL

NOT TO SCALE

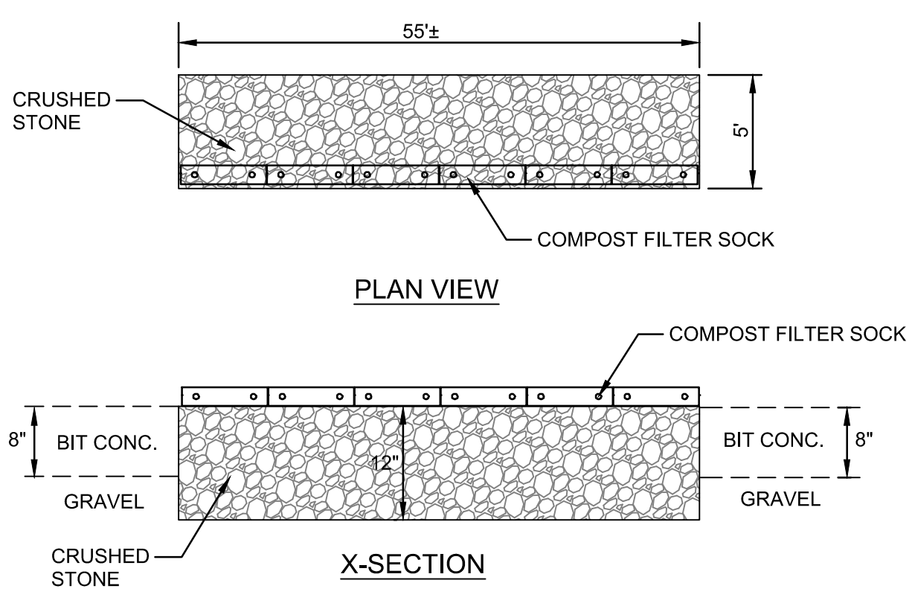

COMPOST FILTER SOCK INSTALLATION

NOT TO SCALE

30 0 15 30 60 120

GRAPHIC SCALE

Gordon R. Archibald, Inc.
Civil and Environmental Engineers
Pawtucket, Rhode Island

This drawing is copyrighted and is subject to copyright protection as an "architectural work" under 17 U. S. C. Sec. 101 et seq. The protection includes but is not limited to the overall form as well as the arrangement and composition of spaces, materials, color and elements in the design. Under such protection, unauthorized use of this drawing may result in the cessation of construction or buildings being seized and/or monetary compensation being awarded to The Robinson Green Beretta Corporation (RGB).

Any reproduction, possession, or use of this drawing or any part thereof without the express written permission of RGB, is prohibited. Violators will be prosecuted to the full extent of the law.

© RGB 2018

Certification

Drawn by LBD

Checked by SPC

Revised on

50 Holden Street
Providence, Rhode Island 02908

Phone: (401) 272-1730
Fax: (401) 273-7156

E-mail: rgbinfo@rgb.net
www.rgb.net

RGB architects

Architecture Project Management Interior Design

Project

STATE OF RHODE ISLAND

DEPARTMENT OF TRANSPORTATION

EAST PROVIDENCE SALT SHED

WARREN AVE.
EAST PROVIDENCE, RI. 02914

Drawing Status

SCHEMATIC DESIGN

Issued On FEBRUARY 2019

Sheet Contents

FIGURE 2: GENERAL PLAN

Project Number. 1880

Drawing No.

C-001

Sheet 1 of 5

F:\FILES\CAD\1880\Project Plans\DEWATERING\1880-GEN-DEWATER.dwg, 5/17/2019 9:28:30 AM, USER67

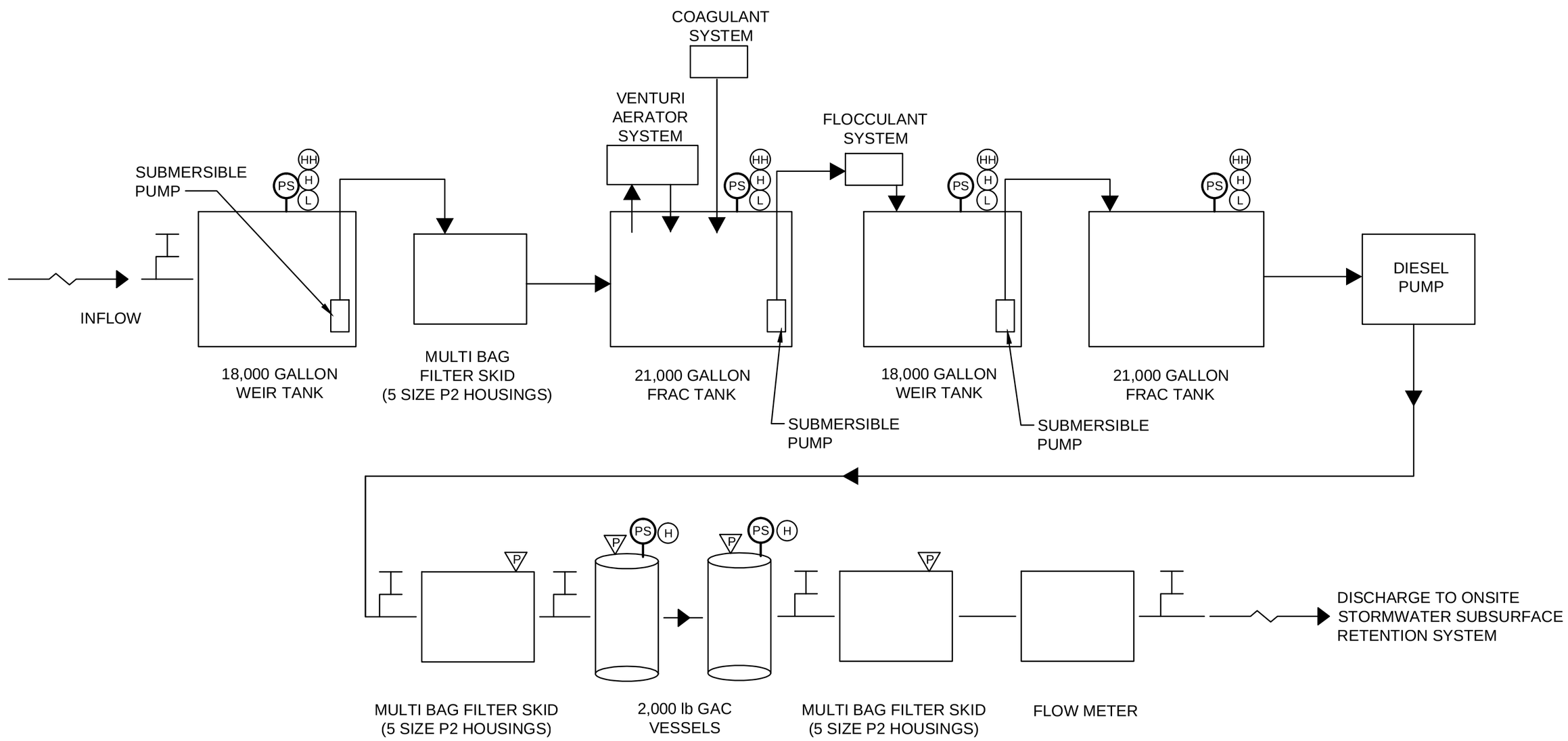

NOTE: TREATMENT EQUIPMENT TO BE PROVIDED BY CARBON FILTRATION SYSTEMS, INC.

LEGEND

- SAMPLE POINT
- PS — PRESSURE SWITCH
- PS HH — PRESSURE SWITCH - HIGH HIGH
- PS H — PRESSURE SWITCH - HIGH
- PS L — PRESSURE SWITCH - LOW
- P — PRESSURE GAUGE

Gordon R. Archibald, Inc.
Civil and Environmental Engineers
Pawtucket, Rhode Island

This drawing is copyrighted and is subject to copyright protection as an "architectural work" under 17 U. S. C. Sec. 101 et seq. The protection includes but is not limited to the overall form as well as the arrangement and composition of spaces, materials, color and elements in the design. Under such protection, unauthorized use of this drawing may result in the cessation of construction or buildings being seized and/or monetary compensation being awarded to The Robinson Green Beretta Corporation (RGB).

Any reproduction, possession, or use of this drawing or any part thereof without the express written permission of RGB, is prohibited. Violators will be prosecuted to the full extent of the law.

© RGB 2018

Certification

STEVEN P. CADORETTE
No. 8536
REGISTERED
PROFESSIONAL ENGINEER
(ENVIRONMENTAL)

Drawn by LBD

Checked by SPC

Revised on

50 Holden Street
Providence, Rhode Island 02908

Phone: (401) 272-1730
Fax: (401) 273-7156

E-mail: rgbinfo@rgb.net
www.rgb.net

RGB architects

Architecture ⊥Project Management ⊥Interior Design

Project

STATE OF RHODE ISLAND

DEPARTMENT OF TRANSPORTATION

EAST PROVIDENCE SALT SHED

WARREN AVE.
EAST PROVIDENCE, RI. 02914

Drawing Status

SCHEMATIC DESIGN

Issued On FEBRUARY 2019

Sheet Contents

TREATMENT SYSTEM SCHEMATIC

Project Number. 1880

Drawing No. FIGURE 3

Sheet of

F:\FILES\CAD\1880\Project Plans\DEWATERING\1880 Treatment System Schem.dwg, 5/17/2019 11:27:36 AM, USER67

TREATMENT SYSTEM DESIGN ANALYTICAL DATA

New England Testing Laboratory, Inc.
(401) 353-3420

REPORT OF ANALYTICAL RESULTS

NETLAB Work Order Number: 9A28002
Client Project: East Providence Maintenance

Report Date: 04-February-2019

Prepared for:

Steve Cadorette
Gordon R. Archibald, Inc.
200 Main Street
Pawtucket, RI 02860

Richard Warila, Laboratory Director
New England Testing Laboratory, Inc.
59 Greenhill Street
West Warwick, RI 02893
rich.warila@newenglandtesting.com

Samples Submitted :

The samples listed below were submitted to New England Testing Laboratory on 01/28/19. The group of samples appearing in this report was assigned an internal identification number (case number) for laboratory information management purposes. The client's designations for the individual samples, along with our case numbers, are used to identify the samples in this report. This report of analytical results pertains only to the sample(s) provided to us by the client which are indicated on the custody record. The case number for this sample submission is 9A28002. Custody records are included in this report.

Lab ID	Sample	Matrix	Date Sampled	Date Received
9A28002-01	GRA-2	Water	01/25/2019	01/28/2019

Request for Analysis

At the client's request, the analyses presented in the following table were performed on the samples submitted.

GRA-2 (Lab Number: 9A28002-01)

Analysis	Method
Antimony	EPA 6010C
Arsenic	EPA 6010C
Cadmium	EPA 6010C
Chromium	EPA 6010C
Copper	EPA 6010C
Dissolved Antimony	EPA 6010C
Dissolved Arsenic	EPA 6010C
Dissolved Cadmium	EPA 6010C
Dissolved Chromium	EPA 6010C
Dissolved Copper	EPA 6010C
Dissolved Iron	EPA 6010C
Dissolved Lead	EPA 6010C
Dissolved Mercury	EPA 7470A
Dissolved Nickel	EPA 6010C
Dissolved Selenium	EPA 6010C
Dissolved Silver	EPA 6010C
Dissolved Zinc	EPA 6010C
Hexavalent Chromium	SM3500-Cr-B
Iron	EPA 6010C
Lead	EPA 6010C
Mercury	EPA 7470A
Nickel	EPA 6010C
PCBs	EPA 8082A
Selenium	EPA 6010C
Semivolatile Organic Compounds	EPA 8270D
Silver	EPA 6010C
Total Petroleum Hydrocarbons	EPA-8100-mod
Trivalent Chromium	Calculation
Volatile Organic Compounds	EPA 8260C
Zinc	EPA 6010C

Method References

Standard Methods for the Examination of Water and Wastewater, 20th Edition, APHA/ AWWA-WPCF, 1998

Test Methods for Evaluating Solid Waste, Physical/Chemical Methods, SW846, USEPA

Case Narrative

Sample Receipt

The samples were all appropriately cooled and preserved upon receipt. The samples were received in the appropriate containers. The chain of custody was adequately completed and corresponded to the samples submitted.

Metals

All analyses were performed according to NETLAB's documented Standard Operating Procedures, within all required holding times, and with appropriate quality control measures. All QC was within laboratory established acceptance criteria. The samples were received, processed, and reported with no anomalies.

PCBs

All samples were extracted and analyzed within method specified holding times and according to NETLAB's documented standard operating procedures. The results for the associated calibration, method blank and laboratory control sample (LCS) were within method specified quality control criteria.

Semi-volatile Compounds

All samples were extracted and analyzed within method specified holding times and according to NETLAB's documented standard operating procedures. The results for the associated calibration, method blank and laboratory control sample (LCS) were within method specified quality control criteria.

Total Petroleum Hydrocarbons

All samples were extracted and analyzed within method specified holding times and according to NETLAB's documented standard operating procedures. The results for the associated calibration, method blank and laboratory control sample (LCS) were within method specified quality control criteria.

Volatile Organic Compounds

All samples were analyzed within method specified holding times and according to NETLAB's documented standard operating procedures. The results for the associated calibration, method blank and laboratory control sample (LCS) were within method specified quality control requirements and allowances.

'GRA-2' was reported with elevated detection limits due to the foaming nature of the sample.

Wet Chemistry

All samples were analyzed within method specified holding times and according to NETLAB's documented standard operating procedures.

The hexavalent chromium was reported with an elevated detection limit due to sample matrix interferences.

Results: Calculation

Sample: GRA-2

Lab Number: 9A28002-01 (Water)

Analyte	Result	Qual	Reporting Limit	Units	Date Prepared	Date Analyzed
Trivalent Chromium	ND		0.255	mg/L	01/29/19 18:20	01/29/19 18:20

Results: General Chemistry

Sample: GRA-2

Lab Number: 9A28002-01 (Water)

Analyte	Result	Qual	Reporting Limit	Units	Date Prepared	Date Analyzed
Hexavalent chromium	ND		0.25	mg/L	01/29/19 18:20	01/29/19 18:20

Results: Total Metals

Sample: GRA-2

Lab Number: 9A28002-01 (Water)

Analyte	Result	Qual	Reporting Limit	Units	Date Prepared	Date Analyzed
Antimony	**0.018**		0.005	mg/L	01/29/19	01/29/19
Arsenic	**0.03**		0.01	mg/L	01/29/19	01/29/19
Cadmium	**0.028**		0.005	mg/L	01/29/19	01/29/19
Chromium	**0.153**		0.005	mg/L	01/29/19	01/29/19
Copper	**0.44**		0.02	mg/L	01/29/19	01/29/19
Iron	**179**		0.05	mg/L	01/29/19	01/29/19
Lead	**3.09**		0.005	mg/L	01/29/19	01/29/19
Mercury	**0.0003**		0.0002	mg/L	02/01/19	02/01/19
Nickel	**0.093**		0.005	mg/L	01/29/19	01/29/19
Selenium	ND		0.01	mg/L	01/29/19	01/29/19
Silver	**0.006**		0.005	mg/L	01/29/19	01/29/19
Zinc	**1.50**		0.020	mg/L	01/29/19	01/29/19

Results: Dissolved Metals

Sample: GRA-2

Lab Number: 9A28002-01 (Water)

Analyte	Result	Qual	Reporting Limit	Units	Date Prepared	Date Analyzed
Antimony	ND		0.010	mg/L	02/04/19	02/04/19
Arsenic	ND		0.010	mg/L	02/04/19	02/04/19
Cadmium	ND		0.005	mg/L	02/04/19	02/04/19
Chromium	ND		0.005	mg/L	02/04/19	02/04/19
Copper	**0.089**		0.020	mg/L	02/04/19	02/04/19
Iron	**1.13**		0.050	mg/L	02/04/19	02/04/19
Lead	ND		0.005	mg/L	02/04/19	02/04/19
Mercury	ND		0.0002	mg/L	01/29/19	01/29/19
Nickel	**0.013**		0.005	mg/L	02/04/19	02/04/19
Selenium	ND		0.010	mg/L	02/04/19	02/04/19
Silver	ND		0.005	mg/L	02/04/19	02/04/19
Zinc	**0.104**		0.020	mg/L	02/04/19	02/04/19

Results: Volatile Organic Compounds

Sample: GRA-2

Lab Number: 9A28002-01 (Water)

Analyte	Result	Qual	Reporting Limit	Units	Date Prepared	Date Analyzed
Acetone	ND		25	ug/l	01/29/19	01/29/19
Benzene	ND		5	ug/l	01/29/19	01/29/19
Bromobenzene	ND		5	ug/l	01/29/19	01/29/19
Bromochloromethane	ND		5	ug/l	01/29/19	01/29/19
Bromodichloromethane	ND		5	ug/l	01/29/19	01/29/19
Bromoform	ND		5	ug/l	01/29/19	01/29/19
Bromomethane	ND		5	ug/l	01/29/19	01/29/19
2-Butanone	ND		25	ug/l	01/29/19	01/29/19
tert-Butyl alcohol	ND		25	ug/l	01/29/19	01/29/19
sec-Butylbenzene	ND		5	ug/l	01/29/19	01/29/19
n-Butylbenzene	ND		5	ug/l	01/29/19	01/29/19
tert-Butylbenzene	ND		5	ug/l	01/29/19	01/29/19
Methyl t-butyl ether (MTBE)	ND		5	ug/l	01/29/19	01/29/19
Carbon Disulfide	ND		5	ug/l	01/29/19	01/29/19
Carbon Tetrachloride	ND		5	ug/l	01/29/19	01/29/19
Chlorobenzene	ND		5	ug/l	01/29/19	01/29/19
Chloroethane	ND		5	ug/l	01/29/19	01/29/19
Chloroform	ND		5	ug/l	01/29/19	01/29/19
Chloromethane	ND		5	ug/l	01/29/19	01/29/19
4-Chlorotoluene	ND		5	ug/l	01/29/19	01/29/19
2-Chlorotoluene	ND		5	ug/l	01/29/19	01/29/19
1,2-Dibromo-3-chloropropane (DBCP)	ND		5	ug/l	01/29/19	01/29/19
Dibromochloromethane	ND		5	ug/l	01/29/19	01/29/19
1,2-Dibromoethane (EDB)	ND		5	ug/l	01/29/19	01/29/19
Dibromomethane	ND		5	ug/l	01/29/19	01/29/19
1,2-Dichlorobenzene	ND		5	ug/l	01/29/19	01/29/19
1,3-Dichlorobenzene	ND		5	ug/l	01/29/19	01/29/19
1,4-Dichlorobenzene	ND		5	ug/l	01/29/19	01/29/19
1,1-Dichloroethane	ND		5	ug/l	01/29/19	01/29/19
1,2-Dichloroethane	ND		5	ug/l	01/29/19	01/29/19
trans-1,2-Dichloroethene	ND		5	ug/l	01/29/19	01/29/19
cis-1,2-Dichloroethene	ND		5	ug/l	01/29/19	01/29/19
1,1-Dichloroethene	ND		5	ug/l	01/29/19	01/29/19
1,2-Dichloropropane	ND		5	ug/l	01/29/19	01/29/19
2,2-Dichloropropane	ND		5	ug/l	01/29/19	01/29/19
cis-1,3-Dichloropropene	ND		5	ug/l	01/29/19	01/29/19
trans-1,3-Dichloropropene	ND		5	ug/l	01/29/19	01/29/19
1,1-Dichloropropene	ND		5	ug/l	01/29/19	01/29/19
1,3-Dichloropropene (cis + trans)	ND		10	ug/l	01/29/19	01/29/19
Diethyl ether	ND		25	ug/l	01/29/19	01/29/19
1,4-Dioxane	ND		2500	ug/l	01/29/19	01/29/19
Ethylbenzene	ND		5	ug/l	01/29/19	01/29/19
Hexachlorobutadiene	ND		5	ug/l	01/29/19	01/29/19
2-Hexanone	ND		25	ug/l	01/29/19	01/29/19
Isopropylbenzene	ND		5	ug/l	01/29/19	01/29/19

Results: Volatile Organic Compounds (Continued)

Sample: GRA-2 (Continued)

Lab Number: 9A28002-01 (Water)

Analyte	Result	Qual	Reporting Limit	Units	Date Prepared	Date Analyzed
p-Isopropyltoluene	ND		5	ug/l	01/29/19	01/29/19
Methylene Chloride	ND		25	ug/l	01/29/19	01/29/19
4-Methyl-2-pentanone	ND		25	ug/l	01/29/19	01/29/19
Naphthalene	ND		5	ug/l	01/29/19	01/29/19
n-Propylbenzene	ND		5	ug/l	01/29/19	01/29/19
Styrene	ND		5	ug/l	01/29/19	01/29/19
1,1,1,2-Tetrachloroethane	ND		5	ug/l	01/29/19	01/29/19
Tetrachloroethene	ND		5	ug/l	01/29/19	01/29/19
Tetrahydrofuran	ND		25	ug/l	01/29/19	01/29/19
Toluene	ND		5	ug/l	01/29/19	01/29/19
1,2,4-Trichlorobenzene	ND		5	ug/l	01/29/19	01/29/19
1,2,3-Trichlorobenzene	ND		5	ug/l	01/29/19	01/29/19
1,1,2-Trichloroethane	ND		5	ug/l	01/29/19	01/29/19
1,1,1-Trichloroethane	ND		5	ug/l	01/29/19	01/29/19
Trichloroethene	ND		5	ug/l	01/29/19	01/29/19
1,2,3-Trichloropropane	ND		5	ug/l	01/29/19	01/29/19
1,3,5-Trimethylbenzene	ND		5	ug/l	01/29/19	01/29/19
1,2,4-Trimethylbenzene	ND		5	ug/l	01/29/19	01/29/19
Vinyl Chloride	ND		5	ug/l	01/29/19	01/29/19
o-Xylene	ND		5	ug/l	01/29/19	01/29/19
m&p-Xylene	ND		10	ug/l	01/29/19	01/29/19
Total xylenes	ND		10	ug/l	01/29/19	01/29/19
1,1,2,2-Tetrachloroethane	ND		5	ug/l	01/29/19	01/29/19
tert-Amyl methyl ether	ND		5	ug/l	01/29/19	01/29/19
1,3-Dichloropropane	ND		5	ug/l	01/29/19	01/29/19
Ethyl tert-butyl ether	ND		5	ug/l	01/29/19	01/29/19
Diisopropyl ether	ND		5	ug/l	01/29/19	01/29/19
Trichlorofluoromethane	ND		5	ug/l	01/29/19	01/29/19
Dichlorodifluoromethane	ND		5	ug/l	01/29/19	01/29/19

Surrogate(s)	Recovery%	Limits		
4-Bromofluorobenzene	*96.7%*	*70-130*	01/29/19	01/29/19
1,2-Dichloroethane-d4	*98.9%*	*70-130*	01/29/19	01/29/19
Toluene-d8	*98.4%*	*70-130*	01/29/19	01/29/19

Results: Semivolatile organic compounds

Sample: GRA-2

Lab Number: 9A28002-01 (Water)

Analyte	Result	Qual	Reporting Limit	Units	Date Prepared	Date Analyzed
1,2,4-Trichlorobenzene	ND		2	ug/l	01/29/19	01/31/19
1,2-Dichlorobenzene	ND		2	ug/l	01/29/19	01/31/19
1,3-Dichlorobenzene	ND		2	ug/l	01/29/19	01/31/19
1,4-Dichlorobenzene	ND		2	ug/l	01/29/19	01/31/19
Phenol	ND		2	ug/l	01/29/19	01/31/19
2,4,5-Trichlorophenol	ND		2	ug/l	01/29/19	01/31/19
2,4,6-Trichlorophenol	ND		2	ug/l	01/29/19	01/31/19
2,4-Dichlorophenol	ND		2	ug/l	01/29/19	01/31/19
2,4-Dimethylphenol	ND		10	ug/l	01/29/19	01/31/19
2,4-Dinitrophenol	ND		5	ug/l	01/29/19	01/31/19
2,4-Dinitrotoluene	ND		2	ug/l	01/29/19	01/31/19
2,6-Dinitrotoluene	ND		2	ug/l	01/29/19	01/31/19
2-Chloronaphthalene	ND		2	ug/l	01/29/19	01/31/19
2-Chlorophenol	ND		2	ug/l	01/29/19	01/31/19
2-Methylnaphthalene	ND		2	ug/l	01/29/19	01/31/19
Nitrobenzene	ND		2	ug/l	01/29/19	01/31/19
2-Methylphenol	ND		2	ug/l	01/29/19	01/31/19
2-Nitroaniline	ND		2	ug/l	01/29/19	01/31/19
2-Nitrophenol	ND		5	ug/l	01/29/19	01/31/19
3,3'-Dichlorobenzidine	ND		5	ug/l	01/29/19	01/31/19
3-Nitroaniline	ND		2	ug/l	01/29/19	01/31/19
4,6-Dinitro-2-methylphenol	ND		5	ug/l	01/29/19	01/31/19
4-Bromophenyl phenyl ether	ND		2	ug/l	01/29/19	01/31/19
4-Chloro-3-methylphenol	ND		2	ug/l	01/29/19	01/31/19
4-Chloroaniline	ND		5	ug/l	01/29/19	01/31/19
4-Chlorophenyl phenyl ether	ND		2	ug/l	01/29/19	01/31/19
4-Nitroaniline	ND		2	ug/l	01/29/19	01/31/19
4-Nitrophenol	ND		5	ug/l	01/29/19	01/31/19
Acenaphthene	ND		2	ug/l	01/29/19	01/31/19
Acenaphthylene	ND		2	ug/l	01/29/19	01/31/19
Aniline	ND		2	ug/l	01/29/19	01/31/19
Anthracene	ND		2	ug/l	01/29/19	01/31/19
Benzo(a)anthracene	ND		2	ug/l	01/29/19	01/31/19
Benzo(a)pyrene	ND		2	ug/l	01/29/19	01/31/19
Benzo(b)fluoranthene	ND		2	ug/l	01/29/19	01/31/19
Benzo(g,h,i)perylene	ND		2	ug/l	01/29/19	01/31/19
Benzo(k)fluoranthene	ND		2	ug/l	01/29/19	01/31/19
Benzoic acid	ND		15	ug/l	01/29/19	01/31/19
Bis(2-chloroethoxy)methane	ND		2	ug/l	01/29/19	01/31/19
Bis(2-chloroethyl)ether	ND		2	ug/l	01/29/19	01/31/19
Bis(2-chloroisopropyl)ether	ND		2	ug/l	01/29/19	01/31/19
Bis(2-ethylhexyl)phthalate	ND		6	ug/l	01/29/19	01/31/19
Butyl benzyl phthalate	ND		3	ug/l	01/29/19	01/31/19
Chrysene	ND		2	ug/l	01/29/19	01/31/19
Di(n)octyl phthalate	ND		3	ug/l	01/29/19	01/31/19

Results: Semivolatile organic compounds (Continued)

Sample: GRA-2 (Continued)

Lab Number: 9A28002-01 (Water)

Analyte	Result	Qual	Reporting Limit	Units	Date Prepared	Date Analyzed
Dibenz(a,h)anthracene	ND		2	ug/l	01/29/19	01/31/19
Dibenzofuran	ND		2	ug/l	01/29/19	01/31/19
Diethyl phthalate	ND		2	ug/l	01/29/19	01/31/19
Dimethyl phthalate	ND		5	ug/l	01/29/19	01/31/19
Di-n-butylphthalate	ND		2	ug/l	01/29/19	01/31/19
Fluoranthene	ND		2	ug/l	01/29/19	01/31/19
Fluorene	ND		2	ug/l	01/29/19	01/31/19
Hexachlorobenzene	ND		2	ug/l	01/29/19	01/31/19
Hexachlorobutadiene	ND		2	ug/l	01/29/19	01/31/19
Hexachlorocyclopentadiene	ND		5	ug/l	01/29/19	01/31/19
Hexachloroethane	ND		2	ug/l	01/29/19	01/31/19
Indeno(1,2,3-cd)pyrene	ND		2	ug/l	01/29/19	01/31/19
Isophorone	ND		2	ug/l	01/29/19	01/31/19
Naphthalene	ND		2	ug/l	01/29/19	01/31/19
N-Nitrosodimethylamine	ND		2	ug/l	01/29/19	01/31/19
N-Nitrosodi-n-propylamine	ND		2	ug/l	01/29/19	01/31/19
N-Nitrosodiphenylamine	ND		2	ug/l	01/29/19	01/31/19
Pentachlorophenol	ND		5	ug/l	01/29/19	01/31/19
Phenanthrene	ND		2	ug/l	01/29/19	01/31/19
Pyrene	ND		2	ug/l	01/29/19	01/31/19
m&p-Cresol	ND		4	ug/l	01/29/19	01/31/19
Pyridine	ND		2	ug/l	01/29/19	01/31/19

Surrogate(s)	Recovery%	Limits		
Nitrobenzene-d5	*87.1%*	*30-130*	01/29/19	01/31/19
p-Terphenyl-d14	*101%*	*30-130*	01/29/19	01/31/19
2-Fluorobiphenyl	*83.6%*	*30-123*	01/29/19	01/31/19
Phenol-d6	*26.0%*	*10-83*	01/29/19	01/31/19
2,4,6-Tribromophenol	*96.3%*	*18-120*	01/29/19	01/31/19
2-Fluorophenol	*42.3%*	*10-81*	01/29/19	01/31/19

Results: Polychlorinated Biphenyls (PCBs)

Sample: GRA-2

Lab Number: 9A28002-01 (Water)

Analyte	Result	Qual	Reporting Limit	Units	Date Prepared	Date Analyzed
Aroclor-1016	ND		0.1	ug/l	02/01/19	02/04/19
Aroclor-1221	ND		0.2	ug/l	02/01/19	02/04/19
Aroclor-1232	ND		0.1	ug/l	02/01/19	02/04/19
Aroclor-1242	ND		0.1	ug/l	02/01/19	02/04/19
Aroclor-1248	ND		0.1	ug/l	02/01/19	02/04/19
Aroclor-1254	ND		0.1	ug/l	02/01/19	02/04/19
Aroclor-1260	ND		0.1	ug/l	02/01/19	02/04/19
Aroclor-1262	ND		0.1	ug/l	02/01/19	02/04/19
Aroclor-1268	ND		0.1	ug/l	02/01/19	02/04/19
PCBs (Total)	ND		0.1	ug/l	02/01/19	02/04/19

Surrogate(s)	Recovery%	Limits		
2,4,5,6-Tetrachloro-m-xylene (TCMX)	*74.1%*	*30-107*	02/01/19	02/04/19
Decachlorobiphenyl (DCBP)	*81.5%*	*30-140*	02/01/19	02/04/19

Results: Total Petroleum Hydrocarbons

Sample: GRA-2

Lab Number: 9A28002-01 (Water)

Analyte	Result	Qual	Reporting Limit	Units	Date Prepared	Date Analyzed
Total Petroleum Hydrocarbons	ND		200	ug/l	01/29/19	01/29/19
Surrogate(s)	Recovery%		Limits			
Chlorooctadecane	*61.5%*		*54.2-105*		01/29/19	01/29/19

Quality Control

General Chemistry

Analyte	Result	Qual	Reporting Limit	Units	Spike Level	Source Result	%REC	%REC Limits	RPD	RPD Limit
Batch: B9A1275 - Hexavalent Chrome										
Blank (B9A1275-BLK1)					Prepared & Analyzed: 01/29/19					
Hexavalent chromium	ND		0.01	mg/L						
Blank (B9A1275-BLK2)					Prepared & Analyzed: 01/29/19					
Hexavalent chromium	ND		0.01	mg/L						
LCS (B9A1275-BS1)					Prepared & Analyzed: 01/29/19					
Hexavalent chromium	0.45		0.01	mg/L	0.500		90.0	90-110		
LCS (B9A1275-BS2)					Prepared & Analyzed: 01/29/19					
Hexavalent chromium	0.09		0.01	mg/L	0.100		90.0	90-110		
LCS (B9A1275-BS3)					Prepared & Analyzed: 01/29/19					
Hexavalent chromium	0.46		0.01	mg/L	0.500		92.2	90-110		
Duplicate (B9A1275-DUP1)		**Source: 9A29047-01**			Prepared & Analyzed: 01/29/19					
Hexavalent chromium	ND		0.01	mg/L		ND				20
Matrix Spike (B9A1275-MS1)		**Source: 9A29047-01**			Prepared & Analyzed: 01/29/19					
Hexavalent chromium	0.45		0.01	mg/L	0.500	ND	90.0	80-120		

Quality Control
(Continued)

Total Metals

Analyte	Result	Qual	Reporting Limit	Units	Spike Level	Source Result	%REC	%REC Limits	RPD	RPD Limit
Batch: B9A1134 - Hot plate acid digestion waters										
Blank (B9A1134-BLK1)					Prepared: 01/29/19 Analyzed: 01/31/19					
Zinc	ND		0.020	mg/L						
Chromium	ND		0.005	mg/L						
Lead	ND		0.005	mg/L						
Silver	ND		0.005	mg/L						
Cadmium	ND		0.005	mg/L						
Selenium	ND		0.01	mg/L						
Nickel	ND		0.005	mg/L						
Antimony	ND		0.005	mg/L						
Copper	ND		0.02	mg/L						
Iron	ND		0.05	mg/L						
Arsenic	ND		0.01	mg/L						
LCS (B9A1134-BS1)					Prepared: 01/29/19 Analyzed: 01/31/19					
Nickel	1.03		0.005	mg/L	1.00		103	85-112		
Copper	1.06		0.02	mg/L	1.00		106	85-115		
Lead	1.03		0.005	mg/L	1.00		103	85-115		
Silver	0.400		0.005	mg/L	0.400		99.9	85-115		
Antimony	1.12		0.005	mg/L	1.00		112	85-115		
Iron	10.4		0.05	mg/L	10.0		104	85-115		
Chromium	1.05		0.005	mg/L	1.00		105	85-115		
Cadmium	1.02		0.005	mg/L	1.00		102	85-114		
Selenium	0.20		0.01	mg/L	0.200		99.7	85-115		
Arsenic	0.21		0.01	mg/L	0.200		105	85-115		
Zinc	1.09		0.020	mg/L	1.00		109	85-115		
Batch: B9B0050 - Hot plate acid digestion waters										
Blank (B9B0050-BLK1)					Prepared & Analyzed: 02/01/19					
Mercury	ND		0.0002	mg/L						

Quality Control
(Continued)

Total Metals (Continued)

Analyte	Result	Qual	Reporting Limit	Units	Spike Level	Source Result	%REC	%REC Limits	RPD	RPD Limit
Batch: B9B0050 - Hot plate acid digestion waters (Continued)										
LCS (B9B0050-BS1)					Prepared & Analyzed: 02/01/19					
Mercury	0.983			ug/l	1.00		98.3	85-115		

Quality Control
(Continued)

Dissolved Metals

Analyte	Result	Qual	Reporting Limit	Units	Spike Level	Source Result	%REC	%REC Limits	RPD	RPD Limit
Batch: B9B0097 - Hot plate acid digestion waters										
Blank (B9B0097-BLK1)					Prepared & Analyzed: 02/04/19					
Zinc	ND		0.020	mg/L						
Arsenic	ND		0.010	mg/L						
Iron	ND		0.050	mg/L						
Selenium	ND		0.010	mg/L						
Lead	ND		0.005	mg/L						
Chromium	ND		0.005	mg/L						
Nickel	ND		0.005	mg/L						
Silver	ND		0.005	mg/L						
Cadmium	ND		0.005	mg/L						
Antimony	ND		0.010	mg/L						
Copper	ND		0.020	mg/L						
LCS (B9B0097-BS1)					Prepared & Analyzed: 02/04/19					
Arsenic	0.210		0.010	mg/L	0.200		105	85-115		
Zinc	1.09		0.020	mg/L	1.00		109	85-115		
Iron	10.1		0.050	mg/L	10.0		101	85-115		
Copper	0.940		0.020	mg/L	1.00		94.0	85-115		
Nickel	1.01		0.005	mg/L	1.00		101	85-115		
Cadmium	1.03		0.005	mg/L	1.00		103	85-115		
Silver	0.389		0.005	mg/L	0.400		97.3	85-115		
Chromium	1.02		0.005	mg/L	1.00		102	85-115		
Lead	1.01		0.005	mg/L	1.00		101	85-115		
Antimony	1.03		0.010	mg/L	1.00		103	85-115		
Selenium	0.207		0.010	mg/L	0.200		104	85-115		

Quality Control
(Continued)

Volatile Organic Compounds

Analyte	Result	Qual	Reporting Limit	Units	Spike Level	Source Result	%REC	%REC Limits	RPD	RPD Limit
Batch: B9A1178 - Purge-Trap										
Blank (B9A1178-BLK1)					Prepared & Analyzed: 01/29/19					
Acetone	ND		5	ug/l						
Benzene	ND		1	ug/l						
Bromobenzene	ND		1	ug/l						
Bromochloromethane	ND		1	ug/l						
Bromodichloromethane	ND		1	ug/l						
Bromoform	ND		1	ug/l						
Bromomethane	ND		1	ug/l						
2-Butanone	ND		5	ug/l						
tert-Butyl alcohol	ND		5	ug/l						
sec-Butylbenzene	ND		1	ug/l						
n-Butylbenzene	ND		1	ug/l						
tert-Butylbenzene	ND		1	ug/l						
Methyl t-butyl ether (MTBE)	ND		1	ug/l						
Carbon Disulfide	ND		1	ug/l						
Carbon Tetrachloride	ND		1	ug/l						
Chlorobenzene	ND		1	ug/l						
Chloroethane	ND		1	ug/l						
Chloroform	ND		1	ug/l						
Chloromethane	ND		1	ug/l						
4-Chlorotoluene	ND		1	ug/l						
2-Chlorotoluene	ND		1	ug/l						
1,2-Dibromo-3-chloropropane (DBCP)	ND		1	ug/l						
Dibromochloromethane	ND		1	ug/l						
1,2-Dibromoethane (EDB)	ND		1	ug/l						
Dibromomethane	ND		1	ug/l						
1,2-Dichlorobenzene	ND		1	ug/l						
1,3-Dichlorobenzene	ND		1	ug/l						
1,4-Dichlorobenzene	ND		1	ug/l						
1,1-Dichloroethane	ND		1	ug/l						
1,2-Dichloroethane	ND		1	ug/l						
trans-1,2-Dichloroethene	ND		1	ug/l						
cis-1,2-Dichloroethene	ND		1	ug/l						
1,1-Dichloroethene	ND		1	ug/l						
1,2-Dichloropropane	ND		1	ug/l						
2,2-Dichloropropane	ND		1	ug/l						
cis-1,3-Dichloropropene	ND		1	ug/l						
trans-1,3-Dichloropropene	ND		1	ug/l						
1,1-Dichloropropene	ND		1	ug/l						
1,3-Dichloropropene (cis + trans)	ND		2	ug/l						
Diethyl ether	ND		5	ug/l						
1,4-Dioxane	ND		500	ug/l						
Ethylbenzene	ND		1	ug/l						
Hexachlorobutadiene	ND		1	ug/l						
2-Hexanone	ND		5	ug/l						
Isopropylbenzene	ND		1	ug/l						
p-Isopropyltoluene	ND		1	ug/l						
Methylene Chloride	ND		5	ug/l						
4-Methyl-2-pentanone	ND		5	ug/l						
Naphthalene	ND		1	ug/l						
n-Propylbenzene	ND		1	ug/l						
Styrene	ND		1	ug/l						
1,1,1,2-Tetrachloroethane	ND		1	ug/l						
Tetrachloroethene	ND		1	ug/l						
Tetrahydrofuran	ND		5	ug/l						

Quality Control
(Continued)

Volatile Organic Compounds (Continued)

Analyte	Result	Qual	Reporting Limit	Units	Spike Level	Source Result	%REC	%REC Limits	RPD	RPD Limit
Batch: B9A1178 - Purge-Trap (Continued)										
Blank (B9A1178-BLK1)					Prepared & Analyzed: 01/29/19					
Toluene	ND		1	ug/l						
1,2,4-Trichlorobenzene	ND		1	ug/l						
1,2,3-Trichlorobenzene	ND		1	ug/l						
1,1,2-Trichloroethane	ND		1	ug/l						
1,1,1-Trichloroethane	ND		1	ug/l						
Trichloroethene	ND		1	ug/l						
1,2,3-Trichloropropane	ND		1	ug/l						
1,3,5-Trimethylbenzene	ND		1	ug/l						
1,2,4-Trimethylbenzene	ND		1	ug/l						
Vinyl Chloride	ND		1	ug/l						
o-Xylene	ND		1	ug/l						
m&p-Xylene	ND		2	ug/l						
Total xylenes	ND		2	ug/l						
1,1,2,2-Tetrachloroethane	ND		1	ug/l						
tert-Amyl methyl ether	ND		1	ug/l						
1,3-Dichloropropane	ND		1	ug/l						
Ethyl tert-butyl ether	ND		1	ug/l						
Diisopropyl ether	ND		1	ug/l						
Trichlorofluoromethane	ND		1	ug/l						
Dichlorodifluoromethane	ND		1	ug/l						
Surrogate: 4-Bromofluorobenzene			*48.0*	ug/l	*50.0*		*96.0*	*70-130*		
Surrogate: 1,2-Dichloroethane-d4			*53.5*	ug/l	*50.0*		*107*	*70-130*		
Surrogate: Toluene-d8			*48.8*	ug/l	*50.0*		*97.5*	*70-130*		
LCS (B9A1178-BS1)					Prepared & Analyzed: 01/29/19					
1,3,5-Trichlorobenzene	49			ug/l	50.0		97.8	70-130		
Acetone	66			ug/l	50.0		132	70-130		
Benzene	50			ug/l	50.0		99.8	70-130		
Bromobenzene	53			ug/l	50.0		106	70-130		
Bromochloromethane	52			ug/l	50.0		104	70-130		
Bromodichloromethane	52			ug/l	50.0		104	70-130		
Bromoform	54			ug/l	50.0		109	70-130		
Bromomethane	59			ug/l	50.0		118	70-130		
2-Butanone	64			ug/l	50.0		127	70-130		
tert-Butyl alcohol	54			ug/l	50.0		108	70-130		
sec-Butylbenzene	58			ug/l	50.0		116	70-130		
n-Butylbenzene	56			ug/l	50.0		112	70-130		
tert-Butylbenzene	57			ug/l	50.0		114	70-130		
Methyl t-butyl ether (MTBE)	54			ug/l	50.0		108	70-130		
Carbon Disulfide	43			ug/l	50.0		86.2	70-130		
Carbon Tetrachloride	52			ug/l	50.0		103	70-130		
Chlorobenzene	52			ug/l	50.0		104	70-130		
Chloroethane	59			ug/l	50.0		118	70-130		
Chloroform	49			ug/l	50.0		98.6	70-130		
Chloromethane	58			ug/l	50.0		116	70-130		
4-Chlorotoluene	54			ug/l	50.0		107	70-130		
2-Chlorotoluene	53			ug/l	50.0		106	70-130		
1,2-Dibromo-3-chloropropane (DBCP)	52			ug/l	50.0		104	70-130		
Dibromochloromethane	54			ug/l	50.0		108	70-130		
1,2-Dibromoethane (EDB)	56			ug/l	50.0		111	70-130		
Dibromomethane	50			ug/l	50.0		101	70-130		
1,2-Dichlorobenzene	52			ug/l	50.0		105	70-130		
1,3-Dichlorobenzene	54			ug/l	50.0		107	70-130		
1,4-Dichlorobenzene	50			ug/l	50.0		101	70-130		

Quality Control
(Continued)

Volatile Organic Compounds (Continued)

Analyte	Result	Qual	Reporting Limit	Units	Spike Level	Source Result	%REC	%REC Limits	RPD	RPD Limit
Batch: B9A1178 - Purge-Trap (Continued)										
LCS (B9A1178-BS1)					Prepared & Analyzed: 01/29/19					
1,1-Dichloroethane	52			ug/l	50.0		104	70-130		
1,2-Dichloroethane	50			ug/l	50.0		100	70-130		
trans-1,2-Dichloroethene	53			ug/l	50.0		106	70-130		
cis-1,2-Dichloroethene	55			ug/l	50.0		109	70-130		
1,1-Dichloroethene	50			ug/l	50.0		99.9	70-130		
1,2-Dichloropropane	55			ug/l	50.0		111	70-130		
2,2-Dichloropropane	54			ug/l	50.0		109	70-130		
cis-1,3-Dichloropropene	56			ug/l	50.0		113	70-130		
trans-1,3-Dichloropropene	56			ug/l	50.0		112	70-130		
1,1-Dichloropropene	59			ug/l	50.0		118	70-130		
Diethyl ether	49			ug/l	50.0		97.7	70-130		
1,4-Dioxane	282			ug/l	250		113	70-130		
Ethylbenzene	53			ug/l	50.0		106	70-130		
Hexachlorobutadiene	56			ug/l	50.0		112	70-130		
2-Hexanone	62			ug/l	50.0		125	70-130		
Isopropylbenzene	57			ug/l	50.0		114	70-130		
p-Isopropyltoluene	59			ug/l	50.0		118	70-130		
Methylene Chloride	49			ug/l	50.0		97.6	70-130		
4-Methyl-2-pentanone	56			ug/l	50.0		112	70-130		
Naphthalene	57			ug/l	50.0		115	70-130		
n-Propylbenzene	55			ug/l	50.0		111	70-130		
Styrene	57			ug/l	50.0		114	70-130		
1,1,1,2-Tetrachloroethane	53			ug/l	50.0		106	70-130		
Tetrachloroethene	54			ug/l	50.0		107	70-130		
Tetrahydrofuran	55			ug/l	50.0		109	70-130		
Toluene	53			ug/l	50.0		107	70-130		
1,2,4-Trichlorobenzene	52			ug/l	50.0		105	70-130		
1,2,3-Trichlorobenzene	54			ug/l	50.0		108	70-130		
1,1,2-Trichloroethane	54			ug/l	50.0		108	70-130		
1,1,1-Trichloroethane	50			ug/l	50.0		100	70-130		
Trichloroethene	47			ug/l	50.0		94.9	70-130		
1,2,3-Trichloropropane	52			ug/l	50.0		105	70-130		
1,3,5-Trimethylbenzene	56			ug/l	50.0		112	70-130		
1,2,4-Trimethylbenzene	56			ug/l	50.0		112	70-130		
Vinyl Chloride	60			ug/l	50.0		119	70-130		
o-Xylene	56			ug/l	50.0		111	70-130		
m&p-Xylene	108			ug/l	100		108	70-130		
1,1,2,2-Tetrachloroethane	52			ug/l	50.0		104	70-130		
tert-Amyl methyl ether	56			ug/l	50.0		112	70-130		
1,3-Dichloropropane	54			ug/l	50.0		108	70-130		
Ethyl tert-butyl ether	55			ug/l	50.0		110	70-130		
Diisopropyl ether	52			ug/l	50.0		104	70-130		
Trichlorofluoromethane	62			ug/l	50.0		123	70-130		
Dichlorodifluoromethane	64			ug/l	50.0		128	70-130		
Surrogate: 4-Bromofluorobenzene			*51.2*	ug/l	*50.0*		*102*	*70-130*		
Surrogate: 1,2-Dichloroethane-d4			*48.5*	ug/l	*50.0*		*97.0*	*70-130*		
Surrogate: Toluene-d8			*50.1*	ug/l	*50.0*		*100*	*70-130*		

Quality Control
(Continued)

Semivolatile organic compounds

Analyte	Result	Qual	Reporting Limit	Units	Spike Level	Source Result	%REC	%REC Limits	RPD	RPD Limit
Batch: B9A1105 - Sep-Funnel-extraction										
Blank (B9A1105-BLK1)					Prepared & Analyzed: 01/29/19					
1,2,4-Trichlorobenzene	ND		2	ug/l						
1,2-Dichlorobenzene	ND		2	ug/l						
1,3-Dichlorobenzene	ND		2	ug/l						
1,4-Dichlorobenzene	ND		2	ug/l						
Phenol	ND		2	ug/l						
2,4,5-Trichlorophenol	ND		2	ug/l						
2,4,6-Trichlorophenol	ND		2	ug/l						
2,4-Dichlorophenol	ND		2	ug/l						
2,4-Dimethylphenol	ND		10	ug/l						
2,4-Dinitrophenol	ND		5	ug/l						
2,4-Dinitrotoluene	ND		2	ug/l						
2,6-Dinitrotoluene	ND		2	ug/l						
2-Chloronaphthalene	ND		2	ug/l						
2-Chlorophenol	ND		2	ug/l						
2-Methylnaphthalene	ND		2	ug/l						
Nitrobenzene	ND		2	ug/l						
2-Methylphenol	ND		2	ug/l						
2-Nitroaniline	ND		2	ug/l						
2-Nitrophenol	ND		5	ug/l						
3,3'-Dichlorobenzidine	ND		5	ug/l						
3-Nitroaniline	ND		2	ug/l						
4,6-Dinitro-2-methylphenol	ND		5	ug/l						
4-Bromophenyl phenyl ether	ND		2	ug/l						
4-Chloro-3-methylphenol	ND		2	ug/l						
4-Chloroaniline	ND		5	ug/l						
4-Chlorophenyl phenyl ether	ND		2	ug/l						
4-Nitroaniline	ND		2	ug/l						
4-Nitrophenol	ND		5	ug/l						
Acenaphthene	ND		2	ug/l						
Acenaphthylene	ND		2	ug/l						
Aniline	ND		2	ug/l						
Anthracene	ND		2	ug/l						
Benzo(a)anthracene	ND		2	ug/l						
Benzo(a)pyrene	ND		2	ug/l						
Benzo(b)fluoranthene	ND		2	ug/l						
Benzo(g,h,i)perylene	ND		2	ug/l						
Benzo(k)fluoranthene	ND		2	ug/l						
Benzoic acid	ND		15	ug/l						
Bis(2-chloroethoxy)methane	ND		2	ug/l						
Bis(2-chloroethyl)ether	ND		2	ug/l						
Bis(2-chloroisopropyl)ether	ND		2	ug/l						
Bis(2-ethylhexyl)phthalate	ND		6	ug/l						
Butyl benzyl phthalate	ND		3	ug/l						
Chrysene	ND		2	ug/l						
Di(n)octyl phthalate	ND		3	ug/l						
Dibenz(a,h)anthracene	ND		2	ug/l						
Dibenzofuran	ND		2	ug/l						
Diethyl phthalate	ND		2	ug/l						
Dimethyl phthalate	ND		5	ug/l						
Di-n-butylphthalate	ND		2	ug/l						
Fluoranthene	ND		2	ug/l						
Fluorene	ND		2	ug/l						
Hexachlorobenzene	ND		2	ug/l						
Hexachlorobutadiene	ND		2	ug/l						

Quality Control
(Continued)

Semivolatile organic compounds (Continued)

Analyte	Result	Qual	Reporting Limit	Units	Spike Level	Source Result	%REC	%REC Limits	RPD	RPD Limit
Batch: B9A1105 - Sep-Funnel-extraction (Continued)										
Blank (B9A1105-BLK1)					Prepared & Analyzed: 01/29/19					
Hexachlorocyclopentadiene	ND		5	ug/l						
Hexachloroethane	ND		2	ug/l						
Indeno(1,2,3-cd)pyrene	ND		2	ug/l						
Isophorone	ND		2	ug/l						
Naphthalene	ND		2	ug/l						
N-Nitrosodimethylamine	ND		2	ug/l						
N-Nitrosodi-n-propylamine	ND		2	ug/l						
N-Nitrosodiphenylamine	ND		2	ug/l						
Pentachlorophenol	ND		5	ug/l						
Phenanthrene	ND		2	ug/l						
Pyrene	ND		2	ug/l						
m&p-Cresol	ND		4	ug/l						
Pyridine	ND		2	ug/l						
Surrogate: Nitrobenzene-d5			*32.6*	ug/l	*50.0*		*65.2*	*30-130*		
Surrogate: p-Terphenyl-d14			*41.4*	ug/l	*50.0*		*82.7*	*30-130*		
Surrogate: 2-Fluorobiphenyl			*29.8*	ug/l	*50.0*		*59.6*	*30-123*		
Surrogate: Phenol-d6			*7.89*	ug/l	*50.0*		*15.8*	*10-83*		
Surrogate: 2,4,6-Tribromophenol			*33.3*	ug/l	*50.0*		*66.6*	*18-120*		
Surrogate: 2-Fluorophenol			*10.1*	ug/l	*50.0*		*20.2*	*10-81*		
LCS (B9A1105-BS1)					Prepared & Analyzed: 01/29/19					
1,2,4-Trichlorobenzene	36		2	ug/l	50.0		71.1	26-98		
1,2-Dichlorobenzene	32		2	ug/l	50.0		64.4	27-92		
1,3-Dichlorobenzene	32		2	ug/l	50.0		63.4	26-87		
1,4-Dichlorobenzene	33		2	ug/l	50.0		65.6	26-89		
Phenol	13		2	ug/l	50.0		25.9	10-67		
2,4,5-Trichlorophenol	42		2	ug/l	50.0		83.3	34-123		
2,4,6-Trichlorophenol	40		2	ug/l	50.0		80.8	35-114		
2,4-Dichlorophenol	39		2	ug/l	50.0		77.7	28-105		
2,4-Dimethylphenol	32		10	ug/l	50.0		63.7	28-114		
2,4-Dinitrophenol	40		5	ug/l	50.0		79.9	15-130		
2,4-Dinitrotoluene	42		2	ug/l	50.0		83.7	41-129		
2,6-Dinitrotoluene	40		2	ug/l	50.0		80.8	41-128		
2-Chloronaphthalene	34		2	ug/l	50.0		67.8	33-108		
2-Chlorophenol	34		2	ug/l	50.0		68.5	28-85		
2-Methylnaphthalene	37		2	ug/l	50.0		74.8	27-104		
Nitrobenzene	34		2	ug/l	50.0		68.8	26-100		
2-Methylphenol	27		2	ug/l	50.0		54.9	30-86		
2-Nitroaniline	44		2	ug/l	50.0		88.0	37-130		
2-Nitrophenol	38		5	ug/l	50.0		75.3	25-115		
3-Nitroaniline	43		2	ug/l	50.0		86.4	32-130		
4,6-Dinitro-2-methylphenol	45		5	ug/l	50.0		89.3	10-130		
4-Bromophenyl phenyl ether	45		2	ug/l	50.0		90.5	36-130		
4-Chloro-3-methylphenol	39		2	ug/l	50.0		77.1	29-116		
4-Chlorophenyl phenyl ether	43		2	ug/l	50.0		85.3	38-130		
4-Nitroaniline	45		2	ug/l	50.0		90.0	15-130		
Acenaphthene	37		2	ug/l	50.0		74.1	34-130		
Acenaphthylene	39		2	ug/l	50.0		79.0	35-113		
Aniline	23		2	ug/l	50.0		45.1	14-92		
Anthracene	46		2	ug/l	50.0		91.8	45-121		
Benzo(a)anthracene	49		2	ug/l	50.0		98.4	52-130		
Benzo(a)pyrene	53		2	ug/l	50.0		105	46-130		
Benzo(b)fluoranthene	51		2	ug/l	50.0		102	45-130		
Benzo(g,h,i)perylene	54		2	ug/l	50.0		108	36-130		

Quality Control
(Continued)

Semivolatile organic compounds (Continued)

Analyte	Result	Qual	Reporting Limit	Units	Spike Level	Source Result	%REC	%REC Limits	RPD	RPD Limit
Batch: B9A1105 - Sep-Funnel-extraction (Continued)										
LCS (B9A1105-BS1)					Prepared & Analyzed: 01/29/19					
Benzo(k)fluoranthene	51		2	ug/l	50.0		102	46-130		
Bis(2-chloroethoxy)methane	38		2	ug/l	50.0		76.8	28-120		
Bis(2-chloroethyl)ether	32		2	ug/l	50.0		64.4	26-120		
Bis(2-ethylhexyl)phthalate	55		6	ug/l	50.0		110	33-130		
Butyl benzyl phthalate	51		3	ug/l	50.0		101	34-130		
Chrysene	49		2	ug/l	50.0		98.6	47-130		
Di(n)octyl phthalate	52		3	ug/l	50.0		104	30-130		
Dibenz(a,h)anthracene	53		2	ug/l	50.0		105	48-130		
Dibenzofuran	39		2	ug/l	50.0		77.9	36-116		
Diethyl phthalate	43		2	ug/l	50.0		85.1	39-121		
Dimethyl phthalate	41		5	ug/l	50.0		82.3	40-130		
Di-n-butylphthalate	46		2	ug/l	50.0		91.3	38-130		
Fluoranthene	48		2	ug/l	50.0		95.7	48-122		
Fluorene	42		2	ug/l	50.0		84.1	40-130		
Hexachlorobenzene	40		2	ug/l	50.0		80.2	48-130		
Hexachlorobutadiene	40		2	ug/l	50.0		80.1	26-115		
Hexachlorocyclopentadiene	30		5	ug/l	50.0		59.8	10-115		
Hexachloroethane	32		2	ug/l	50.0		64.9	24-89		
Indeno(1,2,3-cd)pyrene	54		2	ug/l	50.0		108	41-130		
Isophorone	36		2	ug/l	50.0		71.9	26-115		
Naphthalene	37		2	ug/l	50.0		74.1	27-104		
N-Nitrosodimethylamine	18		2	ug/l	50.0		35.8	10-69		
N-Nitrosodi-n-propylamine	34		2	ug/l	50.0		67.8	31-106		
N-Nitrosodiphenylamine	50		2	ug/l	50.0		100	30-130		
Pentachlorophenol	56		5	ug/l	50.0		111	30-130		
Phenanthrene	45		2	ug/l	50.0		91.0	48-115		
Pyrene	45		2	ug/l	50.0		90.3	45-130		
m&p-Cresol	26		4	ug/l	50.0		52.6	15-115		
Surrogate: Nitrobenzene-d5			*43.1*	ug/l	*50.0*		*86.2*	*30-130*		
Surrogate: p-Terphenyl-d14			*47.1*	ug/l	*50.0*		*94.3*	*30-130*		
Surrogate: 2-Fluorobiphenyl			*42.6*	ug/l	*50.0*		*85.1*	*30-123*		
Surrogate: Phenol-d6			*14.2*	ug/l	*50.0*		*28.3*	*10-83*		
Surrogate: 2,4,6-Tribromophenol			*55.1*	ug/l	*50.0*		*110*	*18-120*		
Surrogate: 2-Fluorophenol			*22.3*	ug/l	*50.0*		*44.6*	*10-81*		

Quality Control
(Continued)

Polychlorinated Biphenyls (PCBs)

Analyte	Result	Qual	Reporting Limit	Units	Spike Level	Source Result	%REC	%REC Limits	RPD	RPD Limit
Batch: B9A1224 - Sep-Funnel-extraction										
Blank (B9A1224-BLK1)					Prepared: 02/01/19 Analyzed: 02/04/19					
Aroclor-1016	ND		0.1	ug/l						
Aroclor-1221	ND		0.2	ug/l						
Aroclor-1232	ND		0.1	ug/l						
Aroclor-1242	ND		0.1	ug/l						
Aroclor-1248	ND		0.1	ug/l						
Aroclor-1254	ND		0.1	ug/l						
Aroclor-1260	ND		0.1	ug/l						
Aroclor-1262	ND		0.1	ug/l						
Aroclor-1268	ND		0.1	ug/l						
PCBs (Total)	ND		0.1	ug/l						
Surrogate: 2,4,5,6-Tetrachloro-m-xylene (TCMX)			*0.0260*	ug/l	*0.0400*		*65.0*	*30-107*		
Surrogate: Decachlorobiphenyl (DCBP)			*0.0333*	ug/l	*0.0400*		*83.2*	*30-140*		
LCS (B9A1224-BS1)					Prepared: 02/01/19 Analyzed: 02/04/19					
Aroclor-1016	0.4		0.1	ug/l	0.500		85.1	40-124		
Aroclor-1260	0.4		0.1	ug/l	0.500		79.7	48-123		
Surrogate: 2,4,5,6-Tetrachloro-m-xylene (TCMX)			*0.0278*	ug/l	*0.0400*		*69.6*	*30-107*		
Surrogate: Decachlorobiphenyl (DCBP)			*0.0301*	ug/l	*0.0400*		*75.1*	*30-140*		

Quality Control
(Continued)

Total Petroleum Hydrocarbons

Analyte	Result	Qual	Reporting Limit	Units	Spike Level	Source Result	%REC	%REC Limits	RPD	RPD Limit
Batch: B9A1097 - Sep-Funnel-extraction										
Blank (B9A1097-BLK1)					Prepared & Analyzed: 01/29/19					
Total Petroleum Hydrocarbons	ND		200	ug/l						
Surrogate: Chlorooctadecane			*72.7*	ug/l	*125*		*58.1*	*54.2-105*		
LCS (B9A1097-BS1)					Prepared & Analyzed: 01/29/19					
Total Petroleum Hydrocarbons	4920		200	ug/l	10000		49.2	40-105		
Surrogate: Chlorooctadecane			*88.4*	ug/l	*125*		*70.7*	*54.2-105*		

Notes and Definitions

Item	Definition
Wet	Sample results reported on a wet weight basis.
ND	Analyte NOT DETECTED at or above the reporting limit.

New England Testing Laboratory
59 Greenhill Street
West Warwick, RI 02893
1-888-863-8522

Chain of Custody Rec

9 A 2 8002;

Project No. | **Project Name/Location: East Providence Maintenance**

Client: Gordon R. Archibald Inc.

Report To: S. Cadorette

Invoice To: S. Cadorette

Date	Time	Comp	Grab	Sample I.D.	Matrix: Aqueous	Matrix: Soil	Matrix: Other	No. of Containers	Preservative	Tests**: RCRA 8 Metals - Total	RCRA 8 Metals - Dissolv	TPH - EPA 8100	SVOCs - EPA 8270	VOCs - EPA 8260	PCBs - EPA 8082				Remarks:
1/25/2019	AM		X	GRA-2	X			4	H2SO4	X	X	X	X	X	X				
									HNO3										
									HCl										

Sampled By:	Date/Time	Received By:	Date/Time	Laboratory Remarks:
[illegible]	1/25/19 1400	GRA OFFICE	1/28/19 0800	
Relinquished By:	**Date/Time**	**Received By:**	**Date/Time**	
[illegible]	1/25/19 0930	[illegible]	1-28-19 9:30	Temp. Received:
Relinquished By:	**Date/Time**	**Received By:**	**Date/Time**	
[illegible]	1-28-19 1020	[illegible]	1/28/19 1500	Temp. Received: 3

Special Instructions:
Metals to Include: Sb, As, Cd, Cu, Pb, Hg, Ni, Se, Ag, Zn, Fe, Chromium III, & Chromium VI

Requested Detection Limit Attached

**Netlab Subcontracts the following tests: Radiologicals, Radon, Asbestos, UCMRs, Perchlorate, Bromate, Bromide, Sieve, Salmonella, Carbamates

Turnaround Time [Business Days]: **5 Days**

20. Category G – Contaminated Construction Dewatering Sites Discharging to Non- Class AA receiving waters. During th date of authorization to discharge and lasting until either the expiration of this general permit or termination of covera authorized to discharge from an approved groundwater treatment system. Such discharges shall be limited and mon specified below:

USE "AVERAGE MONTHLY" UNLESS NOT LISTED →

Effluent Characteristic	Discharge Limitations Concentration - Specify Units		Monitoring
	Average Monthly	Maximum Daily	Measurement Frequency[1,2]
Flow	— GPM	xxx GPM	Continuous[3]
Total Suspended Solids	30,000 ug/l	— ug/l	2/Month
Total Residual Chlorine	11 ug/l	19 ug/l	2/Month
Total Petroleum Hydrocarbons	— ug/l	1000 ug/l	2/Month
Cyanide	4.16 ug/l[4]	17.6 ug/l	2/Month
Benzene	4.72 ug/l	5 ug/l	2/Month
Toluene	11.2 ug/l	508 ug/l	2/Month
Ethylbenzene	28.8 ug/l	1280 ug/l	2/Month
Total Xylenes (m,p,o)	2.4 ug/l	106.4 ug/l	2/Month
Total BTEX	— ug/l	100 ug/l	2/Month
Ethylene dibromide	— ug/l	0.05 ug/l	2/Month
Methyl- t- Butyl Ether	— ug/l	70 ug/l	2/Month
tert-Amyl Methyl Ether	— ug/l	— ug/l	2/Month
Carbon Tetrachloride	4.4 ug/l	4.4 ug/l	2/Month
1,4 Dichlorobenzene	0.96 ug/l	5 ug/l	2/Month
1,2 Dichlorobenzene	1.44 ug/l	63.2 ug/l	2/Month
1,3 Dichlorobenzene	6.96 ug/l	312 ug/l	2/Month
Total Dichlorobenzene	— ug/l	763 ug/l	2/Month
1,1 Dichloroethane	— ug/l	70 ug/l	2/Month
1,2 Dichloroethane	5 ug/l	5 ug/l	2/Month
1,1 Dichloroethylene	3.2 ug/l	3.2 ug/l	2/Month
Cis - 1,2 Dichloroethylene	— ug/l	70 ug/l	2/Month
Dichloromethane	— ug/l	4.6 ug/l	2/Month
Tetrachloroethylene	4.24 ug/l	5 ug/l	2/Month
1,1,1 Trichloroethane	— ug/l	200 ug/l	2/Month
1,1,2 Trichloroethane	5 ug/l	5 ug/l	2/Month
Trichloroethylene	5 ug/l	5 ug/l	2/Month
Vinyl Chloride	1.92 ug/l	2 ug/l	2/Month
Acetone	— ug/l	— ug/l	2/Month
1,4 Dioxane	— ug/l	— ug/l	2/Month
Total Phenols	4.48 ug/l	200.8 ug/l	2/Month

Pentachlorophenol	0.04 ug/l[4]	0.05 ug/l[4]	2/Month
Total Phthalates	3 ug/l[4]	--- ug/l	2/Month
Bis (2-Ethylhexyl) Phthalate	6 ug/l	6 ug/l	2/Month
Total Group I Polycyclic Aromatic Hydrocarbons	0.14 ug/l[4]	10 ug/l	2/Month
Benzo (a) Anthracene	--- ug/l	0.0038 ug/l[4]	2/Month
Benzo (a) Pyrene	--- ug/l	0.0038 ug/l[4]	2/Month
Benzo (b) Fluoranthene	--- ug/l	0.0038 ug/l[4]	2/Month
Benzo (k) Fluoranthene	--- ug/l	0.0038 ug/l[4]	2/Month
Chrysene	--- ug/l	0.0038 ug/l[4]	2/Month
Dibenzo (a,h) anthracene	--- ug/l	0.0038 ug/l[4]	2/Month
Indeno (1,2,3-cd) Pyrene	--- ug/l	0.0038 ug/l[4]	2/Month
Total Group II Polycyclic Aromatic Hydrocarbons	0.14 ug/l[4]	100 ug/l	2/Month
Acenapthene	1.52 ug/l	1.9 ug/l	2/Month
Acenapthylene	--- ug/l	--- ug/l	2/Month
Anthracene	32,000 ug/l	--- ug/l	2/Month
Benzo (ghi) Perylene	--- ug/l	--- ug/l	2/Month
Fluoranthene	3.52 ug/l	159.2 ug/l	2/Month
Fluorene	4240 ug/l	--- ug/l	2/Month
Napthalene	2.08 ug/l	20 ug/l	2/Month
Phenanthrene	--- ug/l	--- ug/l	2/Month
Pyrene	3200 ug/l	--- ug/l	2/Month
Total Polychlorinated Biphenyls	0.000512 ug/l	0.000064 ug/l	2/Month
Antimony (total recoverable)	See Part II.E	See Part II.E	2/Month
Arsenic (total recoverable)	See Part II.E	See Part II.E	2/Month
Cadmium (total recoverable)	See Part II.E	See Part II.E	2/Month
Chromium III (trivalent, total recoverable)	See Part II.E	See Part II.E	2/Month
Chromium VI (hexavalent, total recoverable)	See Part II.E	See Part II.E	2/Month
Copper (total recoverable)	See Part II.E	See Part II.E	2/Month
Lead (total recoverable)	See Part II.E	See Part II.E	2/Month
Mercury (total recoverable)	See Part II.E	See Part II.E	2/Month
Nickel (total recoverable)	See Part II.E	See Part II.E	2/Month
Selenium (total recoverable)	See Part II.E	See Part II.E	2/Month
Silver (total recoverable)	See Part II.E	See Part II.E	2/Month
Zinc (total recoverable)	See Part II.E	See Part II.E	2/Month
Iron (total recoverable)	See Part II.E	See Part II.E	2/Month

SEE ATTACHED

E. Metals Effluent Limitations (ug/l)

Water Body Classification Limit Type	Class AA Freshwater Monthly Average	Class AA Freshwater Daily Maximum	Non-Class AA Freshwater Monthly Average	Non-Class AA Freshwater Daily Maximum
Dilution Range: <5				
Antimony	4.48	360	8	360
Arsenic	0.14[1]	272	1.12[1]	272
Cadmium	0.08[1]	0.42	0.08[1]	0.42
Chromium III	22.15	463.46	22.15	463.46
Chromium VI	9.15	13.03	9.15	13.03
Copper	2.28	3.03	2.28	3.03
Lead	0.44	11.18	0.44	11.18
Mercury	0.13	1.32	0.14	1.32
Nickel	12.92	116.17	12.92	116.17
Selenium	4	16	4	16
Silver	0.3	0.3	0.3	0.3
Zinc	29.61	29.61	29.61	29.61
Iron	240	Monitor Only	800	Monitor Only
Dilution Range: 5 to 10				
Water Body Classification Limit Type	Class AA Freshwater Monthly Average	Class AA Freshwater Daily Maximum	Non-Class AA Freshwater Monthly Average	Non-Class AA Freshwater Daily Maximum
Antimony	22.4	1800	40	1800
Arsenic	0.7[1]	1360	5.6	1360
Cadmium	0.4	2.1	0.4	2.1
Chromium III	110.75	2317.3	110.75	2317.3
Chromium VI	45.75	65.15	45.75	65.15
Copper	11.4	15.15	11.4	15.15
Lead	2.2	55.9	2.2	55.9
Mercury	0.65	6.6	0.7	6.6
Nickel	64.6	580.85	64.6	580.85
Selenium	20	80	20	80
Silver	1.5	1.5	1.5	1.5
Zinc	148.05	148.05	148.05	148.05
Iron	1200	Monitor Only	4000	Monitor Only
Dilution Range: 10 to 20				
Water Body Classification Limit Type	Class AA Freshwater Monthly Average	Class AA Freshwater Daily Maximum	Non-Class AA Freshwater Monthly Average	Non-Class AA Freshwater Daily Maximum
Antimony	44.8	3600	80	3600
Arsenic	1.4	2720	11.2	2720
Cadmium	0.8	4.2	0.8	4.2
Chromium III	221.5	4634.6	221.5	4634.6
Chromium VI	91.5	130.3	91.5	130.3
Copper	22.8	30.3	22.8	30.3
Lead	4.4	111.8	4.4	111.8
Mercury	1.3	13.2	1.4	13.2
Nickel	129.2	1161.7	129.2	1161.7
Selenium	40	160	40	160
Silver	3	3	3	3
Zinc	296.1	296.1	296.1	296.1
Iron	2400	Monitor Only	8000	Monitor Only

Premier
Laboratory, LLC
61 Louisa Viens Drive
Dayville, CT 06241
FAX: 860-774-2689
860-774-6814 800-932-1150

ANALYTICAL DATA REPORT

Report Number: E401523
Project: S1781

prepared for:

Sage Environmental, Inc.
172 Armistice Blvd.
Pawtucket, RI 02860

Attn: Abbey Spargo

Received Date: 1/14/2004
Report Date: 1/19/2004

Premier Laboratory, LLC
Authorized Signature

Certifications:
CT (PH-0465), MA (M-CT008), ME (CT050), NH (2020), NY (11549), RI (RI180)

INORGANIC ANALYSIS DATA SHEET

Laboratory: Premier Laboratory, LLC
PL Report No: E401523
Date Received: 1/14/2004

Customer: Sage Environmental, Inc
Location: East Providence, RI
Project: S1781

Parameter	Result	DL	Units	Completed		By	Dilution
(1) MW-4							
Date Collected: 1/13/2004 Matrix: Water							
Trace Metals by ICP by 6010B, Dissolved							
Arsenic	ND	0.010	mg/L	01/15/04	18:44	LB	
Barium	1.4	0.010	mg/L	01/15/04	18:44	LB	
Cadmium	ND	0.0020	mg/L	01/15/04	18:44	LB	
Chromium	ND	0.010	mg/L	01/15/04	18:44	LB	
Lead	ND	0.0040	mg/L	01/15/04	18:44	LB	
Selenium	ND	0.010	mg/L	01/15/04	18:44	LB	
Silver	ND	0.0020	mg/L	01/15/04	18:44	LB	
Mercury by Cold Vapor by SW-846 7470A, Dissolved	ND	0.00040	mg/L	01/19/04		KW	2
(2) MW-7							
Date Collected: 1/13/2004 Matrix: Water							
Trace Metals by ICP by 6010B, Dissolved							
Arsenic	ND	0.010	mg/L	01/15/04	18:49	LB	
Barium	0.46	0.010	mg/L	01/15/04	18:49	LB	
Cadmium	0.021	0.0020	mg/L	01/15/04	18:49	LB	
Chromium	ND	0.010	mg/L	01/15/04	18:49	LB	
Lead	0.23	0.0040	mg/L	01/15/04	18:49	LB	
Selenium	ND	0.010	mg/L	01/15/04	18:49	LB	
Silver	ND	0.0020	mg/L	01/16/04		LB	
Mercury by Cold Vapor by SW-846 7470A, Dissolved	ND	0.00040	mg/L	01/19/04		KW	2

VOLATILE ORGANIC ANALYSIS DATA SHEET

Laboratory: Premier Laboratory, LLC

PL Report No: E401523
PL Sample No: 1

Date Collected: 1/13/2004
Date Received: 1/14/2004
Date Extracted: By:
Date Analyzed: 01/15/04 By: MM
Method: 8260B
QC Batch#: 26463
Units: ug/L

Customer: Sage Environmental, Inc
Location: East Providence, RI
Project: S1781
Sample Description: MW-4

Matrix: Water
Percent Moisture: N/A
Sample Weight/Volume:
Dilution Factor: 1
Soil Extract Volume:
Lab Data File: J17727.D

CAS No.	Parameter	Result	DL
67-64-1	Acetone	ND	20
107-13-1	Acrylonitrile	ND	25
71-43-2	Benzene	ND	5.0
108-86-1	Bromobenzene	ND	5.0
74-97-5	Bromochloromethane	ND	5.0
75-27-4	Bromodichloromethane	ND	5.0
75-25-2	Bromoform	ND	5.0
74-83-9	Bromomethane	ND	5.0
78-93-3	2-Butanone (MEK)	ND	10
104-51-8	n-Butylbenzene	ND	5.0
135-98-8	sec-Butylbenzene	ND	5.0
98-06-6	tert-Butylbenzene	ND	5.0
75-15-0	Carbon disulfide	ND	5.0
56-23-5	Carbon tetrachloride	ND	5.0
108-90-7	Chlorobenzene	ND	5.0
75-00-3	Chloroethane	ND	5.0
67-66-3	Chloroform	ND	5.0
74-87-3	Chloromethane	ND	5.0
95-49-8	2-Chlorotoluene	ND	5.0
106-43-4	4-Chlorotoluene	ND	5.0
96-12-8	1,2-Dibromo-3-chloropropane (DBCP)	ND	2.0
124-48-1	Dibromochloromethane	ND	5.0
106-93-4	1,2-Dibromoethane (EDB)	ND	5.0
74-95-3	Dibromomethane	ND	5.0
95-50-1	1,2-Dichlorobenzene	ND	5.0
541-73-1	1,3-Dichlorobenzene	ND	5.0
106-46-7	1,4-Dichlorobenzene	ND	5.0
75-71-8	Dichlorodifluoromethane	ND	5.0
75-34-3	1,1-Dichloroethane	ND	5.0
107-06-2	1,2-Dichloroethane	ND	5.0
75-35-4	1,1-Dichloroethene	ND	5.0
156-59-2	cis-1,2-Dichloroethene	ND	5.0
156-60-5	trans-1,2-Dichloroethene	ND	5.0
78-87-5	1,2-Dichloropropane	ND	5.0
142-28-9	1,3-Dichloropropane	ND	5.0
590-20-7	2,2-Dichloropropane	ND	5.0
563-58-6	1,1-Dichloropropene	ND	5.0
10061-01-5	cis-1,3-Dichloropropene	ND	5.0
10061-02-6	trans-1,3-Dichloropropene	ND	5.0
100-41-4	Ethylbenzene	ND	5.0
87-68-3	Hexachlorobutadiene	ND	5.0

VOLATILE ORGANIC ANALYSIS DATA SHEET

Laboratory: Premier Laboratory, LLC

PL Report No: E401523
PL Sample No: 1 (continued)

Date Collected: 1/13/2004
Date Received: 1/14/2004
Date Extracted: By:
Date Analyzed: 01/15/04 By: MM
Method: 8260B
QC Batch#: 26463
Units: ug/L

Customer: Sage Environmental, Inc
Location: East Providence, RI
Project: S1781
Sample Description: MW-4

Matrix: Water
Percent Moisture: N/A
Sample Weight/Volume:
Dilution Factor: 1
Soil Extract Volume:
Lab Data File: J17727.D

CAS No.	Parameter	Result	DL
591-78-6	2-Hexanone	ND	10
98-82-8	Isopropylbenzene	ND	5.0
99-87-6	4-Isopropyltoluene	ND	5.0
1634-04-4	Methyl tert-butyl ether (MTBE)	ND	5.0
108-10-1	4-Methyl-2-pentanone (MIBK)	ND	10
75-09-2	Methylene chloride	ND	5.0
91-20-3	Naphthalene	ND	5.0
103-65-1	n-Propylbenzene	ND	5.0
100-42-5	Styrene	ND	5.0
96-18-4	1,2,3-Trichloropropane	ND	5.0
630-20-6	1,1,1,2-Tetrachloroethane	ND	5.0
79-34-5	1,1,2,2-Tetrachloroethane	ND	5.0
127-18-4	Tetrachloroethene (PCE)	ND	5.0
108-88-3	Toluene	ND	5.0
87-61-6	1,2,3-Trichlorobenzene	ND	5.0
120-82-1	1,2,4-Trichlorobenzene	ND	5.0
71-55-6	1,1,1-Trichloroethane	ND	5.0
79-00-5	1,1,2-Trichloroethane	ND	5.0
79-01-6	Trichloroethene (TCE)	ND	5.0
75-69-4	Trichlorofluoromethane	ND	5.0
95-63-6	1,2,4-Trimethylbenzene	ND	5.0
108-67-8	1,3,5-Trimethylbenzene	ND	5.0
75-01-4	Vinyl chloride	ND	5.0
95-47-6	o-Xylene	ND	5.0
	m,p-Xylenes	ND	5.0

Surrogate	Recovery	Limits
Bromofluorobenzene	99%	81%-109%
Dibromofluoromethane	99%	95%-106%
1,2-Dichloroethane-d4	99%	91%-112%
Toluene-d8	96%	92%-104%

3

VOLATILE ORGANIC ANALYSIS DATA SHEET

Laboratory: Premier Laboratory, LLC

PL Report No: E401523
PL Sample No: 2

Date Collected: 1/13/2004
Date Received: 1/14/2004
Date Extracted: By:
Date Analyzed: 01/15/04 By: MM
Method: 8260B
QC Batch#: 26463
Units: ug/L

Customer: Sage Environmental, Inc
Location: East Providence, RI
Project: S1781
Sample Description: MW-7

Matrix: Water
Percent Moisture: N/A
Sample Weight/Volume:
Dilution Factor: 1
Soil Extract Volume:
Lab Data File: J17728.D

CAS No.	Parameter	Result	DL
67-64-1	Acetone	ND	20
107-13-1	Acrylonitrile	ND	25
71-43-2	Benzene	ND	5.0
108-86-1	Bromobenzene	ND	5.0
74-97-5	Bromochloromethane	ND	5.0
75-27-4	Bromodichloromethane	ND	5.0
75-25-2	Bromoform	ND	5.0
74-83-9	Bromomethane	ND	5.0
78-93-3	2-Butanone (MEK)	ND	10
104-51-8	n-Butylbenzene	ND	5.0
135-98-8	sec-Butylbenzene	ND	5.0
98-06-6	tert-Butylbenzene	ND	5.0
75-15-0	Carbon disulfide	ND	5.0
56-23-5	Carbon tetrachloride	ND	5.0
108-90-7	Chlorobenzene	ND	5.0
75-00-3	Chloroethane	ND	5.0
67-66-3	Chloroform	ND	5.0
74-87-3	Chloromethane	ND	5.0
95-49-8	2-Chlorotoluene	ND	5.0
106-43-4	4-Chlorotoluene	ND	5.0
96-12-8	1,2-Dibromo-3-chloropropane (DBCP)	ND	5.0
124-48-1	Dibromochloromethane	ND	2.0
106-93-4	1,2-Dibromoethane (EDB)	ND	5.0
74-95-3	Dibromomethane	ND	5.0
95-50-1	1,2-Dichlorobenzene	ND	5.0
541-73-1	1,3-Dichlorobenzene	ND	5.0
106-46-7	1,4-Dichlorobenzene	ND	5.0
75-71-8	Dichlorodifluoromethane	ND	5.0
75-34-3	1,1-Dichloroethane	ND	5.0
107-06-2	1,2-Dichloroethane	ND	5.0
75-35-4	1,1-Dichloroethene	ND	5.0
156-59-2	cis-1,2-Dichloroethene	ND	5.0
156-60-5	trans-1,2-Dichloroethene	5.8	5.0
78-87-5	1,2-Dichloropropane	ND	5.0
142-28-9	1,3-Dichloropropane	ND	5.0
590-20-7	2,2-Dichloropropane	ND	5.0
563-58-6	1,1-Dichloropropene	ND	5.0
10061-01-5	cis-1,3-Dichloropropene	ND	5.0
10061-02-6	trans-1,3-Dichloropropene	ND	5.0
100-41-4	Ethylbenzene	ND	5.0
87-68-3	Hexachlorobutadiene	ND	5.0

VOLATILE ORGANIC ANALYSIS DATA SHEET

Laboratory: Premier Laboratory, LLC

PL Report No: E401523
PL Sample No: 2 (continued)

Date Collected: 1/13/2004
Date Received: 1/14/2004
Date Extracted: By:
Date Analyzed: 01/15/04 By: MM
Method: 8260B
QC Batch#: 26463
Units: ug/L

Customer: Sage Environmental, Inc
Location: East Providence, RI
Project: S1781
Sample Description: MW-7

Matrix: Water
Percent Moisture: N/A
Sample Weight/Volume:
Dilution Factor: 1
Soil Extract Volume:
Lab Data File: J17728.D

CAS No.	Parameter	Result	DL
591-78-6	2-Hexanone	ND	10
98-82-8	Isopropylbenzene	ND	5.0
99-87-6	4-Isopropyltoluene	ND	5.0
1634-04-4	Methyl tert-butyl ether (MTBE)	ND	5.0
108-10-1	4-Methyl-2-pentanone (MIBK)	ND	10
75-09-2	Methylene chloride	ND	5.0
91-20-3	Naphthalene	ND	5.0
103-65-1	n-Propylbenzene	ND	5.0
100-42-5	Styrene	ND	5.0
96-18-4	1,2,3-Trichloropropane	ND	5.0
630-20-6	1,1,1,2-Tetrachloroethane	ND	5.0
79-34-5	1,1,2,2-Tetrachloroethane	ND	5.0
127-18-4	Tetrachloroethene (PCE)	ND	5.0
108-88-3	Toluene	ND	5.0
87-61-6	1,2,3-Trichlorobenzene	ND	5.0
120-82-1	1,2,4-Trichlorobenzene	ND	5.0
71-55-6	1,1,1-Trichloroethane	ND	5.0
79-00-5	1,1,2-Trichloroethane	ND	5.0
79-01-6	Trichloroethene (TCE)	ND	5.0
75-69-4	Trichlorofluoromethane	ND	5.0
95-63-6	1,2,4-Trimethylbenzene	ND	5.0
108-67-8	1,3,5-Trimethylbenzene	ND	5.0
75-01-4	Vinyl chloride	ND	5.0
95-47-6	o-Xylene	ND	5.0
	m,p-Xylenes	ND	5.0

Surrogate	Recovery	Limits
Bromofluorobenzene	96%	81%-109%
Dibromofluoromethane	100%	95%-106%
1,2-Dichloroethane-d4	99%	91%-112%
Toluene-d8	99%	92%-104%

Premier
Laboratory, LLC
61 Louisa Viens Drive
Dayville, CT 06241
FAX: 860-774-2689
860-774-6814 800-932-1150

ANALYTICAL DATA REPORT

Report Number: E402538
Project: S1781

prepared for:

Sage Environmental, Inc.
172 Armistice Blvd.
Pawtucket, RI 02860

Attn: Abbey Spargo

Received Date: 2/13/2004
Report Date: 2/23/2004

Premier Laboratory, LLC
Authorized Signature

Certifications:
CT (PH-0465), MA (M-CT008), ME (CT050), NH (2020), NJ (CT002), NY (11549), RI (RI180)

INORGANIC ANALYSIS DATA SHEET

Laboratory: Premier Laboratory, LLC
PL Report No: E402538
Date Received: 2/13/2004

Customer: Sage Environmental, Inc
Location: East Providence, RI
Project: S1781

Parameter	Result	DL	Units	Completed		By	Dilution
(1) MW-8							
Date Collected: 2/12/2004 **Matrix: Water**							
Trace Metals by ICP by 6010B, Dissolved							
Arsenic	ND	0.010	mg/L	02/19/04	18:20	LB	
Lead	ND	0.0040	mg/L	02/19/04	18:20	LB	

VOLATILE ORGANIC ANALYSIS DATA SHEET

Laboratory: Premier Laboratory, LLC

PL Report No: E402538
PL Sample No: 1

Date Collected: 2/12/2004
Date Received: 2/13/2004
Date Extracted: By:
Date Analyzed: 02/18/04 By: GP
Method: 8260B
QC Batch#: 27016
Units: ug/L

Customer: Sage Environmental, Inc
Location: East Providence, RI
Project: S1781
Sample Description: MW-8

Matrix: Water
Percent Moisture: N/A
Sample Weight/Volume:
Dilution Factor: 2
Soil Extract Volume:
Lab Data File: M15597.D

CAS No.	Parameter	Result	DL
67-64-1	Acetone	ND	40
107-13-1	Acrylonitrile	ND	50
71-43-2	Benzene	ND	10
108-86-1	Bromobenzene	ND	10
74-97-5	Bromochloromethane	ND	10
75-27-4	Bromodichloromethane	ND	10
75-25-2	Bromoform	ND	10
74-83-9	Bromomethane	ND	10
78-93-3	2-Butanone (MEK)	ND	20
104-51-8	n-Butylbenzene	15	10
135-98-8	sec-Butylbenzene	ND	10
98-06-6	tert-Butylbenzene	ND	10
75-15-0	Carbon disulfide	ND	10
56-23-5	Carbon tetrachloride	ND	10
108-90-7	Chlorobenzene	ND	10
75-00-3	Chloroethane	ND	10
67-66-3	Chloroform	ND	10
74-87-3	Chloromethane	ND	10
95-49-8	2-Chlorotoluene	ND	10
106-43-4	4-Chlorotoluene	ND	10
96-12-8	1,2-Dibromo-3-chloropropane (DBCP)	ND	10
124-48-1	Dibromochloromethane	ND	2.0
106-93-4	1,2-Dibromoethane (EDB)	ND	10
74-95-3	Dibromomethane	ND	10
95-50-1	1,2-Dichlorobenzene	ND	10
541-73-1	1,3-Dichlorobenzene	ND	10
106-46-7	1,4-Dichlorobenzene	ND	10
75-71-8	Dichlorodifluoromethane	ND	10
75-34-3	1,1-Dichloroethane	ND	10
107-06-2	1,2-Dichloroethane	ND	10
75-35-4	1,1-Dichloroethene	ND	10
156-59-2	cis-1,2-Dichloroethene	ND	7.0
156-60-5	trans-1,2-Dichloroethene	91	10
78-87-5	1,2-Dichloropropane	63	10
142-28-9	1,3-Dichloropropane	ND	10
590-20-7	2,2-Dichloropropane	ND	10
563-58-6	1,1-Dichloropropene	ND	10
10061-01-5	cis-1,3-Dichloropropene	ND	10
10061-02-6	trans-1,3-Dichloropropene	ND	10
100-41-4	Ethylbenzene	ND	10
87-68-3	Hexachlorobutadiene	61	10
		ND	10

VOLATILE ORGANIC ANALYSIS DATA SHEET

Laboratory: Premier Laboratory, LLC

PL Report No: E402538
PL Sample No: 1 (continued)

Date Collected: 2/12/2004
Date Received: 2/13/2004
Date Extracted: By:
Date Analyzed: 02/18/04 By: GP
Method: 8260B
QC Batch#: 27016
Units: ug/L

Customer: Sage Environmental, Inc
Location: East Providence, RI
Project: S1781
Sample Description: MW-8

Matrix: Water
Percent Moisture: N/A
Sample Weight/Volume:
Dilution Factor: 2
Soil Extract Volume:
Lab Data File: M15597.D

CAS No.	Parameter	Result	DL
591-78-6	2-Hexanone	ND	20
98-82-8	Isopropylbenzene	25	10
99-87-6	4-Isopropyltoluene	25	10
1634-04-4	Methyl tert-butyl ether (MTBE)	ND	10
108-10-1	4-Methyl-2-pentanone (MIBK)	ND	20
75-09-2	Methylene chloride	ND	10
91-20-3	Naphthalene	79	10
103-65-1	n-Propylbenzene	46	10
100-42-5	Styrene	ND	10
96-18-4	1,2,3-Trichloropropane	ND	10
630-20-6	1,1,1,2-Tetrachloroethane	ND	10
79-34-5	1,1,2,2-Tetrachloroethane	ND	10
127-18-4	Tetrachloroethene (PCE)	ND	10
108-88-3	Toluene	34	10
87-61-6	1,2,3-Trichlorobenzene	ND	10
120-82-1	1,2,4-Trichlorobenzene	ND	10
71-55-6	1,1,1-Trichloroethane	ND	10
79-00-5	1,1,2-Trichloroethane	ND	10
79-01-6	Trichloroethene (TCE)	140	10
75-69-4	Trichlorofluoromethane	ND	10
95-63-6	1,2,4-Trimethylbenzene	400	10
108-67-8	1,3,5-Trimethylbenzene	100	10
75-01-4	Vinyl chloride	14	10
95-47-6	o-Xylene	59	10
	m,p-Xylenes	150	10

Surrogate	Recovery	Limits
Bromofluorobenzene	97%	81%-109%
Dibromofluoromethane	103%	95%-106%
1,2-Dichloroethane-d4	100%	91%-112%
Toluene-d8	95%	92%-104%

3

Premier
Laboratory, LLC
61 Louisa Viens Drive
Dayville, CT 06241
FAX: 860-774-2689
860-774-6814 800-932-1150

ANALYTICAL DATA REPORT

Report Number: E402723
Project: S1781

prepared for:

Sage Environmental, Inc.
172 Armistice Blvd.
Pawtucket, RI 02860

Attn: Abbey Spargo

Received Date: 2/19/2004
Report Date: 2/24/2004

R. Waite

Premier Laboratory, LLC
Authorized Signature

Certifications:
CT (PH-0465), MA (M-CT008), ME (CT050), NH (2020), NJ (CT002), NY (11549), RI (RI180)

INORGANIC ANALYSIS DATA SHEET

Laboratory: Premier Laboratory, LLC
PL Report No: E402723
Date Received: 2/19/2004

Customer: Sage Environmental, Inc
Location: East Providence, RI
Project: S1781

Parameter	Result	DL	Units	Completed	By	Dilution
(1) MW-9						
Date Collected: 2/17/2004 **Matrix: Water**						
Trace Metals by ICP by 6010B, Dissolved						
Lead	ND	0.0040	mg/L	02/24/04	LB	
Beryllium	ND	0.0010	mg/L	02/24/04	LB	
Arsenic	ND	0.010	mg/L	02/24/04	LB	

VOLATILE ORGANIC ANALYSIS DATA SHEET

Laboratory: Premier Laboratory, LLC

PL Report No: E402723
PL Sample No: 1

Date Collected: 2/17/2004
Date Received: 2/19/2004
Date Extracted: By:
Date Analyzed: 02/24/04 By: GP
Method: 8260B
QC Batch#: 27165
Units: ug/L

Customer: Sage Environmental, Inc
Location: East Providence, RI
Project: S1781
Sample Description: MW-9

Matrix: Water
Percent Moisture: N/A
Sample Weight/Volume:
Dilution Factor: 1
Soil Extract Volume:
Lab Data File: M15723.D

CAS No.	Parameter	Result	DL
67-64-1	Acetone	30	20
107-13-1	Acrylonitrile	ND	25
71-43-2	Benzene	ND	5.0
108-86-1	Bromobenzene	ND	5.0
74-97-5	Bromochloromethane	ND	5.0
75-27-4	Bromodichloromethane	ND	5.0
75-25-2	Bromoform	ND	5.0
74-83-9	Bromomethane	ND	5.0
78-93-3	2-Butanone (MEK)	ND	10
104-51-8	n-Butylbenzene	ND	5.0
135-98-8	sec-Butylbenzene	ND	5.0
98-06-6	tert-Butylbenzene	ND	5.0
75-15-0	Carbon disulfide	ND	5.0
56-23-5	Carbon tetrachloride	ND	5.0
108-90-7	Chlorobenzene	ND	5.0
75-00-3	Chloroethane	ND	5.0
67-66-3	Chloroform	ND	5.0
74-87-3	Chloromethane	ND	5.0
95-49-8	2-Chlorotoluene	ND	5.0
106-43-4	4-Chlorotoluene	ND	5.0
96-12-8	1,2-Dibromo-3-chloropropane (DBCP)	ND	5.0
124-48-1	Dibromochloromethane	ND	2.0
106-93-4	1,2-Dibromoethane (EDB)	ND	5.0
74-95-3	Dibromomethane	ND	5.0
95-50-1	1,2-Dichlorobenzene	ND	5.0
541-73-1	1,3-Dichlorobenzene	ND	5.0
106-46-7	1,4-Dichlorobenzene	ND	5.0
75-71-8	Dichlorodifluoromethane	ND	5.0
75-34-3	1,1-Dichloroethane	ND	5.0
107-06-2	1,2-Dichloroethane	ND	5.0
75-35-4	1,1-Dichloroethene	ND	5.0
156-59-2	cis-1,2-Dichloroethene	ND	5.0
156-60-5	trans-1,2-Dichloroethene	ND	5.0
78-87-5	1,2-Dichloropropane	ND	5.0
142-28-9	1,3-Dichloropropane	ND	5.0
590-20-7	2,2-Dichloropropane	ND	5.0
563-58-6	1,1-Dichloropropene	ND	5.0
10061-01-5	cis-1,3-Dichloropropene	ND	5.0
10061-02-6	trans-1,3-Dichloropropene	ND	5.0
100-41-4	Ethylbenzene	ND	5.0
87-68-3	Hexachlorobutadiene	26	5.0
		ND	5.0

VOLATILE ORGANIC ANALYSIS DATA SHEET

Laboratory: Premier Laboratory, LLC

PL Report No: E402723
PL Sample No: 1 (continued)

Date Collected: 2/17/2004
Date Received: 2/19/2004
Date Extracted: By:
Date Analyzed: 02/24/04 By: GP
Method: 8260B
QC Batch#: 27165
Units: ug/L

Customer: Sage Environmental, Inc
Location: East Providence, RI
Project: S1781
Sample Description: MW-9

Matrix: Water
Percent Moisture: N/A
Sample Weight/Volume:
Dilution Factor: 1
Soil Extract Volume:
Lab Data File: M15723.D

CAS No.	Parameter	Result	DL
591-78-6	2-Hexanone	ND	10
98-82-8	Isopropylbenzene	9.7	5.0
99-87-6	4-Isopropyltoluene	5.8	5.0
1634-04-4	Methyl tert-butyl ether (MTBE)	ND	5.0
108-10-1	4-Methyl-2-pentanone (MIBK)	ND	10
75-09-2	Methylene chloride	ND	5.0
91-20-3	Naphthalene	88	5.0
103-65-1	n-Propylbenzene	15	5.0
100-42-5	Styrene	ND	5.0
96-18-4	1,2,3-Trichloropropane	ND	5.0
630-20-6	1,1,1,2-Tetrachloroethane	ND	5.0
79-34-5	1,1,2,2-Tetrachloroethane	ND	5.0
127-18-4	Tetrachloroethene (PCE)	ND	5.0
108-88-3	Toluene	ND	5.0
87-61-6	1,2,3-Trichlorobenzene	ND	5.0
120-82-1	1,2,4-Trichlorobenzene	ND	5.0
71-55-6	1,1,1-Trichloroethane	ND	5.0
79-00-5	1,1,2-Trichloroethane	ND	5.0
79-01-6	Trichloroethene (TCE)	ND	5.0
75-69-4	Trichlorofluoromethane	ND	5.0
95-63-6	1,2,4-Trimethylbenzene	140	5.0
108-67-8	1,3,5-Trimethylbenzene	38	5.0
75-01-4	Vinyl chloride	ND	5.0
95-47-6	o-Xylene	10	5.0
	m,p-Xylenes	97	5.0

Surrogate	Recovery	Limits
Bromofluorobenzene	96%	81%-109%
Dibromofluoromethane	102%	95%-106%
1,2-Dichloroethane-d4	97%	91%-112%
Toluene-d8	94%	92%-104%

Premier
Laboratory, LLC
61 Louisa Viens Drive
Dayville, CT 06241
FAX: 860-774-2689
860-774-6814 800-932-1150

ANALYTICAL DATA REPORT

Report Number: E404844
Project: S1781

prepared for:

Sage Environmental, Inc.
172 Armistice Blvd.
Pawtucket, RI 02860

Attn: Abbey Spargo

Received Date: 4/20/2004
Report Date: 4/22/2004

Premier Laboratory, LLC
Authorized Signature

Certifications:
CT (PH-0465), MA (M-CT008), ME (CT050), NH (2020), NJ (CT002), NY (11549), RI (RI180)

VOLATILE ORGANIC ANALYSIS DATA SHEET

Laboratory: Premier Laboratory, LLC

PL Report No: E404844
PL Sample No: 1

Date Collected: 4/19/2004
Date Received: 4/20/2004
Date Extracted: By:
Date Analyzed: 04/21/04 By: MM
Method: 8260B
QC Batch#: 28261
Units: ug/L

Customer: Sage Environmental, Inc
Location: East Providence, RI
Project: S1781
Sample Description: MW-8

Matrix: Water
Percent Moisture: N/A
Sample Weight/Volume:
Dilution Factor: 1
Soil Extract Volume:
Lab Data File: J18518,J18520

CAS No.	Parameter	Result	DL
67-64-1	Acetone	ND	20
107-13-1	Acrylonitrile	ND	25
71-43-2	Benzene	ND	5.0
108-86-1	Bromobenzene	ND	5.0
74-97-5	Bromochloromethane	ND	5.0
75-27-4	Bromodichloromethane	ND	5.0
75-25-2	Bromoform	ND	5.0
74-83-9	Bromomethane	ND	5.0
78-93-3	2-Butanone (MEK)	ND	10
104-51-8	n-Butylbenzene	ND	5.0
135-98-8	sec-Butylbenzene	ND	5.0
98-06-6	tert-Butylbenzene	ND	5.0
75-15-0	Carbon disulfide	ND	5.0
56-23-5	Carbon tetrachloride	ND	5.0
108-90-7	Chlorobenzene	ND	5.0
75-00-3	Chloroethane	ND	5.0
67-66-3	Chloroform	ND	5.0
74-87-3	Chloromethane	ND	5.0
95-49-8	2-Chlorotoluene	ND	5.0
106-43-4	4-Chlorotoluene	ND	5.0
96-12-8	1,2-Dibromo-3-chloropropane (DBCP)	ND	2.0
124-48-1	Dibromochloromethane	ND	5.0
106-93-4	1,2-Dibromoethane (EDB)	ND	5.0
74-95-3	Dibromomethane	ND	5.0
95-50-1	1,2-Dichlorobenzene	ND	5.0
541-73-1	1,3-Dichlorobenzene	ND	5.0
106-46-7	1,4-Dichlorobenzene	ND	5.0
75-71-8	Dichlorodifluoromethane	ND	5.0
75-34-3	1,1-Dichloroethane	ND	5.0
107-06-2	1,2-Dichloroethane	ND	5.0
75-35-4	1,1-Dichloroethene	ND	5.0
156-59-2	cis-1,2-Dichloroethene	24	5.0
156-60-5	trans-1,2-Dichloroethene	19	5.0
78-87-5	1,2-Dichloropropane	ND	5.0
142-28-9	1,3-Dichloropropane	ND	5.0
590-20-7	2,2-Dichloropropane	ND	5.0
563-58-6	1,1-Dichloropropene	ND	5.0
10061-01-5	cis-1,3-Dichloropropene	ND	5.0
10061-02-6	trans-1,3-Dichloropropene	ND	5.0
100-41-4	Ethylbenzene	31	5.0
87-68-3	Hexachlorobutadiene	ND	5.0

VOLATILE ORGANIC ANALYSIS DATA SHEET

Laboratory: Premier Laboratory, LLC

PL Report No: E404844
PL Sample No: 1 (continued)

Date Collected: 4/19/2004
Date Received: 4/20/2004
Date Extracted: By:
Date Analyzed: 04/21/04 By: MM
Method: 8260B
QC Batch#: 28261
Units: ug/L

Customer: Sage Environmental, Inc
Location: East Providence, RI
Project: S1781
Sample Description: MW-8

Matrix: Water
Percent Moisture: N/A
Sample Weight/Volume:
Dilution Factor: 1
Soil Extract Volume:
Lab Data File: J18518,J18520

CAS No.	Parameter	Result	DL
591-78-6	2-Hexanone	ND	10
98-82-8	Isopropylbenzene	13	5.0
99-87-6	4-Isopropyltoluene	19	5.0
1634-04-4	Methyl tert-butyl ether (MTBE)	ND	5.0
108-10-1	4-Methyl-2-pentanone (MIBK)	ND	10
75-09-2	Methylene chloride	ND	5.0
91-20-3	Naphthalene	56	5.0
103-65-1	n-Propylbenzene	25	5.0
100-42-5	Styrene	ND	5.0
96-18-4	1,2,3-Trichloropropane	ND	5.0
630-20-6	1,1,1,2-Tetrachloroethane	ND	5.0
79-34-5	1,1,2,2-Tetrachloroethane	ND	5.0
127-18-4	Tetrachloroethene (PCE)	ND	5.0
108-88-3	Toluene	13	5.0
87-61-6	1,2,3-Trichlorobenzene	ND	5.0
120-82-1	1,2,4-Trichlorobenzene	ND	5.0
71-55-6	1,1,1-Trichloroethane	ND	5.0
79-00-5	1,1,2-Trichloroethane	ND	5.0
79-01-6	Trichloroethene (TCE)	31	5.0
75-69-4	Trichlorofluoromethane	ND	5.0
95-63-6	1,2,4-Trimethylbenzene	260	5.0
108-67-8	1,3,5-Trimethylbenzene	55	5.0
75-01-4	Vinyl chloride	ND	2.0
95-47-6	o-Xylene	28	5.0
	m,p-Xylenes	76	5.0

Surrogate	Recovery	Limits
Bromofluorobenzene	99%	81%-109%
Dibromofluoromethane	105%	95%-106%
1,2-Dichloroethane-d4	102%	91%-112%
Toluene-d8	96%	92%-104%

VOLATILE ORGANIC ANALYSIS DATA SHEET

Laboratory: Premier Laboratory, LLC

PL Report No: E404844
PL Sample No: 2

Date Collected: 4/19/2004
Date Received: 4/20/2004
Date Extracted: By:
Date Analyzed: 04/21/04 By: MM
Method: 8260B
QC Batch#: 28261
Units: ug/L

Customer: Sage Environmental, Inc
Location: East Providence, RI
Project: S1781
Sample Description: MW-9

Matrix: Water
Percent Moisture: N/A
Sample Weight/Volume:
Dilution Factor: 1
Soil Extract Volume:
Lab Data File: J18517.D

CAS No.	Parameter	Result	DL
67-64-1	Acetone	ND	20
107-13-1	Acrylonitrile	ND	25
71-43-2	Benzene	ND	5.0
108-86-1	Bromobenzene	ND	5.0
74-97-5	Bromochloromethane	ND	5.0
75-27-4	Bromodichloromethane	ND	5.0
75-25-2	Bromoform	ND	5.0
74-83-9	Bromomethane	ND	5.0
78-93-3	2-Butanone (MEK)	ND	10
104-51-8	n-Butylbenzene	ND	5.0
135-98-8	sec-Butylbenzene	ND	5.0
98-06-6	tert-Butylbenzene	ND	5.0
75-15-0	Carbon disulfide	ND	5.0
56-23-5	Carbon tetrachloride	ND	5.0
108-90-7	Chlorobenzene	ND	5.0
75-00-3	Chloroethane	ND	5.0
67-66-3	Chloroform	ND	5.0
74-87-3	Chloromethane	ND	5.0
95-49-8	2-Chlorotoluene	ND	5.0
106-43-4	4-Chlorotoluene	ND	5.0
96-12-8	1,2-Dibromo-3-chloropropane (DBCP)	ND	2.0
124-48-1	Dibromochloromethane	ND	5.0
106-93-4	1,2-Dibromoethane (EDB)	ND	5.0
74-95-3	Dibromomethane	ND	5.0
95-50-1	1,2-Dichlorobenzene	ND	5.0
541-73-1	1,3-Dichlorobenzene	ND	5.0
106-46-7	1,4-Dichlorobenzene	ND	5.0
75-71-8	Dichlorodifluoromethane	ND	5.0
75-34-3	1,1-Dichloroethane	ND	5.0
107-06-2	1,2-Dichloroethane	ND	5.0
75-35-4	1,1-Dichloroethene	ND	5.0
156-59-2	cis-1,2-Dichloroethene	ND	5.0
156-60-5	trans-1,2-Dichloroethene	ND	5.0
78-87-5	1,2-Dichloropropane	ND	5.0
142-28-9	1,3-Dichloropropane	ND	5.0
590-20-7	2,2-Dichloropropane	ND	5.0
563-58-6	1,1-Dichloropropene	ND	5.0
10061-01-5	cis-1,3-Dichloropropene	ND	5.0
10061-02-6	trans-1,3-Dichloropropene	ND	5.0
100-41-4	Ethylbenzene	12	5.0
87-68-3	Hexachlorobutadiene	ND	5.0

VOLATILE ORGANIC ANALYSIS DATA SHEET

Laboratory: Premier Laboratory, LLC

PL Report No: E404844
PL Sample No: 2 (continued)

Date Collected: 4/19/2004
Date Received: 4/20/2004
Date Extracted: By:
Date Analyzed: 04/21/04 By: MM
Method: 8260B
QC Batch#: 28261
Units: ug/L

Customer: Sage Environmental, Inc
Location: East Providence, RI
Project: S1781
Sample Description: MW-9

Matrix: Water
Percent Moisture: N/A
Sample Weight/Volume:
Dilution Factor: 1
Soil Extract Volume:
Lab Data File: J18517.D

CAS No.	Parameter	Result	DL
591-78-6	2-Hexanone	ND	10
98-82-8	Isopropylbenzene	7.0	5.0
99-87-6	4-Isopropyltoluene	11	5.0
1634-04-4	Methyl tert-butyl ether (MTBE)	ND	5.0
108-10-1	4-Methyl-2-pentanone (MIBK)	ND	10
75-09-2	Methylene chloride	ND	5.0
91-20-3	Naphthalene	42	5.0
103-65-1	n-Propylbenzene	12	5.0
100-42-5	Styrene	ND	5.0
96-18-4	1,2,3-Trichloropropane	ND	5.0
630-20-6	1,1,1,2-Tetrachloroethane	ND	5.0
79-34-5	1,1,2,2-Tetrachloroethane	ND	5.0
127-18-4	Tetrachloroethene (PCE)	ND	5.0
108-88-3	Toluene	ND	5.0
87-61-6	1,2,3-Trichlorobenzene	ND	5.0
120-82-1	1,2,4-Trichlorobenzene	ND	5.0
71-55-6	1,1,1-Trichloroethane	ND	5.0
79-00-5	1,1,2-Trichloroethane	ND	5.0
79-01-6	Trichloroethene (TCE)	ND	5.0
75-69-4	Trichlorofluoromethane	ND	5.0
95-63-6	1,2,4-Trimethylbenzene	110	5.0
108-67-8	1,3,5-Trimethylbenzene	29	5.0
75-01-4	Vinyl chloride	2.1	2.0
95-47-6	o-Xylene	5.9	5.0
	m,p-Xylenes	43	5.0

Surrogate	Recovery	Limits
Bromofluorobenzene	102%	81%-109%
Dibromofluoromethane	103%	95%-106%
1,2-Dichloroethane-d4	102%	91%-112%
Toluene-d8	94%	92%-104%

Premier
Laboratory, LLC
61 Louisa Viens Drive
Dayville, CT 06241
FAX: 860-774-2689
860-774-6814 800-932-1150

ANALYTICAL DATA REPORT

Report Number: E410186
Project: S1781

prepared for:

Sage Environmental, Inc.
172 Armistice Blvd.
Pawtucket, RI 02860

Attn: Edward Warner

Received Date: 10/5/2004
Report Date: 10/12/2004

Premier Laboratory, LLC
Authorized Signature

Certifications:
CT (PH-0465), MA (M-CT008), ME (CT050), NH (2020), NJ (CT002), NY (11549), RI (RI246)

INORGANIC ANALYSIS DATA SHEET

Laboratory: Premier Laboratory, LLC
PL Report No: E410186
Date Received: 10/5/2004

Customer: Sage Environmental, Inc
Location: East Providence, RI
Project: S1781

Parameter	Result	DL	Units	Completed		By	Dilution
(1) MW-1							
Date Collected: 10/4/2004 **Matrix: Water**							
Chloride by EPA 325.2	6000	200	mg/L	10/06/04		DDD	100
(2) MW-2							
Date Collected: 10/4/2004 **Matrix: Water**							
Chloride by EPA 325.2	12000	400	mg/L	10/06/04		DDD	200
(3) MW-3							
Date Collected: 10/4/2004 **Matrix: Water**							
Chloride by EPA 325.2	3600	100	mg/L	10/06/04		DDD	50
(4) MW-4							
Date Collected: 10/4/2004 **Matrix: Water**							
Chloride by EPA 325.2	23000	1000	mg/L	10/06/04		DDD	500
(5) MW-5							
Date Collected: 10/4/2004 **Matrix: Water**							
Chloride by EPA 325.2	23000	1000	mg/L	10/06/04		DDD	500
(6) MW-6							
Date Collected: 10/4/2004 **Matrix: Water**							
Chloride by EPA 325.2	2200	50	mg/L	10/06/04	11:52	DDD	25.0
(7) MW-8							
Date Collected: 10/4/2004 **Matrix: Water**							
Chloride by EPA 325.2	32000	2000	mg/L	10/06/04		DDD	1000
(8) MW-9							
Date Collected: 10/4/2004 **Matrix: Water**							
Chloride by EPA 325.2	11000	400	mg/L	10/06/04		DDD	200
(9) MW-11							
Date Collected: 10/4/2004 **Matrix: Water**							
Chloride by EPA 325.2	34000	1000	mg/L	10/06/04		DDD	500
(10) MW-12							
Date Collected: 10/4/2004 **Matrix: Water**							
Chloride by EPA 325.2	950	50	mg/L	10/06/04	11:55	DDD	25.0
(11) MW-13							
Date Collected: 10/4/2004 **Matrix: Water**							
Chloride by EPA 325.2	190	10	mg/L	10/06/04	11:56	DDD	5
(12) MW-14							
Date Collected: 10/4/2004 **Matrix: Water**							
Chloride by EPA 325.2	330	10	mg/L	10/06/04	11:56	DDD	5

VOLATILE ORGANIC ANALYSIS DATA SHEET

Laboratory: Premier Laboratory, LLC

PL Report No: E410186
PL Sample No: 1

Date Collected: 10/4/2004
Date Received: 10/5/2004
Date Extracted: By:
Date Analyzed: 10/06/04 By: GP
Method: 8260B
QC Batch#: 32778
Units: ug/L

Customer: Sage Environmental, Inc
Location: East Providence, RI
Project: S1781
Sample Description: MW-1

Matrix: Water
Percent Moisture: N/A
Sample Weight/Volume:
Dilution Factor: 1
Soil Extract Volume:
Lab Data File: M19649.D

CAS No.	Parameter	Result	DL
67-64-1	Acetone	ND	20
107-13-1	Acrylonitrile	ND	25
71-43-2	Benzene	ND	5.0
108-86-1	Bromobenzene	ND	5.0
74-97-5	Bromochloromethane	ND	5.0
75-27-4	Bromodichloromethane	ND	5.0
75-25-2	Bromoform	ND	5.0
74-83-9	Bromomethane	ND	5.0
78-93-3	2-Butanone (MEK)	ND	10
104-51-8	n-Butylbenzene	ND	5.0
135-98-8	sec-Butylbenzene	ND	5.0
98-06-6	tert-Butylbenzene	ND	5.0
75-15-0	Carbon disulfide	ND	5.0
56-23-5	Carbon tetrachloride	ND	5.0
108-90-7	Chlorobenzene	ND	5.0
75-00-3	Chloroethane	ND	5.0
67-66-3	Chloroform	ND	5.0
74-87-3	Chloromethane	ND	5.0
95-49-8	2-Chlorotoluene	ND	5.0
106-43-4	4-Chlorotoluene	ND	5.0
96-12-8	1,2-Dibromo-3-chloropropane (DBCP)	ND	0.50
124-48-1	Dibromochloromethane	ND	5.0
106-93-4	1,2-Dibromoethane (EDB)	ND	0.50
74-95-3	Dibromomethane	ND	5.0
95-50-1	1,2-Dichlorobenzene	ND	5.0
541-73-1	1,3-Dichlorobenzene	ND	5.0
106-46-7	1,4-Dichlorobenzene	ND	5.0
75-71-8	Dichlorodifluoromethane	ND	5.0
75-34-3	1,1-Dichloroethane	ND	5.0
107-06-2	1,2-Dichloroethane	ND	5.0
75-35-4	1,1-Dichloroethene	ND	5.0
156-59-2	cis-1,2-Dichloroethene	ND	5.0
156-60-5	trans-1,2-Dichloroethene	ND	5.0
78-87-5	1,2-Dichloropropane	ND	5.0
142-28-9	1,3-Dichloropropane	ND	5.0
590-20-7	2,2-Dichloropropane	ND	5.0
563-58-6	1,1-Dichloropropene	ND	5.0
10061-01-5	cis-1,3-Dichloropropene	ND	5.0
10061-02-6	trans-1,3-Dichloropropene	ND	5.0
100-41-4	Ethylbenzene	ND	5.0
87-68-3	Hexachlorobutadiene	ND	5.0

VOLATILE ORGANIC ANALYSIS DATA SHEET

Laboratory: Premier Laboratory, LLC

PL Report No: E410186
PL Sample No: 1 (continued)

Date Collected: 10/4/2004
Date Received: 10/5/2004
Date Extracted: By:
Date Analyzed: 10/06/04 By: GP
Method: 8260B
QC Batch#: 32778
Units: ug/L

Customer: Sage Environmental, Inc
Location: East Providence, RI
Project: S1781
Sample Description: MW-1

Matrix: Water
Percent Moisture: N/A
Sample Weight/Volume:
Dilution Factor: 1
Soil Extract Volume:
Lab Data File: M19649.D

CAS No.	Parameter	Result	DL
591-78-6	2-Hexanone	ND	10
98-82-8	Isopropylbenzene	ND	5.0
99-87-6	4-Isopropyltoluene	ND	5.0
1634-04-4	Methyl tert-butyl ether (MTBE)	ND	5.0
108-10-1	4-Methyl-2-pentanone (MIBK)	ND	10
75-09-2	Methylene chloride	ND	5.0
91-20-3	Naphthalene	ND	5.0
103-65-1	n-Propylbenzene	ND	5.0
100-42-5	Styrene	ND	5.0
96-18-4	1,2,3-Trichloropropane	ND	5.0
630-20-6	1,1,1,2-Tetrachloroethane	ND	5.0
79-34-5	1,1,2,2-Tetrachloroethane	ND	5.0
127-18-4	Tetrachloroethene (PCE)	ND	5.0
108-88-3	Toluene	ND	5.0
87-61-6	1,2,3-Trichlorobenzene	ND	5.0
120-82-1	1,2,4-Trichlorobenzene	ND	5.0
71-55-6	1,1,1-Trichloroethane	ND	5.0
79-00-5	1,1,2-Trichloroethane	ND	5.0
79-01-6	Trichloroethene (TCE)	ND	5.0
75-69-4	Trichlorofluoromethane	ND	5.0
95-63-6	1,2,4-Trimethylbenzene	ND	5.0
108-67-8	1,3,5-Trimethylbenzene	ND	5.0
75-01-4	Vinyl chloride	ND	2.0
95-47-6	o-Xylene	ND	5.0
	m,p-Xylenes	ND	5.0

Surrogate	Recovery	Limits
Bromofluorobenzene	92%	85%-108%
Dibromofluoromethane	106%	94%-111%
1,2-Dichloroethane-d4	98%	87%-116%
Toluene-d8	90%	90%-102%

VOLATILE ORGANIC ANALYSIS DATA SHEET

Laboratory: Premier Laboratory, LLC

PL Report No: E410186
PL Sample No: 2

Date Collected: 10/4/2004
Date Received: 10/5/2004
Date Extracted: By:
Date Analyzed: 10/06/04 By: GP
Method: 8260B
QC Batch#: 32778
Units: ug/L

Customer: Sage Environmental, Inc
Location: East Providence, RI
Project: S1781
Sample Description: MW-2

Matrix: Water
Percent Moisture: N/A
Sample Weight/Volume:
Dilution Factor: 1
Soil Extract Volume:
Lab Data File: M19650.D

CAS No.	Parameter	Result	DL
67-64-1	Acetone	ND	20
107-13-1	Acrylonitrile	ND	25
71-43-2	Benzene	ND	5.0
108-86-1	Bromobenzene	ND	5.0
74-97-5	Bromochloromethane	ND	5.0
75-27-4	Bromodichloromethane	ND	5.0
75-25-2	Bromoform	ND	5.0
74-83-9	Bromomethane	ND	5.0
78-93-3	2-Butanone (MEK)	ND	5.0
104-51-8	n-Butylbenzene	ND	10
135-98-8	sec-Butylbenzene	ND	5.0
98-06-6	tert-Butylbenzene	ND	5.0
75-15-0	Carbon disulfide	ND	5.0
56-23-5	Carbon tetrachloride	ND	5.0
108-90-7	Chlorobenzene	ND	5.0
75-00-3	Chloroethane	ND	5.0
67-66-3	Chloroform	ND	5.0
74-87-3	Chloromethane	ND	5.0
95-49-8	2-Chlorotoluene	ND	5.0
106-43-4	4-Chlorotoluene	ND	5.0
96-12-8	1,2-Dibromo-3-chloropropane (DBCP)	ND	5.0
124-48-1	Dibromochloromethane	ND	0.50
106-93-4	1,2-Dibromoethane (EDB)	ND	5.0
74-95-3	Dibromomethane	ND	0.50
95-50-1	1,2-Dichlorobenzene	ND	5.0
541-73-1	1,3-Dichlorobenzene	ND	5.0
106-46-7	1,4-Dichlorobenzene	ND	5.0
75-71-8	Dichlorodifluoromethane	ND	5.0
75-34-3	1,1-Dichloroethane	ND	5.0
107-06-2	1,2-Dichloroethane	ND	5.0
75-35-4	1,1-Dichloroethene	ND	5.0
156-59-2	cis-1,2-Dichloroethene	ND	5.0
156-60-5	trans-1,2-Dichloroethene	ND	5.0
78-87-5	1,2-Dichloropropane	ND	5.0
142-28-9	1,3-Dichloropropane	ND	5.0
590-20-7	2,2-Dichloropropane	ND	5.0
563-58-6	1,1-Dichloropropene	ND	5.0
10061-01-5	cis-1,3-Dichloropropene	ND	5.0
10061-02-6	trans-1,3-Dichloropropene	ND	5.0
100-41-4	Ethylbenzene	ND	5.0
87-68-3	Hexachlorobutadiene	ND	5.0

VOLATILE ORGANIC ANALYSIS DATA SHEET

Laboratory: Premier Laboratory, LLC

PL Report No: E410186
PL Sample No: 2 (continued)

Date Collected: 10/4/2004
Date Received: 10/5/2004
Date Extracted: By:
Date Analyzed: 10/06/04 By: GP
Method: 8260B
QC Batch#: 32778
Units: ug/L

Customer: Sage Environmental, Inc
Location: East Providence, RI
Project: S1781
Sample Description: MW-2

Matrix: Water
Percent Moisture: N/A
Sample Weight/Volume:
Dilution Factor: 1
Soil Extract Volume:
Lab Data File: M19650.D

CAS No.	Parameter	Result	DL
591-78-6	2-Hexanone	ND	10
98-82-8	Isopropylbenzene	ND	5.0
99-87-6	4-Isopropyltoluene	ND	5.0
1634-04-4	Methyl tert-butyl ether (MTBE)	ND	5.0
108-10-1	4-Methyl-2-pentanone (MIBK)	ND	10
75-09-2	Methylene chloride	ND	5.0
91-20-3	Naphthalene	6.0	5.0
103-65-1	n-Propylbenzene	ND	5.0
100-42-5	Styrene	ND	5.0
96-18-4	1,2,3-Trichloropropane	ND	5.0
630-20-6	1,1,1,2-Tetrachloroethane	ND	5.0
79-34-5	1,1,2,2-Tetrachloroethane	ND	5.0
127-18-4	Tetrachloroethene (PCE)	ND	5.0
108-88-3	Toluene	ND	5.0
87-61-6	1,2,3-Trichlorobenzene	ND	5.0
120-82-1	1,2,4-Trichlorobenzene	ND	5.0
71-55-6	1,1,1-Trichloroethane	ND	5.0
79-00-5	1,1,2-Trichloroethane	ND	5.0
79-01-6	Trichloroethene (TCE)	ND	5.0
75-69-4	Trichlorofluoromethane	ND	5.0
95-63-6	1,2,4-Trimethylbenzene	ND	5.0
108-67-8	1,3,5-Trimethylbenzene	ND	5.0
75-01-4	Vinyl chloride	ND	2.0
95-47-6	o-Xylene	ND	5.0
	m,p-Xylenes	ND	5.0

Surrogate	Recovery	Limits
Bromofluorobenzene	92%	85%-108%
Dibromofluoromethane	104%	94%-111%
1,2-Dichloroethane-d4	96%	87%-116%
Toluene-d8	96%	90%-102%

VOLATILE ORGANIC ANALYSIS DATA SHEET

Laboratory: Premier Laboratory, LLC

PL Report No: E410186
PL Sample No: 3

Date Collected: 10/4/2004
Date Received: 10/5/2004
Date Extracted: By:
Date Analyzed: 10/06/04 By: GP
Method: 8260B
QC Batch#: 32778
Units: ug/L

Customer: Sage Environmental, Inc
Location: East Providence, RI
Project: S1781
Sample Description: MW-3

Matrix: Water
Percent Moisture: N/A
Sample Weight/Volume:
Dilution Factor: 2
Soil Extract Volume:
Lab Data File: M19665.D

CAS No.	Parameter	Result	DL
67-64-1	Acetone	ND	40
107-13-1	Acrylonitrile	ND	50
71-43-2	Benzene	ND	10
108-86-1	Bromobenzene	ND	10
74-97-5	Bromochloromethane	ND	10
75-27-4	Bromodichloromethane	ND	10
75-25-2	Bromoform	ND	10
74-83-9	Bromomethane	ND	10
78-93-3	2-Butanone (MEK)	ND	20
104-51-8	n-Butylbenzene	ND	10
135-98-8	sec-Butylbenzene	ND	10
98-06-6	tert-Butylbenzene	ND	10
75-15-0	Carbon disulfide	ND	10
56-23-5	Carbon tetrachloride	ND	10
108-90-7	Chlorobenzene	ND	10
75-00-3	Chloroethane	ND	10
67-66-3	Chloroform	ND	10
74-87-3	Chloromethane	ND	10
95-49-8	2-Chlorotoluene	ND	10
106-43-4	4-Chlorotoluene	ND	10
96-12-8	1,2-Dibromo-3-chloropropane (DBCP)	ND	1.0
124-48-1	Dibromochloromethane	ND	10
106-93-4	1,2-Dibromoethane (EDB)	ND	1.0
74-95-3	Dibromomethane	ND	10
95-50-1	1,2-Dichlorobenzene	ND	10
541-73-1	1,3-Dichlorobenzene	ND	10
106-46-7	1,4-Dichlorobenzene	ND	10
75-71-8	Dichlorodifluoromethane	ND	10
75-34-3	1,1-Dichloroethane	ND	10
107-06-2	1,2-Dichloroethane	ND	10
75-35-4	1,1-Dichloroethene	ND	10
156-59-2	cis-1,2-Dichloroethene	ND	10
156-60-5	trans-1,2-Dichloroethene	ND	10
78-87-5	1,2-Dichloropropane	ND	10
142-28-9	1,3-Dichloropropane	ND	10
590-20-7	2,2-Dichloropropane	ND	10
563-58-6	1,1-Dichloropropene	ND	10
10061-01-5	cis-1,3-Dichloropropene	ND	10
10061-02-6	trans-1,3-Dichloropropene	ND	10
100-41-4	Ethylbenzene	ND	10
87-68-3	Hexachlorobutadiene	ND	10

VOLATILE ORGANIC ANALYSIS DATA SHEET

Laboratory: Premier Laboratory, LLC

PL Report No: E410186
PL Sample No: 3 (continued)

Date Collected: 10/4/2004
Date Received: 10/5/2004
Date Extracted: By:
Date Analyzed: 10/06/04 By: GP
Method: 8260B
QC Batch#: 32778
Units: ug/L

Customer: Sage Environmental, Inc
Location: East Providence, RI
Project: S1781
Sample Description: MW-3

Matrix: Water
Percent Moisture: N/A
Sample Weight/Volume:
Dilution Factor: 2
Soil Extract Volume:
Lab Data File: M19665.D

CAS No.	Parameter	Result	DL
591-78-6	2-Hexanone	ND	20
98-82-8	Isopropylbenzene	ND	10
99-87-6	4-Isopropyltoluene	ND	10
1634-04-4	Methyl tert-butyl ether (MTBE)	ND	10
108-10-1	4-Methyl-2-pentanone (MIBK)	ND	20
75-09-2	Methylene chloride	ND	10
91-20-3	Naphthalene	250	10
103-65-1	n-Propylbenzene	ND	10
100-42-5	Styrene	ND	10
96-18-4	1,2,3-Trichloropropane	ND	10
630-20-6	1,1,1,2-Tetrachloroethane	ND	10
79-34-5	1,1,2,2-Tetrachloroethane	ND	10
127-18-4	Tetrachloroethene (PCE)	ND	10
108-88-3	Toluene	ND	10
87-61-6	1,2,3-Trichlorobenzene	ND	10
120-82-1	1,2,4-Trichlorobenzene	ND	10
71-55-6	1,1,1-Trichloroethane	ND	10
79-00-5	1,1,2-Trichloroethane	ND	10
79-01-6	Trichloroethene (TCE)	ND	10
75-69-4	Trichlorofluoromethane	ND	10
95-63-6	1,2,4-Trimethylbenzene	ND	10
108-67-8	1,3,5-Trimethylbenzene	ND	10
75-01-4	Vinyl chloride	ND	4.0
95-47-6	o-Xylene	ND	10
	m,p-Xylenes	ND	10

Surrogate	Recovery	Limits
Bromofluorobenzene	92%	85%-108%
Dibromofluoromethane	105%	94%-111%
1,2-Dichloroethane-d4	97%	87%-116%
Toluene-d8	95%	90%-102%

3

VOLATILE ORGANIC ANALYSIS DATA SHEET

Laboratory: Premier Laboratory, LLC

PL Report No: E410186
PL Sample No: 4

Date Collected: 10/4/2004
Date Received: 10/5/2004
Date Extracted: By:
Date Analyzed: 10/06/04 By: GP
Method: 8260B
QC Batch#: 32778
Units: ug/L

Customer: Sage Environmental, Inc
Location: East Providence, RI
Project: S1781
Sample Description: MW-4

Matrix: Water
Percent Moisture: N/A
Sample Weight/Volume:
Dilution Factor: 1
Soil Extract Volume:
Lab Data File: M19664.D

CAS No.	Parameter	Result	DL
67-64-1	Acetone	ND	20
107-13-1	Acrylonitrile	ND	25
71-43-2	Benzene	ND	5.0
108-86-1	Bromobenzene	ND	5.0
74-97-5	Bromochloromethane	ND	5.0
75-27-4	Bromodichloromethane	ND	5.0
75-25-2	Bromoform	ND	5.0
74-83-9	Bromomethane	ND	5.0
78-93-3	2-Butanone (MEK)	ND	10
104-51-8	n-Butylbenzene	ND	5.0
135-98-8	sec-Butylbenzene	ND	5.0
98-06-6	tert-Butylbenzene	ND	5.0
75-15-0	Carbon disulfide	ND	5.0
56-23-5	Carbon tetrachloride	ND	5.0
108-90-7	Chlorobenzene	ND	5.0
75-00-3	Chloroethane	ND	5.0
67-66-3	Chloroform	ND	5.0
74-87-3	Chloromethane	ND	5.0
95-49-8	2-Chlorotoluene	ND	5.0
106-43-4	4-Chlorotoluene	ND	5.0
96-12-8	1,2-Dibromo-3-chloropropane (DBCP)	ND	0.50
124-48-1	Dibromochloromethane	ND	5.0
106-93-4	1,2-Dibromoethane (EDB)	ND	0.50
74-95-3	Dibromomethane	ND	5.0
95-50-1	1,2-Dichlorobenzene	ND	5.0
541-73-1	1,3-Dichlorobenzene	ND	5.0
106-46-7	1,4-Dichlorobenzene	ND	5.0
75-71-8	Dichlorodifluoromethane	ND	5.0
75-34-3	1,1-Dichloroethane	ND	5.0
107-06-2	1,2-Dichloroethane	ND	5.0
75-35-4	1,1-Dichloroethene	ND	5.0
156-59-2	cis-1,2-Dichloroethene	ND	5.0
156-60-5	trans-1,2-Dichloroethene	ND	5.0
78-87-5	1,2-Dichloropropane	ND	5.0
142-28-9	1,3-Dichloropropane	ND	5.0
590-20-7	2,2-Dichloropropane	ND	5.0
563-58-6	1,1-Dichloropropene	ND	5.0
10061-01-5	cis-1,3-Dichloropropene	ND	5.0
10061-02-6	trans-1,3-Dichloropropene	ND	5.0
100-41-4	Ethylbenzene	ND	5.0
87-68-3	Hexachlorobutadiene	ND	5.0

VOLATILE ORGANIC ANALYSIS DATA SHEET

Laboratory: Premier Laboratory, LLC

PL Report No: E410186
PL Sample No: 4 (continued)

Date Collected: 10/4/2004
Date Received: 10/5/2004
Date Extracted: By:
Date Analyzed: 10/06/04 By: GP
Method: 8260B
QC Batch#: 32778
Units: ug/L

Customer: Sage Environmental, Inc
Location: East Providence, RI
Project: S1781
Sample Description: MW-4

Matrix: Water
Percent Moisture: N/A
Sample Weight/Volume:
Dilution Factor: 1
Soil Extract Volume:
Lab Data File: M19664.D

CAS No.	Parameter	Result	DL
591-78-6	2-Hexanone	ND	10
98-82-8	Isopropylbenzene	ND	5.0
99-87-6	4-Isopropyltoluene	ND	5.0
1634-04-4	Methyl tert-butyl ether (MTBE)	ND	5.0
108-10-1	4-Methyl-2-pentanone (MIBK)	ND	10
75-09-2	Methylene chloride	ND	5.0
91-20-3	Naphthalene	ND	5.0
103-65-1	n-Propylbenzene	ND	5.0
100-42-5	Styrene	ND	5.0
96-18-4	1,2,3-Trichloropropane	ND	5.0
630-20-6	1,1,1,2-Tetrachloroethane	ND	5.0
79-34-5	1,1,2,2-Tetrachloroethane	ND	5.0
127-18-4	Tetrachloroethene (PCE)	ND	5.0
108-88-3	Toluene	ND	5.0
87-61-6	1,2,3-Trichlorobenzene	ND	5.0
120-82-1	1,2,4-Trichlorobenzene	ND	5.0
71-55-6	1,1,1-Trichloroethane	ND	5.0
79-00-5	1,1,2-Trichloroethane	ND	5.0
79-01-6	Trichloroethene (TCE)	ND	5.0
75-69-4	Trichlorofluoromethane	ND	5.0
95-63-6	1,2,4-Trimethylbenzene	ND	5.0
108-67-8	1,3,5-Trimethylbenzene	ND	5.0
75-01-4	Vinyl chloride	ND	2.0
95-47-6	o-Xylene	ND	5.0
	m,p-Xylenes	ND	5.0

Surrogate	Recovery	Limits
Bromofluorobenzene	90%	85%-108%
Dibromofluoromethane	105%	94%-111%
1,2-Dichloroethane-d4	98%	87%-116%
Toluene-d8	93%	90%-102%

3

VOLATILE ORGANIC ANALYSIS DATA SHEET

Laboratory: Premier Laboratory, LLC

PL Report No: E410186
PL Sample No: 5

Date Collected: 10/4/2004
Date Received: 10/5/2004
Date Extracted: By:
Date Analyzed: 10/06/04 By: GP
Method: 8260B
QC Batch#: 32778
Units: ug/L

Customer: Sage Environmental, Inc
Location: East Providence, RI
Project: S1781
Sample Description: MW-5

Matrix: Water
Percent Moisture: N/A
Sample Weight/Volume:
Dilution Factor: 1
Soil Extract Volume:
Lab Data File: M19653.D

CAS No.	Parameter	Result	DL
67-64-1	Acetone	ND	20
107-13-1	Acrylonitrile	ND	25
71-43-2	Benzene	ND	5.0
108-86-1	Bromobenzene	ND	5.0
74-97-5	Bromochloromethane	ND	5.0
75-27-4	Bromodichloromethane	ND	5.0
75-25-2	Bromoform	ND	5.0
74-83-9	Bromomethane	ND	5.0
78-93-3	2-Butanone (MEK)	ND	10
104-51-8	n-Butylbenzene	ND	5.0
135-98-8	sec-Butylbenzene	ND	5.0
98-06-6	tert-Butylbenzene	ND	5.0
75-15-0	Carbon disulfide	ND	5.0
56-23-5	Carbon tetrachloride	ND	5.0
108-90-7	Chlorobenzene	ND	5.0
75-00-3	Chloroethane	ND	5.0
67-66-3	Chloroform	ND	5.0
74-87-3	Chloromethane	ND	5.0
95-49-8	2-Chlorotoluene	ND	5.0
106-43-4	4-Chlorotoluene	ND	5.0
96-12-8	1,2-Dibromo-3-chloropropane (DBCP)	ND	5.0
124-48-1	Dibromochloromethane	ND	0.50
106-93-4	1,2-Dibromoethane (EDB)	ND	5.0
74-95-3	Dibromomethane	ND	0.50
95-50-1	1,2-Dichlorobenzene	ND	5.0
541-73-1	1,3-Dichlorobenzene	ND	5.0
106-46-7	1,4-Dichlorobenzene	ND	5.0
75-71-8	Dichlorodifluoromethane	ND	5.0
75-34-3	1,1-Dichloroethane	ND	5.0
107-06-2	1,2-Dichloroethane	ND	5.0
75-35-4	1,1-Dichloroethene	ND	5.0
156-59-2	cis-1,2-Dichloroethene	ND	5.0
156-60-5	trans-1,2-Dichloroethene	ND	5.0
78-87-5	1,2-Dichloropropane	ND	5.0
142-28-9	1,3-Dichloropropane	ND	5.0
590-20-7	2,2-Dichloropropane	ND	5.0
563-58-6	1,1-Dichloropropene	ND	5.0
10061-01-5	cis-1,3-Dichloropropene	ND	5.0
10061-02-6	trans-1,3-Dichloropropene	ND	5.0
100-41-4	Ethylbenzene	ND	5.0
87-68-3	Hexachlorobutadiene	ND	5.0

VOLATILE ORGANIC ANALYSIS DATA SHEET

Laboratory: Premier Laboratory, LLC

PL Report No: E410186
PL Sample No: 5 (continued)

Date Collected: 10/4/2004
Date Received: 10/5/2004
Date Extracted: By:
Date Analyzed: 10/06/04 By: GP
Method: 8260B
QC Batch#: 32778
Units: ug/L

Customer: Sage Environmental, Inc
Location: East Providence, RI
Project: S1781
Sample Description: MW-5

Matrix: Water
Percent Moisture: N/A
Sample Weight/Volume:
Dilution Factor: 1
Soil Extract Volume:
Lab Data File: M19653.D

CAS No.	Parameter	Result	DL
591-78-6	2-Hexanone	ND	10
98-82-8	Isopropylbenzene	ND	5.0
99-87-6	4-Isopropyltoluene	ND	5.0
1634-04-4	Methyl tert-butyl ether (MTBE)	ND	5.0
108-10-1	4-Methyl-2-pentanone (MIBK)	ND	10
75-09-2	Methylene chloride	ND	5.0
91-20-3	Naphthalene	ND	5.0
103-65-1	n-Propylbenzene	ND	5.0
100-42-5	Styrene	ND	5.0
96-18-4	1,2,3-Trichloropropane	ND	5.0
630-20-6	1,1,1,2-Tetrachloroethane	ND	5.0
79-34-5	1,1,2,2-Tetrachloroethane	ND	5.0
127-18-4	Tetrachloroethene (PCE)	ND	5.0
108-88-3	Toluene	ND	5.0
87-61-6	1,2,3-Trichlorobenzene	ND	5.0
120-82-1	1,2,4-Trichlorobenzene	ND	5.0
71-55-6	1,1,1-Trichloroethane	ND	5.0
79-00-5	1,1,2-Trichloroethane	ND	5.0
79-01-6	Trichloroethene (TCE)	ND	5.0
75-69-4	Trichlorofluoromethane	ND	5.0
95-63-6	1,2,4-Trimethylbenzene	ND	5.0
108-67-8	1,3,5-Trimethylbenzene	ND	5.0
75-01-4	Vinyl chloride	ND	2.0
95-47-6	o-Xylene	ND	5.0
	m,p-Xylenes	ND	5.0

Surrogate	Recovery	Limits
Bromofluorobenzene	91%	85%-108%
Dibromofluoromethane	104%	94%-111%
1,2-Dichloroethane-d4	95%	87%-116%
Toluene-d8	93%	90%-102%

VOLATILE ORGANIC ANALYSIS DATA SHEET

Laboratory: Premier Laboratory, LLC

PL Report No: E410186
PL Sample No: 6 (continued)

Date Collected: 10/4/2004
Date Received: 10/5/2004
Date Extracted: By:
Date Analyzed: 10/06/04 By: GP
Method: 8260B
QC Batch#: 32778
Units: ug/L

Customer: Sage Environmental, Inc
Location: East Providence, RI
Project: S1781
Sample Description: MW-6

Matrix: Water
Percent Moisture: N/A
Sample Weight/Volume:
Dilution Factor: 1
Soil Extract Volume:
Lab Data File: M19654.D

CAS No.	Parameter	Result	DL
591-78-6	2-Hexanone	ND	10
98-82-8	Isopropylbenzene	ND	5.0
99-87-6	4-Isopropyltoluene	ND	5.0
1634-04-4	Methyl tert-butyl ether (MTBE)	ND	5.0
108-10-1	4-Methyl-2-pentanone (MIBK)	ND	10
75-09-2	Methylene chloride	ND	5.0
91-20-3	Naphthalene	ND	5.0
103-65-1	n-Propylbenzene	ND	5.0
100-42-5	Styrene	ND	5.0
96-18-4	1,2,3-Trichloropropane	ND	5.0
630-20-6	1,1,1,2-Tetrachloroethane	ND	5.0
79-34-5	1,1,2,2-Tetrachloroethane	ND	5.0
127-18-4	Tetrachloroethene (PCE)	ND	5.0
108-88-3	Toluene	ND	5.0
87-61-6	1,2,3-Trichlorobenzene	ND	5.0
120-82-1	1,2,4-Trichlorobenzene	ND	5.0
71-55-6	1,1,1-Trichloroethane	ND	5.0
79-00-5	1,1,2-Trichloroethane	ND	5.0
79-01-6	Trichloroethene (TCE)	ND	5.0
75-69-4	Trichlorofluoromethane	ND	5.0
95-63-6	1,2,4-Trimethylbenzene	ND	5.0
108-67-8	1,3,5-Trimethylbenzene	ND	5.0
75-01-4	Vinyl chloride	ND	2.0
95-47-6	o-Xylene	ND	5.0
	m,p-Xylenes	ND	5.0

Surrogate	Recovery	Limits
Bromofluorobenzene	92%	85%-108%
Dibromofluoromethane	105%	94%-111%
1,2-Dichloroethane-d4	96%	87%-116%
Toluene-d8	93%	90%-102%

VOLATILE ORGANIC ANALYSIS DATA SHEET

Laboratory: Premier Laboratory, LLC

PL Report No: E410186
PL Sample No: 7

Date Collected: 10/4/2004
Date Received: 10/5/2004
Date Extracted: By:
Date Analyzed: 10/06/04 By: GP
Method: 8260B
QC Batch#: 32778
Units: ug/L

Customer: Sage Environmental, Inc
Location: East Providence, RI
Project: S1781
Sample Description: MW-8

Matrix: Water
Percent Moisture: N/A
Sample Weight/Volume:
Dilution Factor: 1
Soil Extract Volume:
Lab Data File: M19655.D

CAS No.	Parameter	Result	DL
67-64-1	Acetone	ND	20
107-13-1	Acrylonitrile	ND	25
71-43-2	Benzene	ND	5.0
108-86-1	Bromobenzene	ND	5.0
74-97-5	Bromochloromethane	ND	5.0
75-27-4	Bromodichloromethane	ND	5.0
75-25-2	Bromoform	ND	5.0
74-83-9	Bromomethane	ND	5.0
78-93-3	2-Butanone (MEK)	ND	10
104-51-8	n-Butylbenzene	8.5	5.0
135-98-8	sec-Butylbenzene	8.1	5.0
98-06-6	tert-Butylbenzene	ND	5.0
75-15-0	Carbon disulfide	ND	5.0
56-23-5	Carbon tetrachloride	ND	5.0
108-90-7	Chlorobenzene	ND	5.0
75-00-3	Chloroethane	ND	5.0
67-66-3	Chloroform	ND	5.0
74-87-3	Chloromethane	ND	5.0
95-49-8	2-Chlorotoluene	ND	5.0
106-43-4	4-Chlorotoluene	ND	5.0
96-12-8	1,2-Dibromo-3-chloropropane (DBCP)	ND	0.50
124-48-1	Dibromochloromethane	ND	5.0
106-93-4	1,2-Dibromoethane (EDB)	ND	0.50
74-95-3	Dibromomethane	ND	5.0
95-50-1	1,2-Dichlorobenzene	ND	5.0
541-73-1	1,3-Dichlorobenzene	ND	5.0
106-46-7	1,4-Dichlorobenzene	ND	5.0
75-71-8	Dichlorodifluoromethane	ND	5.0
75-34-3	1,1-Dichloroethane	ND	5.0
107-06-2	1,2-Dichloroethane	ND	5.0
75-35-4	1,1-Dichloroethene	ND	5.0
156-59-2	cis-1,2-Dichloroethene	18	5.0
156-60-5	trans-1,2-Dichloroethene	13	5.0
78-87-5	1,2-Dichloropropane	ND	5.0
142-28-9	1,3-Dichloropropane	ND	5.0
590-20-7	2,2-Dichloropropane	ND	5.0
563-58-6	1,1-Dichloropropene	ND	5.0
10061-01-5	cis-1,3-Dichloropropene	ND	5.0
10061-02-6	trans-1,3-Dichloropropene	ND	5.0
100-41-4	Ethylbenzene	26	5.0
87-68-3	Hexachlorobutadiene	ND	5.0

VOLATILE ORGANIC ANALYSIS DATA SHEET

Laboratory: Premier Laboratory, LLC

PL Report No: E410186
PL Sample No: 7 (continued)

Date Collected: 10/4/2004
Date Received: 10/5/2004
Date Extracted: By:
Date Analyzed: 10/06/04 By: GP
Method: 8260B
QC Batch#: 32778
Units: ug/L

Customer: Sage Environmental, Inc
Location: East Providence, RI
Project: S1781
Sample Description: MW-8

Matrix: Water
Percent Moisture: N/A
Sample Weight/Volume:
Dilution Factor: 1
Soil Extract Volume:
Lab Data File: M19655.D

CAS No.	Parameter	Result	DL
591-78-6	2-Hexanone	ND	10
98-82-8	Isopropylbenzene	10	5.0
99-87-6	4-Isopropyltoluene	13	5.0
1634-04-4	Methyl tert-butyl ether (MTBE)	ND	5.0
108-10-1	4-Methyl-2-pentanone (MIBK)	ND	10
75-09-2	Methylene chloride	ND	5.0
91-20-3	Naphthalene	48	5.0
103-65-1	n-Propylbenzene	19	5.0
100-42-5	Styrene	ND	5.0
96-18-4	1,2,3-Trichloropropane	ND	5.0
630-20-6	1,1,1,2-Tetrachloroethane	ND	5.0
79-34-5	1,1,2,2-Tetrachloroethane	ND	5.0
127-18-4	Tetrachloroethene (PCE)	ND	5.0
108-88-3	Toluene	9.0	5.0
87-61-6	1,2,3-Trichlorobenzene	ND	5.0
120-82-1	1,2,4-Trichlorobenzene	ND	5.0
71-55-6	1,1,1-Trichloroethane	ND	5.0
79-00-5	1,1,2-Trichloroethane	ND	5.0
79-01-6	Trichloroethene (TCE)	7.0	5.0
75-69-4	Trichlorofluoromethane	ND	5.0
95-63-6	1,2,4-Trimethylbenzene	160	5.0
108-67-8	1,3,5-Trimethylbenzene	10	5.0
75-01-4	Vinyl chloride	ND	2.0
95-47-6	o-Xylene	22	5.0
	m,p-Xylenes	30	5.0

Surrogate	Recovery	Limits
Bromofluorobenzene	94%	85%-108%
Dibromofluoromethane	107%	94%-111%
1,2-Dichloroethane-d4	100%	87%-116%
Toluene-d8	95%	90%-102%

VOLATILE ORGANIC ANALYSIS DATA SHEET

Laboratory: Premier Laboratory, LLC

PL Report No: E410186
PL Sample No: 8

Date Collected: 10/4/2004
Date Received: 10/5/2004
Date Extracted: By:
Date Analyzed: 10/06/04 By: GP
Method: 8260B
QC Batch#: 32778
Units: ug/L

Customer: Sage Environmental, Inc
Location: East Providence, RI
Project: S1781
Sample Description: MW-9

Matrix: Water
Percent Moisture: N/A
Sample Weight/Volume:
Dilution Factor: 1
Soil Extract Volume:
Lab Data File: M19656.D

CAS No.	Parameter	Result	DL
67-64-1	Acetone	ND	20
107-13-1	Acrylonitrile	ND	25
71-43-2	Benzene	ND	5.0
108-86-1	Bromobenzene	ND	5.0
74-97-5	Bromochloromethane	ND	5.0
75-27-4	Bromodichloromethane	ND	5.0
75-25-2	Bromoform	ND	5.0
74-83-9	Bromomethane	ND	5.0
78-93-3	2-Butanone (MEK)	ND	10
104-51-8	n-Butylbenzene	13	5.0
135-98-8	sec-Butylbenzene	ND	5.0
98-06-6	tert-Butylbenzene	ND	5.0
75-15-0	Carbon disulfide	ND	5.0
56-23-5	Carbon tetrachloride	ND	5.0
108-90-7	Chlorobenzene	ND	5.0
75-00-3	Chloroethane	ND	5.0
67-66-3	Chloroform	ND	5.0
74-87-3	Chloromethane	ND	5.0
95-49-8	2-Chlorotoluene	ND	5.0
106-43-4	4-Chlorotoluene	ND	5.0
96-12-8	1,2-Dibromo-3-chloropropane (DBCP)	ND	5.0
124-48-1	Dibromochloromethane	ND	0.50
106-93-4	1,2-Dibromoethane (EDB)	ND	5.0
74-95-3	Dibromomethane	ND	0.50
95-50-1	1,2-Dichlorobenzene	ND	5.0
541-73-1	1,3-Dichlorobenzene	ND	5.0
106-46-7	1,4-Dichlorobenzene	ND	5.0
75-71-8	Dichlorodifluoromethane	ND	5.0
75-34-3	1,1-Dichloroethane	ND	5.0
107-06-2	1,2-Dichloroethane	ND	5.0
75-35-4	1,1-Dichloroethene	ND	5.0
156-59-2	cis-1,2-Dichloroethene	ND	5.0
156-60-5	trans-1,2-Dichloroethene	ND	5.0
78-87-5	1,2-Dichloropropane	ND	5.0
142-28-9	1,3-Dichloropropane	ND	5.0
590-20-7	2,2-Dichloropropane	ND	5.0
563-58-6	1,1-Dichloropropene	ND	5.0
10061-01-5	cis-1,3-Dichloropropene	ND	5.0
10061-02-6	trans-1,3-Dichloropropene	ND	5.0
100-41-4	Ethylbenzene	ND	5.0
87-68-3	Hexachlorobutadiene	14	5.0
		ND	5.0

VOLATILE ORGANIC ANALYSIS DATA SHEET

Laboratory: Premier Laboratory, LLC

PL Report No: E410186
PL Sample No: 8 (continued)

Date Collected: 10/4/2004
Date Received: 10/5/2004
Date Extracted: By:
Date Analyzed: 10/06/04 By: GP
Method: 8260B
QC Batch#: 32778
Units: ug/L

Customer: Sage Environmental, Inc
Location: East Providence, RI
Project: S1781
Sample Description: MW-9

Matrix: Water
Percent Moisture: N/A
Sample Weight/Volume:
Dilution Factor: 1
Soil Extract Volume:
Lab Data File: M19656.D

CAS No.	Parameter	Result	DL
591-78-6	2-Hexanone	ND	10
98-82-8	Isopropylbenzene	11	5.0
99-87-6	4-Isopropyltoluene	18	5.0
1634-04-4	Methyl tert-butyl ether (MTBE)	ND	5.0
108-10-1	4-Methyl-2-pentanone (MIBK)	ND	10
75-09-2	Methylene chloride	ND	5.0
91-20-3	Naphthalene	74	5.0
103-65-1	n-Propylbenzene	23	5.0
100-42-5	Styrene	ND	5.0
96-18-4	1,2,3-Trichloropropane	ND	5.0
630-20-6	1,1,1,2-Tetrachloroethane	ND	5.0
79-34-5	1,1,2,2-Tetrachloroethane	ND	5.0
127-18-4	Tetrachloroethene (PCE)	ND	5.0
108-88-3	Toluene	ND	5.0
87-61-6	1,2,3-Trichlorobenzene	ND	5.0
120-82-1	1,2,4-Trichlorobenzene	ND	5.0
71-55-6	1,1,1-Trichloroethane	ND	5.0
79-00-5	1,1,2-Trichloroethane	ND	5.0
79-01-6	Trichloroethene (TCE)	ND	5.0
75-69-4	Trichlorofluoromethane	ND	5.0
95-63-6	1,2,4-Trimethylbenzene	ND	5.0
108-67-8	1,3,5-Trimethylbenzene	170	5.0
75-01-4	Vinyl chloride	ND	5.0
95-47-6	o-Xylene	ND	2.0
	m,p-Xylenes	5.7	5.0
		51	5.0

Surrogate	Recovery	Limits
Bromofluorobenzene	94%	85%-108%
Dibromofluoromethane	106%	94%-111%
1,2-Dichloroethane-d4	97%	87%-116%
Toluene-d8	94%	90%-102%

VOLATILE ORGANIC ANALYSIS DATA SHEET

Laboratory: Premier Laboratory, LLC

PL Report No: E410186
PL Sample No: 9

Date Collected: 10/4/2004
Date Received: 10/5/2004
Date Extracted: By:
Date Analyzed: 10/06/04 By: GP
Method: 8260B
QC Batch#: 32778
Units: ug/L

Customer: Sage Environmental, Inc
Location: East Providence, RI
Project: S1781
Sample Description: MW-11

Matrix: Water
Percent Moisture: N/A
Sample Weight/Volume:
Dilution Factor: 1
Soil Extract Volume:
Lab Data File: M19657.D

CAS No.	Parameter	Result	DL
67-64-1	Acetone	ND	20
107-13-1	Acrylonitrile	ND	25
71-43-2	Benzene	ND	5.0
108-86-1	Bromobenzene	ND	5.0
74-97-5	Bromochloromethane	ND	5.0
75-27-4	Bromodichloromethane	ND	5.0
75-25-2	Bromoform	ND	5.0
74-83-9	Bromomethane	ND	5.0
78-93-3	2-Butanone (MEK)	ND	10
104-51-8	n-Butylbenzene	ND	5.0
135-98-8	sec-Butylbenzene	ND	5.0
98-06-6	tert-Butylbenzene	ND	5.0
75-15-0	Carbon disulfide	ND	5.0
56-23-5	Carbon tetrachloride	ND	5.0
108-90-7	Chlorobenzene	ND	5.0
75-00-3	Chloroethane	ND	5.0
67-66-3	Chloroform	ND	5.0
74-87-3	Chloromethane	ND	5.0
95-49-8	2-Chlorotoluene	ND	5.0
106-43-4	4-Chlorotoluene	ND	5.0
96-12-8	1,2-Dibromo-3-chloropropane (DBCP)	ND	0.50
124-48-1	Dibromochloromethane	ND	5.0
106-93-4	1,2-Dibromoethane (EDB)	ND	0.50
74-95-3	Dibromomethane	ND	5.0
95-50-1	1,2-Dichlorobenzene	ND	5.0
541-73-1	1,3-Dichlorobenzene	ND	5.0
106-46-7	1,4-Dichlorobenzene	ND	5.0
75-71-8	Dichlorodifluoromethane	ND	5.0
75-34-3	1,1-Dichloroethane	ND	5.0
107-06-2	1,2-Dichloroethane	ND	5.0
75-35-4	1,1-Dichloroethene	ND	5.0
156-59-2	cis-1,2-Dichloroethene	ND	5.0
156-60-5	trans-1,2-Dichloroethene	ND	5.0
78-87-5	1,2-Dichloropropane	ND	5.0
142-28-9	1,3-Dichloropropane	ND	5.0
590-20-7	2,2-Dichloropropane	ND	5.0
563-58-6	1,1-Dichloropropene	ND	5.0
10061-01-5	cis-1,3-Dichloropropene	ND	5.0
10061-02-6	trans-1,3-Dichloropropene	ND	5.0
100-41-4	Ethylbenzene	ND	5.0
87-68-3	Hexachlorobutadiene	ND	5.0

VOLATILE ORGANIC ANALYSIS DATA SHEET

Laboratory: Premier Laboratory, LLC

PL Report No: E410186
PL Sample No: 9 (continued)

Date Collected: 10/4/2004
Date Received: 10/5/2004
Date Extracted: By:
Date Analyzed: 10/06/04 By: GP
Method: 8260B
QC Batch#: 32778
Units: ug/L

Customer: Sage Environmental, Inc
Location: East Providence, RI
Project: S1781
Sample Description: MW-11

Matrix: Water
Percent Moisture: N/A
Sample Weight/Volume:
Dilution Factor: 1
Soil Extract Volume:
Lab Data File: M19657.D

CAS No.	Parameter	Result	DL
591-78-6	2-Hexanone	ND	10
98-82-8	Isopropylbenzene	ND	5.0
99-87-6	4-Isopropyltoluene	ND	5.0
1634-04-4	Methyl tert-butyl ether (MTBE)	ND	5.0
108-10-1	4-Methyl-2-pentanone (MIBK)	ND	10
75-09-2	Methylene chloride	ND	5.0
91-20-3	Naphthalene	ND	5.0
103-65-1	n-Propylbenzene	ND	5.0
100-42-5	Styrene	ND	5.0
96-18-4	1,2,3-Trichloropropane	ND	5.0
630-20-6	1,1,1,2-Tetrachloroethane	ND	5.0
79-34-5	1,1,2,2-Tetrachloroethane	ND	5.0
127-18-4	Tetrachloroethene (PCE)	ND	5.0
108-88-3	Toluene	ND	5.0
87-61-6	1,2,3-Trichlorobenzene	ND	5.0
120-82-1	1,2,4-Trichlorobenzene	ND	5.0
71-55-6	1,1,1-Trichloroethane	ND	5.0
79-00-5	1,1,2-Trichloroethane	ND	5.0
79-01-6	Trichloroethene (TCE)	ND	5.0
75-69-4	Trichlorofluoromethane	ND	5.0
95-63-6	1,2,4-Trimethylbenzene	ND	5.0
108-67-8	1,3,5-Trimethylbenzene	ND	5.0
75-01-4	Vinyl chloride	ND	2.0
95-47-6	o-Xylene	ND	5.0
	m,p-Xylenes	ND	5.0

Surrogate	Recovery	Limits
Bromofluorobenzene	92%	85%-108%
Dibromofluoromethane	106%	94%-111%
1,2-Dichloroethane-d4	103%	87%-116%
Toluene-d8	93%	90%-102%

VOLATILE ORGANIC ANALYSIS DATA SHEET

Laboratory: Premier Laboratory, LLC

PL Report No: E410186
PL Sample No: 10

Date Collected: 10/4/2004
Date Received: 10/5/2004
Date Extracted: By:
Date Analyzed: 10/06/04 By: GP
Method: 8260B
QC Batch#: 32778
Units: ug/L

Customer: Sage Environmental, Inc
Location: East Providence, RI
Project: S1781
Sample Description: MW-12

Matrix: Water
Percent Moisture: N/A
Sample Weight/Volume:
Dilution Factor: 1
Soil Extract Volume:
Lab Data File: M19658.D

CAS No.	Parameter	Result	DL
67-64-1	Acetone	ND	20
107-13-1	Acrylonitrile	ND	25
71-43-2	Benzene	ND	5.0
108-86-1	Bromobenzene	ND	5.0
74-97-5	Bromochloromethane	ND	5.0
75-27-4	Bromodichloromethane	ND	5.0
75-25-2	Bromoform	ND	5.0
74-83-9	Bromomethane	ND	5.0
78-93-3	2-Butanone (MEK)	ND	10
104-51-8	n-Butylbenzene	ND	5.0
135-98-8	sec-Butylbenzene	ND	5.0
98-06-6	tert-Butylbenzene	ND	5.0
75-15-0	Carbon disulfide	ND	5.0
56-23-5	Carbon tetrachloride	ND	5.0
108-90-7	Chlorobenzene	ND	5.0
75-00-3	Chloroethane	ND	5.0
67-66-3	Chloroform	ND	5.0
74-87-3	Chloromethane	ND	5.0
95-49-8	2-Chlorotoluene	ND	5.0
106-43-4	4-Chlorotoluene	ND	5.0
96-12-8	1,2-Dibromo-3-chloropropane (DBCP)	ND	5.0
124-48-1	Dibromochloromethane	ND	0.50
106-93-4	1,2-Dibromoethane (EDB)	ND	5.0
74-95-3	Dibromomethane	ND	0.50
95-50-1	1,2-Dichlorobenzene	ND	5.0
541-73-1	1,3-Dichlorobenzene	ND	5.0
106-46-7	1,4-Dichlorobenzene	ND	5.0
75-71-8	Dichlorodifluoromethane	ND	5.0
75-34-3	1,1-Dichloroethane	ND	5.0
107-06-2	1,2-Dichloroethane	ND	5.0
75-35-4	1,1-Dichloroethene	ND	5.0
156-59-2	cis-1,2-Dichloroethene	ND	5.0
156-60-5	trans-1,2-Dichloroethene	ND	5.0
78-87-5	1,2-Dichloropropane	ND	5.0
142-28-9	1,3-Dichloropropane	ND	5.0
590-20-7	2,2-Dichloropropane	ND	5.0
563-58-6	1,1-Dichloropropene	ND	5.0
10061-01-5	cis-1,3-Dichloropropene	ND	5.0
10061-02-6	trans-1,3-Dichloropropene	ND	5.0
100-41-4	Ethylbenzene	ND	5.0
87-68-3	Hexachlorobutadiene	ND	5.0

VOLATILE ORGANIC ANALYSIS DATA SHEET

Laboratory: Premier Laboratory, LLC

PL Report No: E410186
PL Sample No: 10 (continued)

Date Collected: 10/4/2004
Date Received: 10/5/2004
Date Extracted: By:
Date Analyzed: 10/06/04 By: GP
Method: 8260B
QC Batch#: 32778
Units: ug/L

Customer: Sage Environmental, Inc
Location: East Providence, RI
Project: S1781
Sample Description: MW-12

Matrix: Water
Percent Moisture: N/A
Sample Weight/Volume:
Dilution Factor: 1
Soil Extract Volume:
Lab Data File: M19658.D

CAS No.	Parameter	Result	DL
591-78-6	2-Hexanone	ND	10
98-82-8	Isopropylbenzene	ND	5.0
99-87-6	4-Isopropyltoluene	ND	5.0
1634-04-4	Methyl tert-butyl ether (MTBE)	ND	5.0
108-10-1	4-Methyl-2-pentanone (MIBK)	ND	10
75-09-2	Methylene chloride	ND	5.0
91-20-3	Naphthalene	ND	5.0
103-65-1	n-Propylbenzene	ND	5.0
100-42-5	Styrene	ND	5.0
96-18-4	1,2,3-Trichloropropane	ND	5.0
630-20-6	1,1,1,2-Tetrachloroethane	ND	5.0
79-34-5	1,1,2,2-Tetrachloroethane	ND	5.0
127-18-4	Tetrachloroethene (PCE)	ND	5.0
108-88-3	Toluene	ND	5.0
87-61-6	1,2,3-Trichlorobenzene	ND	5.0
120-82-1	1,2,4-Trichlorobenzene	ND	5.0
71-55-6	1,1,1-Trichloroethane	ND	5.0
79-00-5	1,1,2-Trichloroethane	ND	5.0
79-01-6	Trichloroethene (TCE)	ND	5.0
75-69-4	Trichlorofluoromethane	ND	5.0
95-63-6	1,2,4-Trimethylbenzene	ND	5.0
108-67-8	1,3,5-Trimethylbenzene	ND	5.0
75-01-4	Vinyl chloride	ND	2.0
95-47-6	o-Xylene	ND	5.0
	m,p-Xylenes	ND	5.0

Surrogate	Recovery	Limits
Bromofluorobenzene	91%	85%-108%
Dibromofluoromethane	105%	94%-111%
1,2-Dichloroethane-d4	100%	87%-116%
Toluene-d8	94%	90%-102%

VOLATILE ORGANIC ANALYSIS DATA SHEET

Laboratory: Premier Laboratory, LLC

PL Report No: E410186
PL Sample No: 11

Date Collected: 10/4/2004
Date Received: 10/5/2004
Date Extracted: By:
Date Analyzed: 10/06/04 By: GP
Method: 8260B
QC Batch#: 32778
Units: ug/L

Customer: Sage Environmental, Inc
Location: East Providence, RI
Project: S1781
Sample Description: MW-13

Matrix: Water
Percent Moisture: N/A
Sample Weight/Volume:
Dilution Factor: 1
Soil Extract Volume:
Lab Data File: M19659.D

CAS No.	Parameter	Result	DL
67-64-1	Acetone	ND	20
107-13-1	Acrylonitrile	ND	25
71-43-2	Benzene	ND	5.0
108-86-1	Bromobenzene	ND	5.0
74-97-5	Bromochloromethane	ND	5.0
75-27-4	Bromodichloromethane	ND	5.0
75-25-2	Bromoform	ND	5.0
74-83-9	Bromomethane	ND	5.0
78-93-3	2-Butanone (MEK)	ND	10
104-51-8	n-Butylbenzene	ND	5.0
135-98-8	sec-Butylbenzene	ND	5.0
98-06-6	tert-Butylbenzene	ND	5.0
75-15-0	Carbon disulfide	ND	5.0
56-23-5	Carbon tetrachloride	ND	5.0
108-90-7	Chlorobenzene	ND	5.0
75-00-3	Chloroethane	ND	5.0
67-66-3	Chloroform	ND	5.0
74-87-3	Chloromethane	ND	5.0
95-49-8	2-Chlorotoluene	ND	5.0
106-43-4	4-Chlorotoluene	ND	5.0
96-12-8	1,2-Dibromo-3-chloropropane (DBCP)	ND	0.50
124-48-1	Dibromochloromethane	ND	5.0
106-93-4	1,2-Dibromoethane (EDB)	ND	0.50
74-95-3	Dibromomethane	ND	5.0
95-50-1	1,2-Dichlorobenzene	ND	5.0
541-73-1	1,3-Dichlorobenzene	ND	5.0
106-46-7	1,4-Dichlorobenzene	ND	5.0
75-71-8	Dichlorodifluoromethane	ND	5.0
75-34-3	1,1-Dichloroethane	ND	5.0
107-06-2	1,2-Dichloroethane	ND	5.0
75-35-4	1,1-Dichloroethene	ND	5.0
156-59-2	cis-1,2-Dichloroethene	ND	5.0
156-60-5	trans-1,2-Dichloroethene	ND	5.0
78-87-5	1,2-Dichloropropane	ND	5.0
142-28-9	1,3-Dichloropropane	ND	5.0
590-20-7	2,2-Dichloropropane	ND	5.0
563-58-6	1,1-Dichloropropene	ND	5.0
10061-01-5	cis-1,3-Dichloropropene	ND	5.0
10061-02-6	trans-1,3-Dichloropropene	ND	5.0
100-41-4	Ethylbenzene	ND	5.0
87-68-3	Hexachlorobutadiene	ND	5.0

VOLATILE ORGANIC ANALYSIS DATA SHEET

Laboratory: Premier Laboratory, LLC

PL Report No: E410186
PL Sample No: 11 (continued)

Date Collected: 10/4/2004
Date Received: 10/5/2004
Date Extracted: By:
Date Analyzed: 10/06/04 By: GP
Method: 8260B
QC Batch#: 32778
Units: ug/L

Customer: Sage Environmental, Inc
Location: East Providence, RI
Project: S1781
Sample Description: MW-13

Matrix: Water
Percent Moisture: N/A
Sample Weight/Volume:
Dilution Factor: 1
Soil Extract Volume:
Lab Data File: M19659.D

CAS No.	Parameter	Result	DL
591-78-6	2-Hexanone	ND	10
98-82-8	Isopropylbenzene	ND	5.0
99-87-6	4-Isopropyltoluene	ND	5.0
1634-04-4	Methyl tert-butyl ether (MTBE)	ND	5.0
108-10-1	4-Methyl-2-pentanone (MIBK)	ND	10
75-09-2	Methylene chloride	ND	5.0
91-20-3	Naphthalene	ND	5.0
103-65-1	n-Propylbenzene	ND	5.0
100-42-5	Styrene	ND	5.0
96-18-4	1,2,3-Trichloropropane	ND	5.0
630-20-6	1,1,1,2-Tetrachloroethane	ND	5.0
79-34-5	1,1,2,2-Tetrachloroethane	ND	5.0
127-18-4	Tetrachloroethene (PCE)	ND	5.0
108-88-3	Toluene	ND	5.0
87-61-6	1,2,3-Trichlorobenzene	ND	5.0
120-82-1	1,2,4-Trichlorobenzene	ND	5.0
71-55-6	1,1,1-Trichloroethane	ND	5.0
79-00-5	1,1,2-Trichloroethane	ND	5.0
79-01-6	Trichloroethene (TCE)	ND	5.0
75-69-4	Trichlorofluoromethane	ND	5.0
95-63-6	1,2,4-Trimethylbenzene	ND	5.0
108-67-8	1,3,5-Trimethylbenzene	ND	5.0
75-01-4	Vinyl chloride	ND	2.0
95-47-6	o-Xylene	ND	5.0
	m,p-Xylenes	ND	5.0

Surrogate	Recovery	Limits
Bromofluorobenzene	92%	85%-108%
Dibromofluoromethane	107%	94%-111%
1,2-Dichloroethane-d4	101%	87%-116%
Toluene-d8	93%	90%-102%

VOLATILE ORGANIC ANALYSIS DATA SHEET

Laboratory: Premier Laboratory, LLC

PL Report No: E410186
PL Sample No: 12

Date Collected: 10/4/2004
Date Received: 10/5/2004
Date Extracted: By:
Date Analyzed: 10/07/04 By: MM
Method: 8260B
QC Batch#: 32794
Units: ug/L

Customer: Sage Environmental, Inc
Location: East Providence, RI
Project: S1781
Sample Description: MW-14

Matrix: Water
Percent Moisture: N/A
Sample Weight/Volume:
Dilution Factor: 20
Soil Extract Volume:
Lab Data File: J20769.D

CAS No.	Parameter	Result	DL
67-64-1	Acetone	ND	400
107-13-1	Acrylonitrile	ND	500
71-43-2	Benzene	ND	100
108-86-1	Bromobenzene	ND	100
74-97-5	Bromochloromethane	ND	100
75-27-4	Bromodichloromethane	ND	100
75-25-2	Bromoform	ND	100
74-83-9	Bromomethane	ND	100
78-93-3	2-Butanone (MEK)	ND	200
104-51-8	n-Butylbenzene	ND	100
135-98-8	sec-Butylbenzene	ND	100
98-06-6	tert-Butylbenzene	ND	100
75-15-0	Carbon disulfide	ND	100
56-23-5	Carbon tetrachloride	ND	100
108-90-7	Chlorobenzene	ND	100
75-00-3	Chloroethane	ND	100
67-66-3	Chloroform	ND	100
74-87-3	Chloromethane	ND	100
95-49-8	2-Chlorotoluene	ND	100
106-43-4	4-Chlorotoluene	ND	100
96-12-8	1,2-Dibromo-3-chloropropane (DBCP)	ND	10
124-48-1	Dibromochloromethane	ND	100
106-93-4	1,2-Dibromoethane (EDB)	ND	10
74-95-3	Dibromomethane	ND	100
95-50-1	1,2-Dichlorobenzene	ND	100
541-73-1	1,3-Dichlorobenzene	ND	100
106-46-7	1,4-Dichlorobenzene	ND	100
75-71-8	Dichlorodifluoromethane	ND	100
75-34-3	1,1-Dichloroethane	ND	100
107-06-2	1,2-Dichloroethane	ND	100
75-35-4	1,1-Dichloroethene	ND	100
156-59-2	cis-1,2-Dichloroethene	ND	100
156-60-5	trans-1,2-Dichloroethene	ND	100
78-87-5	1,2-Dichloropropane	ND	100
142-28-9	1,3-Dichloropropane	ND	100
590-20-7	2,2-Dichloropropane	ND	100
563-58-6	1,1-Dichloropropene	ND	100
10061-01-5	cis-1,3-Dichloropropene	ND	100
10061-02-6	trans-1,3-Dichloropropene	ND	100
100-41-4	Ethylbenzene	ND	100
87-68-3	Hexachlorobutadiene	ND	100

VOLATILE ORGANIC ANALYSIS DATA SHEET

Laboratory: Premier Laboratory, LLC

PL Report No: E410186
PL Sample No: 12 (continued)

Date Collected: 10/4/2004
Date Received: 10/5/2004
Date Extracted: By:
Date Analyzed: 10/07/04 By: MM
Method: 8260B
QC Batch#: 32794
Units: ug/L

Customer: Sage Environmental, Inc
Location: East Providence, RI
Project: S1781
Sample Description: MW-14

Matrix: Water
Percent Moisture: N/A
Sample Weight/Volume:
Dilution Factor: 20
Soil Extract Volume:
Lab Data File: J20769.D

CAS No.	Parameter	Result	DL
591-78-6	2-Hexanone	ND	200
98-82-8	Isopropylbenzene	ND	100
99-87-6	4-Isopropyltoluene	ND	100
1634-04-4	Methyl tert-butyl ether (MTBE)	ND	100
108-10-1	4-Methyl-2-pentanone (MIBK)	ND	200
75-09-2	Methylene chloride	2800	100
91-20-3	Naphthalene	ND	100
103-65-1	n-Propylbenzene	ND	100
100-42-5	Styrene	ND	100
96-18-4	1,2,3-Trichloropropane	ND	100
630-20-6	1,1,1,2-Tetrachloroethane	ND	100
79-34-5	1,1,2,2-Tetrachloroethane	ND	100
127-18-4	Tetrachloroethene (PCE)	ND	100
108-88-3	Toluene	ND	100
87-61-6	1,2,3-Trichlorobenzene	ND	100
120-82-1	1,2,4-Trichlorobenzene	ND	100
71-55-6	1,1,1-Trichloroethane	ND	100
79-00-5	1,1,2-Trichloroethane	ND	100
79-01-6	Trichloroethene (TCE)	ND	100
75-69-4	Trichlorofluoromethane	ND	100
95-63-6	1,2,4-Trimethylbenzene	ND	100
108-67-8	1,3,5-Trimethylbenzene	ND	100
75-01-4	Vinyl chloride	ND	40
95-47-6	o-Xylene	ND	100
	m,p-Xylenes	ND	100

Surrogate	Recovery	Limits
Bromofluorobenzene	100%	85%-108%
Dibromofluoromethane	99%	94%-111%
1,2-Dichloroethane-d4	98%	87%-116%
Toluene-d8	99%	90%-102%

DEWATERING AND TREATMENT SYSTEM DESIGN

68 Mill Street, Johnston, RI 02919
Tel: 401-946-7838
Tim@carbonfiltrationsystems.com
www.carbonfiltrationsystems.com

May 16, 2019

Mr. Rick Sullivan
GRA Eng
Ph 401-726-4084
Email: RSullivan@graengs.com

RE: GAC Usage

Dear Mr. Sullivan:

Per our recent correspondences, the following carbon usage calculations are based upon the analyses provided. The general usage calculation for each compound is generated per the calculation below. The attached spreadsheet performed the calculations for the entire list of compounds. As discussed, this is only a rough estimate. Actual water quality will greatly affect the results observed.

GAC Usage(lbs./day) = Flow(GPD)*Concentration(PPB)^(1-1/n)*(0.0083/K)

- Flow is in total gallons per day
- Concentrations for individual compounds is in PPB
- 1/n and K are values given per compound

Constants for compounds in question are as follows:

	K	**1/n**
Naphthalene	7250	0.42
Ethylbenzene	225	0.79
Toluene	1250	0.44
Xylenes	22000	0.19
1,2 Dichloroethylene	90	0.51
Trichloroethylene	385	0.62

In total, it is estimated that 1.15 pounds of activated carbon will be used for every 1000 gallons of water treated.

If you require additional information, please contact the undersigned at your earliest convenience.

Sincerely,
Carbon Filtration Systems, Inc.

TR

Tim Rutherford
Project Manager

LIQUID PHASE CARBON CONSUMPTION CALCULATION

Flow in gal/day: 1000

#'s Carbon/day: 1.152987

Compound	Formula	mol.wt.	Conc or ppb	Conc ppm	Carbon #/day
Acenaphthene	C12H10	154.21			0
Acetophenone	C8H8O	120.14			0
Acrolein	C3H4O	56.06			0
Acrylonitrile	C3H3N	53.06			0
Aldrin	C12H8Cl6	365			0
Anthracene	C14H10	178.24			0
Benzene	C6H6	78.12			0
Benzoic Acid	C7H6O2	122.12			0
Bromoform	CHBr3	252.75			0
Butylamine	C4H11N	73.14			n/a
Butylbenzyl phthalate	C19H20O4	312.36			0
Carbon tetrachloride	CCl4	153.82			0
Chlorobenzene	C6H5Cl	112.56			0
Chlordane	C10H6Cl8	409.8			0
Chloroethane	C2H5Cl	64.52			n/a
Chloroform	CHCl3	119.38			0
Chloronaphthalene	C10H7Cl	162.62			0
Chlorophenol	C6H5OCl	125.56			0
Cyclohexanone	C6H10O	98.14			0
DDT	C14H9Cl5	354.5			0
Dichlorobenzene	C6H4Cl2	147			0
1,1-Dichloroethane	C2H4Cl2	98.96			0
1,2-Dichloroethane	C2H4Cl2	98.96			0
1,2-t-Dichloroethene	C2H2Cl2	96.94	91		0.843981
1,1-Dichloroethene	C2H2Cl2	96.94			0
Dichlorophenol	C6H4OCL2	163			0
1,2-Dicloropropane	C3H6Cl2	112.99			0
1,2-Dicloropropene	C3H4Cl2	110.98			0
Dieldrin	C12H8OCl6	380.91			0
Dibutyl phthalate	C16H22O4	278.35			0
Diethyl phthalate	C12H14O4	222.24			0
Dimethylphenol	C8H10O	122.17			0
Dimethyl phthalate	C10H10O4	194.18			0
Dinitrophenol	C6H4N2O5	184.11			0
Dinitrotoluene	C7H6N2O4	182.14			0
Diphenylamine	C12H11N	169.24			0
Endosulfan	C9H6Cl6SO3	406.93			0
Endrin	C12H8Cl6O	381			0
Ethylbenzene	C8H10	106.16	61		0.087777
Heptachlor	C10H5Cl7	373.5			0
Hexachlorobenzene	C6Cl6	284.78			0
Hexachlorobutadiene	C4Cl6	260.76			0
Hexachloroethane	C2Cl6	236.74			0
Hydroquinone	C6H6O2	110.12			0
Isophorone	C9H14O	138.21			0
Lindane	C6H6Cl6	290.83			0
Methylene Chloride	CH2Cl2	84.94			0
Naphthalene	C10H8	128.18	250		0.028256
Nitrobenzene	C6H5NO2	123.11			0
Nitrophenol	C6H5NO3	139.11			0
Nonylphenol	C15H24O	220.34			0
PCB 1221	C12H9CL	200.7			0
PCB 1232	C12H7Cl3	232.2			0
Pentachlorophenol	C6HOCl5	266.4			0
Phenol	C6H6O	94.11			0
Styrene	C8H8	104.14			0
Tetrachloroethane	C2H2Cl4	167.85			0
PERC	C2Cl4	165.83			0
Toluene	C7H8	92.14	9		0.022809

Trichlorobenzene	C6H3Cl3	181.45		0
Trichloroethane	C2H3Cl3	133.41		0
Trichloroethene	C2HCl3	131.39	140	0.141486
Trichlorophenol	C6H9OCl3	197.45		0
Xylene	C8H10	106.2	209	0.028677
MTBE				0

ISOCALC1.WK1 PGM

Isotherm parameters

K (microgm/gm)	1/n
15800	0.36
3540	0.44
13.5	0.65
41.3	0.51
1131	0.92
2990	0.7
1200	0.4
2800	0.42
540	0.52
not absorbed	
12000	0.45
36	0.83
98	0.99
17500	0.38
not adsorbed	
17	0.73
11500	0.46
3000	0.41
35	0.75
10000	0.5
5360	0.45
46	0.53
11.5	0.83
90	0.51
115	0.54
20000	0.3
90	0.6
340	0.46
17500	0.51
10000	0.45
17000	0.27
3350	0.44
5700	0.41
500	0.61
17000	0.31
14000	0.31
2000	0.83
2650	0.8
225	0.79
1700	0.95
7000	0.6
11500	0.45
7000	0.38
16000	0.25
2100	0.39
8650	0.49
16.3	0.504
7250	0.42
3500	0.43
9500	0.34
19000	0.37
1900	0.7
4000	0.73
8250	0.42
500	0.54
2500	0.56
820	0.37
1050	0.56
1250	0.44

18000	0.31
235	0.34
385	0.62
10000	0.4
22000	0.19
800	0.3

(microgm/gm)

Dewatering for long narrow trenches - Partial Penetration by a double row of wellpoints of an unconfined aquifer between two parallel and equidistant line sources

Dewatering for wide trench or narrow rectangular excavation

Case 5 *Partial penetration by a double row of wellpoints of an unconfined aquifer (gravity flow) midway between two parallel and equidistant line sources* (Figure 21).

$$Q = \left[\left(0.73 + 0.27\,\frac{(H - h_0)}{H}\right)\frac{kx}{R_0}\,(H^2 - h_0^2)\right]$$

$$h_D = h_0\left[\frac{C_1 C_2}{R_0}\,(H - h_0) + 1\right]$$

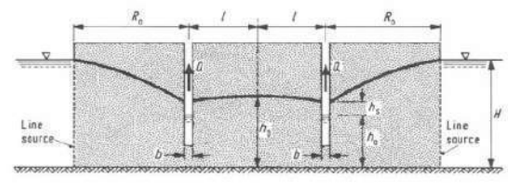

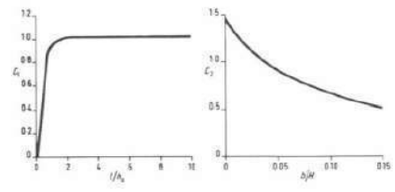

Figure 21

Note

a. Q is total combined flow from *both* slots and twice that for single line source (see Case 1).

b. For large rectangular or square excavations, wellpoints will be needed all around the perimeters. The pumping requirements can be estimated conservatively by calculating separately the drawdown/pumping relationship for each pair of opposite sides of the excavation.

The relationship between h_D and h_0 can be obtained from Figure 22.

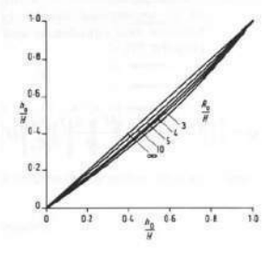

Figure 22

22 CIRIA Report 113

Citation: *Control of Groundwater by Temporary Works* , S. H. Somerville, CIRA 1986 reprinted 2005

10. Radius of influence

Drawdown of the water table at a point produces a cone of depression. (Figure 12)

The radius of influence (R_0) is a function of the drawdown (h) and the permeability (k).

$R_0 \simeq Ch\sqrt{k}$ (see Table 11) where R_0 and h are in metres k is in m/s

C is a factor equal to 3000 for radial flow to pumped wells and between 1500 and 2000 for line flow to trenches or to a line of wellpoints.

The percentage drawdown of the water table at any distance from the centre of the cone can be obtained from Figure 13.

Reference: *Control of Groundwater by Temporary Works* , S. H. Somerville, CIRA 1986 reprinted 2005

Dewatering for wide trench or narrow rectangular excavations
Partial Penetration by a double row of wellpoints of an unconfined aquifer between two parallel and equidistant line sources
Note: For large rectangular or square excavations well points will be needed all around the perimeter. The flow can be estimated conservatively by calculating separately the drawdown/pumping relationship for each pair of opposite sides of the excavation.

Project: RIDOT East Providence Salt Shed
Area: New Salt Shed

Reference: *Control of Groundwater by Temporary Works* , S. H. Somerville, CIRA 1986 reprinted 2005

Q = [(0.73+(0.27(H-ho)/H))*(kx/Ro)*(H^2-ho^2)]

Ro = C*h*(k^1/2) where C=3000 for radial pumped wells
where C = between 1500 and 2000 for line flow to trenches or a line of well points

Q = Total discharge from trench or line of well points (cfs)
H = Height of static water table (ft)
ho = Height of the water table in the trench or wells (ft)
k = Permeability (ft/s)
x = length of trench or line of well points (ft)
Ro = Distance to line source, taken as equal to the radius of influence (ft)

Input Values

H =	10	ft		assumed depth to bedrock is 18 ft
ho =	3	ft		assume 7 feet of drawdown in well
k =	200	gpd/ft^2		From Table 3.5
k =	3.09E-04	ft/s	***automatically calculated	Conversion to ft/s
x =	140	ft		145 ft is the length of the building
C =	3000			Assume a series of dewatering sumps
b =	0.5	ft		Pumping well radius is 6-inches

Calculate Ro

h =	7	ft	Drawdown in pumping well
Ro =	3.69E+02	ft	Caculated radius of influence

Calculate Q in cfs

Q= 9.81E-03 cfs

Calculate Q in gpm

Q = 4 gpm

Calculate hd

hd = ho*[((C1*C2/Ro)*(H-ho))+1]

Distance between well point lines/trenches =	120	ft
l =	60	
l/ho =	20	
C1 =	1	From nomograph
b/H =	0.05	
C2 =	0.8	From nomograph
hd =	3.05	ft
drawdown=	6.95	ft

Soil type and depth to bedrock taken from Geotechnical Engineering Data Report for the Proposed RIDOT Salt Shed Warren Avenue, East Providence, Rhode Island, prepared by Allstate Drilling Company April 22, 2019

1. Soil Classification boring B-2
2. Assume that the foundation excavation long sides (145 ft) will be dewatered by four dewatering wells located 120 feet apart. Other options may be chosen by contractor.
3. Hydraulic Conductivity estimated using soil classification and Table 3.5
4. The depth to groundwater was provided in the Allstate Drilling Geotechnical report and was from April 10, 2019.
5. Dewatering is required to maintain a dewatered groundwater elevation two feet below the bottom of excavation.
6. Greatest depth to bedorck being encountered was boring B-2 from the Allstate report and was 18 feet below grade

Table 3.5 Range of Hydraulic Conductivity of Natural Soils

Soil type	Hydraulic conductivity range gpd/ft² (m/sec)	Permeability description
Openwork gravel (GP)	20,000 (1×10^{-2}) or higher	Very high
Uniform gravel (GP)	4000 to 20,000 (2×10^{-3} to 1×10^{-2})	High
Well-graded gravel (GW)	1000 to 6000 (5×10^{-4} to 3×10^{-3})	Moderate to high
Uniform sand (SP)	100 to 4000 (5×10^{-5} to 2×10^{-3})	Moderate to high
Well-graded sand (SW)	20 to 2000 (1×10^{-5} to 1×10^{-3})	Low to moderate
Silty sand (SM)	20 to 100 (1×10^{-5} to 5×10^{-5})	Low
Clayey sand (SC)	2 to 20 (1×10^{-6} to 1×10^{-5})	Low to very low
Silt (ML)	1 to 2 (5×10^{-7} to 1×10^{-6})	Very low
Clay (CL)	2×10^{-4} to 0.2 (1×10^{-10} to 1×10^{-7})	Very low to practically impermeable

Table 3.5 Range of Hydraulic Conductivity of Natural Soils found in Construction Dewatering and Groundwater Control, New Methods and Applications authored by Powers, J.P., A. B. Corwin, P.C.Schmall, and W.E. Kaeck.

Design Dewatering System Flows

	Design Flow	Drawdown
Maximum depth to bedrock (18 ft) and Minimum K (well graded sand 200 gpd/sf)	16 gpm	6.95 ft
Maximum depth to bedrock (18 ft) and Average K ((well graded sand 1000 gpd/sf)	40 gpm	6.98 ft
Maximum depth to bedrock (18 ft) and Maximum K (well graded sand 2,000 gpd/sf)	56 gpm	6.99 ft
	Required	7 ft

StreamStats Report

Region ID: MA
Workspace ID: MA20190503194236038000
Clicked Point (Latitude, Longitude): 41.81022, -71.33955
Time: 2019-05-03 15:42:17 -0400

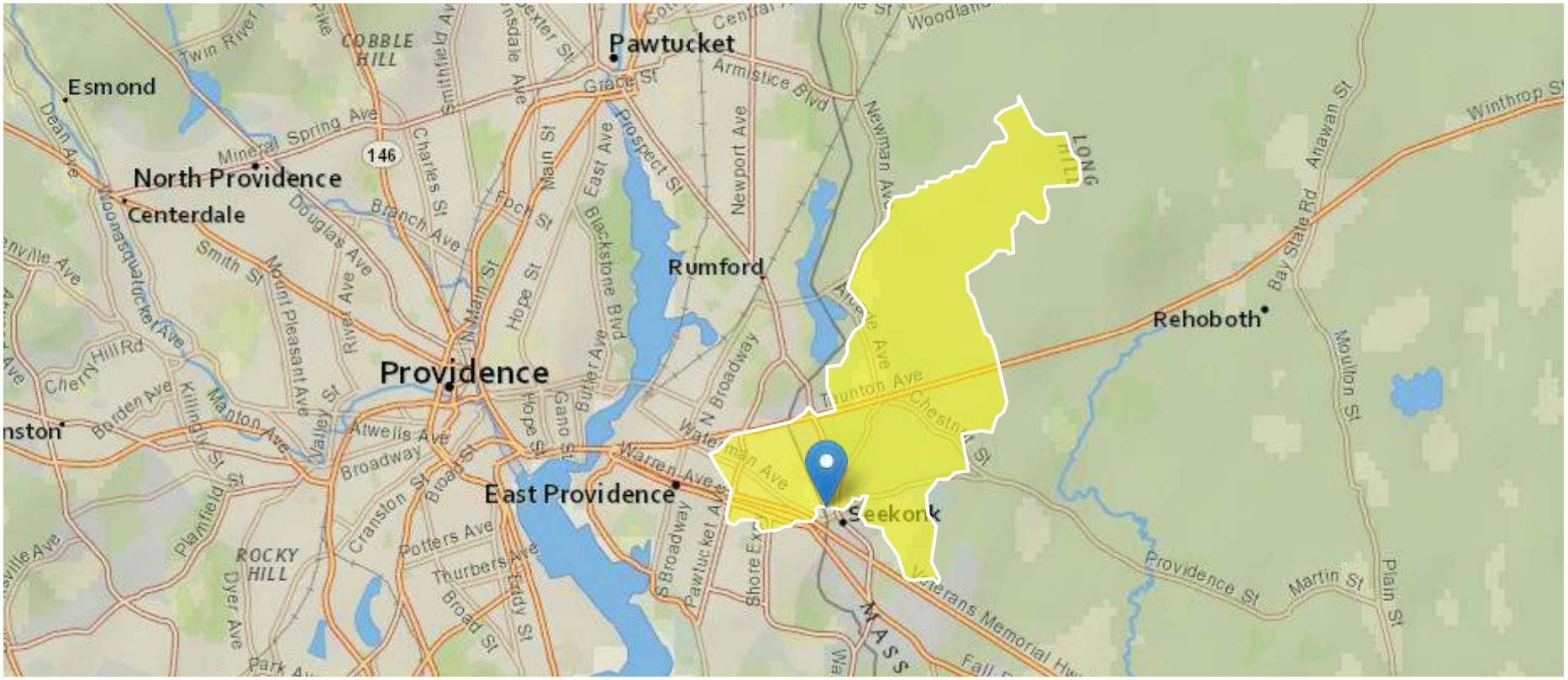

Basin Characteristics

Parameter Code	Parameter Description	Value	Unit

Parameter Code	Parameter Description	Value	Unit
DRNAREA	Area that drains to a point on a stream	7.14	square miles
BSLDEM250	Mean basin slope computed from 1:250K DEM	1.052	percent
DRFTPERSTR	Area of stratified drift per unit of stream length	0.19	square mile per mile
MAREGION	Region of Massachusetts 0 for Eastern 1 for Western	0	dimensionless

Low-Flow Statistics Parameters [100 Percent (7.13 square miles) Statewide Low Flow WRIR00 4135]

Parameter Code	Parameter Name	Value	Units	Min Limit	Max Limit
DRNAREA	Drainage Area	7.14	square miles	1.61	149
BSLDEM250	Mean Basin Slope from 250K DEM	1.052	percent	0.32	24.6
DRFTPERSTR	Stratified Drift per Stream Length	0.19	square mile per mile	0	1.29
MAREGION	Massachusetts Region	0	dimensionless	0	1

Low-Flow Statistics Flow Report [100 Percent (7.13 square miles) Statewide Low Flow WRIR00 4135]

PII: Prediction Interval-Lower, PIu: Prediction Interval-Upper, SEp: Standard Error of Prediction, SE: Standard Error (other -- see report)

Statistic	Value	Unit	PII	PIu	SE	SEp
7 Day 2 Year Low Flow	0.559	ft^3/s	0.182	1.66	49.5	49.5
7 Day 10 Year Low Flow	0.19	ft^3/s	0.048	0.701	70.8	70.8

Low-Flow Statistics Citations

Ries, K.G., III,2000, Methods for estimating low-flow statistics for Massachusetts streams: U.S. Geological Survey Water Resources Investigations Report 00-4135, 81 p. (http://pubs.usgs.gov/wri/wri004135/)

USGS Data Disclaimer: Unless otherwise stated, all data, metadata and related materials are considered to satisfy the quality standards relative to the purpose for which the data were collected. Although these data and associated metadata have been reviewed for accuracy and completeness and approved for release by the U.S. Geological Survey (USGS), no warranty expressed or implied is made regarding the display or utility of the data for other purposes, nor on all computer systems, nor shall the act of distribution constitute any such warranty.

USGS Software Disclaimer: This software has been approved for release by the U.S. Geological Survey (USGS). Although the software has been subjected to rigorous review, the USGS reserves the right to update the software as needed pursuant to further analysis and review. No warranty, expressed or implied, is made by the USGS or the U.S. Government as to the functionality of the software and related material nor shall the fact of release constitute any such warranty. Furthermore, the software is released on condition that neither the USGS nor the U.S. Government shall be held liable for any damages resulting from its authorized or unauthorized use.

USGS Product Names Disclaimer: Any use of trade, firm, or product names is for descriptive purposes only and does not imply endorsement by the U.S. Government.

Application Version: 4.3.0

Dilution Factor (DF) Calculation

StreamStats

StreamStats was used to calculate the 7 day 10 year Low Flow Rate (7Q10) flow rate for the Runnins River. The StreamStats report has been included.

7Q10 – 0.19 ft^3/s

Treatment System Design Flow Rate – 0.167 ft^3/s

DF= ({7Q10 Flow}+{Treatment System Design Flow Rate})/{ Treatment System Design Flow Rate}

DF=(0.19 ft^3/s + 0.167 ft^3/s)/(0.167 ft^3/s)

DF=2.14

TREATMENT SYSTEM COMPONENTS

FL Series Filter Housings
ASME CODE HOUSINGS

LITHSFL1.0297
replaces
LITHSFL1.1092

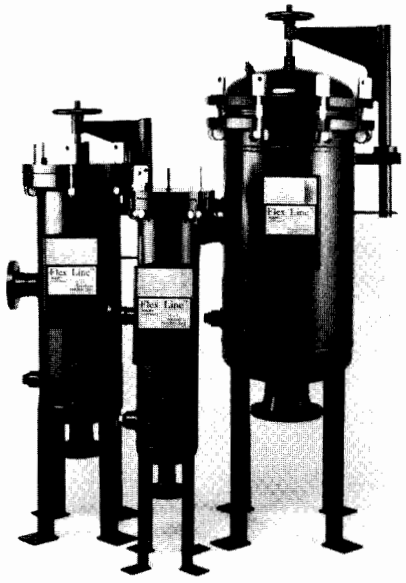

The CUNO Flex Line™ (FL) filter housings are the highest quality ASME Code vessels available. FL housings are available in outside diameters equal to 8, 12, 14, 16, 20, 24, and 30 inch pipe and can be configured for specific system pressures ranging from 150 to 300 psi. A housing can be constructed to the exact requirements of your specific system by using other selections, including inlet/outlet location, connection size and type, housing internals for various cartridge styles, corrosion allowance, vent size and type, and connection height. For more information about FL Series housing selection, see table 5.

APPLICABLE FILTER CARTRIDGE
The FL Series of filter housings can be configured for various cartridge styles of CUNO or competitive cartridges: Applicable CUNO cartridges include:

BETAPURE®	MICRO-KLEAN® III
MICRO-WYND® II	MPF® II
BETAFINE®	ZETAPOR® Style
ZETA PLUS®	ACTIVATED CARBON®
PORO-KLEAN®	MICRO-SCREEN®

DESIGN FEATURES
Designed to ASME With Stamp

150 to 300 psi Housings Standard

Machined O-Ring Groove

Heavy Duty Cover Lifting Device

Fast-Hex™ Cover Fasteners to Facilitate Cover Removal

5 Diaphragms for Cartridge Flexibility

APPLICATIONS
Industrial - Petro-chemical, Chemical, Coatings, Inks, Process Water, Air, Gas, Coolants

Cosmetics - Process Water, Lotions, Soaps,Shampoo, and Perfumes

Pharmaceutical - Process Water, Chemicals, Solvents, Steam, and Topicals

Food & Beverage - Process Water, Beverages, Spirits, Syrups, Juices, Vinegar, and Edible Oils

HOUSING SPECIFICATIONS
Table 1 lists the general specifications for all FL housings. The maximum operating pressure and temperature is for the housing only (determined by ASME Code, Section VIII, Div. I); filter cartridge capability will dictate process limits.

MODEL	PRESSURE ORDER CODE	MATERIAL	ANSI B16.5 FLANGE RATING	ASME CODE SECTION VIII DIV. I PRESSURE/ TEMPERATURE psi @ °F
FL08 FL12 FL14 FL16 FL20 FL24 FL30	1	CARBON STEEL	150	150 @ 450
FL08 FL12 FL14 FL16 FL20 FL24	2	CARBON STEEL	150	245 @ 250
FL30	2	CARBON STEEL	150	240@ 250
FL08 FL12 FL14 FL16 FL20 FL24	3	CARBON STEEL	300	300@ 450
FL30	3	CARBON STEEL	300	260 @ 450
FL08, FL12, FL14, FL16, FL20, FL24, FL30	1	316L STAINLESS STEEL	150	150 @ 250
FL08, FL12, FL14, FL16, FL20, FL24, FL30	2	316L STAINLESS STEEL	150	195 @ 200
FL08, FL12, FL14, FL16, FL20, FL24,	3	316L STAINLESS STEEL	300	300 @ 250
FL30	3	316L STAINLESS STEEL	300	260 @ 250

TABLE 1. - FL HOUSING GENERAL SPECIFICATIONS

CONSTRUCTION
The FL Series filter housing is constructed from carbon steel or stainless steel components. The stainless steel models are manufactured from 316L S.S. (wetted com-

BENEFITS

- Safety Ensured By ASME Code Housing
- Housing Constructed to Fit System Requirements
- Minimal Hold-Up Volume
- Rugged Design Provides Long Service Life
- Reduced Down Time for Cleaning and Cartridge Change-out
- Cover Lifting Device and Unique Fast-Hex™ Cover Fasteners Make Cartridge Removal Easy

CUNO
Fluid Purification

ponents) and 304 S.S. (non-wetted components). The cover closure hardware is zinc plated steel. All FL housings are ASME Code design with stamp.

MAXIMUM RECOMMENDED FLOW RATES

The maximum flow rates for the FL Housings should not exceed 10 ft. per second velocity. The actual process flow rate will be dictated by the filter media and cartridge style used.

FILTER CARTRIDGE CAPACITY

Table 2 lists the maximum number of filter cartridges for each diameter housing with a specific diaphragm installed. Please note that the number of cartridges are listed in both the number of cartridge elements and the number of equivalent lengths required.

HOUSING HEIGHT	NUMBER OF CARTRIDGES ELEMENTS/EQL'S						
	FL08	FL12	FL14	FL16	FL20	FL24	FL30
D1 - Pedestal Type with Max. Diameter 2.625 Inches							
One High	6/6	12/12	18/18	24/24	36/36	52/52	85/85
Two High	6/12	12/24	18/36	24/48	36/72	52/104	85/170
Three High	6/18	12/36	18/54	24/72	36/108	52/156	85/255
Four High	6/24	12/48	18/72	24/96	36/144	52/208	85/340
D2 - 222 Double O-ring Style with Max. Diameter 2.813 Inches							
One High	4/4	12/12	14/14	19/19	28/28	44/44	71/71
Two High	4/8	12/24	14/28	19/38	28/56	44/88	71/142
Three High	4/12	12/36	14/42	19/57	28/84	44/132	71/213
Four High	4/16	12/48	14/56	19/76	28/112	44/176	71/284
D3 - 226 Bayonet Locking with Max. Diameter 2.813 Inches							
One High	4/4	8/8	12/12	17/17	25/25	38/38	67/67
Two High	4/8	8/16	12/24	17/34	25/50	38/76	67/134
Three High	4/12	8/24	12/36	17/51	25/75	38/114	67/201
Four High	4/16	8/32	12/48	17/68	25/100	38/152	67/268
D4 - Pedestal PX 336 Max. Diameter 2.813 Inches/Length 35 Inches (Available with H3 Only)							
Three High	4	11	14	20	30	45	73
D5 - Zeta Plus 12 Inch Cartridge							
Three High	NA	NA	NA	1/3	NA	NA	4/12

NA = Not Available Shaded Cell = These sizes are generally not an economical choice, but are available on request.

TABLE 2.- FILTER CARTRIDGE CAPACITY BY DIAPHRAGM TYPE.

Diaphragms for Poro-Klean, Micro-Screen, and other style cartridges are available. Consult your local CUNO distributor for further information.

HOUSING SELECTION

The FL filter housing offers the widest choice of standard ASME Code housings in the industry. To design a housing, determine the system requirements and refer to table 4. Choose the diameter housing required (determined by the number of filter cartridges required to achieve the desired system flow rate/pressure drop) and the features required to fit your system.

Special Notes About Selections

Please note that the default configuration for each selection is identified by a "D" in column 2 of table 4.

Cover Lifting Device (Davit) Location (Selection Code A) - The larger FL housings require a cover lifting device. The position of this device can be 90°, 180°, or 270° from the inlet connection (Clockwise Top View).

Corrosion Allowance (Selection Code C) - In some applications, the fluid being filtered naturally causes, over time, a specific amount of corrosion of the wetted suface. This corrosion amount can be determined and, when selecting a housing, can be accounted for and anticipated.

Outlet Location (Selection Code E) - All FL housings are available with the outlet in one of five locations - bottom or duplex, and side at 90°, 180°, or 270° from the inlet (Clockwise Top View).

Gasket Material (Selection Code G) - The gasket material selected must be compatible with the material being filtered. For gasket compatibiltiy, contact your local CUNO distributor.

Outlet Height Adjustment (Selection Code L) - Note the outlet height dimension for the selected housing. Determine the outlet height adjustment required.

Inlet/Outlet Size (Selection Code N) - The use of raised face flanges is standard. Table 3 lists the standard size and alternatives. Other sizes and styles are available as special order.

FLANGE	CODE	FL08	FL12	FL14	FL16	FL20	FL24	FL30
		FLANGE SIZE (INCHES)						
Standard	N1	2	3	4	4	6	6	8
Next Smaller*	N2	NA	2	3	3	4	4	6
Next Larger*	N3	NA	4	6	6	8	8	10

NA = Not Available *May influence housing pressure drop.

TABLE 3. - AVAILABLE FLANGE SIZE

HOUSING DIMENSIONS

All dimensions in tables 5-7 and figures 1-3 are nominal for the most widely used configurations (all three high units with 150 psi flanges). Fully dimensioned drawings and CAD data bases in numerous formats are available on request, and certified drawings can be faxed within 24 hours. See your local Cuno distributor for more information.

DIMENSION	FL08 FILTER HOUSING		
(INCHES)	BOTTOM	DUPLEX	SIDE
A	55 1/2	61	61 1/8
B	25 15/16	6 3/4	20 13/16
C	9	21	21 5/8
D	8 1/4	8 1/4	8 1/4
E	7	7	7

TABLE 5. - FL08 DIMENSIONS

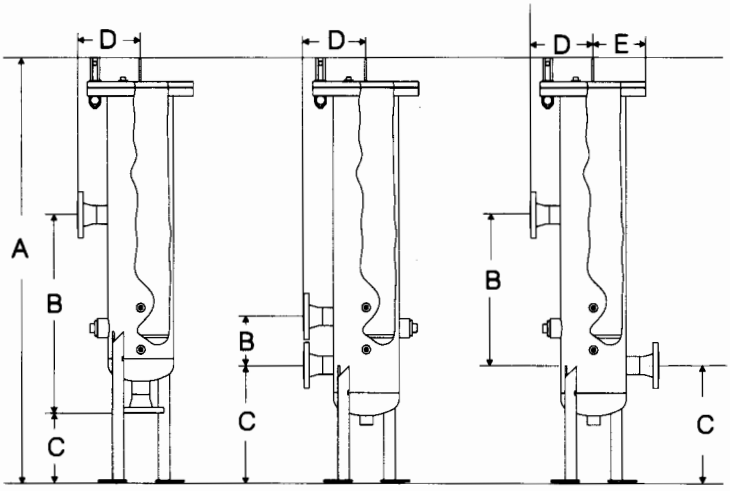

FIGURE 1. - FL08 HOUSING

DIMENSION	FL12 - Outlet Orientation			FL14 - Outlet Orientation			FL16 - Outlet Orientation		
(INCHES)	Bottom	Duplex	Side	Bottom	Duplex	Side	Bottom	Duplex	Side
A	66	65	67 3/4	68 1/2	74	76 7/8	69	74 1/2	77 3/8
B	27 1/8	7 3/4	22 1/8	27 5/8	10 1/4	23 3/16	28 3/8	10 1/4	23 1/4
C	11	24 1/4	24 3/4	13	25 1/2	26 1/8	13	26	26 5/8
D	10 1/2	10 1/2	10 1/2	11 1/4	11 1/4	11 1/4	12 7/16	12 7/16	12 7/16
E	13	13	13	13 1/2	13 1/2	13 1/2	14 1/2	14 1/2	14 1/2

TABLE 6. - FL12, FL14, AND FL16 DIMENSIONS

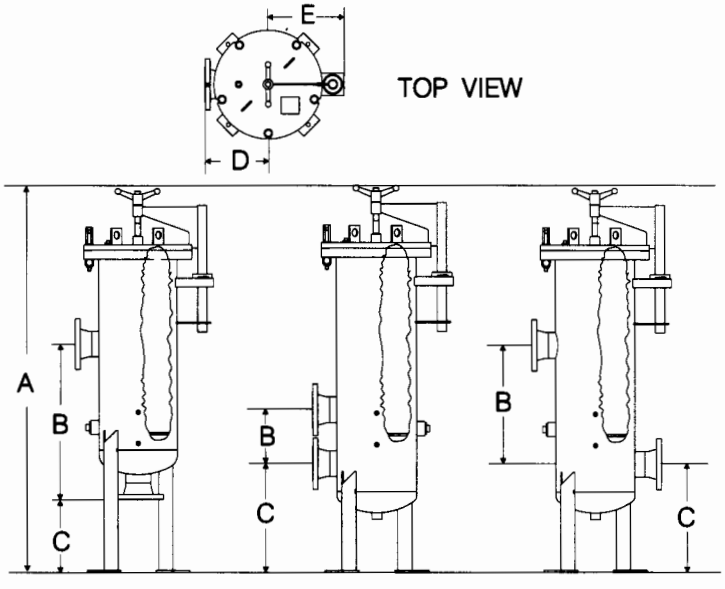

FIGURE 2. - FL12, FL14, AND FL16 HOUSINGS

DIMENSION (INCHES)	FL20 - Outlet Orientation			FL24 - Outlet Orientation			FL30 - Outlet Orientation		
	Bottom	Duplex	Side	Bottom	Duplex	Side	Bottom	Duplex	Side
A	82	85	87 5/8	85	87 1/2	90 3/8	92	90 1/2	93 1/2
B	31 1/2	13	24 1/2	32 15/16	13	24 1/2	35 1/8	15 1/2	23 5/8
C	17	29 1/2	30 1/8	17	30 1/2	31 1/8	16 3/8	31	34
D	15 1/8	15 1/8	15 1/8	17 1/4	17 1/4	17 1/4	20 13/16	20 13/16	20 13/16
E	12 3/4	12 3/4	12 3/4	14 3/4	14 3/4	14 3/4	17 3/4	17 3/4	17 3/4

TABLE 7. - FL20, FL24, AND FL30

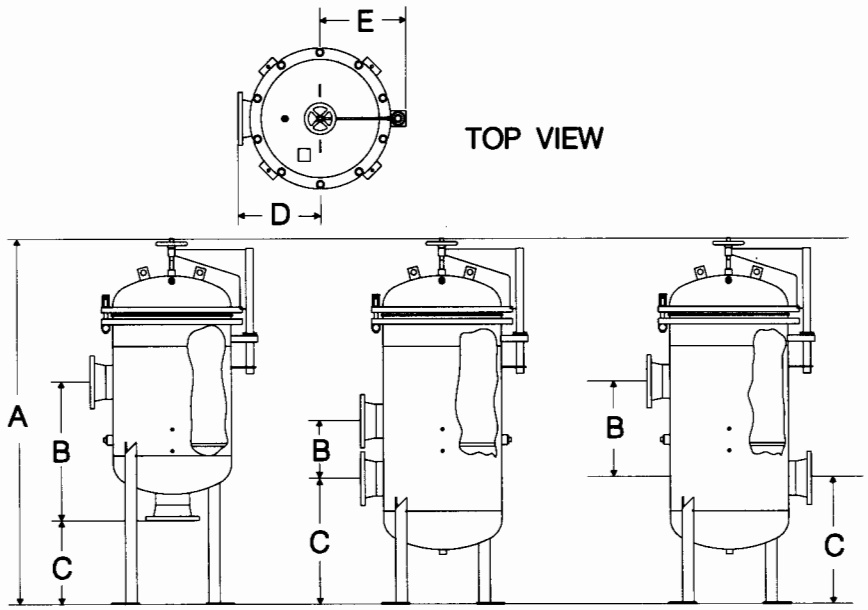

FIGURE 3. - FL20, FL24, AND FL30 HOUSINGS

Flex Line (FL) Series Ordering Guide
Basic Catalog Number

FL	XX	X	XX	X
FL Series Housing	Vessel Diameter	Construction Material	Housing Style	Pressure Rating*
	08 = 8"	1 = Carbon Steel	VE = Vertical	1
	12 = 12"	2 = 316L Stainless Steel		2
	14 = 14"			3
	16 = 16"			
	20 = 20"			
	24 = 24"			
	30 = 30"			

* See Table 1 for more information.

WARRANTY

Seller warrants its equipment against defects in workmanship and material for a period of 5 years from date of shipment from the factory under normal use and service and otherwise when such equipment is used in accordance with instructions furnished by Seller and for purposes disclosed in writing at the time of purchase, if any. Any unauthorized alteration or modification of the equipment by Buyer will void this warranty. Seller's liability under this warranty shall be limited to the replacement or repair, F.O.B. point of manufacture, of any defective equipment or part which, having been returned to the factory, transportation charges prepaid, has been inspected and determined by the Seller to be defective. THIS WARRANTY IS IN LIEU OF ANY OTHER WARRANTY, EITHER EXPRESSED OR IMPLIED, AS TO DESCRIPTION, QUALITY, MERCHANTABILITY, FITNESS FOR ANY PARTICULAR PURPOSE OR USE, OR ANY OTHER MATTER. Under no circumstances shall Seller be liable to Buyer or any third party for any loss of profits or other direct or indirect costs, expenses, losses or consequential damages arising out of or as a result of any defects in or failure of its products or any part or parts thereof or arising out of or as a result of parts or components incorporated in Seller's equipment but not supplied by the Seller.

YOUR LOCAL CUNO DISTRIBUTOR IS:

Service Worldwide

Fluid Purification

Cuno Incorporated
400 Research Parkway
Meriden, CT 06450, U.S.A.
Tele: (203) 237-5541
Fax: (203) 238-8977

CUNO Pacific Pty., Ltd.
140 Sunnyholt Road
Blacktown, N.S.W. 2148
Australia

CUNO Filtration Asia Pte. Ltd.
1 Tech Park Cresent
Singapore 638131

CUNO Europe S.A.
Chemin Du Contre Halage
62730 - Les Attaques
France

CUNO Srl
Via Tonale n°3
20037 Paderno Dugnano
Italy

CUNOGmbH
Wihl-Th-Römheld - Str. 32
55130 Mainz
Germany

CUNO K.K.
Hodogaya Station
Building 6F
1-7 Iwai-cho, Hodagaya-ku
Yokohama 240 Japan

CUNO Latina Ltda.
Rua Amf Do Brasil 251
18120 Mairinque-Sp
Brazil

© Copyright 1997, Cuno Incorporated - ALL RIGHTS RESERVED

REVISIONS				
ZONE	LTR	DESCRIPTION	DATE	APPROVED
	~	FIRST RELEASE ECN 6446 PAG	3-18-97	

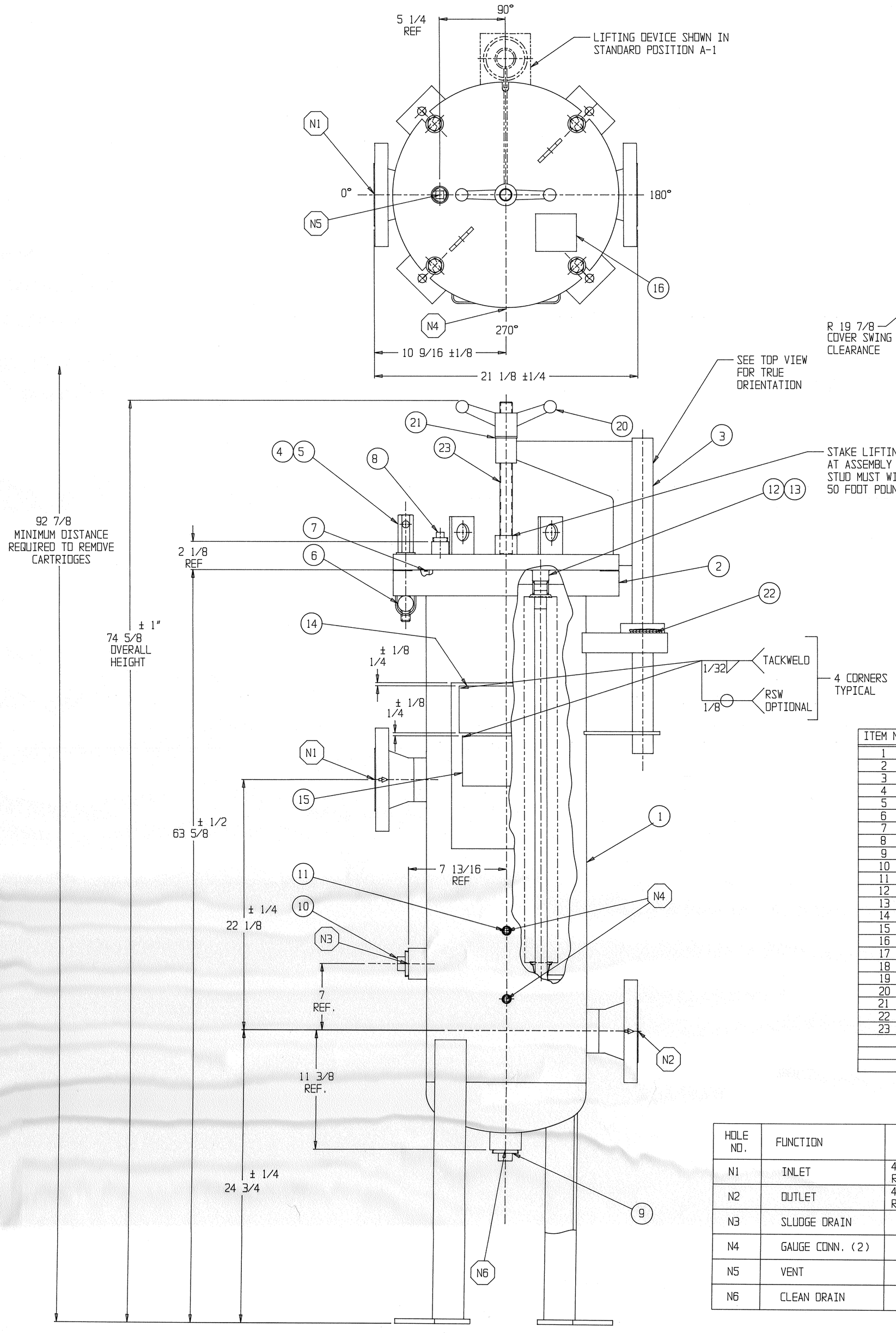

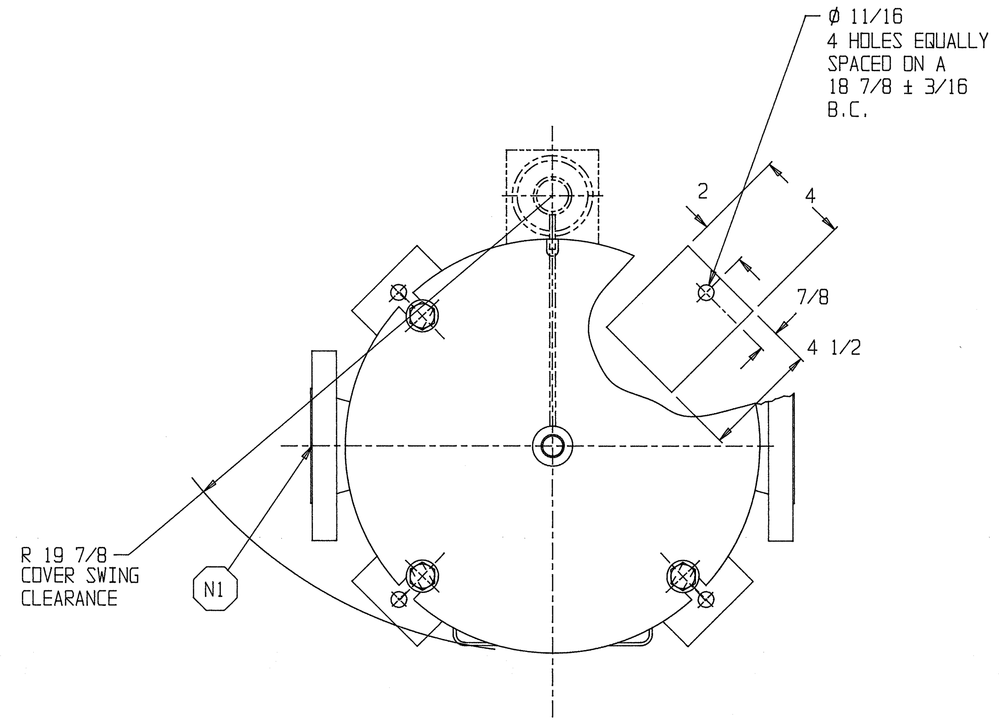

UNIT SIZE	: 12	
UNIT MATERIAL	: 316L STAINLESS STEEL	
UNIT PRESSURE	: 150 PSIG AT 250°F	
COVER L.D. LOCATION	: A1	90 deg. CW fron inlet
CORROSION ALLOWANCE	: C0	Not a std option w/previous choices
DIAPHRAGM TYPE	: D1	DDE pedestal, 2.625 max. dia.
OUTLET LOCATION	: E3	Side, 180 deg. CW fron inlet
GASKET MATERIAL	: G2	EPDM (EPR)
HOUSING CTG HEIGHT	: H3	Three-high
COVER L.D. TYPE	: J1	Handle
CLEAN DRAIN SIZE	: K1	1 in. NPTF female
OUTLET HEIGHT ADJ.	: LN1	Standard height
INLET/OUTLET CONN. SIZE	: N3	4"-150# ANS R.F. W.N. FLG
RADIOGRAPHY	: R1	None
SLUDGE DRAIN SIZE	: S1	1-1/2 in. NPTF female
GAUGE CONN. SIZE	: T1	1/4 in. NPTF female
CLEAN-OUT HAND HOLE	: U0	Not a std option w/previous choices
VENT CONN. SIZE	: V1	3/4 in. NPTF female
POST WELD HEAT TREAT	: W0	N/A with stainless steel
FINISH TREATMENT	: Y1	Gritblasted, unpainted
QTY OF CARTRIDGES	: 12 around	

ITEM NO.	QTY	PART NAME	DESCRIPTION	MATERIAL
1	1	SUMP WELDMENT		STAINLESS STEEL
2	1	COVER WELDMENT		STAINLESS STEEL
3	1	LIFTING DEVICE		STAINLESS STEEL
4	4	EYENUT ASSY	CUNO P/N 6684006	SA193B7 ZINC PLATED STL
5	4	WASHER 5/8	.688 ID X 1 3/4 OD X .134 THK	ZINC PLATED STEEL
6	4	SWING BOLT PIN NUT	CUNO P/N 6528644	ZINC PLATED STEEL
7	1	O'RING - HOUSING	CUNO P/N 8656637	EPDM (EPR)
8	1	VENT PLUG	3/4 NPT SQUARE HEAD SOLID	A182 F 316L SST
9	1	DRAIN PLUG	1" NPT SQUARE HEAD SOLID	A182 F 316L SST
10	1	DRAIN PLUG	1 1/2 NPT SQUARE HEAD SOLID	A182 F 316L SST
11	2	GAUGE PLUG	1/4 NPT SQUARE HEAD SOLID	A182 F 316L SST
12	12	CARTRIDGE POST	CUNO P/N 6681707	316L STAINLESS STEEL
13	12	SPRING AND PLATE ASSY	CUNO P/N 6343707	316 STAINLESS STEEL
14	1	CODE NAMEPLATE		SST
15	1	FL NAMEPLATE	CUNO P/N 6686331	SST
16	1	WARNING LABEL	CUNO P/N 6345431	
17				
18				
19				
20	1	HANDLE	CUNO P/N 6682331	ZINC PLATED STEEL
21	1	THRUST WASHER	CUNO P/N 3447934	OIL IMPREGNATED BRONZE
22	2	LIFTING DEVICE WASHER	CUNO P/N 6682631	NYLON
23	1	THREADED ROD 1"-5 ACME-2G	C1010-1020 STL	ZINC PLATED STEEL
	1	REPLACEMENT PARTS LIST		
	1	OPERATING INSTRUCTIONS		
	1	WARRANTY CARD		

1. DESIGN AND FABRICATION IN ACCORDANCE WITH ASME BOILER AND PRESSURE VESSEL CODE, SECTION VIII, DIV.1
2. APPROXIMATE SHIPPING WEIGHT: 403 LBS
3. DESIGN PRESSURE AND TEMPERATURE: 150 PSIG AT 250°F HYDRAULIC TEST PRESSURE: 230 PSIG AT 70°F HYDROSTATIC MINIMUM DESIGN METAL TEMPERATURE: -20°F AT 150 PSIG
4. APPLY TEFLON SEALANT TO ALL THREADED CONNECTIONS.
5. INLET AND OUTLET FLANGE BOLT HOLES STRADDLE NATURAL CENTERLINE.

HOLE NO.	FUNCTION	CONNECTION SIZE	CW ANG LOC FROM INLET
N1	INLET	4"-150# ANS R.F. W.N. FLG	0°
N2	OUTLET	4"-150# ANS R.F. W.N. FLG	180°
N3	SLUDGE DRAIN	1 1/2 NPT	0°
N4	GAUGE CONN. (2)	1/4 NPT	270°
N5	VENT	3/4 NPT	0°
N6	CLEAN DRAIN	1 NPT	~

THIS DOCUMENT CONTAINS PROPRIETARY, CONFIDENTIAL AND/OR PRIVILEGED INFORMATION WHICH IS THE PROPERTY OF 3M PURIFICATION INC. OR ITS DESIGNATED ENTITY AND IS SUBMITTED FOR USE ONLY IN CONNECTION WITH PROPOSED OR AUTHORIZED WORK. THE INFORMATION ON THIS DOCUMENT SHALL NOT BE USED, COPIED, DISCLOSED, DISSEMINATED OR DISTRIBUTED WITHOUT WRITTEN CONSENT AND THIS DOCUMENT AND ALL COPIES SHALL BE RETURNED UPON REQUEST. 2011, 3M COMPANY. ALL RIGHTS RESERVED.

ONLY SHEET NUMBER 1 IS AUTHORIZED BY CUNO, INC. FOR OUTSIDE DISTRIBUTION.

UNLESS OTHERWISE SPECIFIED:
BREAK EDGES - - - - - - - - - - ~
MACHINED SURFACES - - - - √

THIS DOCUMENT IS THE PROPERTY OF CUNO, INC. AND IS SUBMITTED FOR USE ONLY IN CONNECTION WITH WORK PROPOSED OR AUTHORIZED BY THIS COMPANY. IT SHOULD NOT BE USED OR DUPLICATED FOR ANY OTHER PURPOSE AND IS TO BE RETURNED TO CUNO, INC. WHEN NO LONGER REQUIRED FOR SUCH PURPOSE. COPYRIGHT, 19 97 , CUNO, INC.

	BY	DATE
DRAWN	PAG	3-18-97
CHECKED	PAG	3-18-97
APPROVED		3-19-97

DATE ISSUED

CUNO, Inc.
MERIDEN, CONNECTICUT 06450, U.S.A.

FILTER ASSY - MODEL FL122VE1 SIDE

SIZE	CODE IDENT. NO.	DRAWING NO.
F	15472	FL122VE1973045
SCALE ~		SHEET 1

Pinnacle ProGraphics Version 1.0.0.0

Sewage and Trash Pump DV80

Overview:

The 3” suction x 3” discharge self-priming centrifugal DV80 trash pump provides up to a maximum of 500 gallons per minute pumping and up to 138 feet of head. This pump is usually mounted on a trailer and features the standard PowerPrime Clean Prime Venturi priming system which allows it to run continuously, unattended and even run dry.

Features:

- Continuous self-priming
- Runs dry unattended
- 12 volt, eletric start with auto-start capable control panel
- Flex coupled to diesel engine
- 24-hour minimum capacity fuel tank
- Belt driven compressor fitted to operate the air-ejector priming system
- Cast iron wet end with open impellers
- Replaceable wear plates

Specs:

Maximum Flow	500 GPM
Maximum Head	138 feet
Pump Size	3” x 3”
Maximum Solids Handling	1.25 inches
Dry weight	1,300 lbs.
Footprint: Trailer mounted model	94.75” x 52.25”
Fuel tank	25 gallon
Fuel consumption	0.96 gph @ 2,800 RPM

Accessories:

- Spillguard
- Suction and Discharge Hoses
- Fuel Nurse Tank

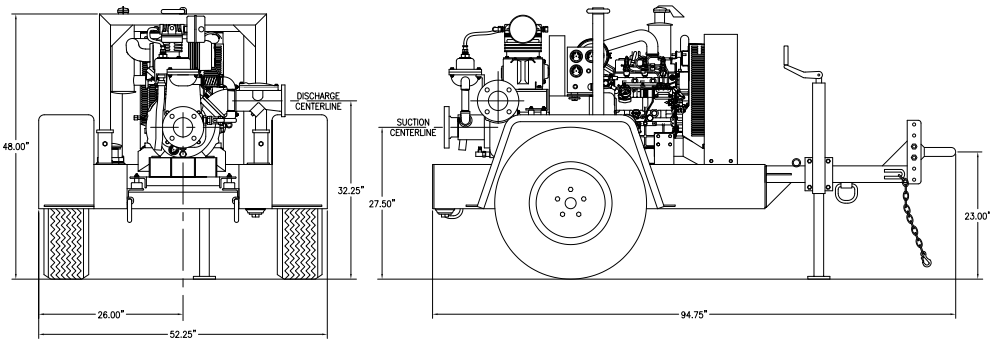

PUMPS • TANKS • FILTRATION • PIPE • SPILLGUARDS

Rain for Rent is a registered trademark of Western Oilfields Supply Company. Features and specifications are subject to change without notice.

Liquid Ingenuity©
800-742-7246
rainforrent.com

Rain For Rent

CURVE: 01-0133-02-15

PUMP : DV-80

SUCTION	DISCHARGE	MAX. SPHERE	IMPELLER	IMPELLER	IMPELLER & WEAR RINGS
3"	3"	1.25"	3 VANE	7.64"	316 S/S

ALL INFORMATION CONTAINED IN OR DISCLOSED BY THIS DOCUMENT IS CONSIDERED CONFIDENTIAL AND PROPRIETARY BY RAIN FOR RENT. ALL DISCLOSURES OF DESIGN INFORMATION AND REPRODUCTION OF THIS DOCUMENT AND ALL SALES RIGHTS ARE EXCLUSIVELY RESERVED BY AND TO RAIN FOR RENT AND COMMUNICATION OF THIS INFORMATION TO OTHERS IS PROHIBITED WITHOUT THE PRIOR WRITTEN CONSENT OF RAIN FOR RENT

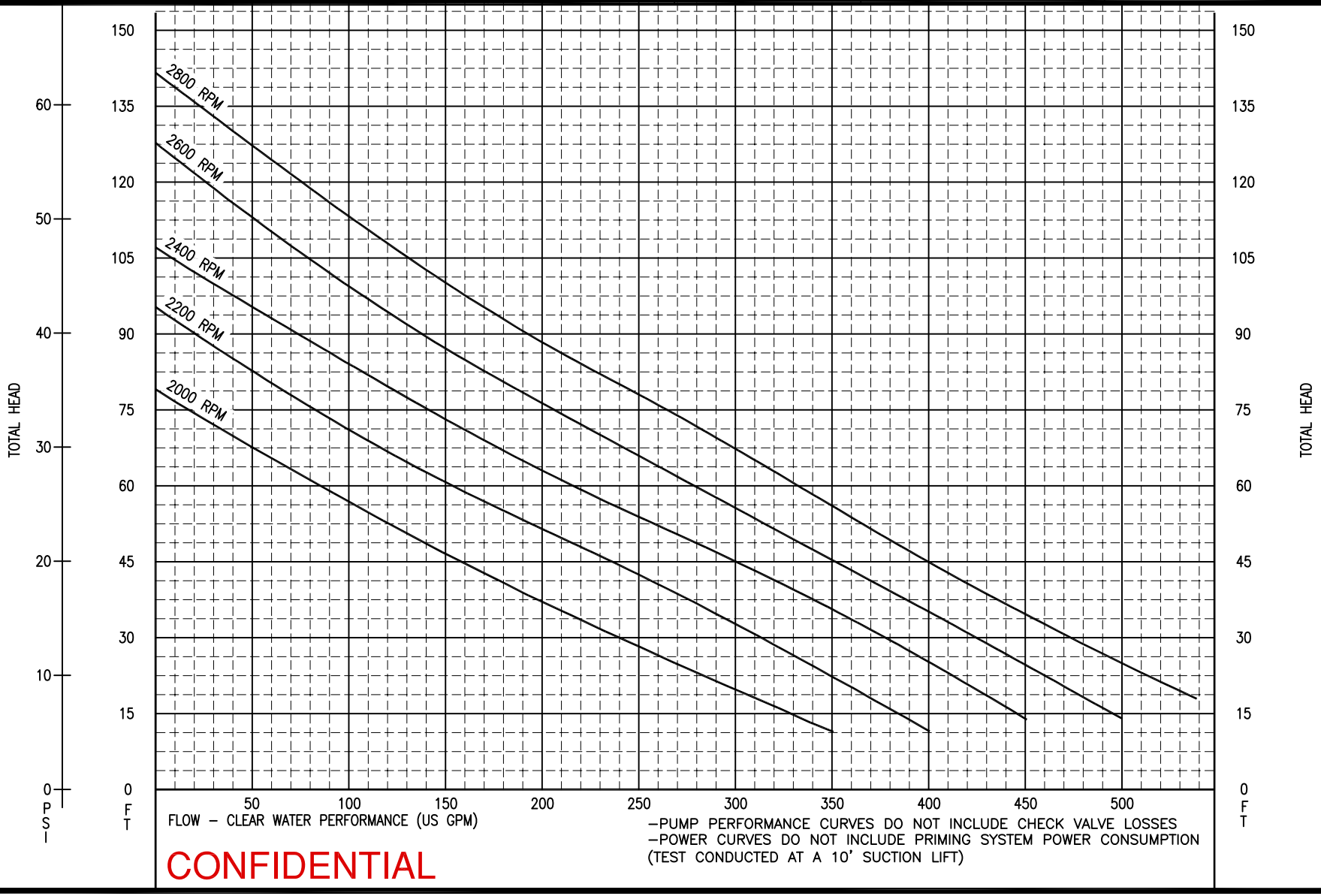

–PUMP PERFORMANCE CURVES DO NOT INCLUDE CHECK VALVE LOSSES
–POWER CURVES DO NOT INCLUDE PRIMING SYSTEM POWER CONSUMPTION
(TEST CONDUCTED AT A 10' SUCTION LIFT)

CONFIDENTIAL

FL Series Filter Housings
ASME CODE HOUSINGS

LITHSFL1.0297
replaces
LITHSFL1.1092

The CUNO Flex Line™ (FL) filter housings are the highest quality ASME Code vessels available. FL housings are available in outside diameters equal to 8, 12, 14, 16, 20, 24, and 30 inch pipe and can be configured for specific system pressures ranging from 150 to 300 psi. A housing can be constructed to the exact requirements of your specific system by using other selections, including inlet/outlet location, connection size and type, housing internals for various cartridge styles, corrosion allowance, vent size and type, and connection height. For more information about FL Series housing selection, see table 5.

APPLICABLE FILTER CARTRIDGE

The FL Series of filter housings can be configured for various cartridge styles of CUNO or competitive cartridges: Applicable CUNO cartridges include:

BETAPURE®	MICRO-KLEAN® III
MICRO-WYND® II	MPF® II
BETAFINE®	ZETAPOR® Style
ZETA PLUS®	ACTIVATED CARBON®
PORO-KLEAN®	MICRO-SCREEN®

DESIGN FEATURES

Designed to ASME With Stamp

150 to 300 psi Housings Standard

Machined O-Ring Groove

Heavy Duty Cover Lifting Device

Fast-Hex™ Cover Fasteners to Facilitate Cover Removal

5 Diaphragms for Cartridge Flexibility

APPLICATIONS

Industrial - Petro-chemical, Chemical, Coatings, Inks, Process Water, Air, Gas, Coolants

Cosmetics - Process Water, Lotions, Soaps,Shampoo, and Perfumes

Pharmaceutical - Process Water, Chemicals, Solvents, Steam, and Topicals

Food & Beverage - Process Water, Beverages, Spirits, Syrups, Juices, Vinegar, and Edible Oils

HOUSING SPECIFICATIONS

Table 1 lists the general specifications for all FL housings. The maximum operating pressure and temperature is for the housing only (determined by ASME Code, Section VIII, Div. I); filter cartridge capability will dictate process limits.

MODEL	PRESSURE ORDER CODE	MATERIAL	ANSI B16.5 FLANGE RATING	ASME CODE SECTION VIII DIV. I PRESSURE/ TEMPERATURE psi @ °F
FL08 FL12 FL14 FL16 FL20 FL24 FL30	1	CARBON STEEL	150	150 @ 450
FL08 FL12 FL14 FL16 FL20 FL24	2	CARBON STEEL	150	245 @ 250
FL30	2	CARBON STEEL	150	240@ 250
FL08 FL12 FL14 FL16 FL20 FL24	3	CARBON STEEL	300	300@ 450
FL30	3	CARBON STEEL	300	260 @ 450
FL08, FL12, FL14, FL16, FL20, FL24, FL30	1	316L STAINLESS STEEL	150	150 @ 250
FL08, FL12, FL14, FL16, FL20, FL24, FL30	2	316L STAINLESS STEEL	150	195 @ 200
FL08, FL12, FL14, FL16, FL20, FL24,	3	316L STAINLESS STEEL	300	300 @ 250
FL30	3	316L STAINLESS STEEL	300	260 @ 250

TABLE 1. - FL HOUSING GENERAL SPECIFICATIONS

CONSTRUCTION

The FL Series filter housing is constructed from carbon steel or stainless steel components. The stainless steel models are manufactured from 316L S.S. (wetted com-

BENEFITS

- Safety Ensured By ASME Code Housing
- Housing Constructed to Fit System Requirements
- Minimal Hold-Up Volume
- Rugged Design Provides Long Service Life
- Reduced Down Time for Cleaning and Cartridge Change-out
- Cover Lifting Device and Unique Fast-Hex™ Cover Fasteners Make Cartridge Removal Easy

CUNO
Fluid Purification

ponents) and 304 S.S. (non-wetted components). The cover closure hardware is zinc plated steel. All FL housings are ASME Code design with stamp.

MAXIMUM RECOMMENDED FLOW RATES

The maximum flow rates for the FL Housings should not exceed 10 ft. per second velocity. The actual process flow rate will be dictated by the filter media and cartridge style used.

FILTER CARTRIDGE CAPACITY

Table 2 lists the maximum number of filter cartridges for each diameter housing with a specific diaphragm installed. Please note that the number of cartridges are listed in both the number of cartridge elements and the number of equivalent lengths required.

HOUSING HEIGHT	NUMBER OF CARTRIDGES ELEMENTS/EQL'S						
	FL08	FL12	FL14	FL16	FL20	FL24	FL30
D1 - Pedestal Type with Max. Diameter 2.625 Inches							
One High	6/6	12/12	18/18	24/24	36/36	52/52	85/85
Two High	6/12	12/24	18/36	24/48	36/72	52/104	85/170
Three High	6/18	12/36	18/54	24/72	36/108	52/156	85/255
Four High	6/24	12/48	18/72	24/96	36/144	52/208	85/340
D2 - 222 Double O-ring Style with Max. Diameter 2.813 Inches							
One High	4/4	12/12	14/14	19/19	28/28	44/44	71/71
Two High	4/8	12/24	14/28	19/38	28/56	44/88	71/142
Three High	4/12	12/36	14/42	19/57	28/84	44/132	71/213
Four High	4/16	12/48	14/56	19/76	28/112	44/176	71/284
D3 - 226 Bayonet Locking with Max. Diameter 2.813 Inches							
One High	4/4	8/8	12/12	17/17	25/25	38/38	67/67
Two High	4/8	8/16	12/24	17/34	25/50	38/76	67/134
Three High	4/12	8/24	12/36	17/51	25/75	38/114	67/201
Four High	4/16	8/32	12/48	17/68	25/100	38/152	67/268
D4 - Pedestal PX 336 Max. Diameter 2.813 Inches/Length 35 Inches (Available with H3 Only)							
Three High	4	11	14	20	30	45	73
D5 - Zeta Plus 12 Inch Cartridge							
Three High	NA	NA	NA	1/3	NA	NA	4/12
NA = Not Available Shaded Cell = These sizes are generally not an economical choice, but are available on request.							

TABLE 2.- FILTER CARTRIDGE CAPACITY BY DIAPHRAGM TYPE.

Diaphragms for Poro-Klean, Micro-Screen, and other style cartridges are available. Consult your local CUNO distributor for further information.

HOUSING SELECTION

The FL filter housing offers the widest choice of standard ASME Code housings in the industry. To design a housing, determine the system requirements and refer to table 4. Choose the diameter housing required (determined by the number of filter cartridges required to achieve the desired system flow rate/pressure drop) and the features required to fit your system.

Special Notes About Selections

Please note that the default configuration for each selection is identified by a "D" in column 2 of table 4.

Cover Lifting Device (Davit) Location (Selection Code A) - The larger FL housings require a cover lifting device. The position of this device can be 90°, 180°, or 270° from the inlet connection (Clockwise Top View).

Corrosion Allowance (Selection Code C) - In some applications, the fluid being filtered naturally causes, over time, a specific amount of corrosion of the wetted suface. This corrosion amount can be determined and, when selecting a housing, can be accounted for and anticipated.

Outlet Location (Selection Code E) - All FL housings are available with the outlet in one of five locations - bottom or duplex, and side at 90°, 180°, or 270° from the inlet (Clockwise Top View).

Gasket Material (Selection Code G) - The gasket material selected must be compatible with the material being filtered. For gasket compatibiltiy, contact your local CUNO distributor.

Outlet Height Adjustment (Selection Code L) - Note the outlet height dimension for the selected housing. Determine the outlet height adjustment required.

Inlet/Outlet Size (Selection Code N) - The use of raised face flanges is standard. Table 3 lists the standard size and alternatives. Other sizes and styles are available as special order.

FLANGE	CODE	FL08	FL12	FL14	FL16	FL20	FL24	FL30
		FLANGE SIZE (INCHES)						
Standard	N1	2	3	4	4	6	6	8
Next Smaller*	N2	NA	2	3	3	4	4	6
Next Larger*	N3	NA	4	6	6	8	8	10
NA = Not Available *May influence housing pressure drop.								

TABLE 3. - AVAILABLE FLANGE SIZE

HOUSING DIMENSIONS

All dimensions in tables 5-7 and figures 1-3 are nominal for the most widely used configurations (all three high units with 150 psi flanges). Fully dimensioned drawings and CAD data bases in numerous formats are available on request, and certified drawings can be faxed within 24 hours. See your local Cuno distributor for more information.

DIMENSION	FL08 FILTER HOUSING		
(INCHES)	BOTTOM	DUPLEX	SIDE
A	55 1/2	61	61 1/8
B	25 15/16	6 3/4	20 13/16
C	9	21	21 5/8
D	8 1/4	8 1/4	8 1/4
E	7	7	7

TABLE 5. - FL08 DIMENSIONS

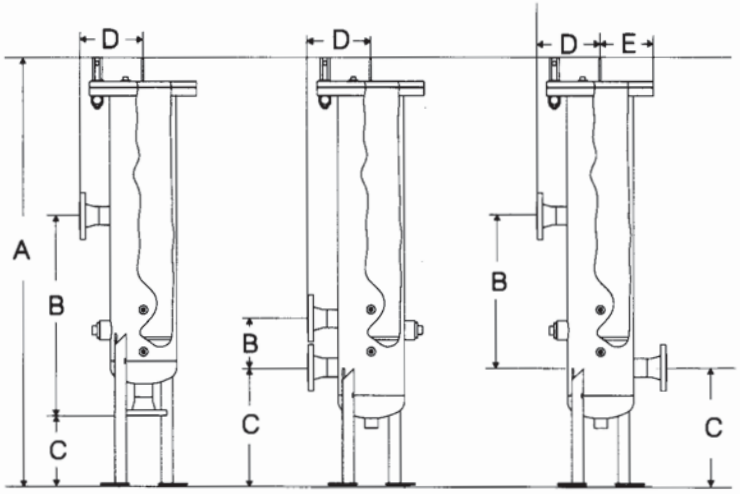

FIGURE 1. - FL08 HOUSING

DIMENSION	FL12 - Outlet Orientation			FL14 - Outlet Orientation			FL16 - Outlet Orientation		
(INCHES)	Bottom	Duplex	Side	Bottom	Duplex	Side	Bottom	Duplex	Side
A	66	65	67 3/4	68 1/2	74	76 7/8	69	74 1/2	77 3/8
B	27 1/8	7 3/4	22 1/8	27 5/8	10 1/4	23 3/16	28 3/8	10 1/4	23 1/4
C	11	24 1/4	24 3/4	13	25 1/2	26 1/8	13	26	26 5/8
D	10 1/2	10 1/2	10 1/2	11 1/4	11 1/4	11 1/4	12 7/16	12 7/16	12 7/16
E	13	13	13	13 1/2	13 1/2	13 1/2	14 1/2	14 1/2	14 1/2

TABLE 6. - FL12, FL14, AND FL16 DIMENSIONS

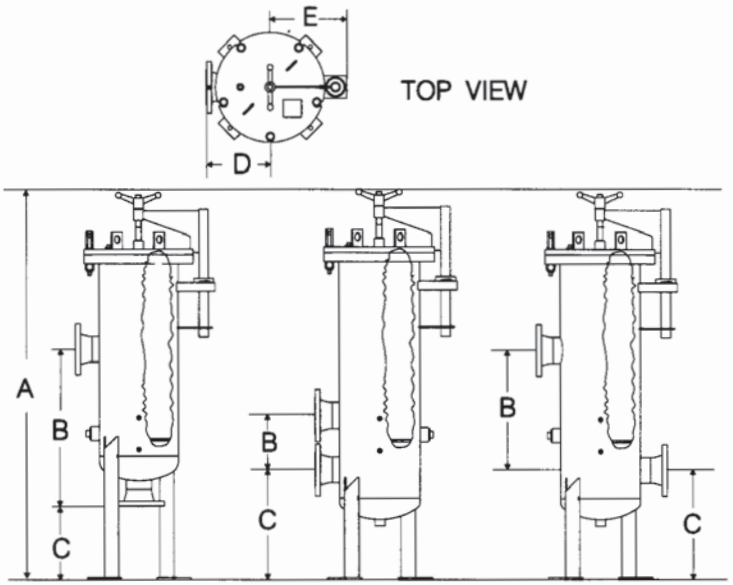

FIGURE 2. - FL12, FL14, AND FL16 HOUSINGS

DIMENSION	FL20 - Outlet Orientation			FL24 - Outlet Orientation			FL30 - Outlet Orientation		
(INCHES)	Bottom	Duplex	Side	Bottom	Duplex	Side	Bottom	Duplex	Side
A	82	85	87 5/8	85	87 1/2	90 3/8	92	90 1/2	93 1/2
B	31 1/2	13	24 1/2	32 15/16	13	24 1/2	35 1/8	15 1/2	23 5/8
C	17	29 1/2	30 1/8	17	30 1/2	31 1/8	16 3/8	31	34
D	15 1/8	15 1/8	15 1/8	17 1/4	17 1/4	17 1/4	20 13/16	20 13/16	20 13/16
E	12 3/4	12 3/4	12 3/4	14 3/4	14 3/4	14 3/4	17 3/4	17 3/4	17 3/4

TABLE 7. - FL20, FL24, AND FL30

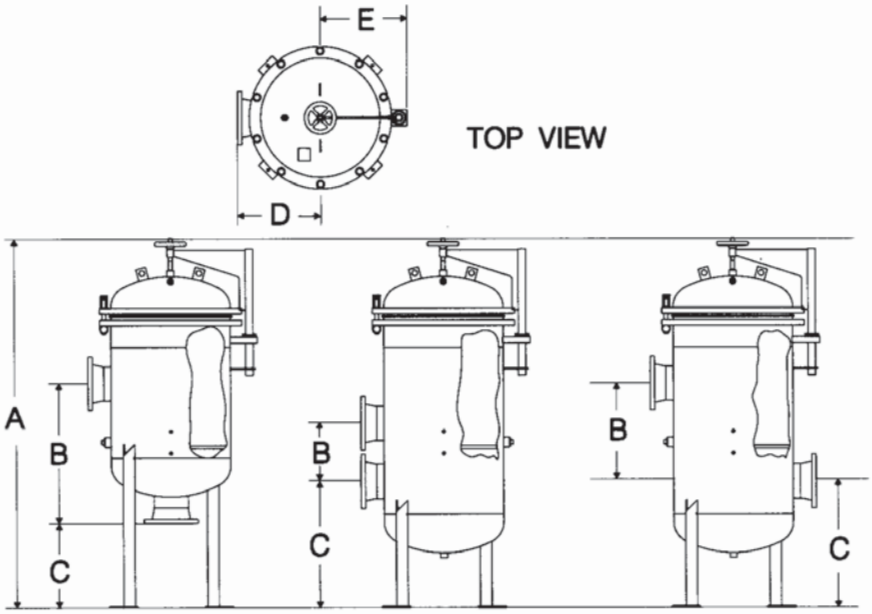

FIGURE 3. - FL20, FL24, AND FL30 HOUSINGS

Flex Line (FL) Series Ordering Guide
Basic Catalog Number

FL	XX	X	XX	X
FL Series Housing	Vessel Diameter	Construction Material	Housing Style	Pressure Rating*
	08 = 8"	1 = Carbon Steel	VE = Vertical	1
	12 = 12"	2 = 316L Stainless Steel		2
	14 = 14"			3
	16 = 16"			
	20 = 20"			
	24 = 24"			
	30 = 30"			

* See Table 1 for more information.

WARRANTY

Seller warrants its equipment against defects in workmanship and material for a period of 5 years from date of shipment from the factory under normal use and service and otherwise when such equipment is used in accordance with instructions furnished by Seller and for purposes disclosed in writing at the time of purchase, if any. Any unauthorized alteration or modification of the equipment by Buyer will void this warranty. Seller's liability under this warranty shall be limited to the replacement or repair, F.O.B. point of manufacture, of any defective equipment or part which, having been returned to the factory, transportation charges prepaid, has been inspected and determined by the Seller to be defective. THIS WARRANTY IS IN LIEU OF ANY OTHER WARRANTY, EITHER EXPRESSED OR IMPLIED, AS TO DESCRIPTION, QUALITY, MERCHANTABILITY, FITNESS FOR ANY PARTICULAR PURPOSE OR USE, OR ANY OTHER MATTER. Under no circumstances shall Seller be liable to Buyer or any third party for any loss of profits or other direct or indirect costs, expenses, losses or consequential damages arising out of or as a result of any defects in or failure of its products or any part or parts thereof or arising out of or as a result of parts or components incorporated in Seller's equipment but not supplied by the Seller.

YOUR LOCAL CUNO DISTRIBUTOR IS:

Service Worldwide

Fluid Purification

Cuno Incorporated
400 Research Parkway
Meriden, CT 06450, U.S.A.
Tele: (203) 237-5541
Fax: (203) 238-8977

CUNO Pacific Pty., Ltd.
140 Sunnyholt Road
Blacktown, N.S.W. 2148
Australia

CUNO Filtration Asia Pte. Ltd.
1 Tech Park Cresent
Singapore 638131

CUNO Europe S.A.
Chemin Du Contre Halage
62730 - Les Attaques
France

CUNO Srl
Via Tonale n°3
20037 Paderno Dugnano
Italy

CUNOGmbH
Wihl-Th-Römheld - Str. 32
55130 Mainz
Germany

CUNO K.K.
Hodogaya Station
Building 6F
1-7 Iwai-cho, Hodagaya-ku
Yokohama 240 Japan

CUNO Latina Ltda.
Rua Amf Do Brasil 251
18120 Mairinque-Sp
Brazil

© Copyright 1997, Cuno Incorporated - ALL RIGHTS RESERVED

REVISIONS				
ZONE	LTR	DESCRIPTION	DATE	APPROVED
	~	FIRST RELEASE ECN 6446 PAE	2-18-97	

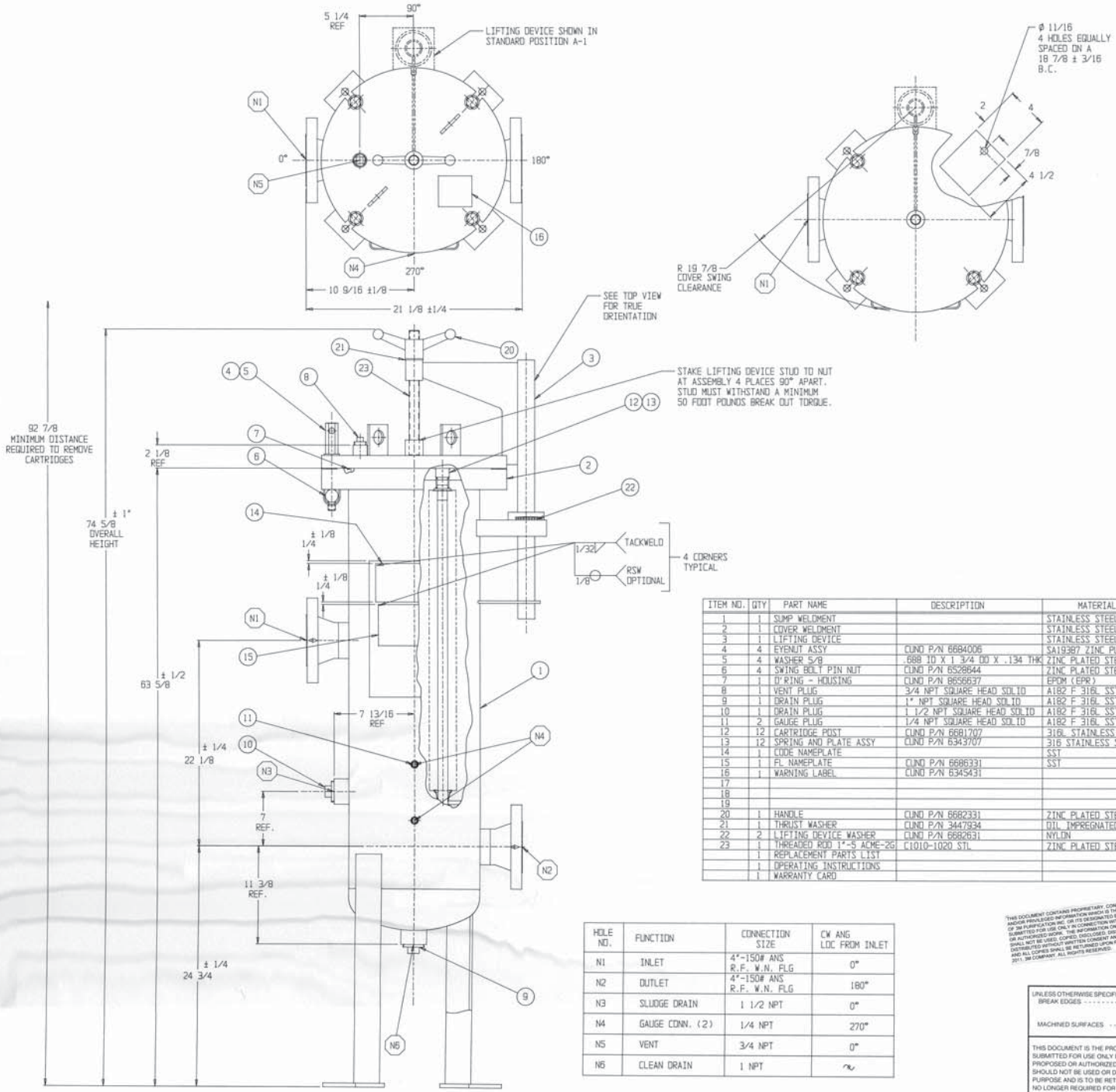

UNIT SIZE	: 12
UNIT MATERIAL	: 316L STAINLESS STEEL
UNIT PRESSURE	: 150 PSIG AT 250°F
COVER L.O. LOCATION	: A1 90 deg. CW from inlet
CORROSION ALLOWANCE	: C0 Not a std option w/previous choices
DIAPHRAGM TYPE	: D1 DDE pedestal, 2.625 max. dia.
OUTLET LOCATION	: E3 Side, 180 deg. CW from inlet
GASKET MATERIAL	: G2 EPDM (EPR)
HOUSING CTG HEIGHT	: H3 Three-high
COVER L.O. TYPE	: J1 Handle
CLEAN DRAIN SIZE	: K1 1 in. NPTF female
OUTLET HEIGHT ADJ.	: LN1 Standard height
INLET/OUTLET CONN. SIZE	: N3 4"-150# ANS R.F. W.N. FLG
RADIOGRAPHY	: R1 None
SLUDGE DRAIN SIZE	: S1 1-1/2 in. NPTF female
GAUGE CONN. SIZE	: T1 1/4 in. NPTF female
CLEAN-OUT HAND HOLE	: U0 Not a std option w/previous choices
VENT CONN. SIZE	: V1 3/4 in. NPTF female
POST WELD HEAT TREAT	: W0 N/A with stainless steel
FINISH TREATMENT	: Y1 Gritblasted, unpainted

QTY OF CARTRIDGES : 12 around

ITEM NO.	QTY	PART NAME	DESCRIPTION	MATERIAL
1	1	SUMP WELDMENT		STAINLESS STEEL
2	1	COVER WELDMENT		STAINLESS STEEL
3	1	LIFTING DEVICE		STAINLESS STEEL
4	4	EYENUT ASSY	CUNO P/N 6684006	SA19387 ZINC PLATED STL
5	4	WASHER 5/8	.688 ID X 1 3/4 OD X .134 THK	ZINC PLATED STEEL
6	4	SWING BOLT PIN NUT	CUNO P/N 6528644	ZINC PLATED STEEL
7	1	O'RING - HOUSING	CUNO P/N 8656637	EPDM (EPR)
8	1	VENT PLUG	3/4 NPT SQUARE HEAD SOLID	A182 F 316L SST
9	1	DRAIN PLUG	1" NPT SQUARE HEAD SOLID	A182 F 316L SST
10	1	DRAIN PLUG	1 1/2 NPT SQUARE HEAD SOLID	A182 F 316L SST
11	2	GAUGE PLUG	1/4 NPT SQUARE HEAD SOLID	A182 F 316L SST
12	12	CARTRIDGE POST	CUNO P/N 6681707	316L STAINLESS STEEL
13	12	SPRING AND PLATE ASSY	CUNO P/N 6343707	316 STAINLESS STEEL
14	1	CODE NAMEPLATE		SST
15	1	FL NAMEPLATE	CUNO P/N 6686331	SST
16	1	WARNING LABEL	CUNO P/N 6345431	
17				
18				
19				
20	1	HANDLE	CUNO P/N 6682331	ZINC PLATED STEEL
21	1	THRUST WASHER	CUNO P/N 3447934	OIL IMPREGNATED BRONZE
22	2	LIFTING DEVICE WASHER	CUNO P/N 6682631	NYLON
23	1	THREADED ROD 1"-5 ACME-2G	C1010-1020 STL	ZINC PLATED STEEL
	1	REPLACEMENT PARTS LIST		
	1	OPERATING INSTRUCTIONS		
	1	WARRANTY CARD		

1. DESIGN AND FABRICATION IN ACCORDANCE WITH ASME BOILER AND PRESSURE VESSEL CODE, SECTION VIII, DIV.1
2. APPROXIMATE SHIPPING WEIGHT: 403 LBS
3. DESIGN PRESSURE AND TEMPERATURE: 150 PSIG AT 250°F HYDRAULIC TEST PRESSURE: 230 PSIG AT 70°F HYDROSTATIC MINIMUM DESIGN METAL TEMPERATURE: -20°F AT 150 PSIG
4. APPLY TEFLON SEALANT TO ALL THREADED CONNECTIONS.
5. INLET AND OUTLET FLANGE BOLT HOLES STRADDLE NATURAL CENTERLINE.

HOLE NO.	FUNCTION	CONNECTION SIZE	CW ANG LOC FROM INLET
N1	INLET	4"-150# ANS R.F. W.N. FLG	0°
N2	OUTLET	4"-150# ANS R.F. W.N. FLG	180°
N3	SLUDGE DRAIN	1 1/2 NPT	0°
N4	GAUGE CONN. (2)	1/4 NPT	270°
N5	VENT	3/4 NPT	0°
N6	CLEAN DRAIN	1 NPT	~

THIS DOCUMENT CONTAINS PROPRIETARY, CONFIDENTIAL AND/OR PRIVILEGED INFORMATION WHICH IS THE PROPERTY OF 3M PURIFICATION INC. OR ITS DESIGNATED ENTITY AND IS SUBMITTED FOR USE ONLY IN CONNECTION ON THIS DOCUMENT OR AUTHORIZED WORK. THE INFORMATION ON THIS DOCUMENT SHALL NOT BE USED, COPIED, DISCLOSED, DISSEMINATED OR DISTRIBUTED WITHOUT WRITTEN CONSENT AND THIS DOCUMENT AND ALL COPIES SHALL BE RETURNED UPON REQUEST. 2011, 3M COMPANY. ALL RIGHTS RESERVED.

ONLY SHEET NUMBER 1 IS AUTHORIZED BY CUNO, INC. FOR OUTSIDE DISTRIBUTION.

UNLESS OTHERWISE SPECIFIED:
BREAK EDGES ~
MACHINED SURFACES √

	BY	DATE
DRAWN	PAE	2-18-97
CHECKED	PAE	2-18-97
APPROVED	SF	2-18-97

DATE ISSUED

THIS DOCUMENT IS THE PROPERTY OF CUNO, INC. AND IS SUBMITTED FOR USE ONLY IN CONNECTION WITH WORK PROPOSED OR AUTHORIZED BY THIS COMPANY. IT SHOULD NOT BE USED OR DUPLICATED FOR ANY OTHER PURPOSE AND IS TO BE RETURNED TO CUNO, INC. WHEN NO LONGER REQUIRED FOR SUCH PURPOSE. COPYRIGHT, 1992, CUNO, INC.

CUNO, Inc.
MERIDEN, CONNECTICUT 06450, U.S.A.

FILTER ASSY - MODEL FL122VE1 SIDE

SIZE F | CODE IDENT NO. 15472 | DRAWING NO. FL122VE1973045
SCALE ~ | SHEET 1

REVISIONS				
ZONE	LTR	DESCRIPTION	DATE	APPROVED
	~	FIRST RELEASE ECN 6446 PAE	2-18-97	

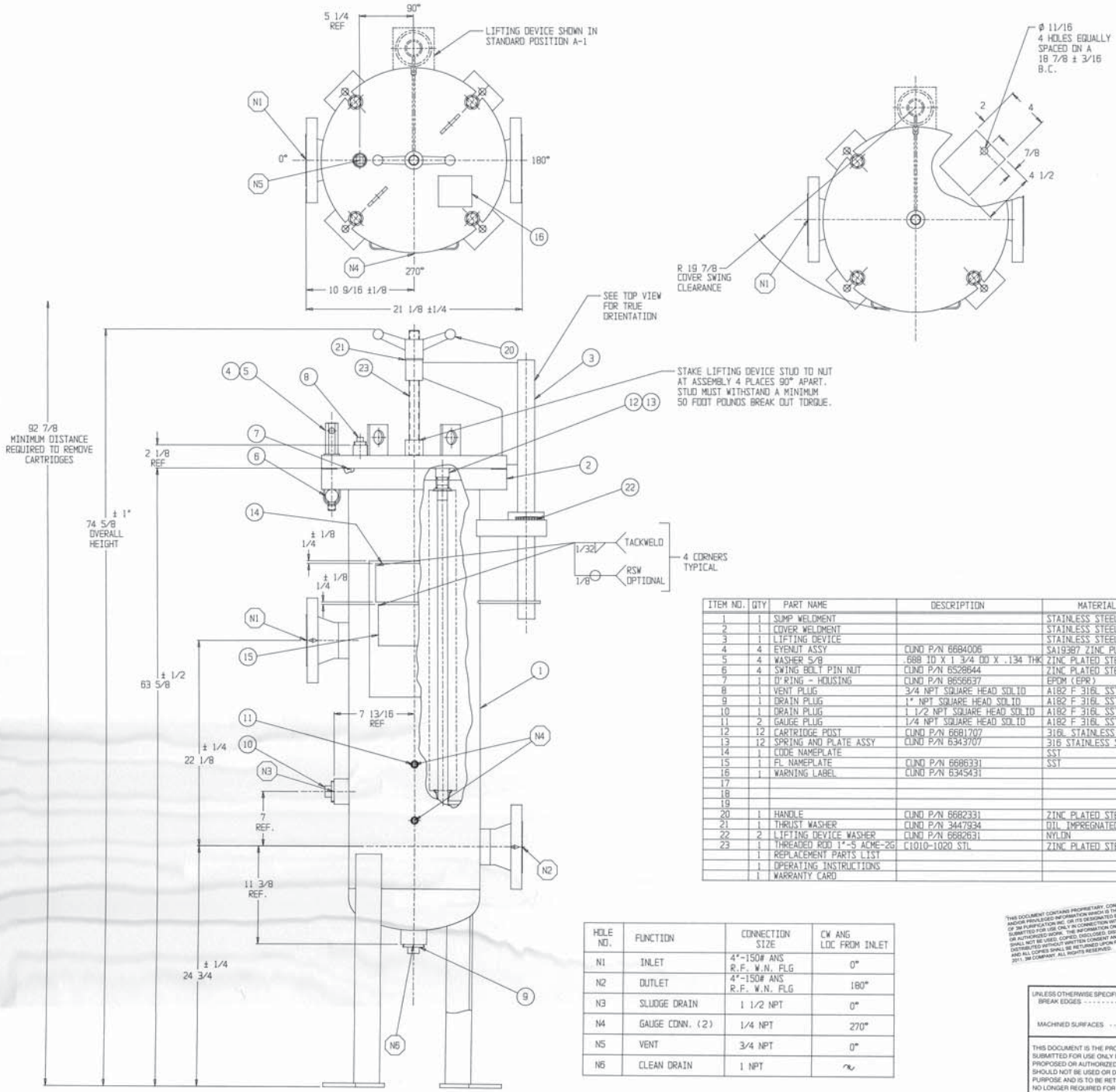

UNIT SIZE	: 12
UNIT MATERIAL	: 316L STAINLESS STEEL
UNIT PRESSURE	: 150 PSIG AT 250°F
COVER L.O. LOCATION	: A1 90 deg. CW from inlet
CORROSION ALLOWANCE	: C0 Not a std option w/previous choices
DIAPHRAGM TYPE	: D1 DDE pedestal, 2.625 max. dia.
OUTLET LOCATION	: E3 Side, 180 deg. CW from inlet
GASKET MATERIAL	: G2 EPDM (EPR)
HOUSING CTG HEIGHT	: H3 Three-high
COVER L.O. TYPE	: J1 Handle
CLEAN DRAIN SIZE	: K1 1 in. NPTF female
OUTLET HEIGHT ADJ.	: LN1 Standard height
INLET/OUTLET CONN. SIZE	: N3 4"-150# ANS R.F. W.N. FLG
RADIOGRAPHY	: R1 None
SLUDGE DRAIN SIZE	: S1 1-1/2 in. NPTF female
GAUGE CONN. SIZE	: T1 1/4 in. NPTF female
CLEAN-OUT HAND HOLE	: U0 Not a std option w/previous choices
VENT CONN. SIZE	: V1 3/4 in. NPTF female
POST WELD HEAT TREAT	: W0 N/A with stainless steel
FINISH TREATMENT	: Y1 Gritblasted, unpainted

QTY OF CARTRIDGES : 12 around

ITEM NO.	QTY	PART NAME	DESCRIPTION	MATERIAL
1	1	SUMP WELDMENT		STAINLESS STEEL
2	1	COVER WELDMENT		STAINLESS STEEL
3	1	LIFTING DEVICE		STAINLESS STEEL
4	4	EYENUT ASSY	CUNO P/N 6684006	SA19387 ZINC PLATED STL
5	4	WASHER 5/8	.688 ID X 1 3/4 OD X .134 THK	ZINC PLATED STEEL
6	4	SWING BOLT PIN NUT	CUNO P/N 6528644	ZINC PLATED STEEL
7	1	O'RING - HOUSING	CUNO P/N 8656637	EPDM (EPR)
8	1	VENT PLUG	3/4 NPT SQUARE HEAD SOLID	A182 F 316L SST
9	1	DRAIN PLUG	1" NPT SQUARE HEAD SOLID	A182 F 316L SST
10	1	DRAIN PLUG	1 1/2 NPT SQUARE HEAD SOLID	A182 F 316L SST
11	2	GAUGE PLUG	1/4 NPT SQUARE HEAD SOLID	A182 F 316L SST
12	12	CARTRIDGE POST	CUNO P/N 6681707	316L STAINLESS STEEL
13	12	SPRING AND PLATE ASSY	CUNO P/N 6343707	316 STAINLESS STEEL
14	1	CODE NAMEPLATE		SST
15	1	FL NAMEPLATE	CUNO P/N 6686331	SST
16	1	WARNING LABEL	CUNO P/N 6345431	
17				
18				
19				
20	1	HANDLE	CUNO P/N 6682331	ZINC PLATED STEEL
21	1	THRUST WASHER	CUNO P/N 3447934	OIL IMPREGNATED BRONZE
22	2	LIFTING DEVICE WASHER	CUNO P/N 6682631	NYLON
23	1	THREADED ROD 1"-5 ACME-2G	C1010-1020 STL	ZINC PLATED STEEL
	1	REPLACEMENT PARTS LIST		
	1	OPERATING INSTRUCTIONS		
	1	WARRANTY CARD		

1. DESIGN AND FABRICATION IN ACCORDANCE WITH ASME BOILER AND PRESSURE VESSEL CODE, SECTION VIII, DIV.1
2. APPROXIMATE SHIPPING WEIGHT: 403 LBS
3. DESIGN PRESSURE AND TEMPERATURE: 150 PSIG AT 250°F HYDRAULIC TEST PRESSURE: 230 PSIG AT 70°F HYDROSTATIC MINIMUM DESIGN METAL TEMPERATURE: -20°F AT 150 PSIG
4. APPLY TEFLON SEALANT TO ALL THREADED CONNECTIONS.
5. INLET AND OUTLET FLANGE BOLT HOLES STRADDLE NATURAL CENTERLINE.

HOLE NO.	FUNCTION	CONNECTION SIZE	CW ANG LOC FROM INLET
N1	INLET	4"-150# ANS R.F. W.N. FLG	0°
N2	OUTLET	4"-150# ANS R.F. W.N. FLG	180°
N3	SLUDGE DRAIN	1 1/2 NPT	0°
N4	GAUGE CONN. (2)	1/4 NPT	270°
N5	VENT	3/4 NPT	0°
N6	CLEAN DRAIN	1 NPT	~

THIS DOCUMENT CONTAINS PROPRIETARY, CONFIDENTIAL AND/OR PRIVILEGED INFORMATION WHICH IS THE PROPERTY OF 3M PURIFICATION INC. OR ITS DESIGNATED ENTITY AND IS SUBMITTED FOR USE ONLY IN CONNECTION ON THIS DOCUMENT OR AUTHORIZED WORK. THE INFORMATION ON THIS DOCUMENT SHALL NOT BE USED, COPIED, DISCLOSED, DISSEMINATED OR DISTRIBUTED WITHOUT WRITTEN CONSENT AND THIS DOCUMENT AND ALL COPIES SHALL BE RETURNED UPON REQUEST. 2011, 3M COMPANY. ALL RIGHTS RESERVED.

ONLY SHEET NUMBER 1 IS AUTHORIZED BY CUNO, INC. FOR OUTSIDE DISTRIBUTION.

UNLESS OTHERWISE SPECIFIED:
BREAK EDGES ~
MACHINED SURFACES √

	BY	DATE
DRAWN	PAE	2-18-97
CHECKED	PAE	2-18-97
APPROVED	SF	2-18-97

DATE ISSUED

THIS DOCUMENT IS THE PROPERTY OF CUNO, INC. AND IS SUBMITTED FOR USE ONLY IN CONNECTION WITH WORK PROPOSED OR AUTHORIZED BY THIS COMPANY. IT SHOULD NOT BE USED OR DUPLICATED FOR ANY OTHER PURPOSE AND IS TO BE RETURNED TO CUNO, INC. WHEN NO LONGER REQUIRED FOR SUCH PURPOSE. COPYRIGHT, 1992, CUNO, INC.

CUNO, Inc.
MERIDEN, CONNECTICUT 06450, U.S.A.

FILTER ASSY - MODEL FL122VE1 SIDE

SIZE F | CODE IDENT NO. 15472 | DRAWING NO. FL122VE1973045
SCALE ~ | SHEET 1

Steel Tank

Flat Top Corrugated Wall Tank

Overview:

Store liquids with confidence with Rain for Rent's 21,000-gallon Flat Top Corrugated Wall tank. Permanently attached axles, for maximum maneuverability, allows this tank to be moved with ease on the jobsite. The staircase ensures proper protection for workers on site. The tank also offers optional epoxy coating, which offers chemical resistance and additional cleanliness for sensitive environmental applications.

Features:

- Vapor Tight Tanks: rated to 16oz/in^2 of pressure and 0.4oz/in^2 of vacuum
- V-drain floor with front and rear 4" 150-lb flanges with valves
- OSHA Compliant Stairway
- 1.5" SCH80 level gauge port
- 8" External manifold or internal manifold
- Rear 3" or 6" SCH40 fill line
- Optional: Epoxy Coating - chemical resistance for a wide variety of chemical compatibility and keeps stored product within the tank cleaner
- Optional: Steam Coils

Accessories:

- E-CONTAIN® Spillguards
- SolidGround® Traction Mats
- Radar Level Gauge
- Mechanical Level Gauge
- PipeStax®
- HoseTrax®
- Suction and Discharge Hose

Specs:

Material	Steel, Epoxy Coated (Option)
Capacity	21,000 gallons
Manways	Four 22" hatches
Dry weight	27,000 lbs.
Footprint (LxWxH):	560" x 102" x 120"

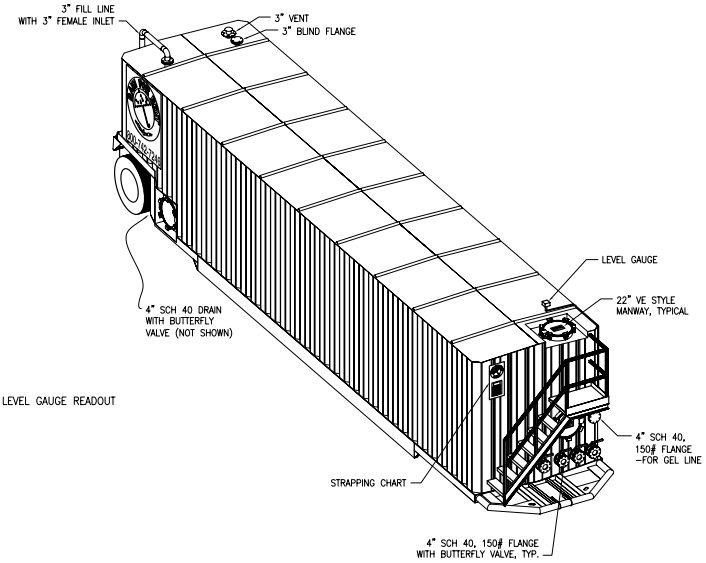

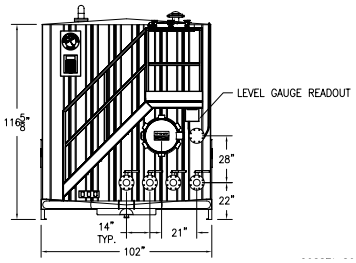

FRONT VIEW

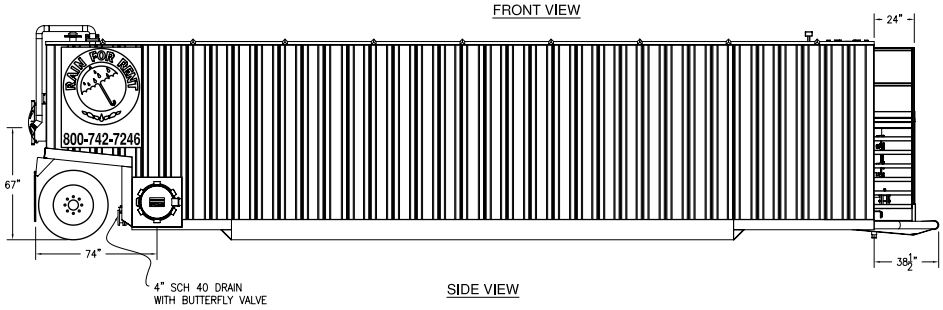

SIDE VIEW

PUMPS • TANKS • FILTRATION • PIPE • SPILLGUARDS

Rain for Rent is a registered trademark of Western Oilfields Supply Company. Features and specifications are subject to change without notice.

Liquid Ingenuity®
800-742-7246
rainforrent.com

GSP05/10/20 Sub-Prime® Electric Submersible Pumps

The GSP Sub-Prime line is a selection of portable, electric submersible dewatering pumps available for a wide range of pumping applications on construction, industrial, mining, utility, and municipal job sites. Available in 0.5 hp / 0.4 kW (GSP05), 1 hp / 0.75 kW (GSP10), and 2 hp / 1.5 kW (GSP20) models, the GSP Sub-Prime offers flow rates from 70 to 110 gpm (4.4 to 6.9 l/sec) and maximum heads from 39 to 70 feet (11.9 to 21.3 meters). Compact design allows these versatile units to go where other pumps simply do not fit. An optional piggy back single float switch can be supplied as a cost effective choice for applications requiring automatic operation.

Features and Benefits

- UL and CSA listed and approved *
- Dry-running capability without damage
- No control panel required for starting. (Control panel is needed for motor protection.)
- Portable, lightweight, durable
- Slim line top discharge design, only 7.2 in. (183mm) diameter for GSP05 and GSP10 models, 9.25 in. (235mm) diameter for the GSP20 model.
- Non-wicking cable with strain relief
- High-torque, capacitor-start motor
- Motor thermal overload protection
- Outer jacket for continuous cooling of motor
- Silicon Carbide upper and lower mechanical seals
- Triple sealed – internal upper and lower mechanical seals and external lip seal
- Torque flow impeller

Specification

	GSP05	GSP10	GSP20
HP (kW)	0.5 (0.4)	1.0 (.75)	2.0 (1.5)
Max. Flow - gpm (l/sec)	70 (4.4)	90 (5.7)	110 (6.9)
Max. Head - ft (m)	39 (11.9)	60 (18.3)	70 (21.3)
Max. Solids - in. (mm)	1/3 (9)	1/3 (9)	1/3 (9)
Cable Length - ft (m)	30 (9)	50 (15)	50 (15)
Discharge - in. (mm)	2 (50)	2 (50)	3 (75)
RPM	3600	3600	3600
Max. Fluid Temp.	90° F (32° C)	90° F (32° C)	104° F (40° C)
PH Range	6.5-8.0	6.5-8.0	6.5-8.0
Voltage	115, 230	115, 230	115/230
Amps	5.8, 3.2	10.3, 5.11	25.9/13.0
Phase	Single	Single	Single
Height - in. (mm)	12.8 (325)	14.1 (358)	24.5 (622)
Width - in. (mm)	7.2 (183)	7.2 (183)	9.25 (235)
Weight - lbs. (kg)	20 (9)	29 lbs. (13)	61 (28)
Max. Sub. - ft (m)	16.5 (5)	16.5 (5)	16.5 (5)

C US

* n.a. for GSP20

godwin
a xylem brand

GSP Sub-Prime® Performance Curves

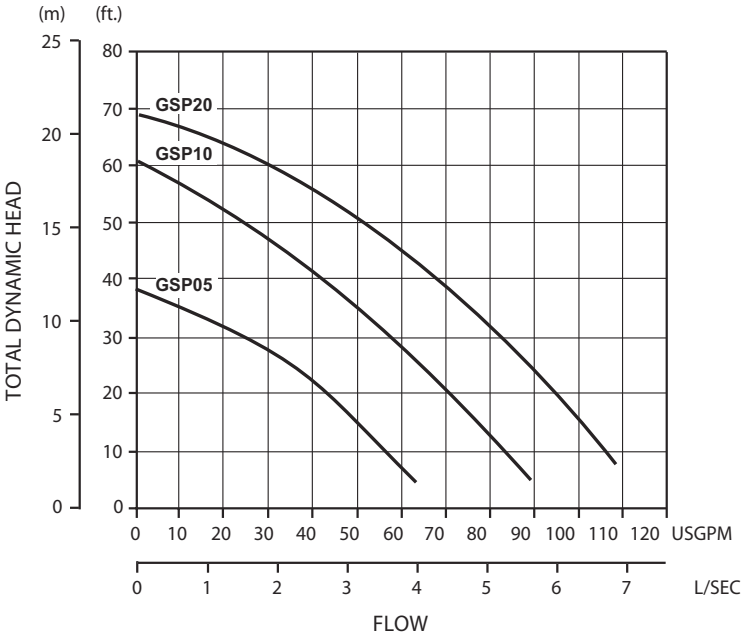

WARNING: Pumps are not designed for use in explosive atmosphere, flammable environments or for pumping volatile liquids.

Design & Construction

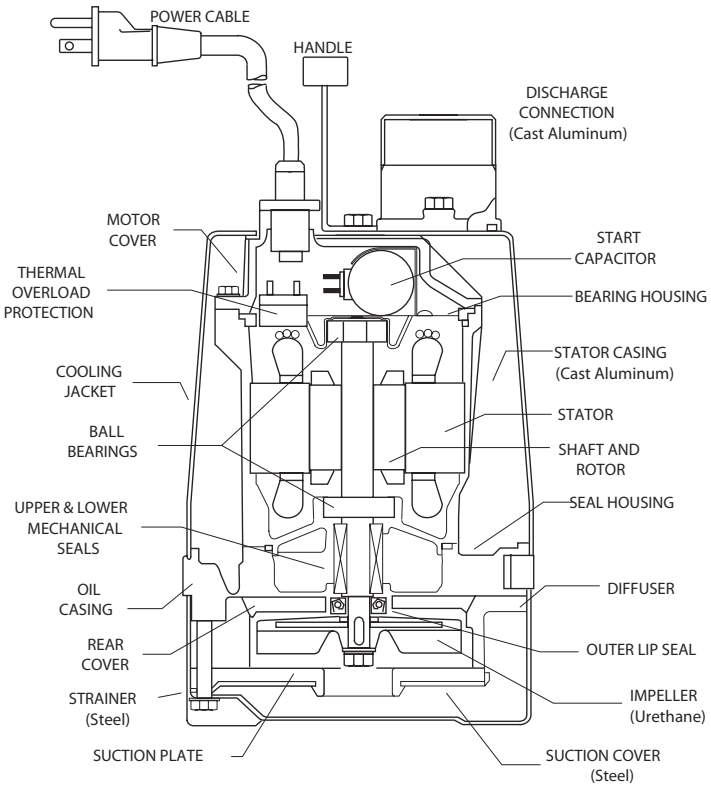

Float Switch

Optional Float Switches available for automatic, remote activation of Sub-Prime pumps. Package consists of 30 ft/50ft (9m/15m) power cord with piggy-back power plug, variable length float tether, and sealed float. Typical configuration shown below.

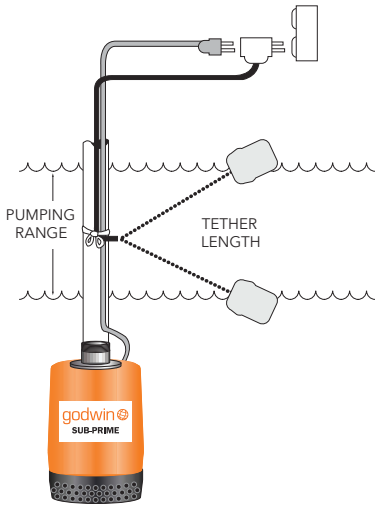

Pumping range determined by tether length according to the following guide.

Tether	3.5	5	7	9	11	13	15	in.
Length	89	127	178	229	279	330	381	mm.
Pumping	6.5	7.5	8.5	10	11	12.5	13.5	in.
Range	165	1914	216	254	279	318	343	mm.

Pumping range based on operation in non-turbulent conditions. Actual range may vary due to temperature conditions and cord shape. Tether length increases variance of pumping range.

Dimensions

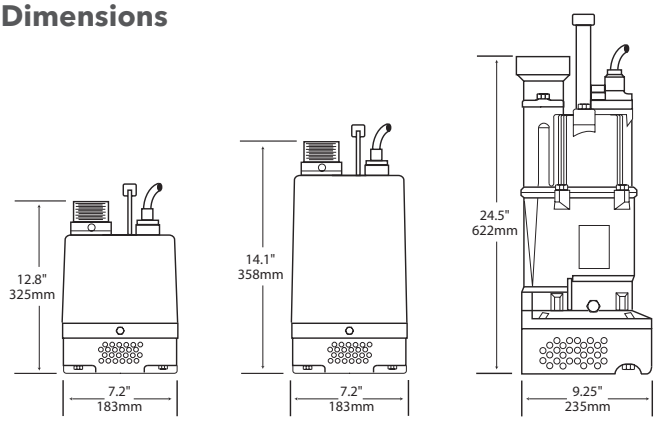

GSP05 **GSP10** **GSP20**

xylem
Let's Solve Water

Dewatering Solutions
84 Floodgate Road, Bridgeport, NJ 08014
Tel +1.856.467.3636

GODWIN_GSP_05/10/20_07.11.14
www.godwinpumps.com

© 2014 Xylem, Inc. All rights reserved. Godwin is a trademark of Xylem Dewatering Solutions, Inc., a wholly-owned subsidiary of Xylem Inc. Specifications and illustrations are subject to revision without notice. Xylem makes no representation regarding the completeness or accuracy of this information and is not liable for any direct or indirect damages arising from or relating to this information or its use.

HaloKlear DBP-2100 Socks

Safety Data Sheet

according to Federal Register / Vol. 77, No. 58 / Monday, March 26, 2012 / Rules and Regulations

Date of issue: 03/24/2016 Version: 1.0

SECTION 1: Identification of the substance/mixture and of the company/undertaking

1.1. Product identifier

Product form	:	Substance
Substance name	:	HaloKlear DBP-2100 Socks
Chemical name	:	Xanthan Gum
CAS No	:	11138-66-2
Product code	:	210014

1.2. Relevant identified uses of the substance or mixture and uses advised against

Use of the substance/mixture	:	Flocculant

1.3. Details of the supplier of the safety data sheet

Dober Chemical Corp.
11230 Katherine's Crossing
Suite 100
Woodridge, IL 60517 - USA
T 630-410-7300 - F 630-410-7444
regulatory@dobergroup.com - www.dober.com

1.4. Emergency telephone number

Emergency number	:	1-800-255-3924 / 1-813-248-0585 ChemTel

SECTION 2: Hazards identification

2.1. Classification of the substance or mixture

GHS-US classification

Not classified

2.2. Label elements

GHS-US labelling

No labelling applicable

2.3. Other hazards

Other hazards not contributing to the classification	:	May form combustible dust concentrations in air. May cause eye irritation.

2.4. Unknown acute toxicity (GHS-US)

Not applicable

SECTION 3: Composition/information on ingredients

3.1. Substance

Substance type	:	Mono-constituent
Name	:	HaloKlear DBP-2100 Socks
CAS No	:	11138-66-2

Full text of H-statements: see section 16

3.2. Mixture

Not applicable

4.1. Description of first aid measures

First-aid measures general	:	Never give anything by mouth to an unconscious person. If you feel unwell, seek medical advice (show the label where possible).
First-aid measures after inhalation	:	Allow breathing of fresh air. Allow the victim to rest.
First-aid measures after skin contact	:	Remove affected clothing and wash all exposed skin area with mild soap and water, followed by warm water rinse.
First-aid measures after eye contact	:	Rinse immediately with plenty of water. Obtain medical attention if pain, blinking or redness persist.
First-aid measures after ingestion	:	Rinse mouth. Do NOT induce vomiting. Obtain emergency medical attention.

4.2. Most important symptoms and effects, both acute and delayed

Symptoms/injuries : Not expected to present a significant hazard under anticipated conditions of normal use.

4.3. Indication of any immediate medical attention and special treatment needed

No additional information available

SECTION 5: Firefighting measures

5.1. Extinguishing media

Suitable extinguishing media : Foam. Dry powder. Carbon dioxide. Water spray. Sand.

Unsuitable extinguishing media : Do not use a heavy water stream.

5.2. Special hazards arising from the substance or mixture

Reactivity : The product is non-reactive under normal conditions of use, storage and transport.

5.3. Advice for firefighters

Firefighting instructions : Exercise caution when fighting any chemical fire. Eliminate all ignition sources if safe to do so. Use water spray or fog for cooling exposed containers.

Protection during firefighting : Do not enter fire area without proper protective equipment, including respiratory protection.

Other information : Spills produce extremely slippery surfaces. Avoid dust formation.

SECTION 6: Accidental release measures

6.1. Personal precautions, protective equipment and emergency procedures

General measures : Use special care to avoid static electric charges.

6.1.1. For non-emergency personnel

Emergency procedures : Evacuate unnecessary personnel.

6.1.2. For emergency responders

Protective equipment : Equip cleanup crew with proper protection.

Emergency procedures : Ventilate area.

6.2. Environmental precautions

None known.

6.3. Methods and material for containment and cleaning up

Methods for cleaning up : On land, sweep or shovel into suitable containers. Minimize generation of dust. Store away from other materials.

6.4. Reference to other sections

See Heading 8. Exposure controls and personal protection.

SECTION 7: Handling and storage

7.1. Precautions for safe handling

Precautions for safe handling : Wash hands and other exposed areas with mild soap and water before eating, drinking or smoking and when leaving work. Provide good ventilation in process area to prevent formation of vapour. No smoking.

7.2. Conditions for safe storage, including any incompatibilities

Storage conditions : Keep only in the original container in a cool, well-ventilated place. Keep container closed when not in use.

Incompatible products : Oxidizing agent.

Incompatible materials : Sources of ignition.

7.3. Specific end use(s)

No additional information available

SECTION 8: Exposure controls/personal protection

8.1. Control parameters

HaloKlear DBP-2100 Socks (11138-66-2)	
ACGIH	Not applicable
OSHA	Not applicable

8.2. Exposure controls

Personal protective equipment	:	Avoid all unnecessary exposure.
Hand protection	:	Wear protective gloves/protective clothing/eye protection/face protection protective gloves.
Eye protection	:	Chemical goggles or safety glasses.
Respiratory protection	:	Use a properly fitted, particulate filter respirator complying with an approved standard if a risk assessment indicates this is necessary. Respirator selection must be based on known or anticipated exposure levels, the hazards of the product and the safe working limits of the selected respirator.
Other information	:	Do not eat, drink or smoke during use.

SECTION 9: Physical and chemical properties

9.1. Information on basic physical and chemical properties

Physical state	:	Solid
Colour	:	White to tan
Odour	:	odourless
Odour threshold	:	No data available
pH	:	approximately neutral (1% solution)
Relative evaporation rate (butylacetate=1)	:	No data available
Melting point	:	No data available
Freezing point	:	No data available
Boiling point	:	No data available
Flash point	:	No data available
Auto-ignition temperature	:	No data available
Decomposition temperature	:	No data available
Flammability (solid, gas)	:	No data available
Vapour pressure	:	No data available
Relative vapour density at 20 °C	:	No data available
Relative density	:	No data available
Solubility	:	Water: 100 %
Log Pow	:	No data available
Log Kow	:	No data available
Viscosity, kinematic	:	No data available
Viscosity, dynamic	:	No data available
Explosive properties	:	No data available
Oxidising properties	:	No data available
Explosive limits	:	No data available

9.2. Other information

No additional information available

SECTION 10: Stability and reactivity

10.1. Reactivity

The product is non-reactive under normal conditions of use, storage and transport.

10.2. Chemical stability

Stable under normal conditions.

10.3. Possibility of hazardous reactions

No dangerous reactions known under normal conditions of use.

10.4. Conditions to avoid

Avoid dust formation.

10.5. Incompatible materials

Oxidizing agent.

10.6. Hazardous decomposition products

Thermal decomposition generates : Carbon dioxide. Carbon monoxide. Fume.

SECTION 11: Toxicological information

11.1. Information on toxicological effects

Acute toxicity	:	Not classified
Skin corrosion/irritation	:	Not classified pH: approximately neutral (1% solution)
Serious eye damage/irritation	:	Not classified pH: approximately neutral (1% solution)
Respiratory or skin sensitisation	:	Not classified
Germ cell mutagenicity	:	Not classified
Carcinogenicity	:	Not classified
Reproductive toxicity	:	Not classified
Specific target organ toxicity (single exposure)	:	Not classified
Specific target organ toxicity (repeated exposure)	:	Not classified
Aspiration hazard	:	Not classified
Potential adverse human health effects and symptoms	:	Based on available data, the classification criteria are not met.

SECTION 12: Ecological information

12.1. Toxicity

HaloKlear DBP-2100 Socks (11138-66-2)	
LC50 fish 1	491 mg/l Rainbow Trout; 96 hour

12.2. Persistence and degradability

HaloKlear DBP-2100 Socks (11138-66-2)	
Persistence and degradability	This product is biodegradable.

12.3. Bioaccumulative potential

HaloKlear DBP-2100 Socks (11138-66-2)	
Bioaccumulative potential	Inherently biodegradable.

12.4. Mobility in soil

HaloKlear DBP-2100 Socks (11138-66-2)	
Mobility in soil	Not available

12.5. Other adverse effects

Effect on the global warming	:	No known ecological damage caused by this product.
Other information	:	No other effects known.

SECTION 13: Disposal considerations

13.1. Waste treatment methods

Waste treatment methods	:	Dispose of contents/container in accordance with licensed collector's sorting instructions.
Ecology - waste materials	:	None known.

SECTION 14: Transport information

UN-No.(DOT)	:	Non Regulated
UN-No. (IMDG)	:	Non Regulated
UN-No. (IATA)	:	Non Regulated

14.2. UN proper shipping name

Proper Shipping Name (DOT)	:	Not applicable

Proper Shipping Name (IMDG)	:	Not applicable
Proper Shipping Name (IATA)	:	Not applicable

14.3. Transport hazard class(es)

Transport hazard class(es) (DOT)	:	Not applicable
	:	
Transport hazard class(es) (IMDG)	:	Not applicable
Transport hazard class(es) (IATA)	:	Not applicable

14.4. Packing group

Packing group (DOT)	:	Not applicable
Packing group (IMDG)	:	Not applicable
Packing group (IATA)	:	Not applicable

14.5. Environmental hazards

Marine pollutant(IMDG)	:	No
Marine pollutant(IATA)	:	No

SECTION 15: Regulatory information

15.1. US Federal regulations

All components of this product are listed, or excluded from listing, on the United States Environmental Protection Agency Toxic Substances Control Act (TSCA) inventory

This product or mixture does not contain a toxic chemical or chemicals in excess of the applicable de minimis concentration as specified in 40 CFR §372.38(a) subject to the reporting requirements of section 313 of Title III of the Superfund Amendments and Reauthorization Act of 1986 and 40 CFR Part 372.

15.2. International regulations

CANADA

No additional information available

15.3. US State regulations

California Proposition 65 - This product does not contain any substances known to the state of California to cause cancer, developmental and/or reproductive harm

SECTION 16: Other information

Other information	:	None.
NFPA health hazard	:	0 - Exposure under fire conditions would offer no hazard beyond that of ordinary combustible materials.
NFPA fire hazard	:	0 - Materials that will not burn.
NFPA reactivity	:	0 - Normally stable, even under fire exposure conditions, and are not reactive with water.
NFPA specific hazard	:	NA - Not Applicable

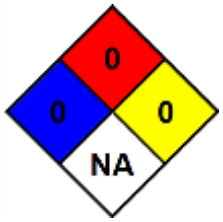

HMIS III Rating	
Health	: 0 - No significant risk to health
Flammability	: 0
Physical	: 0
Personal Protection	: B

Dober SDS US

To the best of our knowledge, the information contained herein is accurate. However, neither the above-named supplier, nor any of its subsidiaries, assumes any liability whatsoever for the accuracy or completeness of the information contained herein. Final determination of suitability of any material is the sole responsibility of the user. All materials may present unknown hazards and should be used with caution. Although certain hazards are described herein, we cannot guarantee that these are the only hazards that exist.

HaloKlear GelFloc Socks

Safety Data Sheet

according to Federal Register / Vol. 77, No. 58 / Monday, March 26, 2012 / Rules and Regulations

Date of issue: 03/24/2016 Version: 1.0

SECTION 1: Identification of the substance/mixture and of the company/undertaking

1.1. Product identifier

Product form	:	Mixture
Product name	:	HaloKlear GelFloc Socks
Product code	:	301200

1.2. Relevant identified uses of the substance or mixture and uses advised against

Use of the substance/mixture	:	Flocculant

1.3. Details of the supplier of the safety data sheet

Dober Chemical Corp.
11230 Katherine's Crossing
Suite 100
Woodridge, IL 60517 - USA
T 630-410-7300 - F 630-410-7444
regulatory@dobergroup.com - www.dober.com

1.4. Emergency telephone number

Emergency number	:	1-800-255-3924 / 1-813-248-0585 ChemTel

SECTION 2: Hazards identification

2.1. Classification of the substance or mixture

GHS-US classification

Not classified

2.2. Label elements

GHS-US labelling

No labelling applicable

2.3. Other hazards

Other hazards not contributing to the classification	:	May cause skin irritation. May cause eye irritation.

2.4. Unknown acute toxicity (GHS-US)

Not applicable

SECTION 3: Composition/information on ingredients

3.1. Substance

Not applicable

3.2. Mixture

Full text of H-statements: see section 16

SECTION 4: First aid measures

4.1. Description of first aid measures

First-aid measures general	:	Never give anything by mouth to an unconscious person. If you feel unwell, seek medical advice (show the label where possible).
First-aid measures after inhalation	:	Allow breathing of fresh air. Allow the victim to rest.
First-aid measures after skin contact	:	Remove affected clothing and wash all exposed skin area with mild soap and water, followed by warm water rinse.
First-aid measures after eye contact	:	Rinse immediately with plenty of water. Obtain medical attention if pain, blinking or redness persist.
First-aid measures after ingestion	:	Rinse mouth. Do NOT induce vomiting. Obtain emergency medical attention.

4.2. Most important symptoms and effects, both acute and delayed

Symptoms/injuries	:	Not expected to present a significant hazard under anticipated conditions of normal use.

4.3. Indication of any immediate medical attention and special treatment needed

No additional information available

SECTION 5: Firefighting measures

5.1. Extinguishing media

Suitable extinguishing media : Foam. Dry powder. Carbon dioxide. Water spray. Sand.

Unsuitable extinguishing media : Do not use a heavy water stream.

5.2. Special hazards arising from the substance or mixture

Reactivity : The product is non-reactive under normal conditions of use, storage and transport.

5.3. Advice for firefighters

Firefighting instructions : Use water spray or fog for cooling exposed containers. Exercise caution when fighting any chemical fire. Prevent fire-fighting water from entering environment.

Protection during firefighting : Do not enter fire area without proper protective equipment, including respiratory protection.

Other information : AVOID WATER; water will dissolve chitosan lactate forming a thick viscous solution or gelatinous mass.

SECTION 6: Accidental release measures

6.1. Personal precautions, protective equipment and emergency procedures

6.1.1. For non-emergency personnel

Emergency procedures : Evacuate unnecessary personnel.

6.1.2. For emergency responders

Protective equipment : Equip cleanup crew with proper protection.

Emergency procedures : Ventilate area.

6.2. Environmental precautions

AVOID WATER; water will dissolve chitosan lactate forming a thick viscous solution or gelatinous mass.

6.3. Methods and material for containment and cleaning up

For containment : Collect spillage.

Methods for cleaning up : On land, sweep or shovel into suitable containers. Minimize generation of dust. Store away from other materials.

6.4. Reference to other sections

See Heading 8. Exposure controls and personal protection.

SECTION 7: Handling and storage

7.1. Precautions for safe handling

Precautions for safe handling : Wash hands and other exposed areas with mild soap and water before eating, drinking or smoking and when leaving work. Provide good ventilation in process area to prevent formation of vapour. No smoking.

7.2. Conditions for safe storage, including any incompatibilities

Storage conditions : Keep only in the original container in a cool, well-ventilated place. Keep container closed when not in use.

Incompatible products : Oxidizing agent.

Incompatible materials : Sources of ignition.

7.3. Specific end use(s)

No additional information available

SECTION 8: Exposure controls/personal protection

8.1. Control parameters

HaloKlear GelFloc Socks	
ACGIH	Not applicable
OSHA	Not applicable

8.2. Exposure controls

Personal protective equipment : Avoid all unnecessary exposure.

Hand protection : Wear protective gloves/protective clothing/eye protection/face protection protective gloves.

Eye protection : Chemical goggles or safety glasses.

Respiratory protection	:	Use a properly fitted, particulate filter respirator complying with an approved standard if a risk assessment indicates this is necessary. Respirator selection must be based on known or anticipated exposure levels, the hazards of the product and the safe working limits of the selected respirator.
Other information	:	Do not eat, drink or smoke during use.

SECTION 9: Physical and chemical properties

9.1. Information on basic physical and chemical properties

Physical state	:	Solid
Colour	:	Colourless
Odour	:	characteristic
Odour threshold	:	No data available
pH	:	No data available
Relative evaporation rate (butylacetate=1)	:	No data available
Melting point	:	No data available
Freezing point	:	No data available
Boiling point	:	No data available
Flash point	:	No data available
Auto-ignition temperature	:	No data available
Decomposition temperature	:	No data available
Flammability (solid, gas)	:	No data available
Vapour pressure	:	No data available
Relative vapour density at 20 °C	:	No data available
Relative density	:	No data available
Solubility	:	Water: Not available
Log Pow	:	No data available
Log Kow	:	No data available
Viscosity, kinematic	:	No data available
Viscosity, dynamic	:	No data available
Explosive properties	:	No data available
Oxidising properties	:	No data available
Explosive limits	:	No data available

9.2. Other information

No additional information available

SECTION 10: Stability and reactivity

10.1. Reactivity

The product is non-reactive under normal conditions of use, storage and transport.

10.2. Chemical stability

Stable under normal conditions.

10.3. Possibility of hazardous reactions

No dangerous reactions known under normal conditions of use.

10.4. Conditions to avoid

Avoid dust formation.

10.5. Incompatible materials

Oxidizing agent.

10.6. Hazardous decomposition products

Fume. Carbon monoxide. Carbon dioxide.

SECTION 11: Toxicological information

11.1. Information on toxicological effects

Acute toxicity	:	Not classified

HaloKlear GelFloc Socks	
LD50 oral rat	> 10 g/kg

Skin corrosion/irritation	:	Not classified
Serious eye damage/irritation	:	Not classified
Respiratory or skin sensitisation	:	Not classified
Germ cell mutagenicity	:	Not classified
Carcinogenicity	:	Not classified
Reproductive toxicity	:	Not classified
Specific target organ toxicity (single exposure)	:	Not classified
Specific target organ toxicity (repeated exposure)	:	Not classified
Aspiration hazard	:	Not classified
Potential adverse human health effects and symptoms	:	Based on available data, the classification criteria are not met.

SECTION 12: Ecological information

12.1. Toxicity

HaloKlear GelFloc Socks	
LC50 fish 1	22.8 mg/l Fathead Minnow
EC50 Daphnia 1	135 mg/l

12.2. Persistence and degradability

HaloKlear GelFloc Socks	
Persistence and degradability	Not established.

12.3. Bioaccumulative potential

HaloKlear GelFloc Socks	
Bioaccumulative potential	Not established.

12.4. Mobility in soil

No additional information available

12.5. Other adverse effects

Effect on the global warming	:	No known ecological damage caused by this product.
Other information	:	No other effects known.

SECTION 13: Disposal considerations

13.1. Waste treatment methods

Waste disposal recommendations	:	Dispose in a safe manner in accordance with local/national regulations.
Ecology - waste materials	:	None known.

SECTION 14: Transport information

UN-No.(DOT)	:	Non Regulated
UN-No. (IMDG)	:	Non Regulated
UN-No. (IATA)	:	Non Regulated

14.2. UN proper shipping name

Proper Shipping Name (DOT)	:	Not applicable
Proper Shipping Name (IMDG)	:	Not applicable
Proper Shipping Name (IATA)	:	Not applicable

14.3. Transport hazard class(es)

Transport hazard class(es) (DOT)	:	Not applicable
	:	
Transport hazard class(es) (IMDG)	:	Not applicable
Transport hazard class(es) (IATA)	:	Not applicable

14.4. Packing group

Packing group (DOT)	:	Not applicable
Packing group (IMDG)	:	Not applicable
Packing group (IATA)	:	Not applicable

14.5. Environmental hazards

Marine pollutant(IMDG)	:	No
Marine pollutant(IATA)	:	No

SECTION 15: Regulatory information

15.1. US Federal regulations

All components of this product are listed, or excluded from listing, on the United States Environmental Protection Agency Toxic Substances Control Act (TSCA) inventory

This product or mixture does not contain a toxic chemical or chemicals in excess of the applicable de minimis concentration as specified in 40 CFR §372.38(a) subject to the reporting requirements of section 313 of Title III of the Superfund Amendments and Reauthorization Act of 1986 and 40 CFR Part 372.

15.2. International regulations

CANADA

No additional information available

15.3. US State regulations

California Proposition 65 - This product does not contain any substances known to the state of California to cause cancer, developmental and/or reproductive harm

SECTION 16: Other information

Other information	:	None.
NFPA health hazard	:	0 - Exposure under fire conditions would offer no hazard beyond that of ordinary combustible materials.
NFPA fire hazard	:	0 - Materials that will not burn.
NFPA reactivity	:	0 - Normally stable, even under fire exposure conditions, and are not reactive with water.
NFPA specific hazard	:	NA - Not Applicable

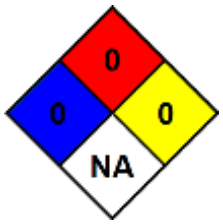

HMIS III Rating

Health	:	0 - No significant risk to health
Flammability	:	0
Physical	:	0
Personal Protection	:	B

Dober SDS US

To the best of our knowledge, the information contained herein is accurate. However, neither the above-named supplier, nor any of its subsidiaries, assumes any liability whatsoever for the accuracy or completeness of the information contained herein. Final determination of suitability of any material is the sole responsibility of the user. All materials may present unknown hazards and should be used with caution. Although certain hazards are described herein, we cannot guarantee that these are the only hazards that exist.

CARBON FILTRATION SYSTEMS INC.

Liquid Series High Pressure (LSHP) – 75 PSI

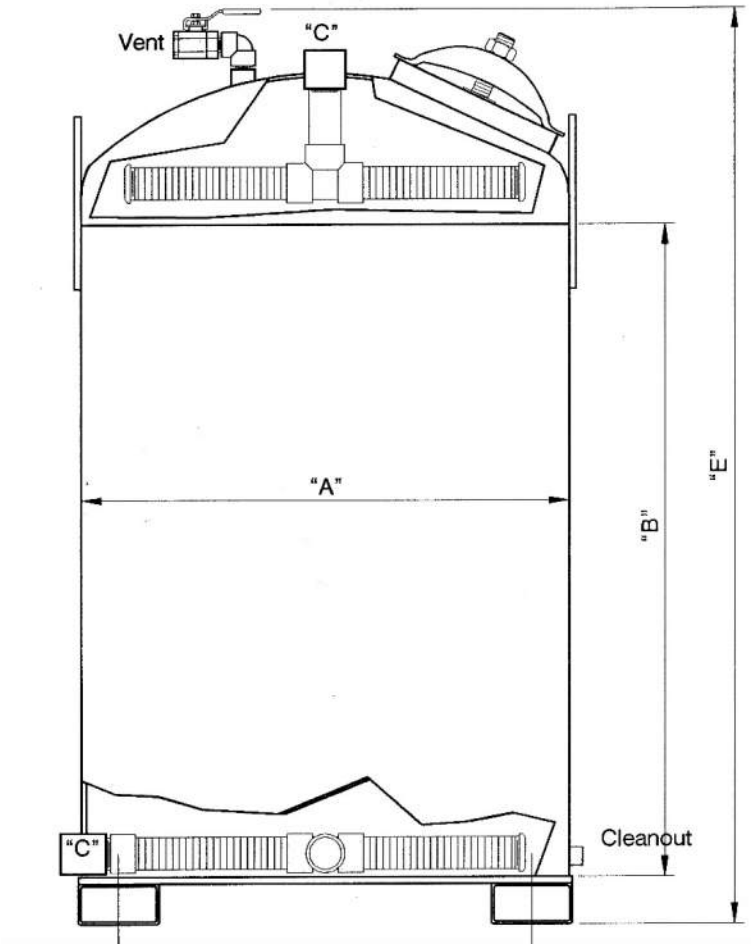

Model	LGAC-(lbs)	Flow Rate(gpm)	Diameter "A"	Sidewall Ht. "B"	OAH "E"	Inlet/Outlet "C"
LSHP-500	500	25	30"	48"	60"	2" NPT
LSHP-1000	1000	50	42"	48"	66"	2" NPT
LSHP-2000	2000	100	48"	72"	90"	3" NPT
LSHP-3000	3000	150	60"	72"	90"	3" NPT

68 Mill Street · Johnston, Rhode Island 02919 · Phone: (401) 946-7838 or (401) 946-4847 · Fax: (401) 946-9722

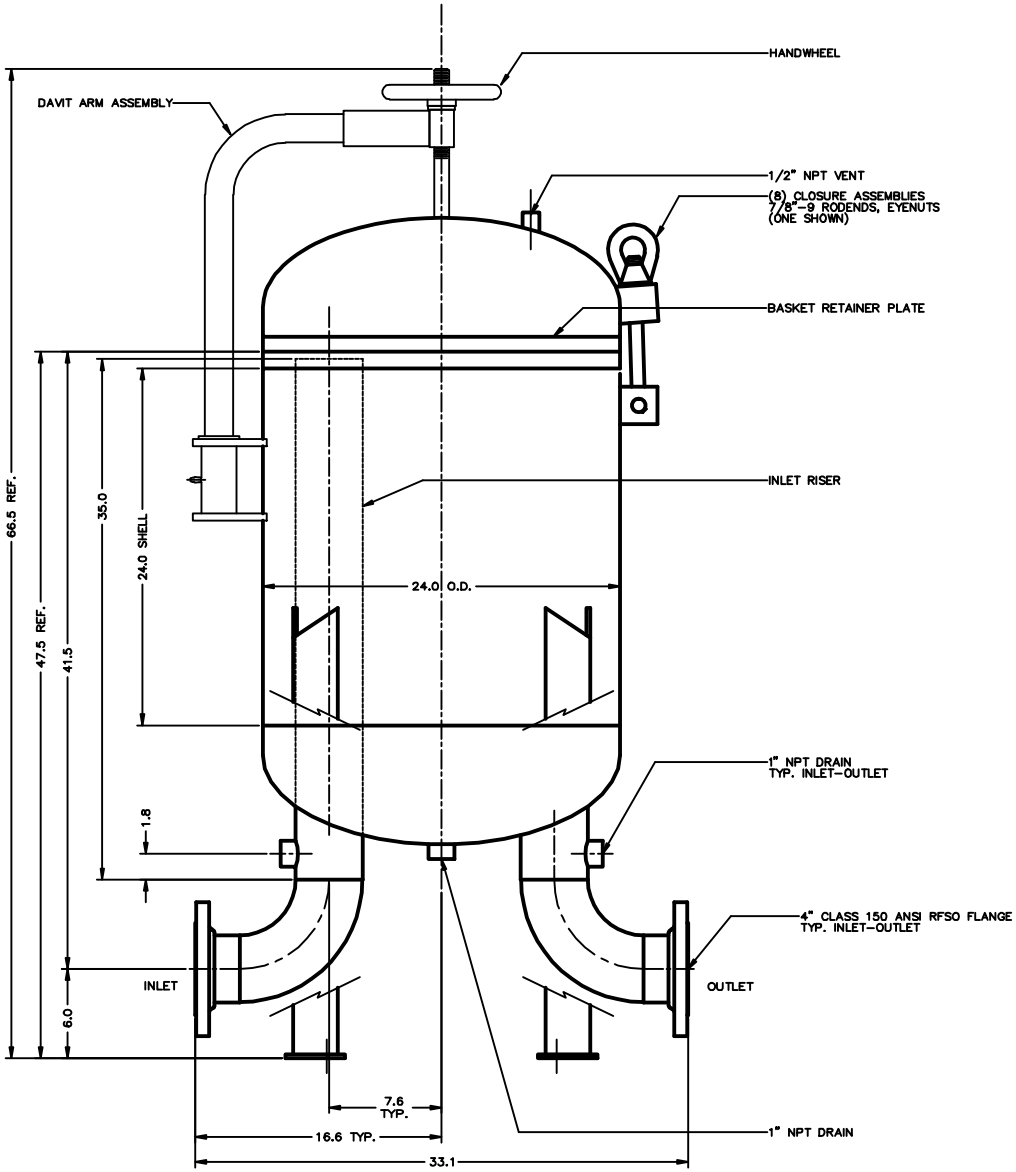

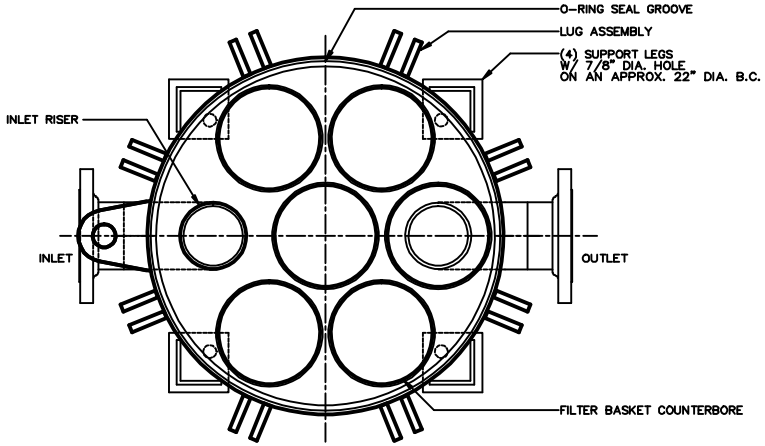

TOP VIEW

SHOWN W/O COVER & DAVIT ARM ASSEMBLY

NOTES:

1. CONSTRUCTION
   ALL WELDED CONSTRUCTION,
   ASME CODE STAMP AVAILABLE
2. MATERIALS OF CONSTRUCTION
   ALL WETTED PARTS TO BE CARBON STEEL OR 300 SERIES STAINLESS STEEL
   ALL WELDED ATTACHMENTS TO BE CARBON STEEL OR 300 SERIES STAINLESS STEEL,
   CLOSURE ASSEMBLIES TO BE SWING BOLT TYPE
3. DESIGN PRESSURE
   150 PSIG
4. DESIGN TEMPERATURE
   400°F
5. FILTER BAG BASKET
   304 STAINLESS STEEL
   4.4 ft2 AREA EACH BASKET
   26.4 ft2 AREA TOTAL EACH HOUSING
   9/64" DIA. HOLES ON 3/16" ST. CL'S (51% OPEN)
6. FILTER BAG
   (ORER SEPARATELY)
7. O-RING MATERIAL
   PER ORDER
8. MODEL NUMBER
   24304F1150****-*

LET.	REVISION	BY	DATE
Q	SEE MANUFACTURING DIMENSIONS DRAWING D10596.10	DMF	10DEC09

DO NOT SCALE DRAWING

UNLESS OTHERWISE SPECIFIED DIMENSIONS ARE IN INCHES

TOLERANCES

# PLACE DEC	# PLACE INT	ANGLE	SURFACE
±	±	± 1/4	±

FINISH

DEBURR ALL EDGES

FILLET BEND

EWR

ASS'Y REF.

DR. DMF

DATE 13AUG09

CH.

DATE

SCALE 1/4

MATERIAL SEE NOTES

ROSEDALE PRODUCTS, INC.
P.O. BOX 1060
ANN ARBOR, MI
48106

TITLE
MODEL 24
24304F1150****-*
ROSEDALE PRODUCTS

ITEM NO.

SHEET 1 of 1

DRAWING NO. D10596.10

REV. 0

NOTES:

1. MADE IN THE U.S.A.
2. U.S. PATENT No. 5,863,128
3. U.S. No. 3,852,076 AND INTERNATIONAL REGISTERED TRADEMARKS
4. MATERIAL: GLASS FILLED POLYPROPYLENE (PP) OR POLYVINYLIDENE FLUORIDE (PVDF) OR NATURAL POLYVINYLIDENE FLUORIDE (N-PVDF) OR ETHYLENE CHLOROTRIFLUOROETHYLENE (ECTFE).
5. INLET/OUTLET CONNECTION: 1" MNPT OR BSPT
6. SUCTION PORT CONNECTION:

   DEFAULT - 1/2" I.D. TUBING BARB WITH INTEGRATED CHECK VALVE

   ALTERNATE - 1/2" MNPT - SEE ALTERNATE CAP MODIFICATION DETAIL
7. FOR INSTALLATION RECOMMENDATIONS REFER TO MAZZEI TECHNICAL BULLETINS No. 4, No. 5, No. 6, No. 10 AND No. 11, WHICH CAN BE FOUND AT WWW.MAZZEI.NET.
8. MAZZEI INJECTOR CO., LLC.
   500 ROOSTER DR.
   BAKERSFIELD, CA 93307
   TEL: 661.363.6500
   WEB: WWW.MAZZEI.NET

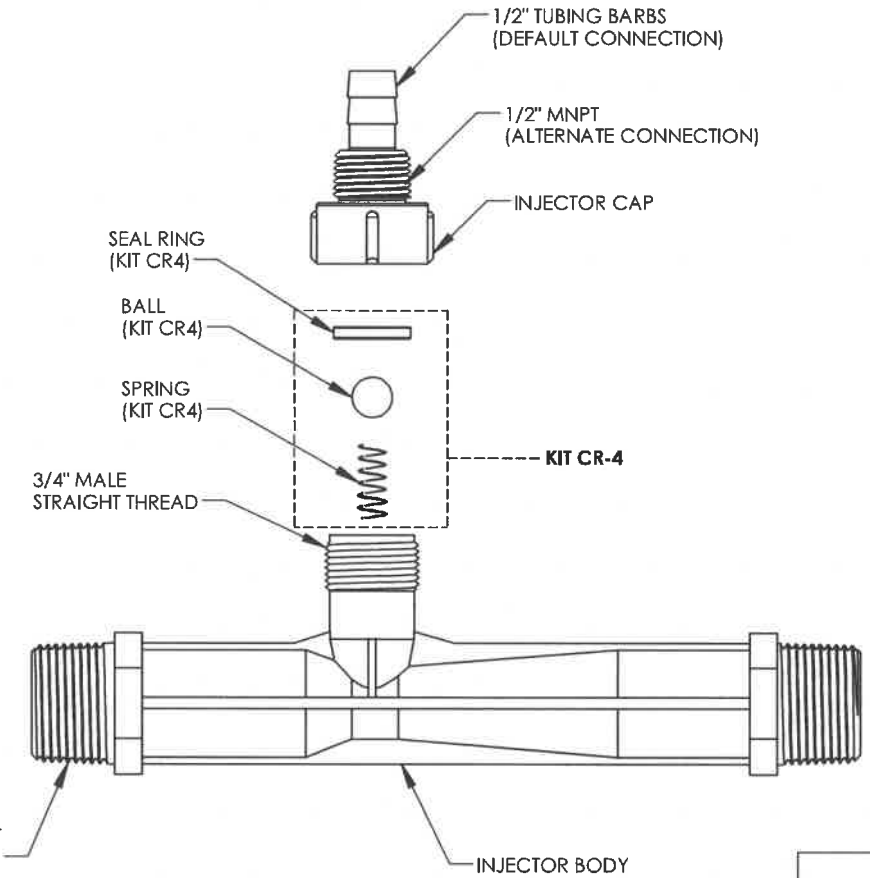

KIT CR-4	
TITLE	MATERIAL
BALL	TEFLON ® (PTFE)
SEAL RING	KEL-F ® (PCTFE)
SPRING	HASTELLOY C-22

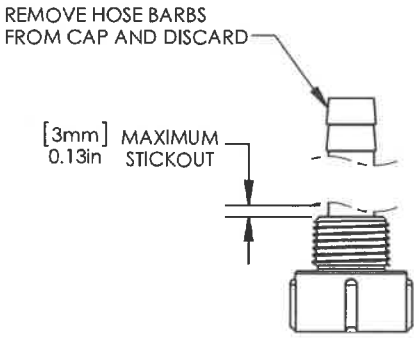

"CAP MODIFICATION DETAIL"
(ALTERNATE)

UNLESS OTHERWISE SPECIFIED DIMENSIONS ARE IN INCHES		mazzei	TITLE: 1" INJECTOR; MODEL 1078 3			
DRAWN:	T. JOHNS		DRAWING NO.: 1078 3			
DATE:	7/19/2013					
APPROVED:	P. BANKOWSKI	SIZE: A	WEIGHT: N/A	SCALE: 1:2	REV.: B	SHEET: 1 OF 2

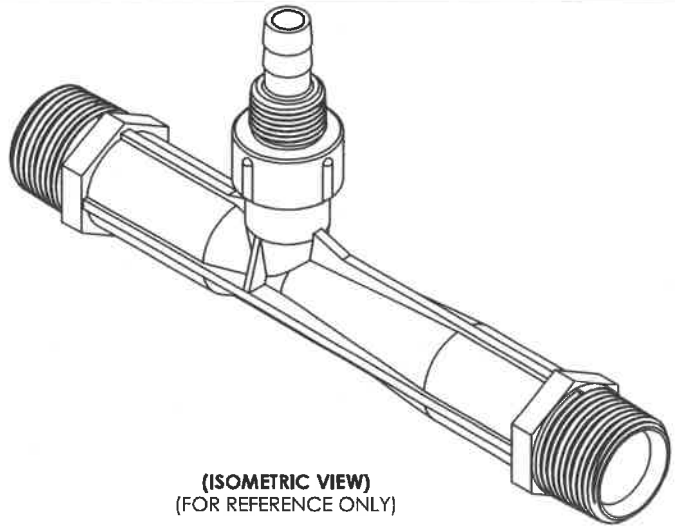

(ISOMETRIC VIEW)
(FOR REFERENCE ONLY)

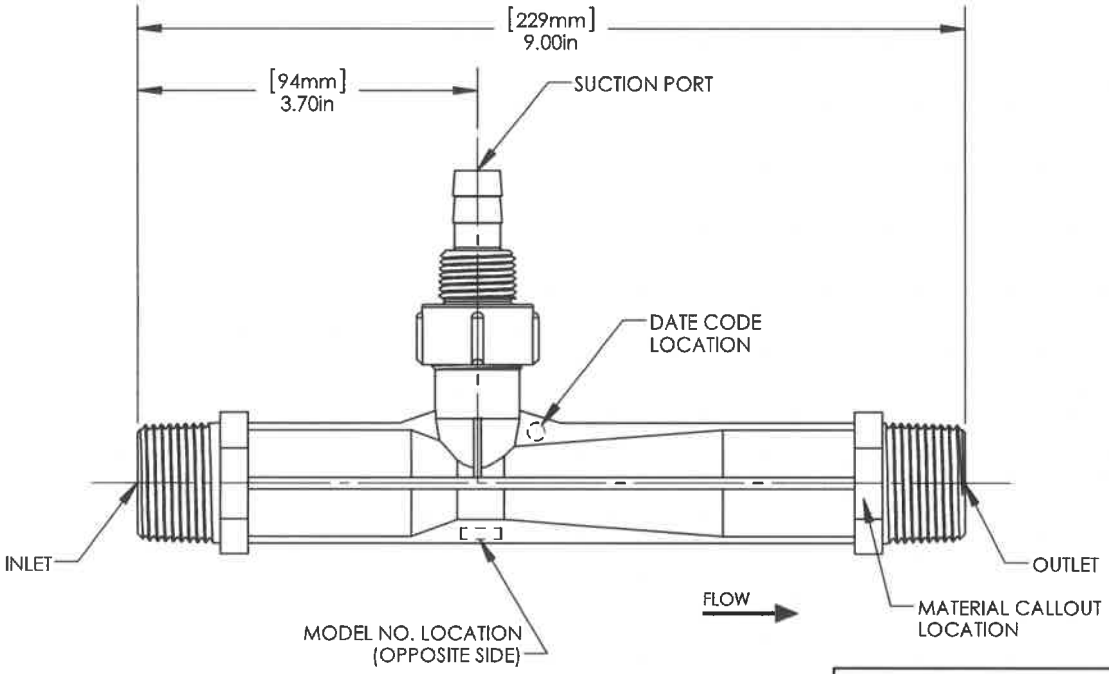

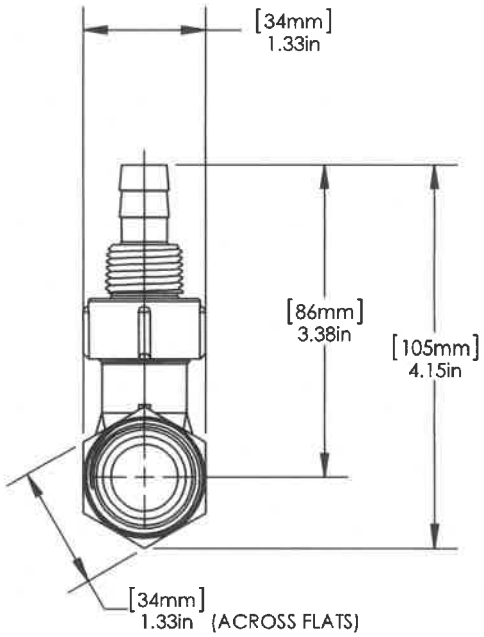

UNLESS OTHERWISE SPECIFIED DIMENSIONS ARE IN INCHES		mazzei	TITLE: 1" INJECTOR; MODEL 1078 3			
DRAWN:	T. JOHNS		DRAWING NO.: 1078 3			
DATE:	7/19/2013					
APPROVED:	P. BANKOWSKI	SIZE: A	WEIGHT: N/A	SCALE: 1:2	REV.: B	SHEET: 2 OF 2

NOTES:

1. MATERIAL OF CONSTRUCTION: TYPE 316L, STAINLESS STEEL
2. MTR/HEAT NUMBERS ARE PROVIDED AND SHALL MEET APPLICABLE MATERIAL SPECIFICATIONS.
3. INLET/OUTLET CONNECTION:

   1.00" NOMINAL DIA., ASME BPE-2008, SANITARY TRI-CLAMP FITTING
4. SUCTION PORT CONNECTION:

   .75" NOMINAL DIA., ASME BPE-2008, SANITARY TRI-CLAMP FITTING
5. WELDING JOINTS TO BE COMPLETE JOINT PENETRATION, WHERE POSSIBLE.
6. HYDROTESTING MAY BE PERFORMED IN ACCORDANCE WITH MAZZEI SOP NO. 6090.
7. DYE PENETRANT TESTING MAY BE PERFORMED IN ACCORDANCE WITH MAZZEI SOP NO. 6095.
8. CLEANED FOR PASSIVATION PER ASTM A380 GUIDELINES.
9. PASSIVATED PER ASTM A967 AND/OR ASTM B912 SPECIFICATION.
10. WELD MAP, NON DESTRUCTIVE TESTING (NDT), CLEANING, SURFACE FINISH CERTIFICATE AND INSPECTION REPORTS TO BE PROVIDED BY MAZZEI.

REVISIONS

REV.	DESCRIPTION	DATE	APPROVED
NC	RELEASED FOR SUBMITTAL.	10/16/2014	J. BENNETT
A	UPDATED NOTES & SHEET FORMAT.	3/13/2015	J. BENNETT

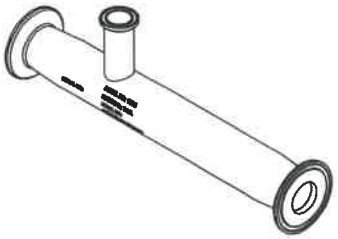

(ISOMETRIC VIEW)
(FOR REFERENCE ONLY)

SUBMITTAL DRAWING

SUBMITTAL NOTICE

ANY RECOMMENDATIONS FOR PRODUCT AND/OR SYSTEM DESIGN, WHETHER CONTAINED IN A DOCUMENT, WITHIN THIS DRAWING, COMMUNICATED BY ELECTRONIC MEANS OR GIVEN VERBALLY, ARE INTENDED SOLELY AS GUIDELINES TO ACTUAL SYSTEM DESIGN. SAID RECOMMENDATIONS ARE BASED UPON INFORMATION SUPPLIED BY OTHERS, THE ACCURACY OF WHICH IS BEYOND VERIFICATION BY MAZZEI INJECTOR CO. LLC. THEREFORE MAZZEI CANNOT AND DOES NOT WARRANT THE SUITABILITY OF ITS PRODUCTS FOR A PARTICULAR SERVICE NOR THE PERFORMANCE OF ANY SYSTEM CONTAINING COMPONENTS MADE OR SOLD BY MAZZEI.

CONFIDENTIALITY NOTICE

THE INFORMATION CONTAINED IN THIS DRAWING IS THE SOLE PROPERTY OF MAZZEI INJECTOR COMPANY LLC. ANY REPRODUCTION IN PART OR AS A WHOLE WITHOUT THE WRITTEN PERMISSION OF MAZZEI IS STRICTLY PROHIBITED.

DRAWING MAY NOT BE PRINTED FULL SIZE DO NOT SCALE

UNLESS OTHERWISE SPECIFIED
DIM ARE IN INCHES
TOL ON ANGLE ± .50°
2 PL ± .06 3 PL ± .030
INTERPRET DIM AND TOL PER ASME Y14.5M-1994

THIRD ANGLE PROJECTION

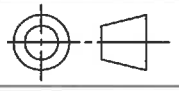

APPROVALS		DATE
DRAWN:	J. PEREZ	10/16/2014
CHECKED:	T. JOHNS	10/16/2014
APPROVED:	J. BENNETT	10/16/2014
QA:	-	
CUSTOMER APPROVAL:	-	
CUSTOMER:	N/A	

MAZZEI INJECTOR CO., LLC
500 ROOSTER DRIVE BAKERSFIELD, CA 93307
PHONE: (661) 363-6500 FAX: (661)363-7500
WWW.MAZZEI.NET

DESCRIPTION: INJECTOR; SSF01078ABBC0

SIZE:	JOB NO.:	DRAWING NUMBER:	REV:
B	N/A	SSF01078ABBC0-SUB	A

SCALE:	WEIGHT:	SHEET:
NONE	2.30 LBS	1 OF 2

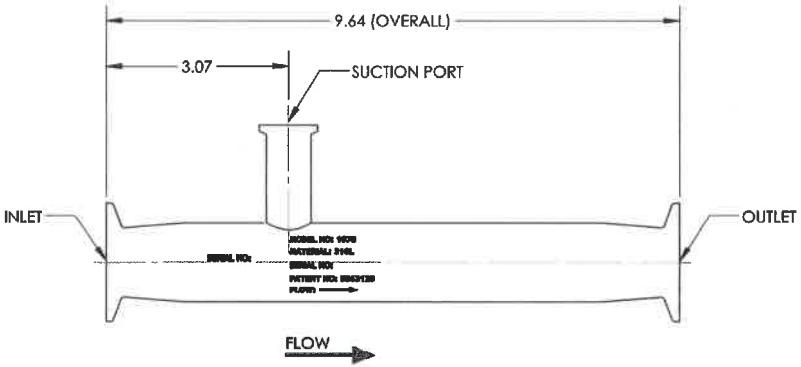

(SIDE VIEW)

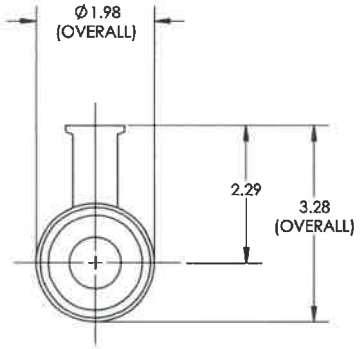

(END VIEW)

MAZZEI INJECTOR CO., LLC
500 ROOSTER DRIVE BAKERSFIELD, CA 93307
PHONE: (661) 363-6500 FAX: (661)363-7500
WWW.MAZZEI.NET

DESCRIPTION: INJECTOR; SSF01078ABBC0

SIZE:	JOB NO.:	DRAWING NUMBER:	REV:
B	N/A	SSF01078ABBC0-SUB	A
SCALE: 1:2	WEIGHT: 2.30 LBS	SHEET: 2 OF 2	

NOTES:

1. MATERIAL OF CONSTRUCTION: TYPE 316L, STAINLESS STEEL
2. MTR/HEAT NUMBERS ARE PROVIDED AND SHALL MEET APPLICABLE MATERIAL SPECIFICATIONS.
3. FLANGE BOLTS HOLES TO STRADDLE COMMON CENTERLINES, UNLESS OTHERWISE NOTED.
4. INLET/OUTLET CONNECTION:

   1.00" NOMINAL DIA., ANSI B16.5, CLASS 150, SCHED. 40, RAISED FACE - WELD NECK FLANGE
5. SUCTION PORT CONNECTION:

   .50" NOMINAL DIA., ANSI B16.5, CLASS 150, SCHED. 40, RAISED FACE - WELD NECK FLANGE
6. WELDING JOINTS TO BE COMPLETE JOINT PENETRATION, WHERE POSSIBLE.
7. HYDROTESTING MAY BE PERFORMED IN ACCORDANCE WITH MAZZEI SOP NO. 6090.
8. DYE PENETRANT TESTING MAY BE PERFORMED IN ACCORDANCE WITH MAZZEI SOP NO. 6095.
9. CLEANED FOR PASSIVATION PER ASTM A380 GUIDELINES.
10. PASSIVATED PER ASTM A967 SPECIFICATION.
11. WELD MAP, NON DESTRUCTIVE TESTING (NDT), CLEANING AND INSPECTION REPORTS TO BE PROVIDED BY MAZZEI.

REVISIONS

REV.	DESCRIPTION	DATE	APPROVED
A	RELEASED FOR SUBMITTAL.	3/18/2014	J. BENNETT
B	UPDATED NOTES & SHEET FORMAT.	3/13/2015	J. BENNETT

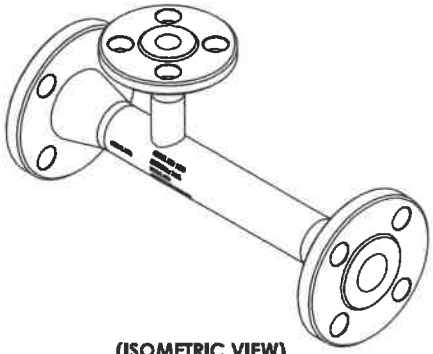

(ISOMETRIC VIEW)
(FOR REFERENCE ONLY)

SUBMITTAL DRAWING

SUBMITTAL NOTICE

ANY RECOMMENDATIONS FOR PRODUCT AND/OR SYSTEM DESIGN, WHETHER CONTAINED IN A DOCUMENT, WITHIN THIS DRAWING, COMMUNICATED BY ELECTRONIC MEANS OR GIVEN VERBALLY, ARE INTENDED SOLELY AS GUIDELINES TO ACTUAL SYSTEM DESIGN. SAID RECOMMENDATIONS ARE BASED UPON INFORMATION SUPPLIED BY OTHERS, THE ACCURACY OF WHICH IS BEYOND VERIFICATION BY MAZZEI INJECTOR CO. LLC. THEREFORE MAZZEI CANNOT AND DOES NOT WARRANT THE SUITABILITY OF ITS PRODUCTS FOR A PARTICULAR SERVICE NOR THE PERFORMANCE OF ANY SYSTEM CONTAINING COMPONENTS MADE OR SOLD BY MAZZEI.

CONFIDENTIALITY NOTICE

THE INFORMATION CONTAINED IN THIS DRAWING IS THE SOLE PROPERTY OF MAZZEI INJECTOR COMPANY LLC. ANY REPRODUCTION IN PART OR AS A WHOLE WITHOUT THE WRITTEN PERMISSION OF MAZZEI IS STRICTLY PROHIBITED.

DRAWING MAY NOT BE PRINTED FULL SIZE DO NOT SCALE

UNLESS OTHERWISE SPECIFIED
DIM ARE IN INCHES
TOL ON ANGLE ± .50°
2 PL ± .06 3 PL ± .030
INTERPRET DIM AND TOL PER ASME Y14.5M-1994

THIRD ANGLE PROJECTION

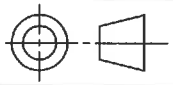

APPROVALS		DATE
DRAWN:	T. JOHNS	3/18/2014
CHECKED:	J. BENNETT	3/18/2014
APPROVED:	J. BENNETT	3/18/2014
QA:	-	
CUSTOMER APPROVAL:	-	
CUSTOMER:	N/A	

MAZZEI INJECTOR CO., LLC
500 ROOSTER DRIVE BAKERSFIELD, CA 93307
PHONE: (661) 363-6500 FAX: (661)363-7500
WWW.MAZZEI.NET

DESCRIPTION: INJECTOR; SSF01078AAA00

SIZE:	JOB NO.:	DRAWING NUMBER:	REV:
B	N/A	SSF01078AAA00-SUB	B

SCALE:	WEIGHT:	SHEET:
NONE	7.37 LBS	1 OF 2

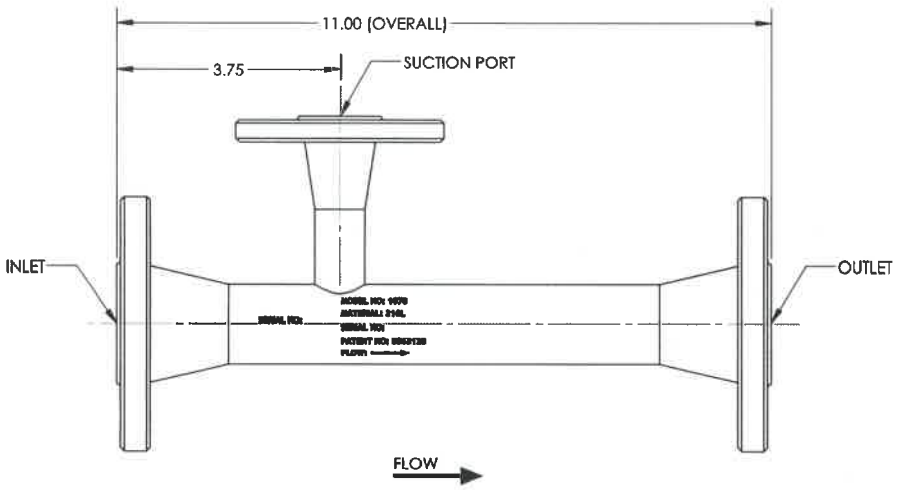

(SIDE VIEW)

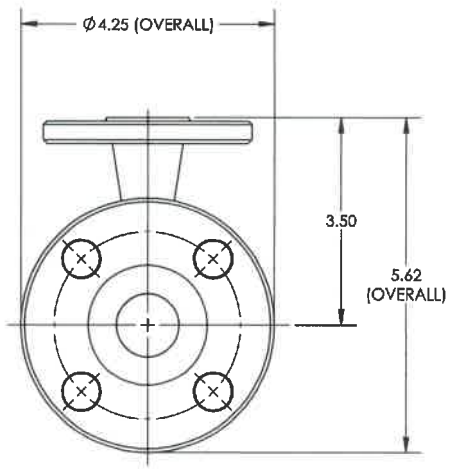

(END VIEW)

MAZZEI INJECTOR CO., LLC
500 ROOSTER DRIVE BAKERSFIELD, CA 93307
PHONE: (661) 363-6500 FAX: (661)363-7500
WWW.MAZZEI.NET

DESCRIPTION: INJECTOR; SSF01078AAA00			
SIZE: B	JOB NO.: N/A	DRAWING NUMBER: SSF01078AAA00-SUB	REV: B
SCALE: 1:2	WEIGHT: 7.37 LBS	SHEET: 2 OF 2	

Injector Performance Table

Water Suction Capacity

Model 1078-03

Operating Pressure PSIG		WATER SUCTION	
Injector INLET	Injector OUTLET	Motive Flow GPM	*Water Suction* GPH
5	0	5.5	101
	1		46.4
	2		22.1
	3		2.7
	4	*(4.0)	
10	0	7.7	105
	2		75.6
	5		41.7
	7		19.1
	8	*(8.1)	4.4
15	0	9.5	101
	5		79.9
	7		64.6
	10		34.2
	12	*(13.1)	16.9
20	0	10.9	98.2
	5		95.4
	10		69.9
	12		51.5
	15	*(17.3)	30.3
25	0	12.2	95.9
	5		96.6
	10		89.4
	15		68.1
	20	*(21.9)	31.8
30	0	13.4	94.3
	5		94.4
	10		94.4
	15		82.0
	20		55.4
	25	*(26.0)	17.9
35	0	14.5	93.9
	5		93.9
	10		93.9
	15		91.8
	20		74.1
	25	*(30.0)	47.2
40	0	15.5	93.1
	5		93.1
	10		93.1
	15		93.1
	20		91.8
	25		72.2
	30	*(34.4)	42.6
45	0	16.4	92.8
	5		92.8
	10		92.8
	15		92.8
	20		93.8
	25		86.9
	30		66.1
	35	*(38.7)	36.7
50	0	17.3	92.4
	5		92.4
	10		92.4
	15		92.4
	20		92.4
	25		92.3
	30		86.3
	35		64.3
	40	*(43.9)	35.0

Operating Pressure PSIG		WATER SUCTION	
Injector INLET	Injector OUTLET	Motive Flow GPM	*Water Suction* GPH
60	0	19.0	92.7
	5		92.7
	10		92.7
	15		92.7
	20		92.7
	30		93.0
	35		91.7
	40		77.1
	45	*(51.0)	44.4
70	0	20.5	93.3
	5		93.3
	10		93.3
	15		93.3
	20		93.3
	30		93.4
	40		92.3
	45		81.8
	50		54.5
	55	*(58.9)	28.7
80	0	21.9	93.8
	5		93.8
	10		93.8
	15		93.8
	20		93.8
	30		93.8
	40		94.7
	50		91.5
	60		52.8
	65	*(68.5)	33.0
90	0	23.2	94.4
	5		94.4
	10		94.4
	20		94.4
	30		94.4
	40		95.6
	50		94.3
	60		84.6
	70		39.5
	75	*(76.9)	20.5
100	0	24.5	94.1
	5		94.1
	10		94.1
	20		94.1
	30		94.1
	40		94.1
	50		93.9
	60		94.9
	70		81.3
	80	*(86.0)	30.6
120	0	26.8	94.4
	5		94.4
	10		94.4
	20		94.4
	30		94.4
	40		94.4
	50		94.4
	60		95.2
	70		94.4
	80		90.8
	90		61.2
	100	*(102)	22.3

**NUMBERS IN PARENTHESIS indicate the injector outlet pressure when suction stops (Zero Suction Point).*

Copyright© 2014 *REV August 2014*

Mazzei Injector Company, LLC
500 Rooster Drive, Bakersfield, CA 93307-9555 USA
TEL 661.363.6500 • FAX 661.363.7500 • www.mazzei.net

Injector Performance Table

Water Suction Capacity - METRIC

Model 1078-03

Operating Pressure kg/cm²		WATER SUCTION	
Injector Inlet	Injector Outlet	Motive Flow l/min	*Water Suction* l/hr
0.35	0.00	20.7	384
	0.07		175
	0.14		83.9
	0.21		10.3
	0.28	*(0.28)	
0.70	0.00	29.3	400
	0.14		286
	0.35		158
	0.49		72.6
	0.56	*(0.57)	16.7
1.05	0.00	35.9	383
	0.35		302
	0.49		244
	0.70		129
	0.84	*(0.92)	64.3
1.41	0.00	41.4	371
	0.35		361
	0.70		264
	0.84		195
	1.05	*(1.22)	114
1.76	0.00	46.3	363
	0.35		365
	0.70		338
	1.05		258
	1.41	*(1.54)	120
2.11	0.00	50.8	357
	0.35		357
	0.70		357
	1.05		310
	1.41		209
	1.76	*(1.83)	67.7
2.46	0.00	54.8	355
	0.35		355
	0.70		355
	1.05		347
	1.41		280
	1.76	*(2.11)	178
2.81	0.00	58.6	352
	0.35		352
	0.70		352
	1.05		352
	1.41		347
	1.76		273
	2.11	*(2.42)	161
3.16	0.00	62.2	351
	0.35		351
	0.70		351
	1.05		351
	1.41		355
	1.76		329
	2.11		250
	2.46	*(2.72)	138
3.52	0.00	65.5	349
	0.35		349
	0.70		349
	1.05		349
	1.41		349
	1.76		349
	2.11		326
	2.46		243
	2.81	*(3.09)	132

Operating Pressure kg/cm²		WATER SUCTION	
Injector Inlet	Injector Outlet	Motive Flow l/min	*Water Suction* l/hr
4.22	0.00	71.8	350
	0.35		350
	0.70		350
	1.05		350
	1.41		350
	2.11		352
	2.46		347
	2.81		291
	3.16	*(3.59)	168
4.92	0.00	77.5	353
	0.35		353
	0.70		353
	1.05		353
	1.41		353
	2.11		353
	2.81		349
	3.16		309
	3.52		206
	3.87	*(4.14)	108
5.62	0.00	82.9	355
	0.35		355
	0.70		355
	1.05		355
	1.41		355
	2.11		355
	2.81		358
	3.52		346
	4.22		200
	4.57	*(4.82)	125
6.33	0.00	87.9	357
	0.35		357
	0.70		357
	1.41		357
	2.11		357
	2.81		361
	3.52		357
	4.22		320
	4.92		149
	5.27	*(5.41)	77.8
7.03	0.00	92.7	356
	0.35		356
	0.70		356
	1.41		356
	2.11		356
	2.81		356
	3.52		355
	4.22		359
	4.92		307
	5.62	*(6.05)	115
8.44	0.00	101	357
	0.35		357
	0.70		357
	1.41		357
	2.11		357
	2.81		357
	3.52		357
	4.22		360
	4.92		357
	5.62		343
	6.33		231
	7.03	*(7.17)	84.5

**NUMBERS IN PARENTHESIS indicate the injector outlet pressure when suction stops (Zero Suction Point).*

Copyright© 2014 *REV August 2014*

Mazzei Injector Company, LLC
500 Rooster Drive, Bakersfield, CA 93307-9555 USA
TEL 661.363.6500 • FAX 661.363.7500 • www.mazzei.net

Injector Performance Table

Air Suction Capacity

Model 1078-03

Operating Pressure PSIG		AIR SUCTION	
Injector INLET	Injector OUTLET	Motive Flow GPM	*Air Suction* SCFH
5	0	5.2	24.3
	1		6.4
	2		2.7
	3		1.5
	4	*(4.0)	
10	0	7.4	40.1
	2		16.1
	5		4.1
	7		1.5
	8	*(8.1)	
15	0	9.1	48.6
	5		13.1
	7		7.8
	10		3.3
	12	*(13.1)	2.1
20	0	10.5	55.0
	5		22.1
	10		8.5
	12		5.6
	15	*(17.3)	3.2
25	0	11.7	60.9
	5		33.2
	10		14.3
	15		7.5
	20	*(21.9)	3.4
30	0	12.9	70.6
	5		46.4
	10		20.5
	15		11.2
	20		6.1
	25	*(26.0)	2.4
35	0	13.9	74.0
	5		52.9
	10		24.7
	15		13.6
	20		9.0
	25	*(30.0)	5.4
40	0	14.8	79.8
	5		57.9
	10		31.4
	15		18.9
	20		13.0
	25		8.0
	30	*(34.4)	4.3
45	0	15.7	85.9
	5		62.8
	10		38.3
	15		23.2
	20		15.7
	25		11.3
	30		7.0
	35	*(38.7)	4.5
50	0	16.6	87.7
	5		66.4
	10		42.3
	15		25.6
	20		16.1
	25		12.7
	30		8.6
	35		5.3
	40	*(43.9)	3.1

Operating Pressure PSIG		AIR SUCTION	
Injector INLET	Injector OUTLET	Motive Flow GPM	*Air Suction* SCFH
60	0	18.2	91.5
	5		76.3
	10		57.5
	15		34.5
	20		24.3
	30		14.0
	35		10.3
	40		7.3
	45	*(51.0)	4.5
70	0	19.6	100
	5		81.7
	10		67.5
	15		46.3
	20		31.8
	30		19.6
	40		12.4
	45		8.7
	50		7.0
	55	*(58.9)	4.5
80	0	21.0	105
	5		89.6
	10		74.8
	15		57.7
	20		39.5
	30		24.7
	40		17.0
	50		10.1
	60		6.3
	65	*(68.5)	4.5
90	0	22.3	112
	5		96.3
	10		81.7
	20		48.8
	30		29.4
	40		20.8
	50		14.9
	60		9.1
	70		5.8
	75	*(76.9)	4.2
100	0	23.5	116
	5		103
	10		87.7
	20		62.8
	30		37.1
	40		25.7
	50		18.0
	60		12.6
	70		8.3
	80	*(86.0)	5.5
120	0	25.7	124
	5		110
	10		97.9
	20		77.7
	30		46.9
	40		33.6
	50		25.0
	60		19.1
	70		14.1
	80		10.2
	90		6.7
	100	*(102)	5.1

**NUMBERS IN PARENTHESIS indicate the injector outlet pressure when suction stops (Zero Suction Point).*

Copyright© 2014 *REV August 2014*

Mazzei Injector Company, LLC
500 Rooster Drive, Bakersfield, CA 93307-9555 USA
TEL 661.363.6500 • FAX 661.363.7500 • www.mazzei.net

Injector Performance Table

Air Suction Capacity - METRIC

Model 1078-03

Operating Pressure kg/cm²		AIR SUCTION	
Injector INLET	Injector OUTLET	Motive Flow l/min	*Air Suction* l/min
0.35	0.00	19.9	11.4
	0.07		3.0
	0.14		1.2
	0.21		0.70
	0.28	*(0.28)	
0.70	0.00	28.1	18.9
	0.14		7.6
	0.35		1.9
	0.49		0.73
	0.56	*(0.57)	
1.05	0.00	34.4	22.9
	0.35		6.1
	0.49		3.7
	0.70		1.5
	0.84	*(0.92)	1.0
1.41	0.00	39.7	25.9
	0.35		10.4
	0.70		4.0
	0.84		2.6
	1.05	*(1.22)	1.5
1.76	0.00	44.4	28.7
	0.35		15.7
	0.70		6.7
	1.05		3.5
	1.41	*(1.54)	1.6
2.11	0.00	48.7	33.3
	0.35		21.9
	0.70		9.6
	1.05		5.3
	1.41		2.8
	1.76	*(1.83)	1.1
2.46	0.00	52.6	34.9
	0.35		24.9
	0.70		11.6
	1.05		6.4
	1.41		4.2
	1.76	*(2.11)	2.5
2.81	0.00	56.2	37.7
	0.35		27.3
	0.70		14.8
	1.05		8.9
	1.41		6.1
	1.76		3.8
	2.11	*(2.42)	2.0
3.16	0.00	59.6	40.5
	0.35		29.6
	0.70		18.1
	1.05		10.9
	1.41		7.4
	1.76		5.3
	2.11		3.3
	2.46	*(2.72)	2.1
3.52	0.00	62.8	41.4
	0.35		31.3
	0.70		19.9
	1.05		12.1
	1.41		7.6
	1.76		6.0
	2.11		4.1
	2.46		2.5
	2.81	*(3.09)	1.4

Operating Pressure kg/cm²		AIR SUCTION	
Injector INLET	Injector OUTLET	Motive Flow l/min	*Air Suction* l/min
4.22	0.00	68.8	43.1
	0.35		36.0
	0.70		27.1
	1.05		16.3
	1.41		11.5
	2.11		6.6
	2.46		4.8
	2.81		3.4
	3.16	*(3.59)	2.1
4.92	0.00	74.3	47.4
	0.35		38.5
	0.70		31.8
	1.05		21.8
	1.41		15.0
	2.11		9.2
	2.81		5.8
	3.16		4.1
	3.52		3.3
	3.87	*(4.14)	2.1
5.62	0.00	79.5	49.8
	0.35		42.2
	0.70		35.3
	1.05		27.2
	1.41		18.6
	2.11		11.6
	2.81		8.0
	3.52		4.8
	4.22		2.9
	4.57	*(4.82)	2.1
6.33	0.00	84.3	53.2
	0.35		45.4
	0.70		38.5
	1.41		23.0
	2.11		13.8
	2.81		9.8
	3.52		7.0
	4.22		4.3
	4.92		2.7
	5.27	*(5.41)	2.0
7.03	0.00	88.8	55.0
	0.35		48.6
	0.70		41.4
	1.41		29.6
	2.11		17.5
	2.81		12.1
	3.52		8.5
	4.22		5.9
	4.92		3.9
	5.62	*(6.05)	2.6
8.44	0.00	97.3	58.8
	0.35		52.3
	0.70		46.2
	1.41		36.7
	2.11		22.1
	2.81		15.8
	3.52		11.8
	4.22		9.0
	4.92		6.6
	5.62		4.8
	6.33		3.1
	7.03	*(7.17)	2.4

**NUMBERS IN PARENTHESIS indicate the injector outlet pressure when suction stops (Zero Suction Point).*

Copyright© 2014 *REV August 2014*

Mazzei Injector Company, LLC
500 Rooster Drive, Bakersfield, CA 93307-9555 USA
TEL 661.363.6500 • FAX 661.363.7500 • www.mazzei.net

Steel Tank

Open-Top Weir

Overview:

18,100 gallon open top weir tanks from Rain for Rent come with over and under weirs for separation of oils or particulates. This tank has a standard “V” shaped floor for ease of draining all stored liquids completely through a 4” butterfly valve with Buna seals standard.

Features:

Store and separate liquids with confidence with Rain for Rent’s 18,100 gallon open top weir tank. Permanently attached axels for maximum maneuverability allow this 18,100 gallon tank to be moved with ease on the jobsite and a safety staircase ensures proper protection for workers on site.

Specs:

Manways	Three 22” hatches
Material	Steel
Capacity	18,100 gallons
Dry weight	27,000 lbs.
Footprint:	516” x 96” x 126”

Accessories:

- Spillguard
- Suction and discharge piping
- Level gauges

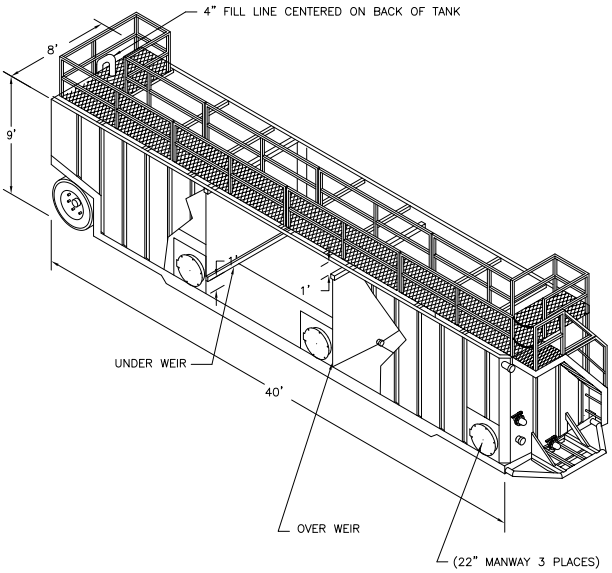

PUMPS • TANKS • FILTRATION • PIPE • SPILLGUARDS

Rain for Rent is a registered trademark of Western Oilfields Supply Company. Features and specifications are subject to change without notice.

Liquid Ingenuity®
800-742-7246
rainforrent.com

ZENNER PERFORMANCE
Cast Iron Turbine Meters
Sizes 2” through 12”

INTRODUCTION: ZENNER PERFORMANCE Turbine Meters are designed for applications where flows are usually moderate to high and occasionally low. They are used in measurement of potable cold water in commercial and industrial services where flows are in one direction.

OPERATION: Water flows through the turbine section which causes the rotor to turn proportionately to the quantity of water flowing through the meter. A drive magnet transmits the motion of the rotor to a driven magnet located within the hermetically sealed register. The magnet is connected to a gear train which translates the rotations into volume totalization displayed on the register dial face. The only moving parts in the meter are the rotor assembly and vertical shaft .

CONSTRUCTION: ZENNER PERFORMANCE Turbine Meters consist of three basic components: Cast Iron Epoxy Coated main case, measuring element, and sealed register. The measuring element assembly includes the rotor assembly, vertical shaft and a calibration vane which eliminates the need for calibration change gears.

MAINTENANCE: ZENNER PERFORMANCE Turbine Meters are engineered and manufactured to provide long-term service and operate virtually maintenance free. If necessary the universal measuring element (UME) can be removed from the main case for maintenance. Interchangeability of certain parts between like sized meters minimizes spare parts inventory.

CONFORMANCE: ZENNER PERFORMANCE Turbine Meters are tested and comply with AWWA C701 Class II performance standards.

STRAINERS: ZENNER PERFORMANCE recommends the use of a separate strainer upstream from the turbine meter. Strainers reduce the chance of damage to the rotor as well as the frequency in which it must be removed for inspection. The lack of a strainer may void the warranty of the turbine meter.

CONNECTIONS: Companion flanges for installation of meters on various pipe types and sizes are available in bronze or cast iron.

PMT04

PMT06

ZENNER PERFORMANCE
15280 Addison Rd #340, Addison, TX 75001, (972) 386-6611, Fax (972) 386-1814
www.zennerusa.com

ZENNER PERFORMANCE
All that counts.

MODEL		PMT02	PMT03	PMT04	PMT06	PMT08	PMT10	PMT12
SIZE		2"	3"	4"	6"	8"	10"	12"
Flow rate maximum intermittent	USGPM	400	550	1250	2500	4500	7000	8800
Maximum continuous	USGPM	200	450	1000	2000	3500	5500	6200
Optimum operating flow range	USGPM	3 - 200	5 - 550	10 - 1250	20 - 2500	30 - 4500	50 - 7000	90 - 8800
Low flow rate	USGPM	2	2-1/2	5	12	20	45	65
Start-up flow rate	USGPM	7/8	1-1/8	1-3/8	7-1/2	8	15	15
Maximum Working Pressure	P.S.I.	160	160	160	160	160	160	160
Maximum Temperature	Deg. F	140	140	140	140	140	140	140
Length	Inches	7-7/8	8-7/8	9-7/8	11-7/8	13-3/4	17-3/4	19-5/8
Height	Inches	9-1/2	10-1/4	11	12-7/8	14-1/4	19	20-1/4
Width	Inches	7	7-1/2	9	11	13-1/2	16	19
Weight	Pounds	24	32	38	84	126	225	255
Number of holes per flange		4	4	8	8	8	12	12

ZENNER PERFORMANCE
15280 Addison Rd #340, Addison, TX 75001, (972) 386-6611, Fax (972) 386-1814
www.zennerusa.com

RHODE ISLAND
DEPARTMENT OF ENVIRONMENTAL MANAGEMENT
235 Promenade Street, Providence, RI 02908-5767 TDD 401-222-4462

REMEDIAL APPROVAL LETTER
File No. SR-10-0410
(Formerly Case No. 2003-064)

May 10, 2019

David W. Fish, P.E.
Administrator of Project Management
R.I. Department of Transportation
2 Capital Hill
Providence, Rhode Island 02903

RE: Proposed Salt and Sand Storage Building
RIDOT East Providence Maintenance Facility
691 Warren Avenue
East Providence, Rhode Island
Plat Map 507, Part of East Shore Expressway

Dear Mr. Fish:

On January 8, 2019 the Rhode Island Department of Environmental Management's (the Department) Office of Waste Management (OWM) re-codified 250-RICR-140-30-1, the Rules and Regulations for the Investigation and Remediation of Hazardous Material Releases (the Remediation Regulations) consistent with the RI Administrative Procedures Act. The purpose of these regulations is to create an integrated program requiring reporting, investigation and remediation of contaminated sites in order to eliminate and/or control threats to human health and the environment in a timely and cost-effective manner. A Remedial Approval Letter (RAL) is a document used by the Department to approve remedial actions at contaminated sites that do not involve the use of complex engineered systems or techniques (e.g. groundwater pump and treat systems, soil vapor extraction systems, etc.).

In the matter of the above-referenced property (the Site), the Department's OWM is in receipt of the following documentation submitted pursuant to the Remediation Regulations in response to the reported release at the Site:

1. **Construction Soil Management Plan**, received by the Department on April 30, 2019, and prepared by Gordon R. Archibald, Inc.;

This document fulfills the requirements of Section 1.9 (Risk Management) and Section 1.10 (Remedial Action Work Plan (RAWP)) of the Remediation Regulations.

The preferred remedial alternative involves construction of a new Salt & Sand Storage Building on the Warren Avenue Property over an area of historical solid waste was identified and capped in place. The plan is to excavate out all solid waste material and contaminated soils and properly dispose of the material at a licensed disposal facility. The foot print of the proposed structure and the loading area will act as an appropriate cap for any remaining contamination.

Based upon review and consideration of the above referenced documents, the Department approves the Remedial Action Work Plan (RAWP) through this RAL provided that:

1. All work must be performed in accordance with all applicable regulations and the Department approved RAWP.

2. Start of the work described in the Department approved RAWP must be initiated within six (6) months of issuance of this RAL.

3. Prior to initiating any remedial activities, the Department shall be provided with a list of all contractors, and their respective contact information, that will be used on Site to complete the remedial work described in the Department approved RAWP. The Department shall be notified, when feasible, a minimum of five (5) working days in advance of any changes in contractors and/or consultants involved with the remedial work on this Site. The notification must be promptly supplied in writing with complete contact information for each new contractor or consultant (including but not limited to company name and address, contact name and address, contact telephone number and e-mail address).

4. All excavated regulated soil, if not approved for encapsulation onsite, shall be disposed of off-site at an appropriately licensed disposal facility in accordance with all local, State, and Federal laws. Copies of the material shipping records and manifests associated with the disposal of the material shall be included along with the Closure Report.

5. Areas of the site where contaminated soils are to be excavated must be staged and temporarily stored in a designated area, as proposed in the RAWP, of the site with proper polyethylene covers. Any stockpiled materials, including clean fill, must be underlain and covered with polyethylene sheeting and be secured at the end of each day with all appropriate erosion and sediment controls to limit the loss of the cover and protect against storm-water and wind erosion (i.e. hay bales, rocks, silt fencing). These appropriate sedimentation and erosion controls must be in place and in proper working order at all times until all disturbed areas are stabilized and capped as proposed. Within reason, the storage location will be selected to limit the unauthorized access to the materials (i.e. away from public roadways/walkways). No regulated soil will be stockpiled on-site for greater than thirty (30) days. In the event that stockpiled soils pose a risk or threat of leaching hazardous materials, a proper leak-proof container (i.e. drum or lined roll-off) or secondary containment will be required and utilized.

6. The OWM no longer requires the submittal of analytical data prior to clean fill being brought to a Site. It is the sole responsibility of the Performing Party and their consultant to analyze the material, certify that the material meets the Department's Residential Direct Exposure Criteria (RDEC), as defined by the Remediation Regulations, for all constituents, and is suitable for use on the Site. The OWM strongly suggests that enough representative samples of the clean fill are collected prior to moving the material to the Site to satisfy the Performing Party and their consultant that the material meets the RDEC. Please note that the OWM reserves its rights to sample the fill, if suspect, to confirm compliance with the RDEC.

7. All regulated soil remaining onsite shall be encapsulated by an engineered control consistent

with those described in the Department approved RAWP.

8. Dust suppression techniques (i.e. watering) must be employed at all times during all soil disturbing/handling activities at the site in order to minimize the generation of fugitive dust.

9. Please note that if soil exceeding the Department's Residential Direct Exposure Criteria (RDEC) is to remain onsite then a draft Environmental Land Usage Restriction (ELUR) and Soil Management Plan (SMP) must be submitted to the OWM for review and approval prior to recording.

10. Within sixty (60) days of completion of the work described in the Department approved RAWP, a Closure Report detailing the remedial action and including any disposal documentation shall be submitted to the OWM.

11. Within sixty (60) days of completion of the work described in the Department approved RAWP, the final Department approved ELUR and SMP shall be recorded in the City of East Providence Land Evidence Records for the property and a stamped, certified copy returned to the Department within fifteen (15) days of recording. Upon receipt of a copy of the recorded (stamped) ELUR and SMP, the OWM will issue a Letter of Compliance.

12. Following recording of the ELUR, the site shall be maintained and annually inspected to evaluate the compliance status of the site with the ELUR. Within thirty (30) days of each annual inspection, an evaluation report shall be prepared and submitted to the OWM detailing the findings of the inspection and noting any compliance violations at the site.

13. Any changes in the activities detailed in the RAWP shall be reported to the OWM by telephone within one (1) working day and in writing within five (5) business days.

14. The OWM shall be notified forty-eight (48) hours prior to initiating the remedial activities at the site associated with the Department approved RAWP.

15. The OWM shall be immediately notified of any site or operation condition that results in non-compliance with this RAL.

At this time, the OWM offers its concurrence with the proposed remedial action for the property. The Department approves the RAWP provided that all activities and procedures detailed in the RAWP are strictly adhered to. Furthermore, this letter continues to place primary responsibility for the construction, operation, maintenance, and monitoring of the approved RAWP and its associated implementation on RI Department of Transportation. As the Responsible Party and Performing Party, RI Department of Transportation is expected to implement the RAWP in an expeditious and professional manner that prevents non-compliance with this RAL and said RAWP, and is protective of human health and the environment.

Please note that at this time the Department does not approve the ELUR for recording in the Land Evidence Records with the City of East Providence. Please forward an electronic version of the draft ELUR and the post-construction SMP in red line / strikeout format for Department review

and approval. The draft ELUR and SMP shall be reviewed and approved by the Department, followed by recording of the approved ELUR, at the completion of all remedial work.

This RAL does not remove your obligation to obtain any other necessary permits from other local, State, or Federal agencies.

If you have any questions regarding this letter or would like the opportunity to meet with Department personnel, please contact me by telephone at (401) 222-2797, ext. 7102, or by E-mail at jeff.crawford@dem.ri.gov.

Sincerely,

Jeffrey Crawford, Project Manager
Principal Environmental Scientist
Office of Waste Management

Authorized by,

Kelly Owens

Kelly Owens
Supervising Engineer
Office of Waste Management

Cc: Stephen Cadorette, Gordon R. Archibald, Inc.

CONSTRUCTION SOIL MANAGEMENT PLAN

Rhode Island Department of Transportation
East Providence Maintenance Facility
Warren Avenue
East Providence, Rhode Island
RIDEM File Number: SR-10-0410
Former File Number: 2003-064

March 2019

Prepared for:

Rhode Island Department of Transportation
Division of Highway & Bridge Maintenance
360 Lincoln Avenue
Warwick, Rhode Island 02888

Prepared by:
Gordon R. Archibald, Inc.
200 Main Street
Pawtucket, Rhode Island

Gordon R. Archibald, Inc.
Civil and Environmental Engineers

Table of Contents

1.0 Introduction 1
2.0 Background 1
2.1 Proposed Project 1
2.2 Regulatory Correspondence 1
3.0 Site Management 3
3.1 Summary of Former Site Conditions 3
3.2 Soil Management 4
3.3 Groundwater Management 6
3.4 Other Requirements 8
4.0 Construction Specifications 8

Figures

Figure 1 – Site Locus Plan
Figure 2 – Boring Location Plan

Tables

Composite Soil Sample Laboratory Analytical Data Table
Groundwater Sample Laboratory Analytical Data Table

Plans

C-001 General Plan
C-002 Grading Plan
C-003 Notes and Legend
C-004 Details
C-005 Details 2

Appendices

Appendix A – Soil Boring Logs
Appendix B – Laboratory Analytical Data Report – Composite Soil Samples
Appendix C – Laboratory Analytical Data Report – Groundwater Sample
Appendix D – Contract Specifications

1.0 Introduction

On behalf of the Rhode Island Department of Transportation (RIDOT), Gordon R. Archibald, Inc. (GRA) has prepared this *Construction Soil Management Plan* (CSMP) for the property known as the East Providence Salt Storage and Maintenance Facility, at 691 Warren Avenue in East Providence, Rhode Island. **Figure 1** is a Site Locus Plan.

This CSMP has been prepared to establish procedures that will be followed during the construction activities at the above facility. The goal of this CSMP is to manage soil and potential groundwater exposures which have the potential to occur as a result of construction activities associated with the planned site improvements at the facility.

2.0 Background

2.1 Proposed Project

The Rhode Island Department of Transportation (RIDOT) is advancing in the design to construct a salt building at the RIDOT's maintenance facility at 691 Warren Avenue in East Providence. The proposed structure is an 80-foot wide, 144-foot long salt storage building with a 24-wide, 60-foot long loading area attached to it. The salt storage portion of the structure has a footprint of 11,520 square foot and the loading area has a footprint of 1,440 square feet. The proposed salt shed foundation is anticipated to be a spread footing along the exterior walls. GRA used the following calculation to determine the volume to be removed as part of the proposed development.

Perimeter: ……556 ft
Assume Depth:……10 ft
Assume Width: ……...10 ft

Volume:……55,600 cf
…….2,059 cy

Tonnage: …….3,089 tons
Say: …….3,100 tons

Rhode Island Resource Recovery Corporation
Acceptance Criteria:…1 Sample / 1,000 tons

Required Samples: ……4 total
Proposed Samples:….4 total (3 dry / 1 wet)

2.2 Regulatory Correspondence

The Rhode Island Department of Environmental management – Office of Waste Management (RIDEM-OWM) issued a *Remedial Decision Letter (4th Amendment)* dated September 2011 which approved the construction of the existing maintenance facility and a proposed salt storage facility. The RIDEM-OWM approved project included the removal of soils as well as creating barriers against direct exposure to soils that would remain on site. There are areas of known and suspect soil and groundwater impacts at the facility which necessitated monitoring during construction, management and/or disposal.

A draft *Post Construction Soil Management Plan* (SMP), was attached to a February 2009 *Remedial Action Work Plan / Limited Design Investigation Report* prepared by SAGE Environmental (SAGE).

Remedial Action Work Plan / Limited Design Investigation Report

A *Remedial Action Work Plan (RAWP) / Limited Design Investigation Report* dated February 2009, prepared by SAGE Environmental provided the following information:

The preferred remedial alternative, as stated in the SIR, included the following measures:

i. Installation of engineered barriers meeting the Department's two (2) foot equivalent policy for capping contaminated sites. As part of the continuing use of the property as a RIDOT Highway and Maintenance Garage, construction of a new Maintenance and Salt Storage Facility is also proposed;
ii. Installation of a Department-approved active sub-slab ventilation system under all permanent structures to monitor, and prevent the build-up of any landfill gases;
iii. Installation of a fence (i.e. an engineered barrier) is also planned to further restrict access and potential exposure to Site contaminants;
iv. Implementation of a Construction Soil Management Plan (CSMP) to manage contaminated media that may be encountered during planned construction activities. As a component of this CSMP, air monitoring and dust suppression techniques will be employed (if needed) during the construction process to reduce potential airborne emission of Site contaminants.

Sub-slab Ventilation Systems

The sub-slab system is designed for active removal of landfill gas from beneath slab-on-grade foundations. Floor slabs will consist of a minimum of four inches poured concrete set over a minimum of six inches of gas-permeable compacted gravel or crushed stone. Three-inch-diameter vent laterals will be installed beneath floor slabs and piped individually to an above ground location.

Cap Design Requirements

A *Cap Design Requirement* letter dated February 2010, prepared by SAGE Environmental provided the following information:

The Rhode Island Department of Environmental Management (RIDEM) Solid Waste Section has specified that the cap over those portions of the Site within the limits of the former landfill be capped with either two feet of soil cover or a combination of eighteen inches of clean fill and four inches of pavement.

The RIDOT paving specification for the facility calls for a paving thickness of six inches (two inches more than the four inches specified above).

Remedial Approval Letter

The Rhode Island Department of Environmental Management issued a *Remedial Approval Letter (4th Amendment)* dated September 2011 for the facility which stated:

> "The Office of Waste Management offers its concurrence with the [Remedial Action Work Plan] RAWP that details of the following proposed remedial action at the property:
>
> 1. Construction of a new Maintenance and Salt Storage Facility on the Warren Avenue property in East Providence as part of the continuing use of the property as a R.I. Department of Transportation Highway and Maintenance Garage;
>
> 2. Conversion of the previously approved Sub-Slab Ventilation system to a Passive Soil Vapor Extraction System based upon pilot study testing. The system shall operate passively under all permanent structures to monitor, treat, and prevent the build-up of any landfill gases;
>
> 3. Installation of engineered barriers meeting the Department's two (2) foot or equivalent policy for capping contaminated sites including but not limited to building foundations, walkways, parking surfaces, and other building amenities ect. to prevent exposure to underlying soils. In areas where the solid waste will remain, the Department requires two (2) feet of soil cover or a combination of eighteen (18) inches of soil and four (4) inches of pavement;

3.0 Site Management

3.1 Summary of Former Site Conditions

The *Remedial Action Work Plan (RAWP) / Limited Design Investigation Report* prepared by SAGE provided the following information:

> Site investigations have identified concentrations of metals, volatile organic compounds (VOCs), total petroleum hydrocarbons (TPH), and polynuclear aromatic hydrocarbons (PAHs) in soils in exceedance of RIDEM Method 1 Industrial / Commercial Direct Exposure Criteria (I/C-DEC). It should be noted that environmental investigations conducted at the property have identified impacts to surficial and near surface soils which are likely the result of past Site usage.
>
> An occasional intermittent GB exceedance of vinyl chloride in overburden groundwater has also been identified at the Site in two monitoring wells. As a result of historic and continued salt storage, groundwater has also been impacted by chloride.
>
> In addition, landfill gas, predominantly methane, has been identified at the Site area previously subjected to landfill use.

3.2 Soil Management

GRA was onsite in January 25, 2019 to collect composite soil samples to evaluate potential soil management options for the proposed Salt Storage Building project. The composite samples were collected from Geoprobe soil borings advanced at the extent of the proposed salt storage building. The soil boring locations are shown on **Figure 2**. Soil boring logs are provided in **Appendix A**. Field observations made during the site investigation activities identified evidence of fill materials consisting of metal, glass, plastic, wood, and miscellaneous debris at each boring location which is likely associated with the former landfill activities at the property.

Each soil boring was advanced to ten feet below grade. The soil was collected in dedicated liners at five-foot intervals. The soil samples were extracted and segregated by their location in the unsaturated or saturated zones. The unsaturated soil samples were intended to represent "dry excavated soils" and the saturated zone samples were intended to represent "wet excavated soils". The previous site investigation information appeared to indicate that groundwater would be at approximately seven to eight feet below grade. Based on the assumed foundation excavation depth of ten feet it was assumed that approximately 75% of the foundation excavation soils would be "dry" and 25% of the foundation excavation soils would be "wet".

A total of four composite soil samples were collected as part of the January 2019 investigation. Three dry composite samples (CS-1, CS-2, and CS-3) and one wet composite sample (CS-4) were submitted for laboratory analysis for the following parameters. The laboratory analysis protocol was intended to comply with the Rhode Island Resource Recovery Corporations (RIRRC) Alternate Cover Policy Table 1 Testing Requirements for general contaminated soils. The composite soil sample laboratory analytical data report is provided in **Appendix B**. The composite soil sample laboratory analytical data is attached in the Tables section.

- Moisture
- Flash Point
- RCRA 8 Metals
- Semi-Volatile Organic Compounds (SVOCs)
- Polychlorinated Biphenyl (PCBs)
- Free Liquids
- pH
- TCLP RCRA 8 Metals
- Volatile Organic Compounds (VOCs)
- Total Petroleum Hydrocarbons (TPH)

<u>Laboratory Analytical Data – Composite Soil Samples</u>

The composite soil sample laboratory analytical data was compared to the RIDEM-OWM Remediation Regulations Industrial/Commercial Direct Exposure Limits (I/C-DEC). The following composite soil sample concentrations were not compliant with the I/C-DEC:

Compounds exceeding I/C-DEC	Sample ID
Semivolatile Organic Compounds (SVOCs)	
Benzo(a)anthracene	CS-4
Benzo(a)pyrene	CS-1, CS-2, CS-3, CS-4
Benzo(f)fluoranthene	CS-4
Dibenz(a,h)anthracene	CS-1, CS-4
Indeno(1,2,3-cd)pyrene	CS-4
Metals	
Arsenic	CS-4
Lead	CS-3, CS-4

The 2019 composite soil sample lead, arsenic, and SVOCs concentrations were consistent with the previous site investigation soil concentrations from the area where the proposed salt storage building will be located.

Solid Wastes

As previously mentioned, significant portions of the property were previously used as a landfill. Prior to the area being used as a landfill, review of historic records suggests that the area may have been briefly quarried which then became a pond which was later used as a landfill.

Observations made during the 2019 investigation and previous site investigations identified evidence of fill material consisting of varying amounts of metal, glass, plastic and wood debris associated with the former landfill activities. Solid waste removed as part of the construction activities will not be acceptable for on-site reuse and will require off-site disposal.

Soil Management

The risk of direct exposure to non-compliant soils and landfill materials is the primary concern during the proposed construction activities. Individuals engaged in construction activities at the site may be exposed through incidental inhalation, dermal contact, or inhalation of vapors or entrained soil particles if proper precautions are not taken. Methane gas may also be present at the site. The following soil management related procedures will be followed during construction:

i. The Contractor will be required to submit a Site-Specific Health and Safety Plan (HASP) prepared by a Certified Industrial Hygienist (CIH) to the RIDOT prior to beginning construction activities.
ii. The Contractor shall be responsible for sampling all imported soils prior to their delivery to the site. The Contractor shall submit a written Imported Soil Material Compliance Report prepared by a Rhode Island professional engineer that includes the imported soil laboratory analytical data certifying that the imported soils are compliant with the RIDEM Remediation Regulations residential direct exposure criteria. (R-DEC). Imported soils cannot be received at the salt storage building project site until RIDOT has reviewed and approved the Imported Soil Material Compliance Report.
iii. The Contractor shall be responsible for providing a list of proposed solid and contaminated soil disposal to RIDOT for approval prior to beginning construction activities. RIDOT's prior approval of all waste disposal facilities proposed for use by the Contractor is included in the Contract Document requirements.
iv. The Contractor shall be responsible for all applications, laboratory analytical, fees, and any other disposal facility requirements required to obtain approval for waste disposal. The Contractor shall obtain disposal facility approval for waste disposal as specified in the Contract Documents.
v. The Contractor will be required to implement measures to restrict unauthorized access to the project area during construction.
vi. The Contractor shall be responsible for certifying that all site workers have adequate health and safety training to perform their work duties at the site.
vii. The Contractor shall be responsible for monitoring the site construction activities to confirm that the site workers are complying with the HASP requirements.
viii. The Contractor will be responsible for monitoring the methane gas levels to ensure that no explosive hazards are present during all construction activities.
ix. All soils and solid wastes excavated as part of the project activities will be disposed of off-site in accordance with the Contract Documents. Excavated material can be screened to remove the solid waste and reused as structural fill below the building after on-site treatment, if feasible.

x. The Contractor shall be responsible for implementing dust suppression (i.e. watering, ect.) techniques at all times when soils are exposed. This includes, but is not limited to periods when earthwork, excavation, and filling are taking place.

xi. Due to the site restraints, all excavated dry soils shall be live-loaded and disposed off-site. Wet soils will be temporarily stored in a designated dewatering stockpile area and disposed off-site once the water content is at a level acceptable for disposal. Liquids that leach from the wet soil stockpile will be contained and transported for off-site disposal. All stockpile conditions shall follow the project's specifications.

xii. If excavated soils are stockpiled, the soils shall be placed on and covered with a minimum of 6-mil polyethylene/plastic sheeting during the entire duration of stockpiling. The Contractor shall be responsible for covering the soil stockpiles at the end of each work day and for maintaining the soil stockpile cover during non-working hours.

xiii. Following completion of all earthwork at the site, all site soils inside and outside of the building footprint will be capped with the pavement structure provided in the Project Plans; 2-inches of bituminous surface course, 4 ½-inches of bituminous base course, underlain with 12-inches of gravel. In addition, three feet of clean fill material will be placed over the existing site soils located below the salt storage building's asphalt pavement structure. The site soils below the building's exterior walls will be capped with the building's foundation. The proposed pavement structure and building foundation comply with the RIDEM's "two foot or equivalent policy for capping contaminated sites including but not limited to building foundations, walkways, parking surfaces, ect. to prevent exposure to underlying soils.".

Disposal

As previously mentioned, the RIRRC requires one soil sample per 1,000 tons of general contaminated soil disposal at its Central landfill facility. The Contractor will be responsible for obtaining approval for general contaminated soil disposal at the RIRRC's Central landfill facility or at an alternate facility licensed to accept the material for disposal.

3.3 Groundwater Management

Dewatering was required for the construction of the existing RIDOT maintenance facility. A Rhode Island Pollutant Discharge Elimination System (RIPDES) Remediation General Permit (RGP) Notice of Intent (NOI) was submitted in August 2009 and RIDEM issued a RIPDES Remediation General Permit RIG85G004. A request to modify the project's RGP was submitted on March 15, 2010 to address the dewatering treatment system's difficulty with achieving antimony compliance in the treatment system effluent.

Groundwater gauging data previously collected at the site indicated that groundwater flow is predominantly to the north and northwest.

It is anticipated that dewatering will be required during the salt storage building's construction. RIDOT will submit a Remediation General Permit Notice of Intent for a conceptual dewatering and treatment system for the project to be used in the project bid documents. The Contractor will submit a Remediation General Permit Notice of Intent for the dewatering and treatment system they propose to use during the salt storage building construction.

Groundwater quality data is required to design the salt storage building project's dewatering treatment system. During the advancement of the January 2019 Geoprobe soil borings, one groundwater sample was collected from boring GRA-2 and submitted for laboratory analysis for the following parameters. This groundwater sample is identified as GRA-2. The laboratory analytical report is provided in **Appendix C**. The GRA-2 groundwater sample laboratory analytical tables can be found in the Tables section.

- RCRA 8 Metals - Total
- Total Petroleum Hydrocarbons (TPH)
- Volatile Organic Compounds (VOCs)
- RCRA 8 Metals - Dissolved
- Semi-Volatile Organic Compounds (SVOCs)
- Polychlorinated Biphenyl (PCBs)

Laboratory Findings

The project area is located in a designated GB Groundwater designated area, therefore the GB Groundwater Objective (GB-O) applies to the facility. GRA-2 was compliant with the RIDEM Remediation Regulation's GB-O. The GRA-2 TPH, SVOC, PCB, and VOC concentrations were below the reporting limits.

GRA collected both: a unfiltered groundwater sample for total metals analysis, and a filtered sample for dissolved metals analysis. There are no RIDEM GB-O metals standards. The GRA-2 metals laboratory analytical data was compared to the RIDEM Remediation Regulation's metals GA Groundwater Objectives (GA-O). The GRA-2 dissolved metal concentrations were compliant with their respective RIDEM's GA-O. The following GRA-2 total metals concentrations were not compliant with their respective GA-O:

GRA-2 Total Metals Exceeding Respective GA-O Criteria	
Antimony	Chromium
Arsenic	Copper
Cadmium	Lead

It is GRA's opinion that the totals metals non-compliance is associated with silt in the GRA-2 groundwater sample. The GRA-2 filtered dissolved metals concentrations were compliant indicating that the material filtered out of the GRA-2 sample is the source of the non-compliant metals concentrations.

Groundwater Dewatering

Groundwater dewatering is anticipated as part of the proposed construction activities. The previous site investigation reports indicate is present at approximately seven to eight feet below grade. Groundwater was present in the four January 25, 2019 borings at depths ranging from four to six feet below grade.

A Rhode Island Pollutant Discharge Elimination System (RIPDES) Remediation General Permit (RGP) Notice of Intent will be submitted to the Department prior to the project bidding. The RGP NOI will be for a conceptual dewatering treatment system that will be used for bidding purposes. The GRA-2 groundwater laboratory analytical will be used for the RIDOT RGP NOI conceptual treatment system design. The Contractor will be required to submit an RGP-NOI for the dewatering treatment system that is proposed for use during the building's construction and to obtain a RIDEM RGP for the site's dewatering treatment system.

The 2009 RGP NOI submitted for the existing RIDOT maintenance building used a dewatering flow rate of 30 gallons per minute. The RIDOT salt storage building project's RGP NOI dewatering flow rate will be dependent upon the building's foundation system and its construction methods. The foundation design has not been completed at this time.

The RGP effluent metal discharge limits are dependent upon the dewatering treatment system flow rate and the surface water that will ultimately be the receiving water for the treatment system effluent. The dewatering treatment system effluent receiving water will be identified in the RGP NOI as will the treatment system effluent metal monthly average and the daily maximum values.

Groundwater Management

The following procedures will be followed during construction activities to minimize or eliminate the potential of exposure:

i. Dewatering and treatment of groundwater is expected during construction activities. The Contractor shall design the dewatering and the dewatering treatment systems and prepare a RGP NOI.
ii. The Contractor shall submit its proposed dewatering and the dewatering treatment systems design and the RGP NOI to RIDOT for its review and approval prior to the RGP NOI submittal to the RIDEM.
iii. RIDOT shall approve the Contractor's dewatering and the dewatering treatment systems design and the RGP NOI.
iv. The Contractor shall submit the RGP NOI along with any required fees to the RIDEM.
v. The Contractor shall obtain the RIDEM RIPDES Remediation General Permit prior to any dewatering activities.
vi. The Contractor shall install and operate the dewatering and dewatering treatment system equipment.
vii. The Contractor shall be responsible for all required RGP Permit monitoring including, but not limited to flow monitoring, effluent sampling, and discharge monitoring report preparation and submittal. The Contractor shall be responsible for any and all system modifications and fines related to RGP non-compliance.
viii. The Contractor shall submit a Notice of termination to the RIDEM when dewatering activities have been completed.

3.4 Other Requirements

As previously mentioned, the site was formerly utilized as a landfill facility and the potential exists for the build-up of methane and other gases in the subsurface. A vapor recovery system is present within the existing asphalt paved parking lot as indicated on the plans. A portion of the recovery system is located below the proposed salt storage building footprint and will be impacted during construction. The subsurface vapor recovery system components disturbed during construction will be reinstalled to existing conditions.

The proposed salt shed is considered an open structure and the build-up of methane and other gases from the former landfill use is not anticipated. The salt storage building is constructed with openings at either end allowing air flow through the building.

4.0 Construction Specifications

Copies of the Project Specification sections that are related to the soil and groundwater management requirements summarized in this document can be found in **Appendix D**.

FIGURES

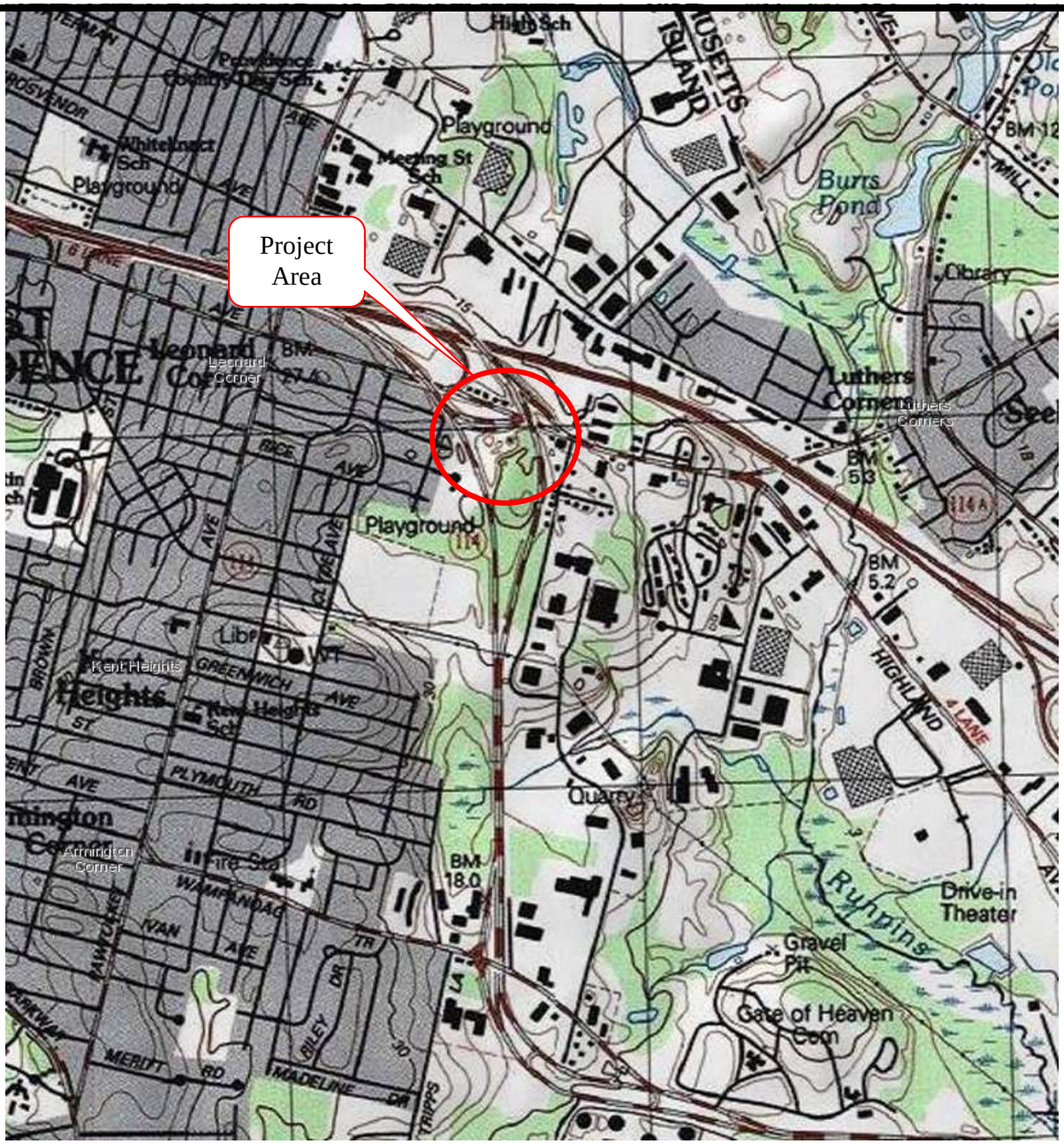

Figure 1
Locus Map
RIDOT East Providence Salt Shed & Maintenance Facility
East Providence, Rhode Island

Source : RIDEM Environmental Resource Map, USA Topo Map

Gordon R. Archibald, Inc.
Civil and Environmental Engineers

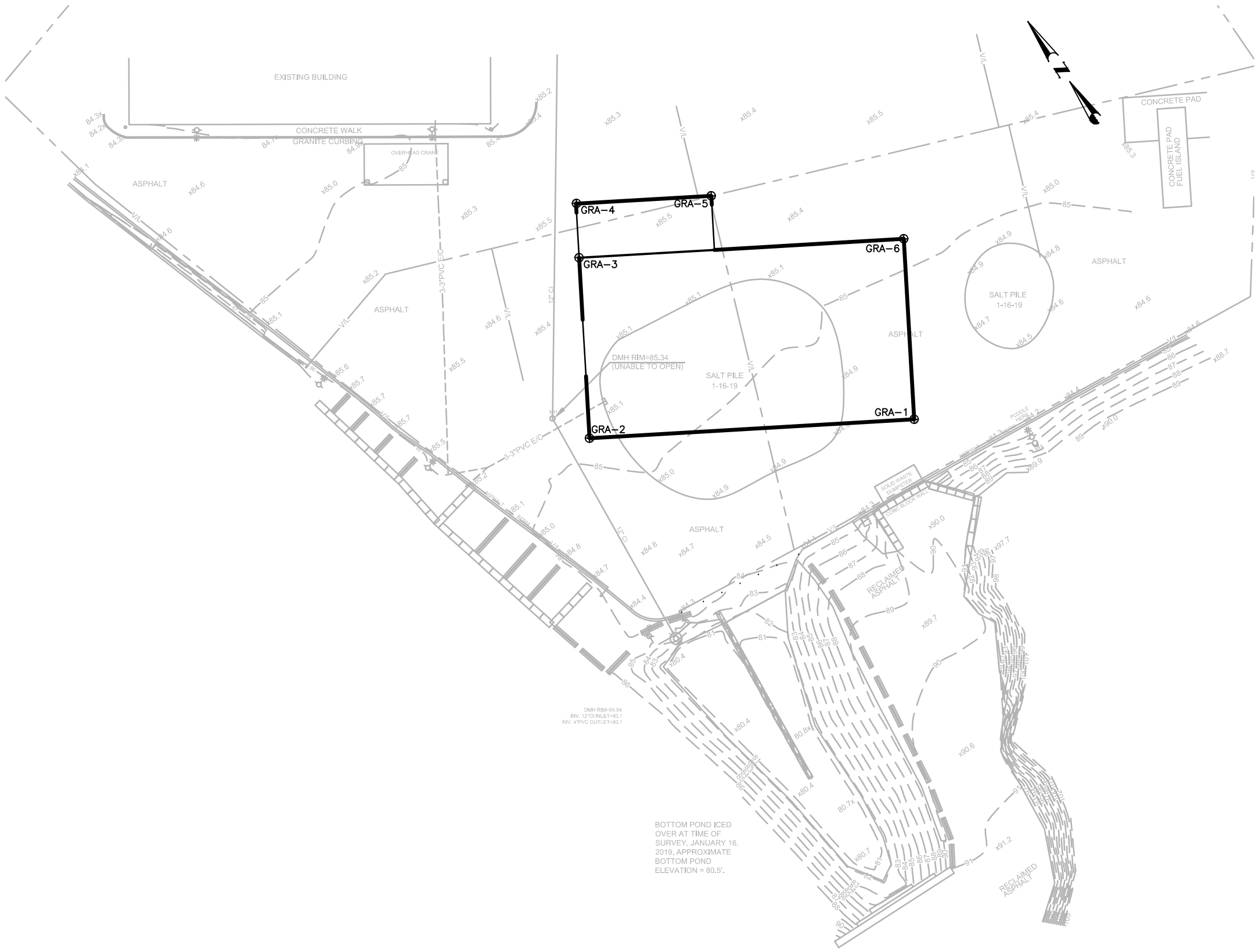

This drawing is copyrighted and is subject to copyright protection as an "architectural work" under 17 U. S. C. Sec. 101 et seq. The protection includes but is not limited to the overall form as well as the arrangement and composition of spaces, materials, color and elements in the design. Under such protection, unauthorized use of this drawing may result in the cessation of construction or buildings being seized and/or monetary compensation being awarded to The Robinson Green Beretta Corporation (RGB).

Any reproduction, possession, or use of this drawing or any part thereof without the express written permission of RGB, is prohibited. Violators will be prosecuted to the full extent of the law.

© RGB 2018

Certification

Drawn by LBD

Checked by SPC

Revised on

50 Holden Street
Providence, Rhode Island 02908

Phone: (401) 272-1730
Fax: (401) 273-7156

E-mail: rgbinfo@rgb.net
www.rgb.net

Architecture | Project Management | Interior Design

Project

STATE OF RHODE ISLAND

DEPARTMENT OF TRANSPORTATION

EAST PROVIDENCE SALT SHED

WARREN AVE.
EAST PROVIDENCE, RI. 02914

Drawing Status

SCHEMATIC DESIGN

Issued On FEBRUARY 2019

Sheet Contents

BORING LOCATION PLAN

Project Number. 1880

Drawing No.

Sheet of

Gordon R. Archibald, Inc.
Civil and Environmental Engineers
Pawtucket, Rhode Island

TABLES

Composite Soil Sample Laboratory Analytical Data
Proposed Salt Storage Building
RIDOT - East Providence, Rhode Island

Sample Date: January 25, 2019	CS-1 - Dry		CS-2 - Dry		CS-3 - Dry		CS-4 - Wet						
Parameter	**Sample Result**	**Reporting Limit**	**Sample Result**	**Reporting Limit**	**Sample Result**	**Reporting Limit**	**Sample Result**	**Reporting Limit**	**Units**	**R-DEC**	**I/C-DEC**	**GA-L**	**GB-L**
General Chemistry													
Flashpoint	> 200	70	> 200	70	> 200	70	> 200	70	degrees F				
Free liquids	ABSENT		ABSENT		ABSENT		ABSENT		P/A				
Solids, Percent	94.4	0.05	92.9	0.05	93.5	0.05	83.5	0.05	Percent				
pH	6.2		6.8		6.8		7.2		SU				
Total Petroleum Hydrocarbons													
Total Petroleum Hydrocarbons	**929**	55	**821**	57	**788**	57	**1,710**	62	mg/kg	500	2500	500	2500
Polychlorinated Biphenyls (PCBs)													
Aroclor-1016	<0.103	0.103	<0.104	0.104	<0.106	0.106	<0.119	0.119	mg/kg	see PCBs (Total)	see PCBs (Total)	see PCBs (Total)	see PCBs (Total)
Aroclor-1221	<0.103	0.103	<0.104	0.104	<0.106	0.106	<0.119	0.119	mg/kg				
Aroclor-1232	<0.103	0.103	<0.104	0.104	<0.106	0.106	<0.119	0.119	mg/kg				
Aroclor-1242	<0.103	0.103	<0.104	0.104	<0.106	0.106	<0.119	0.119	mg/kg				
Aroclor-1248	<0.103	0.103	<0.104	0.104	<0.106	0.106	<0.119	0.119	mg/kg				
Aroclor-1254	<0.103	0.103	<0.104	0.104	0.123	0.106	0.268	0.119	mg/kg				
Aroclor-1260	<0.103	0.103	<0.104	0.104	<0.106	0.106	<0.119	0.119	mg/kg				
Aroclor-1262	<0.103	0.103	<0.104	0.104	<0.106	0.106	<0.119	0.119	mg/kg				
Aroclor-1268	<0.103	0.103	<0.104	0.104	<0.106	0.106	<0.119	0.119	mg/kg				
PCBs (Total)	<0.103	0.103	<0.104	0.104	0.123	0.106	0.268	0.119	mg/kg	10	10	10	10
Total Metals													
Arsenic	4.07	0.92	6.6	0.91	3.19	0.84	21.5	1.14	mg/kg	7	7		
Barium	75.7	0.46	106	0.45	167	0.42	332	0.57	mg/kg	5,500	10,000		
Cadmium	3.73	0.46	4.73	0.45	3.84	0.42	29.9	0.57	mg/kg	39	1,000		
Chromium	15.9	0.46	25.4	0.45	16	0.42	71.6	0.57	mg/kg				
Lead	153	0.46	247	0.45	**592**	0.42	**1240**	0.57	mg/kg	150	500		
Selenium	ND	0.92	ND	0.91	ND	0.84	ND	1.14	mg/kg	390	10000		
Silver	ND	0.46	ND	0.45	ND	0.42	ND	0.57	mg/kg	200	10000		
Mercury	ND	0.068	ND	0.072	ND	0.069	0.167	0.079	mg/kg	23	610		
TCLP Metals													
Arsenic	ND	0.05	ND	0.05	ND	0.05	ND	0.05	mg/L	5	mg/L		
Barium	0.673	0.025	1.23	0.025	0.656	0.025	1.99	0.025	mg/L	100	mg/L		
Cadmium	ND	0.025	ND	0.025	ND	0.025	0.034	0.025	mg/L	1	mg/L		
Chromium	ND	0.025	0.059	0.025	ND	0.025	ND	0.025	mg/L	5	mg/L		
Lead	0.737	0.025	1.62	0.025	1.36	0.025	0.548	0.025	mg/L	5	mg/L		
Selenium	ND	0.05	ND	0.05	ND	0.05	ND	0.05	mg/L	1	mg/L		
Silver	ND	0.025	ND	0.025	ND	0.025	ND	0.025	mg/L	5	mg/L		
Mercury	ND	0.001	ND	0.001	ND	0.001	ND	0.001	mg/L	0.2	mg/L		
Volatile Organic Compounds													
Acetone	ND	0.114	ND	0.142	ND	0.118	ND	0.278	mg/kg	7800	1.00E+04		
Benzene	ND	0.023	ND	0.028	ND	0.024	ND	0.056	mg/kg	2.5	200	0.2	4.3
Bromobenzene	ND	0.023	ND	0.028	ND	0.024	ND	0.056	mg/kg				
Bromochloromethane	ND	0.023	ND	0.028	ND	0.024	ND	0.056	mg/kg				
Bromodichloromethane	ND	0.023	ND	0.028	ND	0.024	ND	0.056	mg/kg	10	92		
Bromoform	ND	0.023	ND	0.028	ND	0.024	ND	0.056	mg/kg	81	720		
Bromomethane	ND	0.046	ND	0.028	ND	0.047	ND	0.111	mg/kg	0.8	2900		
2-Butanone	ND	0.114	ND	0.142	ND	0.118	ND	0.278	mg/kg	1.00E+04	1.00E+04		
tert-Butyl alcohol	ND	0.114	ND	0.142	ND	0.118	ND	0.278	mg/kg				
sec-Butylbenzene	0.054	0.023	0.045	0.028	0.042	0.024	0.099	0.056	mg/kg				
n-Butylbenzene	0.059	0.023	0.073	0.028	0.076	0.024	0.099	0.056	mg/kg				
tert-Butylbenzene	ND	0.023	ND	0.028	ND	0.024	ND	0.056	mg/kg				
Methyl t-butyl ether (MTBE)	ND	0.023	ND	0.028	ND	0.024	ND	0.056	mg/kg	390	1.00E+04	0.9	100
Carbon Disulfide	ND	0.023	ND	0.028	ND	0.024	ND	0.056	mg/kg				
Carbon Tetrachloride	ND	0.023	ND	0.028	ND	0.024	ND	0.056	mg/kg	1.5	44	0.4	5
Chlorobenzene	ND	0.023	ND	0.028	ND	0.024	ND	0.056	mg/kg	210	1.00E+04	3.2	100
Chloroethane	ND	0.023	ND	0.028	ND	0.024	ND	0.056	mg/kg				
Chloroform	ND	0.023	ND	0.028	ND	0.024	ND	0.056	mg/kg	1.2	940		
Chloromethane	ND	0.023	ND	0.028	ND	0.024	ND	0.056	mg/kg				
4-Chlorotoluene	ND	0.023	ND	0.028	ND	0.024	ND	0.056	mg/kg				
2-Chlorotoluene	ND	0.023	ND	0.028	ND	0.024	ND	0.056	mg/kg				
1,2-Dibromo-3-chloropropane (DBCP)	ND	0.023	ND	0.028	ND	0.024	ND	0.056	mg/kg	0.5	4.1		
Dibromochloromethane	ND	0.023	ND	0.028	ND	0.024	ND	0.056	mg/kg	7.6	68		
1,2-Dibromoethane (EDB)	ND	0.023	ND	0.028	ND	0.024	ND	0.056	mg/kg	0.01	0.07	0.0005	
Dibromomethane	ND	0.023	ND	0.028	ND	0.024	ND	0.056	mg/kg				
1,2-Dichlorobenzene	ND	0.023	ND	0.028	ND	0.024	ND	0.056	mg/kg	510	1.00E+04		
1,3-Dichlorobenzene	ND	0.023	ND	0.028	ND	0.024	ND	0.056	mg/kg	430	1.00E+04		
1,4-Dichlorobenzene	ND	0.023	ND	0.028	ND	0.024	0.115	0.056	mg/kg	27	240		
1,1-Dichloroethane	ND	0.023	ND	0.028	ND	0.024	ND	0.056	mg/kg	920	1.00E+04		

Bold:	Samples not compliant with the RIDEM Remediation Regulations GA Groundwater Leachability (GA-L) Objective
Italics :	Samples not compliant with the RIDEM Remediation Regulations GB Groundwater Leachability (GB-L) Objective
Underlined:	Samples not compliant with the RIDEM Remediation Regulations Residential-Direct Exposure Criteria (R-DEC) Objective
Shaded:	Samples not compliant with the RIDEM Remediation Regulations Industrial / Commerical Direct Exposure Criteria (I/C-DEC) Objective.

Composite Soil Sample Laboratory Analytical Data
Proposed Salt Storage Building
RIDOT - East Providence, Rhode Island

Sample Date: January 25, 2019	CS-1 - Dry		CS-2 - Dry		CS-3 - Dry		CS-4 - Wet						
Parameter	**Sample Result**	**Reporting Limit**	**Sample Result**	**Reporting Limit**	**Sample Result**	**Reporting Limit**	**Sample Result**	**Reporting Limit**	**Units**	**R-DEC**	**I/C-DEC**	**GA-L**	**GB-L**
1,2-Dichloroethane	ND	0.023	ND	0.028	ND	0.024	ND	0.056	mg/kg	0.9	63	0.1	2.3
trans-1,2-Dichloroethene	ND	0.023	ND	0.028	ND	0.024	ND	0.056	mg/kg	1100	1.00E+04	3.3	92
cis-1,2-Dichloroethene	ND	0.023	ND	0.028	ND	0.024	ND	0.056	mg/kg	630	1.00E+04	1.7	60
1,1-Dichloroethene	ND	0.023	ND	0.028	ND	0.024	ND	0.056	mg/kg	0.2	9.5	0.7	0.7
1,2-Dichloropropane	ND	0.023	ND	0.028	ND	0.024	ND	0.056	mg/kg	1.9	84	0.1	70
2,2-Dichloropropane	ND	0.023	ND	0.028	ND	0.024	ND	0.056	mg/kg				
cis-1,3-Dichloropropene	ND	0.023	ND	0.028	ND	0.024	ND	0.056	mg/kg	see 1,3-Dichloropropene (cis + trans)			
trans-1,3-Dichloropropene	ND	0.023	ND	0.028	ND	0.024	ND	0.056	mg/kg	see 1,3-Dichloropropene (cis + trans)			
1,1-Dichloropropene	ND	0.023	ND	0.028	ND	0.024	ND	0.056	mg/kg				
1,3-Dichloropropene (cis + trans)	ND	0.046	ND	0.057	ND	0.047	ND	0.111	mg/kg				
Diethyl ether	ND	0.114	ND	0.142	ND	0.118	ND	0.278	mg/kg				
1,4-Dioxane	ND	11.4	ND	14.2	ND	11.8	ND	27.8	mg/kg				
Ethylbenzene	ND	0.023	ND	0.028	ND	0.024	ND	0.056	mg/kg	71	1.00E+04	27	62
Hexachlorobutadiene	ND	0.023	ND	0.028	ND	0.024	ND	0.056	mg/kg	8.2	73		
2-Hexanone	ND	0.114	ND	0.142	ND	0.118	ND	0.278	mg/kg				
Isopropylbenzene	0.030	0.023	0.037	0.028	0.031	0.024	0.075	0.056	mg/kg	27	1.00E+04		
p-Isopropyltoluene	0.041	0.023	0.081	0.028	0.071	0.024	0.088	0.056	mg/kg				
Methylene Chloride	ND	0.023	ND	0.142	ND	0.024	ND	0.056	mg/kg	45	760		
4-Methyl-2-pentanone	ND	0.114	ND	0.142	ND	0.118	ND	0.278	mg/kg	1200	1.00E+04		
Naphthalene	**4.52**	0.046	0.788	0.028	0.620	0.024	**0.850**	0.056	mg/kg	54	1.00E+04	**0.8**	
n-Propylbenzene	0.049	0.023	0.046	0.028	0.043	0.024	0.101	0.056	mg/kg				
Styrene	ND	0.023	ND	0.028	ND	0.024	ND	0.056	mg/kg	13	190	2.9	64
1,1,1,2-Tetrachloroethane	ND	0.023	ND	0.028	ND	0.024	ND	0.056	mg/kg	2.2	220		
Tetrachloroethene	ND	0.023	ND	0.028	ND	0.024	ND	0.056	mg/kg	12	110	0.1	4.2
Tetrahydrofuran	ND	0.114	ND	0.142	ND	0.118	ND	0.278	mg/kg				
Toluene	ND	0.023	ND	0.028	ND	0.024	ND	0.056	mg/kg	190	1.00E+04	32	54
1,2,4-Trichlorobenzene	ND	0.023	ND	0.028	ND	0.024	ND	0.056	mg/kg	96	1.00E+04	140	
1,2,3-Trichlorobenzene	ND	0.023	ND	0.028	ND	0.024	ND	0.056	mg/kg				
1,1,2-Trichloroethane	ND	0.023	ND	0.028	ND	0.024	ND	0.056	mg/kg	3.6	100	0.1	
1,1,1-Trichloroethane	ND	0.023	ND	0.028	ND	0.024	ND	0.056	mg/kg	540	1.00E+04	11	160
Trichloroethene	ND	0.023	ND	0.028	ND	0.024	ND	0.056	mg/kg	13	520	0.2	20
1,2,3-Trichloropropane	ND	0.023	ND	0.028	ND	0.024	ND	0.056	mg/kg				
1,3,5-Trimethylbenzene	0.024	0.023	0.046	0.028	0.043	0.024	0.088	0.056	mg/kg				
1,2,4-Trimethylbenzene	0.172	0.023	0.196	0.028	0.168	0.024	0.257	0.056	mg/kg				
Vinyl Chloride	ND	0.023	ND	0.028	ND	0.024	ND	0.056	mg/kg	0.02	3	0.3	
o-Xylene	ND	0.023	0.035	0.028	ND	0.024	0.061	0.056	mg/kg	see Total xylenes			
m&p-Xylene	ND	0.046	ND	0.057	ND	0.047	ND	0.111	mg/kg	see Total xylenes			
Total xylenes	ND	0.046	0.035	0.028	ND	0.047	ND	0.111	mg/kg	110	1.00E+04	540	
1,1,2,2-Tetrachloroethane	ND	0.023	ND	0.028	ND	0.024	ND	0.056	mg/kg	1.3	29		
tert-Amyl methyl ether	ND	0.023	ND	0.028	ND	0.024	ND	0.056	mg/kg				
1,3-Dichloropropane	ND	0.023	ND	0.028	ND	0.024	ND	0.056	mg/kg				
Ethyl tert-butyl ether	ND	0.023	ND	0.028	ND	0.024	ND	0.056	mg/kg				
Diisopropyl ether	ND	0.023	ND	0.028	ND	0.024	ND	0.056	mg/kg				
Trichlorofluoromethane	ND	0.023	ND	0.028	ND	0.024	ND	0.056	mg/kg				
Dichlorodifluoromethane	ND	0.023	ND	0.028	ND	0.024	ND	0.056	mg/kg				
Semivolatile organic compounds													
1,2,4-Trichlorobenzene	ND	0.536	ND	0.543	ND	0.67	ND	3.01	mg/kg	96	1.00E+04	140	
1,2-Dichlorobenzene	ND	0.536	ND	0.543	ND	0.67	ND	3.01	mg/kg	510	1.00E+04		
1,3-Dichlorobenzene	ND	0.536	ND	0.543	ND	0.67	ND	3.01	mg/kg	430	1.00E+04		
1,4-Dichlorobenzene	ND	0.536	ND	0.543	ND	0.67	ND	3.01	mg/kg	27	240		
Phenol	ND	0.536	ND	0.543	ND	0.67	ND	3.01	mg/kg	6000	1.00E+04		
2,4,5-Trichlorophenol	ND	0.536	ND	0.543	ND	0.67	ND	3.01	mg/kg	330	1.00E+04		
2,4,6-Trichlorophenol	ND	0.536	ND	0.543	ND	0.67	ND	3.01	mg/kg	58	520		
2,4-Dichlorophenol	ND	0.536	ND	0.543	ND	0.67	ND	3.01	mg/kg	30	6100		
2,4-Dimethylphenol	ND	1.36	ND	1.38	ND	1.7	ND	7.65	mg/kg	1400	1.00E+04		
2,4-Dinitrophenol	ND	1.36	ND	1.38	ND	1.7	ND	7.65	mg/kg	160	4100		
2,4-Dinitrotoluene	ND	0.536	ND	0.543	ND	0.67	ND	3.01	mg/kg	0.9	8.4		
2,6-Dinitrotoluene	ND	0.536	ND	0.543	ND	0.67	ND	3.01	mg/kg				
2-Chloronaphthalene	ND	0.536	ND	0.543	ND	0.67	ND	3.01	mg/kg				
2-Chlorophenol	ND	0.536	ND	0.543	ND	0.67	ND	3.01	mg/kg	50	1.00E+04		
2-Methylnaphthalene	ND	0.536	ND	0.543	ND	0.67	ND	3.01	mg/kg	123	1.00E+04		
Nitrobenzene	ND	0.536	ND	0.543	ND	0.67	ND	3.01	mg/kg				
2-Methylphenol	ND	0.536	ND	0.543	ND	0.67	ND	3.01	mg/kg				
2-Nitroaniline	ND	0.536	ND	0.543	ND	0.67	ND	3.01	mg/kg				
2-Nitrophenol	ND	1.36	ND	1.38	ND	1.7	ND	7.65	mg/kg				
3,3'-Dichlorobenzidine	ND	1.36	ND	1.38	ND	1.7	ND	7.65	mg/kg	1.4	13		
3-Nitroaniline	ND	0.536	ND	0.543	ND	0.67	ND	3.01	mg/kg				
4,6-Dinitro-2-methylphenol	ND	1.36	ND	1.38	ND	1.7	ND	7.65	mg/kg				
4-Bromophenyl phenyl ether	ND	0.536	ND	0.543	ND	0.67	ND	3.01	mg/kg				

Bold:	Samples not compliant with the RIDEM Remediation Regulations GA Groundwater Leachability (GA-L) Objective
Italics :	Samples not compliant with the RIDEM Remediation Regulations GB Groundwater Leachability (GB-L) Objective
Underlined:	Samples not compliant with the RIDEM Remediation Regulations Residential-Direct Exposure Criteria (R-DEC) Objective
Shaded:	Samples not compliant with the RIDEM Remediation Regulations Industrial / Commerical Direct Exposure Criteria (I/C-DEC) Objective.

Composite Soil Sample Laboratory Analytical Data
Proposed Salt Storage Building
RIDOT - East Providence, Rhode Island

Sample Date: January 25, 2019	CS-1 - Dry		CS-2 - Dry		CS-3 - Dry		CS-4 - Wet						
Parameter	**Sample Result**	**Reporting Limit**	**Sample Result**	**Reporting Limit**	**Sample Result**	**Reporting Limit**	**Sample Result**	**Reporting Limit**	**Units**	**R-DEC**	**I/C-DEC**	**GA-L**	**GB-L**
4-Chloro-3-methylphenol	ND	0.536	ND	0.543	ND	0.67	ND	3.01	mg/kg				
4-Chloroaniline	ND	0.536	ND	0.543	ND	0.67	ND	3.01	mg/kg	310	8200		
4-Chlorophenyl phenyl ether	ND	0.536	ND	0.543	ND	0.67	ND	3.01	mg/kg				
4-Nitroaniline	ND	0.536	ND	0.543	ND	0.67	ND	3.01	mg/kg				
4-Nitrophenol	ND	1.36	ND	1.38	ND	1.7	ND	7.65	mg/kg				
Acenaphthene	0.698	0.536	ND	0.543	ND	0.67	25.9	3.01	mg/kg	43	1.00E+04		
Acenaphthylene	ND	0.536	ND	0.543	ND	0.67	ND	3.01	mg/kg	23	1.00E+04		
Aniline	ND	0.536	ND	0.543	ND	0.67	ND	3.01	mg/kg				
Anthracene	2.46	0.536	0.657	0.543	ND	0.67	60.3	3.01	mg/kg	35	1.00E+04		
Benzo(a)anthracene	4.99	0.536	1.31	0.543	1.52	0.67	98.3	3.01	mg/kg	0.9	7.8		
Benzo(a)pyrene	5.31	0.536	1.18	0.543	1.46	0.67	91.9	3.01	mg/kg	0.4	0.8	240	
Benzo(b)fluoranthene	6.42	0.536	1.48	0.543	1.82	0.67	112	3.01	mg/kg	0.9	7.8		
Benzo(g,h,i)perylene	3.47	0.536	0.707	0.543	0.987	0.67	52.8	3.01	mg/kg	0.8	1.00E+04		
Benzo(k)fluoranthene	2.15	0.536	ND	0.543	ND	0.67	37.8	3.01	mg/kg	0.9	78		
Benzoic acid	ND	4.12	ND	4.18	ND	5.16	ND	23.2	mg/kg				
Bis(2-chloroethoxy)methane	ND	0.536	ND	0.543	ND	0.67	ND	3.01	mg/kg				
Bis(2-chloroethyl)ether	ND	0.536	ND	0.543	ND	0.67	ND	3.01	mg/kg	0.6	5.2		
Bis(2-chloroisopropyl)ether	ND	0.536	ND	0.543	ND	0.67	ND	3.01	mg/kg	9.1	82		
Bis(2-ethylhexyl)phthalate	ND	1.65	ND	1.67	ND	2.06	ND	9.27	mg/kg	46	410	120	
Butyl benzyl phthalate	ND	0.536	ND	0.543	ND	0.67	ND	3.01	mg/kg				
Chrysene	4.34	0.536	1.12	0.543	1.35	0.67	86.9	3.01	mg/kg	0.4	780		
Di(n)octyl phthalate	ND	0.825	ND	0.836	ND	1.03	ND	4.63	mg/kg				
Dibenz(a,h)anthracene	0.976	0.536	ND	0.543	ND	0.67	15.8	3.01	mg/kg	0.4	0.8		
Dibenzofuran	0.803	0.536	ND	0.543	ND	0.67	10.1	3.01	mg/kg				
Diethyl phthalate	ND	0.536	ND	0.543	ND	0.67	ND	3.01	mg/kg	340	1.00E+04		
Dimethyl phthalate	ND	1.36	ND	1.38	ND	1.7	ND	7.65	mg/kg	1900	1.00E+04		
Di-n-butylphthalate	ND	0.825	ND	0.836	ND	1.03	ND	4.63	mg/kg				
Fluoranthene	10.1	0.536	2.78	0.543	3.12	0.67	276	15.1	mg/kg	20	1.00E+04		
Fluorene	1.51	0.536	ND	0.543	ND	0.67	25	3.01	mg/kg	28	1.00E+04		
Hexachlorobenzene	ND	0.536	ND	0.543	ND	0.67	ND	3.01	mg/kg	0.4	3.6		
Hexachlorobutadiene	ND	0.536	ND	0.543	ND	0.67	ND	3.01	mg/kg	8.2	73		
Hexachlorocyclopentadiene	ND	1.36	ND	1.38	ND	1.7	ND	7.65	mg/kg				
Hexachloroethane	ND	0.536	ND	0.543	ND	0.67	ND	3.01	mg/kg	46	410		
Indeno(1,2,3-cd)pyrene	3.77	0.536	0.799	0.543	1.0	0.67	60.8	3.01	mg/kg	0.9	7.8		
Isophorone	ND	0.536	ND	0.543	ND	0.67	ND	3.01	mg/kg				
Naphthalene	**1.53**	0.536	ND	0.543	ND	0.67	ND	3.01	mg/kg	54	1.00E+04	0.8	
N-Nitrosodimethylamine	ND	0.536	ND	0.543	ND	0.67	ND	3.01	mg/kg				
N-Nitrosodi-n-propylamine	ND	0.536	ND	0.543	ND	0.67	ND	3.01	mg/kg				
N-Nitrosodiphenylamine	ND	0.536	ND	0.543	ND	0.67	ND	3.01	mg/kg				
Pentachlorophenol	ND	1.36	ND	1.38	ND	1.7	ND	*7.65*	mg/kg	5.3	48	7.1	
Phenanthrene	8.52	0.536	2.41	0.543	2.4	0.67	221	15.1	mg/kg	40	1.00E+04		
Pyrene	7.66	0.536	2.13	0.543	2.26	0.67	197	15.1	mg/kg	13	1.00E+04		
m&p-Cresol	ND	1.07	ND	1.09	ND	1.34	ND	6.02	mg/kg				
Pyridine	ND	0.536	ND	0.543	ND	0.67	ND	3.01	mg/kg				

Bold:	Samples not compliant with the RIDEM Remediation Regulations GA Groundwater Leachability (GA-L) Objective
Italics :	Samples not compliant with the RIDEM Remediation Regulations GB Groundwater Leachability (GB-L) Objective
Underlined:	Samples not compliant with the RIDEM Remediation Regulations Residential-Direct Exposure Criteria (R-DEC) Objective
Shaded:	Samples not compliant with the RIDEM Remediation Regulations Industrial / Commerical Direct Exposure Criteria (I/C-DEC) Objective.

Groundwater Sample Laboratory Analytical Data Proposed Salt Storage Building RIDOT - East Providence, Rhode Island					
Sample Date: January 25, 2019	**GRA-2**				
Parameter	**Sample Result**	**Reporting Limit**	**Units**	**GA Objective**	**GB Objective**
Calculation					
Trivalent Chromium	ND	0.255	mg/L		
General Chemistry					
Hexavalent chromium	ND	0.25	mg/L		
Total Petroleum Hydrocarbons (TPH)					
Total Petroleum Hydrocarbons	ND	0.2	mg/L		
Total Metals					
Antimony	**0.018**	0.005	mg/L	0.006	
Arsenic	**0.03**	0.01	mg/L	0.01	
Cadmium	**0.028**	0.005	mg/L	0.005	
Chromium	**0.153**	0.005	mg/L	0.1	
Copper	**0.44**	0.02	mg/L	0.1	
Iron	179	0.05	mg/L		
Lead	**3.09**	0.005	mg/L	0.015	
Nickel	0.093	0.005	mg/L	0.1	
Selenium	ND	0.01	mg/L	0.05	
Silver	0.006	0.005	mg/L		
Zinc	1.5	0.02	mg/L		
Mercury	0.0003	0.0002	mg/L	0.002	
Dissolved Metals					
Antimony	ND	*0.01*	mg/L	0.006	
Arsenic	ND	0.01	mg/L	0.01	
Cadmium	ND	0.005	mg/L	0.005	
Chromium	ND	0.005	mg/L	0.1	
Copper	0.089	0.02	mg/L	0.1	
Iron	1.13	0.05	mg/L		
Lead	ND	0.005	mg/L	0.015	
Nickel	0.013	0.005	mg/L	0.1	
Selenium	ND	0.01	mg/L	0.05	
Silver	ND	0.005	mg/L		
Zinc	0.104	0.02	mg/L		
Mercury	ND	0.0002	mg/L	0.002	

Bold:	Samples not compliant with the RIDEM Remediation Regulations GA Groundwater Objective (GA-O)
Italics :	Samples not compliant with the RIDEM Remediation Regulations GB Groundwater Objective (GB-O)

Groundwater Sample Laboratory Analytical Data Proposed Salt Storage Building RIDOT - East Providence, Rhode Island					
Sample Date: January 25, 2019	**GRA-2**				
Parameter	**Sample Result**	**Reporting Limit**	**Units**	**GA Objective**	**GB Objective**
Polychlorinated Biphenyls (PCBs)					
Aroclor-1016	ND	0.0001	mg/L	see PCBs (Total)	see PCBs (Total)
Aroclor-1221	ND	0.0002	mg/L	see PCBs (Total)	see PCBs (Total)
Aroclor-1232	ND	0.0001	mg/L	see PCBs (Total)	see PCBs (Total)
Aroclor-1242	ND	0.0001	mg/L	see PCBs (Total)	see PCBs (Total)
Aroclor-1248	ND	0.0001	mg/L	see PCBs (Total)	see PCBs (Total)
Aroclor-1254	ND	0.0001	mg/L	see PCBs (Total)	see PCBs (Total)
Aroclor-1260	ND	0.0001	mg/L	see PCBs (Total)	see PCBs (Total)
Aroclor-1262	ND	0.0001	mg/L	see PCBs (Total)	see PCBs (Total)
Aroclor-1268	ND	0.0001	mg/L	see PCBs (Total)	see PCBs (Total)
PCBs (Total)	ND	0.0001	mg/L	0.5	
Semivolatile Organic Compounds (SVOCs)					
1,2,4-Trichlorobenzene	ND	0.002	mg/L	0.07	
1,2-Dichlorobenzene	ND	0.002	mg/L	0.6	
1,3-Dichlorobenzene	ND	0.002	mg/L	0.6	
1,4-Dichlorobenzene	ND	0.002	mg/L	0.075	
Phenol	ND	0.002	mg/L		
2,4,5-Trichlorophenol	ND	0.002	mg/L		
2,4,6-Trichlorophenol	ND	0.002	mg/L		
2,4-Dichlorophenol	ND	0.002	mg/L		
2,4-Dimethylphenol	ND	0.01	mg/L		
2,4-Dinitrophenol	ND	0.005	mg/L		
2,4-Dinitrotoluene	ND	0.002	mg/L		
2,6-Dinitrotoluene	ND	0.002	mg/L		
2-Chloronaphthalene	ND	0.002	mg/L		
2-Chlorophenol	ND	0.002	mg/L		
2-Methylnaphthalene	ND	0.002	mg/L		
Nitrobenzene	ND	0.002	mg/L		
2-Methylphenol	ND	0.002	mg/L		
2-Nitroaniline	ND	0.002	mg/L		
2-Nitrophenol	ND	0.005	mg/L		
3,3'-Dichlorobenzidine	ND	0.005	mg/L		
3-Nitroaniline	ND	0.002	mg/L		
4,6-Dinitro-2-methylphenol	ND	0.005	mg/L		
4-Bromophenyl phenyl ether	ND	0.002	mg/L		
4-Chloro-3-methylphenol	ND	0.002	mg/L		
4-Chloroaniline	ND	0.005	mg/L		
4-Chlorophenyl phenyl ether	ND	0.002	mg/L		
4-Nitroaniline	ND	0.002	mg/L		
Bold:	Samples not compliant with the RIDEM Remediation Regulations GA Groundwater Objective (GA-O)				
Italics :	Samples not compliant with the RIDEM Remediation Regulations GB Groundwater Objective (GB-O)				

Groundwater Sample Laboratory Analytical Data Proposed Salt Storage Building RIDOT - East Providence, Rhode Island					
Sample Date: January 25, 2019	**GRA-2**				
Parameter	**Sample Result**	**Reporting Limit**	**Units**	**GA Objective**	**GB Objective**
4-Nitrophenol	ND	0.005	mg/L		
Acenaphthene	ND	0.002	mg/L		
Acenaphthylene	ND	0.002	mg/L		
Aniline	ND	0.002	mg/L		
Anthracene	ND	0.002	mg/L		
Benzo(a)anthracene	ND	0.002	mg/L		
Benzo(a)pyrene	ND	0.002	mg/L	0.0002	
Benzo(b)fluoranthene	ND	0.002	mg/L		
Benzo(g,h,i)perylene	ND	0.002	mg/L		
Benzo(k)fluoranthene	ND	0.002	mg/L		
Benzoic acid	ND	0.015	mg/L		
Bis(2-chloroethoxy)methane	ND	0.002	mg/L		
Bis(2-chloroethyl)ether	ND	0.002	mg/L		
Bis(2-chloroisopropyl)ether	ND	0.002	mg/L		
Bis(2-ethylhexyl)phthalate	ND	0.006	mg/L	0.006	
Butyl benzyl phthalate	ND	0.003	mg/L		
Chrysene	ND	0.002	mg/L		
Di(n)octyl phthalate	ND	0.003	mg/L		
Dibenz(a,h)anthracene	ND	0.002	mg/L		
Dibenzofuran	ND	0.002	mg/L		
Diethyl phthalate	ND	0.002	mg/L		
Dimethyl phthalate	ND	0.005	mg/L		
Di-n-butylphthalate	ND	0.002	mg/L		
Fluoranthene	ND	0.002	mg/L		
Fluorene	ND	0.002	mg/L		
Hexachlorobenzene	ND	0.002	mg/L	0.001	
Hexachlorobutadiene	ND	0.002	mg/L		
Hexachlorocyclopentadiene	ND	0.005	mg/L		
Hexachloroethane	ND	0.002	mg/L		
Indeno(1,2,3-cd)pyrene	ND	0.002	mg/L		
Isophorone	ND	0.002	mg/L		
Naphthalene	ND	0.002	mg/L	0.1	
N-Nitrosodimethylamine	ND	0.002	mg/L		
N-Nitrosodi-n-propylamine	ND	0.002	mg/L		
N-Nitrosodiphenylamine	ND	0.002	mg/L		
Pentachlorophenol	ND	0.005	mg/L	0.001	
Phenanthrene	ND	0.002	mg/L		
Pyrene	ND	0.002	mg/L		
m&p-Cresol	ND	0.004	mg/L		
Pyridine	ND	0.002	mg/L		
Bold:	Samples not compliant with the RIDEM Remediation Regulations GA Groundwater Objective (GA-O)				
Italics :	Samples not compliant with the RIDEM Remediation Regulations GB Groundwater Objective (GB-O)				

Groundwater Sample Laboratory Analytical Data Proposed Salt Storage Building RIDOT - East Providence, Rhode Island					
Sample Date: January 25, 2019	**GRA-2**				
Parameter	**Sample Result**	**Reporting Limit**	**Units**	**GA Objective**	**GB Objective**
Volatile Organic Compounds (VOCs)					
Acetone	ND	0.025	mg/L		
Benzene	ND	0.005	mg/L	0.005	0.14
Bromobenzene	ND	0.005	mg/L		
Bromochloromethane	ND	0.005	mg/L		
Bromodichloromethane	ND	0.005	mg/L		
Bromoform	ND	0.005	mg/L		
Bromomethane	ND	0.005	mg/L		
2-Butanone	ND	0.025	mg/L		
tert-Butyl alcohol	ND	0.025	mg/L		
sec-Butylbenzene	ND	0.005	mg/L		
n-Butylbenzene	ND	0.005	mg/L		
tert-Butylbenzene	ND	0.005	mg/L		
Methyl t-butyl ether (MTBE)	ND	0.005	mg/L	0.04	5
Carbon Disulfide	ND	0.005	mg/L		
Carbon Tetrachloride	ND	0.005	mg/L	0.005	0.07
Chlorobenzene	ND	0.005	mg/L	0.1	3.2
Chloroethane	ND	0.005	mg/L		
Chloroform	ND	0.005	mg/L		
Chloromethane	ND	0.005	mg/L		
4-Chlorotoluene	ND	0.005	mg/L		
2-Chlorotoluene	ND	0.005	mg/L		
1,2-Dibromo-3-chloropropane (DBCP)	ND	0.005	mg/L	0.0002	0.002
Dibromochloromethane	ND	0.005	mg/L		
1,2-Dibromoethane (EDB)	ND	0.005	mg/L	0.00005	
Dibromomethane	ND	0.005	mg/L		
1,2-Dichlorobenzene	ND	0.005	mg/L	0.6	
1,3-Dichlorobenzene	ND	0.005	mg/L	0.6	
1,4-Dichlorobenzene	ND	0.005	mg/L	0.075	
1,1-Dichloroethane	ND	0.005	mg/L		
1,2-Dichloroethane	ND	0.005	mg/L	0.005	0.11
trans-1,2-Dichloroethene	ND	0.005	mg/L	0.1	2.8
cis-1,2-Dichloroethene	ND	0.005	mg/L	0.07	2.4
1,1-Dichloroethene	ND	0.005	mg/L	0.007	0.007
1,2-Dichloropropane	ND	0.005	mg/L	0.005	3
2,2-Dichloropropane	ND	0.005	mg/L		
cis-1,3-Dichloropropene	ND	0.005	mg/L	see 1,3-Dichloropropene (cis + trans)	
trans-1,3-Dichloropropene	ND	0.005	mg/L	see 1,3-Dichloropropene (cis + trans)	
1,1-Dichloropropene	ND	0.005	mg/L		
Bold:	Samples not compliant with the RIDEM Remediation Regulations GA Groundwater Objective (GA-O)				
Italics :	Samples not compliant with the RIDEM Remediation Regulations GB Groundwater Objective (GB-O)				

Groundwater Sample Laboratory Analytical Data Proposed Salt Storage Building RIDOT - East Providence, Rhode Island					
Sample Date: January 25, 2019	**GRA-2**				
Parameter	**Sample Result**	**Reporting Limit**	**Units**	**GA Objective**	**GB Objective**
1,3-Dichloropropene (cis + trans)	ND	0.01	mg/L		
Diethyl ether	ND	0.025	mg/L		
1,4-Dioxane	ND	2.5	mg/L		
Ethylbenzene	ND	0.005	mg/L	0.7	1.6
Hexachlorobutadiene	ND	0.005	mg/L		
2-Hexanone	ND	0.025	mg/L		
Isopropylbenzene	ND	0.005	mg/L		
p-Isopropyltoluene	ND	0.005	mg/L		
Methylene Chloride	ND	0.025	mg/L	0.005	
4-Methyl-2-pentanone	ND	0.025	mg/L		
Naphthalene	ND	0.005	mg/L	0.1	
n-Propylbenzene	ND	0.005	mg/L		
Styrene	ND	0.005	mg/L	0.1	2.2
1,1,1,2-Tetrachloroethane	ND	0.005	mg/L		
Tetrachloroethene	ND	0.005	mg/L	0.005	0.15
Tetrahydrofuran	ND	0.025	mg/L		
Toluene	ND	0.005	mg/L	1	1.7
1,2,4-Trichlorobenzene	ND	0.005	mg/L	0.07	
1,2,3-Trichlorobenzene	ND	0.005	mg/L		
1,1,2-Trichloroethane	ND	0.005	mg/L	0.005	
1,1,1-Trichloroethane	ND	0.005	mg/L	0.2	3.1
Trichloroethene	ND	0.005	mg/L	0.005	0.54
1,2,3-Trichloropropane	ND	0.005	mg/L		
1,3,5-Trimethylbenzene	ND	0.005	mg/L		
1,2,4-Trimethylbenzene	ND	0.005	mg/L		
Vinyl Chloride	ND	0.005	mg/L	0.002	0.002
o-Xylene	ND	0.005	mg/L	see Total xylenes	
m&p-Xylene	ND	0.01	mg/L	see Total xylenes	
Total xylenes	ND	0.01	mg/L	10	
1,1,2,2-Tetrachloroethane	ND	0.005	mg/L		
tert-Amyl methyl ether	ND	0.005	mg/L		
1,3-Dichloropropane	ND	0.005	mg/L		
Ethyl tert-butyl ether	ND	0.005	mg/L		
Diisopropyl ether	ND	0.005	mg/L		
Trichlorofluoromethane	ND	0.005	mg/L		
Dichlorodifluoromethane	ND	0.005	mg/L		
Bold:	Samples not compliant with the RIDEM Remediation Regulations GA Groundwater Objective (GA-O)				
Italics :	Samples not compliant with the RIDEM Remediation Regulations GB Groundwater Objective (GB-O)				

PLANS

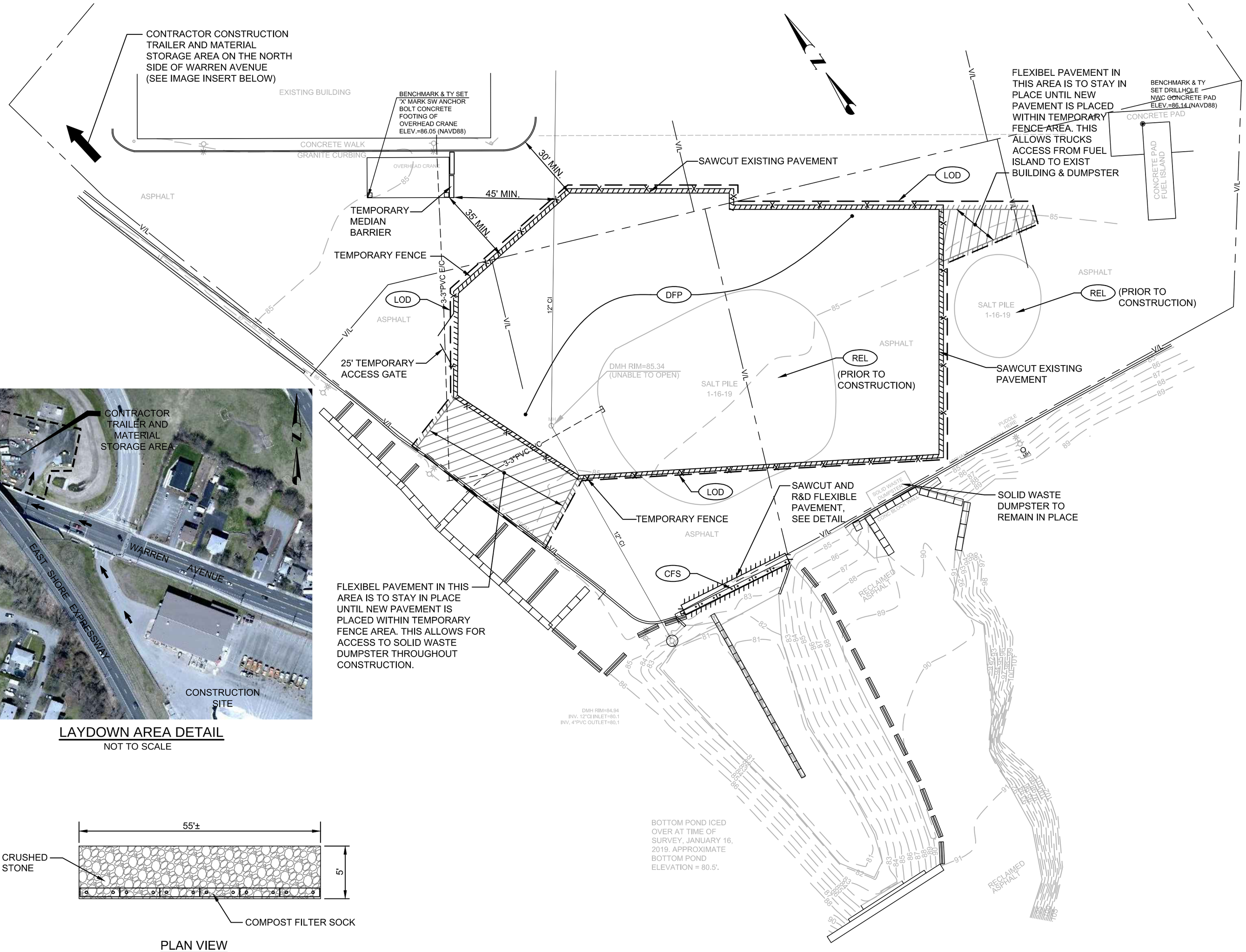

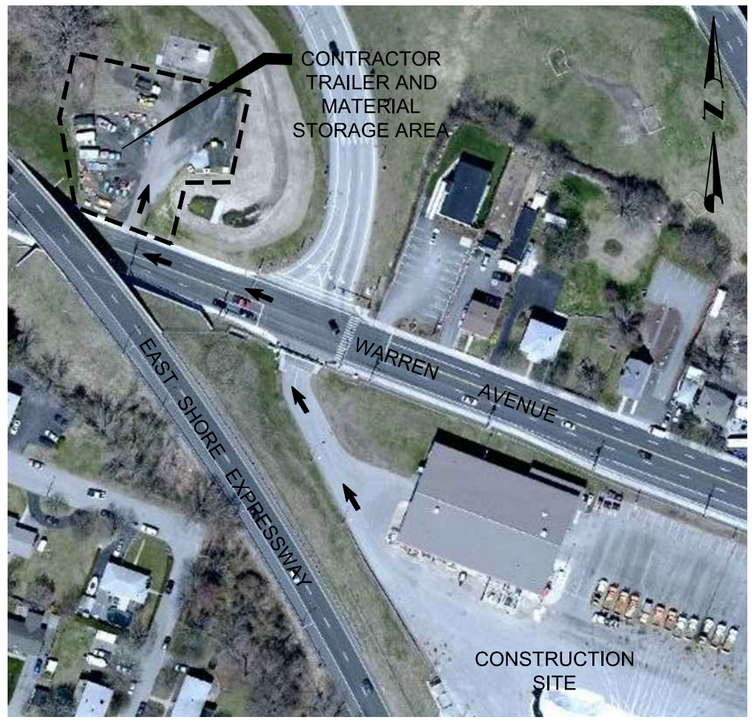

LAYDOWN AREA DETAIL

NOT TO SCALE

PLAN VIEW

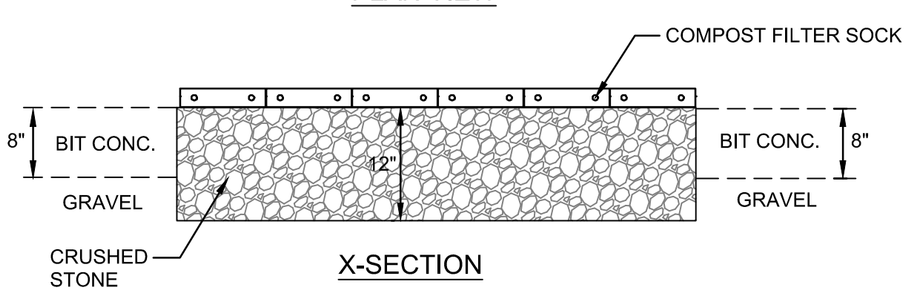

X-SECTION

COMPOST FILTER SOCK INSTALLATION

NOT TO SCALE

GRAPHIC SCALE

Gordon R. Archibald, Inc.
Civil and Environmental Engineers
Pawtucket, Rhode Island

This drawing is copyrighted and is subject to copyright protection as an "architectural work" under 17 U. S. C. Sec. 101 et seq. The protection includes but is not limited to the overall form as well as the arrangement and composition of spaces, materials, color and elements in the design. Under such protection, unauthorized use of this drawing may result in the cessation of construction or buildings being seized and/or monetary compensation being awarded to The Robinson Green Beretta Corporation (RGB).

Any reproduction, possession, or use of this drawing or any part thereof without the express written permission of RGB, is prohibited. Violators will be prosecuted to the full extent of the law.

© RGB 2018

Certification

Drawn by LBD

Checked by SPC

Revised on

50 Holden Street
Providence, Rhode Island 02908

Phone: (401) 272-1730
Fax: (401) 273-7156

E-mail: rgbinfo@rgb.net
www.rgb.net

RGB architects

Architecture ⌊Project Management ⌊Interior Design

Project

STATE OF RHODE ISLAND

DEPARTMENT OF TRANSPORTATION

EAST PROVIDENCE SALT SHED

WARREN AVE.
EAST PROVIDENCE, RI. 02914

Drawing Status

SCHEMATIC DESIGN

Issued On FEBRUARY 2019

Sheet Contents

GENERAL PLAN

Project Number. 1880

Drawing No.

C-001

Sheet 1 of 5

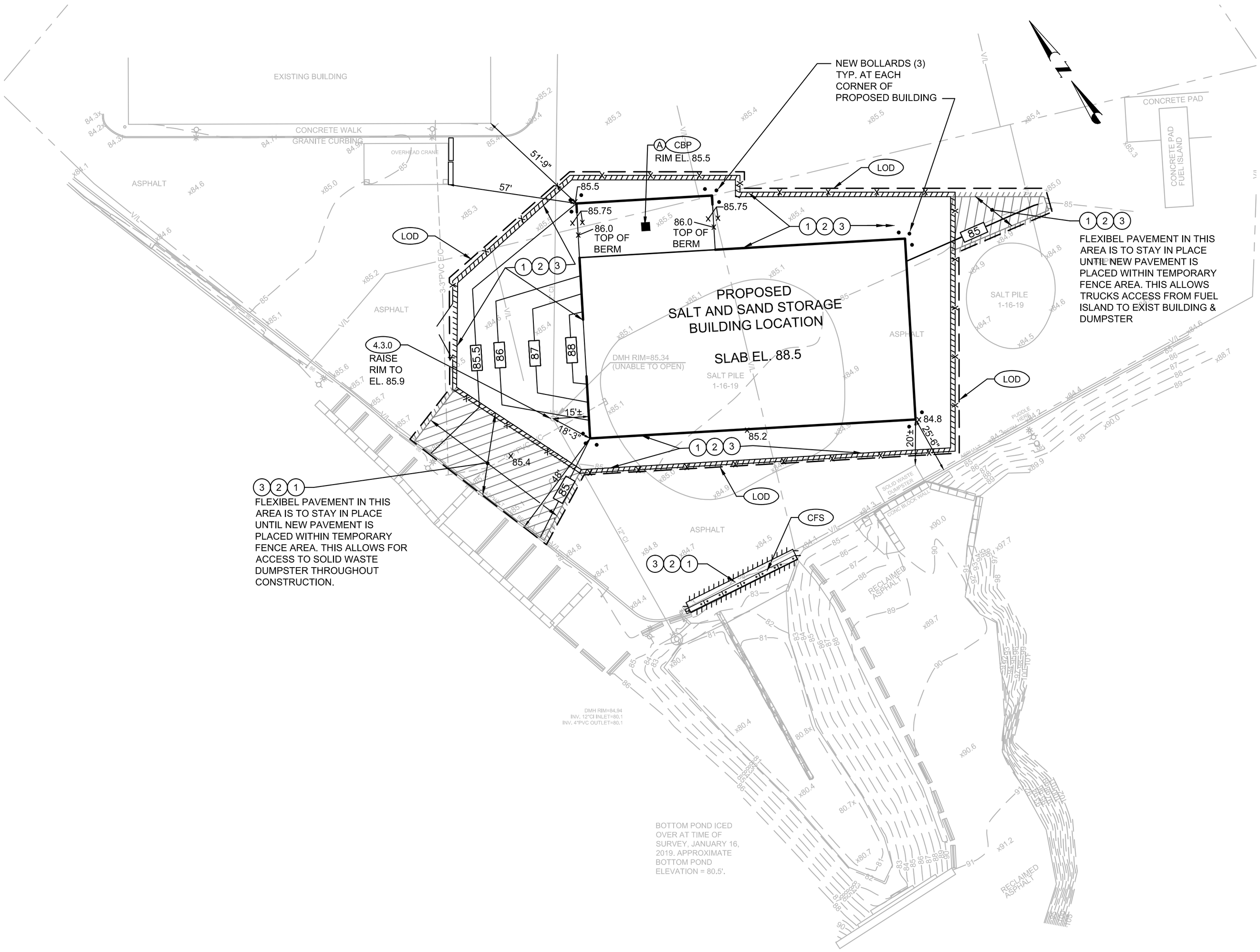

This drawing is copyrighted and is subject to copyright protection as an "architectural work" under 17 U. S. C. Sec. 101 et seq. The protection includes but is not limited to the overall form as well as the arrangement and composition of spaces, materials, color and elements in the design. Under such protection, unauthorized use of this drawing may result in the cessation of construction or buildings being seized and/or monetary compensation being awarded to The Robinson Green Beretta Corporation (RGB).

Any reproduction, possession, or use of this drawing or any part thereof without the express written permission of RGB, is prohibited. Violators will be prosecuted to the full extent of the law.

© RGB 2018

Certification

Drawn by LBD

Checked by SPC

Revised on

50 Holden Street
Providence, Rhode Island 02908

Phone: (401) 272-1730
Fax: (401) 273-7156

E-mail: rgbinfo@rgb.net
www.rgb.net

Architecture L Project Management L Interior Design

Project

STATE OF RHODE ISLAND

DEPARTMENT OF TRANSPORTATION

EAST PROVIDENCE SALT SHED

WARREN AVE.
EAST PROVIDENCE, RI. 02914

Drawing Status

SCHEMATIC DESIGN

Issued On FEBRUARY 2019

Sheet Contents

GRADING PLAN

Project Number. 1880

Drawing No.

C-002

Sheet 2 of 5

Gordon R. Archibald, Inc.
Civil and Environmental Engineers
Pawtucket, Rhode Island

GENERAL NOTES:

1. ANY DAMAGE TO EXISTING PAVEMENT, ROADWAYS, CONDUIT, SIDEWALK, FENCES, ETC., CAUSED BY THE CONTRACTOR SHALL BE REPAIRED BY THE CONTRACTOR AT NO ADDITIONAL COST TO THE STATE.

2. THE CONTRACTOR SHALL PLACE ALL EQUIPMENT AND MATERIAL AS FAR AWAY AS POSSIBLE FROM THE EDGE OF THE TRAVEL LANE SO AS NOT TO CAUSE A SAFETY HAZARD, IN ACCORDANCE WITH SECTION 106.06 OF THE R.I.D.O.T. STANDARD SPECIFICATION, LATEST EDITION.

3. IT IS THE CONTRACTOR'S RESPONSIBILITY TO ENSURE THAT THE EXISTING CONDITIONS ARE NOT OBLITERATED BEFORE CONTROL POINTS ARE LOCATED AND CONSTRUCTION LAYOUT IS ESTABLISHED. THE CONSTRUCTION LAYOUT SHALL BE PROVIDED IN SUFFICIENT DETAIL, THEREBY ENABLING HIM TO CONSTRUCT THE PROJECT IN CONFORMITY WITH THE PLANS AND SPECIFICATIONS. SURVEY WILL BE PROVIDED BY THE CONTRACTOR. THE RESIDENT ENGINEER WILL NOT AUTHORIZE CONSTRUCTION ACTIVITIES TO BEGIN UNTIL THEY ARE SATISFIED THAT ALL GROUND CONTROL HAVE BEEN ESTABLISHED, TIED DOWN, AND DULY RECORDED IN STANDARD FIELD BOOKS.

4. THE FREQUENCY AND APPLICATION RATES FOR THE DUST CONTROL ITEMS WILL BE AS DIRECTED BY THE ENGINEER.

5. ASPHALT EMULSION TACK COAT SHALL BE PLACED PRIOR TO PAVEMENT PLACEMENT ON THE CONCRETE BASE OR COLD PLANED PAVEMENT, AND ON ANY NEW COURSE WHICH HAS BEEN OPEN TO TRAFFIC, OR ANY NEW COURSE WHICH HAS BEEN EXPOSED FOR MORE THAN 3 DAYS, AND/OR AS DIRECTED BY THE ENGINEER. IT SHALL ALSO BE APPLIED TO VERTICAL PAVEMENT FACES BETWEEN ADJOINING PAVEMENT SECTIONS. ALL APPLICATIONS ON BOTH HORIZONTAL AND VERTICAL SURFACES SHALL BE PAID FOR UNDER THE CONTRACT UNIT LUMP SUM PRICE FOR SITE WORK.

6. THE LIMITS OF CLEARING AND SURFACE DISTURBANCE MUST BE STRICTLY ADHERED TO IN ALL AREAS. IN ADDITION TO THOSE AREAS SPECIFICALLY DESIGNATED ON THE PLANS, THE CONTRACTOR WILL BE RESPONSIBLE FOR PROVIDING AND PLACING, AT HIS OWN EXPENSE, PLANTABLE SOIL AND SEED IN AREAS WHICH ARE OUTSIDE OF THE PROJECT'S AREAS OF DISTURBANCE AND WHICH ARE IMPACTED BY CONSTRUCTION OPERATIONS INCLUDING THOSE AREAS WHERE VEHICLES, EQUIPMENT AND MATERIALS ARE STORED WITH THE PERMISSION OF THE ENGINEER.

7. CLEANING AND SWEEPING OF PAVEMENT WILL INCLUDE REMOVAL OF ALL PAVEMENT DEBRIS PRIOR TO THE PLACEMENT OF EACH BITUMINOUS PAVEMENT LIFT. ALL CLEANING AND SWEEPING SHALL BE DONE TO THE SATISFACTION OF THE ENGINEER.

8. THE COORDINATE SYSTEM IS THE R.I. STANDARD GRID SYSTEM, NAD 83(1996). THE VERTICAL CONTROL IS NAVD 88.

9. THE CONTRACTOR SHALL BE RESPONSIBLE FOR MAINTAINING ALL ROADWAYS AND THE FACILITY'S ASPHALT PAVED SURFACES FREE OF DEBRIS RESULTING FROM THEIR CONSTRUCTION OPERATIONS. ALL DEBRIS SHALL BE REMOVED TO THE SATISFACTION OF THE ENGINEER AT NO ADDITIONAL COST TO THE STATE.

10. NO FUEL STORAGE, VEHICLE REFUELING, OR EQUIPMENT STORAGE SHALL TAKE PLACE IN DESIGNATED WETLANDS, NOR WITHIN 100' OF ANY WATER BODY. THIS REQUIREMENT SHALL NOT SUPERSEDE ANY FEDERAL, STATE OR LOCAL LAW, ORDINANCE, RULE OR REGULATION THAT APPLIES TO THE SAME, UNLESS THIS REQUIREMENT IS MORE STRINGENT THAN SAID LAW, ORDINANCE, RULE OR REGULATION.

11. THE CONTRACTOR SHALL BE RESPONSIBLE TO ENSURE THAT AT THE END OF FINAL PAVING OPERATIONS, FLOW TO EXISTING DRAINAGE STRUCTURES HAS BEEN REESTABLISHED AND THAT NO ISOLATED DEPRESSIONS REMAIN. THERE SHALL BE NO SEPARATE PAYMENT FOR THIS PROVISION; IT SHALL BE CONSIDERED INCIDENTAL TO PAVING AND INCLUDED IN THE BID FOR SITE WORK.

12. ALL EMBANKMENTS SHALL BE PLACED IN HORIZONTAL LAYERS NOT EXCEEDING 12" (AFTER COMPACTION) AND SHALL BE COMPACTED AS SPECIFIED BEFORE THE NEXT LAYER IS PLACED. ALSO, EMBANKMENT CONSTRUCTION SHALL CONFORM TO SECTION 202.03.2 OF THE R.I.D.O.T. STANDARD SPECIFICATIONS, LATEST EDITION.

13. THE CONTRACTOR SHALL COMPLETE ALL ASPECTS OF THE CONSTRUCTION PROJECT PRIOR TO OCTOBER 15 OF ANY CALENDAR YEAR. THE PROJECT OPERATIONS MAY EXTEND PAST THE OCTOBER 15 DEADLINE AT THE APPROVAL OF THE ENGINEER.

14. THE CONTRACTORS CONSTRUCTION TRAILER AND MATERIAL STORAGE AREAS SHALL BE LOCATED OFF-SITE AT THE SPACE SHOWN ON SHEET C-001. THE CONTRACTOR SHALL COORDINATE ALL PROJECT ACTIVITIES WITH THE RIDOT. THE CONTRACTOR SHALL PROVIDE ACCESS TO THE EXISTING FACILITY AT ALL TIMES.

15. THE CONTRACTOR SHALL PROVIDE THE RIDOT ACCESS TO THE SOLID WASTE DUMPSTER SITUATED SOUTH OF THE PROJECT LIMITS.

16. THE CONTRACTOR SHALL COORDINATE WITH THE RIDOT TO ESTABLISH TEMPORARY EQUIPMENT & MATERIAL STORAGE AREA. THE CONTRACTOR SHALL MOVE, REMOVE, AND/OR RELOCATE ANY AND ALL EQUIPMENT AND MATERIALS AT THE DIRECTION OF THE RIDOT AT NO ADDITIONAL COST TO THE STATE.

17. THE RIDOT SHALL MOVE, REMOVE, AND/OR RELOCATE EQUIPMENT & MATERIAL AS CALLED OUT ON THE PROJECT DRAWINGS. THE CONTRACTOR SHALL NOT BE ISSUED PAYMENT FOR WORK COMPLETED BY OTHERS.

18. THE CONTRACTOR SHALL INSTALL AND MAINTAIN THE TEMPORARY FENCE AS INDICATED ON THE CONTRACT DRAWINGS. THE CONTRACTOR SHALL RECEIVE THE RIDOT APPROVAL PRIOR TO MODIFYING THE TEMPORARY FENCE.

19. THE CONTRACTOR SHALL COORDINATE THE LOCATIONS FOR PERSONNEL VEHICLE PARKING, WITH THE RIDOT. THE CONTRACTOR SHALL OBTAIN APPROVAL BY THE RIDOT TO UTILIZE ADDITIONAL AREAS OF THE FACILITY.

DRAINAGE AND EROSION CONTROL NOTES:

1. NO UNDISTURBED AREAS SHALL BE CLEARED OF EXISTING VEGETATION AFTER OCTOBER 15 OF ANY CALENDAR YEAR OR DURING ANY PERIOD OF FULL OR LIMITED WINTER SHUTDOWN. ALL DISTURBED SOILS EXPOSED PRIOR TO OCTOBER 15 OF ANY CALENDAR YEAR SHALL BE SEEDED OR PROTECTED BY THAT DATE. ANY SUCH AREAS THAT DO NOT HAVE ADEQUATE VEGETATIVE STABILIZATION, AS DETERMINED BY THE RESIDENT ENGINEER OR ENVIRONMENTAL INSPECTOR, BY NOVEMBER 15 OF ANY CALENDAR YEAR, MUST BE STABILIZED THROUGH THE USE OF EROSION CONTROL MATTING OR HAY MULCH, IN ACCORDANCE WITH SPECIFICATIONS CONTAINED WITHIN THE R.I. SOIL EROSION AND SEDIMENT CONTROL HANDBOOK. IF WORK CONTINUES WITHIN ANY OF THESE AREAS DURING THE PERIOD FROM OCTOBER 15 THROUGH APRIL 15, CARE MUST BE TAKEN TO ENSURE THAT ONLY THE AREA REQUIRED FOR THAT DAY'S WORK IS EXPOSED, AND ALL ERODIBLE SOIL MUST BE RESTABILIZED WITHIN 5 WORKING DAYS. ANY WORK TO CORRECT PROBLEMS RESULTING FROM FAILURE TO COMPLY WITH THIS PROVISION SHALL BE THE RESPONSIBILITY OF THE CONTRACTOR. THERE WILL BE NO SEPARATE PAYMENT FOR THIS PROVISION, IT SHALL BE CONSIDERED INCIDENTAL TO CONSTRUCTION OPERATIONS. STABILIZATION OF ONE FORM OR ANOTHER AS DESCRIBED ABOVE SHALL BE ACHIEVED WITHIN 2 WEEKS OF FINAL GRADING.

2. STOCKPILES OF MATERIAL SHALL NOT BE LOCATED WITHIN REGULATED WETLANDS OR BUFFER ZONE AREAS. THEY SHALL HAVE SIDE SLOPES NO GREATER THAN 30% AND STOCKPILES OF ERODABLE MATERIAL SHALL ALSO BE SEEDED AND RINGED WITH R.I. STD. 9.1.0 OR COMPOST FILTER SOCK TO STABILIZE.

3. IF THE PLANS INCLUDE SPECIFIC AREAS FOR PLACEMENT OF CONSTRUCTION DEWATERING BASINS AND/OR EQUIPMENT AND MATERIALS STORAGE AND STOCKPILING, AND IF THE CONTRACTOR ELECTS TO UTILIZE ANY OTHER AREAS FOR THESE PURPOSES, THIS SHALL BE APPROVED BY THE RIDOT ONLY AFTER OBTAINING ANY NECESSARY PERMITS AND/OR PERMIT MODIFICATIONS FROM THE APPROPRIATE REGULATORY AUTHORITY(IES). ANY PERMITTING REQUIREMENTS SHALL BE THE RESPONSIBILITY OF THE CONTRACTOR AND SHALL BE ACCOMPLISHED AT NO COST TO THE STATE. THE ENGINEER WILL COORDINATE SUBMISSION OF ANY REQUIRED PERMIT APPLICATION MATERIALS WITH THE R.I.D.O.T. OFFICE OF ENVIRONMENTAL PROGRAMS.

4. JUTE MESH SHALL BE USED TO STABILIZE PLANTABLE SOIL AND/OR LOAM IN ALL DITCHES, ON ALL SLOPES ADJACENT TO WETLANDS AND WETLAND PERIMETERS, AND WITHIN ALL WATER WAYS. JUTE MESH IN DITCHES SHALL EXTEND TO AN ELEVATION 2 FEET ABOVE THE BOTTOM OF THE DITCH.

5. SEEDING ON ALL SLOPES 3 TO 1 OR STEEPER SHALL CONSIST OF THE FOLLOWING APPLICATIONS UNLESS CHANGED IN THE CONTRACT.

   a. SEEDING TYPE I.

   b. ADHESIVE MULCH STABILIZER

6. UNVEGETATED SLOPES SHALL NOT BE UNATTENDED OR EXPOSED FOR PERIODS IN EXCESS OF 2 WEEKS OR THROUGH THE INACTIVE WINTER SEASON.

7. ALL DRAINAGE AND UTILITY STRUCTURES WITHIN THE PAVED ROADWAY SHALL BE ADJUSTED TO GRADE WITH THE SURROUNDING PAVEMENT PRIOR TO THE WINTER SHUTDOWN.

8. DURING CONSTRUCTION, THE CONTRACTOR SHALL BE RESPONSIBLE FOR MAINTAINING DRAINAGE AND RUNOFF FLOW DURING STORMS AND PERIODS OF RAINFALL THROUGHOUT THE WORK AREA.

9. ANY ISSUES RELATING TO EROSION AND/OR SEDIMENT TRANSPORT INTO WETLAND AREAS DURING CONSTRUCTION SHALL BE THE RESPONSIBILITY OF THE CONTRACTOR. ANY CORRECTIVE ACTION REQUIRED TO RESOLVE SUCH ISSUES SHALL BE COMPLETED BY THE CONTRACTOR.

10. THE TOE OF ANY FILL SLOPE IS TO REMAIN AT LEAST 1' INSIDE OF ALL EROSION CONTROLS. UNDER NO CIRCUMSTANCES SHALL THE CONTRACTOR COVER ANY PORTION OF THE EROSION CONTROL MEASURES WITH MATERIAL. ANY MATERIAL THAT IS PLACED ON ANY EROSION CONTROLS BY THE CONTRACTOR, OR ANY AGENT OF THE CONTRACTOR, SHALL BE IMMEDIATELY REMOVED BY THE CONTRACTOR, AND ANY NECESSARY REPAIRS TO THE EROSION CONTROLS ACCOMPLISHED.

11. PRIOR TO COMMENCING CONSTRUCTION ACTIVITIES, EROSION AND SEDIMENTATION CONTROLS SHALL BE INSTALLED AT THOSE AREAS INDICATED ON THE PLANS. CLEARING MAY OCCUR PRIOR TO INSTALLATION OF SUCH CONTROLS, HOWEVER NO GRUBBING, GRADING, FILLING, OR OTHER SOIL DISTURBANCE SHALL OCCUR PRIOR TO INSTALLATION. THE LIMITS OF CLEARING AND SURFACE DISTURBANCE MUST BE STRICTLY ADHERED TO IN ALL AREAS.

12. ALL COMPOST FILTER SOCK OR TEMPORARY PROTECTION SHALL REMAIN IN PLACE UNTIL AN ACCEPTABLE STAND OF GRASS IS ESTABLISHED. IF NEEDED, TEMPORARY SEEDING CAN HELP TO MINIMIZE EROSION. TEMPORARY SEED WILL CONFORM TO R.I.D.O.T. STANDARD TEMPORARY SEED MIX.

13. THE CONTRACTOR MUST REPAIR AND/OR RESEED ANY AREAS THAT DO NOT DEVELOP WITHIN THE PERIOD OF ONE YEAR AND HE SHALL DO SO AT NO ADDITIONAL EXPENSE TO THE STATE.

14. THE NORMAL ACCEPTABLE SEASONAL SEEDING DATES ARE SPECIFIED IN SUBSECTION L.02.03 OF THE R.I.D.O.T. STANDARD SPECIFICATIONS, LATEST EDITION.

LANDSCAPE NOTES:

1. ANY TOPSOIL USED AS PLANTABLE SOIL SHALL HAVE A SANDY LOAM TEXTURE RELATIVELY FREE OF SUBSOIL MATERIAL, STONES, ROOTS, LUMPS OF SOIL, TREE LIMBS, TRASH OR CONSTRUCTION DEBRIS, AND SHALL CONFORM TO SECTION M.18 OF THE R.I.D.O.T. STANDARD SPECIFICATIONS, LATEST EDITION.

MAINTENANCE AND PROTECTION OF TRAFFIC NOTES:

1. ALL MAINTENANCE AND PROTECTION OF TRAFFIC CONTROL SETUPS, SIGNS, CHANNELIZING DEVICES, ETC., SHALL BE IN ACCORDANCE WITH THE MANUAL ON UNIFORM TRAFFIC CONTROL DEVICES, LATEST EDITION.

2. ALL SIGN MOUNTINGS FOR TEMPORARY AND CONSTRUCTION SIGNS SHALL BE IN ACCORDANCE WITH THE R.I.D.O.T. STANDARD SPECIFICATIONS, LATEST EDITION.

3. THE CONTRACTOR SHALL COVER ALL EXISTING AND/OR TEMPORARY SIGNS THAT ARE NOT RELEVANT TO THE TRAFFIC CONTROL REQUIRED DURING ANY PARTICULAR STAGE OF THE CONTRACT.

4. TEMPORARY CONSTRUCTION SIGNS AND OTHER WORKZONE TRAFFIC CONTROL DEVICES THAT ARE DAMAGED OR REQUIRE RELOCATION SHALL BE REPLACED AND / OR RELOCATED AS REQUIRED. NO SEPARATE PAYMENT SHALL BE MADE FOR REPLACING OR RELOCATING SIGNS AS THIS WORK WILL BE CONSIDERED INCIDENTAL TO THE PROJECT AND INCLUDED IN THE LUMP SUM PRICE FOR SITE WORK.

5. THE PRIVATE VEHICLES OF CONSTRUCTION WORKERS SHALL NOT BE PARKED ON THE TRAVEL LANES OR SHOULDERS.

6. TEMPORARY CONSTRUCTION SIGNS AND OTHER TEMPORARY TRAFFIC CONTROL DEVICES SHALL BE INSTALLED PRIOR TO THE START OF WORK IN ANY AREA OPEN TO TRAFFIC, AND SHALL BE REMOVED AS SOON AS PRACTICAL WHEN THEY ARE NO LONGER APPROPRIATE.

UTILITY NOTES:

1. EXISTING UTILITIES HAVE BEEN SHOWN ON THE PLANS USING THE BEST AVAILABLE INFORMATION AND ARE APPROXIMATE. EXISTING UTILITY LOCATIONS WERE OBTAINED FROM PLANS PREPARED BY GAROFALO & ASSOCIATES, INC. DATED FEBRUARY 2009 THAT WERE PROVIDED TO GRA BY RIDOT.

2. THE CONTRACTOR SHALL VERIFY THE LOCATIONS OF ALL EXISTING DRAINAGE AND UTILITIES BOTH UNDERGROUND AND OVERHEAD BEFORE EXCAVATION BEGINS IN ACCORDANCE WITH CHAPTER 39-1.2 OF THE R.I. GENERAL LAWS ENTITLED "EXCAVATION NEAR UNDERGROUND UTILITY FACILITIES", WITH AMENDMENTS EFFECTIVE AS OF NOVEMBER 1, 2009 AND, WHEN NECESSARY, BY CONTACTING THE INDIVIDUAL UTILITY COMPANIES. EXCAVATION SHALL BE IN ACCORDANCE WITH ALL STATUTES, ORDINANCES, RULES AND REGULATIONS OF ANY APPLICABLE CITY, TOWN, STATE OR FEDERAL AGENCY. THE CONTRACTOR SHOULD UNDERSTAND THAT NOT ALL UTILITIES SUBSCRIBE TO THE DIG SAFE PROGRAM. IT IS THE CONTRACTOR'S RESPONSIBILITY TO NOTIFY ALL UTILITY COMPANIES AND ENSURE THAT ALL UTILITIES HAVE BEEN MARKED PRIOR TO COMMENCING THEIR WORK. ANY DAMAGE TO EXISTING UTILITIES MARKED IN THE FIELD, OR AS A RESULT OF FAILING TO CONTACT THE APPROPRIATE UTILITY COMPANY, SHALL BE REPAIRED OR REPLACED AT NO ADDITIONAL COST TO THE STATE.

3. FIRE HYDRANTS SHALL NOT BE REMOVED FROM SERVICE WITHOUT WRITTEN AUTHORIZATION FROM THE FIRE DEPARTMENT.

4. VENT LINE LOCATION WERE OBTAINED FROM A PLAN TITLED SITE DEVELOPMENT PLAN, DATED 03/03/11, PREPARED BY SAGE ENVIRONMENTAL, INC.

5. PRIOR TO UTILITY CONSTRUCTION, THE CONTRACTOR SHALL VERIFY THE LOCATION (HORIZONTAL & VERTICAL) OF ALL EXISTING PIPES AND/OR STRUCTURES WHICH ARE TO BE CONNECTED WITH THE RIDOT. WORK CAN COMMENCE ONLY UPON THE RIDOT'S AUTHORIZATION.

6. ELECTRIC, NATURAL GAS, AND WATER UTILITIES WITHIN THE PROJECT AREA ARE NOT SHOWN ON SHEETS C-001 AND C-002. THE CONTRACTOR SHALL REVIEW THE PROJECT PLAN SET ELECTRICAL, MECHANICAL, AND PLUMBING SHEETS FOR THESE UTILITY LOCATIONS.

JOB SPECIFIC LEGEND

LOD	LIMIT OF DISTURBANCE
CBP	CATCH BASIN PROTECTION
CFS	COMPOST FILTER SOCK
REL	RELOCATE MATERIAL ONSITE (COMPLETED BY RIDOT)
DFP	REMOVE AND DISPOSE FLEXIBLE PAVEMENT

Gordon R. Archibald, Inc.
Civil and Environmental Engineers
Pawtucket, Rhode Island

This drawing is copyrighted and is subject to copyright protection as an "architectural work" under 17 U. S. C. Sec. 101 et seq. The protection includes but is not limited to the overall form as well as the arrangement and composition of spaces, materials, color and elements in the design. Under such protection, unauthorized use of this drawing may result in the cessation of construction or buildings being seized and/or monetary compensation being awarded to The Robinson Green Beretta Corporation (RGB).

Any reproduction, possession, or use of this drawing or any part thereof without the express written permission of RGB, is prohibited. Violators will be prosecuted to the full extent of the law.

© RGB 2018

Certification

Drawn by LBD

Checked by SPC

Revised on

50 Holden Street
Providence, Rhode Island 02908

Phone: (401) 272-1730
Fax: (401) 273-7156

E-mail: rgbinfo@rgb.net
www.rgb.net

RGB architects

Architecture | Project Management | Interior Design

Project

STATE OF RHODE ISLAND

DEPARTMENT OF TRANSPORTATION

EAST PROVIDENCE SALT SHED

WARREN AVE.
EAST PROVIDENCE, RI. 02914

Drawing Status

SCHEMATIC DESIGN

Issued On FEBRUARY 2019

Sheet Contents

NOTES AND LEGEND

Project Number. 1880

Drawing No.

C-003

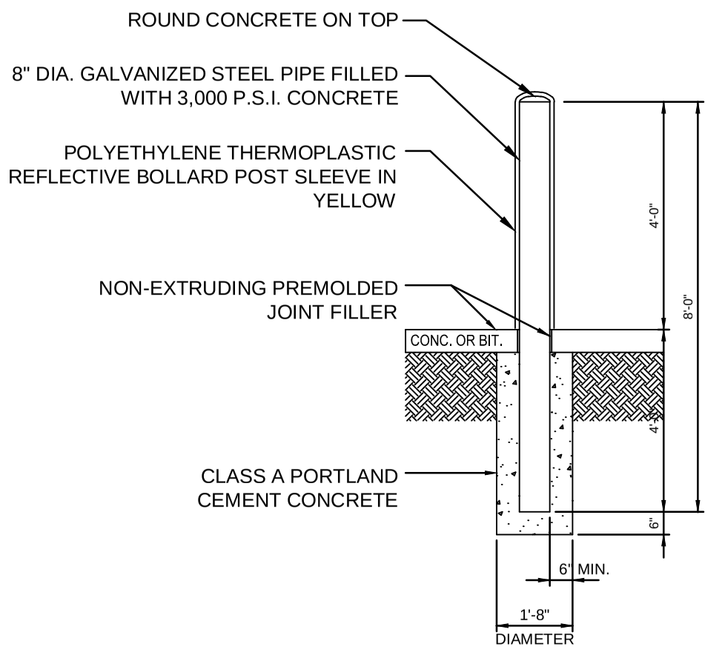

ELEVATION

BOLLARD DETAIL

NOT TO SCALE

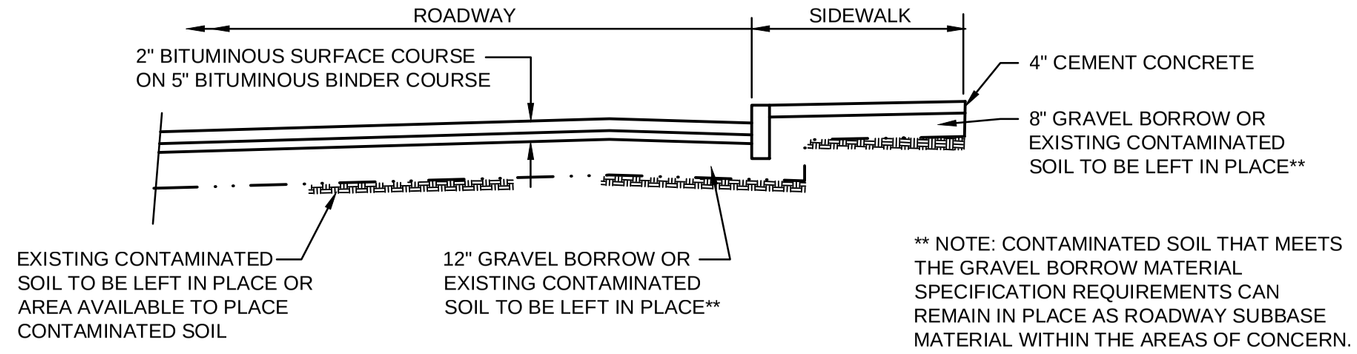

** NOTE: CONTAMINATED SOIL THAT MEETS THE GRAVEL BORROW MATERIAL SPECIFICATION REQUIREMENTS CAN REMAIN IN PLACE AS ROADWAY SUBBASE MATERIAL WITHIN THE AREAS OF CONCERN.

TYPICAL ROADWAY AND SIDEWALK CAP

NOT TO SCALE

PAVEMENT STRUCTURE LEGEND

1. 2" BITUMINOUS SURFACE COURSE, MODIFIED CLASS 12.5 HOT MIX ASPHALT
2. 4 1/2" BITUMINOUS BASE COURSE, CLASS 19.0 HOT MIX ASPHALT (IN TWO-2 1/4" LIFTS)
3. 12" GRAVEL BORROW SUBBASE COURSE

A. R.I. STD. 4.2.0 - 6'-0" ROUND MANHOLE, 6' DEPTH; WITH R.I. STD. 6.3.0 FRAME AND GRATE.

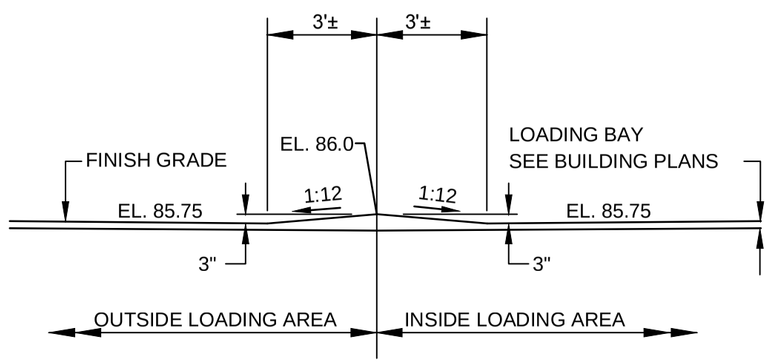

LOADING AREA ASPHALT BERM

NOT TO SCALE

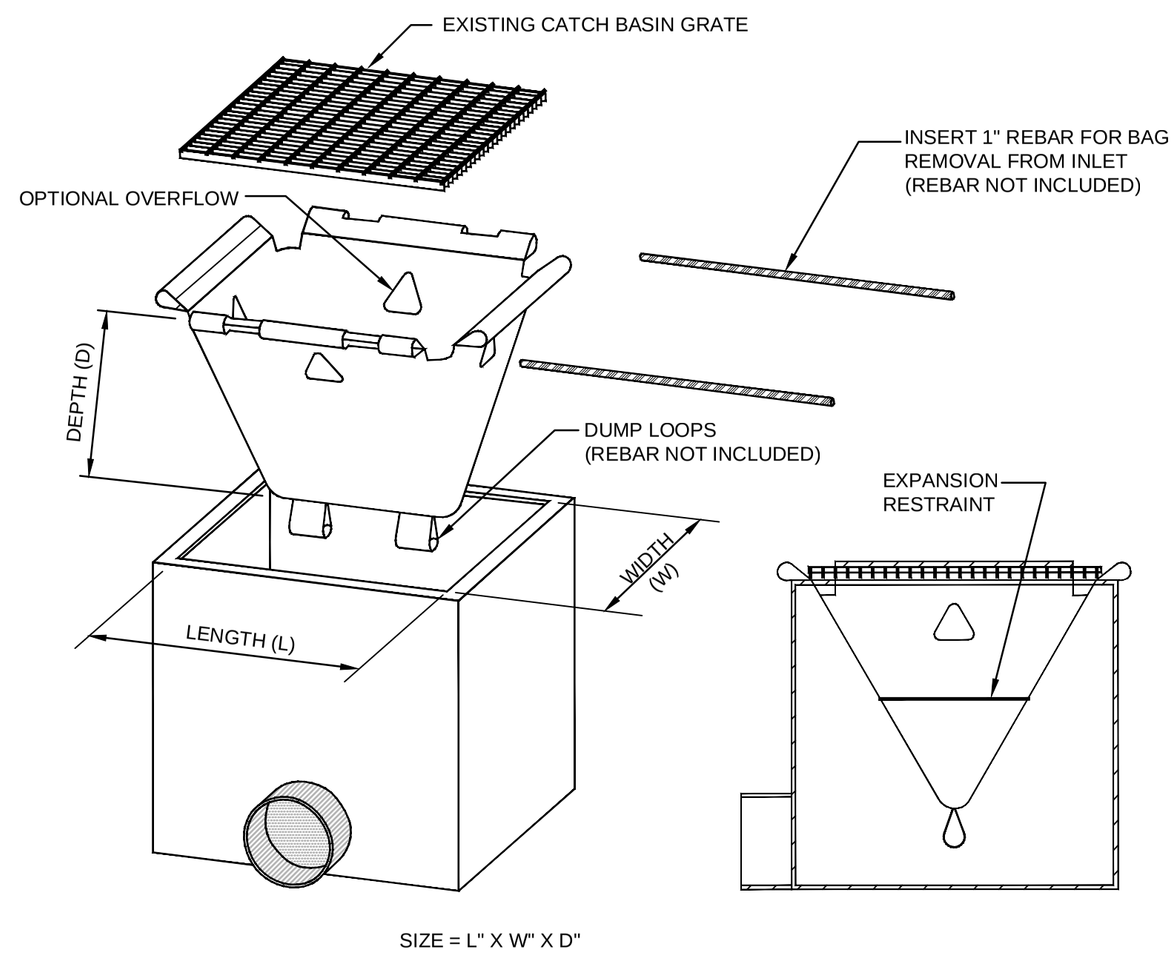

SIZE = L" X W" X D"

CATCH BASIN INLET PROTECTION (CBP)

NOT TO SCALE

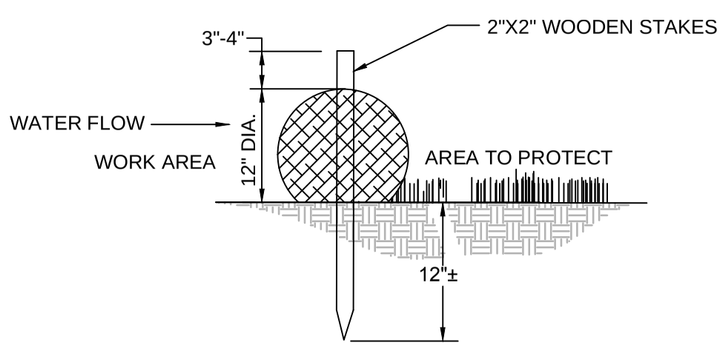

COMPOST FILTER SOCK (CFS)

NOT TO SCALE

NOTE:
COMPOST FILTER SOCK SHALL BE INSTALLED AT ALL LOCATIONS SHOWN ON THE PLANS AND AS DEEMED NECESSARY AND AS DIRECTED BY THE RIDOT RESIDENT ENGINEER. THE CONTRACTOR SHALL MAINTAIN A STOCKPILE OF FILTER SOCK AT A MUTUALLY AGREED UPON SITE, WITHIN THE PROJECT LIMITS. THE STOCKPILE LOCATION SHALL BE SUCH THAT THE FILTER SOCK CAN BE OBTAINED AND DEPLOYED IN THE AREA OF NEED IN AN EXPEDIENT AND EFFICIENT MANNER.

Gordon R. Archibald, Inc.
Civil and Environmental Engineers
Pawtucket, Rhode Island

This drawing is copyrighted and is subject to copyright protection as an "architectural work" under 17 U. S. C. Sec. 101 et seq. The protection includes but is not limited to the overall form as well as the arrangement and composition of spaces, materials, color and elements in the design. Under such protection, unauthorized use of this drawing may result in the cessation of construction or buildings being seized and/or monetary compensation being awarded to The Robinson Green Beretta Corporation (RGB).

Any reproduction, possession, or use of this drawing or any part thereof without the express written permission of RGB, is prohibited. Violators will be prosecuted to the full extent of the law.

© RGB 2018

Certification

Drawn by LBD

Checked by SPC

Revised on

50 Holden Street
Providence, Rhode Island 02908

Phone: (401) 272-1730
Fax: (401) 273-7156

E-mail: rgbinfo@rgb.net
www.rgb.net

Architecture ⊥Project Management ⊥Interior Design

Project

STATE OF RHODE ISLAND

DEPARTMENT OF TRANSPORTATION

EAST PROVIDENCE SALT SHED

WARREN AVE.
EAST PROVIDENCE, RI. 02914

Drawing Status

SCHEMATIC DESIGN

Issued On FEBRUARY 2019

Sheet Contents

DETAILS

Project Number. 1880

Drawing No.

C-004

Sheet 4 of 5

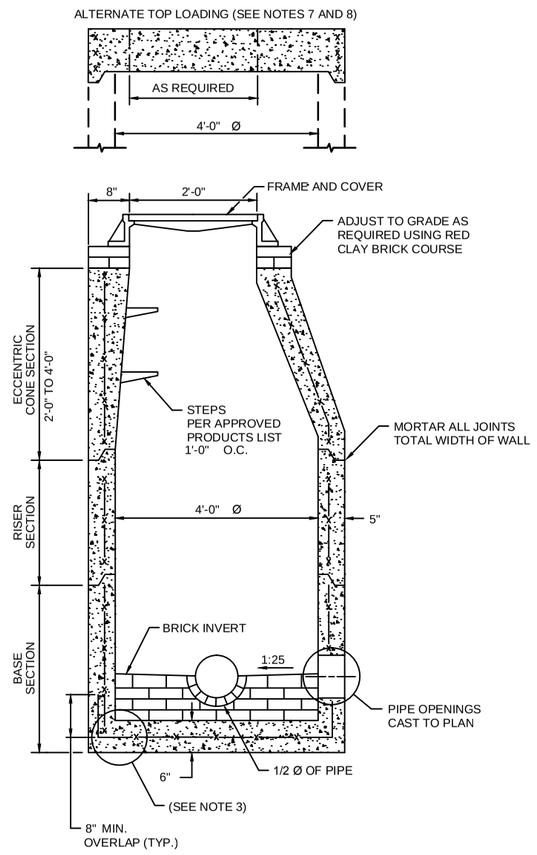

NOTES:
1. SHALL BE IN ACCORDANCE WITH SECTION 702 OF THE R.I. STANDARD SPECIFICATIONS.
2. CIRCUMFERENTIAL STEEL REINFORCEMENT REQUIRED = 0.12 SQ. IN. / LIN. FT. MINIMUM.
3. STEEL REINFORCEMENT FOR BASE SECTION BOTTOM SHALL BE A MINIMUM OF (BOTH WAYS) 0.12 SQ. IN./LIN. FT.
4. ONE POUR MONOLITHIC BASE SECTION.
5. ANY NECESSARY ADJUSTMENTS DURING CONSTRUCTION WILL BE DONE BY SAW-CUTTING AND/OR CORING ONLY. NO JACKHAMMERS, HAMMERS AND CHISELS OR PNEUMATIC TOOLS WILL BE ALLOWED.
6. STEPS SHALL CONFORM TO STD. 5.3.0 AND SHALL BE INSTALLED AT THE CASTING PLANT.
7. ALTERNATE TOP SLAB IS STEEL REINFORCED TO MEET OR EXCEED H-25 LOADING (SEE STD. 4.7.2).
8. ALTERNATE TOP SLAB IS ONLY FOR USE WHEN REDUCING SECTION DOES NOT FIT BECAUSE OF STRUCTURE DEPTH.
9. REFER TO STD. 5.2.0 FOR MAXIMUM PIPE SIZES.

RHODE ISLAND DEPARTMENT OF TRANSPORTATION

REVISIONS		
NO.	BY	DATE

PRECAST 4'–0" ROUND MANHOLE

CHIEF ENGINEER TRANSPORTATION — CHIEF DESIGN ENGINEER TRANSPORTATION — JUNE 15, 1998 ISSUE DATE

R.I. STANDARD 4.2.0

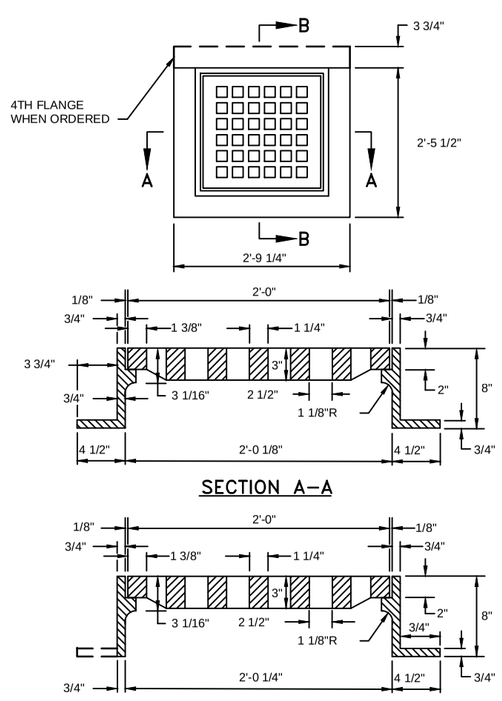

NOTE:
FRAME AND GRATE SHALL CONFORM TO SECTION M.04 OF THE R.I. STANDARD SPECIFICATIONS.

RHODE ISLAND DEPARTMENT OF TRANSPORTATION

REVISIONS		
NO.	BY	DATE

SQUARE FRAME AND GRATE

CHIEF ENGINEER TRANSPORTATION — CHIEF DESIGN ENGINEER TRANSPORTATION — JUNE 15, 1998 ISSUE DATE

R.I. STANDARD 6.3.0

CONTAMINATED SOIL MANAGEMENT NOTES

GENERAL:

1. ALL CONTAMINATED SOIL RELATED WORK SHALL BE COMPLETED IN ACCORDANCE WITH THE CONSTRUCTION SOIL MANAGEMENT PLAN AND THE SPECIFICATION REQUIREMENTS.

IMPORTED FILL MATERIAL:

1. THE CONTRACTOR SHALL BE RESPONSIBLE FOR SAMPLING AND TESTING ALL IMPORTED SOIL PRIOR TO IT BEING BROUGHT ON-SITE. THE SAMPLING AND TESTING SHALL BE COMPLETED IN ACCORDANCE WITH THE ANALYTICAL TESTING REQUIREMENTS FOR IMPORTED SOIL SPECIFICATION.

2. THE CONTRACTOR SHALL PROVIDE A REPORT PREPARED BY A RHODE ISLAND PROFESSIONAL ENGINEER CERTIFYING THAT EACH TYPE OF IMPORTED SOIL TYPE IS COMPLIANT WITH THE REMEDIATION REGULATIONS RESIDENTIAL DIRECT EXPOSURE CRITERIA (R-DEC) AND GA LEACHABILITY CRITERIA (GA-L). THE REPORT SHALL BE PROVIDED TO THE RIDOT A MINIMUM OF TEN WORKING DAYS PRIOR TO THE IMPORTED SOIL BEING BROUGHT ON-SITE. RIDOT MUST APPROVE THE IMPORTED SOIL FOR USE ON-SITE PRIOR TO IT BEING TRANSPORTED TO THE SITE.

CONTAMINATED SOIL EXCAVATION:

1. ALL SOIL EXCAVATION WITHIN THE PROJECT LIMIT OF DISTURBANCE SHALL BE CONSIDERED CONTAMINATED SOIL EXCAVATION.

2. ALL SOIL EXCAVATION SHALL BE COMPLETED IN ACCORDANCE WITH THE CONSTRUCTION SOIL MANAGEMENT PLAN PROVIDED IN THE SPECIFICATIONS.

EXCAVATED CONTAMINATED SOIL MANAGEMENT:

1. THE TERMS "DRY EXCAVATED CONTAMINATED SOIL" AND "WET EXCAVATED COMNTAMINATED SOIL" ARE DEFINED IN THE SPECIFICATIONS.

2. THE CONTRACTOR SHALL SUBMIT THE PROPOSED CONTAMINATED SOIL RECYCLING/DIPOSAL FACILITY AND THE PROPOSED LIQUID WASTE RECYCLING/DISPOSAL FACILITY TO THE RIDOT FOR APPROVAL. CONTAMINATED SOIL AND LIQUID WSTE SHALL BE RECYCLED/DISPOSED AT THE RIDOT APPROVED FACILITY ONLY. NO CONTAMINATED SOIL AND/OR LIQUID WASTE SHALL BE RECYCLED/DISPOSED AT A RECYCLING/DISPOSAL FACILITY THAT HAS NOT BEEN APPROVED BY THE RIDOT.

3. THE CONTRACTOR SHALL LOAD AND HAUL DRY EXCAVATED CONTAMINATED SOIL FOR OFF-SITE RECYCLING/DISPOSAL AT A FACILITY APPROVED BY THE RIDOT. DRY EXCAVATED CONTAMINATED SOIL SHALL NOT BE STOCKPILED AT THE SITE. THE CONTRACTOR SHALL BE RESPONSIBLE FOR ALL LABOR. ANALYTICAL COSTS, APPLICATION FEES, AND ANY OTHER COSTS ASSOCIATED WITH PRE-CHARACTERIZING DRY CONTAMINATED SOIL FOR RECYCLING/DISPOSAL AND OBTAINING RECYCLING/DISPOSAL APPROVAL FROM THE RECYCLING/DISPOSAL FACILITY.

4. WET EXCAVATED CONTAMINATED SOIL SHALL BE STOCKPILED ON-SITE. THE CONTRACTOR SHALL OBTAIN RIDOT APPROVAL FOR THE WET EXCAVATED CONTAMINATED SOIL STOCKPILE LOCATION PRIOR TO COMMENCING WET CONTAMINATED SOIL EXCAVATION WORK. THE STOCKPILE SHALL BE CONSTRUCTED IN ACCORDANCE WITH THE WET CONTAMINATED SOIL STOCKPILE DETAIL.

5. THE CONTRACTOR SHALL BE RESPONSIBLE FOR ALL LABOR. ANALYTICAL COSTS, APPLICATION FEES, AND ANY OTHER COSTS ASSOCIATED WITH CHARACTERIZING WET CONTAMINATED SOIL FOR RECYCLING/DISPOSAL AND OBTAINING RECYCLING/DISPOSAL APPROVAL FROM THE RECYCLING/DISPOSAL FACILITY.

6. THE CONTRACTOR SHALL BE RESPONSIBLE FOR ALL LABOR. ANALYTICAL COSTS, APPLICATION FEES, AND ANY OTHER COSTS ASSOCIATED WITH CHARACTERIZING LIQUID THAT COLLECTS IN THE WET CONTAMINATED SOIL STOCKPILE SUMP FOR RECYCLING/DISPOSAL AND OBTAINING RECYCLING/DISPOSAL APPROVAL FROM THE RECYCLING/DISPOSAL FACILITY.

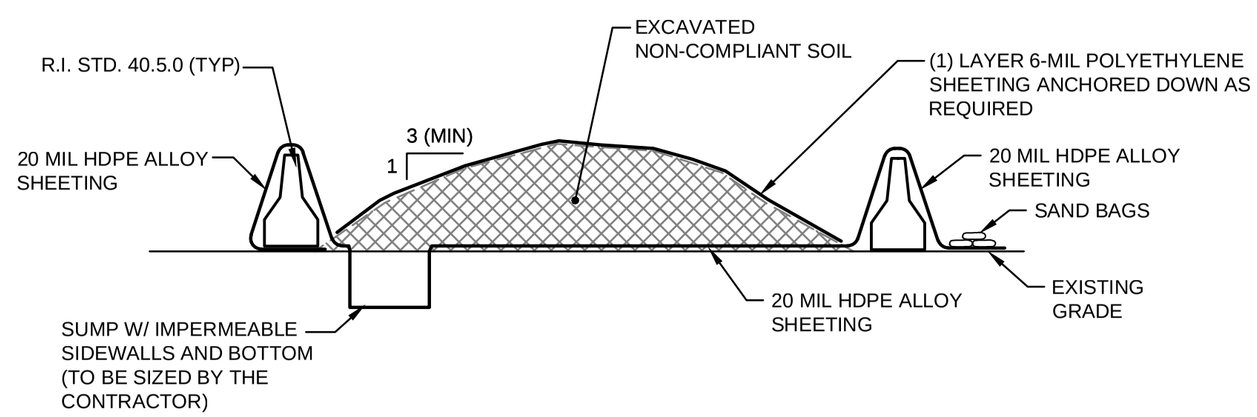

SECTION THROUGH WET CONTAMINATED SOIL STOCKPILE

NOT TO SCALE

NOTES:
1. THE CONTRACTOR SHALL COVER THE CONTAMINATED SOIL STOCKPILE WITH 6-MIL POLYETHYLENE SHEETING AND SECURE COVER AT THE END OF EACH WORK DAY.

2. THE CONTRACTOR SHALL PROVIDE AN IMPERMEABLE, 20MIL HDPE ALLOY SHEETING LINED SUMP TO COLLECT WATER THAT DRAINS FROM THE STOCKPILED CONTAMINATED SOIL/SEDIMENT.

Gordon R. Archibald, Inc.
Civil and Environmental Engineers
Pawtucket, Rhode Island

This drawing is copyrighted and is subject to copyright protection as an "architectural work" under 17 U. S. C. Sec. 101 et seq. The protection includes but is not limited to the overall form as well as the arrangement and composition of spaces, materials, color and elements in the design. Under such protection, unauthorized use of this drawing may result in the cessation of construction or buildings being seized and/or monetary compensation being awarded to The Robinson Green Beretta Corporation (RGB).

Any reproduction, possession, or use of this drawing or any part thereof without the express written permission of RGB, is prohibited. Violators will be prosecuted to the full extent of the law.

© RGB 2018

Certification

Drawn by LBD

Checked by SPC

Revised on

50 Holden Street
Providence, Rhode Island 02908

Phone: (401) 272-1730
Fax: (401) 273-7156

E-mail: rgbinfo@rgb.net
www.rgb.net

RGB architects

Architecture Project Management Interior Design

Project

STATE OF RHODE ISLAND

DEPARTMENT OF TRANSPORTATION

EAST PROVIDENCE SALT SHED

WARREN AVE.
EAST PROVIDENCE, RI. 02914

Drawing Status

SCHEMATIC DESIGN

Issued On FEBRUARY 2019

Sheet Contents

DETAILS 2

Project Number. 1880

Drawing No.

C-005

Sheet 5 of 5

APPENDICES

APPENDIX A

GEOPROBE BORING LOGS

Gordon R. Archibald, Inc.
200 Main Street
Pawtucket, Rhode Island 02860
BORING LOG

BORING ID: GRA-1
SHEET: 1 OF 1
DATE: 1/25/2019
PREAPRED BY: B. Neilan

PROJECT NO./NAME: E.P. Salt Shed
DRILLING CONTRACTOR: PAL Environmental

PROJECT LOCATION: South of Warren Ave.
Between E. Shore Expressway On / Off Ramps
CONTRACTOR OP.: Mike

OFFSET:
DRILLING METHOD: GeoProbe
HOLE SIZE: 3.25"

NOTES: Southeast Corner of Proposed Salt Shed Building. See Boring Location Plan.

DEPTH (ft)	SAMPLE METHOD	SAMPLE DEPTH FROM - TO	REC. (%)	MATERIAL DESCRIPTION	LABORATORY SAMPLE INFORMATION: SAMPLE ID	SAMPLE DEPTH	SAMPLE TYPE	FIELD SCREEN VOC	FIELD SCREEN TPH	WELL INFORMATION
	DL	0-5	3.5'	Fine / Course Sand with Gravel			C*			N / A
5	DL	5-10	4'	Fine / Course Sand with Gravel Saturated Soil at 7' bg			C*			
10				Bottom of Exploration @ 10' bg						
15										
20										
25										
30										
35										

C: Composite Sample
G: Grab Sample
ND: Not Detected
GW Int. - Groundwater Interface
DL: Dedicated Liner

*Saturated and Un-Saturated soils segregated for composite soil samples from boring locations GRA-1, -2, -3, -4, -5, and -6 advanced on January 25, 2019.

Gordon R. Archibald, Inc.
200 Main Street
Pawtucket, Rhode Island 02860
BORING LOG

BORING ID: GRA-2
SHEET: 1 OF 1
DATE: 1/25/2019
PREAPRED BY: B. Neilan

PROJECT NO./NAME: E.P. Salt Shed
DRILLING CONTRACTOR: PAL Environmental
PROJECT LOCATION: South of Warren Ave.
Between E. Shore Expressway On / Off Ramps
CONTRACTOR OP.: Mike
OFFSET:
DRILLING METHOD: GeoProbe
HOLE SIZE: 3.25"
NOTES: Southwest Corner of Proposed Salt Shed Building. See Boring Location Plan.

DEPTH (ft)	SAMPLE METHOD	SAMPLE DEPTH FROM - TO	REC. (%)	MATERIAL DESCRIPTION	LABORATORY SAMPLE INFORMATION: SAMPLE ID	SAMPLE DEPTH	SAMPLE TYPE	FIELD SCREEN VOC	FIELD SCREEN TPH	WELL INFORMATION
				Fine / Course Sand with Gravel						N / A
			2'				C*			
										Groundwater
5	DL	0-5		Fill - Dark Course Sand / Debris						Sample GRA-2
										Collected from open
				Saturated Soil at 6' bg						Boring.
			4'	Fill - Dark Course Sand / Debris / Timber			C*			Groundwater
										Seepage
10	DL	5-10								approximately 4' bg.
				Bottom of Exploration						
				@ 10' bg						
15										
20										
25										
30										
35										

C: Composite Sample ND: Not Detected DL: Dedicated Liner
G: Grab Sample GW Int. - Groundwater Interface

*Saturated and Un-Saturated soils segregated for composite soil samples from boring locations GRA-1, -2, -3, -4, -5, and -6 advanced on January 25, 2019.

Discrepancy in groundwater elevation due to recovery of first DL sample interval and likely collapse during second DL sample.

Gordon R. Archibald, Inc.
200 Main Street
Pawtucket, Rhode Island 02860
BORING LOG

BORING ID: GRA-3
SHEET: 1 OF 1
DATE: 1/25/2019
PREAPRED BY: B. Neilan

PROJECT NO./NAME: E.P. Salt Shed
DRILLING CONTRACTOR: PAL Environmental

PROJECT LOCATION: South of Warren Ave.
Between E. Shore Expressway On / Off Ramps
CONTRACTOR OP.: Mike

OFFSET:
DRILLING METHOD: GeoProbe
HOLE SIZE: 3.25"

NOTES: West Extent of Proposed Salt Shed Building. See Boring Location Plan.

DEPTH (ft)	SAMPLE METHOD	SAMPLE DEPTH FROM - TO	REC. (%)	MATERIAL DESCRIPTION	LABORATORY SAMPLE INFORMATION: SAMPLE ID	SAMPLE DEPTH	SAMPLE TYPE	FIELD SCREEN: VOC	TPH	WELL INFORMATION
	DL	0-5	4'	Fine / Course Sand with Gravel Dark Brown / Black - Fine Sand with Gravel			C*			N / A
5										
	DL	5-10	3'	Saturated Soil at 6' bg Fill - Debris including glass, paper, metals, ect.			C*			
10				Bottom of Exploration @ 10' bg						
15										
20										
25										
30										
35										

C: Composite Sample
G: Grab Sample
ND: Not Detected
GW Int. - Groundwater Interface
DL: Dedicated Liner

*Saturated and Un-Saturated soils segregated for composite soil samples from boring locations GRA-1, -2, -3, -4, -5, and -6 advanced on January 25, 2019.

Gordon R. Archibald, Inc.
200 Main Street
Pawtucket, Rhode Island 02860
BORING LOG

BORING ID: GRA-4
SHEET: 1 OF 1
DATE: 1/25/2019
PREAPRED BY: B. Neilan

PROJECT NO./NAME: E.P. Salt Shed
DRILLING CONTRACTOR: PAL Environmental
PROJECT LOCATION: South of Warren Ave.
Between E. Shore Expressway On / Off Ramps
CONTRACTOR OP.: Mike
OFFSET:
DRILLING METHOD: GeoProbe
HOLE SIZE: 3.25"
NOTES: Northwest Extent of Proposed Salt Shed Building. See Boring Location Plan.

DEPTH (ft)	SAMPLE METHOD	SAMPLE DEPTH FROM - TO	REC. (%)	MATERIAL DESCRIPTION	LABORATORY SAMPLE INFORMATION: SAMPLE ID	SAMPLE DEPTH	SAMPLE TYPE	FIELD SCREEN: VOC	TPH	WELL INFORMATION
				Fine / Course Sand with Gravel						N / A
			4'	Coal Ash at 2.5' bg			C*			
				Fine Sand with Gravel						
5	DL	0-5								
				Saturated Soil at 6' bg						
			2'	Gray Loamy Sand			C*			
10	DL	5-10								
				Bottom of Exploration @ 10' bg						
15										
20										
25										
30										
35										

C: Composite Sample
G: Grab Sample
ND: Not Detected
GW Int. - Groundwater Interface
DL: Dedicated Liner

*Saturated and Un-Saturated soils segregated for composite soil samples from boring locations GRA-1, -2, -3, -4, -5, and -6 advanced on January 25, 2019.

Gordon R. Archibald, Inc.
200 Main Street
Pawtucket, Rhode Island 02860
BORING LOG

BORING ID: GRA-5
SHEET: 1 OF 1
DATE: 1/25/2019
PREAPRED BY: B. Neilan

PROJECT NO./NAME: E.P. Salt Shed
DRILLING CONTRACTOR: PAL Environmental
PROJECT LOCATION: South of Warren Ave.
Between E. Shore Expressway On / Off Ramps
CONTRACTOR OP.: Mike
OFFSET:
DRILLING METHOD: GeoProbe
HOLE SIZE: 3.25"
NOTES: Northern Extent of Proposed Salt Shed Building. See Boring Location Plan.

DEPTH (ft)	SAMPLE METHOD	SAMPLE DEPTH FROM - TO	REC. (%)	MATERIAL DESCRIPTION	LABORATORY SAMPLE INFORMATION: SAMPLE ID	SAMPLE DEPTH	SAMPLE TYPE	FIELD SCREEN VOC	FIELD SCREEN TPH	WELL INFORMATION
				Gray - Fine / Course Sand with Gravel						N / A
			3.5'	Fine / Course Sand with Concrete			C*			
				Dark Brown Fine Sand						
5	DL	0-5								
				Fill - Debris (timber, glass, ect.)						
			3'	Saturated Soil at 7' bg			C*			
10	DL	5-10								
				Bottom of Exploration @ 10' bg						
15										
20										
25										
30										
35										

C: Composite Sample
G: Grab Sample
ND: Not Detected
GW Int. - Groundwater Interface
DL: Dedicated Liner

*Saturated and Un-Saturated soils segregated for composite soil samples from boring locations GRA-1, -2, -3, -4, -5, and -6 advanced on January 25, 2019.

Gordon R. Archibald, Inc.
200 Main Street
Pawtucket, Rhode Island 02860
BORING LOG

BORING ID: GRA-6
SHEET: 1 OF 1
DATE: 1/25/2019
PREAPRED BY: B. Neilan

PROJECT NO./NAME: E.P. Salt Shed
DRILLING CONTRACTOR: PAL Environmental
PROJECT LOCATION: South of Warren Ave.
Between E. Shore Expressway On / Off Ramps
CONTRACTOR OP.: Mike
OFFSET:
DRILLING METHOD: GeoProbe
HOLE SIZE: 3.25"
NOTES: Northeast Extent of Proposed Salt Shed Building. See Boring Location Plan.

DEPTH (ft)	SAMPLE METHOD	SAMPLE DEPTH FROM - TO	REC. (%)	MATERIAL DESCRIPTION	LABORATORY SAMPLE INFORMATION: SAMPLE ID	SAMPLE DEPTH	SAMPLE TYPE	FIELD SCREEN VOC	FIELD SCREEN TPH	WELL INFORMATION
				Gray - Fine / Course Sand with Gravel						N / A
			3'	Fine / Course Sand with Concrete			C*			
5	DL	0-5								
				Fill - Debris (timber, glass, ect.)						
			3'	Saturated Soil at 6.5' bg			C*			
10	DL	5-10								
				Bottom of Exploration @ 10' bg						
15										
20										
25										
30										
35										

C: Composite Sample
G: Grab Sample
ND: Not Detected
GW Int. - Groundwater Interface
DL: Dedicated Liner

*Saturated and Un-Saturated soils segregated for composite soil samples from boring locations GRA-1, -2, -3, -4, -5, and -6 advanced on January 25, 2019.

APPENDIX B

LABORATORY ANALYTICAL DATA REPORT – COMPOSITE SOIL SAMPLES

New England Testing Laboratory, Inc.
(401) 353-3420

REPORT OF ANALYTICAL RESULTS

NETLAB Work Order Number: 9A28003
Client Project: East Providence Maintenance

Report Date: 05-February-2019

Prepared for:

Steve Cadorette
Gordon R. Archibald, Inc.
200 Main Street
Pawtucket, RI 02860

Richard Warila, Laboratory Director
New England Testing Laboratory, Inc.
59 Greenhill Street
West Warwick, RI 02893
rich.warila@newenglandtesting.com

Samples Submitted :

The samples listed below were submitted to New England Testing Laboratory on 01/28/19. The group of samples appearing in this report was assigned an internal identification number (case number) for laboratory information management purposes. The client's designations for the individual samples, along with our case numbers, are used to identify the samples in this report. This report of analytical results pertains only to the sample(s) provided to us by the client which are indicated on the custody record. The case number for this sample submission is 9A28003. Custody records are included in this report.

Lab ID	Sample	Matrix	Date Sampled	Date Received
9A28003-01	CS-1	Soil	01/25/2019	01/28/2019
9A28003-02	CS-2	Soil	01/25/2019	01/28/2019
9A28003-03	CS-3	Soil	01/25/2019	01/28/2019
9A28003-04	CS-4	Soil	01/25/2019	01/28/2019

Request for Analysis

At the client's request, the analyses presented in the following table were performed on the samples submitted.

CS-1 (Lab Number: 9A28003-01)

Analysis	Method
Arsenic	EPA 6010C
Barium	EPA 6010C
Cadmium	EPA 6010C
Chromium	EPA 6010C
Flashpoint	EPA 1010A-Mod
Free liquids	EPA 9095B
Lead	EPA 6010C
Mercury	EPA 7471B
PCBs	EPA 8082A
Percent Total Solids	Gravimetric
pH	SM4500-H-B
Selenium	EPA 6010C
Semivolatile Organic Compounds	EPA 8270D
Silver	EPA 6010C
TCLP Arsenic	EPA 6010C
TCLP Barium	EPA 6010C
TCLP Cadmium	EPA 6010C
TCLP Chromium	EPA 6010C
TCLP Lead	EPA 6010C
TCLP Mercury	EPA 7470A
TCLP Selenium	EPA 6010C
TCLP Silver	EPA 6010C
Total Petroleum Hydrocarbons	EPA-8100-mod
Volatile Organic Compounds	EPA 8260C

CS-2 (Lab Number: 9A28003-02)

Analysis	Method
Arsenic	EPA 6010C
Barium	EPA 6010C
Cadmium	EPA 6010C
Chromium	EPA 6010C
Flashpoint	EPA 1010A-Mod
Free liquids	EPA 9095B
Lead	EPA 6010C
Mercury	EPA 7471B
PCBs	EPA 8082A
Percent Total Solids	Gravimetric
pH	SM4500-H-B
Selenium	EPA 6010C
Semivolatile Organic Compounds	EPA 8270D
Silver	EPA 6010C
TCLP Arsenic	EPA 6010C
TCLP Barium	EPA 6010C
TCLP Cadmium	EPA 6010C
TCLP Chromium	EPA 6010C
TCLP Lead	EPA 6010C
TCLP Mercury	EPA 7470A

Request for Analysis (continued)

CS-2 (Lab Number: 9A28003-02) (continued)

Analysis	Method
TCLP Selenium	EPA 6010C
TCLP Silver	EPA 6010C
Total Petroleum Hydrocarbons	EPA-8100-mod
Volatile Organic Compounds	EPA 8260C

CS-3 (Lab Number: 9A28003-03)

Analysis	Method
Arsenic	EPA 6010C
Barium	EPA 6010C
Cadmium	EPA 6010C
Chromium	EPA 6010C
Flashpoint	EPA 1010A-Mod
Free liquids	EPA 9095B
Lead	EPA 6010C
Mercury	EPA 7471B
PCBs	EPA 8082A
Percent Total Solids	Gravimetric
pH	SM4500-H-B
Selenium	EPA 6010C
Semivolatile Organic Compounds	EPA 8270D
Silver	EPA 6010C
TCLP Arsenic	EPA 6010C
TCLP Barium	EPA 6010C
TCLP Cadmium	EPA 6010C
TCLP Chromium	EPA 6010C
TCLP Lead	EPA 6010C
TCLP Mercury	EPA 7470A
TCLP Selenium	EPA 6010C
TCLP Silver	EPA 6010C
Total Petroleum Hydrocarbons	EPA-8100-mod
Volatile Organic Compounds	EPA 8260C

Request for Analysis (continued)

CS-4 (Lab Number: 9A28003-04)

Analysis	Method
Arsenic	EPA 6010C
Barium	EPA 6010C
Cadmium	EPA 6010C
Chromium	EPA 6010C
Flashpoint	EPA 1010A-Mod
Free liquids	EPA 9095B
Lead	EPA 6010C
Mercury	EPA 7471B
PCBs	EPA 8082A
Percent Total Solids	Gravimetric
pH	SM4500-H-B
Selenium	EPA 6010C
Semivolatile Organic Compounds	EPA 8270D
Silver	EPA 6010C
TCLP Arsenic	EPA 6010C
TCLP Barium	EPA 6010C
TCLP Cadmium	EPA 6010C
TCLP Chromium	EPA 6010C
TCLP Lead	EPA 6010C
TCLP Mercury	EPA 7470A
TCLP Selenium	EPA 6010C
TCLP Silver	EPA 6010C
Total Petroleum Hydrocarbons	EPA-8100-mod
Volatile Organic Compounds	EPA 8260C

Method References

Standard Methods for the Examination of Water and Wastewater, 20th Edition, APHA/ AWWA-WPCF, 1998

Test Methods for Evaluating Solid Waste, Physical/Chemical Methods, SW846, USEPA

Case Narrative

Sample Receipt

The samples were all appropriately cooled and preserved upon receipt. The samples were received in the appropriate containers. The chain of custody was adequately completed and corresponded to the samples submitted.

Metals

All analyses were performed according to NETLAB's documented Standard Operating Procedures, within all required holding times, and with appropriate quality control measures. All QC was within laboratory established acceptance criteria. The samples were received, processed, and reported with no anomalies.

PCBs

All samples were extracted and analyzed within method specified holding times and according to NETLAB's documented standard operating procedures. The results for the associated calibration, method blank and laboratory control sample (LCS) were within method specified quality control criteria.

Semi-volatile Compounds

All samples were extracted and analyzed within method specified holding times and according to NETLAB's documented standard operating procedures. The results for the associated calibration, method blank and laboratory control sample (LCS) were within method specified quality control criteria.

Total Petroleum Hydrocarbons

All samples were extracted and analyzed within method specified holding times and according to NETLAB's documented standard operating procedures. The results for the associated calibration, method blank and laboratory control sample (LCS) were within method specified quality control criteria.

Volatile Organic Compounds

All samples were analyzed within method specified holding times and according to NETLAB's documented standard operating procedures. The results for the associated calibration, method blank and laboratory control sample (LCS) were within method specified quality control requirements and allowances.

Wet Chemistry

All samples were analyzed within method specified holding times and according to NETLAB's documented standard operating procedures.

Results: General Chemistry

Sample: CS-1

Lab Number: 9A28003-01 (Soil)

Analyte	Result	Qual	Reporting Limit	Units	Date Prepared	Date Analyzed
Solids, Percent	**94.4**		0.05	Percent	01/29/19	01/30/19
Flashpoint	> 200		70	degrees F	02/05/19	02/05/19
Free liquids	ABSENT			P/A	02/05/19	02/05/19
pH	**6.2**			SU	01/30/19	01/30/19

Results: General Chemistry

Sample: CS-2

Lab Number: 9A28003-02 (Soil)

Analyte	Result	Qual	Reporting Limit	Units	Date Prepared	Date Analyzed
Solids, Percent	**92.9**		0.05	Percent	01/29/19	01/30/19
Flashpoint	> 200		70	degrees F	02/05/19	02/05/19
Free liquids	ABSENT			P/A	02/05/19	02/05/19
pH	**6.8**			SU	01/30/19	01/30/19

Results: General Chemistry

Sample: CS-3

Lab Number: 9A28003-03 (Soil)

Analyte	Result	Qual	Reporting Limit	Units	Date Prepared	Date Analyzed
Solids, Percent	**93.5**		0.05	Percent	01/29/19	01/30/19
Flashpoint	> 200		70	degrees F	02/05/19	02/05/19
Free liquids	ABSENT			P/A	02/05/19	02/05/19
pH	**6.8**			SU	01/30/19	01/30/19

Results: General Chemistry

Sample: CS-4

Lab Number: 9A28003-04 (Soil)

Analyte	Result	Qual	Reporting Limit	Units	Date Prepared	Date Analyzed
Solids, Percent	**83.5**		0.05	Percent	01/29/19	01/30/19
Flashpoint	> 200		70	degrees F	02/05/19	02/05/19
Free liquids	ABSENT			P/A	02/05/19	02/05/19
pH	**7.2**			SU	01/30/19	01/30/19

Results: Total Metals

Sample: CS-1

Lab Number: 9A28003-01 (Soil)

Analyte	Result	Qual	Reporting Limit	Units	Date Prepared	Date Analyzed
Arsenic	**4.07**		0.92	mg/kg	01/29/19	01/30/19
Barium	**75.7**		0.46	mg/kg	01/29/19	01/30/19
Cadmium	**3.73**		0.46	mg/kg	01/29/19	01/30/19
Chromium	**15.9**		0.46	mg/kg	01/29/19	01/30/19
Lead	**153**		0.46	mg/kg	01/29/19	01/30/19
Mercury	ND		0.068	mg/kg	01/29/19	01/29/19
Selenium	ND		0.92	mg/kg	01/29/19	01/30/19
Silver	ND		0.46	mg/kg	01/29/19	01/30/19

Results: Total Metals

Sample: CS-2

Lab Number: 9A28003-02 (Soil)

Analyte	Result	Qual	Reporting Limit	Units	Date Prepared	Date Analyzed
Arsenic	**6.60**		0.91	mg/kg	01/29/19	01/30/19
Barium	**106**		0.45	mg/kg	01/29/19	01/30/19
Cadmium	**4.73**		0.45	mg/kg	01/29/19	01/30/19
Chromium	**25.4**		0.45	mg/kg	01/29/19	01/30/19
Lead	**247**		0.45	mg/kg	01/29/19	01/30/19
Mercury	ND		0.072	mg/kg	01/29/19	01/29/19
Selenium	ND		0.91	mg/kg	01/29/19	01/30/19
Silver	ND		0.45	mg/kg	01/29/19	01/30/19

Results: Total Metals

Sample: CS-3

Lab Number: 9A28003-03 (Soil)

Analyte	Result	Qual	Reporting Limit	Units	Date Prepared	Date Analyzed
Arsenic	**3.19**		0.84	mg/kg	01/29/19	01/30/19
Barium	**167**		0.42	mg/kg	01/29/19	01/30/19
Cadmium	**3.84**		0.42	mg/kg	01/29/19	01/30/19
Chromium	**16.0**		0.42	mg/kg	01/29/19	01/30/19
Lead	**592**		0.42	mg/kg	01/29/19	01/30/19
Mercury	ND		0.069	mg/kg	01/29/19	01/29/19
Selenium	ND		0.84	mg/kg	01/29/19	01/30/19
Silver	ND		0.42	mg/kg	01/29/19	01/30/19

Results: Total Metals

Sample: CS-4

Lab Number: 9A28003-04 (Soil)

Analyte	Result	Qual	Reporting Limit	Units	Date Prepared	Date Analyzed
Arsenic	**21.5**		1.14	mg/kg	01/29/19	01/30/19
Barium	**332**		0.57	mg/kg	01/29/19	01/30/19
Cadmium	**29.9**		0.57	mg/kg	01/29/19	01/30/19
Chromium	**71.6**		0.57	mg/kg	01/29/19	01/30/19
Lead	**1240**		0.57	mg/kg	01/29/19	01/30/19
Mercury	**0.167**		0.079	mg/kg	01/29/19	01/29/19
Selenium	ND		1.14	mg/kg	01/29/19	01/30/19
Silver	ND		0.57	mg/kg	01/29/19	01/30/19

Results: Volatile Organic Compounds

Sample: CS-1

Lab Number: 9A28003-01 (Soil)

Analyte	Result	Qual	Reporting Limit	Units	Date Prepared	Date Analyzed
Acetone	ND		114	ug/kg	01/29/19	01/29/19
Benzene	ND		23	ug/kg	01/29/19	01/29/19
Bromobenzene	ND		23	ug/kg	01/29/19	01/29/19
Bromochloromethane	ND		23	ug/kg	01/29/19	01/29/19
Bromodichloromethane	ND		23	ug/kg	01/29/19	01/29/19
Bromoform	ND		23	ug/kg	01/29/19	01/29/19
Bromomethane	ND		46	ug/kg	01/29/19	01/29/19
2-Butanone	ND		114	ug/kg	01/29/19	01/29/19
tert-Butyl alcohol	ND		114	ug/kg	01/29/19	01/29/19
sec-Butylbenzene	**54**		23	ug/kg	01/29/19	01/29/19
n-Butylbenzene	**59**		23	ug/kg	01/29/19	01/29/19
tert-Butylbenzene	ND		23	ug/kg	01/29/19	01/29/19
Methyl t-butyl ether (MTBE)	ND		23	ug/kg	01/29/19	01/29/19
Carbon Disulfide	ND		23	ug/kg	01/29/19	01/29/19
Carbon Tetrachloride	ND		23	ug/kg	01/29/19	01/29/19
Chlorobenzene	ND		23	ug/kg	01/29/19	01/29/19
Chloroethane	ND		23	ug/kg	01/29/19	01/29/19
Chloroform	ND		23	ug/kg	01/29/19	01/29/19
Chloromethane	ND		23	ug/kg	01/29/19	01/29/19
4-Chlorotoluene	ND		23	ug/kg	01/29/19	01/29/19
2-Chlorotoluene	ND		23	ug/kg	01/29/19	01/29/19
1,2-Dibromo-3-chloropropane (DBCP)	ND		23	ug/kg	01/29/19	01/29/19
Dibromochloromethane	ND		23	ug/kg	01/29/19	01/29/19
1,2-Dibromoethane (EDB)	ND		23	ug/kg	01/29/19	01/29/19
Dibromomethane	ND		23	ug/kg	01/29/19	01/29/19
1,2-Dichlorobenzene	ND		23	ug/kg	01/29/19	01/29/19
1,3-Dichlorobenzene	ND		23	ug/kg	01/29/19	01/29/19
1,4-Dichlorobenzene	ND		23	ug/kg	01/29/19	01/29/19
1,1-Dichloroethane	ND		23	ug/kg	01/29/19	01/29/19
1,2-Dichloroethane	ND		23	ug/kg	01/29/19	01/29/19
trans-1,2-Dichloroethene	ND		23	ug/kg	01/29/19	01/29/19
cis-1,2-Dichloroethene	ND		23	ug/kg	01/29/19	01/29/19
1,1-Dichloroethene	ND		23	ug/kg	01/29/19	01/29/19
1,2-Dichloropropane	ND		23	ug/kg	01/29/19	01/29/19
2,2-Dichloropropane	ND		23	ug/kg	01/29/19	01/29/19
cis-1,3-Dichloropropene	ND		23	ug/kg	01/29/19	01/29/19
trans-1,3-Dichloropropene	ND		23	ug/kg	01/29/19	01/29/19
1,1-Dichloropropene	ND		23	ug/kg	01/29/19	01/29/19
1,3-Dichloropropene (cis + trans)	ND		46	ug/kg	01/29/19	01/29/19
Diethyl ether	ND		114	ug/kg	01/29/19	01/29/19
1,4-Dioxane	ND		11400	ug/kg	01/29/19	01/29/19
Ethylbenzene	ND		23	ug/kg	01/29/19	01/29/19
Hexachlorobutadiene	ND		23	ug/kg	01/29/19	01/29/19
2-Hexanone	ND		114	ug/kg	01/29/19	01/29/19
Isopropylbenzene	**30**		23	ug/kg	01/29/19	01/29/19

Results: Volatile Organic Compounds (Continued)

Sample: CS-1 (Continued)

Lab Number: 9A28003-01 (Soil)

Analyte	Result	Qual	Reporting Limit	Units	Date Prepared	Date Analyzed
p-Isopropyltoluene	**41**		23	ug/kg	01/29/19	01/29/19
Methylene Chloride	ND		23	ug/kg	01/29/19	01/29/19
4-Methyl-2-pentanone	ND		114	ug/kg	01/29/19	01/29/19
Naphthalene	**4520**		46	ug/kg	01/29/19	01/29/19
n-Propylbenzene	**49**		23	ug/kg	01/29/19	01/29/19
Styrene	ND		23	ug/kg	01/29/19	01/29/19
1,1,1,2-Tetrachloroethane	ND		23	ug/kg	01/29/19	01/29/19
Tetrachloroethene	ND		23	ug/kg	01/29/19	01/29/19
Tetrahydrofuran	ND		114	ug/kg	01/29/19	01/29/19
Toluene	ND		23	ug/kg	01/29/19	01/29/19
1,2,4-Trichlorobenzene	ND		23	ug/kg	01/29/19	01/29/19
1,2,3-Trichlorobenzene	ND		23	ug/kg	01/29/19	01/29/19
1,1,2-Trichloroethane	ND		23	ug/kg	01/29/19	01/29/19
1,1,1-Trichloroethane	ND		23	ug/kg	01/29/19	01/29/19
Trichloroethene	ND		23	ug/kg	01/29/19	01/29/19
1,2,3-Trichloropropane	ND		23	ug/kg	01/29/19	01/29/19
1,3,5-Trimethylbenzene	**24**		23	ug/kg	01/29/19	01/29/19
1,2,4-Trimethylbenzene	**172**		23	ug/kg	01/29/19	01/29/19
Vinyl Chloride	ND		23	ug/kg	01/29/19	01/29/19
o-Xylene	ND		23	ug/kg	01/29/19	01/29/19
m&p-Xylene	ND		46	ug/kg	01/29/19	01/29/19
Total xylenes	ND		46	ug/kg	01/29/19	01/29/19
1,1,2,2-Tetrachloroethane	ND		23	ug/kg	01/29/19	01/29/19
tert-Amyl methyl ether	ND		23	ug/kg	01/29/19	01/29/19
1,3-Dichloropropane	ND		23	ug/kg	01/29/19	01/29/19
Ethyl tert-butyl ether	ND		23	ug/kg	01/29/19	01/29/19
Diisopropyl ether	ND		23	ug/kg	01/29/19	01/29/19
Trichlorofluoromethane	ND		23	ug/kg	01/29/19	01/29/19
Dichlorodifluoromethane	ND		23	ug/kg	01/29/19	01/29/19

Surrogate(s)	Recovery%	Limits		
4-Bromofluorobenzene	*104%*	*70-130*	01/29/19	01/29/19
1,2-Dichloroethane-d4	*98.7%*	*70-130*	01/29/19	01/29/19
Toluene-d8	*87.4%*	*70-130*	01/29/19	01/29/19

Results: Volatile Organic Compounds

Sample: CS-2

Lab Number: 9A28003-02 (Soil)

Analyte	Result	Qual	Reporting Limit	Units	Date Prepared	Date Analyzed
Acetone	ND		142	ug/kg	01/30/19	01/30/19
Benzene	ND		28	ug/kg	01/30/19	01/30/19
Bromobenzene	ND		28	ug/kg	01/30/19	01/30/19
Bromochloromethane	ND		28	ug/kg	01/30/19	01/30/19
Bromodichloromethane	ND		28	ug/kg	01/30/19	01/30/19
Bromoform	ND		28	ug/kg	01/30/19	01/30/19
Bromomethane	ND		28	ug/kg	01/30/19	01/30/19
2-Butanone	ND		142	ug/kg	01/30/19	01/30/19
tert-Butyl alcohol	ND		142	ug/kg	01/30/19	01/30/19
sec-Butylbenzene	**45**		28	ug/kg	01/30/19	01/30/19
n-Butylbenzene	**73**		28	ug/kg	01/30/19	01/30/19
tert-Butylbenzene	ND		28	ug/kg	01/30/19	01/30/19
Methyl t-butyl ether (MTBE)	ND		28	ug/kg	01/30/19	01/30/19
Carbon Disulfide	ND		28	ug/kg	01/30/19	01/30/19
Carbon Tetrachloride	ND		28	ug/kg	01/30/19	01/30/19
Chlorobenzene	ND		28	ug/kg	01/30/19	01/30/19
Chloroethane	ND		28	ug/kg	01/30/19	01/30/19
Chloroform	ND		28	ug/kg	01/30/19	01/30/19
Chloromethane	ND		28	ug/kg	01/30/19	01/30/19
4-Chlorotoluene	ND		28	ug/kg	01/30/19	01/30/19
2-Chlorotoluene	ND		28	ug/kg	01/30/19	01/30/19
1,2-Dibromo-3-chloropropane (DBCP)	ND		28	ug/kg	01/30/19	01/30/19
Dibromochloromethane	ND		28	ug/kg	01/30/19	01/30/19
1,2-Dibromoethane (EDB)	ND		28	ug/kg	01/30/19	01/30/19
Dibromomethane	ND		28	ug/kg	01/30/19	01/30/19
1,2-Dichlorobenzene	ND		28	ug/kg	01/30/19	01/30/19
1,3-Dichlorobenzene	ND		28	ug/kg	01/30/19	01/30/19
1,4-Dichlorobenzene	ND		28	ug/kg	01/30/19	01/30/19
1,1-Dichloroethane	ND		28	ug/kg	01/30/19	01/30/19
1,2-Dichloroethane	ND		28	ug/kg	01/30/19	01/30/19
trans-1,2-Dichloroethene	ND		28	ug/kg	01/30/19	01/30/19
cis-1,2-Dichloroethene	ND		28	ug/kg	01/30/19	01/30/19
1,1-Dichloroethene	ND		28	ug/kg	01/30/19	01/30/19
1,2-Dichloropropane	ND		28	ug/kg	01/30/19	01/30/19
2,2-Dichloropropane	ND		28	ug/kg	01/30/19	01/30/19
cis-1,3-Dichloropropene	ND		28	ug/kg	01/30/19	01/30/19
trans-1,3-Dichloropropene	ND		28	ug/kg	01/30/19	01/30/19
1,1-Dichloropropene	ND		28	ug/kg	01/30/19	01/30/19
1,3-Dichloropropene (cis + trans)	ND		57	ug/kg	01/30/19	01/30/19
Diethyl ether	ND		142	ug/kg	01/30/19	01/30/19
1,4-Dioxane	ND		14200	ug/kg	01/30/19	01/30/19
Ethylbenzene	ND		28	ug/kg	01/30/19	01/30/19
Hexachlorobutadiene	ND		28	ug/kg	01/30/19	01/30/19
2-Hexanone	ND		142	ug/kg	01/30/19	01/30/19
Isopropylbenzene	**37**		28	ug/kg	01/30/19	01/30/19

Results: Volatile Organic Compounds (Continued)

Sample: CS-2 (Continued)

Lab Number: 9A28003-02 (Soil)

Analyte	Result	Qual	Reporting Limit	Units	Date Prepared	Date Analyzed
p-Isopropyltoluene	**81**		28	ug/kg	01/30/19	01/30/19
Methylene Chloride	ND		142	ug/kg	01/30/19	01/30/19
4-Methyl-2-pentanone	ND		142	ug/kg	01/30/19	01/30/19
Naphthalene	**788**		28	ug/kg	01/30/19	01/30/19
n-Propylbenzene	**46**		28	ug/kg	01/30/19	01/30/19
Styrene	ND		28	ug/kg	01/30/19	01/30/19
1,1,1,2-Tetrachloroethane	ND		28	ug/kg	01/30/19	01/30/19
Tetrachloroethene	ND		28	ug/kg	01/30/19	01/30/19
Tetrahydrofuran	ND		142	ug/kg	01/30/19	01/30/19
Toluene	ND		28	ug/kg	01/30/19	01/30/19
1,2,4-Trichlorobenzene	ND		28	ug/kg	01/30/19	01/30/19
1,2,3-Trichlorobenzene	ND		28	ug/kg	01/30/19	01/30/19
1,1,2-Trichloroethane	ND		28	ug/kg	01/30/19	01/30/19
1,1,1-Trichloroethane	ND		28	ug/kg	01/30/19	01/30/19
Trichloroethene	ND		28	ug/kg	01/30/19	01/30/19
1,2,3-Trichloropropane	ND		28	ug/kg	01/30/19	01/30/19
1,3,5-Trimethylbenzene	**46**		28	ug/kg	01/30/19	01/30/19
1,2,4-Trimethylbenzene	**196**		28	ug/kg	01/30/19	01/30/19
Vinyl Chloride	ND		28	ug/kg	01/30/19	01/30/19
o-Xylene	**35**		28	ug/kg	01/30/19	01/30/19
m&p-Xylene	ND		57	ug/kg	01/30/19	01/30/19
Total xylenes	**35**		28	ug/kg	01/30/19	01/30/19
1,1,2,2-Tetrachloroethane	ND		28	ug/kg	01/30/19	01/30/19
tert-Amyl methyl ether	ND		28	ug/kg	01/30/19	01/30/19
1,3-Dichloropropane	ND		28	ug/kg	01/30/19	01/30/19
Ethyl tert-butyl ether	ND		28	ug/kg	01/30/19	01/30/19
Diisopropyl ether	ND		28	ug/kg	01/30/19	01/30/19
Trichlorofluoromethane	ND		28	ug/kg	01/30/19	01/30/19
Dichlorodifluoromethane	ND		28	ug/kg	01/30/19	01/30/19

Surrogate(s)	Recovery%	Limits		
4-Bromofluorobenzene	*87.7%*	*70-130*	01/30/19	01/30/19
1,2-Dichloroethane-d4	*101%*	*70-130*	01/30/19	01/30/19
Toluene-d8	*97.2%*	*70-130*	01/30/19	01/30/19

Results: Volatile Organic Compounds

Sample: CS-3

Lab Number: 9A28003-03 (Soil)

Analyte	Result	Qual	Reporting Limit	Units	Date Prepared	Date Analyzed
Acetone	ND		118	ug/kg	01/29/19	01/29/19
Benzene	ND		24	ug/kg	01/29/19	01/29/19
Bromobenzene	ND		24	ug/kg	01/29/19	01/29/19
Bromochloromethane	ND		24	ug/kg	01/29/19	01/29/19
Bromodichloromethane	ND		24	ug/kg	01/29/19	01/29/19
Bromoform	ND		24	ug/kg	01/29/19	01/29/19
Bromomethane	ND		47	ug/kg	01/29/19	01/29/19
2-Butanone	ND		118	ug/kg	01/29/19	01/29/19
tert-Butyl alcohol	ND		118	ug/kg	01/29/19	01/29/19
sec-Butylbenzene	**42**		24	ug/kg	01/29/19	01/29/19
n-Butylbenzene	**76**		24	ug/kg	01/29/19	01/29/19
tert-Butylbenzene	ND		24	ug/kg	01/29/19	01/29/19
Methyl t-butyl ether (MTBE)	ND		24	ug/kg	01/29/19	01/29/19
Carbon Disulfide	ND		24	ug/kg	01/29/19	01/29/19
Carbon Tetrachloride	ND		24	ug/kg	01/29/19	01/29/19
Chlorobenzene	ND		24	ug/kg	01/29/19	01/29/19
Chloroethane	ND		24	ug/kg	01/29/19	01/29/19
Chloroform	ND		24	ug/kg	01/29/19	01/29/19
Chloromethane	ND		24	ug/kg	01/29/19	01/29/19
4-Chlorotoluene	ND		24	ug/kg	01/29/19	01/29/19
2-Chlorotoluene	ND		24	ug/kg	01/29/19	01/29/19
1,2-Dibromo-3-chloropropane (DBCP)	ND		24	ug/kg	01/29/19	01/29/19
Dibromochloromethane	ND		24	ug/kg	01/29/19	01/29/19
1,2-Dibromoethane (EDB)	ND		24	ug/kg	01/29/19	01/29/19
Dibromomethane	ND		24	ug/kg	01/29/19	01/29/19
1,2-Dichlorobenzene	ND		24	ug/kg	01/29/19	01/29/19
1,3-Dichlorobenzene	ND		24	ug/kg	01/29/19	01/29/19
1,4-Dichlorobenzene	ND		24	ug/kg	01/29/19	01/29/19
1,1-Dichloroethane	ND		24	ug/kg	01/29/19	01/29/19
1,2-Dichloroethane	ND		24	ug/kg	01/29/19	01/29/19
trans-1,2-Dichloroethene	ND		24	ug/kg	01/29/19	01/29/19
cis-1,2-Dichloroethene	ND		24	ug/kg	01/29/19	01/29/19
1,1-Dichloroethene	ND		24	ug/kg	01/29/19	01/29/19
1,2-Dichloropropane	ND		24	ug/kg	01/29/19	01/29/19
2,2-Dichloropropane	ND		24	ug/kg	01/29/19	01/29/19
cis-1,3-Dichloropropene	ND		24	ug/kg	01/29/19	01/29/19
trans-1,3-Dichloropropene	ND		24	ug/kg	01/29/19	01/29/19
1,1-Dichloropropene	ND		24	ug/kg	01/29/19	01/29/19
1,3-Dichloropropene (cis + trans)	ND		47	ug/kg	01/29/19	01/29/19
Diethyl ether	ND		118	ug/kg	01/29/19	01/29/19
1,4-Dioxane	ND		11800	ug/kg	01/29/19	01/29/19
Ethylbenzene	ND		24	ug/kg	01/29/19	01/29/19
Hexachlorobutadiene	ND		24	ug/kg	01/29/19	01/29/19
2-Hexanone	ND		118	ug/kg	01/29/19	01/29/19
Isopropylbenzene	**31**		24	ug/kg	01/29/19	01/29/19

Results: Volatile Organic Compounds (Continued)

Sample: CS-3 (Continued)

Lab Number: 9A28003-03 (Soil)

Analyte	Result	Qual	Reporting Limit	Units	Date Prepared	Date Analyzed
p-Isopropyltoluene	**71**		24	ug/kg	01/29/19	01/29/19
Methylene Chloride	ND		24	ug/kg	01/29/19	01/29/19
4-Methyl-2-pentanone	ND		118	ug/kg	01/29/19	01/29/19
Naphthalene	**620**		24	ug/kg	01/29/19	01/29/19
n-Propylbenzene	**43**		24	ug/kg	01/29/19	01/29/19
Styrene	ND		24	ug/kg	01/29/19	01/29/19
1,1,1,2-Tetrachloroethane	ND		24	ug/kg	01/29/19	01/29/19
Tetrachloroethene	ND		24	ug/kg	01/29/19	01/29/19
Tetrahydrofuran	ND		118	ug/kg	01/29/19	01/29/19
Toluene	ND		24	ug/kg	01/29/19	01/29/19
1,2,4-Trichlorobenzene	ND		24	ug/kg	01/29/19	01/29/19
1,2,3-Trichlorobenzene	ND		24	ug/kg	01/29/19	01/29/19
1,1,2-Trichloroethane	ND		24	ug/kg	01/29/19	01/29/19
1,1,1-Trichloroethane	ND		24	ug/kg	01/29/19	01/29/19
Trichloroethene	ND		24	ug/kg	01/29/19	01/29/19
1,2,3-Trichloropropane	ND		24	ug/kg	01/29/19	01/29/19
1,3,5-Trimethylbenzene	**43**		24	ug/kg	01/29/19	01/29/19
1,2,4-Trimethylbenzene	**168**		24	ug/kg	01/29/19	01/29/19
Vinyl Chloride	ND		24	ug/kg	01/29/19	01/29/19
o-Xylene	ND		24	ug/kg	01/29/19	01/29/19
m&p-Xylene	ND		47	ug/kg	01/29/19	01/29/19
Total xylenes	ND		47	ug/kg	01/29/19	01/29/19
1,1,2,2-Tetrachloroethane	ND		24	ug/kg	01/29/19	01/29/19
tert-Amyl methyl ether	ND		24	ug/kg	01/29/19	01/29/19
1,3-Dichloropropane	ND		24	ug/kg	01/29/19	01/29/19
Ethyl tert-butyl ether	ND		24	ug/kg	01/29/19	01/29/19
Diisopropyl ether	ND		24	ug/kg	01/29/19	01/29/19
Trichlorofluoromethane	ND		24	ug/kg	01/29/19	01/29/19
Dichlorodifluoromethane	ND		24	ug/kg	01/29/19	01/29/19

Surrogate(s)	Recovery%	Limits		
4-Bromofluorobenzene	*95.5%*	*70-130*	01/29/19	01/29/19
1,2-Dichloroethane-d4	*93.8%*	*70-130*	01/29/19	01/29/19
Toluene-d8	*89.6%*	*70-130*	01/29/19	01/29/19

Results: Volatile Organic Compounds

Sample: CS-4

Lab Number: 9A28003-04 (Soil)

Analyte	Result	Qual	Reporting Limit	Units	Date Prepared	Date Analyzed
Acetone	ND		278	ug/kg	01/29/19	01/29/19
Benzene	ND		56	ug/kg	01/29/19	01/29/19
Bromobenzene	ND		56	ug/kg	01/29/19	01/29/19
Bromochloromethane	ND		56	ug/kg	01/29/19	01/29/19
Bromodichloromethane	ND		56	ug/kg	01/29/19	01/29/19
Bromoform	ND		56	ug/kg	01/29/19	01/29/19
Bromomethane	ND		111	ug/kg	01/29/19	01/29/19
2-Butanone	ND		278	ug/kg	01/29/19	01/29/19
tert-Butyl alcohol	ND		278	ug/kg	01/29/19	01/29/19
sec-Butylbenzene	**99**		56	ug/kg	01/29/19	01/29/19
n-Butylbenzene	**99**		56	ug/kg	01/29/19	01/29/19
tert-Butylbenzene	ND		56	ug/kg	01/29/19	01/29/19
Methyl t-butyl ether (MTBE)	ND		56	ug/kg	01/29/19	01/29/19
Carbon Disulfide	ND		56	ug/kg	01/29/19	01/29/19
Carbon Tetrachloride	ND		56	ug/kg	01/29/19	01/29/19
Chlorobenzene	ND		56	ug/kg	01/29/19	01/29/19
Chloroethane	ND		56	ug/kg	01/29/19	01/29/19
Chloroform	ND		56	ug/kg	01/29/19	01/29/19
Chloromethane	ND		56	ug/kg	01/29/19	01/29/19
4-Chlorotoluene	ND		56	ug/kg	01/29/19	01/29/19
2-Chlorotoluene	ND		56	ug/kg	01/29/19	01/29/19
1,2-Dibromo-3-chloropropane (DBCP)	ND		56	ug/kg	01/29/19	01/29/19
Dibromochloromethane	ND		56	ug/kg	01/29/19	01/29/19
1,2-Dibromoethane (EDB)	ND		56	ug/kg	01/29/19	01/29/19
Dibromomethane	ND		56	ug/kg	01/29/19	01/29/19
1,2-Dichlorobenzene	ND		56	ug/kg	01/29/19	01/29/19
1,3-Dichlorobenzene	ND		56	ug/kg	01/29/19	01/29/19
1,4-Dichlorobenzene	**115**		56	ug/kg	01/29/19	01/29/19
1,1-Dichloroethane	ND		56	ug/kg	01/29/19	01/29/19
1,2-Dichloroethane	ND		56	ug/kg	01/29/19	01/29/19
trans-1,2-Dichloroethene	ND		56	ug/kg	01/29/19	01/29/19
cis-1,2-Dichloroethene	ND		56	ug/kg	01/29/19	01/29/19
1,1-Dichloroethene	ND		56	ug/kg	01/29/19	01/29/19
1,2-Dichloropropane	ND		56	ug/kg	01/29/19	01/29/19
2,2-Dichloropropane	ND		56	ug/kg	01/29/19	01/29/19
cis-1,3-Dichloropropene	ND		56	ug/kg	01/29/19	01/29/19
trans-1,3-Dichloropropene	ND		56	ug/kg	01/29/19	01/29/19
1,1-Dichloropropene	ND		56	ug/kg	01/29/19	01/29/19
1,3-Dichloropropene (cis + trans)	ND		111	ug/kg	01/29/19	01/29/19
Diethyl ether	ND		278	ug/kg	01/29/19	01/29/19
1,4-Dioxane	ND		27800	ug/kg	01/29/19	01/29/19
Ethylbenzene	ND		56	ug/kg	01/29/19	01/29/19
Hexachlorobutadiene	ND		56	ug/kg	01/29/19	01/29/19
2-Hexanone	ND		278	ug/kg	01/29/19	01/29/19
Isopropylbenzene	**75**		56	ug/kg	01/29/19	01/29/19

Results: Volatile Organic Compounds (Continued)

Sample: CS-4 (Continued)

Lab Number: 9A28003-04 (Soil)

Analyte	Result	Qual	Reporting Limit	Units	Date Prepared	Date Analyzed
p-Isopropyltoluene	**88**		56	ug/kg	01/29/19	01/29/19
Methylene Chloride	ND		56	ug/kg	01/29/19	01/29/19
4-Methyl-2-pentanone	ND		278	ug/kg	01/29/19	01/29/19
Naphthalene	**850**		56	ug/kg	01/29/19	01/29/19
n-Propylbenzene	**101**		56	ug/kg	01/29/19	01/29/19
Styrene	ND		56	ug/kg	01/29/19	01/29/19
1,1,1,2-Tetrachloroethane	ND		56	ug/kg	01/29/19	01/29/19
Tetrachloroethene	ND		56	ug/kg	01/29/19	01/29/19
Tetrahydrofuran	ND		278	ug/kg	01/29/19	01/29/19
Toluene	ND		56	ug/kg	01/29/19	01/29/19
1,2,4-Trichlorobenzene	ND		56	ug/kg	01/29/19	01/29/19
1,2,3-Trichlorobenzene	ND		56	ug/kg	01/29/19	01/29/19
1,1,2-Trichloroethane	ND		56	ug/kg	01/29/19	01/29/19
1,1,1-Trichloroethane	ND		56	ug/kg	01/29/19	01/29/19
Trichloroethene	ND		56	ug/kg	01/29/19	01/29/19
1,2,3-Trichloropropane	ND		56	ug/kg	01/29/19	01/29/19
1,3,5-Trimethylbenzene	**88**		56	ug/kg	01/29/19	01/29/19
1,2,4-Trimethylbenzene	**257**		56	ug/kg	01/29/19	01/29/19
Vinyl Chloride	ND		56	ug/kg	01/29/19	01/29/19
o-Xylene	**61**		56	ug/kg	01/29/19	01/29/19
m&p-Xylene	ND		111	ug/kg	01/29/19	01/29/19
Total xylenes	ND		111	ug/kg	01/29/19	01/29/19
1,1,2,2-Tetrachloroethane	ND		56	ug/kg	01/29/19	01/29/19
tert-Amyl methyl ether	ND		56	ug/kg	01/29/19	01/29/19
1,3-Dichloropropane	ND		56	ug/kg	01/29/19	01/29/19
Ethyl tert-butyl ether	ND		56	ug/kg	01/29/19	01/29/19
Diisopropyl ether	ND		56	ug/kg	01/29/19	01/29/19
Trichlorofluoromethane	ND		56	ug/kg	01/29/19	01/29/19
Dichlorodifluoromethane	ND		56	ug/kg	01/29/19	01/29/19

Surrogate(s)	Recovery%	Limits		
4-Bromofluorobenzene	*98.5%*	*70-130*	01/29/19	01/29/19
1,2-Dichloroethane-d4	*102%*	*70-130*	01/29/19	01/29/19
Toluene-d8	*99.9%*	*70-130*	01/29/19	01/29/19

Results: Semivolatile organic compounds

Sample: CS-1

Lab Number: 9A28003-01 (Soil)

Analyte	Result	Qual	Reporting Limit	Units	Date Prepared	Date Analyzed
1,2,4-Trichlorobenzene	ND		536	ug/kg	01/30/19	02/01/19
1,2-Dichlorobenzene	ND		536	ug/kg	01/30/19	02/01/19
1,3-Dichlorobenzene	ND		536	ug/kg	01/30/19	02/01/19
1,4-Dichlorobenzene	ND		536	ug/kg	01/30/19	02/01/19
Phenol	ND		536	ug/kg	01/30/19	02/01/19
2,4,5-Trichlorophenol	ND		536	ug/kg	01/30/19	02/01/19
2,4,6-Trichlorophenol	ND		536	ug/kg	01/30/19	02/01/19
2,4-Dichlorophenol	ND		536	ug/kg	01/30/19	02/01/19
2,4-Dimethylphenol	ND		1360	ug/kg	01/30/19	02/01/19
2,4-Dinitrophenol	ND		1360	ug/kg	01/30/19	02/01/19
2,4-Dinitrotoluene	ND		536	ug/kg	01/30/19	02/01/19
2,6-Dinitrotoluene	ND		536	ug/kg	01/30/19	02/01/19
2-Chloronaphthalene	ND		536	ug/kg	01/30/19	02/01/19
2-Chlorophenol	ND		536	ug/kg	01/30/19	02/01/19
2-Methylnaphthalene	ND		536	ug/kg	01/30/19	02/01/19
Nitrobenzene	ND		536	ug/kg	01/30/19	02/01/19
2-Methylphenol	ND		536	ug/kg	01/30/19	02/01/19
2-Nitroaniline	ND		536	ug/kg	01/30/19	02/01/19
2-Nitrophenol	ND		1360	ug/kg	01/30/19	02/01/19
3,3'-Dichlorobenzidine	ND		1360	ug/kg	01/30/19	02/01/19
3-Nitroaniline	ND		536	ug/kg	01/30/19	02/01/19
4,6-Dinitro-2-methylphenol	ND		1360	ug/kg	01/30/19	02/01/19
4-Bromophenyl phenyl ether	ND		536	ug/kg	01/30/19	02/01/19
4-Chloro-3-methylphenol	ND		536	ug/kg	01/30/19	02/01/19
4-Chloroaniline	ND		536	ug/kg	01/30/19	02/01/19
4-Chlorophenyl phenyl ether	ND		536	ug/kg	01/30/19	02/01/19
4-Nitroaniline	ND		536	ug/kg	01/30/19	02/01/19
4-Nitrophenol	ND		1360	ug/kg	01/30/19	02/01/19
Acenaphthene	**698**		536	ug/kg	01/30/19	02/01/19
Acenaphthylene	ND		536	ug/kg	01/30/19	02/01/19
Aniline	ND		536	ug/kg	01/30/19	02/01/19
Anthracene	**2460**		536	ug/kg	01/30/19	02/01/19
Benzo(a)anthracene	**4990**		536	ug/kg	01/30/19	02/01/19
Benzo(a)pyrene	**5310**		536	ug/kg	01/30/19	02/01/19
Benzo(b)fluoranthene	**6420**		536	ug/kg	01/30/19	02/01/19
Benzo(g,h,i)perylene	**3470**		536	ug/kg	01/30/19	02/01/19
Benzo(k)fluoranthene	**2150**		536	ug/kg	01/30/19	02/01/19
Benzoic acid	ND		4120	ug/kg	01/30/19	02/01/19
Bis(2-chloroethoxy)methane	ND		536	ug/kg	01/30/19	02/01/19
Bis(2-chloroethyl)ether	ND		536	ug/kg	01/30/19	02/01/19
Bis(2-chloroisopropyl)ether	ND		536	ug/kg	01/30/19	02/01/19
Bis(2-ethylhexyl)phthalate	ND		1650	ug/kg	01/30/19	02/01/19
Butyl benzyl phthalate	ND		536	ug/kg	01/30/19	02/01/19
Chrysene	**4340**		536	ug/kg	01/30/19	02/01/19
Di(n)octyl phthalate	ND		825	ug/kg	01/30/19	02/01/19

Results: Semivolatile organic compounds (Continued)

Sample: CS-1 (Continued)

Lab Number: 9A28003-01 (Soil)

Analyte	Result	Qual	Reporting Limit	Units	Date Prepared	Date Analyzed
Dibenz(a,h)anthracene	**976**		536	ug/kg	01/30/19	02/01/19
Dibenzofuran	**803**		536	ug/kg	01/30/19	02/01/19
Diethyl phthalate	ND		536	ug/kg	01/30/19	02/01/19
Dimethyl phthalate	ND		1360	ug/kg	01/30/19	02/01/19
Di-n-butylphthalate	ND		825	ug/kg	01/30/19	02/01/19
Fluoranthene	**10100**		536	ug/kg	01/30/19	02/01/19
Fluorene	**1510**		536	ug/kg	01/30/19	02/01/19
Hexachlorobenzene	ND		536	ug/kg	01/30/19	02/01/19
Hexachlorobutadiene	ND		536	ug/kg	01/30/19	02/01/19
Hexachlorocyclopentadiene	ND		1360	ug/kg	01/30/19	02/01/19
Hexachloroethane	ND		536	ug/kg	01/30/19	02/01/19
Indeno(1,2,3-cd)pyrene	**3770**		536	ug/kg	01/30/19	02/01/19
Isophorone	ND		536	ug/kg	01/30/19	02/01/19
Naphthalene	**1530**		536	ug/kg	01/30/19	02/01/19
N-Nitrosodimethylamine	ND		536	ug/kg	01/30/19	02/01/19
N-Nitrosodi-n-propylamine	ND		536	ug/kg	01/30/19	02/01/19
N-Nitrosodiphenylamine	ND		536	ug/kg	01/30/19	02/01/19
Pentachlorophenol	ND		1360	ug/kg	01/30/19	02/01/19
Phenanthrene	**8520**		536	ug/kg	01/30/19	02/01/19
Pyrene	**7660**		536	ug/kg	01/30/19	02/01/19
m&p-Cresol	ND		1070	ug/kg	01/30/19	02/01/19
Pyridine	ND		536	ug/kg	01/30/19	02/01/19

Surrogate(s)	Recovery%	Limits		
Nitrobenzene-d5	*92.9%*	*30-126*	01/30/19	02/01/19
p-Terphenyl-d14	*102%*	*47-130*	01/30/19	02/01/19
2-Fluorobiphenyl	*97.2%*	*34-130*	01/30/19	02/01/19
Phenol-d6	*84.1%*	*30-130*	01/30/19	02/01/19
2,4,6-Tribromophenol	*119%*	*30-130*	01/30/19	02/01/19
2-Fluorophenol	*80.1%*	*30-130*	01/30/19	02/01/19

Results: Semivolatile organic compounds

Sample: CS-2

Lab Number: 9A28003-02 (Soil)

Analyte	Result	Qual	Reporting Limit	Units	Date Prepared	Date Analyzed
1,2,4-Trichlorobenzene	ND		543	ug/kg	01/30/19	02/01/19
1,2-Dichlorobenzene	ND		543	ug/kg	01/30/19	02/01/19
1,3-Dichlorobenzene	ND		543	ug/kg	01/30/19	02/01/19
1,4-Dichlorobenzene	ND		543	ug/kg	01/30/19	02/01/19
Phenol	ND		543	ug/kg	01/30/19	02/01/19
2,4,5-Trichlorophenol	ND		543	ug/kg	01/30/19	02/01/19
2,4,6-Trichlorophenol	ND		543	ug/kg	01/30/19	02/01/19
2,4-Dichlorophenol	ND		543	ug/kg	01/30/19	02/01/19
2,4-Dimethylphenol	ND		1380	ug/kg	01/30/19	02/01/19
2,4-Dinitrophenol	ND		1380	ug/kg	01/30/19	02/01/19
2,4-Dinitrotoluene	ND		543	ug/kg	01/30/19	02/01/19
2,6-Dinitrotoluene	ND		543	ug/kg	01/30/19	02/01/19
2-Chloronaphthalene	ND		543	ug/kg	01/30/19	02/01/19
2-Chlorophenol	ND		543	ug/kg	01/30/19	02/01/19
2-Methylnaphthalene	ND		543	ug/kg	01/30/19	02/01/19
Nitrobenzene	ND		543	ug/kg	01/30/19	02/01/19
2-Methylphenol	ND		543	ug/kg	01/30/19	02/01/19
2-Nitroaniline	ND		543	ug/kg	01/30/19	02/01/19
2-Nitrophenol	ND		1380	ug/kg	01/30/19	02/01/19
3,3'-Dichlorobenzidine	ND		1380	ug/kg	01/30/19	02/01/19
3-Nitroaniline	ND		543	ug/kg	01/30/19	02/01/19
4,6-Dinitro-2-methylphenol	ND		1380	ug/kg	01/30/19	02/01/19
4-Bromophenyl phenyl ether	ND		543	ug/kg	01/30/19	02/01/19
4-Chloro-3-methylphenol	ND		543	ug/kg	01/30/19	02/01/19
4-Chloroaniline	ND		543	ug/kg	01/30/19	02/01/19
4-Chlorophenyl phenyl ether	ND		543	ug/kg	01/30/19	02/01/19
4-Nitroaniline	ND		543	ug/kg	01/30/19	02/01/19
4-Nitrophenol	ND		1380	ug/kg	01/30/19	02/01/19
Acenaphthene	ND		543	ug/kg	01/30/19	02/01/19
Acenaphthylene	ND		543	ug/kg	01/30/19	02/01/19
Aniline	ND		543	ug/kg	01/30/19	02/01/19
Anthracene	**657**		543	ug/kg	01/30/19	02/01/19
Benzo(a)anthracene	**1310**		543	ug/kg	01/30/19	02/01/19
Benzo(a)pyrene	**1180**		543	ug/kg	01/30/19	02/01/19
Benzo(b)fluoranthene	**1480**		543	ug/kg	01/30/19	02/01/19
Benzo(g,h,i)perylene	**707**		543	ug/kg	01/30/19	02/01/19
Benzo(k)fluoranthene	ND		543	ug/kg	01/30/19	02/01/19
Benzoic acid	ND		4180	ug/kg	01/30/19	02/01/19
Bis(2-chloroethoxy)methane	ND		543	ug/kg	01/30/19	02/01/19
Bis(2-chloroethyl)ether	ND		543	ug/kg	01/30/19	02/01/19
Bis(2-chloroisopropyl)ether	ND		543	ug/kg	01/30/19	02/01/19
Bis(2-ethylhexyl)phthalate	ND		1670	ug/kg	01/30/19	02/01/19
Butyl benzyl phthalate	ND		543	ug/kg	01/30/19	02/01/19
Chrysene	**1120**		543	ug/kg	01/30/19	02/01/19
Di(n)octyl phthalate	ND		836	ug/kg	01/30/19	02/01/19

Results: Semivolatile organic compounds (Continued)

Sample: CS-2 (Continued)

Lab Number: 9A28003-02 (Soil)

Analyte	Result	Qual	Reporting Limit	Units	Date Prepared	Date Analyzed
Dibenz(a,h)anthracene	ND		543	ug/kg	01/30/19	02/01/19
Dibenzofuran	ND		543	ug/kg	01/30/19	02/01/19
Diethyl phthalate	ND		543	ug/kg	01/30/19	02/01/19
Dimethyl phthalate	ND		1380	ug/kg	01/30/19	02/01/19
Di-n-butylphthalate	ND		836	ug/kg	01/30/19	02/01/19
Fluoranthene	**2780**		543	ug/kg	01/30/19	02/01/19
Fluorene	ND		543	ug/kg	01/30/19	02/01/19
Hexachlorobenzene	ND		543	ug/kg	01/30/19	02/01/19
Hexachlorobutadiene	ND		543	ug/kg	01/30/19	02/01/19
Hexachlorocyclopentadiene	ND		1380	ug/kg	01/30/19	02/01/19
Hexachloroethane	ND		543	ug/kg	01/30/19	02/01/19
Indeno(1,2,3-cd)pyrene	**799**		543	ug/kg	01/30/19	02/01/19
Isophorone	ND		543	ug/kg	01/30/19	02/01/19
Naphthalene	ND		543	ug/kg	01/30/19	02/01/19
N-Nitrosodimethylamine	ND		543	ug/kg	01/30/19	02/01/19
N-Nitrosodi-n-propylamine	ND		543	ug/kg	01/30/19	02/01/19
N-Nitrosodiphenylamine	ND		543	ug/kg	01/30/19	02/01/19
Pentachlorophenol	ND		1380	ug/kg	01/30/19	02/01/19
Phenanthrene	**2410**		543	ug/kg	01/30/19	02/01/19
Pyrene	**2130**		543	ug/kg	01/30/19	02/01/19
m&p-Cresol	ND		1090	ug/kg	01/30/19	02/01/19
Pyridine	ND		543	ug/kg	01/30/19	02/01/19

Surrogate(s)	Recovery%	Limits		
Nitrobenzene-d5	*75.5%*	*30-126*	01/30/19	02/01/19
p-Terphenyl-d14	*99.8%*	*47-130*	01/30/19	02/01/19
2-Fluorobiphenyl	*90.3%*	*34-130*	01/30/19	02/01/19
Phenol-d6	*79.9%*	*30-130*	01/30/19	02/01/19
2,4,6-Tribromophenol	*97.4%*	*30-130*	01/30/19	02/01/19
2-Fluorophenol	*74.1%*	*30-130*	01/30/19	02/01/19

Results: Semivolatile organic compounds

Sample: CS-3

Lab Number: 9A28003-03 (Soil)

Analyte	Result	Qual	Reporting Limit	Units	Date Prepared	Date Analyzed
1,2,4-Trichlorobenzene	ND		670	ug/kg	01/30/19	02/01/19
1,2-Dichlorobenzene	ND		670	ug/kg	01/30/19	02/01/19
1,3-Dichlorobenzene	ND		670	ug/kg	01/30/19	02/01/19
1,4-Dichlorobenzene	ND		670	ug/kg	01/30/19	02/01/19
Phenol	ND		670	ug/kg	01/30/19	02/01/19
2,4,5-Trichlorophenol	ND		670	ug/kg	01/30/19	02/01/19
2,4,6-Trichlorophenol	ND		670	ug/kg	01/30/19	02/01/19
2,4-Dichlorophenol	ND		670	ug/kg	01/30/19	02/01/19
2,4-Dimethylphenol	ND		1700	ug/kg	01/30/19	02/01/19
2,4-Dinitrophenol	ND		1700	ug/kg	01/30/19	02/01/19
2,4-Dinitrotoluene	ND		670	ug/kg	01/30/19	02/01/19
2,6-Dinitrotoluene	ND		670	ug/kg	01/30/19	02/01/19
2-Chloronaphthalene	ND		670	ug/kg	01/30/19	02/01/19
2-Chlorophenol	ND		670	ug/kg	01/30/19	02/01/19
2-Methylnaphthalene	ND		670	ug/kg	01/30/19	02/01/19
Nitrobenzene	ND		670	ug/kg	01/30/19	02/01/19
2-Methylphenol	ND		670	ug/kg	01/30/19	02/01/19
2-Nitroaniline	ND		670	ug/kg	01/30/19	02/01/19
2-Nitrophenol	ND		1700	ug/kg	01/30/19	02/01/19
3,3'-Dichlorobenzidine	ND		1700	ug/kg	01/30/19	02/01/19
3-Nitroaniline	ND		670	ug/kg	01/30/19	02/01/19
4,6-Dinitro-2-methylphenol	ND		1700	ug/kg	01/30/19	02/01/19
4-Bromophenyl phenyl ether	ND		670	ug/kg	01/30/19	02/01/19
4-Chloro-3-methylphenol	ND		670	ug/kg	01/30/19	02/01/19
4-Chloroaniline	ND		670	ug/kg	01/30/19	02/01/19
4-Chlorophenyl phenyl ether	ND		670	ug/kg	01/30/19	02/01/19
4-Nitroaniline	ND		670	ug/kg	01/30/19	02/01/19
4-Nitrophenol	ND		1700	ug/kg	01/30/19	02/01/19
Acenaphthene	ND		670	ug/kg	01/30/19	02/01/19
Acenaphthylene	ND		670	ug/kg	01/30/19	02/01/19
Aniline	ND		670	ug/kg	01/30/19	02/01/19
Anthracene	ND		670	ug/kg	01/30/19	02/01/19
Benzo(a)anthracene	**1520**		670	ug/kg	01/30/19	02/01/19
Benzo(a)pyrene	**1460**		670	ug/kg	01/30/19	02/01/19
Benzo(b)fluoranthene	**1820**		670	ug/kg	01/30/19	02/01/19
Benzo(g,h,i)perylene	**987**		670	ug/kg	01/30/19	02/01/19
Benzo(k)fluoranthene	ND		670	ug/kg	01/30/19	02/01/19
Benzoic acid	ND		5160	ug/kg	01/30/19	02/01/19
Bis(2-chloroethoxy)methane	ND		670	ug/kg	01/30/19	02/01/19
Bis(2-chloroethyl)ether	ND		670	ug/kg	01/30/19	02/01/19
Bis(2-chloroisopropyl)ether	ND		670	ug/kg	01/30/19	02/01/19
Bis(2-ethylhexyl)phthalate	ND		2060	ug/kg	01/30/19	02/01/19
Butyl benzyl phthalate	ND		670	ug/kg	01/30/19	02/01/19
Chrysene	**1350**		670	ug/kg	01/30/19	02/01/19
Di(n)octyl phthalate	ND		1030	ug/kg	01/30/19	02/01/19

Results: Semivolatile organic compounds (Continued)

Sample: CS-3 (Continued)

Lab Number: 9A28003-03 (Soil)

Analyte	Result	Qual	Reporting Limit	Units	Date Prepared	Date Analyzed
Dibenz(a,h)anthracene	ND		670	ug/kg	01/30/19	02/01/19
Dibenzofuran	ND		670	ug/kg	01/30/19	02/01/19
Diethyl phthalate	ND		670	ug/kg	01/30/19	02/01/19
Dimethyl phthalate	ND		1700	ug/kg	01/30/19	02/01/19
Di-n-butylphthalate	ND		1030	ug/kg	01/30/19	02/01/19
Fluoranthene	**3120**		670	ug/kg	01/30/19	02/01/19
Fluorene	ND		670	ug/kg	01/30/19	02/01/19
Hexachlorobenzene	ND		670	ug/kg	01/30/19	02/01/19
Hexachlorobutadiene	ND		670	ug/kg	01/30/19	02/01/19
Hexachlorocyclopentadiene	ND		1700	ug/kg	01/30/19	02/01/19
Hexachloroethane	ND		670	ug/kg	01/30/19	02/01/19
Indeno(1,2,3-cd)pyrene	**1000**		670	ug/kg	01/30/19	02/01/19
Isophorone	ND		670	ug/kg	01/30/19	02/01/19
Naphthalene	ND		670	ug/kg	01/30/19	02/01/19
N-Nitrosodimethylamine	ND		670	ug/kg	01/30/19	02/01/19
N-Nitrosodi-n-propylamine	ND		670	ug/kg	01/30/19	02/01/19
N-Nitrosodiphenylamine	ND		670	ug/kg	01/30/19	02/01/19
Pentachlorophenol	ND		1700	ug/kg	01/30/19	02/01/19
Phenanthrene	**2400**		670	ug/kg	01/30/19	02/01/19
Pyrene	**2260**		670	ug/kg	01/30/19	02/01/19
m&p-Cresol	ND		1340	ug/kg	01/30/19	02/01/19
Pyridine	ND		670	ug/kg	01/30/19	02/01/19

Surrogate(s)	Recovery%	Limits		
Nitrobenzene-d5	*70.1%*	*30-126*	01/30/19	02/01/19
p-Terphenyl-d14	*78.7%*	*47-130*	01/30/19	02/01/19
2-Fluorobiphenyl	*78.4%*	*34-130*	01/30/19	02/01/19
Phenol-d6	*63.3%*	*30-130*	01/30/19	02/01/19
2,4,6-Tribromophenol	*76.4%*	*30-130*	01/30/19	02/01/19
2-Fluorophenol	*62.6%*	*30-130*	01/30/19	02/01/19

Results: Semivolatile organic compounds

Sample: CS-4

Lab Number: 9A28003-04 (Soil)

Analyte	Result	Qual	Reporting Limit	Units	Date Prepared	Date Analyzed
1,2,4-Trichlorobenzene	ND		3010	ug/kg	01/30/19	02/01/19
1,2-Dichlorobenzene	ND		3010	ug/kg	01/30/19	02/01/19
1,3-Dichlorobenzene	ND		3010	ug/kg	01/30/19	02/01/19
1,4-Dichlorobenzene	ND		3010	ug/kg	01/30/19	02/01/19
Phenol	ND		3010	ug/kg	01/30/19	02/01/19
2,4,5-Trichlorophenol	ND		3010	ug/kg	01/30/19	02/01/19
2,4,6-Trichlorophenol	ND		3010	ug/kg	01/30/19	02/01/19
2,4-Dichlorophenol	ND		3010	ug/kg	01/30/19	02/01/19
2,4-Dimethylphenol	ND		7650	ug/kg	01/30/19	02/01/19
2,4-Dinitrophenol	ND		7650	ug/kg	01/30/19	02/01/19
2,4-Dinitrotoluene	ND		3010	ug/kg	01/30/19	02/01/19
2,6-Dinitrotoluene	ND		3010	ug/kg	01/30/19	02/01/19
2-Chloronaphthalene	ND		3010	ug/kg	01/30/19	02/01/19
2-Chlorophenol	ND		3010	ug/kg	01/30/19	02/01/19
2-Methylnaphthalene	ND		3010	ug/kg	01/30/19	02/01/19
Nitrobenzene	ND		3010	ug/kg	01/30/19	02/01/19
2-Methylphenol	ND		3010	ug/kg	01/30/19	02/01/19
2-Nitroaniline	ND		3010	ug/kg	01/30/19	02/01/19
2-Nitrophenol	ND		7650	ug/kg	01/30/19	02/01/19
3,3'-Dichlorobenzidine	ND		7650	ug/kg	01/30/19	02/01/19
3-Nitroaniline	ND		3010	ug/kg	01/30/19	02/01/19
4,6-Dinitro-2-methylphenol	ND		7650	ug/kg	01/30/19	02/01/19
4-Bromophenyl phenyl ether	ND		3010	ug/kg	01/30/19	02/01/19
4-Chloro-3-methylphenol	ND		3010	ug/kg	01/30/19	02/01/19
4-Chloroaniline	ND		3010	ug/kg	01/30/19	02/01/19
4-Chlorophenyl phenyl ether	ND		3010	ug/kg	01/30/19	02/01/19
4-Nitroaniline	ND		3010	ug/kg	01/30/19	02/01/19
4-Nitrophenol	ND		7650	ug/kg	01/30/19	02/01/19
Acenaphthene	**25900**		3010	ug/kg	01/30/19	02/01/19
Acenaphthylene	ND		3010	ug/kg	01/30/19	02/01/19
Aniline	ND		3010	ug/kg	01/30/19	02/01/19
Anthracene	**60300**		3010	ug/kg	01/30/19	02/01/19
Benzo(a)anthracene	**98300**		3010	ug/kg	01/30/19	02/01/19
Benzo(a)pyrene	**91900**		3010	ug/kg	01/30/19	02/01/19
Benzo(b)fluoranthene	**112000**		3010	ug/kg	01/30/19	02/01/19
Benzo(g,h,i)perylene	**52800**		3010	ug/kg	01/30/19	02/01/19
Benzo(k)fluoranthene	**37800**		3010	ug/kg	01/30/19	02/01/19
Benzoic acid	ND		23200	ug/kg	01/30/19	02/01/19
Bis(2-chloroethoxy)methane	ND		3010	ug/kg	01/30/19	02/01/19
Bis(2-chloroethyl)ether	ND		3010	ug/kg	01/30/19	02/01/19
Bis(2-chloroisopropyl)ether	ND		3010	ug/kg	01/30/19	02/01/19
Bis(2-ethylhexyl)phthalate	ND		9270	ug/kg	01/30/19	02/01/19
Butyl benzyl phthalate	ND		3010	ug/kg	01/30/19	02/01/19
Chrysene	**86900**		3010	ug/kg	01/30/19	02/01/19
Di(n)octyl phthalate	ND		4630	ug/kg	01/30/19	02/01/19

Results: Semivolatile organic compounds (Continued)

Sample: CS-4 (Continued)

Lab Number: 9A28003-04 (Soil)

Analyte	Result	Qual	Reporting Limit	Units	Date Prepared	Date Analyzed
Dibenz(a,h)anthracene	**15800**		3010	ug/kg	01/30/19	02/01/19
Dibenzofuran	**10100**		3010	ug/kg	01/30/19	02/01/19
Diethyl phthalate	ND		3010	ug/kg	01/30/19	02/01/19
Dimethyl phthalate	ND		7650	ug/kg	01/30/19	02/01/19
Di-n-butylphthalate	ND		4630	ug/kg	01/30/19	02/01/19
Fluoranthene	**276000**		15100	ug/kg	01/30/19	02/04/19
Fluorene	**25000**		3010	ug/kg	01/30/19	02/01/19
Hexachlorobenzene	ND		3010	ug/kg	01/30/19	02/01/19
Hexachlorobutadiene	ND		3010	ug/kg	01/30/19	02/01/19
Hexachlorocyclopentadiene	ND		7650	ug/kg	01/30/19	02/01/19
Hexachloroethane	ND		3010	ug/kg	01/30/19	02/01/19
Indeno(1,2,3-cd)pyrene	**60800**		3010	ug/kg	01/30/19	02/01/19
Isophorone	ND		3010	ug/kg	01/30/19	02/01/19
Naphthalene	ND		3010	ug/kg	01/30/19	02/01/19
N-Nitrosodimethylamine	ND		3010	ug/kg	01/30/19	02/01/19
N-Nitrosodi-n-propylamine	ND		3010	ug/kg	01/30/19	02/01/19
N-Nitrosodiphenylamine	ND		3010	ug/kg	01/30/19	02/01/19
Pentachlorophenol	ND		7650	ug/kg	01/30/19	02/01/19
Phenanthrene	**221000**		15100	ug/kg	01/30/19	02/04/19
Pyrene	**197000**		15100	ug/kg	01/30/19	02/04/19
m&p-Cresol	ND		6020	ug/kg	01/30/19	02/01/19
Pyridine	ND		3010	ug/kg	01/30/19	02/01/19

Surrogate(s)	Recovery%	Limits		
Nitrobenzene-d5	*64.8%*	*30-126*	01/30/19	02/01/19
p-Terphenyl-d14	*104%*	*47-130*	01/30/19	02/01/19
2-Fluorobiphenyl	*104%*	*34-130*	01/30/19	02/01/19
Phenol-d6	*85.2%*	*30-130*	01/30/19	02/01/19
2,4,6-Tribromophenol	*98.0%*	*30-130*	01/30/19	02/01/19
2-Fluorophenol	*93.6%*	*30-130*	01/30/19	02/01/19

Results: Polychlorinated Biphenyls (PCBs)

Sample: CS-1

Lab Number: 9A28003-01 (Soil)

Analyte	Result	Qual	Reporting Limit	Units	Date Prepared	Date Analyzed
Aroclor-1016	ND		103	ug/kg	01/31/19	02/04/19
Aroclor-1221	ND		103	ug/kg	01/31/19	02/04/19
Aroclor-1232	ND		103	ug/kg	01/31/19	02/04/19
Aroclor-1242	ND		103	ug/kg	01/31/19	02/04/19
Aroclor-1248	ND		103	ug/kg	01/31/19	02/04/19
Aroclor-1254	ND		103	ug/kg	01/31/19	02/04/19
Aroclor-1260	ND		103	ug/kg	01/31/19	02/04/19
Aroclor-1262	ND		103	ug/kg	01/31/19	02/04/19
Aroclor-1268	ND		103	ug/kg	01/31/19	02/04/19
PCBs (Total)	ND		103	ug/kg	01/31/19	02/04/19

Surrogate(s)	Recovery%	Limits		
2,4,5,6-Tetrachloro-m-xylene (TCMX)	*63.5%*	*36.2-108*	01/31/19	02/04/19
Decachlorobiphenyl (DCBP)	*67.7%*	*43.3-118*	01/31/19	02/04/19

Results: Polychlorinated Biphenyls (PCBs)

Sample: CS-2

Lab Number: 9A28003-02 (Soil)

Analyte	Result	Qual	Reporting Limit	Units	Date Prepared	Date Analyzed
Aroclor-1016	ND		104	ug/kg	01/31/19	02/04/19
Aroclor-1221	ND		104	ug/kg	01/31/19	02/04/19
Aroclor-1232	ND		104	ug/kg	01/31/19	02/04/19
Aroclor-1242	ND		104	ug/kg	01/31/19	02/04/19
Aroclor-1248	ND		104	ug/kg	01/31/19	02/04/19
Aroclor-1254	ND		104	ug/kg	01/31/19	02/04/19
Aroclor-1260	ND		104	ug/kg	01/31/19	02/04/19
Aroclor-1262	ND		104	ug/kg	01/31/19	02/04/19
Aroclor-1268	ND		104	ug/kg	01/31/19	02/04/19
PCBs (Total)	ND		104	ug/kg	01/31/19	02/04/19

Surrogate(s)	Recovery%	Limits		
2,4,5,6-Tetrachloro-m-xylene (TCMX)	*67.9%*	*36.2-108*	01/31/19	02/04/19
Decachlorobiphenyl (DCBP)	*69.8%*	*43.3-118*	01/31/19	02/04/19

Results: Polychlorinated Biphenyls (PCBs)

Sample: CS-3

Lab Number: 9A28003-03 (Soil)

Analyte	Result	Qual	Reporting Limit	Units	Date Prepared	Date Analyzed
Aroclor-1016	ND		106	ug/kg	01/31/19	02/04/19
Aroclor-1221	ND		106	ug/kg	01/31/19	02/04/19
Aroclor-1232	ND		106	ug/kg	01/31/19	02/04/19
Aroclor-1242	ND		106	ug/kg	01/31/19	02/04/19
Aroclor-1248	ND		106	ug/kg	01/31/19	02/04/19
Aroclor-1254	**123**		106	ug/kg	01/31/19	02/04/19
Aroclor-1260	ND		106	ug/kg	01/31/19	02/04/19
Aroclor-1262	ND		106	ug/kg	01/31/19	02/04/19
Aroclor-1268	ND		106	ug/kg	01/31/19	02/04/19
PCBs (Total)	**123**		106	ug/kg	01/31/19	02/04/19

Surrogate(s)	Recovery%	Limits		
2,4,5,6-Tetrachloro-m-xylene (TCMX)	*67.2%*	*36.2-108*	01/31/19	02/04/19
Decachlorobiphenyl (DCBP)	*68.9%*	*43.3-118*	01/31/19	02/04/19

Results: Polychlorinated Biphenyls (PCBs)

Sample: CS-4

Lab Number: 9A28003-04 (Soil)

Analyte	Result	Qual	Reporting Limit	Units	Date Prepared	Date Analyzed
Aroclor-1016	ND		119	ug/kg	01/31/19	02/04/19
Aroclor-1221	ND		119	ug/kg	01/31/19	02/04/19
Aroclor-1232	ND		119	ug/kg	01/31/19	02/04/19
Aroclor-1242	ND		119	ug/kg	01/31/19	02/04/19
Aroclor-1248	ND		119	ug/kg	01/31/19	02/04/19
Aroclor-1254	**268**		119	ug/kg	01/31/19	02/04/19
Aroclor-1260	ND		119	ug/kg	01/31/19	02/04/19
Aroclor-1262	ND		119	ug/kg	01/31/19	02/04/19
Aroclor-1268	ND		119	ug/kg	01/31/19	02/04/19
PCBs (Total)	**268**		119	ug/kg	01/31/19	02/04/19

Surrogate(s)	Recovery%	Limits		
2,4,5,6-Tetrachloro-m-xylene (TCMX)	*60.2%*	*36.2-108*	01/31/19	02/04/19
Decachlorobiphenyl (DCBP)	*93.3%*	*43.3-118*	01/31/19	02/04/19

Results: Total Petroleum Hydrocarbons

Sample: CS-1

Lab Number: 9A28003-01 (Soil)

Analyte	Result	Qual	Reporting Limit	Units	Date Prepared	Date Analyzed
Total Petroleum Hydrocarbons	**929**		55	mg/kg	01/29/19	01/31/19

Surrogate(s)	Recovery%	Limits		
Chlorooctadecane	*83.3%*	*42.9-128*	01/29/19	01/31/19

Results: Total Petroleum Hydrocarbons

Sample: CS-2

Lab Number: 9A28003-02 (Soil)

Analyte	Result	Qual	Reporting Limit	Units	Date Prepared	Date Analyzed
Total Petroleum Hydrocarbons	**821**		57	mg/kg	01/29/19	01/31/19

Surrogate(s)	Recovery%	Limits		
Chlorooctadecane	*85.4%*	*42.9-128*	01/29/19	01/31/19

Results: Total Petroleum Hydrocarbons

Sample: CS-3

Lab Number: 9A28003-03 (Soil)

Analyte	Result	Qual	Reporting Limit	Units	Date Prepared	Date Analyzed
Total Petroleum Hydrocarbons	**788**		57	mg/kg	01/29/19	01/31/19

Surrogate(s)	Recovery%	Limits		
Chlorooctadecane	*84.2%*	*42.9-128*	01/29/19	01/31/19

Results: Total Petroleum Hydrocarbons

Sample: CS-4

Lab Number: 9A28003-04 (Soil)

Analyte	Result	Qual	Reporting Limit	Units	Date Prepared	Date Analyzed
Total Petroleum Hydrocarbons	**1710**		62	mg/kg	01/29/19	01/31/19

Surrogate(s)	Recovery%	Limits		
Chlorooctadecane	*78.7%*	*42.9-128*	01/29/19	01/31/19

Results: TCLP Metals

Sample: CS-1

Lab Number: 9A28003-01 (Soil)

Analyte	Result	Qual	Reporting Limit	Units	Date Prepared	Date Analyzed
Arsenic	ND		0.05	mg/L	01/29/19	01/31/19
Silver	ND		0.025	mg/L	01/29/19	01/31/19
Barium	**0.673**		0.025	mg/L	01/29/19	01/31/19
Cadmium	ND		0.025	mg/L	01/29/19	01/31/19
Chromium	ND		0.025	mg/L	01/29/19	01/31/19
Lead	**0.737**		0.025	mg/L	01/29/19	01/31/19
Mercury	ND		0.001	mg/L	01/29/19	01/29/19
Selenium	ND		0.05	mg/L	01/29/19	01/31/19

Results: TCLP Metals

Sample: CS-2

Lab Number: 9A28003-02 (Soil)

Analyte	Result	Qual	Reporting Limit	Units	Date Prepared	Date Analyzed
Arsenic	ND		0.05	mg/L	01/29/19	01/31/19
Silver	ND		0.025	mg/L	01/29/19	01/31/19
Barium	**1.23**		0.025	mg/L	01/29/19	01/31/19
Cadmium	ND		0.025	mg/L	01/29/19	01/31/19
Chromium	**0.059**		0.025	mg/L	01/29/19	01/31/19
Lead	**1.62**		0.025	mg/L	01/29/19	01/31/19
Mercury	ND		0.001	mg/L	01/29/19	01/29/19
Selenium	ND		0.05	mg/L	01/29/19	01/31/19

Results: TCLP Metals

Sample: CS-3

Lab Number: 9A28003-03 (Soil)

Analyte	Result	Qual	Reporting Limit	Units	Date Prepared	Date Analyzed
Arsenic	ND		0.05	mg/L	01/29/19	01/31/19
Silver	ND		0.025	mg/L	01/29/19	01/31/19
Barium	**0.656**		0.025	mg/L	01/29/19	01/31/19
Cadmium	ND		0.025	mg/L	01/29/19	01/31/19
Chromium	ND		0.025	mg/L	01/29/19	01/31/19
Lead	**1.36**		0.025	mg/L	01/29/19	01/31/19
Mercury	ND		0.001	mg/L	01/29/19	01/29/19
Selenium	ND		0.05	mg/L	01/29/19	01/31/19

Results: TCLP Metals

Sample: CS-4

Lab Number: 9A28003-04 (Soil)

Analyte	Result	Qual	Reporting Limit	Units	Date Prepared	Date Analyzed
Arsenic	ND		0.05	mg/L	01/29/19	01/31/19
Silver	ND		0.025	mg/L	01/29/19	01/31/19
Barium	**1.99**		0.025	mg/L	01/29/19	01/31/19
Cadmium	**0.034**		0.025	mg/L	01/29/19	01/31/19
Chromium	ND		0.025	mg/L	01/29/19	01/31/19
Lead	**0.548**		0.025	mg/L	01/29/19	01/31/19
Mercury	ND		0.001	mg/L	01/29/19	01/29/19
Selenium	ND		0.05	mg/L	01/29/19	01/31/19

Quality Control

General Chemistry

Analyte	Result	Qual	Reporting Limit	Units	Spike Level	Source Result	%REC	%REC Limits	RPD	RPD Limit
Batch: B9A1196 - pH										
Duplicate (B9A1196-DUP1)			**Source: 9A25029-01**		Prepared & Analyzed: 01/30/19					
pH	6.2			SU		6.2			0.325	200
Batch: B9A1199 - pH										
Duplicate (B9A1199-DUP1)			**Source: 9A28003-04**		Prepared & Analyzed: 01/30/19					
pH	7.2			SU		7.2			0.416	200
Batch: B9B0135 - Flashpoint-EPA 1010A-Mod										
LCS (B9B0135-BS1)					Prepared & Analyzed: 02/05/19					
Flashpoint	87		70	degrees F				90-110		
Duplicate (B9B0135-DUP1)			**Source: 9A28029-07**		Prepared & Analyzed: 02/05/19					
Flashpoint	ND		70	degrees F		ND				20

Quality Control
(Continued)

Total Metals

Analyte	Result	Qual	Reporting Limit	Units	Spike Level	Source Result	%REC	%REC Limits	RPD	RPD Limit
Batch: B9A1127 - Metals Digestion Soils										
Blank (B9A1127-BLK1)					Prepared: 01/29/19 Analyzed: 01/30/19					
Selenium	ND		0.33	mg/kg						
Arsenic	ND		0.33	mg/kg						
Silver	ND		0.16	mg/kg						
Barium	ND		0.16	mg/kg						
Cadmium	ND		0.16	mg/kg						
Chromium	ND		0.16	mg/kg						
Lead	ND		0.16	mg/kg						
LCS (B9A1127-BS1)					Prepared: 01/29/19 Analyzed: 01/30/19					
Selenium	6.67		0.33	mg/kg	6.67		100	85-115		
Lead	34.1		0.16	mg/kg	33.3		102	85-115		
Chromium	34.3		0.16	mg/kg	33.3		103	85-115		
Cadmium	34.7		0.16	mg/kg	33.3		104	85-115		
Barium	34.7		0.16	mg/kg	33.3		104	85-115		
Arsenic	6.96		0.33	mg/kg	6.67		104	85-115		
Silver	14.5		0.16	mg/kg	13.3		109	85-115		
Batch: B9A1130 - Metals Digestion Soils										
Blank (B9A1130-BLK1)					Prepared & Analyzed: 01/29/19					
Mercury	ND		0.071	mg/kg						
LCS (B9A1130-BS1)					Prepared & Analyzed: 01/29/19					
Mercury	0.142		0.071	mg/kg	0.143		99.2	93-114		

Quality Control
(Continued)

Volatile Organic Compounds

Analyte	Result	Qual	Reporting Limit	Units	Spike Level	Source Result	%REC	%REC Limits	RPD	RPD Limit
Batch: B9A1189 - Purge-Trap										
Blank (B9A1189-BLK1)					Prepared & Analyzed: 01/29/19					
Acetone	ND		5	ug/kg						
Benzene	ND		1	ug/kg						
Bromobenzene	ND		1	ug/kg						
Bromochloromethane	ND		1	ug/kg						
Bromodichloromethane	ND		1	ug/kg						
Bromoform	ND		1	ug/kg						
Bromomethane	ND		1	ug/kg						
2-Butanone	ND		5	ug/kg						
tert-Butyl alcohol	ND		5	ug/kg						
sec-Butylbenzene	ND		1	ug/kg						
n-Butylbenzene	ND		1	ug/kg						
tert-Butylbenzene	ND		1	ug/kg						
Methyl t-butyl ether (MTBE)	ND		1	ug/kg						
Carbon Disulfide	ND		1	ug/kg						
Carbon Tetrachloride	ND		1	ug/kg						
Chlorobenzene	ND		1	ug/kg						
Chloroethane	ND		1	ug/kg						
Chloroform	ND		1	ug/kg						
Chloromethane	ND		1	ug/kg						
4-Chlorotoluene	ND		1	ug/kg						
2-Chlorotoluene	ND		1	ug/kg						
1,2-Dibromo-3-chloropropane (DBCP)	ND		1	ug/kg						
Dibromochloromethane	ND		1	ug/kg						
1,2-Dibromoethane (EDB)	ND		1	ug/kg						
Dibromomethane	ND		1	ug/kg						
1,2-Dichlorobenzene	ND		1	ug/kg						
1,3-Dichlorobenzene	ND		1	ug/kg						
1,4-Dichlorobenzene	ND		1	ug/kg						
1,1-Dichloroethane	ND		1	ug/kg						
1,2-Dichloroethane	ND		1	ug/kg						
trans-1,2-Dichloroethene	ND		1	ug/kg						
cis-1,2-Dichloroethene	ND		1	ug/kg						
1,1-Dichloroethene	ND		1	ug/kg						
1,2-Dichloropropane	ND		1	ug/kg						
2,2-Dichloropropane	ND		1	ug/kg						
cis-1,3-Dichloropropene	ND		1	ug/kg						
trans-1,3-Dichloropropene	ND		1	ug/kg						
1,1-Dichloropropene	ND		1	ug/kg						
1,3-Dichloropropene (cis + trans)	ND		2	ug/kg						
Diethyl ether	ND		5	ug/kg						
1,4-Dioxane	ND		500	ug/kg						
Ethylbenzene	ND		1	ug/kg						
Hexachlorobutadiene	ND		1	ug/kg						
2-Hexanone	ND		5	ug/kg						
Isopropylbenzene	ND		1	ug/kg						
p-Isopropyltoluene	ND		1	ug/kg						
Methylene Chloride	ND		1	ug/kg						
4-Methyl-2-pentanone	ND		5	ug/kg						
Naphthalene	ND		1	ug/kg						
n-Propylbenzene	ND		1	ug/kg						
Styrene	ND		1	ug/kg						
1,1,1,2-Tetrachloroethane	ND		1	ug/kg						
Tetrachloroethene	ND		1	ug/kg						
Tetrahydrofuran	ND		5	ug/kg						

Quality Control
(Continued)

Volatile Organic Compounds (Continued)

Analyte	Result	Qual	Reporting Limit	Units	Spike Level	Source Result	%REC	%REC Limits	RPD	RPD Limit
Batch: B9A1189 - Purge-Trap (Continued)										
Blank (B9A1189-BLK1)					Prepared & Analyzed: 01/29/19					
Toluene	ND		1	ug/kg						
1,2,4-Trichlorobenzene	ND		1	ug/kg						
1,2,3-Trichlorobenzene	ND		1	ug/kg						
1,1,2-Trichloroethane	ND		1	ug/kg						
1,1,1-Trichloroethane	ND		1	ug/kg						
Trichloroethene	ND		1	ug/kg						
1,2,3-Trichloropropane	ND		1	ug/kg						
1,3,5-Trimethylbenzene	ND		1	ug/kg						
1,2,4-Trimethylbenzene	ND		1	ug/kg						
Vinyl Chloride	ND		1	ug/kg						
o-Xylene	ND		1	ug/kg						
m&p-Xylene	ND		2	ug/kg						
Total xylenes	ND		2	ug/kg						
1,1,2,2-Tetrachloroethane	ND		1	ug/kg						
tert-Amyl methyl ether	ND		1	ug/kg						
1,3-Dichloropropane	ND		1	ug/kg						
Ethyl tert-butyl ether	ND		1	ug/kg						
Diisopropyl ether	ND		1	ug/kg						
Trichlorofluoromethane	ND		1	ug/kg						
Dichlorodifluoromethane	ND		1	ug/kg						
Surrogate: 4-Bromofluorobenzene			*47.3*	ug/l	*50.0*		*94.6*	*70-130*		
Surrogate: 1,2-Dichloroethane-d4			*52.6*	ug/l	*50.0*		*105*	*70-130*		
Surrogate: Toluene-d8			*52.6*	ug/l	*50.0*		*105*	*70-130*		
LCS (B9A1189-BS1)					Prepared & Analyzed: 01/29/19					
1,3,5-Trichlorobenzene	55			ug/l	50.0		110	70-130		
Acetone	45			ug/l	50.0		90.4	70-130		
Benzene	47			ug/l	50.0		93.1	70-130		
Bromobenzene	58			ug/l	50.0		115	70-130		
Bromochloromethane	52			ug/l	50.0		104	70-130		
Bromodichloromethane	57			ug/l	50.0		114	70-130		
Bromoform	49			ug/l	50.0		97.9	70-130		
Bromomethane	52			ug/l	50.0		105	70-130		
2-Butanone	47			ug/l	50.0		94.5	70-130		
tert-Butyl alcohol	54			ug/l	50.0		108	70-130		
sec-Butylbenzene	62			ug/l	50.0		123	70-130		
n-Butylbenzene	61			ug/l	50.0		123	70-130		
tert-Butylbenzene	61			ug/l	50.0		122	70-130		
Methyl t-butyl ether (MTBE)	48			ug/l	50.0		95.1	70-130		
Carbon Disulfide	15			ug/l	50.0		29.9	70-130		
Carbon Tetrachloride	52			ug/l	50.0		103	70-130		
Chlorobenzene	57			ug/l	50.0		113	70-130		
Chloroethane	45			ug/l	50.0		90.2	70-130		
Chloroform	53			ug/l	50.0		106	70-130		
Chloromethane	46			ug/l	50.0		92.2	70-130		
4-Chlorotoluene	59			ug/l	50.0		119	70-130		
2-Chlorotoluene	59			ug/l	50.0		119	70-130		
1,2-Dibromo-3-chloropropane (DBCP)	48			ug/l	50.0		95.2	70-130		
Dibromochloromethane	59			ug/l	50.0		118	70-130		
1,2-Dibromoethane (EDB)	61			ug/l	50.0		123	70-130		
Dibromomethane	54			ug/l	50.0		108	70-130		
1,2-Dichlorobenzene	56			ug/l	50.0		113	70-130		
1,3-Dichlorobenzene	58			ug/l	50.0		115	70-130		
1,4-Dichlorobenzene	55			ug/l	50.0		109	70-130		

Quality Control
(Continued)

Volatile Organic Compounds (Continued)

Analyte	Result	Qual	Reporting Limit	Units	Spike Level	Source Result	%REC	%REC Limits	RPD	RPD Limit
Batch: B9A1189 - Purge-Trap (Continued)										
LCS (B9A1189-BS1)					Prepared & Analyzed: 01/29/19					
1,1-Dichloroethane	48			ug/l	50.0		95.2	70-130		
1,2-Dichloroethane	50			ug/l	50.0		100	70-130		
trans-1,2-Dichloroethene	43			ug/l	50.0		85.6	70-130		
cis-1,2-Dichloroethene	51			ug/l	50.0		101	70-130		
1,1-Dichloroethene	28			ug/l	50.0		55.1	70-130		
1,2-Dichloropropane	59			ug/l	50.0		118	70-130		
2,2-Dichloropropane	53			ug/l	50.0		106	70-130		
cis-1,3-Dichloropropene	60			ug/l	50.0		119	70-130		
trans-1,3-Dichloropropene	57			ug/l	50.0		114	70-130		
1,1-Dichloropropene	45			ug/l	50.0		89.5	70-130		
Diethyl ether	41			ug/l	50.0		81.7	70-130		
1,4-Dioxane	266			ug/l	250		107	70-130		
Ethylbenzene	59			ug/l	50.0		119	70-130		
Hexachlorobutadiene	52			ug/l	50.0		104	70-130		
2-Hexanone	55			ug/l	50.0		111	70-130		
Isopropylbenzene	64			ug/l	50.0		127	70-130		
p-Isopropyltoluene	62			ug/l	50.0		125	70-130		
Methylene Chloride	50			ug/l	50.0		100	70-130		
4-Methyl-2-pentanone	55			ug/l	50.0		110	70-130		
Naphthalene	51			ug/l	50.0		101	70-130		
n-Propylbenzene	62			ug/l	50.0		125	70-130		
Styrene	56			ug/l	50.0		113	70-130		
1,1,1,2-Tetrachloroethane	56			ug/l	50.0		112	70-130		
Tetrachloroethene	57			ug/l	50.0		114	70-130		
Tetrahydrofuran	45			ug/l	50.0		90.2	70-130		
Toluene	56			ug/l	50.0		113	70-130		
1,2,4-Trichlorobenzene	52			ug/l	50.0		104	70-130		
1,2,3-Trichlorobenzene	49			ug/l	50.0		97.7	70-130		
1,1,2-Trichloroethane	60			ug/l	50.0		119	70-130		
1,1,1-Trichloroethane	48			ug/l	50.0		95.8	70-130		
Trichloroethene	47			ug/l	50.0		94.5	70-130		
1,2,3-Trichloropropane	54			ug/l	50.0		108	70-130		
1,3,5-Trimethylbenzene	62			ug/l	50.0		124	70-130		
1,2,4-Trimethylbenzene	60			ug/l	50.0		121	70-130		
Vinyl Chloride	50			ug/l	50.0		99.4	70-130		
o-Xylene	61			ug/l	50.0		123	70-130		
m&p-Xylene	120			ug/l	100		120	70-130		
1,1,2,2-Tetrachloroethane	56			ug/l	50.0		113	70-130		
tert-Amyl methyl ether	54			ug/l	50.0		107	70-130		
1,3-Dichloropropane	60			ug/l	50.0		120	70-130		
Ethyl tert-butyl ether	52			ug/l	50.0		105	70-130		
Diisopropyl ether	55			ug/l	50.0		109	70-130		
Trichlorofluoromethane	54			ug/l	50.0		107	70-130		
Dichlorodifluoromethane	46			ug/l	50.0		92.5	70-130		
Surrogate: 4-Bromofluorobenzene			*51.4*	ug/l	*50.0*		*103*	*70-130*		
Surrogate: 1,2-Dichloroethane-d4			*53.4*	ug/l	*50.0*		*107*	*70-130*		
Surrogate: Toluene-d8			*51.0*	ug/l	*50.0*		*102*	*70-130*		

Quality Control
(Continued)

Volatile Organic Compounds (Continued)

Analyte	Result	Qual	Reporting Limit	Units	Spike Level	Source Result	%REC	%REC Limits	RPD	RPD Limit
Batch: B9A1203 - Purge-Trap										
Blank (B9A1203-BLK1)					Prepared & Analyzed: 01/30/19					
Acetone	ND		5	ug/kg						
Benzene	ND		1	ug/kg						
Bromobenzene	ND		1	ug/kg						
Bromochloromethane	ND		1	ug/kg						
Bromodichloromethane	ND		1	ug/kg						
Bromoform	ND		1	ug/kg						
Bromomethane	ND		1	ug/kg						
2-Butanone	ND		5	ug/kg						
tert-Butyl alcohol	ND		5	ug/kg						
sec-Butylbenzene	ND		1	ug/kg						
n-Butylbenzene	ND		1	ug/kg						
tert-Butylbenzene	ND		1	ug/kg						
Methyl t-butyl ether (MTBE)	ND		1	ug/kg						
Carbon Disulfide	ND		1	ug/kg						
Carbon Tetrachloride	ND		1	ug/kg						
Chlorobenzene	ND		1	ug/kg						
Chloroethane	ND		1	ug/kg						
Chloroform	ND		1	ug/kg						
Chloromethane	ND		1	ug/kg						
4-Chlorotoluene	ND		1	ug/kg						
2-Chlorotoluene	ND		1	ug/kg						
1,2-Dibromo-3-chloropropane (DBCP)	ND		1	ug/kg						
Dibromochloromethane	ND		1	ug/kg						
1,2-Dibromoethane (EDB)	ND		1	ug/kg						
Dibromomethane	ND		1	ug/kg						
1,2-Dichlorobenzene	ND		1	ug/kg						
1,3-Dichlorobenzene	ND		1	ug/kg						
1,4-Dichlorobenzene	ND		1	ug/kg						
1,1-Dichloroethane	ND		1	ug/kg						
1,2-Dichloroethane	ND		1	ug/kg						
trans-1,2-Dichloroethene	ND		1	ug/kg						
cis-1,2-Dichloroethene	ND		1	ug/kg						
1,1-Dichloroethene	ND		1	ug/kg						
1,2-Dichloropropane	ND		1	ug/kg						
2,2-Dichloropropane	ND		1	ug/kg						
cis-1,3-Dichloropropene	ND		1	ug/kg						
trans-1,3-Dichloropropene	ND		1	ug/kg						
1,1-Dichloropropene	ND		1	ug/kg						
1,3-Dichloropropene (cis + trans)	ND		2	ug/kg						
Diethyl ether	ND		5	ug/kg						
1,4-Dioxane	ND		500	ug/kg						
Ethylbenzene	ND		1	ug/kg						
Hexachlorobutadiene	ND		1	ug/kg						
2-Hexanone	ND		5	ug/kg						
Isopropylbenzene	ND		1	ug/kg						
p-Isopropyltoluene	ND		1	ug/kg						
Methylene Chloride	ND		5	ug/kg						
4-Methyl-2-pentanone	ND		5	ug/kg						
Naphthalene	ND		1	ug/kg						
n-Propylbenzene	ND		1	ug/kg						
Styrene	ND		1	ug/kg						
1,1,1,2-Tetrachloroethane	ND		1	ug/kg						
Tetrachloroethene	ND		1	ug/kg						
Tetrahydrofuran	ND		5	ug/kg						

Quality Control
(Continued)

Volatile Organic Compounds (Continued)

Analyte	Result	Qual	Reporting Limit	Units	Spike Level	Source Result	%REC	%REC Limits	RPD	RPD Limit
Batch: B9A1203 - Purge-Trap (Continued)										
Blank (B9A1203-BLK1)					Prepared & Analyzed: 01/30/19					
Toluene	ND		1	ug/kg						
1,2,4-Trichlorobenzene	ND		1	ug/kg						
1,2,3-Trichlorobenzene	ND		1	ug/kg						
1,1,2-Trichloroethane	ND		1	ug/kg						
1,1,1-Trichloroethane	ND		1	ug/kg						
Trichloroethene	ND		1	ug/kg						
1,2,3-Trichloropropane	ND		1	ug/kg						
1,3,5-Trimethylbenzene	ND		1	ug/kg						
1,2,4-Trimethylbenzene	ND		1	ug/kg						
Vinyl Chloride	ND		1	ug/kg						
o-Xylene	ND		1	ug/kg						
m&p-Xylene	ND		2	ug/kg						
Total xylenes	ND		2	ug/kg						
1,1,2,2-Tetrachloroethane	ND		1	ug/kg						
tert-Amyl methyl ether	ND		1	ug/kg						
1,3-Dichloropropane	ND		1	ug/kg						
Ethyl tert-butyl ether	ND		1	ug/kg						
Diisopropyl ether	ND		1	ug/kg						
Trichlorofluoromethane	ND		1	ug/kg						
Dichlorodifluoromethane	ND		1	ug/kg						
Surrogate: 4-Bromofluorobenzene			*46.6*	ug/l	*50.0*		*93.2*	*70-130*		
Surrogate: 1,2-Dichloroethane-d4			*52.9*	ug/l	*50.0*		*106*	*70-130*		
Surrogate: Toluene-d8			*47.9*	ug/l	*50.0*		*95.9*	*70-130*		
LCS (B9A1203-BS1)					Prepared & Analyzed: 01/30/19					
1,3,5-Trichlorobenzene	46		1	ug/kg				70-130		
Acetone	36			ug/l	50.0		71.6	70-130		
Benzene	51			ug/l	50.0		102	70-130		
Bromobenzene	49			ug/l	50.0		98.7	70-130		
Bromochloromethane	52			ug/l	50.0		103	70-130		
Bromodichloromethane	46			ug/l	50.0		92.5	70-130		
Bromoform	51			ug/l	50.0		102	70-130		
Bromomethane	58			ug/l	50.0		117	70-130		
2-Butanone	40			ug/l	50.0		80.4	70-130		
tert-Butyl alcohol	55			ug/l	50.0		109	70-130		
sec-Butylbenzene	51			ug/l	50.0		101	70-130		
n-Butylbenzene	52			ug/l	50.0		105	70-130		
tert-Butylbenzene	49			ug/l	50.0		98.9	70-130		
Methyl t-butyl ether (MTBE)	51			ug/l	50.0		103	70-130		
Carbon Disulfide	36			ug/l	50.0		72.6	70-130		
Carbon Tetrachloride	44			ug/l	50.0		88.9	70-130		
Chlorobenzene	51			ug/l	50.0		103	70-130		
Chloroethane	49			ug/l	50.0		98.7	70-130		
Chloroform	47			ug/l	50.0		93.2	70-130		
Chloromethane	48			ug/l	50.0		96.2	70-130		
4-Chlorotoluene	48			ug/l	50.0		96.1	70-130		
2-Chlorotoluene	47			ug/l	50.0		94.7	70-130		
1,2-Dibromo-3-chloropropane (DBCP)	51			ug/l	50.0		103	70-130		
Dibromochloromethane	50			ug/l	50.0		99.2	70-130		
1,2-Dibromoethane (EDB)	51			ug/l	50.0		101	70-130		
Dibromomethane	48			ug/l	50.0		96.1	70-130		
1,2-Dichlorobenzene	51			ug/l	50.0		102	70-130		
1,3-Dichlorobenzene	47			ug/l	50.0		94.0	70-130		
1,4-Dichlorobenzene	50			ug/l	50.0		100	70-130		

Quality Control
(Continued)

Volatile Organic Compounds (Continued)

Analyte	Result	Qual	Reporting Limit	Units	Spike Level	Source Result	%REC	%REC Limits	RPD	RPD Limit
Batch: B9A1203 - Purge-Trap (Continued)										
LCS (B9A1203-BS1)					Prepared & Analyzed: 01/30/19					
1,1-Dichloroethane	48			ug/l	50.0		95.3	70-130		
1,2-Dichloroethane	44			ug/l	50.0		87.6	70-130		
trans-1,2-Dichloroethene	51			ug/l	50.0		103	70-130		
cis-1,2-Dichloroethene	53			ug/l	50.0		107	70-130		
1,1-Dichloroethene	44			ug/l	50.0		88.4	70-130		
1,2-Dichloropropane	49			ug/l	50.0		97.2	70-130		
2,2-Dichloropropane	45			ug/l	50.0		89.4	70-130		
cis-1,3-Dichloropropene	50			ug/l	50.0		99.7	70-130		
trans-1,3-Dichloropropene	50			ug/l	50.0		100	70-130		
1,1-Dichloropropene	53			ug/l	50.0		106	70-130		
Diethyl ether	43			ug/l	50.0		86.7	70-130		
1,4-Dioxane	336			ug/l	250		134	70-130		
Ethylbenzene	52			ug/l	50.0		103	70-130		
Hexachlorobutadiene	50			ug/l	50.0		99.5	70-130		
2-Hexanone	41			ug/l	50.0		81.6	70-130		
Isopropylbenzene	52			ug/l	50.0		105	70-130		
p-Isopropyltoluene	50			ug/l	50.0		101	70-130		
Methylene Chloride	53			ug/l	50.0		105	70-130		
4-Methyl-2-pentanone	45			ug/l	50.0		90.7	70-130		
Naphthalene	50			ug/l	50.0		101	70-130		
n-Propylbenzene	49			ug/l	50.0		98.1	70-130		
Styrene	53			ug/l	50.0		106	70-130		
1,1,1,2-Tetrachloroethane	50			ug/l	50.0		100	70-130		
Tetrachloroethene	48			ug/l	50.0		96.1	70-130		
Tetrahydrofuran	58			ug/l	50.0		116	70-130		
Toluene	51			ug/l	50.0		102	70-130		
1,2,4-Trichlorobenzene	47			ug/l	50.0		93.8	70-130		
1,2,3-Trichlorobenzene	42			ug/l	50.0		84.4	70-130		
1,1,2-Trichloroethane	51			ug/l	50.0		102	70-130		
1,1,1-Trichloroethane	44			ug/l	50.0		87.9	70-130		
Trichloroethene	44			ug/l	50.0		88.5	70-130		
1,2,3-Trichloropropane	46			ug/l	50.0		91.5	70-130		
1,3,5-Trimethylbenzene	50			ug/l	50.0		99.2	70-130		
1,2,4-Trimethylbenzene	50			ug/l	50.0		100	70-130		
Vinyl Chloride	51			ug/l	50.0		102	70-130		
o-Xylene	54			ug/l	50.0		109	70-130		
m&p-Xylene	104			ug/l	100		104	70-130		
1,1,2,2-Tetrachloroethane	50			ug/l	50.0		99.4	70-130		
tert-Amyl methyl ether	54			ug/l	50.0		109	70-130		
1,3-Dichloropropane	49			ug/l	50.0		98.2	70-130		
Ethyl tert-butyl ether	52			ug/l	50.0		103	70-130		
Diisopropyl ether	47			ug/l	50.0		93.7	70-130		
Trichlorofluoromethane	49			ug/l	50.0		97.9	70-130		
Dichlorodifluoromethane	49			ug/l	50.0		97.8	70-130		
Surrogate: 4-Bromofluorobenzene			*48.5*	ug/l	*50.0*		*96.9*	*70-130*		
Surrogate: 1,2-Dichloroethane-d4			*51.6*	ug/l	*50.0*		*103*	*70-130*		
Surrogate: Toluene-d8			*48.4*	ug/l	*50.0*		*96.7*	*70-130*		

Quality Control
(Continued)

Semivolatile organic compounds

Analyte	Result	Qual	Reporting Limit	Units	Spike Level	Source Result	%REC	%REC Limits	RPD	RPD Limit
Batch: B9A1202 - EPA 3546										
Blank (B9A1202-BLK1)					Prepared: 01/30/19 Analyzed: 02/01/19					
1,2,4-Trichlorobenzene	ND		130	ug/kg						
1,2-Dichlorobenzene	ND		130	ug/kg						
1,3-Dichlorobenzene	ND		130	ug/kg						
1,4-Dichlorobenzene	ND		130	ug/kg						
Phenol	ND		130	ug/kg						
2,4,5-Trichlorophenol	ND		130	ug/kg						
2,4,6-Trichlorophenol	ND		130	ug/kg						
2,4-Dichlorophenol	ND		130	ug/kg						
2,4-Dimethylphenol	ND		330	ug/kg						
2,4-Dinitrophenol	ND		330	ug/kg						
2,4-Dinitrotoluene	ND		130	ug/kg						
2,6-Dinitrotoluene	ND		130	ug/kg						
2-Chloronaphthalene	ND		130	ug/kg						
2-Chlorophenol	ND		130	ug/kg						
2-Methylnaphthalene	ND		130	ug/kg						
Nitrobenzene	ND		130	ug/kg						
2-Methylphenol	ND		130	ug/kg						
2-Nitroaniline	ND		130	ug/kg						
2-Nitrophenol	ND		330	ug/kg						
3,3'-Dichlorobenzidine	ND		330	ug/kg						
3-Nitroaniline	ND		130	ug/kg						
4,6-Dinitro-2-methylphenol	ND		330	ug/kg						
4-Bromophenyl phenyl ether	ND		130	ug/kg						
4-Chloro-3-methylphenol	ND		130	ug/kg						
4-Chloroaniline	ND		130	ug/kg						
4-Chlorophenyl phenyl ether	ND		130	ug/kg						
4-Nitroaniline	ND		130	ug/kg						
4-Nitrophenol	ND		330	ug/kg						
Acenaphthene	ND		130	ug/kg						
Acenaphthylene	ND		130	ug/kg						
Aniline	ND		130	ug/kg						
Anthracene	ND		130	ug/kg						
Benzo(a)anthracene	ND		130	ug/kg						
Benzo(a)pyrene	ND		130	ug/kg						
Benzo(b)fluoranthene	ND		130	ug/kg						
Benzo(g,h,i)perylene	ND		130	ug/kg						
Benzo(k)fluoranthene	ND		130	ug/kg						
Benzoic acid	ND		1000	ug/kg						
Bis(2-chloroethoxy)methane	ND		130	ug/kg						
Bis(2-chloroethyl)ether	ND		130	ug/kg						
Bis(2-chloroisopropyl)ether	ND		130	ug/kg						
Bis(2-ethylhexyl)phthalate	ND		400	ug/kg						
Butyl benzyl phthalate	ND		130	ug/kg						
Chrysene	ND		130	ug/kg						
Di(n)octyl phthalate	ND		200	ug/kg						
Dibenz(a,h)anthracene	ND		130	ug/kg						
Dibenzofuran	ND		130	ug/kg						
Diethyl phthalate	ND		130	ug/kg						
Dimethyl phthalate	ND		330	ug/kg						
Di-n-butylphthalate	ND		200	ug/kg						
Fluoranthene	ND		130	ug/kg						
Fluorene	ND		130	ug/kg						
Hexachlorobenzene	ND		130	ug/kg						
Hexachlorobutadiene	ND		130	ug/kg						

Quality Control
(Continued)

Semivolatile organic compounds (Continued)

Analyte	Result	Qual	Reporting Limit	Units	Spike Level	Source Result	%REC	%REC Limits	RPD	RPD Limit
Batch: B9A1202 - EPA 3546 (Continued)										
Blank (B9A1202-BLK1)					Prepared: 01/30/19 Analyzed: 02/01/19					
Hexachlorocyclopentadiene	ND		330	ug/kg						
Hexachloroethane	ND		130	ug/kg						
Indeno(1,2,3-cd)pyrene	ND		130	ug/kg						
Isophorone	ND		130	ug/kg						
Naphthalene	ND		130	ug/kg						
N-Nitrosodimethylamine	ND		130	ug/kg						
N-Nitrosodi-n-propylamine	ND		130	ug/kg						
N-Nitrosodiphenylamine	ND		130	ug/kg						
Pentachlorophenol	ND		330	ug/kg						
Phenanthrene	ND		130	ug/kg						
Pyrene	ND		130	ug/kg						
m&p-Cresol	ND		260	ug/kg						
Pyridine	ND		130	ug/kg						
Surrogate: Nitrobenzene-d5			*2340*	ug/kg	*3330*		*70.2*	*30-126*		
Surrogate: p-Terphenyl-d14			*3480*	ug/kg	*3330*		*104*	*47-130*		
Surrogate: 2-Fluorobiphenyl			*2190*	ug/kg	*3330*		*65.8*	*34-130*		
Surrogate: Phenol-d6			*2020*	ug/kg	*3330*		*60.6*	*30-130*		
Surrogate: 2,4,6-Tribromophenol			*1870*	ug/kg	*3330*		*56.2*	*30-130*		
Surrogate: 2-Fluorophenol			*1810*	ug/kg	*3330*		*54.4*	*30-130*		
LCS (B9A1202-BS1)					Prepared: 01/30/19 Analyzed: 02/01/19					
1,2,4-Trichlorobenzene	1790		130	ug/kg	3330		53.8	40-130		
1,2-Dichlorobenzene	1560		130	ug/kg	3330		46.7	40-130		
1,3-Dichlorobenzene	1600		130	ug/kg	3330		47.9	40-130		
1,4-Dichlorobenzene	1600		130	ug/kg	3330		48.0	40-130		
Phenol	1760		130	ug/kg	3330		52.7	40-130		
2,4,5-Trichlorophenol	1880		130	ug/kg	3330		56.4	40-130		
2,4,6-Trichlorophenol	1900		130	ug/kg	3330		57.1	40-130		
2,4-Dichlorophenol	1810		130	ug/kg	3330		54.4	40-130		
2,4-Dimethylphenol	1870		330	ug/kg	3330		56.2	40-130		
2,4-Dinitrotoluene	2760		130	ug/kg	3330		82.9	40-130		
2,6-Dinitrotoluene	2480		130	ug/kg	3330		74.3	40-130		
2-Chloronaphthalene	1710		130	ug/kg	3330		51.4	40-130		
2-Chlorophenol	1800		130	ug/kg	3330		54.1	40-130		
2-Methylnaphthalene	1860		130	ug/kg	3330		55.8	40-130		
Nitrobenzene	1790		130	ug/kg	3330		53.8	40-130		
2-Methylphenol	1730		130	ug/kg	3330		51.9	40-130		
2-Nitroaniline	2630		130	ug/kg	3330		78.8	40-130		
2-Nitrophenol	1800		330	ug/kg	3330		54.1	40-130		
3-Nitroaniline	2460		130	ug/kg	3330		73.9	40-130		
4,6-Dinitro-2-methylphenol	1350		330	ug/kg	3330		40.6	40-130		
4-Bromophenyl phenyl ether	2900		130	ug/kg	3330		87.0	40-130		
4-Chloro-3-methylphenol	2220		130	ug/kg	3330		66.6	40-130		
4-Chlorophenyl phenyl ether	2640		130	ug/kg	3330		79.1	40-130		
4-Nitroaniline	2920		130	ug/kg	3330		87.5	40-130		
4-Nitrophenol	2930		330	ug/kg	3330		87.8	40-130		
Acenaphthene	2140		130	ug/kg	3330		64.3	40-130		
Acenaphthylene	2200		130	ug/kg	3330		65.9	40-130		
Anthracene	2850		130	ug/kg	3330		85.6	40-130		
Benzo(a)anthracene	3130		130	ug/kg	3330		93.9	40-130		
Benzo(a)pyrene	3380		130	ug/kg	3330		101	40-130		
Benzo(b)fluoranthene	3380		130	ug/kg	3330		101	40-130		
Benzo(g,h,i)perylene	3100		130	ug/kg	3330		92.9	40-130		
Benzo(k)fluoranthene	3380		130	ug/kg	3330		102	40-130		

Quality Control
(Continued)

Semivolatile organic compounds (Continued)

Analyte	Result	Qual	Reporting Limit	Units	Spike Level	Source Result	%REC	%REC Limits	RPD	RPD Limit
Batch: B9A1202 - EPA 3546 (Continued)										
LCS (B9A1202-BS1)					Prepared: 01/30/19 Analyzed: 02/01/19					
Bis(2-chloroethoxy)methane	1980		130	ug/kg	3330		59.4	40-130		
Bis(2-chloroethyl)ether	1850		130	ug/kg	3330		55.5	40-130		
Bis(2-chloroisopropyl)ether	2010		130	ug/kg	3330		60.4	40-130		
Bis(2-ethylhexyl)phthalate	3570		400	ug/kg	3330		107	40-130		
Butyl benzyl phthalate	3260		130	ug/kg	3330		97.7	40-130		
Chrysene	3130		130	ug/kg	3330		93.8	40-130		
Di(n)octyl phthalate	3730		200	ug/kg	3330		112	40-130		
Dibenz(a,h)anthracene	2990		130	ug/kg	3330		89.8	40-130		
Dibenzofuran	2330		130	ug/kg	3330		70.0	40-130		
Diethyl phthalate	2900		130	ug/kg	3330		87.0	40-130		
Dimethyl phthalate	2470		330	ug/kg	3330		74.0	40-130		
Di-n-butylphthalate	2850		200	ug/kg	3330		85.5	40-130		
Fluoranthene	2880		130	ug/kg	3330		86.4	40-130		
Fluorene	2650		130	ug/kg	3330		79.4	40-130		
Hexachlorobenzene	2570		130	ug/kg	3330		77.0	40-130		
Hexachlorobutadiene	1960		130	ug/kg	3330		58.7	40-130		
Hexachlorocyclopentadiene	1550		330	ug/kg	3330		46.6	40-130		
Hexachloroethane	1560		130	ug/kg	3330		46.9	40-130		
Indeno(1,2,3-cd)pyrene	3110		130	ug/kg	3330		93.4	40-130		
Isophorone	2020		130	ug/kg	3330		60.5	40-130		
Naphthalene	1910		130	ug/kg	3330		57.2	40-130		
N-Nitrosodimethylamine	2000		130	ug/kg	3330		60.1	40-130		
N-Nitrosodi-n-propylamine	1800		130	ug/kg	3330		54.0	40-130		
N-Nitrosodiphenylamine	3100		130	ug/kg	3330		92.9	40-130		
Pentachlorophenol	1780		330	ug/kg	3330		53.3	40-130		
Phenanthrene	2820		130	ug/kg	3330		84.6	40-130		
Pyrene	2950		130	ug/kg	3330		88.4	40-130		
m&p-Cresol	1850		260	ug/kg	3330		55.5	40-130		
Surrogate: Nitrobenzene-d5			*2240*	ug/kg	*3330*		*67.3*	*30-126*		
Surrogate: p-Terphenyl-d14			*3550*	ug/kg	*3330*		*106*	*47-130*		
Surrogate: 2-Fluorobiphenyl			*2120*	ug/kg	*3330*		*63.7*	*34-130*		
Surrogate: Phenol-d6			*2070*	ug/kg	*3330*		*62.2*	*30-130*		
Surrogate: 2,4,6-Tribromophenol			*3100*	ug/kg	*3330*		*93.1*	*30-130*		
Surrogate: 2-Fluorophenol			*1940*	ug/kg	*3330*		*58.2*	*30-130*		

Quality Control
(Continued)

Semivolatile organic compounds (Continued)

Analyte	Result	Qual	Reporting Limit	Units	Spike Level	Source Result	%REC	%REC Limits	RPD	RPD Limit
Batch: B9A1202 - EPA 3546 (Continued)										
LCS Dup (B9A1202-BSD1)					Prepared: 01/30/19 Analyzed: 02/04/19					
1,2,4-Trichlorobenzene	2180		130	ug/kg	3330		65.4	40-130	19.5	30
1,2-Dichlorobenzene	1830		130	ug/kg	3330		54.8	40-130	16.0	30
1,3-Dichlorobenzene	1780		130	ug/kg	3330		53.4	40-130	10.9	30
1,4-Dichlorobenzene	1850		130	ug/kg	3330		55.4	40-130	14.4	30
Phenol	2050		130	ug/kg	3330		61.4	40-130	15.3	30
2,4,5-Trichlorophenol	2310		130	ug/kg	3330		69.2	40-130	20.5	30
2,4,6-Trichlorophenol	2350		130	ug/kg	3330		70.6	40-130	21.1	30
2,4-Dichlorophenol	2150		130	ug/kg	3330		64.4	40-130	16.8	30
2,4-Dimethylphenol	1920		330	ug/kg	3330		57.6	40-130	2.36	30
2,4-Dinitrotoluene	2850		130	ug/kg	3330		85.6	40-130	3.18	30
2,6-Dinitrotoluene	2690		130	ug/kg	3330		80.6	40-130	8.14	30
2-Chloronaphthalene	2100		130	ug/kg	3330		62.9	40-130	20.2	30
2-Chlorophenol	2030		130	ug/kg	3330		60.8	40-130	11.8	30
2-Methylnaphthalene	2180		130	ug/kg	3330		65.4	40-130	15.7	30
Nitrobenzene	2190		130	ug/kg	3330		65.8	40-130	20.1	30
2-Methylphenol	2020		130	ug/kg	3330		60.6	40-130	15.4	30
2-Nitroaniline	3090		130	ug/kg	3330		92.8	40-130	16.3	30
2-Nitrophenol	2040		330	ug/kg	3330		61.2	40-130	12.4	30
3-Nitroaniline	2910		130	ug/kg	3330		87.4	40-130	16.8	30
4,6-Dinitro-2-methylphenol	1540		330	ug/kg	3330		46.1	40-130	12.8	30
4-Bromophenyl phenyl ether	3080		130	ug/kg	3330		92.4	40-130	6.06	30
4-Chloro-3-methylphenol	2520		130	ug/kg	3330		75.6	40-130	12.7	30
4-Chlorophenyl phenyl ether	2870		130	ug/kg	3330		86.1	40-130	8.43	30
4-Nitroaniline	3110		130	ug/kg	3330		93.2	40-130	6.33	30
4-Nitrophenol	3140		330	ug/kg	3330		94.2	40-130	6.99	30
Acenaphthene	2380		130	ug/kg	3330		71.5	40-130	10.6	30
Acenaphthylene	2540		130	ug/kg	3330		76.3	40-130	14.6	30
Anthracene	2880		130	ug/kg	3330		86.5	40-130	1.02	30
Benzo(a)anthracene	3260		130	ug/kg	3330		97.8	40-130	4.01	30
Benzo(a)pyrene	3650		130	ug/kg	3330		109	40-130	7.61	30
Benzo(b)fluoranthene	3740		130	ug/kg	3330		112	40-130	10.2	30
Benzo(g,h,i)perylene	3560		130	ug/kg	3330		107	40-130	14.0	30
Benzo(k)fluoranthene	3740		130	ug/kg	3330		112	40-130	9.91	30
Bis(2-chloroethoxy)methane	2260		130	ug/kg	3330		67.8	40-130	13.1	30
Bis(2-chloroethyl)ether	1570		130	ug/kg	3330		47.1	40-130	16.4	30
Bis(2-chloroisopropyl)ether	2340		130	ug/kg	3330		70.3	40-130	15.2	30
Bis(2-ethylhexyl)phthalate	3790		400	ug/kg	3330		114	40-130	5.87	30
Butyl benzyl phthalate	3430		130	ug/kg	3330		103	40-130	5.24	30
Chrysene	3270		130	ug/kg	3330		98.1	40-130	4.44	30
Di(n)octyl phthalate	4460		200	ug/kg	3330		134	40-130	17.8	30
Dibenz(a,h)anthracene	3380		130	ug/kg	3330		101	40-130	12.0	30
Dibenzofuran	2560		130	ug/kg	3330		76.9	40-130	9.31	30
Diethyl phthalate	2900		130	ug/kg	3330		87.1	40-130	0.0460	30
Dimethyl phthalate	2720		330	ug/kg	3330		81.5	40-130	9.54	30
Di-n-butylphthalate	2780		200	ug/kg	3330		83.5	40-130	2.44	30
Fluoranthene	2830		130	ug/kg	3330		84.8	40-130	1.82	30
Fluorene	2850		130	ug/kg	3330		85.6	40-130	7.46	30
Hexachlorobenzene	2670		130	ug/kg	3330		80.0	40-130	3.82	30
Hexachlorobutadiene	2420		130	ug/kg	3330		72.6	40-130	21.2	30
Hexachlorocyclopentadiene	1590		330	ug/kg	3330		47.7	40-130	2.33	30
Hexachloroethane	1850		130	ug/kg	3330		55.6	40-130	17.0	30
Indeno(1,2,3-cd)pyrene	3520		130	ug/kg	3330		106	40-130	12.3	30
Isophorone	2230		130	ug/kg	3330		66.8	40-130	9.93	30
Naphthalene	2210		130	ug/kg	3330		66.4	40-130	14.9	30

Quality Control
(Continued)

Semivolatile organic compounds (Continued)

Analyte	Result	Qual	Reporting Limit	Units	Spike Level	Source Result	%REC	%REC Limits	RPD	RPD Limit
Batch: B9A1202 - EPA 3546 (Continued)										
LCS Dup (B9A1202-BSD1)					Prepared: 01/30/19 Analyzed: 02/04/19					
N-Nitrosodimethylamine	2410		130	ug/kg	3330		72.3	40-130	18.5	30
N-Nitrosodi-n-propylamine	2210		130	ug/kg	3330		66.2	40-130	20.3	30
N-Nitrosodiphenylamine	2970		130	ug/kg	3330		89.1	40-130	4.18	30
Pentachlorophenol	2240		330	ug/kg	3330		67.2	40-130	23.2	30
Phenanthrene	2950		130	ug/kg	3330		88.6	40-130	4.60	30
Pyrene	3040		130	ug/kg	3330		91.1	40-130	2.99	30
m&p-Cresol	2220		260	ug/kg	3330		66.5	40-130	18.0	30
Surrogate: Nitrobenzene-d5			*2670*	ug/kg	*3330*		*80.2*	*30-126*		
Surrogate: p-Terphenyl-d14			*3680*	ug/kg	*3330*		*110*	*47-130*		
Surrogate: 2-Fluorobiphenyl			*2560*	ug/kg	*3330*		*76.7*	*34-130*		
Surrogate: Phenol-d6			*2340*	ug/kg	*3330*		*70.1*	*30-130*		
Surrogate: 2,4,6-Tribromophenol			*3430*	ug/kg	*3330*		*103*	*30-130*		
Surrogate: 2-Fluorophenol			*2180*	ug/kg	*3330*		*65.5*	*30-130*		

Quality Control
(Continued)

Polychlorinated Biphenyls (PCBs)

Analyte	Result	Qual	Reporting Limit	Units	Spike Level	Source Result	%REC	%REC Limits	RPD	RPD Limit
Batch: B9A1226 - EPA 3546										
Blank (B9A1226-BLK1)					Prepared: 01/31/19 Analyzed: 02/01/19					
Aroclor-1016	ND		100	ug/kg						
Aroclor-1221	ND		100	ug/kg						
Aroclor-1232	ND		100	ug/kg						
Aroclor-1242	ND		100	ug/kg						
Aroclor-1248	ND		100	ug/kg						
Aroclor-1254	ND		100	ug/kg						
Aroclor-1260	ND		100	ug/kg						
Aroclor-1262	ND		100	ug/kg						
Aroclor-1268	ND		100	ug/kg						
PCBs (Total)	ND		100	ug/kg						
Surrogate: 2,4,5,6-Tetrachloro-m-xylene (TCMX)			*11.4*	ug/kg	*13.3*		*85.6*	*36.2-108*		
Surrogate: Decachlorobiphenyl (DCBP)			*13.3*	ug/kg	*13.3*		*99.7*	*43.3-118*		
LCS (B9A1226-BS1)					Prepared: 01/31/19 Analyzed: 02/01/19					
Aroclor-1016	156		100	ug/kg	167		93.4	58.2-125		
Aroclor-1260	158		100	ug/kg	167		94.6	65.5-130		
Surrogate: 2,4,5,6-Tetrachloro-m-xylene (TCMX)			*11.6*	ug/kg	*13.3*		*86.7*	*36.2-108*		
Surrogate: Decachlorobiphenyl (DCBP)			*13.2*	ug/kg	*13.3*		*99.2*	*43.3-118*		
LCS Dup (B9A1226-BSD1)					Prepared: 01/31/19 Analyzed: 02/01/19					
Aroclor-1016	173		100	ug/kg	167		104	58.2-125	10.5	20
Aroclor-1260	167		100	ug/kg	167		100	65.5-130	5.61	20
Surrogate: 2,4,5,6-Tetrachloro-m-xylene (TCMX)			*11.6*	ug/kg	*13.3*		*87.0*	*36.2-108*		
Surrogate: Decachlorobiphenyl (DCBP)			*13.2*	ug/kg	*13.3*		*99.2*	*43.3-118*		

Quality Control
(Continued)

Total Petroleum Hydrocarbons

Analyte	Result	Qual	Reporting Limit	Units	Spike Level	Source Result	%REC	%REC Limits	RPD	RPD Limit
Batch: B9A1152 - EPA 3546										
Blank (B9A1152-BLK1)					Prepared: 01/29/19 Analyzed: 01/30/19					
Total Petroleum Hydrocarbons	ND		27	mg/kg						
Surrogate: Chlorooctadecane			*7.37*	mg/kg	*8.33*		*88.4*	*42.9-128*		
LCS (B9A1152-BS1)					Prepared: 01/29/19 Analyzed: 01/30/19					
Total Petroleum Hydrocarbons	462		27	mg/kg	667		69.3	40-115		
Surrogate: Chlorooctadecane			*6.90*	mg/kg	*8.33*		*82.8*	*42.9-128*		
LCS Dup (B9A1152-BSD1)					Prepared: 01/29/19 Analyzed: 01/30/19					
Total Petroleum Hydrocarbons	484		27	mg/kg	667		72.6	40-115	4.69	200
Surrogate: Chlorooctadecane			*6.74*	mg/kg	*8.33*		*80.8*	*42.9-128*		

Quality Control
(Continued)

TCLP Metals

Analyte	Result	Qual	Reporting Limit	Units	Spike Level	Source Result	%REC	%REC Limits	RPD	RPD Limit
Batch: B9A1134 - Hot plate acid digestion waters										
Blank (B9A1134-BLK1)					Prepared: 01/29/19 Analyzed: 01/31/19					
Arsenic	ND		0.01	mg/L						
Silver	ND		0.005	mg/L						
Barium	ND		0.005	mg/L						
Cadmium	ND		0.005	mg/L						
Chromium	ND		0.005	mg/L						
Lead	ND		0.005	mg/L						
Selenium	ND		0.01	mg/L						
LCS (B9A1134-BS1)					Prepared: 01/29/19 Analyzed: 01/31/19					
Arsenic	0.21		0.01	mg/L	0.200		105	85-115		
Silver	0.400		0.005	mg/L	0.400		99.9	85-115		
Barium	1.06		0.005	mg/L	1.00		106	85-115		
Cadmium	1.02		0.005	mg/L	1.00		102	85-115		
Chromium	1.05		0.005	mg/L	1.00		105	85-115		
Lead	1.03		0.005	mg/L	1.00		103	85-115		
Selenium	0.20		0.01	mg/L	0.200		99.7	85-115		

Notes and Definitions

Item	Definition
Wet	Sample results reported on a wet weight basis.
ND	Analyte NOT DETECTED at or above the reporting limit.

New England Testing Laboratory
59 Greenhill Street
West Warwick, RI 02893
1-888-863-8522

Chain of Custody Record

9 A 2 8003 A

Project No. | **Project Name/Location: East Providence Maintenance**

Client: Gordon R. Archibald Inc.

Report To: S. Cadorette

Invoice To: S. Cadorette

Date	Time	Comp	Grab	Sample I.D.	Matrix: Aqueous	Matrix: Soil	Matrix: Other	No. of Containers	Preservative	Tests**: Moisture	Free Liquids	Flash Point	pH	RCRA 8 Metals	TCLP RCRA 8 Metals	TPH - EPA 8100	SVOCs - EPA 8270	VOCs - EPA 8260	PCBs - EPA 8082		
1/25/2019	PM	X		CS-1		X		4	MeOH	X	X	X	X	X	X	X	X	X	X		
1/25/2019	PM	X		CS-2		X		4	MeOH	X	X	X	X	X	X	X	X	X	X		
1/25/2019	PM	X		CS-3		X		4	MeOH	X	X	X	X	X	X	X	X	X	X		
1/25/2019	PM	X		CS-4		X		4	MeOH	X	X	X	X	X	X	X	X	X	X		

	Date/Time		Date/Time	
Sampled By: [signature]	1/25/19 1400	Received By: GRA OFFICE	1/25/19 0800	Laboratory Remarks:
Relinquished By: [signature]	1/28/19 0930	Received By: [signature]	1-28-19 9:30	Temp. Received:
Relinquished By: [signature]	1-28-19 1520	Received By: [signature]	1/28/19 1520	Temp. Received: 4

Special Instructions:

**Netlab Subcontracts the following tests: Radiologicals, Radon, Asbestos, UCMRs, Perchlorate, Bromate, Bromide, Sieve, Salmonella, Carbamates

Turnaround Time [Business Days]: **5 Days**

APPENDIX C

LABORATORY ANALYTICAL DATA REPORT – GROUNDWATER SAMPLE

New England Testing Laboratory, Inc.
(401) 353-3420

REPORT OF ANALYTICAL RESULTS

NETLAB Work Order Number: 9A28002
Client Project: East Providence Maintenance

Report Date: 04-February-2019

Prepared for:

Steve Cadorette
Gordon R. Archibald, Inc.
200 Main Street
Pawtucket, RI 02860

Richard Warila, Laboratory Director
New England Testing Laboratory, Inc.
59 Greenhill Street
West Warwick, RI 02893
rich.warila@newenglandtesting.com

Samples Submitted :

The samples listed below were submitted to New England Testing Laboratory on 01/28/19. The group of samples appearing in this report was assigned an internal identification number (case number) for laboratory information management purposes. The client's designations for the individual samples, along with our case numbers, are used to identify the samples in this report. This report of analytical results pertains only to the sample(s) provided to us by the client which are indicated on the custody record. The case number for this sample submission is 9A28002. Custody records are included in this report.

Lab ID	Sample	Matrix	Date Sampled	Date Received
9A28002-01	GRA-2	Water	01/25/2019	01/28/2019

Request for Analysis

At the client's request, the analyses presented in the following table were performed on the samples submitted.

GRA-2 (Lab Number: 9A28002-01)

Analysis	Method
Antimony	EPA 6010C
Arsenic	EPA 6010C
Cadmium	EPA 6010C
Chromium	EPA 6010C
Copper	EPA 6010C
Dissolved Antimony	EPA 6010C
Dissolved Arsenic	EPA 6010C
Dissolved Cadmium	EPA 6010C
Dissolved Chromium	EPA 6010C
Dissolved Copper	EPA 6010C
Dissolved Iron	EPA 6010C
Dissolved Lead	EPA 6010C
Dissolved Mercury	EPA 7470A
Dissolved Nickel	EPA 6010C
Dissolved Selenium	EPA 6010C
Dissolved Silver	EPA 6010C
Dissolved Zinc	EPA 6010C
Hexavalent Chromium	SM3500-Cr-B
Iron	EPA 6010C
Lead	EPA 6010C
Mercury	EPA 7470A
Nickel	EPA 6010C
PCBs	EPA 8082A
Selenium	EPA 6010C
Semivolatile Organic Compounds	EPA 8270D
Silver	EPA 6010C
Total Petroleum Hydrocarbons	EPA-8100-mod
Trivalent Chromium	Calculation
Volatile Organic Compounds	EPA 8260C
Zinc	EPA 6010C

Method References

Standard Methods for the Examination of Water and Wastewater, 20th Edition, APHA/ AWWA-WPCF, 1998

Test Methods for Evaluating Solid Waste, Physical/Chemical Methods, SW846, USEPA

Case Narrative

Sample Receipt

The samples were all appropriately cooled and preserved upon receipt. The samples were received in the appropriate containers. The chain of custody was adequately completed and corresponded to the samples submitted.

Metals

All analyses were performed according to NETLAB's documented Standard Operating Procedures, within all required holding times, and with appropriate quality control measures. All QC was within laboratory established acceptance criteria. The samples were received, processed, and reported with no anomalies.

PCBs

All samples were extracted and analyzed within method specified holding times and according to NETLAB's documented standard operating procedures. The results for the associated calibration, method blank and laboratory control sample (LCS) were within method specified quality control criteria.

Semi-volatile Compounds

All samples were extracted and analyzed within method specified holding times and according to NETLAB's documented standard operating procedures. The results for the associated calibration, method blank and laboratory control sample (LCS) were within method specified quality control criteria.

Total Petroleum Hydrocarbons

All samples were extracted and analyzed within method specified holding times and according to NETLAB's documented standard operating procedures. The results for the associated calibration, method blank and laboratory control sample (LCS) were within method specified quality control criteria.

Volatile Organic Compounds

All samples were analyzed within method specified holding times and according to NETLAB's documented standard operating procedures. The results for the associated calibration, method blank and laboratory control sample (LCS) were within method specified quality control requirements and allowances.

'GRA-2' was reported with elevated detection limits due to the foaming nature of the sample.

Wet Chemistry

All samples were analyzed within method specified holding times and according to NETLAB's documented standard operating procedures.

The hexavalent chromium was reported with an elevated detection limit due to sample matrix interferences.

Results: Calculation

Sample: GRA-2

Lab Number: 9A28002-01 (Water)

Analyte	Result	Qual	Reporting Limit	Units	Date Prepared	Date Analyzed
Trivalent Chromium	ND		0.255	mg/L	01/29/19 18:20	01/29/19 18:20

Results: General Chemistry

Sample: GRA-2

Lab Number: 9A28002-01 (Water)

Analyte	Result	Qual	Reporting Limit	Units	Date Prepared	Date Analyzed
Hexavalent chromium	ND		0.25	mg/L	01/29/19 18:20	01/29/19 18:20

Results: Total Metals

Sample: GRA-2

Lab Number: 9A28002-01 (Water)

Analyte	Result	Qual	Reporting Limit	Units	Date Prepared	Date Analyzed
Antimony	**0.018**		0.005	mg/L	01/29/19	01/29/19
Arsenic	**0.03**		0.01	mg/L	01/29/19	01/29/19
Cadmium	**0.028**		0.005	mg/L	01/29/19	01/29/19
Chromium	**0.153**		0.005	mg/L	01/29/19	01/29/19
Copper	**0.44**		0.02	mg/L	01/29/19	01/29/19
Iron	**179**		0.05	mg/L	01/29/19	01/29/19
Lead	**3.09**		0.005	mg/L	01/29/19	01/29/19
Mercury	**0.0003**		0.0002	mg/L	02/01/19	02/01/19
Nickel	**0.093**		0.005	mg/L	01/29/19	01/29/19
Selenium	ND		0.01	mg/L	01/29/19	01/29/19
Silver	**0.006**		0.005	mg/L	01/29/19	01/29/19
Zinc	**1.50**		0.020	mg/L	01/29/19	01/29/19

Results: Dissolved Metals

Sample: GRA-2

Lab Number: 9A28002-01 (Water)

Analyte	Result	Qual	Reporting Limit	Units	Date Prepared	Date Analyzed
Antimony	ND		0.010	mg/L	02/04/19	02/04/19
Arsenic	ND		0.010	mg/L	02/04/19	02/04/19
Cadmium	ND		0.005	mg/L	02/04/19	02/04/19
Chromium	ND		0.005	mg/L	02/04/19	02/04/19
Copper	**0.089**		0.020	mg/L	02/04/19	02/04/19
Iron	**1.13**		0.050	mg/L	02/04/19	02/04/19
Lead	ND		0.005	mg/L	02/04/19	02/04/19
Mercury	ND		0.0002	mg/L	01/29/19	01/29/19
Nickel	**0.013**		0.005	mg/L	02/04/19	02/04/19
Selenium	ND		0.010	mg/L	02/04/19	02/04/19
Silver	ND		0.005	mg/L	02/04/19	02/04/19
Zinc	**0.104**		0.020	mg/L	02/04/19	02/04/19

Results: Volatile Organic Compounds

Sample: GRA-2

Lab Number: 9A28002-01 (Water)

Analyte	Result	Qual	Reporting Limit	Units	Date Prepared	Date Analyzed
Acetone	ND		25	ug/l	01/29/19	01/29/19
Benzene	ND		5	ug/l	01/29/19	01/29/19
Bromobenzene	ND		5	ug/l	01/29/19	01/29/19
Bromochloromethane	ND		5	ug/l	01/29/19	01/29/19
Bromodichloromethane	ND		5	ug/l	01/29/19	01/29/19
Bromoform	ND		5	ug/l	01/29/19	01/29/19
Bromomethane	ND		5	ug/l	01/29/19	01/29/19
2-Butanone	ND		25	ug/l	01/29/19	01/29/19
tert-Butyl alcohol	ND		25	ug/l	01/29/19	01/29/19
sec-Butylbenzene	ND		5	ug/l	01/29/19	01/29/19
n-Butylbenzene	ND		5	ug/l	01/29/19	01/29/19
tert-Butylbenzene	ND		5	ug/l	01/29/19	01/29/19
Methyl t-butyl ether (MTBE)	ND		5	ug/l	01/29/19	01/29/19
Carbon Disulfide	ND		5	ug/l	01/29/19	01/29/19
Carbon Tetrachloride	ND		5	ug/l	01/29/19	01/29/19
Chlorobenzene	ND		5	ug/l	01/29/19	01/29/19
Chloroethane	ND		5	ug/l	01/29/19	01/29/19
Chloroform	ND		5	ug/l	01/29/19	01/29/19
Chloromethane	ND		5	ug/l	01/29/19	01/29/19
4-Chlorotoluene	ND		5	ug/l	01/29/19	01/29/19
2-Chlorotoluene	ND		5	ug/l	01/29/19	01/29/19
1,2-Dibromo-3-chloropropane (DBCP)	ND		5	ug/l	01/29/19	01/29/19
Dibromochloromethane	ND		5	ug/l	01/29/19	01/29/19
1,2-Dibromoethane (EDB)	ND		5	ug/l	01/29/19	01/29/19
Dibromomethane	ND		5	ug/l	01/29/19	01/29/19
1,2-Dichlorobenzene	ND		5	ug/l	01/29/19	01/29/19
1,3-Dichlorobenzene	ND		5	ug/l	01/29/19	01/29/19
1,4-Dichlorobenzene	ND		5	ug/l	01/29/19	01/29/19
1,1-Dichloroethane	ND		5	ug/l	01/29/19	01/29/19
1,2-Dichloroethane	ND		5	ug/l	01/29/19	01/29/19
trans-1,2-Dichloroethene	ND		5	ug/l	01/29/19	01/29/19
cis-1,2-Dichloroethene	ND		5	ug/l	01/29/19	01/29/19
1,1-Dichloroethene	ND		5	ug/l	01/29/19	01/29/19
1,2-Dichloropropane	ND		5	ug/l	01/29/19	01/29/19
2,2-Dichloropropane	ND		5	ug/l	01/29/19	01/29/19
cis-1,3-Dichloropropene	ND		5	ug/l	01/29/19	01/29/19
trans-1,3-Dichloropropene	ND		5	ug/l	01/29/19	01/29/19
1,1-Dichloropropene	ND		5	ug/l	01/29/19	01/29/19
1,3-Dichloropropene (cis + trans)	ND		10	ug/l	01/29/19	01/29/19
Diethyl ether	ND		25	ug/l	01/29/19	01/29/19
1,4-Dioxane	ND		2500	ug/l	01/29/19	01/29/19
Ethylbenzene	ND		5	ug/l	01/29/19	01/29/19
Hexachlorobutadiene	ND		5	ug/l	01/29/19	01/29/19
2-Hexanone	ND		25	ug/l	01/29/19	01/29/19
Isopropylbenzene	ND		5	ug/l	01/29/19	01/29/19

Results: Volatile Organic Compounds (Continued)

Sample: GRA-2 (Continued)

Lab Number: 9A28002-01 (Water)

Analyte	Result	Qual	Reporting Limit	Units	Date Prepared	Date Analyzed
p-Isopropyltoluene	ND		5	ug/l	01/29/19	01/29/19
Methylene Chloride	ND		25	ug/l	01/29/19	01/29/19
4-Methyl-2-pentanone	ND		25	ug/l	01/29/19	01/29/19
Naphthalene	ND		5	ug/l	01/29/19	01/29/19
n-Propylbenzene	ND		5	ug/l	01/29/19	01/29/19
Styrene	ND		5	ug/l	01/29/19	01/29/19
1,1,1,2-Tetrachloroethane	ND		5	ug/l	01/29/19	01/29/19
Tetrachloroethene	ND		5	ug/l	01/29/19	01/29/19
Tetrahydrofuran	ND		25	ug/l	01/29/19	01/29/19
Toluene	ND		5	ug/l	01/29/19	01/29/19
1,2,4-Trichlorobenzene	ND		5	ug/l	01/29/19	01/29/19
1,2,3-Trichlorobenzene	ND		5	ug/l	01/29/19	01/29/19
1,1,2-Trichloroethane	ND		5	ug/l	01/29/19	01/29/19
1,1,1-Trichloroethane	ND		5	ug/l	01/29/19	01/29/19
Trichloroethene	ND		5	ug/l	01/29/19	01/29/19
1,2,3-Trichloropropane	ND		5	ug/l	01/29/19	01/29/19
1,3,5-Trimethylbenzene	ND		5	ug/l	01/29/19	01/29/19
1,2,4-Trimethylbenzene	ND		5	ug/l	01/29/19	01/29/19
Vinyl Chloride	ND		5	ug/l	01/29/19	01/29/19
o-Xylene	ND		5	ug/l	01/29/19	01/29/19
m&p-Xylene	ND		10	ug/l	01/29/19	01/29/19
Total xylenes	ND		10	ug/l	01/29/19	01/29/19
1,1,2,2-Tetrachloroethane	ND		5	ug/l	01/29/19	01/29/19
tert-Amyl methyl ether	ND		5	ug/l	01/29/19	01/29/19
1,3-Dichloropropane	ND		5	ug/l	01/29/19	01/29/19
Ethyl tert-butyl ether	ND		5	ug/l	01/29/19	01/29/19
Diisopropyl ether	ND		5	ug/l	01/29/19	01/29/19
Trichlorofluoromethane	ND		5	ug/l	01/29/19	01/29/19
Dichlorodifluoromethane	ND		5	ug/l	01/29/19	01/29/19

Surrogate(s)	Recovery%	Limits		
4-Bromofluorobenzene	*96.7%*	*70-130*	01/29/19	01/29/19
1,2-Dichloroethane-d4	*98.9%*	*70-130*	01/29/19	01/29/19
Toluene-d8	*98.4%*	*70-130*	01/29/19	01/29/19

Results: Semivolatile organic compounds

Sample: GRA-2

Lab Number: 9A28002-01 (Water)

Analyte	Result	Qual	Reporting Limit	Units	Date Prepared	Date Analyzed
1,2,4-Trichlorobenzene	ND		2	ug/l	01/29/19	01/31/19
1,2-Dichlorobenzene	ND		2	ug/l	01/29/19	01/31/19
1,3-Dichlorobenzene	ND		2	ug/l	01/29/19	01/31/19
1,4-Dichlorobenzene	ND		2	ug/l	01/29/19	01/31/19
Phenol	ND		2	ug/l	01/29/19	01/31/19
2,4,5-Trichlorophenol	ND		2	ug/l	01/29/19	01/31/19
2,4,6-Trichlorophenol	ND		2	ug/l	01/29/19	01/31/19
2,4-Dichlorophenol	ND		2	ug/l	01/29/19	01/31/19
2,4-Dimethylphenol	ND		10	ug/l	01/29/19	01/31/19
2,4-Dinitrophenol	ND		5	ug/l	01/29/19	01/31/19
2,4-Dinitrotoluene	ND		2	ug/l	01/29/19	01/31/19
2,6-Dinitrotoluene	ND		2	ug/l	01/29/19	01/31/19
2-Chloronaphthalene	ND		2	ug/l	01/29/19	01/31/19
2-Chlorophenol	ND		2	ug/l	01/29/19	01/31/19
2-Methylnaphthalene	ND		2	ug/l	01/29/19	01/31/19
Nitrobenzene	ND		2	ug/l	01/29/19	01/31/19
2-Methylphenol	ND		2	ug/l	01/29/19	01/31/19
2-Nitroaniline	ND		2	ug/l	01/29/19	01/31/19
2-Nitrophenol	ND		5	ug/l	01/29/19	01/31/19
3,3'-Dichlorobenzidine	ND		5	ug/l	01/29/19	01/31/19
3-Nitroaniline	ND		2	ug/l	01/29/19	01/31/19
4,6-Dinitro-2-methylphenol	ND		5	ug/l	01/29/19	01/31/19
4-Bromophenyl phenyl ether	ND		2	ug/l	01/29/19	01/31/19
4-Chloro-3-methylphenol	ND		2	ug/l	01/29/19	01/31/19
4-Chloroaniline	ND		5	ug/l	01/29/19	01/31/19
4-Chlorophenyl phenyl ether	ND		2	ug/l	01/29/19	01/31/19
4-Nitroaniline	ND		2	ug/l	01/29/19	01/31/19
4-Nitrophenol	ND		5	ug/l	01/29/19	01/31/19
Acenaphthene	ND		2	ug/l	01/29/19	01/31/19
Acenaphthylene	ND		2	ug/l	01/29/19	01/31/19
Aniline	ND		2	ug/l	01/29/19	01/31/19
Anthracene	ND		2	ug/l	01/29/19	01/31/19
Benzo(a)anthracene	ND		2	ug/l	01/29/19	01/31/19
Benzo(a)pyrene	ND		2	ug/l	01/29/19	01/31/19
Benzo(b)fluoranthene	ND		2	ug/l	01/29/19	01/31/19
Benzo(g,h,i)perylene	ND		2	ug/l	01/29/19	01/31/19
Benzo(k)fluoranthene	ND		2	ug/l	01/29/19	01/31/19
Benzoic acid	ND		15	ug/l	01/29/19	01/31/19
Bis(2-chloroethoxy)methane	ND		2	ug/l	01/29/19	01/31/19
Bis(2-chloroethyl)ether	ND		2	ug/l	01/29/19	01/31/19
Bis(2-chloroisopropyl)ether	ND		2	ug/l	01/29/19	01/31/19
Bis(2-ethylhexyl)phthalate	ND		6	ug/l	01/29/19	01/31/19
Butyl benzyl phthalate	ND		3	ug/l	01/29/19	01/31/19
Chrysene	ND		2	ug/l	01/29/19	01/31/19
Di(n)octyl phthalate	ND		3	ug/l	01/29/19	01/31/19

Results: Semivolatile organic compounds (Continued)

Sample: GRA-2 (Continued)

Lab Number: 9A28002-01 (Water)

Analyte	Result	Qual	Reporting Limit	Units	Date Prepared	Date Analyzed
Dibenz(a,h)anthracene	ND		2	ug/l	01/29/19	01/31/19
Dibenzofuran	ND		2	ug/l	01/29/19	01/31/19
Diethyl phthalate	ND		2	ug/l	01/29/19	01/31/19
Dimethyl phthalate	ND		5	ug/l	01/29/19	01/31/19
Di-n-butylphthalate	ND		2	ug/l	01/29/19	01/31/19
Fluoranthene	ND		2	ug/l	01/29/19	01/31/19
Fluorene	ND		2	ug/l	01/29/19	01/31/19
Hexachlorobenzene	ND		2	ug/l	01/29/19	01/31/19
Hexachlorobutadiene	ND		2	ug/l	01/29/19	01/31/19
Hexachlorocyclopentadiene	ND		5	ug/l	01/29/19	01/31/19
Hexachloroethane	ND		2	ug/l	01/29/19	01/31/19
Indeno(1,2,3-cd)pyrene	ND		2	ug/l	01/29/19	01/31/19
Isophorone	ND		2	ug/l	01/29/19	01/31/19
Naphthalene	ND		2	ug/l	01/29/19	01/31/19
N-Nitrosodimethylamine	ND		2	ug/l	01/29/19	01/31/19
N-Nitrosodi-n-propylamine	ND		2	ug/l	01/29/19	01/31/19
N-Nitrosodiphenylamine	ND		2	ug/l	01/29/19	01/31/19
Pentachlorophenol	ND		5	ug/l	01/29/19	01/31/19
Phenanthrene	ND		2	ug/l	01/29/19	01/31/19
Pyrene	ND		2	ug/l	01/29/19	01/31/19
m&p-Cresol	ND		4	ug/l	01/29/19	01/31/19
Pyridine	ND		2	ug/l	01/29/19	01/31/19

Surrogate(s)	Recovery%	Limits		
Nitrobenzene-d5	*87.1%*	*30-130*	01/29/19	01/31/19
p-Terphenyl-d14	*101%*	*30-130*	01/29/19	01/31/19
2-Fluorobiphenyl	*83.6%*	*30-123*	01/29/19	01/31/19
Phenol-d6	*26.0%*	*10-83*	01/29/19	01/31/19
2,4,6-Tribromophenol	*96.3%*	*18-120*	01/29/19	01/31/19
2-Fluorophenol	*42.3%*	*10-81*	01/29/19	01/31/19

Results: Polychlorinated Biphenyls (PCBs)

Sample: GRA-2

Lab Number: 9A28002-01 (Water)

Analyte	Result	Qual	Reporting Limit	Units	Date Prepared	Date Analyzed
Aroclor-1016	ND		0.1	ug/l	02/01/19	02/04/19
Aroclor-1221	ND		0.2	ug/l	02/01/19	02/04/19
Aroclor-1232	ND		0.1	ug/l	02/01/19	02/04/19
Aroclor-1242	ND		0.1	ug/l	02/01/19	02/04/19
Aroclor-1248	ND		0.1	ug/l	02/01/19	02/04/19
Aroclor-1254	ND		0.1	ug/l	02/01/19	02/04/19
Aroclor-1260	ND		0.1	ug/l	02/01/19	02/04/19
Aroclor-1262	ND		0.1	ug/l	02/01/19	02/04/19
Aroclor-1268	ND		0.1	ug/l	02/01/19	02/04/19
PCBs (Total)	ND		0.1	ug/l	02/01/19	02/04/19

Surrogate(s)	Recovery%	Limits		
2,4,5,6-Tetrachloro-m-xylene (TCMX)	*74.1%*	*30-107*	02/01/19	02/04/19
Decachlorobiphenyl (DCBP)	*81.5%*	*30-140*	02/01/19	02/04/19

Results: Total Petroleum Hydrocarbons

Sample: GRA-2

Lab Number: 9A28002-01 (Water)

Analyte	Result	Qual	Reporting Limit	Units	Date Prepared	Date Analyzed
Total Petroleum Hydrocarbons	ND		200	ug/l	01/29/19	01/29/19
Surrogate(s)	Recovery%		Limits			
Chlorooctadecane	*61.5%*		*54.2-105*		01/29/19	01/29/19

Quality Control

General Chemistry

Analyte	Result	Qual	Reporting Limit	Units	Spike Level	Source Result	%REC	%REC Limits	RPD	RPD Limit
Batch: B9A1275 - Hexavalent Chrome										
Blank (B9A1275-BLK1)					Prepared & Analyzed: 01/29/19					
Hexavalent chromium	ND		0.01	mg/L						
Blank (B9A1275-BLK2)					Prepared & Analyzed: 01/29/19					
Hexavalent chromium	ND		0.01	mg/L						
LCS (B9A1275-BS1)					Prepared & Analyzed: 01/29/19					
Hexavalent chromium	0.45		0.01	mg/L	0.500		90.0	90-110		
LCS (B9A1275-BS2)					Prepared & Analyzed: 01/29/19					
Hexavalent chromium	0.09		0.01	mg/L	0.100		90.0	90-110		
LCS (B9A1275-BS3)					Prepared & Analyzed: 01/29/19					
Hexavalent chromium	0.46		0.01	mg/L	0.500		92.2	90-110		
Duplicate (B9A1275-DUP1)		**Source: 9A29047-01**			Prepared & Analyzed: 01/29/19					
Hexavalent chromium	ND		0.01	mg/L		ND				20
Matrix Spike (B9A1275-MS1)		**Source: 9A29047-01**			Prepared & Analyzed: 01/29/19					
Hexavalent chromium	0.45		0.01	mg/L	0.500	ND	90.0	80-120		

Quality Control
(Continued)

Total Metals

Analyte	Result	Qual	Reporting Limit	Units	Spike Level	Source Result	%REC	%REC Limits	RPD	RPD Limit
Batch: B9A1134 - Hot plate acid digestion waters										
Blank (B9A1134-BLK1)					Prepared: 01/29/19 Analyzed: 01/31/19					
Zinc	ND		0.020	mg/L						
Chromium	ND		0.005	mg/L						
Lead	ND		0.005	mg/L						
Silver	ND		0.005	mg/L						
Cadmium	ND		0.005	mg/L						
Selenium	ND		0.01	mg/L						
Nickel	ND		0.005	mg/L						
Antimony	ND		0.005	mg/L						
Copper	ND		0.02	mg/L						
Iron	ND		0.05	mg/L						
Arsenic	ND		0.01	mg/L						
LCS (B9A1134-BS1)					Prepared: 01/29/19 Analyzed: 01/31/19					
Nickel	1.03		0.005	mg/L	1.00		103	85-112		
Copper	1.06		0.02	mg/L	1.00		106	85-115		
Lead	1.03		0.005	mg/L	1.00		103	85-115		
Silver	0.400		0.005	mg/L	0.400		99.9	85-115		
Antimony	1.12		0.005	mg/L	1.00		112	85-115		
Iron	10.4		0.05	mg/L	10.0		104	85-115		
Chromium	1.05		0.005	mg/L	1.00		105	85-115		
Cadmium	1.02		0.005	mg/L	1.00		102	85-114		
Selenium	0.20		0.01	mg/L	0.200		99.7	85-115		
Arsenic	0.21		0.01	mg/L	0.200		105	85-115		
Zinc	1.09		0.020	mg/L	1.00		109	85-115		
Batch: B9B0050 - Hot plate acid digestion waters										
Blank (B9B0050-BLK1)					Prepared & Analyzed: 02/01/19					
Mercury	ND		0.0002	mg/L						

Quality Control
(Continued)

Total Metals (Continued)

Analyte	Result	Qual	Reporting Limit	Units	Spike Level	Source Result	%REC	%REC Limits	RPD	RPD Limit
Batch: B9B0050 - Hot plate acid digestion waters (Continued)										
LCS (B9B0050-BS1)					Prepared & Analyzed: 02/01/19					
Mercury	0.983			ug/l	1.00		98.3	85-115		

Quality Control
(Continued)

Dissolved Metals

Analyte	Result	Qual	Reporting Limit	Units	Spike Level	Source Result	%REC	%REC Limits	RPD	RPD Limit
Batch: B9B0097 - Hot plate acid digestion waters										
Blank (B9B0097-BLK1)					Prepared & Analyzed: 02/04/19					
Zinc	ND		0.020	mg/L						
Arsenic	ND		0.010	mg/L						
Iron	ND		0.050	mg/L						
Selenium	ND		0.010	mg/L						
Lead	ND		0.005	mg/L						
Chromium	ND		0.005	mg/L						
Nickel	ND		0.005	mg/L						
Silver	ND		0.005	mg/L						
Cadmium	ND		0.005	mg/L						
Antimony	ND		0.010	mg/L						
Copper	ND		0.020	mg/L						
LCS (B9B0097-BS1)					Prepared & Analyzed: 02/04/19					
Arsenic	0.210		0.010	mg/L	0.200		105	85-115		
Zinc	1.09		0.020	mg/L	1.00		109	85-115		
Iron	10.1		0.050	mg/L	10.0		101	85-115		
Copper	0.940		0.020	mg/L	1.00		94.0	85-115		
Nickel	1.01		0.005	mg/L	1.00		101	85-115		
Cadmium	1.03		0.005	mg/L	1.00		103	85-115		
Silver	0.389		0.005	mg/L	0.400		97.3	85-115		
Chromium	1.02		0.005	mg/L	1.00		102	85-115		
Lead	1.01		0.005	mg/L	1.00		101	85-115		
Antimony	1.03		0.010	mg/L	1.00		103	85-115		
Selenium	0.207		0.010	mg/L	0.200		104	85-115		

Quality Control
(Continued)

Volatile Organic Compounds

Analyte	Result	Qual	Reporting Limit	Units	Spike Level	Source Result	%REC	%REC Limits	RPD	RPD Limit
Batch: B9A1178 - Purge-Trap										
Blank (B9A1178-BLK1)					Prepared & Analyzed: 01/29/19					
Acetone	ND		5	ug/l						
Benzene	ND		1	ug/l						
Bromobenzene	ND		1	ug/l						
Bromochloromethane	ND		1	ug/l						
Bromodichloromethane	ND		1	ug/l						
Bromoform	ND		1	ug/l						
Bromomethane	ND		1	ug/l						
2-Butanone	ND		5	ug/l						
tert-Butyl alcohol	ND		5	ug/l						
sec-Butylbenzene	ND		1	ug/l						
n-Butylbenzene	ND		1	ug/l						
tert-Butylbenzene	ND		1	ug/l						
Methyl t-butyl ether (MTBE)	ND		1	ug/l						
Carbon Disulfide	ND		1	ug/l						
Carbon Tetrachloride	ND		1	ug/l						
Chlorobenzene	ND		1	ug/l						
Chloroethane	ND		1	ug/l						
Chloroform	ND		1	ug/l						
Chloromethane	ND		1	ug/l						
4-Chlorotoluene	ND		1	ug/l						
2-Chlorotoluene	ND		1	ug/l						
1,2-Dibromo-3-chloropropane (DBCP)	ND		1	ug/l						
Dibromochloromethane	ND		1	ug/l						
1,2-Dibromoethane (EDB)	ND		1	ug/l						
Dibromomethane	ND		1	ug/l						
1,2-Dichlorobenzene	ND		1	ug/l						
1,3-Dichlorobenzene	ND		1	ug/l						
1,4-Dichlorobenzene	ND		1	ug/l						
1,1-Dichloroethane	ND		1	ug/l						
1,2-Dichloroethane	ND		1	ug/l						
trans-1,2-Dichloroethene	ND		1	ug/l						
cis-1,2-Dichloroethene	ND		1	ug/l						
1,1-Dichloroethene	ND		1	ug/l						
1,2-Dichloropropane	ND		1	ug/l						
2,2-Dichloropropane	ND		1	ug/l						
cis-1,3-Dichloropropene	ND		1	ug/l						
trans-1,3-Dichloropropene	ND		1	ug/l						
1,1-Dichloropropene	ND		1	ug/l						
1,3-Dichloropropene (cis + trans)	ND		2	ug/l						
Diethyl ether	ND		5	ug/l						
1,4-Dioxane	ND		500	ug/l						
Ethylbenzene	ND		1	ug/l						
Hexachlorobutadiene	ND		1	ug/l						
2-Hexanone	ND		5	ug/l						
Isopropylbenzene	ND		1	ug/l						
p-Isopropyltoluene	ND		1	ug/l						
Methylene Chloride	ND		5	ug/l						
4-Methyl-2-pentanone	ND		5	ug/l						
Naphthalene	ND		1	ug/l						
n-Propylbenzene	ND		1	ug/l						
Styrene	ND		1	ug/l						
1,1,1,2-Tetrachloroethane	ND		1	ug/l						
Tetrachloroethene	ND		1	ug/l						
Tetrahydrofuran	ND		5	ug/l						

Quality Control
(Continued)

Volatile Organic Compounds (Continued)

Analyte	Result	Qual	Reporting Limit	Units	Spike Level	Source Result	%REC	%REC Limits	RPD	RPD Limit
Batch: B9A1178 - Purge-Trap (Continued)										
Blank (B9A1178-BLK1)					Prepared & Analyzed: 01/29/19					
Toluene	ND		1	ug/l						
1,2,4-Trichlorobenzene	ND		1	ug/l						
1,2,3-Trichlorobenzene	ND		1	ug/l						
1,1,2-Trichloroethane	ND		1	ug/l						
1,1,1-Trichloroethane	ND		1	ug/l						
Trichloroethene	ND		1	ug/l						
1,2,3-Trichloropropane	ND		1	ug/l						
1,3,5-Trimethylbenzene	ND		1	ug/l						
1,2,4-Trimethylbenzene	ND		1	ug/l						
Vinyl Chloride	ND		1	ug/l						
o-Xylene	ND		1	ug/l						
m&p-Xylene	ND		2	ug/l						
Total xylenes	ND		2	ug/l						
1,1,2,2-Tetrachloroethane	ND		1	ug/l						
tert-Amyl methyl ether	ND		1	ug/l						
1,3-Dichloropropane	ND		1	ug/l						
Ethyl tert-butyl ether	ND		1	ug/l						
Diisopropyl ether	ND		1	ug/l						
Trichlorofluoromethane	ND		1	ug/l						
Dichlorodifluoromethane	ND		1	ug/l						
Surrogate: 4-Bromofluorobenzene			*48.0*	ug/l	*50.0*		*96.0*	*70-130*		
Surrogate: 1,2-Dichloroethane-d4			*53.5*	ug/l	*50.0*		*107*	*70-130*		
Surrogate: Toluene-d8			*48.8*	ug/l	*50.0*		*97.5*	*70-130*		
LCS (B9A1178-BS1)					Prepared & Analyzed: 01/29/19					
1,3,5-Trichlorobenzene	49			ug/l	50.0		97.8	70-130		
Acetone	66			ug/l	50.0		132	70-130		
Benzene	50			ug/l	50.0		99.8	70-130		
Bromobenzene	53			ug/l	50.0		106	70-130		
Bromochloromethane	52			ug/l	50.0		104	70-130		
Bromodichloromethane	52			ug/l	50.0		104	70-130		
Bromoform	54			ug/l	50.0		109	70-130		
Bromomethane	59			ug/l	50.0		118	70-130		
2-Butanone	64			ug/l	50.0		127	70-130		
tert-Butyl alcohol	54			ug/l	50.0		108	70-130		
sec-Butylbenzene	58			ug/l	50.0		116	70-130		
n-Butylbenzene	56			ug/l	50.0		112	70-130		
tert-Butylbenzene	57			ug/l	50.0		114	70-130		
Methyl t-butyl ether (MTBE)	54			ug/l	50.0		108	70-130		
Carbon Disulfide	43			ug/l	50.0		86.2	70-130		
Carbon Tetrachloride	52			ug/l	50.0		103	70-130		
Chlorobenzene	52			ug/l	50.0		104	70-130		
Chloroethane	59			ug/l	50.0		118	70-130		
Chloroform	49			ug/l	50.0		98.6	70-130		
Chloromethane	58			ug/l	50.0		116	70-130		
4-Chlorotoluene	54			ug/l	50.0		107	70-130		
2-Chlorotoluene	53			ug/l	50.0		106	70-130		
1,2-Dibromo-3-chloropropane (DBCP)	52			ug/l	50.0		104	70-130		
Dibromochloromethane	54			ug/l	50.0		108	70-130		
1,2-Dibromoethane (EDB)	56			ug/l	50.0		111	70-130		
Dibromomethane	50			ug/l	50.0		101	70-130		
1,2-Dichlorobenzene	52			ug/l	50.0		105	70-130		
1,3-Dichlorobenzene	54			ug/l	50.0		107	70-130		
1,4-Dichlorobenzene	50			ug/l	50.0		101	70-130		

Quality Control
(Continued)

Volatile Organic Compounds (Continued)

Analyte	Result	Qual	Reporting Limit	Units	Spike Level	Source Result	%REC	%REC Limits	RPD	RPD Limit
Batch: B9A1178 - Purge-Trap (Continued)										
LCS (B9A1178-BS1)					Prepared & Analyzed: 01/29/19					
1,1-Dichloroethane	52			ug/l	50.0		104	70-130		
1,2-Dichloroethane	50			ug/l	50.0		100	70-130		
trans-1,2-Dichloroethene	53			ug/l	50.0		106	70-130		
cis-1,2-Dichloroethene	55			ug/l	50.0		109	70-130		
1,1-Dichloroethene	50			ug/l	50.0		99.9	70-130		
1,2-Dichloropropane	55			ug/l	50.0		111	70-130		
2,2-Dichloropropane	54			ug/l	50.0		109	70-130		
cis-1,3-Dichloropropene	56			ug/l	50.0		113	70-130		
trans-1,3-Dichloropropene	56			ug/l	50.0		112	70-130		
1,1-Dichloropropene	59			ug/l	50.0		118	70-130		
Diethyl ether	49			ug/l	50.0		97.7	70-130		
1,4-Dioxane	282			ug/l	250		113	70-130		
Ethylbenzene	53			ug/l	50.0		106	70-130		
Hexachlorobutadiene	56			ug/l	50.0		112	70-130		
2-Hexanone	62			ug/l	50.0		125	70-130		
Isopropylbenzene	57			ug/l	50.0		114	70-130		
p-Isopropyltoluene	59			ug/l	50.0		118	70-130		
Methylene Chloride	49			ug/l	50.0		97.6	70-130		
4-Methyl-2-pentanone	56			ug/l	50.0		112	70-130		
Naphthalene	57			ug/l	50.0		115	70-130		
n-Propylbenzene	55			ug/l	50.0		111	70-130		
Styrene	57			ug/l	50.0		114	70-130		
1,1,1,2-Tetrachloroethane	53			ug/l	50.0		106	70-130		
Tetrachloroethene	54			ug/l	50.0		107	70-130		
Tetrahydrofuran	55			ug/l	50.0		109	70-130		
Toluene	53			ug/l	50.0		107	70-130		
1,2,4-Trichlorobenzene	52			ug/l	50.0		105	70-130		
1,2,3-Trichlorobenzene	54			ug/l	50.0		108	70-130		
1,1,2-Trichloroethane	54			ug/l	50.0		108	70-130		
1,1,1-Trichloroethane	50			ug/l	50.0		100	70-130		
Trichloroethene	47			ug/l	50.0		94.9	70-130		
1,2,3-Trichloropropane	52			ug/l	50.0		105	70-130		
1,3,5-Trimethylbenzene	56			ug/l	50.0		112	70-130		
1,2,4-Trimethylbenzene	56			ug/l	50.0		112	70-130		
Vinyl Chloride	60			ug/l	50.0		119	70-130		
o-Xylene	56			ug/l	50.0		111	70-130		
m&p-Xylene	108			ug/l	100		108	70-130		
1,1,2,2-Tetrachloroethane	52			ug/l	50.0		104	70-130		
tert-Amyl methyl ether	56			ug/l	50.0		112	70-130		
1,3-Dichloropropane	54			ug/l	50.0		108	70-130		
Ethyl tert-butyl ether	55			ug/l	50.0		110	70-130		
Diisopropyl ether	52			ug/l	50.0		104	70-130		
Trichlorofluoromethane	62			ug/l	50.0		123	70-130		
Dichlorodifluoromethane	64			ug/l	50.0		128	70-130		
Surrogate: 4-Bromofluorobenzene			*51.2*	ug/l	*50.0*		*102*	*70-130*		
Surrogate: 1,2-Dichloroethane-d4			*48.5*	ug/l	*50.0*		*97.0*	*70-130*		
Surrogate: Toluene-d8			*50.1*	ug/l	*50.0*		*100*	*70-130*		

Quality Control
(Continued)

Semivolatile organic compounds

Analyte	Result	Qual	Reporting Limit	Units	Spike Level	Source Result	%REC	%REC Limits	RPD	RPD Limit
Batch: B9A1105 - Sep-Funnel-extraction										
Blank (B9A1105-BLK1)					Prepared & Analyzed: 01/29/19					
1,2,4-Trichlorobenzene	ND		2	ug/l						
1,2-Dichlorobenzene	ND		2	ug/l						
1,3-Dichlorobenzene	ND		2	ug/l						
1,4-Dichlorobenzene	ND		2	ug/l						
Phenol	ND		2	ug/l						
2,4,5-Trichlorophenol	ND		2	ug/l						
2,4,6-Trichlorophenol	ND		2	ug/l						
2,4-Dichlorophenol	ND		2	ug/l						
2,4-Dimethylphenol	ND		10	ug/l						
2,4-Dinitrophenol	ND		5	ug/l						
2,4-Dinitrotoluene	ND		2	ug/l						
2,6-Dinitrotoluene	ND		2	ug/l						
2-Chloronaphthalene	ND		2	ug/l						
2-Chlorophenol	ND		2	ug/l						
2-Methylnaphthalene	ND		2	ug/l						
Nitrobenzene	ND		2	ug/l						
2-Methylphenol	ND		2	ug/l						
2-Nitroaniline	ND		2	ug/l						
2-Nitrophenol	ND		5	ug/l						
3,3'-Dichlorobenzidine	ND		5	ug/l						
3-Nitroaniline	ND		2	ug/l						
4,6-Dinitro-2-methylphenol	ND		5	ug/l						
4-Bromophenyl phenyl ether	ND		2	ug/l						
4-Chloro-3-methylphenol	ND		2	ug/l						
4-Chloroaniline	ND		5	ug/l						
4-Chlorophenyl phenyl ether	ND		2	ug/l						
4-Nitroaniline	ND		2	ug/l						
4-Nitrophenol	ND		5	ug/l						
Acenaphthene	ND		2	ug/l						
Acenaphthylene	ND		2	ug/l						
Aniline	ND		2	ug/l						
Anthracene	ND		2	ug/l						
Benzo(a)anthracene	ND		2	ug/l						
Benzo(a)pyrene	ND		2	ug/l						
Benzo(b)fluoranthene	ND		2	ug/l						
Benzo(g,h,i)perylene	ND		2	ug/l						
Benzo(k)fluoranthene	ND		2	ug/l						
Benzoic acid	ND		15	ug/l						
Bis(2-chloroethoxy)methane	ND		2	ug/l						
Bis(2-chloroethyl)ether	ND		2	ug/l						
Bis(2-chloroisopropyl)ether	ND		2	ug/l						
Bis(2-ethylhexyl)phthalate	ND		6	ug/l						
Butyl benzyl phthalate	ND		3	ug/l						
Chrysene	ND		2	ug/l						
Di(n)octyl phthalate	ND		3	ug/l						
Dibenz(a,h)anthracene	ND		2	ug/l						
Dibenzofuran	ND		2	ug/l						
Diethyl phthalate	ND		2	ug/l						
Dimethyl phthalate	ND		5	ug/l						
Di-n-butylphthalate	ND		2	ug/l						
Fluoranthene	ND		2	ug/l						
Fluorene	ND		2	ug/l						
Hexachlorobenzene	ND		2	ug/l						
Hexachlorobutadiene	ND		2	ug/l						

Quality Control
(Continued)

Semivolatile organic compounds (Continued)

Analyte	Result	Qual	Reporting Limit	Units	Spike Level	Source Result	%REC	%REC Limits	RPD	RPD Limit
Batch: B9A1105 - Sep-Funnel-extraction (Continued)										
Blank (B9A1105-BLK1)					Prepared & Analyzed: 01/29/19					
Hexachlorocyclopentadiene	ND		5	ug/l						
Hexachloroethane	ND		2	ug/l						
Indeno(1,2,3-cd)pyrene	ND		2	ug/l						
Isophorone	ND		2	ug/l						
Naphthalene	ND		2	ug/l						
N-Nitrosodimethylamine	ND		2	ug/l						
N-Nitrosodi-n-propylamine	ND		2	ug/l						
N-Nitrosodiphenylamine	ND		2	ug/l						
Pentachlorophenol	ND		5	ug/l						
Phenanthrene	ND		2	ug/l						
Pyrene	ND		2	ug/l						
m&p-Cresol	ND		4	ug/l						
Pyridine	ND		2	ug/l						
Surrogate: Nitrobenzene-d5			*32.6*	ug/l	*50.0*		*65.2*	*30-130*		
Surrogate: p-Terphenyl-d14			*41.4*	ug/l	*50.0*		*82.7*	*30-130*		
Surrogate: 2-Fluorobiphenyl			*29.8*	ug/l	*50.0*		*59.6*	*30-123*		
Surrogate: Phenol-d6			*7.89*	ug/l	*50.0*		*15.8*	*10-83*		
Surrogate: 2,4,6-Tribromophenol			*33.3*	ug/l	*50.0*		*66.6*	*18-120*		
Surrogate: 2-Fluorophenol			*10.1*	ug/l	*50.0*		*20.2*	*10-81*		
LCS (B9A1105-BS1)					Prepared & Analyzed: 01/29/19					
1,2,4-Trichlorobenzene	36		2	ug/l	50.0		71.1	26-98		
1,2-Dichlorobenzene	32		2	ug/l	50.0		64.4	27-92		
1,3-Dichlorobenzene	32		2	ug/l	50.0		63.4	26-87		
1,4-Dichlorobenzene	33		2	ug/l	50.0		65.6	26-89		
Phenol	13		2	ug/l	50.0		25.9	10-67		
2,4,5-Trichlorophenol	42		2	ug/l	50.0		83.3	34-123		
2,4,6-Trichlorophenol	40		2	ug/l	50.0		80.8	35-114		
2,4-Dichlorophenol	39		2	ug/l	50.0		77.7	28-105		
2,4-Dimethylphenol	32		10	ug/l	50.0		63.7	28-114		
2,4-Dinitrophenol	40		5	ug/l	50.0		79.9	15-130		
2,4-Dinitrotoluene	42		2	ug/l	50.0		83.7	41-129		
2,6-Dinitrotoluene	40		2	ug/l	50.0		80.8	41-128		
2-Chloronaphthalene	34		2	ug/l	50.0		67.8	33-108		
2-Chlorophenol	34		2	ug/l	50.0		68.5	28-85		
2-Methylnaphthalene	37		2	ug/l	50.0		74.8	27-104		
Nitrobenzene	34		2	ug/l	50.0		68.8	26-100		
2-Methylphenol	27		2	ug/l	50.0		54.9	30-86		
2-Nitroaniline	44		2	ug/l	50.0		88.0	37-130		
2-Nitrophenol	38		5	ug/l	50.0		75.3	25-115		
3-Nitroaniline	43		2	ug/l	50.0		86.4	32-130		
4,6-Dinitro-2-methylphenol	45		5	ug/l	50.0		89.3	10-130		
4-Bromophenyl phenyl ether	45		2	ug/l	50.0		90.5	36-130		
4-Chloro-3-methylphenol	39		2	ug/l	50.0		77.1	29-116		
4-Chlorophenyl phenyl ether	43		2	ug/l	50.0		85.3	38-130		
4-Nitroaniline	45		2	ug/l	50.0		90.0	15-130		
Acenaphthene	37		2	ug/l	50.0		74.1	34-130		
Acenaphthylene	39		2	ug/l	50.0		79.0	35-113		
Aniline	23		2	ug/l	50.0		45.1	14-92		
Anthracene	46		2	ug/l	50.0		91.8	45-121		
Benzo(a)anthracene	49		2	ug/l	50.0		98.4	52-130		
Benzo(a)pyrene	53		2	ug/l	50.0		105	46-130		
Benzo(b)fluoranthene	51		2	ug/l	50.0		102	45-130		
Benzo(g,h,i)perylene	54		2	ug/l	50.0		108	36-130		

Quality Control
(Continued)

Semivolatile organic compounds (Continued)

Analyte	Result	Qual	Reporting Limit	Units	Spike Level	Source Result	%REC	%REC Limits	RPD	RPD Limit
Batch: B9A1105 - Sep-Funnel-extraction (Continued)										
LCS (B9A1105-BS1)					Prepared & Analyzed: 01/29/19					
Benzo(k)fluoranthene	51		2	ug/l	50.0		102	46-130		
Bis(2-chloroethoxy)methane	38		2	ug/l	50.0		76.8	28-120		
Bis(2-chloroethyl)ether	32		2	ug/l	50.0		64.4	26-120		
Bis(2-ethylhexyl)phthalate	55		6	ug/l	50.0		110	33-130		
Butyl benzyl phthalate	51		3	ug/l	50.0		101	34-130		
Chrysene	49		2	ug/l	50.0		98.6	47-130		
Di(n)octyl phthalate	52		3	ug/l	50.0		104	30-130		
Dibenz(a,h)anthracene	53		2	ug/l	50.0		105	48-130		
Dibenzofuran	39		2	ug/l	50.0		77.9	36-116		
Diethyl phthalate	43		2	ug/l	50.0		85.1	39-121		
Dimethyl phthalate	41		5	ug/l	50.0		82.3	40-130		
Di-n-butylphthalate	46		2	ug/l	50.0		91.3	38-130		
Fluoranthene	48		2	ug/l	50.0		95.7	48-122		
Fluorene	42		2	ug/l	50.0		84.1	40-130		
Hexachlorobenzene	40		2	ug/l	50.0		80.2	48-130		
Hexachlorobutadiene	40		2	ug/l	50.0		80.1	26-115		
Hexachlorocyclopentadiene	30		5	ug/l	50.0		59.8	10-115		
Hexachloroethane	32		2	ug/l	50.0		64.9	24-89		
Indeno(1,2,3-cd)pyrene	54		2	ug/l	50.0		108	41-130		
Isophorone	36		2	ug/l	50.0		71.9	26-115		
Naphthalene	37		2	ug/l	50.0		74.1	27-104		
N-Nitrosodimethylamine	18		2	ug/l	50.0		35.8	10-69		
N-Nitrosodi-n-propylamine	34		2	ug/l	50.0		67.8	31-106		
N-Nitrosodiphenylamine	50		2	ug/l	50.0		100	30-130		
Pentachlorophenol	56		5	ug/l	50.0		111	30-130		
Phenanthrene	45		2	ug/l	50.0		91.0	48-115		
Pyrene	45		2	ug/l	50.0		90.3	45-130		
m&p-Cresol	26		4	ug/l	50.0		52.6	15-115		
Surrogate: Nitrobenzene-d5			*43.1*	ug/l	*50.0*		*86.2*	*30-130*		
Surrogate: p-Terphenyl-d14			*47.1*	ug/l	*50.0*		*94.3*	*30-130*		
Surrogate: 2-Fluorobiphenyl			*42.6*	ug/l	*50.0*		*85.1*	*30-123*		
Surrogate: Phenol-d6			*14.2*	ug/l	*50.0*		*28.3*	*10-83*		
Surrogate: 2,4,6-Tribromophenol			*55.1*	ug/l	*50.0*		*110*	*18-120*		
Surrogate: 2-Fluorophenol			*22.3*	ug/l	*50.0*		*44.6*	*10-81*		

Quality Control
(Continued)

Polychlorinated Biphenyls (PCBs)

Analyte	Result	Qual	Reporting Limit	Units	Spike Level	Source Result	%REC	%REC Limits	RPD	RPD Limit
Batch: B9A1224 - Sep-Funnel-extraction										
Blank (B9A1224-BLK1)					Prepared: 02/01/19 Analyzed: 02/04/19					
Aroclor-1016	ND		0.1	ug/l						
Aroclor-1221	ND		0.2	ug/l						
Aroclor-1232	ND		0.1	ug/l						
Aroclor-1242	ND		0.1	ug/l						
Aroclor-1248	ND		0.1	ug/l						
Aroclor-1254	ND		0.1	ug/l						
Aroclor-1260	ND		0.1	ug/l						
Aroclor-1262	ND		0.1	ug/l						
Aroclor-1268	ND		0.1	ug/l						
PCBs (Total)	ND		0.1	ug/l						
Surrogate: 2,4,5,6-Tetrachloro-m-xylene (TCMX)			*0.0260*	ug/l	*0.0400*		*65.0*	*30-107*		
Surrogate: Decachlorobiphenyl (DCBP)			*0.0333*	ug/l	*0.0400*		*83.2*	*30-140*		
LCS (B9A1224-BS1)					Prepared: 02/01/19 Analyzed: 02/04/19					
Aroclor-1016	0.4		0.1	ug/l	0.500		85.1	40-124		
Aroclor-1260	0.4		0.1	ug/l	0.500		79.7	48-123		
Surrogate: 2,4,5,6-Tetrachloro-m-xylene (TCMX)			*0.0278*	ug/l	*0.0400*		*69.6*	*30-107*		
Surrogate: Decachlorobiphenyl (DCBP)			*0.0301*	ug/l	*0.0400*		*75.1*	*30-140*		

Quality Control
(Continued)

Total Petroleum Hydrocarbons

Analyte	Result	Qual	Reporting Limit	Units	Spike Level	Source Result	%REC	%REC Limits	RPD	RPD Limit
Batch: B9A1097 - Sep-Funnel-extraction										
Blank (B9A1097-BLK1)					Prepared & Analyzed: 01/29/19					
Total Petroleum Hydrocarbons	ND		200	ug/l						
Surrogate: Chlorooctadecane			*72.7*	ug/l	*125*		*58.1*	*54.2-105*		
LCS (B9A1097-BS1)					Prepared & Analyzed: 01/29/19					
Total Petroleum Hydrocarbons	4920		200	ug/l	10000		49.2	40-105		
Surrogate: Chlorooctadecane			*88.4*	ug/l	*125*		*70.7*	*54.2-105*		

Notes and Definitions

Item	Definition
Wet	Sample results reported on a wet weight basis.
ND	Analyte NOT DETECTED at or above the reporting limit.

New England Testing Laboratory
59 Greenhill Street
West Warwick, RI 02893
1-888-863-8522

Chain of Custody Rec

9 A 2 8002;

Project No. | **Project Name/Location: East Providence Maintenance**

Client: Gordon R. Archibald Inc.

Report To: S. Cadorette

Invoice To: S. Cadorette

Date	Time	Comp	Grab	Sample I.D.	Matrix: Aqueous	Matrix: Soil	Matrix: Other	No. of Containers	Preservative	Tests**: RCRA 8 Metals - Total	RCRA 8 Metals - Dissolv	TPH - EPA 8100	SVOCs - EPA 8270	VOCs - EPA 8260	PCBs - EPA 8082				Remarks:
1/25/2019	AM		X	GRA-2	X			4	H2SO4	X	X	X	X	X	X				
									HNO3										
									HCl										

Sampled By:	Date/Time	Received By:	Date/Time	Laboratory Remarks:
[illegible]	1/25/19 1400	GRA OFFICE	1/28/19 0800	
Relinquished By:	**Date/Time**	**Received By:**	**Date/Time**	
[illegible]	1/25/19 0930	[illegible]	1-28-19 9:30	Temp. Received:
Relinquished By:	**Date/Time**	**Received By:**	**Date/Time**	
[illegible]	1-28-19 1020	[illegible]	1/28/19 1500	Temp. Received: 3

Special Instructions:
Metals to Include: Sb, As, Cd, Cu, Pb, Hg, Ni, Se, Ag, Zn, Fe, Chromium III, & Chromium VI

Requested Detection Limit Attached

**Netlab Subcontracts the following tests: Radiologicals, Radon, Asbestos, UCMRs, Perchlorate, Bromate, Bromide, Sieve, Salmonella, Carbamates

Turnaround Time [Business Days]: **5 Days**

20. Category G – Contaminated Construction Dewatering Sites Discharging to Non- Class AA receiving waters. During th date of authorization to discharge and lasting until either the expiration of this general permit or termination of covera authorized to discharge from an approved groundwater treatment system. Such discharges shall be limited and mon specified below:

USE "AVERAGE MONTHLY" UNLESS NOT LISTED →

Effluent Characteristic	Discharge Limitations Concentration - Specify Units		Monitoring
	Average Monthly	Maximum Daily	Measurement Frequency[1,2]
Flow	— GPM	xxx GPM	Continuous[3]
Total Suspended Solids	30,000 ug/l	— ug/l	2/Month
Total Residual Chlorine	11 ug/l	19 ug/l	2/Month
Total Petroleum Hydrocarbons	— ug/l	1000 ug/l	2/Month
Cyanide	4.16 ug/l[4]	17.6 ug/l	2/Month
Benzene	4.72 ug/l	5 ug/l	2/Month
Toluene	11.2 ug/l	508 ug/l	2/Month
Ethylbenzene	28.8 ug/l	1280 ug/l	2/Month
Total Xylenes (m,p,o)	2.4 ug/l	106.4 ug/l	2/Month
Total BTEX	— ug/l	100 ug/l	2/Month
Ethylene dibromide	— ug/l	0.05 ug/l	2/Month
Methyl- t- Butyl Ether	— ug/l	70 ug/l	2/Month
tert-Amyl Methyl Ether	— ug/l	— ug/l	2/Month
Carbon Tetrachloride	4.4 ug/l	4.4 ug/l	2/Month
1,4 Dichlorobenzene	0.96 ug/l	5 ug/l	2/Month
1,2 Dichlorobenzene	1.44 ug/l	63.2 ug/l	2/Month
1,3 Dichlorobenzene	6.96 ug/l	312 ug/l	2/Month
Total Dichlorobenzene	— ug/l	763 ug/l	2/Month
1,1 Dichloroethane	— ug/l	70 ug/l	2/Month
1,2 Dichloroethane	5 ug/l	5 ug/l	2/Month
1,1 Dichloroethylene	3.2 ug/l	3.2 ug/l	2/Month
Cis - 1,2 Dichloroethylene	— ug/l	70 ug/l	2/Month
Dichloromethane	— ug/l	4.6 ug/l	2/Month
Tetrachloroethylene	4.24 ug/l	5 ug/l	2/Month
1,1,1 Trichloroethane	— ug/l	200 ug/l	2/Month
1,1,2 Trichloroethane	5 ug/l	5 ug/l	2/Month
Trichloroethylene	5 ug/l	5 ug/l	2/Month
Vinyl Chloride	1.92 ug/l	2 ug/l	2/Month
Acetone	— ug/l	— ug/l	2/Month
1,4 Dioxane	— ug/l	— ug/l	2/Month
Total Phenols	4.48 ug/l	200.8 ug/l	2/Month

Pentachlorophenol	0.04 ug/l[4]	0.05 ug/l[4]	2/Month
Total Phthalates	3 ug/l[4]	--- ug/l	2/Month
Bis (2-Ethylhexyl) Phthalate	6 ug/l	6 ug/l	2/Month
Total Group I Polycyclic Aromatic Hydrocarbons	0.14 ug/l[4]	10 ug/l	2/Month
Benzo (a) Anthracene	--- ug/l	0.0038 ug/l[4]	2/Month
Benzo (a) Pyrene	--- ug/l	0.0038 ug/l[4]	2/Month
Benzo (b) Fluoranthene	--- ug/l	0.0038 ug/l[4]	2/Month
Benzo (k) Fluoranthene	--- ug/l	0.0038 ug/l[4]	2/Month
Chrysene	--- ug/l	0.0038 ug/l[4]	2/Month
Dibenzo (a,h) anthracene	--- ug/l	0.0038 ug/l[4]	2/Month
Indeno (1,2,3-cd) Pyrene	--- ug/l	0.0038 ug/l[4]	2/Month
Total Group II Polycyclic Aromatic Hydrocarbons	0.14 ug/l[4]	100 ug/l	2/Month
Acenapthene	1.52 ug/l	1.9 ug/l	2/Month
Acenapthylene	--- ug/l	--- ug/l	2/Month
Anthracene	32,000 ug/l	--- ug/l	2/Month
Benzo (ghi) Perylene	--- ug/l	--- ug/l	2/Month
Fluoranthene	3.52 ug/l	159.2 ug/l	2/Month
Fluorene	4240 ug/l	--- ug/l	2/Month
Napthalene	2.08 ug/l	20 ug/l	2/Month
Phenanthrene	--- ug/l	--- ug/l	2/Month
Pyrene	3200 ug/l	--- ug/l	2/Month
Total Polychlorinated Biphenyls	0.000512 ug/l	0.000064 ug/l	2/Month
Antimony (total recoverable)	See Part II.E	See Part II.E	2/Month
Arsenic (total recoverable)	See Part II.E	See Part II.E	2/Month
Cadmium (total recoverable)	See Part II.E	See Part II.E	2/Month
Chromium III (trivalent, total recoverable)	See Part II.E	See Part II.E	2/Month
Chromium VI (hexavalent, total recoverable)	See Part II.E	See Part II.E	2/Month
Copper (total recoverable)	See Part II.E	See Part II.E	2/Month
Lead (total recoverable)	See Part II.E	See Part II.E	2/Month
Mercury (total recoverable)	See Part II.E	See Part II.E	2/Month
Nickel (total recoverable)	See Part II.E	See Part II.E	2/Month
Selenium (total recoverable)	See Part II.E	See Part II.E	2/Month
Silver (total recoverable)	See Part II.E	See Part II.E	2/Month
Zinc (total recoverable)	See Part II.E	See Part II.E	2/Month
Iron (total recoverable)	See Part II.E	See Part II.E	2/Month

SEE ATTACHED

E. Metals Effluent Limitations (ug/l)

Water Body Classification Limit Type	Class AA Freshwater Monthly Average	Class AA Freshwater Daily Maximum	Non-Class AA Freshwater Monthly Average	Non-Class AA Freshwater Daily Maximum
Dilution Range: <5				
Antimony	4.48	360	8	360
Arsenic	0.14[1]	272	1.12[1]	272
Cadmium	0.08[1]	0.42	0.08[1]	0.42
Chromium III	22.15	463.46	22.15	463.46
Chromium VI	9.15	13.03	9.15	13.03
Copper	2.28	3.03	2.28	3.03
Lead	0.44	11.18	0.44	11.18
Mercury	0.13	1.32	0.14	1.32
Nickel	12.92	116.17	12.92	116.17
Selenium	4	16	4	16
Silver	0.3	0.3	0.3	0.3
Zinc	29.61	29.61	29.61	29.61
Iron	240	Monitor Only	800	Monitor Only
Dilution Range: 5 to 10				
Water Body Classification Limit Type	Class AA Freshwater Monthly Average	Class AA Freshwater Daily Maximum	Non-Class AA Freshwater Monthly Average	Non-Class AA Freshwater Daily Maximum
Antimony	22.4	1800	40	1800
Arsenic	0.7[1]	1360	5.6	1360
Cadmium	0.4	2.1	0.4	2.1
Chromium III	110.75	2317.3	110.75	2317.3
Chromium VI	45.75	65.15	45.75	65.15
Copper	11.4	15.15	11.4	15.15
Lead	2.2	55.9	2.2	55.9
Mercury	0.65	6.6	0.7	6.6
Nickel	64.6	580.85	64.6	580.85
Selenium	20	80	20	80
Silver	1.5	1.5	1.5	1.5
Zinc	148.05	148.05	148.05	148.05
Iron	1200	Monitor Only	4000	Monitor Only
Dilution Range: 10 to 20				
Water Body Classification Limit Type	Class AA Freshwater Monthly Average	Class AA Freshwater Daily Maximum	Non-Class AA Freshwater Monthly Average	Non-Class AA Freshwater Daily Maximum
Antimony	44.8	3600	80	3600
Arsenic	1.4	2720	11.2	2720
Cadmium	0.8	4.2	0.8	4.2
Chromium III	221.5	4634.6	221.5	4634.6
Chromium VI	91.5	130.3	91.5	130.3
Copper	22.8	30.3	22.8	30.3
Lead	4.4	111.8	4.4	111.8
Mercury	1.3	13.2	1.4	13.2
Nickel	129.2	1161.7	129.2	1161.7
Selenium	40	160	40	160
Silver	3	3	3	3
Zinc	296.1	296.1	296.1	296.1
Iron	2400	Monitor Only	8000	Monitor Only

APPENDIX D

CONTRACT SPECIFICATIONS

SECTION 30 01 20
HEALTH & SAFETY REQUIREMENTS

DESCRIPTION: The Contractors attention is directed to the fact that the work site contains hazardous materials. The Contractor is likely to encounter hazardous materials during the course of work, and is required to prepare a site-specific Health and Safety Plan certified by a Certified Industrial Hygienist.

Site investigation has identified soil and groundwater concentrations that are not compliant with the Rhode Island Department of Environmental Management Rules and Regulations for the Investigation and Remediation of Hazardous Material Releases (Remediation Regulations) industrial/commercial direct exposure criteria. The soil and groundwater parameters exceeding the Remediation Regulations are provided in the projects Construction Soil Management Plan. The Contractor's employees and Subcontractor's employees who will be potentially exposed to the subsurface soils and groundwater at the East Providence Salt Shed project area are required to have OSHA 40-hour health and safety training and the 8-hour refresher training, if applicable. The Contractor shall provide training certificates to the RIDOT for the persons that will be performing the work.

The Contractor is responsible to monitor working conditions at all times during construction and to provide appropriate protective clothing, equipment and facilities for his personnel, and to establish workplace procedures to ensure their safety, and to enforce the use of these procedures, equipment and facilities in accordance with the following guidelines:

Safety and Health Regulations Promulgated by the U.S. Department of Labor OSHA, 29 CFR 1910 - Occupational Safety and Health Standards, and 29 CFR 1926 - Safety and Health Regulations for Construction.

The Contractor shall engage a qualified Health and Safety expert having experience in similar hazardous waste disposal conditions, to monitor site conditions and recommend all necessary Health and Safety protection. This person shall be a Certified Industrial Hygienist (CIH). The CIH shall prepare a site-specific Health and Safety Plan (HASP) prepared in accordance with the requirements of OSHA's Hazardous Waste Operations and Emergency Response (HAZWOPER) Standard, 29 CFR 1910.120 or 29 CFR 1926.65, paragraph (b)(4) and all other applicable state and federal regulations for all work on this project. The Contractor shall follow the site-specific HASP requirements and recommendations during all site work.

The Contractor shall implement a Health and Safety Protection Program. The Contractor’s Health and Safety Protection Program shall establish methods and procedures to be utilized during construction that achieve compliance with the Safety and Health Regulations Promulgated by the U.S. Department of Labor OSHA, 29 CFR 1910 - Occupational Safety and Health Standards, 29 CFR 1926 - Safety and Health Regulations for Construction, and the site-specific HASP. The Contractor shall provide stations allowing workers to wash and to put on and remove protective clothing, stations for vehicles to be cleaned, if necessary, before leaving the site, and air monitoring in accordance with the site-specific HASP and the Rhode Island

Department of Environmental Management Air Pollution Control Regulations.

If, at any time, the RIDOT is apprised of a safety hazard which demands immediate attention because of its high potential for harm to the public travel, persons on or about the work, or public or private property, the RIDOT shall have the right to order such safeguards to be erected and such precautions to be taken as necessary and the Contractor shall comply with such orders. If, under such circumstances, the Contractor does not or cannot immediately put the work into proper and approved condition, or if the Contractor or his representative is not upon the site so that he can be notified immediately of the insufficiency of safety precautions, then the RIDOT may put the work into such a condition that shall be, in its opinion, in all respects safe, and the Contractor shall pay all expenses of such labor and materials as may have been used for this purpose by him or by the RIDOT. The fact that the RIDOT does not observe a safety hazard or does not order the Contractor to take remedial measures shall in no way relieve the Contractor of the entire responsibility for any costs, loss or damage by any party sustained on account of the insufficiency of the safety precautions taken by him or by the Owner acting under authority of this Section.

The Contractor is alerted to the fact that conditions of high hazard are present or can be present at the site during the performance of the work. It is the responsibility of the Contractor to take appropriate safety precautions to meet whatever conditions of hazard may be present during the performance of the work, whether reasonably foreseeable or not. The safety conditions enumerated within the Specifications are the minimum permissible and RIDOT does not make any representation that the safety standards provided herein will be adequate to meet all eventualities. The Contractor is therefore alerted to the fact that it shall be his responsibility to anticipate and provide such additional safety precautions, facilities, personnel and equipment as shall be necessary to protect life and property from whatsoever conditions of hazard are present or may be present.

The Contractor shall supply and erect highly visible safety fencing a minimum of three feet in height around all construction areas that pose a threat to safety and shall post proper signage as required by Local, State and Federal requirements. The Contractor shall erect safety fencing as documented on the Contract Drawings or as directed by the RIDOT and shall maintain such fencing and signage until such a time that the potential safety hazard has been rectified. Upon final completion of construction, all safety fencing shall be removed off-site by the Contractor. The Contractor shall enforce safety fencing requirements of OSHA.

During operations, whenever unsafe levels of toxic gases are detected, all work will cease in the area until acceptable levels are reached.

MATERIALS: Not applicable.

CONSTRUCTION METHODS: The Contractor shall comply with all applicable local, state, and federal regulations applicable to all work included in the project.

SHOP DRAWINGS: The Contractor shall submit two copies of the site-specific health and safety plan (HASP) and the Contractor's Health and Safety Protection Program used for work on this project to the RIDOT for record use only.

The Contractor and Subcontractor shall submit evidence of initial 40-hour OSHA health and safety training and the 8-hour refresher training, if applicable for each employee that will be engaged in excavation, loading, hauling, stockpiling, and other contaminated soil management related activities completed within the Project area.

METHOD OF MEASUREMENT: This item will not be measured for payment.

BASIS OF PAYMENT: Section 30 01 20 "Health and Safety Requirements" will not be paid for separately. Payment is included in the **"contract sum"** listed in the Bid Proposal Form. The portion of the **"contract sum"** representing payment for this section constitutes full and complete compensation for all labor, materials, and for all other incidentals required to finish this work, as discussed in these provisions.

SECTION 30 01 55
DISPOSAL OF SOLID WASTE

DESCRIPTION: The work under this specification includes all labor, tools, materials and equipment necessary to completely dispose of all solid waste materials, and the proper disposal of solid waste debris generated on the project. This item of work does not include- materials covered separately under Section 30 02 25 Load, Haul and Dispose Contaminated Soil.

APPLICABLE LAWS AND REGULATIONS: The Contractor shall ensure that all solid waste and debris removal shall be conducted in accordance with the State of Rhode Island Building Code, and OSHA standard **29 CFR 1926** "Safety and Health Regulations for Construction."

The Contractor shall ensure that the solid waste shall be disposed of in accordance with the applicable USEPA regulations (40 CFR 239-259, with all amendments and revisions) and RIDEM Solid Waste Regulations (DEM OWM-SW-04-01, with all amendments and revisions).

The Contractor shall obtain all required hauling permits and is responsible for the payment of necessary tipping and other fees required.

The Contractor shall immediately notify the Engineer if actual or suspected oil, hazardous material, and/or hazardous waste (OHM), other than that already identified under the contract, are encountered during debris removal. All OHM must be handled according to state and federal regulations and these Special Provisions.

METHOD OF MEASUREMENT: Section 30 01 55 “Disposal of Solid Waste” will not be measured separately for payment.

BASIS OF PAYMENT: Section 30 01 55 “Disposal of Solid Waste” will not be paid for separately. Payment is included in the **“contract sum”** listed in the Bid Proposal Form. The portion of the **“contract sum”** representing payment for this section constitutes full and complete compensation for all labor, handling, storage, hauling, and disposal, and for all other incidentals required to finish this work, as discussed in these provisions.

SECTION 30 01 71
DISPOSAL OF LIQUID WASTE

DESCRIPTION: The work under this specification includes all labor, tools, materials and equipment necessary to completely dispose of all liquid waste generated on the project. This item of work does not include- disposal of Hazardous and Special Wastes.

APPLICABLE LAWS AND REGULATIONS: The Contractor shall ensure that all liquid waste disposal shall be conducted according to OSHA standard **29 CFR 1910** Occupational Safety and Health Standards and OSHA standard **29 CFR 1926** Safety and Health Regulations for Construction.

The Contractor shall ensure that the liquid waste shall be disposed of in accordance with all applicable USEPA regulations and RIDEM Regulations.

The Contractor shall obtain all required hauling permits and is responsible for the payment of necessary disposal, recycling, and other fees required.

The Contractor shall immediately notify the Engineer if actual or suspected oil, hazardous material, and/or hazardous waste (OHM), other than that already identified under the contract, are encountered during debris removal. All OHM must be handled according to state and federal regulations and these Special Provisions.

CONSTRUCTION METHODS:

The Contractor may submit proposed liquid waste receiving facilities, along with copies of each facility's license and permit. Approval of the proposed liquid waste receiving facility/facilities by the Engineer is required prior to any disposal of liquid waste.

The Contractor shall be responsible for the characterization of liquid waste for acceptance into the receiving facility. The Work Plan shall include waste sampling frequency and required laboratory analysis for the receiving facility. The Contractor shall be responsible for all waste characterization related costs including but not limited to sampling, submittal of samples to an RIDOH approved analytical laboratory, and laboratory analysis.

The Contractor shall be responsible with obtaining waste acceptance approval at the receiving facility. The Contractor shall be responsible for all waste acceptance approval related costs including but not limited to preparing waste acceptance applications and supporting materials and application fees.

Prior to the commencement of any on-site activities, the Contractor shall submit to RIDOT a list of proposed liquid waste transporters, along with copies of each transporter's license and permit. RIDOT approval of the proposed transporter shall be required prior to any liquid waste transportation.

The Contractor shall provide two copies of the receiving facility approval for the disposal of

liquid waste at the facility to the RIDOT a minimum of three days prior to the loading, hauling, and disposal of contaminated soil at the facility.

The Contractor shall provide receiving facility waste disposal documents to the RIDOT that include at a minimum the disposal facility name and location, the date the liquid waste was disposed at the facility, the liquid waste disposal characterization, and the number of gallons of liquid waste disposed at the facility.

METHOD OF MEASUREMENT: Section 30 01 71 "Disposal of Liquid Waste" will be measured for payment by the "Gallon" actually loaded and hauled and disposed in accordance with the Contract Documents and/or as directed by the RIDOT. The number of gallons will be determined from disposal documents generated by the receiving disposal.

BASIS OF PAYMENT: Section 30 01 71 Disposal of Liquid Waste bid quantity is 100 gallons. Liquid waste disposal shall be paid for at a unit price per gallon. The unit price so-stated constitutes full and complete compensation for all labor, materials, and equipment for implementing the work described in this Section plus all other substantial work and incidentals of whatever nature required to finish the work, complete and accepted by the Engineer.

Final payment for liquid waste disposal will not be made until all disposal documentation including but not limited to manifests and/or bills of ladings and disposal receipts have been submitted and approved by the RIDOT.

SECTION 30 02 05
CONTAMINATED SOIL EXCAVATION

DESCRIPTION: This item includes the excavation of contaminated subsurface soils. All soil excavation within the project's Limit of Disturbance shall be classified as contaminated soil excavation. The work shall be performed in accordance with all appropriate sections of the Rhode Island Department of Transportation Standard Specifications for Road and Bridge Construction, 2013 Edition all revisions.

Previous soil sampling has documented elevated levels of various parameters, as provided in the Construction Soil Management Plan (CSMP), within the project's Limit of Disturbance. The East Providence Salt Shed project extent is located within the 2009 Rhode Island Department of Transportation Salt Storage Facility project extent.

The soil excavation work on the Project shall conform with all addendums and revisions of the: Rhode Island Department of Environmental Management's (RIDEM) approved Remedial Action Work Plan (RAWP), the RIDEM approved Remedial Approval Letter, the 2019 Gordon R. Archibald Construction Soil Management Plan, the Contractor's RIDOT approved Soil Management Plan (SMP), the Project Plans and Specifications, and in compliance with all applicable permits. Copies of the RIDEM approved Remedial Action Work Plan (RAWP), Gordon R. Archibald, Inc.'s March 2019 Construction Soil Management Plan (CSMP), and the RIDEM's Remedial Approval Letter (4th Amended) are Appended to the Contract Documents.

The Contractor shall load and haul dry excavated non-compliant soil and sediment for offsite recycling / disposal. The Contractor shall be responsible for pre-characterizing the soil and sediment for recycling / disposal and receive approval from the receiving recycling / disposal facility prior to beginning excavation. There shall be no stockpiling of dry contaminated soil and sediment.

Wet contaminated soil stockpile construction and management shall be conducted for in accordance with Section 30 04 75 Soil Stockpile – Wet Contaminated Soil. The handling and hauling of wet contaminated soil from the excavation location to the approved wet contaminated soil stockpile location, and the unloading, and stockpiling of the wet contaminated soil in the wet contaminated soil stockpile location(s) shall be conducted in accordance with Section 30 04 82 Handling, Hauling, and Stockpiling of Wet Contaminated Soils. The wet contaminated soil shall be stockpiled until its moisture content has been reduced to meet the disposal facility's acceptance criteria. Loading, hauling, and off-site disposal of wet contaminated soil whose moisture content has been reduced to meet the disposal facility's acceptance criteria shall be conducted for in accordance with Section 30 02 25 Load, Haul, and Dispose Contaminated Soil.

SUBMITTALS: The Contractor shall submit two copies of a Soil Management Plan (SMP) to the RIDOT for review and approval. The SMP shall include a list of all equipment, including sizes and capacities the sequencing of all soil removal activities, all proposed on-site and off-site stockpile locations and their respective capacities, contaminated soil loading and hauling methodologies, and off-site recycling/disposal facilities. All soil excavation within the project's Limit of Disturbance shall be classified as contaminated soil excavation. The Contractor's SMP shall include soil management strategies that conform to the facilities Remedial Action Work

Plan, the September 29, 2011 RIDEM Remedial Approval Letter (4th Amended) requirements, the RIDEM approved Construction Soil Management Plan (CSMP), prepared by Gordon R. Archibald, Inc., dated March 2019, and the Remedial Approval Letter dated May 10, 2019. The Contractor's sequence of construction shall identify specific excavations and earthmoving operations by baseline and stations. Proposed wet contaminated soil stockpile locations and capacities shall be identified. The Contractor shall be required to sequence excavation operations so as not to exceed the RIDOT approved wet contaminated soil stockpile location capacity. The Contractor's SMP shall include an operation log that will be used to document daily contaminated soil excavation activities.

HEALTH AND SAFETY PLAN: The Contractor shall comply with the Health and Safety requirements in Section 30 01 20 Health and Safety Requirements. For all contaminated soil excavation work

APPLICABLE LAWS AND REGULATIONS: The contaminated soil excavation shall be conducted in accordance with all applicable Environmental Protection Agency (EPA) and the Rhode Island Department of Environmental Management (RIDEM) regulations, the RIDEM approved March 2019 Gordon R. Archibald, Inc. Construction Soil Management Plan (CSMP) all revisions, the RIDEM approved Remedial Action Work Plan (RAWP), the September 29, 2011 RIDEM Remedial Approval Letter (4th Amended), the May 10, 2019 Remedial Approval Letter, and in compliance with all applicable permits.

MATERIALS: The Contractor shall supply and utilize all required materials to adequately complete contaminated soil excavation. Personal protective equipment shall be utilized as specified in the Contractor's site-specific Health and Safety Plan prepared in accordance with Section 30 01 20, Health and Safety Requirements.

CONTAMINATED SOIL EXCAVATION: The Contractor may choose and implement any effective and lawful method for excavating contaminated soil encountered in the work area provided they perform the required excavation subject to the RIDOT approved Contractor's SMP. The Contractor shall assume all responsibility for the adequacy of the methods, materials, documentation, and equipment employed.

The Contractor shall classify excavated contaminated soil as "Wet" or "Dry". Wet contaminated soil is defined as soil that is excavated from at or below the groundwater table and has a moisture content that does not comply with the disposal/recycling facility's moisture content acceptance criteria. Dry contaminated soil is soil excavated from above the groundwater table and has a moisture content that complies with the disposal/recycling facility's moisture content acceptance criteria. Dry contaminated soil that does not comply with the disposal/recycling facility's moisture content acceptance criteria shall be considered wet contaminated soil.

The Contractor shall ensure that compliance with applicable regulations is maintained during all contaminated soil earthwork operations. The Contractor shall be required to have available a minimum of two copies of the RIDOT approved Contractor's SMP in the Contractor's project office for use by the Contractor's personnel, subcontractors, and the RIDOT. The Contractor shall be required to maintain an operation log during the contaminated soil earthwork activities to include, but not be limited to, dates of earthwork activities, dates and times of field sampling,

soil management observations, and tracking related to stockpile generation. The operation log shall be submitted to the RIDOT Resident Engineer daily to document the operations associated with contaminated soil earthwork activities. The Contractor and Resident Engineer shall sign the operating log at the completion of contaminated soil excavation activities. The Contractor shall not resume contaminated soil excavation activities until the daily log for the previous day has been signed by the Contractor and the RIDOT Resident Engineer.

In addition to the above, the Contractor is responsible for erosion and pollution controls in accordance with local, State and Federal regulations as well as what is included in the Contract Documents.

During excavation of contaminated soil, the Contractor shall be required to control dust and sedimentation erosion. If visible dust is generated, the level of dermal and respiratory protection shall be determined based upon periodic air monitoring to be performed by the Contractor and the requirements of the Site-specific HASP and the Rhode Island Department of Environmental Management's Air Pollution Control Regulations. The RIDOT may conduct duplicate air monitoring for quality assurance purposes. All excavated dry contaminated soils shall immediately be placed into trucks, covered, and hauled to the RIDOT approved disposal facility. All excavated wet contaminated soil shall be stockpiled in the wet contaminated soil stockpile. Wet contaminated soil stockpiles shall be constructed in accordance with Section 30 04 75 Soil Stockpile – Contaminated Soil. Stockpile areas shall be selected by the Contractor at no additional cost to the State, and are subject to the approval of the RIDOT.

While engaged in contaminated soil excavation work, the Contractor shall be subject to on-site inspection by the RIDOT Inspector. If the work is in violation of the requirements of this specification, RIDOT will issue a stop work order to be in effect immediately and until the violation is resolved. Standby time and expenses required to resolve the violation shall be at the Contractor's expense.

The Contractor shall coordinate contaminated soil excavation with the RIDOT. The Contractor shall provide notification to the RIDOT 72-hours in advance of all contaminated soil excavation work.

The Contractor shall notify RIDOT within 24 hours if an unexpected change of conditions related to the presence of hazardous wastes or material is encountered at the site. The Contractor shall not proceed with work in the areas where an unexpected change of conditions related to the presence of hazardous wastes or material is encountered until authorized to do so by the RIDOT.

During contaminated soil excavation, the Contractor shall minimize odors by methods including the use of odor suppressant shell material where necessary.

The Contractor shall be responsible for obtaining all necessary permits, manifests, and bill of lading documentation in conjunction with contaminated soil and he shall provide timely notification of such actions as may be required by applicable federal, state regional, and/or local authorities.

METHOD OF MEASUREMENT: Section 30 02 05 "Contaminated Soil and Sediment Excavation**"** will not be measured separately for payment.

BASIS OF PAYMENT: Section 30 02 05 "Contaminated Soil Excavation" will not be paid for separately. Payment is included in the **"contract sum"** listed in the Bid Proposal Form. The portion of the **"contract sum"** representing payment for this section constitutes full and complete compensation for all labor, materials, equipment, and for all other incidentals required to finish this work, as discussed in these provisions.

SECTION 30 02 25
LOAD, HAUL, AND DISPOSE CONTAMINATED SOIL

DESCRIPTION: This item of work includes soil management, special handling, loading and hauling of contaminated soil, and disposal at the RIDOT approved disposal facility in accordance with RIDEM regulations for disposal of these materials and as directed by the RIDOT.

Contaminated soil has been identified throughout the East Providence Salt Shed project area. The work shall be performed in accordance with all appropriate sections of the Rhode Island Department of Transportation Standard Specifications for Road and Bridge Construction, 2013 Edition all revisions, and the project's RIDEM approved 2019 Construction Phase Soil Management Plan (CSMP), and in compliance with all applicable permits.

HEALTH AND SAFETY PLAN: The Contractor shall produce and maintain a site-specific Health and Safety Plan (HASP) in compliance with Section 30 02 20, Health and Safety Requirements. The site-specific HASP shall be implemented as part of this work.

If visible dust is generated, the level of dermal and respiratory protection shall be determined based upon periodic air monitoring to be performed by the Contractor and the requirements of the Site-specific HASP and the Rhode Island Department of Environmental Management's Air Pollution Control Regulations. The RIDOT may conduct duplicate air monitoring for quality assurance purposes.

APPLICABLE LAWS AND REGULATIONS: The loading, hauling, and disposal of contaminated soil shall be conducted in accordance with all applicable Environmental Protection Agency (EPA) and the Rhode Island Department of Environmental Management (RIDEM) regulations, the RIDEM approved Construction Soil Management Plan (CSMP), and in compliance with all applicable permits.

The Contractor shall ensure that compliance with applicable regulations is maintained during all loading, hauling, and disposal operations. The Contractor shall be required to maintain an operations log during the loading, hauling, and disposal activities to include, but not be limited to, dates of activities, soil management observations, estimated volumes loaded and hauled for offsite recycling/disposal, the recycling/disposal facility the contaminated soil was transported to and paperwork documenting lawful off-site disposition. In addition to the above, the Contractor is responsible for erosion and pollution controls in accordance with local, State and Federal regulations as well as what is included in the Contract Documents. The Contractor shall submit a summary report to the RIDOT on a daily basis to document the operations associated with loading, hauling, and transportation activities.

SUBMITTALS: The Contractor shall be required to submit a Soil Management Plan in accordance with the Section 30 02 05 Contaminated Soil Excavation submittal requirements that includes their proposed soil management methodologies during the project. The Contractor's Soil Management Plan shall include their proposed excavation, loading, hauling, and stockpiling of soil methodologies to be utilized during the project. The RIDEM approved Construction Soil Management Plan (SMP), prepared by Gordon R. Archibald, Inc., dated March 2019 and all revisions; is provided in the Contract Specifications for reference.

The Contractor shall dispose of all contaminated soil at a disposal facility licensed to accept the material. Prior to the commencement of any on-site activities, the Contractor shall submit to RIDOT a list of proposed contaminated soil receiving facilities, along with copies of each facility's license and permit. RIDOT approval of the proposed contaminated soil receiving facilities shall be required prior to any contaminated soil disposal.

Prior to the commencement of any on-site activities, the Contractor shall submit to RIDOT a list of proposed contaminated soil transporters, along with copies of each transporter's license and permit. RIDOT approval of the proposed transporter shall be required prior to any contaminated soil transportation.

The Contractor shall provide two copies of the receiving facility approval for the disposal of contaminated soil at the facility to the RIDOT a minimum of three days prior to the loading, hauling, and disposal of contaminated soil at the facility.

The Contractor shall provide two copies of contaminated soil manifest/bill of lading that require RIDOT signature as the waste generator to the RIDOT a minimum of three days prior to the hazardous waste being loaded, hauled and transported for off-site disposal. The RIDOT shall sign and return the contaminated soil manifest/bill of lading to the Contractor one day prior to the contaminated soil being transported for disposal.

The Contractor shall maintain copies of the contaminated soil operational log. The operational log shall be submitted to the RIDOT daily.

Hauling Slips: The Contractor shall prepare slips to document the transportation of the contaminated soil from the project to the final disposal site. The slips shall, as a minimum, list the following information: date, truck identification, truck driver's name, approximate quantity of soil hauled, weight, disposal location, and the RIDOT's representative's signature. These slips will be prepared in duplicate. The Contractor shall retain one copy, and the second copy will be given to the RIDOT at the end of each day in which soil is hauled.

Copies of all Bill of Ladings, manifests, disposal facility weight slips and any other disposal related documents shall be provided to the RIDOT within 5 days of the disposal work being completed.

EQUIPMENT/MATERIALS: The Contractor is required to have the necessary personal protective equipment available as specified in the Contractor's site-specific Health and Safety Plan and shall have access to an inventory of personal protection equipment in the event that the level of personal protection equipment needs to be upgraded.

CONTAMINATED SOIL LOADING, HAULING, AND DISPOSAL: The Contractor may choose and implement any effective and lawful method for loading, hauling, and disposing of contaminated soil encountered, excavated and/or stockpiled in the work area provided all work is

performed in accordance with the project documents and the RIDOT approved documents, outlined in the Contract Documents. The Contractor shall assume all responsibility for the adequacy of the methods, materials, documentation, and equipment employed.

The Contractor shall supply and utilize all required equipment to adequately complete the contaminated soil loading, hauling, and disposal. During contaminated soil loading dust, erosion and sedimentation control best management practices shall be installed around the loading areas to minimize the effects of erosion and surface run-off. Erosion control devices shall be installed as shown on the Plans or as directed by the RIDOT.

Free liquids shall not be present in the contaminated soil transported for off-site disposal. The Contractor shall be responsible for confirming that free liquids are not present in contaminated soils transported for off-site recycling/disposal. The Contractor shall be responsible for all costs related to off-site impact from free liquids present in contaminated soil being transported for off-site disposal including, but not limited to, regulatory compliance, fines and penalties, and response actions.

While engaged in contaminated soil loading and hauling the Contractor shall be subject to on-site inspection by RIDOT representatives. If the work is in violation of the requirements of this specification, RIDOT will issue a stop work order to be in effect immediately and until the violation is resolved. Standby time and expenses required to resolve the violation shall be at the Contractor's expense.

The Contractor shall be responsible for obtaining all necessary permits, manifests, and bill of lading documentation in conjunction with contaminated soil loading, hauling and disposal; and shall provide timely notification of such actions as may be required by applicable federal, state regional, and/or local authorities. RIDEM shall be notified within 24 hours if an unexpected change of conditions is encountered related to the presence of hazardous wastes or material encountered at the site.

The Contractor shall classify excavated contaminated soil as "Wet" or "Dry". Wet contaminated soil is defined as soil that is excavated from at or below the groundwater table and has a moisture content that does not comply with the disposal/recycling facility's moisture content acceptance criteria. Dry contaminated soil is soil excavated from above the groundwater table and has a moisture content that complies with the disposal/recycling facility's moisture content acceptance criteria. Dry contaminated soil that does not comply with the disposal/recycling facility's moisture content acceptance criteria shall be considered wet contaminated soil.

Excavated wet contaminated soil shall require stockpiling and dewatering in accordance with Section 30 04 82 Handling, Hauling, and Stockpiling of Wet Contaminated Soil prior to disposal at the RIDOT approved disposal facility.

Dry contaminated soil shall not be stockpiled on-site. Dry contaminated soil shall be excavated, loaded, and hauled to the RIDOT approved disposal facility.

The Contractor shall be responsible for all costs including but not limited to labor, laboratory analytical, application fees, and federal, state, and local regulatory fees associated with classifying contaminated soil for disposal at the RIDOT approved disposal facility. The Contractor shall be responsible for pre-classifying the dry contaminated soil for direct loading, hauling, and

beneficial reuse/disposal shall include collecting any additional soil samples, the laboratory analysis of the additional soil samples, preparing any submittals required by the RIDOT approved disposal facility, and obtaining approval for disposal at the RIDOT approved disposal facility. The Contractor shall be responsible for classifying the wet contaminated soil for loading, hauling, and disposal shall include collecting any additional soil samples, the laboratory analysis of the additional soil samples, preparing any submittals required by the RIDOT approved disposal facility, and obtaining approval for disposal at the RIDOT approved disposal facility. The Contractor shall submit a copy of the RIDOT approved disposal facility acceptance for the disposal of contaminated soil at the facility to the RIDOT. Where specifications, requirements, and reference documents vary, the more stringent requirements shall apply.

METHOD OF MEASUREMENT: Section 30 02 25 "Load, Haul, and Dispose Contaminated Soil" will be measured for payment by the "Ton" actually loaded and hauled and disposed in accordance with the Contract Documents and/or as directed by the RIDOT. The number of tons will be determined from weight slips, generated by the receiving disposal facility or other Contractor provided scale approved by the RIDOT.

BASIS OF PAYMENT: Section 30 02 25 "Load, Haul, and Dispose Contaminated Soil" bid quantity is 750 tons. Payment for this section, within the bid quantity, shall not be paid for separately. Payment is included in the "**contract sum**" listed in the Bid Proposal Form. The portion of the "**contract sum**" shall constitute full and complete compensation for all labor, materials, tools, and equipment and all other incidentals required to complete the work as described in the Contract Documents, complete in place and accepted by the RIDOT.

In accordance with the above stated method of measurement, should the "Load, Haul, and Dispose Contaminated Soil" quantity exceed the bid quantity of 750 tons, the Contractor will be paid as discussed in the Contingency section of the Contract Documents. The unit price per ton shall constitute full and complete compensation for all labor, materials, tools, and equipment and all other incidentals required to complete the work as described in the Contract Documents, complete in place and accepted by the RIDOT.

Final payment for "Load, Haul, and Dispose Contaminated Soil" will not be made until all disposal documentation including but not limited to manifests and/or bills of ladings and disposal receipts have been submitted and approved by the RIDOT.

SECTION 30 04 10
ANALYTICAL TESTING REQUIREMENTS FOR IMPORTED SOIL

DESCRIPTION: The work consists of obtaining and screening soil samples from soil sources to be imported and incorporated into the East Providence Salt Shed project's limit of disturbance. These soil samples shall be collected prior to importing soils to the project area for use in the construction process. Soil source samples shall be analyzed for certain contaminants as outlined in these Special Provisions and in accordance with the March 2019 Gordon R. Archibald's Construction Soil Management Plan (CSMP) and the Contract Drawings, and in a manner satisfactory to the RIDOT. The Contractor shall provide submittals, sampling and laboratory testing as outlined in these Special Provisions prior to the delivery of soils to the Project.

SUBMITTALS: Prior to commencing construction, the Contractor shall submit to the RIDOT a list of soil sources for each classification of soil outlined in these Special Provisions to be imported and incorporated into the East Providence Salt Shed project's limit of disturbance. The list for each soil classification shall state the location of material, owner, anticipated quantity of soil to be imported, material state (in situ, stockpiled), material condition (virgin, processed, reclaimed, recycled from another Project) and any known environmental history associated with material condition. Include with list any existing analytical results of soil source.

Prior to commencing construction, the Contractor shall submit to the RIDOT a Sampling and Analytical Work Plan (SAWP) outlining the methodology used to collect, preserve, analyze and report soil sample results. As minimum, the SAWP shall include:

- Sample collection methods including a description of sampling equipment, grab sample size and how representative grab samples will be obtained from in situ undeveloped and developed borrow sources and/or from stockpiled processed, reclaimed and/or recycled borrow sources;
- Procedures for decontamination of sampling equipment prior to and between obtaining successive samples;
- Sample container, storage and preservation procedures and holding times;
- Sample handling, packaging, and transportation protocols;
- Sample documentation (labeling, chain-of-custody, log book); and
- Sampling and analysis quality assurance/quality control procedures.

The Contractor shall provide third party soil sampling with all samples analyzed at an analytical laboratory who meets the minimum requirements and guidelines to conduct chemical analysis, as developed by the EPA. The analytical laboratory shall be approved/certified by the Rhode Island Department of Environmental Management. The detection limit for all analytical results shall be below the acceptance criteria outlined in this Special Provision.

The soil sampling frequency (which is dependent on soil borrow source and contaminant) and a list of contaminants to be analyzed for each soil classification are as outlined in this Special

Provision. The Contractor shall submit to the RIDOT two copies of an Imported Soil Material Compliance Report that includes soil analytical results, applicable QA/QC data and chains of custody a minimum of one month prior to importing each classification of soil outlined in these Special Provisions to be imported and incorporated into the Project. The submittal shall include an opinion authored by a professional engineer registered in the State of Rhode Island and Providence Plantation who has a minimum of 10 years of experience evaluating soil compliance with the RIDEM's Remediation Regulations Method 1 soil direct exposure criteria and leachability criteria that the soil classification is compliant with the Project Specification requirements for that soil classification. The RIDOT shall review this submittal. The soil classification shall not be imported into the Project Limits until the RIDOT has provided written concurrence that the soil classification meets the Specification requirements for the soil classification.

MATERIALS AND PERSONNEL: The Contractor shall be responsible for furnishing all equipment, personnel and subcontractors required to complete and submit soil testing required in this Special Provisions.

All materials to be used shall be in accordance with all appropriate sections of the Rhode Island Standard Specifications for Road and Bridge Construction, 2013 Edition, with all revisions.

TESTING: Testing as described in this section is required for soil imported to the East Providence Salt Shed project's limit of disturbance.

1. Soil imported for use in the East Providence Salt Shed project limit of disturbance for use as Common Borrow, Gravel Borrow, Modified Common Borrow, Fill Gravel Borrow Under Structures, and Pervious Fill used up to a non-impervious finished grade or to subgrade of an impervious surface shall be shown to have an average contaminant level below the Rhode Island Department of Environmental Management (RIDEM) Method 1 RIDEM Residential Direct Exposure Criteria (RDEC) for TPH, VOC, SVOCs (16 PAH priority pollutants only), PCBs, and RCRA 8 Metals prior to delivery to the Project.

   Soil imported for use in the East Providence Salt Shed project limit of disturbance from a non-developed borrow source shall be tested at a frequency of 1 sample for every 5,000 cubic yards of in situ soil with a minimum of 2 samples per borrow source. Soil imported from another project or developed borrow source shall be tested at a frequency of 1 sample for every 2,000 cubic yards with a minimum of 2 samples per borrow source. Contaminants to be tested, the test methods and acceptance shall be as outlined in the following table:

Constituent	Test Method	Minimum Detection Level
TPH	EPA Method 8100M	Below RIDEM Method 1 R-DEC
VOC	EPA Method 8260B	Below RIDEM Method 1 R-DEC
Semi-VOCs (16 PAHs only)	EPA Method 8270C	Below RIDEM Method 1 R-DEC
PCBs	EPA Method 8082A	Below RIDEM Method 1 R-DEC
RCRA Eight Metals	EPA Methods 6010 and 7471A	Below RIDEM Method 1 R-DEC

Notes:

1. Gravel Borrow Subbase shall not require testing.
2. The only exception is Arsenic, wherein the acceptance and sampling frequency criteria include the following:
   - No individual sample result shall be greater than 15 mg/kg;
   - A minimum of 10 soil samples per first 2000 cubic yards with 2 additional soil samples per each additional 2000 cubic yards of borrow source;
   - No greater than 10% of sample results shall exceed 7.0 mg/kg; and
   - The average of all sample results shall be 7.0 mg/kg or less.

3. Soil imported for use in the East Providence Salt Shed project limit of disturbance as Loam Borrow shall be shown to have an average contaminant level below the RIDEM Residential Direct Exposure Criteria (RDEC) for TPH, VOC, SVOCs (16 PAH priority pollutants only), PCBs, and RCRA Eight Metals prior to delivery to the Project. Soil shall be tested at a frequency of 1 sample for every 2,000 cubic yards with a minimum of 2 samples per borrow source. Contaminants to be tested, the test methods and acceptance shall be as outlined in the following table:

Constituent	Test Method	Minimum Detection Level
TPH	EPA Method 8100M	Below RIDEM Method 1 R-DEC
VOC	EPA Method 8260B	Below RIDEM Method 1 R-DEC
Semi-VOCs (16 PAHs only)	EPA Method 8270C	Below RIDEM Method 1 R-DEC
PCBs	EPA Method 8082A	Below RIDEM Method 1 R-DEC
RCRA Eight Metals	EPA Methods 6010 and 7471A	Below RIDEM Method 1 R-DEC

Notes:

1. The only exception is Arsenic, wherein the acceptance and sampling frequency criteria include the following:
   - No individual sample result shall be greater than 15 mg/kg;
   - A minimum of 10 soil samples per first 2000 cubic yards with 2 additional soil samples per each additional 2000 cubic yards of borrow source;
   - No greater than 10% of sample results shall exceed 7.0 mg/kg; and
   - The average of all sample results shall be 7.0 mg/kg or less.

3. Soil imported for use in the East Providence Salt Shed project limit of disturbance as Special Graded Aggregate for Shaping and Trimming Driveways or Shoulders or Crushed Stone Surface Treatment shall be shown to have an average contaminant level below the Rhode Island Department of Environmental Management (RIDEM) Method 1 Residential Direct Exposure Criteria (RDEC) for TPH, VOC, SVOCs (16 PAH priority pollutants only), PCBs, and RCRA Eight Metals1 prior to delivery to the Project. Soil shall be tested at a frequency of 1 sample for every 2,000 cubic yards with a minimum of 2 samples per borrow source. Contaminants to be tested, the test methods and acceptance shall be as outlined in the following table:

Constituent	**Test Method**	**Minimum Detection Level**
TPH	EPA Method 8100M	Below RIDEM Method 1 R-DEC
VOC	EPA Method 8260B	Below RIDEM Method 1 R-DEC
Semi-VOCs (16 PAHs only)	EPA Method 8270C	Below RIDEM Method 1 R-DEC
PCBs	EPA Method 8082A	Below RIDEM Method 1 R-DEC
RCRA Eight Metals	EPA Methods 6010 and 7471A	Below RIDEM Method 1 R-DEC

Notes:

1. The only exception is Arsenic, wherein the acceptance and sampling frequency criteria include the following:
   - No individual sample result shall be greater than 15 mg/kg;
   - A minimum of 10 soil samples per first 2000 cubic yards with 2 additional soil samples per each additional 2000 cubic yards of borrow source;
   - No greater than 10% of sample results shall exceed 7.0 mg/kg; and
   - The average of all sample results shall be 7.0 mg/kg or less.

ACCEPTANCE CRITERIA

Contaminant	RDEC (mg/kg)	I/C-DEC (mg/kg)	Contaminant	RDEC (mg/kg)	I/C-DEC (mg/kg)
Volatiles					
Acetone	7,800	10,000	Ethylene dibromide	0.01	0.07
Benzene	2.5	200	Isopropyl benzene	27	10,000
Bromodichloromethane	10	92	Methyl ethyl ketone	10,000	10,000
Bromoform	81	720	Methyl isobutyl ketone	1,200	10,000
Bromomethane	0.8	2,900	Methyl tertiary-butyl ether (MTBE)	390	10,000
Carbon tetrachloride	1.5	44	Methylene chloride	45	760
Chlorobenzene	210	10,000	Styrene	13	190
Chloroform	1.2	940	1,1,1,2-Tetrachloroethane	2.2	220
Dibromochloromethane	7.6	68	1,1,2,2-Tetrachloroethane	1.3	29
1,2- Dibromo-3-chloropropane (DBCP)	0.5	41	Tetrachloroethene	12	110
1,1-Dichloroethane	920	10,000	Toluene	190	10,000
1,2-Dichloroethane	0.9	63	Trichloroethane	540	10,000
1,1-Dichloroethene	0.2	9.5	1,1,2-Trichloroethane	3.6	100
cis-1,2-Dichloroethene	630	10,000	Trichloroethene	13	520
Trans-1,2-Dichloroethene	1,100	10,000	Vinyl chloride	0.02	3.0
1,2-Dichloropropane	1.9	84	Xylenes (Total)	110	10,000
Ethylbenzene	71	10,000			
Semi-Volatiles					
Acenaphthene	43	10,000	Chrysene	0.4	780
Acenaphthylene	23	10,000	Dibenz(a,h)anthracene[a]	0.4	0.8
Anthracene	35	10,000	Fluoranthene	20	10,000
Benzo(a)anthracene	0.9	7.8	Fluorene	28	10,000
Benzo(a)pyrene	0.4	0.8	Indeno(1,2,3-cd)pyrene	0.9	7.8
Benzo(b)fluoranthene	0.9	7.8	Naphthalene	54	10,000
Benzo(g,h,i)perylene	0.8	10,000	Phenanthrene	40	10,000
Benzo(k)fluoranthene	0.9	7.8	Pyrene	13	10,000
Polychlorinated Biphenyls (PCBs)					
PCBs	10	10			
RCRA 8 Metals					
Arsenic[b]	7.0	7.0	Lead[c]	150	500
Barium	5,500	10,000	Mercury	23	610
Cadmium	39	1,000	Selenium	390	10,000
Chromium III (Trivalent)	1,400	10,000	Silver	200	10,000
Chromium VI (Hexavalent)	390	10,000			

Soil Criteria as presented is based on the RI DEM Method 1 Criteria. See notes below for qualifiers

[a] Estimated quantitation limits

[b] Background Levels of Priority Pollutant Metals In Rhode Island Soils, T. O'Connor, RIDEM. For arsenic, see Section 12.0

[c] Direct exposure criteria for Lead consistent with the Rhode Island Department of Health Rules and Regulations for Lead Poisoning Prevention [R23-24.6-PB], as amended

METHOD OF MEASUREMENT: Section 30 04 10 "Analytical Testing Requirements for Imported Soil**"** will not be measured separately for payment.

BASIS OF PAYMENT: Section 30 04 10 "Analytical Testing Requirements for Imported Soil" will not be paid for separately. Payment is included in the **"contract sum"** listed in the Bid Proposal Form. The portion of the **"contract sum"** representing payment for this Section constitutes full and complete compensation for all labor, materials, and for all other incidentals required to finish this work, as discussed in these provisions.

SECTION 30 04 51
DEWATERING AND TREATMENT – AREAS WITH CONTAMINATED GROUNDWATER

REQUIREMENT: The Contractor shall hire a licensed Testing Agency to sample the groundwater in the areas of required dewatering activities prior to dewatering activities. The collected groundwater samples shall be laboratory analyzed in accordance with the RIDEM's Rhode Island Pollutant Discharge Elimination System (RIPDES) requirements. Should any compounds exceed the RIPDES requirements, the Contractor shall receive a RIDEM RIPDES Remediation General Permit Notice of Intent (NOI) for the East Providence Salt Shed project. The approved RIPDES Remediation General Permit shall be implemented and Section 30 04 51 shall be required.

Should the groundwater's laboratory analytical report comply with the RIPDES requirements in full, this Section 30 04 51 shall not be required and payment will not be received. In this instance, dewatering shall be conducted in accordance with the Rhode Island Blue Book, latest addition and addenda.

Should groundwater dewatering not be required as part of the East Providence Salt Shed project, payment for this Section shall not be received.

REFERENCE: The Contractor is directed to the Engineer's 2019 RIPDES Remediation General Permit application as found in the project documents. The attached General Permit is for reference purpose only. The Contractor shall receive a RIDEM RIPDES Remediation General Permit Notice of Intent (NOI) should any compound be found exceeding the RIPDES requirements.

DESCRIPTION: This work shall be in accordance with Section 203 of the Rhode Island Department of Transportation Standard Specifications for Road and Bridge Construction 2010 edition with all addenda except as modified herein.

This work shall consist of:

1. Dewatering as necessary in excavations for utility construction, and for any and all other work requiring dewatering within the project's Limit of Disturbance as shown on the Contract Plans.

2. Dewatering and treatment under this Item shall be in areas where contaminated groundwater is encountered and groundwater dewatering is required.

3. For the purpose of this Item contaminated groundwater shall be defined as groundwater that is not compliant with the RIDEM Groundwater Quality Rules dated June 2010 with all revisions and addenda GA Groundwater Standards.

4. Designing, providing, installing, operating, maintaining, and subsequently removing temporary dewatering systems that shall perform the following functions:

    a. Lower groundwater levels or hydrostatic pressure heads in the soils within the excavation limits to a minimum of at least 2 feet below excavation level.
    b. Maintain a dry and stable subgrade and/or work area and prevent piping, boiling or detrimental saturation of the excavation base.
    c. Divert surface water away from excavations and all other work areas on the project.
    d. Control and remove seepage, surface water, and precipitation in excavations and/or work areas.
    e. Prevent disturbance of adjacent structures due to the dewatering.
    f. Provide sedimentation control to reduce total suspended solids in effluent prior to discharge.
    g. Maintain construction-dewatering effluent in compliance with applicable permit requirements.

5. Providing, operating, maintaining, and removing temporary treatment equipment to achieve compliance with the RIDEM Remediation General Permit Notice of Intent or as required by the RIDOT. All dewatering system treatment effluent shall comply with requirements of the applicable permits and shall be in accordance with all federal, state and local codes, ordinances, and regulations.

6. Performing dewatering effluent sampling in accordance with all applicable permits and regulations. The Contractor shall hire a licensed Testing Agency which shall monitor the effluent and compare the results with the permitted discharge criteria.

7. Operating all construction dewatering in a manner that prevents disturbance of adjacent structures due to the lowering of groundwater levels outside of the project limits.

8. Demobilizing the treatment system, abandoning dewatering wells and/or points, and restoring the dewatering system location as required in the Contract Specifications and Plans.

The Contractor shall comply with all requirements of federal, state, and local permits.

MATERIALS: There are no additional material requirements.

SUBMITTALS: The following submittals shall apply to dewatering in the East Providence Salt Shed project as shown on the Contract Plans and described in the Contract specification. All submittals shall be made by the Contractor for review and approval by the RIDOT prior to the start of dewatering.

The Contractor shall submit a Groundwater Sampling Plan (GSP) as part of the Contractors Soil Management Plan (SMP) to the RIDOT including but not limited to the plans and figures, sample location, methods, and laboratory analysis. The GSP shall be in accordance with the requirements found in the RIDEM's *Rules and Regulations for Dredging and the Management of*

Dredged Material, Rule 11 - Dewatering of Dredged Material. The groundwater shall not be sampled prior to RIDOTs approval of the submitted GSP. The Contractor shall submit to the RIDOT a Groundwater Sampling Report summarizing the sampling methods, and a summary of the laboratory analysis compared to the RIPDES requirements.

Should any groundwater compounds exceed the RIPDES requirements, the Contractor may determine the method for dewatering as either Onsite Treatment or the Storage and Hauling for Offsite Disposal. The requirements of the methods is as follows:

Store and Haul for Offsite Disposal

The following submittals shall apply to dewatering shall be made by the Contractor for review and approval by the RIDOT prior to the start of dewatering. The Contractor shall conform to all submittal requirements of the Contract, including submitting the information specified herein to the RIDOT.

1. The Contractor shall submit the following information:

    a. The Contractor shall submit the proposed location of the dewatering equipment to the RIDOT for approval. A submittal is required for each dewatering equipment if dewatering is required in multiple locations. The Contractor shall not install dewatering equipment until their respective locations are approved by the RIDOT.

    b. Shop drawings showing the proposed types and details of the surface water control, dewatering system (including but not limited to well details, well screen openings, and filter pack materials), groundwater pumping and/or vacuum extraction equipment, groundwater observation well locations, sedimentation tank.

    The shop drawings shall include a complete description of equipment and materials to be used and the procedure to be followed in installation, operation, maintenance and removal in relation to the proposed sequence of excavation construction and backfilling. The shop drawing shall also describe the standby equipment and standby power supply.

    c. The anticipated peak and average dewatering rates.

    d. The Contractor shall submit proposed methods for removing the dewatering system elements, including methods to ensure that no significant ground movements will occur as a result of extraction. If deemed necessary, the Contractor shall describe locations of, or conditions under which dewatering systems will be left in place, including proposed cutoff levels and methods for tremie grouting the wells or well points.

    e. At least one (1) week (five calendar days) prior to any dewatering activities commencement onsite, the Contractor shall submit to the RIDOT a list of proposed

contaminated groundwater receiving facilities, along with copies of each facility's license and permit, and each facility's written acceptance of dewatering water. RIDOT approval of the proposed contaminated groundwater receiving facilities shall be required prior to removing contaminated groundwater off-site.

f. The Contractor shall sample and characterize the contaminated groundwater for disposal. The Contractor's sampling and laboratory analytical protocol shall conform to the disposal facility's laboratory analytical requirements for acceptance. The Contractor shall prepare and submit all documentation required for disposal facility acceptance. The Contractor shall be responsible for obtaining approval for disposal at the selected facility.

g. The Contractor shall provide two copies of the receiving facility approval for the disposal of contaminated groundwater at the facility to the RIDOT a minimum of five (5) calendar days prior to the loading, hauling, and disposal of contaminated groundwater at the facility.

h. The Contractor shall provide two copies of contaminated groundwater manifest/bill of lading that require the RIDOT signature as the waste generator to the RIDOT a minimum of five (5) calendar days prior to being loaded, hauled and transported for off-site disposal. The RIDOT shall sign and return the contaminated groundwater manifest/bill of lading to the Contractor one day prior to the contaminated groundwater being transported for disposal.

i. Hauling Slips: The Contractor shall prepare slips to document the transportation of the groundwater from the project to the final disposal site. The slips shall, at a minimum, list the following information: date, truck identification, truck driver's name, approximate quantity of groundwater hauled, weight, disposal location, and the Owner's representative's signature. These slips will be prepared in duplicate. The Contractor shall retain one copy, and the second copy will be given to the RIDOT at the end of each day in which groundwater is hauled.

j. Copies of all Bill of Ladings, manifests, disposal facility weight slips and any other disposal related documents shall be provided to the RIDOT within 5 days of the disposal work being completed.

2. Assurance/Control Submittals:

a. Samples:

1) During dewatering and as required, the Contractor shall provide results of laboratory testing, monitoring, and inspection records. The Contractor shall submit bi-weekly monitoring and inspection reports to the Owner summarizing all monitoring, inspection, and analytical monitoring data.

Onsite Treatment

The Contractor shall submit the following information to the RIDOT:

a. The qualifications of the Dewatering and Treatment System Contractor. The Dewatering Contractor shall have a minimum of 10 years of experience in installation, operation, and maintenance of Dewatering and treatment systems including, but not limited to, well point systems, filtration systems, metals removal system, and granular activated carbon treatment systems.

b. The Contractor's Designer shall be a Professional Engineer registered in the State of Rhode Island. The Contractor's Professional Engineer shall have a minimum of 10 years of relevant experience in designing dewatering and treatment systems.

c. The Contractor shall submit the proposed location of the dewatering equipment, the dewatering treatment system, and the dewatering system discharge outfall to the RIDOT for approval. A submittal is required for each dewatering equipment, dewatering treatment system, and dewatering system outfall location if dewatering is required in multiple locations. The Contractor shall not install dewatering equipment, the dewatering treatment system, or the discharge outfall until their respective locations are approved by RIDOT.

d. Shop drawings showing the proposed types and details of the surface water control, dewatering system (including but not limited to well details, well screen openings, and filter pack materials), groundwater pumping and/or vacuum extraction equipment, groundwater observation well locations, sedimentation tank, filtration system, metals removal system, granular activated carbon treatment system, and discharge systems. Complete back-up system as required under Section 2p shall be included.

   The shop drawings shall include the arrangements, sizes, capacities, plan locations and depths of the proposed dewatering and treatment systems, a complete description of equipment and materials to be used and the procedure to be followed in installation, operation, maintenance and removal in relation to the proposed sequence of excavation, demolition, foundation construction and backfilling. The shop drawing shall also describe the standby equipment and standby power supply; and the proposed dewatering effluent discharge locations, and their relationship to sediment control facilities and water disposal points.

e. The design and details of the on-site treatment system components including calculations, supporting technical information, and a schedule for cleaning the filtration equipment and changing out the granular activated carbon treatment units, if utilized in the treatment system.

f. Design calculations documenting that the dewatering system can handle all seepage into the excavation and will prevent piping or boiling of the excavation subgrade.

g. The anticipated peak and average dewatering rates.

h. The name of the Rhode Island Department of Health certified analytical laboratory performing the laboratory analytical testing.

i. The proposed methods for removing the dewatering and treatment system elements, including methods to ensure that no significant ground movements will occur as a result of extraction that could adversely impact any completed structures. If deemed necessary, the Contractor shall describe locations of, or conditions under which dewatering systems will be left in place, including proposed cutoff levels and methods for tremie grouting the wells or well points.

j. The Contractor shall prepare a Remediation General Permit Notice of Intent for the contaminated groundwater dewatering and treatment system and submit two copies of the document to the RIDOT for review and approval. RIDOT's Remediation General Permit Notice of Intent review shall be subject to the shop drawing review deadline of 45 days.

k. RIDOT shall be responsible for the submittal of the Remediation General Permit Notice of Intent to the RIDEM Office of Water Resources. The RIDEM Office of Water Resources' review and approval of the Remediation General Permit Notice of Intent is not subject to the shop drawing review deadline of 45 days. The Contractor shall be required to complete any and all revisions to the Remediation General Permit Notice of Intent required by the RIDEM Office of Water Resources to obtain approval.

l. The Contractor shall provide two copies of the RIDEM Order of Approval for the Remediation General Permit Notice of Intent for the contaminated groundwater dewatering and treatment system to the RIDOT.

m. The Contractor shall provide one-week advance notice to the RIDOT prior to any discharge of dewatering effluent.

n. During dewatering and as required, the Contractor shall provide results of laboratory testing, monitoring, and inspection records dictated by the applicable permit requirements or conditions. The Contractor shall submit bi-weekly monitoring and inspection reports to the RIDOT summarizing all monitoring, inspection, and analytical monitoring data.

o. The Contractor shall be responsible for abandoning dewatering wells and/or points in accordance with the RIDEM's Groundwater Quality regulations requirements. The Contractor shall be responsible for disposing of dewatering well and/or point materials after well/point abandonment.

p. The Contractor shall be responsible for demobilizing dewatering and treatment system equipment and restoring the dewatering and treatment system location as required in the Contract Specifications and Plans.

1. Design and Performance Criteria:

General:

a. The methods of controlling water, inside and outside the work area being dewatered, are at the option of the Contractor who shall be solely responsible for the design, operation, performance, location, arrangement, and depth of any system or systems selected to accomplish the work. Equipment shall be of suitable size, capacity and type to perform dewatering and to maintain dry and stable working surfaces, and to pump, store, manage, treat and discharge the dewatering effluent.

b. The Contractor shall adapt and modify the dewatering and treatment system(s) as required throughout the course of the work to meet the requirements of the work.

c. The Contractor shall maintain construction dewatering and treatment equipment, and subsurface drainage in an acceptable manner during the course of the work. The Contractor shall maintain site grades to direct surface runoff to collection points and shall prevent surface water from running or collecting over prepared subgrades, fill surfaces, or the work area being dewatered. The Contractor shall collect and discharge surface water, seepage, precipitation, groundwater and other water that enters work areas being dewatered. No standing water shall be allowed to accumulate in excavations or work areas being dewatered.

d. The Contractor shall install dewatering wells, points, or other dewatering structures as required to adequately dewater the site.

e. The Contractor shall install observation wells, as approved by the RIDOT, in order to monitor the effectiveness of the dewatering system.

f. The Contractor shall dewater to allow installation of temporary excavation support elements without loss of ground or unacceptable ground movements.

g. The Contractor shall minimize impacts to groundwater levels outside the site limits at all times during construction.

h. The Contractor shall dewater such that all construction and demolition is conducted "in-the-dry", unless otherwise stated. "In-the-dry" shall be construed to mean lower groundwater levels or hydrostatic pressure heads in the soils within the excavation limits to a minimum of at least 2 feet below excavation level. The excavation shall be without standing water or saturated conditions that may interfere with construction operations and the successful completion of the work.

i. The Contractor shall take measures to prevent damage to properties, buildings or structures, utilities, and all other existing and newly constructed work.

j. The Contractor shall be aware that the subgrade likely consists of sand and gravelly sand which, given its high hydraulic conductivity (permeability), will impact the amount of seepage into the excavation. The Contractor shall include as part of their dewatering methods design calculations documenting that the selected dewatering system(s) can handle this seepage and prevent piping into the excavation.

k. The Contractor shall modify the system(s) at no additional cost to the State if, after installation and while in operation, it causes or threatens to cause damage to properties, buildings or structures, utilities, and all other existing or newly constructed work, or otherwise does not perform as required.

l. The Contractor shall repair damage to any utility, structure, and/or facility resulting directly or indirectly from dewatering activities, including inadequate performance of such systems, to the satisfaction of the RIDOT at no additional cost to the State.

m. The Contractor shall manage construction dewatering effluent on-site provided that the on-site discharge of the effluent does not result in erosion and off-site surface runoff, damage any on-site construction, and does not spread contamination and/or increase levels of contamination on any portion of the site.

n. The Contractor shall include storage vessels in the system design, and shall be responsible for implementing appropriate measures and/or using appropriate equipment to capture, remove, and dispose of suspended solids, total petroleum hydrocarbons, semivolatile compounds, and volatile organic compounds. The Contractor shall be responsible for providing a treatment system to effectively handle the expected flows influent concentrations. The treatment system influent design calculations for the contaminated groundwater treatment system shall be the concentrations as provided in the Remediation General Permit Notice of Intent application approved by the RIDEM – Office of Water Resources. The Contractor shall be responsible for the design calculations by collecting samples prior to designing the treatment system.

o. The Contractor shall be responsible for the collection of any all groundwater quality information required for the contaminated groundwater treatment system design and permitting. The Contractor is advised to review the groundwater sampling and analysis requirements in the RIDEM Office of Water Resources.

p. The Contractor shall comply with all federal, state, and local codes, ordinances and regulations for disposal of all discharge water and for sediment control.

q. The Contractor shall maintain continuous and complete effectiveness of dewatering systems and surface water control 24 hours per day, 7 days per week at all times until no longer required.

r. The Contractor shall maintain and employ adequate back-up equipment, dewatering system components, and power in the case of equipment breakdown. The Contractor shall devise emergency procedures for maintaining continuous, uninterrupted dewatering operations. The Contractor shall regularly check the back-up equipment for proper operation at the start of the work and every week thereafter.

2. Dewatering and Treatment System:

a. The Contractor shall provide, install, maintain and operate pumps, wells, dewatering points, and related equipment of sufficient capacity to adequately dewater excavations or work areas until the required construction, installation, and backfilling of underground structures are completed to a level at which the construction is no longer impacted, as approved by the RIDOT.

Dewatering systems may include gravity wells, vacuum wellpoints or open pumping from sumps and/or drainage trenches, or a combination of such systems and seepage cutoff walls, depending upon location on-site, and/or soil conditions. All sumps shall include a properly designed sand filter or filter fabric, or other acceptable materials to prevent the migration or pumping of fine-grained materials and subgrade disturbance.

The treatment system shall be of sufficient size and capacity to handle the dewatering flows and to reduce suspended materials, total petroleum hydrocarbon, and organic compound concentrations in the dewatering effluent in accordance with all permits obtained for the Project. Fractionation tanks shall be used to remove sediment and allow sediment to settle inside the tank. A filter unit shall be used to pretreat the water that will be treated with the granular activated carbon vessels. Granular activated carbon or other treatment equipment selected by the Contractor and approved by the RIDOT shall be used to treat organic compounds. If storage units are used to handle quantities of water in excess of the sedimentation tank capacity, they shall be of sufficient size and capacity to allow work to proceed without interruption.

b. The Contractor shall maintain water levels or hydrostatic pressure heads at least 2 feet below excavation and fill subgrades or greater as may be necessary to maintain an "in-the-dry" stable work area and/or subgrade, whichever is deeper, continuously, 24 hours per day.

Dewatering operations shall prevent loss of fine materials into bedding, piping, boiling up of trench and excavation bottoms, or other disturbances that may cause subsidence or loss of strength of the underlying natural soils.

If requested by the RIDOT, the Contractor shall excavate all soils made unsuitable due to inadequate dewatering or disturbance by construction operations and replace the unsuitable soils with compacted fill, to the satisfaction of the RIDOT at no additional cost to the State.

If the dewatering procedures result in boiling, loss of fines, ground instability, uncontrolled flow, or other detrimental effects, the Contractor shall immediately notify the RIDOT of these unsuitable conditions. The Contractor shall be required to modify its operations or take other supplementary measures to correct the situation as approved by the RIDOT at no additional cost to the State.

c. When installing tank vaults, sewer manholes, or other structures that are subject to buoyant forces, the Contractor shall maintain dewatering operations until sufficient structure dead weight or backfill is placed to resist uplift forces.

d. Permanent utilities and piping shall not be used as part of dewatering system(s).

e. The Contractor shall inform the RIDOT in writing of any changes in the dewatering and treatment system that he wishes to make to accommodate field conditions prior to making the changes.

f. The Contractor shall discharge dewatering effluent to the designated discharge point(s) identified in the applicable permits according to the stipulations in the applicable permits obtained for the project. The discharge shall be conducted after receiving approval from the applicable permit agencies.

g. The Contractor shall provide a calibrated flow meter to measure the discharges flow rate and the total volume of water discharged. The Contractor shall maintain daily discharge flow-monitoring logs indicating the daily flow rate.

h. The Contractor shall provide access to the dewatering and treatment system(s) at all times to facilitate obtaining samples of the dewatering effluent prior to and after treatment.

i. The Contractor shall ensure that the dewatering effluent contains no compounds in excess of the discharge permit limit concentrations. If such conditions occur the Contractor shall immediately notify the RIDOT and discontinue the discharge until the system can be modified to the satisfaction of the RIDOT in accordance with all applicable federal, state and local regulations and permits.

The Contractor's licensed Testing Agency shall obtain samples of the dewatering effluent at the frequencies specified in the Permit, or as otherwise requested by the RIDOT. Results of testing shall be submitted to the appropriate permit and regulatory agencies and the RIDOT.

If the results of analyses indicate that the water quality does not comply with the applicable Permit criteria, the Contractor shall take immediate action to meet the requirements, including, but not limited to, continuing to store any pumped water on-site until an adequate treatment system can be implemented. The design and operation of the treatment system to meet the requirements shall be the sole responsibility of the Contractor.

j. The Contractor shall prepare any Remediation General Permit Notice if Intent discharge monitoring reports as required. Draft discharge monitoring reports shall be submitted to the RIDOT for review and approval one week prior to their required RIDEM submittal date.

k. The Contractor shall pay for all fines, penalties and other costs associated with noncompliance of the discharge permits at no additional cost to the State.

l. The Contractor shall remove and backfill dewatering elements when they are no longer required, using methods acceptable to the RIDOT and in compliance with the RIDEM Groundwater Quality Regulations. The Contractor shall backfill any voids resulting from dewatering system removal with cement grout, concrete, or other material as directed by the RIDOT to prevent potential loss of ground. The Contractor shall restore the dewatering system location to the conditions required in the Contract Specifications and Plans.

METHOD OF MEASUREMENT: This item does not require a measurement for payment.

BASIS OF PAYMENT: Section 30 04 51 "Dewatering and Treatment – Areas with Contaminated Groundwater" will be bid using a quantity of 40,000-gallons. Dewatering and Treatment shall be paid for at a unit price per gallon. The unit price so-stated constitutes full and complete compensation for all labor, materials, and equipment for implementing the work described in this Section plus all other substantial work and incidentals of whatever nature required to finish the work, complete and accepted by the Engineer.

Final payment for dewatering and treatment will not be made until all RIDEM Remediation General Permit documentation including but not limited to discharge monitoring reports, RIDEM permit termination submittal, and RIDEM approval to terminate the permit have been submitted and approved by the RIDOT.

SECTION 30 04 75
SOIL STOCKPILE – WET CONTAMINATED SOIL

DESCRIPTION: This item shall consist of constructing, maintaining, securing, and removing the wet contaminated soil stockpile. The wet stockpile locations shall be used to dewater excavated wet contaminated soils as directed by the RIDOT representative. The wet contaminated soil stockpile location shall be selected by the Contractor at no additional cost to the State, and is subject to the approval of the RIDOT prior to its construction. The location of the wet contaminated soil stockpile shall not obstruct through vehicular and pedestrian traffic. The wet contaminated soil stockpile shall be maintained for the duration of excavating, dewatering, and disposing of excavated wet contaminated soils.

The Contractor shall classify excavated contaminated soil as “Wet” or “Dry”. Wet contaminated soil is defined as soil that is excavated from at or below the groundwater table and has a moisture content that does not comply with the disposal/recycling facility’s moisture content acceptance criteria. Dry contaminated soil is soil excavated from above the groundwater table and has a moisture content that complies with the disposal/recycling facility’s moisture content acceptance criteria. Contaminated soil that does not comply with the disposal/recycling facility’s moisture content acceptance criteria shall be considered wet contaminated soil.

Dry contaminated soil shall not be stockpiled on-site in accordance with Section 30 02 25.

MATERIALS: All materials used, including but not limited to, hay bales and concrete barrier, shall conform to the standard specifications for the applicable items.

Top Liner: The top liner shall be a minimum 6-mil polyethylene

Bottom Liner: Minimum standard for 20-mil cross laminated HDPE alloy bottom liner include: a) all bottom liner material must be warranted by the manufacturer for its intended use; b) all bottom liner installation and seaming will be done in accordance with the liner manufacturer's requirements; c) bottom liner material must be impermeable to the extent that it will prevent underlying soil and groundwater from becoming contaminated; and d) bottom liners meet the following minimum specifications:

SPECIFICATIONS	20-mil Cross Laminated HDPE Alloy
Thickness, mils (ASTM D5199)	20
Weight (lbs/1,000-sf) (ASTM D5199)	81
Tongue Tear (lbf) (ASTM D-2261)	28
Trapezoidal tear (lbf) (ASTM D-4533)	44
PPT Resistance (lbf) (ASTM D-2582)	50
Elongation at Break (%) (D-882)	550
Load at Break (lbf) (D-882)	75
Load at Yield (lbf) (D-882)	37
Dart Impact Strength (lbs) (ASTM D-1709)	3.5
Puncture Strength (lbs) (ASTM D-4833)	45

SUBMITTALS: The Contractor shall submit a plan detailing the proposed location for the wet contaminated soil stockpile to the RIDOT for approval. Any and all changes to the RIDOT approved wet contaminated soil stockpile location shall be subject to approval by the RIDOT prior to changes.

The Contractor shall submit a shop drawing for the wet contaminated soil stockpile bottom liner demonstrating that it is compliant with the 20-mil cross laminated HDPE alloy specification.

Dewatering of the wet contaminated soil will be required for disposal at the RIDOT approved disposal facility. The Contractor shall submit a plan detailing its proposed wet contaminated soil dewatering procedures to the RIDOT for review and approval. The Contractor shall not proceed with the stockpiling of excavated wet contaminated soil until the Contractor received written RIDOT approval for the dewatering plan.

CONSTRUCTION METHODS: The Contractor shall determine the size of the wet contaminated soil stockpile based on his anticipated excavation operations. Prior to constructing the wet contaminated soil stockpile the Contractor shall submit a plan to the RIDOT for approval showing the location, size and limits of the proposed wet contaminated soil stockpile. The Contractor shall construct the wet contaminated soil stockpile in accordance with the detail and only at the location approved by the RIDOT. Alternate locations for wet contaminated soil stockpiles shall be submitted to RIDOT for approval before any such stockpile shall be utilized. The wet contaminated soil stockpile shall be complete and ready to accept excavated soils prior to initiating any excavation operations.

The actual dimensions of the wet contaminated soil stockpile shall be determined by the Contractor. The wet contaminated soil stockpile shall be large enough to contain the amount of excavated wet contaminated soil anticipated at any one period and still provide ample operating

room for turning the excavated material to facilitate drying, loading, and unloading within the confines of the stockpile.

The material shall be dried as required for off-site disposal at the RIDOT approved disposal facility and turned over as necessary to facilitate the drying process.

The wet soil stockpiles shall be constructed in a manner that allows the Contractor to collect water that drains form the stockpile. Water that drains from the wet contaminated soil stockpile shall be collected and characterized for disposal by the Contractor. The Contractor shall provide copies of the disposal characterization laboratory analytical data to the RIDOT prior to off-site disposal. The Contractor shall be responsible for the transportation and off-site disposal of the collected water at a disposal facility approved by the RIDOT prior to disposal.

The Contractor shall inspect the wet contaminated soil stockpile weekly and perform all work required to maintain the soil stockpile. The 20-mil HDPE alloy bottom liner shall be repaired in accordance with the manufacturer's specifications or replaced when the bottom liner is damaged and is no longer impermeable. The top liner shall be replaced when it is ripped. Stockpiled wet contaminated soil shall be covered and the cover secured at the end of each workday that soils are being placed or removed from the contaminated soil stockpile locations. The wet contaminated soil stockpile shall be covered with two layers of 6-mil polyethylene sheeting overlapped a minimum of four feet and secured. Contractor shall maintain an inventory of stockpile maintenance items including but not limited to 6-mil polyethylene sheeting, weights to secure the contaminated soil stockpile covers, hay bales, composite filter socks, or other erosion control devices required to contain the contaminated soil, and any other items required for the stockpile maintenance.

Upon completion of excavation operations, and after all excavated soil is removed from the wet contaminated soil stockpile the Contractor shall restore the stockpile location to the final condition in accordance with the Plans. All materials used to construct the wet contaminated soil stockpile, including but not limited to HDPE alloy sheeting, polyethylene sheeting, geotextiles, hay bales and concrete barrier, shall remain the property of the Contractor and shall be disposed of legally.

METHOD OF MEASUREMENT: Section 30 04 75 "Soil Stockpile - Wet Contaminated Soil" shall not be measured separately.

BASIS OF PAYMENT: Section 30 04 75 "Soil Stockpile - Wet Contaminated Soil" shall not be paid separately. Payment for 30 04 75 "Soil Stockpile - Wet Contaminated Soil" will be included in payment for 30 04 82 "Handing, Hauling, and Stockpiling of Wet Contaminated Soil". The prices so-stated constitutes full and complete compensation for all labor, materials, and equipment for implementing the work described in this Section plus all other substantial work and incidentals of whatever nature required to finish the work, complete and accepted by the Engineer.

Final payment for these items will not be made until the wet soil stockpile area has been removed, restored as required in the Contract Documents, and approved by the RIDOT.

SECTION 30 04 82
HANDLING, HAULING, AND STOCKPILING OF WET CONTAMINATED SOIL

DESCRIPTION: This item includes the handling and hauling of wet contaminated soil from the East Providence Salt Shed project area's excavation locations to the RIDOT approved contaminated soil stockpile location, and the unloading and stockpiling of the wet contaminated soil in the stockpile location.

The work shall be performed in accordance with all appropriate sections of the Rhode Island Department of Transportation Standard Specifications for Road and Bridge Construction, 2013 Edition all revisions, and the project's RIDEM approved 2019 Construction Soil Management Plan (CSMP), and in compliance with all applicable permits.

The Contractor shall classify excavated contaminated soil as "Wet" or "Dry". Wet contaminated soil is defined as soil that is excavated from at or below the groundwater table and has a moisture content that does not comply with the disposal/recycling facility's moisture content acceptance criteria. Dry contaminated soil is soil excavated from above the groundwater table and has a moisture content that complies with the disposal/recycling facility's moisture content acceptance criteria. Contaminated soil that does not comply with the disposal/recycling facility's moisture content acceptance criteria shall be considered wet contaminated soil.

The Contractor shall load and haul excavated dry contaminated soil to the RIDOT approved off-site disposal facility. The Contractor shall only stockpile excavated wet contaminated soil as part of the East Providence Salt Shed project.

MATERIALS: The Contractor shall supply and utilize all required materials to adequately complete contaminated soil and sediment handling, hauling and stockpiling. Personal protective equipment shall be as specified in the Contractor's site specific Health and Safety Plan prepared in accordance with Section 30 01 20, Health and Safety Requirements.

CONSTRUCTION METHODS: The Contractor shall supply and utilize all required equipment and material to handle, haul, and stockpile excavated wet contaminated soil within the approved wet contaminated soil stockpile area. All soil stockpile locations shall be constructed in accordance with Section 30 04 75 Soil Stockpile – Wet Contaminated Soil as shown on the Contract Plans. The Contractor shall maintain the stockpile locations as required by the Engineer.

Wet contaminated soil excavated from the East Providence Salt Shed project shall be loaded, hauled, and stockpiled at the wet contaminated soil stockpile location approved by the RIDOT. During loading, hauling, and/or stockpiling, the Contractor shall minimize odors by methods including the use of odor suppressant shell material where necessary.

Subject to the approval of the RIDOT, the Contractor may choose to implement any effective and lawful methods for handling, hauling, and stockpiling wet contaminated soil encountered in

the work area, provided the required handling, hauling, and stockpiling methods are performed in accordance with the Contractor's approved Soil Management Plan (SMP). The Contractor shall assume all responsibility for the adequacy of the methods, materials, documentation, and equipment employed.

The Contractor shall load, haul, and place wet contaminated soil into the wet contaminated soil stockpile locations identified by the Contractor and approved by the RIDOT. The Contractor shall comply with the Construction SMP (CSMP) and Contractor's approved SMP requirements during all contaminated soil and sediment management activities.

METHOD OF MEASUREMENT: Section 30 04 82 Handling, Hauling, and Stockpiling - Wet Contaminated Soil will be measured for payment by the "cubic yards" of wet soil actually handled, hauled, and tockpiled in accordance with the Contract Documents and/or as directed by the RIDOT.

BASIS OF PAYMENT: Section 30 04 82 Handling, Hauling, and Stockpiling - Wet Contaminated Soil bid quantity shall be 325 cubic yards. The wet contaminated soils to be stockpiled will be paid for its respective contract unit price per cubic yard.

Payment for 30 04 75 "Soil Stockpile - Wet Contaminated Soil" shall be included in the payment for Section 30 04 82 Handling, Hauling, and Stockpiling - Wet Contaminated Soil. The prices so-stated constitutes full and complete compensation for all labor, materials, and equipment for implementing the work described in this Section plus all other substantial work and incidentals of whatever nature required to finish the work, complete and accepted by the Engineer.

In accordance with the above stated method of measurement, should the "Soil Stockpile – Wet Contaminated Soil" quantity exceed the bid quantity of 350 cubic yards, the Contractor will be paid as discussed in the Contingency section of the Contract Documents. The unit price per cubic yards shall constitute full and complete compensation for all labor, materials, tools, and equipment and all other incidentals required to complete the work as described in the Contract Documents, complete in place and accepted by the RIDOT.

Final payment for these items will not be made until the wet soil stockpile area has been removed, restored as required in the Contract Documents, and approved by the RIDOT.

SECTION 31 15 00
CATCH BASIN INLET PROTECTION

DESCRIPTION: This work shall consist of the furnishing, installation, maintenance and removal of a filter bag to be installed in drainage structures for the protection of wetlands and other resource areas and the prevention of silt and sediment from the construction site from entering the storm water collection system and shall conform to Section 209 of the Rhode Island Standard Specifications for Road and Bridge Construction, Amended 2013, and all revisions. Devices shall be ACF Environmental (800)-448-3636; Complete Environmental Products, Inc. (800)-444-4237; Ultra Tech International (800)-764-9563; or approved equal.

CONSTRUCTION METHODS: Filter bag for catch basins shall be installed in all catch basins and drop inlets within the project limits as shown on the plans and/or as directed by the Engineer.

The filter bag for catch basins shall be as manufactured to fit the opening of the drainage structure under regular flow conditions.

Catch Basin inserts shall be a reusable sediment control device utilized during construction that mounts under the grate in catch basins, made of a permeable geotextile fabric that allows water to pass but prevents silts and sediment from entering the drainage system. The insert shall be secured from the surface such that the grate can be removed without the insert discharging into the structure.

The filter material shall be installed and maintained in accordance with the manufacturer's written literature and as directed by the Engineer.

Filter bag shall remain in place until the placement of the pavement or top course and the graded areas have become permanently stabilized by vegetative growth. All materials used for the filter fabric will become the property of the Contractor and shall be removed from the site and disposed of legally. The Contractor shall inspect the condition of filter bags after each rainstorm and during major rain events in accordance with the Stromwater Pollution Prevention Plan. When emptying the insert, the contractor shall take all due care to prevent sediment from entering the structure. Any silt or other debris found in the drainage system at the end of construction shall be removed at the Contractors expense. The silt and sediment from the insert shall be legally disposed of off site. Under no condition shall silt and sediment from the insert be deposited on site and used in construction. All curb openings shall be blocked to prevent storm water from bypassing the device.

Filter bags, which become damaged during construction operations, shall be repaired or replaced immediately at no additional cost to the State.

BASIS OF PAYMENT: Section 31 15 00 "Catch Basin Inlet Protection" will not be paid for separately. Payment is included in the **"contract sum"** listed in the Bid Proposal Form. The portion of the **"contract sum"** representing payment for this Section requirements constitutes full and complete compensation of all labor, materials, equipment including installation, subsequent removal of the filter bags and all other incidentals required to complete the work, complete in place and accepted by the Engineer.

Geotechnical Report
Proposed RIDOT Salt Shed
Warren Ave.
East Providence, RI

Allstate Drilling Company
April 22, 2019
Y-569

Contents

Geotechnical Report
- Summary Table of Recommendations
- Structural Bearing Preparation
- Groundwater Characteristics
- Site Precautions
- Additional Site Characteristics

Boring Logs

Subsurface Exploration Location Plan

Geotechnical Report

Summary Table of Recommendations

DESIGN ITEM	Recommended Parameter
STRUCTURE FOUNDATIONS*:	
Main Structure Foundation Type	Deep Foundation System [1]
Maximum Allowable Bearing Capacity	3,000 psf for Elements in which Differential Settlement is Acceptable [1]
Suitable Bearing Soil	Suitable Native Material or Structural Fill [1]
EQUIPMENT SLABS:	
Type	Conventional Slab-on-Grade if Differential Settlement is Acceptable [1]
Subgrade	Structural Fill [1]
PAVEMENTS	
Asphaltic Concrete (Main Drive & Loading Areas)	1- ½" Top Course, 1-½" Binder
Asphaltic Concrete (Drives & Parking)	1" Top Course, 1-½" Binder
Base Course	12" of Structural Fill or Filter Stone per "Structural Bearing Preparation" section [1]
Subgrade	Structural Fill or Existing Subgrade Soil proof rolled and reinforced with geo-grid [1]

**For foundation systems where geotechnical concerns govern over other design parameters (e.g. Flood Design or special usage)*

PROJECT SITE CONDITIONS (Average – maximum variance)	Maximum Ranges Observed
Material	***Depth (Feet)***
Asphalt	0.0 to 0.5
Fine to medium Sand, little fine to coarse Gravel, trace Silt, and Rubble - Varying Unsuitable Fill	0.5 to 5.5
Fine -medium Sand, trace coarse Sand, little fine to coarse Gravel, Little Silt, Trace of Glass and Wood Fill	5.5 to 10.0
Rubbish-fill, glass,paper, metal, limbs, ash,Little Black Sand, trace of silt	10.0 to 15.2
Refusal on Auger	4.8 to 18.1
Groundwater Depth	8.0 [2]
Soil Expansion	Low

1. *See "Structural Bearing Preparation" section*
2. *See "Groundwater Characteristics" section*

Structural Bearing Preparation

Due to the depth of unsuitable soils, it is recommended that the proposed additions be supported on a deep foundation system. Our office advises consideration of Helical Piers. Due to the fairly shallow depth to ledge we believe the piers will be end bearing. Helical Piers must have torque readings logged as field verification of soil conditions. Variation from expected criteria should be brought to the Structural and Geotechnical Engineer of Record's (EoR) attentions.

Prior to use of any soil for structural bearing of buildings, large structures, or the support of vital utilities, any layers containing topsoil/organics/loam, excessive root material, ash, wood, debris/rubbish, or voids must be removed and replaced with structural fill. This removal and replacement extends to most soils on the site, and reaches to depths of 5.5 to 15.2 feet below current grade. Removal and replacement must extend beyond the footprint of structures at a 1:1 slope (e.g. 10' horizontal from footing face for 10' of depth below footing). This will not be a cost effective solution on this site.

Once the site has been excavated to the required grade, the disturbed soil at the bottom of excavation must be stabilized against moisture concerns and compacted with vibratory compaction equipment prior to commencement of construction. A soils engineer or his representative should be present during compaction operations to ensure that proper compaction takes place and to watch for any unusual settlement in the soil, which can be a sign of the presence of weak soil layers. If vibratory compaction causes pumping of water resulting in saturation of fines/tight soils, see the Groundwater Characteristics section.

Once the site has been excavated of any unsuitable soils and prepared as described above, it is recommended that the desired grade be achieved by placing granular soil in 12 inch lifts and compacting the soil to 95 percent of its maximum dry density as determined by ASTM D-1557. The soil shall be free of organics, wood/roots, debris and hazardous material

Groundwater Characteristics

Groundwater was encountered at a depth of 8.0 feet at the time of the exploration. The static water table should be expected to rise during wet periods. Additionally, the low permeability of the sub-strata is likely to cause sharp variation subsequent to storm events, quite likely creating perched water tables over the silty strata. Capillary action is likely to draw moisture 18 to 36 inches above the water table and/or below perched water tables in the fine layers. These conditions will result in moisture concerns at all depths during inclement weather.

Due to the low permeability of some of the on-site soils, excavations should be sloped to a sump area, and sump pumps may be required to dewater the site subsequent to storm events. Additionally, if soil becomes too saturated to compact, all excavations may be over excavated 1'-0" and backfilled with one 6" lift of 1-½" to 4" washed crushed stone; this lift of stone must be compacted with a heavy roller (10 ton minimum static operating weight) until firm, which will drive the stone into the underlying soil. In any areas where this first lift of stone is completely driven into the soft, moist material, additional lifts of similarly sized stone are to be placed until the stone withstands compaction efforts without completely subsiding. Once this level of stability is achieved, a 6" lift of either ½" to ¾" crushed stone or filter stone is to be placed over the larger stone and similarly compacted. Neither of these lift depths are to be exceeded, as thicker lifts will not be able to be driven into the underlying material with the recommended equipment. If different compaction equipment is to be used, a written recommendation of stone size and lift size is to be obtained from our office. In any area where the excavation penetrates below the water table, construction sump pumps are to be used to remove excess water.

Site Precautions

Any undermining of adjacent structures and/or utilities likely to be incurred by construction activities shall be prevented by shoring or underpinning at the discretion of the contractor, and with the agreement of the owners of said structures. Any mechanical (impact) damage or vibration damage (such as might be caused by ledge removal or blasting) likely to be caused to neighboring structures/utilities is to be identified by the contractor (or his rep.) and prevented via shielding, debris mitigation, or other approved methods which are found to be agreeable with the owner of the neighboring structure. All construction activities are to be in complete accordance with OSHA and IBC/State B. C. regulations; specifically 1990 OSHA sections: .900 - .914, .650 - .652, .800, .550; and 2007 IBC Articles 1803, or the relevant sections of more updated codes. Digsafe is to be contacted, and a digsafe number acquired prior to excavation.

Additional Site Characteristics

Location:

Seismic Site Coefficient:	Ss: 0.177	S1: 0.061
Site Classification:	D	
Frost Protection Depth	3'-4"	

Soil:

Cohesion value:	0, cohesionless soil
Approximate Soil Unit Weights:	Dry=115 to 138 pcf
Allowable Lateral Bearing Capacity:	150 psf for all layers
Friction reduction factor between soil and concrete:	.45
Friction reduction factor between ledge and concrete:	.7 (rough, clean surface)
Design Internal Friction Angle:	34 degrees

OSHA Soil Type B

Allowable Excavation Slope 1:1 (45 degree)

Soil Characteristics:

Permeability	Very Slow to Moderate in topsoil and subsoil, Very Slow to Moderate in substrata.
Slope	Without erosion mitigation, slopes should be less than 14 degrees (1-Vertical : 4-Horizontal). With erosion mitigation, slopes should be less than 27 degrees (1-Vertical : 2-Horizontal)

Letter of Certification

Our office certifies that the information in this report is correct and accurate to the extent current exploration makes possible. Localized variations not intersected by current exploration could deviate from the conditions summarized in this report. If deviation is found, our office is to be consulted.

If you have any questions, or should you require any additional information, please do not hesitate to contact our office.

Sincerely,

Allstate Drilling Company

STEVEN A. BOGLE
No. 5317
PROFESSIONAL ENGINEER
CIVIL

Steven A. Bogle, P.E.

Senior Engineer

Boring Logs

HAMMER

CASING: WT. -- FALL --

SAMPLER: WT. 140 FALL 30

Allstate Drilling Co.

EAST PROVIDENCE, R.I. 02915

CLIENT: ROBINSON GREEN BERETTA CORP.

PROJECT: RIDOT - SALT SHED - WARREN AVENUE

SHEET 1 OF 1

LOCATION E. PROVIDENCE

HOLE NO. B-1

LINE & STA.

OFFSET

Inspector

Driller R. COOK, JR.

Helper K. RODERICK JR.

SAMPLER I. D. 1 3/8"

CASING I. D. ---

ALLSTATE NO. Y-569

DATE, START 04/10/19

DATE, FINISH 04/10/19

GROUND ELEVATION

GROUND WATER DEPTH DRY @ 1/4 HR.

DEPTH BELOW SURFACE	CASING BLOWS PER FOOT	SAMPLE NO DEPTHS ELEV. FT.	TYPE of SAMPLE	PENETRATION BLOWS PER 6 INCHES	DENSITY OR CONSIST Moisture	PROFILE CHANGE DEPTH Elev.	FIELD IDENTIFICATION OF SOILS, REMARKS (REMARKS INCLUDE COLOR, GRADATION, TYPE OF SOIL, ETC ROCK COLOR, TYPE, CONDITION, HARDNESS, DRILLING TIME, SEAMS, ETC.)
0	A	0-2.0	D-1	X-19-27-31	DENSE	0.5	ASPHALT 6"
	U					2.8	F-C LT GR SAND AND F-C GRAVEL, little silt-fill
	G						
	E						F-M DK BR SAND, little silt
	R					5.0	
	S					5.3	F-M DK GR SAND, LITTLE F-C GRAVEL, tr of silt
10							
							REFUSAL ON AUGER - 5.3'
20							
30							
40							

GROUND SURFACE TO 5.3 FT. USED AUGER CASING: THEN REFUSAL ON AUGER HOLE NO. B-1

Type of Sample

D = Dry C = Cored W = Washed
UP= Undisturbed Piston
TP = Test Pit A = Auger
US = Undisturbed Shelby
V = Vane Test

Proportions Used

trace	0 to 10%
little	11 to 20%
some	21 to 35%
and	36 to 50%

Penetration Resistance
140 lb. Wt. Falling 30" on 2" O.D. Sampler

Cohesionless Density		Cohesive Consistency	
Very Loose	0-4	0-2	Very Soft
Loose	5-9	3-4	Soft
Med Dense	10-29	5-8	M/Stiff
Dense	30-49	9-15	Stiff
Very Dense	50+	16-30	V/Stiff
		31+	Hard

Summary

Earth Boring 5.3'

Rock Coring

Samples D-1

Allstate Drilling Co.

EAST PROVIDENCE, R.I. 02915

HAMMER

CASING: WT. -- FALL --

SAMPLER: WT. 140 FALL 30

CLIENT: ROBINSON GREEN BERETTA CORP.

PROJECT: RIDOT - SALT SHED - WARREN AVENUE

SHEET 1 OF 1

LOCATION E. PROVIDENCE

HOLE NO. B-1A

LINE & STA.

OFFSET 5.0' SOUTH OF B-1

Inspector

Driller R. COOK, JR.

Helper K. RODERICK JR.

SAMPLER I. D. 1 3/8"

CASING I. D. ---

ALLSTATE NO. Y-569

DATE, START 04/10/19

DATE, FINISH 04/10/19

GROUND ELEVATION

GROUND WATER DEPTH DRY @ 1/4 HR.

DEPTH BELOW SURFACE	CASING BLOWS PER FOOT	SAMPLE NO DEPTHS ELEV. FT.	TYPE of SAMPLE	PENETRATION BLOWS PER 6 INCHES	DENSITY OR CONSIST Moisture	PROFILE CHANGE DEPTH Elev.	FIELD IDENTIFICATION OF SOILS, REMARKS (REMARKS INCLUDE COLOR, GRADATION, TYPE OF SOIL, ETC ROCK COLOR, TYPE, CONDITION, HARDNESS, DRILLING TIME, SEAMS, ETC.)
0	A	0-2.0	D-1	X-23-33-30	VERY	0.5	ASPHALT 6"
	U				DENSE	2.5	F-C LT GR SAND AND F-C GRAVEL, little silt-fill
	G						
	E					3.0	F-M DK BR SAND, little silt
	R					4.8	F-M DK GR SAND, LITTLE F-C GRAVEL, tr of silt
	S						
10							REFUSAL ON AUGER - 4.8'
							NOTE: OFFSET BORING 5.0' SOUTH OF B-1
20							
30							
40							

GROUND SURFACE TO 4.8 FT. USED AUGER CASING: THEN REFUSAL ON AUGER HOLE NO. B-1A

Type of Sample

D = Dry C = Cored W = Washed
UP= Undisturbed Piston
TP = Test Pit A = Auger
US = Undisturbed Shelby
V = Vane Test

Proportions Used

trace	0 to 10%
little	11 to 20%
some	21 to 35%
and	36 to 50%

Penetration Resistance
140 lb. Wt. Falling 30" on 2" O.D. Sampler

Cohesionless Density		Cohesive Consistency	
Very Loose	0-4	0-2	Very Soft
Loose	5-9	3-4	Soft
Med Dense	10-29	5-8	M/Stiff
Dense	30-49	9-15	Stiff
Very Dense	50+	16-30	V/Stiff
		31+	Hard

Summary

Earth Boring 4.8'

Rock Coring

Samples D-1

Allstate Drilling Co.

EAST PROVIDENCE, R.I. 02915

HAMMER

CASING: WT. -- FALL --

SAMPLER: WT. 140 FALL 30

CLIENT: ROBINSON GREEN BERETTA CORP.

PROJECT: RIDOT - SALT SHED - WARREN AVENUE

SHEET 1 OF 1

LOCATION E. PROVIDENCE

HOLE NO. B-2

LINE & STA.

OFFSET

Inspector

Driller R. COOK, JR.

Helper K. RODERICK JR.

SAMPLER I. D 1 3/8"

CASING I. D ---

ALLSTATE NO Y-569

DATE, START 04/10/19

DATE, FINISH 04/10/19

GROUND ELEVATION

GROUND WATER DEPTH 8.0' @ 1/4 HR.

DEPTH BELOW SURFACE	CASING BLOWS PER FOOT	SAMPLE NO DEPTHS ELEV. FT.	TYPE of SAMPLE	PENETRATION BLOWS PER 6 INCHES	DENSITY OR CONSIST Moisture	PROFILE CHANGE DEPTH Elev.	FIELD IDENTIFICATION OF SOILS, REMARKS (REMARKS INCLUDE COLOR, GRADATION, TYPE OF SOIL, ETC ROCK COLOR, TYPE, CONDITION, HARDNESS, DRILLING TIME, SEAMS, ETC.)
0	A	0-2.0	D-1	X-21-25-39	DENSE	0.5	ASPHALT 6"
	U						F-M LT GR SAND, LITTLE C SAND, SOME F-C GRAVEL, tr of silt-fill
	G						
	E						
	R					5.5	
	S	5-7.0	D-2	25-37-22-12	VERY DENSE		F-M DK BR-BLK SAND, LITTLE F-C GRAVEL, little silt, tr of glass and wood-fill
10						10.0	
		10-12.0	D-3	9-8-8-6	MED. DENSE		Rubbish-fill, glass, paper, metal, limbs, ash, LITTLE BLACK SAND, tr of silt
		15-17.0	D-4	10-13-25-27	DENSE	15.2	F-C LT GR SAND AND F-C GRAVEL, little silt
						18.1	
20							REFUSAL ON AUGER - 18.1'
30							
40							

GROUND SURFACE TO 18.1 FT. USED AUGER CASING: THEN REFUSAL ON AUGER HOLE NO. B-2

Type of Sample

D = Dry C = Cored W = Washed
UP= Undisturbed Piston
TP = Test Pit A = Auger
US = Undisturbed Shelby
V = Vane Tesl

Proportions Used

trace	0 to 10%
little	11 to 20%
some	21 to 35%
and	36 to 50%

Penetration Resistance
140 lb. Wt. Falling 30" on 2" O.D. Sampler

Cohesionless Density		Cohesive Consistency	
Very Loose	0-4	0-2	Very Soft
Loose	5-9	3-4	Soft
Med Dense	10-29	5-8	M/Stiff
Dense	30-49	9-15	Stiff
Very Dense	50+	16-30	V/Stiff
		31+	Hard

Summary

Earth Boring 18.1'

Rock Coring

Samples D-4

Subsurface Exploration Location Plan

Subsurface Exploration Location Plan

WWW.GEISSERENGINEERING.COM EMAIL: GEC@GEISSERENGINEERING.COM

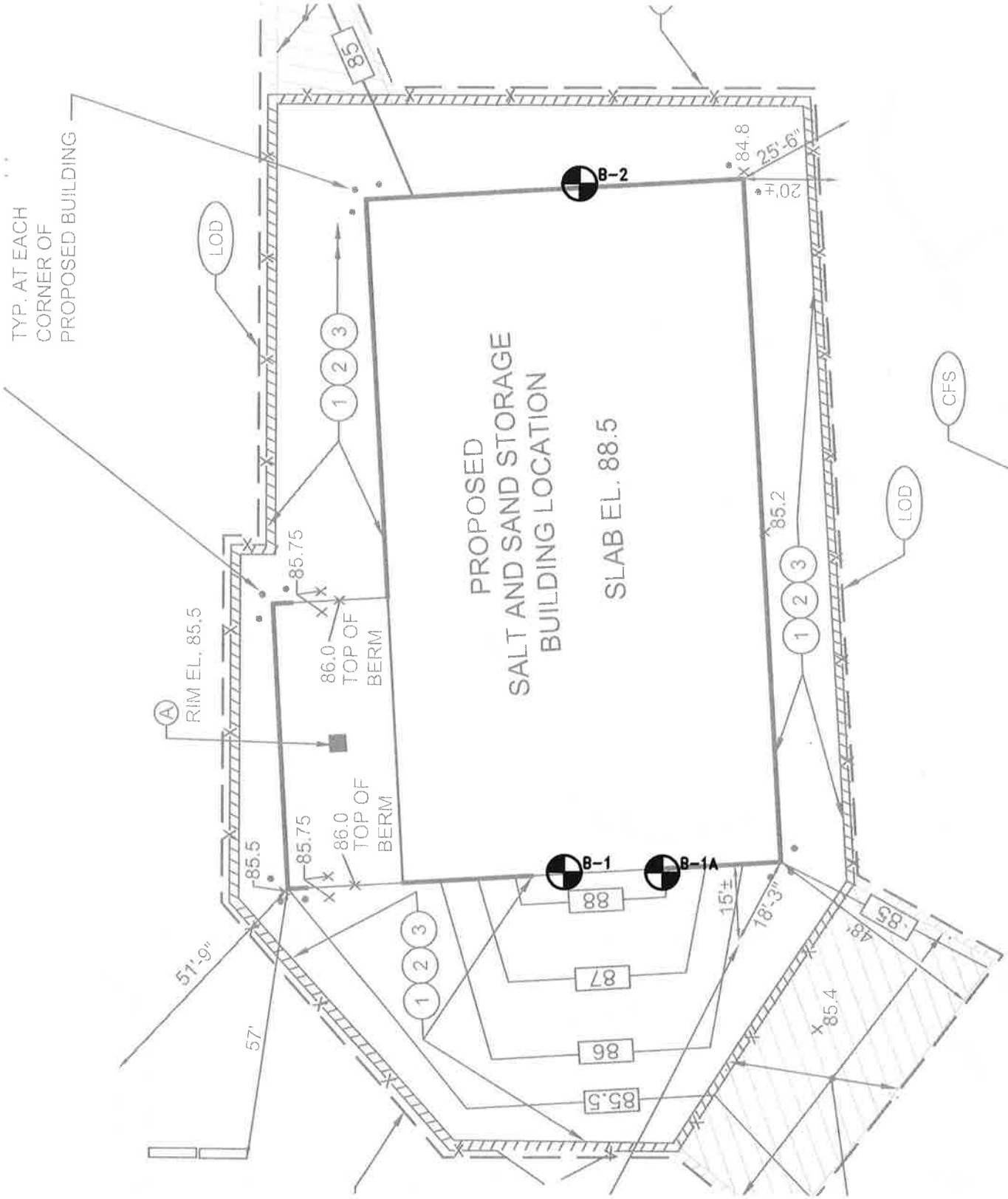

BORING LOCATION PLAN

NTS

GG
GEISSER

GEISSER ENGINEERING CORP. CONSULTING ENGINEERS 227 WAMPANOAG TRAIL 02915 PHONE: 401.438.7711 FAX: 401.438.0281	DATE: 4/16/2019 SCALE: NTS DESIGNED BY: ACAD DRAWN BY: KMR CHECKED BY: SAB	BORING LOCATION PLAN PROPOSED RIDOT SALT SHED EAST PROVIDENCE, RI
JOB NUMBER:		CLIENT: RGB ARCHITECTS

Required Forms

These Forms are To Be Filled In and Submitted With Your Bid

- DEBAREMENT FORM
- LOBBING FORM
- CONFLICTS DISCLOSURE STATEMENT
- ANTI-COLLUSION CERTIFICATE
- CERTIFICATION FOR TITLE VI ASSURANCE
- REQUIREMENT FOR AFFIRMATIVE ACTION

CERTIFICATION REGARDING DEBARMENT, SUSPENSION,
AND OTHER RESPONSIBILITY MATTERS
PRIMARY COVERED TRANSACTIONS

East Providence Salt Storage - 2019-CM-030

In accordance with the code of Federal Regulations, Part 49 CFR Section 29.5 10, the prospective primary participant _____, _____, being duly sworn (or executed under penalty of perjury under the laws of the United States), certifies to the best of his/her knowledge and belief, that its principals:

a.) Are not presently debarred, suspended, proposed for debarment, declared ineligible or voluntarily Excluded from covered transactions by any Federal department or agency;

b.) Have not within a three-year period preceding this proposal been convicted of or had a civil judgment rendered against them for commission of fraud or a criminal offense in connection with obtaining, attempting to obtain, or performing a public (Federal, State or local) transaction or contract under a public transaction; violation of Federal or State antitrust statues or commission of embezzlement, theft, forgery, bribery, falsification or destruction of records, making false statements, or receiving stolen property;

c.) Are not presently indicted for or otherwise criminally or civilly charged by a governmental entity (Federal, State or local) with commission of any of the offenses enumerated in paragraph (l)(b) of this certification;

d.) Have not within a three-year period preceding this application/proposal had one or more public transactions (Federal, State or local) terminated for cause or default.

Where the prospective primary participant is unable to certify to any of the statements in this certification, such prospective participant shall list exceptions below.

Exceptions will not necessarily result in denial of award, but, will be considered in determining contractor responsibility. For any exception noted, indicate below to whom it applies, the initiating agency, and the dates of the action. Providing false information may result in criminal prosecution or administrative sanctions. If an exception is noted the contractor must contact the Department to discuss the exception prior to award of the contract.

Signature:_____Date:_____

Approved by OMB
0348-0046

Disclosure of Lobbying Activities

Complete this form to disclose lobbying activities pursuant to 31 U.S.C. 1352
(See reverse for public burden disclosure)

1. Type of Federal Action: a. contract ____ b. grant c. cooperative agreement d. loan e. loan guarantee f. loan insurance	**2. Status of Federal Action:** a. bid/offer/application _____ b. initial award c. post-award	**3. Report Type:** a. initial filing _____ b. material change **For material change only:** Year _____ quarter _____ Date of last report_____
4. Name and Address of Reporting Entity: ____ Prime _____ Subawardee Tier_____, if Known: **Congressional District,** *if known*:	**5. If Reporting Entity in No. 4 is Subawardee,** Enter Name and Address of Prime: **Congressional District,** *if known*:	
6. Federal Department/Agency:	**7. Federal Program Name/Description:** CFDA Number, *if applicable*: _____	
8. Federal Action Number, *if known:*	**9. Award Amount**, *if known:* **$**	
10. a. Name and Address of Lobbying Registrant *(if individual, last name, first name, MI):*	**b. Individuals Performing Services** *(including address if different from No. 10a)* *(last name, first name, MI):*	
11. Information requested through this form is authorized by title 31 U.S.C. section 1352. This disclosure of lobbying activities is a material representation of fact upon which reliance was placed by the tier above when this transaction was made or entered into. This disclosure is required pursuant to 31 U.S.C. 1352. This information will be reported to the Congress semi-annually and will be available for public inspection. Any person who fails to file the required disclosure shall be subject to a civil penalty of not less than $10,000 and not more than $100,000 for each such failure.	**Signature:** _____ **Print Name:** _____ **Title:** _____ **Telephone No.:** _____ **Date:** _____	
Federal Use Only	**Authorized for Local Reproduction** **Standard Form - LLL (Rev. 7-97)**	

INSTRUCTIONS FOR COMPLETION OF SF-LLL, DISCLOSURE OF LOBBYING ACTIVITIES

This disclosure form shall be completed by the reporting entity, whether subawardee or prime Federal recipient, at the initiation or receipt of a covered Federal action, or a material change to a previous filing, pursuant to title 31 U.S.C. section 1352. The filing of a form is required for each payment or agreement to make payment to any lobbying entity for influencing or attempting to influence an officer or employee of any agency, a Member of Congress, an officer or employee of Congress, or an employee of a Member of Congress in connection with a covered Federal action. Complete all items that apply for both the initial filing and material change report. Refer to the implementing guidance published by the Office of Management and Budget for additional information.

1. Identify the type of covered Federal action for which lobbying activity is and/or has been secured to influence the outcome of a covered Federal action.

2. Identify the status of the covered Federal action.

3. Identify the appropriate classification of this report. If this is a followup report caused by a material change to the information previously reported, enter the year and quarter in which the change occurred. Enter the date of the last previously submitted report by this reporting entity for this covered Federal action.

4. Enter the full name, address, city, State and zip code of the reporting entity. Include Congressional District, if known. Check the appropriate classification of the reporting entity that designates if it is, or expects to be, a prime or subaward recipient. Identify the tier of the subawardee, e.g., the first subawardee of the prime is the 1st tier. Subawards include but are not limited to subcontracts, subgrants and contract awards under grants.

5. If the organization filing the report in item 4 checks "Subawardee," then enter the full name, address, city, State and zip code of the prime Federal recipient. Include Congressional District, if known.

6. Enter the name of the federal agency making the award or loan commitment. Include at least one organizational level below agency name, if known. For example, Department of Transportation, United States Coast Guard.

7. Enter the Federal program name or description for the covered Federal action (item 1). If known, enter the full Catalog of Federal Domestic Assistance (CFDA) number for grants, cooperative agreements, loans, and loan commitments.

8. Enter the most appropriate Federal identifying number available for the Federal action identified in item 1 (e.g., Request for Proposal (RFP) number; Invitations for Bid (IFB) number; grant announcement number; the contract, grant, or loan award number; the application/proposal control number assigned by the Federal agency). Included prefixes, e.g., "RFP-DE-90-001."

9. For a covered Federal action where there has been an award or loan commitment by the Federal agency, enter the Federal amount of the award/loan commitment for the prime entity identified in item 4 or 5.

10. (a) Enter the full name, address, city, State and zip code of the lobbying registrant under the Lobbying Disclosure Act of 1995 engaged by the reporting entity identified in item 4 to influence the covered Federal action.

    (b) Enter the full names of the individual(s) performing services, and include full address if different from 10(a). Enter Last Name, First Name, and Middle Initial (MI).

11. The certifying official shall sign and date the form, print his/her name, title, and telephone number.

According to the Paperwork Reduction Act, as amended, no persons are required to respond to a collection of information unless it displays a valid OMB control Number. The valid OMB control number for this information collection is OMB No. 0348-0046. Public reporting burden for this collection of information is estimated to average 10 minutes per response, including time for reviewing instructions, searching existing data sources, gathering and maintaining the data needed, and completing and reviewing the collection of information. Send comments regarding the burden estimate or any other aspect of this collection of information, including suggestions for reducing this burden, to the Office of Management and Budget, Paperwork Reduction Project (0348-0046), Washington, DC 20503

CONFLICTS DISCLOSURE POLICY

To ensure that the Rhode Island Department of Transportation (RIDOT) maintains the continued confidence and trust of the people of Rhode Island in carrying out its mission, prospective vendors must disclose any family (or other personal) relationships, associations or connections that the vendor, its affiliates, or employees, may currently have with any RIDOT employee. A Conflicts Disclosure Statement shall be submitted to RIDOT from the following:

- Owners;
- Directors;
- Principals;
- Officers, board members, or individuals with corporate authority;
- If the vendor is a partnership, the applicant's partners;
- If the vendor is a limited liability company, its members and managers;
- Employees with decision-making authority, including executive directors, managers or individuals in a similar position with corporate authority; and
- Shareholders with a controlling interest.

RIDOT 12/27/07

CONFLICTS DISCLOSURE STATEMENT

RE: _____

_____

I, _____ **hereby certify as follows:**

I am employed as a _____ **of** _____
[TITLE] **[COMPANY]**
and to the best of my knowledge:

PLEASE CHECK THE APPROPRIATE BOX:

☐ **I have no family or personal relations currently employed either on a full-time or part-time basis at the Rhode Island Department of Transportation.**

☐ **I do have family or personal relations currently employed at the Rhode Island Department of Transportation. Please list their name(s), title(s), and RIDOT Division(s) (if known):**

NAME	TITLE	RIDOT DIVISION

If necessary, please add any additional names as attachments hereto.

FOR ILLUSTRATIVE PURPOSES, FAMILY RELATIONS SHALL INCLUDE, WHETHER BY BLOOD, ADOPTION OR MARRIAGE, ANY OF THE FOLLOWING RELATIONSHIPS:

Father, Mother, Son, Daughter, Brother, Sister, Grandfather, Grandmother, Grandson, Granddaughter, Father-In-Law, Mother-In-Law, Brother-In-Law, Sister-In-Law, Son-In-Law, Daughter-In-Law, Stepfather, Stepmother, Stepson, Stepdaughter, Stepbrother, Stepsister, Half-Brother Or Half-Sister, Niece, Nephew, And Cousin

- *If you are unsure whether a relationship, association, or connection you have may need to be disclosed, please consult with RIDOT's Legal Office at (401) 222-6510.*

_____

SIGNATURE **DATE**

By signing this form you: (1) certify that the information contained in this form is complete and accurate to the best of your knowledge; and (2) acknowledge your continuing obligation to complete and submit a new Disclosure form when there is any change in your family or personal relations during the course of this Contract.

This document is used for internal RIDOT purposes only in order to address and avoid any potential conflicts at the inception of the contract process and to avoid any impropriety or the appearance of impropriety during the contract process. Any disclosures made hereto will not prejudice prospective vendors from selection.

Revised: 4/12/2002

ANTI-COLLUSION CERTIFICATE FOR CONTRACT AND FORCE ACCOUNT
[Unsworn Declaration]

East Providence Salt Storage 2019-CM-030

Title 23, United States Code, Section 112(c), requires, as a condition precedent to approval by the Director of Public Roads of the contract for this work, that there be filed an unsworn declaration executed by, on behalf of, the person, firm, association, or corporation submitting the bid certifying that such person, firm, association, or corporation has not either directly or indirectly, entered into any agreement, participated in any collusion, or otherwise taken any action, in restraint of free competitive bidding in connection with the submitted bid. This unsworn statement shall be in the form of a declaration executed under penalty of perjury under the laws of the United States.

To the: **STATE OF RHODE ISLAND AND PROVIDENCE PLANTATIONS**
DEPARTMENT OF TRANSPORTATION, DIVISION OF PUBLIC WORKS

State of _____

County of _____

I, _____, _____, under penalty under the laws of the United States, do depose and say:

On behalf of _____, of_____ that said Contractor has not, either directly or indirectly, entered into any agreement, participated in any collusion, or otherwise taken any action in restraint of free competitive bidding in connection with Rhode Island Contract Number _____, Federal-Aid Project Number _____ , County of _____ Town-City _____, Road-Bridge _____.

Signature: _____Date:_____

USDOT Standard Title VI/Nondiscrimination Assurances for Contractors DOT Order 1050.2A

East Providence Salt Storage **2019-CM-030**

I, _____, _____Job Title _____, a duly authorized representative of _____Company Name _____ do hereby certify that the organization affirmatively agrees to the provisions set forth by *U.S. DOT Order 1050.2A, DOT Standard Title VI Assurances and Non-Discrimination Provisions (April 11, 2013)*

_____
Signature of Authorized Official

_____
Date

APPENDIX A

During the performance of this contract, the contractor, for itself, its assignees, and successors in interest (hereinafter referred to as the "contractor") agrees as follows:

1. **Compliance with Regulations:** The contractor (hereinafter includes consultants) will comply with the Acts and the Regulations relative to Non-discrimination in Federally-assisted programs of the U.S. Department of Transportation, Federal Highway Administration, as they may be amended from time to time, which are herein incorporated by reference and made a part of this contract.

2. **Non-discrimination:** The contractor, with regard to the work performed by it during the contract, will not discriminate on the grounds of race, color, or national origin in the selection and retention of subcontractors, including procurements of materials and leases of equipment. The contractor will not participate directly or indirectly in the discrimination prohibited by the Acts and the Regulations, including employment practices when the contract covers any activity, project, or program set forth in Appendix B of 49 CFR Part 21.

3. **Solicitations for Subcontracts, Including Procurements of Materials and Equipment:** In all solicitations, either by competitive bidding, or negotiation made by the contractor for work to be performed under a subcontract, including procurements of materials, or leases of equipment, each potential subcontractor or supplier will be notified by the contractor of the contractor's obligations under this contract and the Acts and the Regulations relative to Non-discrimination on the grounds of race, color, or national origin.

4. **Information and Reports:** The contractor will provide all information and reports required by the Acts, the Regulations, and directives issued pursuant thereto and will permit access to its books, records, accounts, other sources of information, and its facilities as may be determined by the Recipient or the Federal Highway Administration to be pertinent to ascertain compliance with such Acts, Regulations, and instructions. Where any information required of a contractor is in the exclusive possession of another who fails or refuses to furnish the information, the contractor will so certify to the Recipient or the Federal Highway Administration, as appropriate, and will set forth what efforts it has made to obtain the information.

5. **Sanctions for Noncompliance:** In the event of a contractor's noncompliance with the Non-discrimination provisions of this contract, the Recipient will impose such contract sanctions as it or the Federal Highway Administration may determine to be appropriate, including, but not limited to:

    a. withholding payments to the contractor under the contract until the contractor complies; and/or
    b. cancelling, terminating, or suspending a contract, in whole or in part.

6. **Incorporation of Provisions**: The contractor will include the provisions of paragraphs one through six in every subcontract, including procurements of materials and leases of equipment, unless exempt by the Acts, the Regulations and directives issued pursuant thereto. The contractor will take action with respect to any subcontract or procurement as the Recipient or the Federal Highway Administration may direct as a means of enforcing such provisions including sanctions for noncompliance. Provided, that if the contractor becomes involved in, or is threatened with litigation by a subcontractor, or supplier because of such direction, the contractor may request the Recipient to enter into any litigation to protect the interests of the Recipient. In addition, the contractor may request the United States to enter into the litigation to protect the interests of the United States.

APPENDIX E

During the performance of this contract, the contractor, for itself, its assignees, and successors in interest (hereinafter referred to as the "contractor") agrees to comply with the following non-discrimination statutes and authorities; including but not limited to:

<u>Pertinent Non-Discrimination Authorities:</u>

- Title VI of the Civil Rights Act of 1964 (42 U.S.C. § 2000d *et seq*., 78 stat. 252), (prohibits discrimination on the basis of race, color, national origin); and 49 CFR Part 21;
- The Uniform Relocation Assistance and Real Property Acquisition Policies Act of 1970, (42 U.S.C. § 4601), (prohibits unfair treatment of persons displaced or whose property has been acquired because of Federal or Federal-aid programs and projects);
- Federal-Aid Highway Act of 1973, (23 U.S.C. § 324 *et seq*.), (prohibits discrimination on

the basis of sex);

- Section 504 of the Rehabilitation Act of 1973, (29 U.S.C. § 794 *et seq*.), as amended, (prohibits discrimination on the basis of disability); and 49 CFR Part 27;
- The Age Discrimination Act of 1975, as amended, (42 U.S.C. § 6101 *et seq*.), (prohibits discrimination on the basis of age);
- Airport and Airway Improvement Act of 1982, (49 USC § 471, Section 47123), as amended, (prohibits discrimination based on race, creed, color, national origin, or sex);
- The Civil Rights Restoration Act of 1987, (PL 100-209), (Broadened the scope, coverage and applicability of Title VI of the Civil Rights Act of 1964, The Age Discrimination Act of 1975 and Section 504 of the Rehabilitation Act of 1973, by expanding the definition of the terms "programs or activities" to include all of the programs or activities of the Federal-aid recipients, sub-recipients and contractors, whether such programs or activities are Federally funded or not);
- Titles II and III of the Americans with Disabilities Act, which prohibit discrimination on the basis of disability in the operation of public entities, public and private transportation systems, places of public accommodation, and certain testing entities (42 U.S.C. §§ 12131 -- 12189) as implemented by Department of Transportation regulations at 49 C.F.R. parts 37 and 38;
- The Federal Aviation Administration's Non-discrimination statute (49 U.S.C. § 47123) (prohibits discrimination on the basis of race, color, national origin, and sex);
- Executive Order 12898, Federal Actions to Address Environmental Justice in Minority Populations and Low-Income Populations, which ensures non-discrimination against minority populations by discouraging programs, policies, and activities with disproportionately high and adverse human health or environmental effects on minority and low-income populations;
- Executive Order 13166, Improving Access to Services for Persons with Limited English Proficiency, and resulting agency guidance, national origin discrimination includes discrimination because of limited English proficiency (LEP). To ensure compliance with Title VI, you must take reasonable steps to ensure that LEP persons have meaningful access to your programs (70 Fed. Reg. at 74087 to 74100);
- Title IX of the Education Amendments of 1972, as amended, which prohibits you from discriminating because of sex in education programs or activities (20 U.S.C. 1681 *et seq*).

Last Update: November 2017

BID CONDITIONS

NOTICE OF REQUIREMENT FOR AFFIRMATIVE ACTION TO ENSURE EQUAL OPPORTUNITY (Executive Order 11246)

1. The Offeror's or Bidder's attention is called to the "Equal Opportunity Clause" and the "Standard Federal Equal Employment Opportunity Construction Contract Specifications set forth herein.

2. The goals and timetables for minority and female participation, expressed in percentage terms for the Contractor's aggregate work force in each trade on all construction work in the covered area, are as follows:

Timetables	Goals for Minority Participation for Each Trade	Goals for Female Participation in Each Trade
	3.0% R.I. Except Newport County	6.9%
	3.1% Newport County	6.9%

These goals are applicable to all the Contractor's construction work (whether or not it is Federal or Federally assisted) performed in the covered area. If the Contractor performs construction work in a geographical area located outside of the covered area, it shall apply the goals established for such geographical area where the work is actually performed. With regard to this second area, the Contractor also is subject to the goals for both its federally involved and nonfederally involved construction.

The Contractor's compliance with the Executive Order and the regulations in 41 CFR Part 60-4 shall be based on its implementation of the Equal Opportunity Clause, specific affirmative action obligations required by the specifications set forth in 41 CFR 60-4.3(a), and its efforts to met the goals. The hours of minority and female employment and training must be substantially uniform throughout the length of the contract, and in each trade, and the Contractor shall make a good faith effort to employ minorities and women evenly on each of its projects. The transfer of minority or female employees or trainees from Contractor to Contractor or from project to project for the sole purpose of meeting the Contractor's goals shall be a violation of the contract, Executive Order and the regulations in 41 CFR Part 60-4. Compliance with the goals will be measured against the total work hours performed.

3. The Contractor shall provide written notification to the Director of the Office of Federal Contract Compliance Programs through the Area Director, OFCCP, 169 Weybosset Street, Providence, Rhode Island 02903, within 10 working days of award of any construction subcontract in excess of $10,000.00 at any tier for construction work under the contract resulting from this solicitation. The notification shall list the name, address and telephone number of the Subcontractor; employer identification number; estimated dollar amount of the subcontract; estimated starting and completion dates of the subcontract; and the geographical area in which the contract is to be performed.

4. As used in this Notice, and in the contract resulting from this Solicitation, the "covered area" is the State of Rhode Island.

STANDARD FEDERAL EQUAL EMPLOYMENT OPPORTUNITY
CONSTRUCTION CONTRACT SPECIFICATIONS
(Executive Order 11246)

1. As used in these specifications:

   (a) "Covered area" means the geographical area described in the solicitation from which this contract resulted.

   (b) "Director" means Director, Office of Federal Contract Compliance Programs United States Department of Labor, or any person to whom the Director delegates authority.

   (c) "Employer identification number" means the Federal Social Security number used on the Employer's Quarterly Federal Tax Return, U.S. Treasury Department Form 941.

   (d) "Minority" includes:

      (i) Black (all persons having origins in any of the Black African racial groups not of Hispanic origin);

      (ii) Hispanic (all persons of Mexican, Puerto Rican, Cuban, Central or South American or other Spanish Culture or origin, regardless of race);

      (iii) Asian and Pacific Islander (all persons having origins in any of the original peoples of the Far East, Southeast Asia, the Indian Subcontinent, or the Pacific Islands); and

      (iv) American Indian or Alaskan Native (all persons having origins in any of the original peoples of North America and maintaining identifiable tribal affiliations through membership and participation or community identifi- cation).

2. Whenever the Contractor, or any Subcontractor at any tier subcontracts a portion of the work involving any construction trade, it shall physically include in each subcontract in excess of $10,000.00 the provisions of these specifications and the Notice which contains the applicable goals for minority and female participation and which is set forth in the solicitations from which this contract resulted.

3. If the Contractor is participating (pursuant to 41 CFR 60-4.5) in a Hometown Plan approved by the U.S. Department of Labor in the covered area either individually or through an association, its affirmative action obligations on all work in the Plan area (including goals and timetables) shall be in accordance with that Plan for those trades which have unions participating in the Plan. Contractors must be able to demonstrate their participation in and compliance with the provisions of any such Hometown Plan. Each Contractor or Subcontractor participating in an approved Plan is individually required to comply with its obligations under the EEO clause, and to make a good faith effort to achieve each goal under the Plan in each trade in which it has employees. The overall good faith performance by other Contractors or Subcontractors toward a goal in a approved Plan does not excuse any covered Contractor's or Subcontractor's failure to take good faith efforts to achieve the Plan goals and timetables.

4. The Contractor shall implement the specific affirmative action standards provided in paragraphs 7a through p of these specifications. The goals set forth in the solicitation from which this contract resulted are expressed as percentages of the total hours of employment and training of minority and female utilization the Contractor should reasonably be able to achieve in each construction trade in which it has employees in the covered area. Covered Construction Contractors performing construction work in geographical areas where they do not have a Federal or federally assisted construction contract shall apply the minority and female goals established for the geographical

area where the work is being performed. Goals are published periodically in the Federal Register in notice form, and such notices may be obtained from any Office of Federal Contract Compliance Programs office or from Federal procurement contracting officers. The Contractor is expected to make substantially uniform progress in meeting its goals in each craft during the period specified.

5. Neither the provisions of any collective bargaining agreement, nor the failure by a union with whom the Contractor has a collective bargaining agreement, to refer either minorities or women shall excuse the Contractor's obligations under these specifications, Executive Order 11246, or the regulations promulgated pursuant thereto.

6. In order for the nonworking training hours of apprentices and trainees to be counted in meeting the goals such apprentices and trainees must be employed by the Contractor during the training period, and the Contractor must have made a commitment to employ the apprentices and trainees at the completion of their training, subject to the availability to employment opportunities. Trainees must be trained pursuant to training programs approved by the U.S. Department of Labor.

7. The Contractor shall take specific affirmative actions to ensure equal employment opportunity. The evaluation of the Contractor's compliance with these specifications shall be based upon its effort to achieve maximum results from its actions. The Contractor shall document these efforts fully, and shall implement affirmative action steps at least as extensive as the following:

   (a) Ensure and maintain a working environment free of harassment, intimidation and coercion at all sites, and in all facilities at which the Contractor's employees are assigned to work. The Contractor, where possible, will assign two or more women to each construction project. The Contractor shall specifically ensure that all on site supervisory personnel are aware of and carry out the Contractor's obligation to maintain such a working environment, with specific attention to minority or female individuals working at such sites or in such facilities.

   (b) Establish and maintain a current list of minority and female recruitment sources, provide written notification to minority and female recruitment sources and to community organizations when the Contractor or its unions have employment opportunities available, and maintain a record of the organization responses.

   (c) Maintain a current file of the names, addresses and telephone numbers of each minority and female off-the-street applicant and minority or female referral from a union, a recruitment source or community organization and of what action was taken with respect to each such individual. If such individual was sent to the union hiring hall for referral and was not referred back to the Contractor by the union or, if referred, not employed by the Contractor, this shall be documented in the file with the reason therefor, along with whatever additional actions the Contractor may have taken.

   (d) Provide immediate written notification to the Director when the union or unions with which the Contractor has a collective bargaining agreement has not referred to the Contractor a minority person or woman sent by the Contractor, or when the Contractor has other information that the union referral process has impeded the Contractor's efforts to meet its obligations.

   (e) Develop on-the-job training opportunities and/or participate in training programs for the area which expressly include minorities and women, including upgrading programs and apprenticeship and trainee programs relevant to the Contractor's employment needs, especially those programs funded or approved by the Department of Labor. The Contractor shall provide notice of these programs to the sources complied under 7b above.

   (f) Disseminate the Contractor's EEO policy by providing notice of the policy to unions and training programs and requesting their cooperation is assisting the Contractor in meeting its EEO obligations; by including it in any policy manual and collective bargaining agreement; by publicizing it in the company newspaper, annual report, etc.; by specific review of the policy with all management personnel and with all minority and female employees at least once a year; and by posting the company EEO policy on bulletin boards

accessible to all employees at each location where construction work is performed.

(g) Review, at least annually, the company's EEO policy and affirmative action obligations under these specifications with all employees having any responsibility for hiring, assignment, layoff, termination or other employment decisions including specific review of these items with on site supervisory personnel such as Superintendents, Supervisors, etc., prior to the initiation of construction work at any job site. A written record shall be made and maintained identifying the time and place of these meetings, persons attending, subject matter discussed, and disposition of the subject matter.

(h) Disseminate the Contractor's EEO policy externally by including it in any advertising in the news media, specifically including minority and female news media, and providing written notification to and discussing the Contractor's EEO policy with other Contractors and Subcontractors with whom the Contractor does or anticipates doing business.

(i) Direct its recruitment efforts, both oral and written, to minority female and community organizations, to schools with minority and female students and to minority and female recruitment and training organizations serving the Contractor's recruitment area and employment needs. Not later than one month prior to the date for the acceptance of applications for apprenticeship or other training by any recruitment source, the Contractor shall send written notification to organizations such as the above, describing the openings, screening procedures, and tests to be used in the selection procedures.

(j) Encourage present minority and female employees to recruit other minority persons and women and, where reasonable, provide after school, summer and vacation employment to minority and female youth both on the site and in other areas of a Contractor's work force.

(k) Validate all tests and other selection requirements where there is an obligation to do so under 41 CFR Part 60-3.

(l) Conduct, at least annually, an inventory and evaluation of all minority and female personnel for promotional opportunities and encourage these employees to seek or to prepare for, through appropriate training, etc., such opportunities.

(m) Ensure that seniority practices, job classifications, work assignments and other personnel practices, do not have a discriminatory effect by continually monitoring all personnel and employment related activities to ensure that the EEO policy and the Contractor's obligations under these specifications are being carried out.

(n) Ensure that all facilities and company activities are nonsegregated except that separate or single-user toilet and necessary changing facilities shall be provided to assure privacy between the sexes.

(o) Document and maintain a record of all solicitations of offers for subcontracts from minority and female construction contractors and suppliers, including circulation of solicitations to minority and female contractor associations and other business associations.

(p) Conduct a review, at least annually, of all supervisors' adherence to and performance under the Contractor's EEO policies and affirmative action obligations.

8. Contractors are encouraged to participate in voluntary associations which assist in fulfilling one or more of their affirmative action obligations (7a through p). The efforts of a contractor associations, joint contractor union, contractor-community, or other similar group of which the Contractor is a member and participant, may be asserted as fulfilling any one or more of its obligations under 7a through p of these Specifications provided that the Contractor actively participates in the group, makes every effort to assure that the group has a positive impact on the employment of minorities and women in the industry, ensures that the concrete benefits of the program are reflected in the Contractor's minority and female work force participation, makes a good faith effort to meet its individual goals and timetables, and can provide access to documentation which demonstrates the effectiveness of

actions taken on behalf of the Contractor. The obligation to comply, however, is the Contractor's and failure of such a group to fulfill an obligation shall not be a defense for the Contractor's noncompliance.

9. A single goal for minorities and a separate single goal for women have been established. The Contractor, however, is required to provide equal employment opportunity and to take affirmative action for all minority groups, both male and female, and all women, both minority and nonminority. Consequently, the Contractor may be in violation of the Executive Order if a particular group is employed in a substantially disparate manner (for example, even though a Contractor has achieved its goals for women generally, the Contractor may be in violation of the Executive Order if a specific minority group of women is underutilized).

10. The Contractor shall not use the goals and timetables or affirmative action standards to discriminate against any person because of race, color, religion, sex, or national origin.

11. The Contractor shall not enter into any subcontract with any person or firm debarred from Government contracts pursuant to Executive Order 11246.

12. The Contractor shall carry out such sanctions and penalties for violation of these specifications and of the Equal Opportunity Clause, including suspension, termination and cancellation of existing subcontracts as may be imposed or ordered pursuant to Executive Order 11246, as amended, and its implementing regulations, by the Office of Federal Contract Compliance Programs. Any Contractor who fails to carry out such sanctions and penalties shall be in violation of these specifications and Executive Order 11246, as amended.

13. The Contractor, in fulfilling its obligations under these specifications shall implement specific affirmative action steps, at least as extensive as those standards prescribed in paragraph 7 of these specifications, so as to achieve maximum results from its efforts to ensure equal employment opportunity. If the Contractor fails to comply with the requirements of the Executive Order, the implementing regulations, or these specifications, the Director shall proceed in accordance with 41 CFR 60-4.8.

14. The Contractor shall designate a responsible official to monitor all employment related activity to ensure that the company EEO policy is being carried out, to submit reports relating to the provisions hereof as may be required by the Government and to keep records. Records shall at least include for each employee the name, address, telephone numbers, construction trade, union affiliation, if any, employee identification number when assigned, social security number, race, sex, status (e.g., mechanic, apprentice, trainee,helper, or laborer), dates of changes in status, hours worked per week in the indicated trade, rate of pay, and locations at which the work was performed. Records shall be maintained in an easily understandable and retrievable form; however, to the degree that existing records satisfy this requirement, Contractors shall not be required to maintain separate records.

15. Nothing herein provided shall be construed as a limitation upon application of other laws which establish different standards of compliance or upon the application of requirements for the hiring of local or other area residents (e.g., those under the Public Works Employment Act of 1977 and the Community Development Block Grant Program.).

    (a) A Form 257, Monthly Employment Utilization Report, is to be completed by both Contractor and Subcontractors, and signed by the designated EEO Officer or an authorized representative of the prime or subcontractor. The reports are to be submitted by the 5th of each month during the term of the contract. The Contractor shall submit an aggregate Form 257 showing its entire work force, minority work force, and female work force (in work hours), on all construction work (Federal and non-federally assisted) in the covered area. The Contractor shall collect and submit reports for each Subcontractor's aggregate work force, providing the same information as above.

    (b) The Contractor shall submit a Form PR-1391, Federal-Aid Highway Construction Contractors' Annual EEO Report, to be completed by the Contractor and each Subcontractor for every month of July, during which work was performed and submitted to the State. **A separate report is to be completed for each Contractor and subcontractor holding contracts or subcontracts exceeding $10,000.00, except where specified.** The employment data entered should reflect the work force on board during all or any part of

the last payroll period preceding the end of the month of July.

NOTE: Include the R.I. Contract Number in the upper right hand corner of the form.

(c) The Contractor shall submit a Form EEO-10, Federal-Aid Highway Construction Contractors' Semiannual Training Report, to be completed by the Contractor semiannually for each individual employed on this contract (including any subcontractors under it who have provided training during the reporting period under the training special provision). This report is to be submitted by the 20th of the month following the reporting period (July 20 and January 20). The original of this report is to be furnished to the trainee, and two (2) copies submitted to the State.

These reports are required by the Public Laws of Rhode Island (1960), Chapters 85, 96, & 88; 23 U.S.C., 140(a); 23 CFR, Part 23; and Executive Order 11246.