235 Promenade Street, The Foundry Office Complex, Suite 535, Providence, RI 02908 T 401.383.6530 F 401.383.5480

HVAC ROOF ENCLOSURE REPAIRS
CCRI, Knight Campus
Warwick, Rhode Island 02886

DOCUMENT 00 91 13
ADDENDA

ADDENDUM #1 - 8/05/2019

This addendum makes changes and additions to the drawings for the referenced project and provides responses to bidder questions.

The following Drawings are replaced by this addendum and significant changes include:

Sheet No. 1 - Added Scope of Work description for Base Bid including Notes 1 and 2.
Revised drawing date

Sheet No. 2 - Revised girt and connection angle thickness to be consistent with existing girts.
Revised drawing title and date.

The following Drawing and Specification are added by this addendum and significant changes include:

Sheet No. 3 - Added new drawing and Scope of Work description for Alternate Bid #1

Comments:

1. **Comment:** The following additional Scope of Work is added to the contract for both the Base Bid and Alternate #1 Bid Items:

   THE CONTRACTOR SHALL REVIEW EXISTING CONDITIONS TO DETERMINE IF THE EXISTING ENCLOSURES ARE PROPERLY BONDED AND GROUNDED FOR LIGHTNING. IF ENCLOSURES ARE NOT BONDED AND GROUNDED FOR LIGHTNING IN ACCORDANCE WITH CURRENT BUILDING CODE REQUIREMENTS, THE CONTRACTOR SHALL PROVIDE A GROUNDING SYSTEM ROUTED THROUGH THE INTERIOR OF THE BUILDING THAT MEETS ALL BUILDING CODE REQUIREMENTS. THE GROUNDING SYSTEM SHALL BE DESIGNED BY A LICENSED PROFESSIONAL ENGINEER REGISTERED IN THE STATE OF RHODE ISLAND. THE DESIGN OF THE GROUNDING SYSTEM SHALL BE SUBMITTED FOR REVIEW AND ACCEPTANCE BY THE OWNER.

2. **Comment:** If Alternate Bid #1 is accepted, Contractor shall submit custom color for fiberglass panel. Color must match the steel panel color.

Response to Bidder comments/questions:

3. **Question:** What is existing roofing system and is it under warranty?

   Response: The roofing system is Sarnifil and is still under warrantee. A certified Sarnifil installer will be required to be carried in the Base Bid Costs for any roofing work.

4. **Question:** Is there any off hours work?

   Response: All work should be accomplished during the hours of 6:30AM and 3PM. Loading/unloading of materials and equipment for the roof will be required off hours preferably early in the morning before 7AM. This will have to be coordinated with the College. All safety devices such as barrels, caution tape, etc. will be required for this operation.

State of Rhode Island
Division of Purchases
One Capitol Hill
Providence, RI 02908

"NON-MANDATORY" PRE-BID CONFERENCE SIGN IN SHEET

BID NUMBER: 7598894

BID TITLE: HVAC Roof Enclosure Repairs, CCRI Knight Campus

PRE-BID DATE AND TIME: July 29, 2019 @ 9:00 AM

Purchasing Representative:
Gary P. Mosca
NON-Mandatory Pre-bid START TIME:
9:05
NON-Mandatory Pre-bid END TIME:
9:15

	COMPANY NAME	COMPANY REPRESENTATIVE	SIGNATURE	ADDRESS	CONTACT E-MAIL	CONTACT PHONE NUMBER
1	State of Rhode Island	Gary P. Mosca	[illegible]	One Capitol Hill, Providence, RI 02908	gary.mosca@purchasing.ri.gov	401-574-8124
2	GM2	Fred Vincent	Fred Vincent	235 Promenade St, Providence RI	FVincent@GM2inc.com	401-694-3021
3	CCRI	MARK LiBati	Mark Libati			
4	CCRI	Lisa Tontes	Lisa Tontes			
5	TOWER	DEREKK PAPA	[illegible]	10 S. Industrial Dr. Cranston RI 02921	estimating@towerconstructioncorp.com	401.942.3.0110
6	GM2	JAMES Day	[illegible]	115 Glastonbury Blvd CT 06033	JDay@GM2inc.com	860-659-1416
7						
8						
9						
10						
11						
12						
13						
14						
15						

** VENDOR: PLEASE SUBMIT A BUSINESS CARD IF AVAILABLE**

FED. ROAD DIV. NO.	STATE	FEDERAL AID PROJECT NO.	FISCAL YEAR	SHEET NO.	TOTAL SHEETS
N/A	RI	N/A	2019	01	03

BUILDING CODE:

RHODE ISLAND STATE BUILDING CODE (RISBCC-1), 2016
INTERNATIONAL BUILDING CODE (2016)
MINIMUM DESIGN LOADS FOR BUILDINGS AND OTHER STRUCTURES, ASCE (7-10)

DESIGN LOADS:

WIND LOAD:	
BASIC WIND SPEED	Vult = 146 mph
RISK CATEGORY	Rc = III
WIND DIRECTIONALITY FACTOR	Kd = 0.85
SURFACE ROUGHNESS CATEGORY	SRC = C
EXPOSURE CATEGORY	EXC = C
TOPOGRAPHIC FACTOR	Kzt = 1
GUST EFFECT FACTOR	G = 0.85
ENCLOSURE CLASSIFICATION	ENC = ENCLOSED
INTERNAL PRESSURE COEFFICIENT	GCpi = ± 0.18
VELOCITY PRESSURE	qz = 58 psf
C&C (COMPONENTS AND CLADDING)	
DESIGN WIND PRESSURE (ASCE 7-10)	PWW = +63 PSF, PLW = -69 PSF
FM APPROVAL WIND RATING (DS 1-28)	PWW = +76 PSF, PLW = -83 PSF

MATERIAL PROPERTIES:

STRUCTURAL STEEL:	
OTHER ROLLED SHAPES (ASTM A36)	Fy = 36 ksi
METAL PANELING	Fy = TBD
HIGH STRENGTH BOLTS (ASTM A325,SC)	Fu = 120 ksi

GENERAL NOTES:

1. CONTRACTOR TO COORDINATE STRUCTURAL DRAWINGS WITH OTHER DISCIPLINES. CONTRACTOR SHALL BE RESPONSIBLE FOR INCORPORATING ALL REQUIREMENTS IN THE SHOP DRAWINGS AND WORK.
2. DO NOT CHANGE SIZE OR DIMENSIONS OF STRUCTURAL MEMBERS WITHOUT APPROVAL OF THE ENGINEER.
3. CONTRACTOR SHALL BE RESPONSIBLE FOR LIMITING THE AMOUNT OF CONSTRUCTION LOAD IMPOSED UPON STRUCTURAL FRAMING. CONSTRUCTION LOADS SHALL NOT EXCEED THE DESIGN CAPACITY OF STRUCTURAL MEMBERS AT THE TIME LOADS ARE IMPOSED.
4. THE STRUCTURE IS DESIGNED TO FUNCTION AS A UNIT UPON COMPLETION. THE STRUCTURE IS DEPENDENT UPON THE LATERAL FORCE RESISTING SYSTEM INCLUDING BUT NOT LIMITED TO BRACED FRAMES, ANCHORAGES AND ATTACHMENTS FOR STABILITY AND FOR RESISTANCE TO GRAVITY AND LATERAL FORCES. CONTRACTOR SHALL PROVIDE TEMPORARY BRACING AND SUPPORT AS REQUIRED TO ENSURE THE STABILITY OF ALL STRUCTURAL ELEMENTS DURING CONSTRUCTION UNTIL THE ENTIRE STRUCTURE IS IN PLACE.
5. DO NOT SCALE DRAWINGS, USE DIMENSIONS.
6. CONTRACTOR'S CONSTRUCTION AND/OR ERECTION SEQUENCES SHALL RECOGNIZE AND CONSIDER THE EFFECTS OF THERMAL MOVEMENTS OF STRUCTURAL ELEMENTS DURING THE CONSTRUCTION PERIOD.
7. CONTRACTOR SHALL INFORM THE ENGINEER OF ANY DEVIATION FROM THE CONTRACT DOCUMENTS. THE CONTRACTOR SHALL NOT BE RELIEVED OF THE RESPONSIBILITY OF ANY DEVIATION BY THE ENGINEER'S REVIEW OF SHOP DRAWINGS, PRODUCT DATA, ETC., UNLESS THE CONTRACTOR HAS INFORMED THE ENGINEER OF SUCH DEVIATION AT THE TIME OF SUBMISSION AND THE ENGINEER HAS GIVEN WRITTEN APPROVAL TO THE DEVIATION.
8. CONTRACTOR TO FIELD VERIFY ALL DIMENSIONS, ELEVATIONS AND MEMBER SIZES ON STRUCTURAL DRAWINGS. PRIOR TO START OF CONSTRUCTION. CONTRACTOR TO REPORT DISCREPANCIES TO ENGINEER BEFORE PROCEEDING WITH WORK. CONTRACTOR SHALL PLACE ALL EQUIPMENT AND MATERIALS IN HIS FIELD YARD OR AT A SITE APPROVED BY THE ENGINEER.
9. LOCATION OF EXISTING STRUCTURES AND UTILITIES AND MATERIALS OF CONSTRUCTION SHALL BE FIELD VERIFIED BY THE CONTRACTOR PRIOR TO START OF CONSTRUCTION.
10. CONTRACTOR SHALL NOT DISRUPT THE OWNER'S OPERATIONS DURING CONSTRUCTION.
11. ALL DISTURBED AREAS TO BE RESTORED TO THE ORIGINAL CONDITIONS.
12. CONTRACTOR SHALL PROVIDE ADEQUATE SHORING AND BRACING TO SUPPORT AND MAINTAIN UTILITIES DURING CONSTRUCTION.
13. CONTRACTOR SHALL REQUEST MARK OUT OF UTILITY LOCATIONS FROM "CALL BEFORE YOU DIG" (1-888-344-7233) AT LEAST 48 HOURS PRIOR TO ANY EXCAVATION OR SET-UP OF PROPOSED LIFTING OPERATION.
14. IF ANY FIELD CONDITIONS PRECLUDE COMPLIANCE WITH THE DRAWINGS AND/OR CONDITIONS SPECIFIED, THE CONTRACTOR SHALL IMMEDIATELY NOTIFY THE ENGINEER AND SHALL NOT PROCEED WITH ANY AFFECTED WORK.
15. CONTRACTOR SHALL REVIEW AND APPROVE SHOP DRAWINGS PRIOR TO SUBMISSION TO THE ENGINEER. SHOP DRAWINGS SUBMITTED TO THE ENGINEER WITHOUT FIRST BEING STAMPED "REVIEWED" BY THE CONTRACTOR WILL BE RETURNED WITHOUT BEING REVIEWED. REVIEW OF SHOP DRAWINGS BY THE ENGINEER SHALL NOT RELIEVE THE CONTRACTOR FROM CONFORMING TO THE REQUIREMENTS OF THE CONTRACT DOCUMENTS.
16. ANY DAMAGE TO THE EXISTING ROOF MEMBRANE AND PANEL SUPPORT STRUCTURE CAUSED BY THE CONTRACTOR SHALL BE REPAIRED BY THE CONTRACTOR AT NO ADDITIONAL COST.
17. CONTRACTOR SHALL PLACE ALL EQUIPMENT AND MATERIAL AS FAR AWAY AS POSSIBLE FROM THE EDGE OF THE TRAVEL AREA SO AS NOT TO CAUSE A SAFETY HAZARD. CONTRACTOR SHALL NOT STOCKPILE REMOVED PANELS WITHIN THE PROJECT LIMITS.
18. CONTRACTOR SHALL BE SOLELY RESPONSIBLE FOR FABRICATION AND FIT OF HIS WORK.

STRUCTURAL STEEL:

1. ALL STRUCTURAL STEEL SHALL BE IN ACCORDANCE WITH AISC LOAD AND RESISTANCE FACTOR DESIGN SPECIFICATION FOR STRUCTURAL STEEL BUILDINGS.
2. FIELD CONNECTIONS SHALL BE BOLTED WITH HIGH STRENGTH BOLTS UNLESS OTHERWISE SHOWN.
3. ALL STRUCTURAL STEEL SHALL BE DETAILED IN ACCORDANCE WITH THE LATEST EDITION OF AISC "DETAILING FOR STEEL CONSTRUCTION". STEEL DETAILING SHALL INCORPORATE ALL CLEARANCES NECESSARY TO PRODUCE PROPER ERECTION CONNECTION AND FIT-UP.
4. THE EXISTING STRUCTURAL STEEL TO BE REPAINTED SHALL INCLUDE BUT NOT BE LIMITED TO, BEAMS, CONNECTION PLATES, STIFFENERS, UTILITY SUPPORTS, DIAPHRAGMS CROSS FRAMES, COLUMN'S AND FASTENERS.
5. THE WORK INCLUDES THE ELEMENTS OF CLEANING, SURFACE PREPARATION, THE SELECTION OF AN APPROPRIATE PAINT SYSTEM, AND THE ACTUAL PAINTING, ALL OF WHICH ARE SUBSEQUENTLY DEFINED HEREIN.
6. THE CONTRACTOR SHALL PROTECT PERSONNEL AND THE ENVIRONMENT FROM REMOVAL AND CONTAINMENT OF PAINT OR CORROSION PRODUCTS FROM STEEL FRAMES DURING CLEANING AND PAINTING OPERATIONS.
7. ALL PAINTING CONTRACTORS, PAINTING SUBCONTRACTORS ENGAGED IN WORK SHALL BE CERTIFIED UNDER THE STEEL STRUCTURES PAINTING COUNCILS CERTIFICATION PROGRAM.
8. SURFACE PREPARATION OF STEEL SURFACES SHALL CONSISTS OF SCRAPING OR GRINDING TO PROPERLY RECEIVE THE SPECIFIED PAINT/COATING SYSTEM. A PAINT SYSTEM CONSISTS OF A SPECIFIC COMBINATION OF PRIMER, INTERMEDIATE AND TOP COATING.
9. THE MATERIALS FOR ALL COATINGS SHALL BE FURNISHED FROM THE SAME PAINT PRODUCER AND/OR MANUFACTURE TO ENSURE COMPATIBILITY OF COMPONENTS AND COSTS.

METAL WALL PANEL/SYSTEM:

1. METAL WALL SYSTEMS AS DESIGNATED BY THE MANUFACTURE SHALL BE A COMPLETE SYSTEM. ALL COMPONENTS OF THE SYSTEM SHALL BE SUPPLIED BY THE SAME MANUFACTURER.
2. STEEL PANELS SHALL BE DESIGNED IN ACCORDANCE WITH AISI COLD FORM STEEL DESIGN MANUAL.
3. APPLICATION OF DESIGN LOADS SHALL BE IN ACCORDANCE WITH LOCAL BUILDING CODE.
4. WIND LOAD SHALL BE BASED ON THE WIND CRITERIA IN ACCORDANCE WITH LOCAL BUILDING CODE.
5. DEFLECTION REQUIREMENTS SHALL BE IN ACCORDANCE WITH THE APPLICABLE BUILDING CODE OR A MAXIMUM OF L/180.
6. ACCESSORIES AND FASTENERS SHALL BE CAPABLE OF RESISTING THE SPECIFIED DESIGN WIND SECTION FORCES IN ACCORDANCE WITH LOCAL BUILDING CODE.
7. PROVIDE METAL WALL PANEL SYSTEM W/ CONCEALED FASTENERS.

ERECTION OF PANELS AND COMPONENTS:

1. CONTRACTOR SHALL SUBMIT AN ERECTION PLAN THAT PROVIDES COMPLETE DETAILS OF THE PROCESS INCLUDING, BUT NOT LIMITED TO, TEMPORARY SUPPORTS, SCHEDULING AND OPERATION SEQUENCING, CRANE PLACEMENT, AND CALCULATED LIFTING FORCES AND STRESSES DURING VARYING STAGES OF LIFTING. THE CAPACITY OF THE CRANE AND ALL LIFTING AND CONNECTING DEVICES SHALL BE ADEQUATE FOR 125 PERCENT OF THE TOTAL PICK LOAD INCLUDING SPREADERS, RIGGING, HOOKS, AND ALL OTHER MATERIALS.
2. A REGISTERED PROFESSIONAL ENGINEER, LICENSED IN THE STATE OF RHODE ISLAND, SHALL STAMP THE CONTRACTOR'S ERECTION PLANS.
3. THE CONTRACTOR WILL BE REQUIRED TO PERFORM DAILY INSPECTIONS OF THE ERECTED PANELS UNTIL THE JOB IS COMPLETED.
4. THE COST OF PREPARING AND STAMPING THE ERECTION PLAN, COMPUTATIONS, REPORTS, COMMENTS AND NECESSARY REVISIONS SHALL BE CONSIDERED INCIDENTAL TO THE COST OF ERECTION.

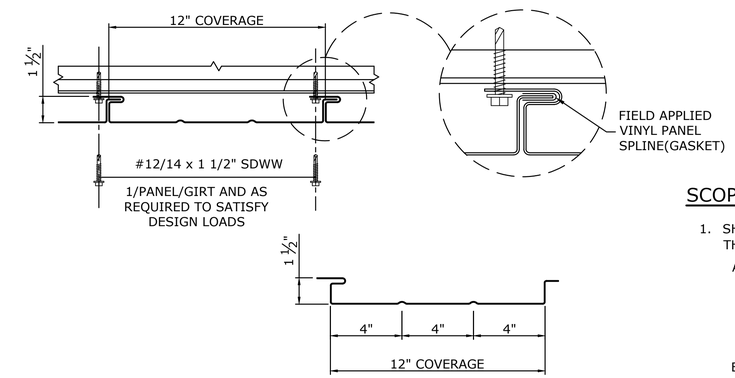

FLEXOSPAN FE12 STANDARD DETAILS
SCALE: NOT TO SCALE

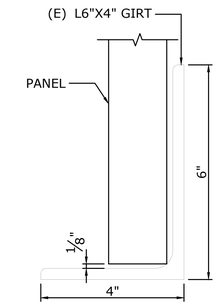

SECTION D-D
SCALE: 6"=1'-0"

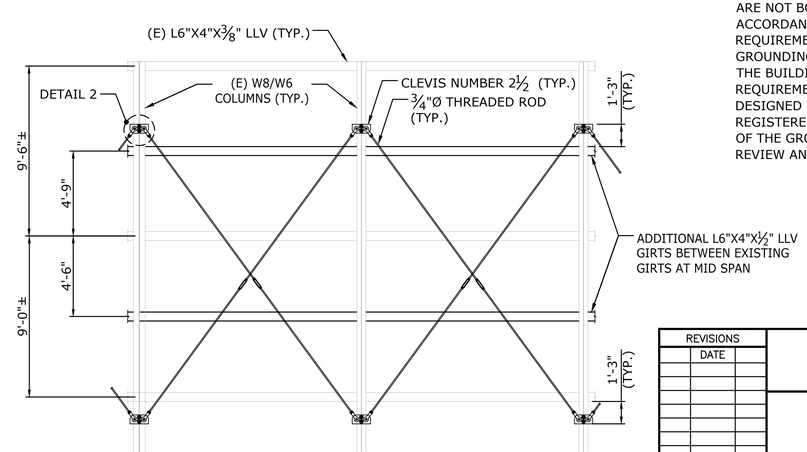

SECTION C-C
SCALE: ¼"=1'-0"

SCOPE OF WORK:BASE BID

1. SHEETS NO. 1 AND 2 REPRESENT THE BASE BID CONCEPT. THE BASE BID CONCEPT GENERALLY CONSISTS OF:
   A. REINFORCING THE EXISTING FRAMEWORK BY:
      a. REPLACING OR INSTALLING NEW X-BRACING AT EACH BAY
      b. INSTALLING ADDITIONAL GIRTS BETWEEN EXISTING GIRTS
   B. REPLACING THE EXISTING METAL WALL PANELS WITH NEW METAL WALL PANELS
   C. PAINTING THE EXISTING STEEL FRAMEWORK
   D. ENSURING THAT STRUCTURE IS PROPERLY BONDED AND GROUNDED FOR LIGHTNING
2. THE CONTRACTOR SHALL REVIEW EXISTING CONDITIONS TO DETERMINE IF THE EXISTING ENCLOSURES ARE PROPERLY BONDED AND GROUNDED FOR LIGHTNING. IF ENCLOSURES ARE NOT BONDED AND GROUNDED FOR LIGHTNING IN ACCORDANCE WITH CURRENT BUILDING CODE REQUIREMENTS, THE CONTRACTOR SHALL PROVIDE A GROUNDING SYSTEM ROUTED THROUGH THE INTERIOR OF THE BUILDING THAT MEETS ALL BUILDING CODE REQUIREMENTS. THE GROUNDING SYSTEM SHALL BE DESIGNED BY A LICENSED PROFESSIONAL ENGINEER REGISTERED IN THE STATE OF RHODE ISLAND. THE DESIGN OF THE GROUNDING SYSTEM SHALL BE SUBMITTED FOR REVIEW AND ACCEPTANCE BY THE OWNER.

RONALD SACCHI
No. 0012819
REGISTERED PROFESSIONAL ENGINEER CIVIL

ADDENDUM NO. 1

REVISIONS	
	DATE

COMMUNITY COLLEGE OF RHODE ISLAND

HVAC ROOF ENCLOSURES
STRUCTURAL REPAIR AT
KNIGHT CAMPUS

GENERAL NOTES AND DETAILS

GM2 Associates, Inc.
Consulting Engineers
235 Promenade Street, Suite 535
Providence, RI 02908

CHECKED BY NB/JKD DATE 08/05/2019 SCALE AS NOTED

FED. ROAD DIV. NO.	STATE	FEDERAL AID PROJECT NO.	FISCAL YEAR	SHEET NO.	TOTAL SHEETS
N/A	RI	N/A	2019	02	03

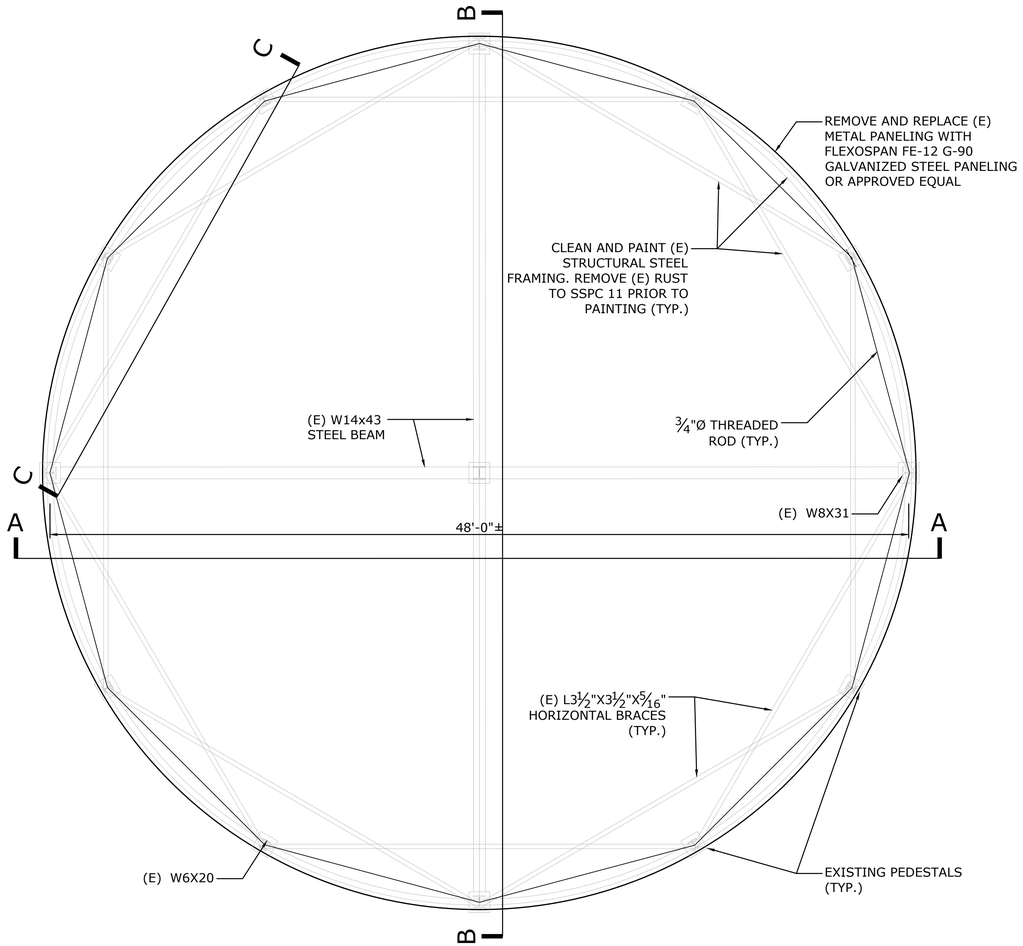

PLAN VIEW
SCALE: ¼"=1'-0"

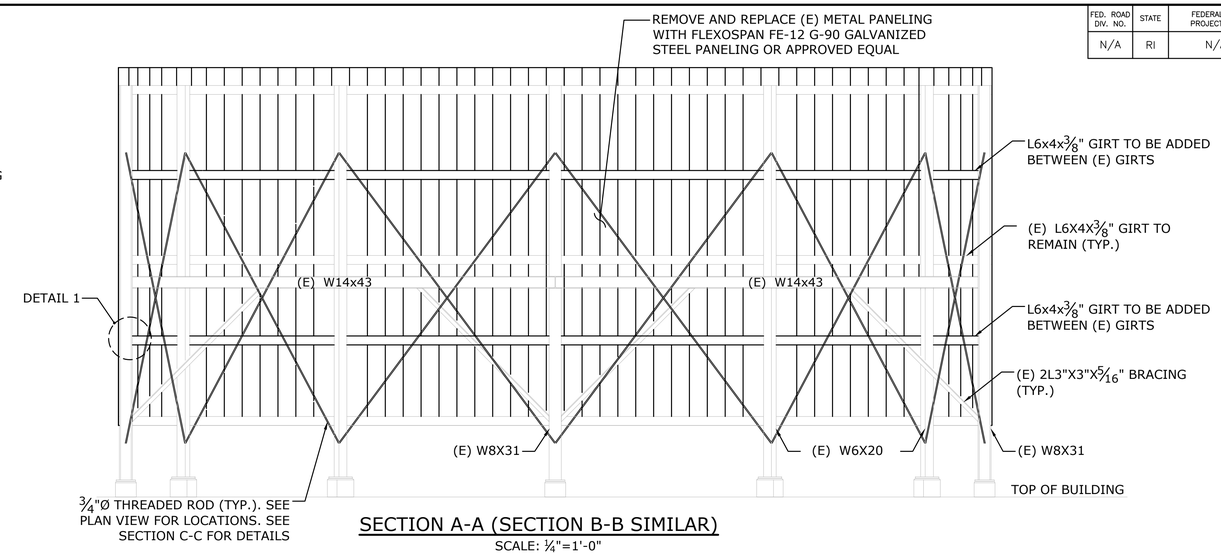

SECTION A-A (SECTION B-B SIMILAR)
SCALE: ¼"=1'-0"

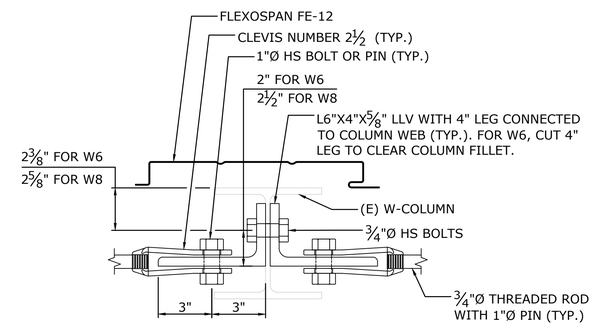

SECTION F-F
SCALE: 3"=1'-0"

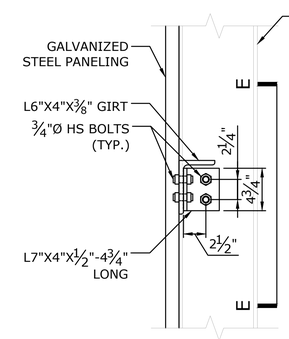

DETAIL 1
SCALE: 1½"=1'-0"

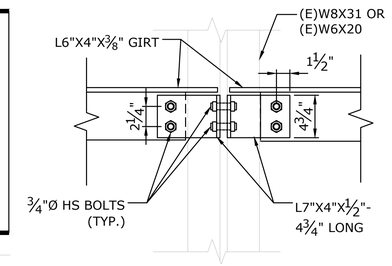

SECTION E-E
SCALE: 1½"=1'-0"

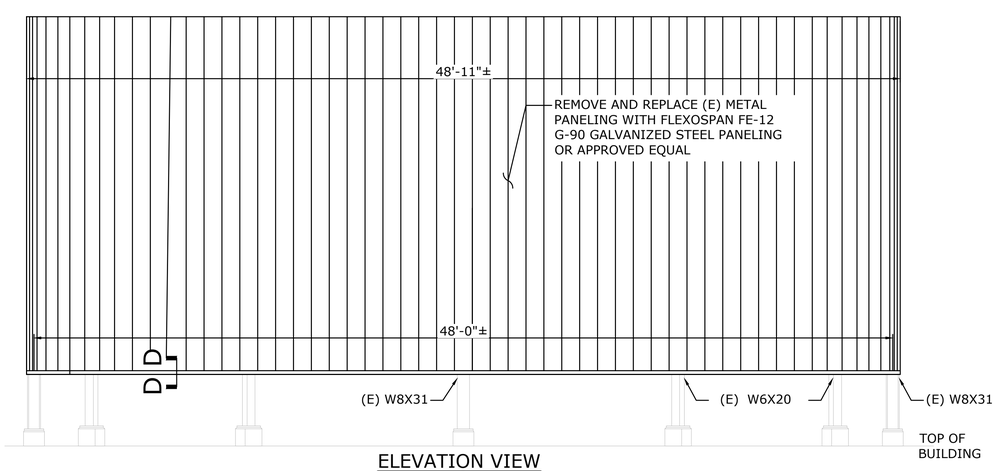

ELEVATION VIEW
SCALE: ¼"=1'-0"

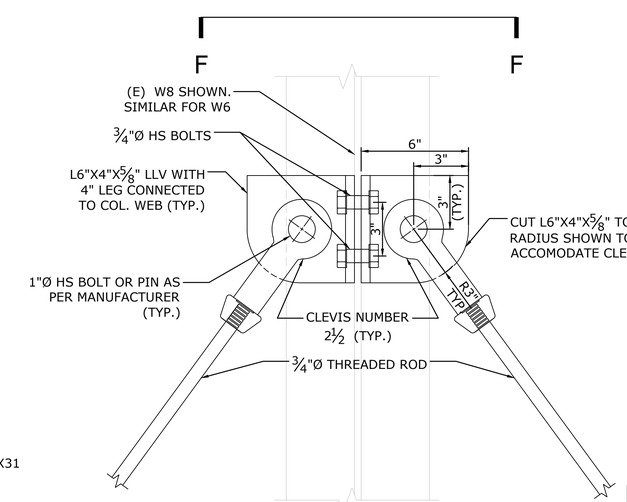

DETAIL 2
SCALE: 3"=1'-0"

RONALD SACCHI
No. 001289
REGISTERED PROFESSIONAL ENGINEER CIVIL

ADDENDUM NO. 1

REVISIONS	
	DATE

GM2 Associates, Inc.
Consulting Engineers
235 Promenade Street, Suite 535
Providence, RI 02908

COMMUNITY COLLEGE OF RHODE ISLAND

HVAC ROOF ENCLOSURES
STRUCTURAL REPAIR AT
KNIGHT CAMPUS

SECTIONS AND DETAILS

CHECKED BY NB/JKD DATE 08/05/2019 SCALE AS NOTED

20190718HVAC Plan
8/5/2019 2:22 PM

FED. ROAD DIV. NO.	STATE	FEDERAL AID PROJECT NO.	FISCAL YEAR	SHEET NO.	TOTAL SHEETS
N/A	RI	N/A	2019	03	03

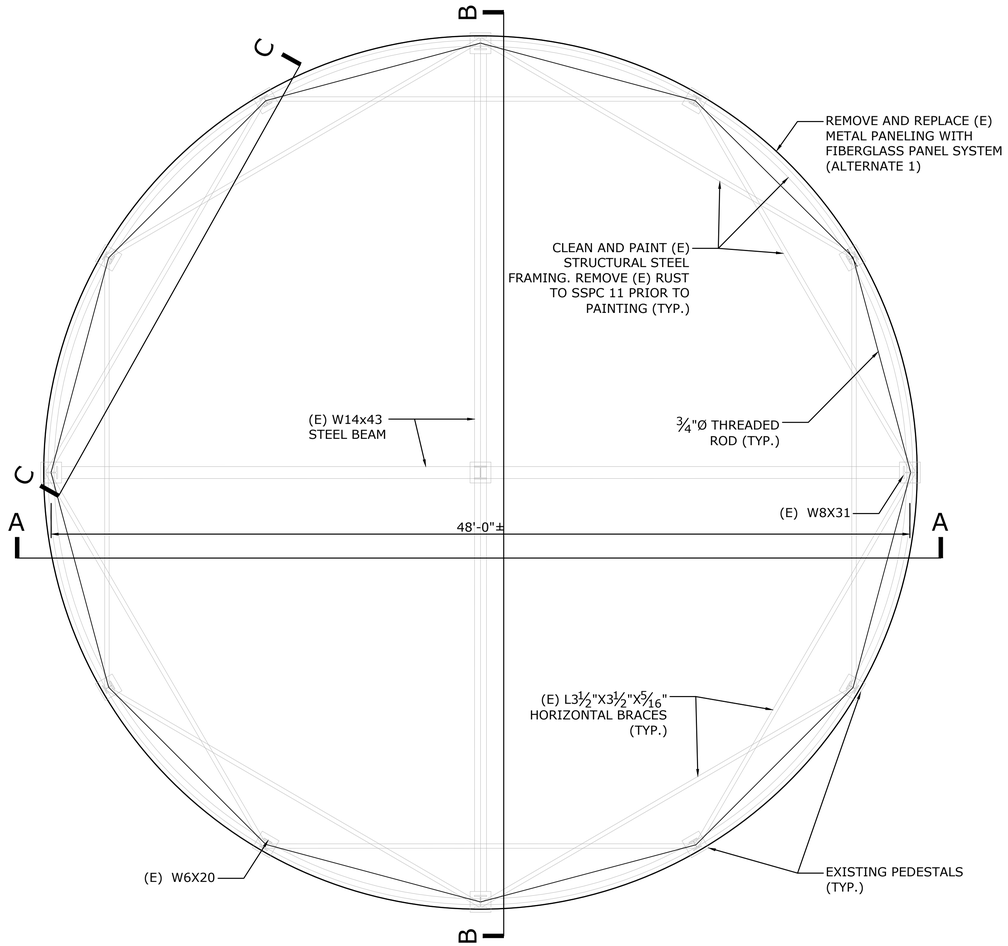

PLAN VIEW

SCALE: ¼"=1'-0"

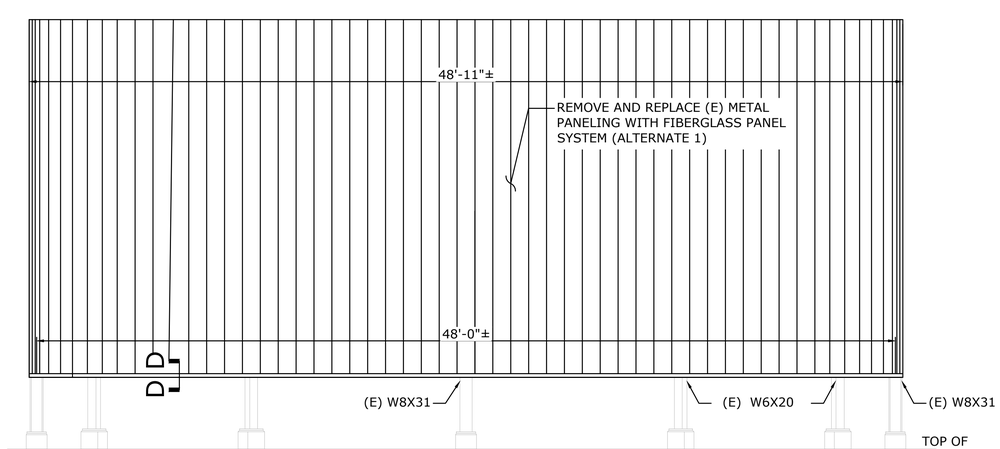

ELEVATION VIEW

SCALE: ¼"=1'-0"

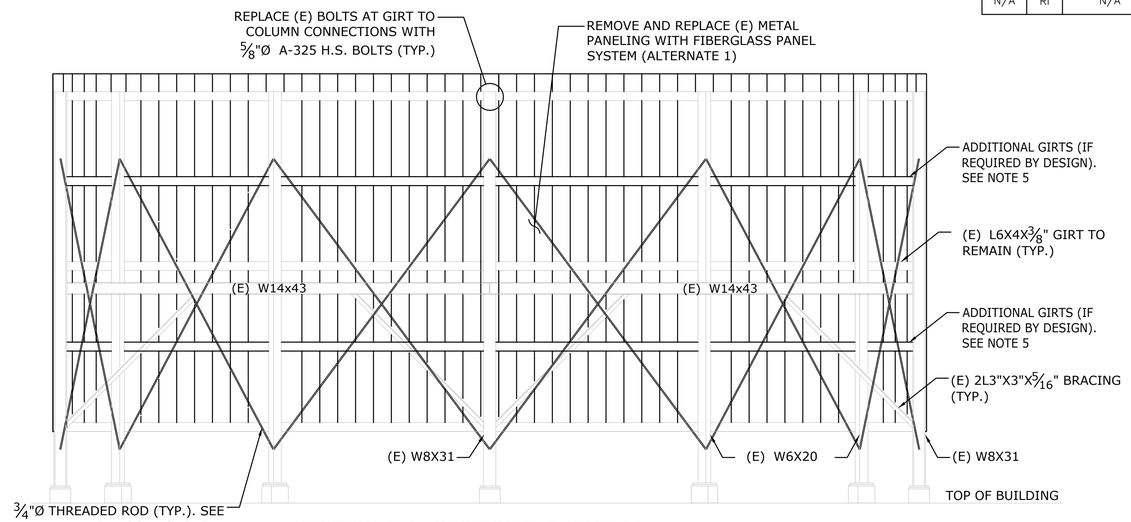

SECTION A-A (SECTION B-B SIMILAR)

SCALE: ¼"=1'-0"

SCOPE OF WORK:ALTERNATE 1

1. THIS SHEET PROVIDES REVISED DETAILS FOR AN ALTERNATE BID CONCEPT REFERRED TO AS ALTERNATE 1. ALTERNATE 1 GENERALLY CONSISTS OF:

   A. REINFORCING THE EXISTING FRAMEWORK BY:
      a. REPLACING OR INSTALLING NEW X-BRACING AT EACH BAY
      b. INSTALLING ADDITIONAL GIRTS OR SUPPORTS, IF REQUIRED
      c. INSTALLING HIGH STRENGTH BOLTS AT GIRT ATTACHMENT POINTS
   B. REPLACING THE EXISTING METAL WALL PANELS WITH NEW FIBERGLASS WALL PANELS
   C. PAINTING THE EXISTING STEEL FRAMEWORK
   D. ENSURING THAT STRUCTURE IS PROPERLY BONDED AND GROUNDED FOR LIGHTNING

2. ALTERNATE 1 CONSISTS OF MODIFYING THE BASE BID CONCEPT BY REPLACING THE PROPOSED FULL HEIGHT METAL PANELS WITH FULL HEIGHT FIBERGLASS PANELS.

3. DETAILS ON THIS SHEET REPLACE THE CORRESPONDING DETAILS ON SHEET NO. 2 FOR ALTERNATE 1. IN ADDITION, THE FOLLOWING DETAILS NO LONGER APPLY FOR ALTERNATE 1:

   SHEET NO. 1: FLEXOSPAN FE12 STANDARD DETAILS

   SHEET NO. 2: DETAIL 1 AND SECTION E-E

4. THE INSTALLATION OF THREADED ROD CROSS BRACING AND PAINTING OF THE EXISTING STEEL FRAMEWORK IS REQUIRED FOR BOTH THE BASE BID AND THE ALTERNATE 1 CONCEPTS.

5. THE CONTRACTOR'S ENGINEER SHALL DESIGN THE FIBERGLASS PANELS AND ANY ADDITIONAL GIRTS OR SUPPORTS THAT MAY BE REQUIRED. THE DESIGN AND DETAILING OF THE FIBERGLASS PANELS AND ANY ADDITIONAL GIRTS SHALL BE BASED ON THE WIND LOADS PROVIDED AND SHALL BE PREPARED BY A LICENSED PROFESSIONAL ENGINEER REGISTERED IN THE STATE OF RHODE ISLAND.

6. THE CONTRACTOR SHALL REVIEW EXISTING CONDITIONS TO DETERMINE IF THE EXISTING ENCLOSURES ARE PROPERLY BONDED AND GROUNDED FOR LIGHTNING. IF ENCLOSURES ARE NOT BONDED AND GROUNDED FOR LIGHTNING IN ACCORDANCE WITH CURRENT BUILDING CODE REQUIREMENTS, THE CONTRACTOR SHALL PROVIDE A GROUNDING SYSTEM ROUTED THROUGH THE INTERIOR OF THE BUILDING THAT MEETS ALL BUILDING CODE REQUIREMENTS. THE GROUNDING SYSTEM SHALL BE DESIGNED BY A LICENSED PROFESSIONAL ENGINEER REGISTERED IN THE STATE OF RHODE ISLAND. THE DESIGN OF THE GROUNDING SYSTEM SHALL BE SUBMITTED FOR REVIEW AND ACCEPTANCE BY THE OWNER.

RONALD SACCHI
No. 0012819
REGISTERED PROFESSIONAL ENGINEER CIVIL

ADDENDUM NO. 1

REVISIONS	
	DATE

COMMUNITY COLLEGE OF RHODE ISLAND

HVAC ROOF ENCLOSURES

STRUCTURAL REPAIR AT

KNIGHT CAMPUS

ALTERNATE 1
SECTIONS AND
DETAILS

GM2 Associates, Inc.
Consulting Engineers
235 Promenade Street, Suite 535
Providence, RI 02908

CHECKED BY NB/JKD DATE 08/05/2019 SCALE AS NOTED

20190718HVAC Plan
8/5/2019 2:22 PM