PROJECT MANUAL

Issued for Construction: July, 2019

COMMUNITY COLLEGE OF RHODE ISLAND

HVAC ROOF ENCLOSURE REPAIRS KNIGHT CAMPUS

400 EAST AVENUE
WARWICK, RHODE ISLAND 02886

GM2 ASSOCIATES, INC.

235 Promenade Street, The Foundry Office Complex, Suite 535, Providence, RI 02908 T 401.383.6530 F 401.383.5480

235 Promenade Street, The Foundry Office Complex, Suite 535, Providence, RI 02908 T 401.383.6530 F 401.383.5480

HVAC ROOF ENCLOSURE REPAIRS
CCRI, Knight Campus
Warwick, Rhode Island 02886

TABLE OF CONTENTS

PROCUREMENT AND CONTRACTING REQUIREMENTS GROUP

DIVISION 00 PROCUREMENT AND CONTRACTING REQUIREMENTS

DOCUMENT	*TITLE*	*# of PAGES*
00 01 15	LIST OF DRAWING SHEETS	1
00 43 13	BID SECURITY FORM (AIA A310 BID BOND)	3
00 52 00	AGREEMENT FORM (AIA A101)	10
00 61 13	PERFORMANCE BOND AND PAYMENT BOND FORM (AIA A312)	9
00 62 16	ACORD CERTIFICATE OF INSURANCE FORM (AIA G715)	3
00 65 20	RELEASE OF LIENS (AIA G706A)	2
00 72 00	GENERAL CONDITIONS (AIA A201)	34
00 73 46	WAGE DETERMINATION SCHEDULE	1
00 91 13	ADDENDA	1

SPECIFICATIONS GROUP

DIVISION 01 GENERAL REQUIREMENTS

SECTION	*TITLE*	*# of PAGES*
01 10 00	SUMMARY OF WORK	3
01 29 00	PAYMENT PROCEDURES	5
01 30 00	ADMINISTRATIVE PROCEDURES	3
01 33 00	SUBMITTAL PROCEDURES	6
01 45 00	QUALITY CONTROL	2
01 50 00	TEMPORARY FACILITIES AND CONTROLS	3
01 60 00	PRODUCT REQUIREMENTS	4
01 78 00	CLOSEOUT PROCEDURES AND SUBMITTALS	5
01 78 39	PROJECT RECORD DOCUMENTS	3

DIVISION 02 SITE CONSTRUCTION

SECTION	*TITLE*	*# of PAGES*
02 41 19	SELECTIVE STRUCTURE DEMOLITION	6

DIVISION 05 METALS

SECTION	*TITLE*	*# of PAGES*
05 12 00	STRUCTURAL STEEL FRAMING	10

DIVISION 07 THERMAL AND MOISTURE PROTECTION

SECTION	*TITLE*	*# of PAGES*
07 41 12	MANUFACTURED WALL PANELS	6

DIVISION 09 FINISHES

SECTION	*TITLE*	*# of PAGES*
09 96 00	HIGH-PERFORMANCE COATINGS	8

END OF TABLE OF CONTENTS

235 Promenade Street, The Foundry Office Complex, Suite 535, Providence, RI 02908 T 401.383.6530 F 401.383.5480

HVAC ROOF ENCLOSURE REPAIRS
CCRI, Knight Campus
Warwick, Rhode Island 02886

DOCUMENT 00 43 13
BID SECURITY FORM

AIA DOCUMENT A310 – Latest Edition
BID BOND

Document bound herewith. Failure to review this document will not relieve parties of the contractual requirements contained herein.

END OF DOCUMENT 00 43 13

AIA® Document A310™ – 2010

Bid Bond

CONTRACTOR:
(Name, legal status and address)

SURETY:
(Name, legal status and principal place of business)

OWNER:

State of Rhode Island, acting by and through
the Department of Administration, Division of Purchases, on behalf of the User Agency
One Capitol Hill, Second Floor
Providence, Rhode Island 02908-5855
401.578.8100 (telephone)

BOND AMOUNT: $

PROJECT:

HVAC Roof Enclosure Repairs
Community College of Rhode Island, Knight Campus
400 East Avenue
Warwick, RI 02886

The Contractor and Surety are bound to the Owner in the amount set forth above, for the payment of which the Contractor and Surety bind themselves, their heirs, executors, administrators, successors and assigns, jointly and severally, as provided herein. The conditions of this Bond are such that if the Owner accepts the bid of the Contractor within the time specified in the bid documents, or within such time period as may be agreed to by the Owner and Contractor, and the Contractor either (1) enters into a contract with the Owner in accordance with the terms of such bid, and gives such bond or bonds as may be specified in the bidding or Contract Documents, with a surety admitted in the jurisdiction of the Project and otherwise acceptable to the Owner, for the faithful performance of such Contract and for the prompt payment of labor and material furnished in the prosecution thereof; or (2) pays to the Owner the difference, not to exceed the amount of this Bond, between the amount specified in said bid and such larger amount for which the Owner may in good faith contract with another party to perform the work covered by said bid, then this obligation shall be null and void, otherwise to remain in full force and effect. The Surety hereby waives any notice of an agreement between the Owner and Contractor to extend the time in which the Owner may accept the bid. Waiver of notice by the Surety shall not apply to any extension exceeding sixty (60) days in the aggregate beyond the time for acceptance of bids specified in the bid documents, and the Owner and Contractor shall obtain the Surety's consent for an extension beyond sixty (60) days.

If this Bond is issued in connection with a subcontractor's bid to a Contractor, the term Contractor in this Bond shall be deemed to be Subcontractor and the term Owner shall be deemed to be Contractor.

When this Bond has been furnished to comply with a statutory or other legal requirement in the location of the Project, any provision in this Bond conflicting with said statutory or

Init.
/

AIA Document A310™ – 2010. Copyright © 1963, 1970 and 2010 by The American Institute of Architects. **All rights reserved. WARNING: This AIA® Document is protected by U.S. Copyright Law and International Treaties. Unauthorized reproduction or distribution of this AIA® Document, or any portion of it, may result in severe civil and criminal penalties, and will be prosecuted to the maximum extent possible under the law.** This document was produced by AIA software at 13:17:53 ET on 05/28/2019 under Order No. 4731673679 which expires on 02/12/2020, and is not for resale.
User Notes: (3B9ADA54)

legal requirement shall be deemed deleted herefrom and provisions conforming to such statutory or other legal requirement shall be deemed incorporated herein. When so furnished, the intent is that this Bond shall be construed as a statutory bond and not as a common law bond.

Signed and sealed this day of ,

	(Contractor as Principal) *(Seal)*
(Witness)	*(Title)*
	(Surety) *(Seal)*
(Witness)	*(Title)*

Init.

/

AIA Document A310™ – 2010. Copyright © 1963, 1970 and 2010 by The American Institute of Architects. **All rights reserved. WARNING: This AIA® Document is protected by U.S. Copyright Law and International Treaties. Unauthorized reproduction or distribution of this AIA® Document, or any portion of it, may result in severe civil and criminal penalties, and will be prosecuted to the maximum extent possible under the law.** This document was produced by AIA software at 13:17:53 ET on 05/28/2019 under Order No. 4731673679 which expires on 02/12/2020, and is not for resale.
User Notes: (3B9ADA54)

235 Promenade Street, The Foundry Office Complex, Suite 535, Providence, RI 02908 T 401.383.6530 F 401.383.5480

HVAC ROOF ENCLOSURE REPAIRS
CCRI, Knight Campus
Warwick, Rhode Island 02886

DOCUMENT 00 52 00
AGREEMENT FORM

AIA DOCUMENT A101 - 2017 Edition
ABBREVIATED STANDARD FORM OF AGREEMENT BETWEEN OWNER AND CONTRACTOR FOR CONSTRUCTION PROJECTS OF LIMITED SCOPE WHERE THE BASIS OF PAYMENT IS A STIPULATED SUM AS MODIFIED BY STATE PURCHASING

Document bound herewith. Failure to review this document will not relieve parties of the contractual requirements contained herein.

END OF DOCUMENT 00 52 00

AIA® Document A101™ – 2017

Standard Form of Agreement Between Owner and Contractor

AGREEMENT made as of the _____ day of _____ in the year _____.
(In words, indicate day, month and year.)

BETWEEN the Owner:
State of Rhode Island, acting by and through
the Department of Administration, Division of Purchases, on behalf of the User Agency
One Capitol Hill, Second Floor
Providence, Rhode Island 02908-5855
401.578.8100 (telephone); 401.574.8387 (facsimile)
www.puchasing.ri.gov

on behalf of the User Agency:
Community College of Rhode Island, Knight Campus
400 East Avenue
Warwick, RI 02886
401-8285-2380 (telephone)

and the Contractor:
(Name, legal status, address, telephone and facsimile numbers, and website)

for the following Project:
HVAC Roof Enclosure Repairs
Community College of Rhode Island, Knight Campus
400 East Avenue
Warwick, RI 02886

The Design Agent:
GM2 Associates, Inc.
235 Promenade Street
The Foundry Office Complex, Suite 535
Providence, RI 02908
401.383.6530 (telephone); 401.383.5480 (facsimile)

The Owner and Contractor agree as follows.

AIA Document A101™ – 2017. Copyright © 1915, 1918, 1925, 1937, 1951, 1958, 1961, 1963, 1967, 1974, 1977, 1987, 1991, 1997, 2007 and 2017 by The American Institute of Architects. **All rights reserved. WARNING: This AIA® Document is protected by U.S. Copyright Law and International Treaties. Unauthorized reproduction or distribution of this AIA® Document, or any portion of it, may result in severe civil and criminal penalties, and will be prosecuted to the maximum extent possible under the law.** This draft was produced by AIA software at 14:36:14 on 10/05/2018 under Order No. 0710989945 which expires on 07/31/2019, and is not for resale.
User Notes: A101– 2017 template revision date 2/27/2019 (3B9ADA24)

TABLE OF ARTICLES

1 THE CONTRACT DOCUMENTS

2 THE WORK OF THIS CONTRACT

3 DATE OF COMMENCEMENT AND SUBSTANTIAL COMPLETION

4 CONTRACT SUM

5 PAYMENTS

6 DISPUTE RESOLUTION

7 TERMINATION OR SUSPENSION

8 MISCELLANEOUS PROVISIONS

9 ENUMERATION OF CONTRACT DOCUMENTS

EXHIBIT A INSURANCE AND BONDS

ARTICLE 1 THE CONTRACT DOCUMENTS

The Contract Documents consist of this Agreement, Conditions of the Contract (General Conditions, Supplementary Conditions (if any), and other Conditions), Drawings, Specifications, Addenda issued prior to execution of this Agreement, other documents listed in this Agreement, and Modifications issued after execution of this Agreement, all of which form the Contract, and are as fully a part of the Contract as if attached to this Agreement or repeated herein. The Contract represents the entire and integrated agreement between the parties hereto and supersedes prior negotiations, representations, or agreements, either written or oral. An enumeration of the Contract Documents, other than a Modification, appears in Article 9.

ARTICLE 2 THE WORK OF THIS CONTRACT

The Contractor shall fully execute the Work described in the Contract Documents, except as specifically indicated in the Contract Documents to be the responsibility of others. No part of the Work shall be performed by Subcontractors without the Owner's prior written consent.

ARTICLE 3 DATE OF COMMENCEMENT AND SUBSTANTIAL COMPLETION

§ 3.1 The date of commencement of the Work shall be the later of: (i) the issuance of the Purchase Order by the Owner; and (ii) the date set forth in a notice to proceed issued by the User Agency.

§ 3.2 The Contract Time shall be measured from the date of commencement of the Work.

§ 3.3 Substantial Completion

§ 3.3.1 Subject to adjustments of the Contract Time as provided in the Contract Documents, the Contractor shall achieve Substantial Completion of the entire Work:
(Check one of the following boxes and complete the necessary information.)

[ ] Not later than _____ (___) calendar days from the date of commencement of the Work.

[ ] By the following date: _____

§ 3.3.2 Subject to adjustments of the Contract Time as provided in the Contract Documents, if portions of the Work are to be completed prior to Substantial Completion of the entire Work, the Contractor shall achieve Substantial Completion of such portions by the following dates:

AIA Document A101™ – 2017. Copyright © 1915, 1918, 1925, 1937, 1951, 1958, 1961, 1963, 1967, 1974, 1977, 1987, 1991, 1997, 2007 and 2017 by The American Institute of Architects. **All rights reserved. WARNING: This AIA® Document is protected by U.S. Copyright Law and International Treaties. Unauthorized reproduction or distribution of this AIA® Document, or any portion of it, may result in severe civil and criminal penalties, and will be prosecuted to the maximum extent possible under the law.** This draft was produced by AIA software at 14:36:14 on 10/05/2018 under Order No. 0710989945 which expires on 07/31/2019, and is not for resale.
User Notes: (3B9ADA24)

Portion of Work	Substantial Completion Date

§ 3.3.3 If the Contractor fails to achieve Substantial Completion as provided in this Section 3.3, liquidated damages, if any, shall be assessed as set forth in Section 4.5.

ARTICLE 4 CONTRACT SUM

§ 4.1 The Owner shall pay the Contractor the Contract Sum in current funds for the Contractor's performance of the Contract. Subject to additions and deductions as provided in the Contract Documents, the Contract Sum shall be: $_____.

§ 4.2 Alternates

§ 4.2.1 Alternates, if any, included in the Contract Sum:

Item	Price

§ 4.2.2 Subject to the conditions noted below, the following alternates may be accepted by the Owner following execution of this Agreement. Upon acceptance, the Owner shall issue a Modification to this Agreement.
(Insert below each alternate and the conditions that must be met for the Owner to accept the alternate.)

Item	Price	Conditions for Acceptance

§ 4.3 Allowances, if any, are specified in the Bid Proposal Form and are included in the Contract Sum.

§ 4.4 Unit prices, if any, are specified in the Bid Proposal Form and include all costs, including without limitation, labor, materials, services, regulatory compliance, overhead, and profit necessary for the completion of the Work. Unit prices shall be used for both additions to, and deletions from the Work.

§ 4.5 Liquidated damages, if any:
(Insert terms and conditions for liquidated damages, if any.)

.1 In the event that there is one date for Substantial Completion of the Work, the Contractor shall pay the Owner the sum stipulated in this Section 4.5.1 as liquidated damages, and not as a penalty, for each calendar day of delay until the Work is substantially complete: $_____.

.2 In the event that the Project is scheduled to be completed in phases, and there is more than one date for Substantial Completion of the Work, the Contractor shall pay the Owner an aggregate amount equal to the sums stipulated in this Section 4.5.2 as liquidated damages, and not as a penalty, for each calendar day of delay until the Work for each phase is substantially complete:

Phase	Liquidated Damages Sum

.3 The Owner and the Contractor have reasonably determined the sums set forth in this Section 4.5 to be a fair estimate of the Owner' actual damages which are difficult to ascertain in the event of delay.

§ 4.6 Other:

The Owner shall not be liable to the Contractor or any Subcontractor for claims or damages of any nature caused by or arising out of any delays. The sole remedy against the Owner for delays shall be the allowance of additional time for completion of the Work.

AIA Document A101™ – 2017. Copyright © 1915, 1918, 1925, 1937, 1951, 1958, 1961, 1963, 1967, 1974, 1977, 1987, 1991, 1997, 2007 and 2017 by The American Institute of Architects. **All rights reserved. WARNING: This AIA® Document is protected by U.S. Copyright Law and International Treaties. Unauthorized reproduction or distribution of this AIA® Document, or any portion of it, may result in severe civil and criminal penalties, and will be prosecuted to the maximum extent possible under the law.** This draft was produced by AIA software at 14:36:14 on 10/05/2018 under Order No. 0710989945 which expires on 07/31/2019, and is not for resale.
User Notes: (3B9ADA24)

ARTICLE 5 PAYMENTS

§ 5.1 Progress Payments

§ 5.1.1 Based upon Applications for Payment submitted to the Design Agent by the Contractor and Certificates for Payment issued by the Design Agent and approved by the Owner in writing, the Owner shall make progress payments on account of the Contract Sum to the Contractor as provided below and elsewhere in the Contract Documents.

§ 5.1.2 The period covered by each Application for Payment shall be one calendar month ending on the last day of the month.

§ 5.1.3 The Owner shall make payment of the certified amount, less retainage, to the Contractor not later than the 30th working day following written approval by the Owner.

§ 5.1.4 Each Application for Payment shall be based on the most recent schedule of values submitted by the Contractor and approved by the Design Agent and the Owner in accordance with the Contract Documents. The schedule of values shall allocate the entire Contract Sum among the various portions of the Work. The schedule of values shall be prepared in such form, and supported by such data to substantiate its accuracy, as the Design Agent and the Owner may require. This schedule of values shall be used as a basis for reviewing the Contractor's Applications for Payment.

§ 5.1.5 Applications for Payment shall show the percentage of completion of each portion of the Work as of the end of the period covered by the Application for Payment.

§ 5.1.6 In accordance with AIA Document A201™–2007, General Conditions of the Contract for Construction as modified by the Owner, and subject to other provisions of the Contract Documents, the amount of each progress payment shall be computed as follows:

§ 5.1.6.1 The amount of each progress payment shall first include:

- **.1** That portion of the Contract Sum properly allocable to completed Work;
- **.2** That portion of the Contract Sum properly allocable to materials and equipment delivered and suitably stored at the site for subsequent incorporation in the completed construction, or, if approved in advance by the Owner, suitably stored off the site at a location agreed upon in writing; and
- **.3** That portion of Construction Change Directives that the Design Agent determines, in the Design Agent's professional judgment, to be reasonably justified.

§ 5.1.6.2 The amount of each progress payment shall then be reduced by:

- **.1** The aggregate of any amounts previously paid by the Owner;
- **.2** The amount, if any, for Work that remains uncorrected and for which the Design Agent has previously withheld a Certificate for Payment as provided in Article 9 of AIA Document A201–2007 as modified by the Owner;
- **.3** For Work performed or defects discovered since the last payment application, any amount for which the Design Agent may withhold payment, or nullify a Certificate of Payment in whole or in part, as provided in Article 9 of AIA Document A201–2007 as modified by the Owner; and
- **.4** Retainage withheld pursuant to Section 5.1.7.

§ 5.1.7 Retainage

§ 5.1.7.1 For each progress payment made prior to Substantial Completion of the Work, the Owner may withhold the following amount, as retainage, from the payment otherwise due: five (5%) percent.

§ 5.1.7.1.1 Deleted.

§ 5.1.7.2 Deleted.

§ 5.1.7.3 Except as set forth in this Section 5.1.7.3, upon Substantial Completion of the Work, the Contractor may submit an Application for Payment that includes the retainage withheld from prior Applications for Payment pursuant to this Section 5.1.7. The Application for Payment submitted at Substantial Completion shall not include retainage as follows:

The amount of five (5%) percent shall be retained by the Owner through the date of Substantial Completion of the Work and then after the date of Substantial Completion of the Work in accordance with R.I. Gen. Laws § 37-12-10.1.

AIA Document A101™ – 2017. Copyright © 1915, 1918, 1925, 1937, 1951, 1958, 1961, 1963, 1967, 1974, 1977, 1987, 1991, 1997, 2007 and 2017 by The American Institute of Architects. **All rights reserved. WARNING: This AIA® Document is protected by U.S. Copyright Law and International Treaties. Unauthorized reproduction or distribution of this AIA® Document, or any portion of it, may result in severe civil and criminal penalties, and will be prosecuted to the maximum extent possible under the law.** This draft was produced by AIA software at 14:36:14 on 10/05/2018 under Order No. 0710989945 which expires on 07/31/2019, and is not for resale.
User Notes: (3B9ADA24)

§ 5.1.8 If final completion of the Work is materially delayed through no fault of the Contractor, the Owner shall pay the Contractor any additional amounts in accordance with Article 9 of AIA Document A201–2007 as modified by the Owner.

§ 5.1.9 Except with the Owner's prior written approval, the Contractor shall not make advance payments to suppliers for materials or equipment which have not been delivered and stored at the site.

§ 5.1.10 Within 10 working days of receipt of any progress payment from the Owner, the Contractor must pay its Subcontractors the full amount included for each such Subcontractor within the Contractor's Application for Payment in accordance with the provisions of AIA A201 – 2007, General Conditions of the Contract for Construction as modified by the Owner.

§ 5.2 Final Payment

§ 5.2.1 Final payment, constituting the entire unpaid balance of the Contract Sum, less the amount withheld pursuant to § 5.1.7.3, shall be made by the Owner to the Contractor when:

- **.1** the Contractor has fully performed the Contract except for the Contractor's responsibility to correct Work as provided in Article 12 of AIA Document A201–2007 as modified by the Owner, and to satisfy other requirements, if any, which extend beyond final payment; and
- **.2** a final Certificate for Payment has been issued by the Design Agent and approved in writing by the Owner;
- **.3** the Contractor has submitted its final release and final releases from all of its Subcontractors and suppliers in a form acceptable to the Owner; and
- **4** the Contractor has submitted to the Owner all close-out documents, including without limitation, all as-built plans, warranties, manuals, and other materials set forth in the Contract Documents.

§ 5.2.2 The Owner's final payment to the Contractor shall be made no later than 30 working days after the issuance of the Design Agent's final Certificate for Payment and written approval by the Owner.

§ 5.3 Interest

Payments due and unpaid under the Contract shall bear interest from the date payment is due in accordance with the provisions of "Prompt Payment by Department of Administration," R.I. Gen. Laws §§ 42-11.1-1 et seq.

§ 5.4 Owner's Rights

§ 5.4.1 The Owner shall have the right to deduct from any payments due to the Contractor the amount of any unpaid obligations owed to the State of Rhode Island by the Contractor, including without limitation, any and all unpaid taxes, the amount of any claim against the Contractor arising out of this Agreement, or any amount on account of any other reason permitted by applicable law.

§ 5.5 Pursuant to R.I. Gen. Laws § 44-1-6, the Owner shall withhold payment from the Contractor if the Contractor does not maintain a regular place of business in Rhode Island in the amount of three (3%) percent of the Contract Sum until 30 calendar days after Final Completion and compliance by the Contractor with the requirements of such section. The three (3%) percent withheld pursuant to R.I. Gen. Laws § 44-1-6 is not considered retainage which is held pursuant to § 5.1.7.

ARTICLE 6 DISPUTE RESOLUTION

§ 6.1 Initial Decision Maker

Claims shall be referred to the Initial Decision Maker for initial decision. The Purchasing Agent appointed pursuant to the provisions of the "State Purchases Act," R.I. Gen. Laws § 37-2-1 et seq., will serve as the Initial Decision Maker in accordance with the provisions of the State Purchases Act, State of Rhode Island Procurement Regulations, and this Section 6.1. An initial decision shall be required as a condition precedent to binding dispute resolution pursuant to Section 6.3 of any Claim arising prior to the date final payment is due.

§ 6.2 Mediation

For any Claim not resolved by the Initial Decision Maker procedures set forth in Section 6.1, and prior to the implementation of the binding dispute resolution procedures set forth in Section 6.3, the Contractor shall have the option to pursue mediation, exercisable by written notice to the Owner within 30 calendar days of an Initial Decision.

AIA Document A101™ – 2017. Copyright © 1915, 1918, 1925, 1937, 1951, 1958, 1961, 1963, 1967, 1974, 1977, 1987, 1991, 1997, 2007 and 2017 by The American Institute of Architects. **All rights reserved. WARNING: This AIA® Document is protected by U.S. Copyright Law and International Treaties. Unauthorized reproduction or distribution of this AIA® Document, or any portion of it, may result in severe civil and criminal penalties, and will be prosecuted to the maximum extent possible under the law.** This draft was produced by AIA software at 14:36:14 on 10/05/2018 under Order No. 0710989945 which expires on 07/31/2019, and is not for resale.
User Notes: (3B9ADA24)

In the event of the exercise of such option by the Contractor, the Owner and the Contractor shall attempt to select a mediator, and in the event that the Owner and the Contractor cannot agree on a mediator, either party may apply in writing to the Presiding Justice of the Providence County Superior Court, with a copy to the other, with a request for the court to appoint a mediator, and the costs of the mediator shall be borne equally by both parties.

§ 6.3 Binding Dispute Resolution
For any Claim not resolved by the Initial Decision Maker procedures set forth in Section 6.1, or mediation at the option of the Contractor pursuant to Section 6.2, the method of binding dispute resolution shall be determined in accordance with the provisions of the "Public Works Arbitration Act," R.I. Gen. Laws §§ 37-16-1 et seq.

ARTICLE 7 TERMINATION OR SUSPENSION

§ 7.1 The Contract may be terminated by the Owner or the Contractor as provided in Article 14 of AIA Document A201–2007, as modified by the Owner. The Contract may also be terminated by the Owner: (i) in the event of the unavailability of appropriated funds; (ii) in the absence of a determination of continued need; or (iii) as otherwise provided in the State of Rhode Island Procurement Regulations General Conditions of Purchase or other applicable law.

§ 7.1.1 Deleted.

§ 7.2 The Work may be suspended by the Owner as provided in: (i) the State of Rhode Island General Conditions of Purchase Regulation or other applicable law; or (ii) Article 14 of AIA Document A201–2007 as modified by the Owner.

ARTICLE 8 MISCELLANEOUS PROVISIONS

§ 8.1 Where reference is made in this Agreement to a provision of AIA Document A201–2007 or another Contract Document, the reference refers to: (i) the AIA Document A201 – 2007 or other Contract Document as modified by the Owner; and (ii) that provision in the AIA Document A201 – 2007 as modified by the Owner or other Contract Document as amended or supplemented by other provisions of the Contract Documents.

§ 8.2 Representatives for the Owner
§ 8.2.1 The Owner's representative:
(Name, title, address, email address, and other information for the preferred methods of contact)

§ 8.2.2 The User Agency's representative:
(Name, title, address, email address, and other information for the preferred methods of contact)

§ 8.2.3 The Design Agent's representative:
(Name, title, address, email address, and other information for the preferred methods of contact)

AIA Document A101™ – 2017. Copyright © 1915, 1918, 1925, 1937, 1951, 1958, 1961, 1963, 1967, 1974, 1977, 1987, 1991, 1997, 2007 and 2017 by The American Institute of Architects. **All rights reserved. WARNING: This AIA® Document is protected by U.S. Copyright Law and International Treaties. Unauthorized reproduction or distribution of this AIA® Document, or any portion of it, may result in severe civil and criminal penalties, and will be prosecuted to the maximum extent possible under the law.** This draft was produced by AIA software at 14:36:14 on 10/05/2018 under Order No. 0710989945 which expires on 07/31/2019, and is not for resale.
User Notes: (3B9ADA24)

§ 8.3 The Contractor's representative:
(Name, title, address, email address, and other information for the preferred methods of contact)

§ 8.4 Neither the Owner's nor the Contractor's representative nor the Design Agent's representative shall be changed without 10 working days' prior notice to the other party.

§ 8.5 Insurance and Bonds
§ 8.5.1 The Owner and the Contractor shall purchase and maintain insurance as set forth in the Solicitation and elsewhere in the Contract Documents.

§ 8.5.2 The Contractor shall provide bonds as set forth in the Solicitation and elsewhere in the Contract Documents.

§ 8.6 Deleted.

§ 8.7 Other provisions:
§ 8.7.1 The Contractor represents and warrants to the Owner, in addition to any other representations and warranties of the Contractor elsewhere in the Contract Documents:

.1 The Contractor and its Subcontractors are each financially solvent, able to pay their debts as they mature, and possess sufficient working capital to perform their obligations under the Contract Documents.
.2 The Contractor and its Subcontractors are each able to furnish the tools, materials, equipment, and labor required to complete the Project as required under the Contract Documents.
.3 The Contractor and each Subcontractor are authorized to do business in the State of Rhode Island and are properly licensed by all necessary governmental authorities having jurisdiction over them and over the Work and the Project.
.4 The execution of this Agreement and its performance is within its duly authorized powers.
.5 The Contractor has visited the site of the Project, familiarized itself with the local and special conditions under which the Work is to be performed, and correlated its observations with the requirements of the Contract Documents.
.6 The Contractor possesses the requisite level of experience and expertise in the business administration, construction, and superintendence of projects of the size, complexity, and nature of the Project, and it will perform the Work with the care, skill, and diligence of a contractor possessing such experience and expertise.

§ 8.7.2 The representations and warranties of the Contractor in this Section 8.7 and elsewhere in the Contract Documents will survive the execution and delivery of this Agreement, any termination of this Agreement, and the final completion of the Work.

§ 8.7.3 Any Change Orders or other Modifications must be approved in writing by the Owner.

§ 8.7.4 The Owner is the State of Rhode Island, acting by and through its Department of Administration, Division of Purchases, and therefore, pursuant to the provisions of R.I. Gen. Laws § 34-28-31, mechanics liens may not be placed against the Project.

ARTICLE 9 ENUMERATION OF CONTRACT DOCUMENTS
§ 9.1 This Agreement is comprised of the following documents:
.1 AIA Document A101™–2017, Standard Form of Agreement Between Owner and Contractor, as modified by the Owner
.2 **Deleted.**
.3 AIA Document A201™–2007, General Conditions of the Contract for Construction, as modified by the Owner.
.4 **Deleted.**

AIA Document A101™ – 2017. Copyright © 1915, 1918, 1925, 1937, 1951, 1958, 1961, 1963, 1967, 1974, 1977, 1987, 1991, 1997, 2007 and 2017 by The American Institute of Architects. **All rights reserved. WARNING: This AIA® Document is protected by U.S. Copyright Law and International Treaties. Unauthorized reproduction or distribution of this AIA® Document, or any portion of it, may result in severe civil and criminal penalties, and will be prosecuted to the maximum extent possible under the law.** This draft was produced by AIA software at 14:36:14 on 10/05/2018 under Order No. 0710989945 which expires on 07/31/2019, and is not for resale.
User Notes: (3B9ADA24)

.5 Drawings

The Drawings are included in the Solicitation and are available on the Division of Purchases website at www.purchasing.ri.gov.

.6 Specifications

The Specifications are included in the Solicitation and are available on the Division of Purchases website at www.purchasing.ri.gov.

.7 Addenda, if any, issued pursuant to the Solicitation form a part of the Solicitation and are available on the Division of Purchases website at www.purchasing.ri.gov.

.8 Supplementary and other Conditions of the Contract, including without limitation, the State of Rhode Island General Conditions of Purchase Regulation.

.9 Other documents listed below:

.1 The Solicitation, issued by the Owner, including without limitation, the Invitation to Bid, the Instructions to Bidders, the Specifications and Drawings, any Addenda, and the Bid Checklist.

.2 The Bid Proposal, including without limitation, the Bid Form and the Bidder Certification Cover Form.

.3 The Purchase Order issued by the Owner.

§ 9.2 This Agreement and the Contract Documents are subject to, and governed by, the laws of the State of Rhode Island, including all procurement statutes and regulations (available at www.purchasing.ri.gov), and applicable federal and local law, all of which are fully incorporated into this Agreement by this reference.

§ 9.3 In the event of any conflict between or among the Contract Documents, or any Contract Documents and any provision of the State of Rhode Island Procurement Regulations and/or any other provision of the Rhode Island General Laws, the State of Rhode Island Procurement Regulations and the Rhode Island General Laws shall control.

ARTICLE 10 BENEFITS OF AGREEMENT

§ 10.1 The User Agency is a disclosed third-party beneficiary of this Agreement and shall have all of the rights and benefits hereunder to which such a party is entitled. Nothing contained in this Agreement shall create a contractual relationship with, or a cause of action in favor of, any other third party against the Owner or the User Agency.

§ 10.2 This Agreement shall be binding on the Contractor and its successors and assigns; provided, however, that the Contractor may not assign its rights nor delegate its responsibilities under this Agreement without the Owner's prior written consent.

This Agreement is entered into as of the day and year first written above; provided, however, that this Agreement shall not become a valid, binding, and enforceable contract unless and until the Owner shall have issued a Purchase Order.

AIA Document A101™ – 2017. Copyright © 1915, 1918, 1925, 1937, 1951, 1958, 1961, 1963, 1967, 1974, 1977, 1987, 1991, 1997, 2007 and 2017 by The American Institute of Architects. **All rights reserved. WARNING: This AIA® Document is protected by U.S. Copyright Law and International Treaties. Unauthorized reproduction or distribution of this AIA® Document, or any portion of it, may result in severe civil and criminal penalties, and will be prosecuted to the maximum extent possible under the law.** This draft was produced by AIA software at 14:36:14 on 10/05/2018 under Order No. 0710989945 which expires on 07/31/2019, and is not for resale.
User Notes: (3B9ADA24)

THE STATE OF RHODE ISLAND, acting by and through its Department of Administration, Division of Purchases

OWNER *(Signature)*	**CONTRACTOR** *(Signature)*
(Printed name and title)	*(Printed name and title)*

AIA Document A101™ – 2017. Copyright © 1915, 1918, 1925, 1937, 1951, 1958, 1961, 1963, 1967, 1974, 1977, 1987, 1991, 1997, 2007 and 2017 by The American Institute of Architects. **All rights reserved. WARNING: This AIA® Document is protected by U.S. Copyright Law and International Treaties. Unauthorized reproduction or distribution of this AIA® Document, or any portion of it, may result in severe civil and criminal penalties, and will be prosecuted to the maximum extent possible under the law.** This draft was produced by AIA software at 14:36:14 on 10/05/2018 under Order No. 0710989945 which expires on 07/31/2019, and is not for resale.
User Notes: (3B9ADA24)

929705.v2

235 Promenade Street, The Foundry Office Complex, Suite 535, Providence, RI 02908 T 401.383.6530 F 401.383.5480

HVAC ROOF ENCLOSURE REPAIRS
CCRI, Knight Campus
Warwick, Rhode Island 02886

DOCUMENT 00 61 13
PERFORMANCE AND PAYMENT BOND FORM

AIA DOCUMENT A312 – Latest Edition
PERFORMANCE AND PAYMENT BOND

Document bound herewith. Failure to review this document will not relieve parties of the contractual requirements contained herein.

END OF DOCUMENT 00 61 13

AIA® Document A312™ – 2010

Performance Bond

CONTRACTOR:
(Name, legal status and address)

SURETY:
(Name, legal status and principal place of business)

OWNER:
State of Rhode Island, acting by and through
the Department of Administration, Division of Purchases, on behalf of the User Agency
One Capitol Hill, Second Floor
Providence, Rhode Island 02908-5855
401.578.8100 (telephone)

CONSTRUCTION CONTRACT
Date:
Amount: $
Description:
HVAC Roof Enclosure Repairs
Community College of Rhode Island, Knight Campus
400 East Avenue
Warwick, RI 02886

BOND
Date:
(Not earlier than Construction Contract Date)

Amount: $
Modifications to this Bond: None See Section 16

CONTRACTOR AS PRINCIPAL
Company: *(Corporate Seal)*
Signature:
Name and Title:

SURETY
Company: *(Corporate Seal)*
Signature:
Name and Title:

(Any additional signatures appear on the last page of this Performance Bond.)

(FOR INFORMATION ONLY — Name, address and telephone)

AGENT or **BROKER:**

OWNER'S REPRESENTATIVE:
GM2 Associates, Inc.
235 Promenade Street
The Foundry Office Complex, Suite 535
Providence, RI 02908
401.383.6530 (telephone); 401.383.5480 (facsimile)

AIA Document A312™ – 2010 Performance Bond. The American Institute of Architects. **All rights reserved. WARNING: This AIA® Document is protected by U.S. Copyright Law and International Treaties. Unauthorized reproduction or distribution of this AIA® Document, or any portion of it, may result in severe civil and criminal penalties, and will be prosecuted to the maximum extent possible under the law.** This document was produced by AIA software at 13:46:51 ET on 05/28/2019 under Order No. 4731673679 which expires on 02/12/2020, and is not for resale.
User Notes: (3B9ADA56)

§ 1 The Contractor and Surety, jointly and severally, bind themselves, their heirs, executors, administrators, successors and assigns to the Owner for the performance of the Construction Contract, which is incorporated herein by reference.

§ 2 If the Contractor performs the Construction Contract, the Surety and the Contractor shall have no obligation under this Bond, except when applicable to participate in a conference as provided in Section 3.

§ 3 If there is no Owner Default under the Construction Contract, the Surety's obligation under this Bond shall arise after

.1 the Owner first provides notice to the Contractor and the Surety that the Owner is considering declaring a Contractor Default. Such notice shall indicate whether the Owner is requesting a conference among the Owner, Contractor and Surety to discuss the Contractor's performance. If the Owner does not request a conference, the Surety may, within five (5) business days after receipt of the Owner's notice, request such a conference. If the Surety timely requests a conference, the Owner shall attend. Unless the Owner agrees otherwise, any conference requested under this Section 3.1 shall be held within ten (10) business days of the Surety's receipt of the Owner's notice. If the Owner, the Contractor and the Surety agree, the Contractor shall be allowed a reasonable time to perform the Construction Contract, but such an agreement shall not waive the Owner's right, if any, subsequently to declare a Contractor Default;

.2 the Owner declares a Contractor Default, terminates the Construction Contract and notifies the Surety; and

.3 the Owner has agreed to pay the Balance of the Contract Price in accordance with the terms of the Construction Contract to the Surety or to a contractor selected to perform the Construction Contract.

§ 4 Failure on the part of the Owner to comply with the notice requirement in Section 3.1 shall not constitute a failure to comply with a condition precedent to the Surety's obligations, or release the Surety from its obligations, except to the extent the Surety demonstrates actual prejudice.

§ 5 When the Owner has satisfied the conditions of Section 3, the Surety shall promptly and at the Surety's expense take one of the following actions:

§ 5.1 Arrange for the Contractor, with the consent of the Owner, to perform and complete the Construction Contract;

§ 5.2 Undertake to perform and complete the Construction Contract itself, through its agents or independent contractors;

§ 5.3 Obtain bids or negotiated proposals from qualified contractors acceptable to the Owner for a contract for performance and completion of the Construction Contract, arrange for a contract to be prepared for execution by the Owner and a contractor selected with the Owner's concurrence, to be secured with performance and payment bonds executed by a qualified surety equivalent to the bonds issued on the Construction Contract, and pay to the Owner the amount of damages as described in Section 7 in excess of the Balance of the Contract Price incurred by the Owner as a result of the Contractor Default; or

§ 5.4 Waive its right to perform and complete, arrange for completion, or obtain a new contractor and with reasonable promptness under the circumstances:

.1 After investigation, determine the amount for which it may be liable to the Owner and, as soon as practicable after the amount is determined, make payment to the Owner; or

.2 Deny liability in whole or in part and notify the Owner, citing the reasons for denial.

§ 6 If the Surety does not proceed as provided in Section 5 with reasonable promptness, the Surety shall be deemed to be in default on this Bond seven days after receipt of an additional written notice from the Owner to the Surety demanding that the Surety perform its obligations under this Bond, and the Owner shall be entitled to enforce any remedy available to the Owner. If the Surety proceeds as provided in Section 5.4, and the Owner refuses the payment or the Surety has denied liability, in whole or in part, without further notice the Owner shall be entitled to enforce any remedy available to the Owner.

AIA Document A312™ – 2010 Performance Bond. The American Institute of Architects. **All rights reserved. WARNING: This AIA® Document is protected by U.S. Copyright Law and International Treaties. Unauthorized reproduction or distribution of this AIA® Document, or any portion of it, may result in severe civil and criminal penalties, and will be prosecuted to the maximum extent possible under the law.** This document was produced by AIA software at 13:46:51 ET on 05/28/2019 under Order No. 4731673679 which expires on 02/12/2020, and is not for resale.
User Notes: (3B9ADA56)

§ 7 If the Surety elects to act under Section 5.1, 5.2 or 5.3, then the responsibilities of the Surety to the Owner shall not be greater than those of the Contractor under the Construction Contract, and the responsibilities of the Owner to the Surety shall not be greater than those of the Owner under the Construction Contract. Subject to the commitment by the Owner to pay the Balance of the Contract Price, the Surety is obligated, without duplication, for

.1 the responsibilities of the Contractor for correction of defective work and completion of the Construction Contract;

.2 additional legal, design professional and delay costs resulting from the Contractor's Default, and resulting from the actions or failure to act of the Surety under Section 5; and

.3 liquidated damages, or if no liquidated damages are specified in the Construction Contract, actual damages caused by delayed performance or non-performance of the Contractor.

§ 8 If the Surety elects to act under Section 5.1, 5.3 or 5.4, the Surety's liability is limited to the amount of this Bond.

§ 9 The Surety shall not be liable to the Owner or others for obligations of the Contractor that are unrelated to the Construction Contract, and the Balance of the Contract Price shall not be reduced or set off on account of any such unrelated obligations. No right of action shall accrue on this Bond to any person or entity other than the Owner or its heirs, executors, administrators, successors and assigns.

§ 10 The Surety hereby waives notice of any change, including changes of time, to the Construction Contract or to related subcontracts, purchase orders and other obligations.

§ 11 Any proceeding, legal or equitable, under this Bond may be instituted in any court of competent jurisdiction in the location in which the work or part of the work is located and shall be instituted within two years after a declaration of Contractor Default or within two years after the Contractor ceased working or within two years after the Surety refuses or fails to perform its obligations under this Bond, whichever occurs first. If the provisions of this Paragraph are void or prohibited by law, the minimum period of limitation available to sureties as a defense in the jurisdiction of the suit shall be applicable.

§ 12 Notice to the Surety, the Owner or the Contractor shall be mailed or delivered to the address shown on the page on which their signature appears.

§ 13 When this Bond has been furnished to comply with a statutory or other legal requirement in the location where the construction was to be performed, any provision in this Bond conflicting with said statutory or legal requirement shall be deemed deleted herefrom and provisions conforming to such statutory or other legal requirement shall be deemed incorporated herein. When so furnished, the intent is that this Bond shall be construed as a statutory bond and not as a common law bond.

§ 14 Definitions

§ 14.1 Balance of the Contract Price. The total amount payable by the Owner to the Contractor under the Construction Contract after all proper adjustments have been made, including allowance to the Contractor of any amounts received or to be received by the Owner in settlement of insurance or other claims for damages to which the Contractor is entitled, reduced by all valid and proper payments made to or on behalf of the Contractor under the Construction Contract.

§ 14.2 Construction Contract. The agreement between the Owner and Contractor identified on the cover page, including all Contract Documents and changes made to the agreement and the Contract Documents.

§ 14.3 Contractor Default. Failure of the Contractor, which has not been remedied or waived, to perform or otherwise to comply with a material term of the Construction Contract.

§ 14.4 Owner Default. Failure of the Owner, which has not been remedied or waived, to pay the Contractor as required under the Construction Contract or to perform and complete or comply with the other material terms of the Construction Contract.

§ 14.5 Contract Documents. All the documents that comprise the agreement between the Owner and Contractor.

AIA Document A312™ – 2010 Performance Bond. The American Institute of Architects. **All rights reserved. WARNING: This AIA® Document is protected by U.S. Copyright Law and International Treaties. Unauthorized reproduction or distribution of this AIA® Document, or any portion of it, may result in severe civil and criminal penalties, and will be prosecuted to the maximum extent possible under the law.** This document was produced by AIA software at 13:46:51 ET on 05/28/2019 under Order No. 4731673679 which expires on 02/12/2020, and is not for resale.
User Notes: (3B9ADA56)

§ 15 If this Bond is issued for an agreement between a Contractor and subcontractor, the term Contractor in this Bond shall be deemed to be Subcontractor and the term Owner shall be deemed to be Contractor.

§ 16 Modifications to this bond are as follows:

(Space is provided below for additional signatures of added parties, other than those appearing on the cover page.)

CONTRACTOR AS PRINCIPAL		**SURETY**	
Company:	*(Corporate Seal)*	Company:	*(Corporate Seal)*
Signature:		Signature:	
Name and Title:		Name and Title:	
Address:		Address:	

AIA Document A312™ – 2010 Performance Bond. The American Institute of Architects**. All rights reserved. WARNING: This AIA® Document is protected by U.S. Copyright Law and International Treaties. Unauthorized reproduction or distribution of this AIA® Document, or any portion of it, may result in severe civil and criminal penalties, and will be prosecuted to the maximum extent possible under the law.** This document was produced by AIA software at 13:46:51 ET on 05/28/2019 under Order No. 4731673679 which expires on 02/12/2020, and is not for resale.
User Notes: (3B9ADA56)

AIA® Document A312™ – 2010

Payment Bond

CONTRACTOR:
(Name, legal status and address)

SURETY:
(Name, legal status and principal place of business)

OWNER:
State of Rhode Island, acting by and through
the Department of Administration, Division of Purchases, on behalf of the User Agency
One Capitol Hill, Second Floor
Providence, Rhode Island 02908-5855
401.578.8100 (telephone)

CONSTRUCTION CONTRACT
Date:
Amount: $
Description:
HVAC Roof Enclosure Repairs
Community College of Rhode Island, Knight Campus
400 East Avenue
Warwick, RI 02886

BOND
Date:
(Not earlier than Construction Contract Date)

Amount: $
Modifications to this Bond: None See Section 18

CONTRACTOR AS PRINCIPAL
Company: *(Corporate Seal)*
Signature:
Name and Title:

SURETY
Company: *(Corporate Seal)*
Signature:
Name and Title:

(Any additional signatures appear on the last page of this Payment Bond.)

(FOR INFORMATION ONLY — Name, address and telephone)

AGENT or **BROKER:**

OWNER'S REPRESENTATIVE:
GM2 Associates, Inc.
235 Promenade Street
The Foundry Office Complex, Suite 535
Providence, RI 02908
401.383.6530 (telephone); 401.383.5480 (facsimile)

AIA Document A312™ – 2010 Payment Bond. The American Institute of Architects. **All rights reserved. WARNING: This AIA® Document is protected by U.S. Copyright Law and International Treaties. Unauthorized reproduction or distribution of this AIA® Document, or any portion of it, may result in severe civil and criminal penalties, and will be prosecuted to the maximum extent possible under the law.** This document was produced by AIA software at 13:44:33 ET on 05/28/2019 under Order No. 4731673679 which expires on 02/12/2020, and is not for resale.
User Notes: (3B9ADA54)

§ 1 The Contractor and Surety, jointly and severally, bind themselves, their heirs, executors, administrators, successors and assigns to the Owner to pay for labor, materials and equipment furnished for use in the performance of the Construction Contract, which is incorporated herein by reference, subject to the following terms.

§ 2 If the Contractor promptly makes payment of all sums due to Claimants, and defends, indemnifies and holds harmless the Owner from claims, demands, liens or suits by any person or entity seeking payment for labor, materials or equipment furnished for use in the performance of the Construction Contract, then the Surety and the Contractor shall have no obligation under this Bond.

§ 3 If there is no Owner Default under the Construction Contract, the Surety's obligation to the Owner under this Bond shall arise after the Owner has promptly notified the Contractor and the Surety (at the address described in Section 13) of claims, demands, liens or suits against the Owner or the Owner's property by any person or entity seeking payment for labor, materials or equipment furnished for use in the performance of the Construction Contract and tendered defense of such claims, demands, liens or suits to the Contractor and the Surety.

§ 4 When the Owner has satisfied the conditions in Section 3, the Surety shall promptly and at the Surety's expense defend, indemnify and hold harmless the Owner against a duly tendered claim, demand, lien or suit.

§ 5 The Surety's obligations to a Claimant under this Bond shall arise after the following:

§ 5.1 Claimants, who do not have a direct contract with the Contractor,

- **.1** have furnished a written notice of non-payment to the Contractor, stating with substantial accuracy the amount claimed and the name of the party to whom the materials were, or equipment was, furnished or supplied or for whom the labor was done or performed, within ninety (90) days after having last performed labor or last furnished materials or equipment included in the Claim; and
- **.2** have sent a Claim to the Surety (at the address described in Section 13).

§ 5.2 Claimants, who are employed by or have a direct contract with the Contractor, have sent a Claim to the Surety (at the address described in Section 13).

§ 6 If a notice of non-payment required by Section 5.1.1 is given by the Owner to the Contractor, that is sufficient to satisfy a Claimant's obligation to furnish a written notice of non-payment under Section 5.1.1.

§ 7 When a Claimant has satisfied the conditions of Sections 5.1 or 5.2, whichever is applicable, the Surety shall promptly and at the Surety's expense take the following actions:

§ 7.1 Send an answer to the Claimant, with a copy to the Owner, within sixty (60) days after receipt of the Claim, stating the amounts that are undisputed and the basis for challenging any amounts that are disputed; and

§ 7.2 Pay or arrange for payment of any undisputed amounts.

§ 7.3 The Surety's failure to discharge its obligations under Section 7.1 or Section 7.2 shall not be deemed to constitute a waiver of defenses the Surety or Contractor may have or acquire as to a Claim, except as to undisputed amounts for which the Surety and Claimant have reached agreement. If, however, the Surety fails to discharge its obligations under Section 7.1 or Section 7.2, the Surety shall indemnify the Claimant for the reasonable attorney's fees the Claimant incurs thereafter to recover any sums found to be due and owing to the Claimant.

§ 8 The Surety's total obligation shall not exceed the amount of this Bond, plus the amount of reasonable attorney's fees provided under Section 7.3, and the amount of this Bond shall be credited for any payments made in good faith by the Surety.

§ 9 Amounts owed by the Owner to the Contractor under the Construction Contract shall be used for the performance of the Construction Contract and to satisfy claims, if any, under any construction performance bond. By the Contractor furnishing and the Owner accepting this Bond, they agree that all funds earned by the Contractor in the performance of the Construction Contract are dedicated to satisfy obligations of the Contractor and Surety under this Bond, subject to the Owner's priority to use the funds for the completion of the work.

AIA Document A312™ – 2010 Payment Bond. The American Institute of Architects. **All rights reserved. WARNING: This AIA® Document is protected by U.S. Copyright Law and International Treaties. Unauthorized reproduction or distribution of this AIA® Document, or any portion of it, may result in severe civil and criminal penalties, and will be prosecuted to the maximum extent possible under the law.** This document was produced by AIA software at 13:44:33 ET on 05/28/2019 under Order No. 4731673679 which expires on 02/12/2020, and is not for resale.
User Notes: (3B9ADA54)

§ 10 The Surety shall not be liable to the Owner, Claimants or others for obligations of the Contractor that are unrelated to the Construction Contract. The Owner shall not be liable for the payment of any costs or expenses of any Claimant under this Bond, and shall have under this Bond no obligation to make payments to, or give notice on behalf of, Claimants or otherwise have any obligations to Claimants under this Bond.

§ 11 The Surety hereby waives notice of any change, including changes of time, to the Construction Contract or to related subcontracts, purchase orders and other obligations.

§ 12 No suit or action shall be commenced by a Claimant under this Bond other than in a court of competent jurisdiction in the state in which the project that is the subject of the Construction Contract is located or after the expiration of one year from the date (1) on which the Claimant sent a Claim to the Surety pursuant to Section 5.1.2 or 5.2, or (2) on which the last labor or service was performed by anyone or the last materials or equipment were furnished by anyone under the Construction Contract, whichever of (1) or (2) first occurs. If the provisions of this Paragraph are void or prohibited by law, the minimum period of limitation available to sureties as a defense in the jurisdiction of the suit shall be applicable.

§ 13 Notice and Claims to the Surety, the Owner or the Contractor shall be mailed or delivered to the address shown on the page on which their signature appears. Actual receipt of notice or Claims, however accomplished, shall be sufficient compliance as of the date received.

§ 14 When this Bond has been furnished to comply with a statutory or other legal requirement in the location where the construction was to be performed, any provision in this Bond conflicting with said statutory or legal requirement shall be deemed deleted herefrom and provisions conforming to such statutory or other legal requirement shall be deemed incorporated herein. When so furnished, the intent is that this Bond shall be construed as a statutory bond and not as a common law bond.

§ 15 Upon request by any person or entity appearing to be a potential beneficiary of this Bond, the Contractor and Owner shall promptly furnish a copy of this Bond or shall permit a copy to be made.

§ 16 Definitions

§ 16.1 Claim. A written statement by the Claimant including at a minimum:

- **.1** the name of the Claimant;
- **.2** the name of the person for whom the labor was done, or materials or equipment furnished;
- **.3** a copy of the agreement or purchase order pursuant to which labor, materials or equipment was furnished for use in the performance of the Construction Contract;
- **.4** a brief description of the labor, materials or equipment furnished;
- **.5** the date on which the Claimant last performed labor or last furnished materials or equipment for use in the performance of the Construction Contract;
- **.6** the total amount earned by the Claimant for labor, materials or equipment furnished as of the date of the Claim;
- **.7** the total amount of previous payments received by the Claimant; and
- **.8** the total amount due and unpaid to the Claimant for labor, materials or equipment furnished as of the date of the Claim.

§ 16.2 Claimant. An individual or entity having a direct contract with the Contractor or with a subcontractor of the Contractor to furnish labor, materials or equipment for use in the performance of the Construction Contract. The term Claimant also includes any individual or entity that has rightfully asserted a claim under an applicable mechanic's lien or similar statute against the real property upon which the Project is located. The intent of this Bond shall be to include without limitation in the terms "labor, materials or equipment" that part of water, gas, power, light, heat, oil, gasoline, telephone service or rental equipment used in the Construction Contract, architectural and engineering services required for performance of the work of the Contractor and the Contractor's subcontractors, and all other items for which a mechanic's lien may be asserted in the jurisdiction where the labor, materials or equipment were furnished.

§ 16.3 Construction Contract. The agreement between the Owner and Contractor identified on the cover page, including all Contract Documents and all changes made to the agreement and the Contract Documents.

AIA Document A312™ – 2010 Payment Bond. The American Institute of Architects. **All rights reserved. WARNING: This AIA® Document is protected by U.S. Copyright Law and International Treaties. Unauthorized reproduction or distribution of this AIA® Document, or any portion of it, may result in severe civil and criminal penalties, and will be prosecuted to the maximum extent possible under the law.** This document was produced by AIA software at 13:44:33 ET on 05/28/2019 under Order No. 4731673679 which expires on 02/12/2020, and is not for resale.
User Notes: (3B9ADA54)

§ 16.4 Owner Default. Failure of the Owner, which has not been remedied or waived, to pay the Contractor as required under the Construction Contract or to perform and complete or comply with the other material terms of the Construction Contract.

§ 16.5 Contract Documents. All the documents that comprise the agreement between the Owner and Contractor.

§ 17 If this Bond is issued for an agreement between a Contractor and subcontractor, the term Contractor in this Bond shall be deemed to be Subcontractor and the term Owner shall be deemed to be Contractor.

§ 18 Modifications to this bond are as follows:

(Space is provided below for additional signatures of added parties, other than those appearing on the cover page.)

CONTRACTOR AS PRINCIPAL		**SURETY**	
Company:	*(Corporate Seal)*	Company:	*(Corporate Seal)*
Signature:		Signature:	
Name and Title:		Name and Title:	
Address:		Address:	

AIA Document A312™ – 2010 Payment Bond. The American Institute of Architects. **All rights reserved. WARNING: This AIA® Document is protected by U.S. Copyright Law and International Treaties. Unauthorized reproduction or distribution of this AIA® Document, or any portion of it, may result in severe civil and criminal penalties, and will be prosecuted to the maximum extent possible under the law.** This document was produced by AIA software at 13:44:33 ET on 05/28/2019 under Order No. 4731673679 which expires on 02/12/2020, and is not for resale.
User Notes: (3B9ADA54)

235 Promenade Street, The Foundry Office Complex, Suite 535, Providence, RI 02908 T 401.383.6530 F 401.383.5480

HVAC ROOF ENCLOSURE REPAIRS
CCRI, Knight Campus
Warwick, Rhode Island 02886

SECTION 00 62 16
ACORD CERTIFICATE OF INSURANCE FORM

AIA DOCUMENT G715 Latest Edition
ACORD CERTIFICATE OF INSURANCE FORM

Document is bound herewith. Failure to review this document will not relieve parties of the contractual requirements contained herein.

END OF DOCUMENT 00 62 16

AIA® Document G715™ – 2017

Supplemental Attachment for ACORD Certificate of Insurance 25

PROJECT: *(name and address)*
HVAC Roof Enclosure Repairs
CCRI, Knight Campus
400 East Avenue
Warwick, RI 02886

OWNER: *(name and address)*
State of Rhode Island, acting by and through the Department of Administration, Division of Purchases, on behalf of the User Agency
One Capitol Hill, Second Floor
Providence, RI 02908-5855

CONTRACT INFORMATION:
Contract For: General Construction
Date:

ARCHITECT: *(name and address)*
GM2 Associates, Inc.
235 Promenade Street
The Foundry Office Complex,
Suite 535
Providence, RI 02908

CERTIFICATE INFORMATION:
Producer:
Insured:
Date:

CONTRACTOR: *(name and address)*

A. General Liability	**Yes**	**No**	**N/A**
1. Does this policy include coverage for:			
a Damages because of bodily injury, sickness, or disease, including occupational sickness or disease, and death of any person?	☐	☐	☐
b Personal injury and advertising injury?	☐	☐	☐
c Damages because of physical damage to or destruction of tangible property, including the loss of use of such property?	☐	☐	☐
d Bodily injury or property damage arising out of completed operations?	☐	☐	☐
e The Contractor's indemnity obligations included in the Contract Documents?	☐	☐	☐
2. Does this policy contain an exclusion or restriction of coverage for:			
a Claims by one insured against another insured, where the exclusion or restrictions is based solely on the fact that the claimant is an insured, and there would otherwise be coverage for the claim?	☐	☐	☐
b Claims for property damage to the Contractor's Work arising out of the products-completed operations hazard where the damaged Work or the Work out of which the damage arises was performed by a Subcontractor?	☐	☐	☐
c Claims for bodily injury other than to employees of the insured?	☐	☐	☐
d Claims for the Contractor's indemnity obligations included in the Contract Documents arising out of injury to employees of the insured?	☐	☐	☐
e Claims for loss excluded under a prior work endorsement or other similar exclusionary language?	☐	☐	☐
f Claims or loss due to physical damage under a prior injury endorsement or similar exclusionary language?	☐	☐	☐
g Claims related to residential, multi-family, or other habitational projects?	☐	☐	☐
h Claims related to roofing?	☐	☐	☐
i Claims related to exterior insulation finish systems, synthetic stucco, or similar exterior coatings or surfaces?	☐	☐	☐
j Claims related to earth subsistence or movement?	☐	☐	☐
k Claims related to explosion, collapse, and underground hazards?	☐	☐	☐

B. Other Insurance Coverage	**Yes**	**No**	**N/A**
1. Indicate whether the Contractor has the following insurance coverages and, if so, indicate the coverage limits for each.			

AIA Document G715™ – 2017. Copyright © 1991 and 2017 by The American Institute of Architects. **All rights reserved. WARNING: This AIA® Document is protected by U.S. Copyright Law and International Treaties. Unauthorized reproduction or distribution of this AIA® Document, or any portion of it, may result in severe civil and criminal penalties, and will be prosecuted to the maximum extent possible under the law.** This document was produced by AIA software at 14:15:34 ET on 05/28/2019 under Order No. 4731673679 which expires on 02/12/2020, and is not for resale.
User Notes: (3B9ADA68)

a	Professional liability insurance Coverage limits:	☐	☐	☐
b	Pollution liability insurance Coverage limits:	☐	☐	☐
c	Insurance for maritime liability risks associated with the operation of a vessel Coverage limits:	☐	☐	☐
d	Insurance for the use or operation of manned or unmanned aircraft Coverage limits:	☐	☐	☐
e	Property insurance Coverage limits:	☐	☐	☐
f	Railroad protective liability insurance Coverage limits:	☐	☐	☐
g	Asbestos abatement liability insurance Coverage limits:	☐	☐	☐
h	Insurance for physical damage to property while it is in storage and in transit to the construction site Coverage limits:	☐	☐	☐
i	Other:	☐	☐	☐

_____
(Authorized Representative)

_____
(Date of Issue)

AIA Document G715™ – 2017. Copyright © 1991 and 2017 by The American Institute of Architects**. All rights reserved. WARNING: This AIA® Document is protected by U.S. Copyright Law and International Treaties. Unauthorized reproduction or distribution of this AIA® Document, or any portion of it, may result in severe civil and criminal penalties, and will be prosecuted to the maximum extent possible under the law.** This document was produced by AIA software at 14:15:34 ET on 05/28/2019 under Order No. 4731673679 which expires on 02/12/2020, and is not for resale.
User Notes: (3B9ADA68)

235 Promenade Street, The Foundry Office Complex, Suite 535, Providence, RI 02908 T 401.383.6530 F 401.383.5480

HVAC ROOF ENCLOSURE REPAIRS
CCRI, Knight Campus
Warwick, Rhode Island 02886

DOCUMENT 00 65 20
RELEASE OF LIENS

AIA DOCUMENT G706A – Latest Edition
Release of Liens

Document bound herewith. Failure to review this document will not relieve parties of the contractual requirements contained herein.

END OF DOCUMENT 00 65 20

AIA® Document G706A™ – 1994

Contractor's Affidavit of Release of Liens

PROJECT: *(name and address)*
HVAC Roof Enclosure Repairs
CCRI, Knight Campus
400 East Avenue
Warwick, RI 02886

ARCHITECT'S PROJECT NUMBER:

CONTRACT FOR:

CONTRACT DATED:

OWNER: ☐
ARCHITECT: ☐
CONTRACTOR: ☐
SURETY: ☐
OTHER: ☐

OWNER: *(name and address)*
State of Rhode Island, acting by and through the Department of Administration,
Division of Purchases, on behalf of the User Agency
One Capitol Hill, Second Floor
Providence, RI 02908-5855

STATE OF: **COUNTY OF:**

The undersigned hereby certifies that to the best of the undersigned's knowledge, information and belief, except as listed below, the Releases or Waivers of Lien attached hereto include the Contractor, all Subcontractors, all suppliers of materials and equipment, and all performers of Work, labor or services who have or may have liens or encumbrances or the right to assert liens or encumbrances against any property of the Owner arising in any manner out of the performance of the Contract referenced above.

EXCEPTIONS:

SUPPORTING DOCUMENTS ATTACHED HERETO:

1. Contractor's Release or Waiver of Liens, conditional upon receipt of final payment.

2. Separate Releases or Waivers of Liens from Subcontractors and material and equipment suppliers, to the extent required by the Owner, accompanied by a list thereof.

CONTRACTOR: *(Name and address)*

BY: _____
(Signature of authorized representative)

_____
(Printed name and title)

Subscribed and sworn to before me on this date:

Notary Public:
My Commission Expires:

AIA Document G706A™ – 1994. Copyright © 1982 and 1994 by The American Institute of Architects. **All rights reserved. WARNING: This AIA® Document is protected by U.S. Copyright Law and International Treaties. Unauthorized reproduction or distribution of this AIA® Document, or any portion of it, may result in severe civil and criminal penalties, and will be prosecuted to the maximum extent possible under the law.** This document was produced by AIA software at 14:19:44 ET on 05/28/2019 under Order No. 4731673679 which expires on 02/12/2020, and is not for resale.
User Notes: (3B9ADA8B)

235 Promenade Street, The Foundry Office Complex, Suite 535, Providence, RI 02908 T 401.383.6530 F 401.383.5480

HVAC ROOF ENCLOSURE REPAIRS
CCRI, Knight Campus
Warwick, Rhode Island 02886

SECTION 00 72 00
GENERAL CONDITIONS

AIA DOCUMENT A201 - 2007 Edition
GENERAL CONDITIONS OF THE CONTRACT FOR CONSTRUCTION AS MODIFIED BY STATE PURCHASING

Document is bound herewith. Failure to review this document will not relieve parties of the contractual requirements contained herein.

END OF DOCUMENT 00 72 00

AIA® Document A201™ – 2007

General Conditions of the Contract for Construction

for the following PROJECT:

HVAC Roof Enclosure Repairs
Community College of Rhode Island, Knight Campus
400 East Avenue
Warwick, RI 02886

THE OWNER:

State of Rhode Island, acting by and through
the Department of Administration, Division of Purchases, on behalf of the User Agency
One Capitol Hill, Second Floor
Providence, Rhode Island 02908-5855
401.578.8100 (telephone); 401.574.8387 (facsimile)
www.puchasing.ri.gov

THE USER AGENCY

Community College of Rhode Island, Knight Campus
400 East Avenue
Warwick, RI 02886
401-8285-2380 (telephone)

THE Design Agent:

GM2 Associates, Inc.
235 Promenade Street
The Foundry Office Complex, Suite 535
Providence, RI 02908
401.383.6530 (telephone); 401.383.5480 (facsimile)

AIA Document A201™ – 2007. Copyright © 1911, 1915, 1918, 1925, 1937, 1951, 1958, 1961, 1963, 1966, 1970, 1976, 1987, 1997 and 2007 by The American Institute of Architects. **All rights reserved. WARNING: This AIA® Document is protected by U.S. Copyright Law and International Treaties. Unauthorized reproduction or distribution of this AIA® Document, or any portion of it, may result in severe civil and criminal penalties, and will be prosecuted to the maximum extent possible under the law.** This draft was produced by AIA software at 14:02:42 ET on 11/16/2018 under Order No.1973475587 which expires on 02/21/2019, and is not for resale.
User Notes: A201– 2007 template revision date 2/27/2019 (1870164535)

TABLE OF ARTICLES

1 GENERAL PROVISIONS

2 OWNER

3 CONTRACTOR

4 DESIGN AGENT

5 SUBCONTRACTORS

6 CONSTRUCTION BY OWNER OR BY SEPARATE CONTRACTORS

7 CHANGES IN THE WORK

8 TIME

9 PAYMENTS AND COMPLETION

10 PROTECTION OF PERSONS AND PROPERTY

11 INSURANCE AND BONDS

12 UNCOVERING AND CORRECTION OF WORK

13 MISCELLANEOUS PROVISIONS

14 TERMINATION OR SUSPENSION OF THE CONTRACT

15 CLAIMS AND DISPUTES

AIA Document A201™ – 2007. Copyright © 1911, 1915, 1918, 1925, 1937, 1951, 1958, 1961, 1963, 1966, 1970, 1976, 1987, 1997 and 2007 by The American Institute of Architects. **All rights reserved. WARNING: This AIA® Document is protected by U.S. Copyright Law and International Treaties. Unauthorized reproduction or distribution of this AIA® Document, or any portion of it, may result in severe civil and criminal penalties, and will be prosecuted to the maximum extent possible under the law.** This draft was produced by AIA software at 14:02:42 ET on 11/16/2018 under Order No.1973475587 which expires on 02/21/2019, and is not for resale.
User Notes: (1870164535)

ARTICLE 1 GENERAL PROVISIONS

§ 1.1 BASIC DEFINITIONS

§ 1.1.1 THE CONTRACT DOCUMENTS

The Contract Documents are enumerated in the Agreement between the Owner and Contractor (the Agreement) and consist of the Agreement (and the documents enumerated therein), Conditions of the Contract (General Conditions, Supplementary Conditions, if any, and other Conditions), Drawings, Specifications, Addenda issued prior to execution of the Contract, other documents listed in the Agreement and Modifications issued after execution of the Contract. A Modification is (1) a written amendment to the Contract signed by both parties, (2) a Change Order, (3) a Construction Change Directive or (4) a written order for a minor change in the Work issued by the Design Agent.

§ 1.1.2 THE CONTRACT

The Contract Documents form the Contract for Construction. The Contract represents the entire and integrated agreement between the parties hereto and supersedes prior negotiations, representations or agreements, either written or oral. The Contract may be amended or modified only by a Modification. The Contract Documents shall not be construed to create a contractual relationship of any kind (1) between the Contractor and the Design Agent or the Design Agent's consultants, (2) between the Owner and a Subcontractor or a Sub-subcontractor, (3) between the Owner and the Design Agent or the Design Agent's consultants or (4) between any persons or entities other than the Owner and the Contractor. The Design Agent shall, however, be entitled to performance and enforcement of obligations under the Contract intended to facilitate performance of the Design Agent's duties.

§ 1.1.3 THE WORK

The term "Work" means the construction and services required by the Contract Documents, whether completed or partially completed, and includes all other labor, materials, equipment and services provided or to be provided by the Contractor to fulfill the Contractor's obligations. The Work may constitute the whole or a part of the Project.

§ 1.1.4 THE PROJECT

The Project is the total construction of which the Work performed under the Contract Documents may be the whole or a part and which may include construction by the Owner and by separate contractors.

§ 1.1.5 THE DRAWINGS

The Drawings are the graphic and pictorial portions of the Contract Documents showing the design, location, and dimensions of the Work, generally including plans, elevations, sections, details, schedules, and diagrams.

§ 1.1.6 THE SPECIFICATIONS

The Specifications are that portion of the Contract Documents consisting of the written requirements for materials, equipment, systems, standards and workmanship for the Work, and performance of related services.

§ 1.1.7 INSTRUMENTS OF SERVICE

Instruments of Service are representations, in any medium of expression now known or later developed, of the tangible and intangible creative work performed by the Design Agent and the Design Agent's consultants under their respective professional services agreements. Instruments of Service may include, without limitation, studies, surveys, models, sketches, drawings, specifications, and other similar materials.

§ 1.1.8 INITIAL DECISION MAKER

The Initial Decision Maker is the person identified in the Agreement to render initial decisions on Claims in accordance with Section 15.2 and certify termination of the Agreement under Section 14.2.2.

§ 1.2 CORRELATION AND INTENT OF THE CONTRACT DOCUMENTS

§ 1.2.1 The intent of the Contract Documents is to include all items and services necessary for the proper execution and completion of the Work by the Contractor. The Contract Documents are complementary, and what is required by one shall be as binding as if required by all; the Contractor shall perform all work reasonably inferable from the Contract Documents as being necessary to produce the indicated results.

§ 1.2.2 Organization of the Specifications into divisions, sections and articles, and arrangement of Drawings shall not control the Contractor in dividing the Work among Subcontractors or in establishing the extent of Work to be performed by any trade.

AIA Document A201™ – 2007. Copyright © 1911, 1915, 1918, 1925, 1937, 1951, 1958, 1961, 1963, 1966, 1970, 1976, 1987, 1997 and 2007 by The American Institute of Architects. **All rights reserved. WARNING: This AIA® Document is protected by U.S. Copyright Law and International Treaties. Unauthorized reproduction or distribution of this AIA® Document, or any portion of it, may result in severe civil and criminal penalties, and will be prosecuted to the maximum extent possible under the law.** This draft was produced by AIA software at 14:02:42 ET on 11/16/2018 under Order No.1973475587 which expires on 02/21/2019, and is not for resale.
User Notes: (1870164535)

§ 1.2.3 Unless otherwise stated in the Contract Documents, words that have well-known technical or construction industry meanings are used in the Contract Documents in accordance with such recognized meanings.

§ 1.2.4 In the event of any conflicts or discrepancies among the Contract Documents, the provisions of the Contract Documents will be interpreted in the following order of priority:

.1 Modifications (if any).
.2 The Purchase Order.
.3 The Agreement.
.4 The Solicitation, including any Addenda, and the Specifications and Drawings
.5 The Supplementary Conditions (if any).
.6 The General Conditions.
.7 The Bid Proposal.

§ 1.2.5 In the event of any conflicts or discrepancies between the Contract Documents and the State of Rhode Island Procurement Regulations or any provision of the Rhode Island General Laws, the State of Rhode Island Procurement Regulations and the Rhode Island General Laws will control.

§ 1.2.6 In the event of any inconsistency between the Drawings and Specifications, the better quality or greater quantity of Work shall be provided.

§ 1.2.7 The Owner will be the final decision maker for any and all interpretations.

§ 1.3 CAPITALIZATION

Terms capitalized in these General Conditions include those that are (1) specifically defined, (2) the titles of numbered articles or (3) the titles of other documents published by the American Institute of Architects.

§ 1.4 INTERPRETATION

In the interest of brevity the Contract Documents frequently omit modifying words such as "all" and "any" and articles such as "the" and "an," but the fact that a modifier or an article is absent from one statement and appears in another is not intended to affect the interpretation of either statement.

§ 1.5 OWNERSHIP AND USE OF DRAWINGS, SPECIFICATIONS AND OTHER INSTRUMENTS OF SERVICE

§ 1.5.1 The Owner and the User Agency shall have a perpetual license to utilize the Drawings, Specifications, and other documents, including electronic or digital documents, prepared by the Design Agent and the Design Agent's consultants, for the execution of the Project and shall have and retain all rights to use them and reproduce them for the production and maintenance of the Work described therein. The Contractor, Subcontractors, Sub-subcontractors, and material or equipment suppliers shall not own or claim a copyright in the Instruments of Service. Submittal or distribution to meet official regulatory requirements or for other purposes in connection with this Project is not to be construed as publication in derogation of the Design Agent's or Design Agent's consultants' reserved rights.

§ 1.5.2 The Contractor, Subcontractors, Sub-subcontractors and material or equipment suppliers are authorized to use and reproduce the Instruments of Service provided to them solely and exclusively for execution of the Work. All copies made under this authorization shall bear the copyright notice, if any, shown on the Instruments of Service. The Contractor, Subcontractors, Sub-subcontractors, and material or equipment suppliers may not use the Instruments of Service on other projects or for additions to this Project outside the scope of the Work without the specific written consent of the Owner, Design Agent and the Design Agent's consultants.

§ 1.6 TRANSMISSION OF DATA IN DIGITAL FORM

If the parties intend to transmit Instruments of Service or any other information or documentation in digital form, they shall endeavor to establish necessary protocols governing such transmissions, unless otherwise already provided in the Agreement or the Contract Documents.

ARTICLE 2 OWNER

§ 2.1 GENERAL

§ 2.1.1 The Owner is the person or entity identified as such in the Agreement and is referred to throughout the Contract Documents as if singular in number. The Owner shall designate in writing a representative who shall have express authority to bind the Owner with respect to all matters requiring the Owner's approval or authorization.

AIA Document A201™ – 2007. Copyright © 1911, 1915, 1918, 1925, 1937, 1951, 1958, 1961, 1963, 1966, 1970, 1976, 1987, 1997 and 2007 by The American Institute of Architects. **All rights reserved. WARNING: This AIA® Document is protected by U.S. Copyright Law and International Treaties. Unauthorized reproduction or distribution of this AIA® Document, or any portion of it, may result in severe civil and criminal penalties, and will be prosecuted to the maximum extent possible under the law.** This draft was produced by AIA software at 14:02:42 ET on 11/16/2018 under Order No.1973475587 which expires on 02/21/2019, and is not for resale.
User Notes: (1870164535)

Except as otherwise provided in Section 4.2.1, the Design Agent does not have such authority. The term "Owner" means the Owner or the Owner's authorized representative.

§ 2.1.2 Deleted.

§ 2.2 INFORMATION AND SERVICES REQUIRED OF THE OWNER

§ 2.2.1 Deleted.

§ 2.2.2 The Contractor shall secure and pay for permits and fees, necessary approvals, easements, assessments and charges required for construction, use or occupancy of permanent structures or for permanent changes in existing facilities.

§ 2.2.3 If required for the Work in the discretion of the Owner, the Owner shall furnish surveys describing physical characteristics, legal limitations and utility locations for the site of the Project, and a legal description of the site. The Contractor shall be entitled to rely on the accuracy of any information furnished by the Owner but shall exercise proper precautions relating to the safe performance of the Work.

§ 2.2.4 The Owner shall furnish information or services required of the Owner by the Contract Documents with reasonable promptness. The Owner shall also furnish any other information or services under the Owner's control and relevant to the Contractor's performance of the Work with reasonable promptness after receiving the Contractor's written request for such information or services.

§ 2.2.5 Deleted.

§ 2.3 OWNER'S RIGHT TO STOP THE WORK

If the Contractor fails to correct Work that is not in accordance with the requirements of the Contract Documents as required by Section 12.2 or repeatedly fails to carry out Work in accordance with the Contract Documents, the Owner may issue a written order to the Contractor to stop the Work, or any portion thereof, until the cause for such order has been eliminated; however, the right of the Owner to stop the Work shall not give rise to a duty on the part of the Owner to exercise this right for the benefit of the Contractor or any other person or entity, except to the extent required by Section 6.1.3.

§ 2.4 OWNER'S RIGHT TO CARRY OUT THE WORK

If the Contractor defaults or neglects to carry out the Work in accordance with the Contract Documents and fails within a 10 working-day period after receipt of written notice from the Owner to commence and continue correction of such default or neglect with diligence and promptness, the Owner may, without prejudice to other remedies the Owner may have, correct such deficiencies. In such case an appropriate Change Order shall be issued deducting from payments then or thereafter due the Contractor the reasonable cost of correcting such deficiencies, including Owner's expenses and compensation for the Design Agent's additional services made necessary by such default, neglect, or failure. Such action by the Owner and amounts charged to the Contractor are both subject to prior approval of the Design Agent. If payments then or thereafter due the Contractor are not sufficient to cover such amounts, the Contractor shall pay the difference to the Owner.

ARTICLE 3 CONTRACTOR

§ 3.1 GENERAL

§ 3.1.1 The Contractor is the person or entity identified as such in the Agreement and is referred to throughout the Contract Documents as if singular in number. The Contractor shall be lawfully licensed. The Contractor shall designate in writing a representative who shall have express authority to bind the Contractor with respect to all matters under this Contract. The term "Contractor" means the Contractor or the Contractor's authorized representative.

§ 3.1.2 The Contractor shall perform the Work in accordance with the Contract Documents.

§ 3.1.3 The Contractor shall not be relieved of obligations to perform the Work in accordance with the Contract Documents either by activities or duties of the Design Agent, or by tests, inspections, or approvals required or performed by persons or entities other than the Contractor.

AIA Document A201™ – 2007. Copyright © 1911, 1915, 1918, 1925, 1937, 1951, 1958, 1961, 1963, 1966, 1970, 1976, 1987, 1997 and 2007 by The American Institute of Architects. **All rights reserved. WARNING: This AIA® Document is protected by U.S. Copyright Law and International Treaties. Unauthorized reproduction or distribution of this AIA® Document, or any portion of it, may result in severe civil and criminal penalties, and will be prosecuted to the maximum extent possible under the law.** This draft was produced by AIA software at 14:02:42 ET on 11/16/2018 under Order No.1973475587 which expires on 02/21/2019, and is not for resale.
User Notes: (1870164535)

§ 3.2 REVIEW OF CONTRACT DOCUMENTS AND FIELD CONDITIONS BY CONTRACTOR

§ 3.2.1 Execution of the Contract by the Contractor is a representation that the Contractor has visited the site, become generally familiar with local conditions under which the Work is to be performed and correlated personal observations with requirements of the Contract Documents.

§ 3.2.2 Because the Contract Documents are complementary, the Contractor shall, before starting each portion of the Work, carefully study and compare the various Contract Documents relative to that portion of the Work, as well as the information furnished by the Owner pursuant to Section 2.2.3, shall take field measurements of any existing conditions related to that portion of the Work, and shall observe any conditions at the site affecting it. These obligations are for the purpose of facilitating coordination and construction by the Contractor and are not for the purpose of discovering errors, omissions, or inconsistencies in the Contract Documents; however, the Contractor shall promptly report to the Owner and the Design Agent any errors, inconsistencies, or omissions discovered by or made known to the Contractor or additional Drawings, Specifications, or instructions required to define the Work in greater detail to permit the proper progress of the Work as a request for information in such form as the Design Agent may require. It is recognized that the Contractor's review is made in the Contractor's capacity as a contractor and not as a licensed design professional, unless otherwise specifically provided in the Contract Documents.

§ 3.2.3 The Contractor is not required to ascertain that the Contract Documents are in accordance with applicable laws, statutes, ordinances, codes, rules and regulations, or lawful orders of public authorities, but the Contractor shall promptly report to the Design Agent and the Owner any nonconformity discovered by or made known to the Contractor as a request for information in such form as the Design Agent or Owner may require.

§ 3.2.3.1 Omissions from the Drawings and Specifications of items obviously needed to perform the Work properly, such as attachments, bolts, hangers, and other fastening devices, shall not relieve the Contractor from the obligation to furnish and install such items.

§ 3.2.4 If the Contractor believes that additional cost or time is involved because of clarifications or instructions the Design Agent issues in response to the Contractor's notices or requests for information pursuant to Sections 3.2.2 or 3.2.3, the Contractor shall make Claims as provided in Article 15. If the Contractor fails to perform the obligations of Sections 3.2.2, 3.2.3, or 3.2.3.1, the Contractor shall pay such costs and damages to the Owner as would have been avoided if the Contractor had performed such obligations. If the Contractor performs those obligations, the Contractor shall not be liable to the Owner or Design Agent for damages resulting from errors, inconsistencies, or omissions in the Contract Documents, for differences between field measurements or conditions and the Contract Documents, or for nonconformities of the Contract Documents to applicable laws, statutes, ordinances, codes, rules and regulations, and lawful orders of public authorities.

§ 3.2.4.1 The Contractor shall not make any changes without prior written authorization from the Design Agent and the Owner.

§ 3.2.5 The Owner is entitled to reimbursement from the Contractor for amounts paid to the Design Agent for evaluating and responding to the Contractor's requests for information that are not prepared in accordance with the Contract Documents or where the requested information is available to the Contractor from a careful study and comparison of the Contract Documents, field conditions, other Owner-provided information, Contractor-prepared coordination drawings, or prior Project correspondence or documentation.

§ 3.3 SUPERVISION AND CONSTRUCTION PROCEDURES

§ 3.3.1 The Contractor shall supervise and direct the Work, using the Contractor's best skill and attention. The Contractor shall be solely responsible for, and have control over, construction means, methods, techniques, sequences and procedures and for coordinating all portions of the Work under the Contract, unless the Contract Documents give other specific instructions concerning these matters. If the Contract Documents give specific instructions concerning construction means, methods, techniques, sequences or procedures, the Contractor shall evaluate the jobsite safety thereof and, except as stated below, shall be fully and solely responsible for the jobsite safety of such means, methods, techniques, sequences or procedures. If the Contractor determines that such means, methods, techniques, sequences or procedures may not be safe, the Contractor shall give timely written notice to the Owner and Design Agent and shall not proceed with that portion of the Work without further written instructions from the Design Agent. If the Contractor is then instructed to proceed with the required means, methods, techniques, sequences or procedures without acceptance of changes proposed by the Contractor, the Owner shall be solely

AIA Document A201™ – 2007. Copyright © 1911, 1915, 1918, 1925, 1937, 1951, 1958, 1961, 1963, 1966, 1970, 1976, 1987, 1997 and 2007 by The American Institute of Architects. **All rights reserved. WARNING: This AIA® Document is protected by U.S. Copyright Law and International Treaties. Unauthorized reproduction or distribution of this AIA® Document, or any portion of it, may result in severe civil and criminal penalties, and will be prosecuted to the maximum extent possible under the law.** This draft was produced by AIA software at 14:02:42 ET on 11/16/2018 under Order No.1973475587 which expires on 02/21/2019, and is not for resale.
User Notes: (1870164535)

responsible for any loss or damage arising solely from those Owner-required means, methods, techniques, sequences or procedures.

§ 3.3.2 The Contractor shall be responsible to the Owner for acts and omissions of the Contractor's employees, Subcontractors and their agents and employees, and other persons or entities performing portions of the Work for, or on behalf of, the Contractor or any of its Subcontractors.

§ 3.3.3 The Contractor shall be responsible for inspection of portions of Work already performed to determine that such portions are in proper condition to receive subsequent Work.

§ 3.4 LABOR AND MATERIALS

§ 3.4.1 Unless otherwise provided in the Contract Documents, the Contractor shall provide and pay for labor, materials, equipment, tools, construction equipment and machinery, water, heat, utilities, transportation, and other facilities and services necessary for proper execution and completion of the Work, whether temporary or permanent and whether or not incorporated or to be incorporated in the Work. Whenever the Contractor has an obligation to provide labor and materials under the Agreement, the Contractor, at a minimum, shall provide the labor for, and furnish and install and place in operation all items, including without limitation, all proper connections.

§ 3.4.2 Except in the case of minor changes in the Work authorized by the Design Agent in accordance with Sections 3.12.8 or 7.4, the Contractor may make substitutions only with the consent of the Owner, after evaluation by the Design Agent and in accordance with a Change Order or Construction Change Directive.

§ 3.4.3 The Contractor shall enforce strict discipline and good order among the Contractor's employees and other persons carrying out the Work. The Contractor shall not permit employment of unfit persons or persons not properly skilled in tasks assigned to them.

§ 3.5 WARRANTY

The Contractor warrants to the Owner and the Design Agent that materials and equipment furnished under the Contract will be of first quality, prime manufacture, and new unless the Contract Documents require or permit otherwise. The Contractor further warrants that the Work will conform to the requirements of the Contract Documents and will be free from defects, except for those inherent in the quality of the Work the Contract Documents require or permit. Work, materials, or equipment not conforming to these requirements, including substitutions not properly authorized, may be considered defective. The Contractor's warranty excludes remedy for damage or defect caused by abuse, alterations to the Work not executed by the Contractor, improper or insufficient maintenance, improper operation, or normal wear and tear and normal usage. If required by the Design Agent, the Contractor shall furnish satisfactory evidence as to the kind and quality of materials and equipment.

§ 3.6 TAXES

§ 3.6.1 The Contractor shall pay sales, consumer, use and similar taxes for the Work provided by the Contractor that are legally enacted when bids are received or negotiations concluded, whether or not yet effective or merely scheduled to go into effect.

§ 3.6.2 The State of Rhode Island is exempt from payment of any federal or state excise, transportation, or sales tax. The Rhode Island Department of Administration Division of Purchases will furnish Exemption Certificates upon request.

§ 3.7 PERMITS, FEES, NOTICES AND COMPLIANCE WITH LAWS

§ 3.7.1 Unless otherwise provided in the Contract Documents, the Contractor shall secure and pay for the building permit as well as for other permits, fees, licenses, and inspections required by the Rhode Island State Building Code necessary for proper execution and completion of the Work that are customarily secured after execution of the Contract and legally required at the time bids are received or negotiations concluded. The Contractor shall be responsible for obtaining the Certificate of Occupancy from the appropriate governmental authorities.

§ 3.7.2 The Contractor shall comply with and give notices required by applicable laws, statutes, ordinances, codes, rules and regulations, and lawful orders of public authorities applicable to performance of the Work.

AIA Document A201™ – 2007. Copyright © 1911, 1915, 1918, 1925, 1937, 1951, 1958, 1961, 1963, 1966, 1970, 1976, 1987, 1997 and 2007 by The American Institute of Architects. **All rights reserved. WARNING: This AIA® Document is protected by U.S. Copyright Law and International Treaties. Unauthorized reproduction or distribution of this AIA® Document, or any portion of it, may result in severe civil and criminal penalties, and will be prosecuted to the maximum extent possible under the law.** This draft was produced by AIA software at 14:02:42 ET on 11/16/2018 under Order No.1973475587 which expires on 02/21/2019, and is not for resale.
User Notes: (1870164535)

§ 3.7.3 The Contractor shall promptly notify the Design Agent and the Owner if the Contractor becomes aware that the Contract Documents are not in accordance with applicable laws, statutes, ordinances, codes, rules and regulations, or lawful orders of public authorities. If the Contractor performs Work knowing it to be contrary to applicable laws, statutes, ordinances, codes, rules and regulations, or lawful orders of public authorities, the Contractor shall assume appropriate responsibility for such Work and shall bear the costs attributable to correction.

§ 3.7.4 Concealed or Unknown Conditions. If the Contractor encounters conditions at the site that are (1) subsurface or otherwise concealed physical conditions that differ materially from those indicated in the Contract Documents or (2) unknown physical conditions of an unusual nature, that differ materially from those ordinarily found to exist and generally recognized as inherent in construction activities of the character provided for in the Contract Documents, the Contractor shall promptly provide notice to the Owner and the Design Agent before conditions are disturbed and in no event later than 21 working days after first observance of the conditions. The Design Agent will promptly investigate such conditions and, if the Design Agent determines that they differ materially and cause an increase or decrease in the Contractor's cost of, or time required for, performance of any part of the Work, will recommend an equitable adjustment in the Contract Sum or Contract Time, or both. If the Design Agent determines that the conditions at the site are not materially different from those indicated in the Contract Documents and that no change in the terms of the Contract is justified, the Design Agent shall promptly notify the Owner and Contractor in writing, stating the reasons. If either party disputes the Design Agent's determination or recommendation, that party may proceed as provided in Article 15.

§ 3.7.5 If, in the course of the Work, the Contractor encounters human remains or recognizes the existence of burial markers, archaeological sites or wetlands not indicated in the Contract Documents, the Contractor shall immediately suspend any operations that would affect them and shall notify the Owner and Design Agent. Upon receipt of such notice, the Owner shall promptly take any action necessary to obtain governmental authorization required to resume the operations. The Contractor shall continue to suspend such operations until otherwise instructed by the Owner but shall continue with all other operations that do not affect those remains or features. Requests for adjustments in the Contract Sum and Contract Time arising from the existence of such remains or features may be made as provided in Article 15.

§ 3.8 ALLOWANCES

§ 3.8.1 The Contractor shall include in the Contract Sum all allowances stated in the Contract Documents. Items covered by allowances shall be supplied for such amounts and by such persons or entities as the Owner may direct, but the Contractor shall not be required to employ persons or entities to whom the Contractor has reasonable objection.

§ 3.8.2 Unless otherwise provided in the Contract Documents,

- **.1** Allowances shall cover the cost to the Contractor of materials and equipment delivered at the site and all required taxes, less applicable trade discounts;
- **.2** Contractor's costs for unloading and handling at the site, labor, installation costs, overhead, profit and other expenses contemplated for stated allowance amounts shall be included in the Contract Sum but not in the allowances; and
- **.3** Whenever costs are more than or less than allowances, the Contract Sum shall be adjusted accordingly by Change Order. The amount of the Change Order shall reflect (1) the difference between actual costs and the allowances under Section 3.8.2.1 and (2) changes in Contractor's costs under Section 3.8.2.2.

§ 3.8.3 Materials and equipment under an allowance shall be selected by the Owner with reasonable promptness.

§ 3.9 SUPERINTENDENT

§ 3.9.1 The Contractor shall employ a competent superintendent and necessary assistants who shall be in attendance at the Project site during performance of the Work. The superintendent shall represent the Contractor, and communications given to the superintendent shall be as binding as if given to the Contractor.

§ 3.9.2 The Contractor, as soon as practicable after award of the Contract, shall furnish in writing to the Owner through the Design Agent the name and qualifications of a proposed superintendent. The Design Agent may reply within 14 working days to the Contractor in writing stating (1) whether the Owner or the Design Agent has reasonable objection to the proposed superintendent or (2) that the Design Agent requires additional time to review.

AIA Document A201™ – 2007. Copyright © 1911, 1915, 1918, 1925, 1937, 1951, 1958, 1961, 1963, 1966, 1970, 1976, 1987, 1997 and 2007 by The American Institute of Architects. **All rights reserved. WARNING: This AIA® Document is protected by U.S. Copyright Law and International Treaties. Unauthorized reproduction or distribution of this AIA® Document, or any portion of it, may result in severe civil and criminal penalties, and will be prosecuted to the maximum extent possible under the law.** This draft was produced by AIA software at 14:02:42 ET on 11/16/2018 under Order No.1973475587 which expires on 02/21/2019, and is not for resale.
User Notes: (1870164535)

Failure of the Design Agent to reply within the 14 working-day period shall constitute notice of no reasonable objection.

§ 3.9.3 The Contractor shall not employ a proposed superintendent to whom the Owner or Design Agent has made reasonable and timely objection. The Contractor shall not change the superintendent without the Owner's consent, which shall not unreasonably be withheld or delayed.

§ 3.10 CONTRACTOR'S CONSTRUCTION SCHEDULES

§ 3.10.1 The Contractor, within 20 working days after the issuance of the Purchase Order, shall prepare and submit for the Owner's and Design Agent's information a Contractor's construction schedule for the Work. The schedule shall not exceed time limits current under the Contract Documents, shall be revised at appropriate intervals, not less frequently than monthly, as required by the conditions of the Work and Project, shall be related to the entire Project to the extent required by the Contract Documents, and shall provide for expeditious and practicable execution of the Work. The Contractor shall certify on the initial schedule and all revised schedules that they comply with the Contract Documents.

§ 3.10.2 The Contractor shall prepare a submittal schedule, within 20 working days after the issuance of the Purchase Order, and thereafter as necessary to maintain a current submittal schedule, and shall submit the schedule(s) for the Owner's and the Design Agent's approval. The Owner's and the Design Agent's approval shall not unreasonably be delayed or withheld. The submittal schedule shall (1) be coordinated with the Contractor's construction schedule, and (2) allow the Owner and the Design Agent reasonable time to review submittals. If the Contractor fails to submit a submittal schedule, the Contractor shall not be entitled to any increase in Contract Sum or extension of Contract Time based on the time required for review of submittals.

§ 3.10.3 The Contractor shall perform the Work in general accordance with the most recent schedules submitted to the Owner and Design Agent.

§ 3.11 DOCUMENTS AND SAMPLES AT THE SITE

The Contractor shall maintain at the site for the Owner one copy of the Drawings, Specifications, Addenda, Change Orders and other Modifications, in good order and marked currently to indicate field changes and selections made during construction, and one copy of approved Shop Drawings, Product Data, Samples and similar required submittals. These shall be available to the Design Agent and shall be delivered to the Design Agent for submittal to the Owner upon completion of the Work as a record of the Work as constructed.

§ 3.12 SHOP DRAWINGS, PRODUCT DATA AND SAMPLES

§ 3.12.1 Shop Drawings are drawings, diagrams, schedules and other data specially prepared for the Work by the Contractor or a Subcontractor, Sub-subcontractor, manufacturer, supplier or distributor to illustrate some portion of the Work.

§ 3.12.2 Product Data are illustrations, standard schedules, performance charts, instructions, brochures, diagrams and other information furnished by the Contractor to illustrate materials or equipment for some portion of the Work.

§ 3.12.3 Samples are physical examples that illustrate materials, equipment or workmanship and establish standards by which the Work will be judged.

§ 3.12.4 Shop Drawings, Product Data, Samples and similar submittals are not Contract Documents. Their purpose is to demonstrate the way by which the Contractor proposes to conform to the information given and the design concept expressed in the Contract Documents for those portions of the Work for which the Contract Documents require submittals. Review by the Design Agent is subject to the limitations of Section 4.2.7. Informational submittals upon which the Design Agent is not expected to take responsive action may be so identified in the Contract Documents. Submittals that are not required by the Contract Documents may be returned by the Design Agent without action.

§ 3.12.5 The Contractor shall review for compliance with the Contract Documents, approve and submit to the Design Agent Shop Drawings, Product Data, Samples and similar submittals required by the Contract Documents in accordance with the submittal schedule approved by the Owner and the Design Agent or, in the absence of an approved submittal schedule, with reasonable promptness and in such sequence as to cause no delay in the Work or in the activities of the Owner or of separate contractors.

AIA Document A201™ – 2007. Copyright © 1911, 1915, 1918, 1925, 1937, 1951, 1958, 1961, 1963, 1966, 1970, 1976, 1987, 1997 and 2007 by The American Institute of Architects. **All rights reserved. WARNING: This AIA® Document is protected by U.S. Copyright Law and International Treaties. Unauthorized reproduction or distribution of this AIA® Document, or any portion of it, may result in severe civil and criminal penalties, and will be prosecuted to the maximum extent possible under the law.** This draft was produced by AIA software at 14:02:42 ET on 11/16/2018 under Order No.1973475587 which expires on 02/21/2019, and is not for resale.
User Notes: (1870164535)

§ 3.12.6 By submitting Shop Drawings, Product Data, Samples and similar submittals, the Contractor represents to the Owner and Design Agent that the Contractor has (1) reviewed and approved them, (2) determined and verified materials, field measurements and field construction criteria related thereto, or will do so and (3) checked and coordinated the information contained within such submittals with the requirements of the Work and of the Contract Documents.

§ 3.12.7 The Contractor shall perform no portion of the Work for which the Contract Documents require submittal and review of Shop Drawings, Product Data, Samples or similar submittals until the respective submittal has been approved by the Design Agent.

§ 3.12.8 The Work shall be in accordance with approved submittals except that the Contractor shall not be relieved of responsibility for deviations from requirements of the Contract Documents by the Design Agent's approval of Shop Drawings, Product Data, Samples or similar submittals unless the Contractor has specifically informed the Design Agent in writing of such deviation at the time of submittal and (1) the Design Agent has given written approval to the specific deviation as a minor change in the Work, or (2) a Change Order or Construction Change Directive has been issued authorizing the deviation. The Contractor shall not be relieved of responsibility for errors or omissions in Shop Drawings, Product Data, Samples or similar submittals by the Design Agent's approval thereof.

§ 3.12.9 The Contractor shall direct specific attention, in writing or on resubmitted Shop Drawings, Product Data, Samples or similar submittals, to revisions other than those requested by the Design Agent on previous submittals. In the absence of such written notice, the Design Agent's approval of a resubmission shall not apply to such revisions.

§ 3.12.10 The Contractor shall not be required to provide professional services that constitute the practice of architecture or engineering unless such services are specifically required by the Contract Documents for a portion of the Work or unless the Contractor needs to provide such services in order to carry out the Contractor's responsibilities for construction means, methods, techniques, sequences and procedures. The Contractor shall not be required to provide professional services in violation of applicable law. If professional design services or certifications by a design professional related to systems, materials or equipment are specifically required of the Contractor by the Contract Documents, the Owner and the Design Agent will specify all performance and design criteria that such services must satisfy. The Contractor shall cause such services or certifications to be provided by a properly licensed design professional, whose signature and seal shall appear on all drawings, calculations, specifications, certifications, Shop Drawings and other submittals prepared by such professional. Shop Drawings and other submittals related to the Work designed or certified by such professional, if prepared by others, shall bear such professional's written approval when submitted to the Design Agent. The Owner and the Design Agent shall be entitled to rely upon the adequacy, accuracy and completeness of the services, certifications, and approvals performed or provided by such design professionals, provided the Owner and Design Agent have specified to the Contractor all performance and design criteria that such services must satisfy. Pursuant to this Section 3.12.10, the Design Agent will review, approve, or take other appropriate action on submittals only for the limited purpose of checking for conformance with information given and the design concept expressed in the Contract Documents. The Contractor shall not be responsible for the adequacy of the performance and design criteria specified in the Contract Documents.

§ 3.12.11 The Owner shall be entitled to reimbursement from the Contractor for amounts paid to the Design Agent for evaluation of resubmittals.

§ 3.13 USE OF SITE

The Contractor shall confine operations at the site to areas permitted by applicable laws, statutes, ordinances, codes, rules and regulations, and lawful orders of public authorities, and any restrictions imposed by the User Agency or the Owner, and the Contract Documents and shall not unreasonably encumber the site with materials or equipment.

§ 3.14 CUTTING AND PATCHING

§ 3.14.1 The Contractor shall be responsible for cutting, fitting or patching required to complete the Work or to make its parts fit together properly. All areas requiring cutting, fitting and patching shall be restored to the condition existing prior to the cutting, fitting and patching, unless otherwise required by the Contract Documents.

AIA Document A201™ – 2007. Copyright © 1911, 1915, 1918, 1925, 1937, 1951, 1958, 1961, 1963, 1966, 1970, 1976, 1987, 1997 and 2007 by The American Institute of Architects. **All rights reserved. WARNING: This AIA® Document is protected by U.S. Copyright Law and International Treaties. Unauthorized reproduction or distribution of this AIA® Document, or any portion of it, may result in severe civil and criminal penalties, and will be prosecuted to the maximum extent possible under the law.** This draft was produced by AIA software at 14:02:42 ET on 11/16/2018 under Order No.1973475587 which expires on 02/21/2019, and is not for resale.
User Notes: (1870164535)

§ 3.14.2 The Contractor shall not damage or endanger a portion of the Work or fully or partially completed construction of the Owner or separate contractors by cutting, patching or otherwise altering such construction, or by excavation. The Contractor shall not cut or otherwise alter such construction by the Owner or a separate contractor except with written consent of the Owner and of such separate contractor; such consent shall not be unreasonably withheld. The Contractor shall not unreasonably withhold from the Owner or a separate contractor the Contractor's consent to cutting or otherwise altering the Work.

§ 3.15 CLEANING UP

§ 3.15.1 The Contractor shall keep the premises and surrounding area free from accumulation of waste materials or rubbish caused by operations under the Contract. At completion of the Work, the Contractor shall remove waste materials, rubbish, the Contractor's tools, construction equipment, machinery and surplus materials from and about the Project.

§ 3.15.2 If the Contractor fails to clean up as provided in the Contract Documents, the Owner may do so and Owner shall be entitled to reimbursement from the Contractor.

§ 3.16 ACCESS TO WORK

The Contractor shall provide the Owner and Design Agent access to the Work in preparation and progress wherever located.

§ 3.17 ROYALTIES, PATENTS AND COPYRIGHTS

The Contractor shall pay all royalties and license fees. The Contractor shall defend suits or claims for infringement of copyrights and patent rights and shall hold the Owner and Design Agent harmless from loss on account thereof, but shall not be responsible for such defense or loss when a particular design, process or product of a particular manufacturer or manufacturers is required by the Contract Documents, or where the copyright violations are contained in Drawings, Specifications or other documents prepared by the Owner or Design Agent. However, if the Contractor has reason to believe that the required design, process or product is an infringement of a copyright or a patent, the Contractor shall be responsible for such loss unless such information is promptly furnished to the Design Agent and the Owner.

§ 3.18 INDEMNIFICATION

§ 3.18.1 To the fullest extent permitted by law the Contractor shall indemnify and hold harmless the Owner, the State of Rhode Island, and each executive, legislative, judicial, regulatory, and administrative body of the state, and any political subdivision thereof, including without limitation, any department, division, agency, commission, board, office, bureau, committee, authority, educational institution, school, water, and fire district, and other agency of Rhode Island state, municipal, and local government that exercises governmental functions, any other governmental authority, and any quasi-public corporation and/or body corporate and politic, including without limitation, the User Agency, their elected and appointed officials, members, employees, and agents, the Design Agent, the Design Agent's Consultants, Subconsultants, and Subcontractors, and agents and employees and any of them from and against any and all claims, demands, damages, liabilities, judgments, losses and expenses, including but not limited to attorneys' fees and costs of mediation, arbitration, and/or litigation, arising out of or resulting from performance of the Work, and/or the obligations of the under the Contract Documents, but only to the extent caused by the acts or omissions of the Contractor, a Subcontractor, anyone directly or indirectly employed by them or anyone for whose acts they may be liable, regardless of whether or not any such claim, demand, damage, liability, judgment, loss or expense is caused in part by a party indemnified hereunder. Such obligation shall not be construed to negate, abridge, or reduce other rights or obligations of indemnity that would otherwise exist as to a party or person described in this Section 3.18.

§ 3.18.2 In claims against any person or entity indemnified under this Section 3.18 by an employee of the Contractor, a Subcontractor, anyone directly or indirectly employed by them or anyone for whose acts they may be liable, the indemnification obligation under Section 3.18.1 shall not be limited by a limitation on amount or type of damages, compensation or benefits payable by or for the Contractor or a Subcontractor under workers' compensation acts, disability benefit acts or other employee benefit acts.

§ 3.18.3 Without limiting the generality of the foregoing, the defense and indemnity set forth in this Section 3.18 includes, without limitation, all liabilities, damages, losses, claims, demands, and actions on account of bodily injury, death, or property loss to a person or entity indemnified hereunder or any other persons or entities, whether based upon statutory (including, without limitation, workers compensation), contractual, tort, or other liability of any

AIA Document A201™ – 2007. Copyright © 1911, 1915, 1918, 1925, 1937, 1951, 1958, 1961, 1963, 1966, 1970, 1976, 1987, 1997 and 2007 by The American Institute of Architects. **All rights reserved. WARNING: This AIA® Document is protected by U.S. Copyright Law and International Treaties. Unauthorized reproduction or distribution of this AIA® Document, or any portion of it, may result in severe civil and criminal penalties, and will be prosecuted to the maximum extent possible under the law.** This draft was produced by AIA software at 14:02:42 ET on 11/16/2018 under Order No.1973475587 which expires on 02/21/2019, and is not for resale.
User Notes: (1870164535)

person or entity so indemnified.

§ 3.18.4 The remedies set forth herein shall not deprive any person indemnified hereunder of any other indemnity action, right, or remedy otherwise available to any such person or entity at common law or otherwise.

§ 3.18.5 The Contractor will include the indemnity set forth in this Section 3.18, without modification, in each Subcontract with any Subcontractor.

§ 3.18.6 Notwithstanding any other language in the Contract Documents to the contrary, the indemnity hereunder shall survive Final Completion of the Work and final payment under the Agreement and shall survive any termination of the Agreement.

ARTICLE 4 DESIGN AGENT

§ 4.1 GENERAL

§ 4.1.1 The Design Agent is the person lawfully licensed to practice his or her profession in the State of Rhode Island or an entity lawfully practicing its profession in the State of Rhode Island and identified in the Contract Documents as the Design Agent. The term "Design Agent" means the Design Agent or the Design Agent's authorized representative.

§ 4.1.2 Duties, responsibilities and limitations of authority of the Design Agent as set forth in the Contract Documents shall not be restricted, modified or extended without written consent of the Owner, Contractor and Design Agent. Consent shall not be unreasonably withheld.

§ 4.1.3 If the employment of the Design Agent is terminated, the Owner shall employ a successor Design Agent as to whom the Contractor has no reasonable objection and whose status under the Contract Documents shall be that of the Design Agent.

§ 4.2 ADMINISTRATION OF THE CONTRACT

§ 4.2.1 The Owner with assistance from the Design Agent will provide administration of the Contract as described in the Contract Documents and will be an Owner's representative during construction through the date the Design Agent issues the final Certificate for Payment and continuing until the expiration of the one-year period following Final Completion. The Design Agent will have authority to act on behalf of the Owner only to the extent provided in the Contract Documents.

§ 4.2.2 The Design Agent will visit the site at intervals appropriate to the stage of construction, or as otherwise agreed with the Owner, to become generally familiar with the progress and quality of the portion of the Work completed, and to determine in general if the Work observed is being performed in a manner indicating that the Work, when fully completed, will be in accordance with the Contract Documents. However, the Design Agent will not be required to make exhaustive or continuous on-site inspections to check the quality or quantity of the Work. The Design Agent will not have control over, charge of, or responsibility for, the construction means, methods, techniques, sequences or procedures, or for the safety precautions and programs in connection with the Work, since these are solely the Contractor's rights and responsibilities under the Contract Documents, except as provided in Section 3.3.1.

§ 4.2.2.1 The Owner is entitled to reimbursement from the Contractor for amounts paid to the Design Agent for site visits made necessary by the fault of the Contractor or by defects and deficiencies in the Work.

§ 4.2.3 On the basis of the site visits, the Design Agent will keep the Owner reasonably informed about the progress and quality of the portion of the Work completed, and report to the Owner (1) known deviations from the Contract Documents and from the most recent construction schedule submitted by the Contractor, and (2) defects and deficiencies observed in the Work. The Design Agent will not be responsible for the Contractor's failure to perform the Work in accordance with the requirements of the Contract Documents. The Design Agent will not have control over or charge of and will not be responsible for acts or omissions of the Contractor, Subcontractors, or their agents or employees, or any other persons or entities performing portions of the Work.

§ 4.2.4 COMMUNICATIONS FACILITATING CONTRACT ADMINISTRATION

Except as otherwise provided in the Contract Documents or when direct communications have been specially authorized, the Owner and Contractor shall endeavor to communicate with each other through the Design Agent

AIA Document A201™ – 2007. Copyright © 1911, 1915, 1918, 1925, 1937, 1951, 1958, 1961, 1963, 1966, 1970, 1976, 1987, 1997 and 2007 by The American Institute of Architects. **All rights reserved. WARNING: This AIA® Document is protected by U.S. Copyright Law and International Treaties. Unauthorized reproduction or distribution of this AIA® Document, or any portion of it, may result in severe civil and criminal penalties, and will be prosecuted to the maximum extent possible under the law.** This draft was produced by AIA software at 14:02:42 ET on 11/16/2018 under Order No.1973475587 which expires on 02/21/2019, and is not for resale.
User Notes: (1870164535)

about matters arising out of or relating to the Contract. Communications by and with the Design Agent's consultants shall be through the Design Agent. Communications by and with Subcontractors and material suppliers shall be through the Contractor. Communications by and with separate contractors shall be through the Owner.

§ 4.2.5 Based on the Design Agent's evaluations of the Contractor's Applications for Payment, the Design Agent will review and certify the amounts due the Contractor and will issue Certificates for Payment in such amounts.

§ 4.2.6 The Design Agent has authority to reject Work that does not conform to the Contract Documents. Whenever the Design Agent considers it necessary or advisable, the Design Agent will have authority to require inspection or testing of the Work in accordance with Sections 13.5.2 and 13.5.3, whether or not such Work is fabricated, installed or completed. However, neither this authority of the Design Agent nor a decision made in good faith either to exercise or not to exercise such authority shall give rise to a duty or responsibility of the Design Agent to the Contractor, Subcontractors, material and equipment suppliers, their agents or employees, or other persons or entities performing portions of the Work.

§ 4.2.7 The Design Agent will review and approve, or take other appropriate action upon, the Contractor's submittals such as Shop Drawings, Product Data and Samples, but only for the limited purpose of checking for conformance with information given and the design concept expressed in the Contract Documents. The Design Agent's action will be taken in accordance with the submittal schedule approved by the Design Agent or, in the absence of an approved submittal schedule, with reasonable promptness while allowing sufficient time in the Design Agent's professional judgment to permit adequate review. Review of such submittals is not conducted for the purpose of determining the accuracy and completeness of other details such as dimensions and quantities, or for substantiating instructions for installation or performance of equipment or systems, all of which remain the responsibility of the Contractor as required by the Contract Documents. The Design Agent's review of the Contractor's submittals shall not relieve the Contractor of the obligations under Sections 3.3, 3.5 and 3.12. The Design Agent's review shall not constitute approval of safety precautions or, unless otherwise specifically stated by the Design Agent, of any construction means, methods, techniques, sequences or procedures. The Design Agent's approval of a specific item shall not indicate approval of an assembly of which the item is a component.

§ 4.2.8 The Design Agent will prepare Change Orders and Construction Change Directives, and may authorize minor changes in the Work as provided in Section 7.4. The Design Agent will investigate and make determinations and recommendations regarding concealed and unknown conditions as provided in Section 3.7.4.

§ 4.2.9 The Design Agent will conduct inspections to determine the date or dates of Substantial Completion and the date of final completion; issue Certificates of Substantial Completion pursuant to Section 9.8; receive and forward to the Owner, for the Owner's review and records, written warranties and related documents required by the Contract and assembled by the Contractor pursuant to Section 9.10; and issue a final Certificate for Payment pursuant to Section 9.10.

§ 4.2.10 If the Owner and Design Agent agree, the Design Agent will provide one or more project representatives to assist in carrying out the Design Agent's responsibilities at the site. The duties, responsibilities and limitations of authority of such project representatives shall be as set forth in an exhibit to be incorporated in the Contract Documents.

§ 4.2.11 The Design Agent will interpret and decide matters concerning performance under, and requirements of, the Contract Documents on written request of either the Owner or Contractor. The Design Agent's response to such requests will be made in writing within any time limits agreed upon or otherwise with reasonable promptness.

§ 4.2.12 Interpretations and decisions of the Design Agent will be consistent with the intent of, and reasonably inferable from, the Contract Documents and will be in writing or in the form of drawings. When making such interpretations and decisions, the Design Agent will endeavor to secure faithful performance by both Owner and Contractor, will not show partiality to either and will not be liable for results of interpretations or decisions rendered in good faith.

§ 4.2.13 The Design Agent's decisions on matters relating to aesthetic effect will be final if consistent with the intent expressed in the Contract Documents and approved by the Owner.

AIA Document A201™ – 2007. Copyright © 1911, 1915, 1918, 1925, 1937, 1951, 1958, 1961, 1963, 1966, 1970, 1976, 1987, 1997 and 2007 by The American Institute of Architects. **All rights reserved. WARNING: This AIA® Document is protected by U.S. Copyright Law and International Treaties. Unauthorized reproduction or distribution of this AIA® Document, or any portion of it, may result in severe civil and criminal penalties, and will be prosecuted to the maximum extent possible under the law.** This draft was produced by AIA software at 14:02:42 ET on 11/16/2018 under Order No.1973475587 which expires on 02/21/2019, and is not for resale.
User Notes: (1870164535)

§ 4.2.14 The Design Agent will review and respond to requests for information about the Contract Documents. The Design Agent's response to such requests will be made in writing within any time limits agreed upon or otherwise with reasonable promptness. If appropriate, the Design Agent will prepare and issue supplemental Drawings and Specifications in response to the requests for information.

ARTICLE 5 SUBCONTRACTORS

§ 5.1 DEFINITIONS

§ 5.1.1 A Subcontractor is a person or entity who has a direct contract with the Contractor to perform a portion of the Work at the site. The term "Subcontractor" is referred to throughout the Contract Documents as if singular in number and means a Subcontractor or an authorized representative of the Subcontractor. The term "Subcontractor" does not include a separate contractor or subcontractors of a separate contractor.

§ 5.1.2 A Sub-subcontractor is a person or entity who has a direct or indirect contract with a Subcontractor to perform a portion of the Work at the site. The term "Sub-subcontractor" is referred to throughout the Contract Documents as if singular in number and means a Sub-subcontractor or an authorized representative of the Sub-subcontractor.

§ 5.2 AWARD OF SUBCONTRACTS AND OTHER CONTRACTS FOR PORTIONS OF THE WORK

§ 5.2.1 Unless otherwise stated in the Contract Documents or the bidding requirements, the Contractor, as soon as practicable after award of the Contract, shall furnish in writing to the Owner and the Design Agent the names of persons or entities (including those who are to furnish materials or equipment fabricated to a special design) proposed for each portion of the Work. The Owner may reply within 14 working days to the Contractor in writing stating (1) whether the Owner or the Design Agent has reasonable objection to any such proposed person or entity or (2) that the Owner or Design Agent requires additional time for review.

§ 5.2.2 The Contractor shall not contract with a proposed person or entity to whom the Owner or Design Agent has made reasonable and timely objection. The Contractor shall not be required to contract with anyone to whom the Contractor has made reasonable objection.

§ 5.2.3 If the Owner or Design Agent has reasonable objection to a person or entity proposed by the Contractor, the Contractor shall propose another to whom the Owner or Design Agent has no reasonable objection. If the proposed but rejected Subcontractor was reasonably capable of performing the Work, the Contract Sum and Contract Time shall be increased or decreased by the difference, if any, occasioned by such change, and an appropriate Change Order shall be issued before commencement of the substitute Subcontractor's Work. However, no increase in the Contract Sum or Contract Time shall be allowed for such change unless the Contractor has acted promptly and responsively in submitting names as required.

§ 5.2.4 The Contractor shall not substitute a Subcontractor, person or entity previously selected if the Owner or Design Agent makes reasonable objection to such substitution.

§ 5.2.5 MANUFACTURERS AND FABRICATORS

§ 5.2.5.1 Not later than 10 working days after the date of commencement of the Work, the Contractor shall furnish in writing to the Owner and the Design Agent the names of the manufacturers or fabricators for certain products, equipment, and systems identified in the Specifications and, where applicable, the name of the installing Subcontractor. The Owner may reply within 14 working days to the Contractor in writing, stating: (i) whether the Owner or the Design Agent has reasonable objection to any such proposed person manufacturer or fabricator; or (ii) whether the Owner or Design Agent requires additional time to review.

§ 5.2.5.2 The Contractor shall not contract with a proposed manufacturer, fabricator, or Subcontractor to whom the Owner or Design Agent has made reasonable and timely objection. The Contractor shall not be required to contract with anyone to whom the Contractor has made reasonable objection.

§ 5.2.5.3 If the Owner or Design Agent has an objection to a manufacturer, fabricator, or Subcontractor proposed by the Contractor, the Contractor shall propose another to whom the Owner or Design Agent has no objection.

§ 5.2.5.4 The Contractor shall not substitute a manufacturer, fabricator, or Subcontractor previously selected if the Owner or Design Agent makes reasonable objection to such substitution.

AIA Document A201™ – 2007. Copyright © 1911, 1915, 1918, 1925, 1937, 1951, 1958, 1961, 1963, 1966, 1970, 1976, 1987, 1997 and 2007 by The American Institute of Architects. **All rights reserved. WARNING: This AIA® Document is protected by U.S. Copyright Law and International Treaties. Unauthorized reproduction or distribution of this AIA® Document, or any portion of it, may result in severe civil and criminal penalties, and will be prosecuted to the maximum extent possible under the law.** This draft was produced by AIA software at 14:02:42 ET on 11/16/2018 under Order No.1973475587 which expires on 02/21/2019, and is not for resale.
User Notes: (1870164535)

§ 5.3 SUBCONTRACTUAL RELATIONS

By appropriate written agreement, the Contractor shall require each Subcontractor, to the extent of the Work to be performed by the Subcontractor, to be bound to the Contractor by terms of the Contract Documents, and to assume toward the Contractor all the obligations and responsibilities, including the responsibility for safety of the Subcontractor's Work, which the Contractor, by these Documents, assumes toward the Owner and Design Agent. Upon the request of the User Agency and/or the Owner, the Contractor shall provide the User Agency and/or the Owner with copies of each subcontract agreement. Each subcontract agreement shall preserve and protect the rights of the Owner and Design Agent under the Contract Documents with respect to the Work to be performed by the Subcontractor so that subcontracting thereof will not prejudice such rights, and shall allow to the Subcontractor, unless specifically provided otherwise in the subcontract agreement, the benefit of all rights, remedies and redress against the Contractor that the Contractor, by the Contract Documents, has against the Owner. Where appropriate, the Contractor shall require each Subcontractor to enter into similar agreements with Sub-subcontractors. The Contractor shall make available to each proposed Subcontractor, prior to the execution of the subcontract agreement, copies of the Contract Documents to which the Subcontractor will be bound, and, upon written request of the Subcontractor, identify to the Subcontractor terms and conditions of the proposed subcontract agreement that may be at variance with the Contract Documents. Subcontractors will similarly make copies of applicable portions of such documents available to their respective proposed Sub-subcontractors.

§ 5.4 CONTINGENT ASSIGNMENT OF SUBCONTRACTS

§ 5.4.1 Each subcontract agreement for a portion of the Work is assigned by the Contractor to the Owner, provided that

- **.1** assignment is effective only after termination of the Contract by the Owner for cause pursuant to Section 14.2 and only for those subcontract agreements that the Owner accepts by notifying the Subcontractor and Contractor in writing; and
- **.2** assignment is subject to the prior rights of the surety, if any, obligated under bond relating to the Contract.

§ 5.4.2 Upon such assignment, if the Work has been suspended for more than 30 working days, the Subcontractor's compensation shall be equitably adjusted for increases in cost resulting from the suspension.

§ 5.4.3 Upon such assignment to the Owner under this Section 5.4, the Owner may further assign the subcontract to a successor contractor or other entity.

ARTICLE 6 CONSTRUCTION BY OWNER OR BY SEPARATE CONTRACTORS

§ 6.1 OWNER'S RIGHT TO PERFORM CONSTRUCTION AND TO AWARD SEPARATE CONTRACTS

§ 6.1.1 The Owner reserves the right to perform construction or operations related to the Project with the Owner's own forces, and to award separate contracts in connection with other portions of the Project or other construction or operations on the site under Conditions of the Contract identical or substantially similar to these including those portions related to insurance and waiver of subrogation.

§ 6.1.2 When separate contracts are awarded for different portions of the Project or other construction or operations on the site, the term "Contractor" in the Contract Documents in each case shall mean the Contractor who executes each separate Owner-Contractor Agreement.

§ 6.1.3 The Owner shall provide for coordination of the activities of the Owner's own forces and of each separate contractor with the Work of the Contractor, who shall cooperate with them. The Contractor shall participate with other separate contractors and the Owner in reviewing their construction schedules. The Contractor shall make any revisions to the construction schedule deemed necessary after a joint review and mutual agreement. The construction schedules shall then constitute the schedules to be used by the Contractor, separate contractors and the Owner until subsequently revised.

§ 6.1.4 Unless otherwise provided in the Contract Documents, when the Owner performs construction or operations related to the Project with the Owner's own forces, the Owner shall be deemed to be subject to the same obligations and to have the same rights that apply to the Contractor under the Conditions of the Contract, including, without excluding others, those stated in Article 3, this Article 6 and Articles 10, 11 and 12.

AIA Document A201™ – 2007. Copyright © 1911, 1915, 1918, 1925, 1937, 1951, 1958, 1961, 1963, 1966, 1970, 1976, 1987, 1997 and 2007 by The American Institute of Architects. **All rights reserved. WARNING: This AIA® Document is protected by U.S. Copyright Law and International Treaties. Unauthorized reproduction or distribution of this AIA® Document, or any portion of it, may result in severe civil and criminal penalties, and will be prosecuted to the maximum extent possible under the law.** This draft was produced by AIA software at 14:02:42 ET on 11/16/2018 under Order No.1973475587 which expires on 02/21/2019, and is not for resale.
User Notes: (1870164535)

§ 6.2 MUTUAL RESPONSIBILITY

§ 6.2.1 The Contractor shall afford the Owner and separate contractors reasonable opportunity for introduction and storage of their materials and equipment and performance of their activities, and shall connect and coordinate the Contractor's construction and operations with theirs as required by the Contract Documents.

§ 6.2.2 If part of the Contractor's Work depends for proper execution or results upon construction or operations by the Owner or a separate contractor, the Contractor shall, prior to proceeding with that portion of the Work, promptly report to the Design Agent apparent discrepancies or defects in such other construction that would render it unsuitable for such proper execution and results. Failure of the Contractor so to report shall constitute an acknowledgment that the Owner's or separate contractor's completed or partially completed construction is fit and proper to receive the Contractor's Work, except as to defects not then reasonably discoverable.

§ 6.2.3 The Contractor shall reimburse the Owner for costs the Owner incurs that are payable to a separate contractor because of the Contractor's delays, improperly timed activities or defective construction. The Owner shall be responsible to the Contractor for costs the Contractor incurs because of a separate contractor's delays, improperly timed activities, damage to the Work or defective construction.

§ 6.2.4 The Contractor shall promptly remedy damage the Contractor wrongfully causes to completed or partially completed construction or to property of the Owner or separate contractors as provided in Section 10.2.5.

§ 6.2.5 The Owner and each separate contractor shall have the same responsibilities for cutting and patching as are described for the Contractor in Section 3.14.

§ 6.3 OWNER'S RIGHT TO CLEAN UP

If a dispute arises among the Contractor, separate contractors and the Owner as to the responsibility under their respective contracts for maintaining the premises and surrounding area free from waste materials and rubbish, the Owner may clean up and allocate the cost among those responsible.

ARTICLE 7 CHANGES IN THE WORK

§ 7.1 GENERAL

§ 7.1.1 Changes in the Work may be accomplished after execution of the Contract, and without invalidating the Contract, by Change Order, Construction Change Directive or order for a minor change in the Work, subject to the limitations stated in this Article 7 and elsewhere in the Contract Documents.

§ 7.1.2 A Change Order shall be based upon agreement between the Owner and the Contractor; a Construction Change Directive requires agreement by the Owner and may or may not be agreed to by the Contractor; an order for a minor change in the Work may be issued by the Design Agent alone.

§ 7.1.3 Changes in the Work shall be performed under applicable provisions of the Contract Documents, and the Contractor shall proceed promptly, unless otherwise provided in the Change Order, Construction Change Directive or order for a minor change in the Work.

§ 7.2 CHANGE ORDERS

§ 7.2.1 A Change Order is a written instrument prepared by the Contractor and signed by the Owner, Contractor and Design Agent stating their agreement upon all of the following:

- **.1** The change in the Work;
- **.2** The amount of the adjustment, if any, in the Contract Sum; and
- **.3** The extent of the adjustment, if any, in the Contract Time.

§ 7.2.2 Subsequent to the approval of a Change Order as provided in § 7.1.2, whether such Change Order changes the Contract Sum or Contract Time or both, no additional claim related to such Change Order will be considered by the Owner. Any change, once incorporated into a Change Order, is all inclusive, and includes all factors that could have been considered at the time of the Change Order such as Project impact or schedule "ripple" effect.

§ 7.3 CONSTRUCTION CHANGE DIRECTIVES

§ 7.3.1 A Construction Change Directive is a written order prepared by the Design Agent and signed by the Owner, directing a change in the Work prior to agreement on adjustment, if any, in the Contract Sum or Contract Time, or both. The Owner may by Construction Change Directive, without invalidating the Contract, order changes in the

AIA Document A201™ – 2007. Copyright © 1911, 1915, 1918, 1925, 1937, 1951, 1958, 1961, 1963, 1966, 1970, 1976, 1987, 1997 and 2007 by The American Institute of Architects. **All rights reserved. WARNING: This AIA® Document is protected by U.S. Copyright Law and International Treaties. Unauthorized reproduction or distribution of this AIA® Document, or any portion of it, may result in severe civil and criminal penalties, and will be prosecuted to the maximum extent possible under the law.** This draft was produced by AIA software at 14:02:42 ET on 11/16/2018 under Order No.1973475587 which expires on 02/21/2019, and is not for resale.
User Notes: (1870164535)

Work within the general scope of the Contract consisting of additions, deletions or other revisions, the Contract Sum and Contract Time being adjusted accordingly.

§ 7.3.2 A Construction Change Directive shall be used in the absence of total agreement on the terms of a Change Order.

§ 7.3.3 If the Construction Change Directive provides for an adjustment to the Contract Sum, the adjustment shall be based on one of the following methods:

- **.1** Mutual acceptance of a lump sum properly itemized and supported by sufficient substantiating data to permit evaluation;
- **.2** Unit prices stated in the Contract Documents or subsequently agreed upon;
- **.3** Cost to be determined in a manner agreed upon by the parties and a mutually acceptable fixed or percentage fee; or
- **.4** As provided in Section 7.3.7.

§ 7.3.4 Deleted.

§ 7.3.5 Upon receipt of a Construction Change Directive, the Contractor shall promptly proceed with the change in the Work involved and advise the Design Agent of the Contractor's agreement or disagreement with the method, if any, provided in the Construction Change Directive for determining the proposed adjustment in the Contract Sum or Contract Time.

§ 7.3.6 A Construction Change Directive signed by the Contractor indicates the Contractor's agreement therewith, including adjustment in Contract Sum and Contract Time or the method for determining them. Such agreement shall be effective immediately and shall be recorded as a Change Order.

§ 7.3.7 If the Contractor does not respond promptly or disagrees with the method for adjustment in the Contract Sum, the Design Agent shall determine the method and the adjustment on the basis of reasonable expenditures and savings of those performing the Work attributable to the change, including, in case of an increase in the Contract Sum, an amount for overhead and profit as set forth in Section 7.3.1. In such case, and also under Section 7.3.3.3, the Contractor shall keep and present, in such form as the Design Agent may prescribe, an itemized accounting together with appropriate supporting data. Unless otherwise provided in the Contract Documents, costs for the purposes of this Section 7.3.7 shall be limited to the following:

- **.1** Costs of labor, including social security, old age and unemployment insurance, fringe benefits required by agreement or custom, and workers' compensation insurance;
- **.2** Costs of materials, supplies and equipment, including cost of delivery;
- **.3** Rental costs of machinery and equipment, exclusive of hand tools; or
- **.4** Costs of premiums for all bonds and insurance and permit fees related to the Work..

§ 7.3.8 The amount of credit to be allowed by the Contractor to the Owner for a deletion or change that results in a net decrease in the Contract Sum shall be actual net cost as confirmed by the Design Agent. When both additions and credits covering related Work or substitutions are involved in a change, the allowance for overhead and profit shall be figured on the basis of net increase, if any, with respect to that change.

§ 7.3.9 Pending final determination of the total cost of a Construction Change Directive to the Owner, the Contractor may request payment for Work completed under the Construction Change Directive in Applications for Payment. The Design Agent will make an interim determination for purposes of monthly certification for payment for those costs and certify for payment the amount that the Design Agent determines, in the Design Agent's professional judgment, to be reasonably justified. The Design Agent's interim determination of cost shall adjust the Contract Sum on the same basis as a Change Order, subject to the right of either party to disagree and assert a Claim in accordance with Article 15.

§ 7.3.10 When the Owner and Contractor agree with a determination made by the Design Agent concerning the adjustments in the Contract Sum and Contract Time, or otherwise reach agreement upon the adjustments, such agreement shall be effective immediately and the Contractor will prepare a Change Order. Change Orders may be issued for all or any part of a Construction Change Directive.

AIA Document A201™ – 2007. Copyright © 1911, 1915, 1918, 1925, 1937, 1951, 1958, 1961, 1963, 1966, 1970, 1976, 1987, 1997 and 2007 by The American Institute of Architects. **All rights reserved. WARNING: This AIA® Document is protected by U.S. Copyright Law and International Treaties. Unauthorized reproduction or distribution of this AIA® Document, or any portion of it, may result in severe civil and criminal penalties, and will be prosecuted to the maximum extent possible under the law.** This draft was produced by AIA software at 14:02:42 ET on 11/16/2018 under Order No.1973475587 which expires on 02/21/2019, and is not for resale.
User Notes: (1870164535)

§ 7.3.11 The combined overhead and profit included in the total cost to the Owner for a change in the Work shall be based on the following schedule:

.1 For the Contractor, for work performed by the Contractor's own forces, an amount not to exceed ten (10%) percent of the cost.

.2 For the Contractor, for work performed by the Contractor's Subcontractors, an amount not to exceed five (5%) of the amount due to the Subcontractors.

.3 For each Subcontractor, for work performed by the Subcontractor's own forces, an amount not to exceed ten (10%) percent of the cost.

.4 Where the Work represents both additions and deletions and results in a net increase, the allowable overhead and profit shall be in accordance with this Section 7.3.11, but in no event shall the amount exceed fifteen (15%) percent of the net increase in the cost of the Work.

§ 7.3.12 All proposals with an aggregate cost equal to or in excess of $500.00 shall be accompanied by a detailed itemization of costs, including labor, materials (quantities and prices), and Subcontracts, in a form acceptable to the Owner. In no event will a change order request reflecting an aggregate cost equal to or in excess of $500.00 be approved without such itemization.

§ 7.4 MINOR CHANGES IN THE WORK

The Design Agent with the prior written approval of the Owner has authority to order minor changes in the Work not involving adjustment in the Contract Sum or extension of the Contract Time and not inconsistent with the intent of the Contract Documents. Such changes will be affected by written order signed by the Design Agent and shall be binding on the Owner and Contractor.

ARTICLE 8 TIME

§ 8.1 DEFINITIONS

§ 8.1.1 Unless otherwise provided, Contract Time is the period of time, including authorized adjustments, allotted in the Contract Documents for Substantial Completion of the Work.

The date of commencement of the Work is the date established in Section 3.1 of the Agreement..

§ 8.1.3 The date of Substantial Completion is the date certified by the Design Agent in accordance with Section 9.8.

§ 8.1.4 Deleted.

§ 8.2 PROGRESS AND COMPLETION

§ 8.2.1 Time limits stated in the Contract Documents are of the essence of the Contract. By executing the Agreement the Contractor confirms that the Contract Time is a reasonable period for performing the Work.

§ 8.2.2 The Contractor shall not except by agreement or instruction of the Owner in writing, prematurely commence operations on the site or elsewhere prior to the effective date of insurance required by Article 11 to be furnished by the Contractor and Owner. The date of commencement of the Work shall not be changed by the effective date of such insurance.

§ 8.2.3 The Contractor shall proceed expeditiously with adequate forces and shall achieve Substantial Completion within the Contract Time.

§ 8.3 DELAYS AND EXTENSIONS OF TIME

§ 8.3.1 If the Contractor is delayed at any time in the commencement or progress of the Work by an act or neglect of the Owner or Design Agent, or of an employee of either, or of a separate contractor employed by the Owner; or by changes ordered in the Work; or by labor disputes, fire, unusual delay in deliveries, unavoidable casualties or other causes beyond the Contractor's control, then the Contract Time shall be extended by Change Order for such reasonable time as the Owner may determine.

§ 8.3.2 Claims relating to time shall be made in accordance with applicable provisions of Article 15.

§ 8.3.3 This Section 8.3 does not preclude recovery of damages for delay by either party under other provisions of the Contract Documents.

AIA Document A201™ – 2007. Copyright © 1911, 1915, 1918, 1925, 1937, 1951, 1958, 1961, 1963, 1966, 1970, 1976, 1987, 1997 and 2007 by The American Institute of Architects. **All rights reserved. WARNING: This AIA® Document is protected by U.S. Copyright Law and International Treaties. Unauthorized reproduction or distribution of this AIA® Document, or any portion of it, may result in severe civil and criminal penalties, and will be prosecuted to the maximum extent possible under the law.** This draft was produced by AIA software at 14:02:42 ET on 11/16/2018 under Order No.1973475587 which expires on 02/21/2019, and is not for resale.
User Notes: (1870164535)

ARTICLE 9 PAYMENTS AND COMPLETION

§ 9.1 CONTRACT SUM

The Contract Sum is stated in the Agreement and, including authorized adjustments, is the total amount payable by the Owner to the Contractor for performance of the Work under the Contract Documents.

§ 9.2 SCHEDULE OF VALUES

Within 20 working days of the issuance of the Purchase Order, and promptly if revision is necessary from time to time as a result of a Change Order, the Contractor shall submit to the Owner, before the first Application for Payment, a schedule of values allocating the entire Contract Sum to the various portions of the Work and prepared in such form and supported by such data to substantiate its accuracy as the Design Agent and the Owner may require. This schedule, if and when approved by the Design Agent and the Owner in writing, shall be used as a basis for reviewing the Contractor's Applications for Payment.

§ 9.3 APPLICATIONS FOR PAYMENT

§ 9.3.1 At least 10 working days before the date established for each progress payment, the Contractor shall submit to the Design Agent and the Owner for approval an itemized Application for Payment prepared in accordance with the schedule of values for completed portions of the Work. Such application shall be notarized, if required, and supported by such data substantiating the Contractor's right to payment as the Owner or the Design Agent may require, such as copies of requisitions from Subcontractors and material suppliers, and shall reflect retainage if provided for in the Contract Documents.

§ 9.3.1.1 All Applications for Payment for Change Orders must be accompanied by a Notice of Change in Purchase Order issued by the Owner, and if directed by the Owner, by the User Agency.

§ 9.3.1.2 Applications for Payment shall not include requests for payment for portions of the Work for which the Contractor does not intend to pay a Subcontractor or material supplier, unless such Work has been performed by others whom the Contractor intends to pay.

§ 9.3.1.3 The form of Application for Payment shall be AIA Document G702, Application and Certification for Payment, supported by AIA Document G702A, Continuation Sheet.

§ 9.3.1.4 Until Substantial Completion, the Owner shall pay ninety-five (95%) percent of the amount due the Contract on account of progress payments.

§ 9.3.2 Unless otherwise provided in the Contract Documents, payments shall be made on account of materials and equipment delivered and suitably stored at the site for subsequent incorporation in the Work. If approved in advance by the Owner, payment may similarly be made for materials and equipment suitably stored off the site at a location agreed upon in writing. Payment for materials and equipment stored on or off the site shall be conditioned upon compliance by the Contractor with procedures satisfactory to the Owner to establish the Owner's title to such materials and equipment or otherwise protect the Owner's interest, and shall include the costs of applicable insurance, storage and transportation to the site for such materials and equipment stored off the site.

§ 9.3.3 The Contractor warrants that title to all Work covered by an Application for Payment will pass to the Owner no later than the time of payment. The Contractor further warrants that upon submittal of an Application for Payment all Work for which Certificates for Payment have been previously issued and payments received from the Owner shall be free and clear of liens, claims, security interests or encumbrances in favor of the Contractor, Subcontractors, material suppliers, or other persons or entities making a claim by reason of having provided labor, materials and equipment relating to the Work. The Contractor shall immediately satisfy any lien, claim, or encumbrance against the site where the Project is located and indemnify the Owner from and against all resulting costs and expenses, including without limitation, attorneys' fees.

§ 9.4 CERTIFICATES FOR PAYMENT

§ 9.4.1 The Design Agent will, within 7 working days after receipt of the Contractor's Application for Payment, either issue to the Owner a Certificate for Payment, with a copy to the Contractor, for such amount as the Design Agent determines is properly due, or notify the Contractor and Owner in writing of the Design Agent's reasons for withholding certification in whole or in part as provided in Section 9.5.1.

AIA Document A201™ – 2007. Copyright © 1911, 1915, 1918, 1925, 1937, 1951, 1958, 1961, 1963, 1966, 1970, 1976, 1987, 1997 and 2007 by The American Institute of Architects. **All rights reserved. WARNING: This AIA® Document is protected by U.S. Copyright Law and International Treaties. Unauthorized reproduction or distribution of this AIA® Document, or any portion of it, may result in severe civil and criminal penalties, and will be prosecuted to the maximum extent possible under the law.** This draft was produced by AIA software at 14:02:42 ET on 11/16/2018 under Order No.1973475587 which expires on 02/21/2019, and is not for resale.
User Notes: (1870164535)

§ 9.4.2 The issuance of a Certificate for Payment will constitute a representation by the Design Agent to the Owner, based on the Design Agent's evaluation of the Work and the data comprising the Application for Payment, that, the Work has progressed to the point indicated and that the quality of the Work is in accordance with the Contract Documents. The foregoing representations are subject to an evaluation of the Work for conformance with the Contract Documents upon Substantial Completion, to results of subsequent tests and inspections, to correction of minor deviations from the Contract Documents prior to completion and to specific qualifications expressed by the Design Agent. The issuance of a Certificate for Payment will further constitute a representation that the Contractor is entitled to payment in the amount certified. However, the issuance of a Certificate for Payment will not be a representation that the Design Agent has (1) made exhaustive or continuous on-site inspections to check the quality or quantity of the Work, (2) reviewed construction means, methods, techniques, sequences or procedures, (3) reviewed copies of requisitions received from Subcontractors and material suppliers and other data requested by the Owner to substantiate the Contractor's right to payment, or (4) made examination to ascertain how or for what purpose the Contractor has used money previously paid on account of the Contract Sum.

§ 9.4.3 The Contractor must submit all product literature, material and color samples with each Application for Payment, or as otherwise required by the Owner.

§ 9.5 DECISIONS TO WITHHOLD CERTIFICATION

§ 9.5.1 The Design Agent will withhold a Certificate for Payment in whole or in part, to the extent reasonably necessary to protect the Owner, if in the Design Agent's opinion the representations to the Owner required by Section 9.4.2 cannot be made. If the Design Agent is unable to certify payment in the amount of the Application, the Design Agent will notify the Contractor and Owner as provided in Section 9.4.1. If the Contractor and Design Agent cannot agree on a revised amount, the Design Agent will promptly issue a Certificate for Payment for the amount for which the Design Agent is able to make such representations to the Owner. The Design Agent may also withhold a Certificate for Payment or, because of subsequently discovered evidence, may nullify the whole or a part of a Certificate for Payment previously issued, to such extent as may be necessary in the Design Agent's opinion to protect the Owner from loss for which the Contractor is responsible, including loss resulting from acts and omissions described in Section 3.3.2, because of:

- **.1** defective Work not remedied;
- **.2** third party claims filed or reasonable evidence indicating probable filing of such claims unless security acceptable to the Owner is provided by the Contractor;
- **.3** failure of the Contractor to make payments properly to Subcontractors or for labor, materials or equipment;
- **.4** reasonable evidence that the Work cannot be completed for the unpaid balance of the Contract Sum;
- **.5** damage to the Owner or a separate contractor;
- **.6** reasonable evidence that the Work will not be completed within the Contract Time, and that the unpaid balance would not be adequate to cover actual or liquidated damages for the anticipated delay;
- **.7** failure to carry out the Work in accordance with the Contract Documents; or
- **.8** any other failure to comply with the obligations of the Contractor under the Contract Documents.

§ 9.5.2 When the above reasons for withholding certification are removed, certification will be made for amounts previously withheld.

§ 9.5.3 The Owner may, at its sole option, issue joint checks to the Contractor and to any Subcontractor or material or equipment suppliers to whom the Contractor failed to make payment for Work properly performed or material or equipment suitably delivered. If the Owner makes payments by joint check, the Owner shall notify the Design Agent and the Design Agent will reflect such payment on the next Certificate for Payment.

§ 9.6 PROGRESS PAYMENTS

§ 9.6.1 After the Design Agent has issued a Certificate for Payment and the Owner has approved the Certificate for Payment in writing, the Owner shall make payment in the manner and within the time provided in the Contract Documents, and shall so notify the Design Agent.

§ 9.6.2 The Contractor shall pay each Subcontractor no later than 10 working days after receipt of payment from the Owner the amount to which the Subcontractor is entitled, reflecting percentages actually retained from payments to the Contractor on account of the Subcontractor's portion of the Work. The Contractor shall, by appropriate agreement with each Subcontractor, require each Subcontractor to make payments to Sub-subcontractors in a similar manner.

AIA Document A201™ – 2007. Copyright © 1911, 1915, 1918, 1925, 1937, 1951, 1958, 1961, 1963, 1966, 1970, 1976, 1987, 1997 and 2007 by The American Institute of Architects. **All rights reserved. WARNING: This AIA® Document is protected by U.S. Copyright Law and International Treaties. Unauthorized reproduction or distribution of this AIA® Document, or any portion of it, may result in severe civil and criminal penalties, and will be prosecuted to the maximum extent possible under the law.** This draft was produced by AIA software at 14:02:42 ET on 11/16/2018 under Order No.1973475587 which expires on 02/21/2019, and is not for resale.
User Notes: (1870164535)

§ 9.6.3 The Design Agent will, on request, furnish to a Subcontractor, if practicable, information regarding percentages of completion or amounts applied for by the Contractor and action taken thereon by the Design Agent and Owner on account of portions of the Work done by such Subcontractor.

§ 9.6.4 The Owner has the right to request written evidence from the Contractor that the Contractor has properly paid Subcontractors and material and equipment suppliers amounts paid by the Owner to the Contractor for subcontracted Work. If the Contractor fails to furnish such evidence within 7 working days, the Owner shall have the right to contact Subcontractors to ascertain whether they have been properly paid. The Owner shall have the right to withhold payment(s) to the Contractor in the event that any Subcontractors or material and equipment suppliers have not been properly paid. Neither the Owner nor Design Agent shall have an obligation to pay or to see to the payment of money to a Subcontractor, except as may otherwise be required by law.

§ 9.6.5 Contractor payments to material and equipment suppliers shall be treated in a manner similar to that provided in Sections 9.6.2, 9.6.3 and 9.6.4.

§ 9.6.6 A Certificate for Payment, a progress payment, or partial or entire use or occupancy of the Project by the Owner shall not constitute acceptance of Work not in accordance with the Contract Documents.

§ 9.6.7 Unless the Contractor provides the Owner with a payment bond in the full penal sum of the Contract Sum, payments received by the Contractor for Work properly performed by Subcontractors and suppliers shall be held by the Contractor for those Subcontractors or suppliers who performed Work or furnished materials, or both, under contract with the Contractor for which payment was made by the Owner. Nothing contained herein shall require money to be placed in a separate account and not commingled with money of the Contractor, shall create any fiduciary liability or tort liability on the part of the Contractor for breach of trust or shall entitle any person or entity to an award of punitive damages against the Contractor for breach of the requirements of this provision.

§ 9.7 FAILURE OF PAYMENT

If the Design Agent does not issue a Certificate for Payment, through no fault of the Contractor, within 7 working days after receipt of the Contractor's Application for Payment, or if the Owner does not pay the Contractor within 7 working days after the date established in the Contract Documents the amount certified by the Design Agent or awarded by binding dispute resolution, then the Contractor may, upon 7 additional working days' written notice to the Owner and Design Agent, make a claim for payment as provided under the provisions of applicable law.

.

§ 9.8 SUBSTANTIAL COMPLETION

§ 9.8.1 Substantial Completion is the stage in the progress of the Work when the Work or designated portion thereof is sufficiently complete in accordance with the Contract Documents so that the Owner can occupy or utilize the Work for its intended use.

§ 9.8.2 When the Contractor considers that the Work, or a portion thereof which the Owner agrees to accept separately, is substantially complete, the Contractor shall prepare and submit to the Design Agent a comprehensive list of items to be completed or corrected prior to final payment. Failure to include an item on such list does not alter the responsibility of the Contractor to complete all Work in accordance with the Contract Documents.

§ 9.8.3 Upon receipt of the Contractor's list, the Design Agent will make an inspection to determine whether the Work or designated portion thereof is substantially complete. If the Design Agent's inspection discloses any item, whether or not included on the Contractor's list, which is not sufficiently complete in accordance with the Contract Documents so that the Owner can occupy or utilize the Work or designated portion thereof for its intended use, the Contractor shall, before issuance of the Certificate of Substantial Completion, complete or correct such item upon notification by the Design Agent. In such case, the Contractor shall then submit a request for another inspection by the Design Agent to determine Substantial Completion. The Design Agent will perform no more than 2 inspections to determine whether the Work or a designated portion thereof has attained Substantial Completion in accordance with the Contract Documents. The Owner is entitled to reimbursement from the Contractor for amounts paid to the Design Agent for any additional inspections.

§ 9.8.4 When the Work or designated portion thereof is substantially complete, the Design Agent will prepare a Certificate of Substantial Completion that shall establish the date of Substantial Completion, shall establish responsibilities of the Owner and Contractor for security, maintenance, heat, utilities, damage to the Work and

AIA Document A201™ – 2007. Copyright © 1911, 1915, 1918, 1925, 1937, 1951, 1958, 1961, 1963, 1966, 1970, 1976, 1987, 1997 and 2007 by The American Institute of Architects. **All rights reserved. WARNING: This AIA® Document is protected by U.S. Copyright Law and International Treaties. Unauthorized reproduction or distribution of this AIA® Document, or any portion of it, may result in severe civil and criminal penalties, and will be prosecuted to the maximum extent possible under the law.** This draft was produced by AIA software at 14:02:42 ET on 11/16/2018 under Order No.1973475587 which expires on 02/21/2019, and is not for resale.
User Notes: (1870164535)

insurance, and shall fix the time within which the Contractor shall finish all items on the list accompanying the Certificate.

§ 9.8.5 The Certificate of Substantial Completion shall be submitted to the Owner and Contractor for their written acceptance of responsibilities assigned to them in such Certificate. Upon such acceptance and consent of surety, if any, the Owner shall make payment less the amount of five (5%) percent to be retained by the Owner in accordance with R.I. Gen. Laws § 37-12-10.1. Such payment shall be adjusted for Work that is incomplete or not in accordance with the requirements of the Contract Documents.

§ 9.9 PARTIAL OCCUPANCY OR USE

§ 9.9.1 The Owner may occupy or use any completed or partially completed portion of the Work at any stage when such portion is designated by separate agreement with the Contractor, provided such occupancy or use is consented to by the insurer as required under Section 11.3.1.5 and authorized by public authorities having jurisdiction over the Project. Such partial occupancy or use may commence whether or not the portion is substantially complete, provided the Owner and Contractor have accepted in writing the responsibilities assigned to each of them for payments, retainage, if any, security, maintenance, heat, utilities, damage to the Work and insurance, and have agreed in writing concerning the period for correction of the Work and commencement of warranties required by the Contract Documents. When the Contractor considers a portion substantially complete, the Contractor shall prepare and submit a list to the Design Agent as provided under Section 9.8.2. Consent of the Contractor to partial occupancy or use shall not be unreasonably withheld. The stage of the progress of the Work shall be determined by written agreement between the Owner and Contractor or, if no agreement is reached, by decision of the Design Agent.

§ 9.9.2 Immediately prior to such partial occupancy or use, the Owner, Contractor and Design Agent shall jointly inspect the area to be occupied or portion of the Work to be used in order to determine and record the condition of the Work.

§ 9.9.3 Unless otherwise agreed upon, partial occupancy or use of a portion or portions of the Work shall not constitute acceptance of Work not complying with the requirements of the Contract Documents.

§ 9.10 FINAL COMPLETION AND FINAL PAYMENT

§ 9.10.1 Upon receipt of the Contractor's written notice that the Work is ready for final inspection and acceptance and upon receipt of a final Application for Payment, the Design Agent will promptly make such inspection and, when the Design Agent finds the Work acceptable under the Contract Documents and the Contract fully performed, the Design Agent will promptly issue a final Certificate for Payment stating that to the best of the Design Agent's knowledge, information and belief, and on the basis of the Design Agent's on-site visits and inspections, the Work has been completed in accordance with terms and conditions of the Contract Documents and that the entire balance found to be due the Contractor and noted in the final Certificate is due and payable. The Design Agent's final Certificate for Payment will constitute a further representation that conditions listed in Section 9.10.2 as precedent to the Contractor's being entitled to final payment have been fulfilled. The Design Agent will perform no more than 2 inspections to determine whether the Work or a designated portion thereof has attained Final Completion in accordance with the Contract Documents. The Owner is entitled to reimbursement from the Contractor for amounts paid to the Design Agent for any additional inspections.

§ 9.10.2 Neither final payment nor any remaining retained percentage shall become due until the Contractor submits to the Design Agent (1) an affidavit that payrolls, bills for materials and equipment, and other indebtedness connected with the Work for which the Owner or the Owner's property might be responsible or encumbered (less amounts withheld by Owner) have been paid or otherwise satisfied, (2) a certificate evidencing that insurance required by the Contract Documents to remain in force after final payment is currently in effect and will not be canceled or allowed to expire until at least 30 working days' prior written notice has been given to the Owner, (3) a written statement that the Contractor knows of no substantial reason that the insurance will not be renewable to cover the period required by the Contract Documents, (4) consent of surety, if any, to final payment, (5), if required by the Owner, other data establishing payment or satisfaction of obligations, such as receipts, releases and waivers of liens, claims, security interests or encumbrances arising out of the Contract, to the extent and in such form as may be designated by the Owner, and (6) all other close-out documents required by the Owner, including without limitation, all as-built plans, warranties, manuals, and other materials set forth in the Contract Documents. If a Subcontractor refuses to furnish a release or waiver required by the Owner, the Contractor may furnish a bond satisfactory to the Owner to indemnify the Owner against such lien. If such lien remains unsatisfied after payments

AIA Document A201™ – 2007. Copyright © 1911, 1915, 1918, 1925, 1937, 1951, 1958, 1961, 1963, 1966, 1970, 1976, 1987, 1997 and 2007 by The American Institute of Architects. **All rights reserved. WARNING: This AIA® Document is protected by U.S. Copyright Law and International Treaties. Unauthorized reproduction or distribution of this AIA® Document, or any portion of it, may result in severe civil and criminal penalties, and will be prosecuted to the maximum extent possible under the law.** This draft was produced by AIA software at 14:02:42 ET on 11/16/2018 under Order No.1973475587 which expires on 02/21/2019, and is not for resale.
User Notes: (1870164535)

are made, the Contractor shall refund to the Owner all money that the Owner may be compelled to pay in discharging such lien, including all costs and reasonable attorneys' fees.

§ 9.10.3 If, after Substantial Completion of the Work, final completion thereof is materially delayed through no fault of the Contractor or by issuance of Change Orders affecting final completion, and the Design Agent so confirms, the Owner shall, upon application by the Contractor and certification by the Design Agent, and without terminating the Contract, make payment of the balance due for that portion of the Work fully completed and accepted. If the remaining balance for Work not fully completed or corrected is less than retainage stipulated in the Contract Documents, and if bonds have been furnished, the written consent of surety to payment of the balance due for that portion of the Work fully completed and accepted shall be submitted by the Contractor to the Design Agent prior to certification of such payment. Such payment shall be made under terms and conditions governing final payment, except that it shall not constitute a waiver of claims.

§ 9.10.4 The making of final payment shall constitute a waiver of Claims by the Owner except those arising from:

- **.1** liens, Claims, security interests, or encumbrances arising out of the Contract and unsettled;
- **.2** failure of the Work to comply with the requirements of the Contract Documents;
- **.3** terms of special warranties required by the Contract Documents; or
- **.4** claims permitted under the State of Rhode Island General Conditions of Purchase Regulation.

§ 9.10.5 Acceptance of final payment by the Contractor, a Subcontractor or material supplier shall constitute a waiver of claims by that payee except those previously made in writing and identified by that payee as unsettled at the time of final Application for Payment.

§ 9.11 The Contractor and the Contractor's surety shall be liable for and shall pay the Owner as liquidated damages the sums specified in the Solicitation and Bid Form, or if completed, the amount set forth in Section 3.4 of the Agreement.

§ 9.12 Warranties required by the Contract Documents shall commence on the date of Final Completion of the Work.

ARTICLE 10 PROTECTION OF PERSONS AND PROPERTY

§ 10.1 SAFETY PRECAUTIONS AND PROGRAMS

The Contractor shall be responsible for initiating, maintaining and supervising all safety precautions and programs in connection with the performance of the Contract.

§ 10.2 SAFETY OF PERSONS AND PROPERTY

§ 10.2.1 The Contractor shall take reasonable precautions for safety of, and shall provide reasonable protection to prevent damage, injury or loss to:

- **.1** employees on the Work and other persons who may be affected thereby;
- **.2** the Work and materials and equipment to be incorporated therein, whether in storage on or off the site, under care, custody or control of the Contractor or the Contractor's Subcontractors or Sub-subcontractors; and
- **.3** other property at the site or adjacent thereto, such as trees, shrubs, lawns, walks, pavements, roadways, structures and utilities not designated for removal, relocation or replacement in the course of construction.

§ 10.2.2 The Contractor shall comply with and give notices required by applicable laws, statutes, ordinances, codes, rules and regulations, and lawful orders of public authorities bearing on safety of persons or property or their protection from damage, injury or loss.

§ 10.2.3 The Contractor shall erect and maintain, as required by existing conditions and performance of the Contract, reasonable safeguards for safety and protection, including posting danger signs and other warnings against hazards, promulgating safety regulations and notifying owners and users of adjacent sites and utilities.

§ 10.2.4 When use or storage of explosives or other hazardous materials or equipment or unusual methods are necessary for execution of the Work, the Contractor shall exercise utmost care and carry on such activities under supervision of properly qualified personnel and in consultation with the appropriate governmental authorities.

AIA Document A201™ – 2007. Copyright © 1911, 1915, 1918, 1925, 1937, 1951, 1958, 1961, 1963, 1966, 1970, 1976, 1987, 1997 and 2007 by The American Institute of Architects. **All rights reserved. WARNING: This AIA® Document is protected by U.S. Copyright Law and International Treaties. Unauthorized reproduction or distribution of this AIA® Document, or any portion of it, may result in severe civil and criminal penalties, and will be prosecuted to the maximum extent possible under the law.** This draft was produced by AIA software at 14:02:42 ET on 11/16/2018 under Order No.1973475587 which expires on 02/21/2019, and is not for resale.
User Notes: (1870164535)

§ 10.2.4.1 When use or storage of explosives, or other hazardous materials, substances or equipment, or unusual methods are necessary for execution of the Work, the Contractor shall give the User Agency and the Owner reasonable advance notice.

§ 10.2.4.2 If the Contract Documents require the Contractor to handle materials or substances that under certain circumstances may be designated as hazardous, the Contractor shall handle such materials in an appropriate manner.

§ 10.2.5 The Contractor shall promptly remedy damage and loss (other than damage or loss insured under property insurance required by the Contract Documents) to property referred to in Sections 10.2.1.2 and 10.2.1.3 caused in whole or in part by the Contractor, a Subcontractor, a Sub-subcontractor, or anyone directly or indirectly employed by any of them, or by anyone for whose acts they may be liable and for which the Contractor is responsible under Sections 10.2.1.2 and 10.2.1.3, except damage or loss attributable to acts or omissions of the Owner or Design Agent or anyone directly or indirectly employed by either of them, or by anyone for whose acts either of them may be liable, and not attributable to the fault or negligence of the Contractor. The foregoing obligations of the Contractor are in addition to the Contractor's obligations under Section 3.18.

§ 10.2.6 The Contractor shall designate a responsible member of the Contractor's organization at the site whose duty shall be the prevention of accidents. This person shall be the Contractor's superintendent unless otherwise designated by the Contractor in writing to the Owner and Design Agent.

§ 10.2.7 The Contractor shall not permit any part of the construction or site to be loaded so as to cause damage or create an unsafe condition.

§ 10.2.8 INJURY OR DAMAGE TO PERSON OR PROPERTY
If either party suffers injury or damage to person or property because of an act or omission of the other party, or of others for whose acts such party is legally responsible, written notice of such injury or damage, whether or not insured, shall be given to the other party within a reasonable time. The notice shall provide sufficient detail to enable the other party to investigate the matter.

§ 10.3 HAZARDOUS MATERIALS
§ 10.3.1 The Contractor is responsible for compliance with any requirements included in the Contract Documents regarding hazardous materials. If the Contractor encounters a hazardous material or substance not addressed in the Contract Documents and if reasonable precautions will be inadequate to prevent foreseeable bodily injury or death to persons resulting from a material or substance, including but not limited to asbestos or polychlorinated biphenyl (PCB), encountered on the site by the Contractor, the Contractor shall, upon recognizing the condition, immediately stop Work in the affected area and report the condition to the Owner and Design Agent in writing.

§ 10.3.2 Upon receipt of the Contractor's written notice, the Owner shall obtain the services of a licensed laboratory to verify the presence or absence of the material or substance reported by the Contractor and, in the event such material or substance is found to be present, to cause it to be rendered harmless. Unless otherwise required by the Contract Documents, the Owner shall furnish in writing to the Contractor and Design Agent the names and qualifications of persons or entities who are to perform tests verifying the presence or absence of such material or substance or who are to perform the task of removal or safe containment of such material or substance. The Contractor and the Design Agent will promptly reply to the Owner in writing stating whether or not either has reasonable objection to the persons or entities proposed by the Owner. If either the Contractor or Design Agent has an objection to a person or entity proposed by the Owner, the Owner shall propose another to whom the Contractor and the Design Agent have no reasonable objection. When the material or substance has been rendered harmless, Work in the affected area shall resume upon written agreement of the Owner and Contractor. By Change Order, the Contract Time shall be extended appropriately and the Contract Sum shall be increased in the amount of the Contractor's reasonable additional costs of shut-down, delay and start-up.

§ 10.3.3 To the extent permitted by the provisions of R.I. Gen. Laws §§ 9-31-1 et seq., the Owner shall indemnify and hold harmless the Contractor, Subcontractors, Design Agent, Design Agent's consultants and agents and employees of any of them from and against claims, damages, losses and expenses, including but not limited to attorneys' fees, arising out of or resulting from performance of the Work in the affected area if in fact the material or substance presents the risk of bodily injury or death as described in Section 10.3.1 and has not been rendered harmless, provided that such claim, damage, loss or expense is attributable to bodily injury, sickness, disease or

AIA Document A201™ – 2007. Copyright © 1911, 1915, 1918, 1925, 1937, 1951, 1958, 1961, 1963, 1966, 1970, 1976, 1987, 1997 and 2007 by The American Institute of Architects. **All rights reserved. WARNING: This AIA® Document is protected by U.S. Copyright Law and International Treaties. Unauthorized reproduction or distribution of this AIA® Document, or any portion of it, may result in severe civil and criminal penalties, and will be prosecuted to the maximum extent possible under the law.** This draft was produced by AIA software at 14:02:42 ET on 11/16/2018 under Order No.1973475587 which expires on 02/21/2019, and is not for resale.
User Notes: (1870164535)

death, or to injury to or destruction of tangible property (other than the Work itself), except to the extent that such damage, loss or expense is due to the fault or negligence of the party seeking indemnity.

§ 10.3.4 The Owner shall not be responsible under this Section 10.3 for materials or substances the Contractor brings to the site unless such materials or substances are required by the Contract Documents. The Owner shall be responsible for materials or substances required by the Contract Documents, except to the extent of the Contractor's fault or negligence in the use and handling of such materials or substances.

§ 10.3.5 The Contractor shall indemnify the Owner for the cost and expense the Owner incurs (1) for remediation of a material or substance the Contractor brings to the site and negligently handles, or (2) where the Contractor fails to perform its obligations under Section 10.3.1, except to the extent that the cost and expense are due to the Owner's fault or negligence.

§ 10.3.6 If, without negligence on the part of the Contractor, the Contractor is held liable by a government agency for the cost of remediation of a hazardous material or substance solely by reason of performing Work as required by the Contract Documents, the Owner shall indemnify the Contractor for all cost and expense thereby incurred.

§ 10.4 EMERGENCIES

In an emergency affecting safety of persons or property, the Contractor shall act, at the Contractor's discretion, to prevent threatened damage, injury or loss. Additional compensation or extension of time claimed by the Contractor on account of an emergency shall be determined as provided in Article 15 and Article 7.

ARTICLE 11 INSURANCE AND BONDS

§ 11.1 CONTRACTOR'S LIABILITY INSURANCE

§ 11.1.1 The Contractor shall purchase from and maintain in a company or companies lawfully authorized to do business in the jurisdiction in which the Project is located such insurance as is specified in the Solicitation and as will protect the Contractor from claims set forth below which may arise out of or result from the Contractor's operations and completed operations under the Contract and for which the Contractor may be legally liable, whether such operations be by the Contractor or by a Subcontractor or by anyone directly or indirectly employed by any of them, or by anyone for whose acts any of them may be liable:

- **.1** Claims under workers' compensation, disability benefit and other similar employee benefit acts that are applicable to the Work to be performed;
- **.2** Claims for damages because of bodily injury, occupational sickness or disease, or death of the Contractor's employees;
- **.3** Claims for damages because of bodily injury, sickness or disease, or death of any person other than the Contractor's employees;
- **.4** Claims for damages insured by usual personal injury liability coverage;
- **.5** Claims for damages, other than to the Work itself, because of injury to or destruction of tangible property, including loss of use resulting therefrom;
- **.6** Claims for damages because of bodily injury, death of a person or property damage arising out of ownership, maintenance or use of a motor vehicle;
- **.7** Claims for bodily injury or property damage arising out of completed operations; and
- **.8** Claims involving contractual liability insurance applicable to the Contractor's obligations under Section 3.18.

§ 11.1.1.2 The Contractor's liability insurance shall include all major coverages and be on a comprehensive general liability basis.

§ 11.1.2 The insurance required by Section 11.1.1 shall be written for not less than limits of liability specified in the Contract Documents or required by law, whichever coverage is greater. Coverages, whether written on an occurrence or claims-made basis, shall be maintained without interruption from the date of commencement of the Work until the date of final payment and termination of any coverage required to be maintained after final payment, and, with respect to the Contractor's completed operations coverage, until the expiration of the period for correction of Work or for such other period for maintenance of completed operations coverage as specified in the Contract Documents.

§ 11.1.3 Certificates of insurance as specified in the Solicitation and as otherwise acceptable to the Owner shall be filed with the Owner and the User Agency prior to commencement of the Work and thereafter upon renewal or

AIA Document A201™ – 2007. Copyright © 1911, 1915, 1918, 1925, 1937, 1951, 1958, 1961, 1963, 1966, 1970, 1976, 1987, 1997 and 2007 by The American Institute of Architects. **All rights reserved. WARNING: This AIA® Document is protected by U.S. Copyright Law and International Treaties. Unauthorized reproduction or distribution of this AIA® Document, or any portion of it, may result in severe civil and criminal penalties, and will be prosecuted to the maximum extent possible under the law.** This draft was produced by AIA software at 14:02:42 ET on 11/16/2018 under Order No.1973475587 which expires on 02/21/2019, and is not for resale.
User Notes: (1870164535)

replacement of each required policy of insurance. These certificates and the insurance policies required by this Section 11.1 shall contain a provision that coverages afforded under the policies will not be canceled or allowed to expire until at least 30 working days' prior written notice has been given to the Owner and the User Agency. An additional certificate evidencing continuation of liability coverage, including coverage for completed operations, shall be submitted with the final Application for Payment as required by Section 9.10.2 and thereafter upon renewal or replacement of such coverage until the expiration of the time required by Section 11.1.2. Information concerning reduction of coverage on account of revised limits or claims paid under the General Aggregate, or both, shall be furnished by the Contractor with reasonable promptness.

§ 11.1.4 The Contractor shall cause the commercial liability coverage required by the Contract Documents to include (1) the Owner, the User Agency, and their elected and appointed officials, members, employees, and agents, the Design Agent and the Design Agent's consultants as additional insureds for claims caused in whole or in part by the Contractor's acts or omissions during the Contractor's operations; and (2) the Owner, the User Agency, and their elected and appointed officials, members, employees, and agents, as additional insureds for claims caused in whole or in part by the Contractor's negligent acts or omissions during the Contractor's completed operations.

§ 11.1.5 The Contractor shall be responsible for the prompt payment to the Owner of any deductible amounts under any insurance policies required under the Contract Documents for claims made pursuant to such policies.

§ 11.2 OWNER'S LIABILITY INSURANCE.

§ 11.2.1 The Contractor shall furnish the Owner and the User Agency, through the Design Agent, an insurance certificate providing Owner's Protective Liability extended to include the interests of the Design Agent, and to protect the Owner, User Agency, and Design Agent from any liability which might be incurred against any of them as a result of any operation of the Contractor or Subcontractors or their employees or anyone for whom either the Contractor or Subcontractors are responsible. Such insurance shall be written for the same limits as the Contractor's commercial general liability insurance and shall include the same coverage.

§ 11.2.2 If the Owner engages separate contractors to perform work for, or in or around, the Project, it shall require in its contracts with each separate contractor that Contractor and its officers, directors, partners, members, employees, and agents shall be: (i) named as additional insureds on a primary, noncontributory basis to any commercial general liability, pollution liability, and excess liability insurance policies; and (ii) provided a waiver of subrogation on all workers compensation and professional liability insurance policies.

§ 11.3 PROPERTY INSURANCE

§ 11.3.1 The Contractor shall purchase and maintain, in a company or companies lawfully authorized to do business in the state of Rhode Island, property insurance written on a builder's risk "all-risk" or equivalent policy form in the amount of the initial Contract Sum, plus value of subsequent Contract Modifications and cost of materials supplied or installed by others, comprising total value for the entire Project at the site on a replacement cost basis without optional deductibles. Such property insurance shall be maintained, unless otherwise provided in the Contract Documents or otherwise agreed in writing by all persons and entities who are beneficiaries of such insurance, until final payment has been made as provided in Section 9.10 or until no person or entity other than the Owner has an insurable interest in the property required by this Section 11.3 to be covered, whichever is later. This insurance shall include interests of the Owner, the User Agency, the Contractor, Subcontractors and Sub-subcontractors in the Project. If the Owner and/or the User Agency incur any damages by failure of the Contractor to maintain such insurance, then the Contractor shall bear all reasonable cost resulting from such failure.

§ 11.3.1.1 Property insurance shall be on an "all-risk" or equivalent policy form and shall include, without limitation, insurance against the perils of fire (with extended coverage) and physical loss or damage including, without duplication of coverage, theft, vandalism, malicious mischief, collapse, earthquake, flood, windstorm, falsework, testing and startup, temporary buildings and debris removal including demolition occasioned by enforcement of any applicable legal requirements, and shall cover reasonable compensation for Design Agent's and Contractor's services and expenses required as a result of such insured loss.

§ 11.3.1.2 Deleted.

§ 11.3.1.3 If the property insurance requires deductibles, the Owner shall pay costs not covered because of such deductibles.

AIA Document A201™ – 2007. Copyright © 1911, 1915, 1918, 1925, 1937, 1951, 1958, 1961, 1963, 1966, 1970, 1976, 1987, 1997 and 2007 by The American Institute of Architects. **All rights reserved. WARNING: This AIA® Document is protected by U.S. Copyright Law and International Treaties. Unauthorized reproduction or distribution of this AIA® Document, or any portion of it, may result in severe civil and criminal penalties, and will be prosecuted to the maximum extent possible under the law.** This draft was produced by AIA software at 14:02:42 ET on 11/16/2018 under Order No.1973475587 which expires on 02/21/2019, and is not for resale.
User Notes: (1870164535)

§ 11.3.1.4 This property insurance shall cover portions of the Work stored off the site, and also portions of the Work in transit.

§ 11.3.1.5 Partial occupancy or use in accordance with Section 9.9 shall not commence until the insurance company or companies providing property insurance have consented to such partial occupancy or use by endorsement or otherwise. The Contractor shall take reasonable steps to obtain consent of the insurance company or companies and shall, without mutual written consent, take no action with respect to partial occupancy or use that would cause cancellation, lapse or reduction of insurance.

§ 11.3.2 Deleted.

§ 11.3.3 Deleted.

§ 11.3.4 Deleted.

§ 11.3.5 If during the Project construction period the Owner insures properties, real or personal or both, at or adjacent to the site by property insurance under policies separate from those insuring the Project, or if after final payment property insurance is to be provided on the completed Project through a policy or policies other than those insuring the Project during the construction period, the Owner shall waive all rights in accordance with the terms of Section 11.3.7 for damages caused by fire or other causes of loss covered by this separate property insurance. All separate policies shall provide this waiver of subrogation by endorsement or otherwise.

§ 11.3.6 Before an exposure to loss may occur, the Contractor shall file with the Owner a copy of each policy that includes insurance coverages required by this Section 11.3. Each policy shall contain all generally applicable conditions, definitions, exclusions and endorsements related to this Project. Each policy shall contain a provision that the policy will not be canceled or allowed to expire, and that its limits will not be reduced, until at least 30 working days' prior written notice has been given to the Owner and the User Agency.

§ 11.3.7 WAIVERS OF SUBROGATION

The Contractor waives all rights against the Owner and the User Agency and any of their subcontractors, sub-subcontractors, agents and employees, and (2) the Design Agent, Design Agent's consultants, separate contractors described in Article 6, if any, and any of their subcontractors, sub-subcontractors, agents and employees, for damages caused by fire or other causes of loss to the extent covered by property insurance obtained pursuant to this Section 11.3 or other property insurance applicable to the Work, except such rights as they have to proceeds of such insurance held by the Owner as fiduciary. The Owner or Contractor, as appropriate, shall require of the Design Agent, Design Agent's consultants, separate contractors described in Article 6, if any, and the subcontractors, sub-subcontractors, agents and employees of any of them, by appropriate agreements, written where legally required for validity, similar waivers each in favor of other parties enumerated herein. The policies shall provide such waivers of subrogation by endorsement or otherwise. A waiver of subrogation shall be effective as to a person or entity even though that person or entity would otherwise have a duty of indemnification, contractual or otherwise, did not pay the insurance premium directly or indirectly, and whether or not the person or entity had an insurable interest in the property damaged.

§ 11.3.8 A loss insured under this property insurance shall be adjusted by the Contractor as fiduciary and made payable to the Owner as fiduciary for the insureds, as their interests may appear, subject to requirements of any applicable mortgagee clause and of Section 11.3.10. The Contractor shall pay Subcontractors their just shares of insurance proceeds received by the Contractor, and by appropriate agreements, written where legally required for validity, shall require Subcontractors to make payments to their Sub-subcontractors in similar manner.

§ 11.3.9 If required in writing by a party in interest, the Owner as fiduciary shall, upon occurrence of an insured loss, give bond for proper performance of the Contractor's duties. The cost of required bonds shall be charged against proceeds received as fiduciary. The Contractor shall deposit in a separate account proceeds so received, which the Contractor shall distribute in accordance with such agreement as the parties in interest may reach, or as determined in accordance with the method of binding dispute resolution selected in the Agreement between the Owner and Contractor. If after such loss no other special agreement is made and unless the Owner terminates the Contract for convenience, replacement of damaged property shall be performed by the Contractor after notification of a Change in the Work in accordance with Article 7.

AIA Document A201™ – 2007. Copyright © 1911, 1915, 1918, 1925, 1937, 1951, 1958, 1961, 1963, 1966, 1970, 1976, 1987, 1997 and 2007 by The American Institute of Architects. **All rights reserved. WARNING: This AIA® Document is protected by U.S. Copyright Law and International Treaties. Unauthorized reproduction or distribution of this AIA® Document, or any portion of it, may result in severe civil and criminal penalties, and will be prosecuted to the maximum extent possible under the law.** This draft was produced by AIA software at 14:02:42 ET on 11/16/2018 under Order No.1973475587 which expires on 02/21/2019, and is not for resale.
User Notes: (1870164535)

§ 11.3.10 The Contractor as fiduciary shall have power to adjust and settle a loss with insurers unless one of the parties in interest shall object in writing within 5 working days after occurrence of loss to the Contractor's exercise of this power; if such objection is made, the dispute shall be resolved in the manner selected by the Owner and Contractor as the method of binding dispute resolution in the Agreement.

§ 11.4 PERFORMANCE BOND AND PAYMENT BOND

§ 11.4.1 The Contractor shall furnish bonds covering faithful performance of the Contract and payment of obligations arising thereunder as stipulated in the Solicitation.

§ 11.4.2 Upon the request of any person or entity appearing to be a potential beneficiary of bonds covering payment of obligations arising under the Contract, the Contractor shall promptly furnish a copy of the bonds or shall authorize a copy to be furnished.

ARTICLE 12 UNCOVERING AND CORRECTION OF WORK

§ 12.1 UNCOVERING OF WORK

§ 12.1.1 If a portion of the Work is covered contrary to the Design Agent's request or to requirements specifically expressed in the Contract Documents, it must, if requested in writing by the Design Agent, be uncovered for the Design Agent's examination and be replaced at the Contractor's expense without change in the Contract Time.

§ 12.1.2 If a portion of the Work has been covered that the Design Agent has not specifically requested to examine prior to its being covered, the Design Agent may request to see such Work and it shall be uncovered by the Contractor. If such Work is in accordance with the Contract Documents, costs of uncovering and replacement shall, by appropriate Change Order, be at the Owner's expense. If such Work is not in accordance with the Contract Documents, such costs and the cost of correction shall be at the Contractor's expense unless the condition was caused by the Owner or a separate contractor in which event the Owner shall be responsible for payment of such costs.

§ 12.2 CORRECTION OF WORK

§ 12.2.1 BEFORE OR AFTER SUBSTANTIAL COMPLETION

The Contractor shall promptly correct Work rejected by the Design Agent or failing to conform to the requirements of the Contract Documents, whether discovered before or after Substantial Completion and whether or not fabricated, installed or completed. Costs of correcting such rejected Work, including additional testing and inspections, the cost of uncovering and replacement, and compensation for the Design Agent's services and expenses made necessary thereby, shall be at the Contractor's expense.

§ 12.2.2 AFTER SUBSTANTIAL COMPLETION

§ 12.2.2.1 In addition to the Contractor's obligations under Section 3.5, if, within one year after the date of Final Completion of the Work or designated portion thereof or after the date for commencement of warranties established under Section 9.9.1, or by terms of an applicable special warranty required by the Contract Documents, any of the Work is found to be not in accordance with the requirements of the Contract Documents, the Contractor shall correct it promptly after receipt of written notice from the Owner to do so unless the Owner has previously given the Contractor a written acceptance of such condition. The Owner shall give such notice promptly after discovery of the condition. If the Contractor fails to correct nonconforming Work within a reasonable time after receipt of notice from the Owner or Design Agent, the Owner may correct it in accordance with Section 2.4.

§ 12.2.2.2 The one-year period for correction of Work shall be extended with respect to portions of Work first performed after Substantial Completion by the period of time between Substantial Completion and the actual completion of that portion of the Work.

§ 12.2.2.3 The one-year period for correction of Work shall not be extended by corrective Work performed by the Contractor pursuant to this Section 12.2.

§ 12.2.2.4 Upon request by the Owner and prior to the expiration of one year from the date of Final Completion, the Design Agent will conduct and the Contractor shall attend 2 meetings with the Owner to review the facility operations and performance.

AIA Document A201™ – 2007. Copyright © 1911, 1915, 1918, 1925, 1937, 1951, 1958, 1961, 1963, 1966, 1970, 1976, 1987, 1997 and 2007 by The American Institute of Architects. **All rights reserved. WARNING: This AIA® Document is protected by U.S. Copyright Law and International Treaties. Unauthorized reproduction or distribution of this AIA® Document, or any portion of it, may result in severe civil and criminal penalties, and will be prosecuted to the maximum extent possible under the law.** This draft was produced by AIA software at 14:02:42 ET on 11/16/2018 under Order No.1973475587 which expires on 02/21/2019, and is not for resale.
User Notes: (1870164535)

§ 12.2.3 The Contractor shall remove from the site portions of the Work that are not in accordance with the requirements of the Contract Documents and are neither corrected by the Contractor nor accepted by the Owner.

§ 12.2.4 The Contractor shall bear the cost of correcting destroyed or damaged construction, whether completed or partially completed, of the Owner or separate contractors caused by the Contractor's correction or removal of Work that is not in accordance with the requirements of the Contract Documents.

§ 12.2.5 Nothing contained in this Section 12.2 shall be construed to establish a period of limitation with respect to other obligations the Contractor has under the Contract Documents. Establishment of the one-year period for correction of Work as described in Section 12.2.2 relates only to the specific obligation of the Contractor to correct the Work, and has no relationship to the time within which the obligation to comply with the Contract Documents may be sought to be enforced, nor to the time within which proceedings may be commenced to establish the Contractor's liability with respect to the Contractor's obligations other than specifically to correct the Work.

§ 12.3 ACCEPTANCE OF NONCONFORMING WORK

If the Owner prefers to accept Work that is not in accordance with the requirements of the Contract Documents, the Owner may do so instead of requiring its removal and correction, in which case the Contract Sum will be reduced as appropriate and equitable. Such adjustment shall be effected whether or not final payment has been made.

ARTICLE 13 MISCELLANEOUS PROVISIONS

§ 13.1 GOVERNING LAW

The Contract shall be governed by the law of the State of Rhode Island.

§ 13.2 SUCCESSORS AND ASSIGNS

§ 13.2.1 The Owner and Contractor respectively bind themselves, their successors, assigns and legal representatives to covenants, agreements and obligations contained in the Contract Documents. Except as provided in Section 13.2.2, neither party to the Contract shall assign the Contract as a whole without written consent of the other. If either party attempts to make such an assignment without such consent, that party shall nevertheless remain legally responsible for all obligations under the Contract.

§ 13.2.2 The Owner may, without consent of the Contractor, assign the Contract to any executive, legislative, judicial, regulatory, or administrative body of the state, or any political subdivision thereof, including without limitation, any department, division, agency, commission, board, office, bureau, authority, school, water, or fire district, or other agency of Rhode Island state or local government that exercises governmental functions, any other governmental authority, and any quasi-public corporation and/or body corporate and politic. The Contractor shall execute all consents reasonably required to facilitate such assignment.

§ 13.3 WRITTEN NOTICE

Written notice shall be deemed to have been duly served if delivered in person to the individual, to a member of the firm or entity, or to an officer of the corporation for which it was intended; or if delivered at, or sent by registered or certified mail or by courier service providing proof of delivery to, the last business address known to the party giving notice, or when received, if manually delivered or transmitted by electronic mail or facsimile to the last such address known to the party giving notice.

§ 13.4 RIGHTS AND REMEDIES

§ 13.4.1 Duties and obligations imposed by the Contract Documents and rights and remedies available thereunder shall be in addition to and not a limitation of duties, obligations, rights and remedies otherwise imposed or available by law.

§ 13.4.2 No action or failure to act by the Owner, Design Agent or Contractor shall constitute a waiver of a right or duty afforded them under the Contract, nor shall such action or failure to act constitute approval of or acquiescence in a breach there under, except as may be specifically agreed in writing.

§ 13.5 TESTS AND INSPECTIONS

§ 13.5.1 Tests, inspections and approvals of portions of the Work shall be made as required by the Contract Documents and by applicable laws, statutes, ordinances, codes, rules and regulations or lawful orders of public authorities. Unless otherwise provided, the Contractor shall make arrangements for such tests, inspections and approvals with an independent testing laboratory or entity acceptable to the Owner, or with the appropriate public

AIA Document A201™ – 2007. Copyright © 1911, 1915, 1918, 1925, 1937, 1951, 1958, 1961, 1963, 1966, 1970, 1976, 1987, 1997 and 2007 by The American Institute of Architects. **All rights reserved. WARNING: This AIA® Document is protected by U.S. Copyright Law and International Treaties. Unauthorized reproduction or distribution of this AIA® Document, or any portion of it, may result in severe civil and criminal penalties, and will be prosecuted to the maximum extent possible under the law.** This draft was produced by AIA software at 14:02:42 ET on 11/16/2018 under Order No.1973475587 which expires on 02/21/2019, and is not for resale.
User Notes: (1870164535)

authority, and shall bear all related costs of tests, inspections and approvals. The Contractor shall give the Design Agent timely notice of when and where tests and inspections are to be made so that the Design Agent may be present for such procedures. The Owner shall bear costs of (1) tests, inspections or approvals that do not become requirements until after bids are received or negotiations concluded, and (2) tests, inspections or approvals where building codes or applicable laws or regulations prohibit the Owner from delegating their cost to the Contractor.

§ 13.5.2 If the Design Agent, Owner or public authorities having jurisdiction determine that portions of the Work require additional testing, inspection or approval not included under Section 13.5.1, the Design Agent will, upon written authorization from the Owner, instruct the Contractor to make arrangements for such additional testing, inspection or approval by an entity acceptable to the Owner, and the Contractor shall give timely notice to the Design Agent of when and where tests and inspections are to be made so that the Design Agent may be present for such procedures. Such costs, except as provided in Section 13.5.3, shall be at the Owner's expense.

§ 13.5.3 If such procedures for testing, inspection or approval under Sections 13.5.1 and 13.5.2 reveal failure of the portions of the Work to comply with requirements established by the Contract Documents, all costs made necessary by such failure including those of repeated procedures and compensation for the Design Agent's services and expenses shall be at the Contractor's expense.

§ 13.5.4 Required certificates of testing, inspection or approval shall, unless otherwise required by the Contract Documents, be secured by the Contractor and promptly delivered to the Design Agent.

§ 13.5.5 If the Design Agent is to observe tests, inspections or approvals required by the Contract Documents, the Design Agent will do so promptly and, where practicable, at the normal place of testing.

§ 13.5.6 Tests or inspections conducted pursuant to the Contract Documents shall be made promptly to avoid unreasonable delay in the Work.

§ 13.6 INTEREST

No interest shall be due or payable on account of any payment due or unpaid under the Contract Documents except in accordance with the provisions of "Prompt Payment by Department of Administration," R.I. Gen. Laws §§ 42-11.1-1 et seq.

§ 13.7 TIME LIMITS ON CLAIMS

The Owner and Contractor shall commence all claims and causes of action, whether in contract, tort, breach of warranty or otherwise, against the other arising out of or related to the Contract in accordance with the requirements of the final dispute resolution method selected in the Agreement within the time period specified by applicable law. The Owner and Contractor waive all claims and causes of action not commenced in accordance with this Section 13.7.

ARTICLE 14 TERMINATION OR SUSPENSION OF THE CONTRACT

§ 14.1 TERMINATION BY THE CONTRACTOR

§ 14.1.1 The Contractor may terminate the Contract if the Work is stopped for a period of 30 calendar days through no act or fault of the Contractor or a Subcontractor, Sub-subcontractor or their agents or employees or any other persons or entities performing portions of the Work under direct or indirect contract with the Contractor, for any of the following reasons:

- **.1** Issuance of an order of a court or other public authority having jurisdiction that requires all Work to be stopped;
- **.2** An act of government, such as a declaration of national emergency that requires all Work to be stopped; or
- **.3** Because the Design Agent has not issued a Certificate for Payment and has not notified the Contractor of the reason for withholding certification as provided in Section 9.4.1

§ 14.1.2 Deleted.

§ 14.1.3 If one of the reasons described in Section 14.1.1 exists, the Contractor may, upon 7 working days' written notice to the Owner and Design Agent, terminate the Contract and recover from the Owner payment for Work executed.

AIA Document A201™ – 2007. Copyright © 1911, 1915, 1918, 1925, 1937, 1951, 1958, 1961, 1963, 1966, 1970, 1976, 1987, 1997 and 2007 by The American Institute of Architects. **All rights reserved. WARNING: This AIA® Document is protected by U.S. Copyright Law and International Treaties. Unauthorized reproduction or distribution of this AIA® Document, or any portion of it, may result in severe civil and criminal penalties, and will be prosecuted to the maximum extent possible under the law.** This draft was produced by AIA software at 14:02:42 ET on 11/16/2018 under Order No.1973475587 which expires on 02/21/2019, and is not for resale.
User Notes: (1870164535)

§ 14.1.4 If the Work is stopped for a period of 60 calendar days through no act or fault of the Contractor or a Subcontractor or their agents or employees or any other persons performing portions of the Work under contract with the Contractor because the Owner has repeatedly failed to fulfill the Owner's obligations under the Contract Documents with respect to matters important to the progress of the Work, the Contractor may, upon 7 additional days' written notice to the Owner and the Design Agent, terminate the Contract and recover from the Owner as provided in Section 14.1.3.

§ 14.2 TERMINATION BY THE OWNER FOR CAUSE

§ 14.2.1 The Owner may terminate the Contract if the Contractor:

- **.1** refuses or fails to supply enough properly skilled workers or proper materials;
- **.2** fails to make payment to Subcontractors for materials or labor in accordance with the respective agreements between the Contractor and the Subcontractors;
- **.3** disregards or fails to comply with applicable laws, statutes, ordinances, codes, rules and regulations, or lawful orders of a public authority;
- **.4** otherwise is guilty of breach of a provision of the Contract Documents; or
- **.5** cancels or the Contractor or the Owner receives notice of cancellation or nonrenewal of any insurance required under the Contract Documents.

§ 14.2.2 When any of the above reasons exist, the Owner, upon certification by the Initial Decision Maker that sufficient cause exists to justify such action, may without prejudice to any other rights or remedies of the Owner and after giving the Contractor and the Contractor's surety, if any, 7 working days' written notice, terminate employment of the Contractor and may, subject to any prior rights of the surety:

- **.1** Exclude the Contractor from the site and take possession of all materials, equipment, tools, and construction equipment and machinery thereon owned by the Contractor;
- **.2** Accept assignment of subcontracts pursuant to Section 5.4; and
- **.3** Finish the Work by whatever reasonable method the Owner may deem expedient. Upon written request of the Contractor, the Owner shall furnish to the Contractor a detailed accounting of the costs incurred by the Owner in finishing the Work.

§ 14.2.3 When the Owner terminates the Contract for one of the reasons stated in Section 14.2.1, the Contractor shall not be entitled to receive further payment until the Work is finished.

§ 14.2.4 If the unpaid balance of the Contract Sum exceeds costs of finishing the Work, including compensation for the Design Agent's services and expenses made necessary thereby, and other damages incurred by the Owner and not expressly waived, such excess shall be paid to the Contractor. If such costs and damages exceed the unpaid balance, the Contractor shall pay the difference to the Owner. The amount to be paid to the Contractor or Owner, as the case may be, shall be certified by the Initial Decision Maker, upon application, and this obligation for payment shall survive termination of the Contract.

§ 14.3 SUSPENSION BY THE OWNER FOR CONVENIENCE

§ 14.3.1 The Owner may, without cause, order the Contractor in writing to suspend, delay or interrupt the Work in whole or in part for such period of time as the Owner may determine.

§ 14.3.2 The Owner shall not be liable to the Contractor or any Subcontractor for claims or damages of any nature caused by or arising out of any delays. The sole remedy against the Owner for delays shall be the allowance of additional time for completion of the Work in accordance with the provisions of Section 8.3.1.

§ 14.4 TERMINATION BY THE OWNER FOR CONVENIENCE

§ 14.4.1 The Owner may, at any time, terminate the Contract for the Owner's convenience and without cause.

§ 14.4.2 Upon receipt of written notice from the Owner of such termination for the Owner's convenience, the Contractor shall:

- **.1** cease operations as directed by the Owner in the notice;
- **.2** take actions necessary, or that the Owner may direct, for the protection and preservation of the Work; and
- **.3** except for Work directed to be performed prior to the effective date of termination stated in the notice, terminate all existing subcontracts and purchase orders and enter into no further subcontracts and purchase orders.

AIA Document A201™ – 2007. Copyright © 1911, 1915, 1918, 1925, 1937, 1951, 1958, 1961, 1963, 1966, 1970, 1976, 1987, 1997 and 2007 by The American Institute of Architects. **All rights reserved. WARNING: This AIA® Document is protected by U.S. Copyright Law and International Treaties. Unauthorized reproduction or distribution of this AIA® Document, or any portion of it, may result in severe civil and criminal penalties, and will be prosecuted to the maximum extent possible under the law.** This draft was produced by AIA software at 14:02:42 ET on 11/16/2018 under Order No.1973475587 which expires on 02/21/2019, and is not for resale.
User Notes: (1870164535)

§ 14.4.3 In case of such termination for the Owner's convenience, the Contractor shall be entitled to receive payment for Work executed, and costs incurred by reason of such termination.

ARTICLE 15 CLAIMS AND DISPUTES

§ 15.1 CLAIMS

§ 15.1.1 DEFINITION

A Claim is a demand or assertion by one of the parties seeking, as a matter of right, payment of money, or other relief with respect to the terms of the Contract. The term "Claim" also includes other disputes and matters in question between the Owner and Contractor arising out of or relating to the Contract. The responsibility to substantiate Claims shall rest with the party making the Claim.

§ 15.1.2 NOTICE OF CLAIMS

Claims by either the Owner or Contractor must be initiated by written notice to the other party. Such notice shall be provided in writing to the designated representative of the party to whom the notice is addressed and shall be deemed to have been duly serviced if delivered in person, by mail, by courier, or by electronic transmission. Claims by either party must be initiated within 21 working days after occurrence of the event giving rise to such Claim or within 21 working days after the claimant first recognizes the condition giving rise to the Claim, whichever is later.

§ 15.1.3 CONTINUING CONTRACT PERFORMANCE

Pending final resolution of a Claim, except as otherwise agreed in writing or as provided in Section 9.7 and Article 14, the Contractor shall proceed diligently with performance of the Contract and the Owner shall continue to make payments in accordance with the Contract Documents. The Design Agent will prepare Change Orders and issue Certificates for Payment in accordance with the decisions of the Initial Decision Maker.

§ 15.1.4 CLAIMS FOR ADDITIONAL COST

If the Contractor wishes to make a Claim for an increase in the Contract Sum, written notice as provided herein shall be given before proceeding to execute the Work. Prior notice is not required for Claims relating to an emergency endangering life or property arising under Section 10.4.

§ 15.1.5 CLAIMS FOR ADDITIONAL TIME

§ 15.1.5.1 If the Contractor wishes to make a Claim for an increase in the Contract Time, written notice as provided herein shall be given. The Contractor's Claim shall include an estimate of cost and of probable effect of delay on progress of the Work. In the case of a continuing delay, only one Claim is necessary.

§ 15.1.5.2 If adverse weather conditions are the basis for a Claim for additional time, such Claim shall be documented by data substantiating that weather conditions were abnormal for the period of time, could not have been reasonably anticipated and had an adverse effect on the scheduled construction.

§ 15.1.5.3 Claims for increase in the Contract Time shall set forth in detail the circumstances that form the basis for the Claim, the date upon which each cause of delay began to affect the progress of the Work, the date upon which each cause of delay ceased to affect the progress of the Work and the number of days' increase in the Contract Time claimed as a consequence of each such cause of delay. The Contractor shall provide such supporting documentation as the Owner may require including, where appropriate, a revised construction schedule indicating all the activities affected by the circumstances forming the basis of the Claim.

§ 15.1.5.4 The Contractor shall not be entitled to a separate increase in the Contract Time for each one of the number of causes of delay which may have concurrent or interrelated effects on the progress of the Work, or for concurrent delays due to the fault of the Contractor.

§ 15.1.6 Deleted.

§ 15.2 INITIAL DECISION

§ 15.2.1 Claims shall be referred to the Initial Decision Maker for initial decision. The Purchasing Agent appointed pursuant to the provisions of the "State Purchases Act," R.I. Gen. Laws § 37-2-1 et seq., will serve as the Initial Decision Maker in accordance with the provisions of the State Purchases Act, State of Rhode Island Procurement Regulations, and this Section 15.2.1. An initial decision shall be required as a condition precedent to binding dispute resolution pursuant to Section 15.3.1 of any Claim arising prior to the date final payment is due.

AIA Document A201™ – 2007. Copyright © 1911, 1915, 1918, 1925, 1937, 1951, 1958, 1961, 1963, 1966, 1970, 1976, 1987, 1997 and 2007 by The American Institute of Architects. **All rights reserved. WARNING: This AIA® Document is protected by U.S. Copyright Law and International Treaties. Unauthorized reproduction or distribution of this AIA® Document, or any portion of it, may result in severe civil and criminal penalties, and will be prosecuted to the maximum extent possible under the law.** This draft was produced by AIA software at 14:02:42 ET on 11/16/2018 under Order No.1973475587 which expires on 02/21/2019, and is not for resale.
User Notes: (1870164535)

§ 15.2.2 Deleted.

§ 15.2.3 Deleted.

§ 15.2.4 Deleted.

§ 15.2.5 Deleted.

§ 15.2.6 Deleted.

§ 15.2.6.1 Deleted.

§ 15.2.7 Deleted.

§ 15.2.8 Deleted.

§ 15.3 MEDIATION

§ 15.3.1 For any Claim not resolved by the Initial Decision Maker procedures set forth in Section 15.2.1, and prior to the implementation of the binding dispute resolution procedures set forth in Section 15.4.1, the Contractor or the Design Agent shall have the option to pursue mediation, exercisable by written notice to the Owner within 30 calendar days of an Initial Decision. In the event of the exercise of such option by the Contractor or the Design Agent, the Owner and the Contractor or the Design Agent shall attempt to select a mediator, and in the event that the Owner and the Contractor or the Design Agent cannot agree on a mediator, either party may apply in writing to the Presiding Justice of the Providence County Superior Court, with a copy to the other, with a request for the court to appoint a mediator, and the costs of the mediator shall be borne equally by both parties.

§ 15.3.2 Deleted.

§ 15.3.3 Deleted.

§ 15.4 BINDING DISPUTE RESOLUTION

§ 15.4.1 For any Claim not resolved by the Initial Decision Maker procedures set forth in Section 15.2.1, or mediation at the option of the Contractor pursuant to Section 15.3.1, the method of binding dispute resolution shall be determined in accordance with the provisions of the "Public Works Arbitration Act," R.I. Gen. Laws §§ 37-16-1 et seq.

§ 15.4.4 Deleted.

§ 15.4.4.1 Deleted.

§ 15.4.4.2 Deleted.

§ 15.4.4.3 Deleted.

§ 16 COMPLIANCE WITH APPLICABLE LAW

The Contractor and its Subcontractors shall comply with all applicable federal, state, and local laws.

AIA Document A201™ – 2007. Copyright © 1911, 1915, 1918, 1925, 1937, 1951, 1958, 1961, 1963, 1966, 1970, 1976, 1987, 1997 and 2007 by The American Institute of Architects. **All rights reserved. WARNING: This AIA® Document is protected by U.S. Copyright Law and International Treaties. Unauthorized reproduction or distribution of this AIA® Document, or any portion of it, may result in severe civil and criminal penalties, and will be prosecuted to the maximum extent possible under the law.** This draft was produced by AIA software at 14:02:42 ET on 11/16/2018 under Order No.1973475587 which expires on 02/21/2019, and is not for resale.
User Notes: (1870164535)

235 Promenade Street, The Foundry Office Complex, Suite 535, Providence, RI 02908 T 401.383.6530 F 401.383.5480

HVAC ROOF ENCLOSURE REPAIRS
CCRI, Knight Campus
Warwick, Rhode Island 02886

DOCUMENT 00 73 46
WAGE DETERMINATION SCHEDULE

The State of Rhode Island Department of Labor, Division of Professional Regulation General Decision Modification document, in effect at the time of the Bid issuance for this Project, is an integral part of the Bid Documents for use in fulfilling prevailing wage rate requirements. A copy is available on the web site of the State of Rhode Island Department of Administration, Division of Purchases.

The Division of Purchases Web Site Address:

http://www.purchasing.state.ri.us/home.html

Click on “Information”; click on “Prevailing Wage Table”.

Documents are not contained within this Project Manual, may be obtained from the State of Rhode Island, Department of Labor and Training, Division of Professional Regulations, 1511 Pontiac Avenue, Cranston, RI 02920-4407, Tel. No. 401-462-8580.

END OF DOCUMENT 00 73 46

235 Promenade Street, The Foundry Office Complex, Suite 535, Providence, RI 02908 T 401.383.6530 F 401.383.5480

HVAC ROOF ENCLOSURE REPAIRS
CCRI, Knight Campus
Warwick, Rhode Island 02886

DOCUMENT 00 91 13
ADDENDA

Insert Addenda as issued.

235 Promenade Street, The Foundry Office Complex, Suite 535, Providence, RI 02908 T 401.383.6530 F 401.383.5480

HVAC ROOF ENCLOSURE REPAIRS
CCRI, Knight Campus
Warwick, Rhode Island 02886

SECTION 01 10 00
SUMMARY OF WORK

PART 1 GENERAL

1.01 WORK COVERED BY CONTRACT DOCUMENTS

A. The Project consists of removal of the existing metal screening panels on two HVAC Roof Enclosures, installing additional members to strengthen existing structural frame, surface preparation and painting the existing structural frame and installation of new screening panels on the roof enclosures at the Knight Building on the CCRI Warwick campus.

B. Coordination with Owner's separate concurrent contracts, if any.

C. General Requirements:

1. Contractor shall perform the Work of the Contract under a stipulated sum Contract with the Owner in accordance with the Conditions of Contract.

2. Vendor is responsible for obtaining and paying for any required Local and State licenses, Permits and Inspections.

3. Contractor to include all Bond costs in their Bid.

4. Before starting work, all Contractor workers and Subs are required to obtain and submit a current BCI and State-approved picture ID. CCRI reserves the right to deny Campus access to any worker based on information provided on the submitted BCI. All BCI's to be current within one calendar month. BCI'S are required from the State of Residence and RI if an out of state worker.

5. All onsite workers are to be OSHA 10 certified. Copies of certifications along with driver licenses are required on the first day of work.

6. The Contractor is responsible for providing their workers with all personal protection equipment. at a minimum, this includes hard hats, reflective vests, eye protection, harnesses, and ear protection.

7. All completed work must be inspected and approved by College and Engineer.

8. There will be mandatory bi- weekly progress meetings onsite with four week look a-head schedules to be furnished to the Engineer and College.

9. Vendor and/or its subcontractors are to be licensed as required by RI Department of Labor.

10. All contractors and subcontractors to sign in each employee at the CCRI Security Office located on the lower level at the start of each shift.

11. A full-time superintendent is required for the extent of construction. Selected vendor to submit resume of proposed Super and/or on-site personnel for College team to review and approve. College reserves the right to reject proposed Superintendent.

12. A full list of subcontractors to be provided as part of the submittal package at the time of tentative award.

13. No substitution will be considered prior to receipt of bid unless written request for approval has been received by the Division of Purchases no later than 10 days before the closing of the Bid. Such requests shall include the name of the material or equipment for which it is to be substituted and a complete description of the proposed substitution including drawings, performance and test data and other information necessary for any evaluation. A statement setting forth changes in other materials, equipment, or other portions of the work, including changes in work of other contracts that incorporation of the proposed substitution would require, shall be included. The burden of proof of the merit of the proposed substitution is upon the proposer. The State of Rhode Island's decision of approval or disapproval of the proposed substitution shall be final. If the State approves a proposed substitution prior to receipt of bids, such approval will be set forth in an Addendum. Bidders shall not rely upon approvals made in any other manner. No substitutions will be considered after the Contract Award except as provided for in the contract documents.

14. Contractors are not permitted to display a project sign anywhere on the campus grounds.

15. Contractor to provide all conex boxes for storing of their equipment of tools. The College is not responsible for lost or stolen tools/equipment or materials. Placement & Quantity of Conex Boxes shall be coordinated with and approved by the College.

1.02 RELATED DOCUMENTS

A. Drawings and general provisions of the Contract, including General and Supplementary Conditions and other Division 1 Specification Sections, apply to this Section.

1.03 FUTURE WORK

A. FUTURE CONTRACT: The Owner reserves the right to award contracts for additional work to be performed at the site during construction and following the Substantial Completion. Completion of that future work depends on the progress of, and the successful and timely completion of, the preparatory and related Work of this Contract.

1.04 CONTRACTOR USE OF SITE AND PREMISES

A. GENERAL: The Owner intends to fully occupy the facility during the period of construction.

B. CONSTRUCTION OPERATIONS: Coordinate with Owner to insure delivery and completion per the schedule. Include all costs of this coordination, including all premium time wages that may be required to meet these requirements, in the Base bid. Fulltime maintenance and security personnel are on staff at CCRI during night and weekend hours. The College is not responsible for stolen materials, tools, equipment, etc.

C. Provide access to and from site as required by law and by Owner:

1. Emergency Building Exits During Construction: Keep all exits required by code open during construction period; provide temporary exit signs if routes are temporarily altered during 3rd shift only. Include and maintain temporary fire extinguishers within the limit of construction.

2. Do not obstruct roadways, sidewalks, or other public ways without permission from the Owner.

3. Contractor to provide temporary signage to identify the work area and emergency egress points.

D. TIME RESTRICTIONS

1. No weekend work will be permitted.

2. All Work is to be performed during first shift.

3. Coordinate work with college staff to avoid disruptions of college activities. Coordinate and adjust workflow weekly and by special request.

E. UTILITY OUTAGES AND SHUTDOWN

1. Do not disrupt or shut down life safety systems, including but not limited to fire alarm system, without 7 days notice to the Owner and authorities having jurisdiction.

2. Prevent accidental disruption of utility services to other facilities. Any and all shutdowns to occur during third shift.

3. Do not disrupt building control wiring or fire alarm wiring passing through the area of work.

F. Protect all existing surfaces from damages. Any damages to the existing surfaces requiring replacement and or repair shall be at Contractor's expense.

G. Construction areas shall be kept in a clean, safe, and acceptable condition on a daily basis at all times and at completion of the Project.

H. Contractor is responsible for removing all debris off the site daily, including all costs associated with waste containers and proper disposal of waste.

I. Vendor is to have all equipment necessary to perform the installation and service including, tools, staging, lift truck, etc. No CCRI equipment or tools will be available.

J. A Conex box is allowed for storage on site. Location to be determined.

PART 2 PRODUCTS (Not Applicable)

PART 3 EXECUTIONS (Not Applicable)

END OF SECTION 01 11 00

235 Promenade Street, The Foundry Office Complex, Suite 535, Providence, RI 02908 T 401.383.6530 F 401.383.5480

HVAC ROOF ENCLOSURE REPAIRS
CCRI, Knight Campus
Warwick, Rhode Island 02886

SECTION 01 29 00
PAYMENT PROCEDURES

PART 1 GENERAL

1.01 SECTION INCLUDES

A. Schedule of Values.

B. Change procedures.

C. Procedures for preparation and submittal of Applications For Payment.

D. Defect Assessment.

E. Sales Tax Exemption.

F. Warranty Inspection Retainage.

1.02 RELATED SECTIONS

A. Document 00 72 00 - General Conditions: Progress Payments and Final Payment.

B. Section 01 33 00 – Submittal Procedures.

C. Section 01 78 00 – Closeout Procedures and Submittals.

1.03 SCHEDULE OF VALUES

A. Submit typed schedule on AIA Form G703 - Application and Certificate for Payment Continuation Sheet. Contractor's standard form or electronic media printout will be considered.

B. Submit Schedule of Values in duplicate within 15 days after date of receipt of a Purchase Order from the State Division of Purchases.

C. FORMAT: Utilize the Table of Contents of this Project Manual. Identify each line item with number and title of the major specification Section. Identify site mobilization, bonds and insurance and General Conditions.

D. Include in each line item, the amount of Allowances specified in this Section. For Unit Cost Allowances, identify quantities taken from Contract Documents multiplied by the unit cost to achieve the total for the item.

E. Include within each line item, a directly proportional amount of Contractor's overhead and profit.

F. Revise schedule to list approved Change Orders, with each Application For Payment.

1.04 CHANGE PROCEDURES

A. The Engineer will advise of minor changes in the Work not involving an adjustment to Contract Sum/Price or Contract Time by issuing supplemental instructions on AIA Form G710 Engineer's Supplemental Instructions or other similar form.

B. The Engineer may issue a Proposal Request which includes a detailed description of a proposed change with supplementary or revised Drawings and specifications, a change in Contract Time for executing the change. Contractor will prepare and submit an estimate within 7 days.

C. The Contractor may propose a change by submitting request for change to the Engineer, describing the proposed change and its full effect on the Work. Include a statement describing the reason for the change, and the effect on the Contract Sum/Price and Contract Time with full documentation and a statement describing the effect on Work by separate or other contractors. Document any requested substitutions in accordance with Section 01 60 00.

D. STIPULATED SUM/PRICE CHANGE ORDER: Based on Proposal Request and Contractor's fixed or maximum price quotation or Contractor's request for a Change Order as approved by Engineer.

E. UNIT PRICE CHANGE ORDER: For pre-determined unit prices and quantities, the Change Order will be executed on a fixed unit price basis. For unit costs or quantities of units of work which are not pre-determined, execute Work under a Construction Change Authorization. Changes in Contract Sum/Price or Contract Time will be computed as specified for Time and Material Change Order.

F. TIME AND MATERIAL CHANGE ORDER: Submit itemized account and supporting data after completion of change, within time limits indicated in the Conditions of the Contract. Engineer will determine the change allowable in Contract Sum/Price and Contract Time as provided in the Contract Documents.

G. CONSTRCTION CHANGE MARK-UP: See AIA Documents.

H. CONSTRUCTION CHANGE AUTHORIZATION: Engineer may issue a directive, on AIA Form G713 Construction Change Authorization or similar form, signed by the Owner, instructing the Contractor to proceed with a change in the Work, for subsequent inclusion in a Change Order. Document will describe changes in the Work, and designate method of determining any change in Contract Sum/Price or Contract Time. Promptly execute the change.

I. Maintain detailed records of work done on Time and Material basis. Provide full information required for evaluation of proposed changes, and to substantiate costs for changes in the Work.

J. CHANGE ORDER FORMS: AIA G701 Change Order.

K. EXECUTION OF CHANGE ORDERS: Engineer will issue Change Orders for signatures of parties as provided in the Conditions of the Contract.

L. CORRELATION OF CONTRACTOR SUBMITTALS

1. Promptly revise the Schedule of Values and the Application for Payment forms to record each authorized Change Order as a separate line item and adjust the Contract Sum.

2. Promptly revise Progress Schedules to reflect any change in Contract Time. Revise sub-schedules to adjust times for any other items of Work affected by the change and resubmit.

3. Promptly enter changes in the Project Record Documents.

1.05 ADMINISTRATIVE SUBMITTALS

A. APPLICATION FOR PAYMENT: In accordance with the General Conditions and as specified herein.

B. FINAL APPLICATION FOR PAYMENT: As specified herein.

1.06 SUBMITTAL PROCEDURES

A. Submit three copies of each Application for Payment.

B. Submit an updated construction schedule with each Application for Payment.

C. PAYMENT PERIOD: Submit at intervals stipulated in the Agreement.

D. Submit under transmittal letter specified in Section 01 33 00.

E. Submit lien waivers.

1.06 FORMAT

A. AIA G702 - Application and Certificate for Payment, including continuation sheets when required.

B. For each item, provide a column for listing: Item Number; Description of Work; Scheduled Value, Previous Applications: Work in Place and Stored Materials under this Application: Authorized Change Orders; Total Completed and Stored to Date of Application; Percentage of Completion; Balance to Finish; and Retainage.

C. Reference the General Conditions.

1.07 SUBSTANTIATING DATA

A. When Engineer requires substantiating information, submit data justifying dollar amounts in question.

B. Provide one copy of data with cover letter for each copy of submittal. Show Application number and date, and line item by number and description.

1.08 PREPARATION OF APPLICATIONS

A. Present required information in typewritten form or on electronic media printout.

B. Execute certification by signature of authorized officer.

C. Use data from approved Schedule of Values. Provide dollar value in each column for each line item for portion of work performed and for stored Products.

D. List each authorized Change Order as an extension on continuation sheet, listing Change Order number and dollar amount as for an original item of Work.

E. Prepare Application for Final Payment as specified in Section 01 78 00.

1.09 PAYMENT

A. GENERAL: Progress payment requests shall be submitted monthly as specified in the General Conditions.

B. Payment for Lump Sum Work covers all Work necessary to furnish, install and/or complete the Work of the Contract.

C. Payment for unit price items covers all Work necessary to furnish, install and/or complete the item.

D. Payment for equipment, materials and labor for items not included on the Bid shall be considered incidental and no separate payment will be made.

1.10 DEFECT ASSESSMENT

A. Replace the Work or portions of the Work not conforming to the specified requirements.

B. If, in the opinion of the Engineer, it is not practical to remove and replace the Work, the Engineer will direct an appropriate remedy or adjust payment.

1. The defective work may remain but the unit sum will be adjusted to a new sum at the discretion of the Engineer.

2. The defective Work will be partially repaired to the instructions of the Engineer and the unit sum will be adjusted to a new some sum at the discretion of the Engineer.

3. The authority of the Engineer to assess the defect and identify a payment adjustment is final.

C. Payment will not be made for following:

1. Loading, hauling, and disposing of rejected products.

2. Quantities of material wasted or disposed of in manner not acceptable.

3. Products determined as unacceptable before or after placement.

4. Material not completely unloaded from transporting vehicle.

5. Products remaining on hand after completion of the Work.

6. Material remaining on hand after completion of Work.

1.11 PARTIAL PAYMENT FOR STORED MATERIALS AND EQUIPMENT

A. FINAL PAYMENT: Will be made only for materials incorporated into the Work in the Contract; no partial payments shall be made for equipment or materials delivered to the site but not used.

1.12 FINAL APPLICATION FOR PAYMENT

A. Reference the General Conditions, and as may otherwise be required in the Contract Documents.

B. Prior to submitting final application, make acceptable delivery of required documents.

1.13 SALES TAX EXEMPTION

A. Owner is exempt for sales tax on products permanently incorporated in the Work of the Project.

1. Obtain Sales Tax Exemption Certificate number from Owner.

2. Place Exemption Certificate number on invoice for materials permanently incorporated in the Work of the Project.

3. Furnish copies of invoices to Owner.

4. Upon completion of Work, file a notarized statement with Owner that all purchases made under exemption certificate were entitled to be exempt.

5. Pay legally assessed penalties for improper use of Exemption Certificate number.

C. Prior to submitting final application, make acceptable delivery of required documents.

PART 2 PRODUCTS (Not Applicable)

PART 3 EXECUTION (Not Applicable)

END OF SECTION 01 29 00

235 Promenade Street, The Foundry Office Complex, Suite 535, Providence, RI 02908 T 401.383.6530 F 401.383.5480

HVAC ROOF ENCLOSURE REPAIRS
CCRI, Knight Campus
Warwick, Rhode Island 02886

SECTION 01 30 00
ADMINISTRATIVE PROCEDURES

PART 1 GENERAL

1.01 SECTION INCLUDES

A. Site Administration.

B. Coordination and project conditions.

C. Pre-construction meeting.

D. Site mobilization meeting.

E. Progress meetings.

F. Pre-installation meetings.

1.02 SITE ADMINISTRATION

A. Maintain a Daily Attendance Log to include the names of all project employees and guests to the site. The log sheets must clearly indicate the Project Name, and the name of the General Contractor. Each line in the log should allow for the name of that employee, the employee's job title (use terminology used by prevailing wage job title), and the name of that employee's employer. Each guest signing the log should indicate a brief description of the reason for the visit and the guest's employer or organization.

1.03 COORDINATION AND PROJECT CONDITIONS

A. Coordinate the scheduling, submittals and the Work of the various Sections of the Project Manual to ensure an efficient and orderly sequence of the installation of interdependent construction elements.

B. Coordinate the scheduling, submittals and the Work of the various Sections of the Project Manual to ensure an efficient and orderly sequence of the installation of interdependent construction elements.

C. Coordinate the space requirements, supports and installation of the electrical Work. Utilize spaces efficiently to maximize accessibility for other installations, maintenance or repairs.

D. Coordinate the completion and clean up of the Work of the separate Sections in preparation for Substantial Completion.

1.04 PRE-CONSTRUCTION MEETING

A. The Contractor will schedule a meeting after a Purchase Order is issued to the Contractor by the CCRI Department of Purchasing.

B. ATTENDANCE REQUIRED: Owner, Engineer and Contractor.

C. AGENDA:

A. Distribution of the Contract Documents.

B. Submission of a list of Subcontractors, a list of products, Schedule of Values and a Progress Schedule.

C. Designation of personnel representing the parties in the Contract, and the Engineer.

D. The procedures and processing of field decisions, submittals, substitutions, Applications for Payment, Proposal Requests, Change Orders and Contract Closeout procedures.

E. Scheduling.

F. Contractor shall record the minutes and distribute copies within two days after the meeting to the participants, with two copies to the Engineer, the Owner the participants and those affected by the decisions made.

1.05 SITE MOBILIZATION MEETING

The Contractor will schedule a meeting at the Project site prior to the Contractor's occupancy.

ATTENDANCE REQUIRED: Owner, Engineer, Special Consultants, Contractor, Contractor's Superintendent and major Subcontractors.

AGENDA

1. Use of premises by the Owner and Contractor.

2. Owner's requirements and occupancy.

3. Security and housekeeping procedures.

4. Schedules.

5. Application for Payment procedures.

6. Contractor shall record the minutes and distribute copies within two days after the meeting to the participants, with two copies to the Engineer, the Owner the participants and those affected by the decisions made.

1.06 PROGRESS MEETINGS

A. Contractor shall schedule and administer the meetings throughout the progress of the Work at weekly or no more than monthly intervals.

B. Make arrangements for the meetings, prepare the agenda with copies for the participants and preside at the meetings.

C. ATTENDANCE REQUIRED: Contractor's Superintendent, major Subcontractors and suppliers, Owner and Engineer as appropriate to the agenda topics at each meeting.

D. AGENDA

A. Review approval of minutes of previous meeting.

B. Review of Work progress since previous meeting.

C. Field observations, problems and decisions.

D. Problems that impede construction schedule.

E. Review of off-site fabrication, delivery schedules.

F. Maintenance of Progress Schedule.

G. Corrective measures and procedures to regain projected schedule.

H. Progress schedule during succeeding work period.

I. Maintenance of quality and Work standards.

J. Effect of proposed changes and substitutions on the Progress Schedule and coordination.

K. Coordination of schedules.

L. Other business.

M. Contractor shall record the minutes and distribute copies within two days after the meeting to the participants, with two copies to the Engineer, the Owner the participants and those affected by the decisions made.

1.07 PRE-INSTALLATION MEETINGS

A. When required in the individual specification Sections, convene a pre-installation meeting at the site prior to commencing the Work of the Section.

B. Make arrangements for the meetings, prepare the agenda with copies for the participants and preside at the meetings.

C. Require attendance of the parties directly affecting, or affected by, the Work of the specific Section.

D. Prepare an agenda and preside at the meeting.

1. Review the conditions of the installation, preparation and installation procedures.

2. Review coordination with the related work.

3. Contractor to provide a mock-up installation at one of the Dental stations for review prior to installing all supports and arms.

4. Contractor shall record the minutes and distribute copies within two days after the meeting to the participants, with two copies to the Engineer, the Owner the participants and those affected by the decisions made.

PART 2 PRODUCTS (Not Applicable)

PART 3 EXECUTIONS (Not Applicable)

END OF SECTION 01 30 00

235 Promenade Street, The Foundry Office Complex, Suite 535, Providence, RI 02908 T 401.383.6530 F 401.383.5480

HVAC ROOF ENCLOSURE REPAIRS
CCRI, Knight Campus
Warwick, Rhode Island 02886

SECTION 01 33 00
SUBMITTAL PROCEDURES

PART 1 GENERAL

1.01 SECTION INCLUDES

A. Submittal procedures.

B. Construction Progress Schedules.

C. Proposed Products List.

D. Product data and shop drawings.

E. Samples.

F. Design data.

G. Test Reports.

H. Certificates.

I. Manufacturer's instructions.

J. Manufacturer's field reports.

K. Engineer's action.

1.02 RELATED DOCUMENTS

A. Drawings, General Provisions of the Contract and Division 1 Specification Sections apply to work of this Section.

1.03 SUBMITTAL PROCEDURES

A. MASTER LIST SUBMITTAL

1. Submit a Master List of the required submittals with a proposed date for each item to be submitted.

2. Show the date the submittal was sent, days since submittal was sent, status of submittal, date submittal was received in return and any date associated with re-submittals.

3. Update Master List with each submission and response.

B. GENERAL: Refer to the General Conditions for basic procedures for submittal handling.

C. SUBMITTAL PREPARATION: Mark each submittal with a permanent label for identification. Provide the following information on the label for proper processing and recording of action taken.

1. Project name; Date.

2. Name and address of Owner, Contractor and Supplier.

3. Name of manufacturer; Number and title of appropriate Specification Section; Drawing number and detail references, as appropriate; Similar definite information as necessary.

4. Provide a space on the label for the Contractor's review and approval markings, and a space for the Engineer's "Action" marking.

D. SUBMITTAL TRANSMITTAL: Package each submittal appropriately for transmittal and handling. Transmit four (4) copies, plus the number of copies the Contractor wants returned to him after review of each submittal by the Engineer, and to other destinations as required, by use of a transmittal form. Prepare a separate transmittal form for each division of work and identify each submittal by Specification Section number on the transmittal form. Submittals received from sources other than the Contractor will be returned to the sender "without action".

1. Submittals will be accepted via E-mail transmission.

2. Record relevant information and requests for data on the transmittal form. On the transmittal form, or on a separate sheet attached to the form, record deviations from the requirements of the Contract Documents, if any, including minor variations and limitations.

3. **No submittals will be accepted by the Engineer if transmitted via FAX machine.**

4. Include the Contractor's signed certification stating that information submitted complies with requirements of the Contract Documents.

5. Sequentially number the transmittal forms; resubmittals to have original number with an alphabetic suffix.

E. CONTRACTOR'S REVIEW: Stamp of approval indicates to Owner and Engineer that all quantities, dimensions, field construction criteria, materials, catalog numbers and similar data have been determined and verified, and that each submittal has been reviewed or coordinated with requirements of Work and Contract Documents. **Failure to provide the Contractor's Review Stamp shall be grounds for the Submittal to be returned to the Contractor with no action taken.**

F. No portion of Work requiring shop drawings shall be started or any materials be fabricated, delivered to site or installed prior to approval of such items. Fabrication performed, materials purchased or on-site construction accomplished which does not conform to approved shop drawings and data shall be at Contractor's risk. Owner will not be liable for any expense or delay due to corrections or remedies required to accomplish conformity.

G. Project work, materials, fabrications and installation shall conform to approved shop drawings.

H. COORDINATION: Coordinate the preparation and processing of submittals with the performance of the work. Coordinate each separate submittal with other submittals and related activities such as testing, purchasing, fabrication, delivery and similar activities that require sequential activity.

1. Coordinate the submittal of different units of interrelated work so that one submittal will not be delayed by the Engineer's need to review a related submittal. The Engineer reserves the right to withhold action on any submittal requiring coordination with other submittals until related submittals are forthcoming.

I. SCHEDULING: In each appropriate administrative submittal, such as the Progress Schedule, show the principal work-related submittals and time requirements for coordination of submittal activity with related work.

J. COORDINATION OF SUBMITTAL TIMES: Prepare and transmit each submittal to the Engineer sufficiently in advance of the scheduled performance of related work and other applicable activities. Transmit different kinds of submittals for the same unit of work so that processing will not be delayed by the Engineer's need to review submittals concurrently for coordination.

K. REVIEW TIME: Allow sufficient time so that the installation will not be delayed as a result of the time required to properly process submittals, including time for resubmittal, if necessary. Advise the Engineer on each submittal, as to whether processing time is critical to the progress of the work, and if the work would be expedited if processing time could be shortened.

1. Allow Five (5) calendar days for the Engineer's initial processing of each submittal, excluding delivery tome from and to the Contractor. Allow a longer time period where processing must be delayed for coordination with subsequent submittals. The Engineer will advise the Contractor promptly when it is determined that a submittal being processed must be delayed for coordination.

2. Allow Two (2) calendar days for reprocessing each submittal.

3. No extension of time will be authorized because of the Contractor's failure to transmit submittals to the Engineer sufficiently in advance of the work.

L. MISCELLANEOUS SUBMITTALS

1. INSPECTION AND TEST REPORTS: Classify each inspection and test report as being either "shop drawings" or "product data" depending on whether the report is specially prepared for the project, or a standard publication of workmanship control testing at the point of production. Process inspection and test reports accordingly.

2. SURVEY DATA: Provide copies of all survey data collected for property surveys, field measurements, and quantitative records of actual work, damage surveys and similar data required by the individual Sections of these specifications. None of the specified copies will be returned.

3. STANDARDS: Where submittal of a copy of standards is indicated, and except where copies of standards are specified as an integral part of a "Product Data" submittal, submit a single copy of standards for the Engineer's use. Where workmanship, whether at the project site or elsewhere, is governed by a standard, furnish additional copies of the standard to installers, Owner's field representative and others involved in the performance of the Work.

4. CLOSEOUT SUBMITTALS: Refer to section "Project Closeout" and to individual Sections of these specifications for specific submittal requirements of project closeout information, materials, tools and similar items.

5. RECORD DOCUMENTS: Furnish set of original documents as maintained on the project site.

6. GENERAL DISTRIBUTION: Provide additional distribution of submittals to Subcontractors, suppliers, fabricators, installers, governing authorities and others as necessary for the proper performance of the Work. Include such additional copies of submittals in the transmittal to the Engineer where the submittals are required to receive "Action" marking before final distribution. Record distributions on transmittal forms.

1.04 CONSTRUCTION PROGRESS SCHEDULES

A. Submit preliminary outline Schedules within 5 days after the receipt of a Purchase Order from CCRI Department of Purchasing for coordination with Owner's requirements. After being reviewed, submit detailed Schedules within 2 days modified to accommodate the revisions recommended by the Engineer.

B. Show a complete sequence of construction by activity, identifying the Work of separate stages and other logically grouped activities. Indicate the early and late start, the early and late finish, float dates and duration. All work shall take place after school hours.

1.05 PRODUCT DATA AND SHOP DRAWINGS

A. Submit for review for the limited purpose of checking for conformance with the information given and the design concept expressed in the Contract Documents.

B. Submit the number of copies which the Contractor requires plus two copies the Engineer will retain. For shop drawings, submit in the form of 4 opaque reproductions.

C. Should contractor choose to e-mail submittals, contractor will be responsible for copies to be filed for the owner upon completion of the project.

D. Mark each copy to identify the applicable products, models, options and other data. Supplement the manufacturer's standard data to provide information specific to this Project.

E. Indicate the product utility and electrical characteristics, utility connection requirements and the location of utility outlets for service for functional equipment and appliances.

F. After being reviewed, distribute in accordance with the requirements of this Section and provide copies for Record Documents described in Section 01 78 39.

1.06 SAMPLES

A. Submit for review for the limited purpose of checking for conformance with the information given and the design concept expressed in the Contract Documents.

B. Submit samples to illustrate the functional and aesthetic characteristics of the product, with integral parts and attachment devices. Coordinate the sample submittals for interfacing Work.

C. Include identification on each sample with full Project information.

D. Submit 2 samples of specified materials specified within the Construction Documents, in the individual specification Sections or as requested by the Engineer. Engineer will retain one sample.

E. Reviewed samples which may be used in the Work are indicated in the individual specification Sections.

F. Samples will not be used for testing purposes unless they are specifically stated to be in the individual specification Sections.

1.07 DESIGN DATA

A. Submit for the Engineer's knowledge as Contract Administrator or for the Owner.

B. Submit for information for the limited purpose of assessing conformance with the information given and the design concept expressed in the Contract Documents.

1.08 TEST REPORTS

A. Submit simultaneously to the Engineer and the Owner.

B. Submit for review for the limited purpose of assessing conformance with the information given and the design concept expressed in the Contract Documents.

1.09 CERTIFICATES

A. When specified in the individual specification Sections, submit certification by the manufacturer, installation/applicator subcontractor, or Contractor to the Engineer, in the quantities specified for the Product Data.

B. Indicate that the material or product conforms to or exceeds the specified requirements. Submit supporting reference data, affidavits and certifications as appropriate.

C. Certificates may be recent or previous test results on the material or product, but must be acceptable to the Engineer.

1.10 MANUFACTURER'S INSTRUCTIONS

A. When specified in the individual specification Sections, submit printed instructions for delivery, storage, assembly, installation, start-up, adjusting and finishing to the Engineer for delivery to the Owner in the quantities specified for the Product Data.

B. Indicate the special procedures, the perimeter condition requiring special attention and the special environmental criteria required for application or installation.

1.11 MANUFACTURER'S FIELD REPORTS

A. Submit reports for the Engineer's benefit as Contract Administrator or for the Owner.

B. Submit the report in duplicate within 30 days of observation to the Engineer for information.

C. Submit for review for the limited purpose of assessing conformance with the information given and the design concept expressed in the Contract Documents.

1.12 ENGINEER’S ACTION

A. GENERAL: Except for submittals for the record and similar purposes, where action and return on submittals is required or requested, the Engineer will review each submittal, mark with appropriate "Action", and where possible return within Five (5) calendar days of receipt. Where the submittal must be held for coordination the Engineer will so advise the Contractor without delay.

B. ACTION STAMP: The Engineer will stamp, sign and date each submittal copy to be returned to Contractor and indicate disposition of each submittal in accordance with the following grading requirements:

1. “Approved” or “Reviewed” indicates that Engineer notes not exception to the intent of the Contract Documents. Fabrication of item may commence.

2. "Not Approved" or “Rejected” indicates nonconformance with the Contract requirements. The Engineer will state the reasons for rejections.

3. “Revise and Resubmit” indicates nonconformance with the Contract requirements or that too many corrections would be necessary. No fabrication may commence.

4. “Furnish as Corrected” indicates that the Engineer notes changes needed to the intent of the Contract Documents. The Contractor is responsible for completing all noted changes.

C. ENGINEER’S REVIEW

1. Engineer’s review of submitted drawings and data will cover only general conformity to drawings and specification, external connections and dimensions which affect layout.

2. Engineer’s review does not indicate thorough review of all dimensions.

3. **Engineer's review of submittals does not relieve Contractor's responsibility for errors, omissions or deviations, field verification of all dimensions nor responsibility for compliance with Contract Documents.**

1.13 RESUBMISSION REQUIREMENTS

A. Make any corrections or changes in the submittals required by the Engineer and resubmit until they are denoted "Approved", "Reviewed", "Approved as Noted" or "Furnish as Corrected" by the Engineer. Resubmission requirements specified in individual specifications Sections, which differ from these requirements, will take precedence over these requirements.

B. SHOP DRAWINGS AND PRODUCT DATA

1. Revise initial drawings or data, and resubmit as specified for the initial submittal.

2. Indicate any changes which have been made other than those requested by the Engineer.

C. SAMPLES: Submit new samples as required for initial submittal.

1.14 DISTRIBUTION

A. Distribute reproductions of shop drawings and copies of product data which carry the Engineer's stamp denoting "Approved", "Reviewed", "Approved as Noted" or "Furnish as Corrected" to:

1. Job site file; Record documents file.

2. Subcontractors; Supplier or fabricator.

B. Distribute samples which carry the Engineer's stamp denoting "Approved", "Reviewed", "Approved as Noted" or "Furnish as Corrected" as directed by the Engineer.

PART 2 PRODUCTS (Not Applicable)

PART 3 EXECUTION (Not Applicable)

END OF SECTION 01 33 00

235 Promenade Street, The Foundry Office Complex, Suite 535, Providence, RI 02908 T 401.383.6530 F 401.383.5480

HVAC ROOF ENCLOSURE REPAIRS
CCRI, Knight Campus
Warwick, Rhode Island 02886

SECTION 01 45 00
QUALITY CONTROL

PART 1 GENERAL

1.01 SECTION INCLUDES

A. Quality assurance and control of installation.

B. Verification of Credentials and Licenses

C. Tolerances.

D. References.

1.02 RELATED SECTIONS

A. Section 01 33 00 – Submittal Procedures: Submission of Manufacturers' Instructions and Certificates.

B. Section 01 60 00 – Product Requirements: Requirements for material and product quality.

1.03 QUALITY ASSURANCE/CONTROL OF INSTALLATION

A. Monitor quality control over suppliers, manufacturers, Products, services, site conditions and workmanship, to produce Work of specified quality.

B. Comply fully with manufacturers' instructions, including each step-in sequence.

C. Should manufacturers' instructions conflict with Contract Documents, request clarification from Engineer before proceeding.

D. Comply with specified standards as a minimum quality for the Work except when more stringent tolerances, codes or specified requirements indicate higher standards or more precise workmanship.

E. Perform work by persons qualified to produce workmanship of specified quality.

F. Secure products in place with positive anchorage devices designed and sized to withstand stresses, vibration, physical distortion or disfigurement.

1.04 VERIFICATION OF CREDENTIALS AND LICENSES

A. The Owner has implemented a project management oversight process and is applying it to current construction projects at CCRI.

B. An element of this oversight process is the verification that persons employed on the Project site have appropriate and current credentials and licenses in their possession, at the Project site, for the work they are performing.

C. Those persons without appropriate and current credentials and licenses will be subject to dismissal from the Project site.

1.05 TOLERANCES

A. Monitor the fabrication and installation tolerance control of products to produce acceptable Work. Do not permit tolerances to accumulate.

B. Comply with manufacturers' tolerances. When the manufacturers' tolerances conflict with the Contract Documents, request clarification from the Engineer before proceeding.

C. Adjust products to appropriate dimensions; position before securing products in place.

1.06 REFERENCES

A. For products or workmanship specified by association, trade or other consensus standards, comply with requirements of the standard, except when more rigid requirements are specified or are required by applicable Codes.

B. Conform to reference standard by date of issue current on date of Contract Documents, except where a specific date is established by Code.

C. Obtain copies of standards when required by Contract Documents.

D. Should specified reference standards conflict with Contract Documents, request clarification for Engineer before proceeding.

E. The contractual relationship of the parties to the Contract shall not be altered from the Contract Documents by mention or inference otherwise in any reference document.

PART 2 PRODUCTS (Not Applicable)

PART 3 EXECUTION (Not Applicable)

END OF SECTION 01 45 00

235 Promenade Street, The Foundry Office Complex, Suite 535, Providence, RI 02908 T 401.383.6530 F 401.383.5480

HVAC ROOF ENCLOSURE REPAIRS
CCRI, Knight Campus
Warwick, Rhode Island 02886

SECTION 01 50 00
TEMPORARY FACILITIES AND CONTROLS

PART 1 GENERAL

1.01 SECTION INCLUDES

A. Temporary Utilities:

1. Temporary electricity
2. Temporary lighting for construction purposes.
3. Telephone service.

B. Construction Facilities:

1. Hoisting.
2. Parking/Traffic.
3. Progress cleaning and waste removal.
4. Traffic and Pedestrian regulation.

C. Temporary Controls:

1. Security.
2. Fire detection.
3. Noise control.
4. Pollution control

1.02 TEMPORARY ELECTRICITY

A. Generators will be required by the Contractor; electrical extension cords will not be permitted to run across the ground from the building.

B. Provide flexible power cords as required for portable construction tools and equipment. All flexible power cords shall be suspended with hangers to eliminate trip hazards.

C. Provide distribution equipment, wiring, and outlets to provide single-phase branch circuits for power. Provide 20-ampere duplex outlets, single-phase circuits for power tools.

1.03 TEMPORARY LIGHTING FOR CONSTRUCTION PURPOSES

A. If necessary, provide and maintain incandescent lighting for construction operations to achieve a minimum lighting level of 2 watt/sq ft (21 watt/sq m).

B. Provide branch wiring from power source to distribution boxes with lighting conductors, pigtails, and lamps as required.

C. Maintain lighting and provide routine repairs.

1.04 TELEPHONE SERVICE

A. Provide, maintain, and pay for cell phone service to the field supervisor at the time of project mobilization until final completion.

1.05 HOISTING

A. Contractor is responsible for all hoisting required to facilitate, serve, stock, clean, and complete the Work. Include all costs for Operating Engineers, fuel, delivery and removal, mobilization, staging, protection of grades and surfaces, and equipment.

1.06 PARKING/TRAFFIC

A. Workers must park where directed by the College. Areas damaged by traffic or parking use must be restored to original condition at project completion.

B. Use of designated existing on-site streets and driveways for construction traffic is permitted. Tracked vehicles are not allowed on unpaved areas.

C. Do not allow heavy vehicles or construction equipment in parking areas.

D. Do not allow vehicle parking on existing sidewalks. Contractor shall conduct a pre-mobilization photo survey of existing sidewalk conditions and submit to Owner and Engineer as a record for evaluating damaged areas after construction. Contractor is responsible for replacing sidewalks, roadway sections, and curbing to match that are damaged during construction.

E. Provide and maintain access to fire hydrants and control valves free of obstructions.

1.07 PROGRESS CLEANING AND WASTE REMOVAL

A. Maintain areas free of waste materials, debris and rubbish. Maintain site in a clean and orderly condition.

B. Collect and remove waste materials, debris, and rubbish from the site daily, as necessary to prevent an on-site accumulation of waste material, debris, and rubbish, and dispose off-site.

C. Open free-fall chutes are not permitted. Terminate closed chutes into appropriate containers with lids.

D. Lay-down areas will be as directed by CCRI.

E. All snow removal to provide access to enclosures, maintain detoured egress, and within work area, shall be by forces of the Contractor within the Base Bid.

1.08 TRAFFIC AND PEDESTRIAN REGULATION

A. Coordinate with CCRI to establish routes to be used for haul routes and site access.

B. Flag Persons: Provide trained and equipped flag persons to regulate the traffic when construction operations or traffic encroach on the public traffic lanes.

C. Lights: Use lights during the hours of low visibility to delineate the traffic lanes and to guide traffic.

D. Remove equipment and devices when no longer required. Repair damage caused by installation.

1.09 SECURITY

A. Security Program:

1. Protect the Work, and the existing premises from theft, vandalism, and unauthorized entry.

2. Initiate the program in coordination with the Owner's existing security system at mobilization.

3. Maintain the program throughout the construction period until Owner occupancy of each designated area.

4. Contractor is responsible for all security within the work area and of the constructed enclosures and fencing serving it.

B. Entry Control: Coordinate the access of the Owner's personnel to the area in coordination with the Owner's security forces.

1.10 FIRE DETECTION

A. Before beginning any construction operation that can potentially trigger the existing fire alarm detection system, notify the Owner.

B. Failure to so notify the Owner will subject the Contractor to a monetary fine for each occurrence, should the fire detection system be activated inadvertently by a construction activity.

C. Comply with State underwriting standards and insurer recommendations for Hot Work, sprinkler impairment, and site maintenance.

D. Fire Protection system wok must be coordinated with CCRI's warrantee vendor and those costs included in the Base Bid.

1.11 NOISE CONTROL

A. Provide methods, means, and facilities to minimize noise produced by the construction operations. Work only during agreed days and hours.

1.12 POLLUTION CONTROL

A. Provide methods, means, and facilities to prevent the contamination of soil, water, and the atmosphere from discharge of noxious, toxic substances, and pollutants produced by the construction operations

1.13 REMOVAL OF UTILITIES, FACILITIES, AND CONTROLS

A. Remove temporary utilities, equipment, facilities, and materials, prior to Substantial Completion.

B. Clean and repair the damage caused by installation or use of temporary work.

C. Restore the existing and new facilities used during construction to their original condition.

PART 2 PRODUCTS (Not Applicable)

PART 3 EXECUTION (Not Applicable)

END OF SECTION 01 50 00

235 Promenade Street, The Foundry Office Complex, Suite 535, Providence, RI 02908 T 401.383.6530 F 401.383.5480

HVAC ROOF ENCLOSURE REPAIRS
CCRI, Knight Campus
Warwick, Rhode Island 02886

SECTION 01 60 00
PRODUCT REQUIREMENTS

PART 1 GENERAL

1.01 SECTION INCLUDES

A. Products, materials and equipment.

B. Transportation and handling.

C. Storage and protection.

D. Product options.

E. Substitutions.

1.02 RELATED SECTIONS

A. Section 01 10 00 – Summary of Work: Pre-Bid substitution procedures.

B. Section 01 45 00 - Quality Control: Product quality monitoring.

1.03 MANUFACTURED AND FABRICATED PRODUCTS

A. Design, fabricate and assemble in accordance with the best engineering and shop practices.

B. Manufacture like parts of duplicate units to standard sizes and gages, to be interchangeable.

C. Two or more items of the same kind shall be identical, by the same manufacturer.

D. Products shall be suitable for service conditions.

E. Equipment capacities, sizes and dimensions shown or specified shall be adhered to unless variations are specifically reviewed by Engineer.

F. Do not use material or equipment for any purpose other than that for which it is designed or is specified.

1.04 MATERIAL AND EQUIPMENT INCORPORATED INTO THE WORK

A. Conform to applicable specifications and standards.

B. Comply with size, make, type and quality specified within these specifications and construction documents or as specifically reviewed by the Engineer.

1.05 MANUFACTURER'S INSTRUCTIONS

A. When the Contract Documents require that installation of Work shall comply with manufacturer's printed instructions, obtain and distribute copies of such instructions to parties involved in the installation, as specified in Section 01 33 00 – Submittal Procedures.

B. Maintain one set of complete instructions at the job site during installation and until completion.

C. Handle, install, connect, clean, condition and adjust products in strict accordance with such instructions and in conformity with specified requirements.

D. Should job conditions or specified requirements conflict with manufacturer's instructions, consult with Engineer for further instructions.

E. Do not proceed with Work without clear instructions.

F. Perform Work in accordance with manufacturer's instructions. Do not omit any preparatory step or installation procedure unless specifically modified or exempted by the Contract Documents.

1.06 CERTIFICATES OF CONFORMANCE AND MANUFACTURE

A. In addition to other requirements specified herein, the Contractor shall furnish to the Engineer, as specified in Section 01 33 00 - Submittals, notarized certificates of conformance and manufacture that all materials and/or equipment to be furnished under this Contract meet the specification requirements. When directed, each shipment of material shall be accompanied by the manufacturer's notarized certificates of conformance and manufacture. Unless otherwise specifically specified, all testing of materials shall be provided by the Contractor at no additional expense to the Owner.

B. Each manufacturer's certificate shall be endorsed or accompanied by the Contractor's certificate that the material certified by the manufacturer will be the material incorporated in the Work.

1.07 TRANSPORTATION AND HANDLING

A. Arrange deliveries of products in accordance with construction and CCRI school schedules, coordinate to avoid conflict with Work, conditions at the site, CCRI daily operations and also when two or more trades, contractors or suppliers are involved.

B. Transport all materials and equipment on legally approved conveyances as required or recommended by the respective manufacturer, supplier, and CCRI.

C. Deliver products in undamaged condition, in manufacturer's original containers or packaging with identifying labels intact and legible.

D. Receive and handle all materials and equipment, at the Project site, by conveyances or methods as recommended by the respective manufacturer or supplier to prevent damage to products.

E. Immediately on delivery, inspect shipments to assure compliance with requirements of Contract Documents and reviewed submittals, and that products are properly protected and undamaged.

F. Remove from the site any material or item of equipment damaged during the transportation or handling process, and immediately replace at no additional cost to the Owner.

1.08 STORAGE AND PROTECTION

A. Coordinate on site storage locations with CCRI staff.

B. Store products in accordance with the manufacturer's instructions, with seals and labels intact and legible.

C. Store products subject to damage by the elements in weathertight enclosures.

D. Maintain temperature and humidity within the ranges required by manufacturer's instructions.

E. Storage does not exist within the building. Maintain all storage areas in a clean and orderly condition at all times.

1.09 EXTERIOR STORAGE

A. No products shall be stored outside.

1.10 PROTECTION AFTER INSTALLATION

A. Provide substantial coverings as necessary to protect installed products from damage from traffic and subsequent construction operations. Remove when no longer needed.

1.11 PRODUCT OPTIONS

A. PRODUCTS SPECIFIED BY REFERENCE STANDARDS OR BY DESCRIPTION ONLY: Any product meeting those standards or description.

B. PRODUCTS SPECIFIED BY NAMING ONE OR MORE MANUFACTURERS: Products of manufacturers named and meeting specifications, no options or substitutions allowed.

C. PRODUCTS SPECIFIED BY NAMING ONE OR MORE MANUFACTURERS WITH A PROVISION FOR SUBSTITUTIONS: Submit a request for substitution for any manufacturer not named.

1.12 SUBSTITUTIONS

A. Instructions to Bidders specify time restrictions for submitting requests for Substitutions during the bidding period to requirements specified in this Section.

B. Thereafter, Substitutions may be considered when a product becomes unavailable through no fault of the Contractor.

C. Document each request with complete data substantiating compliance of proposed Substitution with Contract Documents.

D. A REQUEST CONSTITUTES A REPRESENTATION THAT THE CONTRACTOR:

1. Has investigated proposed product and determined that it meets or exceeds the quality level of the specified product.

2. Will provide the same warranty for the Substitution as for the specified product.

3. Will coordinate installation and make changes to other Work that may be required for the Work to be complete, with no additional cost to Owner.

4. Waives claims for additional costs or time extension that may subsequently become apparent.

5. Will reimburse Owner for review or redesign services associated with re-approval by authorities.

E. **Substitutions will not be considered when they are indicated or implied on shop drawing or product data submittals, without separate written request, or when acceptance will require revision to the Contract Documents.**

F. SUBSTITUTION SUBMITTAL PROCEDURE

1. Submit four copies of request for Substitution for consideration. Limit each request to one proposed Substitution.

2. Submit shop drawings, product data and certified test results attesting to the proposed product equivalence.

3. The Engineer will notify the Contractor, in writing, of decision to accept or reject request.

PART 2 PRODUCTS (Not Applicable)

PART 3 EXECUTION (Not Applicable)

END OF SECTION 01 60 00

235 Promenade Street, The Foundry Office Complex, Suite 535, Providence, RI 02908 T 401.383.6530 F 401.383.5480

HVAC ROOF ENCLOSURE REPAIRS
CCRI, Knight Campus
Warwick, Rhode Island 02886

SECTION 01 78 00
CLOSEOUT PROCEDURES AND SUBMITTALS

PART 1 GENERAL

1.01 SECTION INCLUDES

A. Closeout Procedures.

B. Requirements.

C. Substantial Completion.

D. Final Review.

E. Additional Reviews.

F. Submittals.

G. Final Adjustment of Accounts.

H. Final Application for Payment.

I. Final Cleaning.

J. Adjusting.

K. Operation and Maintenance Data.

L. Warranties.

M. Spare Parts and Maintenance Materials.

1.02 RELATED SECTIONS

A. Section 01 78 39 – Project Record Documents.

1.03 REQUIREMENTS

A. Comply with requirements stated in conditions of the Contract and in specifications for administrative procedures in closing out the Work.

1.04 SUBSTANTIAL COMPLETION

A. When Contractor considers the work is Substantially Complete, he/she shall submit to the Engineer:

1. A written notice that the Work or designated portion thereof, is Substantially Complete.

2. A list of items to be completed or corrected.

B. Within a reasonable time after receipt of such notice, Engineer will review the Work to determine the status of completion.

C. Should Engineer determine that the Work is not Substantially Complete:

1. Engineer will promptly notify the Contractor in writing, giving the reasons therefor.

2. Contractor shall remedy the deficiencies in the work and send out another written notice of substantial completion to the Engineer.

3. Engineer will again review the work.

D. When Engineer concurs that the Work is Substantially Complete, he will:

1. Prepare a Certificate of Substantial Completion, accompanied by Contractor's list of items to be completed or corrected, as verified and amended by the Engineer.

2. Submit the certificate to Owner, Contractor and manufacturer for their written acceptance of the responsibilities assigned to them in the certificate.

1.05 FINAL REVIEW

A. When Contractor considers the Work is complete, he shall submit written certification that:

1. Contract documents have been reviewed.

2. Work has been inspected for compliance with Contract Documents.

3. Work has been completed in accordance with Contract Documents.

4. Equipment and systems have been tested in the presence of the Owner's representative and are operational.

5. Work is completed and ready for final review.

B. Engineer will make final review to verify the status of completion with reasonable promptness after receipt of such certification.

C. Should Engineer consider that the Work is incomplete or defective:

1. Engineer will promptly notify the Contractor in writing, listing the incomplete or defective work.

2. Contractor shall take immediate steps to remedy the stated deficiencies and send out another written certification to Engineer that the work is complete.

3. Engineer will again review the Work.

4. Should Engineer consider that the Work is still incomplete or defective, all subsequent reviews shall be considered as Additional Reviews, subject to the provisions listed in 1.06 below.

D. When the Engineer finds that the Work is acceptable under the Contract Documents and that all Punch List items have been accomplished to his satisfaction, he shall request the Contractor to make closeout submittals.

1.06 FEES FOR ADDITIONAL REVIEWS

A. Should Engineer perform additional reviews due to failure of the Work to comply with the claims of status of completion made by the Contractor:

1. Owner will compensate Engineer for such additional services.

2. Owner will deduct the amount of such compensation from the final payment to the Contractor.

1.07 CONTRACTOR'S CLOSEOUT SUBMITTALS TO ENGINEER

A. OPERATING AND MAINTENANCE DATA: Submit documentation as described in 1.12 below.

B. WARRANTIES, GUARANTEES AND BONDS: Submit documentation as described in 1.13 below.

C. SPARE PARTS AND MAINTENANCE MATERIALS FOR OWNER: Submit documentation as described in 1.14 below.

D. Contractor's affidavit of payment of debts and claims.

E. Contractor’s affidavit of release of liens.

F. Consent of surety to final payment.

G. Certificate of insurance for products and completed operations.

H. PROJECT RECORD DRAWINGS: Submit documentation as described in Section 01720.

1.08 FINAL ADJUSTMENT OF ACCOUNTS

A. Submit a final statement of accounting to Engineer.

B. Statement shall reflect all adjustments to the Contract Sum:

1. The original Contract Sum.

2. Additions and deductions resulting from:

a. Previous Change Orders, allowances and unit prices.

b. Deductions for uncorrected work, liquidated damages and re-inspection payments.

c. Other adjustments.

3. Total Contract Sum, as adjusted.

4. Previous payments.

5. Sum remaining due.

C. Engineer will prepare a final change order reflecting approved adjustments to the Contract sum that were not previously made by Change Orders.

1.09 FINAL APPLICATION FOR PAYMENT

A. Contractor shall submit the final application for payment in accordance with procedures and requirements stated in Section 00 72 00 - General Conditions.

1.10 FINAL CLEANING

A. Execute final cleaning prior to final inspection.

B. Clean interior surfaces exposed to view; remove temporary labels, stains and foreign substances, vacuum resilient, carpeted and soft surfaces.

C. Clean equipment and fixtures to a sanitary condition.

D. Remove waste and surplus materials, rubbish and construction facilities from the site.

1.11 ADJUSTING

A. Adjust operating products and equipment to ensure smooth and unhindered operation.

1.12 OPERATION AND MAINTENANCE DATA

A. Submit one copy of completed volumes in final form 5 days prior to final inspection. This copy will be returned with Engineer comments. Revise content of documents as required prior to final submittal.

B. Submit Operation and Maintenance Data; Three (3) bound and three (3) electronic copies. Bound copies in 8-1/2 x 11 inch text pages, three D side-ring capacity expansion binders with durable plastic covers. Prepare binder covers and electronic copies with printed title "OPERATION AND MAINTENANCE INSTRUCTIONS", title of project and subject matter of binder when multiple binders are required.

C. Internally subdivide the binder contents with permanent page dividers, logically organized as described below; with tab titling clearly printed under reinforced laminated plastic tabs.

D. CONTENTS: Prepare a Table of Contents for each volume, with each Product or system description identified, type on 24 pound white paper.

E. PART 1: Directory, listing names, addresses and telephone numbers of Engineer, Contractor, Subcontractors and major equipment suppliers.

F. PART 2: Operation and maintenance instructions, arranged by system and subdivided by specification section. For each category, identify names, addresses and telephone numbers of Subcontractors and suppliers. Identify the following:

1. Significant design criteria.

2. List of equipment.

3. Parts list for each component.

4. Operating instructions.

5. Maintenance instructions for equipment and systems.

6. Maintenance instructions for all finishes, including recommended cleaning methods and materials and special precautions identifying detrimental agents.

G. PART 3: Project documents and certificates, including the following:

1. Shop drawings and product data.

2. Certificates.

3. Photocopies of warranties and bonds.

H. Submit final volumes revised, within ten days after final inspection.

1.13 WARRANTIES

A. Provide duplicate notarized copies.

1. In addition to the Warranty and Guarantee Requirements of the General Conditions, provide all other guarantees, bonds, affidavits and certifications required throughout the Project Manual.

B. Execute and assemble documents from Subcontractors, suppliers and manufacturers.

C. Provide Table of Contents and assemble in three D side-ring binder with durable plastic cover.

D. Submit prior to final Application for Payment.

E. For items of Work delayed beyond date of Substantial Completion, provide updated submittal within ten days after acceptance, listing date of acceptance as start of warranty period.

1.14 SPARE PARTS AND MAINTENANCE MATERIALS

A. Provide products, spare parts, maintenance and extra materials in quantities specified in individual specification Sections.

B. Deliver to Project site and place in location as directed by the Owner; obtain receipt prior to final payment.

PART 2 PRODUCTS (Not Applicable)

PART 3 EXECUTION (Not Applicable)

END OF SECTION 01 78 00

235 Promenade Street, The Foundry Office Complex, Suite 535, Providence, RI 02908 T 401.383.6530 F 401.383.5480

HVAC ROOF ENCLOSURE REPAIRS
CCRI, Knight Campus
Warwick, Rhode Island 02886

SECTION 01 78 39
PROJECT RECORD DOCUMENTS

PART 1 GENERAL

1.01 SECTION INCLUDES

1. Project Record Documents required for Contract closeout.

1.02 RELATED SECTIONS

A. Section 01 78 00 – Closeout Procedures and Submittals.

1.03 REQUIREMENTS

A. Maintain at the site for the Owner one record copy of:

1. Drawings
2. Specifications
3. Addenda
4. Change Orders and other modifications to the Contract
5. Engineer field orders or written instructions
6. Reviewed shop drawings, product data and samples

1.04 MAINTENANCE OF DOCUMENTS AND SAMPLES

A. Store documents and samples in Contractor's field office apart from documents used for construction.

B. Provide locked file cabinet for storage of documents and samples.

C. File documents and samples in accordance with CSI/CSC format.

D. Maintain documents in a clean, dry, legible condition and in good order. Do not use Record Documents for construction purposes.

E. Make documents and samples available at all times for inspection by Engineer and Owner.

1.05 MARKING DEVICES

A. Provide felt tip marking pens for recording information in the color code designated by Engineer.

1.06 RECORDING

A. Label each document "Project Record" in neat large printed letters.

B. Record information concurrently with construction progress.

C. Do not conceal any work until required information is recorded.

D. DRAWINGS: Principal dimensions, elevations and other data as required shall be recorded for all work, such as:

1. Deviations of any nature made during construction.

2. Location of underground utilities.

3. Field changes of dimension and detail.

4. Changes made by field order or by Change Order.

5. Details not on original Contract Drawings.

E. The marked-up prints shall be inspected weekly by the Engineer and shall be corrected immediately if found either inaccurate or incomplete.

F. SPECIFICATIONS AND ADDENDA: Legibly mark each Section to record:

1. Manufacturer, trade name, catalog number and supplier of each product and item of equipment actually installed.

2. Changes made by field order or by Change Order.

1.07 FINAL MEASUREMENTS

A. The Contractor shall provide qualified personnel and equipment for taking final measurements for quantities and Record Documents.

1.08 RECORD DRAWINGS

A. Submit documents to Engineer with claim for final Application for Payment for review & comment.

1. Submit two electronic copies and one print copy of all documents.

B. The Contractor shall correct, amplify and do all other work as may be required by the Engineer to complete the drawings in a manner satisfactory to the Engineer and at no additional cost to the Owner.

C. Upon approval, the Contractor shall provide a final Record Drawing set, two electronic copies and one print copy (electronic format (PDF, heavyweight bond). The bond and electronic version shall be submitted to the Owner by the Engineer.

1.09 SUBMITTAL

A. At Contract close-out, deliver Record Documents to Engineer for the Owner.

B. Accompany submittal with transmittal letter in duplicate, containing:

1. Date.

2. Project title and number.

3. Contractor's name and address.

4. Title and number of each record document.

5. Signature of Contractor or his authorized representative.

PART 2 PRODUCTS (Not Used)

PART 3 EXECUTION (Not Used)

END OF SECTION 01 78 39

SECTION 024119 - SELECTIVE STRUCTURE DEMOLITION

PART 1 - GENERAL

1.1 RELATED DOCUMENTS

A. Drawings and general provisions of the Contract, including General and Supplementary Conditions and other Division 01 Specification Sections, apply to this Section.

1.2 SUMMARY

A. This Section includes the following:

1. Demolition and removal of selected portions of building or structure.

B. Related Sections include the following:

1. Division 01 Section "Summary of Work" for use of premises and phasing and Owner-occupancy requirements.

1.3 DEFINITIONS

A. Remove: Detach items from existing construction and legally dispose of them off-site, unless indicated to be removed and salvaged or removed and reinstalled.

B. Remove and Reinstall: Detach items from existing construction, prepare them for reuse, and reinstall them where indicated.

C. Existing to Remain: Existing items of construction that are not to be removed and that are not otherwise indicated to be removed, removed and salvaged, or removed and reinstalled.

1.4 SUBMITTALS

A. Qualification Data: For demolition firm.

B. Schedule of Selective Demolition Activities: Indicate the following:

1. Detailed sequence of selective demolition and removal work, with starting and ending dates for each activity. Ensure Owner's building manager's and other tenants' on-site operations are uninterrupted.

2. Erection plan signed and sealed by a registered professional engineer, licensed in the State of Rhode Island. Erection plan shall indicate temporary supports, sequence of operation, crane placement, calculated lifting forces, capacity of crane including all lifting and connecting devices, spreaders, rigging, hooks and all other materials.

3. Interruption of utility services. Utility services may only be interrupted during third shift and shall be coordinated with the college representative.
4. Coordination for shutoff, capping, and continuation of utility services.
5. Use of elevator and stairs is not allowed for materials.
6. Coordination of Owner's continuing occupancy of portions of existing building and of Owner's partial occupancy of completed Work.
7. Means of protection for items to remain and items in path of waste removal from building. Existing roof shall be protected from damage.

C. Predemolition Photographs or Videotapes: Show existing conditions of adjoining construction and site improvements, including finish surfaces, that might be misconstrued as damage caused by selective demolition operations.

D. Landfill Records: Indicate receipt and acceptance of hazardous wastes by a landfill facility licensed to accept hazardous wastes.

1.5 QUALITY ASSURANCE

A. Demolition Firm Qualifications: An experienced firm that has specialized in demolition work similar in material and extent to that indicated for this Project.

B. Regulatory Requirements: Comply with governing EPA notification regulations before beginning selective demolition. Comply with hauling and disposal regulations of authorities having jurisdiction.

C. Standards: Comply with ANSI A10.6 and NFPA 241.

D. Predemolition Conference: Conduct a predemolition meeting at Project site. Review methods and procedures related to selective demolition including, but not limited to, the following:

1. Inspect and discuss condition of construction to be selectively demolished.
2. Review structural load limitations of existing structure.
3. Review and finalize selective demolition schedule and verify availability of materials, demolition personnel, equipment, and facilities needed to make progress and avoid delays.
4. Review requirements of work performed by other trades that rely on substrates exposed by selective demolition operations.
5. Review areas where existing construction is to remain and requires protection.

1.6 PROJECT CONDITIONS

A. Owner will occupy portions of building immediately adjacent to selective demolition area. Conduct selective demolition so Owner's operations will not be disrupted.

1. Comply with requirements specified in Division 01 Section "Summary of Work".

B. Notify Architect of discrepancies between existing conditions and Drawings before proceeding with selective demolition.

C. Hazardous Materials: It is unknown whether hazardous materials will be encountered in the Work.

1. If materials suspected of containing hazardous materials are encountered, do not disturb; immediately notify Architect and Owner. Owner will remove hazardous materials under a separate contract.

D. Storage or sale of removed items or materials on-site is not permitted.

E. Utility Service: Maintain existing utilities indicated to remain in service and protect them against damage during selective demolition operations.

1. Maintain fire-protection facilities in service during selective demolition operations.

1.7 WARRANTY

A. Existing Warranties: Remove, replace, patch, and repair materials and surfaces cut or damaged during selective demolition, by methods and with materials so as not to void existing warranties.

1. Any damage to existing roof shall be repaired by a certified installer of Sarnifil roofing systems.

PART 2 - PRODUCTS (Not Used)

PART 3 - EXECUTION

3.1 EXAMINATION

A. Verify that utilities have been disconnected and capped.

B. Survey existing conditions and correlate with requirements indicated to determine extent of selective demolition required.

C. Inventory and record the condition of items to be removed and reinstalled and items to be removed and salvaged.

D. When unanticipated mechanical, electrical, or structural elements that conflict with intended function or design are encountered, investigate and measure the nature and extent of conflict. Promptly submit a written report to Architect.

E. Engage a professional engineer to survey condition of building to determine whether removing any element might result in structural deficiency or unplanned collapse of any portion of structure or adjacent structures during selective demolition operations.

F. Survey of Existing Conditions: Record existing conditions by use of measured drawings, preconstruction photographs, preconstruction videotapes and templates.

1. Before selective demolition or removal of existing building elements that will be reproduced or duplicated in final Work, make permanent record of measurements, materials, and construction details required to make exact reproduction.

G. Perform surveys as the Work progresses to detect hazards resulting from demolition activities.

3.2 UTILITY SERVICES AND MECHANICAL/ELECTRICAL SYSTEMS

A. Existing Services/Systems: Maintain services/systems indicated to remain and protect them against damage during selective demolition operations.

1. Comply with requirements for existing services/systems interruptions specified in Division 01 Section "Summary of Work".

B. Service/System Requirements: Locate, identify, disconnect, and seal or cap off indicated utility services and mechanical/electrical systems serving areas to be selectively demolished.

1. Arrange to shut off indicated utilities with utility companies.
2. If services/systems are required to be removed, relocated, or abandoned, before proceeding with selective demolition provide temporary services/systems that bypass area of selective demolition and that maintain continuity of services/systems to other parts of building.
3. Cut off pipe or conduit in walls or partitions to be removed. Cap, valve, or plug and seal remaining portion of pipe or conduit after bypassing.
4. Existing RTU’s must remain operation at all times.

3.3 PREPARATION

A. Site Access and Temporary Controls: Conduct selective demolition and debris-removal operations to ensure minimum interference with roads, streets, walks, walkways, and other adjacent occupied and used facilities.

B. Temporary Facilities: Provide temporary barricades and other protection required to prevent injury to people and damage to adjacent buildings and facilities to remain when crane is loading or unloading roof materials.

1. Provide protection to ensure safe passage of people around selective demolition area and to and from occupied portions of building.
2. Provide temporary weather protection, during interval between selective demolition of existing construction on exterior surfaces and new construction, to prevent water leakage and damage to structure and interior areas.
3. Protect roofing and other existing finish work that are to remain or that are exposed during selective demolition operations.

C. Temporary Shoring: Provide and maintain shoring, bracing, and structural supports as required to preserve stability and prevent movement, settlement, or collapse of construction and finishes to remain, and to prevent unexpected or uncontrolled movement or collapse of construction being demolished.

1. Strengthen or add new supports when required during progress of selective demolition.

3.4 SELECTIVE DEMOLITION, GENERAL

A. General: Demolish and remove existing construction only to the extent required by new construction and as indicated. Use methods required to complete the Work within limitations of governing regulations and as follows:

1. Proceed with selective demolition systematically, from higher to lower level. Complete selective demolition operations above each floor or tier before disturbing supporting members on the next lower level.
2. Neatly cut openings and holes plumb, square, and true to dimensions required. Use cutting methods least likely to damage construction to remain or adjoining construction. Use hand tools or small power tools designed for sawing or grinding, not hammering and chopping, to minimize disturbance of adjacent surfaces. Temporarily cover openings to remain.
3. Cut or drill from the exposed or finished side into concealed surfaces to avoid marring existing finished surfaces.
4. Do not use cutting torches. Clear work area of flammable materials. At concealed spaces, such as duct and pipe interiors, verify condition and contents of hidden space before starting cutting operations. Maintain fire watch and portable fire-suppression devices during cutting operations.
5. Maintain adequate ventilation.
6. Remove decayed, vermin-infested, or otherwise dangerous or unsuitable materials and promptly dispose of off-site.
7. Remove structural framing members and lower to ground by method suitable to avoid free fall and to prevent ground impact or dust generation.
8. Locate selective demolition equipment and remove debris and materials so as not to impose excessive loads on supporting walls, floors, roofs or framing.
9. Dispose of demolished items and materials promptly.

B. Reuse of Building Elements: Do not demolish building elements beyond what is indicated on Drawings without Architect's approval.

C. Removed and Reinstalled Items:

1. Clean and repair items to functional condition adequate for intended reuse. Paint equipment to match new equipment.
2. Pack or crate items after cleaning and repairing. Identify contents of containers.
3. Protect items from damage during transport and storage.
4. Reinstall items in locations indicated. Comply with installation requirements for new materials and equipment. Provide connections, supports, and miscellaneous materials necessary to make item functional for use indicated.

D. Existing Items to Remain: Protect construction indicated to remain against damage and soiling during selective demolition. When permitted by Architect, items may be removed to a suitable, protected storage location during selective demolition and cleaned and reinstalled in their original locations after selective demolition operations are complete.

3.5 DISPOSAL OF DEMOLISHED MATERIALS

A. General: Except for items or materials indicated to be reused, salvaged, reinstalled, or otherwise indicated to remain Owner's property, remove demolished materials from Project site and legally dispose of them in an EPA-approved landfill.

1. Do not allow demolished materials to accumulate on-site.
2. Remove and transport debris in a manner that will prevent spillage on adjacent surfaces and areas.
3. Remove debris from elevated portions of building by chute, hoist, or other device that will convey debris to grade level in a controlled descent.

B. Burning: Do not burn demolished materials.

C. Disposal: Transport demolished materials off Owner's property and legally dispose of them.

3.6 CLEANING

A. Clean adjacent structures and improvements of dust, dirt, and debris caused by selective demolition operations. Return adjacent areas to condition existing before selective demolition operations began.

END OF SECTION 024119

SECTION 051200 - STRUCTURAL STEEL FRAMING

PART 1 - GENERAL

1.1 RELATED DOCUMENTS

A. Drawings and general provisions of the Contract, including General and Supplementary Conditions and Division 01 Specification Sections, apply to this Section.

1.2 SUMMARY

A. This Section includes the following:

1. Structural steel.
2. Architecturally exposed structural steel.
3. Prefabricated building columns.
4. Grout.

B. Related Sections include the following:

1. Division 01 Section "Quality Control" for administrative requirements.
2. Division 09 Section "High-Performance Coatings" for surface preparation and priming requirements.

1.3 DEFINITIONS

A. Structural Steel: Elements of structural-steel frame, as classified by AISC's "Code of Standard Practice for Steel Buildings and Bridges," that support design loads.

1.4 SUBMITTALS

A. Product Data: For each type of product indicated.

B. Shop Drawings: Show fabrication of structural-steel components.

1. Include details of cuts, connections, splices, camber, holes, and other pertinent data.
2. Include embedment drawings.
3. Indicate welds by standard AWS symbols, distinguishing between shop and field welds, and show size, length, and type of each weld.
4. Indicate type, size, and length of bolts, distinguishing between shop and field bolts. Identify pretensioned and slip-critical high-strength bolted connections.

C. Welding certificates.

D. Qualification Data: For Installer, fabricator, professional engineer and testing agency.

E. Mill Test Reports: Signed by manufacturers certifying that the following products comply with requirements:

1. Structural steel including chemical and physical properties.
2. Bolts, nuts, and washers including mechanical properties and chemical analysis.
3. Threaded rods, forged steel structural hardware, clevises, turnbuckles, rods and pins including mechanical properties, chemical analysis and rated strength.
4. Direct-tension indicators.
5. Tension-control, high-strength bolt-nut-washer assemblies.
6. Shear stud connectors.
7. Shop primers.
8. Nonshrink grout.

F. Source quality-control test reports.

1.5 QUALITY ASSURANCE

A. Installer Qualifications: A qualified installer who participates in the AISC Quality Certification Program and is designated an AISC-Certified Erector, Category CSE.

B. Fabricator Qualifications: A qualified fabricator who participates in the AISC Quality Certification Program and is designated an AISC-Certified Plant, Category Sbd.

C. Shop-Painting Applicators: Qualified according to AISC's Sophisticated Paint Endorsement P1 or SSPC-QP 3, "Standard Procedure for Evaluating Qualifications of Shop Painting Applicators."

D. Welding: Qualify procedures and personnel according to AWS D1.1, "Structural Welding Code--Steel."

E. Comply with applicable provisions of the following specifications and documents:

1. AISC's "Code of Standard Practice for Steel Buildings and Bridges."
2. AISC's "Seismic Provisions for Structural Steel Buildings" and "Supplement No. 2."
3. AISC's "Load and Resistance Factor Design Specification for Structural Steel Buildings."
4. AISC's "Specification for the Design of Steel Hollow Structural Sections."
5. RCSC's "Specification for Structural Joints Using ASTM A 325 or A 490 Bolts."

F. Preinstallation Conference: Conduct conference at Project site to comply with requirements in Division 01 Section "Project Management and Coordination."

1.6 DELIVERY, STORAGE, AND HANDLING

A. Store materials to permit easy access for inspection and identification. Keep steel members off ground and spaced by using pallets, dunnage, or other supports and spacers. Protect steel members and packaged materials from erosion and deterioration.

1. Store fasteners in a protected place. Clean and relubricate bolts and nuts that become dry or rusty before use.

2. Do not store materials on structure in a manner that might cause distortion, damage, or overload to members or supporting structures. Repair or replace damaged materials or structures as directed.
3. No storage within the building is available or allowed.

1.7 COORDINATION

A. Furnish anchorage items to be embedded in or attached to other construction without delaying the Work. Provide setting diagrams, sheet metal templates, instructions, and directions for installation.

PART 2 - PRODUCTS

2.1 STRUCTURAL-STEEL MATERIALS

A. Recycled Content of Steel Products: Provide products with an average recycled content of steel products so postconsumer recycled content plus one-half of preconsumer recycled content is not less than 25 percent.

B. W-Shapes: ASTM A 992/A 992M, Grade 50 (345).

C. Channels, Angles, M, S-Shapes: ASTM A 36/A 36M, ASTM A 572/A 572M, Grade 50 (345).

D. Plate and Bar: ASTM A 36/A 36M, ASTM A 572/A 572M, Grade 50 (345).

E. Cold-Formed Hollow Structural Sections: ASTM A 500, Grade B, structural tubing.

F. Steel Pipe: ASTM A 53/A 53M, Type E or S, Grade B.

1. Weight Class: Standard.
2. Finish: Black, except where indicated to be galvanized.

G. High-Strength Steel Castings: ASTM A 148/A 148M,Grade 80-50 (Grade 550-345), carbon or alloy steel.

H. Welding Electrodes: Comply with AWS requirements.

2.2 BOLTS, CONNECTORS, AND ANCHORS

A. High-Strength Bolts, Nuts, and Washers: ASTM A 325 (ASTM A 325M), Type 1, heavy hex steel structural bolts; ASTM A 563 (ASTM A 563M) heavy hex carbon-steel nuts; and ASTM F 436 (ASTM F 436M) hardened carbon-steel washers.

1. Finish: Plain.
2. Direct-Tension Indicators: ASTM F 959, Type 325 (ASTM F 959M, Type 8.8,) compressible-washer type.

a. Finish: Plain.

B. Tension-Control, High-Strength Bolt-Nut-Washer Assemblies: ASTM F 1852, Type 1, heavy hex head steel structural bolts with splined ends; ASTM A 563 (ASTM A 563M) heavy hex carbon-steel nuts; and ASTM F 436 (ASTM F 436M) hardened carbon-steel washers.

1. Finish: Plain.

C. Shear Connectors: ASTM A 108, Grades 1015 through 1020, headed-stud type, cold-finished carbon steel; AWS D1.1, Type B.

D. Unheaded Anchor Rods: ASTM F 1554, Grade 36.

1. Configuration: Straight.
2. Nuts: ASTM A 563 (ASTM A 563M) heavy hex carbon steel.
3. Plate Washers: ASTM A 36/A 36M carbon steel.
4. Washers: ASTM F 436 (ASTM F 436M) hardened carbon steel.
5. Finish: Hot-dip zinc coating, ASTM A 153/A 153M, Class C.

E. Headed Anchor Rods: ASTM F 1554, Grade 36., straight.

1. Nuts: ASTM A 563 (ASTM A 563M) heavy hex carbon steel.
2. Plate Washers: ASTM A 36/A 36M carbon steel.
3. Washers: ASTM F 436 (ASTM F 436M) hardened carbon steel.
4. Finish: Hot-dip zinc coating, ASTM A 153/A 153M, Class C.

F. Threaded Rods: ASTM A 193/A 193M, ASTM A 36/A 36M.

1. Nuts: ASTM A 563 (ASTM A 563M) heavy hex carbon steel.
2. Washers: ASTM F 436 (ASTM F 436M) hardened carbon steel.
3. Finish: Hot-dip zinc coating, ASTM A 153/A 153M, Class C.

G. Clevises and Turnbuckles: ASTM A 108, Grade 1035, cold-finished carbon steel, Hot-dip zinc coating, ASTM A 153/A 153M, Class C.

H. Eye Bolts and Nuts: ASTM A 108, Grade 1030, cold-finished carbon steel.

I. Sleeve Nuts: ASTM A 108, Grade 1018, cold-finished carbon steel.

2.3 PRIMER

A. Primer: Comply with Division 9 Section “High-Performance Coatings” for shop and field priming.

B. Galvanizing Repair Paint: ASTM A 780.

2.4 GROUT

A. Nonmetallic, Shrinkage-Resistant Grout: ASTM C 1107, factory-packaged, nonmetallic aggregate grout, noncorrosive, nonstaining, mixed with water to consistency suitable for application and a 30-minute working time.

2.5 FABRICATION

A. Structural Steel: Fabricate and assemble in shop to greatest extent possible. Fabricate according to AISC's "Code of Standard Practice for Steel Buildings and Bridges" and AISC's "Load and Resistance Factor Design Specification for Structural Steel Buildings."

1. Camber structural-steel members where indicated.
2. Identify high-strength structural steel according to ASTM A 6/ A 6M and maintain markings until structural steel has been erected.
3. Mark and match-mark materials for field assembly.
4. Complete structural-steel assemblies, including welding of units, before starting shop-priming operations.

B. Thermal Cutting: Perform thermal cutting by machine to greatest extent possible.

1. Plane thermally cut edges to be welded to comply with requirements in AWS D1.1.

C. Bolt Holes: Cut, drill, or punch standard bolt holes perpendicular to metal surfaces.

D. Finishing: Accurately finish ends of columns and other members transmitting bearing loads.

E. Shear Connectors: Prepare steel surfaces as recommended by manufacturer of shear connectors. Use automatic end welding of headed-stud shear connectors according to AWS D1.1 and manufacturer's written instructions.

F. Steel Wall-Opening Framing: Select true and straight members for fabricating steel wall-opening framing to be attached to structural steel. Straighten as required to provide uniform, square, and true members in completed wall framing.

G. Welded Door Frames: Build up welded door frames attached to structural steel. Weld exposed joints continuously and grind smooth. Plug-weld fixed steel bar stops to frames. Secure removable stops to frames with countersunk, cross-recessed head machine screws, uniformly spaced not more than 10 inches (250 mm) o.c., unless otherwise indicated.

H. Holes: Provide holes required for securing other work to structural steel and for passage of other work through steel framing members.

1. Cut, drill, or punch holes perpendicular to steel surfaces. Do not thermally cut bolt holes or enlarge holes by burning.
2. Base-Plate Holes: Cut, drill, or punch holes perpendicular to steel surfaces.
3. Weld threaded nuts to framing and other specialty items indicated to receive other work.

2.6 SHOP CONNECTIONS

A. High-Strength Bolts: Shop install high-strength bolts according to RCSC's "Specification for Structural Joints Using ASTM A 325 or A 490 Bolts" for type of bolt and type of joint specified.

1. Joint Type: Slip critical.

B. Weld Connections: Comply with AWS D1.1 for welding procedure specifications, tolerances, appearance, and quality of welds and for methods used in correcting welding work.

1. Remove backing bars or runoff tabs, back gouge, and grind steel smooth.
2. Assemble and weld built-up sections by methods that will maintain true alignment of axes without exceeding tolerances of AISC's "Code of Standard Practice for Steel Buildings and Bridges" for mill material.
3. Verify that weld sizes, fabrication sequence, and equipment used for architecturally exposed structural steel will limit distortions to allowable tolerances. Prevent weld show-through on exposed steel surfaces.

   a. Grind butt welds flush.
   b. Grind or fill exposed fillet welds to smooth profile. Dress exposed welds.

2.7 SHOP PRIMING

A. Shop prime steel surfaces except the following:

1. Surfaces embedded in concrete or mortar. Extend priming of partially embedded members to a depth of 2 inches (50 mm).
2. Surfaces to be field welded.
3. Surfaces to be high-strength bolted with slip-critical connections.
4. Surfaces to receive sprayed fire-resistive materials.
5. Galvanized surfaces.

B. Surface Preparation: Clean surfaces to be painted. Remove loose rust and mill scale and spatter, slag, or flux deposits. Prepare surfaces using methods recommended in writing by paint manufacturer but not less than the following specifications and standards:

1. SSPC-SP 6/NACE No. 3, "Commercial Blast Cleaning."

C. Priming: Immediately after surface preparation, apply primer according to manufacturer's written instructions and at rate recommended by SSPC to provide a dry film thickness of not less than 1.5 mils (0.038 mm). Use priming methods that result in full coverage of joints, corners, edges, and exposed surfaces.

1. Stripe paint corners, crevices, bolts, welds, and sharp edges.
2. Apply two coats of shop paint to inaccessible surfaces after assembly or erection. Change color of second coat to distinguish it from first.

2.8 GALVANIZING

A. Hot-Dip Galvanized Finish: Apply zinc coating by the hot-dip process to structural steel according to ASTM A 123/ A 123M and to hardware products according to ASTM A 153/ A 153M.

1. Fill vent holes and grind smooth after galvanizing.
2. Galvanize threaded rods, clevises, turnbuckles and pins attached to structural-steel frame and located in exterior walls.

2.9 SOURCE QUALITY CONTROL

A. General Contractor will engage an independent testing and inspecting agency to perform shop tests and inspections and prepare test reports.

1. Provide testing agency with access to places where structural-steel work is being fabricated or produced to perform tests and inspections.

B. Correct deficiencies in Work that test reports and inspections indicate does not comply with the Contract Documents.

C. Bolted Connections: Shop-bolted connections will be tested and inspected according to RCSC's "Specification for Structural Joints Using ASTM A 325 or A 490 Bolts."

D. Welded Connections: In addition to visual inspection, shop-welded connections will be tested and inspected according to AWS D1.1 and the following inspection procedures, at testing agency's option:

1. Liquid Penetrant Inspection: ASTM E 165.
2. Magnetic Particle Inspection: ASTM E 709; performed on root pass and on finished weld. Cracks or zones of incomplete fusion or penetration will not be accepted.
3. Ultrasonic Inspection: ASTM E 164.
4. Radiographic Inspection: ASTM E 94.

E. In addition to visual inspection, shop-welded shear connectors will be tested and inspected according to requirements in AWS D1.1 for stud welding and as follows:

1. Bend tests will be performed if visual inspections reveal either a less-than- continuous 360-degree flash or welding repairs to any shear connector.
2. Tests will be conducted on additional shear connectors if weld fracture occurs on shear connectors already tested, according to requirements in AWS D1.1.

PART 3 - EXECUTION

3.1 EXAMINATION

A. Verify elevations of concrete- and masonry-bearing surfaces and locations of anchor rods, bearing plates, and other embedments, with steel erector present, for compliance with requirements.

B. Proceed with installation only after unsatisfactory conditions have been corrected.

3.2 PREPARATION

A. Provide temporary shores, guys, braces, and other supports during erection to keep structural steel secure, plumb, and in alignment against temporary construction loads and loads equal in intensity to design loads. Remove temporary supports when permanent structural steel, connections, and bracing are in place, unless otherwise indicated.

3.3 ERECTION

A. Set structural steel accurately in locations and to elevations indicated and according to AISC's "Code of Standard Practice for Steel Buildings and Bridges" and "Load and Resistance Factor Design Specification for Structural Steel Buildings."

B. Base and Bearing Plates: Clean concrete- and masonry-bearing surfaces of bond-reducing materials, and roughen surfaces prior to setting base and bearing plates. Clean bottom surface of base and bearing plates.

1. Set base and bearing plates for structural members on wedges, shims, or setting nuts as required.
2. Weld plate washers to top of base plate.
3. Snug-tighten anchor rods after supported members have been positioned and plumbed. Do not remove wedges or shims but, if protruding, cut off flush with edge of base[or bearing] plate before packing with grout.
4. Promptly pack grout solidly between bearing surfaces and base or bearing plates so no voids remain. Neatly finish exposed surfaces; protect grout and allow to cure. Comply with manufacturer's written installation instructions for shrinkage-resistant grouts.

C. Maintain erection tolerances of structural steel and architecturally exposed structural steel within AISC's "Code of Standard Practice for Steel Buildings and Bridges."

D. Align and adjust various members forming part of complete frame or structure before permanently fastening. Before assembly, clean bearing surfaces and other surfaces that will be in permanent contact with members. Perform necessary adjustments to compensate for discrepancies in elevations and alignment.

1. Level and plumb individual members of structure.
2. Make allowances for difference between temperature at time of erection and mean temperature when structure is completed and in service.

E. Splice members only where indicated.

F. Remove erection bolts on welded, architecturally exposed structural steel; fill holes with plug welds; and grind smooth at exposed surfaces.

G. Do not use thermal cutting during erection.

H. Do not enlarge unfair holes in members by burning or using drift pins. Ream holes that must be enlarged to admit bolts.

I. Shear Connectors: Prepare steel surfaces as recommended by manufacturer of shear connectors. Use automatic end welding of headed-stud shear connectors according to AWS D1.1 and manufacturer's written instructions.

3.4 FIELD CONNECTIONS

A. High-Strength Bolts: Install high-strength bolts according to RCSC's "Specification for Structural Joints Using ASTM A 325 or A 490 Bolts" for type of bolt and type of joint specified.

1. Joint Type: Slip critical.

B. Weld Connections: Comply with AWS D1.1 for welding procedure specifications, tolerances, appearance, and quality of welds and for methods used in correcting welding work.

1. Comply with AISC's "Code of Standard Practice for Steel Buildings and Bridges" and "Load and Resistance Factor Design Specification for Structural Steel Buildings" for bearing, adequacy of temporary connections, alignment, and removal of paint on surfaces adjacent to field welds.
2. Remove backing bars or runoff tabs, back gouge, and grind steel smooth.
3. Assemble and weld built-up sections by methods that will maintain true alignment of axes without exceeding tolerances of AISC's "Code of Standard Practice for Steel Buildings and Bridges" for mill material.
4. Verify that weld sizes, fabrication sequence, and equipment used for architecturally exposed structural steel will limit distortions to allowable tolerances. Prevent weld show-through on exposed steel surfaces.

   a. Grind butt welds flush.
   b. Grind or fill exposed fillet welds to smooth profile. Dress exposed welds.

3.5 FIELD QUALITY CONTROL

A. Testing Agency: General Contractor will engage a qualified independent testing and inspecting agency to inspect field welds and high-strength bolted connections.

B. Bolted Connections: Shop-bolted connections will be tested and inspected according to RCSC's "Specification for Structural Joints Using ASTM A 325 or A 490 Bolts."

C. Welded Connections: Field welds will be visually inspected according to AWS D1.1.

1. In addition to visual inspection, field welds will be tested according to AWS D1.1 and the following inspection procedures, at testing agency's option:

   a. Liquid Penetrant Inspection: ASTM E 165.
   b. Magnetic Particle Inspection: ASTM E 709; performed on root pass and on finished weld. Cracks or zones of incomplete fusion or penetration will not be accepted.
   c. Ultrasonic Inspection: ASTM E 164.
   d. Radiographic Inspection: ASTM E 94.

D. In addition to visual inspection, test and inspect field-welded shear connectors according to requirements in AWS D1.1 for stud welding and as follows:

1. Perform bend tests if visual inspections reveal either a less-than- continuous 360-degree flash or welding repairs to any shear connector.

2. Conduct tests on additional shear connectors if weld fracture occurs on shear connectors already tested, according to requirements in AWS D1.1.

E. Correct deficiencies in Work that test reports and inspections indicate does not comply with the Contract Documents.

3.6 REPAIRS AND PROTECTION

A. Repair damaged galvanized coatings on galvanized items with galvanized repair paint according to ASTM A 780 and manufacturer's written instructions.

B. Touchup Painting: After installation, promptly clean, prepare, and prime or reprime field connections, rust spots, and abraded surfaces of prime-painted joists and accessories, bearing plates, and abutting structural steel.

1. Clean and prepare surfaces by SSPC-SP 2 hand-tool cleaning or SSPC-SP 3 power-tool cleaning.
2. Apply a compatible primer of same type as shop primer used on adjacent surfaces.

END OF SECTION 051200

SECTION 074112 - MANUFACTURED WALL PANELS

PART 1 - GENERAL

1.1 RELATED DOCUMENTS

A. Drawings and general provisions of the Contract, including General and Supplementary Conditions and Division 1 Specification Sections, apply to this Section.

1.2 SUMMARY

A. This Section includes the following:

1. Metal wall panels with concealed fasteners.

B. Related Sections include the following:

1. Division 5 Section "Structural Steel Framing" for structural-steel framing.

1.3 PERFORMANCE REQUIREMENTS

A. General: Provide manufactured wall panel assemblies complying with performance requirements indicated and capable of withstanding structural movement, thermally induced movement, and exposure to weather without failure or infiltration of water into the building interior.

B. Water Penetration: Provide manufactured wall panel assemblies with no water penetration as defined in the test method when tested according to ASTM E 331 at a minimum differential pressure of 20 percent of inward acting, wind-load design pressure of not less than 6.24 lb/sq. ft. (300 Pa) and not more than 12.0 lb/sq. ft. (575 Pa).

C. Structural Performance: Provide manufactured wall panel assemblies capable of withstanding design wind loads indicated under in-service conditions with deflection no greater than the following, based on testing manufacturer's standard units according to ASTM E 330 by a qualified independent testing and inspecting agency.

1. Maximum Deflection: 1/180 of the span and as required by manufacturer.

1.4 SUBMITTALS

A. Product Data: Include manufacturer's product specifications, standard details, certified product test results, and general recommendations, as applicable to materials and finishes for each component and for total panel assemblies.

B. Shop Drawings: Show layouts of panels, details of corner conditions, joints, panel profiles, supports, anchorages, trim, flashings, closures, and special details. Distinguish between factory- and field-assembled work.

1. For installed products indicated to comply with certain design loadings, include structural analysis data signed and sealed by the qualified professional engineer responsible for their preparation.

C. Samples for Initial Selection: Color shall be Flexospan #320 Parchment as submitted to and approved by Rhode Island Historic Preservation and Heritage Commission. No other color is acceptable.

D. Samples for Verification: Provide sample panels 12 inches (300 mm) long by actual panel width, in the profile, style, color, and texture indicated. Include clips, caps, battens, fasteners, closures, and other exposed panel accessories.

E. Qualification Data: For firms and persons specified in the "Quality Assurance" Article to demonstrate their capabilities and experience. Include lists of completed projects with project names and addresses, names and addresses of architects and owners, and other information specified.

F. Product Test Reports: Indicate compliance of manufactured wall panel assemblies and materials with performance and other requirements based on comprehensive testing of current products.

1.5 QUALITY ASSURANCE

A. Installer Qualifications: Engage an experienced installer who has completed metal wall panel projects similar in material, design, and extent to that indicated for this Project and with a record of successful in-service performance.

B. Professional Engineer Qualifications: A professional engineer who is legally qualified to practice in the jurisdiction where the Project is located and who is experienced in providing engineering services of the kind indicated.

C. Testing Agency Qualifications: An independent testing agency with the experience and capability to conduct the testing indicated without delaying the Work, as documented according to ASTM E 699. All costs associated with materials testing shall be borne by the General Contractor and shall be included in Contractors bid.

D. Fire-Test-Response Characteristics: Where fire-resistance-rated wall panel assemblies are indicated, provide materials and construction identical to those of assemblies tested for fire resistance per ASTM E 119 by an independent testing and inspecting agency acceptable to authorities having jurisdiction.

1. Fire-Resistance Ratings: As indicated by design designations in UL's "Fire Resistance Directory" or in the listing of another testing and inspecting agency acceptable to authorities having jurisdiction.

1.6 DELIVERY, STORAGE, AND HANDLING

A. Deliver panels and other components so they will not be damaged or deformed. Package panels for protection against damage during transportation or handling.

B. Handling: Exercise care in unloading, storing, and erecting wall panels to prevent bending, warping, twisting, and surface damage.

C. Stack materials on platforms or pallets, covered with tarpaulins or other suitable weathertight and ventilated covering. Store panels to ensure dryness. Do not store panels in contact with other materials that might cause staining, denting, or other surface damage.

1.7 PROJECT CONDITIONS

A. Field Measurements: Verify location of structural members and openings in substrates by field measurements before fabrication and indicate measurements on Shop Drawings. Coordinate fabrication schedule with construction progress to avoid delaying the Work.

1.8 WARRANTY

A. General Warranty: Special warranties specified in this Article shall not deprive the Owner of other rights the Owner may have under other provisions of the Contract Documents and shall be in addition to, and run concurrent with, other warranties made by the Contractor under requirements of the Contract Documents.

B. Special Finish Warranty: Submit a written warranty, signed by manufacturer, covering failure of the factory-applied exterior finish on metal wall panels within the specified warranty period and agreeing to repair finish or replace wall panels that show evidence of finish deterioration. Deterioration of finish includes, but is not limited to, color fade, chalking, cracking, peeling, and loss of film integrity.

C. Finish Warranty Period: 20 years from date of Substantial Completion.

PART 2 - PRODUCTS

2.1 MANUFACTURERS

A. Available Manufacturers: Subject to compliance with requirements, manufacturers offering metal panels that may be incorporated into the Work include, but are not limited to, the following:

1. Steel Wall Panels:
   a. Centria, Inc.
   b. Flexospan, Inc. (Basis-of-Design)
   c. VicWest Steel.

2.2 METALS AND FINISHES

A. Metallic-Coated Steel Sheet Prepainted with Coil Coating: Steel sheet metallic coated by the hot-dip process and prepainted by the coil-coating process to comply with ASTM A 755 (ASTM A 755M) and the following requirements:

1. Galvanized Steel Sheet: ASTM A 653, G90 (ASTM A 653M, Z275); structural quality.
2. Surface: Smooth, flat, mill finish.
3. Exposed Finish for Exterior Panels: Apply the following coating in thickness indicated. Furnish appropriate air-drying spray finish in matching color for touchup.

a. Fluoropolymer 2-Coat Coating System: Manufacturer's standard 2-coat, thermocured system composed of specially formulated inhibitive primer and fluoropolymer color topcoat containing not less than 70 percent polyvinylidene fluoride resin by weight with a total minimum dry film thickness of 0.9 mil (0.023 mm) and 30 percent reflective gloss when tested according to ASTM D 523.

1) Durability: Provide coating field tested under normal range of weather conditions for a minimum of 20 years without significant peel, blister, flake, chip, crack, or check in finish; without chalking in excess of a chalk rating of 8 according to ASTM D 4214; and without fading in excess of 5 Hunter units.
2) Color: Color shall be Flexospan #320 Parchment as submitted to and approved by Rhode Island Historic Preservation and Heritage Commission. No other color is acceptable.

2.3 WALL PANEL ASSEMBLIES

A. Exterior Wall Panels: Fabricate panel face sheets to the profile or configuration indicated; and of the material, finish, and thickness indicated. Design joints between panels to form weathertight seals.

1. Steel Face Sheet: 0.028-inch- (0.7-mm-) thick, metallic-coated steel sheet with organic coating finish, unless otherwise indicated.

2.4 MISCELLANEOUS MATERIALS

A. Fasteners: Self-tapping screws, bolts, nuts, self-locking rivets and bolts, end-welded studs, and other suitable fasteners designed to withstand design loads.

1. Use stainless-steel fasteners for exterior applications and galvanized steel fasteners for interior applications.

B. Accessories: Unless otherwise specified, provide components required for a complete wall panel assembly including trim, copings, fasciae, mullions, sills, corner units, clips, seam covers, flashings, louvers, sealants, gaskets, fillers, closure strips, and similar items. Match materials and finishes of panels.

1. Closure Strips: Closed-cell, self-extinguishing, expanded, cellular, rubber or cross-linked, polyolefin-foam flexible closure strips. Cut or premold to match configuration of panels. Provide closure strips where indicated or necessary to ensure weathertight construction.
2. Sealing Tape: Pressure-sensitive, 100 percent solids, polyisobutylene compound sealing tape with release paper backing. Provide permanently elastic, nonsag, nontoxic, nonstaining tape.
3. Joint Sealant: One-part elastomeric polyurethane, polysulfide, or silicone-rubber sealant as recommended by panel manufacturer.

C. Bituminous Coating: Cold-applied asphalt mastic, SSPC-Paint 12, compounded for 15-mil (0.4-mm) dry film thickness per coat, unless otherwise indicated. Provide inert-type noncorrosive compound free of asbestos fibers, sulfur components, and other deleterious impurities.

2.5 FABRICATION

A. General: Fabricate and finish panels and accessories at the factory to greatest extent possible, by manufacturer's standard procedures and processes, as necessary to fulfill indicated performance requirements demonstrated by laboratory testing. Comply with indicated profiles and with dimensional and structural requirements.

B. Sound Control: Where sound-absorption requirement is indicated, fabricate interior liner panels with 1/8-inch- (3-mm-) diameter holes uniformly spaced approximately 1000 holes per square foot (10 750 holes per square meter). Cover insulation with polyethylene film and provide inserts of wire mesh to form acoustical spacer grid.

C. Apply bituminous coating or other permanent separation materials on concealed panel surfaces where panels would otherwise be in direct contact with substrate materials that are noncompatible or could result in corrosion or deterioration of either materials or finishes.

D. Fabricate panel joints with captive gaskets or separator strips that provide a tight seal and prevent metal-to-metal contact, in a manner that will minimize noise from movements within panel assembly.

PART 3 - EXECUTION

3.1 EXAMINATION

A. Examine substrates and conditions, with Installer present, for compliance with requirements indicated for conditions affecting performance of metal panel walls.

1. Panel Supports and Anchorage: Examine wall framing to verify that girts, angles, and other secondary structural panel support members and anchorage have been installed to meet requirements of panel manufacturer.
2. Do not proceed with wall panel installation until unsatisfactory conditions have been corrected.

3.2 PREPARATION

A. Coordinate metal wall panels with rain drainage work; flashing; trim; and construction of soffits, roofing, parapets, walls, and other adjoining work to provide a leakproof, secure, and noncorrosive installation.

B. Promptly remove protective film, if any, from exposed surfaces of metal panels. Strip with care to avoid damage to finish.

C. Secondary Structural Supports: Install girts, angles, and other secondary structural panel support members and anchorage according to Section 051200, “Structural Steel Framing”.

3.3 PANEL INSTALLATION

A. General: Comply with panel manufacturer's written instructions and recommendations for installation, as applicable to project conditions and supporting substrates. Anchor panels and

other components of the Work securely in place, with provisions for thermal and structural movement.

1. Field cutting exterior panels by torch is not permitted.
2. Install panels with concealed fasteners.
3. Locate and space exposed fasteners in true vertical and horizontal alignment. Use proper tools to obtain controlled, uniform compression for positive seal without rupture of neoprene washer.

B. Accessories: Install components required for a complete wall panel assembly including trim, copings, fasciae, mullions, sills, corner units, clips, seam covers, flashings, louvers, sealants, gaskets, fillers, closure strips, and similar items.

C. Joint Sealers: Install gaskets, joint fillers, and sealants where indicated and where required for weatherproof performance of wall panel assemblies. Provide types of gaskets, fillers, and sealants indicated or, if not otherwise indicated, types recommended by panel manufacturer.

1. Install weatherseal to prevent air and moisture penetration. Flash and seal panels at ends and intersections with other materials with rubber, neoprene, or other closures to exclude weather.
2. Seal panel end laps with a bead of tape or sealant, full width of panel. Seal side joints where recommended by panel manufacturer.

D. Wall Panels: Apply elastomeric sealant continuously as necessary for waterproofing. Handle and apply sealant and back-up according to sealant manufacturer's written instructions.

1. Align bottom of wall panels and fasten with blind rivets, bolts, or self-tapping screws. Fasten flashings and trim around openings and similar elements with self-tapping screws.
2. Install screw fasteners with power tools having controlled torque adjusted to compress neoprene washer tightly without damage to washer, screw threads, or panels. Install screws in predrilled holes.
3. Provide weatherproof escutcheons for pipe and conduit penetrating exterior walls.

E. Separate dissimilar metals by painting each metal surface contact area with a bituminous coating or by other permanent separation as recommended by the manufacturer of the dissimilar metal.

F. Installation Tolerances: Shim and align panel units within installed tolerance of 1/4 inch in 20 feet (6 mm in 6 m) on level, plumb, and location lines as indicated and within 1/8-inch (3-mm) offset of adjoining faces and of alignment of matching profiles.

3.4 CLEANING AND PROTECTING

A. Damaged Units: Replace panels and other components of the Work that have been damaged or have deteriorated beyond successful repair by finish touchup or similar minor repair procedures.

B. Cleaning: Remove temporary protective coverings and strippable films, if any, as soon as each panel is installed. On completion of panel installation, clean finished surfaces as recommended by panel manufacturer and maintain in a clean condition during construction.

END OF SECTION 07412

SECTION 099600 - HIGH-PERFORMANCE COATINGS

PART 1 - GENERAL

1.1 RELATED DOCUMENTS

A. Drawings and general provisions of the Contract, including General and Supplementary Conditions and Division 01 Specification Sections, apply to this Section.

1.2 SUMMARY

A. Section includes surface preparation and the application of high-performance coating systems on the following substrates:

Exterior Substrates:

a. Steel.
b. Galvanized metal.

B. Related Requirements:

1. Section 051200 "Structural Steel Framing" for shop priming of metal substrates with primers specified in this Section.

1.3 ACTION SUBMITTALS

A. Product Data: For each type of product indicated. Include preparation requirements and application instructions.

1. Indicate VOC content.

B. Sustainable Design Submittals:

1. Product Data for LEED 2009 Credit EQ 4.2: For paints and coatings, include printed statement of VOC content.
2. Laboratory Test Reports for LEED 2009 Credit EQ 4.2: For paints and coatings, indicating compliance with requirements for low-emitting materials.

C. Samples for Initial Selection: For each type of topcoat product indicated.

D. Samples for Verification: For each type of coating system and in each color and gloss of topcoat indicated.

1. Submit Samples on rigid backing, 8 inches (200 mm) square.
2. Step coats on Samples to show each coat required for system.
3. Label each coat of each Sample.
4. Label each Sample for location and application area.

E. Product List: For each product indicated, include the following:

1. Cross-reference to paint system and locations of application areas. Use same designations indicated on Drawings and in schedules.
2. Printout of current "MPI Approved Products List" for each product category specified in Part 2, with the proposed product highlighted.
3. VOC content.

1.4 CLOSEOUT SUBMITTALS

A. Coating Maintenance Manual: Provide coating maintenance manual including area summary with finish schedule, area detail designating location where each product/color/finish was used, product data pages, material safety data sheets, care and cleaning instructions, touch-up procedures, and color samples of each color and finish used.

1.5 MAINTENANCE MATERIAL SUBMITTALS

A. Furnish extra materials, from the same product run, that match products installed and that are packaged with protective covering for storage and identified with labels describing contents.

1. Paint: 3 gal. (11 L) of each material and color applied.

1.6 QUALITY ASSURANCE

A. MPI Standards:

1. Products: Complying with MPI standards indicated and listed in "MPI Approved Products List".

2. Preparation and Workmanship: Comply with requirements in "MPI Architectural Painting Specification Manual" and "MPI Maintenance Repainting Manual" for products and paint systems indicated.

1.7 DELIVERY, STORAGE, AND HANDLING

A. Delivery and Handling: Deliver products to Project site in an undamaged condition in manufacturer's original sealed containers, complete with labels and instructions for handling, storing, unpacking, protecting, and installing. Packaging shall bear the manufacture's label with the following information:

1. Product name and type (description).
2. Batch date.
3. Color number.
4. VOC content.
5. Environmental handling requirements.
6. Surface preparation requirements.
7. Application instructions.

B. Store materials not in use in tightly covered containers in well-ventilated areas with ambient temperatures continuously maintained at not less than 45 deg F (7 deg C).

1. Maintain containers in clean condition, free of foreign materials and residue.
2. Remove rags and waste from storage areas daily.

1.8 FIELD CONDITIONS

A. Apply coatings only when temperature of surfaces to be coated and surrounding air temperatures are between 50 and 95 deg F (10 and 35 deg C) or as required by manufacturer.

B. Do not apply coatings when relative humidity exceeds 85 percent; at temperatures less than 5 deg F (3 deg C) above the dew point; or to damp or wet surfaces.

C. Do not apply exterior coatings in snow, rain, fog, or mist.

D. Maintain environmental conditions (temperature, humidity and ventilation) within limits recommended by manufacturer for optimum results. Do not install products under environmental conditions outside manufacturer's limits.

PART 2 - PRODUCTS

2.1 MANUFACTURERS

A. Basis-of-Design Product: Subject to compliance with requirements, provide Sherwin-Williams Company (The); products indicated or comparable product from one of the following:

1. Benjamin Moore & Co.
2. Columbia Paint & Coatings.
3. Davis Paint Company.
4. PPG Architectural Finishes, Inc.
5. Sherwin-Williams Company (The) (Basis-of-Design).

B. Comparable Products: Comparable products of approved manufacturers will be considered in accordance with Section 016000 "Product Requirements," and the following:

1. Products are approved by manufacturer in writing for application specified.
2. Products meet performance and physical characteristics of basis of design product including published ratio of solids by volume, plus or minus two percent.

C. Source Limitations: Obtain paint materials from single source from single listed manufacturer.

1. Manufacturer's designations listed on a separate color schedule are for color reference only and do not indicate prior approval.

2.2 HIGH-PERFORMANCE COATINGS, GENERAL

A. Material Compatibility:

1. Provide materials for use within each coating system that are compatible with one another and substrates indicated, under conditions of service and application as demonstrated by manufacturer, based on testing and field experience.
2. For each coat in a coating system, provide products recommended in writing by manufacturers of topcoat for use in coating system and on substrate indicated.
3. Provide products of same manufacturer for each coat in a coating system.

B. VOC Content: For field applications that are inside the weatherproofing system, paints and coatings shall comply with VOC content limits of authorities having jurisdiction and, for interior paints and coatings applied at Project site, the following VOC content limits, exclusive of colorants added to a tint base, when calculated according to 40 CFR 59, Subpart D (EPA Method 24):

1. Flat Paints and Coatings: 50 g/L.
2. Nonflat Paints and Coatings: 150 g/L.
3. Primers, Sealers, and Undercoaters: 200 g/L.
4. Anticorrosive and Antirust Paints Applied to Ferrous Metals: 250 g/L.
5. Floor Coatings: 100 g/L.
6. Shellacs, Clear: 730 g/L.
7. Shellacs, Pigmented: 550 g/L.

C. Low-Emitting Materials: Interior paints and coatings shall comply with the testing and product requirements of the California Department of Health Service's "Standard Practice for the Testing of Volatile Organic Chemical Emissions from Various Sources Using Small Scale Environmental Chambers."

D. Colors: Color shall be Flexospan #320 Parchment or approved equal as selected from manufacturer’s full range.

PART 3 - EXECUTION

3.1 EXAMINATION

A. Examine substrates and conditions, with Applicator present, for compliance with requirements for maximum moisture content and other conditions affecting performance of the Work. Verify suitability of substrates, including surface conditions and compatibility with existing finishes and primers. Where acceptability of substrate conditions is in question, apply samples and perform in-situ testing to verify compatibility, adhesion, and film integrity of new paint application.

1. Report in writing conditions that may affect application, appearance, or performance of paint.

B. Substrate Conditions:

1. Maximum Moisture Content of Substrates: When measured with an electronic moisture meter as follows:

a. Concrete: 12 percent.
b. Concrete Masonry: 12 percent.

c. Gypsum Board: 12 percent.

2. Gypsum Board Substrates: Verify that finishing compound is sanded smooth.
3. Plaster Substrates: Verify that plaster is fully cured.

C. Verify suitability of substrates, including surface conditions and compatibility, with existing finishes and primers.

D. Proceed with coating application only after unsatisfactory conditions have been corrected; application of coating indicates acceptance of surfaces and conditions.

3.2 PREPARATION

A. Comply with manufacturer's written instructions and recommendations in "MPI Architectural Painting Specification Manual" and “MPI Maintenance Repainting Manual” applicable to substrates indicated.

B. Remove hardware, covers, plates, and similar items already in place that are removable and are not to be painted. If removal is impractical or impossible because of size or weight of item, provide surface-applied protection before surface preparation and painting.

1. After completing painting operations, use workers skilled in the trades involved to reinstall items that were removed. Remove surface-applied protection.

C. Clean substrates of substances that could impair bond of coatings, including dust, dirt, oil, grease, and incompatible paints and encapsulants.

1. Remove incompatible primers and reprime substrate with compatible primers or apply tie coat as required to produce coating systems indicated.

D. Steel Substrates: Remove rust, loose mill scale, and shop primer if any. Clean using methods recommended in writing by paint manufacturer but not less than the following:

1. SSPC-SP 11, "Power Tool Cleaning to Bare Metal.”

E. Shop-Primed Steel Substrates: Clean field welds, bolted connections, and abraded areas of shop paint, and paint exposed areas with the same material as used for shop priming to comply with SSPC-PA 1 for touching up shop-primed surfaces.

F. Galvanized-Metal Substrates: Remove grease and oil residue from galvanized sheet metal by mechanical methods to produce clean, lightly etched surfaces that promote adhesion of subsequently applied coatings.

G. Aluminum Substrates: Remove loose surface oxidation.

3.3 APPLICATION

A. Apply high-performance coatings according to manufacturer's written instructions and recommendations in "MPI Architectural Painting Specification Manual" and “MPI Maintenance Repainting Manual”.

1. Use applicators and techniques suited for coating and substrate indicated and as approved by Owner.
2. Coat surfaces behind movable equipment and furniture same as similar exposed surfaces. Before final installation, coat surfaces behind permanently fixed equipment or furniture with prime coat only.
3. Coat back sides of access panels, removable or hinged covers, and similar hinged items to match exposed surfaces.
4. Do not apply coatings over labels of independent testing agencies or equipment name, identification, performance rating, or nomenclature plates.

B. Tint each undercoat a lighter shade to facilitate identification of each coat if multiple coats of the same material are to be applied. Tint undercoats to match color of finish coat, but provide sufficient difference in shade of undercoats to distinguish each separate coat.

C. If undercoats or other conditions show through final coat, apply additional coats until cured film has a uniform coating finish, color, and appearance.

D. Apply coatings to produce surface films without cloudiness, spotting, holidays, laps, brush marks, runs, sags, ropiness, or other surface imperfections. Produce sharp glass lines and color breaks.

3.4 FIELD QUALITY CONTROL

A. Dry Film Thickness Testing: Owner may engage the services of a qualified testing and inspecting agency to inspect and test coatings for dry film thickness.

1. Contractor shall touch up and restore coated surfaces damaged by testing.
2. If test results show that dry film thickness of applied coating does not comply with coating manufacturer's written recommendations, Contractor shall pay for testing and apply additional coats as needed to provide dry film thickness that complies with coating manufacturer's written recommendations.

3.5 CLEANING AND PROTECTION

A. At end of each workday, remove rubbish, empty cans, rags, and other discarded materials from Project site.

B. After completing coating application, clean spattered surfaces. Remove spattered coatings by washing, scraping, or other methods. Do not scratch or damage adjacent finished surfaces.

C. Protect work of other trades against damage from coating operation. Correct damage by cleaning, repairing, replacing, and recoating, as approved by Architect, and leave in an undamaged condition.

D. At completion of construction activities of other trades, touch up and restore damaged or defaced coated surfaces.

3.6 EXTERIOR HIGH-PERFORMANCE COATING SCHEDULE

A. Steel Substrates:

1. Pigmented Polyurethane System:

a. Prime Coat: Alkyd anti-corrosive, quick dry:

1) S-W Pro-Cryl Universal Primer, B66-310 Series, at 2.0 to 4.0 mils (0.051 to 0.102 mm) dry, per coat.

b. Intermediate Coat: Polyurethane, two-component, pigmented, matching topcoat.
c. Topcoat: Polyurethane, two-component, pigmented, gloss:

1) S-W Pro Industrial Waterbased Acrolon 100 Polyurethane, B65-720 Series, at 2.0 to 4.0 mils (0.051 to 0.102 mm) dry, per coat.

2. Pigmented Polyurethane over Epoxy System:

a. Prime Coat: Epoxy, high-build, low gloss:

1) S-W Macropoxy 646-100, B58-600 Series, at 5.0 to 10 mils (0.127 to 0.254 mm) dry, per coat.

a. Intermediate Coat: Polyurethane, two-component, pigmented, matching topcoat.
b. Topcoat: Polyurethane, two-component, pigmented, gloss:

1) S-W Pro Industrial Waterbased Acrolon 100 Polyurethane, B65-720 Series, at 2.0 to 4.0 mils (0.051 to 0.102 mm) dry, per coat.

B. Galvanized-Metal Substrates:

1. Pigmented Polyurethane over Vinyl Wash Primer System:

a. Prime Coat: Primer, vinyl wash:

1) S-W DTM Wash Primer, B71Y1, at 0.7 to 1.3 mils (0.018 to 0.033 mm) dry, per coat.

b. First Topcoat: Polyurethane, two-component, pigmented, matching topcoat.
c. Second Topcoat: Polyurethane, two-component, pigmented, gloss:

1) S-W Pro Industrial Waterbased Acrolon 100 Polyurethane, B65-720 Series, at 2.0 to 4.0 mils (0.051 to 0.102 mm) dry, per coat.

C. Aluminum (Not Anodized or Otherwise Coated) Substrates:

1. Pigmented Polyurethane System:

a. Prime Coat: Primer, vinyl wash:

1) S-W DTM Wash Primer, at 0.2 to 0.4 mils (0.005 to 0.010 mm) dry, per coat.

b. First Topcoat: Polyurethane, two-component, pigmented, matching topcoat.
c. Second Topcoat: Polyurethane, two-component, pigmented, gloss:

1) S-W Pro Industrial Waterbased Acrolon 100 Polyurethane, B65-720 Series, at 2.0 to 4.0 mils (0.051 to 0.102 mm) dry, per coat.

END OF SECTION 099600

FED. ROAD DIV. NO.	STATE	FEDERAL AID PROJECT NO.	FISCAL YEAR	SHEET NO.	TOTAL SHEETS
N/A	RI	N/A	2019	01	02

BUILDING CODE:

RHODE ISLAND STATE BUILDING CODE (RISBCC-1), 2016
INTERNATIONAL BUILDING CODE (2016)
MINIMUM DESIGN LOADS FOR BUILDINGS AND OTHER STRUCTURES, ASCE (7-10)

DESIGN LOADS:

WIND LOAD:

BASIC WIND SPEED	Vult = 146 mph
RISK CATEGORY	Rc = III
WIND DIRECTIONALITY FACTOR	Kd = 0.85
SURFACE ROUGHNESS CATEGORY	SRC = C
EXPOSURE CATEGORY	EXC = C
TOPOGRAPHIC FACTOR	Kzt = 1
GUST EFFECT FACTOR	G = 0.85
ENCLOSURE CLASSIFICATION	ENC = ENCLOSED
INTERNAL PRESSURE COEFFICIENT	GCpi = ± 0.18
VELOCITY PRESSURE	qz = 58 psf
C&C (COMPONENTS AND CLADDING)	
DESIGN WIND PRESSURE (ASCE 7-10)	PWW = +63 PSF, PLW = -69 PSF
FM APPROVAL WIND RATING (DS 1-28)	PWW = +76 PSF, PLW = -83 PSF

MATERIAL PROPERTIES:

STRUCTURAL STEEL:

OTHER ROLLED SHAPES (ASTM A36)	Fy = 36 ksi
METAL PANELING	Fy = TBD
HIGH STRENGTH BOLTS (ASTM A325,SC)	Fu = 120 ksi

GENERAL NOTES:

1. CONTRACTOR TO COORDINATE STRUCTURAL DRAWINGS WITH OTHER DISCIPLINES. CONTRACTOR SHALL BE RESPONSIBLE FOR INCORPORATING ALL REQUIREMENTS IN THE SHOP DRAWINGS AND WORK.
2. DO NOT CHANGE SIZE OR DIMENSIONS OF STRUCTURAL MEMBERS WITHOUT APPROVAL OF THE ENGINEER.
3. CONTRACTOR SHALL BE RESPONSIBLE FOR LIMITING THE AMOUNT OF CONSTRUCTION LOAD IMPOSED UPON STRUCTURAL FRAMING. CONSTRUCTION LOADS SHALL NOT EXCEED THE DESIGN CAPACITY OF STRUCTURAL MEMBERS AT THE TIME LOADS ARE IMPOSED.
4. THE STRUCTURE IS DESIGNED TO FUNCTION AS A UNIT UPON COMPLETION. THE STRUCTURE IS DEPENDENT UPON THE LATERAL FORCE RESISTING SYSTEM INCLUDING BUT NOT LIMITED TO BRACED FRAMES, ANCHORAGES AND ATTACHMENTS FOR STABILITY AND FOR RESISTANCE TO GRAVITY AND LATERAL FORCES. CONTRACTOR SHALL PROVIDE TEMPORARY BRACING AND SUPPORT AS REQUIRED TO ENSURE THE STABILITY OF ALL STRUCTURAL ELEMENTS DURING CONSTRUCTION UNTIL THE ENTIRE STRUCTURE IS IN PLACE.
5. DO NOT SCALE DRAWINGS, USE DIMENSIONS.
6. CONTRACTOR'S CONSTRUCTION AND/OR ERECTION SEQUENCES SHALL RECOGNIZE AND CONSIDER THE EFFECTS OF THERMAL MOVEMENTS OF STRUCTURAL ELEMENTS DURING THE CONSTRUCTION PERIOD.
7. CONTRACTOR SHALL INFORM THE ENGINEER OF ANY DEVIATION FROM THE CONTRACT DOCUMENTS. THE CONTRACTOR SHALL NOT BE RELIEVED OF THE RESPONSIBILITY OF ANY DEVIATION BY THE ENGINEER'S REVIEW OF SHOP DRAWINGS, PRODUCT DATA, ETC., UNLESS THE CONTRACTOR HAS INFORMED THE ENGINEER OF SUCH DEVIATION AT THE TIME OF SUBMISSION AND THE ENGINEER HAS GIVEN WRITTEN APPROVAL TO THE DEVIATION.
8. CONTRACTOR TO FIELD VERIFY ALL DIMENSIONS, ELEVATIONS AND MEMBER SIZES ON STRUCTURAL DRAWINGS. PRIOR TO START OF CONSTRUCTION. CONTRACTOR TO REPORT DISCREPANCIES TO ENGINEER BEFORE PROCEEDING WITH WORK. CONTRACTOR SHALL PLACE ALL EQUIPMENT AND MATERIALS IN HIS FIELD YARD OR AT A SITE APPROVED BY THE ENGINEER.
9. LOCATION OF EXISTING STRUCTURES AND UTILITIES AND MATERIALS OF CONSTRUCTION SHALL BE FIELD VERIFIED BY THE CONTRACTOR PRIOR TO START OF CONSTRUCTION.
10. CONTRACTOR SHALL NOT DISRUPT THE OWNER'S OPERATIONS DURING CONSTRUCTION.
11. ALL DISTURBED AREAS TO BE RESTORED TO THE ORIGINAL CONDITIONS.
12. CONTRACTOR SHALL PROVIDE ADEQUATE SHORING AND BRACING TO SUPPORT AND MAINTAIN UTILITIES DURING CONSTRUCTION.
13. CONTRACTOR SHALL REQUEST MARK OUT OF UTILITY LOCATIONS FROM "CALL BEFORE YOU DIG" (1-888-344-7233) AT LEAST 48 HOURS PRIOR TO ANY EXCAVATION OR SET-UP OF PROPOSED LIFTING OPERATION.
14. IF ANY FIELD CONDITIONS PRECLUDE COMPLIANCE WITH THE DRAWINGS AND/OR CONDITIONS SPECIFIED, THE CONTRACTOR SHALL IMMEDIATELY NOTIFY THE ENGINEER AND SHALL NOT PROCEED WITH ANY AFFECTED WORK.
15. CONTRACTOR SHALL REVIEW AND APPROVE SHOP DRAWINGS PRIOR TO SUBMISSION TO THE ENGINEER. SHOP DRAWINGS SUBMITTED TO THE ENGINEER WITHOUT FIRST BEING STAMPED "REVIEWED" BY THE CONTRACTOR WILL BE RETURNED WITHOUT BEING REVIEWED. REVIEW OF SHOP DRAWINGS BY THE ENGINEER SHALL NOT RELIEVE THE CONTRACTOR FROM CONFORMING TO THE REQUIREMENTS OF THE CONTRACT DOCUMENTS.
16. ANY DAMAGE TO THE EXISTING ROOF MEMBRANE AND PANEL SUPPORT STRUCTURE CAUSED BY THE CONTRACTOR SHALL BE REPAIRED BY THE CONTRACTOR AT NO ADDITIONAL COST.
17. CONTRACTOR SHALL PLACE ALL EQUIPMENT AND MATERIAL AS FAR AWAY AS POSSIBLE FROM THE EDGE OF THE TRAVEL AREA SO AS NOT TO CAUSE A SAFETY HAZARD. CONTRACTOR SHALL NOT STOCKPILE REMOVED PANELS WITHIN THE PROJECT LIMITS.
18. CONTRACTOR SHALL BE SOLELY RESPONSIBLE FOR FABRICATION AND FIT OF HIS WORK.

STRUCTURAL STEEL:

1. ALL STRUCTURAL STEEL SHALL BE IN ACCORDANCE WITH AISC LOAD AND RESISTANCE FACTOR DESIGN SPECIFICATION FOR STRUCTURAL STEEL BUILDINGS.
2. FIELD CONNECTIONS SHALL BE BOLTED WITH HIGH STRENGTH BOLTS UNLESS OTHERWISE SHOWN.
3. ALL STRUCTURAL STEEL SHALL BE DETAILED IN ACCORDANCE WITH THE LATEST EDITION OF AISC "DETAILING FOR STEEL CONSTRUCTION". STEEL DETAILING SHALL INCORPORATE ALL CLEARANCES NECESSARY TO PRODUCE PROPER ERECTION CONNECTION AND FIT-UP.
4. THE EXISTING STRUCTURAL STEEL TO BE REPAINTED SHALL INCLUDE BUT NOT BE LIMITED TO, BEAMS, CONNECTION PLATES, STIFFENERS, UTILITY SUPPORTS, DIAPHRAGMS CROSS FRAMES, COLUMN'S AND FASTENERS.
5. THE WORK INCLUDES THE ELEMENTS OF CLEANING, SURFACE PREPARATION, THE SELECTION OF AN APPROPRIATE PAINT SYSTEM, AND THE ACTUAL PAINTING, ALL OF WHICH ARE SUBSEQUENTLY DEFINED HEREIN.
6. THE CONTRACTOR SHALL PROTECT PERSONNEL AND THE ENVIRONMENT FROM REMOVAL AND CONTAINMENT OF PAINT OR CORROSION PRODUCTS FROM STEEL FRAMES DURING CLEANING AND PAINTING OPERATIONS.
7. ALL PAINTING CONTRACTORS, PAINTING SUBCONTRACTORS ENGAGED IN WORK SHALL BE CERTIFIED UNDER THE STEEL STRUCTURES PAINTING COUNCILS CERTIFICATION PROGRAM.
8. SURFACE PREPARATION OF STEEL SURFACES SHALL CONSISTS OF SCRAPING OR GRINDING TO PROPERLY RECEIVE THE SPECIFIED PAINT/COATING SYSTEM. A PAINT SYSTEM CONSISTS OF A SPECIFIC COMBINATION OF PRIMER, INTERMEDIATE AND TOP COATING.
9. THE MATERIALS FOR ALL COATINGS SHALL BE FURNISHED FROM THE SAME PAINT PRODUCER AND/OR MANUFACTURE TO ENSURE COMPATIBILITY OF COMPONENTS AND COSTS.

METAL WALL PANEL/SYSTEM:

1. METAL WALL SYSTEMS AS DESIGNATED BY THE MANUFACTURE SHALL BE A COMPLETE SYSTEM. ALL COMPONENTS OF THE SYSTEM SHALL BE SUPPLIED BY THE SAME MANUFACTURER.
2. STEEL PANELS SHALL BE DESIGNED IN ACCORDANCE WITH AISI COLD FORM STEEL DESIGN MANUAL.
3. APPLICATION OF DESIGN LOADS SHALL BE IN ACCORDANCE WITH LOCAL BUILDING CODE.
4. WIND LOAD SHALL BE BASED ON THE WIND CRITERIA IN ACCORDANCE WITH LOCAL BUILDING CODE.
5. DEFLECTION REQUIREMENTS SHALL BE IN ACCORDANCE WITH THE APPLICABLE BUILDING CODE OR A MAXIMUM OF L/180.
6. ACCESSORIES AND FASTENERS SHALL BE CAPABLE OF RESISTING THE SPECIFIED DESIGN WIND SECTION FORCES IN ACCORDANCE WITH LOCAL BUILDING CODE.
7. PROVIDE METAL WALL PANEL SYSTEM W/ CONCEALED FASTENERS.

ERECTION OF PANELS AND COMPONENTS:

1. CONTRACTOR SHALL SUBMIT AN ERECTION PLAN THAT PROVIDES COMPLETE DETAILS OF THE PROCESS INCLUDING, BUT NOT LIMITED TO, TEMPORARY SUPPORTS, SCHEDULING AND OPERATION SEQUENCING, CRANE PLACEMENT, AND CALCULATED LIFTING FORCES AND STRESSES DURING VARYING STAGES OF LIFTING. THE CAPACITY OF THE CRANE AND ALL LIFTING AND CONNECTING DEVICES SHALL BE ADEQUATE FOR 125 PERCENT OF THE TOTAL PICK LOAD INCLUDING SPREADERS, RIGGING, HOOKS, AND ALL OTHER MATERIALS.
2. A REGISTERED PROFESSIONAL ENGINEER, LICENSED IN THE STATE OF RHODE ISLAND, SHALL STAMP THE CONTRACTOR'S ERECTION PLANS.
3. THE CONTRACTOR WILL BE REQUIRED TO PERFORM DAILY INSPECTIONS OF THE ERECTED PANELS UNTIL THE JOB IS COMPLETED.
4. THE COST OF PREPARING AND STAMPING THE ERECTION PLAN, COMPUTATIONS, REPORTS, COMMENTS AND NECESSARY REVISIONS SHALL BE CONSIDERED INCIDENTAL TO THE COST OF ERECTION.

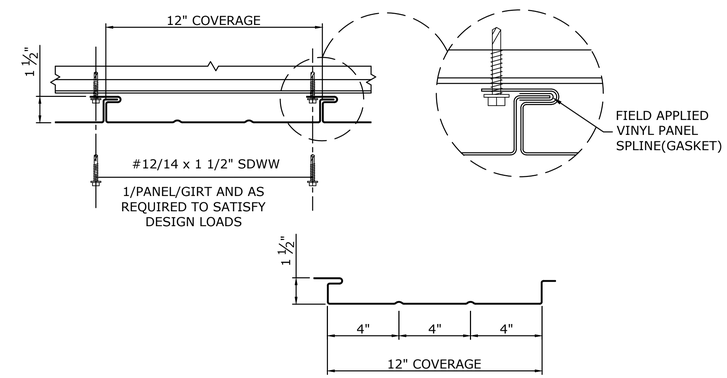

FLEXOSPAN FE12 STANDARD DETAILS
SCALE: NOT TO SCALE

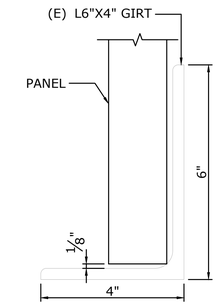

SECTION D-D
SCALE: 6"=1'-0"

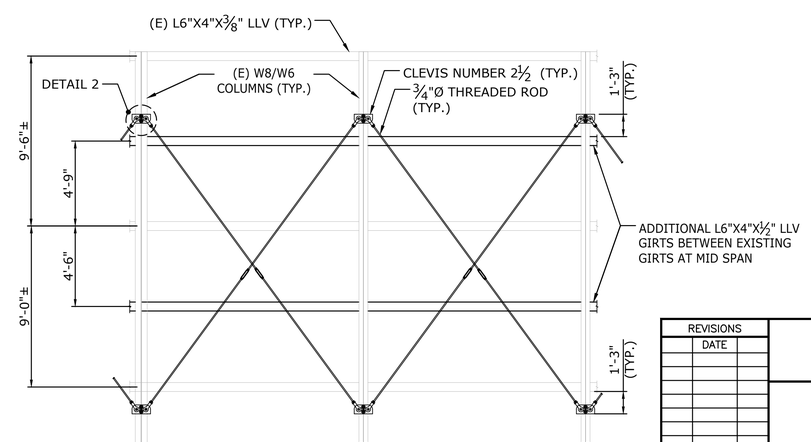

SECTION C-C
SCALE: ¼"=1'-0"

GM2 Associates, Inc.
Consulting Engineers
235 Promenade Street, Suite 535
Providence, RI 02908

REVISIONS	
DATE	

COMMUNITY COLLEGE OF RHODE ISLAND

HVAC ROOF ENCLOSURES
STRUCTURAL REPAIR AT
KNIGHT CAMPUS

GENERAL NOTES AND DETAILS

CHECKED BY NB/JKD DATE 06/19/2019 SCALE AS NOTED

20190626 HVAC Plan
6/28/2019 1:47 PM

FED. ROAD DIV. NO.	STATE	FEDERAL AID PROJECT NO.	FISCAL YEAR	SHEET NO.	TOTAL SHEETS
N/A	RI	N/A	2019	02	02

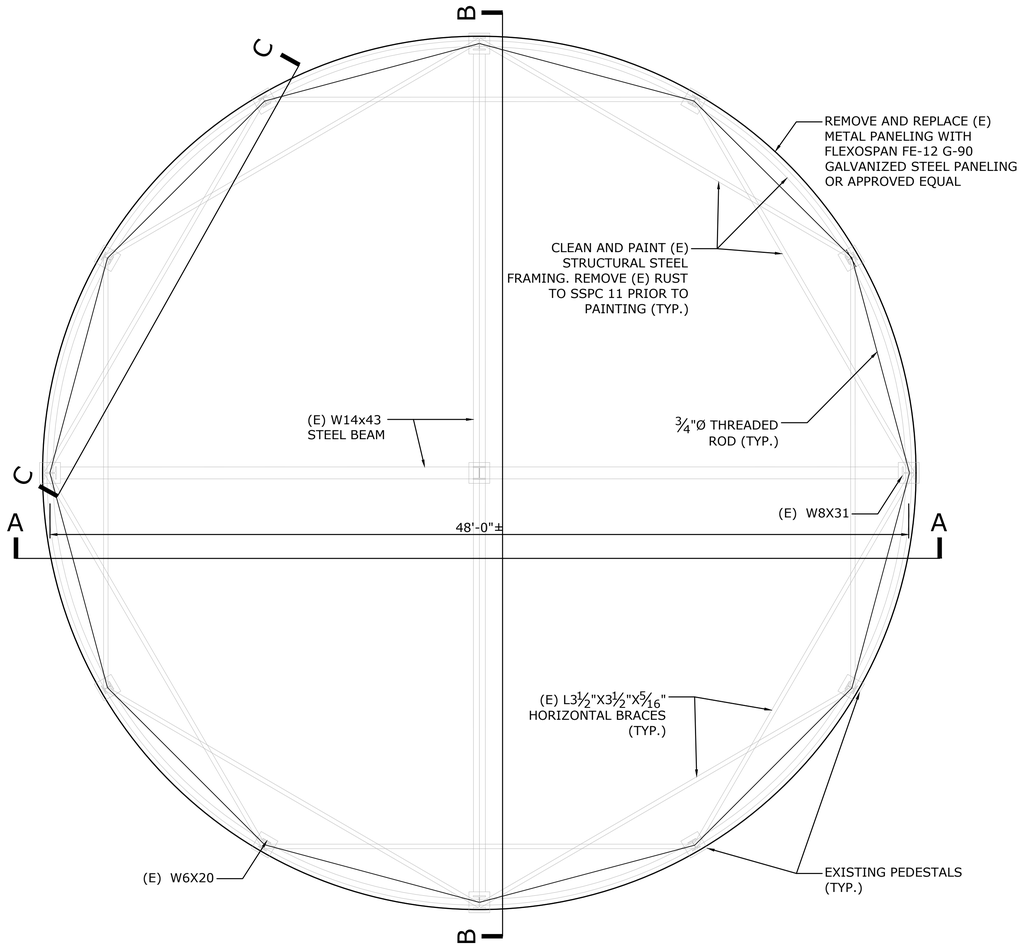

PLAN VIEW
SCALE: ¼"=1'-0"

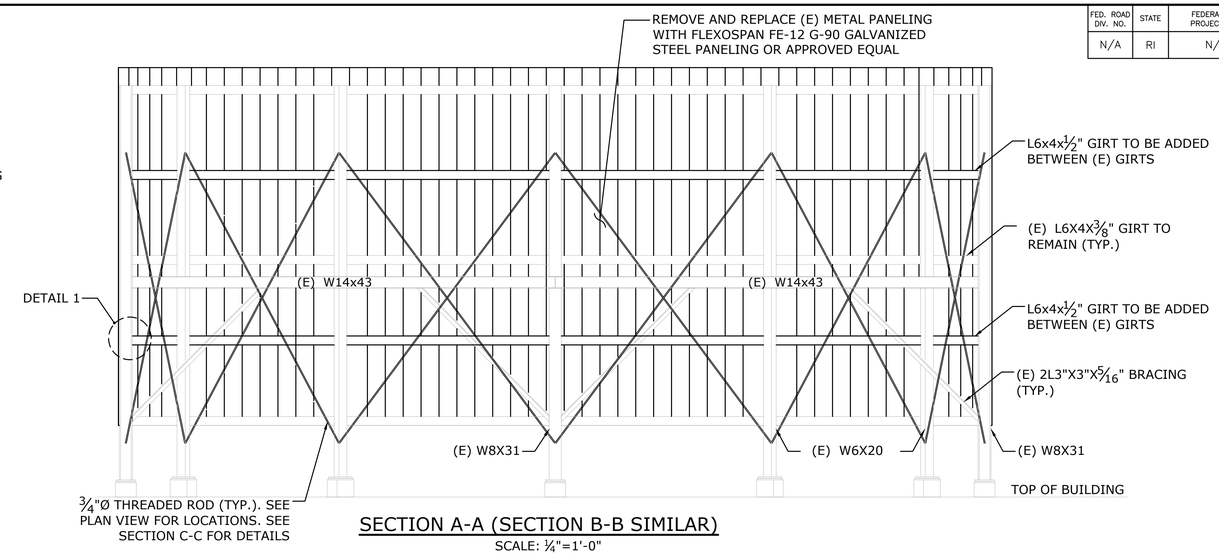

SECTION A-A (SECTION B-B SIMILAR)
SCALE: ¼"=1'-0"

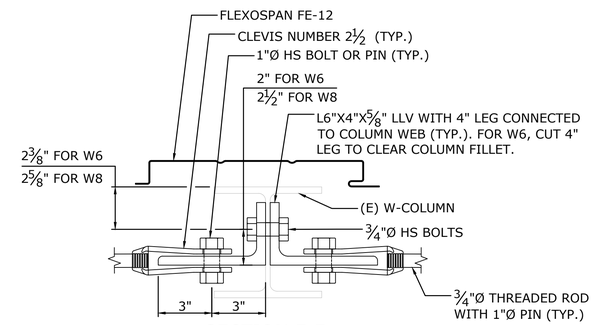

SECTION F-F
SCALE: 3"=1'-0"

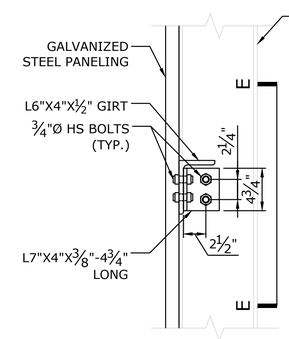

DETAIL 1
SCALE: 1½"=1'-0"

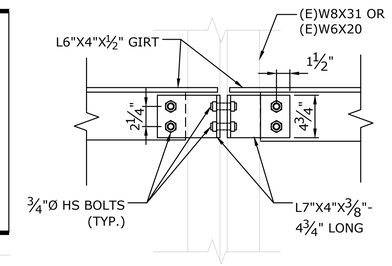

SECTION E-E
SCALE: 1½"=1'-0"

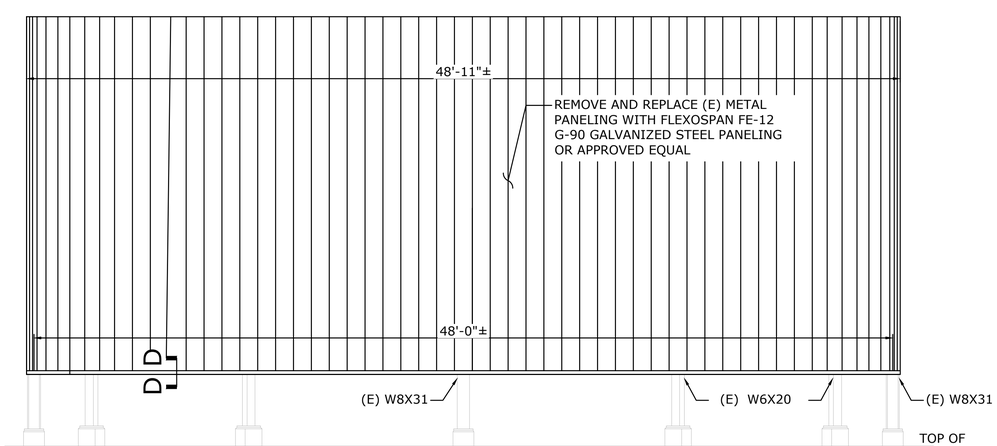

ELEVATION VIEW
SCALE: ¼"=1'-0"

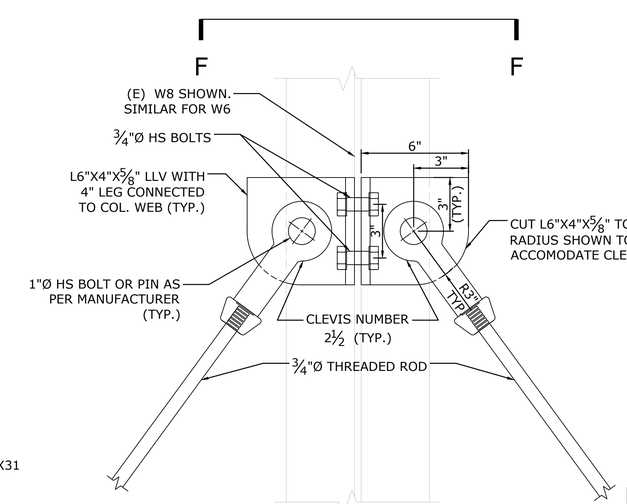

DETAIL 2
SCALE: 3"=1'-0"

GM2 Associates, Inc.
Consulting Engineers
235 Promenade Street, Suite 535
Providence, RI 02908

REVISIONS
DATE

COMMUNITY COLLEGE OF RHODE ISLAND

HVAC ROOF ENCLOSURES
STRUCTURAL REPAIR AT
KNIGHT CAMPUS

SECTION AND DETAILS

CHECKED BY NB/JKD DATE 06/19/2019 SCALE AS NOTED