RHODE ISLAND ARMY NATIONAL GUARD

PLAN OF PROPOSED

CAMP FOGARTY
CULVERT REPLACEMENT

ASSESSOR'S PLAT 18 LOT 16
EAST GREENWICH, RHODE ISLAND

ISSUED FOR BID

LIST OF DRAWINGS

SHEET No.	DRAWING No.	TITLE
1		COVER SHEET
2	C1.0	PLAN SYMBOLS, NOTES & LEGEND
3	C2.0	GENERAL PLAN
4	C3.0	DETAILS
5		EXISTING CONDITIONS PLAN

CONSTRUCTION & FACILITIES MANAGEMENT OFFICE
PROVIDENCE COUNTY
STATE OF RHODE ISLAND

May 16, 2019

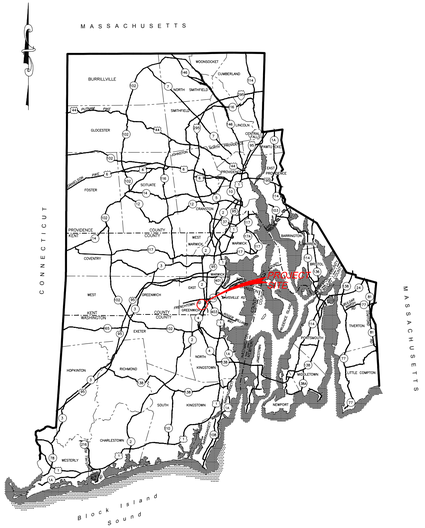

LOCATION MAP
NOT TO SCALE

PARE CORPORATION
ENGINEERS - SCIENTISTS - PLANNERS
8 BLACKSTONE VALLEY PLACE
LINCOLN, RI 02865
401-334-4100

CARL J. ADAMO
No. 4211
REGISTERED PROFESSIONAL ENGINEER
5/16/19

R.I. STANDARD SPECIFICATIONS AND STANDARD DETAILS

SPECIFICATIONS TO GOVERN THIS PROJECT ARE THE R.I. STANDARD SPECIFICATIONS FOR ROAD AND BRIDGE CONSTRUCTION, LATEST EDITION, AND SPECIAL PROVISIONS INCLUDED IN THE CONTRACT DOCUMENTS. STANDARD DETAILS FOR THIS PROJECT ARE R.I. STANDARD DETAILS, LATEST EDITION, WITH ALL REVISIONS.

SURVEY NOTES

1. FIELD SURVEY PERFORMED BY NATIONAL SURVEYORS–DEVELOPERS INC IN JUNE 2018. THIS PLAN REFLECTS ON THE GROUND CONDITIONS AS OF THAT DATE.

2. ALL UNDERGROUND UTILITIES SHOWN ON THIS PLAN HAVE BEEN LOCATED FROM FIELD SURVEY OBSERVATIONS ONLY TOGETHER WITH EXISTING PLANS BY OTHERS. NATIONAL SURVEYORS–DEVELOPERS INC IS NOT RESPONSIBLE FOR MISSING UNDERGROUND UTILITIES, EITHER IN SERVICE OR ABANDONED, NOT OBSERVED AT THE TIME OF THE SURVEY. (PLEASE CONTACT AN INDEPENDENT UTILITY LOCATION COMPANY PRIOR TO ANY CONSTRUCTION). DIG SAFE DOES NOT LOCATE UTILITIES WITHIN THE BASE.

DATUM:

ELEVATIONS SHOWN HEREON, IN U.S. SURVEY FEET, ARE REFERENCED TO THE NORTH AMERICAN VERTICAL DATUM OF 1988 (NAVD 88), AS DETERMINED BY NATIONAL SURVEYORS–DEVELOPERS INC.

GENERAL NOTES

1. ANY DAMAGE BY THE CONTRACTOR TO EXISTING SITE PAVEMENT, CONDUIT, FENCES, ETC., DESIGNATED ON THE PLANS TO REMAIN, SHALL BE REPAIRED BY THE CONTRACTOR AT NO ADDITIONAL COST TO THE RIARNG.

2. SURFACE EVIDENCE OF UTILITIES IS BASED UPON SURVEY LOCATION OF VISIBLE FEATURES. SUBSURFACE EVIDENCE IS BASED UPON MAPS AND RECORDS PROVIDED BY MUNICIPAL SOURCES, UTILITY COMPANIES, AND OTHER CONTROLLING AUTHORITIES, TOGETHER WITH SUCH REASONABLE ASSUMPTIONS AS MAY BE DRAWN FROM THE FIELD AND RECORD DATA. UTILITY INFORMATION MAY NOT BE ACCURATE OR COMPLETE, AND IS SUBJECT TO SUCH REVISIONS AND CHANGES AS ADDITIONAL DATA MAY DISCLOSE. ALL EXCAVATION MUST BE PRECEDED BY CONTACTING AN INDEPENDENT UTILITY LOCATING COMPANY FOR A MORE ACCURATE AND MORE RELIABLE ON–SITE LAYOUT OF EXISTING UTILITIES. UTILITIES SHOULD BE LOCATED PRIOR TO THE START OF ANY WORK.

3. IT IS THE CONTRACTOR'S RESPONSIBILITY TO ENSURE THAT THE EXISTING CONDITIONS ARE NOT DISTURBED BEFORE CONTROL POINTS ARE LOCATED AND CONSTRUCTION LAYOUT IS ESTABLISHED. THE CONSTRUCTION LAYOUT SHALL BE PROVIDED IN SUFFICIENT DETAIL, THEREBY ENABLING HIM TO CONSTRUCT THE PROJECT IN CONFORMITY WITH THE PLANS AND SPECIFICATIONS. SURVEY WILL BE PROVIDED BY THE CONTRACTOR. THE RESIDENT ENGINEER AND THE OWNER WILL NOT AUTHORIZE CONSTRUCTION ACTIVITIES TO BEGIN UNTIL THEY ARE SATISFIED THAT ALL GROUND CONTROL HAS BEEN ESTABLISHED, TIED DOWN, AND DULY RECORDED IN STANDARD FIELD BOOKS.

4. IN CASE OF ANY EMERGENCY, THE CONTRACTOR WILL BE REQUIRED TO MOVE EQUIPMENT AND ALLOW THE PASSAGE OF EMERGENCY VEHICLES. THE SAFETY OF THE PUBLIC MUST BE CONSIDERED AT ALL TIMES.

5. THE CONTRACTOR SHALL FIELD VERIFY ALL EXISTING UTILITIES WITHIN ROADWAY AND SITE AREAS IN THE PROJECT LIMITS WHICH MAY BE BURIED.

6. DURING CONSTRUCTION, THE CONTRACTOR SHALL BE RESPONSIBLE FOR MAINTAINING DRAINAGE AND RUNOFF FLOW DURING STORMS AND PERIODS OF RAINFALL THROUGHOUT THE WORK AREA.

7. ALL DRAINAGE PIPE WITHIN THE PROJECT LIMITS ARE TO BE CLEANED AND FLUSHED UPON COMPLETION OF THE WORK.

8. DURING THE PROCESS OF THE WORK, THE CONTRACTOR SHALL COOPERATE WITH THE OWNERS OF THE UTILITIES AND PERMIT THEIR REPRESENTATIVES ACCESS TO THE WORK TO DETERMINE IF THEIR UTILITIES ARE BEING ENDANGERED IN ANY WAY.

9. THE LIMITS OF CLEARING AND SURFACE DISTURBANCE MUST BE STRICTLY ADHERED TO IN ALL AREAS. IN ADDITION TO THOSE AREAS SPECIFICALLY DESIGNATED ON THE PLANS, THE CONTRACTOR WILL BE RESPONSIBLE FOR PROVIDING AND PLACING, AT HIS OWN EXPENSE, LOAM AND SEED IN AREAS WHICH ARE OUTSIDE OF THE PROJECT'S AREAS OF DISTURBANCE AND WHICH ARE IMPACTED BY CONSTRUCTION OPERATIONS INCLUDING THOSE AREAS WHERE VEHICLES, EQUIPMENT AND MATERIALS ARE STORED WITH THE PERMISSION OF THE ENGINEER.

10. THE CONTRACTOR SHALL BE RESPONSIBLE FOR MAINTAINING ALL ROADWAYS AND ACCESS FREE OF DEBRIS RESULTING FROM THEIR CONSTRUCTION OPERATIONS. ALL DEBRIS SHALL BE REMOVED TO THE SATISFACTION OF THE ENGINEER AT NO ADDITIONAL COST TO THE OWNER.

11. THE CONTRACTOR SHALL ADHERE TO ALL OF THE OWNER'S REQUIREMENTS FOR PERSONNEL ACCESS AND WORK LIMITATIONS.

DRAINAGE AND EROSION CONTROL NOTES

1. PRIOR TO DRAINAGE AND UTILITY CONSTRUCTION, THE CONTRACTOR IS RESPONSIBLE FOR VERIFYING THE LOCATION (HORIZONTAL AND VERTICAL) OF ALL EXISTING PIPES AND/OR STRUCTURES WHICH ARE TO BE CONNECTED. ANY VARIATION FOUND FROM THE PLANS MUST BE BROUGHT TO THE ENGINEER'S ATTENTION PRIOR TO DRAINAGE AND UTILITY CONSTRUCTION. WORK CAN COMMENCE ONLY UPON THE ENGINEER'S AUTHORIZATION.

2. ALL ACCUMULATED SEDIMENT THAT RESULTS FROM THE CLEANING AND FLUSHING OF PIPE AND/OR CATCH BASIN OPERATIONS MUST BE REMOVED FROM THE PROJECT AND LEGALLY DISPOSED OF PROPERLY IN AN AREA OUTSIDE OF RIDEM JURISDICTION.

3. DURING CONSTRUCTION, THE CONTRACTOR SHALL BE RESPONSIBLE FOR ALL EROSION CONTROL MAINTENANCE AND SHALL INSPECT/REPLACE ALL CONTROLS AS NEEDED. MAINTENANCE WILL BE CARRIED OUT IN ACCORDANCE WITH SECTION 212 OF THE R.I.D.O.T. STANDARD SPECIFICATIONS, LATEST EDITION. THE CONTRACTOR IS RESPONSIBLE FOR CARRYING OUT NECESSARY MAINTENANCE DURING ALL PHASES OF PROJECT CONSTRUCTION.

4. ADDITIONAL EROSION CONTROLS, NOT SHOWN ON THESE PLANS, SHALL BE INSTALLED AS CONDITIONS WARRANT, OR AS DIRECTED BY THE ENGINEER. THESE ADDITIONAL ITEMS WILL BE PAID AT THE UNIT PRICE FOR THAT BID ITEM.

5. THE CONTRACTOR SHALL KEEP THE STREETS, DRIVEWAYS, PRIVATE WALKS, PARKING AREAS AND SIDEWALKS IN WHICH HE MAY WORK PASSABLE BY MEANS OF SECURED ACCESS AROUND THE POINT AND PLACE OF CONSTRUCTION. IF, IN THE OPINION OF THE OWNER OR THEIR REPRESENTATIVE, THE INTEREST OF THE ABUTTERS AND THE PUBLIC REQUIRES IT, THE CONTRACTOR SHALL BRIDGE OR CONSTRUCT CROSSINGS OVER TRENCHES AT STREET CROSSINGS, ROADS, OR PRIVATE WAYS OR PROVIDE SUCH TEMPORARY MEANS OF CROSSING AND GUARDING IN A MEANS ACCEPTABLE TO THE ENGINEER. THE CONTRACTOR SHALL CONDUCT HIS WORK FOR THIS PROJECT IN SUCH A MANNER AS THE ENGINEER MAY DIRECT FROM TIME TO TIME.

6. PRIOR TO COMMENCING CONSTRUCTION ACTIVITIES, EROSION AND SEDIMENTATION CONTROLS SHALL BE INSTALLED AT THOSE AREAS INDICATED ON THE PLANS. CLEARING MAY OCCUR PRIOR TO INSTALLATION OF SUCH CONTROLS, HOWEVER NO GRUBBING, GRADING, FILLING, OR OTHER SOIL DISTURBANCE SHALL OCCUR PRIOR TO INSTALLATION. THE LIMITS OF CLEARING AND SURFACE DISTURBANCE MUST BE STRICTLY ADHERED TO IN ALL AREAS.

11. ALL EROSION CONTROL SHALL REMAIN IN PLACE UNTIL AN ACCEPTABLE STAND OF GRASS IS ESTABLISHED. IF NEEDED, TEMPORARY SEEDING CAN HELP TO MINIMIZE EROSION IF APPROVED BY THE ENGINEER. TEMPORARY SEED WILL CONFORM TO RIDOT STANDARD TEMPORARY SEED MIX.

12. THE CONTRACTOR MUST REPAIR AND/OR RESEED ANY AREAS THAT DO NOT DEVELOP WITHIN THE PERIOD OF ONE YEAR AND HE SHALL DO SO AT NO ADDITIONAL EXPENSE TO THE TOWN.

13. THE NORMAL ACCEPTABLE SEASONAL SEEDING DATES ARE SPECIFIED IN SUBSECTION L.02.03 OF THE R.I.D.O.T STANDARD SPECIFICATIONS, LATEST EDITION.

14. POST CONSTRUCTION, THE CONTRACTOR SHALL REMOVE ALL TRASH LITTER, SEDIMENT, AND OTHER DEBRIS WITHIN THE EXISTING AND PROPOSED STORMWATER MANAGEMENT SYSTEM ACCUMULATED DURING CONSTRUCTION.

LANDSCAPING NOTES

1. LOAM AND SEED AREAS SHOWN ARE THE MINIMUM AMOUNT ALLOWED. ALL DISTURBED AREAS SHALL BE RESTORED UPON COMPLETION OF THE PROJECT.

2. ANY TOPSOIL USED AS PLANTABLE SOIL OR LOAM SHALL HAVE A SANDY LOAM TEXTURE RELATIVELY FREE OF SUBSOIL MATERIAL, STONES, ROOTS, LUMPS OF SOIL, TREE LIMBS, TRASH OR CONSTRUCTION DEBRIS, AND SHALL CONFORM TO SECTION M.18 OF THE R.I.D.O.T. STANDARD SPECIFICATIONS, LATEST EDITION.

3. TREE AND SHRUB PROTECTION SHALL BE INSTALLED AS SHOWN ON THE PLANS OR AS DIRECTED BY THE ENGINEER, AND SHALL CONFORM TO SECTION L.11, TREE AND SHRUB PROTECTION DEVICE, OF THE R.I.D.O.T. STANDARD SPECIFICATIONS, LATEST EDITION.

CONSTRUCTION NOTES

1. SAND BAGS CAN BE MANUALLY STACKED TO FORM A TEMPORARY IMPERVIOUS COFFERDAM WHEN ENCAPSULATED WITH AN IMPERVIOUS POLY–FABRIC LINE. THE SANDBAGS CAN BE FILTER BAGS FILLED WITH SAND. THIS TYPE OF SANDBAG COFFERDAM CAN BE USED TO IMPOUND WATER TO BE BYPASSED.

2. A FLUME PIPE MAY BE TEMPORARILY INSTALLED TO DIVERT FLOW WITHIN THE WATERWAY THROUGH THE WORK AREA. COFFERDAMS AND FLUME PIPE MUST BE INSPECTED DAILY FOR DAMAGE OR LEAKING. OUTLET SHALL BE INSPECTED DAILY FOR EROSION.

3. DEWATERIING PUMPING PROCEDURES SHALL BE SUBMITTED AND APPROVED BY THE ENGINEER. PUMPS SHALL DISCHARGE TO A DEWATERING BASIN AND SHALL BE INSPECTED DAILY. A FILTER BAG MAY BE ACCEPTED IN CASES WHERE A DEWATERING BASIN CANNOT BE CONSTRUCTED. IF FLOWS EXCEED 1500 GPM, A BASIN SHALL BE REQUIRED.

4. THE CONTRACTOR IS RESPONSIBLE FOR DEVELOPING AND SUBMITTING TO THE OWNER FOR APPROVAL, A CONTROL OF WATER PLAN IN ACCORDANCE WITH THE CONTRACT DOCUMENTS.

STANDARD PLAN SYMBOLS

EXISTING		PROPOSED
255	CONTOUR	11
X 407.5	SPOT ELEVATION	×11.35
	FENCE	
	TREE LINE	
	STONE WALL	
	EDGE OF PAVEMENT	
	TREE	
	WETLAND EDGE	
	COMPOST FILTER SOCK	
	LIMIT OF DISTURBANCE	LOD

PARE
PARE CORPORATION
ENGINEERS - SCIENTISTS - PLANNERS
8 BLACKSTONE VALLEY PLACE
LINCOLN, RI 02865
401-334-4100

CARL J. ADAMO
No. 4211
REGISTERED PROFESSIONAL ENGINEER
5/16/19

CAMP FOGARTY CULVERT REPLACEMENT
Rhode Island Army National Guard

PLAT 18 LOT 16
East Greenwich, Rhode Island

0.5" 0 1.0"
BAR SCALE

REVISIONS:

1	4/11/19	RIDEM PERMIT
2	5/16/19	ISSUED FOR BID

PROJECT NO.:	18200.00
DATE:	FEBRUARY 2019
SCALE:	NOT TO SCALE
DESIGNED BY:	RJS
CHECKED BY:	CJA
DRAWN BY:	RJS
APPROVED BY:	CJA

DRAWING TITLE:

PLAN SYMBOLS, NOTES AND LEGEND

DRAWING NO.: C1.0

SHEET NO. 2 OF 5

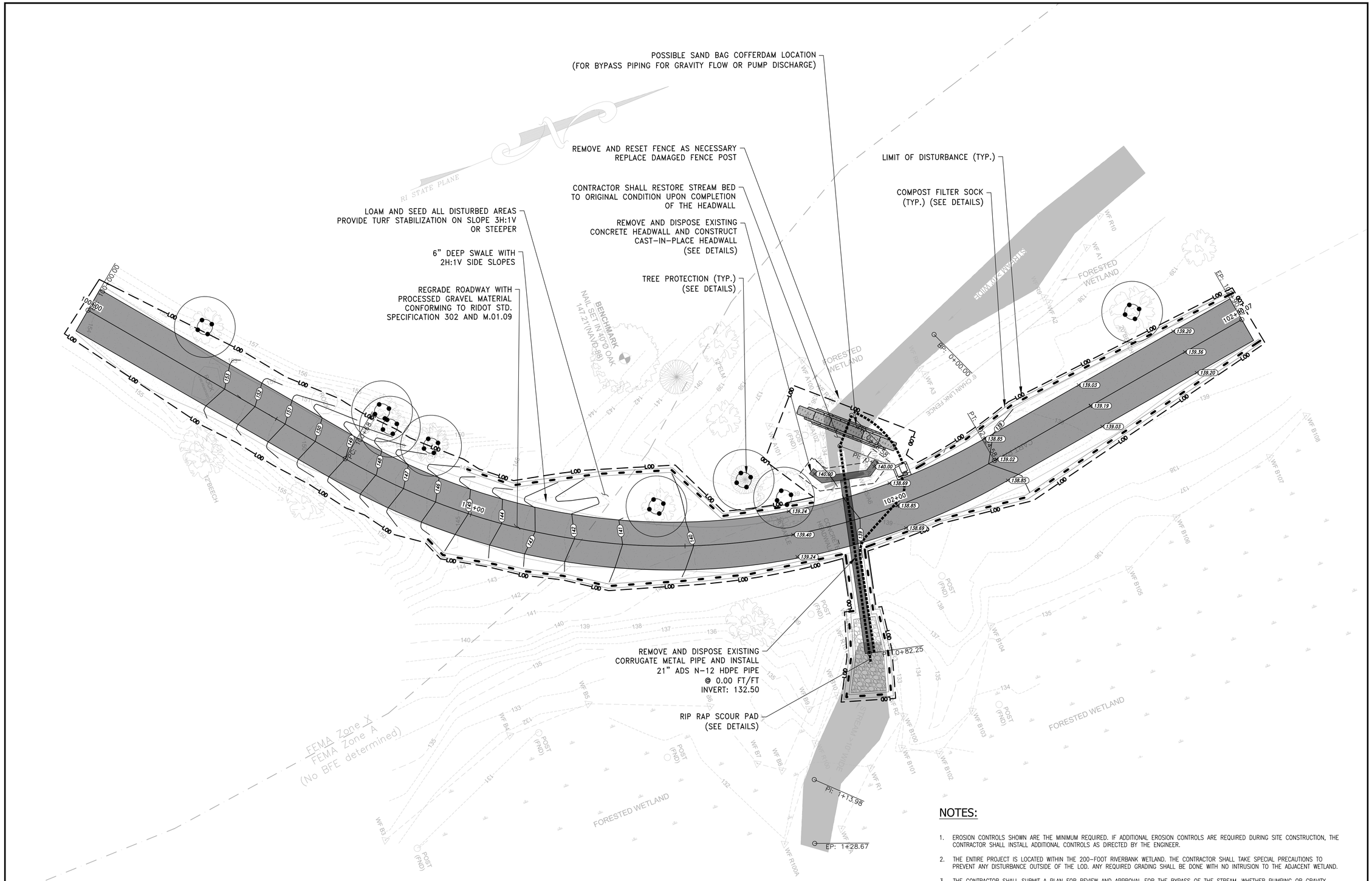

PLAN VIEW

SCALE: 1"=10'

NOTES:

1. EROSION CONTROLS SHOWN ARE THE MINIMUM REQUIRED. IF ADDITIONAL EROSION CONTROLS ARE REQUIRED DURING SITE CONSTRUCTION, THE CONTRACTOR SHALL INSTALL ADDITIONAL CONTROLS AS DIRECTED BY THE ENGINEER.

2. THE ENTIRE PROJECT IS LOCATED WITHIN THE 200-FOOT RIVERBANK WETLAND. THE CONTRACTOR SHALL TAKE SPECIAL PRECAUTIONS TO PREVENT ANY DISTURBANCE OUTSIDE OF THE LOD. ANY REQUIRED GRADING SHALL BE DONE WITH NO INTRUSION TO THE ADJACENT WETLAND.

3. THE CONTRACTOR SHALL SUBMIT A PLAN FOR REVIEW AND APPROVAL FOR THE BYPASS OF THE STREAM, WHETHER PUMPING OR GRAVITY BYPASS.
   - 3.1. CONTROL OF WATER WITHIN THE CHANNEL SHALL BE ACCOMPLISHED BY DIVERTING FLOW AND CONTROLLING GROUNDWATER FOR CONSTRUCTION ACTIVITIES.
   - 3.2. CONTROL OF WATER SHALL BE IN ACCORDANCE WITH WITH THE RHODE ISLAND DEPARTMENT OF ENVIRONMENTAL MANAGEMENT (RIDEM) WETLANDS PERMIT.
   - 3.3. SHOULD THE CONTRACTOR PROPOSE MEANS AND METHODS FOR CONTROL OF WATER NOT ALLOWED BY THE PERMIT, THE CONTRACTOR SHALL BE FULLY RESPONSIBLE FOR OBTAINING APPROVAL FROM RIDEM AND/OR OTHER AGENCIES FOR SUCH CHANGES.
   - 3.4. TREATMENT OF BYPASS WATER NOT REQUIRED UNLESS DISCHARGE IS MORE TURBID THAN INFLOW.
   - 3.5. ALL WORK SHALL BE COMPLETED DURING THE LOW TO NO FLOW PERIOD. BASED ON OBSERVATIONS AND CHANNEL DIMENSIONS, FLOW TO BE ASSUMED TO BE A MINIMUM OF 10 CFS. FLOWS TO BE CONFIRMED BY PUMP DESIGNER. MAY VARY DURING LOW FLOW CONDITIONS.
     - 3.5.1. THE BYPASS SYSTEM SHALL BE DESIGNED TO MAINTAIN A MINIMUM OF 1-FOOT OF FREE BOARD AT COFFERDAMS. THE CONTRACTOR SHALL SUBMIT TO THE ENGINEER FOR APPROVAL A COMPLETE PLAN AND DESCRIPTION OF THE METHODS INTENDED TO BE USED FOR CONTROL OF WATER. CONTRACTOR'S PROPOSED METHODS SHALL NOT EXTEND BEYOND THE LIMIT OF DISTURBANCE SHOWN ON THE PLANS. THE PROPOSED PLAN SHALL BE STAMPED BY A RHODE ISLAND REGISTERED PROFESSIONAL ENGINEER.

PARE
PARE CORPORATION
ENGINEERS - SCIENTISTS - PLANNERS
8 BLACKSTONE VALLEY PLACE
LINCOLN, RI 02865
401-334-4100

CARL J. ADAMO
No. 4211
REGISTERED PROFESSIONAL ENGINEER
5/16/19

CAMP FOGARTY CULVERT REPLACEMENT
Rhode Island Army National Guard

PLAT 18 LOT 16
East Greenwich, Rhode Island

0.5" 0 1.0"
BAR SCALE

REVISIONS:

1	4/11/19	RIDEM PERMIT
2	5/16/19	ISSUED FOR BID

PROJECT NO.:	18200.00
DATE:	FEBRUARY 2019
SCALE:	
DESIGNED BY:	RJS
CHECKED BY:	CJA
DRAWN BY:	RJS
APPROVED BY:	CJA

DRAWING TITLE:

GENERAL PLAN

DRAWING NO.: C2.0

SHEET NO. 3 OF 5

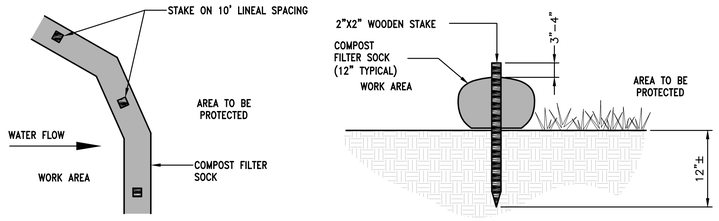

1. COMPOST/ SOIL/ ROCK/ SEED FILL TO MEET APPLICATION REQUIREMENTS.
2. COMPOST MATERIAL TO BE REMOVED OR DISPERSED ON SITE AS DETERMINED BY ENGINEER.

COMPOST FILTER SOCK DETAIL

NOT TO SCALE

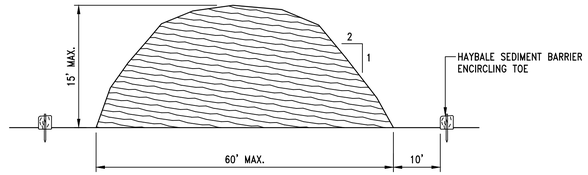

NOTES:

1. PRIOR TO CONSTRUCTION THE CONTRACTOR SHALL PREPARE A PLAN SHOWING THE PROPOSED LOCATION OF ALL STOCKPILE AREAS.
2. STOCKPILE AREA SHALL NOT EXCEED SPECIFIED DIMENSIONS WITHOUT APPROVAL FROM ENGINEER.
3. STOCKPILED ERODIBLE MATERIAL THAT WILL NOT BE USED FOR GREATER THAN 30 DAYS SHALL BE STABILIZED WITH TEMPORARY VEGETATION IMMEDIATELY FOLLOWING PLACEMENT.

ERODIBLE MATERIAL STOCKPILE

NOT TO SCALE

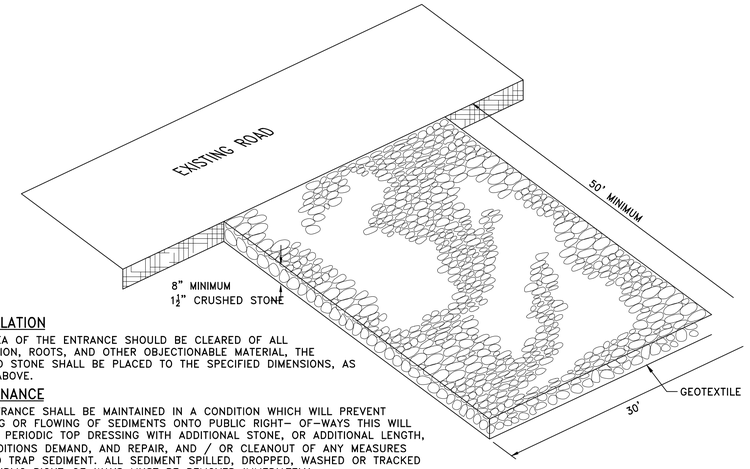

INSTALLATION

THE AREA OF THE ENTRANCE SHOULD BE CLEARED OF ALL VEGETATION, ROOTS, AND OTHER OBJECTIONABLE MATERIAL. THE CRUSHED STONE SHALL BE PLACED TO THE SPECIFIED DIMENSIONS, AS NOTED ABOVE.

MAINTENANCE

THE ENTRANCE SHALL BE MAINTAINED IN A CONDITION WHICH WILL PREVENT TRACKING OR FLOWING OF SEDIMENTS ONTO PUBLIC RIGHT- OF-WAYS THIS WILL REQUIRE PERIODIC TOP DRESSING WITH ADDITIONAL STONE, OR ADDITIONAL LENGTH, AS CONDITIONS DEMAND, AND REPAIR, AND / OR CLEANOUT OF ANY MEASURES USED TO TRAP SEDIMENT. ALL SEDIMENT SPILLED, DROPPED, WASHED OR TRACKED ONTO PUBLIC RIGHT-OF-WAYS MUST BE REMOVED IMMEDIATELY.

LOCATION

SEE PROJECT PLANS FOR LOCATION OF CONSTRUCTION ENTRANCE.

CONSTRUCTION ENTRANCE PROTECTION STONE STABILIZATION PAD

NOT TO SCALE

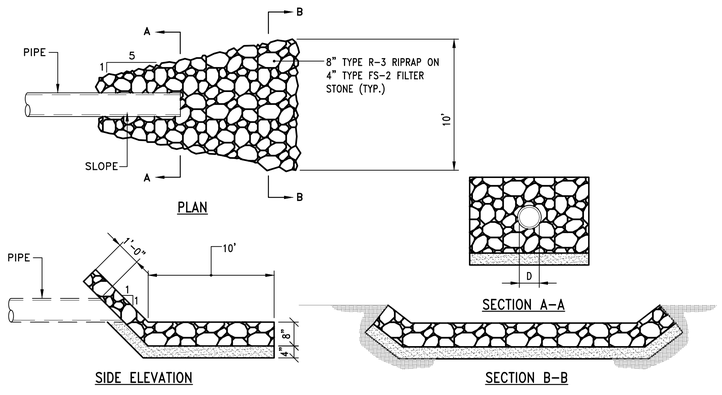

RIPRAP SCOUR PAD

NOT TO SCALE

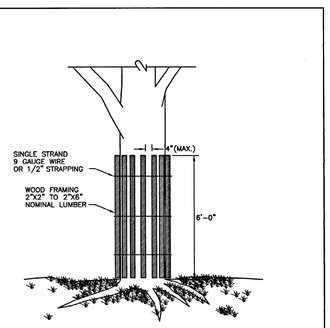

NOTE:
SHALL BE IN ACCORDANCE WITH SECTION L.11 OF THE STANDARD SPECIFICATIONS.

RHODE ISLAND DEPARTMENT OF TRANSPORTATION

REVISIONS		
NO.	BY	DATE

TREE PROTECTION DEVICE

JUNE 15, 1998 — R.I. STANDARD 51.1.0

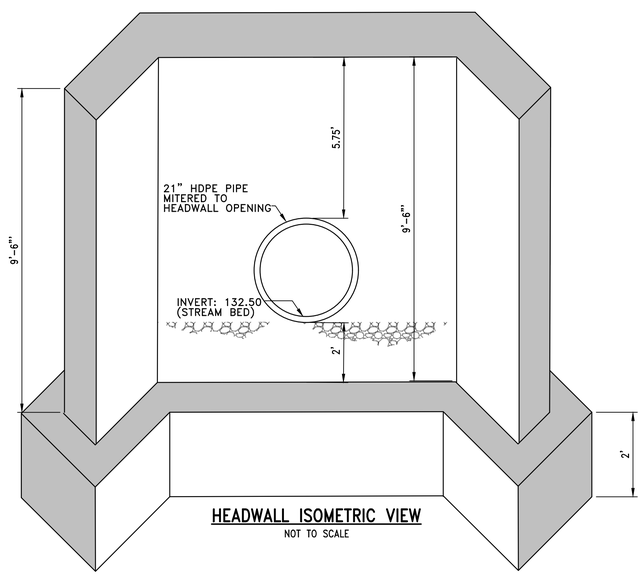

HEADWALL ISOMETRIC VIEW

NOT TO SCALE

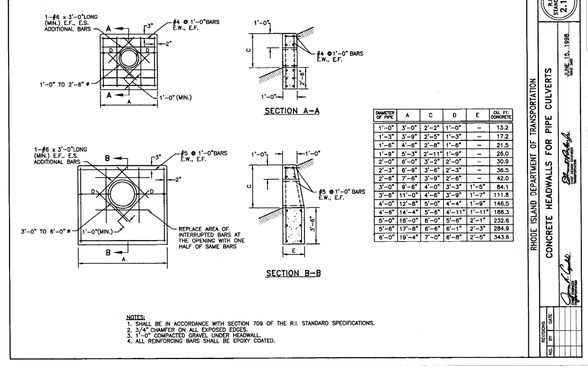

DIAMETER OF PIPE	A	C	D	E	CU. FT. CONCRETE
1'-0"	3'-0"	2'-2"	1'-0"	–	13.2
1'-3"	3'-6"	2'-3"	1'-3"	–	17.2
1'-6"	4'-6"	2'-8"	1'-6"	–	21.5
1'-9"	5'-3"	2'-11"	1'-9"	–	26.0
2'-0"	6'-0"	3'-2"	2'-0"	–	30.9
2'-3"	6'-9"	3'-5"	2'-3"	–	36.5
2'-6"	7'-6"	3'-9"	2'-6"	–	42.0
3'-0"	9'-6"	4'-0"	3'-3"	1'-5"	84.1
3'-6"	11'-0"	4'-6"	3'-9"	1'-7"	111.8
4'-0"	12'-8"	5'-0"	4'-4"	1'-9"	146.5
4'-6"	14'-4"	5'-5"	4'-11"	1'-11"	186.3
5'-0"	15'-0"	6'-0"	5'-6"	2'-1"	232.6
5'-6"	17'-8"	6'-6"	6'-1"	2'-3"	284.9
6'-0"	19'-4"	7'-0"	6'-8"	2'-5"	343.6

NOTES:
1. SHALL BE IN ACCORDANCE WITH SECTION 709 OF THE R.I. STANDARD SPECIFICATIONS.
2. 3/4" CHAMFER ON ALL EXPOSED EDGES.
3. 1'-0" COMPACTED GRAVEL UNDER HEADWALL.
4. ALL REINFORCING BARS SHALL BE EPOXY COATED.

RHODE ISLAND DEPARTMENT OF TRANSPORTATION
CONCRETE HEADWALLS FOR PIPE CULVERTS
JUNE 15, 1998
R.I. STANDARD 2.1.0

REVISIONS		
NO.	BY	DATE

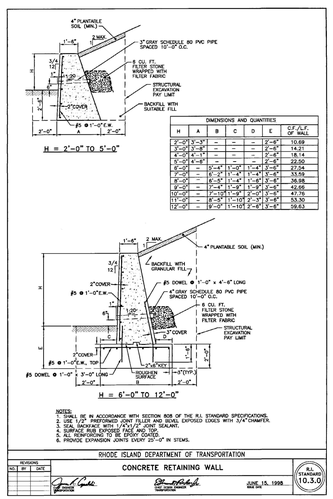

DIMENSIONS AND QUANTITIES					
H	A	B	C	D	E	C.F./L.F. OF WALL
2'-0"	3'-9"	–	–	–	2'-8"	12.68
2'-3"	3'-9"	–	–	–	2'-8"	14.21
2'-6"	4'-1"	–	–	–	2'-8"	18.14
3'-0"	4'-6"	–	–	–	2'-8"	22.50
3'-6"	–	3'-4"	1'-0"	1'-4"	2'-8"	27.54
4'-0"	–	6'-0"	1'-4"	1'-4"	2'-8"	33.59
4'-6"	–	6'-3"	1'-4"	1'-4"	2'-8"	36.98
5'-0"	–	7'-4"	1'-9"	1'-9"	2'-8"	42.66
5'-6"	–	7'-10"	1'-9"	2'-0"	2'-8"	47.76
6'-0"	–	8'-3"	1'-10"	2'-0"	2'-8"	53.30
6'-6"	–	9'-0"	1'-10"	2'-0"	2'-8"	59.63

NOTES:
1. SHALL BE IN ACCORDANCE WITH SECTION 808 OF THE R.I. STANDARD SPECIFICATIONS.
2. USE 1/2" PREFORMED JOINT FILLER AND SEAL EXPOSED EDGES WITH 3/4"CHAMFER.
3. SEAL BACKFACE WITH 1/4"x1/4" JOINT SEALANT.
4. USE #5 DOWELS @ 1'-0" IN STEMS.
5. ALL REINFORCING TO BE EPOXY COATED.
6. PROVIDE EXPANSION JOINTS EVERY 25'-0" IN STEMS.

RHODE ISLAND DEPARTMENT OF TRANSPORTATION

REVISIONS		
NO.	BY	DATE

CONCRETE RETAINING WALL

JUNE 15, 1998 — R.I. STANDARD 10.3.0

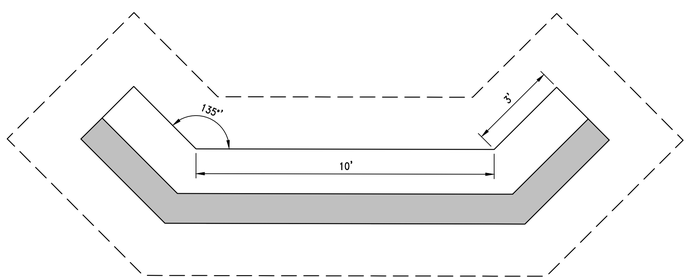

HEADWALL PLAN VIEW

NOT TO SCALE

NOTES:

1. DETAIL 10.3.0 SHALL BE USED FOR THE DESIGN OF THE CAST IN PLACE CONCRETE HEADWALL, WITH THE COMBINATION OF DETAIL 2.1.0 FOR THE REBAR AT THE PIPE PERFORATION. THE CONTRACTOR SHALL SUBMIT SHOP DRAWINGS FOR THE DESIGN OF THE REINFORCING STEEL.
2. STREAM BED MATERIAL SHALL BE STOCKPILED AND RESTORED IN AREAS EXCAVATED NEAR EXISTING STREAM BED,

PARE
PARE CORPORATION
ENGINEERS - SCIENTISTS - PLANNERS
8 BLACKSTONE VALLEY PLACE
LINCOLN, RI 02865
401-334-4100

CARL J. ADAMO
No. 4211
REGISTERED PROFESSIONAL ENGINEER
5/16/19

CAMP FOGARTY CULVERT REPLACEMENT
Rhode Island Army National Guard

PLAT 18 LOT 16
East Greenwich, Rhode Island

0.5" 0 1.0"
BAR SCALE

REVISIONS:

1	4/11/19	RIDEM PERMIT
2	5/16/19	ISSUED FOR BID

PROJECT NO.:	18200.00
DATE:	FEBRUARY 2019
SCALE:	NOT TO SCALE
DESIGNED BY:	RJS
CHECKED BY:	CJA
DRAWN BY:	RJS
APPROVED BY:	CJA

DRAWING TITLE:
DETAILS 1

DRAWING NO.: C3.0

SHEET NO. 4 OF 5

NO.	DATE	DESCRIPTION	BY

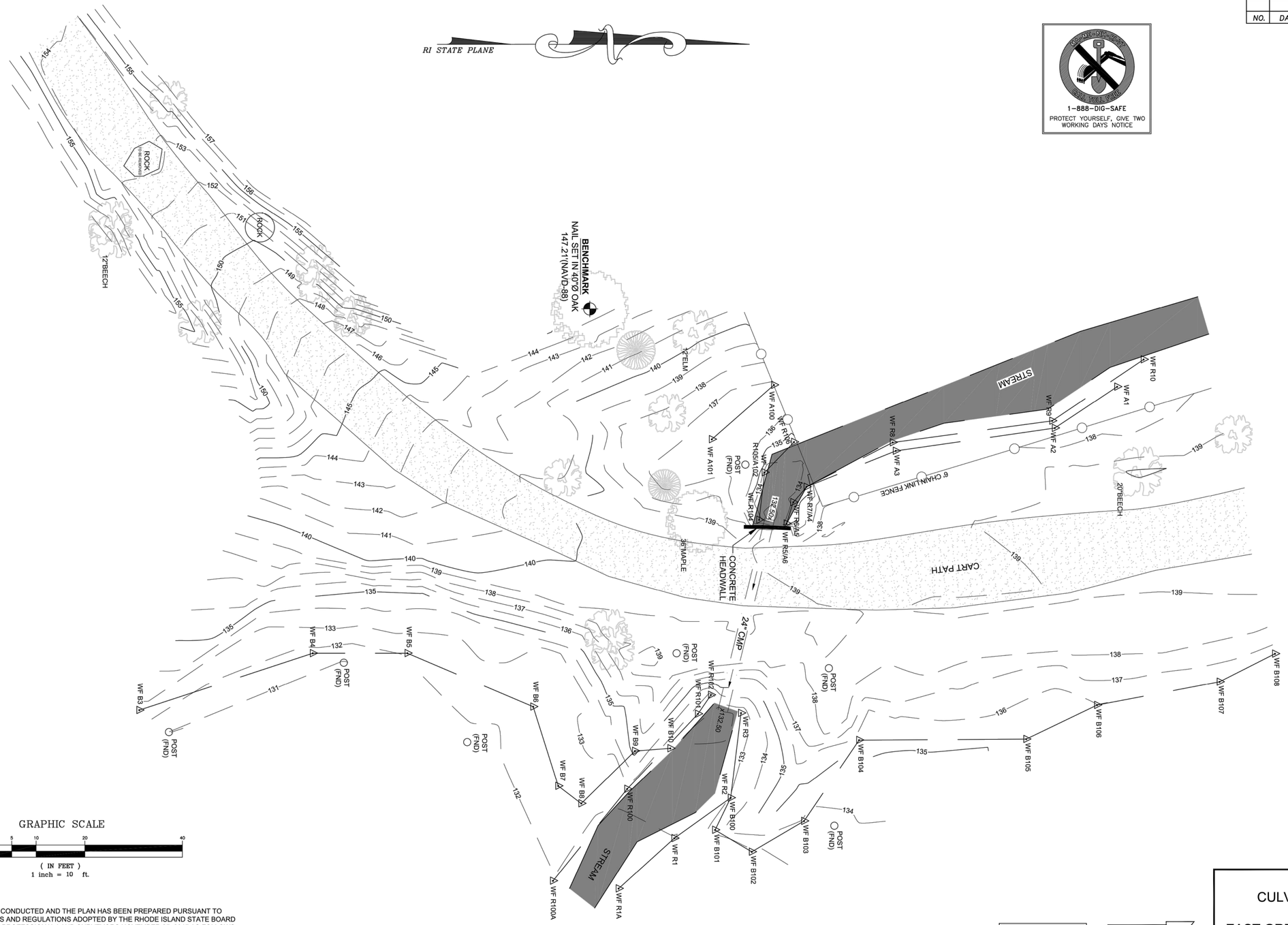

1-888-DIG-SAFE
PROTECT YOURSELF, GIVE TWO WORKING DAYS NOTICE

GRAPHIC SCALE

10 0 5 10 20 40

(IN FEET)
1 inch = 10 ft.

THIS SURVEY HAS BEEN CONDUCTED AND THE PLAN HAS BEEN PREPARED PURSUANT TO SECTION 9 OF THE RULES AND REGULATIONS ADOPTED BY THE RHODE ISLAND STATE BOARD OF REGISTRATIONS FOR PROFESSIONAL LAND SURVEYORS NOVEMBER 25, 2015 AS FOLLOWS:

TYPE OF SURVEY: COMPREHENSIVE BOUNDARY SURVEY
MEASUREMENT SPECIFICATION: CLASS 1 STANDARD

PURPOSE OF SURVEY: BOUNDARY SURVEY

BY:_____DATE:_____
NORBERT A. THERIEN, PLS NO. 1739

NORBERT A. THERIEN
No. 1739
PROFESSIONAL LAND SURVEYOR

NATIONAL
Surveyors-Developers Inc.
42 Hamlet Ave., Woonsocket, R.I.
(401) 769-7779

RIARNG
CULVERT REPLACEMENT

EAST GREENWICH, RHODE ISLAND

EXISTING CONDITIONS

DRAWN BY: J.M.L.	CHECKED BY: N.A.T.	FIELD BY: E.M.
APRIL 2013	JOB No. 111111	SHEET 5 OF 6