PROJECT MANUAL

PHASE IIA / EXTERIOR RESTORATION

OLD STATE HOUSE

150 BENEFIT STREET, PROVIDENCE, RHODE ISLAND

OWNER:
State of Rhode Island and Providence Plantations

PROJECT MANAGEMENT:
Department of Administration
Division of Capital Asset Management and Maintenance

OCCUPANTS:
Rhode Island Historical Preservation and Heritage Commission

ARCHITECT:
Haynes /de Boer Architecture+Preservation
One Park Row, Providence, RI 02903
Cornelis J. de Boer AIA, *Principal*
Jeffrey Harris, *Intern Architect*

JUNE 18, 2019

PROJECT MANUAL INDEX No. of Pages

I. BIDDING DOCUMENTS

A.	Invitation of Bid*	4
B.	Notice of Vendors* (Division of Purchases)	1
C.	Bid Form*	4
D.	Instruction to Bidders* (by Division of Purchases)	11
E.	General Contractor Apprenticeship Certification Form*	2
F.	Subcontractor Apprenticeship Certification Form*	2
G.	General Contractor Apprenticeship Re-Certification and Certification Form*	2
H.	Prevailing Wage Requirements*	7
I.	Bid Preparation Checklist*	2
J.	Form W-9 Payer's Request for Taxpayer Identification Number and Certification*	1

II. CONTRACT DOCUMENTS

A.	Standard Form of Agreement Between Owner and Contractor*DRAFT (AIA Document A101, as amended)	10
B.	General Conditions of the Contract for Construction*DRAFT (AIA Document A201, as amended)	33
C.	Supplementary General Conditions*	16
D.	Performance Bond and Materials Payment Bond*DRAFT (AIA Document A312)	4
E.	Certificates of Insurance	
F.	Addenda, Change Orders, and Authorized Modifications	

**Documents provided by the State of Rhode Island and edited accordingly. DRAFT documents to be completed by Contractor and/or Owner.*

G. Technical Specifications

DIVISION 1 – GENERAL REQUIREMENTS

01100-Summary	2
01200-Price and Payment Procedures	3
01300-Administrative Requirements	3
01400-Quality Requirements	2
01500-Temporary Facilities and Controls	3
01600-Product Requirements	2
01701-Execution Requirements	3
01732-Selective Demolition	2

DIVISION 2 – SITE WORK

02300-Earthwork	2
02751-Site Concrete	6

DIVISION 4 – MASONRY

04010-Masonry Coating System	7
04500-Masonry Restoration and Cleaning	12
04810-Unit Masonry Assemblies	3

DIVISION 5 – METALS

05520-Railings	2

DIVISION 6 – WOOD

06100-Rough Carpentry	4
06200-Finish Carpentry	5

DIVISION 7 – THERMAL AND MOISTURE PROTECTION

07115-Butuminous Damp-proofing	2
07300-Wood Roof Shingles	3
07600-Flashing and Sheet Metal	5
07723-Roof Hatch	3
07920-Joint Sealants	2

DIVISION 8 – WINDOWS AND DOORS

08000-**Door Schedule**	2
08212-Stile and Rail Wood Doors	2
08500-**Window Schedule**	4
08520-Aluminum Storm Windows	2
08600-Wood Windows	2

08710-Door Hardware and Hardware Schedule 3

DIVISION 9 – FINISHES

09240-Stucco 6
09900-Painting 12

DIVISION 10 – SPECIALTIES

10350-Flagpoles (See Allowance No. 3)

H. **LIST OF DRAWINGS** (16 Total)

ARCHITECTURAL (24” x 36” Format to scale noted on each drawing)

COVER SHEET (INCLUDING TIMELINE)

SP-1 SITE PLAN / SITE SURVEY

ARCHITECTURAL PLANS

A0.1 ABBREVIATIONS, SYMBOLS, DOOR ELEVATIONS
A1.0 BASEMENT FLOOR PLAN
A1.1 FIRST FLOOR PLAN
A1.2 SECOND FLOOR PLAN
A1.3 THIRD FLOOR PLAN
A1.4 ROOF PLAN W/ KEY NOTES
A2.0 EAST ELEVATION W/ KEY NOTES
A2.1 WEST ELEVATION
A2.2 NORTH ELEVATION
A2.3 SOUTH ELEVATION
A2.4 NORTH AREAWAY: SECTIONS, ELEVATIONS AND DETAILS
A2.5 SOUTH AREAWAY: SECTIONS, ELEVATIONS AND DETAILS
A4.0 ROOF AND TOWER DETAILS
A4.1 TOWER DETAILS

I. **KEY NOTES**

KEY NOTES AND GENERAL NOTES FOR EXTERIOR ELEVATIONS (DRAWINGS A2.0, A2.1, A2.2 & A2.3) 4

KEY NOTES FOR ROOF PLAN (DRAWING A1.4) 2

SECTION 01100 - SUMMARY

PART 1 - GENERAL

1.1 SUMMARY OF WORK

A. Project: Exterior Restoration of the Old State House, 150 Benefit Street, Providence, RI.

B. Owner: State of Rhode Island

C. Architect: Cornelis J. de Boer AIA, Haynes / de Boer Architecture+Preservation, One Park Row, Providence, RI.

D. Contractor: To be selected.

E. General Scope of Work: Comprehensive exterior restoration of the Old State House, including new wood shingled roof, masonry restoration, preparation for painting, finish painting, window and door restoration, metal repairs, and selective site work.

1.2 WORK RESTRICTIONS

A. Contractor's Use of Premises: During construction, Contractor will have limited use of site and building. Contractor's use of premises is limited only by Owner's right to perform work or employ other contractors on portions of grounds (unrelated to this Project) and as follows:

1. Contractor shall consult and fully cooperate with Owner's policies and personnel regarding use of site, access to specific areas, schedules for services and special events, site rental, outdoor events, and others as indicated by Owner.

B. The Old State House, built in 1763, is on the National Register of Historic Places and therefore is a cultural site of great architectural, esthetic, cultural and historic significance. Extraordinary measures shall be taken to respect, protect and preserve its materials and finishes during the work.

C. The work may be subject to review and approval by the Providence Historic District Commission and the RI Historical Preservation and Heritage Commission.

1.3 SCAFFOLDING

A. Scaffolding erected on the outside of the building must be secured daily in a manner that prevents and prohibits any entry to the building or access above ground level.

1. Contractor must provide pipe staging to gain access to all exterior wall surfaces, main cornice and tower, in full compliance with authorities having jurisdiction.

2. All surface areas of the exterior of the building shall be accessible for inspection by Architect and Owner throughout the course of the restoration process.

3. All scaffolding shall be erected in compliance with OSHA regulations. Provide scaffolding layout with engineer's stamp.

4. Provide 14'-0" high debris netting at base of all scaffolding to collect debris and provide security. Do not obstruct entrance doors. Every effort shall be made to prevent unauthorized personnel from climbing the scaffolding and from entering the building.

1.4 STREET CLOSURES

A. Contractor to be responsible for obtaining permits and barriers as needed. Coordinate with adjacent property owners reliant on street access. Consult with City officials regarding emergency use, protective barriers, signage, etc.

END OF SECTION 01100

SECTION 01200 - PRICE AND PAYMENT PROCEDURES

PART 1 - GENERAL

1.1 ALLOWANCES

A. Allowances shall include cost to Contractor of specific products and materials ordered by Owner under allowance and shall include applicable taxes, freight, and delivery to Project site. Include the following allowances in the Contract Sum:

Allowance No. 1 (Wood Repairs):

Allow the sum of **$ 30,000.** for miscellaneous wood repair, including wood consolidation, blocking, and in–kind replacement of missing and deteriorated wood components, not specifically identified in the construction documents, as required and as directed by the Architect and Owner's Representative. Allowance value includes all labor and material charges. (See Bidding Instructions). Any unused portion of this allowance shall be credited to the Contract Sum in the final payment invoice. See Bid Form and Specification Section 06200.

Allowance No. 2 (Metal Flashing and Repairs):

Allow the sum of **$ 25,000.** for miscellaneous metal flashing repairs, including patching and soldering seams, pinholes, etc., and in–kind replacement of missing and damaged flashings, not specifically identified in the construction documents, as required and as directed by the Architect and Owner's Representative. Allowance value includes all labor and material charges. (See Bidding Instructions). Any unused portion of this allowance shall be credited to the Contract Sum in the final payment invoice. See Bid Form and Specification Section 07600.

Allowance No. 3 (Flagpoles):

Allow the sum of **$ 10,000.** for two new wood or fiberglass flagpoles on east side of building. Allowance value includes all labor and material charges. Any unused portion of this allowance shall be credited to the Contract Sum in the final payment invoice.

Allowance No.4 (Tower Leak Investigation):

Allow the sum of **$15,000**. for investigation into tower leaks, including dismantling tower components as directed by Architect, and water testing tower areas to determine source of leaks entering interior of Clock Room and adjacent duct space. Remediate, repair, restore conditions as required and as directed by Architect. After remediation is completed, conduct water test to ensure leaks have stopped.

Allowance No. 5 (Testing):

Allow the sum of **$10,000** for testing required and requested under Section 01400, including wind testing of roofing materials as specified under Section 07300.

Allowance No. 6 (Sump Pump in Boiler Room): Allow the sum of **$15,000**. for work to include excavation for sump pit, utility hook-ups, etc. Allowance value includes labor and material charges.

B. Submit invoices to show cost of products furnished and labor charges under each allowance. Reconciliation of Allowance amounts with actual costs will be by Change Order approved by Architect and Owner.

1.2 ALTERNATES

A. An alternate is an amount proposed by bidder for certain work that may be added to or deducted from the Base Bid amount if Owner accepts the Alternate. The cost or credit for each alternate is the net addition to or deduction from the Contract Sum to incorporate the Alternate into the Work. No other adjustments are made to the Contract Sum.

B. Indicate on the Bid Form amounts to be deducted from or added to the Contract Sum for the following alternates:

ADD ALTERNATE PRICE NO.1: (MASONRY RESTORATION)

1.1 Masonry cleaning and restoration of north, east, south, and west walls of building, including tower, as detailed on drawings and specified under 04500.

1.2 Note: Masonry work involving 4 brick chimneys above roof and masonry work at north and south areaways are part of Base Bid.

1.3 UNIT PRICES

A. A unit price is an amount proposed by bidders and stated on the Bid Form as a price per unit of measurement for work added to or deducted from the Contract Sum by appropriate modification, if estimated quantities of Work required by the Contract Documents are increased or decreased. Bidders shall indicate on the Bid Form unit prices for the following items of work:

1. Unit Price No. 1: Additional brick replacement, beyond 100 bricks to be replaced with salvaged bricks.

   Add $_____/ brick installed (including removal of broken or deteriorated brick).

2. Unit Price No. 2: Deductions or credit for brick replacement if fewer than 100 bricks are replaced.

   Deduct $_____/ brick installed.

3. Unit Price No. 3: Police Details. (See Bid Form)

B. Unit prices include all necessary labor, material, plus cost for delivery, installation, insurance, applicable taxes, overhead, and profit.

1.4 CONTRACT MODIFICATION PROCEDURES

A. On Owner's approval of a proposal from Contractor on AIA Document G709, Architect will issue a Change Order on AIA Document G701, for all changes to the Contract Sum or the Contract Time (UNLESS AN ALTERNATE METHOD IS MUTUALLY AGREED UPON).

B. When Owner and Contractor disagree on the terms of a proposal, Architect, after reasonable discussion and compromise with Owner, may issue a Construction Change Directive on AIA Document G714, instructing Contractor to proceed with the change, for subsequent inclusion in a Change Order. Construction Change Directive will contain a description of the change and designate the method to be followed to determine changes to the Contract Sum or the Contract Time.

1.5 PAYMENT PROCEDURES

A. Submit a Schedule of Values at least 10 days before the initial Application for Payment. Break down the Contract Sum into at least one line item for each Specification Section in the Project Manual table of contents. Coordinate the Schedule of Values with Contractor's Construction Schedule.

1. Round amounts to nearest whole dollar; total shall equal the Contract Sum.
2. Provide separate line items in the Schedule of Values for initial cost of materials and for total installed value of that part of the Work.

B. Submit 3 copies of each application for payment on AIA Document G702/703, according to the schedule established in Owner/Contractor Agreement.

1. With each Application for Payment, submit waivers of mechanic's liens from subcontractors, sub-subcontractors, and suppliers for construction period covered by the previous application.
2. Submit final Application for Payment after completion of Project closeout procedures with release of liens and supporting documentation.

a. Include consent of surety to final payment on AIA Document G707 and insurance certificates.
b. Submit final meter readings for utilities, a record of stored fuel, and similar data as of the date of Substantial Completion.

END OF SECTION 01200

SECTION 01300 - ADMINISTRATIVE REQUIREMENTS

PART 1 - GENERAL

1.1 PROJECT MANAGEMENT AND COORDINATION

A. Coordinate construction to ensure efficient and orderly installation of each part of the Work.

B. Schedule and conduct progress meetings at Project site at appropriate intervals. Notify Owner and Architect of meeting dates and times. Require attendance of each subcontractor or other entity concerned with current progress or involved with planning or coordination of future activities.

1. Record minutes and distribute to everyone concerned, including Owner and Architect.

1.2 SUBMITTAL PROCEDURES

A. Coordinate each submittal with fabrication, purchasing, testing, delivery, other submittals, and related activities that require sequential activity.

1. No extension of the Contract Time will be authorized because of failure to transmit submittals enough in advance of the Work to permit processing, including resubmittals.
2. Submit a minimum of three copies of each submittal. Architect will return one copy, and provide one copy to Owner. Alternatively, ‘paper’ submittals may be processed in PDF format via email to Architect.
3. Architect will return submittals, without review**,** received from sources other than Contractor.

B. Place a permanent label or title block on each submittal for identification. Provide a space approximately 6 by 8 inches (150 by 200 mm) on label or beside title block to record Contractor's review and approval markings and action taken by Architect. Include the following information on the label:

1. Project name.
2. Date.
3. Name and address of Contractor.
4. Name and address of subcontractor or supplier.
5. Number and title of appropriate Specification Section.

C. Identify deviations from the Contract Documents on submittals.

D. Contractor's Construction Schedule Submittal Procedure: Submit legible copies of schedule within 5 days after date established for Commencement of the Work.

PART 2 - PRODUCTS

2.1 ACTION SUBMITTALS

A. Product Data: Mark each copy to show applicable products and options. Include the following:

1. Manufacturer's written recommendations, product specifications, and installation instructions.
2. Wiring diagrams showing factory-installed wiring.
3. Printed performance curves and operational range diagrams.
4. Testing by recognized testing agency.
5. Compliance with specified standards and requirements.

B. Shop Drawings: Prepare Project-specific information, drawn accurately to scale. Do not base Shop Drawings on reproductions of the Contract Documents or standard printed data. Submit on sheets at least 8-1/2 by 11 inches (215 by 280 mm) but no larger than 30 by 42 inches (762 by 1067 mm). Scaled drawings in PDF format via e-mail are acceptable. Include the following:

1. Dimensions and identification of products.
2. Fabrication and installation drawings and roughing-in and setting diagrams.
3. Wiring diagrams showing field-installed wiring.
4. Notation of coordination requirements.
5. Notation of dimensions established by field measurement.

C. Samples: Submit Samples for review of kind, color, pattern, and texture and for a comparison of these characteristics between submittal and actual component as delivered and installed. Include name of manufacturer and product name on label.

1. If variation is inherent in material or product, submit at least 3 sets of paired units that show variations.

2.2 INFORMATION SUBMITTALS

A. Qualification Data: Include lists of completed projects with project names and addresses, names and addresses of architects and owners, and other information specified.

B. Product Certificates: Prepare written statements on manufacturer's letterhead certifying that product complies with requirements in the Contract Documents.

2.3 DELEGATED DESIGN

A. Performance and Design Criteria: Where professional design services or certifications by a design professional are specifically required of Contractor by the Contract Documents, provide products and systems complying with specific performance and design criteria indicated.

1. If criteria indicated are not sufficient to perform services or certification required, submit a written request for additional information to Architect.

B. Delegated-Design Submittal: In addition to Shop Drawings, Product Data, and other required submittals, submit 3 copies of a statement, signed and sealed by the responsible design professional, for each product and system specifically assigned to Contractor to be designed or certified by a design professional.

1. Indicate that products and systems comply with performance and design criteria in the Contract Documents. Include list of codes, loads, and other factors used in performing these services.

2.4 CONTRACTOR'S CONSTRUCTION SCHEDULE

A. Gantt-Chart Schedule: Submit a comprehensive, fully developed, horizontal Gantt-chart-type schedule within 5 days of date established for the Notice to Proceed.

B. Preparation: Indicate each significant construction activity separately. Identify first workday of each week with a continuous vertical line.

PART 3 - EXECUTION

3.1 SUBMITTAL REVIEW

A. Review each submittal and check for coordination with other Work of the Contract and for compliance with the Contract Documents. Note corrections and field dimensions. Mark with approval stamp before submitting to Architect.

B. Architect will review each action submittal, confer with Owner on content, make marks to indicate corrections or modifications required, stamp and mark as appropriate to indicate action taken, and return copies less those retained.

3.2 CONTRACTOR'S CONSTRUCTION SCHEDULE

A. Distribute copies of approved schedule to Owner, Architect, subcontractors, testing and inspecting agencies, and parties identified by Contractor with a need-to-know schedule responsibility. When revisions are made, distribute updated schedules to the same parties.

B. Updating: Upon request, update schedule to reflect actual construction progress and activities. Issue schedule as requested before each regularly scheduled progress meeting.

1. As the Work progresses, indicate Actual Completion percentage for each activity.

END OF SECTION 01300

SECTION 01400 - QUALITY REQUIREMENTS

PART 1 - GENERAL

1.1 SECTION REQUIREMENTS

A. Where called for in specific sections, testing and inspecting services are required to verify compliance with requirements specified or indicated. These services do not relieve Contractor of responsibility for compliance with the Contract Document requirements.

1. Testing and inspecting services are specified in other Sections of these Specifications or are required by authorities having jurisdiction and shall be performed by independent testing agencies.
2. Where quality-control services are indicated as Contractor's responsibility, engage a qualified testing agency to perform these services.
3. Contractor is responsible for scheduling times for tests, inspections, and obtaining samples and notifying testing agency.
4. Retesting and Reinspecting: Contractor shall pay for additional testing and inspecting required as a result of tests and inspections indicating noncompliance with requirements.

B. Submittals: Testing agency shall submit a certified written report of each test and inspection to Contractor, Owner, and Architect, and to authorities having jurisdiction when they so direct. Reports of each inspection, test, or similar service shall include the following:

1. Name, address, and telephone number of testing agency.
2. Project title and number.
3. Date of issue.
4. Dates and locations of samples and tests or inspections.
5. Record of temperature and weather conditions at time of sample taking and testing and inspecting.
6. Names of individuals making tests and inspections.
7. Description of the Work and test and inspection method.
8. Complete test or inspection data, test and inspection results, an interpretation of test results, and comments or professional opinion on whether tested or inspected Work complies with the Contract Document requirements.
9. Recommendations on retesting and reinspecting.
10. Name and signature of laboratory inspector.

C. Testing Agency Qualifications: An independent agency with the experience and capability to conduct testing and inspecting indicated; and where required by authorities having jurisdiction, that is acceptable to authorities.

D. Testing Agency Responsibilities: Testing agency shall cooperate with Architect and Contractor in performing its duties and shall provide qualified personnel to perform inspections and tests.

1. Agency shall promptly notify Architect, Owner, and Contractor of irregularities or deficiencies in the Work observed during performance of its services.
2. Agency shall not release, revoke, alter, or increase requirements of the Contract Documents nor approve or accept any portion of the Work.
3. Agency shall not perform any duties of Contractor.

E. Auxiliary Services: Cooperate with testing agencies and provide auxiliary services as requested, including the following:

1. Access to the Work.
2. Incidental labor and facilities necessary to facilitate tests and inspections.
3. Adequate quantities of materials for testing, and assistance in obtaining samples.
4. Facilities for storage and field curing of test samples.
5. Security and protection for samples and for testing and inspecting equipment.

F. Special Tests and Inspections: Owner will engage a qualified testing agency or special inspector to conduct special tests and inspections required by authorities having jurisdiction.

G. Special Tests and Inspections: Conducted by a qualified testing agency or special inspector as required by authorities having jurisdiction, as indicated in individual Specification Sections.

H. Minimum Quantity or Quality Levels: The quantity or quality level shown or specified shall be the minimum provided or performed. The actual installation may comply exactly with the minimum quantity or quality specified, or it may exceed the minimum within reasonable limits.

PART 2 - PRODUCTS (Not Applicable)

PART 3 - EXECUTION (Not Applicable)

END OF SECTION 01400

SECTION 01500 - TEMPORARY FACILITIES AND CONTROLS

PART 1 - GENERAL

1.1 SECTION REQUIREMENTS

A. Use Charges: Cost or use charges for temporary facilities shall be included in the Contract Sum.

B. Use water and electrical power from Owner's existing system in basement without metering and without payment of use charges. Consult with Owner’s Representative.

C. Electrical Service: Comply with NEMA, NECA, and UL standards and regulations for temporary electric service. Install service to comply with NFPA 70.

PART 2 - PRODUCTS

2.1 EQUIPMENT

A. Heating Equipment: Unless Owner authorizes use of permanent heating system, provide vented, self-contained heaters with thermostatic control.

1. Use of gasoline-burning space heaters, open-flame heaters, or salamander-type heating units is prohibited.

2. Heating Units: Listed and labeled, by a testing agency acceptable to authorities having jurisdiction, and marked for intended use. Owner shall approve type of heating system, and placement and use of system, prior to use.

PART 3 - EXECUTION

3.1 TEMPORARY UTILITIES

A. General: Coordinate with Owner and arrange with utility company, and existing users for time when service can be interrupted, if necessary, to make connections for temporary services.

B. Sanitary Facilities: Provide temporary (portable) toilets, wash facilities, and drinking-water fixtures for its own use. Comply with regulations and health codes for type, number, location, operation, and maintenance of fixtures and facilities.

C. Heating: Provide temporary heating required for curing or drying of completed installations or for protecting installed construction from adverse effects of low temperatures or high

humidity. Select equipment that will not have a harmful effect on completed installations or elements being installed.

D. Provide temporary lighting with local switching that provides adequate illumination for construction operations, observations, inspections, and traffic conditions.

3.2 TEMPORARY SUPPORT FACILITIES

A. After discussion with Owner regarding type, need, and proposed location of any field offices, storage and fabrication sheds, and other support and staging facilities as necessary to be located on site for construction operations, Contractor shall provide such facilities.

B. Provide waste-collection containers in sizes adequate to handle waste from construction operations, consulting with Owner prior to their location on site. Collect waste daily and, when containers are full, legally dispose of waste off-site. Comply with requirements of authorities having jurisdiction.

C. Install project identification and other signs in locations as needed and approved by Owner to inform the public and persons seeking entrance to Project.

D. Provide durable painted project sign, approximately 2’ x 3’, mounted on scaffolding as directed. Architect shall provide camera-ready art work.

3.3 TEMPORARY SECURITY AND PROTECTION FACILITIES

A. Provide temporary environmental protection, operate temporary facilities, and conduct construction in ways and by methods that comply with environmental regulations and that minimize possible air, waterway, and subsoil contamination or pollution or other undesirable effects.

B. Provide measures to prevent soil erosion and discharge of soil-bearing water runoff and airborne dust to adjacent properties and walkways, according to requirements of authorities having jurisdiction.

C. Provide temporary enclosures for protection of construction and workers from inclement weather and for containment of heat.

D. Where necessary, provide floor-to-ceiling dustproof partitions to limit dust and dirt migration and to separate areas occupied by Owner from fumes and noise.

E. Comply with requirements of authorities having jurisdiction for erecting structurally adequate barricades, including warning signs and lighting.

F. In consultation with Owner, furnish and install site enclosure fence in a manner that will prevent people and animals from easily entering site except by entrance gates.

G. Install and maintain temporary fire-protection facilities. Comply with NFPA 241.

H. See Section 01100 for scaffolding requirements and Drawing SP-1 (Site Plan) for additional information and requirements regarding use of site for staging, storage, etc.

3.4 TERMINATION AND REMOVAL

A. Temporary Utilities: At earliest feasible time, when acceptable to Owner, change over from use of temporary service to use of permanent service.

B. Remove temporary facilities and controls as soon as feasible or practical and no later than on the Date of Substantial Completion. Personnel remaining after Substantial Completion will be permitted to use permanent facilities, under conditions acceptable to Owner.

C. After removal of temporary facilities and equipment, restore site to pre-existing condition.

END OF SECTION 01500

SECTION 01600 - PRODUCT REQUIREMENTS

PART 1 - GENERAL

1.1 SECTION REQUIREMENTS

A. The term "product" includes the terms "material," "equipment," "system," and terms of similar intent.

B. Product Substitutions: Substitutions include changes in products, materials, equipment, and methods of construction from those required by the Contract Documents and proposed by Contractor after award of the Contract.

1. Submit 3 copies of each request for product substitution.
2. Submit requests within 5 days after the Notice to Proceed.
3. Do not submit unapproved substitutions on Shop Drawings or other submittals.
4. Identify product to be replaced and show compliance with requirements for substitutions. Include a detailed comparison of significant qualities of proposed substitution with those of the Work specified, a list of changes needed to other parts of the Work required to accommodate proposed substitution, and any proposed changes in the Contract Sum or the Contract Time should the substitution be accepted.
5. Architect and Owner will review the proposed substitution and notify Contractor of their acceptance or rejection by Change Order**.**

C. Comparable Product Requests:

1. Submit 3 copies of each request for comparable product. Do not submit unapproved products on Shop Drawings or other submittals.
2. Identify product to be replaced and show compliance with requirements for comparable product requests. Include a detailed comparison of significant qualities of proposed substitution with those of the Work specified.
3. Architect will review the proposed product with Owner, and notify Contractor of its acceptance or rejection.

D. Deliver, store, and handle products using means and methods that will prevent damage, deterioration, and loss, including theft. Comply with manufacturer's written instructions.

1. Schedule delivery to minimize long-term storage at Project site and to prevent overcrowding of construction spaces.
2. Deliver products to Project site in manufacturer's original sealed container or packaging, complete with labels and instructions for handling, storing, unpacking, protecting, and installing.
3. Inspect products on delivery to ensure compliance with the Contract Documents and to ensure that products are undamaged and properly protected.
4. Store materials in a manner that will not endanger Project structure.

5. Store products that are subject to damage by the elements, under cover in a weathertight enclosure above ground, with ventilation adequate to prevent condensation.
6. Retain Material Safety Data Sheets (MSDS) for any potential hazardous materials or products stored on site.

E. Warranties specified in other Sections shall be in addition to, and run concurrent with, other warranties required by the Contract Documents. Manufacturer's disclaimers and limitations on product warranties do not relieve Contractor of obligations under requirements of the Contract Documents.

PART 2 - PRODUCTS

2.1 PRODUCT OPTIONS

A. Provide products that comply with the Contract Documents, are undamaged, and are new at the time of installation.

1. Provide products complete with accessories, trim, finish, and other devices and components needed for a complete installation and the intended use and effect.
2. Descriptive, performance, and reference standard requirements in the Specifications establish "salient characteristics" of products.

B. Product Selection Procedures:

1. Where Specifications name a single product or manufacturer, provide the item indicated that complies with requirements.
2. Where Specifications include a list of names of products or manufacturers, provide one of the items indicated that complies with requirements.
3. Where Specifications include a list of names of products or manufacturers, accompanied by the term "available products" or "available manufacturers," provide one of the named items that complies with requirements. Comply with provisions for "comparable product requests" for consideration of an unnamed product.
4. Where Specifications name a product as the "basis-of-design" and include a list of manufacturers, provide the named product. Comply with provisions for "comparable product requests" for consideration of an unnamed product by the other named manufacturers.
5. Where Specifications name a single product as the "basis-of-design" and no other manufacturers are named, provide the named product. Comply with provisions for "comparable product requests" for consideration of an unnamed product by another manufacturer.

C. Unless otherwise indicated, Architect and Owner will select color, pattern, and texture of each product from manufacturer's full range of options that includes both standard and premium items.

END OF SECTION 01600

SECTION 01701 - EXECUTION AND CLOSEOUT REQUIREMENTS

PART 1 - GENERAL

1.1 CLOSEOUT SUBMITTALS

A. Record Drawings: Maintain a set of prints of the Contract Drawings as Record Drawings. Mark to show actual installation where installation varies from that shown originally.

1. Identify and date each Record Drawing; include the designation "PROJECT RECORD DRAWING" in a prominent location.

B. Operation and Maintenance Data for mechanical and electrical equipment (if any): Submit 2 copies of manual. Organize data into three-ring binders with identification on front and spine of each binder, and envelopes for folded drawings. Include the following:

1. Manufacturer's operation and maintenance documentation.
2. Maintenance and service schedules.
3. Maintenance service contracts.
4. Emergency instructions.
5. Spare parts list.
6. Wiring diagrams.
7. Copies of warranties.

PART 2 - PRODUCTS (Not Applicable)

PART 3 - EXECUTION

3.1 EXAMINATION AND PREPARATION

A. Examine substrates and conditions for compliance with manufacturer's written requirements including, but not limited to, surfaces that are sound, level, plumb, smooth, clean, and free of deleterious substances; substrates within installation tolerances; and application conditions within environmental limits. Proceed with installation only after unsatisfactory conditions have been corrected.

B. Before proceeding to lay out the Work, verify layout information shown on Drawings, in relation to property survey and existing benchmarks.

C. Take field measurements as required to fit the Work properly. Where fabricated products are to be fitted to other construction, verify dimensions by field measurement before fabrication and, when possible, allow for fitting and trimming during installation.

3.2 CUTTING AND PATCHING

A. Do not cut structural members or operational elements without prior written approval of Architect and Owner.

B. Where existing services/systems are required to be removed, relocated, or abandoned, bypass such services/systems before cutting to minimize or prevent interruption to occupied areas.

C. Patch with durable seams that are as invisible as possible. Provide patching materials to match and comply with installation requirements specified in other Sections.

3.3 INSTALLATION

A. Comply with manufacturer's written instructions for installation. Anchor each product securely in place, accurately located and aligned with other portions of the Work. Clean exposed surfaces and protect from damage.

B. Clean Project site and work areas daily, including common areas.

3.4 FINAL CLEANING

A. Complete the following cleaning operations before requesting inspection for certification of Substantial Completion:

1. Remove labels that are not permanent.
2. Clean transparent materials. Remove excess glazing compounds. Replace chipped or broken glass.
3. Clean exposed finishes to a dust-free condition, free of stains, films, and foreign substances.
4. Sweep floors broom clean.
5. Clean Project site, yard, and grounds, in areas disturbed by construction activities. Sweep paved areas; remove stains, spills, and foreign deposits. Rake grounds to a smooth, even-textured surface.

3.5 CLOSEOUT PROCEDURES

A. Substantial Completion: Before requesting Substantial Completion inspection, complete the following:

1. Prepare a list of items to be completed and corrected (punch list), the value of items on the list, and reasons why the Work is not complete.
2. Advise Owner of pending insurance changeover requirements.
3. Submit specific warranties, maintenance service agreements, and similar documents.
4. Obtain and submit releases permitting Owner unrestricted use of the Work and access to services and utilities. Include occupancy permits, operating certificates, and similar releases, where applicable.

5. Submit Record Drawings and Specifications, operation and maintenance manuals, and similar final record information.
6. Deliver tools, spare parts, extra materials, and similar items.
7. Make final changeover of permanent locks and deliver keys to Owner.
8. Complete startup testing of systems.
9. Remove temporary facilities and controls.
10. Submit changeover information related to Owner's occupancy, use, operation, and maintenance.
11. Complete final cleaning requirements, including touchup painting.
12. Touch up and otherwise repair and restore marred exposed finishes to eliminate visual defects.

B. Submit a written request for inspection for Substantial Completion. On receipt of request, Architect and Owner will proceed with inspection or advise Contractor of unfulfilled requirements. Architect will prepare the Certificate of Substantial Completion after inspection or will advise Contractor of items that must be completed or corrected before certificate will be issued.

C. Request inspection for Final Completion, once the following are complete:

1. Submit a copy of Substantial Completion inspection list stating that each item has been completed or otherwise resolved for acceptance.
2. Instruct Owner's personnel in operation, adjustment, and maintenance of products, equipment, and systems.

D. Request reinspection when the Work identified in previous inspections as incomplete is completed or corrected.

E. Submit a written request for final inspection for acceptance. On receipt of request, Architect will proceed with inspection or advise Contractor of unfulfilled requirements. Architect will prepare final Certificate for Payment after inspection or will advise Contractor of items that must be completed or corrected before certificate will be issued.

3.6 DEMONSTRATION AND TRAINING

A. Engage qualified instructors to instruct Owner's personnel to adjust, operate, and maintain systems, subsystems, and equipment not part of a system. Include a detailed review of the following:

1. Include instruction for basis of system design and operational requirements, review of documentation, emergency procedures, operations, adjustments, troubleshooting, maintenance, and repairs.

END OF SECTION 01701

SECTION 01732 - SELECTIVE DEMOLITION

PART 1 - GENERAL

1.1 SECTION REQUIREMENTS

A. Items indicated to be removed and salvaged remain Owner's property. Remove, clean, and deliver to Owner's designated storage area.

B. Comply with EPA regulations and hauling and disposal regulations of authorities having jurisdiction.

C. Owner may occupy portions of building immediately adjacent to selective demolition area. Conduct selective demolition so Owner's operations will not be disrupted.

D. It is expected that hazardous materials may be encountered in the Work. If materials suspected of containing hazardous materials are encountered, do not disturb; immediately notify Architect and Owner. Owner will be responsible for identifying, abating, and proper removal of hazardous materials under a separate contract. (See Section 09900 for abatement of lead-based paints.)

PART 2 - PRODUCTS (Not Applicable)

PART 3 - EXECUTION

3.1 DEMOLITION

A. Maintain services/systems indicated to remain and protect them against damage during selective demolition operations. Before proceeding with demolition, provide temporary services/systems that bypass area of selective demolition and that maintain continuity of services/systems to other parts of the building.

B. Locate, identify, shut off, disconnect, and cap off utility services and mechanical/electrical systems serving areas to be selectively demolished.

C. Provide temporary barricades and other protection required to prevent injury to people and damage to adjacent buildings and facilities to remain.

D. Provide and maintain shoring, bracing, and structural supports as required to preserve stability and prevent movement, settlement, or collapse of construction and finishes to remain or construction being demolished.

E. Provide temporary weather protection to prevent water leakage and damage to structure and interior areas.

F. Protect walls, doors, windows, and other existing finish work that are to remain. Erect and maintain dustproof partitions if necessary.

G. Where called for, neatly cut openings and holes plumb, square, and true to dimensions required. Use cutting methods least likely to damage construction to remain or adjoining construction.

H. Promptly remove demolished materials from Owner's property and legally dispose of them. Do not burn demolished materials.

I. Ensure that no materials being removed from building and site end up in wetland areas and farmland.

3.2 DISMANTLING

A. All dismantling shall be done by skilled, experienced trades people using the best techniques and practices of the trade.

B. Any materials or part of the building not designated to be removed, but which in order to allow access (or for any other reason) must be temporarily dismantled, shall be handled and stored with utmost care, as directed, and reinstated in the building as soon as possible. The Architect and Owner shall be notified in advance of any such removal prior to work in that area.

C. Dismantling shall be done to minimize damage to existing materials and to permit their reassembling to match their original appearance.

D. Salvaged materials of historic value, which are not intended for reinstallation, shall remain the property of the Owner and be stored neatly and safely in a space designated by the Owner's Project Representative.

E. State (as Owner) to be given right of first refusal on all materials, hardware, and equipment to be removed from building.

3.3 SCHEDULE OF SELECT ITEMS TO BE REMOVED FROM SITE

A. Wood roof shingles.

B. Window air conditioners.

C. Basement window security screens.

D. See Drawings for specific items to be dismantled and/or removed.

END OF SECTION 01732

SECTION 02300 - EARTHWORK

PART 1 - GENERAL

1.1 SECTION REQUIREMENTS

A. Unauthorized excavation consists of removing materials beyond indicated subgrade elevations or dimensions without direction by Architect. Unauthorized excavation and remedial work shall be at Contractor's expense.

B. Do not interrupt existing utilities serving facilities occupied by Owner. Provide temporary utility services.

C. Section primarily addresses excavation and backfill operations for work on north and south areaways.

PART 2 - PRODUCTS

2.1 MATERIALS

A. Satisfactory Soil: ASTM D 2487 Soil Classification Groups GW, GP, GM, SW, SP, and SM; free of rock or gravel larger than 2 inches in any dimension, debris, waste, frozen materials, vegetation, or other deleterious matter.

B. Unsatisfactory Soil: ASTM D 2487 Soil Classification Groups GC, SC, ML, MH, CL, CH, OL, OH, and PT.

C. Backfill and Fill: Satisfactory soil materials.

D. Subbase: Naturally or artificially graded mixture of natural or crushed gravel, crushed stone, and natural or crushed sand, ASTM D 2940, with at least 95 percent passing a 1-1/2-inch sieve and not more than 8 percent passing a No. 200 sieve.

E. Bedding: Subbase materials with 100 percent passing a 1-inch sieve and not more than 8 percent passing a No. 200 sieve.

F. Drainage Fill: Washed, evenly graded mixture of crushed stone, or crushed or uncrushed gravel, ASTM D 448, Size 57, with 100 percent passing a 1-1/2-inch sieve and not more than 5 percent passing a No. 8 sieve.

PART 3 - EXECUTION

3.1 EARTHWORK

A. Protect subgrades and foundation soils from softening and damage by water, freezing temperatures, or frost.

B. Explosives: Do not use explosives.

C. Excavate to subgrade elevations regardless of character of materials and obstructions encountered.

D. Excavate for structures, building slabs, pavements, and walkways. Trim subgrades to required lines and grades.

E. Utility Trenches: Excavate trenches to indicated slopes, lines, depths, and invert elevations. Maintain 12 inches of working clearance on each side of pipe or conduit.

1. Place, compact, and shape bedding course to provide continuous support for pipes and conduits over rock and other unyielding bearing surfaces and to fill unauthorized excavations.
2. Place and compact initial backfill of satisfactory soil material or subbase material, free of particles larger than 1 inch to a height of 12 inches over the utility pipe or conduit. Place and compact final backfill of satisfactory soil material to final subgrade.

F. Plow strip or break up sloped surfaces steeper than 1 vertical to 4 horizontal to receive fill.

G. When subgrade or existing ground surface to receive fill has a density less than that required for fill, break up ground surface, pulverize, moisture-condition or aerate soil, and recompact.

H. Place backfill and fill in layers not more than 8 inches in loose depth at optimum moisture content. Compact each layer under structures, building slabs, pavements, and walkways to 95 percent of maximum dry unit weight according to ASTM D 698; elsewhere to 90 percent.

I. Grade areas to a smooth surface to cross sections, lines, and elevations indicated. Grade lawns, walkways, and unpaved subgrades to tolerances of plus or minus 1-1/4 inch and pavements and areas within building lines to plus or minus 1/2 inch.

J. Under pavements and walkways, place subbase course material on prepared subgrades and compact at optimum moisture content to required grades, lines, cross sections, and thicknesses.

K. Under slabs-on-grade, place drainage fill on prepared subgrade and compact to required cross section and thickness.

L. Allow testing agency to inspect and test each subgrade and each fill or backfill layer and verify compliance with requirements.

M. Remove surplus satisfactory soil and waste material, including unsatisfactory soil, trash, and debris, and legally dispose of it off Owner's property.

END OF SECTION 02300

SECTION 02751- SITE CONCRETE

PART 1 - GENERAL

1.1 SUMMARY

A. Cast-in-place concrete slabs in areaways.

1.2 QUALITY ASSURANCE

A. Codes and Standards: All work shall be done in accordance with all local governing regulations having jurisdiction. Unless otherwise specified herein, or by local ordinance, all work shall be done in accordance with the latest edition of ACI Building Code 318, ACI Manual of Standard Practice 315, and ACI Specifications for Structural Concrete.

B. All workers shall be thoroughly trained and experienced in the necessary crafts and familiar with the specified requirements and methods needed for proper performance of the work.

1.3 SUBMITTALS

A. Submit concrete mix designs. Obtain approval before placing concrete.

B. Product Data:

1. Submit complete materials list of items proposed for the work. Identify materials source.

2. Submit admixture and accessory item product data.

3. Submit material certificates for aggregates and reinforcing.

C. Submit concrete delivery tickets.

D. Submit concrete test reports.

1.4 PROJECT CONDITIONS

A. Work notification: Notify Owner's Representative at least 24 hours prior to installation of concrete.

B. Establish and maintain required lines, surfaces, and elevations.

C. Do not install concrete work over wet, saturated, muddy or frozen subgrade.

D. Do not install concrete when air temperature is below 40 degrees F. Use of calcium chloride, salt, or any other admixture to prevent concrete from freezing is prohibited.

E. Protect adjacent work.

F. Provide temporary barricades and warning lights as required for protection of project work and public safety.

PART 2 PRODUCTS

2.1 Materials

A. Portland Cement: ASTM C150, Type 1, natural color

B. Aggregate: provide ASTM C33 1/2" maximum size, clean, uncoated crushed stone or coarse aggregate gravel free of materials which cause staining or rust spots; fine aggregate shall be clean, natural sand. Colors to be approved by Architect.

C. Water: clean, fresh and potable

D. Air-entraining admixture: ASTM C260

E. Water-reducing admixture: ASTM C494

F. Provide ASTM C94 ready-mixed concrete. Batch mixing at site is not acceptable. Use ACI 301 Method 1 or Method 2 to determine mix.

G. Indicate water added to mix at job site on each delivery ticket. Show quantity of water added. Site water tempered mixes exceeding specified slump range will be rejected as not complying with specification requirements.

H. Admixtures, bonding materials, curing materials, and other materials as required shall be approved by Owner's Representative.

1. Clear Sealer: “siloxane” coating or approved equal.

I. Design concrete mix to produce normal weight concrete, consisting of Portland cement, aggregate, air-entraining admixture, and water to produce the following properties:

1. Compressive strength: 3500 psi minimum at 28 days

2. Slump range: 2"-4" at point of placement

3. Air content: 6%-7%

2.2 ACCESSORIES

A. Forms: Steel, wood, or other suitable material of size and strength to resist movement during concrete placement and to retain horizontal and vertical alignment until removal. Use forms that are straight and free of distortion and defects. Use flexible spring steel forms or laminated boards to form radius bends as required. Coat forms with a non-staining form release agent that will not discolor or deface surface of concrete.

B. Welded Wire Mesh: Welded plan cold drawn steel wire fabric 6"x6", W1.4 x W1.4 (mat) conforming to ASTM A185. Furnish in flat sheets, not rolls, unless otherwise acceptable to Owner's Representative.

C. Reinforcing bars: Deformed bars of new billet steel conforming to ASTM A615, grade 40, unless otherwise shown.

D. Provide form ties, formwork accessories, and anchorages or size required and of sufficient strength to maintain formwork in proper alignment and tolerances while placing concrete.

E. Joint filler: preformed non-extruding, resilient type filler conforming to AASHTO-M153.

F. Joint Sealant: multi-component pourable urethane sealant for use at joints within concrete paving and between concrete paving and existing concrete or walls

G. Smooth steel dowels: 12" long conforming to AASHTO-M31 Grade 40

H. Type 2 liquid membrane forming compound for curing concrete: AASHTO M148

PART 3 EXECUTION

3.1 GENERAL

A. All methods used in the construction of this item shall conform to the applicable parts of RIDOT Section 500.

B. Examine the subgrade and the conditions under which each part of the concrete work is to be installed. Installation shall not proceed until all unsatisfactory conditions, if any, have been corrected.

3.2 BASE

A. After the subgrade has been prepared in accordance with Section 02300, place a base of processed gravel at optimum moisture content upon it. Roll thoroughly with a power roller and tamp. The gravel base shall be a minimum of 6" in thickness or as indicated.

B. Compact by means of mechanical or pneumatic tampers. The density of the compacted gravel base as tested in the field shall be a minimum of 90% of the laboratory maximum density as determined by ASTM D1557-70.

3.3 FORMS

A. If necessary, set forms to the required grades and lines, rigidly braced and secured. Install a sufficient quantity of forms to allow continuous progress of work and so that form can remain in place at least 24 hours after concrete placement.

B. Coat forms for exposed surfaces with "Nox-Crete ","Sta-Kleen" or "Pro-Cote" or equal form coating as taken from its original container. Apply before the reinforcement is placed. After coating, remove any surplus on the form surface and any on the reinforcing steel. Forms for unexposed surfaces may be thoroughly wetted with water in lieu of coating, immediately before placing concrete. In cold weather coating is mandatory.

C. Check completed formwork for grade and alignment to the following tolerances:

1. Top of form units: not more than 1/8" in 10'

2. Vertical face: not more than 1/4" in 10' on longitudinal axis

3. Location dimensions indicated: 1/4"

4. Cross-sectional dimensions: Plus or minus 1/4"

D. Do not disturb forms for at least 24 hours or until the concrete has adequately hardened. Take care when stripping or chipping the concrete surface. Completely remove wood forms. After removing forms, patch and rub all fins, honey-combing, form tie holes to produce a smooth finish. Clean forms after each use and coat with form release agent as often as required to ensure separation from concrete without damage.

3.4 REINFORCEMENT

A. Storage: Keep bar and mesh free from scale, oil, ice, and structural defects and store out of contact with the ground.

B. Appliances: Adequate chairs and other devices shall be used to maintain proper elevation of bars and mesh reinforcing at all times. All chairs and other devices shall be galvanized. Continuous mesh reinforcing shall be lapped at least one wire space.

C. Preparation: All reinforcing steel within the limits of 1 day's pour shall be in place and firmly wired before concrete pouring starts.

D. Placement: Locate, place, and support reinforcement in accordance with all applicable requirements of ACI 318-77.

3.5 CONCRETE PLACEMENT- GENERAL

A. Placement of concrete shall be according to the accepted practice of ACI 304 and 305.

B. Do not place concrete until subgrade and forms have been checked for line and grade. Moisten subgrade as required to provide a uniform dampened condition. Do not place concrete around other structures until they have been brought to the required grade and alignment. Locate expansion joints as shown on drawings.

C. Place concrete using methods that prevent segregation of the mix and with as little rehandling as possible. Consolidate concrete along the face of forms and adjacent to transverse joints with an internal vibrator. Keep vibrator away from reinforcement and side forms. Assure close contact with all form surfaces by spading, hand working, and vibration. Level off at proper grade to receive finish. Apply vibration directly to concrete unless otherwise approved. The intensity of vibration shall be sufficient to cause flow or settlement of concrete into place. No concrete that has partially hardened or been contaminated by foreign material shall be placed nor shall re-tempered concrete be used. Place all concrete upon clean, well-thawed damp surfaces, free from water, and never upon soft mud or dry porous earth. Do not exceed a free fall of 5 ft.

D. Deposit and spread concrete in a continuous operation between joints. If interrupted for more than 1/2 hour, place a construction joint.

3.6 JOINTS

A. Construct all joints true to line with faces perpendicular to surface plane of concrete.

B. Expansion joints (isolation): Form expansion joints of preformed joint filler strips abutting concrete curbs, utility structures, walks, other fixed objects and where indicated. Add sealant according to manufacturer's instructions. Comply with ASTM C1193 for use of joint sealants as applicable to materials, applications, and conditions indicated.

C. Sawed joints: Form contraction joints with power saws equipped with shatterproof abrasive or diamond rimmed blades. Cut 1/8-inch wide joints to a depth of 1/4 to 1/3 of the depth of the concrete. Saw joints when cutting action will not damage surface and before developing random cracks (12 to 24 hrs.).

3.7 FINISHING

A. Do not perform finishing operations until all bled water and water sheen has left the surface and the concrete has started to stiffen.

B. After striking off and consolidating concrete, smooth surface by screeding and floating. Adjust floating to compact surface and produce uniform texture.

C. After floating, test surface for trueness with a 10' straightedge. Distribute concrete as necessary to remove surface irregularities and refloat repaired areas to provide a continuous smooth finish.

D. Work edges as with an edging tool and round to 1/2" radius unless otherwise indicated. Eliminate all tool marks.

E. After form removal, clean ends of joints and point up any minor honeycombed areas. Remove and replace areas or sections with major defects, as directed by Owner's Representative.

3.8 CURING

A. Protect concrete so that temperature at the surface will not fall below 50 F. and there will be no loss of moisture from concrete surfaces for a period of seven days. Cover concrete surfaces with approved kraft paper, burlap, or polyethylene sheeting.

B. At Contractor's option and only with approval by Owner's Representative, a colorless liquid curing compound may be applied following manufacturer's recommendations.

C. Whenever the temperature is 90 degrees F., the Owner's Representative shall have the right to require a second application of compound at no additional expense.

D. Protect concrete surfaces to which the compound has been applied for at least three days. Retreat any section damaged by rain or in any other way within the three day period at no additional expense. All vehicular and pedestrian traffic is considered injurious. Adequately protect when temperatures of 40 degrees F. or lower occur during placement and curing. Maintain a minimum temperature of 55 degrees F. for the fresh concrete after placement and during the first three days. Protect from freezing for an additional 3 days.

E. Apply clear sealer to concrete pavement. Paving must be completely dry before application of sealer and air must be calm. Cover and protect adjacent surfaces and vegetation prior to application. Wear protective clothing and mask while applying sealer according to manufacturer's recommendations.

3.9 COLD WEATHER CONCRETE

A. Adhere to RIDOT Section 601.03.8

B. Provide adequate heating and protection of the concrete during freezing or near freezing weather. Do not use frozen or icy materials.

3.10 REPAIRS

A. Where new concrete work has been cracked or damaged, remove the entire section. Patching or repairing of surface defects (honeycombed areas) may be permitted if damaged areas are not extensive in Owner's Representative's opinion. Repair work must meet with the approval of the Owner's Representative

3.11 PROTECTION AND CLEAN-UP

A. Sweep and wash all concrete surfaces free from stains, discolorations, dirt, and other foreign matter just prior to final inspection.

B. Protection of finished work is the responsibility of Contractor until final acceptance of all work. Contractor shall replace all damaged work at no additional cost to the Owner.

C. Remove unused materials and equipment and leave the area clean.

END OF SECTION 02751

SECTION 04010 – MASONRY COATING SYSTEM

PART 1 GENERAL

1.1 RELATED DOCUMENTS

A. Drawings and general provisions of the Contract, including General Conditions, Division 01 - GENERAL REQUIREMENTS, and other applicable specification sections in the Project Manual apply to the work specified in this Section.

1.2 SUMMARY

A. This is a master specification for the proprietary products of the KEIM masonry coating systems in a common workflow for the maintenance or restoration of masonry.

B. See Exterior Elevation Drawings indicating brownstone surface areas (by a boxed **KC**) to receive KEIM coating systems.

C. Related Sections include the following:

1. Section 04500 – Masonry restoration
2. Section 09900 – Painting

1.3 REFERENCES

A. General: The publications listed below form a part of this Specification to the extent referenced. The publications are referred to in the text by the basic designation only.

B. ASTM (ASTM):

1. ASTM E 96, "Standard Test Methods for Water Vapor Transmission of Materials."
2. ASTM E 514, "Standard Test Method for Water Penetration and Leakage through Masonry."
3. ASTM G 154, “Standard Practice for Operating Fluorescent Light Apparatus for UV Exposure of Nonmetallic Materials.”

1.4 DEFINITIONS

A. Gentle Cleaner: A detergent used to remove soiling from mineral surfaces.

B. Lime remover: A liquid silicic acid.

C. Water Repellency, non-combustible concentrate: Solvent-free environmentally friendly water repellency.

D. Water repellency, silane based: Solvent-free silane-based water repellency. Also applied to masonry surfaces prior to overcoating with a silicate stain base coat for weathering protection.

E. Silicate Stain, base coat: The first applied coat of the sol silicate stain.

F. Silicate Stain, top coat: The second applied coat of the sol silicate stain.

G. Coating: Silicate coating, coatings, and stain refer to the Silicate Stain.

1.5 SYSTEM DESCRIPTION

A. A materials-compatible highly vapor permeable mineral restoration system offering severe weathering protection and long life for exterior exposure. Install over mineral surfaces.

1. Gentle Cleaner: A neutral biodegradable cleaning concentrate for gentle cleaning of masonry surfaces.
2. Lime Remover: A silicic acid used to open the surface of sintered layers and to remove lime efflorescence and deposits from mineral surfaces.
3. Silicate Stain: An incombustible two coat system with UV and alkaline resistant inorganic pigments comprising one sol silicate mineral stain base coat and one sol silicate mineral stain top coat mixed in the specified dilution-to-stain ratio and color. Stain penetrates the surface and in a chemical reaction with the substrate results in covalent and mechanical bonding forming a hard amorphous microporous layer with extremely high vapor permeability that is unaffected by acids, UV exposure, or air-borne pollutants.

1.6 SUBMITTALS

A. General: Submit under provisions of Section 01300 - SUBMITTALS

B. Product Data: Submit product data showing material proposed. Submit sufficient information to determine compliance with the Drawings and Specifications. Provide published documentation describing materials, characteristics, and limitations.

C. Samples:

1. Submit samples for initial color and/or texture selection. Submit samples of each specified finish. Submit samples in form of manufacturer’s color charts showing full range of colors and finishes available. Where finishes involve normal color variations, include samples showing the full range of variations expected.
2. Submit samples for verification purposes. Additional samples may be required to show fabrication techniques and workmanship.

D. Manufacturer's Instructions: Submit manufacturer’s instructions including technical data sheets, material safety data sheets, mixing instructions, application requirements, special procedures, and conditions requiring special attention.

1.7 QUALITY ASSURANCE

A. Qualifications:

1. Manufacturer Qualifications: Provide evidence that Manufacturer is a firm engaged in the manufacture of the required products, and whose products have been in satisfactory use in similar service for a minimum of ten years.
2. Applicator Qualifications: Provide evidence Applicator is a firm having a minimum of three years of successful application experience with projects similar in type and scope to that required for this Project, and approved by the manufacturer.

B. Regulatory Requirements: Comply with applicable requirements of the laws, codes, ordinances, and regulations of Federal, State, and local authorities having jurisdiction. Obtain necessary approvals from such authorities.

C. Mock-Ups: Prior to application of the work, fabricate and erect mock-ups for each type of finish and application required to verify selections made under sample submittals and to demonstrate aesthetic effects as well as qualities of materials and execution. Build mock-ups to comply with the following requirements, using materials indicated for final unit of work. Locate mock-ups on site in location and of size indicated or, if not indicated, as directed by the Architect. Demonstrate the proposed range of aesthetic effects and workmanship to be expected in the

completed work. Obtain the Architect's acceptance of mock-ups before start of final unit of work.

1. Retain and maintain mock-ups during construction in undisturbed condition as a standard for judging completed unit of work.
   a. When directed, demolish and remove mock-ups from the Project site.
   b. Accepted mock-ups in undisturbed condition at time of Substantial Completion may become part of completed unit of work.

D. Pre-Application Conference: Prior to commencing the application, meet at Project site to review material selections, application procedures, and coordination with other trades. Review mock-ups during pre-application conference. Coordinate with Owner and Architect to establish date and time of the pre-application conference with Contractor, Applicator, manufacturer's representatives, and any trade that requires coordination with the work.

1.8 DELIVERY, STORAGE, AND HANDLING

A. Deliver materials to Project site in supplier's or manufacturer's original wrappings and containers, labeled with supplier's or manufacturer's name, material or product brand name, and lot number, if any.

B. Store materials in their original, undamaged packages and containers, inside well-ventilated area protected from weather, moisture, soiling, extreme temperatures, and humidity.

1.9 PROJECT CONDITIONS

A. Environmental Requirements: Do not apply silicate stain until surfaces are cleaned, substrate repairs are complete and cured, and wet work is completed and nominally dry.
   1. Substrate and ambient air temperature must be above 41 °F (5 °C). Maintain temperature during and after application.
   2. Protect surfaces from rain, high winds, and solar heating from direct sun during application.

1.10 WARRANTY

A. Warranty Period: Warranty period from date of Substantial Completion is 1 year for all listed products with exception for silicate stain which has a warranty period of **15 years** from date of Substantial Completion.

PART 2 PRODUCTS

2.1 MANUFACTURERS

A. Basis of Design: Items specified are to establish a standard of quality for design, function, materials, compatibility, warranty, and appearance. Equivalent products by listed manufacturers are acceptable. The Architect is the sole judge of the basis of what is equivalent.

B. KEIM Mineral Coatings of America, Inc., 10615 Texland Blvd. #600, Charlotte, North Carolina 28273. Telephone 704-588-4811. Email keim-info@keim.com. No substitutions.

2.2 MATERIALS

A. Gentle Cleaner: Neutral pH cleaning concentrate to remove well-adhering dust, fats, oil, and carbon-based pollutants from masonry surfaces. Environmentally harmless and biodegradable. No VOC.

1. Basis of Design: “KEIM Stone Cleaner N”, KEIM Mineral Coatings of America, Inc.

B. Lime Remover: Silicic acid based cleaner diluted with water that reacts immediately upon application to remove sinter layers from troweled or formed surfaces and to increase absorption. No VOC.

1. Basis of Design: “KEIM Lime Remover”, KEIM Mineral Coatings of America, Inc.

C. Sol silicate, Base Coat: Sol silicate base coat in the specified color, conforming to DIN EN 1504-2/2.2, with added water repellency. No biocides. Meets Non-flammable standard DIN 4102-A2. ASTM E 96 Vapor Permeability – 77 perms, ASTM G 154 Accelerated Weathering – no fading, cracking, peeling, ASTM E 514 62-MPH Wind-Driven Rain Test – no water penetration. Less than 1 g/l VOC.

1. Basis of Design: “KEIM Soldalit”, KEIM Mineral Coatings of America, Inc.

D. Sol silicate Base Coat Dilution: add 10% Dilution to the Sol silicate coating

1. Basis of Design: KEIM Soldalit Dilution” KEIM Mineral Coatings of America, Inc.

E. Sol silicate, Top Coat: Sol silicate base coat in the specified color applied un-diluted, conforming to DIN EN 1504-2/2.2, with added water repellency. No biocides. Meets Non-flammable standard DIN 4102-A2. ASTM E 96 Vapor Permeability – 77 perms, ASTM G 154 Accelerated Weathering – no fading, cracking, peeling, ASTM E 514 62-MPH Wind-Driven Rain Test – no water penetration. Less than 1 g/l VOC.

1. Basis of Design: “KEIM Soldalit”, KEIM Mineral Coatings of America, Inc.

F. Silicate Stain, Top Coat: Sol silicate based stain in the specified color, conforming to DIN EN 1504-2/2.2, with added water repellency. No biocides. Meets Non-flammable standard DIN 4102-A2. ASTM E 96 Vapor Permeability – 77 perms, ASTM G 154 Accelerated Weathering – no fading, cracking, peeling, ASTM E 514 62-MPH Wind-Driven Rain Test – no water penetration. Less than 1 g/l VOC.

1. Basis of Design: “KEIM Restauro Lasur Metalics”, KEIM Mineral Coatings of America, Inc.

G. Dilution for Silicate Stain: Provide sol silicate dilution with added water repellency that is designed for the sol silicate stain system. Meets Non-flammable standard DIN 4102-A2. Less than 1g/l VOC.

1. Basis of Design: “KEIM Restauro Dilution”, KEIM Mineral Coatings of America, Inc.

2.3 EQUIPMENT

A. Tools:

1. Gentle Cleaner: Apply by brush or injected through steam cleaner or pressure washer. Clean up with water.
2. Lime Remover: Apply by brush, rinse off with water. Clean up with water.

2.4 FINISHES

A. Gentle Cleaner: Leave surface clean and free of removed soiling.

B. Lime Remover: Leave surface clean from removed particles.

C. Silicate Stain; Base and Top Coats: Apply evenly to a smooth mineral matte finish without voids, “holidays”, or drips.

PART 3 EXECUTION

3.1 EXAMINATION

A. Verification of Conditions: Examine areas and conditions under which the work is to be applied, and notify the Contractor in writing, with a copy to the Owner and the Architect, of any conditions detrimental to the proper and timely completion of the work. Do not proceed with the work until unsatisfactory conditions have been corrected.

1. Verify substrate is secure, sound, dry, and absorbent, and free of dust, dirt, grease, salts, oil-based paints, release agents, and other bond breakers.
2. Verify substrate has no pretreatments or priming materials applied.
3. Verify materials to be coated are fully cured to manufacturer recommendations.
4. Beginning of the work shall indicate acceptance of the areas and conditions as satisfactory by the Applicator.

3.2 PREPARATION

A. Protection: Lay ground cloths and take measures as necessary to protect surfaces subject to contact by products specified by this Section.

B. Substrate: Prepare using products or materials as per manufacturer’s recommendations.

3.3 APPLICATION

A. Conform to reviewed product data, manufacturer's written instructions, and provisions of the Contract Documents.

B. Plan the work properly.

1. Do not apply water repellency over damp substrate or on sun heated substrate.
2. Work ahead of the sun on shaded façades.
3. Work to logical stopping points (corners, seams, architectural features, etc.)
4. Apply stains maintaining a wet edge to desired finish as indicated in FINISHES Article.
5. Unless otherwise stated below, protect from wind and rain prior to, during, and for a minimum 24 hours after application.

C. Gentle Cleaner: Brush Cleaning Method

1. Mechanically remove thick soil deposits.
2. Dilute 1:10 with clean water (1 part gentle cleaner to 10 parts clean water.)
3. Clean contaminated surfaces with diluted gentle cleaner. Allow to rest minimum 1 hour.
4. Reapply diluted gentle cleaner to contaminated surfaces. Rinse from bottom of façade to top and then back down without allowing the façade to dry in-between to prevent loosened soil from re-depositing onto the cleaned surface.

D. Gentle Cleaner: Steam Cleaner or Pressure Washer Method

1. Dilute 1:10 with clean water (1 part gentle cleaner to 10 parts clean water.)
2. Add diluted gentle cleaner to additive reservoir of cleaning equipment. Adjust product delivery for best effect.

3. Clean contaminated surfaces from bottom to top. Rinse cleaned surfaces from bottom of façade to top and then back down with clean water before allowing surfaces to dry to prevent loosened soil from re-depositing onto the cleaned surface.

E. Lime Remover:

1. Dampen substrate with water. When dry to touch, proceed with lime remover.
2. Dilute 1:3 with clean water (1 part lime remover to 3 parts clean water.)
3. Apply to substrate from bottom working to the top. Reaction is immediate.
4. Rinse substrate with clean water from bottom to top and back down to prevent loosened particles from depositing into the surface.

F. Determine Application Ratio:

1. Prepare sample material of silicate stain and silicate dilution in a ratio as directed by KEIM representative for equalization test. Stir well for one minute using 600-800 RPM mixing equipment.
2. Apply sample material to substrate to evaluate equalizing effect. Adjust ratio as determined to obtain Application Ratio. Test by trial application to achieve desired optical equalization in two coats applied minimum 24 hours apart. Evaluate to approve result after final coat has cured minimum 12 hours.

G. Sol silicate coating:

1. Base Coat: Prepare base coat material using approved Application Ratio to determine mixture of Sol silicate dilution.
2. Stir well by hand or 600-800 RPM mixing equipment to ensure color is uniform throughout the material. Keep mixture stirred during application.
   a. Apply base coat of sol silicate coating.
   b. Allow minimum 12 hours drying time.
3. Top Coat: Prepare top coat material of Sol silicate coating. Stir well by hand or 600-800 RPM mixing equipment to ensure color is uniform throughout the material. Keep mixture stirred during application.
   a. Apply top coat of Sol silicate coating, allow to cure 12 hours.

H. Silicate Stain:

1. Top Coat: Prepare base coat material using approved Application Ratio to determine mixture of silicate stain and silicate dilution.
2. Stir well by hand or 600-800 RPM mixing equipment to ensure color is uniform throughout the material. Keep mixture stirred during application.
   a. Apply base coat of silicate stain.
   b. Allow minimum 24 hours drying time.

3.4 CLEANING

A. Clean tools, spills, and accidental drips immediately with plenty of water.

B. Leave applications clean and premises free from residue and debris from work of this Section.

3.5 PROTECTION

A. Provide final protection and maintain conditions in a manner acceptable to the Applicator to ensure silicate stains are without damage at time of Substantial Completion.

END OF SECTION 04010

SECTION 04500 - MASONRY RESTORATION AND CLEANING

PART 1 - GENERAL

1.1 SECTION INCLUDES

A. Repointing of mortar joints as per 3.14 Schedule.

B. Cleaning of exterior masonry surfaces.

C. Application of breathable water-repellent coating.

D. Resetting cap stones on walls of areaways, north and south sides.

E. Replacement of surface brownstone components, including quoin blocks, keystones, and window sills with new brownstone to match existing. (See exterior elevations and legend for specific locations).

F. Cutting back, tooling and re-dressing exfoliated brownstone surfaces to receive brownstone patching mortar where shown on elevations.

G. Parging of exterior field stone walls below grade.

H. Stucco of new exterior and interior concrete block surfaces.

I. Sealing of cracks and joints as per Schedule.

1.2 RELATED SECTIONS

A. Section 01200 and Bid Form – Alternates and Unit Prices.

B. Section 04010- Application of silicate-based coating system on brownstone surfaces.

C. Section 07600 – Flashing and Sheet Metal (Chimney reglet counterflashing).

1.3 REFERENCES

A. ANSI A41.2 - Building Code Requirements for Reinforced Masonry.

B. International Masonry Industry All-Weather Council (IMIAC) - Recommended Practices and Guide Specifications for Cold Weather Masonry Construction.

1.4 SUBMITTALS

A. Submit product data under Division 1.

B. Provide product data on cleaning solutions, mortar mix, sealants and brownstone patching material.

C. Submit following samples:

1. Cleaning of masonry surfaces.
2. Pointing mix.
3. Brownstone patching.
4. Brownstone (to replace existing).

D. Submit manufacturer's application instructions.

1.5 QUALITY ASSURANCE

A. Masonry Restorer: Company with five years documented experience in historic masonry restoration, including demonstrated experience in brownstone restoration.

B. Brownstone Restorer using Jahn Products: Company certified by Cathedral Stone Co.

1.6 FIELD SAMPLES / MOCK-UPS

A. Provide samples as directed by Architect.

B. Clean a 4'-0 x 4'-0 test panel of each type of masonry to determine appropriate cleaning method and degree of cleanliness. Repeat as necessary to arrive at approved sample and as directed by Architect.

C. Cut out stone mortar joints (approx. 4 LF) to illustrate method of mortar removal and absence of damage to stone work. Repeat as necessary to achieve satisfactory results. Replace or repair damaged stone at no additional cost to Owner.

D. Repoint up to 4 LF of joint to represent appearance, color, mortar composition and joint tooling. Architect to indicate sample location in field. Repeat as necessary to achieve an acceptable match to original joints (as determined by Architect).

E. Construct field sample of Jahn brownstone patching, illustrating color, texture, method of application, tooling, etc. Sample size to be determined by Architect and shall include finish tooling.

F. Demonstrate method of cutting back exfoliated and patched brownstone and installing new brownstone piece as specified.

G. Locate samples and mock-ups where directed by Architect at no additional cost to Owner.

H. Repeat procedures as necessary to achieve satisfactory results as determined by Architect.

I. Accepted samples shall be clearly marked and shall remain in place through the course of the project. Accepted samples may remain as part of the Work.

1.7 PRE-INSTALLATION CONFERENCE

A. Convene a pre-installation conference one week prior to commencing work of this Section.

B. Require attendance of parties directly affecting work of this Section.

C. Review conditions of installation, installation procedures, and coordination with related work.

1.8 DELIVERY, STORAGE AND HANDLING

A. Deliver products to site and store and protect products as required under Division 1.

B. Deliver masonry neatly stacked and tied on pallets. Store clear of ground, cover with waterproof covering, and secure from theft and/or vandalism.

C. Furnish all materials in manufacturer's packaging, including instructions for use.

1.9 ENVIRONMENTAL REQUIREMENTS

A. Do not lay masonry, repoint, caulk, wash down or wet surfaces when temperature may drop below 40° F within 24 hours.

B. Follow cold weather procedures in accordance with ANSI A41.2 when temperatures may drop below 40° F.

C. Do not use processes creating dust, dirt and spray when wind is over 10 miles/hr.

D. Strictly comply with pertinent codes and regulations, including OSHA regulations, related to masonry work.

1.10 PROTECTION

A. Protect passers-by and surrounding area from wind drift during any procedures that generate dust, dirt or spray. Note: Contractor shall be required to completely enclose scaffolding to prevent wind drift during procedures that generate spray, dust or debris.

1.11 SEQUENCING/ SCHEDULING

A. Perform cleaning, raking out of mortar joints and repointing of exterior masonry in consultation with Owner and Architect and in compliance with relevant regulations.

B. Perform repointing after cleaning and applying water repellent coating (if required) to existing masonry surfaces.

1.12 TESTING

A. Contractor shall engage a certified testing agency or laboratory to test up to four existing mortar samples selected by Architect to determine compressive strength and material composition. Note: Original mortar as determined by Architect shall be tested. Submit test results to Architect for review.

PART 2 - PRODUCTS

2.1 MANUFACTURERS: CLEANING MATERIALS

A. ProSoCo, Inc. of Kansas City, KS.

B. Substitutions: Subject to prior review and approval by Architect.

2.2 CLEANING MATERIALS

A. Cleaning Agent: Sure Klean Restoration Cleaner and/or Sure Klean Heavy Duty Restoration Cleaner or approved equal.

B. Water: Clean and potable.

2.3 MORTAR MATERIALS

A. Water: Clean and free of deleterious amounts of oils, acids, alkalies, and organic matter.

B. Cement: ASTM C150, Type I or II or Federal Spec. SS-C-192G(3) with not more than 0.60% alkali (sodium oxide) or not more than 0.15% water soluble alkali by weight (in combination of lime and cement).

C. Hydrated Lime: Type S, ASTM C207.

D. Sand: ASTM C144. Provide sand of constant color, as approved, and delivered from the same source at the same time.

E. Mortar used for repointing shall match original (based on tests) in composition, color and appearance as closely as possible.

1. Provide highly plastic mortar, in accord with ASTM C270, Type N with high water retentivity; tinted as directed by the Architect, with no anti-freeze liquids, salts or other substances to lower the freezing point.

a. Mix cementitious materials and aggregate with the maximum amount of water consistent with satisfactory workability for a minimum period of time, three minutes, in a drum type batch mixer.
b. Measure mortar materials so that the specified proportions can be controlled and accurately maintained during the entire progress of the work. Measure mortar materials in approved containers. Do <u>not</u> measure materials with shovels.
c. Measure all materials for mortars by volume; sand and cement mixed dry, lime added and then water added to bring to the proper consistency for use, and retempering as required. Do not use mortar that has stood for more than one and one-half (1-1/2) hours.

2. <u>Note:</u> The following mortar composition may be used as a starting point for developing a pointing mortar mix:

1 part hydrated lime
1/4 part Portland cement
3 parts sand, suitable for repointing, to match original

3. It may be necessary to add a color additive and to make adjustments to mortar mix to achieve proper match.

F. Grout for thin cracks: Jahn M30 and M40 Micro-Injection Grout by Cathedral Stone Products.

2.4 MASONRY MATERIALS

A. Patching materials for brownstone shall be Jahn M70, furnished by Cathedral Stone Products, Inc. of Hanover, MD. Tel: 410-782-9150. Website: Cathedralstone.com

1. Color, texture and tooling of patching material shall match existing brownstone after cleaning.

B. Epoxy adhesive: Two-part polyester resin adhesive, knife-grade with a 15-30 minute cure at 70°F.

C. Brownstone: Portland brownstone, natural bed, (salvaged or new) to match existing.

1. Substitutions: Subject to prior review and approval by Architect.

D. Water Repellent Coating: Sure Klean Weather Seal Natural Stone Treatment WB Plus or SL100 Water Repellent by ProSoCo, Inc. (800-255-4255)

E. Crack injection grout: Jahn M30 (for cracks 3/16” to 9/16”) and M40 (for hairline cracks up to 3/16”) by Cathedral Stone Products.

2.5 FASTENERS

A. For securing and bonding stone to stone and for fractured stone repairs, use stainless steel threaded rod, 1/8" diameter, minimum 4" long, set in epoxy.

2.6 CAULKING MATERIALS

A. Joint sealants (for exposed masonry joints on horizontal stone, and for joints between stone and wood at openings): 2-part polyurethane (equal to TREMCO Dymeric sealant), tinted to match original mortar. Sand or finely crushed stone should be set in sealant as necessary to match original mortar joints.

B. Backer rod: Polyethylene foam rod or polyethylene tape.

PART 3 - EXECUTION

3.1 EXAMINATION

A. Verify that surfaces to be cleaned and restored are ready for work of this Section.

B. Beginning of installation means acceptance of existing surfaces and conditions.

3.2 GENERAL INTENT: RESTORATION OF EXTERIOR MASONRY SURFACES

A. STONE REPOINTING: It is the intent of this specification to create sound, weathertight joints and a seamless appearance between old and new mortar joints insofar as possible.

B. BROWNSTONE: Brownstone quoins, voussoir arch blocks, watertable coursing, window sills, etc. exhibit a wide range of conditions. It is the intent of this specification to patch brownstone where limited portions of a stone are deteriorated and subject to further water penetration, and to replace sections of brownstone with new or salvaged material where patching is not feasible. See exterior elevations which identify specific components to be replaced, patched, and/or coated.

3.3 PREPARATION

A. Protect elements surrounding the work of this Section from damage or disfiguration.

B. Carefully remove and store fixtures, fittings, finishing hardware, and accessories.

C. Close off, seal, mask, and/or board up areas, materials, and surfaces not receiving work of this Section to protect from damage. Protect and seal off exterior of all windows and doors affected by this work.

D. Construct dust-proof and weather-proof partitions or enclosures to protect the public.

E. Provide sand or waterproof dams to divert flowing water to exterior drains if necessary.

3.4 GENERAL PROCEDURES FOR MASONRY RESTORATION

A. 4'-0 x 4'-0 test areas will be designated by Architect to test chemicals, techniques, and procedures required to clean stone, remove mortars, and repoint stone joints.

B. Clean all masonry surfaces to achieve desired result (as determined by Architect) prior to performing repointing of masonry.

3.5 CLEANING EXISTING MASONRY

A. Because of a variety of masonry materials and conditions, two or more cleaning methods and materials may be required to achieve desired results. It may be necessary to employ different cleaning methods and products for cleaning granite and brownstone.

B. Several test patches will be necessary to establish exact procedures and materials.

C. No mechanical or abrasive techniques will be permitted.

D. Use cleaning detergents and/or chemicals in strict accordance with manufacturer's instructions and environmental regulations.

E. Clean all exposed masonry surfaces of atmospheric dirt, mildew, efflorescence, carbon stains and excess mortar, so as to restore masonry surfaces to a condition closer to their original appearance as directed by Architect. It is the intent of this procedure to remove excess dirt and discoloration, but not to attempt to make the building look new. Only cleaning which does not damage the existing masonry will be employed.

F. The gentlest means necessary to achieve acceptable results shall be used for each masonry surface and each condition, using the following steps, in order:

STEP #1 CLEANING WITH WATER: Apply a gentle, steady water wash over masonry surfaces using approximately 60 psi of water. Allow water to run over surface until dirt is loosened and begins to dissolve. Follow gentle wash with a high pressure wash not to exceed 600 psi, and being careful not to damage masonry or mortar. Protect openings as necessary.

STEP #2 CLEANING WITH MILD DETERGENT: Apply a mild solution of warm water and a gentle, non-ionic masonry detergent additive and scrub with a natural bristle brush. Rinse with water pressure not in excess of 600 psi. Protect openings as necessary.

STEP #3 CHEMICAL CLEANING: If above options do not achieve acceptable results (as determined by Architect), proceed with chemical cleaning of masonry surfaces using Sure Klean Restoration Cleaner and the following procedures and following all safety precautions stipulated by manufacturer:

1. Protect all surrounding window glass, aluminum, painted surfaces and foliage with polyethylene or other proven protective material.

2. Pre-wet surface to be cleaned with clean water.

3. Dilute chemicals to the greatest extent possible, while still achieving satisfactory results.

4. Apply the cleaning solution liberally to the masonry surface using low pressure spray (50 PSI), roller, or brush.

5. Allow the cleaning solution to remain on the surface for 3 to 5 minutes. Reapply. Light scrubbing of the surface will improve cleaning results especially where high pressure rinsing equipment is not available.

6. Rinse the treated area thoroughly being sure that water pressure used does not cause damage to the masonry (water pressure shall not exceed 600 PSI). Rinse from bottom of treated area to top, covering each section of surface with a concentrated stream of water.

7. To avoid streaking on vertical walls, care should be taken to keep wall surface immediately below area being cleaned wet and rinsed free of cleaner rundown residues.

8. Do not apply restoration cleaner with high pressure spray. Such application will drive the chemicals deep into the surface, making it difficult to rinse

completely. Discoloration of the surface may result.

9. Cleaning process shall be repeated where necessary and as directed by Architect to remove concentrated staining.

STEP#4 STRONGER CHEMICAL CLEANING: If above steps do not achieve acceptable results (as determined by Architect), follow same procedures using Sure Klean Heavy Duty Restoration Cleaner or other approved cleaning agents.

3.6 CLEANING NEW MASONRY

A. Verify mortar is fully set and cured.

B. Clean surfaces and remove large particles with wood scrapers, brass or nylon wire brushes.

C. Saturate masonry with clean water and flush loose mortar and dirt.

D. Scrub walls with non-acidic type detergent solution using stiff brush.

E. Thoroughly rinse and wash off cleaning solution, dirt, and mortar crumbs using clean, pressurized water.

3.8 REPOINTING

A. Cut out soft, deteriorated and loose mortar in masonry joints to sound original mortar, or to a depth that is equal to 2-1/2 times the width of the joint, whichever is greater.

B. Remove old joint compounds, sealants, and patching materials taking special care not to damage masonry surfaces. Any chemical means for removal of sealants must not damage stone in any way and must be approved by Architect prior to execution.

C. For raking out mortar joints, utilize only those tools which will cause the least amount of damage to masonry. Power tools may be used only where it can be demonstrated that there is no damage to masonry units. Any damage to masonry caused by tools, as determined by Architect, shall be replaced in-kind at no cost to Owner.

D. Remove mortar from both surfaces of adjacent masonry and cut square at the back of the joint.

E. Employ a regulated and light application of compressed air to clean masonry dust and debris.

F. Pre-moisten joint and apply pointing mortar. Pack tightly in maximum 1/4 inch layers. Leave a smooth, compact joint which matches the joint profile of original joints.

G. Masonry surrounding joint shall be left in a clean condition following repointing. Each worker shall be responsible for ensuring that his/her area is clean of excess mortar at the end of each day. No overall masonry cleaning shall be necessary at the end of the job.

1. A dry natural bristle brush may be used to remove excess mortar from masonry surfaces during repointing.

2. Finished mortar joint shall match existing (original) tooling as determined by Architect.

3. Following tooling of the joints, a wet sponge or brush may be used to wipe off excess mortar. Ensure that face of bricks is free of mortar and mortar residue.

H. Moist cure for 72 hours.

I. For all exposed horizontal joints on top of ledges, window sills, water table, etc., apply joint sealant as follows:

1. Ratio of joint width to sealant depth should be about 2 to 1 as recommended by sealant manufacturer.

2. Use appropriate backer rod for wide, deep joints and polyethylene tape for joints or cracks too shallow to allow foam rod.

3. Prepare joints as stated above. Provide clean, sound substrate for optimum sealant adhesion. Apply primer as recommended by manufacturer.

4. Mask joint to assure neat sealant lines. Tooling should be completed in one continuous stroke immediately after sealant application and before skin forms. Masking should be removed immediately after tooling. Set sand (or pulverized stone to suit) in sealant as necessary to match original mortar joint.

5. Follow manufacturer's recommendations for method of application.

J. When all stabilizing repair and repointing of masonry have been completed, and loose and non-original mortar has been removed, wash entire wall down as required to remove all grime, dirt, residual particles, excess mortar, etc. Do not use any chemicals or cleaning methods that will alter the appearance or integrity of stone or mortar joints.

3.9 BROWNSTONE PATCHING (using Jahn M70 Brownstone Patching Compounds only)

A. Check all brownstone for condition of stone. Slightly damaged and deteriorated brownstone surfaces that are relatively small in area and do not warrant brownstone 'dutchmen' (as determined by Architect in consultation with Contractor) shall be cut back to sound stone. Establish a new surface by incrementally patching with Jahn materials as follows:

1. Patching material shall be mixed according to the manufacturer's instruction using two consistencies:

a. A slurry coat consisting of a very wet mix.
b. A patching mix with a ratio of 350 ml of water to 1500 ml of material, near the consistency of wet sand.

2. Mixes may vary according to weather conditions.

3. Material must be used within 30 minutes of mixing.

4. In preparation for patching, all paint and loose or flaky pieces of stone shall be removed from the area to be patched. An additional 1/4" to 1/2" of stone should then be removed.

   a. Cutting out of stone is best done with a hammer (hand or air) and tooth chisels.
   b. Leave a rough or chiseled surface for best possible adhesion of patching material.
   c. Clean all dust and debris from surface of stone to be patched.
   d. Where patching material will be applied to a horizontal walking surface, a minimum of 1/2" of stone shall be cut back.

5. The edge of the area to be patched shall be cut out to form a vertical wall a minimum of 1/4" deep and perpendicular to the face of the stone.

   a. There shall be no feathered edges for the patching material.

6. Cracks to be cut out to a minimum width of 1/8" and to a minimum depth of 1/2". Where the sides of the crack are broken or spalled, the edges shall be cut as specified above to eliminate feathered edges.

7. Where patches are over 2" deep, insert stainless steel threaded pins into holes drilled into stone.

   a. Secure pins in pre-drilled holes using epoxy adhesives.

8. Apply material to area to be patched according to manufacturer's instructions.

   a. Mask around work area to protect adjacent surfaces.
   b. Dampen surfaces to be patched.
   c. Apply slurry coat to all surfaces to be patched.
   d. Apply stiff mix of patching material, building surface up slightly above adjacent surfaces.
   e. Use blade to scrape away excess material. Do not trowel patching material.

9. After patching material is in place and set up, tool surface to match masonry unit being restored.

3.10 RE-DRESSING OF BROWNSTONE

A. Where noted on Drawings or as required, remove exfoliated and loose stone.

B. Tool and re-dress remaining stone surfaces with pneumatic carving tools, stone chisels and/or diamond honing/grinding wheels to replicate original texture and finish.

C. Consult Architect if retooling process produces a finish surface that is set back more

than ¾" from original face of stone.

D. Where necessary, remove and replace exfoliated stones with new brownstone (2" minimum thickness) set flush.

3.11 RESETTING OF CAPSTONES

A. Carefully remove metal handrails and set aside for re-installation.

B. Identify, label, and carefully remove stones to be reset or repositioned as noted on drawings. Provide graphic documentation indicating labeling systems for all cut stone components. Store and protect on site.

C. Contractor shall be responsible for breakage due to mishandling or negligence.

D. Inspect exposed conditions. Inform Architect of substandard conditions requiring structural analysis.

E. Prepare substrate for proper re-setting of stone pieces. Create a sound and stable bearing condition using natural stone and mortar.

F. Re-set stone pieces in original location with mortar. Color and tooling of mortar to match existing.

G. Install/re-install metal railings as shown on drawings. Core drill for installing stanchions. See 05520.

H. As work proceeds and upon completion, remove excess mortar, smears, efflorescence, etc. from stone surfaces.

3.12 STONE CRACK REPAIRS

A. Use Jahn M30 Micro-Injection Grout for hairline cracks and fissures up to 3/16” in width. Use Jahn M40 Crack Injection Grout for stone cracks ranging in width from about 3/16 to 9/16” or larger. Follow manufacturer’s written instructions carefully.

3.13 CLEANING

A. As work proceeds and upon completion, remove excess mortar, droppings, smears, stains, efflorescence, or other unsightly excess resulting from work of this Section. Clean surrounding surfaces.

3.14 STUCCO (See Section 09240)

3.15 **SCHEDULE**

A. Masonry Cleaning:

1. Step #1 cleaning of all exposed masonry surfaces.

2. Steps #2, 3, and 4 cleaning in localized areas (e.g. rust staining, graffiti) as needed for best results, as directed by Architect.
3. Masonry surfaces, after spot-repointing and setting railings.

B. Water Repellent Coating: Apply to clean brownstone water table course surfaces on all 4 sides of building at first floor level, as noted on drawings. Apply to NE and SE chimneys.

C. Raking Out and Repointing of Masonry Joints:

1. Repointing: 100% of all brick and stone joints (except where noted). See Alternates 1 and 2.

2. Repointing of all 4 chimneys under Base Bid (100% for NE and SE chimneys; up to 50% for NW and SW chimneys)

D. Brownstone Patching and Replacement:

1. See Exterior Elevations for specific locations.

E. Re-setting of existing granite cap stones at north and south areaways.

F. Joint sealants: Apply to all masonry joints facing skyward and joints between wood and masonry where necessary.

G. Grout injection of micro-cracks as directed, in accordance with manufacturer's recommendations. Assume **up to 20 LF.**

H. Replacement of up to 100 badly deteriorated bricks using salvaged brick on site, as directed by Architect. See 01200 and Bid Form for Unit Prices.

I. Parging of field stone foundation wall, where exposed after excavation, with a cement-based coating.

END OF SECTION 04500

SECTION 04810 - UNIT MASONRY ASSEMBLIES

PART 1 - GENERAL

1.1 SECTION REQUIREMENTS

A. Submittals:

1. Product data on brick and concrete masonry units.
2. Material Certificates: For each type of product indicated. Include statements of material properties indicating compliance with requirements.
3. Field sample of veneer brick and CMU panels and mortar for approval.

B. Comply with ACI 530.1/ASCE 6/TMS 602.

PART 2 - PRODUCTS

2.1 MASONRY UNITS

A. Concrete Masonry Units: ASTM C 90 Weight Classification, Normal Weight:
1. Special shapes for lintels, corners, jambs, sash, control joints, and other special conditions.

B. Building Brick: ASTM C 62

1. New brick to resemble existing brick as selected by Owner and Architect.

2.2 MORTAR AND GROUT

A. Mortar: ASTM C 270 proportion specification.

1. Masonry Cement.
2. Do not use calcium chloride in mortar.
3. For reinforced masonry, use Type S.
4. For exterior, above-grade, load-bearing and non-load-bearing walls; for interior load-bearing walls; for interior non-load-bearing partitions, and for other applications where another type is not indicated, use Type N.
5. For finish pointing new and existing brick, use mortar mix to resemble existing in color, material composition, etc.

B. Grout: ASTM C 476 with a slump of 8 to 11 inches.

2.3 REINFORCEMENT, TIES, AND ANCHORS

A. Steel Reinforcing Bars: ASTM A 615/A 615M, Grade 60 (Grade 400).

B. Joint Reinforcement: ASTM A 951.

1. Coating: Mill galvanized at interior walls and hot-dip galvanized at exterior walls.
2. For single-wythe masonry, provide either ladder design or truss design.

2.4 MISCELLANEOUS MASONRY ACCESSORIES

A. Compressible Filler: Premolded strips complying with ASTM D 1056, Grade 2A1.

B. Preformed Control-Joint Gaskets: Designed to fit standard sash block and to maintain lateral stability in masonry wall; made from styrene-butadiene rubber or PVC.

C. Proprietary Acidic Masonry Cleaner: Product expressly approved for intended use by cleaner manufacturer and manufacturer of masonry units.

PART 3 - EXECUTION

3.1 INSTALLATION, GENERAL

A. Cut masonry units with saw. Install with cut surfaces and, where possible, cut edges concealed.

B. Mix units for exposed unit masonry from several pallets or cubes as they are placed to produce uniform blend of colors and textures.

C. Matching Existing Masonry where required: Match coursing, bonding, color, tooling, and texture of existing masonry.

D. Stopping and Resuming Work: Rack back units; do not tooth.

E. Fill all cores in hollow concrete masonry units with grout.

F. Tool exposed joints slightly concave when thumbprint hard, unless otherwise indicated.

G. Keep cavities clean of mortar droppings and other materials during construction.

H. Reinforce horizontal joints with continuous masonry wire reinforcing at each block course.

I. Anchor ends of CMU infill walls within window masonry opening to existing structure with ¾” x 8” stainless anchors or dowels spaced vertically at each block course.

J. Anchor bottom of CMU infill walls with rebar at 16” o.c. horizontally. Anchor rebar into existing masonry with epoxy grout.

3.2 PARGING

A. Parge masonry walls, where indicated, in two uniform coats with a steel-trowel finish. Form a wash at top of parging and a cove at bottom. Damp cure parging for at least 24 hours.

3.3 CLEANING

A. Clean masonry as work progresses. Remove mortar fins and smears before tooling joints.

B. Final Cleaning: After mortar is thoroughly cured, clean exposed masonry.

1. Wet wall surfaces with water before applying acidic cleaner, then remove cleaner promptly by rinsing thoroughly with clear water.
2. Clean masonry with a proprietary acidic cleaner applied according to manufacturer's written instructions.

END OF SECTION 04810

SECTION 05520 - RAILINGS

PART 1 - GENERAL

1.1 SECTION REQUIREMENTS

A. Structural Performance: Design, engineer, fabricate, and install railings to withstand structural loads required by ASCE 7.

B. Submittals: Product Data and Shop Drawings.

1.2 RELATED SECTIONS

A. Section 04500- Masonry Restoration: Resetting stone caps

PART 2 - PRODUCTS

2.1 METALS

A. Steel Plates, Shapes, and Bars: ASTM A 36/A 36M.

B. Steel Pipe: ASTM A 53, Schedule 40.

C. Steel Tube: ASTM A 500.

D. Brackets, Flanges, and Anchors: Cast or formed metal of same type of material and finish as supported rails, unless otherwise indicated.

2.2 OTHER MATERIALS

A. Non-shrink, Nonmetallic Grout: ASTM C 1107; recommended by manufacturer for exterior applications. Tint grout to match surrounding material.

B. Stainless steel masonry anchors to suit.

2.3 RAILING SYSTEMS

A. New custom steel pipe railings, 2” diameter, and related components, to match existing around north areaway, as per drawings.

2.4 FABRICATION

A. Assemble railing systems in shop to the greatest extent possible. Use connections that maintain structural value of joined pieces.

B. Form changes in direction of railing members by bending, by mitering at elbow bends or by use of prefabricated fittings as shown on drawings and to match existing.

C. Fabricate railing systems for connecting members by welding and/or with concealed mechanical fasteners and fittings.

D. Provide wall brackets, flanges, miscellaneous fittings, and anchors to connect handrail and railing members to other construction.

2.5 FINISHES

A. Steel Railings: Cleaned and shop primed, ready for field painting under 09900.

PART 3 - EXECUTION

3.1 INSTALLATION

A. Fit exposed connections accurately together to form tight, hairline joints.

B. Set railings accurately in location, alignment, and elevation and free from rack.

C. Anchor posts in concrete slab by forming or core-drilling holes 5 inches (125 mm) deep and 3/4 inch (20 mm) greater than OD of post. Completely fill annular space between post and concrete with non-shrink, nonmetallic grout. Provide conical wash at base of stanchions. Use tinted grout to match color of surrounding material. Apply stone dust to grout before curing.

3.2 SCHEDULE

A. New steel railings at north areaway (along North Court Street) to match,

B. Modifications to existing handrail as required (affected by its re-installation on south side along South Court Street)). Add to and weld 2” diameter pipe to extend stanchions as required to ensure proper anchorage into new concrete slab. Ensure top of rail is a constant 3’-6” above cap stones.

END OF SECTION 05520

SECTION 06100 – ROUGH CARPENTRY

PART 1 - GENERAL

1.1 WORK INCLUDED

A. New wood blocking, shims, etc. as required to repair and restore finish trim, windows, and doors, and for replacing deteriorated roof sheathing, etc. (under Allowance No.1).

1.2 RELATED WORK

A. Section 06200 - Finish Carpentry
B. Section 01200 – Allowances for wood repairs

1.3 QUALITY ASSURANCE

A. Lumber Grading Rules and Wood Species to be in conformance with PS 20.
B. Grading rules of following associations apply to materials furnished under this Section:
   1. Western Wood Products Association (WWPA).
C. Plywood Grading Rules:
   1. Softwood Plywood - Construction and Industrial: PS 1.
D. Grade Marks:
   1. Identify lumber and plywood by official grade mark.
   2. Lumber:
      a. Grade stamp to contain symbol of grading agency certified by Board of Review, American Lumber Standards Committee, mill number or name, grade of lumber, species or species grouping or combination designation, rules under which graded where applicable, and condition of seasoning at time of manufacture.
      b. MC-15 or KD: Maximum of 15% moisture content.
   3. Softwood Plywood:
      a. Conforming to PS 1.

E. Requirements of Regulatory Agencies:

   1. Preservative treated lumber and plywood: American Wood Preservers Bureau, Quality Mark.
   2. Pressure treated material: American Wood Preservers Bureau Standards.
   3. Working stresses: National Design Specifications, National Forest Products Association.

F. Reference Standards:

   1. American Society for Testing and Materials (ASTM):
      a. ASTM A 526, Steel Sheet, Zinc Coated (Galvanized) by the Hot-Dip Process, General Requirements.

b. ASTM D 226, Asphalt-Saturated Organic Roofing Felt for use in Membrane Waterproofing and Built-up Roofing.

2. American Wood Preservers Bureau (AWPB):
   a. AWPB LP-2, Standard for Softwood Lumber, Timber, and Plywood Pressure Treated with Water-borne Preservatives for Above Ground Use.
3. Product Standards (PS):
   a. PS 20, American Softwood Lumber Standard.

1.4 SUBMITTALS

A. Submit product literature on fasteners.
B. Provide certifications for pressure-treated wood.

1.5 PRODUCT HANDLING

A. Immediately upon delivery to job site, place materials in area protected from weather and high humidity.

1.6 JOB CONDITIONS

A. Time delivery and installation of wood materials to avoid extended on-site storage, and avoid delaying work of other trades.

PART 2 - PRODUCTS

2.1 MATERIALS

A. Lumber:

1. Dimensions: Specified lumber dimensions are nominal; actual dimensions to conform to PS 20.
2. Surfacing: Surface four sides (S45), unless specified otherwise.
3. Species for Framing Members: Hem-Fir #2, F_b=1000 psi (single) or 1150 psi (repetitive use), E=1.4 x 10^6psi, kiln-dried; maximum moisture content: 15%.
4. Furring and Grounds: Spruce or pine, #3 grade.

B. Plywood:

1. Exterior wall and roof sheathing: Exterior, Structural I sheathing. Span Rating: Not less than 32/16. Thickness: To match existing.

C. ENGINEERED WOOD PRODUCTS:

1. Laminated-Veneer Lumber: A composite of wood veneers with grain primarily parallel to member lengths, manufactured with an exterior-type adhesive complying with ASTM D 2559. Product has the following allowable design values as determined according to ASTM D 5456:

a. Extreme Fiber Stress in Bending, Edgewise: 2850 psi for 12-inch nominal- depth members.
b. Modulus of Elasticity, Edgewise: 2,000,000 psi (13 800 MPa).

D. Building Paper: Asphalt-saturated felt, ASTM D 226, 30 lb., non-perforated.

E. Preservative Treated Wood Products:

1. Water-borne preservatives for painted, stained, or exposed natural wood product; AWPB LP-2 for above ground applications.

F. Rough Hardware:

1. Bolts, Nuts, Washers, Lug Screws, and Expansion Shields: Standards units, Galvanized (stainless steel in exterior applications), sized as required or shown.

2. Nails and Staples: Standard size, type and gauge for application.

3. Joist Hangers: 18 ga. minimum, galvanized.

4. Bar or Strap Anchors: ASTM A 525, galvanized, 18 ga. minimum or as indicated on the drawings.

2.2 MOISTURE CONTENT

A. Except as otherwise indicated, provide lumber of 15 percent or similar indication in grade markings or certification of grade.

PART 3 - EXECUTION

3.1 INSPECTION

A. Verify that surfaces to receive rough carpentry materials are prepared to required grades and dimensions.

3.2 INSTALLATION

A. Structural Framing:

1. Install structural framing members where shown, in sizes indicated and at specified intervals. Position studs level, plumb, and true.

B. Plywood Roof Sheathing:

1. Install with face grain across supports. Nail 6 inches o.c. along panel edges and 10 inches o.c. at intermediate supports with 8d common nails (or equivalent). Match existing installation.

C. Pressure-treated Wood Products:

1. Provide pressure-treated wood for all framing, blocking, furring, nailing strips built into exterior masonry walls, and wood in contact with concrete and masonry.

2. Apply two (2) brush coats of same preservative used in original treatment to all sawed or cut surfaces of treated lumber.

3.3 WOOD BLOCKING, AND NAILER INSTALLATION

B. Install where indicated and where required for attaching other work. Form to shapes indicated and cut as required for true line and level of attached work. Coordinate locations with other work involved.

C. Attach items to substrates to support applied loading. Recess bolts and nuts flush with surfaces, unless otherwise indicated. Build anchor bolts into masonry during installation of masonry work. Where possible, secure anchor bolts to formwork before concrete placement.

D. Provide permanent grounds of dressed, pressure-preservative-treated, key-beveled lumber not less than 1-1/2 inches (38 mm) wide and of thickness required to bring face of ground to exact thickness of finish material. Remove temporary grounds when no longer required.

END OF SECTION 06100

SECTION 06200 – FINISH CARPENTRY

PART 1 – GENERAL

1.1 SECTION INCLUDES

A. Finish carpentry items, including hardware and attachment accessories.

B. See Schedule at end of this Section.

1.2 RELATED WORK

A. Section 06100 - Rough Carpentry
B. Section 01200 - Allowances for wood repairs
C. Section 09900 - Painting

1.3 SUBMITTALS

A. Shop Drawings: Indicate materials, component profiles, fastening methods, jointing details, finishes, and accessories.

B. Samples: Submit two 6 x 6 inch size samples illustrating wood grain and specified finish.

C. Submit samples of all new moldings and flat stock (with representative sample of existing used as a model or template for replication).

1.4 QUALITY ASSURANCE

A. Perform work in accordance with AWI Premium quality standards.

1.5 REGULATORY REQUIREMENTS

A. Conform to applicable code for fire retardant requirements.

PART 2 – PRODUCTS

2.1 LUMBER MATERIALS

A. Softwood Lumber: PS 20; Graded in accordance with AWI Premium; species as noted on drawings and/or Schedule, maximum moisture content of 10% for interior work and 15% for exterior work; of quality suitable for transparent finish or opaque finish subject to Architect's approval.

B. Hardwood Lumber: Graded in accordance with AWI Premium; species as noted on drawings and/or Schedule, maximum moisture content of 8%; with vertical or mixed grain, of quality suitable for transparent finish.

C. Hand-select wood for uniformity of appearance and freedom from characteristics on exposed surfaces, edges, and ends that would impair finish appearance, including decay, honeycomb, knot holes, splits, torn grain, and wane.

D. Substitutions: Composite and/or synthetic materials (such as Azek and Boral) may be considered on a case by case basis. See 01600.

2.2 ACCESSORIES

A. Fasteners: Size and type to suit application; stainless steel for exterior, high humidity and treated wood locations, plain finish elsewhere.

B. Contact Adhesives: Water Base type.

C. Joint sealants: Cartridge type, compatible with adjacent materials and suitable under service and application conditions.

D. Primer: Alkyd primer sealer type.

E. Underlayment: 30 lb. building paper.

F. Vertical Joint flashing: .021” thick aluminum roll flashing.

2.3 WOOD TREATMENT PROCESSES

A. Fire retardant (FR-S Type): Chemically treated and pressure impregnated; capable of providing a maximum flame spread/smoke development rating of 75/200.

B. Wood Preservative by Pressure Treatment (PT Type): AWPA Treatment C2 using water borne preservative with 0.25 percent retainage.

C. Wood Preservative (Surface Application): Clear, water-borne type.

2.5 SHOP TREATMENT OF WOOD MATERIALS

A. Shop dip or brush apply treatment to wood materials requiring UL fire rating or preservatives to concealed wood blocking

B. Re-dry wood after pressure treatment to maximum 19% moisture content.

2.6 FABRICATION

A. Fabricate to AWI Premium standards or matching extant historical methods.

2.8 WOOD CONSOLIDANTS

A. Epoxy: liquid wood consolidant (LIQUID WOOD) and structural adhesive putty (WOOD EPOX) by ABATRON, INC. of Gilberts, IL (312-426-2200) or approved equal.

PART 3 – EXECUTION

3.1 EXAMINATION AND PREPARATION

A. Prime paint surfaces of items or assemblies in contact with cementitious materials, before installation.

3.2 INSTALLATION

A. Install work in accordance with AWI Premium Quality Standard or in accordance with extant historical details and methods.

B. Set and secure materials and components in place, plumb and level.

C. Install exterior trim by nails or screws (countersunk).

D. Install hardware supplied by others in accordance with manufacturer's instructions.

3.3 SITE APPLIED WOOD TREATMENT

A. Apply preservative treatment in accordance with manufacturer's instructions.

B. Brush apply one coat of preservative treatment on wood in contact with cementitious materials and roofing and related metal flashings. Treat site-sawn cuts. Allow preservative to dry prior to erecting members.

3.4 PREPARATION FOR FINISH

A. Sand work smooth and set exposed fasteners. Apply wood filler in exposed fastener indentations.

B. Backprime all new exterior-located wood items, including cut edges.

C. Site Finishing: Refer to Section 09900.

3.5 **GENERAL REQUIREMENTS FOR MATCHING AND RESTORING EXISTING WOODWORK**

A. Finish carpenters shall thoroughly familiarize themselves with existing finish woodwork to determine how joints are made, etc. so that all new finish replication work will be as compatible with the existing as possible both in quality and in techniques, procedures, sequence of fabrication, methods of joining, and uses of wood in grain direction, thicknesses, and in profiles, dimensions and surface treatment.

B. Install new work in accordance with measurements taken on site. Provide material with ample allowance for cutting.

C. Machine-sand and hand-sand, as required, all exposed surfaces to an even, smooth surface.

D. Do all scribing, mitering, and joining accurately and neatly to conform to details and according to the best practices of the trade.

E. Cope, do not miter, intersecting pieces at inside corners.

F. Erect all work plumb, level, true, and in accordance with the details and conforming to existing conditions as directed.

G. Erect all members in as long pieces as is practicable with the joints arranged to be as inconspicuous as possible and to allow for shrinkage.

H. Moldings, panelings, trim, etc. shall be true copies of existing profiles and dimensions.

I. Joints, where new and old materials meet, shall be so located, designed, and installed to minimize visual disruptions.

K. Where moldings or other original wood pieces are missing, fabricate new pieces (as directed by Architect) to match original as much as possible.

L. Provide and anchor securely all blocking and bracing required to support all finish woodwork in a solid and stable condition.

M. Where cutting, dismantling, and patching of existing woodwork is required to accommodate other trades, the Architect's approval must be obtained prior to any cutting, etc.

N. Where minor damage, gouges, recesses, splits, surface rot, etc. exist, repair by cutting, splicing, and gluing in new wood pieces and moldings (or 'dutchmen') flush with surrounding surfaces, and/or with wood epoxy repair system. Consolidate rotted wood with ‘liquid wood’ and filling with compatible wood epoxy (e.g. Abatron system). Follow manufacturer’s written instructions for proper application.

O. If, in Architect's judgment, certain finish woodwork is not acceptable, portions in question shall be removed and replaced at no cost to Owner.

3.6 SCHEDULE

A. Miscellaneous wood repair, including wood consolidation, blocking, and in –kind replacement of missing and deteriorated wood components, <u>not specifically identified in the construction documents</u>, as required and as directed by Architect and Owner. (See Allowance No. 1).

B. Repair and/or replacement of wood trim, and other architectural components. Use clear South American mahogany or comparable naturally rot-resistant wood species for piecing-in (or ‘dutchmen’), total replacement of wood pieces to match, etc.

C. For patching rotted wood, cracks, checks, etc. where appropriate and as directed, use Abatron System or equal.

D. Clear hard pine or fir for blocking, board sheathing, etc.

E. For replacing clapboards on tower, use clear vertical grain Western red cedar, primed all sides, to match existing.

END OF SECTION 06200

SECTION 07115 - BITUMINOUS DAMPPROOFING

PART 1 - GENERAL

1.1 SECTION REQUIREMENTS

A. Submittals: Product Data.

PART 2 - PRODUCTS

2.1 MANUFACTURERS

B. Hydrocide 600, 700, 700B or Sonneborn Mastics by ChemRex Inc.

C. Substitutions: Section 01600.

2.2 BITUMINOUS DAMPPROOFING

D. Hot-Applied Asphalt Dampproofing: ASTM D 449, Type I.

E. Cold-Applied, Asphalt Emulsion Dampproofing: Asphalt-based emulsions, trowel grade, ASTM D 1187, Type I, trowel grade, ASTM D 1227, Type III or IV, semi-mastic grade, ASTM D 1227, Type III or IV or spray grade, ASTM D 1227, Type III].

F. Primer: Asphalt primer, ASTM D 41.

G. Glass Fabric: Woven glass fabric, treated with asphalt, complying with ASTM D 1668, Type I.

PART 2 - EXECUTION

2.1 PREPARATION

A. Prepare substrate by cleaning, removing projections, filling voids, sealing joints, and as otherwise recommended in dampproofing manufacturer's written instructions.

B. Install cant strips, separate flashings, and corner protection stripping, and prime substrate as recommended in dampproofing manufacturer's written instructions.

2.2 INSTALLATION

A. Comply with manufacturer's written instructions for methods and rates of dampproofing application, cleaning, and installation of protection course.

B. Apply dampproofing to exterior face of concrete and masonry below grade and where indicated on Drawings.

C. Apply 1 or more coats to produce a dry film thickness of at least 60 mils (1.5 mm), average; 30 mils (0.8 mm), minimum.

D. Install glass fabric reinforcement, embedded in dampproofing, at corners and changes in plane.

END OF SECTION 07115

SECTION 07300 - WOOD ROOF SHINGLES

PART 1 - GENERAL

1.1 SECTION REQUIREMENTS

A. Submittals: Product Data and Samples.

B. Fire-Test-Exposure Classification: UL 790 or ASTM E 108, Class B. Testing in accordance with ASTM D 2898.

1.2 RELATED SECTIONS

A. Section 07600 – Metal Flashings

B. Section 01400 -Testing procedures

C. Section 01200 and Bid Form – Allowance for testing

1.3 REFERENCES

A. Cedar Shingle and Shake Bureau (CSSB).

B. Rhode Island Building Code 2013: Section 1505, Table 1505.1 and Par. 1505.6.

C. ANSI/SPRIFX-1 (*Standard Field Test Procedure for Determining the Withdrawal Resistance of Roofing Fasteners)*

1.4 QUALITY ASSURANCE

A. Refer to FM Global website www.roofnav.com for comparable FM-approved roof assembly.

B. Conduct fastener pullout test results and submit results to FM Global, along with FM Global Form 2688 and RoofNav Contractor Package. Include manufacturer, model, dimensions, thicknesses, and fastening rates for all components being installed. Consult Owner's Representative for additional information.

C. Ensure that all roof-mounted equipment is secured to withstand wind speeds of 105 mph, in accordance with Standard ASCE-7.

PART 2 - PRODUCTS

2.1 SHINGLES

A. Grading Standard for Wood Shingles: CSSB's "Grading Rules for Certi-grade Red Cedar Shingles."

B. Cedar Shingles: Certi-Guard, Fire-retardant, Class B, No. 1 grade, Western red cedar, smooth sawn, 18 inches long and 3.5” to 8” wide, 7/16” thick square butts, rebutted and rejointed, 5” average exposure.

2.2 ACCESSORIES

A. Felt Underlayment: ASTM D 226, Type II, No. 30.

B. HT Self-Adhering Sheet Underlayment: ASTM D 1970, SBS-modified asphalt; mineral-granule or slip-resisting-polyethylene surfaced; with release paper backing; cold applied.

C. Nails: Type 316 stainless-steel ring shank nails of sufficient length to penetrate 3/4 inch into solid wood decking/sheathing. (Ensure shank nails do not cause splitting.)

D. Sheet Metal Flashing: Lead-coated copper (See 07600.)
   1. Fabricate sheet metal flashing and trim to comply with recommendations in SMACNA's "Architectural Sheet Metal Manual."

E. Ventilation Plenum: Cedar Breather by Benjamin Obdyke of Horsham, PA.

PART 3 - EXECUTION

3.1 GENERAL INSTALLATION REQUIREMENTS

A. Where applicable, comply with CSSB's "Design and Application Manual for New Roof Construction"; and NRCA's "The NRCA Roofing and Waterproofing Manual": Section "The NRCA Steep Roofing Manual," Chapter "Wood Shingle and Wood Shake Roofing" for roofing installations.

3.2 SHINGLE INSTALLATION

A. After removal of old shingles, and (most) metal flashings, inspect condition of roof sheathing and substrate. Report any substandard conditions to Architect and Owner. Beginning work means installer accepts substrates and conditions suitable for proper installation of self-adhering sheet underlayment and wood roof shingles.

B. Apply self-adhering sheet underlayment on exposed roof sheathing over entire roof.

C. Place eave flashing and base flashings, gutter hangers, etc. as required.

D. Install roofing felt over entire roof sheathing area as per manufacturer’s instructions.

E. Install ‘Cedar Breather’ over underlayment. Strictly follow manufacturer’s written installation instructions.

F. Install wood shingles directly to 'Cedar Breather' with shingle coursing averaging 5" of exposure. Provide double coverage at sloped eaves with bottom layer stepped back 1" to 1 ½" if necessary.

G. Install shingles along ridge to match existing and as per industry standard. Flash ridge shingles as per SMACNA detail under 07600.

H. Place individual shingles about 1/8" apart side to side if dry and lightly touching if wet or damp. Stagger vertical joints between shingle courses a minimum 1 ½"-2". Stagger vertical joints 1" – 1 ½" over three shingle courses.

I. Space nails ½" to ¾" from edge of shingles. Use 2 nails per shingle. Do not nail into center of underlying shingle. Nail no more than 1 ½" above exposure line. Set nails flush with shingle surface.

END OF SECTION 07300

SECTION 07600 - FLASHING AND SHEET METAL

PART 1 - GENERAL

1.1 WORK INCLUDED

A. New hanging gutters and rain leaders to replace existing.

B. New counter flashing at all 4 chimney bases.

C. Miscellaneous flashings as required.

D. New eave, ridge, and valley flashings.

E. Ream out all underground connections to rain leaders as required.

1.2 RELATED WORK

A. Section 01200 – Allowance No. 2 for flashing repairs

B. Section 07300 – Wood Roof Shingles

C. Section 09900 - Painting

1.3 QUALITY ASSURANCE

A. Perform Work in accordance with the following:

1. SMACNA - Architectural Sheet Metal Manual, latest edition.

2. ANSI/ASTM B32 - Solder Metal.

3. ASTM B370 - Copper Sheet and Strip for Building Construction and Waterproofing.

4. ASTM D226 - Asphalt-Saturated Organic Felt Used in Roofing and Waterproofing.

5. CDA (Copper Development Association) - Contemporary Copper, A Handbook of Sheet Copper Fundamentals, Design, Details and Specifications.

6. CDA - Copper Roofing - A Practical Handbook.

7. FS O-F-506 - Flux, Soldering, Paste and Liquid.

8. FS QQ-S-571 - Solder, Tin Alloy.

1.4 SUBMITTALS

A. Submit shop drawings of gutters and downspouts, and product data under provisions of Section 01300.

B. Describe material profile, jointing pattern, jointing details, fastening methods, and installation details.

C. Submit manufacturer's installation instructions under provisions of Section 01300.

D. Submit field sample of gutter under provisions of Section 01300.

1.5 STORAGE AND HANDLING

A. Store products under provisions of Section 01300.

B. Stack preformed material to prevent twisting, bending, or abrasion, and to provide ventilation.

C. Prevent contact with materials during storage which may cause discoloration, staining, or damage.

PART 2 - PRODUCTS

2.1 SHEET MATERIALS

A. Copper: ASTM B370, cold rolled; 20 oz/sq ft, natural finish.

B. Lead Coated Copper: In conformance with ASTM B101, Type 1, Class A with lead coating on both sides of copper sheet weighing 6 to 7 1/2 lbs/100 sf for each side (16 oz. and 20 oz./sf).

2.2 ACCESSORIES

A. Fasteners: Copper set in caulking bed at exposed fasteners. Nails and screws of sufficient length to penetrate roof deck 1-1/2" minimum. Finish exposed fasteners same as flashing metal.

B. Gutter Supports: Solid bronze hangers.

C. Rain leader hangers with suitable masonry anchors.

D. Straps of half-hard copper or half-hard C26000 brass.

E. Underlayment (to prevent ice damming, etc.): Grace High Temperature Ice and Water Shield, or equal.

F. Lead wedges and lead wool (for masonry reglets).

G. Slip Sheet: Rosin sized unsaturated building paper.

H. Sealant: Synthetic or rubber base type compatible with materials to be sealed.

I. Solder: FS QQ-S-571; ANSI/ASTM B32; 50/50 type for sheet copper and 60/40 type for lead-coated copper.

J. Flux: FS O-F-506.

K. Elastic cement: FS-SS-C-153.

L. Cast iron pipe and related components to match existing.

2.3 COMPONENTS

A. Hanging Gutters: 6” half round 20 oz. lead-coated copper with double bead and threaded brass hangers, adjustable, at 24” o.c. as detailed.

B. Rain Leaders: 3 ½” diameter 20 oz. lead-coated copper rain leaders where indicated to replace existing. (Total of 8).

C. Accessories: Profiled to suit gutters and downspouts, including cast iron elbow and extension at Rain Leaders #1 and #6.

D. Basket copper strainers at gutter outlets.

2.4 FABRICATION

A. Form components true to shape, accurate in size, square, and free from distortion or defects. Form pieces in longest practical lengths.

B. Fabricate cleats and starter strips of same material as sheet, minimum 2 inch wide, interlockable with sheet.

C. Hem exposed edges on underside 1/2 inch; miter and seam corners. Fabricate vertical faces with bottom edge formed outward 1/4 inch and hemmed to form drip.

D. Form material with flat lock seam.

E. Fabricate corners in one piece, with minimum 18 inch long legs; seam for rigidity, seal with sealant.

F. Pre-tin edges of copper sheet.

G. Solder and seal metal joints. After soldering, remove flux. Wipe and wash solder joints clean.

H. Form gutters and downspouts of profiles and sizes indicated on drawings and as required to properly collect and remove water. Fabricate complete with required connection pieces, strap hangers, strainers, and downspout hangers.

PART 3 - EXECUTION

3.1 EXAMINATION AND PREPARATION

A. Verify roof openings, curbs, pipes, sleeves, ducts, or vents through roof are solidly set, cant strips and reglets in place, and nailing strips located.

B. Verify base flashings are in place, sealed, and secure.

C. Beginning of installation means acceptance of existing conditions.

3.2 INSTALLATION OF FLASHINGS

A. Conform to drawing details and specifications included in SMACNA Manual and SMACNA Figures in appendix of this Section.

B. Field measure site conditions prior to fabricating work.

C. Install HT Ice and Water Shield on all substrates to receive flashing, including about 2 feet up roof slope beyond interior face of exterior wall, at valleys, at hips, at ridges, at roof penetrations, and along eaves. Follow manufacturer's installation instructions.

D. Install starter and edge strips, and cleats before starting installation.

E. At masonry walls, insert flashings 1" into new or existing reglets to form tight fit. Secure in place with lead wedges as required. Pack remaining spaces with lead wool and seal top of reglets with sealants.

F. Secure flashings, gutters and downspouts in place using concealed fasteners. Use exposed fasteners only in locations approved by Architect.

G. Lock and seal all joints.

H. Fit components tight in place. Make corners square, surfaces true and straight in planes, and lines accurate to profiles.

I. Solder metal joints watertight for full metal surface contact. After soldering, wash metal clean with neutralizing solution and rinse with water.

J. Seal metal joints where seams are sloped 3" per foot or greater.

3.3 INSTALLATION OF GUTTERS AND RAIN LEADERS

A. Install gutters and rain leaders as detailed on Drawings. Join lengths with formed seams sealed watertight, flash and seal gutters to rain leaders.

B. Slope gutters 1/16 inch per square foot minimum toward outlets.

C. Provide lead-coated copper rain deflectors at outer edge of gutters intersecting valleys

where necessary and where shown. Mechanically fasten and/or solder to gutter edge.

D. Provide copper basket strainers at outlets.

E. Build in expansion joints where shown on drawings.

F. Install l.c.c. rain leaders where indicated on Drawings, using suitable hinged bronze hangers 6' to 8' o.c. Provide offsets to follow vertical section of building. Tie into existing cast iron rain leaders.

G. Allow clearance around gutter outlets for movement.

H. Where rain leader connects to underground drainage system on south side, ream out existing underground connections and ensure proper drainage at each rain leader.

I. At existing rain leader #4 that connects to underground piping, provide transition fitting to suit, similar to fitting at Rain Leader #5.

3.4 REPAIRS AND RESTORATION OF EXISTING METAL FLASHINGS

A. Carefully inspect condition of all existing metal flashings to remain for cracks, tears and holes. Repair all holes with copper or lead patches and solder. Close all seams and resolder. See Allowance No. 2.

B. Notify Architect if any conditions or surfaces exist which require replacement.

C. Prior to soldering existing copper or l.c.c., remove all scales and corrosion by scraping and wire brushing.

D. All soldering shall be done slowly with well-heated coppers - to heat sheet thoroughly and to sweat solder completely through full width of seam. Ample solder should be used and seam shall show at least one full inch of evenly flowed solder. Seams on slopes steeper than 45 degrees shall be soldered a second time.

E. Patch holes 1/4" in diameter or less with solder.

F. Repair or replace defective flashing as required and as specified to ensure a complete watertight and stable installation. See Allowance No. 2.

3.5 PRECAUTIONS

A. Contractor shall take extraordinary measures to prevent fires when field soldering. Comply with applicable codes and regulations.

3.6 APPENDIX OF RELEVANT SMACNA FIGURES FOR TYPICAL FLASHING INSTALLATIONS

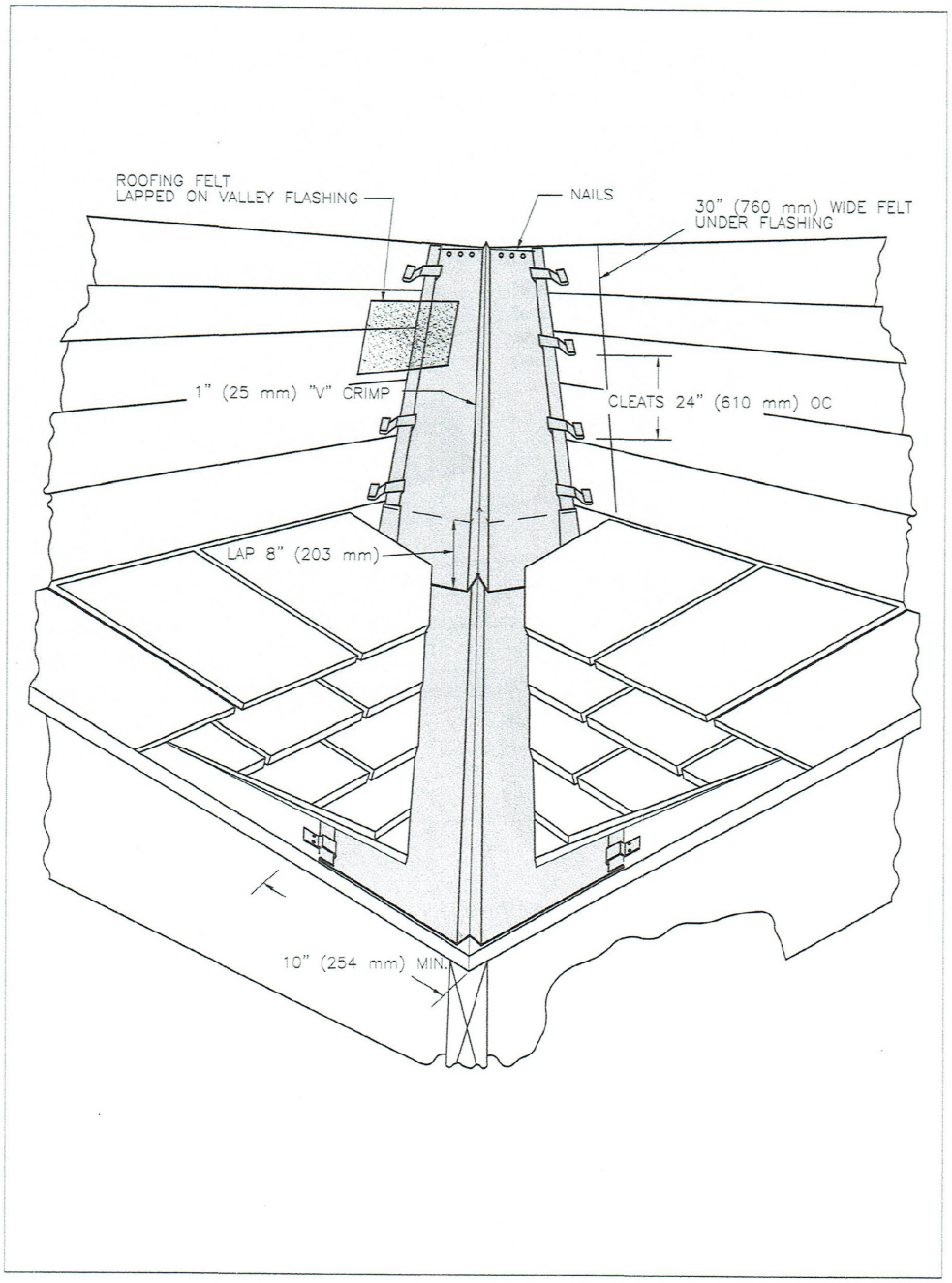

FIGURE 4–10 VALLEY FLASHING INSTALLATION

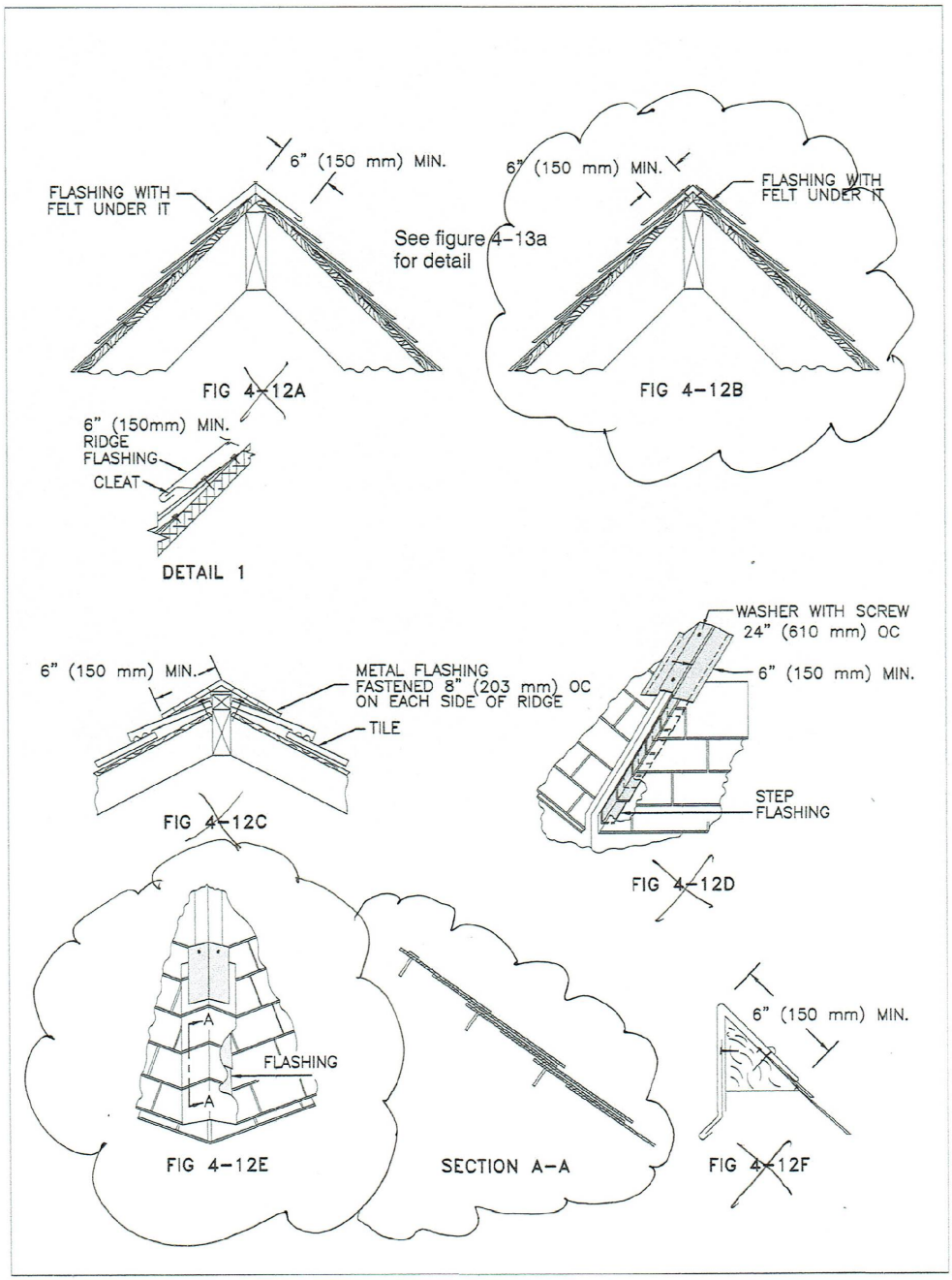

FIGURE 4-12 HIP AND RIDGE FLASHING

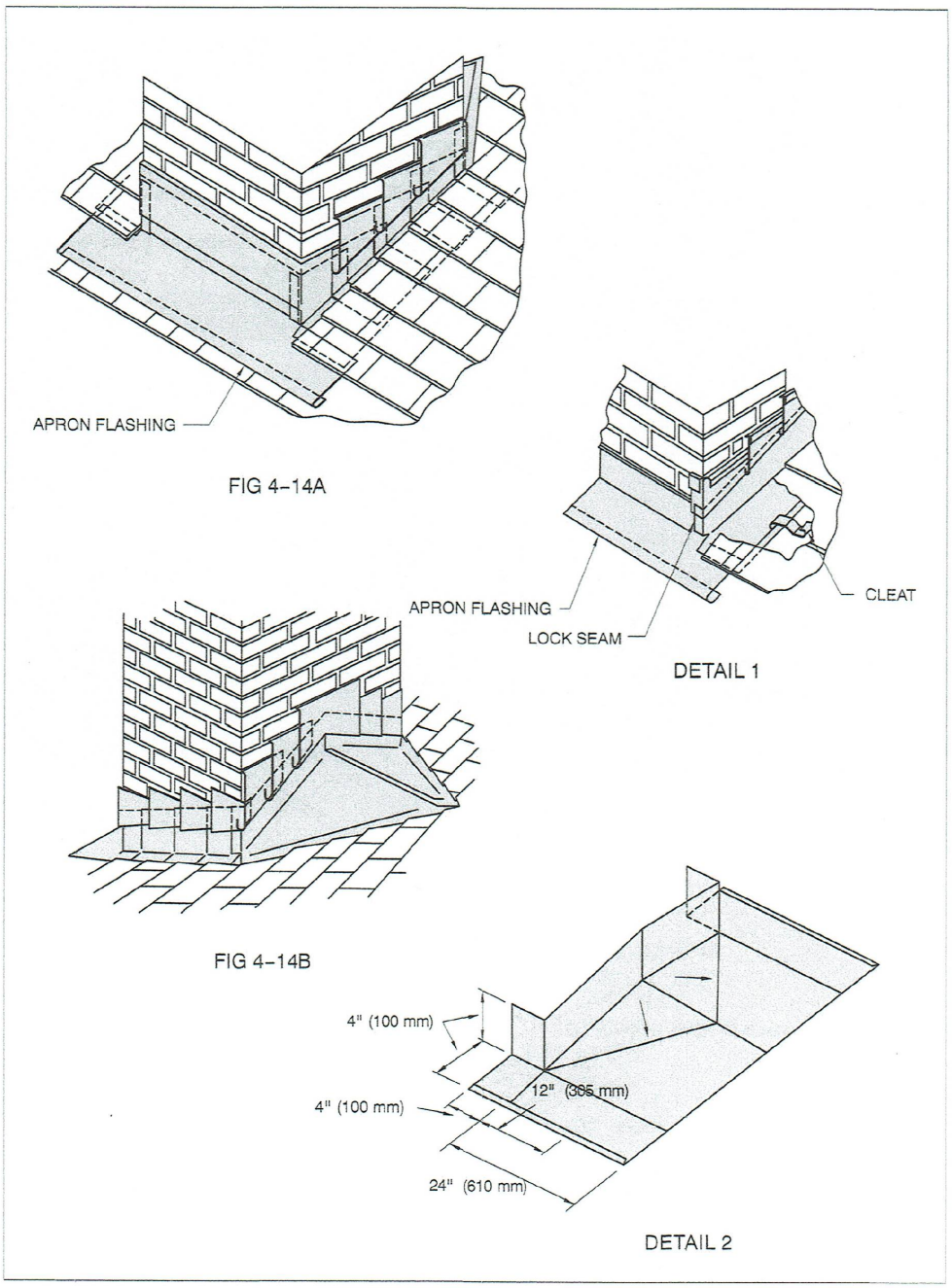

FIGURE 4–14 CHIMNEY FLASHING

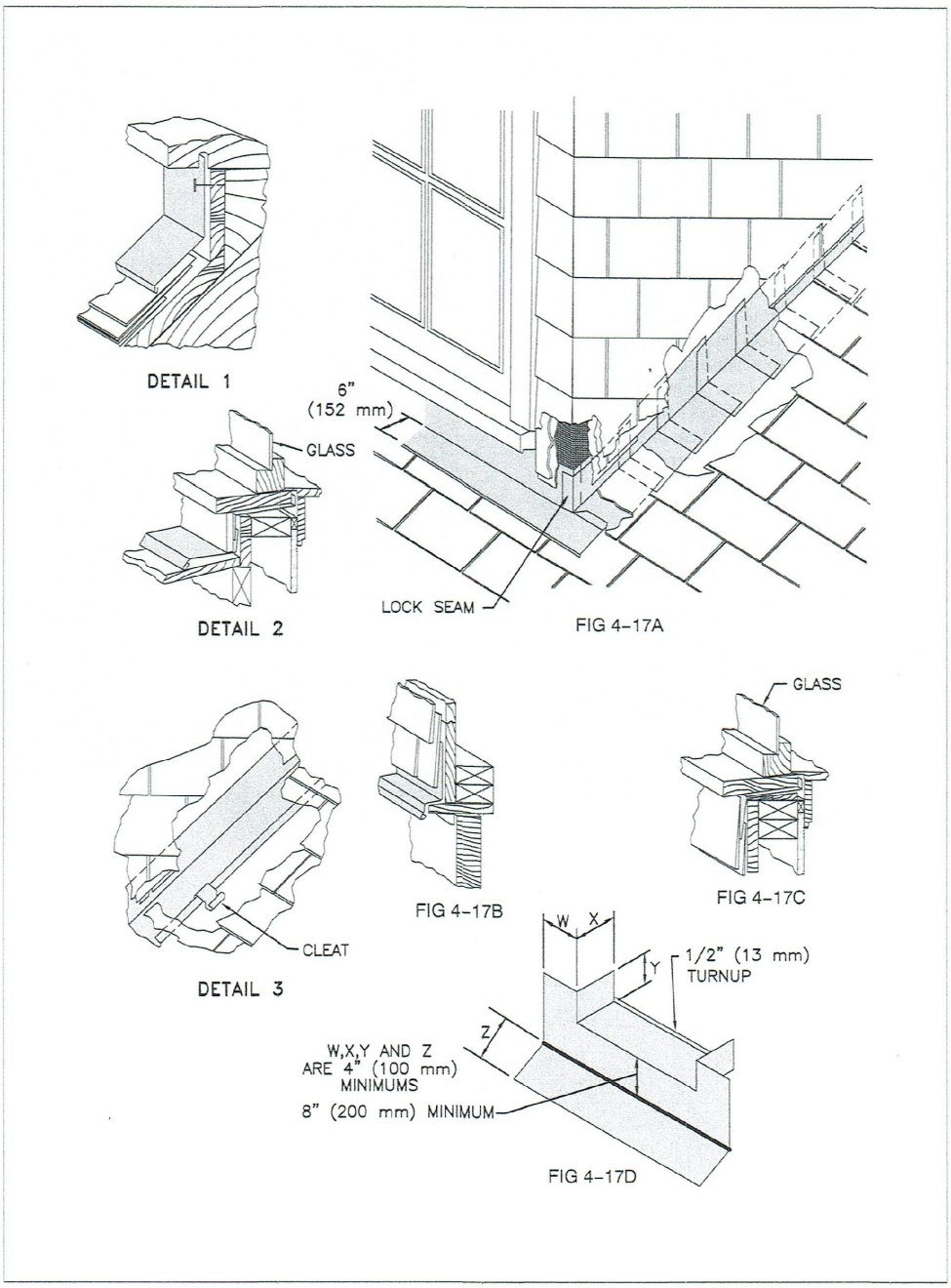

FIGURE 4-17 DORMER-HEAD–SILL FLASHING FOR FRAME CONSTRUCTION

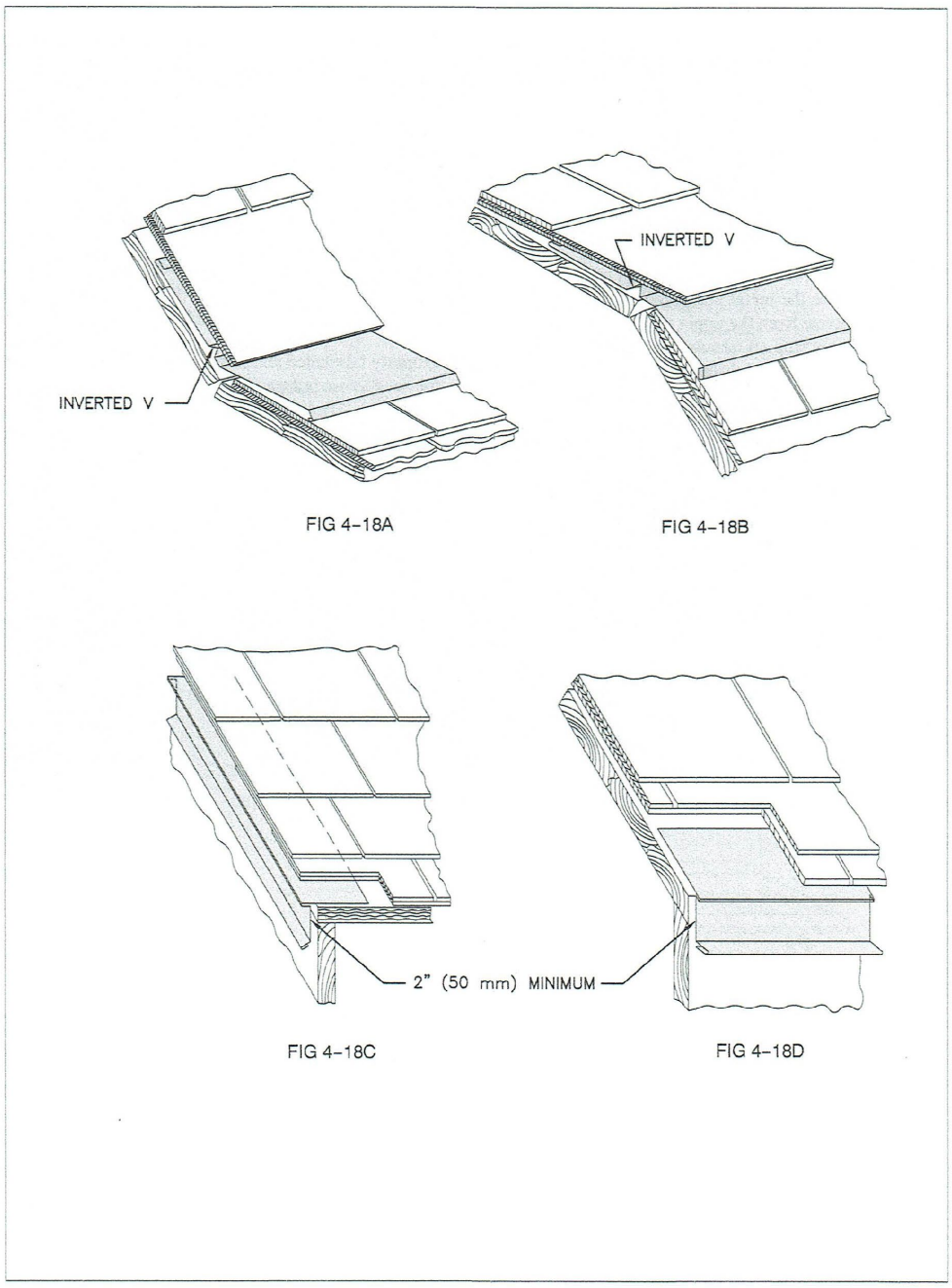

FIGURE 4-18 SHINGLE ROOF FLASHING

END OF SECTION 07600

SECTION 07723 -ROOF HATCH

PART 1 - GENERAL

1.1 SUMMARY

A. Work Included: Provide factory-fabricated roof hatch to replace existing on main roof.

1.2 SUBMITTALS

A. Product Data: Submit manufacturer's product data.

B. Shop Drawings: Submit shop drawings including profiles, accessories, location, adjacent construction interface, and dimensions.

C. Warranty: Submit executed copy of manufacturer's standard warranty.

1.3 QUALITY ASSURANCE

A. Manufacturer: A minimum of 5 years experience manufacturing similar products.

B. Installer: A minimum of 2 years experience installing similar products.

C. Manufacturer's Quality System: Registered to ISO 9001:2008 Quality Standards including in-house engineering for product design activities.

1.4 DELIVERY, STORAGE AND HANDLING

A. Deliver products in manufacturer's original packaging. Store materials in a dry, protected, well-vented area. Inspect product upon receipt and report damaged material immediately to delivering carrier and note such damage on the carrier's freight bill of lading.

1.5 WARRANTY

A. Manufacturer's Warranty: Provide manufacturer's standard warranty. Materials shall be free of defects in material and workmanship for a period of five years from the date of purchase. Should a part fail to function in normal use within this period, manufacturer shall furnish a new part at no charge.

PART 2 - PRODUCTS

2.1 MANUFACTURER

A. Basis-of-Design Manufacturer: Type GS Roof Hatch by The BILCO Company, P.O. Box 1203, New Haven, CT 06505, 1-800-366-6530, Fax: 1-203-535-1582, Web: www.bilco.com.

B. Substitutions: See Section 01600.

2.2 ROOF HATCH

A. Furnish and install where indicated on plans metal roof hatch Type GS, size width: 36" (914mm) x length: 30" (762mm). Length denotes hinge side. The roof hatch shall be single leaf. The roof hatch shall be pre-assembled from the manufacturer.

B. Performance characteristics:

1. Cover shall be reinforced to support a minimum live load of 40 psf (195kg/m^2) with a maximum deflection of 1/150th of the span or 20 psf (97kg/m^2) wind uplift.
2. Operation of the cover shall be smooth and easy with controlled operation throughout the entire arc of opening and closing.
3. Operation of the cover shall not be affected by temperature.
4. Entire hatch shall be weather tight with fully welded corner joints on cover and curb.

C. Cover: Shall be 11 gauge (2.3mm) aluminum with a 3” (76mm) beaded flange and a polycarbonate dome framed with rigid extruded aluminum and coated for UV resistance. Cover shall have a heavy extruded EPDM rubber gasket that s bonded to the cover interior to assure a continuous seal when compressed to the top surface of the curb.

D. Curb: Shall be 12” (305mm) in height and of [select: 14 gauge (1.9mm) paint bond G-90 galvanized steel or 11 gauge (2.3mm) aluminum]. The curb shall be formed with a 3-1/2” (89mm) flange with 7/16” (11mm) holes provided for securing to the roof deck. The curb shall be equipped with an integral metal cap flashing of the same gauge and material as the curb, fully welded at the corners, that features the Bil-Clip® flashing system, including stamped tabs, 6” (153mm) on center, to be bent inward to hold single ply roofing membrane securely in place.

E. Curb insulation: Shall be rigid, high-density fiberboard of 1” (25mm) thickness on outside of curb.

F. Lifting mechanisms: Manufacturer shall provide compression spring operators enclosed in telescopic tubes to provide, smooth, easy, and controlled cover operation throughout the entire arc of opening and closing. The upper tube shall be the outer tube to prevent accumulation of moisture, grit, and debris inside the lower tube assembly. The lower tube shall interlock with a flanged support shoe [for aluminum construction: welded to the curb assembly; for steel construction: through bolted to the curb assembly].

G. Hardware

1. Heavy pintle hinges shall be provided
2. Cover shall be equipped with a spring latch with interior and exterior push handle.
3. Roof hatch shall be equipped with interior and exterior padlock hasps.
4. The latch strike shall be a stamped component bolted to the curb assembly.
5. Cover shall automatically lock in the open position with a rigid hold open arm equipped with a 1” (25mm) diameter red vinyl grip handle to permit easy release for closing.
6. Compression spring tubes shall be an anti-corrosive composite material and all other hardware shall be zinc plated and chromate sealed.
7. Cover hardware shall be bolted into heavy gauge channel reinforcing welded to the underside of the cover and concealed within the insulation space.

H. Finishes: Factory finish shall be mill finish aluminum.

PART 3 - EXECUTION

3.1 EXAMINATION

A. Examine substrates and openings for compliance with requirements for installation tolerances and other conditions affecting performance. Proceed with installation only after unsatisfactory conditions have been corrected.

3.2 INSTALLATION

A. Install products in strict accordance with manufacturer's instructions and approved submittals. Locate unit level, plumb, and in proper alignment with adjacent work.

1. Test units for proper function and adjust until proper operation is achieved.
2. Repair finishes damaged during installation.
3. Restore finishes so no evidence remains of corrective work.

3.3 ADJUSTING AND CLEANING

A. Clean exposed surfaces using methods acceptable to the manufacturer which will not damage finish.

END OF SECTION 07723

SECTION 07920 - JOINT SEALANTS

PART 1 - GENERAL

1.1 SECTION REQUIREMENTS

A. Submittals: Product Data and Color Samples (field-applied).

PART 2 - PRODUCTS

2.1 JOINT SEALANTS

A. Compatibility: Provide joint sealants, joint fillers, and other related materials that are compatible with one another and with joint substrates under service and application conditions.

B. Elastomeric Sealants: Comply with ASTM C 920.

1. Single-component, neutral-curing silicone sealant, Type S; Grade NS; Class 25; Uses T, M, and O, with the additional capability to withstand [50 percent movement in both extension and compression for a total of 100 percent movement. Use for building expansion joints.
2. Single-component, nonsag polysulfide sealant, Type S; Grade NS; Class 12-1/2; Uses NT, M, G, A, and O. For general exterior use.
3. Single-component, neutral-curing silicone sealant, Type S; Grade NS; Class 25; Uses T, NT, M, G, A, and O. For general exterior use.
4. Single-component, nonsag urethane sealant, Type S; Grade NS; Class 25; and Uses NT, M, A, and O. For general exterior use.
5. Single-component, nonsag urethane sealant, Type S; Grade NS; Class 25; Uses T, NT, M, G, A, and O. Use for exterior traffic-bearing joints, where slope precludes use of pourable sealant.
6. Single-component, pourable urethane sealant, Type S; Grade P; Class 25; Uses T, M, G, A, and O. Use for exterior traffic-bearing joints.
7. Single-component, mildew-resistant silicone sealant, Type S; Grade NS; Class 25; Uses NT, G, A, and O; formulated with fungicide. Use for interior sealant joints in ceramic tile, stone, and other hard surfaces in kitchens and toilet rooms and around plumbing fixtures.

C. Latex Sealant: Single-component, nonsag, mildew-resistant, paintable, acrylic-emulsion sealant complying with ASTM C 834. For interior use only at perimeters of door and window frames.

D. Acoustical Sealant for Exposed Joints: Nonsag, paintable, nonstaining, latex sealant complying with ASTM C 834. For interior use only at acoustical assemblies.

E. Acoustical Sealant for Concealed Joints: Nondrying, nonhardening, nonskinning, nonstaining, gunnable, synthetic-rubber sealant recommended for sealing interior concealed joints to reduce transmission of airborne sound. For interior use only at acoustical assemblies.

F. Joint sealants (for exposed joints between masonry and wood at openings): 2-part polyurethane (equal to TREMCO Dymeric sealant), tinted to match original mortar.

G. Backer rod: Polyethylene foam rod or polyethylene tape.

PART 3 – EXECUTION

3.1 INSTALLATION

A. Comply with ASTM C 1193.

B. Comply with ASTM C 919 for use of joint sealants in acoustical applications.

C. Strictly follow manufacturer's recommendation for proper use and installation.

END OF SECTION 07920

OLD STATE HOUSE / PHASE IIA / EXTERIOR RESTORATION

SECTION 08000 DOOR SCHEDULE

DOOR NO.	LOCATION	SIZE	DESCRIPTION	HARDWARE SUMMARY	REMARKS
B1	EXTERIOR TO HALLWAY B5	(2) 2'-7"x5'-9"x1 3/4"	Restore double wood doors. Undercut bottom edge for new threshold.	New surface bolts, top and bottom on inactive leaf. New saddle. New weatherstripping. New door shoe. See HW-1	Segmental arched opening. See Drawing A0.1. Remove 2 x 4 bar and brackets.
B2	EXTERIOR TO ENTRY B1	2 - 2'-6"x7'-1 1/2"x1 3/4"	Repair double wood doors as shown. Provide security screen / mesh (t.m.e) to protect glass panes.	New surface bolts. Weatherstripping. New door bottom protection. See HW-2.	Segmental arched opening. See Drawing A0.1. Remove 2 x 4 bar and brackets.
B3	EXTERIOR TO STOREROOM B14	4'-3 1/4 w x 4'-7 1/2"x 1 3/4"	Repair paneled door as shown. Provide frosted tempered glass.	New 2 Surface bolts top and bottom New Weatherstripping. New door shoe. See HW-3	Segmental arched opening. See Drawing A0.1.
FIRST FLOOR					
101	EXTERIOR TO VESTUBULE 101	2 -2'-6" x 8'-0" x 2 3/4"	New solid mahogany paneled doors to match existing	Use existing butt hinges New Russwin vintage closer on active leaf. Re-use and refurbish thumblatch pull on exterior and interior. Re-use slide bolts on inactive leaf. Re-use closer on inactive leaf. See HW-4.	See Drawing A0.1 for interior elevation and notes.
102	EXTERIOR TO LOBBY 108	2 -2'-6" x 8'-0" x 2 3/4"	Repair existing paneled doors as required for ease of operation and proper closing and latching.		

General Notes to Door Schedule:

1. Contractor shall coordinate Door Schedule with Hardware Schedule and with the drawings to determine actual door sizes, door swings, etc.

2. See Hardware Sechedule for finishes.

3. Verify all conditions and dimensions in field.

4. See Drawing A0.1 for door elevations and notes.

5. See Specification Section 08710 for Door Hardware.

6. See Specification Section 08212 for wood door specifications.

7. Temporary removal of exterior doors (for shop repairs) is acceptable. However, all exit doors must remain operable, lockable, and accessible for emergency use as doors (no plywood panels). It is preferred that existing double doors 101 stay in place until new replica doors are ready for installation.

SECTION 08212 - STILE AND RAIL WOOD DOORS

PART 1 - GENERAL

1.1 SECTION REQUIREMENTS

A. Submittals: Product Data and Shop Drawings.

B. Quality Standard: NWWDA I.S.6, "Industry Standard for Wood Stile and Rail Doors."

C. Safety Glass: Comply with 16 CFR 1201.

1.2 RELATED SECTIONS

A. Section 08000 – Door Schedule

B. Section 08100 – Door Hardware

C. Section 09900 - Painting

PART 2 - PRODUCTS

2.1 STILE AND RAIL WOOD DOORS

A. Exterior Doors: NWWDA custom premium grade assembled with mortises, tenons, and dowels, and wet-use adhesives.

1. Double Entrance Door 101 (with wood astragal): To match existing in all respects, in clear vertical grain solid Honduran mahogany or comparable wood species.

2.2 FABRICATION AND FINISHING

A. Fit doors to suit frame-opening sizes and to comply with referenced quality standard.

B. Factory machine doors for hardware that is not surface applied.

C. Factory treat exterior doors after fabrication with water repellent to comply with NWWDA I.S.4.

D. Factory prime wood doors with manufacturer's standard oil-based coating system. Doors to be primed and finish painted in field after installation.

PART 3 - EXECUTION

3.1 INSTALLATION

A. Align and fit doors in existing frames with uniform clearances and bevels indicated below. Machine doors for hardware. Seal cut surfaces after fitting and machining.

1. Provide 1/8-inch clearance at jambs, heads, and meeting stiles and 1/8 inch at bottom. At thresholds, provide 1/4-inch clearance from bottom of door. Make provisions for weather-stripping.

B. Align custom doors in frames for uniform clearances.

C. Repair, refinish, or replace finished doors damaged during installation as directed by Architect.

D. See Drawing A0.1 and Door Schedule and Hardware Schedule for additional information and requirements.

END OF SECTION 08212

SECTION 08500 WINDOW SCHEDULE

WINDOW NO.	REMARKS
BASEMENT	
B1	Fix sash in place. Seal. Restore sash. Reglaze 100%. Replace 2 broken panes of glass. Add Lexan protective glazing on exterior. (No interior painting).
B2	See Note 1
B3	Fix sash in place. Seal. Restore sash. Reglaze 100%. (No interior painting).
B4	See Note 1. Fix top sash in place. Ensure operability of bottom sash. New protective glazing. See Note 2
B5	See Note 1. Fix top sash in place. Ensure operability of bottom sash. New protective glazing. See Note 2 Replace wood sill in-kind.
B6	See Note 1. Fix top sash in place. Ensure operability of bottom sash. New protective glazing. See Note 2. Replace bottom sash and wood sill in-kind.
B7	Restore / paint fixed sash. (No interior work).
B8 B9 B10	Remove bottom sash Repair and restore top sash Fix in place Remove louver (unused B8 only). Reglaze 100% New protective glazing. See Note 2. Provide new wood sill to match existing. At opening B8, modify wood frame around louver to suit. Paint exterior of louver in B9. See Details on Drawing A2.4.
FIRST FLOOR	
101	See Note 1 Strip, patch exterior sill Add weatherstripping on sides.
102	See Note 1
103	See Note 1 Add sash lock to match. Seal opening at meeting rail.
104	See Note 1 Re-install sash lock.

WINDOW SCHEDULE

WINDOW NO.	REMARKS
FIRST FLOOR (CONTINUED)	
105	See Note 1 Strip, patch, sand exterior and interior sill.
106	See Note 1 Strip, patch, sand exterior and interior sill.
107	See Note 1 Strip, patch, sand exterior and interior sill
108	Temporarily remove interior shutters to access window Paint shutters. Reinstall See Note 1
109	See Note 1 Strip, patch, sand interior sill
110	See Notes 1 and 3 Add parting beads Add sash lock (missing) Strip, patch, sand exterior and interior sills Patch, repair bottom sash
111	See Note 1 New wood sill on exterior Remount sash lock New slide bolt on bottom sash
112	See Note 1 Strip, patch, sand exterior sill New slide bolt on bottom sash
113	See Note 1 New slide bolt
114	Transom window Reglaze as required. Paint Protect lettering on glass.
115	See Notes 1 and 3 Remount sash lock New slide bolt
116	See Note 1 New slide bolt Replace glass in bottom sash with translucent tempered glass panes
117 118 119	See Notes 1 and 3

OLD STATE HOUSE / PHASE IIA EXTERIOR RESTORATION

WINDOW SCHEDULE

WINDOW NO.	REMARKS
SECOND FLOOR (CONTINUED)	
201	See Note 1 Strip, patch, sand existing sill
202	See Note 1 Re-install sash lock
203 204 205	See Note 1 Replace sash locks
206 207 208 209	See Note 1
210	See Notes 1 and 3
211	See Notes 1 and 3 Strip, patch, sand exterior and interior sills
212	See Notes 1 and 3 Strip interior sill Repair sash stop
213 214	See Note 1 Strip interior sill
215	See Note 1
216	See Note 1 Repair sash stop
217 218	See Notes 1 and 3
THIRD FLOOR	
301 302	See Notes 1 and 4 Provide parting beads
303	See Notes 1, 3, and 4 Provide parting beads
304	See Notes 1 and 4 Provide parting beads
305 306 307	See Notes 1 and 4

OLD STATE HOUSE / PHASE IIA EXTERIOR RESTORATION

WINDOW SCHEDULE

NOTES:

1. Repair and restore existing wood sash to original condition. Fix / seal top sash. Provide wood block under top sash to match existing (where missing). Reglaze 100%. Fix and polish sash hardware as required. Repair interlocking Repair interlocking weatherstripping. Paint sash, bother sides, as specified under 09900.

2. Remove window exterior security screens. Provide exterior Lexan protective glazing as specified under Section 08520 and detailed.

3. Remove window air conditioning unit and related brackets, wiring, wiremold, switches, etc. Remove filler panels and raise top sash into original position. Seal in place. Interior patching and painting of finish surfaces, except sash, to be done at a later date under a separate contract.

4. Remove compressible gasket on bottom edge of bottom sash. Provide slot in bottom edge to receive interlocking-type weatherstrip, in place. Ensure all bottom sash are operable and have interlocking weatherstipping in place.

5. See Spec. Section 08600 for additional information on wood windows.

6. See Spec. Section 06200 for wood repairs, etc.

7. Window sash may be removed and restored off-site provided temporary panels are installed in the opening that are secured without anchors (no holes in brick or wood frames) and are painted white inside and red brick outside. Sash removal shall be coordinated in each occupied space so that not every window will be removed from one space at the same time.

Exception: Rooms with only one window where Contractor shall provide panel with 18” x 24” plexiglass panel for natural light.

SECTION 08520 – ALUMINUM STORM WINDOWS (MONUMENTAL ALLIED ONE LITE)

PART 1 – GENERAL

1.1 SCOPE: All aluminum windows of the types and sizes shown in the drawings and/or as called for in this specification and the Window Schedule (a total of 7 basement windows) shall be furnished with all necessary hardware, fasteners, glazing, and miscellaneous equipment as herein specified and shall be manufactured by Allied Window, Inc. (or approved equal). For more information, contact:

ALLIED WINDOW, INC.
11111 Canal Road
Cincinnati, Ohio 45241
(800) 445-5411
(513) 559-1212

WEBSITE:
www.alliedwindow.com
www.invisiblestorms.com
E-MAIL ADDRESS:
info@alliedwindow.com

1.2 QUALITY ASSURANCE: Contractor shall submit scaled shop drawings and product information for approval prior to fabrication. Verify all conditions and dimensions in the field for each window opening to receive protective glazing.

PART 2 – MATERIALS

2.1 ALLOYS: Aluminum shall be of commercial quality and of proper alloy for window construction free from defects impairing strength and durability. All straight extruded sections shall be of 6063-T5 alloy and temper and shall have a minimum ultimate tensile strength of 22,000 P.S.I. and a yield of 16,000 P.S.I.

2.2 WINDOW MEMBERS: All master frame members shall be of extruded aluminum with a 3/8” x 1” dimension and with nominal wall thickness of not less than .062. All extrusions shall be of sufficient strength to perform as designed. All corner keys shall be of extruded aluminum. Insert frames shall be of extruded aluminum with a 3/8” x 1-1/4” dimension. All marine-glazed insert corners are secured with special screws into screw-spline ports.

2.3 FASTENERS: All screws and other fastening devices incorporated shall be stainless steel, zinc plated, cadmium plated or other non-corrosive metals compatible with aluminum.

2.4 HARDWARE: All insert clips shall be nylon, or zinc die cast.

2.5 “INVISIBLE” CLIPS: Optional insert clips shall be a 3-part zinc die cast assembly which shall be flush with the face of the insert frame. Latching clips shall be activated by use of a Phillips-head screwdriver, with a 90 degree turn being sufficient to engage or disengage the cam clip.

PART 3 – CONSTRUCTION

3.1 ASSEMBLY: All windows shall be assembled in a secure and workmanlike manner. The frame shall be of mitered head and sill. Frame rails and stiles shall be neatly joined together using extruded aluminum corner keys, or special screws for marine-glazing.

3.2 PERIMETER FRAMING: Provide ½" x ¾" aluminum angle screwed into side jambs or casings and curved head (or segmental arch) of window openings. Provide ½" x 5/8" aluminum channel screwed at bottom of window opening, with weeps. See details on drawings.

3.3 PANELS: Inserts shall be freely removable and equipped with a bottom rail lift handle.

PART 4 – FINISH

The exposed surfaces of all aluminum members shall be clean and free from serious surface blemishes. Standard finishes shall be mill finish or electrostatically applied baked acrylic enamel in white, colonial white, beige, black or bronze. Painted finish shall meet AAMA 603.6.

For bidding purposes, assume custom color factory finish, a two-part polyurethane paint (air dried).

PART 5– GLASS AND GLAZING

5.1 GLASS: Clear polycarbonate (Lexan), ¼" thickness.

5.2 GLAZING METHOD: Glass shall be retained in place with wrap-around extruded glazing vinyl (compatible with Lexan). Vinyl shall be manufactured from virgin polyvinyl chloride.

PART 6 – INSTALLATION

The installer shall securely fasten windows in place to a straight, plumb and level condition, without distortion of the windows and shall make final adjustments for proper operation in accordance with the manufacturer's instructions.

PART 7 – WARRANTY

Manufacturer shall provide a five (5) year warranty against faulty materials, paint and workmanship.

END OF SECTION 08520

SECTION 08600 - CUSTOM WOOD WINDOWS

PART 1 - GENERAL

1.1 WORK INCLUDED

A. Fabrication of new wood sash to match existing.

B. Repair and restoration of existing wood sash.

C. Glazing.

1.2 RELATED WORK

A. Section 06200 - Finish Carpentry: Preparation of window openings.

B. Section 09900 - Painting: Restoration of existing sash, reglazing, and site finishing of wood surfaces.

C. Section 08500 - Wood Window Schedule for additional window work requirements.

1.3 REFERENCES

A. AWI Quality Standards.

1.4 QUALITY ASSURANCE

A. Employ only skilled experienced artisans, glaziers, and carpenters thoroughly familiar with historic wood window fabrication and restoration.

1.5 SUBMITTALS

A. Submit shop drawings and product data under provisions of Division 1.

B. Include field dimensions, relation to adjacent construction, hardware installation details, and schedule.

C. Submit samples under provisions of Division 1.

D. Submit sample of typical window sash components.

PART 2 - PRODUCTS

2.1 MATERIALS

A. Wood: Clear Hard Pine species to match existing, AWI premium grade, kiln-dried (with a moisture content of 6-12% at time of fabrication), preservative-treated and primed.

B. Glass: to match existing (or salvaged glass).

2.2 REPLACEMENT SASH

A. Custom wood sash to match existing.

B. Sash hardware (including sash cords, sash locks, sash lifts, and interlocking weather-stripping): to match existing.

C. Substitutions: See Division 1.

PART 3 - EXECUTION

3.1 CUSTOM SINGLE- GLAZED WOOD SASH

A. All wood components to match existing windows in all respects and as detailed on Drawings.

B. Treat all wood parts with preservative. Allow 3 days drying time before priming. Re-apply preservative to all cut ends.

C. All joints to be mortise and tenon-type, dowelled, glued, and nailed with galvanized nails.

D. Apply one coat of prime paint on all surfaces after assembly.

E. All new sash shall be fitted with new or salvaged sash locks, weatherstripping, sash, etc.

3. 2 INSTALLATION

A. Provide all hardware, anchors, clips, and other components necessary for a complete, operational and weather tight installation.

B. Set sash units level, plumb, and true to line, without warp or rack of frames and panels. Set units into existing openings. Adjust as necessary for smooth operation and weather tight closure.

C. See Wood Window Schedule (08500) for additional information and requirements.

D. At location of window air conditioner units to be removed, remove filler panels and other related accessories. Raise top sash into proper position and seal in place. Provide wood blocks to support top sash. Ensure bottom sash is fully operable. Replace sash cords if necessary and ensure sash weights are in place and properly balanced. Repair existing bronze interlocking weather-stripping as required for the bottom sash to be fully operable and properly weather-sealed.

END OF SECTION 08600

SECTION 08710 - DOOR HARDWARE

PART 1 - GENERAL

1.1 SECTION REQUIREMENTS

A. Submittals: Hardware schedule and keying schedule.

B. Deliver keys to Owner.

C. Fire-Resistance-Rated Assemblies: Provide products that comply with NFPA 80 and are listed and labeled by a testing and inspecting agency acceptable to authorities having jurisdiction for applications indicated. On exit devices provide label indicating "Fire Exit Hardware."

PART 2 - PRODUCTS

2.1 HARDWARE

A. Acceptable Manufacturers: Refer to Hardware Schedule, attached.

B. Hinges:

1. Brass/bronze hinges with stainless-steel pins for exterior.
2. Nonremovable hinge pins for exterior and public interior exposure.
3. Ball-bearing hinges for doors with closers and entry doors.
4. 3 hinges for 1-3/4-inch- (45-mm-) thick doors 90 inches (2300 mm) or less in height; 4 hinges for doors more than 90 inches (2300 mm) in height.

C. Locksets and Latchsets:

1. BHMA A156.2, Series 4000, highest grade for bored locks and latches.
2. BHMA A156.3, Grade 1 for exit devices.
3. BHMA A156.5, Grade 1 or Grade 2 for auxiliary locks.
4. BHMA A156.12, Series 5000, Grade 1for interconnected locks and latches.
5. BHMA A156.13, Series 1000, Grade 1 for mortise locks and latches.
6. Lever handles on locksets and latchsets.
7. Provide trim on exit devices matching locksets.

D. Key locks to Owner's master-key system. All keys to be keyed alike.

1. Cylinders with five or six-pin tumblers and removable cores.
2. Provide construction keying, if requested.

E. Closers:

1. Mount closers on interior side (room side) of wood and door opening, unless otherwise noted. Provide regular-arm, parallel-arm, or top-jamb-mounted closers as necessary.
2. Adjustable delayed opening (accessible to people with disabilities) feature on closers.

F. Provide wall stops or floor stops for doors without closers.

G. Provide hardware finishes as follows:

1. Hinges: Matching finish of lockset/latchset.
2. Locksets, Latchsets, and Exit Devices: as noted in Schedule.
3. Closers: Matching finish of lockset/latchset.
4. Other Hardware: Matching finish of lockset/latchset.

PART 3 - EXECUTION

3.1 INSTALLATION

A. Mount hardware in locations recommended by the Door and Hardware Institute unless otherwise indicated.

B. **DOOR HARDWARE SCHEDULE:**

HARDWARE SETS

HW – 1 (for Exterior Double Door **B1** into Hallway B5).

- □ Existing butt hinges to remain. Lubricate.
- □ 2 new surface bolts, top and bottom of inactive leaf (by Rockwood 580-8 US10B).
- □ Refurbish existing door knobs and rim latch lock on active leaf.
- □ New threshold (by Pemko 1716 D).
- □ New door shoe (by Pemko 210DV).
- □ Pemko Spring Bronze weather-stripping at perimeter.

HW – 2 (for Exterior Double Door **B2** to Entry B5).

- □ Existing butt hinges to remain. Lubricate.
- □ 2 Surface bolts, top and bottom of inactive leaf (by Rockwood 580 -8 US10B).
- □ New Door bottom protection (by Pemko 3151 CN) on both leafs (paint trim color).
- □ Pemko Spring bronze weather-stripping at perimeter.
- □ Repair / refurbish existing door knobs and lock on active leaf.

HW – 3 (for Exterior Door **B3** to Storeroom B14).

- □ Existing butt hinges to remain. Lubricate.
- □ 2 new surface bolts on lock side (by Rockwood 630 -4 US10B).
- □ Pemko Spring bronze weatherstripping.
- □ Existing pull handle on exterior to remain.
- □ New door shoe (by Pemko 210 DV).

HW – 4 (for Exterior Double Door 101 to Vestibule 101).

- □ Re-use existing butt hinges (6 total). Lubricate.
- □ 1 New Russwin 'Vintage' closer (to match existing on inactive leaf).
- □ Re-use mortise lock with thumb latch handle. Refurbish both sides.
- □ Remove key cylinder.
- □ Weather-stripping, bronze-interlocking type to suit.
- □ Re-use existing slide / surface bolts on inactive leaf, top and bottom.
- □ New wood astragal to match existing.
- □ Existing bronze saddle to remain. Provide bronze J Hook to door bottom.
- □ New door bottom sweeps (by Pemko 308 DPK).

See Door Schedule and Drawing A0.1 for additional information on each exterior door.

END OF SECTION 08710

SECTION 09240–STUCCO

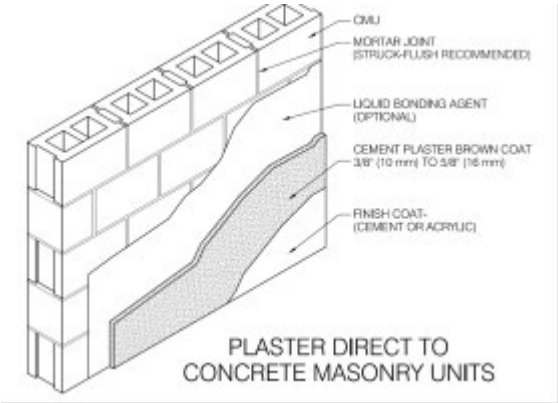

PART 1- GENERAL

1.01 SUMMARY

A. Section Includes: Work includes all labor, materials, and equipment necessary to install portland cement plaster stucco assembly below basement Windows B8, B9, and B10, inside and out, aa shown on drawings.

B. Related Sections

1. 04500 Masonry Restoration
2. 04810- Concrete Unit Masonry

1.02 REFERENCES

A. ASTM C150 – Portland Cement

B. ASTM C847 – Standard Specification for Metal Lath

C. ASTM C1032 - Woven Wire Plaster Base

D. ASTM C933 - Welded Wire Lath

E. ASTM C144/C897 – Aggregate for Job-Mixed Portland Cement-Based Plaster

F. ASTM C926 – Application of Portland Cement-Based Plaster

G. ASTM C1063 – Installation of Lathing and Furring for Portland Cement Based Plaster

H. PCA (Portland Cement Association) – Plaster (Stucco) Manual

I. SMA (Stucco Manufacturer's Association) Details and Technical Bulletins

1.03 ASSEMBLY DESCRIPTION

A. General: Portland cement plaster over masonry with lath (optional) , scratch (when lath is applied) , brown coat, and a finish coat. Nominal thickness is ½ to 5/8 inch for no lath and ¾ to one inch with lath.

Application Methods: The plaster may be applied by hand tools or machine pumps but must be applied with sufficient pressure to adhere to the substrate.

B. Masonry and concrete shall be sound, free of coatings, cured minimum 28 days.

C. Thickness of plaster are considered maximum nominal measurements.

1.04 SUBMITTALS

A. Product Data: All product data sheets, evaluation reports, details, and warranty information.

B. Samples: Submitted upon request.

C. Retain approved samples at the construction site throughout the application process.

1.05 QUALITY ASSURANCE

A. Qualifications:

B. Manufacturer: All component materials shall be SMA approved and shall be distributed by authorized dealers.

C. Plastering Contractor:

Shall specialize in lath and plaster contracting with documented experience of at least 5 years in business.

D. Provide proof of current contractor's license and bond where required.

E. On-Site Mock-Ups: Produced upon request.

F. Retain approved mock-up at job site throughout the application process.

1.06 DELIVERY, STORAGE, AND HANDLING

G. Delivery: Deliver all materials to the construction site in their original, unopened packaging with labels intact.

H. Inspection: Inspect the materials upon delivery to assure that specified products have been received. Report defects or discrepancies to the responsible party according to the construction documents; do not use reported material for application.

I. Storage: Store all products per manufacturer's recommendations. Generally, store materials in a cool, dry location; away from direct contact with the ground and/or concrete; out of direct sunlight; and protect from weather and other damage.

1.07 PROJECT CONDITIONS

J. Environmental Requirements: Follow product manufacturer's recommendations for environmental conditions and surface preparation.

K. Temperatures: Before, during and following the application of the portland cement plaster, the ambient and surface temperatures must remain above 40 degrees F (4 C) for a minimum period of 24 hours. Protect stucco from uneven and excessive evaporation, especially during hot, dry and/or windy weather. Protect the portland cement plaster from freezing for a period of not less than 24-hours after set has occurred.

L. Substrates: Prior to installation, inspect the wall for surface contamination, bond breakers, or other defects that may adversely affect the performance of the materials, and shall be free of foreign matter. Do not apply the portland cement plaster to substrates with temperatures less than 40 degrees F (4 C) or that contain frost or ice.

M. Inclement Weather: Protect applied material from deleterious effects until cured or dry.

N. Existing Conditions:

Contractor shall walk the project prior to starting work and notify the architect or owner's representative of any deficiencies that will negatively impact the plaster or parge coating. Do NOT proceed until remedied and contractor can provide warranty.

1.08 SEQUENCING AND SCHEDULING

O. Sequencing: Coordinate the installation of the lath and portland cement plaster with all other construction trades. To reduce stucco cracking, insure the concrete/masonry substrate is cured a minimum of 28 days and not saturated prior to plastering.

P. Plastering contractor shall request and attend a pre-installation meeting with general contractor and architect.

1.08 WARRANTY

Q. Warranty: Submit documentation on all products. At completion of work, contractor shall provide a written warranty documentation for the assembly and products used.

R. Warranty Length: Shall start at the time of substantial completion.

PART 2 - PRODUCTS

2.01 MANUFACTURERS

A. SMA Manufacturers: Must be from the current list on SMA website under appropriate category.

B. Lath and Trim Accessories (if required).

2.02 BROWN COAT (BASECOAT)

A. Cement: Portland cement complying with ASTM C150.

B. Sand:

1. Field mixes shall comply with ASTM C-926 and must have sand that is clean and free from deleterious amounts of loam, clay, silt, soluble salts and organic matter. Sampling and testing shall comply with ASTM C144 or C897.
2. An "engineered performance mix" by an SMA manufacturer is acceptable with appropriate approvals (ICC ES, IAPMO or Interek report).

C. Water: Clean and potable without foreign matter.

D. Bonding agents as recommended by SMA.

2.03 ACCESSORIES

A. Sealants: Acrylic latex complying with ASTM C834 or Polyurethane, polyurethane modified, polysulfide, or silyl-terminated polyether elastomeric sealant complying with ASTM C920 or 100% silicone.

2.04 FINISHES

A. Color and Texture: Manufacturer, color and finish texture shall be as approved by the Architect.

2.05 MIXES

A. Portland Cement Plaster Basecoats:

1. Prescriptive Method: Ratios and Mix Design shall be per ASTM C926. Contractor shall select one of the following mixes (sand is per **combined volume** of cements), lime is cement:

a.

Portland Cement	1 part
Lime (type S)	¼ to ½ part
Sand	3 to 4 parts per cement & Lime
Fibers	Maximum 3 oz per batch

2. Engineered Method: Pre-mix blends or silos per SMA manufacturer.

B. Finish Coats: Mixing and tinting instructions are contained in the appropriate product data sheets by the SMA Manufacturer.

PART 3 - EXECUTION

3.01 EXAMINATION / INSTALLATION

A. Prior to the application of the portland cement plaster basecoat the plastering contractor shall ensure that:

1. Surface and site conditions are ready to receive work.

2. Grounds and Blocking: Verify that the items within the walls for other sections of work have been installed.
3. Notify architect/owner of any defects that may impact the finished assembly. Proceed as directed.

B. Substrates:
1. Acceptable substrates must be sound, secure and suitable for plaster.
2. Substrates and adjacent materials must be dry and clean. Substrate surface must be flat, free of protrusions or planar irregularities greater than ¼-nch in 10-feet (6mm in 3m).

C. Unsatisfactory conditions or concerns shall be reported to the general contractor and/or builder and/or architect and/or owner. Do not proceed until directed in writing by architect or general contractor.

PREPARATION

D. Substrate: inspect all work prior to starting lath and plastering. Notify architect of any issues impacting performance, proceed as directed.

E. Surrounding Areas: Protect surfaces near the work of this section from damage, disfiguration, and overspray. Mask off all dissimilar materials.

INSTALLATION, GENERAL

F. General Installation: ASTM C926, ASTM C1063, and/or the appropriate manufacturer's product data sheet for additional installation requirements and recommendations of the SMA.

INSTALLING PORTLAND CEMENT PLASTER

G. Per ASTM C926, apply portland cement plaster by hand-troweling to a nominal thickness of 3/8-inch (9.5mm) for scratch coat (if lath is used) . Apply a second coat to a nominal thickness of 3/8-inch (9.5 mm) brown coat. Total basecoat shall be a nominal ¾ inch thickness for lath and ½ inch for direct application to masonry substrates. Concrete should be skim only, unless lath is used.

H. Scratch coat shall substantially cover the lath. Score in a horizontal pattern.

I. Apply brown coat to fill and complete basecoat. Rod to a flat plane. Do not apply to frozen or soft scratch coat. When excess moisture leaves brown coat, hard float to provide densification per ATSM.

J. Moist Curing: Provide sufficient moisture by fog or moist curing to permit proper hydration of the cementitious materials. The length of time and most effective procedure for curing will depend on climatic and job conditions. Refer to SMA curing guidelines.

INSTALLING FINISH COAT

K. General: Mix and apply per manufacturer's product data sheet.

L. Do not apply to soft, contaminated or frozen basecoat.

M. Avoid applying to excessively hot walls.

N. Verification: Verify the desired color, material and texture to match the approved sample and/or mock-up prior to installation.

O. Avoid scaffold lines and cold joints

P. Fog coat (cement finish only) as needed to blend color variations

Q. Finish coat shall be free of eye-catching imperfections.

CLEANING/PATCHING/TOLERANCE

R. Cleaning: Remove any and all materials used, overspray from adjacent surfaces, and all protective masking.

S. Patch and repair as needed, including but not limited to fog coating, imperfections and blisters.

T. Cracks shall be repaired per the most current SMA Crack Policy (Technical Bulletin 4)

U. Eye catching variations in color or texture pattern will not be accepted.

PROTECTION

V. Protect applied material from inclement weather until dry and prevent it from freezing for a minimum of 24-hours after set and/or until dry. Refer to manufacturer's product data sheet for additional requirements.

END OF SECTION 09240

SECTION 09900 - PAINTING

PART 1 - GENERAL

1.1 WORK INCLUDED

A. Surface preparation and field application of paints and coatings.

B. See Schedule at end of this Section.

1.2 RELATED SECTIONS

A. 01200 and Bid Form – Alternates, Allowances, and Unit Prices.

B. 08212 – Wood Doors: Priming

C. 05520 – Repairs to metal railings

D. 06200 – Wood repairs: Back priming

E. 04010 – Masonry Coating Systems

1.3 REFERENCES

A. ANSI/ASTM D16 - Definitions of Terms Relating to Paint, Varnish, Lacquer, and Related Products.

B. ASTM D2016 - Test Method for Moisture Content of Wood.

C. NACE (National Association of Corrosion Engineers) - Industrial Maintenance Painting.

D. NPCA (National Paint and Coatings Association) - Guide to U.S. Government Paint Specifications.

E. PDCA (Painting and Decorating Contractors of America) - Painting - Architectural Specifications Manual.

F. SSPC (Steel Structures Painting Council) - Steel Structures Painting Manual.

G. 40 CFR 59, Subpart D – National Volatile Organic Compound Emission Standards for Architectural Coatings: U.S. EPA.

1.4 DEFINITIONS

A. Conform to ASTM D16 for interpretation of terms used in this Section.

1.5 SUBMITTALS

A. Submit product data at request of Architect.

B. Product Data: Provide data on all finishing products.

C. Field Samples: Submit two samples, 48 x 48 inches in size, illustrating range of colors and textures available for each surface finishing product scheduled. Assume up to 4 different color samples for each surface to reach approval.

D. Samples: Submit two samples, 8 x 10 inches in size, illustrating selected colors and textures available for each color selected.

E. Glass Samples: Submit 3” x 5” samples to match existing.

F. Manufacturer's Instructions: Indicate special surface preparation procedures, and substrate conditions requiring special attention.

G. Mock-up: Provide field mock-up for evaluation of each surface preparation techniques and application workmanship.

1.6 QUALIFICATIONS

A. Manufacturer: Company specializing in manufacturing the Products specified in this section with minimum 10 years documented experience.

B. Applicator: Company specializing in performing the work of this Section with minimum 10 years documented experience with historic restoration projects.

1.7 REGULATORY REQUIREMENTS

A. Conform to applicable code for flame and smoke rating requirements for finishes.

B. Follow current procedures and requirements for removing and disposing of lead-based paints as required by the Department of Environmental Management, Department of Health, and other regulatory agencies having jurisdiction.

Note: Given the age of the building, it is assumed that some lead-based paints exist on the exterior (especially the main cornice) and interior sash surfaces. Contractor must be certified, or engage the services of a certified consultant, to implement a lead paint abatement program in conformance with regulatory mandates.

1.8 DELIVERY, STORAGE, AND HANDLING

A. Deliver, store protect and handle products to site.

B. Deliver products to site in sealed and labeled containers; inspect to verify acceptability.

C. Container label to include manufacturer's name, type of paint, brand name, lot number, brand code, coverage, surface preparation, drying time, cleanup requirements, color designation, and instructions for mixing and reducing.

D. Store paint materials at minimum ambient temperature of 45 degrees F and a maximum of 90 degrees F, in ventilated area, and as required by manufacturer's instructions.

E. Waste Management and Disposal:

1. Comply with local regulations for disposal of all paint materials including paint, stain, wood preservative finishes, solvents, and other related materials.

2. Recycle paint as available in jurisdiction. Separate materials by type. Where paint recycling is not available, materials shall be treated as hazardous waste and disposed of in compliance with current applicable codes and regulations.

1.9 ENVIRONMENTAL REQUIREMENTS

A. Do not apply materials when surface and ambient temperatures are outside the temperature ranges required by the paint product manufacturer.

B. Do not apply exterior coatings during rain or snow, or when relative humidity is outside the humidity ranges required by the paint product manufacturer.

C. Minimum Application Temperatures for Latex Paints: 45 degrees F for interiors; 50 degrees F for exterior; unless required otherwise by manufacturer's instructions.

D. Minimum Application Temperatures for Varnish Finishes: 65 degrees F for interior or exterior, unless required otherwise by manufacturer's instructions.

E. Provide lighting level of 80 ft candles measured mid-height at substrate surface.

1.10 WARRANTY

A. At project closeout, provide Owner with manufacturer's Limited Warranty against Manufacturing Defects.

1.11 EXTRA MATERIALS

A. At project closeout, Provide 1 gallon of each color, type and surface texture to Owner.

B. Label each container with color, type, texture, room locations, and date, in addition to manufacturer's label.

PART 2 - PRODUCTS

2.1 MANUFACTURERS

A. Acceptable Manufacturers– Paint:
1. Benjamin Moore & Co. of Montvale, NJ

B. Substitutions: Submit product substitution to Architect for approval as per Section 01600.

2.2 MATERIALS – GENERAL

A. Volatile Organic Compound (VOC) Content:
   1. Provide coatings that comply with the most stringent requirements specified in the following:
      a. 40 CFR 59, Subpart D—National Volatile Organic Compound Emission Standards for Architectural Coatings.
      b. Determination of VOC Content: Testing and calculation in accordance with 40 CFR 59, Subpart D (EPA Method 24), exclusive of colorants added to a tint base and water added at project site; or other method acceptable to authorities having jurisdiction.

B. Compatibility: Provide materials that are compatible with one another and the substrates indicated under conditions of service and application, as demonstrated by manufacturer based on testing and field experience.

2.3 MATERIALS

A. Coatings: Ready mixed, except field catalyzed coatings. Process pigments to a soft paste consistency, capable of being readily and uniformly dispersed to a homogeneous coating; good flow and brushing properties; capable of drying or curing free of streaks or sags.

B. Accessory Materials: Linseed oil, shellac, turpentine, paint thinners, trisodium phosphate and other materials not specifically indicated but required to achieve the finishes specified, of premium commercial quality.

C. Patching Materials: Latex filler.

D. Fastener Head Cover Materials: Latex filler.

E. Paint Stripper: Enviro-Klean Paint and Coating Removers (Safety Peel 1) by PROSOCO, Inc. or approved equal.

F. Glazing materials: Galvanized steel diamond shaped glazing points and top quality oil-based glazing compound.

G. Replacement glass for historic windows to match existing.

H. Glazing materials: Galvanized steel diamond shaped glazing points and top quality oil-based glazing compound.

I. Wood Consolidants: Abatron products (Liquid Wood and Wood Epox) or equal.

J. Caulking between wood and masonry: Tremco Dymonic Caulk (or equal).

K. Gilding materials:

   1. Giusto Manetti Goldbeaters 23 karat XX patent gold leaf, in rolls or sheets to suit.

2. Size: Slow-drying oil gold size (Hastings Oil Size, yellow or approved equal).
3. Sizing material shall be compatible with all other materials it comes in contact with so that entire priming and gilding system will not crack, bubble, or peel

2.4 FINISHES

A. Refer to schedule at end of Section for surface finish schedule. Colors to be established on site by Architect in consultation with Owner.

PART 3 - EXECUTION

3.1 EXAMINATION

A. Verify that surfaces and substrate conditions are ready to receive work as instructed by the product manufacturer.

B. Examine surfaces scheduled to be finished prior to commencement of work. Report any condition that may potentially affect proper application.

C. Test shop applied primer for compatibility with subsequent cover materials.

D. Measure moisture content of surfaces using an electronic moisture meter. Do not apply finishes unless moisture content of surfaces are below the following maximums:
1. Masonry, Concrete, and Concrete Unit Masonry: 12 percent.
2. Exterior Wood: 15 percent, measured in accordance with ASTM D2016.
3. Exterior Plaster: 15%.

3.2 PREPARATION OF NEW SURFACES

A. Remove or mask electrical plates, hardware, light fixture trim, and fittings prior to preparing surfaces for finishing.

B. Correct minor defects and clean surfaces which affect work of this Section. Remove existing coatings that exhibit loose surface defects.

C. Cover stains and marks with isolating primer or sealer recommended by coating manufacturer to prevent bleed-through.

D. Impervious Surfaces: Remove mildew by scrubbing with solution of tri-sodium phosphate and bleach. Rinse with clean water and allow surface to dry.

E. Aluminum Surfaces Scheduled for Paint Finish: Remove surface contamination by steam or high pressure water. Remove oxidation with acid etch and solvent washing. Apply etching primer immediately following cleaning.

I. Copper and Lead-Coated Surfaces Scheduled for a Paint Finish: Remove contamination by steam, high pressure water, or solvent washing.

J. Galvanized Surfaces: Remove surface contamination and oils and wash with solvent.

Apply coat of etching primer.

K. Concrete and Unit Masonry Surfaces Scheduled to Receive Paint Finish: Remove dirt, loose mortar, scale, salt or alkali powder, and other foreign matter. Remove oil and grease with a solution of tri-sodium phosphate; rinse well and allow to dry. Remove stains caused by weathering of corroding metals with a solution of sodium metasilicate after thoroughly wetting with water. Allow to dry.

L. Uncoated Steel and Iron Surfaces: Remove grease, mill scale, weld splatter, dirt, and rust. Where heavy coatings of scale are evident, remove by hand power tool wire brushing or sandblasting; clean by washing with solvent. Apply a treatment of phosphoric acid solution, ensuring weld joints, bolts and nuts are similarly cleaned. Spot prime paint after repairs.

M. Shop Primed Steel Surfaces: Sand and scrape to remove loose primer and rust. Feather edges to make touch-up patches inconspicuous. Clean surfaces with solvent. Prime bare steel surfaces. Prime metal items including shop primed items.

N. Exterior Wood Scheduled to Receive Paint Finish: Remove dust, grit and foreign matter. Seal knots, pitch streaks, and sappy sections. Fill nail holes with tinted exterior caulking compound after prime coat has been applied.

3.3 PREPARATION OF EXISTING SURFACES

A. Painted Iron and Steel to be Re-painted: (e.g. pipe railings, bell cradle components, lantern over front door, shutter pintles, etc.):

1. Where called for or required to achieve best results, remove paint down to bare metal using approved chemical strippers.

2. Remove rust and scaling down to sound, bare metal. Use hand scrapers, wire brushes or machine sanders as required and where necessary. Avoid damage to original materials.

3. Grind metal surfaces as necessary to ensure proper closing and opening of metal sash. Immediately prime exposed metal with specified metal primer.

B. Painted Wood to be Re-painted (including exterior wood surfaces and interior wood surfaces of window sills and sash only):

1. Special Instructions: It is important to the success of the painting that the Painting Contractor and all his employees understand the historical nature of the wood to be painted. The painted wood is historic material and its surface, contour, and profile must be respected as such.

2. All required precautions to insure the integrity of profiles, surfaces, etc. shall be taken. Scraping and sanding tools, materials, and procedures shall be chosen to minimize loss of historic material. To this end, test samples shall be made for the

Architects' approval prior to painting.

3. Where woodwork cannot be successfully prepared for re-finishing, the Painting Contractor shall notify Architect. Cracked, loose, or missing wood trim shall be stabilized or replaced as required before preparation is started. Unspecified wood repairs shall be performed under Allowance No.1. (See 01200).

4. It is the intention of these Specifications that old surfaces be respected and that there is no requirement to make old surfaces look like new surfaces.

5. On all surfaces that do not require paint stripping, remove loose and poorly bonded paint by hand scraping and hand sanding. Sand smooth all irregularities. 'Feather' out edges. Produce a paintable, uniformly smooth surface ready for painting. Sand 'weathered' wood down to a bright finish before painting.

   NOTE: Mechanical abrasive methods may be used if hand sanding proves inadequate. Orbital sanders ma y be used with a medium grit, open-coat aluminum oxide sandpaper for smoothing paint only if it can be demonstrated that there is no damage to the wood. Belt sanders may only be used by a skilled operator. Chemical strippers may only be used with prior written approval by the Architect. Open flame torches, rotary drill attachments, high pressure water-blasting and sand-blasting will <u>not</u> be permitted.

6. Thoroughly wash all surfaces with Jomax and bleach solution to remove dirt, mold, and mildew. Pressure wash with clear water. Control water pressure to avoid damage to material finishes and to prevent water penetration into building. Wipe clean with dry rags.

7. Fill cracks, voids, and minor indentations with suitable high quality patching/caulking compound and sand smooth by hand sanding. For badly checked, deteriorated and gouged surfaces, use an epoxy consolidant (e'g', Abatron) as directed and as per manufacturer's written instructions. See Section 06200.

8. For severely deteriorated wood, replace rotted sections in-kind with 'Dutchmen' using compatible wood species, as directed by Architect. (See Allowances under 01200).

9. Set rusty nail heads and putty holes flush.

C. Painted wood to be stripped and re-painted:

1. Where called for on drawings and in Key Notes or necessary to achieve best results, strip paint down to bare wood using Prosoco's Safety Peel #1 (or equal) as per manufacturer's instructions.

   a. Contractor may propose alternative methods of paint removal for approval.
   b. Alternative methods must comply with applicable lead paint abatement, containment and disposal regulations.

2. Thoroughly wash all surfaces with Jomax and bleach solution to remove mildew, particulate matter, etc. Pressure wash with clear water. Control water pressure to avoid damage to material finishes and to prevent water penetration into building. Wipe clean with dry rags.

3. Fill cracks, voids, and minor indentations with suitable high quality patching/caulking compound and sand smooth by hand sanding. For badly checked, deteriorated and gouged surfaces, use an epoxy consolidant as directed and as per manufacturer's written instructions. See Section 06200.

4. Set rusty nail heads and putty holes flush.

5. For bidding purposes, assume the following areas and building components to be stripped down to bare wood :

   a. Window sills, inside and out, as noted on Window Schedule.

D. Painted copper and lead-coated copper to be re-painted (including flat seam roofing on dormer roofs and enclosed passageway behind tower, balustrade cap flashing, etc.):

1. Carefully scrape off loose and poorly bonded paint. Sand lightly.
2. Remove dust and dirt with mild detergent and water. Wash and rinse thoroughly. Pressure wash if necessary with clear water.
3. Remove, oil, grease, etc. by solvent cleaning in accordance with SSPC-SPI.
4. Care should be taken not to remove or damage lead coating.
5. Leave surfaces clean and dry.

E. Painted brownstone to be re-painted (See 04010):

1. Carefully scrape off loose and poorly bonded paint. Sand lightly.
2. Remove dust and dirt with mild detergent and water. Wash and rinse thoroughly.
3. Fill cracks and crevices with appropriate patching compounds.

F. Painted brownstone to be stripped and re-painted (See 04010):

1. Strip paint layers down to bare masonry surface.
2. Lightly power wash bare masonry surfaces. Remove mildew by scrubbing with mildewcide wash and rinse clean.
3. Fill cracks and crevices with appropriate patching compounds.
4. Patch brownstone where necessary and as specified under 04500.

G. Painted galvanized metal to be re-painted:

1. Remove peeling and scaling paint and chalk by scraping, sanding and wire-brushing.
2. Clean in accordance with SSPC-SPI-63 'Solvent Cleaning'.
3. Sand clean rust spots.
4. Prime immediately with approved metal primer.

H. Gilded Surfaces to be Re-gilded (on clock faces, if required):

1. Remove all gold leaf and paint under-coatings down to bare metal or wood using approved solvents, hand scrapers, and brushes. Do not use power tools.
2. Wash and clean copper with alcohol. Then thoroughly wash with clean water.
3. Prepare barer wood surfaces for priming.
4. Immediately prime bare metal or wood with specified primer.

3.4 GLAZING / RE-GLAZING

A. Carefully inspect all windows for broken, cracked or missing glass. Glass broken during course of work by contractor is to be replaced at no additional cost to Owner. (See Elevations and/ Window Schedule for glass panes to be replaced under Base Bid).

B. To replace glass, carefully remove old putty manually and extract glazing points. Remove remaining putty on rabbeted edges and sand and clean down to bare wood.

C. Apply coat of boiled linseed oil on wood sash sticking, then a coat of oil base primer.

D. Before installation of glass, lay bead of glazing compound (or linseed oil putty) around rabbet to cushion and seal glass.

E. Insert glazing points at perimeter of glass pane. Apply and bevel final seal of putty around edge of glass. Remove excess glazing compound on interior side of sash and clean glass.

F. Purchase and install replacement glass (to match existing hand-blown glass).

G. Inspect all window panes for condition of glazing putty, inside and out. Carefully but completely remove all loose and cracked old putty down to glass. Putty in sound, good condition shall remain and prepared for painting. Install glazing points as necessary. Apply boiled linseed oil on bare wood and prime with oil base primer. Use high quality glazing compound and galvanized glazing points.
For bidding purposes, assume the following:

1. Re-glaze all window sash up to 100% (except dormer windows on third floor).
2. Spot re-glaze dormer windows on third floor as necessary.
3. Spot re-glaze interior panes of glass as necessary.

H. Clean new glass panes after glazing (both sides). Clean all exterior panes of glass of entire window.

3.5 APPLICATION

A. Apply products in accordance with manufacturer's instructions. Use only high-quality paint brushes. <u>No spray equipment and no rollers without specific prior approval by Architect</u>.

B. Do not apply finishes to surfaces that are not dry.

C. Apply each coat of paint by brush to uniform finish.

D. Apply each coat of paint slightly darker than preceding coat unless otherwise approved.

E. Sand wood and metal lightly between coats to achieve required finish.

F. Vacuum clean surfaces free of loose particles. Use tack cloth just prior to applying next coat.

G. Allow applied coat to dry before next coat is applied.

H. Prime concealed surfaces of interior and exterior woodwork with primer paint.

3.6 GOLD LEAF APPLICATION

A. Strictly follow gold leaf manufacturer's written instructions for proper application of gold leaf. In general, the method of application is as follows:

1. Make sure base coats of primer and 3 coats of paint are thoroughly dry and very smooth before applying sizing and gold leaf.
2. Apply slow-drying oil size by brush on areas to be gilded.
3. When size has reached proper tack (usually within 12 hours) apply patent gold from paper, smoothly and evenly. Before removing paper, rub back of it to make sure gold is thoroughly adhered to size. After laying, burnish with absorbent cotton to eliminate voids, pinholes, or wrinkles.
4. Apply size only on portion of work that can be gilded next day.

B. Items to Receive Gold Leaf Include:

1. Clock numerals, ring lines and dots previously gilded.
2. Clock minute and hour hands on all 3 clock faces.

3.7 CLEANING

A. Collect waste material which may constitute a fire hazard, place in closed metal containers and remove daily from site.

3.8 SCHEDULE - EXTERIOR SURFACES

A. New Wood to be Painted (including miscellaneous 'dutchmen'):

1. One coat Benjamin Moore exterior oil base primer sealer.
2. Two coats 100% acrylic latex soft gloss finish (dry film thickness: 2.0 mils minimum) equal to Benjamin Moore Regal Select Exterior Soft Gloss Paint.

B. Painted Wood to be Re-painted (including tower trim, doors, cornices, roof balustrades, and all windows).

1. On bare, weathered wood, treat with two parts raw linseed oil and one-part turpentine.
2. One coat Benjamin Moore 094 Fresh Start Moorwhite exterior oil base primer sealer, Fast Dry after sanding and patching. Apply second coat of primer after filling open joints and filling small imperfections.
3. Two coats 100% acrylic latex soft gloss finish (dry film thickness: 2.0 mils minimum) equal to Benjamin Moore N403 Regal Select High Build Exterior Soft Gloss Paint.

C. New Ferrous Metal to be Painted (including pipe railings):

1. One coat Benjamin Moore P06 Super Spec HP Alkyd Metal Primer.
2. Two coats Benjamin Moore P22 Super Spec HP Urethane Alkyd Gloss Enamel.

D. Painted Ferrous Metal to be Re-painted (including lantern, railings, bell cradle components, shutter pintles, etc.):

1. One coat Benjamin Moore P06 Super Spec HP Alkyd Metal Primer.
2. Two coats Benjamin Moore P22 Super Spec HP Urethane Alkyd Gloss Enamel.

E. Painted Copper and Lead-coated Copper to be Re-painted (including tower flashings, cladding, bell deck, and cap flashings):

1. One coat BM Corotech Waterborne Bonding Primer.
2. One coat BM Corotech Polyamide Epoxy Primer.
3. One coat BM Regal Select Exterior Soft Gloss Paint.

F. Painted Lead-coated Copper Batten Seam Roof of Tower to be Repainted:

1. Two coats BM Corotech V160 Epoxy Mastic Primer.
2. One coat BM Corotech V510 Aliphatic Acrylic Urethane Coating.

H. Painted Masonry Surfaces to be Re-painted: See 04010.

J. Gilding (clock hands, numbers, etc.):

1. One coat BM Corotech Waterborne Bonding Primer.
2. Three (3) coats BM P22 Urethane Alkyd Enamel.
3. One coat slow set oil gold size.
4. Gold leaf as specified.

K. Interior Painted Wood to be Re-painted (including window sash, sill, etc.)

1. On bare, weathered wood, treat with two parts raw linseed oil and one-part

turpentine.

2. One coat Benjamin Moore Alkyd Enamel Underbody primer sealer.
3. Two coats Benjamin Moore Alkyd Satin Finish Enamel.

L. Natural Finish (on new oak bell wheel):

1. Two coats Penofin Ultra Premium Penetrating Oil Finish (tinted).

3.9 PRELIMINARY COLOR SCHEDULE

A. Painted wood surfaces (except doors): Color to match. Architect to provide color samples to match.

B. Doors: Architect to provide color selection.

C. Aluminum frames of Lexan panels over basement windows: by Allied Windows.

D. Metal railings, pintles, etc.: Black to match existing.

E. Bell cradle components: Black to match existing.

F. Brownstone and stucco surfaces: To match existing.

G. Flat and batten seam roof: Custom patina green. Architect to provide color sample to match.

H. Interior color of sash and certain window sills: To match paint color of each room or space as directed by Architect.

END OF SECTION 09900

KEY NOTES AND GENERAL NOTES
FOR DRAWINGS A2.0, A2.1, A2.2 & A2.3 EXTERIOR ELEVATIONS:

2.0 SITE WORK

2.1 Remove and properly dispose of the following:

- Metal security grilles on basement windows (Total of 6).
- Bottom sash of Windows B6, B8, B9, B10.
- Gutters and copper rain leaders.
- Wood roof shingles, underlayment, etc.
- Roof scuttle.
- Window air conditioners and filler panels (Total of 10).
- Door 101.

2.2 Excavate bottom of areaways, north and south sides, down to level of basement floor. After masonry repairs and waterproofing, backfill with crushed stone to level indicated on Drawings A2.4 and A2.5.

2.3 Install 4” thick reinforced concrete slab in bottom of areaways. Pitch westward to drain to street.

4.0 MASONRY (see 04500)

4.1 At areaway, north side:

- Temporarily remove and set aside granite cap stones (and pipe railing).
- Patch, grout, repair exposed concrete retaining wall (3 sides). Remove loose, broken, and deteriorated concrete surfaces. Tuck point open joints. Parge wall as required.
- Reset cap stones in bed of cement mortar. Pin and glue broken stones.
- Clean, repoint exposed masonry wall. Parge smooth.
- Install CMU, filled solid, in lower half of 3 window openings. Finish with tinted stucco.
- Install brownstone sills to suit.
- See Dwg. A2.4 for detailed requirements.

4.2 At areaway, south side:

- Temporarily remove and set aside granite cap stones (and pipe railing).
- Patch, grout, repair exposed concrete retaining wall (3 sides). Remove loose, broken, and deteriorated concrete surfaces. Tuck point open joints. Parge wall as required.
- Reset cap stones in bed of cement mortar. Pin and glue broken stones.
- Clean, repoint exposed masonry wall. Parge smooth.
- See Dwg. A2.5 for detailed requirements.

4.3 Clean all masonry surfaces using gentlest means possible to remove dirt, biological growth, efflorescence, carbon stains, graffiti, etc.

4.4 Repoint brick and brownstone joints 100% with high lime mortar to match existing in composition, color, and tooling, etc.

4.5 Repoint coursed ashlar stone foundation walls as noted on Dwgs. A2.4 and A2.5.

4.6 Brownstone repairs as follows (See Legend for brownstone work):

4.6.1 Replacement of badly deteriorated and damaged brownstone, shown darkly shaded on exterior elevations (molded window sills, quoin blocks, keystones, etc.) with new solid clear brownstone pieces to match. Use Portland brownstone as first choice.

4.6.2 Patching of brownstone surfaces, shown lightly shaded on exterior elevations. Use Jahn M70 brownstone patching compound by Cathedral Stone.

4.6.3 New brownstone sill at front Door 101 (to replace wood sill). Use Portland Brownstone or approved equal (Approx. size 10”x 6'-0” x 2 1/2“ thick). See Detail B/A2.1.

4.6.4 At curved watertable course of brownstone, carefully remove cement patches and loose and spalling pieces. Dress stone surfaces as required to sound and stable condition. Patch with Jahn M70 as required. Apply siloxane water repellant coating.

4.7 Repoint 2 brick chimneys, east side, 100%. Apply siloxane water repellant coating. Spot repoint 2 chimneys west side, up to 50%.

4.8 Replace badly deteriorated brick with salvaged brick to match. Assume up to 100 bricks to be replaced.

4.9 Seal all vertical, skyward joints in brownstone with top-quality gunnable sealant with applied crushed brownstone sand finish.

5.0 METALS

5.1 Dismantle pipe railings at areaways, north and south sides, to facilitate repairs. Straighten bent sections and repair as required (or replace in-kind). See Dwg A2.4 & A2.5. Re-install with stainless anchors. Paint black.

6.0 WOOD (CARPENTRY)

6.1 At roof balustrade, replace deteriorated wood components in-kind where shown.

6.2 At bell deck, replace broken bell wheel with new solid oak wheel to match existing. Replace broken rope.

6.3 Inspect all remaining woodwork, including main cornices, tower, dormers, door and window trim. Repair/ restore/ replace as required under Allowance No. 1.

7.0 THERMAL AND MOISTURE PROTECTION

7.1 New cedar shingles: No. 1 Grade, smooth sawn, 18” long and 3.5” to 8” wide, 5/8” thick, fire-retardant treated, rebutted and repointed Install with stainless steel ring shank nails. See 07300.

7.2 Install cedar shingles over Cedar Breather by Benjamin Obdyke.

7.3 Install self-adhering sheet underlayment (e.g. HT Ice and Water Shield by Grace) on existing plywood roof sheathing as specified. Cover entire roof.

7.4 Repair/ replace defective sheet metal flashings on roof and tower under Allowance No. 2. Use 16 oz. to 20 oz. lead-coated copper in accordance with SMACNA recommendations.

7.5 Replace gutters at roof perimeter with new 20oz. lead-coated copper hanging gutters to match existing. Ensure positive pitch to outlets. See 07600 and Detail 6/A4.0. Paint.

7.6 Replace rain leaders with new 20 oz. lead-coated copper rain leaders (3 1/2" dia.). (Total of 8). Paint.

7.7 Provide cast iron elbow extension at bottom of cast iron Rain Leader Nos. 1 and 6. Paint.

7.8 Apply liquid-applied water-proof coating system on exposed foundation walls at north and south areaways.

7.9 Install soffit vents where missing. Replace up to 5 vents where missing or damaged under Base Bid.

7.10 Caulk joints between dissimilar materials. Cut out existing caulking compounds as required. Use high quality sealants.

7.11 New roof hatch. See 07723.

8.0 DOORS AND WINDOWS

8.1 See Door Schedule under 08000 and Dwg A0.1 for specific information on exterior Doors B1, B2, B3, 101, 102.

8.2 See Window Schedule under 08500 for specific information on each exterior window (a total of 54).

8.3 Provide clear Lexan panels set in painted aluminum frames on exterior of Windows B1, B4, B5, B6, B8, B9, and B10. (Possible source: Allied Windows of Cincinnati). See 08520.

9.0 PAINTING (See 09900)

9.1 On all exterior wood window sills, strip paint down to bare wood. Apply oil base primer.

9.2 On all remaining wood painted surfaces (cornices, balustrades, door and window casings, tower cladding), prepare surfaces for painting and paint 3 coats high quality paint finish as specified.

9.3 Prepare for painting and paint all metal railings, shutter pintles, and bell carriage, 3 coats.

9.4 On all window sash (except 3rd floor - total of 47 windows), remove glazing putty on exterior up to 100%. Caulk and putty all glass panes using top-quality paintable material.

9.5 Prepare for painting and paint all previously painted metal flashings and cast iron and new L.C.C. rain leaders and gutters as specified under 09900.

9.6 Apply silicate-based coating system (e.g. KEIM Soldalit) on brownstone surfaces where shown on exterior elevations. See 04010.

9.7 Paint black steel bracket and fasteners of lantern.

10.0 SPECIALTIES

10.1 Add 2 flagpoles on east elevation, where shown. Allowance No. 4 of $10,000 for 2 flagpoles.

10.2 Cut existing wood flagpole (atop tower) at top of metal flashing at base. Install L.C. copper cap flashing. Seal and Paint.

KEY NOTES FOR DRAWING A1.4 ROOF PLAN:

2.0 REMOVALS

2.1 ALLOWANCE NO. 4, TOWER LEAK INVESTIGATION: DISMANTLE TOWER COMPONENTS AS DIRECTED BY ARCHITECT, INCLUDING PILASTER BASES. SYSTEMATICALLY WATER TEST TOWER TO DETERMINE SOURCE OF LEAKS ENTERING INTERIOR OF CLOCK ROOM. REMEDIATE / REPAIR AS REQUIRED AND AS DIRECTED.

2.2 REMOVE WOOD ROOF SHINGLES, NAILS, UNDERLAYMENT, AND VALLEY, EAVE, AND RIDGE FLASHINGS DOWN TO ROOF SHEATHING.

4.0 MASONRY (SEE SPECIFICATION SECTION 04500)

4.1 REPOINT BRICK CHIMNEY 100% (ABOVE ROOF).

6.0 WOOD (SEE SPECIFICATION SECTIONS 06100 AND 06200)

6.1 REPLACE DETERIORATED SIDES OF BALUSTRADE POSTS, WHERE SHOWN, IN-KIND, BACK-PRIMED AND PAINTED. (APPROX. DIM. ¾” x 10” x 24”)

6.2 REPLACE BOTTOM RAIL, IN-KIND. CAREFULLY DISMANTLE BALUSTERS TO FACILITATE REPLACEMENT AND REINSTALL.

6.3 INSPECT WOOD TRIM ON TOWER. SECURE / NAIL LOOSE PIECES, SEAL JOINTS, ETC. AS REQUIRED. REPLACE DETERIORATED WOOD COMPONENTS IN-KIND (OR DUTCHMEN AND/OR WOOD CONSOLIDANTS). SEE ALLOWANCE NO. 1.

6.4 REPLACE BROKEN WOOD BELL WHEEL WITH NEW OAK WHEEL TO MATCH EXISTING. SEE DETAIL 1/A4.1. PROVIDE NEW ROPE TO RING BELL.

6.5 INSPECT ALL WOODWORK TO REMAIN, INCLUDING DORMERS, WINDOWS, BALUSTRADES, CORNICES, ETC. REPAIR, RESTORE, REPLACE COMPONENTS AS REQUIRED UNDER ALLOWANCE NO. 1.

7.0 THERMAL AND MOISTURE PROTECTION

7.1 AFTER REMOVAL OF WOOD SHINGLES, INSPECT CONDITION OF METAL FLASHINGS. UNDER BASE BID, ASSUME METAL FLASHING AT BASE OF BALUSTRADE POSTS, GRAVITY VENTS, DORMER ROOFS AND VENT STACKS TO REMAIN. REMOVE AND REPLACE EAVE, VALLEY, RIDGE AND CHIMNEY FLASHINGS. SEE PROJECT MANUAL AND SMACNA FIGURES 4-10, 4-12, 4-14, 4-17 AND 4-18. SEE 07600 AND ALLOWANCE NO. 2.

7.2 INSTALL NEW CEDAR SHINGLES OVER 'CEDAR BREATHER' OVER #30 FELT. APPLY HT SELF-ADHERING SHEET UNDERLAYMENT OVER ENTIRE ROOF. SEE 07300 AND 07600.

7.3 REMOVE HANGING GUTTERS AND OUTLETS. PROVIDE NEW LEAD-COATED COPPER HALF ROUND GUTTERS. SEE DETAIL 6/A4.0 AND 07600.

7.4 REPLACE EXISTING DOMED ROOF HATCH WITH NEW BILCO UNIT WITH CURBING AS SPECIFIED. PROVIDE LEAD-COATED COPPER FLASHING TO REPLACE EXISTING.

7.5 REPLACE METAL CAP AROUND VENT PIPE. INSTALL 20 OZ. LEAD-COATED COPPER CAP OVER CHIMNEY OPENING. SECURE WITH CLEATS. SEAL.

7.6 INSPECT FLASHING AT EXISTING PLUMBING VENT STACK. RAISE PIPE FLASHING AND RESET. REPAIR/ PATCH AS REQUIRED UNDER ALLOWANCE NO. 2. TYPICAL OF 5 LOCATIONS.

7.7 INSPECT FLAT SEAM METAL ROOFING. REPAIR/ PATCH AS REQUIRED UNDER ALLOWANCE NO. 2. PREPARE FOR PAINTING AND PAINT METAL SURFACES TO MATCH.

7.8 NEW BASE AND CRICKET FLASHINGS TO REPLACE EXISTING. INSTALL 16 OZ. LEAD-COATED COPPER COUNTERFLASHING (STEPPED) ON SIDES AND BACK OF CHIMNEY. INSTALL L.C.C. APRON FLASHING IN FRONT. SET IN REGLETS 8” MIN. ABOVE ROOF. SEE 07600 AND SMACNA FIGURE 4-14.

7.9 INSPECT METAL TOP RAIL CAP. REMOVE SEALANTS, REPAIR AND RE-SOLDER ALL OPEN JOINTS. PREPARE FOR PAINTING AND PAINT METAL SURFACES TO MATCH.

9.0 FINISHES

GENERAL: PREPARE FOR PAINTING AND PAINT ALL PREVIOUSLY PAINTED SURFACES AS SPECIFIED UNDER 09900.

15.0 MECHANICAL

15.1 PROVIDE NEW ROOF VENT CAP: BROAN NUTONE MODEL 634M W/ 6" ROUND DUCT COLLAR, BLACK FACTORY FINISH (OR EQUAL). CUT 6" HOLE THRU ROOF SHEATHING. INSTALL AND FLASH AS PER MANUFACTURERS INSTRUCTIONS. (VENT CAP IS FOR FUTURE CONNECTION TO EXHAUST FAN IN TOILET ROOM 304).