PHASE IIA: EXTERIOR RESTORATION

THE OLD STATE HOUSE

150 BENEFIT STREET, PROVIDENCE, RHODE ISLAND

OWNER:

THE STATE OF RHODE ISLAND

PROJECT MANAGEMENT:

DEPARTMENT OF ADMINISTRATION
DIVISION OF CAPITAL ASSET MANAGEMENT & MAINTENANCE

OCCUPANT:

RHODE ISLAND HISTORICAL PRESERVATION AND HERITAGE COMMISSION

ARCHITECT

HAYNES/DEBOER

ARCHITECTURE + PRESERVATION

One Park Row, Providence, RI

JUNE 18, 2019

LIST OF DRAWINGS

COVER SHEET

SP-1 SITE PLAN & SITE SURVEY

ARCHITECTURAL

A0.1 GENERAL INFORMATION
A1.0 BASEMENT FLOOR PLAN
A1.1 FIRST FLOOR PLAN
A1.2 SECOND FLOOR PLAN
A1.3 THIRD FLOOR PLAN
A1.4 ROOF PLAN
A2.0 EAST ELEVATION
A2.1 WEST ELEVATION
A2.2 NORTH ELEVATION
A2.3 SOUTH ELEVATION
A2.4 NORTH AREAWAY
A2.5 SOUTH AREAWAY
A4.0 ROOF & TOWER DETAILS
A4.1 TOWER DETAILS

TIME LINE OF EXTERIOR CHANGES

1762 Construction of the Colony House is completed; it is rectangular, 70 x 38 feet, two stories on a high basement, capped by a hipped, wood shingled roof, with a balustrade deck and tower, and pedimented gable on the west façade. The west and east facades were of a five bay composition with a central door on the west at the first level. The north and south facades were three bays wide. The plan of the Colony House consisted of a large Hall of Representatives on the first floor, with a Chamber of Deputies, Governor's Council Chamber and a small room, thought to be a stair hall, on the second.

1850 Basement under original structure is excavated.
Floors cemented.
Two furnaces installed, with chimneys and vent flues for upper floors.
Exterior basement walls were excavated to present height.
New end walls were put in, two feet away from existing walls, to form light wells. Windows in basement were cut down to the floor, to increase light and ventilation. Basement partitioned to separate furnace area from clerk's office.

1851 Benefit Street yard enclosed and improved.
New entrance pavilion is constructed at the west entrance. Under the direction of Thomas A. Tefft, a three-story brick and frame clock tower is completed along with sweeping steps from it to central walkway.

1867 Benefit Street addition constructed, designed by Architect James Bucklin, using similar materials, fenestration, etc.

1906 All work listed below was begun in 1902 and completed in 1906:
Major renovation completed under the direction of Edward T. Banning of the firm Banning and Thornton. Building converted to Sixth District Courthouse.

Exterior changes included:
Window blocked up at second story of north wall of Benefit Street addition because of installation of the vault.
Window of 2nd floor center original curtain blocked up.
Brownstone trim was patched.
Walls were waterproofed by means of a 'paraffine process'.

1919 Roof changed to its mansard-hip appearance and asbestos shingles installed. (Unconfirmed)

1947 New slate roof added (replacing asbestos).

1981 Roof and Tower Repair and Restoration Project (by Irving B. Haynes and Associates):

Structural repairs to roof and tower framing.
Replacement of slate shingles with cedar shingles to match original roof shingles.
Reconstruction of roof balustrade (based on historic photos).
Attic insulation, soffit vents, and gravity ventilators.
Recladding, residing, and reflashing of tower.
Removal of louvers at bell level.
Restoration of bell cradle.
New hanging gutters and downspouts.
Painting of new balustrade, main cornices, dormers, and tower.

1983 Window Restoration Project, including new window interlocking weather-stripping, sash locks, sash lifts, etc. (by IBH&A)

1997 Exterior Restoration Project (by Haynes/de Boer Associates):

Repair and restoration of roof and roof balustrade.
Masonry restoration, including cleaning, repointing, brownstone patching, and new brick veneer on south wall of 1867 Bucklin addition.
New window grilles on basement windows.
Painting of all previously painted surfaces. (Paint color scheme based on presumed colors extant upon completion of Tefft tower in 1850's).

2008 Painting of tower above main cornice by Dome Construction. Work included replacing some wood components using Azek.

2014 Phase I Systems Improvements

New geo-thermal heating and cooling system, including drilling 2 deep wells under parking area, new water source heat pumps throughout, replacing steam radiators, and coil boxes.

New fire-rated boiler room.
Reinforcement of first floor framing above boiler room ceiling.
New asphalt parking area with chips seal, bluestone apron at base of building, and flush curbs delineating property lines.

2015 Phase IA- New Electrical Service

Construction of new below-grade electrical transformer vault on east side of building.
New 3-phase service from Benefit Street.
New exposed aggregate concrete sidewalks on east, north and south sides.
New London plane tree planted on Benefit Street.

2018 New security system installed, including exterior cameras.

FOR BIDDING
NOT FOR CONSTRUCTION

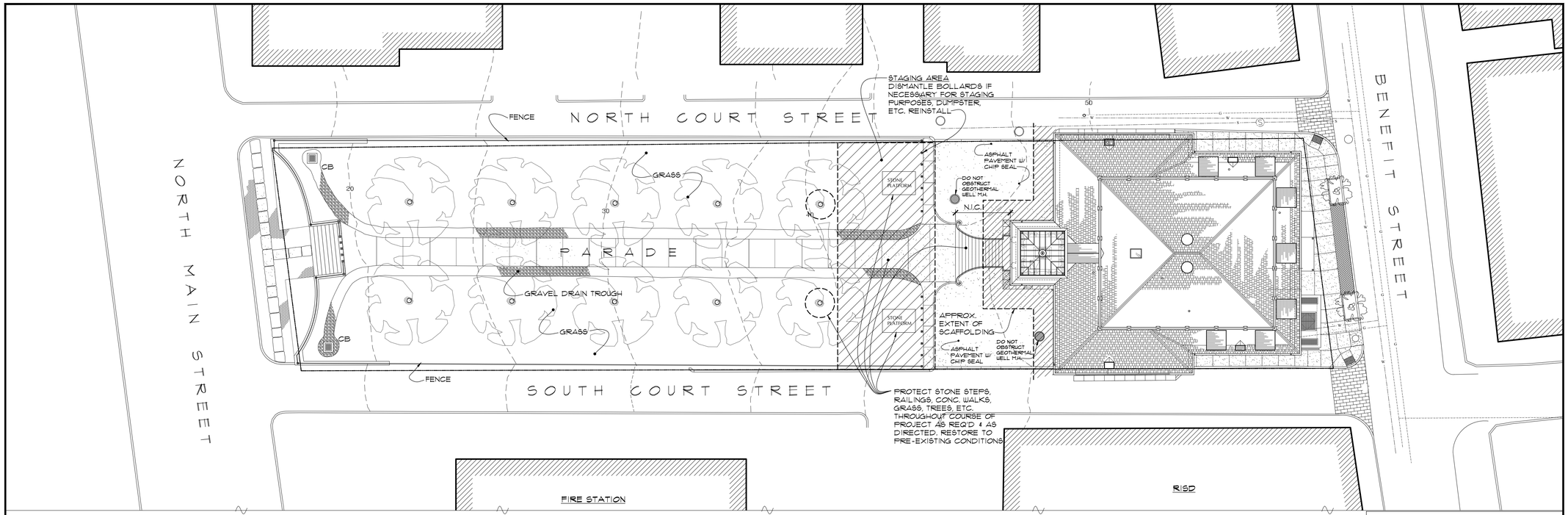

1 SP1 SITE PLAN
SCALE: 1/16" = 1'-0"

CALLED NORTH

NOTE: IF STREET CLOSURES ARE NECESSARY, SEE SPEC. SECTION #01100.

GENERAL NOTES

1. SITE PLAN IS NOT BASED ON ACTUAL PROFESSIONAL SURVEY. CONDITIONS ARE SCHEMATIC AND APPROXIMATE.

2. VERIFY ALL CONDITIONS AND DIMENSIONS IN FIELD.

GENERAL NOTES:

1. THE LOCATION AND DEPTH OF EXISTING UTILITIES ARE APPROXIMATE AND HAVE BEEN PLOTTED FROM THE LATEST AVAILABLE INFORMATION. THE UTILITY LOCATIONS ARE APPROXIMATE AND MAY NOT BE ALL INCLUSIVE. THE CONTRACTOR SHALL CHECK AND VERIFY THE LOCATIONS OF ALL EXISTING UTILITIES, BOTH OVERHEAD AND UNDERGROUND, AND "DIG-SAFE" MUST BE NOTIFIED PRIOR TO COMMENCING ANY CONSTRUCTION OPERATIONS. RESTORATION AND REPAIR OF DAMAGE TO EXISTING UTILITIES SHALL BE THE RESPONSIBILITY OF THE CONTRACTOR WITH NO ADDITIONAL COST THE OWNER. NO EXCAVATION SHALL COMMENCE UNTIL ALL INVOLVED UTILITY COMPANIES AND/OR TOWN WHOSE FACILITIES MIGHT BE AFFECTED BY ANY WORK TO BE PERFORMED BY THE CONTRACTOR ARE NOTIFIED AT LEAST 72 HOURS IN ADVANCE.

2. THIS SITE DOES NOT LIE WITHIN ANY KNOWN AGRICULTURAL USE, SILVICULTURAL USE, NATURAL HERITAGE OR FARMLAND CONSERVATION AREAS.

3. THERE ARE NO KNOWN EASEMENTS OR RIGHTS OF WAY WITHIN OR ADJACENT TO THIS PARCEL.

4. THERE ARE NO KNOW HISTORIC CEMETERIES WITHIN OR IMMEDIATELY ADJACENT TO THIS PARCEL.

5. HORIZONAL DATUM IS BASED ON RHODE ISLAND STATE PLANE COORDINATES NAD 83 DATUM AND CONTOURS BASED ON NAVD 88 DATUM.

REFERENCES:

1. PLAN ENTITLED " PLAT OF NORTH COURT STREET FROM BENEFIT STREET TO NORTH MAIN STREET SCALE 1"=30' DATED JANUARY 24, 1890 " AND RECORDED IN THE PROVIDENCE REGISTRY OF DEEDS IN DRAWER 85 SHEET A-43.

2. PLAN ENTITLED " PLAT OF SOUTH COURT STREET FROM NORTH MAIN STREET TO BENEFIT STREET SCALE 1"=30' DATED MARCH 3, 1928 " AND RECORDED IN THE PROVIDENCE REGISTRY OF DEEDS IN DRAWER 73 SHEET B-48.

3. PLAN ENTITLED " PLAT OF BENEFIT STREET FROM BOWEN STREET TO PIKE STREET IN SEVEN SHEETS SCALE 1"=50' DATED MAY 10, 1889 AND RECORDED IN THE PROVIDENCE REGISTRY OF DEEDS.

LEGEND
NOT TO SCALE

- BOUNDARY
- ABUTTER
- MAJOR CONTOUR
- MINOR CONTOUR
- TC — TELECOMMUNICATION LINE
- G — GAS LINE
- D — DRAINAGE LINE
- S — SEWER LINE
- W — WATER LINE
- OHW — ELECTRIC LINE
- IRON PIN
- BOUND
- DRILL HOLE
- WELL
- UTILITY POLE
- WATER VALVE
- GAS VALVE
- HYDRANT

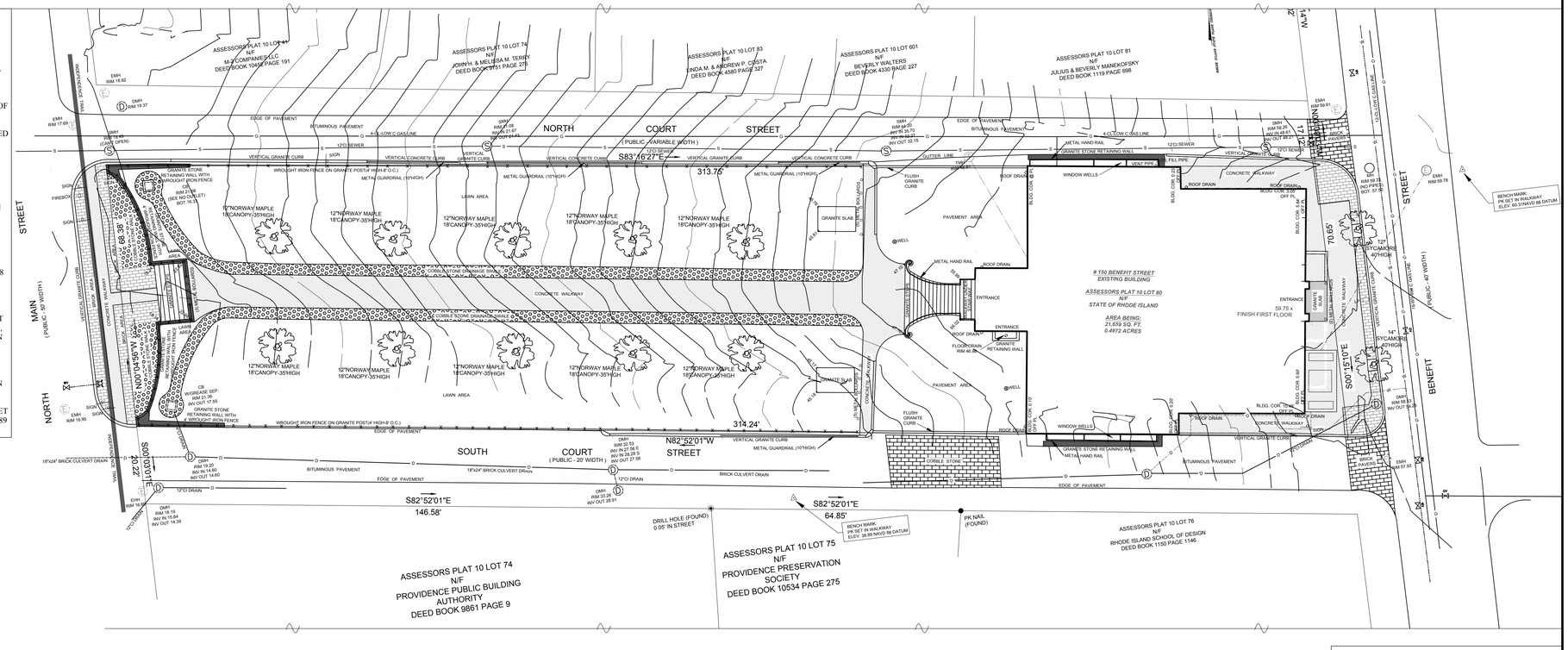

2 SP1 SITE SURVEY
SCALE: 1/16" = 1'-0"

CALLED NORTH

GENERAL NOTES

1. SITE SURVEY PREPARED BY NATIONAL SURVEYORS-DEVELOPERS, INC. DATED JANUARY 2018.

HAYNES / DE BOER
ARCHITECTURE + PRESERVATION
ONE PARK ROW
PROVIDENCE, RI 02903
401 · 274 · 1555
CdeB@haynesdeboer.com

PHASE IIA:
EXTERIOR RESTORATION

THE OLD STATE HOUSE

150 BENEFIT STREET
PROVIDENCE, RHODE ISLAND

DRAWING TITLE:
SITE PLAN & SITE SURVEY

SCALE: 1/16" = 1'- 0"

DRAWING STATUS:
FOR BIDDING
NOT FOR CONSTRUCTION

REVISIONS:

PROJECT #: 0218-1
DATE: 06/18/2019
DRAWN BY: JPH
CHECKED BY: CdeB
SHEET 2 OF 16

SP1

1 ARCHITECTURAL ABBREVIATIONS

ACT	Acoustical Ceiling Tile
ADJ	Adjustable
ADJC	Adjacent
A/E	Architect/Engineer
AFF	Above Finished Floor
ALUM	Aluminum
ARCHT	Architect
BIT	Bituminous
BLDG	Building
BLKG	Blocking
CABT	Cabinet
CI	Continuous Insulation
CJ	Construction Joint
CL	Center line
CLG	Ceiling
CLO	Closet
CLR	Clear
CMU	Concrete Masonry Unit
COL	Column
CONC	Concrete
CONSTR	Construction
CONT	Continuous
CT	Ceramic Tile
CW	Cold Water
DEMO	Demolition
DF	Drinking Fountain
DIA	Diameter
DIM	Dimension
DN	Down
DR	Door
DWG	Drawing(s)
E	East
EA	Each
EIFS	Exterior Insulation Finish System
EL	Elevation
ELEC	Electrical
ELEV	Elevator/Elevation
ENGR	Engineer
EPDM	Ethylene Propylene Diene Monomer
EQ	Equal
EQPMT	Equipment
ETR	Existing to Remain
EXTG	Existing
EXT	Exterior
FAI	Fresh Air Intake
FB	Flat Bar
FD	Floor Drain
FDN	Foundation
FIN	Finish
FLR	Floor
FLUOR	Fluorescent
FO	Frame opening
FOB	Face of Brick
FOP	Face of Plaster
FOS	Face of Steel
F/R	Fire Rated
FT	Feet or Foot
FURR	Furring
GA	Gauge
GALV	Galvanized
GC	General Contractor
GWB	Gypsum Wall Board
GYP	Gypsum
HC	Hollow Core
HM	Hollow Metal
HNDRL	Handrail
HORIZ	Horizontal
HR	Hour
HT	Height
HVAC	Heating/ Ventilation/ Air Conditioning
ID	Inside Diameter
INSUL	Insulation
INT	Interior
INV	Invert
JAN	Janitor
JC	Janitors Closet
JT	Joint
KIT	Kitchen
LAM	Laminate
LAV	Lavatory
LH	Left Hand
MACH	Machine
MATL	Material
MAX	Maximum
MECH	Mechanical
MEMB	Membrane
MIN	Minimum
MISC	Miscellaneous
MO	Masonry Opening
M&T	Mortise & Tenon (joint)
MTD	Mounted
N	North
NA	Not Applicable
NIC	Not In Contract
NO	Number
NOM	Nominal
NTS	Not To Scale
OA	Overall
OC	On Center
OD	Outside Diameter
OH	Opposite Hand
PERF	Perforated
PL	Plate
PLAM	Plastic Laminate
PLAS	Plaster
PLMB	Plumbing
PLYWD	Plywood
PSI	Pounds per Square Inch
PT	Pressure Treated
PTD	Painted
PR	Pair
QT	Quarry Tile
QTY	Quantity
R	Riser
RAD	Radius
RD	Roof Drain
RECD	Received
REF	Reference
REFL	Reflected
REINF	Reinforced
REQD	Required
RH	Right Hand
RL	Rain Leader
RLG	Railing
RM	Room
RO	Rough Opening
S	South
SC	Solid Core
S&V	Stained and Varnished
SECT	Section
SF	Square Feet
SIM	Similar
SPEC	Specification
SQ	Square
ST	Street
STC	Sound Transmission Class
STD	Standard
STL	Steel
STRUCT	Structural
STSTL	Stainless Steel
SUSP	Suspended
SYM	Symbol
T	Tread
T&B	Top and Bottom
T&G	Tongue and Groove
TBD	To Be Determined
TEL	Telephone
TEMP	Temperature
THK	Thickness
TME	To Match Existing
T.O.	Top Of _____
TYP	Typical
UON	Unless Otherwise Noted
VB	Vapor Barrier
VCT	Vinyl Composition Tile
VERT	Vertical
VEST	Vestibule
VIF	Verify In Field
VP	Veneer Plaster
W	West
WC	Water Closet
W/	With
W/O	Without
WD	Wood
WP	Waterproof
WR	Water Resistant
WT	Weight
WWF	Welded Wire Fabric

2 MATERIAL CONVENTIONS

- ACOUSTICAL TILE OR PANEL
- ALUMINUM
- BITUMINOUS CONCRETE
- BRICK (PLAN / SECTION)
- CERAMIC TILE
- CONCRETE (CAST IN PLACE)
- CONCRETE (PRECAST)
- CONCRETE MASONRY UNIT
- EARTH (COMPACTED FILL)
- GLASS
- GRAVEL FILL OR CRUSHED STONE
- GYPSUM BOARD
- INSULATION, BATT OR BLANKET
- INSULATION, RIGID
- VENEER PLASTER ON GWB
- PLYWOOD
- SAND
- STEEL
- STONE
- WOOD GRAIN
- WOOD FRAMING, CONTINUOUS
- WOOD SHIM OR BLOCKING

3 GENERAL NOTES

1. VERIFY ALL CONDITIONS AND DIMENSIONS IN FIELD. NOTIFY ARCHITECT OF ANY CONFLICTS OR DISCREPANCIES FROM CONSTRUCTION DOCUMENTS.
2. SEE PROJECT MANUAL FOR ADDITIONAL INFORMATON AND REQUIREMENTS.
3. PROVIDE ACCESS TO ALL EXTERIOR SURFACES FOR INSPECTION AND EXECUTION OF THE WORK. PROVIDE SCAFFOLDING (PIPE STAGING) FROM GRADE TO TOP OF SPIRE, ALL SIDES. SEE SECTION 01100.
4. PERFORM ALL EXTERIOR WORK IN COMPLIANCE WITH ALL PERTINENT CODES AND REGULATIONS.
5. REPAIR/RESTORE SITE AND EXISTING BUIDING COMPONENTS DAMAGED OR DISTURBED BY CONSTRUCTION OPERATIONS TO PRE-EXISTING CONDITION.
6. PREPARE FOR PAINTING AND PAINT ALL PREVIOUSLY PAINTED SURFACES AS SPECIFIED UNDER SECTION 09900.

4 GRAPHIC SYMBOLS

- 123 — ROOM/ SPACE NUMBER
- 123 — DOOR NUMBER
- B1 — WINDOW NUMBER
- 1 / A1.1 (Number / Dwg. Sheet) — DETAIL
- 5 / 3-0 (Number / Dwg. Sheet) — SECTION DETAIL
- A / A1 (Letter / Dwg. Sheet) — BUILDING SECTION
- 1 — KEY NOTE
- D — WALL TYPE
- 1 — REVISION SYMBOL
- 1 / 2 / 3 / 4 / A1.1 — INTERIOR ELEVATION REFERENCE MARKER
- 100.84' — SPOT ELEVATION INDICATOR
- T.O. CONC. SLAB EL.: 100.50' — LEVEL LINE CONTROL POINT OR DATUM

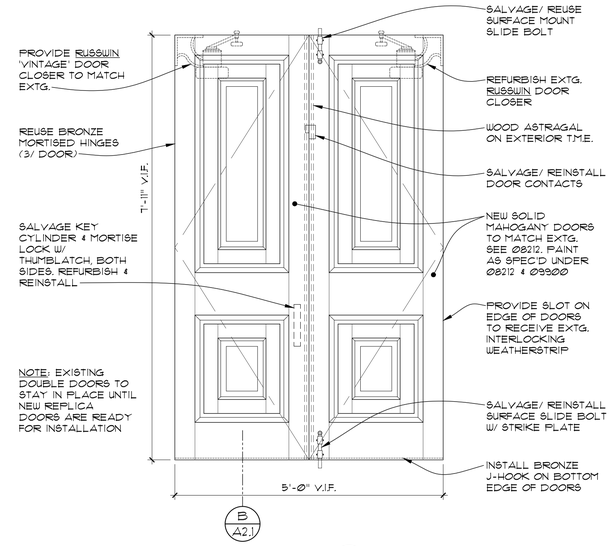

INTERIOR ELEVATION 1 / A0.1 DOOR #101
SCALE: 3/4"= 1'-0"

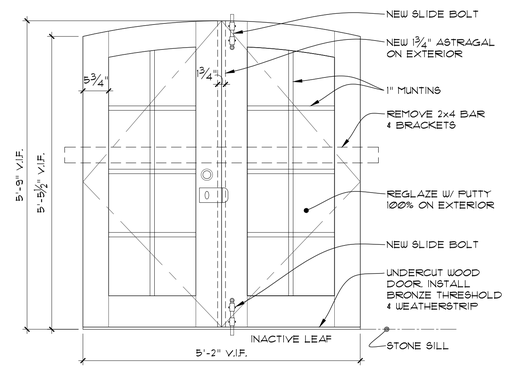

INTERIOR ELEVATION 2 / A0.1 DOOR #B1
SCALE: 3/4"= 1'-0"

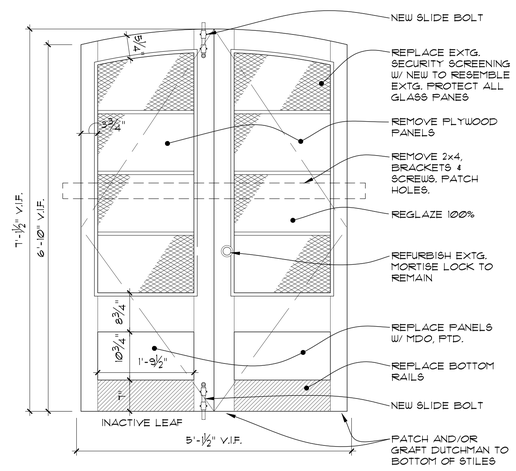

INTERIOR ELEVATION 3 / A0.1 DOOR #B2
SCALE: 3/4"= 1'-0"

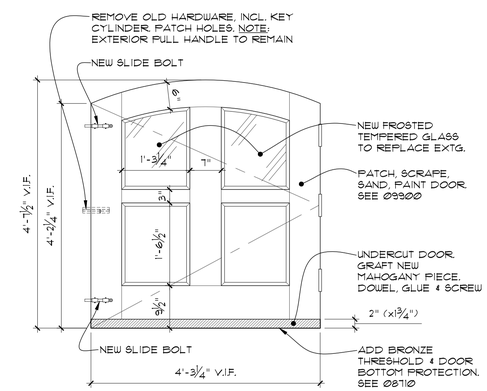

INTERIOR ELEVATION 4 / A0.1 DOOR #B3
SCALE: 3/4"= 1'-0"

GENERAL NOTES

1. ALL DOORS TO BE PAINTED INSIDE AND OUT AS SPECIFIED UNDER 09900.
2. TEMPORARY REMOVAL OF EXTERIOR DOORS FOR SHOP REPAIRS (EXCEPT DOOR #101) IS ACCEPTABLE. ALL EXIT DOORS MUST REMAIN OPERABLE, LOCKABLE AND ACCESSIBLE FOR EMERGENCY USE AS DOORS (NOT PLYWOOD PANELS) WITH PROPER HARDWARE.

HAYNES / DE BOER
ARCHITECTURE + PRESERVATION
ONE PARK ROW
PROVIDENCE, RI 02903
401 · 274 · 1555
CdeB@haynesdeboer.com

PHASE IIA:
EXTERIOR RESTORATION

THE OLD STATE HOUSE

150 BENEFIT STREET
PROVIDENCE, RHODE ISLAND

DRAWING TITLE:
ABBREVIATIONS, SYMBOLS, GENERAL NOTES & DOOR ELEVATIONS

SCALE: AS NOTED

DRAWING STATUS:
FOR BIDDING
NOT FOR CONSTRUCTION

REVISIONS:

PROJECT #: 0218-1
DATE: 06/18/2019
DRAWN BY: JPH
CHECKED BY: CdeB
SHEET 3 OF 16

A0.1

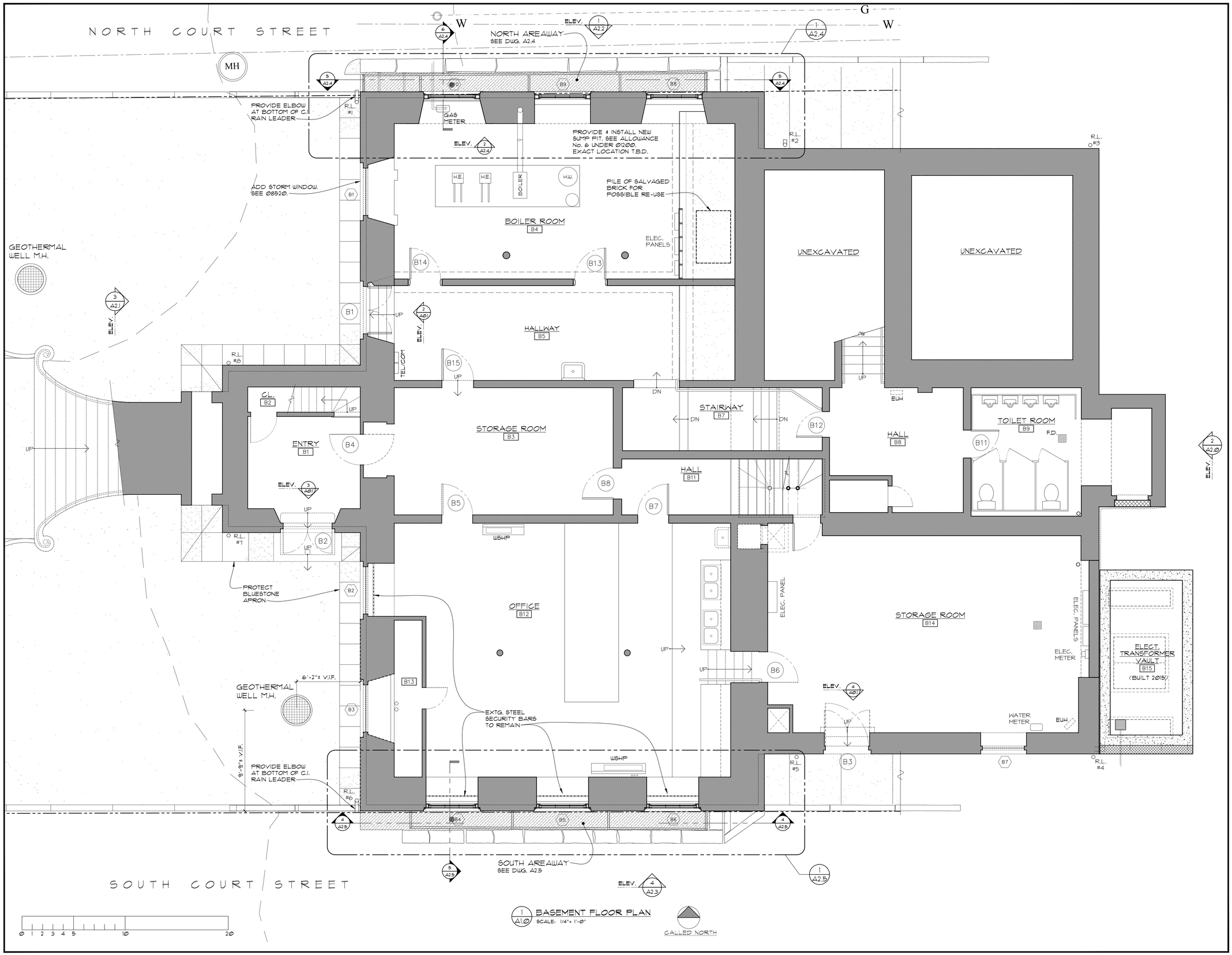

1 A1.0 BASEMENT FLOOR PLAN
SCALE: 1/4"= 1'-0"

CALLED NORTH

HAYNES / DE BOER
ARCHITECTURE + PRESERVATION
ONE PARK ROW
PROVIDENCE, RI 02903
401 · 274 · 1555
CdeB@haynesdeboer.com

PHASE IIA:
EXTERIOR RESTORATION

THE OLD STATE HOUSE

150 BENEFIT STREET
PROVIDENCE, RHODE ISLAND

DRAWING TITLE:
BASEMENT PLAN

SCALE: 1/4"= 1'- 0"

DRAWING STATUS:
FOR BIDDING
NOT FOR CONSTRUCTION

REVISIONS:

PROJECT #: 0218-1
DATE: 06/18/2019
DRAWN BY: JPH
CHECKED BY: CdeB
SHEET 4 OF 16

A1.0

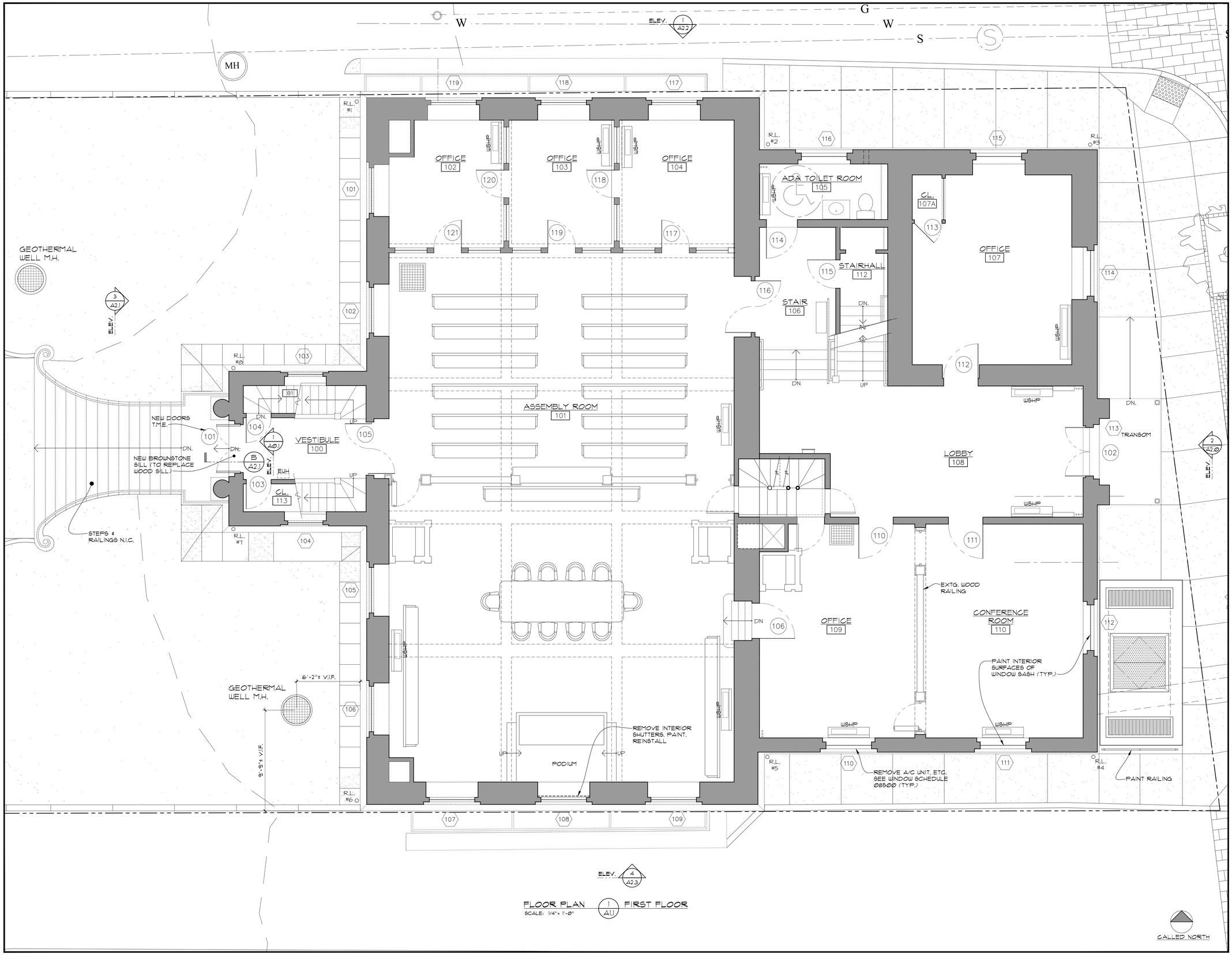

FLOOR PLAN 1 A1.1 FIRST FLOOR
SCALE: 1/4" = 1'-0"

HAYNES / DE BOER
ARCHITECTURE
+
PRESERVATION

ONE PARK ROW
PROVIDENCE, RI 02903
401 · 274 · 1555

CdeB@haynesdeboer.com

PHASE IIA:
EXTERIOR RESTORATION

THE OLD STATE HOUSE

150 BENEFIT STREET
PROVIDENCE, RHODE ISLAND

DRAWING TITLE:
FIRST FLOOR PLAN

SCALE: 1/4" = 1'- 0"

DRAWING STATUS:
FOR BIDDING
NOT FOR CONSTRUCTION

REVISIONS:

PROJECT #: 0218-1
DATE: 06/18/2019
DRAWN BY: JPH
CHECKED BY: CdeB
SHEET 5 OF 16

A1.1

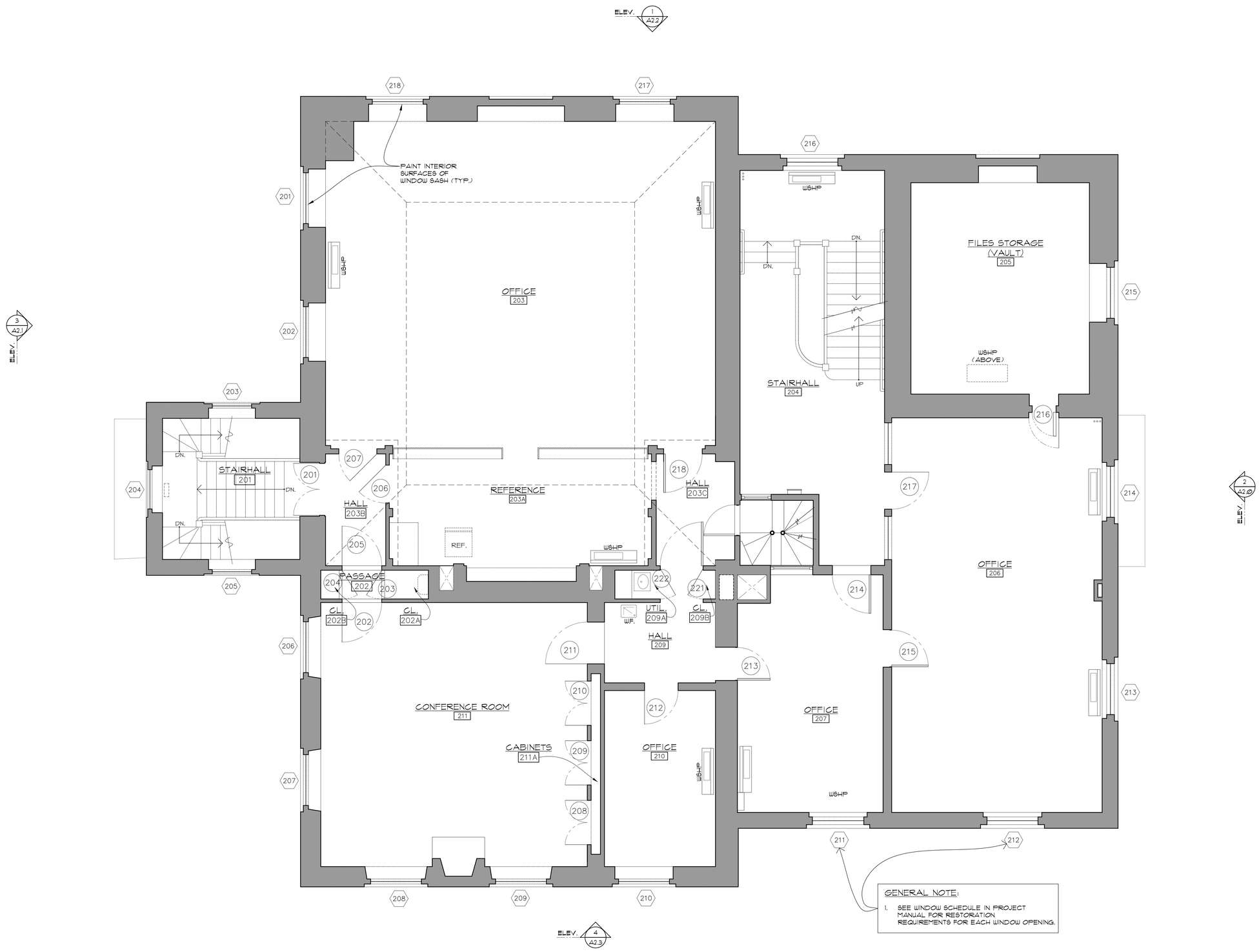

FLOOR PLAN 1 A1.2 SECOND FLOOR
SCALE: 1/4" = 1'-0"

HAYNES / DE BOER
ARCHITECTURE + PRESERVATION
ONE PARK ROW
PROVIDENCE, RI 02903
401 · 274 · 1555
CdeB@haynesdeboer.com

PHASE IIA:
EXTERIOR RESTORATION

THE OLD STATE HOUSE

150 BENEFIT STREET
PROVIDENCE, RHODE ISLAND

DRAWING TITLE:
SECOND FLOOR PLAN

SCALE: 1/4" = 1'-0"

DRAWING STATUS:
FOR BIDDING
NOT FOR CONSTRUCTION

REVISIONS:

PROJECT #: 0218-1
DATE: 06/18/2019
DRAWN BY: JPH
CHECKED BY: CdeB
SHEET 6 OF 16

A1.2

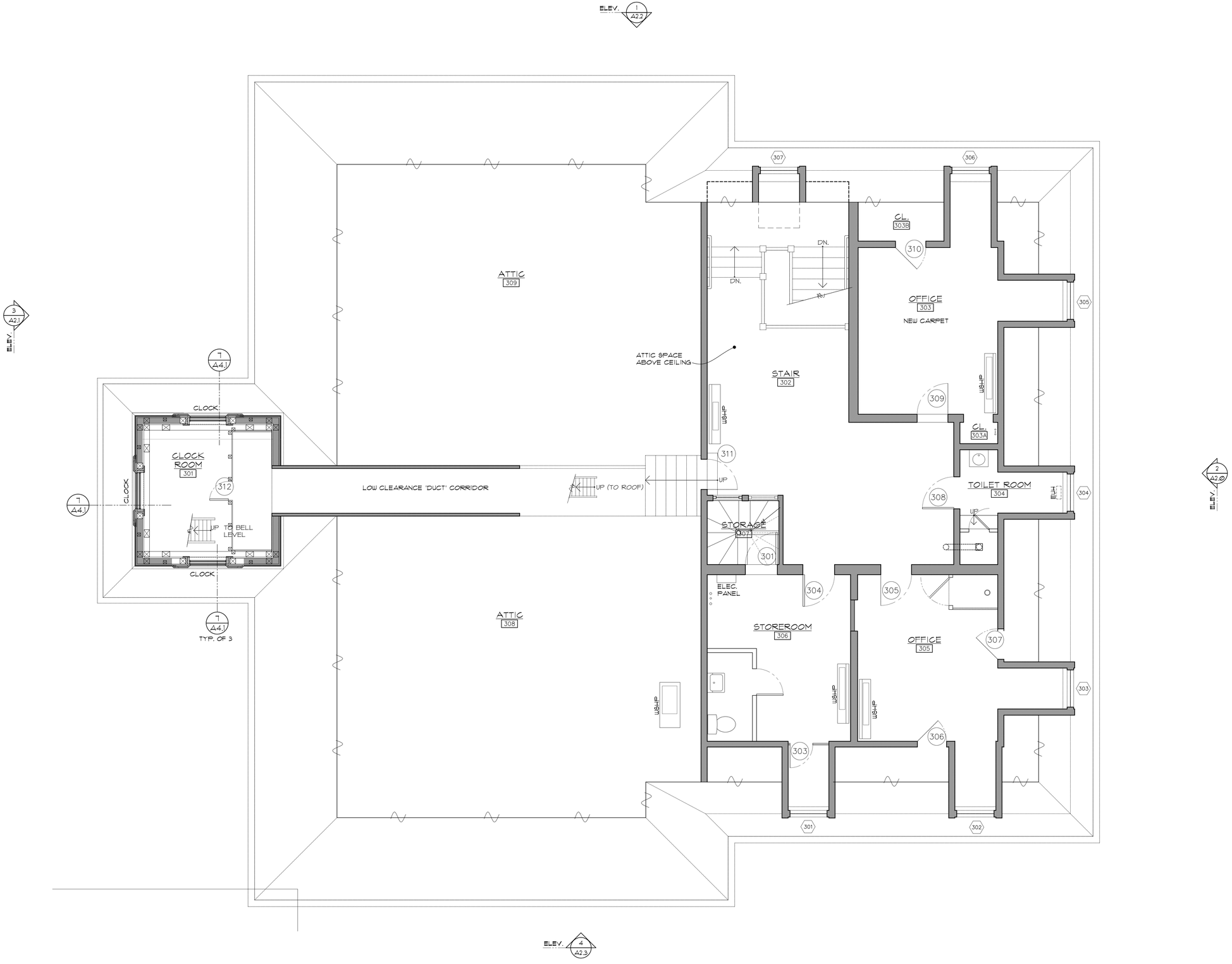

FLOOR PLAN 1 A1.3 THIRD FLOOR
SCALE: 1/4" = 1'-0"

CALLED NORTH

HAYNES / DE BOER
ARCHITECTURE + PRESERVATION
ONE PARK ROW
PROVIDENCE, RI 02903
401 · 274 · 1555
CdeB@haynesdeboer.com

PHASE IIA:
EXTERIOR RESTORATION

THE OLD STATE HOUSE

150 BENEFIT STREET
PROVIDENCE, RHODE ISLAND

DRAWING TITLE:
THIRD FLOOR PLAN

SCALE: 1/4" = 1'- 0"

DRAWING STATUS:
FOR BIDDING
NOT FOR CONSTRUCTION

REVISIONS:

PROJECT #: 0218-1
DATE: 06/18/2019
DRAWN BY: JPH
CHECKED BY: CdeB
SHEET 7 OF 16

A1.3

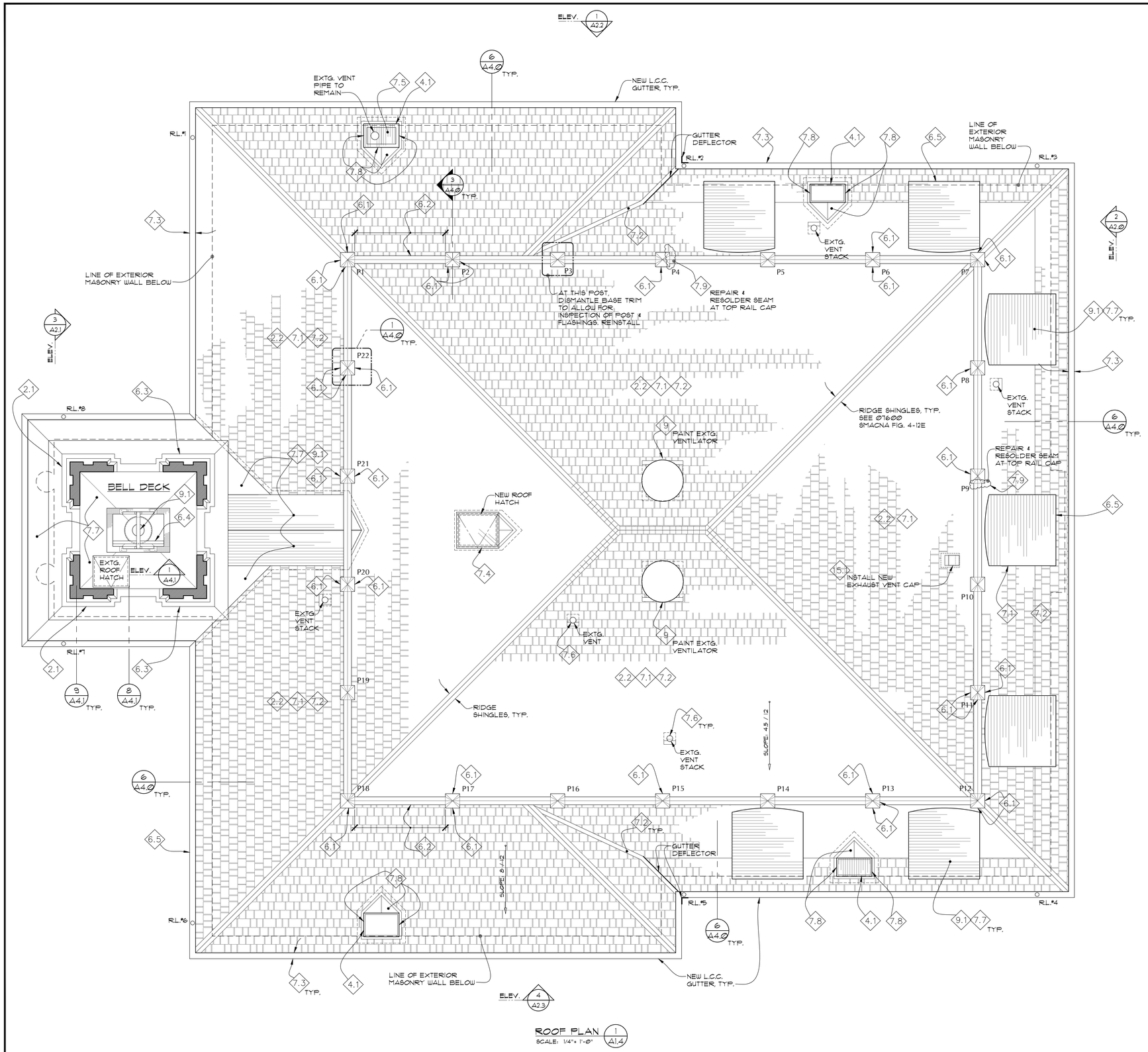

ROOF PLAN 1 A1.4
SCALE: 1/4" = 1'-0"

0 1 2 3 4 5 10 20 ft

CALLED NORTH

KEY NOTES FOR ROOF PLAN:

2.0 REMOVALS

2.1 ALLOWANCE NO. 4. TOWER LEAK INVESTIGATION: DISMANTLE TOWER COMPONENTS AS DIRECTED BY ARCHITECT, INCLUDING PILASTER BASES. SYSTEMATICALLY WATER TEST TOWER TO DETERMINE SOURCE OF LEAKS ENTERING INTERIOR OF CLOCK ROOM. REMEDIATE / REPAIR AS REQUIRED AND AS DIRECTED.

2.2 REMOVE WOOD ROOF SHINGLES, NAILS, UNDERLAYMENT, AND VALLEY, EAVE, AND RIDGE FLASHINGS DOWN TO ROOF SHEATHING.

4.0 MASONRY (SEE SPECIFICATION SECTION 04500)

4.1 REPOINT BRICK CHIMNEY 100% (ABOVE ROOF).

6.0 WOOD (SEE SPECIFICATION SECTIONS 06100 AND 06200)

6.1 REPLACE DETERIORATED SIDES OF BALUSTRADE POSTS, WHERE SHOWN, IN-KIND, BACK-PRIMED AND PAINTED. (APPROX. DIM. ½" x 10" x 24")

6.2 REPLACE BOTTOM RAIL, IN-KIND. CAREFULLY DISMANTLE BALUSTERS TO FACILITATE REPLACEMENT AND REINSTALL.

6.3 INSPECT WOOD TRIM ON TOWER. SECURE / NAIL LOOSE PIECES, SEAL JOINTS, ETC. AS REQUIRED. REPLACE DETERIORATED WOOD COMPONENTS IN-KIND (OR DUTCHMEN AND/ OR WOOD CONSOLIDANTS). SEE ALLOWANCE NO. 1.

6.4 REPLACE BROKEN WOOD BELL WHEEL WITH NEW OAK WHEEL TO MATCH EXISTING. SEE DETAIL 1/A4.1. PROVIDE NEW ROPE TO RING BELL.

6.5 INSPECT ALL WOOD WORK TO REMAIN, INCLUDING DORMERS, WINDOWS, BALUSTRADES, CORNICES, ETC. REPAIR, RESTORE, REPLACE COMPONENTS AS REQUIRED UNDER ALLOWANCE NO. 1.

7.0 THERMAL AND MOISTURE PROTECTION

7.1 AFTER REMOVAL OF WOOD SHINGLES, INSPECT CONDITION OF METAL FLASHINGS, UNDER BASE BID, ASSUME METAL FLASHING AT BASE OF BALUSTRADE POSTS, GRAVITY VENTS, DORMER ROOFS AND VENT STACKS TO REMAIN. REMOVE AND REPLACE EAVE, VALLEY, RIDGE AND CHIMNEY FLASHINGS. SEE PROJECT MANUAL AND SMACNA FIGURES 4-10, 4-12, 4-14, 4-17 AND 4-18. SEE 07600 AND ALLOWANCE NO. 2.

7.2 INSTALL NEW CEDAR SHINGLES OVER 'CEDAR BREATHER' OVER #30 FELT. APPLY HT SELF-ADHERING SHEET UNDERLAYMENT OVER ENTIRE ROOF. SEE 07300 AND 07600.

7.3 REMOVE HANGING GUTTERS AND OUTLETS. PROVIDE NEW LEAD-COATED COPPER HALF ROUND GUTTERS. SEE DETAIL 6/A4.0 AND 07600.

7.4 REPLACE EXISTING DOMED ROOF HATCH WITH NEW BILCO UNIT WITH CURBING AS SPECIFIED. PROVIDE LEAD-COATED COPPER FLASHING TO REPLACE EXISTING.

7.5 REPLACE METAL CAP AROUND VENT PIPE. INSTALL 20 OZ. LEAD-COATED COPPER CAP OVER CHIMNEY OPENING. SECURE WITH CLEATS. SEAL.

7.6 INSPECT FLASHING AT EXISTING PLUMBING VENT STACK. RAISE PIPE FLASHING AND RESET. REPAIR/ PATCH AS REQUIRED UNDER ALLOWANCE NO. 2. TYPICAL OF 5 LOCATIONS.

7.7 INSPECT FLAT SEAM METAL ROOFING. REPAIR/ PATCH AS REQUIRED UNDER ALLOWANCE NO. 2. PREPARE FOR PAINTING AND PAINT METAL SURFACES TO MATCH.

7.8 NEW BASE AND CRICKET FLASHINGS TO REPLACE EXISTING. INSTALL 16 OZ. LEAD-COATED COPPER COUNTERFLASHING (STEPPED) ON SIDES AND BACK OF CHIMNEY. INSTALL L.C.C. APRON FLASHING IN FRONT. SET IN REGLETS 8" MIN. ABOVE ROOF. SEE 07600 AND SMACNA FIGURE 4-14.

7.9 INSPECT METAL TOP RAIL CAP. REMOVE SEALANTS, REPAIR AND RE-SOLDER ALL OPEN JOINTS. PREPARE FOR PAINTING AND PAINT METAL SURFACES TO MATCH.

9.0 FINISHES

9.1 GENERAL: PREPARE FOR PAINTING AND PAINT ALL PREVIOUSLY PAINTED SURFACES AS SPECIFIED UNDER 09900.

15.0 MECHANICAL

15.1 PROVIDE NEW ROOF VENT CAP: BROAN NUTONE MODEL 634M W/ 6" ROUND DUCT COLLAR, BLACK FACTORY FINISH (OR EQUAL). CUT 6" HOLE THRU ROOF SHEATHING. INSTALL AND FLASH AS PER MANUFACTURERS INSTRUCTIONS. (VENT CAP IS FOR FUTURE CONNECTION TO EXHAUST FAN IN TOILET ROOM 304)

HAYNES / DE BOER
ARCHITECTURE + PRESERVATION
ONE PARK ROW
PROVIDENCE, RI 02903
401 · 274 · 1555
CdeB@haynesdeboer.com

PHASE IIA:
EXTERIOR RESTORATION

THE OLD STATE HOUSE

150 BENEFIT STREET
PROVIDENCE, RHODE ISLAND

DRAWING TITLE:
ROOF PLAN

SCALE: 1/4" = 1'- 0"

DRAWING STATUS:
FOR BIDDING
NOT FOR CONSTRUCTION

REVISIONS:

PROJECT #: 0218-1
DATE: 06/18/2019
DRAWN BY: JPH
CHECKED BY: CdeB
SHEET 8 OF 16

A1.4

KEY NOTES AND GENERAL NOTES FOR EXTERIOR ELEVATIONS:

(A2.0, A2.1, A2.2 & A2.3)

2.0 SITE WORK

2.1 Remove and properly dispose of the following:

- Metal security grilles on basement windows (Total of 6).
- Bottom sash of Windows B6, B8, B9, B10.
- Gutters and copper rain leaders.
- Wood roof shingles, underlayment, etc.
- Roof scuttle.
- Window air conditioners and filler panels (Total of 10).
- Door 101.

2.2 Excavate bottom of areaways, north and south sides, down to level of basement floor. After masonry repairs and waterproofing, backfill with crushed stone to level indicated on Drawings A2.4 and A2.5.

2.3 Install 4" thick reinforced concrete slab in bottom of areaways. Pitch westward to drain to street.

4.0 MASONRY (see 04500)

4.1 At areaway, north side:

- Temporarily remove and set aside granite cap stones (and pipe railing).
- Patch, grout, repair exposed concrete retaining wall (3 sides). Remove loose, broken, and deteriorated concrete surfaces. Tuck point open joints. Parge wall as required.
- Reset cap stones in bed of cement mortar. Pin and glue broken stones.
- Clean, repoint exposed masonry wall. Parge smooth.
- Install CMU, filled solid, in lower half of 3 window openings. Finish with tinted stucco.
- Install brownstone sills to suit.
- See Dwg. A2.4 for detailed requirements.

4.2 At areaway, south side:

- Temporarily remove and set aside granite cap stones (and pipe railing).
- Patch, grout, repair exposed concrete retaining wall (3 sides). Remove loose, broken, and deteriorated concrete surfaces. Tuck point open joints. Parge wall as required.
- Reset cap stones in bed of cement mortar. Pin and glue broken stones.
- Clean, repoint exposed masonry wall. Parge smooth.
- See Dwg. A2.5 for detailed requirements.

4.3 Clean all masonry surfaces using gentlest means possible to remove dirt, biological growth, efflorescence, carbon stains, graffiti, etc.

4.4 Repoint brick and brownstone joints 100% with high lime mortar to match existing in composition, color, and tooling, etc.

4.5 Repoint coursed ashlar stone foundation walls as noted on Dwgs. A2.4 and A2.5.

4.6 Brownstone repairs as follows (See Legend for brownstone work):

4.6.1 Replacement of badly deteriorated and damaged brownstone, shown darkly shaded on exterior elevations (molded window sills, quoin blocks, keystones, etc.) with new solid clear brownstone pieces to match. Use Portland brownstone as first choice.

4.6.2 Patching of brownstone surfaces, shown lightly shaded on exterior elevations. Use Jahn M70 brownstone patching compound by Cathedral Stone.

4.6.3 New brownstone sill at front Door 101 (to replace wood sill). Use Portland Brownstone or approved equal (Approx. size 10"x 6'-0" x 2 1/2 " thick). See Detail B/A2.1.

4.6.4 At curved watertable course of brownstone, carefully remove cement patches and loose and spalling pieces. Dress stone surfaces as required to sound and stable condition. Patch with Jahn M70 as required. Apply siloxane water repellant coating.

4.7 Repoint 2 brick chimneys, east side, 100%. Apply siloxane water repellant coating. Spot repoint 2 chimneys west side, up to 50%.

4.8 Replace badly deteriorated brick with salvaged brick to match. Assume up to 100 bricks to be replaced.

4.9 Seal all vertical, skyward joints in brownstone with top-quality gunnable sealant with applied crushed brownstone sand finish.

5.0 METALS

5.1 Dismantle pipe railings at areaways, north and south sides, to facilitate repairs. Straighten bent sections and repair as required (or replace in-kind). See Dwg A2.4 & A2.5. Re-install with stainless anchors. Paint black.

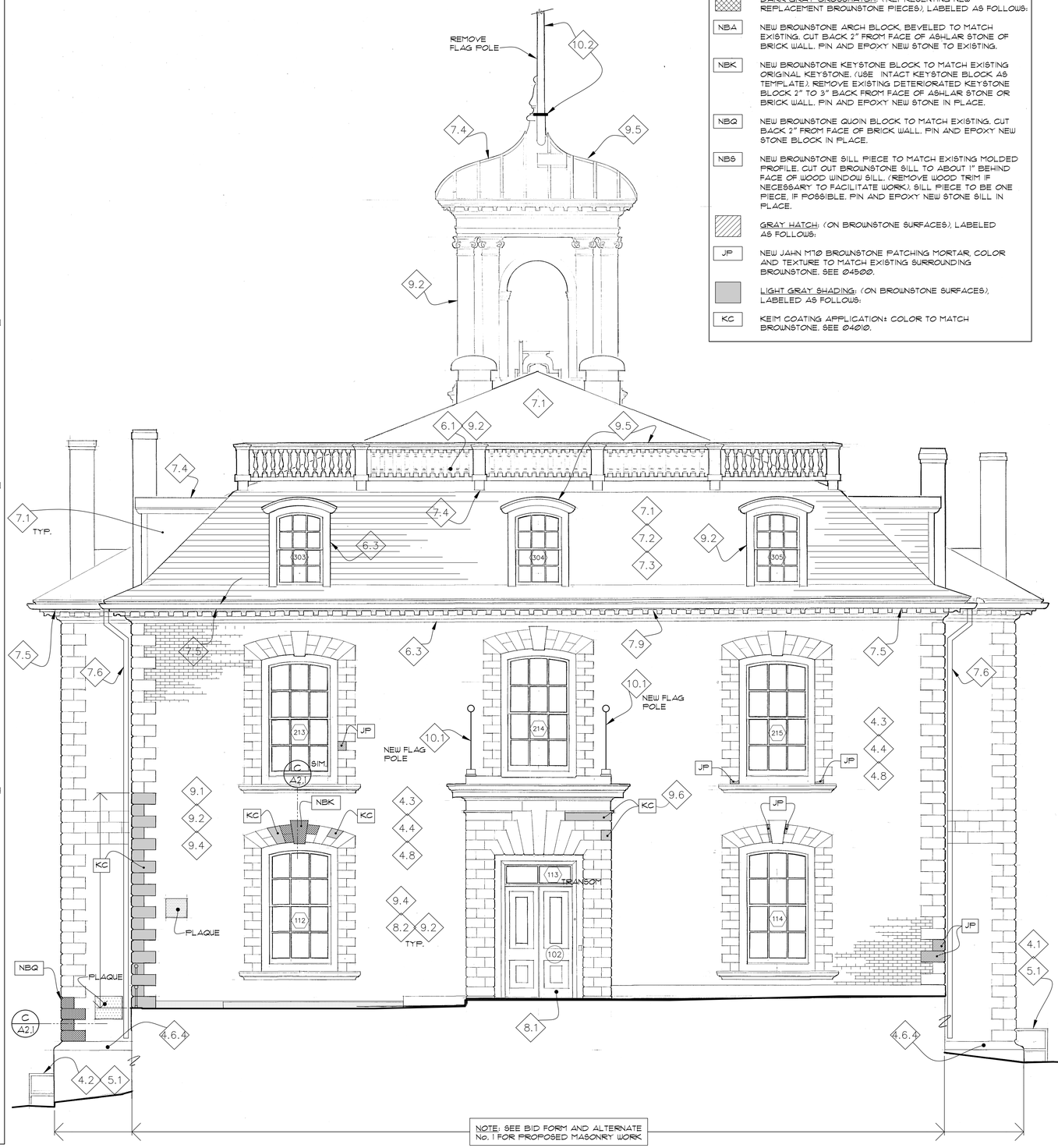

NOTE: SEE BID FORM AND ALTERNATE No. 1 FOR PROPOSED MASONRY WORK

2 A2.0 EAST ELEVATION
SCALE: 1/4"= 1'-0"

0 1 2 3 4 5 10 20 ft

LEGEND FOR BROWNSTONE WORK

DARK GRAY CROSSHATCH: (REPRESENTING NEW REPLACEMENT BROWNSTONE PIECES), LABELED AS FOLLOWS:

- NBA — NEW BROWNSTONE ARCH BLOCK, BEVELED TO MATCH EXISTING. CUT BACK 2" FROM FACE OF ASHLAR STONE OF BRICK WALL. PIN AND EPOXY NEW STONE TO EXISTING.
- NBK — NEW BROWNSTONE KEYSTONE BLOCK TO MATCH EXISTING ORIGINAL KEYSTONE. (USE INTACT KEYSTONE BLOCK AS TEMPLATE). REMOVE EXISTING DETERIORATED KEYSTONE BLOCK 2" TO 3" BACK FROM FACE OF ASHLAR STONE OR BRICK WALL. PIN AND EPOXY NEW STONE IN PLACE.
- NBQ — NEW BROWNSTONE QUOIN BLOCK TO MATCH EXISTING. CUT BACK 2" FROM FACE OF BRICK WALL. PIN AND EPOXY NEW STONE BLOCK IN PLACE.
- NBS — NEW BROWNSTONE SILL PIECE TO MATCH EXISTING MOLDED PROFILE. CUT OUT BROWNSTONE SILL TO ABOUT 1" BEHIND FACE OF WOOD WINDOW SILL. (REMOVE WOOD TRIM IF NECESSARY TO FACILITATE WORK). SILL PIECE TO BE ONE PIECE, IF POSSIBLE. PIN AND EPOXY NEW STONE SILL IN PLACE.

GRAY HATCH: (ON BROWNSTONE SURFACES), LABELED AS FOLLOWS:

- JP — NEW JAHN M70 BROWNSTONE PATCHING MORTAR, COLOR AND TEXTURE TO MATCH EXISTING SURROUNDING BROWNSTONE. SEE 04500.

LIGHT GRAY SHADING: (ON BROWNSTONE SURFACES), LABELED AS FOLLOWS:

- KC — KEIM COATING APPLICATION: COLOR TO MATCH BROWNSTONE. SEE 04010.

KEY NOTES (cont'd)

6.0 WOOD (CARPENTRY)

6.1 At roof balustrade, replace deteriorated wood components in-kind where shown.

6.2 At bell deck, replace broken bell wheel with new solid oak wheel to match existing. Replace broken rope.

6.3 Inspect all remaining wood work, including main cornices, tower, dormers, door and window trim. Repair/ restore/ replace as required under Allowance No. 1.

7.0 THERMAL AND MOISTURE PROTECTION

7.1 New cedar shingles: No. 1 Grade, smooth sawn, 18" long and 3.5" to 8" wide, 5/8" thick, fire-retardant treated, rebutted and repointed install with stainless steel ring shank nails. See 07300.

7.2 Install cedar shingles over Cedar Breather by Benjamin Obdyke.

7.3 Install self-adhering sheet underlayment (e.g. HT Ice and Water Shield by Grace) on existing plywood roof sheathing as specified. Cover entire roof.

7.4 Repair/ replace defective sheet metal flashings on roof and tower under Allowance NO. 2. Use 16 oz. to 20 oz. lead-coated copper in accordance with SMACNA recommendations.

7.5 Replace gutters at roof perimeter with new 20oz. lead-coated copper hanging gutters to match existing. Ensure positive pitch to outlets. See 07600 and Detail 6/A4.0. Paint.

7.6 Replace rain leaders with new 20 oz. lead-coated copper rain leaders (3½"ø). (Total of 8). Paint.

7.7 Provide cast iron elbow extension at bottom of cast iron Rain Leaders 1 and 6. Paint.

7.8 Apply liquid-applied water-proof coating system on exposed foundation walls at north and south areaways.

7.9 Install soffit vents where missing. Replace up to 5 vents where missing or damaged under Base Bid.

7.10 Caulk joints between dissimilar materials. Cut out existing caulking compounds as required. Use high quality sealants.

7.11 New roof hatch. See 07723.

8.0 DOORS AND WINDOWS

8.1 See Door Schedule under 08000 and Dwg A0.1 for specific information on exterior Doors B1, B2, B3, 101, 102.

8.2 See Window Schedule under 08500 for specific information on each exterior window (a total of 54).

8.3 Provide clear Lexan panels set in painted aluminum frames on exterior of Windows B1, B4, B5, B6, B8, B9, and B10. (Possible source: Allied Windows of Cincinnati). See 08520.

9.0 PAINTING (See 09900)

9.1 On all exterior wood window sills, strip paint down to bare wood. Apply oil base primer.

9.2 On all remaining wood painted surfaces (cornices, balustrades, door and window casings, tower cladding), prepare surfaces for painting and paint 3 coats high quality paint finish as specified.

9.3 Prepare for painting and paint all metal railings, shutter pintles, and bell carriage, 3 coats.

9.4 On all window sash (except 3rd floor - total of 47 windows), remove glazing putty on exterior up to 100%. Caulk and putty all glass panes using top-quality paintable material.

9.5 Prepare for painting and paint all previously painted metal flashings and cast iron and new L.C.C. rain leaders and gutters as specified under 09900

9.6 Apply silicate-based coating system (e.g. KEIM Soldalit) on brownstone surfaces where shown on exterior elevations. See 04010.

9.7 Paint black steel bracket and fasteners of lantern.

10.0 SPECIALTIES

10.1 Add 2 flagpoles on east elevation, where shown. Allowance No. 4 of $10,000 for 2 flagpoles.

10.2 Cut existing wood flagpole (atop tower) at top of metal flashing at base. Install L.C. copper cap flashing. Seal and Paint.

HAYNES / DE BOER
ARCHITECTURE + PRESERVATION
ONE PARK ROW
PROVIDENCE, RI 02903
401 · 274 · 1555
CdeB@haynesdeboer.com

PHASE IIA:
EXTERIOR RESTORATION

THE OLD STATE HOUSE

150 BENEFIT STREET
PROVIDENCE, RHODE ISLAND

DRAWING TITLE:
EAST ELEVATION

SCALE: 1/4"= 1'- 0"

DRAWING STATUS:
FOR BIDDING
NOT FOR CONSTRUCTION

REVISIONS:

PROJECT #: 0218-1
DATE: 06/18/2019
DRAWN BY: JPH
CHECKED BY: CdeB
SHEET 9 OF 16

A2.0

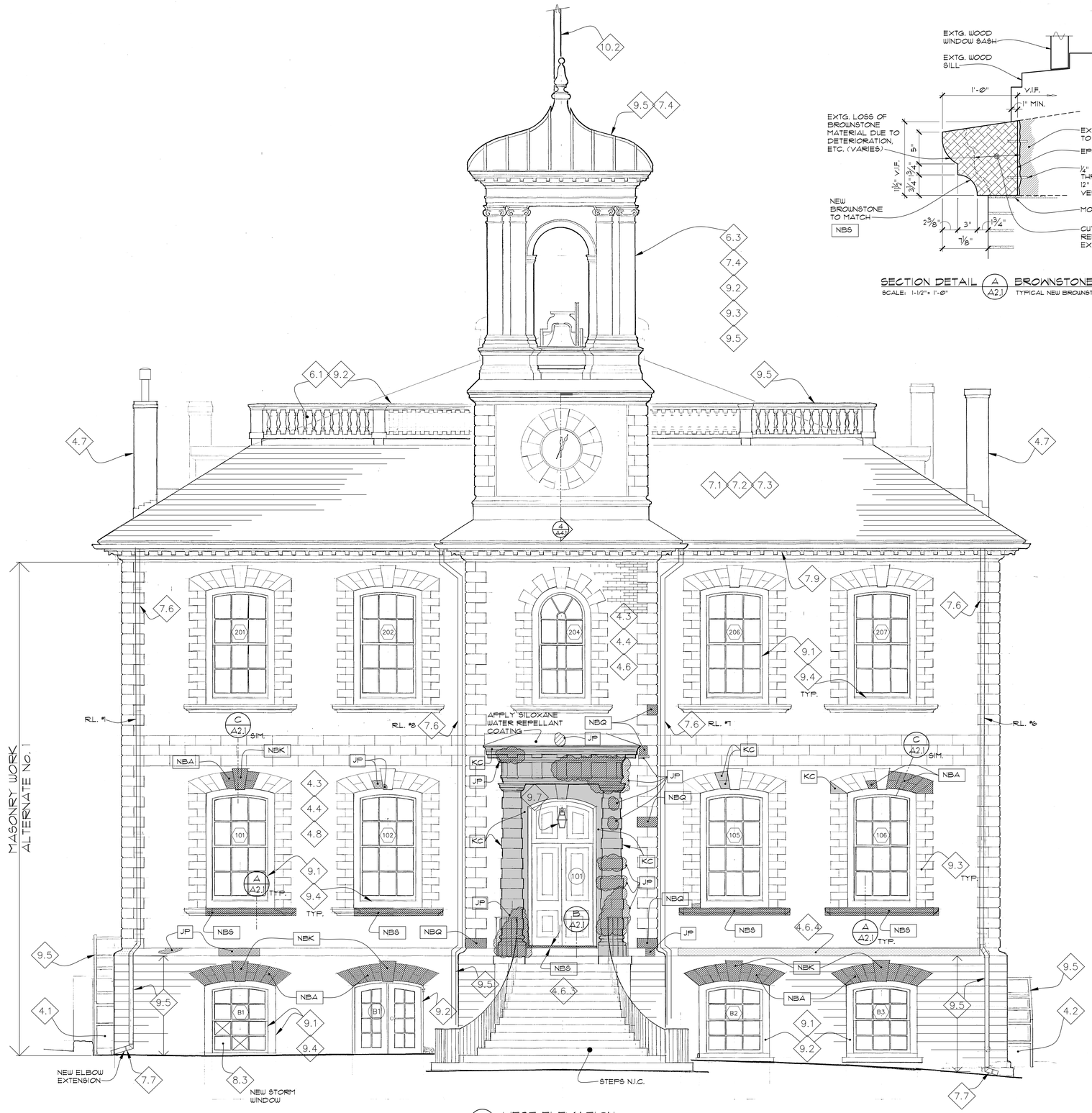

3 A2.1 WEST ELEVATION
SCALE: 1/4"= 1'-0"

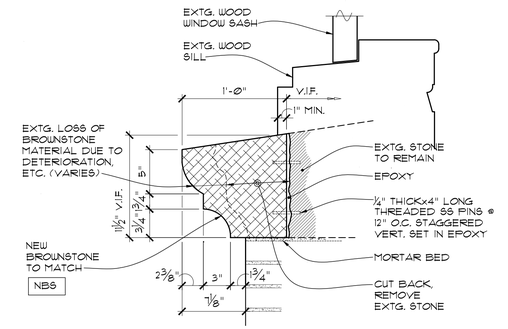

SECTION DETAIL A A2.1 BROWNSTONE WINDOW SILL
SCALE: 1-1/2"= 1'-0" TYPICAL NEW BROWNSTONE TME.

LEGEND FOR BROWNSTONE WORK

DARK GRAY CROSSHATCH: (REPRESENTING NEW REPLACEMENT BROWNSTONE PIECES), LABELED AS FOLLOWS:

- NBA — NEW BROWNSTONE ARCH BLOCK, BEVELED TO MATCH EXISTING. CUT BACK 2" FROM FACE OF ASHLAR STONE OF BRICK WALL. PIN AND EPOXY NEW STONE TO EXISTING.
- NBK — NEW BROWNSTONE KEYSTONE BLOCK TO MATCH EXISTING ORIGINAL KEYSTONE. (USE INTACT KEYSTONE BLOCK AS TEMPLATE). REMOVE EXISTING DETERIORATED KEYSTONE BLOCK 2" TO 3" BACK FROM FACE OF ASHLAR STONE OR BRICK WALL. PIN AND EPOXY NEW STONE IN PLACE.
- NBQ — NEW BROWNSTONE QUOIN BLOCK TO MATCH EXISTING. CUT BACK 2" FROM FACE OF BRICK WALL. PIN AND EPOXY NEW STONE BLOCK IN PLACE.
- NBS — NEW BROWNSTONE SILL PIECE TO MATCH EXISTING MOLDED PROFILE. CUT OUT BROWNSTONE SILL TO ABOUT 1" BEHIND FACE OF WOOD WINDOW SILL. (REMOVE WOOD TRIM IF NECESSARY TO FACILITATE WORK). SILL PIECE TO BE ONE PIECE, IF POSSIBLE. PIN AND EPOXY NEW STONE SILL IN PLACE.

GRAY HATCH: (ON BROWNSTONE SURFACES), LABELED AS FOLLOWS:

- JP — NEW JAHN M70 BROWNSTONE PATCHING MORTAR, COLOR AND TEXTURE TO MATCH EXISTING SURROUNDING BROWNSTONE. SEE 04500.

LIGHT GRAY SHADING: (ON BROWNSTONE SURFACES), LABELED AS FOLLOWS:

- KC — KEIM COATING APPLICATION: COLOR TO MATCH BROWNSTONE. SEE 04010.

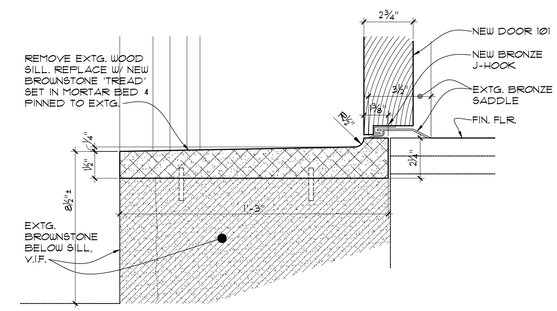

SECTION DETAIL B A2.1 BROWNSTONE DOOR SILL
SCALE: 3"= 1'-0" DOOR #101

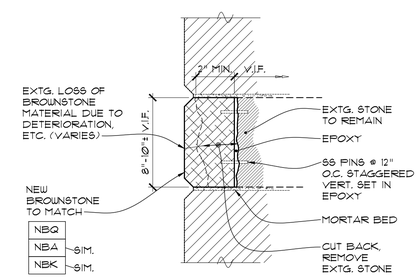

SECTION DETAIL C A2.1 BROWNSTONE QUOIN BLOCK
SCALE: 3"= 1'-0" TYPICAL (BROWNSTONE ARCH & KEYSTONE BLOCKS SIMILAR)

GENERAL NOTES

1. SEE DWG. A2.0 FOR KEY NOTES.
2. SEE BID FORM AND ALTERNATE No. 1 FOR MASONRY WORK.

0 1 2 3 4 5 10 20 ft

HAYNES / DE BOER
ARCHITECTURE + PRESERVATION
ONE PARK ROW
PROVIDENCE, RI 02903
401 · 274 · 1555
CdeB@haynesdeboer.com

PHASE IIA:
EXTERIOR RESTORATION

THE OLD STATE HOUSE

150 BENEFIT STREET
PROVIDENCE, RHODE ISLAND

DRAWING TITLE:
WEST ELEVATION

SCALE: 1/4"= 1'- 0"

DRAWING STATUS:
FOR BIDDING
NOT FOR CONSTRUCTION

REVISIONS:

PROJECT #: 0218-1
DATE: 06/18/2019
DRAWN BY: JPH
CHECKED BY: CdeB
SHEET 10 OF 16

A2.1

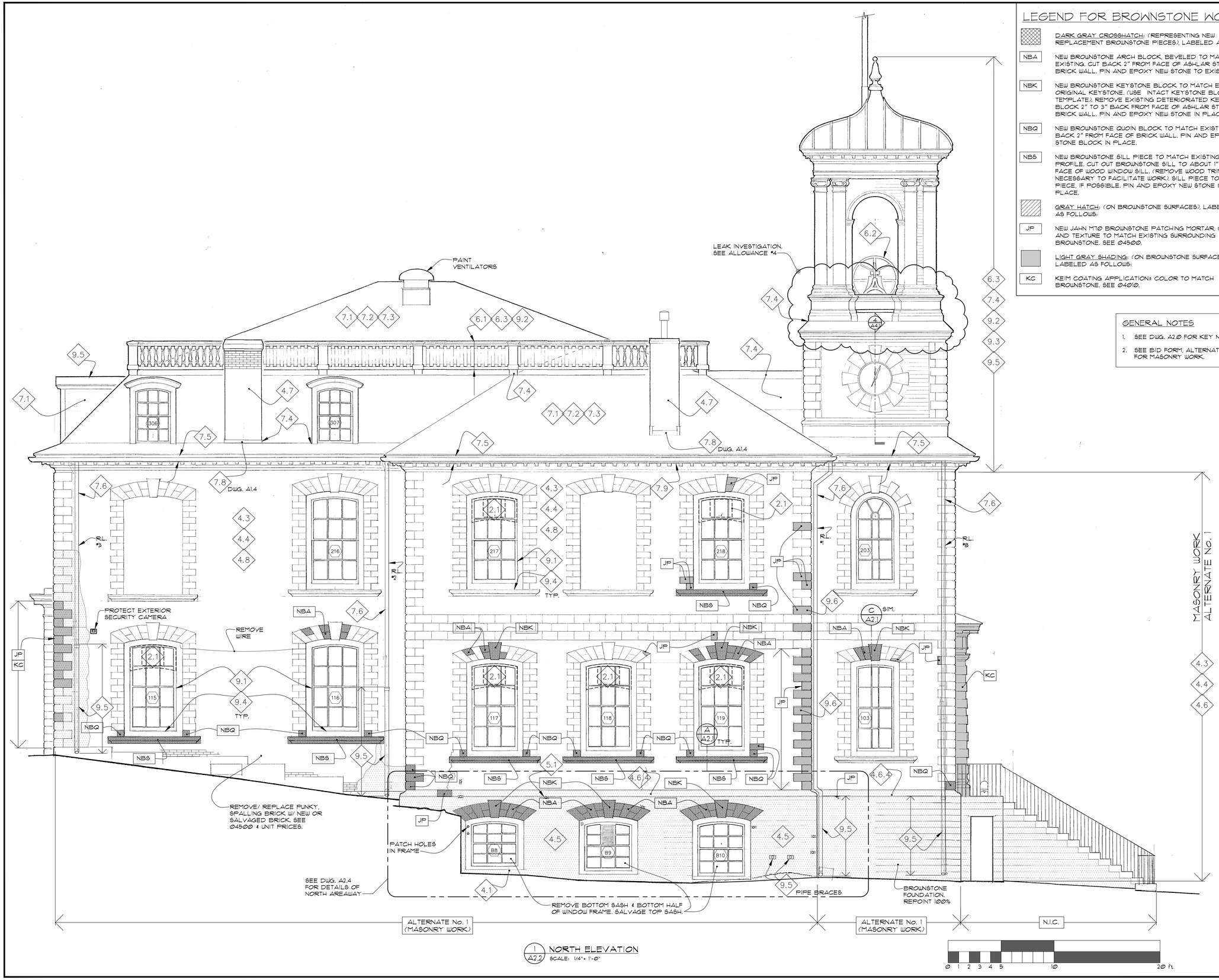

1 / A2.2 NORTH ELEVATION
SCALE: 1/4"= 1'-Ø"

LEGEND FOR BROWNSTONE WORK

DARK GRAY CROSSHATCH: (REPRESENTING NEW REPLACEMENT BROWNSTONE PIECES), LABELED AS FOLLOWS:

- NBA — NEW BROWNSTONE ARCH BLOCK, BEVELED TO MATCH EXISTING. CUT BACK 2" FROM FACE OF ASHLAR STONE OF BRICK WALL. PIN AND EPOXY NEW STONE TO EXISTING.
- NBK — NEW BROWNSTONE KEYSTONE BLOCK TO MATCH EXISTING ORIGINAL KEYSTONE. (USE INTACT KEYSTONE BLOCK AS TEMPLATE). REMOVE EXISTING DETERIORATED KEYSTONE BLOCK 2" TO 3" BACK FROM FACE OF ASHLAR STONE OR BRICK WALL. PIN AND EPOXY NEW STONE IN PLACE.
- NBQ — NEW BROWNSTONE QUOIN BLOCK TO MATCH EXISTING. CUT BACK 2" FROM FACE OF BRICK WALL. PIN AND EPOXY NEW STONE BLOCK IN PLACE.
- NBS — NEW BROWNSTONE SILL PIECE TO MATCH EXISTING MOLDED PROFILE. CUT OUT BROWNSTONE SILL TO ABOUT 1" BEHIND FACE OF WOOD WINDOW SILL. (REMOVE WOOD TRIM IF NECESSARY TO FACILITATE WORK). SILL PIECE TO BE ONE PIECE, IF POSSIBLE. PIN AND EPOXY NEW STONE SILL IN PLACE.

GRAY HATCH: (ON BROWNSTONE SURFACES), LABELED AS FOLLOWS:

- JP — NEW JAHN M70 BROWNSTONE PATCHING MORTAR, COLOR AND TEXTURE TO MATCH EXISTING SURROUNDING BROWNSTONE. SEE Ø450Ø.

LIGHT GRAY SHADING: (ON BROWNSTONE SURFACES), LABELED AS FOLLOWS:

- KC — KEIM COATING APPLICATION: COLOR TO MATCH BROWNSTONE. SEE Ø40Ø.

GENERAL NOTES

1. SEE DWG. A2.Ø FOR KEY NOTES.
2. SEE BID FORM, ALTERNATE No. 1 FOR MASONRY WORK.

HAYNES / DE BOER
ARCHITECTURE + PRESERVATION
ONE PARK ROW
PROVIDENCE, RI 02903
401 · 274 · 1555
CdeB@haynesdeboer.com

PHASE IIA: EXTERIOR RESTORATION

THE OLD STATE HOUSE

150 BENEFIT STREET
PROVIDENCE, RHODE ISLAND

DRAWING TITLE:
NORTH ELEVATION

SCALE: 1/4"= 1'- 0"

DRAWING STATUS:
FOR BIDDING
NOT FOR CONSTRUCTION

REVISIONS:

PROJECT #: 0218-1
DATE: 06/18/2019
DRAWN BY: JPH
CHECKED BY: CdeB
SHEET 11 OF 16

A2.2

LEGEND FOR BROWNSTONE WORK

DARK GRAY CROSSHATCH: (REPRESENTING NEW REPLACEMENT BROWNSTONE PIECES), LABELED AS FOLLOWS:

- NBA — NEW BROWNSTONE ARCH BLOCK, BEVELED TO MATCH EXISTING. CUT BACK 2" FROM FACE OF ASHLAR STONE OF BRICK WALL. PIN AND EPOXY NEW STONE TO EXISTING.
- NBK — NEW BROWNSTONE KEYSTONE BLOCK TO MATCH EXISTING ORIGINAL KEYSTONE. (USE INTACT KEYSTONE BLOCK AS TEMPLATE). REMOVE EXISTING DETERIORATED KEYSTONE BLOCK 2" TO 3" BACK FROM FACE OF ASHLAR STONE OR BRICK WALL. PIN AND EPOXY NEW STONE IN PLACE.
- NBQ — NEW BROWNSTONE QUOIN BLOCK TO MATCH EXISTING. CUT BACK 2" FROM FACE OF BRICK WALL. PIN AND EPOXY NEW STONE BLOCK IN PLACE.
- NBS — NEW BROWNSTONE SILL PIECE TO MATCH EXISTING MOLDED PROFILE. CUT OUT BROWNSTONE SILL TO ABOUT 1" BEHIND FACE OF WOOD WINDOW SILL. (REMOVE WOOD TRIM IF NECESSARY TO FACILITATE WORK). SILL PIECE TO BE ONE PIECE, IF POSSIBLE. PIN AND EPOXY NEW STONE SILL IN PLACE.

GRAY HATCH: (ON BROWNSTONE SURFACES), LABELED AS FOLLOWS:

- JP — NEW JAHN M70 BROWNSTONE PATCHING MORTAR, COLOR AND TEXTURE TO MATCH EXISTING SURROUNDING BROWNSTONE. SEE 04500.

LIGHT GRAY SHADING: (ON BROWNSTONE SURFACES), LABELED AS FOLLOWS:

- KC — KEIM COATING APPLICATION: COLOR TO MATCH BROWNSTONE. SEE 04010.

GENERAL NOTES

1. SEE DWG. A2.0 FOR KEY NOTES.
2. SEE BID FORM, ALTERNATE No. 1 FOR MASONRY WORK.

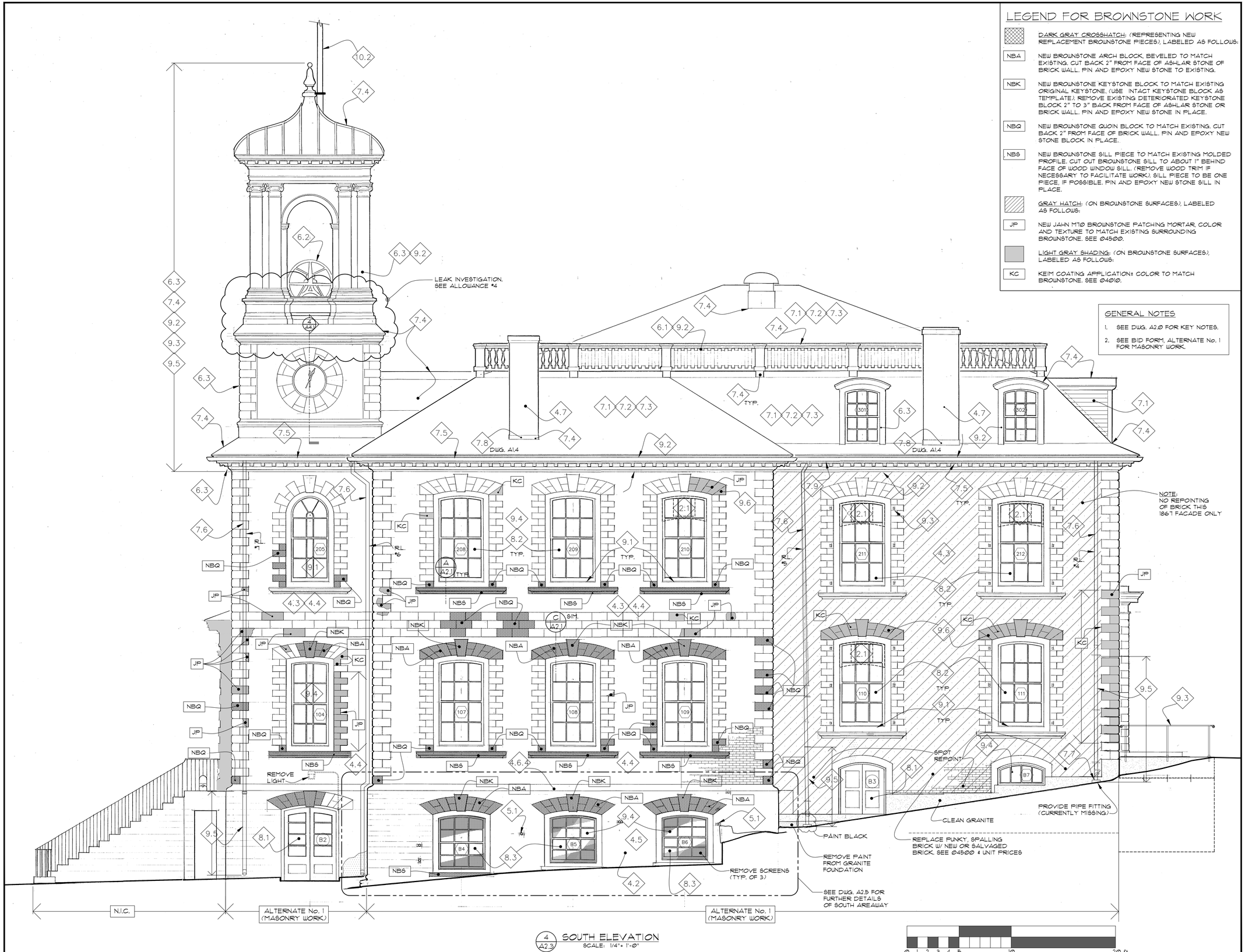

4 / A2.3 SOUTH ELEVATION
SCALE: 1/4" = 1'-0"

HAYNES / DE BOER
ARCHITECTURE + PRESERVATION
ONE PARK ROW
PROVIDENCE, RI 02903
401 · 274 · 1555
CdeB@haynesdeboer.com

PHASE IIA:
EXTERIOR RESTORATION

THE OLD STATE HOUSE

150 BENEFIT STREET
PROVIDENCE, RHODE ISLAND

DRAWING TITLE:
SOUTH ELEVATION

SCALE: 1/4" = 1'- 0"

DRAWING STATUS:
FOR BIDDING
NOT FOR CONSTRUCTION

REVISIONS:

PROJECT #: 0218-1
DATE: 06/18/2019
DRAWN BY: JPH
CHECKED BY: CdeB
SHEET 12 OF 16

A2.3

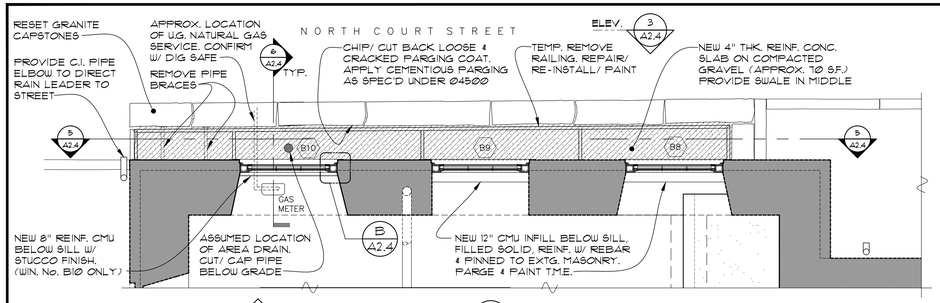

PLAN (1 A2.4) NORTH AREAWAY
SCALE: 1/4"= 1'-0"

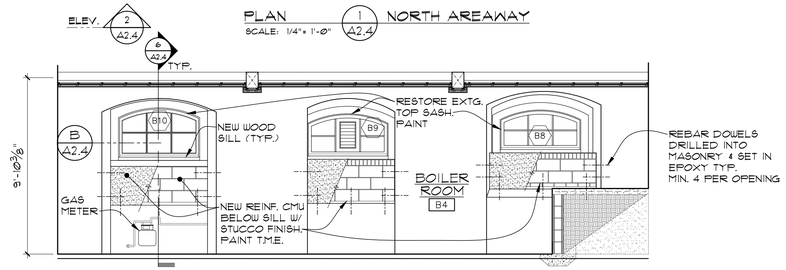

INTERIOR ELEVATION (2 A2.4) BOILER ROOM #B4
SCALE: 1/4"= 1'-0" LOOKING NORTH - PROPOSED

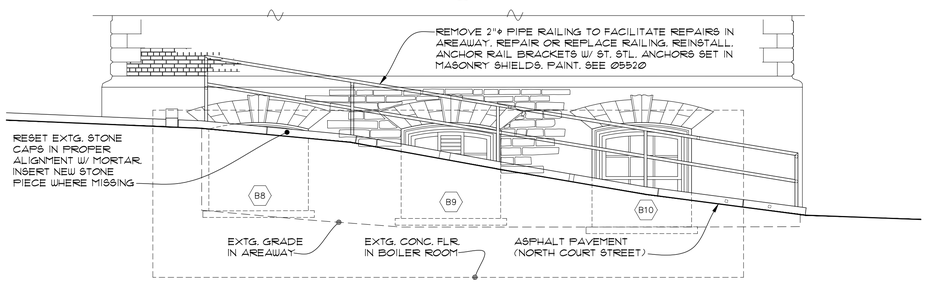

ELEVATION (3 A2.4) NORTH AREAWAY
SCALE: 1/4"= 1'-0" EXISTING CONDITIONS

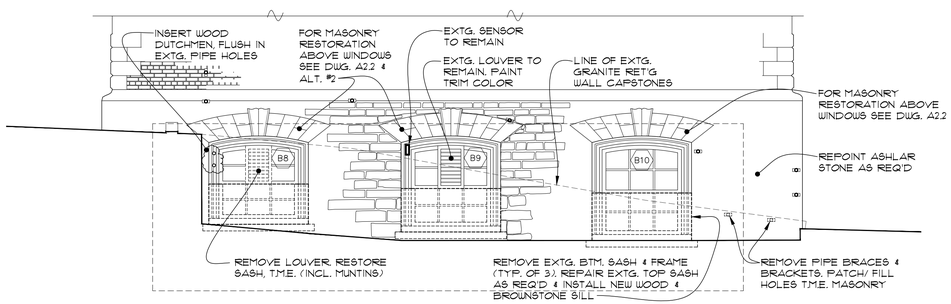

SECTION/ ELEVATION (4 A2.4) NORTH AREAWAY
SCALE: 1/4"= 1'-0" LOOKING SOUTH - EXISTING

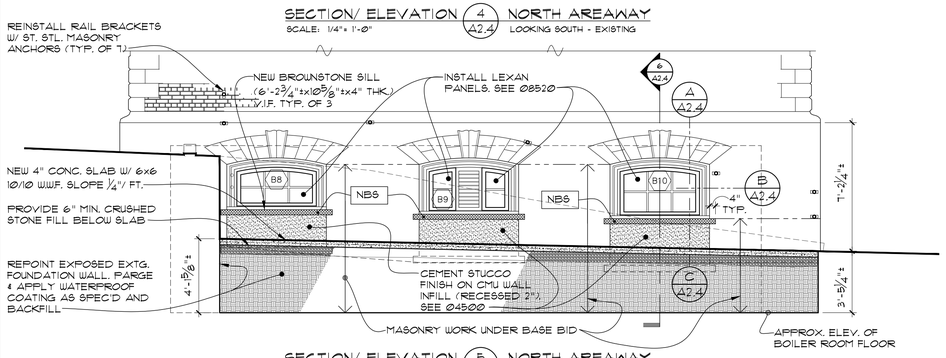

SECTION/ ELEVATION (5 A2.4) NORTH AREAWAY
SCALE: 1/4"= 1'-0" LOOKING SOUTH - PROPOSED

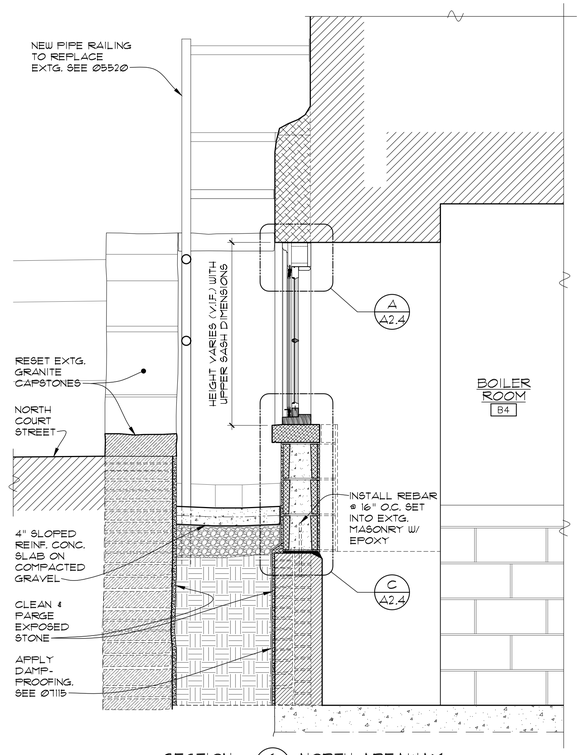

SECTION (6 A2.4) NORTH AREAWAY
SCALE: 3/4"= 1'-0" LOOKING EAST - PROPOSED

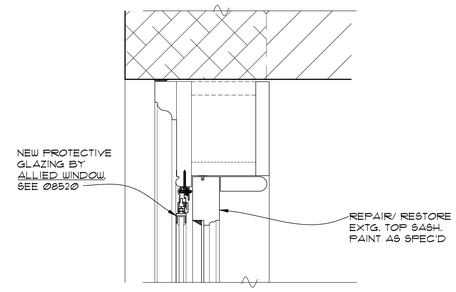

HEAD DETAIL (A A2.4) NORTH AREAWAY
SCALE: 3"= 1'-0" JAMB SIMILAR

NOTE: DETAILS OF PROTECTIVE GLAZING TYPICAL OF 7 WINDOW OPENINGS

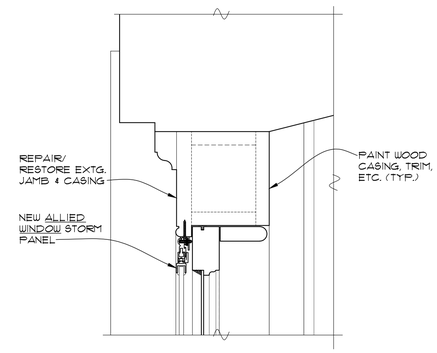

JAMB DETAIL (B A2.4) NORTH AREAWAY
SCALE: 3"= 1'-0" (WIN. No.'s: B8, B9 & B10)

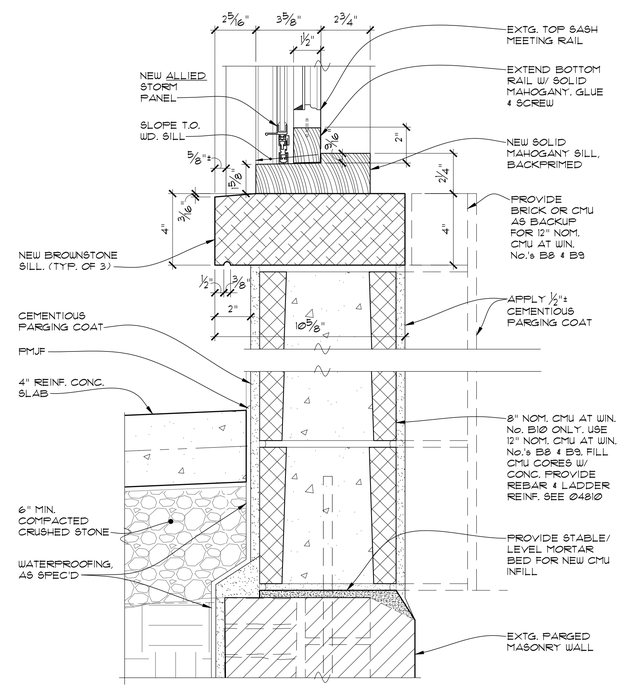

SILL DETAIL (C A2.4) NORTH AREAWAY
SCALE: 3"= 1'-0" (WIN. No.'s: B8, B9 & B10)

HAYNES / DE BOER
ARCHITECTURE + PRESERVATION
ONE PARK ROW
PROVIDENCE, RI 02903
401 · 274 · 1555
CdeB@haynesdeboer.com

PHASE IIA:
EXTERIOR RESTORATION

THE OLD STATE HOUSE

150 BENEFIT STREET
PROVIDENCE, RHODE ISLAND

DRAWING TITLE:
NORTH AREAWAY: SECTIONS, ELEVATIONS & DETAILS

SCALE: 1/4"= 1'- 0"

DRAWING STATUS:
FOR BIDDING
NOT FOR CONSTRUCTION

REVISIONS:

PROJECT #: 0218-1
DATE: 06/18/2019
DRAWN BY: JPH
CHECKED BY: CdeB
SHEET 13 OF 16

A2.4

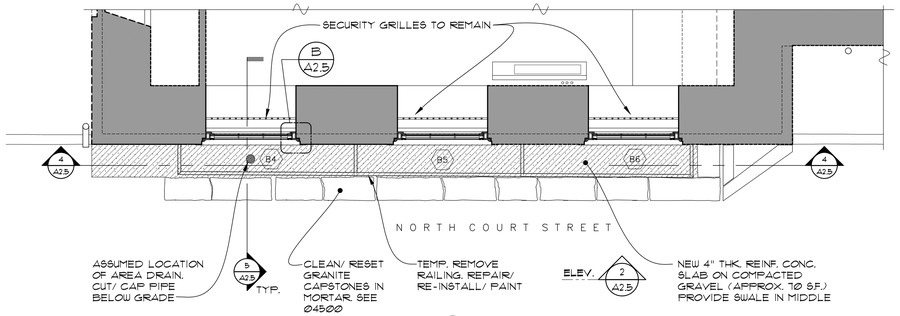

PLAN (1 / A2.5) SOUTH AREAWAY
SCALE: 1/4"= 1'-Ø" EXISTING CONDITIONS

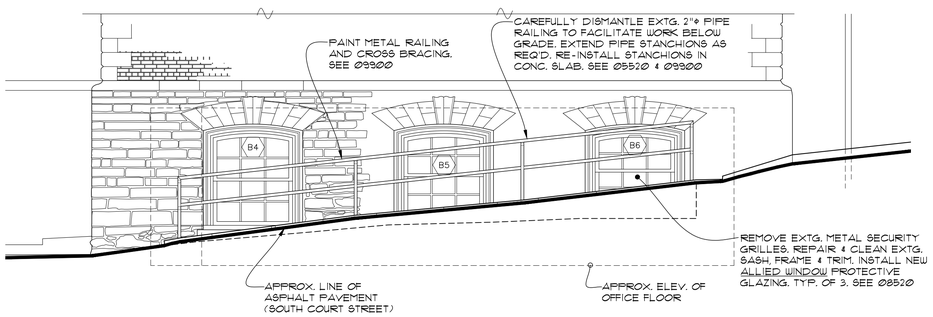

ELEVATION (2 / A2.5) SOUTH AREAWAY
SCALE: 1/4"= 1'-Ø" EXISTING CONDITIONS

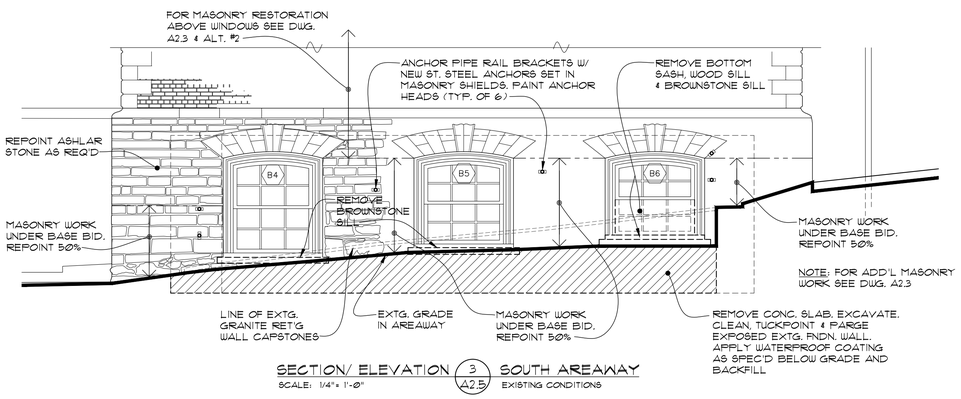

SECTION/ ELEVATION (3 / A2.5) SOUTH AREAWAY
SCALE: 1/4"= 1'-Ø" EXISTING CONDITIONS

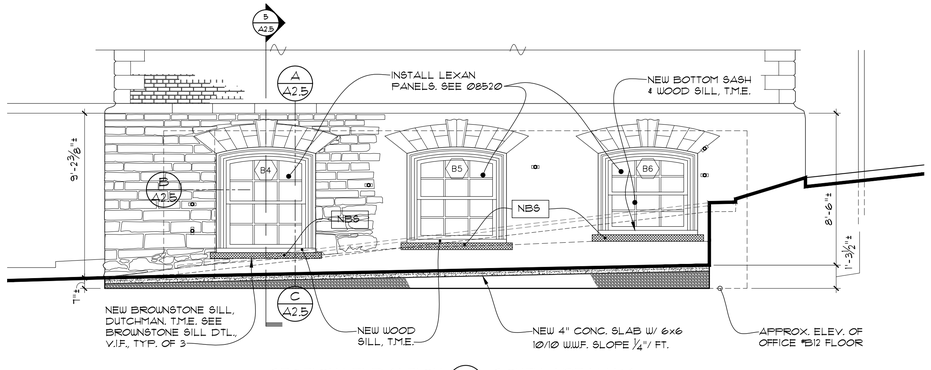

SECTION/ ELEVATION (4 / A2.5) SOUTH AREAWAY
SCALE: 1/4"= 1'-Ø" PROPOSED

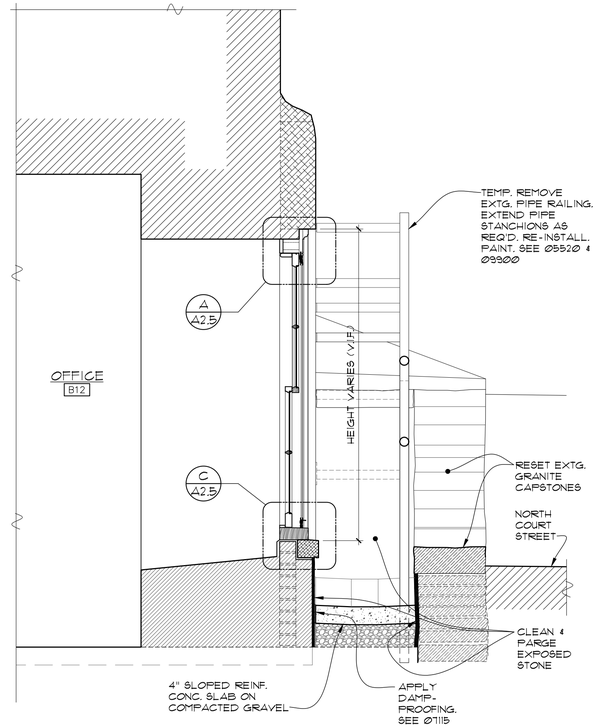

SECTION (5 / A2.5) SOUTH AREAWAY
SCALE: 3/4"= 1'-Ø" LOOKING EAST - PROPOSED

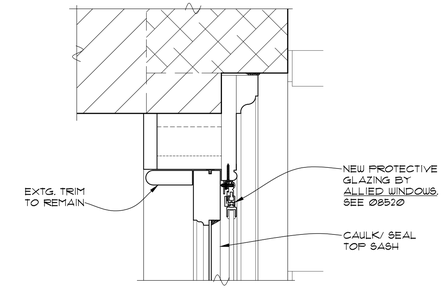

HEAD DETAIL (A / A2.5) WINDOW B4
SCALE: 3"= 1'-Ø" TYPICAL OF 3

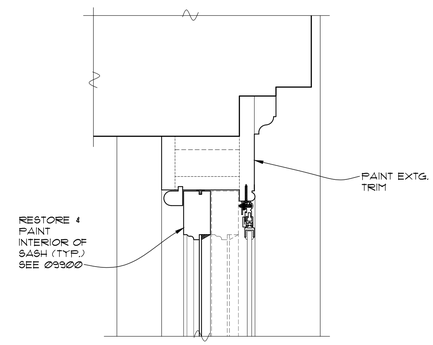

JAMB DETAIL (B / A2.5) WINDOW B4
SCALE: 3"= 1'-Ø" TYPICAL OF 3

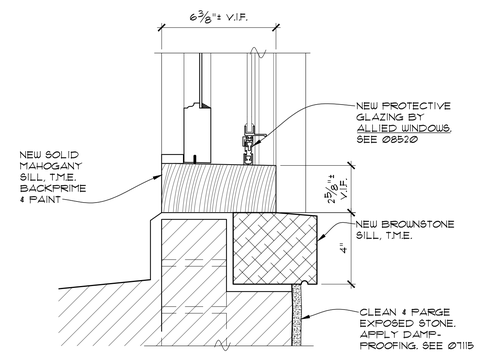

SILL DETAIL (C / A2.5) WINDOW B4
SCALE: 3"= 1'-Ø" TYPICAL OF 3

NOTE:
SEE WINDOW SCHEDULE FOR ADDITIONAL INFORMATION AND REQUIREMENTS

HAYNES / DE BOER
ARCHITECTURE + PRESERVATION
ONE PARK ROW
PROVIDENCE, RI 02903
401 · 274 · 1555
haynes.deboer@verizon.net

PHASE IIA:
EXTERIOR RESTORATION

THE OLD STATE HOUSE

150 BENEFIT STREET
PROVIDENCE, RHODE ISLAND

DRAWING TITLE:
SOUTH AREAWAY: SECTIONS, ELEVATIONS & DETAILS

SCALE: AS NOTED

DRAWING STATUS:
FOR BIDDING
NOT FOR CONSTRUCTION

REVISIONS:

PROJECT #: 0218-1
DATE: 06/18/2019
DRAWN BY: JPH
CHECKED BY: CdeB
SHEET 14 OF 16

A2.5

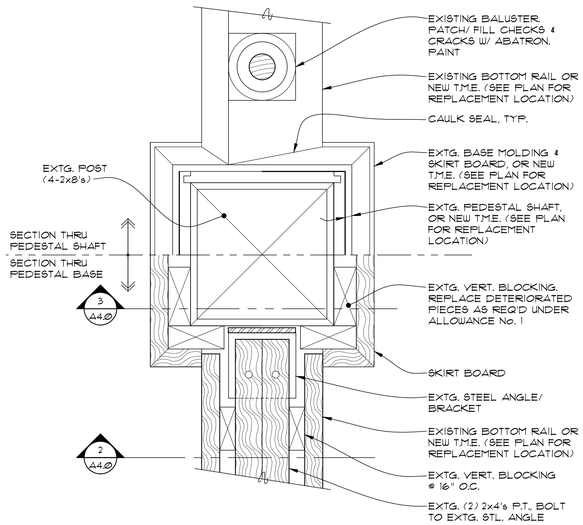

SECTION DETAIL (1 / A4.0) BALUSTRADE PEDESTAL
SCALE: 3"= 1'-0" TYPICAL

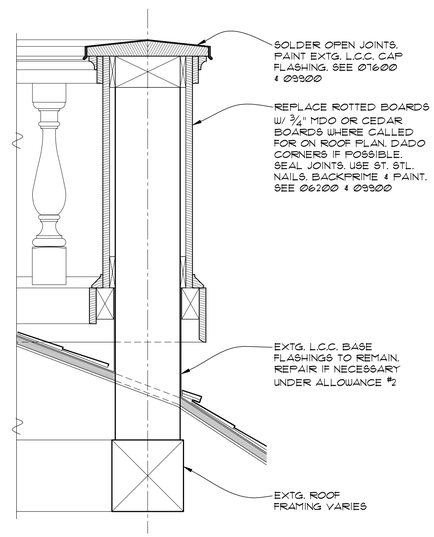

SECTION DETAIL (3 / A4.0) BALUSTRADE POST
SCALE: 1-1/2"= 1'-0" TYPICAL

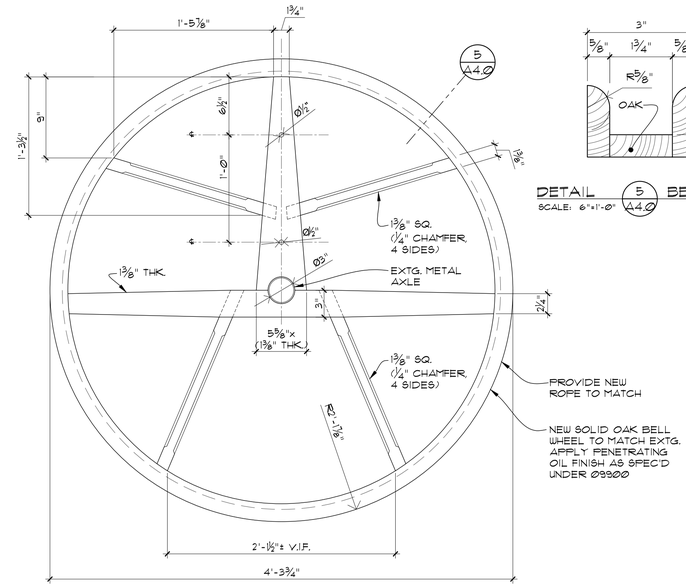

ELEVATION DETAIL (4 / A4.0) BELL WHEEL
SCALE: 1-1/2"= 1'-0"

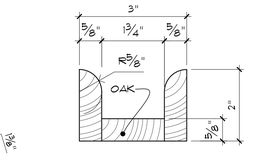

DETAIL (5 / A4.0) BELL WHEEL
SCALE: 6"=1'-0"

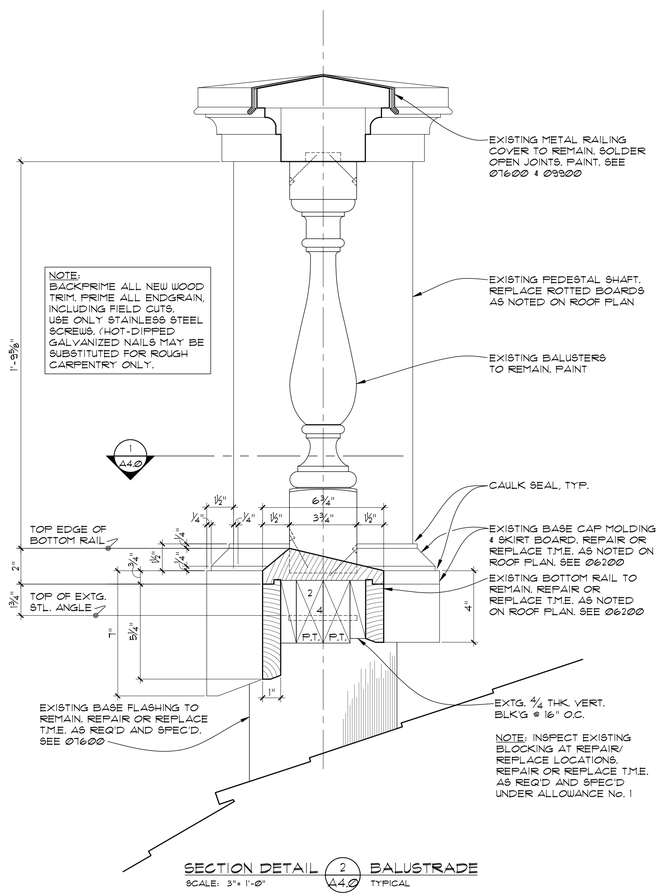

SECTION DETAIL (2 / A4.0) BALUSTRADE
SCALE: 3"= 1'-0" TYPICAL

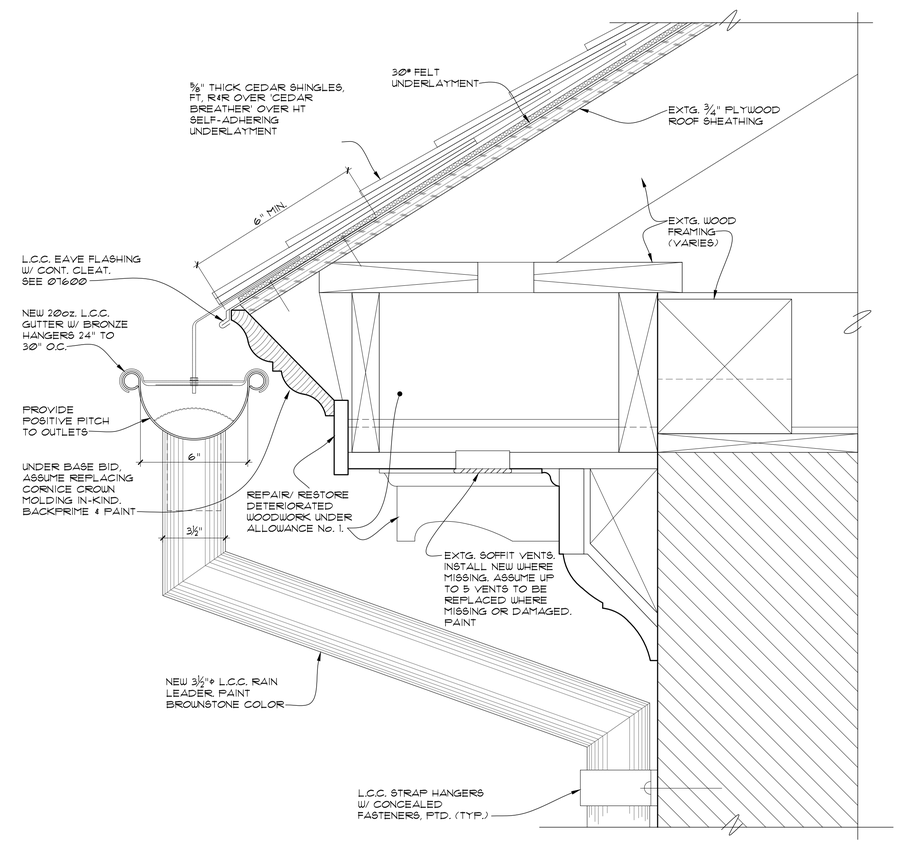

SECTION DETAIL (6 / A4.0) TYP. CORNICE
SCALE: 3"= 1'-0"

HAYNES / DE BOER
ARCHITECTURE + PRESERVATION
ONE PARK ROW
PROVIDENCE, RI 02903
401 · 274 · 1555
CdeB@haynesdeboer.com

PHASE IIA:
EXTERIOR RESTORATION

THE OLD STATE HOUSE

150 BENEFIT STREET
PROVIDENCE, RHODE ISLAND

DRAWING TITLE:
ROOF & TOWER DETAILS

SCALE: AS NOTED

DRAWING STATUS:
FOR BIDDING
NOT FOR CONSTRUCTION

REVISIONS:

PROJECT #: 0218-1
DATE: 06/18/2019
DRAWN BY: JPH
CHECKED BY: CdeB
SHEET 15 OF 16

A4.0

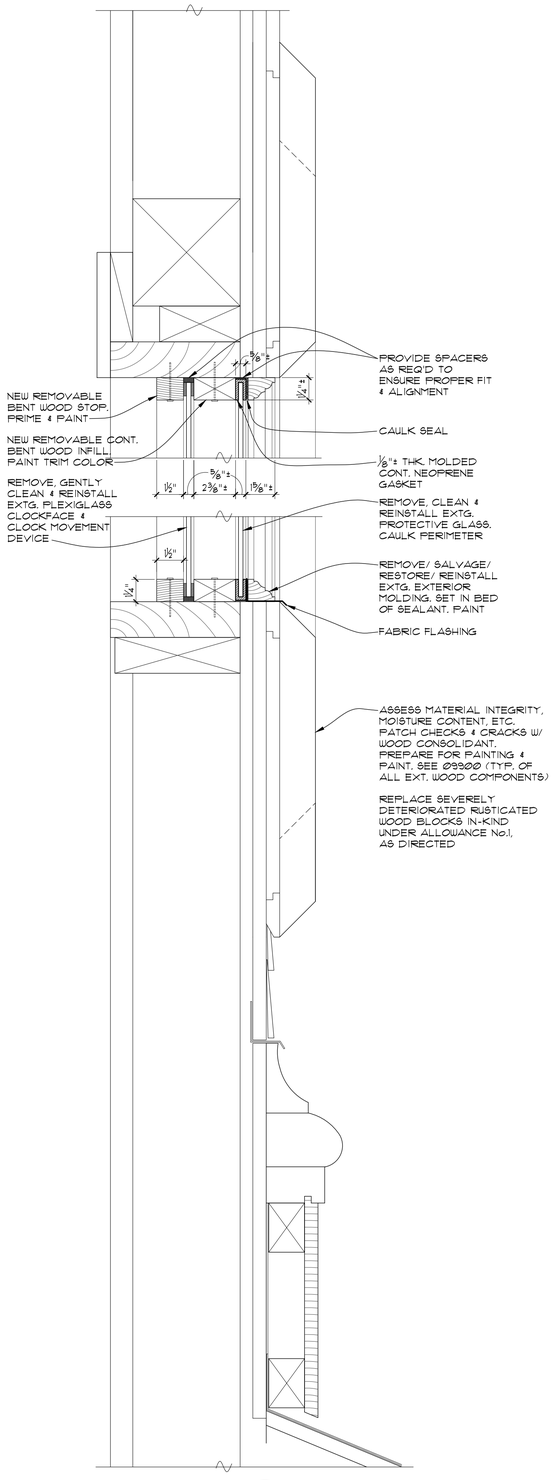

SECTION DETAIL 7/A4.1 TOWER CLOCK FACE
SCALE: 3" = 1'-0" TYP. 3 SIDES

SCANNED DETAILS 8/A4.1 AND 9/A4.1, DATED 1981, SHOWN HERE FOR INFORMATION AND REFERENCE ONLY. MAY NOT REFLECT AS-BUILT CONDITIONS. VERIFY IN FIELD

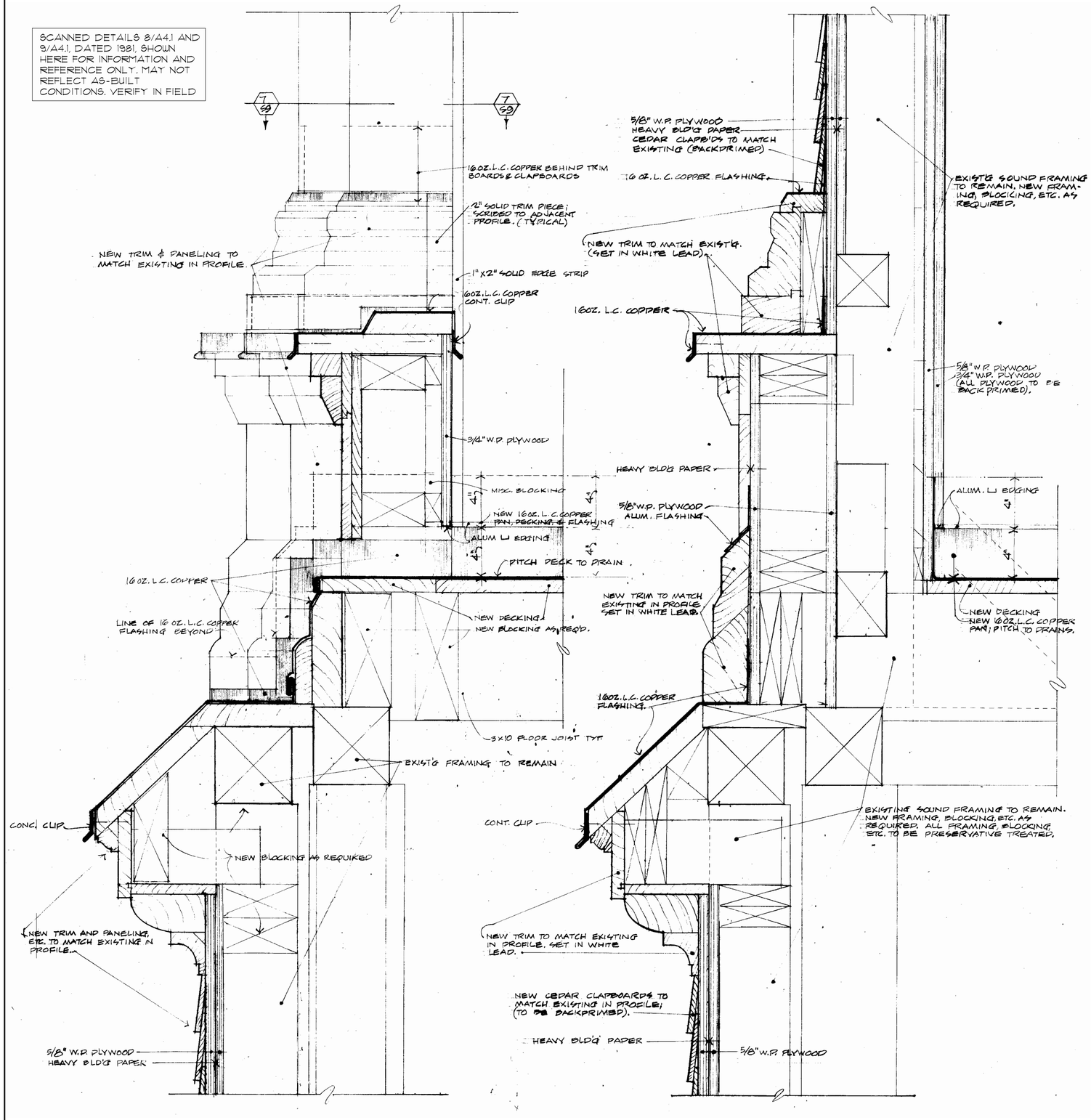

SECTION DETAIL 8/A4.1 THRU SILL AT TOWER CENTER
SCALE: 3" = 1'-0" TYPICAL

SECTION DETAIL 9/A4.1 THRU PILASTERS AT TOWER CORNERS
SCALE: 3" = 1'-0" TYPICAL

HAYNES / DE BOER
ARCHITECTURE + PRESERVATION
ONE PARK ROW
PROVIDENCE, RI 02903
401 · 274 · 1555
CdeB@haynesdeboer.com

PHASE IIA:
EXTERIOR RESTORATION

THE OLD STATE HOUSE

150 BENEFIT STREET
PROVIDENCE, RHODE ISLAND

DRAWING TITLE:
TOWER DETAILS

SCALE: AS NOTED

DRAWING STATUS:
FOR BIDDING
NOT FOR CONSTRUCTION

REVISIONS:

PROJECT #: 0218-1
DATE: 06/18/2019
DRAWN BY: JPH
CHECKED BY: CdeB
SHEET 16 OF 16

A4.1