FED. ROAD DIV. NO.	STATE	FEDERAL AID PROJECT NO.	FISCAL YEAR	SHEET NO.	TOTAL SHEETS
	RI			1	64

INDEX

FOR VOLUME 3 INDEX REFER TO SHEET 2

LIST OF VOLUMES

VOLUME 1 - HIGHWAY PLANS

VOLUME 2 - REPLACEMENT OF SMITH ST. BRIDGE NO. 701 AND PARK ST. RETAINING WALLS

VOLUME 3 - PRESERVATION OF BRIDGE NOS. 575, 578, 704, 706, 707 AND 708

STATE OF RHODE ISLAND

DEPARTMENT OF TRANSPORTATION

BRIDGE GROUP 75A
I-95 SMITH STREET

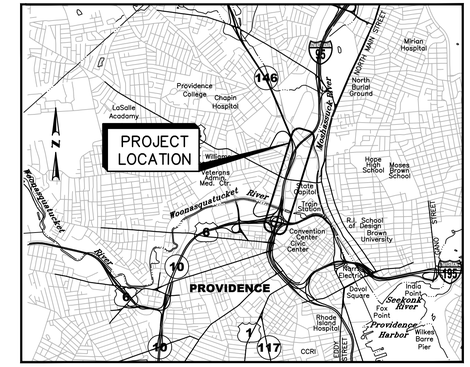

LOCATION MAP
SCALE: 1"=3600'

PRESERVATION OF BRIDGE NOS. 575, 578, 704, 706, 707, AND 708 VOLUME 3

CITY OF PROVIDENCE
COUNTY OF PROVIDENCE

R.I. CONTRACT NO. 20XX-XX-XXX F.A. PROJECT NO. XXX-XXXX

NOTE TO DESIGN BUILD TEAM

FOR ALL CONCRETE REPAIRS, WHICH INCLUDE BUT ARE NOT LIMITED TO, ABUTMENT STEMS, BACKWALLS, COLUMNS, PIER CAP, AND DECKS, THE DESIGN BUILD TEAM SHALL CARRY A COST IN THEIR BID FOR AN ADDITIONAL 20% OF CONCRETE REPAIRS. THIS ADDITIONAL COST SHALL BE USED TO COVER ANY ADDITIONAL REPAIRS APPROVED BY THE ENGINEER DURING CONSTRUCTION.THE ADDITIONAL 20% SHALL BE CALCULATED BASED ON THE CUMULATIVE AMOUNT OF REPAIRS PERFORMED THROUGHOUT THE PROJECT LIMITS PER TYPE OF REPAIR. APPROVED REPAIRS MADE BEYOND THESE LIMITS WOULD BE CONSIDERED FOR ADDITIONAL COMPENSATION SUBJECT TO NEGOTIATION.

SEE SHEETS A05, D06, E01 AND F01 FOR ADDITIONAL BRIDGE SPECIFIC QUANTITIES (BEARING REPLACEMENT AND BEAM END REPAIRS) THAT SHALL BE INCLUDED IN THE BID TO SUPPLEMENT THE REPAIRS SHOWN IN THIS SET.

WITH THE EXCEPTION OF BRIDGE NO. 578 AND 704, THE DESIGN BUILD TEAM SHALL DESIGN, DEVELOP AND INSTALL BEAM END REPAIR DETAILS FOR ANY BEAM THAT EXHIBITS MORE THAN 10% SHEAR LOSS OR 20% BEARING LOSS. THE DESIGN BUILD TEAM SHALL REFERENCE THE LATEST BRIDGE INSPECTION REPORTS FOR BEAM END SECTION LOSSES.

ADDITIONAL SECTION LOSS SHALL BE ASSUMED FROM THE SANDBLASTING DURING THE CLEANING OF THE GIRDER END THAT MAY RESULT IN A GIRDER END TO EXCEED THE LIMITING SECTION LOSS PERCENTAGES. BASED ON THE LATEST BRIDGE INSPECTION REPORTS THE THE DESIGN BUILD TEAM SHALL ASSUME STEEL REPAIRS (TO BE APPROVED BY THE ENGINEER DURING CONSTRUCTION) IN ADDITION TO THE AREAS SHOWN ON THE PLANS:

BRIDGE 575 ATWELLS AVE
- GIRDER B IN SPAN 2 AT PIER HAS 8.33% SHEAR LOSS

BRIDGE 707 ASHBURTON ST
- BEAM A AT SOUTH ABUTMENT 23.1% BEARING LOSS
- BEAM A AT NORTH ABUTMENT 16.6% BEARING LOSS
- BEAM R AT SOUTH ABUTMENT 8.3% SHEAR LOSS AND 16.6% BEARING LOSS

BRIDGE 708 CHARLES ST
- BEAM K AT SOUTH ABUTMENT 21.7% BEARING LOSS

THE DESIGN BUILD TEAM SHALL CARRY A COST IN THEIR BID FOR THESE ADDITIONAL STEEL REPAIRS. THIS ADDITIONAL COST SHALL BE USED TO COVER ANY ADDITIONAL REPAIRS APPROVED BY THE ENGINEER DURING CONSTRUCTION. THE ADDITIONAL REPAIR SHALL BE CALCULATED BASED ON THE CUMULATIVE AMOUNT OF REPAIRS PERFORMED THROUGHOUT THE PROJECT LIMITS PER TYPE OF REPAIR. APPROVED REPAIRS MADE BEYOND THESE LIMITS WOULD BE CONSIDERED FOR ADDITIONAL COMPENSATION SUBJECT TO NEGOTIATION.

R.I. STANDARD SPECIFICATIONS AND STANDARD DETAILS

SPECIFICATIONS TO GOVERN THIS PROJECT ARE THE R.I. STANDARD SPECIFICATIONS FOR ROAD AND BRIDGE CONSTRUCTION, AMENDED MARCH 2018, WITH ALL REVISIONS AND THE STATE AND FEDERAL SPECIAL PROVISIONS INCLUDED IN THE CONTRACT DOCUMENTS. STANDARD DETAILS FOR THIS PROJECT ARE R.I. STANDARD DETAILS, 1998 EDITION, WITH ALL REVISIONS.

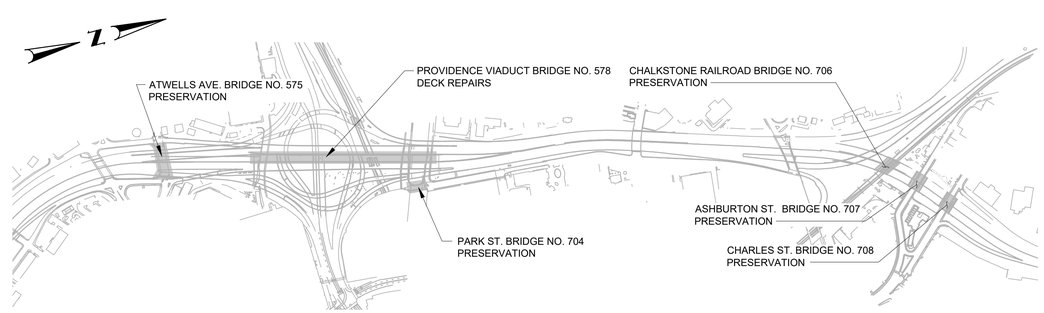

LAYOUT PLAN
SCALE" 1"=500'

BASE OF LEVELS
VERTICAL DATUM: NGVD 29
HORIZONTAL DATUM: NAD 83 (CORS96) (EPOCH2002.0000)

vhb
1 Cedar Street
Suite 400
Providence, RI 02903
401.272.8100

Contract Number _____

Number of Sheet 1

Total Sheets 64

R.I. DEPARTMENT OF TRANSPORTATION

APPROVED

ADMINISTRATOR, PROJECT MANAGEMENT — DATE

APPROVED

CHIEF ENGINEER OF INFRASTRUCTURE — DATE

APPROVED

DIRECTOR — DATE

DEPARTMENT OF TRANSPORTATION
FEDERAL HIGHWAY ADMINISTRATION

APPROVED

DIVISION ADMINISTRATOR — DATE

FED. ROAD DIV. NO.	STATE	FEDERAL AID PROJECT NO.	FISCAL YEAR	SHEET NO.	TOTAL SHEETS
	RI			2	64

VOLUME 3

SHEET NO.	DESCRIPTION
1	COVER SHEET
2	BRIDGE DRAWING INDEX AND ABBREVIATIONS
3	JOB SPECIFIC GENERAL NOTES 1
4	JOB SPECIFIC GENERAL NOTES 2
5	JOB SPECIFIC GENERAL NOTES 3
6	CONCRETE REPAIR DETAILS

ATWELLS AVE. BRIDGE NO. 575 PRESERVATION

A01	GENERAL PLAN AND LONGITUDINAL SECTION
A02	WEST ABUTMENT REPAIRS
A03	EAST ABUTMENT REPAIRS
A04	PIER REPAIRS
A05	FRAMING PLAN
A06	DECK JOINT REPAIRS 1
A07	DECK JOINT REPAIRS 2
A08	DECK JOINT REPAIRS 3

PROVIDENCE VIADUCT BRIDGE NO. 578 DECK REPAIRS

B01	DECK REPAIR AREAS (1 OF 4)
B02	DECK REPAIR AREAS (2 OF 4)
B03	DECK REPAIR AREAS (3 OF 4)
B04	DECK REPAIR AREAS (4 OF 4)
B05	CONCRETE DECK REPAIR
B06	DECK JOINT DETAILS 1
B07	DECK JOINT DETAILS 2

PARK ST. BRIDGE NO. 704 REPAIR

C01	GENERAL PLAN AND LONGITUDINAL SECTION
C02	SOUTH ABUTMENT MODIFICATIONS
C03	NORTH ABUTMENT MODIFICATIONS
C04	BACKWALL REPAIR DETAILS 1
C05	BACKWALL REPAIR DETAILS 2
C06	BACKWALL REPAIR DETAILS 3
C07	EXPANSION JOINT DETAILS
C08	DECK JOINT DETAILS
C09	CONCRETE DECK REPAIR DETAILS

CHALKSTONE RAILROAD BRIDGE NO. 706 PRESERVATION

D01	GENERAL PLAN
D02	TYPICAL SECTIONS
D03	WEST ABUTMENT
D04	EAST ABUTMENT
D05	JOINT REPAIR DETAILS
D06	FRAMING PLAN
D07	STEEL REPAIRS
D08	BEARING DETAILS 1
D09	BEARING DETAILS 2
D10	BEARING RESTRAINT DETAILS
D11	TEMPORARY SHORING DETAILS

ASHBURTON ST. BRIDGE NO. 707 PRESERVATION

E01	BRIDGE PLANS
E02	TRANSVERSE SECTION
E03	WEST AND EAST ABUTMENT ELEVATIONS
E04	JOINT DETAILS 1
E05	JOINT DETAILS 2
E06	STEEL DETAILS 1
E07	STEEL DETAILS 2
E08	STEEL DETAILS 3
E09	STEEL DETAILS 4
E10	TEMPORARY SHORING DETAILS

CHARLES ST. BRIDGE NO. 708 PRESERVATION

F01	BRIDGE PLANS
F02	TRANSVERSE SECTION
F03	WEST AND EAST ABUTMENT ELEVATIONS
F04	JOINT DETAILS 1
F05	JOINT DETAILS 2
F06	STEEL REPAIR 1
F07	STEEL REPAIR 2
F08	STEEL REPAIR 3
F09	STEEL DETAILS 1
F10	STEEL DETAILS 2
F11	STEEL DETAILS 3
F12	STEEL DETAILS 4
F13	TEMPORARY SHORING DETAILS

LIST OF ABBREVIATIONS

A	
ABANDONED	= ABD.
ABUTMENT	= ABUT.
ALTERNATE	= ALT.
AMERICAN ASSOCIATION OF STATE HIGHWAY AND TRANSPORTATION OFFICIALS	= AASHTO
ANCHOR BOLT	= A.B.
AMERICAN PETROLEUM INSTITUTE	= API
APPROVED	= APPD.
APPROXIMATE	= APPROX.
AT	= @
AVERAGE	= AVG.
B	
BASELINE OF CONSTRUCTION	= ℄
BACK TO BACK	= B TO B
BEAM	= BM.
BEARING	= BRG.
BEND POINT	= B.P.
BETWEEN	= BTWN
BITUMINOUS	= BIT.
BITUMINOUS COATED CORRUGATED METAL PIPE	= B.C.C.M.P.
BUILDING	= BLDG.
BUILDING LINE	= B.L.
BOLT CIRCLE	= B.C.
BOTH SIDES	= B.S.
BOTTOM	= BOT.
BOTTOM OF FOOTING	= B.O.F.
C	
CAST IN PLACE	= C.I.P.
CENTER TO CENTER	= C TO C, C/C
COLLECTOR/DISTRIBUTOR	= C/D
CENTERLINE	= ℄
CIRCLE	= CIR.
CONTROLLED LOW STRENGTH MATERIAL	= CLSM
CLEARANCE	= CLR.
COLUMN	= COL.
CONCRETE	= CONC.
CONDUIT	= COND.
CONNECTION	= CONN.
CONSTRUCTION	= CONST.
CONTINUOUS	= CONT.
CONTRACTION	= CONTR.
CORRUGATED METAL PIPE	= CMP
COUNTERSINK	= CSK.
COUPLING	= CPLG.
D	
DETAIL	= DET.
DIAGONAL	= DIAG.
DIAPHRAGM	= DIAPHM.
DIAMETER	= DIA.
DIMENSION	= DIM.
DRAIN	= DR.
DRAWING	= DWG.
DRILL & GROUT	= D&G
E	
EACH	= EA.
EACH FACE	= E.F.
EACH WAY	= E.W.
EAST	= E.
EASTBOUND	= EB
ELECTRIC	= ELEC.
ELEVATION	= EL.
EMBANKMENT	= EMBANK.
EXISTING	= EXIST.
EXPANSION	= EXP.
EQUAL	= EQ.
F	
FABRICATE	= FAB.
FACE TO FACE	= F TO F
FAR FACE	= F.F.
FAR SIDE	= F.S.
FLANGE	= FLG.
FLAT HEAD	= F.H.
FOOTING	= FTG.
FOUNDATION	= FDN.
FURNISH, FABRICATE & ERECT	= F.F. & E.
G	
GAGE	= GA.
GALVANIZED	= GALV.
GRADE	= GR.
GRATING	= GRTG.
GROUND	= GND.
H	
HEIGHT	= HGT., HT.
HEXAGON	= HEX.
HIGH STRENGTH	= HS
HOT MIXED ASPHALT	= HMA
HOLLOW STRUCTURAL SECTION	= HSS
HORIZONTAL	= HORIZ.
I	
INCH	= IN.
INFORMATION	= INFO.
INSIDE DIAMETER	= I.D.
INTELLIGENT TRANSPORTATION SYSTEMS	= I.T.S.
INVERT	= INV.
J	
JOINT	= JT.
L	
LEFT	= LT.
LENGTH	= LGTH.
LIGHTING	= LTG.
LONG	= LG.
LONGITUDINAL	= LONGIT.
M	
MATERIAL	= MATL.
MAXIMUM	= MAX.
MEAN HIGH WATER	= M.H.W.
MEAN LOW WATER	= M.L.W.
MEAN SEA LEVEL	= M.S.L.
MINIMUM	= MIN.
MISCELLANEOUS	= MISC.
N	
NEAR FACE	= N.F.
NEAR SIDE	= N.S.
NORTH	= N.
NORTHBOUND	= NB, N.B.
NOT IN CONTRACT	= N.I.C.
NOT TO SCALE	= N.T.S.
NUMBER	= NO.
O	
ON CENTER	= O.C.
OPENING	= OPNG.
OPPOSITE	= OPP.
OCCUPATIONAL SAFETY & HEALTH ADMINISTRATION	= OSHA
OUTSIDE DIAMETER	= O.D.
OPTIONAL	= OPT.
OVERHEAD WIRE	= O.H.W.
P	
PARALLEL	= PRL.
PEDESTRIAN	= PED.
PLATE	= ℙ
POINT OF VERTICAL CURVATURE	= P.V.C.
POINT OF VERTICAL TANGENCY	= P.V.T.
POINT	= PT.
POINT OF CURVATURE	= PC
POINT OF TANGENCY	= PT
POLYVINYL CHLORIDE	= PVC
POUNDS PER SQUARE INCH	= P.S.I.
PRECAST CONCRETE INSTITUTE	= PCI
PRECAST	= P/C
PRESTRESSED	= P/S
PROFILE GRADE LINE	= PGL
PROPOSED	= PROP.
R	
RADIUS	= RAD., R
RAILROAD	= RR.
REHABILITATION	= REHAB.
REINFORCED CONCRETE PIPE	= RCP
REINFORCING	= REINF.
RELOCATED	= RELOC.
REMOVE & DISPOSE	= R&D
REMOVE & RESET	= R&R
REQUIRED	= REQD.
RETAINING	= RET.
RHODE ISLAND	= R.I.
RIGHT	= RT.
RIGID STEEL CONDUIT	= R.S.C.
ROAD WEATHER INFORMATION SYSTEM	= RWIS
S	
SECTION	= SECT.
SCHEDULE	= SCH.
SCHEMATIC	= SCHEM.
SHEET	= SH., SHT.
SHOULDER	= SHLDR
SIMILAR	= SIM.
SOLDIER PILE & LAGGING	= SPL
SOUTH	= S.
SOUTHBOUND	= SB, S.B.
SPACES	= SP.
SPACING	= SPC.
STANDARD	= STD.
STAY-IN-PLACE	= SIP
STANDARD	= STD.
STATION	= STA.
STAINLESS STEEL	= S.S.
STIFFENER	= STIFF.
SUPPORT OF EXCAVATION	= SOE, S.O.E.
SYMMETRICAL	= SYM.
T	
TANGENT	= TAN.
TEMPORARY	= TEMP.
TOP	= T
TOP AND BOTTOM	= T&B
TOP OF STEEL	= T.O.S.
TOP OF WALL	= T.O.W.
TRANSVERSE	= TRANSV.
TUBE SECTION	= TS
TYPICAL	= TYP.
U	
UNLESS NOTED OTHERWISE	= U.N.O.
ULTRA HIGH PERFORMANCE CONCRETE	= UHPC
V	
VARIES	= VAR.
VERTICAL CURVE	= V.C.
VERTICAL	= VERT.
W	
WEARING SURFACE	= W.S.
WELDED WIRE FABRIC	= W.W.F.
WEST	= W.
WESTBOUND	= WB
WITH	= W/
WIDE FLANGE	= W
WORKING POINT	= W.P.

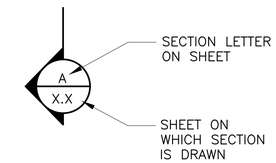

SECTION MARK

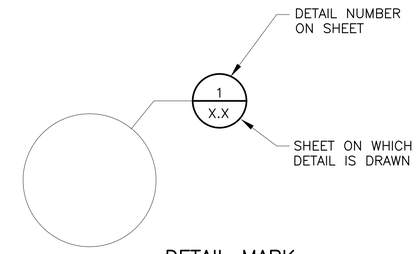

DETAIL MARK

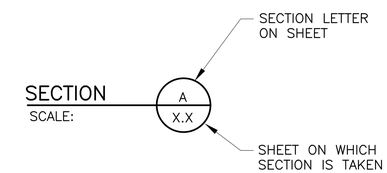

SECTION TITLE

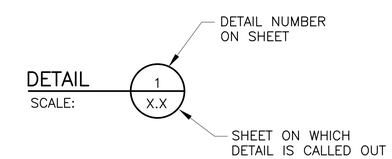

DETAIL TITLE

SECTION & DETAIL DESIGNATIONS

vhb
1 Cedar Street
Suite 400
Providence, RI 02903
401.272.8100

REVISIONS		
NO.	DATE	BY

RHODE ISLAND
DEPARTMENT OF TRANSPORTATION

PRESERVATION OF
BRIDGE NOS. 575, 578, 704, 706, 707, AND 708
PROVIDENCE, RHODE ISLAND

BRIDGE DRAWING INDEX AND ABBREVIATIONS

CHECKED BY _____ DATE _____ SCALE _____

0018C_V3_002_INDEX_ABBR

\\vhb\gb\proj\Providence\72328.04\cad\st\plansetPreservation - For Viaduct RFP\0018C_V3_002_INDEX_ABBR.dwg Plotted on Tuesday, January 7, 2020 10:50:50 AM

FED. ROAD DIV. NO.	STATE	FEDERAL AID PROJECT NO.	FISCAL YEAR	SHEET NO.	TOTAL SHEETS
	RI			3	64

GENERAL NOTES

1. ALL CONSTRUCTION INDICATED ON THESE PLANS SHALL BE IN ACCORDANCE WITH:

* THE STATE OF RHODE ISLAND STANDARD SPECIFICATIONS FOR ROAD AND BRIDGE CONSTRUCTION, AMENDED 2018 INCLUDING ALL REVISIONS OR SUPPLEMENTS.

* THE 2007 EDITION OF THE STATE OF RHODE ISLAND DEPARTMENT OF TRANSPORTATION LRFD BRIDGE DESIGN MANUAL, INCLUDING ALL REVISIONS OR SUPPLEMENTS UP TO YEAR 2018.

* AASHTO LRFD BRIDGE CONSTRUCTION SPECIFICATIONS, 4RD EDITION, INCLUDING LATEST INTERIMS.

* THE SPECIFICATIONS ACCOMPANYING THESE PLANS.

IN CASE OF CONFLICT BETWEEN THE PLANS, SPECIFICATIONS OR MANUAL LISTED ABOVE, THE SPECIAL PROVISIONS OF THE SPECIFICATIONS ACCOMPANYING THESE PLANS SHALL GOVERN.

2. DIMENSIONS, STATIONS, AND ELEVATIONS ARE SHOWN TO THE NEAREST ONE–HUNDREDTH OF A FOOT OR ONE–EIGHTH OF AN INCH, EXCEPT STRUCTURAL STEEL DIMENSIONS WHICH ARE TO THE NEAREST ONE–SIXTEENTH OF AN INCH.

3. ALL ELEVATIONS ARE REFERENCED TO NGVD 1929. TO OBTAIN AN EQUIVALENT ELEVATION FROM THE PROVIDENCE MEAN HIGH WATER DATUM, A CONVERSION OF 2.38 SHALL BE ADDED TO THE PROVIDENCE MEAN HIGH WATER DATUM.

4. ANGLES ARE SHOWN TO THE NEAREST SECOND.

5. ALL ABUTMENTS, PIERS, AND WALLS ARE DRAWN LOOKING AT THE EXPOSED FACES.

6. ALL ITEMS NOT REFERENCED FOR MODIFICATION WILL BE "EXISTING TO REMAIN" UNLESS OTHERWISE DIRECTED BY THE ENGINEER.

7. ANY STRUCTURAL MEMBERS THAT ARE TO REMAIN IN USE AND DAMAGED DURING DEMOLITION SHALL BE REPAIRED AT THE CONTRACTOR'S EXPENSE, TO THE ENGINEER'S SATISFACTION.

8. ANY DAMAGE TO EXISTING STATE OR PRIVATE PROPERTY CAUSED BY THE CONTRACTOR'S OPERATIONS SHALL BE REPAIRED BY THE CONTRACTOR AT NO ADDITIONAL COST TO THE STATE.

9. THE CONTRACTOR SHALL PLACE ALL EQUIPMENT AND MATERIAL IN HIS FIELD YARD OR AT A SITE APPROVED BY THE ENGINEER. THE EQUIPMENT AND MATERIAL SHALL BE PLACED IN A STORAGE AREA SO AS NOT TO CAUSE A SAFETY HAZARD.

10. IT SHALL BE THE CONTRACTOR'S RESPONSIBILITY TO FIELD VERIFY ALL ELEVATIONS, DIMENSIONS, DETAILS, ANGLES, STRUCTURAL MEMBER SIZES, AND LAYOUTS AS SHOWN ON THESE PLANS. THIS PRIOR FIELD VERIFICATION IS ESPECIALLY PERTINENT FOR PRE–FABRICATED STRUCTURAL ITEMS AND WORK IN THE VICINITY OF UTILITIES.

11. TEMPORARY PROTECTIVE SHIELDING
DEBRIS SHIELDS SHALL BE PROVIDED AND INSTALLED TO PROTECT MOTORISTS, WATERWAY, PEDESTRIANS, ETC. FROM ANY DEMOLITION OR CONSTRUCTION DEBRIS.

12. EXISTING DETAILS, DIMENSIONS AND ELEVATIONS PROVIDED IN THIS PLAN SET HAVE BEEN OBTAINED FROM THE ORIGINAL DRAWINGS AND ARE NOT GUARANTEED.

13. FIELD CONDITIONS MAY EXIST WHICH DEVIATE FROM THE TYPICAL AND THEORETICAL DIMENSIONS SHOWN ON THE PLANS. THE CONTRACTOR SHALL TAKE ALL FIELD MEASUREMENTS NECESSARY TO ASSURE PROPER FIT OF THE FINISHED WORK AND SHALL ASSUME FULL RESPONSIBILITY FOR THEIR ACCURACY.

14. THE CONTRACTOR SHALL TAKE THE PROPER PRECAUTION TO ENSURE THE STABILITY OF ALL STRUCTURAL ELEMENTS DURING ALL PHASED CONSTRUCTION UNTIL THE TOTAL STRUCTURE IS IN PLACE.

15. FOR REQUIRED SEQUENCE OF CONSTRUCTION SEE CONTRACT DOCUMENTS AND TRAFFIC CONTROL PLANS "VOLUME 1" FOR MAINTENANCE AND PROTECTION OF TRAFFIC.

16. CONTRACTOR SHALL CALL DIG SAFE AT LEAST 72 HOURS PRIOR TO STARTING THE WORK TO VERIFY LOCATIONS OF EXISTING UTILITIES.

17. CONTRACTOR SHALL BE RESPONSIBLE FOR ALL COORDINATION WITH UTILITY AND RAILROAD COMPANIES.

18. COORDINATES USED ON THESE PLANS ARE BASED ON THE STATEWIDE COORDINATE SYSTEM, THE NORTH AMERICAN DATUM OF 1983 (NAD 83).

19. TOPOGRAPHIC CONDITIONS WERE OBTAINED FROM AERIAL PHOTOGRAMMETRY. ACCURACY OF VERTICAL TOPOGRAPHY IS WITHIN 10% OF ONE–HALF THE CONTOUR INTERVAL.

20. FOR BENCH MARKS AND TIES SEE HIGHWAY LOCATION PLANS.

21. ALL FOOTINGS SHALL BE APPROVED BY ENGINEER AS TO DIMENSIONS, ELEVATIONS, AND SUITABILITY OF FOUNDATION MATERIAL BEFORE THE PLACING OF CONCRETE.

22. ALL WORKING POINTS ARE SHOWN AT THE CENTERLINES OF PIERS AND CENTERLINE OF ABUTMENT BEARING, UNLESS OTHERWISE NOTED.

23. THE CONTRACTOR IS ADVISED THAT UPON 12 (TWELVE) HOURS NOTICE THE ROADWAY SHALL BE OPEN TO EVACUEES AND EMERGENCY PERSONNEL. ANY EXTRA WORK NECESSARY TO COMPLY WITH THIS REQUIREMENT WILL BE REIMBURSED UNDER FORCE ACCOUNT PROCEDURES.

24. CONTRACTOR SHALL SECURE ALL WORK AREAS AT ALL TIMES TO PREVENT UNAUTHORIZED ACCESS.

DESIGN DATA

DESIGN SPECIFICATIONS:

* THE AASHTO LRFD BRIDGE DESIGN SPECIFICATIONS, 8TH EDITION, 2017.

* THE RHODE ISLAND LRFD BRIDGE DESIGN MANUAL, 2007, INCLUDING ALL REVISIONS OR SUPPLEMENTS UP TO YEAR 2018.

* ALL OTHER APPLICABLE DESIGN SPECIFICATIONS ARE REFERENCED IN SECTION 1 OF THE RHODE ISLAND LRFD BRIDGE DESIGN MANUAL DATED 2014.

* THE STATE OF RHODE ISLAND STANDARD SPECIFICATIONS FOR ROAD AND BRIDGE CONSTRUCTION, AMENDED 2010 INCLUDING ALL REVISIONS OR SUPPLEMENTS UP TO YEAR 2018.

* IN CASE OF CONFLICT, THE RHODE ISLAND LRFD BRIDGE DESIGN MANUAL SHALL GOVERN.

LOAD MODIFIERS:

THE LOAD MODIFIERS FOR THIS PROJECT ARE AS FOLLOWS:

* THE LOAD MODIFIER FOR DUCTILITY SHALL BE TAKEN AS 1.0 FOR ALL LIMIT STATES.
* THE LOAD MODIFIER FOR REDUNDANCY SHALL BE TAKEN AS 1.0.
* THE LOAD MODIFIER FOR OPERATIONAL IMPORTANCE SHALL BE TAKEN AS 1.05.

LOAD FACTORS:

ALL LOAD FACTORS SHALL BE IN ACCORDANCE WITH THE AASHTO LRFD BRIDGE DESIGN SPECIFICATIONS, EXCEPT AS MODIFIED IN THE RHODE ISLAND LRFD BRIDGE DESIGN MANUAL

* THE LOAD FACTOR FOR LIVE LOAD FOR THE EXTREME EVENT I SHALL BE TAKEN AS ZERO.
* THE LOAD FACTOR FOR DEAD LOAD FOR THE EXTREME EVENT I AND EXTREME EVENT II SHALL BE TAKEN AS 1.0.
* THE LOAD FACTOR FOR SETTLEMENT FOR ALL LIMIT STATES SHALL BE TAKEN AS 1.0

LIVE LOADS:

* THE DESIGN VEHICULAR LIVE LOAD SHALL BE THE HS–20 DESIGNATION ADJUSTED FOR THE DYNAMIC LOAD ALLOWANCE AND MULTIPLE PRESENCE FACTOR.

* RHODE ISLAND LEGAL LOADS.

WIND LOADING DESIGN DATA:

THE WIND LOADING DESIGN SHALL BE IN ACCORDANCE WITH THE AASHTO LRFD BRIDGE DESIGN SPECIFICATIONS, THE RHODE ISLAND LRFD BRIDGE DESIGN MANUAL, AND AS MODIFIED HEREIN.

* EXCEPT DURING CONSTRUCTION, THE DESIGN WIND PRESSURE IS BASED ON A DESIGN WIND SPEED OF 130 MPH.

* THE DESIGN WIND PRESSURES DURING CONSTRUCTION SHALL BE AS SPECIFIED UNDER THE NOTES TITLED "GENERAL NOTES REGARDING TEMPORARY CONSTRUCTION CONDITIONS".

THERMAL DESIGN FORCE DATA:

UNIFORM TEMPERATURE EFFECTS HAVE BEEN TAKEN INTO CONSIDERATION IN ACCORDANCE WITH THE PROCEDURE B OF THE AASHTO LRFD BRIDGE DESIGN SPECIFICATIONS. THE MINIMUM DESIGN TEMPERATURE SHALL BE –10 DEGREES F, AND THE MAXIMUM TEMPERATURE SHALL BE 105 DEGREES F.

SEISMIC DESIGN DATA:

* UNDER 2017 AASHTO LRFD INTERIM, THE SEISMIC CLASSIFICATION IS SEISMIC ZONE 1.

MATERIALS

STRUCTURAL STEEL:

* AASHTO DESIGNATION M 270 (ASTM DESIGNATION A 709) GRADE 50.

REINFORCING STEEL:

* AASHTO DESIGNATION M 31 (ASTM DESIGNATION A 615) GRADE 60.

CONCRETE:

* CLASS HP (3/4") f'c = 5,000 PSI ABUTMENT BACKWALLS, SEPARATELY POURED BRIDGE SEAT PEDESTALS (AS APPLICABLE), STEMS.

* CLASS HP (3/8") f'c = 5,000 PSI CONCRETE PATCH REPAIR.

CONCRETE NOTES

1. CLASSES OF CONCRETE SHALL BE A, XX, HP, HS, MC AND Z, AS DESCRIBED IN THE LATEST REVISION OF TABLES (1) AND (2) UNDER SECTION 601 "PORTLAND CEMENT CONCRETE" OF THE RHODE ISLAND STANDARD SPECIFICATIONS FOR ROAD AND BRIDGE CONSTRUCTION AND THE SPECIAL PROVISIONS OF THE SPECIFICATIONS.

2. THE CONTRACTOR MAY, AT THE APPROVAL OF THE ENGINEER, PROPOSE THE USE OF SELF–CONSOLIDATING CONCRETE FOR ANY CLASS OF CONCRETE ON THIS PROJECT. SECTION 606 "SELF CONSOLIDATING CONCRETE (SCC)", CONTAINS THE REQUIREMENTS FOR MODIFYING ALL CLASSES OF CONCRETE MIX DESIGN FOR SELF–CONSOLIDATING APPLICATIONS.

3. ALL PORTLAND CEMENT CONCRETE SHALL BE AIR–ENTRAINED PORTLAND CEMENT CONCRETE.

4. UNLESS OTHERWISE NOTED, ALL REINFORCING STEEL SHALL BE GALVANIZED IN ACCORDANCE WITH SECTION 810. ALL WIRE TIES AND MISCELLANEOUS HARDWARE USED FOR PLACEMENT OF GALVANIZED REINFORCING SHALL BE NON–METALIC. REINFORCING STEEL SHALL BE GALVANIZED PER ASTM A767 CLASS I (GALVANIZED STEEL).

5. ALL LAP SPLICES NOT SHOWN ON THE PLANS SHALL BE LAPPED IN ACCORDANCE WITH AASHTO LRFD BRIDGE DESIGN SPECIFICATIONS FOR CLASS C LAP SPLICES.

6. UNLESS OTHERWISE SPECIFIED ALL REINFORCING BARS SHALL HAVE THE FOLLOWING MINIMUM COVER:

	MINIMUM COVER
CONCRETE CAST AGAINST AND PERMANENTLY EXPOSED TO EARTH (FOOTINGS, ABUTMENT AND WALL FACES, BACKWALLS)	3"
ALL OTHER BARS	2"

COVER TO TIES AND STIRRUPS MAY BE 0.5 INCH LESS THAN ABOVE VALUES SPECIFIED FOR MAIN REINFORCING, BUT IN NO CASE LESS THAN 2 INCHES.

7. UNLESS OTHERWISE NOTED ON THE PLANS, ALL ANCHOR BOLTS SHALL BE ASTM DESIGNATION F1554, GR 55 AND SHALL BE GALVANIZED IN ACCORDANCE WITH AASHTO DESIGNATION M 232. SWEDGED RODS SHALL BE AASHTO DESIGNATION M 270 GRADE 36 AND SHALL BE GALVANIZED IN ACCORDANCE WITH AASHTO DESIGNATION M 232.

8. ALL ANCHOR BOLTS SHALL BE SET BY TEMPLATES PRIOR TO PLACEMENT OF CONCRETE UNLESS OTHERWISE INDICATED ON THE PLANS OR AS AUTHORIZED BY THE ENGINEER.

vhb
1 Cedar Street
Suite 400
Providence, RI 02903
401.272.8100

REVISIONS		
NO.	DATE	BY

RHODE ISLAND
DEPARTMENT OF TRANSPORTATION

PRESERVATION OF
BRIDGE NOS. 575, 578, 704, 706, 707, AND 708
PROVIDENCE, RHODE ISLAND

JOB SPECIFIC
GENERAL NOTES 1

CHECKED BY _____ DATE _____ SCALE _____

\\vhb\gbl\proj\Providence\72328.04\cad\stplanset\Preservation - For Viaduct RFP\0018C_V3_003_JSBRGNOT001.dwg Plotted on Tuesday, January 7, 2020 10:51:06 AM

FED. ROAD DIV. NO.	STATE	FEDERAL AID PROJECT NO.	FISCAL YEAR	SHEET NO.	TOTAL SHEETS
	RI			4	64

CONCRETE NOTES (CONTINUED)

9. HORIZONTAL CONSTRUCTION JOINTS OTHER THAN THOSE SHOWN ON PLANS WILL NOT BE PERMITTED WITHOUT A WRITTEN REQUEST BY THE CONTRACTOR AND PRIOR AUTHORIZATION BY THE ENGINEER.

10. UNLESS OTHERWISE NOTED ON THE PLANS, ALL NEW EXPOSED CONCRETE SURFACES VISIBLE IN ELEVATION (AND THE UNDERSIDE OF NEW CONCRETE DECK SLABS OUTSIDE OF THE FASCIA BEAMS), SHALL RECEIVE A CONCRETE SURFACE RUBBED FINISH IN ACCORDANCE WITH THE R.I. STANDARD SPECIFICATIONS.

11. THE ENTIRE TOPSIDE SURFACES OF REPAIRED ABUTMENT AND PIER CAP BEAM SEATS, AS WELL AS VERTICAL FACES OF BACKWALLS, SHALL BE PROVIDED WITH A FILM–FORMING SEALER (M12.03.1) CONCRETE SURFACE TREATMENT–PROTECTIVE COATING IN ACCORDANCE WITH SECTION 820 OF THE RI STANDARD SPECIFICATIONS.

12. ALL EXPOSED EDGES AND REENTRANT CORNERS NOT OTHERWISE DETAILED ON THE PLANS SHALL HAVE A MINIMUM $\frac{3}{4}$" CHAMFER.

13. THE CONTRACTOR SHALL BE RESPONSIBLE FOR PREVENTING CONCRETE STAINS OR DISCOLORATIONS DURING CONSTRUCTION UNTIL SUCH TIME AS THE SURFACES ARE APPROVED AND ACCEPTED BY THE ENGINEER. ANY CONCRETE STAINS OR DISCOLORATIONS OCCURRING PRIOR TO ACCEPTANCE OF THE SURFACES SHALL BE REMOVED BY THE CONTRACTOR AT NO ADDITIONAL COST TO THE STATE.

14. ALL JOINT SEALANT SHALL BE POLYURETHANE, POLYURETHANE ELASTOMERIC, OR SILICONE SEALANT AS DESIGNATED ON THE PLANS. THE COLOR OF THE JOINT SEALANT, WHERE EXPOSED, SHALL BE NEUTRAL (LIGHT GRAY OR TAN). COLOR OF THE SEALANT WHERE NOT EXPOSED, WILL BE AT THE DISCRETION OF THE CONTRACTOR. SILICONE SEALANTS SHALL BE PAYED FOR UNDER ITEM CODE 808.1675 POLYURETHANE ELASTOMERIC JOINT SEALANT.

15. UNLESS OTHERWISE NOTED ON THE PLANS, JOINT FILLER IS TO BE PREFORMED NON–EXPANSIVE, NON–EXTRUDING TYPE IN ACCORDANCE WITH SECTION M.02.11.1 OF THE RI STANDARD SPECIFICATIONS.

16. EMBEDMENT LENGTHS FOR DRILLED AND GROUTED DOWELS SHALL BE IN ACCORDANCE WITH SECTION 819 OF THE RI STANDARD SPECIFICATION, UNLESS OTHERWISE INDICATED ON THE PLANS.

17. IN ACCORDANCE WITH THE RI STANDARD SPECIFICATIONS, ALL METAL TIES OR ANCHORAGES WHICH ARE REQUIRED FOR CONCRETE FORMWORK SHALL BE SO CONSTRUCTED THAT THEY CAN BE REMOVED TO AT LEAST TWO INCHES BELOW THE EXPOSED SURFACE OF THE CONCRETE WITHOUT CAUSING DAMAGE TO THE CONCRETE SURFACE. SNAP TIES MAY BE USED ONLY IF APPROVED BY THE ENGINEER. IF THE CONTRACTOR PROPOSES TO USE THEM, A CATALOG CUT AND OTHER NECESSARY INFORMATION MUST BE SUBMITTED TO THE ENGINEER TO DEMONSTRATE THAT THE TIES WILL SNAP–OFF FAR ENOUGH INTO THE CONCRETE TO ALLOW FOR PROPER PATCHING. SNAP TIES MUST PROVIDE ADEQUATE STRENGTH TO SUPPORT THE FORMS. ALL CAVITIES SHALL BE FILLED WITH AN APPROVED CEMENT MORTAR MEETING THE REQUIREMENTS OF ASTM C 928.

18. HAND–HELD VIBRATORS SHALL BE EQUIPPED WITH RUBBER TIPPED HEADS WHEN USED TO CONSOLIDATE CONCRETE AROUND REINFORCEMENT AND EMBEDMENT.

19. UNLESS OTHERWISE DIMENSIONED ON THE PLANS, ALL REINFORCEMENT BENDS SHOWN ARE STANDARD HOOKS.

20. ALL EXPOSED FACES OF PIERS AND ABUTMENTS FROM THE BRIDGE SEATS TO THE GROUND SURFACE AND EXPOSED WALL SURFACES SHALL BE POWER WASHED AND RECEIVE AN ANTI–GRAFFITI COATING.

21. ANY METALLIC ELEMENTS THAT ARE TO BE LEFT IN PLACE AND NOT STATED HERE SHALL BE GALVANIZED, THIS INCLUDES BUT IT NOT LIMITED TO REINFORCING STEEL, WIRE MESH, SNAP TIES, METAL TIES, ANCHORAGES FOR FORM WORK, SUPPORTS FOR MASS CONCRETE COOLING PIPES.

REINFORCEMENT NOTE

THE CONTRACTOR'S BAR FABRICATOR SHALL VERIFY THE CORRECTNESS IN PREPARING HIS ORDER LISTS AND BENDING DIAGRAMS. ANY EXPENSE INCIDENT TO REVISION OF MATERIAL AS SHOWN ON THE ORDER LISTS AND BENDING DIAGRAMS IN ORDER TO MAKE IT COMPLY WITH THE DESIGN DRAWINGS SHALL BE BORNE BY THE CONTRACTOR. SHOP DRAWINGS FOR ALL REINFORCEMENT DETAILS AND SCHEDULE SHALL BE SUBMITTED TO THE ENGINEER IN SUFFICIENT TIME TO PERMIT CAREFUL CHECKING.

STRUCTURAL STEEL NOTES

1. FRAMING DIMENSIONS ARE GIVEN ALONG CENTERLINES OF GIRDERS AND ALONG CENTERLINES OF BEARINGS ON ABUTMENTS AND PIERS. THE FABRICATOR IS RESPONSIBLE FOR INCORPORATING THE CAMBER, CROSS SLOPE, AND OTHER EFFECTS THAT MAY IMPACT THE OVERALL GIRDER LENGTHS, DIMENSIONS AND/OR THE DETAILING.

2. THE SHOPS FABRICATING THE STRUCTURAL STEEL (EXCEPT FOR EXPANSION JOINTS, RAILINGS AND BEARINGS), MUST BE CERTIFIED FOR "MAJOR STEEL BRIDGES (CBR)" IN ACCORDANCE WITH THE AISC QUALITY CERTIFICATION PROGRAM OR EQUIVALENT. SHOPS FABRICATING THE EXPANSION JOINTS, RAILINGS AND BEARINGS SHALL, AT A MINIMUM, BE CERTIFIED FOR "SIMPLE STEEL BRIDGE STRUCTURES (SBR)".

   THE SHOPS SHALL ALSO BE CERTIFIED UNDER THE AISC "SOPHISTICATED PAINT ENDORSEMENT (SPE)" QUALITY PROGRAM OR THE SSPC–QP3 PAINT CERTIFICATION PROGRAM.

   THE FABRICATOR MUST SUBMIT PROOF OF CURRENT CERTIFICATION AS SPECIFIED.

3. THE STEEL ERECTOR/CONTRACTOR FOR THIS PROJECT SHALL BE CERTIFIED FOR "ADVANCED CERTIFIED STEEL ERECTOR (ASCE)" IN ACCORDANCE WITH THE AISC QUALITY CERTIFICATION PROGRAM. THE ERECTOR/CONTRACTOR OF THE STRUCTURAL STEEL SHALL BE REQUIRED TO SUBMIT PROOF OF CURRENT CERTIFICATION AS SPECIFIED, INCLUDING THE QUALITY CONTROL PLAN AND SAFETY PLAN THAT IS REQUIRED TO OBTAIN THE CERTIFICATION.

4. FRACTURE CRITICAL MEMBERS (FCM) IF ANY, HAVE BEEN DESIGNATED ON THE STEEL FRAMING AND/OR THE STEEL DETAIL SHEETS.

5. SHOP DRAWINGS FOR ALL FABRICATED STEEL INCLUDING BEARINGS, EXPANSION JOINTS, RAILINGS AND FALSEWORK SHALL BE SUBMITTED TO THE ENGINEER IN SUFFICIENT TIME TO PERMIT CAREFUL CHECKING PRIOR TO FABRICATION.

6. INSPECTION OF WELDS INCLUDING RADIOGRAPHIC TESTING (RT) AND MAGNETIC PARTICLE TESTING (MT) SHALL BE IN ACCORDANCE WITH THE RI STANDARD SPECIFICATIONS AND THE AASHTO/AWS BRIDGE WELDING CODE, EXCEPT THAT THE REMAINING PERCENTAGE OF ALL GROOVE WELDS NOT RT TESTED SHALL BE MT.

7. STRUCTURAL STEEL SHAPES AND PLATES SHALL CONFORM TO THE LATEST PROVISIONS OF AASHTO DESIGNATION M 270 GRADE 36, GRADE 50, AND HPS 70W AS DESIGNATED ON THE PLANS. UNLESS OTHERWISE NOTED ALL STRUCTURAL STEEL SHALL BE GRADE 50.

8. ALL AASHTO M 270 STRUCTURAL STEEL USED IN GIRDERS (INCLUDING CONNECTION PLATES AND STIFFENERS), SHALL MEET THE ZONE 2 CHARPY V–NOTCH FRACTURE TOUGHNESS TEST REQUIREMENTS AS SPECIFIED IN TABLE 6.6.2–2 OF THE AASHTO LRFD BRIDGE DESIGN SPECIFICATIONS FOR "NONFRACTURE–CRITICAL" COMPONENTS. THE ZONE 2 FRACTURE TOUGHNESS REQUIREMENTS ARE AS FOLLOWS:

   NONFRACTURE–CRITICAL

GRADE 36	15 FT–LBS @ 40°F (UP TO 4 INCHES THICK)
GRADE 50	15 FT–LBS @ 40°F (UP TO AND INCLUDING 2 INCHES THICK)
GRADE 50	20 FT–LBS @ 40°F (FROM 2 INCHES THICK UP TO AND INCLUDING 4 INCHES THICK)

   FRACTURE–CRITICAL

GRADE 36	25 FT–LBS @ 40°F (UP TO 4 INCHES THICK)
GRADE 50	25 FT–LBS @ 40°F (UP TO AND INCLUDING 2 INCHES THICK)
GRADE 50	30 FT–LBS @ 40°F (FROM 2 INCHES THICK UP TO AND INCLUDING 4 INCHES THICK)

   SAMPLING AND TESTING PROCEDURES SHALL BE IN ACCORDANCE WITH AASHTO T243. THE FREQUENCY OF TESTING SHALL BE IN ACCORDANCE WITH THE AASHTO LRFD BRIDGE DESIGN SPECIFICATIONS.

   THE CHARPY V–NOTCH FRACTURE TOUGHNESS TEST REQUIREMENT IS NOT MANDATORY FOR THE FOLLOWING STEEL COMPONENTS:

   - BEARINGS, MASONRY PLATES AND SOLE PLATES
   - EXPANSION JOINTS SYSTEMS

9. WELDING SHALL BE IN ACCORDANCE WITH THE LATEST STRUCTURAL WELDING CODE AASHTO/AWS D1.5 INCLUDING ALL INTERIMS TO DATE) AND APPLICABLE SUPPLEMENTAL AWS PUBLICATIONS.

10. ALL HIGH STRENGTH BOLTS SHALL CONFORM TO ASTM F3125 (GRADE 325), AND SHALL BE MECHANICALLY GALVANIZED IN ACCORDANCE WITH AASHTO M298 (ASTM B695) CLASS 50. HIGH STRENGTH BOLTS SHALL BE INSTALLED IN ACCORDANCE WITH SECTION 824 OF THE RI STANDARD SPECIFICATIONS. ALL NUTS AND WASHERS SHALL BE MECHANICALLY GALVANIZED IN ACCORDANCE WITH M05.04.4 OF THE RI STANDARD SPECIFICATIONS. UNLESS NOTED OTHERWISE, ALL STRUCTURAL STEEL CONNECTIONS ARE "SLIP CRITICAL" WITH CLASS B SURFACE CONDITIONS.

11. WASHERS MEETING AASHTO DESIGNATION M 293 ARE TO BE USED OVER ALL HOLES THAT ARE MORE THAN $\frac{1}{16}$" IN DIAMETER GREATER THAN THE BOLT DIAMETER AND UNDER ALL PARTS TURNED DURING ASSEMBLY.

12. WELDING ELECTRODES SHALL HAVE THE SAME CORROSION RESISTANCE AS THE BASE METAL AND SHALL BE FREE OF MOISTURE AT THE TIME OF USE.

13. UNLESS OTHERWISE SPECIFIED, STRUCTURAL STEEL SHALL BE PREPARED AND PAINTED IN ACCORDANCE WITH THE RI STANDARD SPECIFICATIONS.

STRUCTURAL STEEL NOTES (CONTINUED)

14. PRIOR TO FABRICATION, ALL MATERIALS SHALL BE BLAST–CLEANED TO AT LEAST SSPC–SP6 TO REMOVE ALL OIL, DIRT, GREASE, MILL SCALE AND OTHER DELETERIOUS MATERIALS FROM THE SURFACES OF THE STEEL TO BE FABRICATED.

15. PRIOR TO SHOP COATING AS SPECIFIED IN SECTION 825 OF THE RI STANDARD SPECIFICATIONS, ALL CORNERS AND EDGES OF STEEL WHICH HAVE BEEN FLAME CUT OR OTHERWISE HARDENED SHALL BE SOFTENED BY GRINDING OR BLAST–CLEANING TO PROVIDE A SURFACE SUITABLE FOR APPLICATION OF THE SPECIFIED PAINT SYSTEM.

16. WELDING OF ATTACHMENTS TO GIRDER FLANGES OR WEBS FOR CONSTRUCTION PURPOSES IS NOT PERMITTED EXCEPT WHEN APPROVED BY THE ENGINEER.

17. BOLTED CONNECTIONS SHALL BE DESIGNED AS SLIP–CRITICAL CONNECTIONS. THE FAYING SURFACES SHALL SATISFY CLASS B SURFACE CONDITION AS DEFINED IN THE AASHTO LRFD BRIDGE DESIGN SPECIFICATIONS.

18. ALL SHOP CONNECTIONS AND SPLICES SHALL BE WELDED. WELDING PROCEDURES AND TECHNIQUES TO BE USED IN FABRICATION SHALL BE AS SHOWN ON THE SHOP DRAWINGS AND SHALL INCORPORATE THE FOLLOWING:

    - ALL SPLICES OTHER THAN THOSE SHOWN ON THE PLANS MUST BE APPROVED BY THE ENGINEER. ALTERNATE OR ADDITIONAL SPLICES ARE TO BE LOCATED AND DESIGNED BY THE FABRICATOR AND SHOWN ON THE SHOP DRAWINGS. THESE SPLICES ARE TO FULLY DEVELOP THE STRENGTH OF THE MEMBERS BEING SPLICED.

    - SPLICING BY FIELD WELDING WILL NOT BE PERMITTED.

19. NO SHOP FILLET WELD SHALL BE LESS THAN $\frac{1}{4}$".

20. WHEN STEEL DIE STAMPS ARE USED TO IDENTIFY PIECES AND MEMBERS, FABRICATORS SHALL UTILIZE LOW STRESS STAMPS.

21. FOR SIZE AND LOCATION OF ANCHOR BOLTS, SEE PIER, ABUTMENT, AND BEARING DRAWINGS.

22. IT SHALL BE THE CONTRACTOR'S RESPONSIBILITY TO ENSURE THAT THE EXPANSION JOINT SYSTEM PROVIDED WILL BE COMPATIBLE WITH BOTH THE END OF DECK HAUNCHES AND/OR THE STRUCTURAL STEEL FRAMING CONFIGURATION. THAT IS, THE EXPANSION JOINT SYSTEM AND ALL ITS INHERENT COMPONENTS AND ATTACHMENT DEVICES SHALL BE SIZED OR ARRANGED TO BE COMPATIBLE WITH THE GIRDER AND DIAPHRAGM FLANGES, CONNECTION PLATES, BOLTS, SHEAR STUDS AND REINFORCING STEEL THAT SHARE THE END HAUNCH REGION.

vhb
1 Cedar Street
Suite 400
Providence, RI 02903
401.272.8100

REVISIONS		
NO.	DATE	BY

RHODE ISLAND
DEPARTMENT OF TRANSPORTATION

PRESERVATION OF
BRIDGE NOS. 575, 578, 704, 706, 707, AND 708
PROVIDENCE, RHODE ISLAND

JOB SPECIFIC
GENERAL NOTES 2

CHECKED BY _____ DATE _____ SCALE _____

\\vhb\gbl\proj\Providence\72328.04\cadset\planset\Preservation - For Viaduct RFP0018C_V3_004_JSBRGNOT002.dwg Plotted on Tuesday, January 7, 2020 10:51:20 AM

GENERAL NOTES REGARDING TEMPORARY CONSTRUCTION CONDITIONS

1. DESIGN WIND PRESSURES FOR CONSTRUCTION:

   MINIMUM WIND PRESSURES TO BE USED BY THE CONTRACTOR FOR DESIGN DURING THE CONSTRUCTION CONTRACT (WITH THE EXCEPTION OF SIGNS) SHALL BE FROM THE FOLLOWING TABLE:

HEIGHT ABOVE GROUND (FEET)	WIND PRESSURE (PSF)
UP TO 17'	23
OVER 17' AND UP TO 33'	27
OVER 33' AND UP TO 50'	30
OVER 50' AND UP TO 75'	34
OVER 75' AND UP TO 100'	37

   TABLE NOTES

   A. APPLICATION OF THE TABULAR PRESSURE:
   - BRIDGE COMPONENTS DURING CONSTRUCTION, PRIOR TO THE INSTALLATION OF THE PERMANENT BRACING SYSTEMS, NOT INCLUDING CRANE LIFTING.
   - FALSE WORK, SHORING, AND SCAFFOLDING AS DEFINED IN FHWA "GUIDE DESIGN SPECIFICATION FOR BRIDGE TEMPORARY WORKS", EXCLUDING 3–DIMENSIONAL LATTICED OR TRUSSED FRAMES OR TOWERS;
   - TEMPORARY SHIELDING.

   WIND PRESSURES FOR ALL OTHER STRUCTURES SHALL BE CALCULATED BASED ON ASCE "DESIGN LOADS ON STRUCTURES DURING CONSTRUCTION", SEI/ASCE 37–02 (ALL REFERENCES TO THE ASCE 7 IN THE SEI/ASCE 37–02 PUBLICATION, SHALL BE THE LATEST REVISION OF ASCE 7). THE EXPOSURE CATEGORY SHALL BE B.

   B. WHERE APPLICABLE HIGHER AMTRAK WIND REQUIREMENTS SHALL SUPERSEDE THESE REQUIREMENTS.

   C. FOR STRUCTURES SITUATED ABOVE LIVE INTERSTATE TRAFFIC, THE TABULAR VALUES SHALL BE INCREASED BY 5 PSF.

2. ERECTION OF BRIDGE COMPONENTS:

   FOR THE ERECTION OF STRUCTURES, THE FOLLOWING SHALL APPLY:

   - THE CONTRACTOR SHALL SUBMIT AN ERECTION PLAN THAT PROVIDES COMPLETE DETAILS OF THE PROCESS INCLUDING, BUT NOT LIMITED TO, TEMPORARY SUPPORTS, SCHEDULING AND OPERATION SEQUENCING, CRANE PLACEMENT, AND ASSUMED LOADS AND CALCULATED STRESSES DURING VARYING STAGES OF LIFTING. THIS APPLIES TO STRUCTURES OF ANY KIND. THE CAPACITY OF THE CRANE AND ALL LIFTING AND CONNECTING DEVICES SHALL BE ADEQUATE FOR 125 PERCENT OF THE TOTAL PICK LOAD INCLUDING SPREADERS AND OTHER MATERIALS. THIS FACTOR OF SAFETY SHALL BE IN ADDITION TO ALL MANUFACTURERS' PUBLISHED FACTORS OF SAFETY.

   - A REGISTERED PROFESSIONAL ENGINEER, LICENSED IN THE STATE OF RHODE ISLAND, WILL BE REQUIRED TO STAMP THE CONTRACTOR'S ERECTION PLAN.

   - THE COST OF PREPARING AND STAMPING THE ERECTION PLAN, COMPUTATIONS, AND REPORTS, RESPONDING TO RIDOT'S COMMENTS AND MAKING THE NECESSARY REVISIONS, AND ATTENDANCE AT MEETINGS SHALL BE CONSIDERED INCIDENTAL TO THE COST OF THE SUPERSTRUCTURE PAY ITEM, BE IT CONCRETE, STEEL OR TIMBER.

3. TEMPORARY BARRIERS ON BRIDGES:

   TEMPORARY BARRIERS TO BE UTILIZED ON THE BRIDGES AND THEIR APPROACHES DURING CONSTRUCTION SHALL MEET TEXT LEVEL TL–2.

CONSTRUCTION NOTES

1. THE CONTRACTOR IS RESPONSIBLE FOR THE IMPLEMENTATION, CONSTRUCTION, OPERATION AND SAFETY OF ALL EQUIPMENT AND PROCEDURES.
2. THE CONTRACTOR SHALL SUBMIT WORKING DOCUMENTS SHOWING PROPOSED METHODS OF LIFTING, SEQUENCING OF LIFTING, LOCATION OF CRANES, CRANE CAPACITIES, LOCATION OF THE LIFTING POINTS ON THE BRIDGE COMPONENTS, WEIGHTS OF THE COMPONENTS, LIFTING DEVICES AND LOAD DISTRIBUTION DEVICE DETAIL. THE METHOD AND ALL SUBMISSIONS SHALL BE PREPARED AND STAMPED BY A RHODE ISLAND REGISTERED PROFESSIONAL ENGINEER.
3. COORDINATE ALL CONSTRUCTION ACTIVITIES WITHIN THE WORKING AREA WITH RIDOT REGARDING UTILITIES, PROTECTION OF TRAFFIC AND SCHEDULE.
4. THE CONTRACTOR SHALL EXERCISE EXTREME CARE TO AVOID DAMAGE TO EXISTING STRUCTURES. ALL STRUCTURES DAMAGED AS A RESULT OF THE CONTRACTOR'S OPERATION SHALL BE REPAIRED TO THE SATISFACTION OF THE ENGINEER AT NO ADDITIONAL COST TO THE STATE.
5. ALL SHOP DRAWINGS SHALL BE SUBMITTED TO THE ENGINEER IN SUFFICIENT TIME TO PERMIT CAREFUL CHECKING AS NOT TO DELAY THE PROJECT.
6. ALL RIGGING IS TO BE IN EXCELLENT WORKING CONDITION.
7. UNLOADED CRANES ARE ALLOWED TO TRAVEL IN THE WORKING AREA.
8. CRANE DELIVERY LOCATIONS MAY VARY AS LONG AS MAXIMUM CRANE RADIUS IS NOT EXCEEDED.
9. THE CONTRACTOR SHALL NOT BE PERMITTED TO ANCHOR HEAVY EQUIPMENT TO THE EXISTING BRIDGE DURING CONSTRUCTION.
10. TEMPORARY EXCAVATION SUPPORT SYSTEM SHALL BE DESIGNED, FURNISHED AND INSTALLED BY THE CONTRACTOR AND SUBMITTED TO THE ENGINEER FOR REVIEW AND APPROVAL PRIOR TO THE START OF ANY EXCAVATION.
11. CONTRACTOR SHALL SECURE ALL WORK AREAS AT ALL TIMES TO PREVENT UNAUTHORIZED ACCESS.
12. STOCKPILED SOIL TO BE 30 FEET FROM PIERS, WALLS AND ABUTMENTS.
13. THE CONTRACTOR SHALL NOT BE ALLOWED TO USE RIVER WATER DURING CONSTRUCTION. IN ADDITION, DISCHARGE FROM THE CONSTRUCTION ACTIVITIES SHALL NOT BE PERMITTED.
14. THE CONTRACTOR SHALL NOT BE ALLOWED TO USE RIVER WATER DURING CONSTRUCTION. IN ADDITION, DISCHARGE FROM THE CONSTRUCTION ACTIVITIES SHALL NOT BE PERMITTED.
15. NO IN–WATER WORK ALLOWED FROM MARCH 15–JUNE 15 TO PROTECT ANADROMOUS FISH IN THE WOONASQUATUCKET RIVER.

UTILITY NOTES

1. EXISTING UTILITIES SHOWN ON THE PLANS ARE APPROXIMATE AND WERE LOCATED USING THE BEST AVAILABLE INFORMATION. NO BUILDING SERVICE CONNECTIONS (ELECTRIC, TELEPHONE, GAS, WATER, SANITARY AND OTHERS) ARE SHOWN. THE CONTRACTOR IS TO ASSUME THAT SERVICES TO ALL BUILDINGS ARE PRESENT.
2. BOTH FEDERAL AND STATE LAW (RI. GENERAL LAW 39–1.2) REQUIRE NOTIFICATION OF APPROPRIATE UTILITY COMPANIES BEFORE DIGGING. TRENCHING, BLASTING, DEMOLISHING, BORING, BACKFILLING, GRADING, LANDSCAPING, OR OTHER EARTH MOVING OPERATIONS. IT IS THE CONTRACTOR'S RESPONSIBILITY TO NOTIFY ALL UTILITY COMPANIES (INCLUDING THROUGH THE "DIG SAFE" PROGRAM) TO ENSURE THAT ALL UTILITIES, BOTH UNDERGROUND AND OVERHEAD, HAVE BEEN MARKED BEFORE COMMENCEMENT OF SUCH WORK. THE CONTRACTOR SHOULD UNDERSTAND THAT NOT ALL UTILITIES SUBSCRIBE TO THE "DIG SAFE" PROGRAM. ANY DAMAGE TO EXISTING UTILITIES MARKED IN THE FIELD, OR AS A RESULT OF FAILING TO CONTACT THE APPROPRIATE UTILITY COMPANIES, SHALL BE REPAIRED OR REPLACED (AS DEEMED APPROPRIATE BY THE STATE AND/OR THE IMPACTED UTILITY COMPANY) AT NO ADDITIONAL COST TO THE STATE.
3. CONSTRUCTION EQUIPMENT OR PERSONNEL SHALL FOLLOW OSHA REGULATION IN REGARDS TO MINIMUM CLEARANCE TO ENERGIZED OVERHEAD LINES.
4. OVERHEAD OR UNDERGROUND UTILITY LINES MAY BE IN CONFLICT WITH REQUIRED TEMPORARY OR PERMANENT CONSTRUCTION, OR THE EQUIPMENT NECESSARY TO PERFORM THIS REQUIRED CONSTRUCTION. DEPENDING UPON THE CONTRACTOR'S METHOD OF CONSTRUCTION, THESE UTILITIES MAY NEED TO BE RELOCATED FOR PORTIONS OF THE CONSTRUCTION PERIOD AND THEN MOVED BACK TO PERMANENT LOCATIONS WHICH MAY BE OTHER THAN CURRENT LOCATIONS. THE ACTUAL RELOCATIONS (TEMPORARY OR PERMANENT) ARE THE RESPONSIBILITY OF THE INDIVIDUAL UTILITY OWNER. HOWEVER, THE CONTRACTOR WILL BE REQUIRED TO COORDINATE THE EXACT LOCATION AND TIMING OF ALL UTILITY RELOCATIONS WITH THE INDIVIDUAL UTILITY OWNER, AND TO PHASE HIS CONSTRUCTION OPERATIONS AS REQUIRED TO ACCOMMODATE ALL (TEMPORARY AND PERMANENT) UTILITY RELOCATIONS. IN ADDITION TO FIELD MEETINGS AND CORRESPONDENCE, THIS COORDINATION MAY INCLUDE STAKING OF LOCATIONS, EXCAVATION AND TEMPORARY GRADING, PROVIDING ACCESS TO EXISTING AND FUTURE UTILITY POLE AND CONDUIT LOCATIONS, OR OTHER PHYSICAL WORK AS REQUIRED TO ALLOW FOR UTILITY RELOCATION WORK. THE CONTRACTOR SHALL ENGAGE IN THE NECESSARY COORDINATION OF UTILITY RELOCATIONS AND ASSOCIATED WORK AT NO ADDITIONAL COST TO THE PROJECT OR THE STATE, AND SHALL HAVE NO RIGHT TO ADDITIONAL COMPENSATION FOR DELAYS OR STAGING AND PHASING OF HIS WORK AS A RESULT OF UTILITY RELOCATION WORK.

vhb
1 Cedar Street
Suite 400
Providence, RI 02903
401.272.8100

REVISIONS		
NO.	DATE	BY

RHODE ISLAND
DEPARTMENT OF TRANSPORTATION

PRESERVATION OF
BRIDGE NOS. 575, 578, 704, 706, 707, AND 708
PROVIDENCE, RHODE ISLAND

JOB SPECIFIC
GENERAL NOTES 3

CHECKED BY _____ DATE _____ SCALE _____

\\vhb\gbl\proj\Providence\72328.04\cad\st\planset\Preservation - For Viaduct RFP\0018C_V3_005_JSBRGNOT003.dwg Plotted on Tuesday, January 7, 2020 10:51:35 AM

FED. ROAD DIV. NO.	STATE	FEDERAL AID PROJECT NO.	FISCAL YEAR	SHEET NO.	TOTAL SHEETS
	RI			6	64

NOTES:

1. ITEM CODE 817.2100 REPAIR TO STRUCTURAL CONCRETE MASONRY (PNEUMATIC REPAIR) SHALL BE USED FOR ALL REPAIR GREATER THAN 16 SQUARE FEET IN SURFACE AREA, AND TO A MAXIMUM DEPTH OF ONE INCH CLEAR DISTANCE BEHIND THE REBAR MAT.
2. ITEM CODE 817.2110 REPAIR TO STRUCTURAL CONCRETE MASONRY (PATCHING MORTAR) SHALL BE USED FOR ALL REPAIRS 16 SQUARE FEET OR LESS IN SURFACE AREA, TO A MAXIMUM OF ONE INCH CLEAR DISTANCE BEHIND THE REBAR MAT.
3. ITEM CODE 817.2140 REPAIRS TO STRUCTURAL CONCRETE MASONRY FORM AND CAST–IN–PLACE SHALL BE USED FOR ALL REPAIRS DEEPER THAN ONE INCH CLEAR DISTANCE BEHIND THE REBAR MAT WITH THE EXCEPTION OF OVERHEAD REPAIRS WHICH SHALL BE PATCHING MORTAR PER ITEM CODE 817.2110.
4. THE CONTRACTOR AND THE ON–SITE FORMAN MUST EACH HAVE A MINIMUM OF 5 SUCCESSFULLY COMPLETED DOCUMENTED PNEUMATIC MORTAR REPAIR BRIDGE FIELD APPLICATIONS IN THE LAST 5 YEARS WITH ACCEPTABLE REFERENCE LETTER FROM RESPECTIVE OWNERS. THE CONTRACTOR SHALL SUBMIT 5 COPIES OF THE PERSONNEL EXPERIENCE LISTS.
5. UNSOUND CONCRETE SHALL BE REMOVED ONLY TO THE DEPTH NECESSARY TO EXPOSE A BONDING SURFACE OF SOUND CONCRETE MATERIAL.
6. ALL DETERIORATED AREAS TO BE REPAIRED SHALL BE MARKED AND IDENTIFIED BY THE CONTRACTOR. THE CONTRACTOR SHALL OBTAIN THE APPROVAL OF THE ENGINEER THAT ALL REPAIR AREAS ARE CORRECTLY MARKED PRIOR TO MAKING SAWCUTS FOR REMOVAL OF CONCRETE.
7. ALL DETERIORATED AREAS TO BE REPAIRED SHALL THEN BE OUTLINED WITH ½" (±⅛") DEEP SAW–CUTS ON A RECTANGULAR SHAPE AROUND THE PERIPHERY OF THE DEFECT. THE ENGINEER WILL INSPECT THE SAWCUT AREAS PRIOR TO REMOVAL OF THE DETERIORATED CONCRETE. THE CONTRACTOR SHALL OBTAIN THE APPROVAL OF THE ENGINEER THAT ALL REPAIR AREAS ARE CORRECTLY SAWCUT PRIOR TO REMOVAL OF ANY CONCRETE.
8. THE CONTRACTOR SHALL CAREFULLY REMOVE SPALLED, LOOSE AND HOLLOW CONCRETE FROM WITHIN THE SAWCUT LIMITS. POWER TOOLS SHALL BE LIMITED TO PNEUMATIC HAMMERS OF NO MORE THAN 15 POUND CLASS. ANY OVERBREAKAGE OR DAMAGE BEYOND THE LIMITS OF THE APPROVED REPAIR SHALL BE REPAIRED BY THE CONTRACTOR AT NO ADDITIONAL COST TO THE STATE.
9. SAWCUTS AND DETERIORATED CONCRETE REMOVAL SHALL BE PERFORMED IN THE PRESENCE OF THE RESIDENT ENGINEER'S REPRESENTATIVE.
10. CONCRETE REPAIRS SHALL BE PERFORMED IN ACCORDANCE WITH THE REQUIREMENTS OF RIDOT STANDARD SPECIFICATIONS SECTION 817.
11. ALL NEW CONCRETE REPAIRS SHALL BE RESTORED TO ORIGINAL CONTOUR.
12. WHERE REPAIR DEPTH EXCEEDS 1½" GALVANIZED WIRE MESH SHALL BE USED IN ACCORDANCE WITH THE REQUIREMENTS OF SECTION 817.
13. THE CONTRACTOR SHALL LOCATE EXISTING REINFORCING PRIOR TO DEMOLITION OF REPAIR AREA. THE EXISTING REINFORCING SHALL NOT BE DAMAGED.
14. ALL CORRODED REINFORCING BARS SHALL BE THOROUGHLY CLEANED TO REMOVE ALL RUST.
15. DURING REMOVAL OF DETERIORATED CONCRETE, IF THE CONTRACTOR'S OPERATIONS CAUSE ANY DAMAGE TO THE EXISTING STRUCTURE, HE SHALL BE REQUIRED TO REPAIR THE AREA TO THE SATISFACTION OF THE ENGINEER AT NO ADDITIONAL COST TO THE STATE.
16. THE BONDING SURFACES OF THE REPAIR AREA SHALL BE PREPARED IN ACCORDANCE WITH THE RIDOT STANDARD SPECIFICATION SECTION 817. THE SURFACES AGAINST WHICH MORTAR OR CONCRETE IS TO BE PLACED SHALL BE KEPT WET FOR AT LEAST ONE HOUR AND THEN ALLOWED TO DRY TO A SATURATED SURFACE DRY CONDITION JUST PRIOR TO APPLICATION OF THE MORTAR OR CONCRETE.
17. REPAIR QUANTITIES ARE BASED ON THE LATEST RIDOT INSPECTION REPORT. ALL OF THE MAJOR DEFECTED AREAS KNOWN TO EXIST AT THE TIME OF THE INSPECTION HAVE BEEN SHOWN TO INDICATE APPROXIMATE EXTENT OF DETERIORATION THAT WILL HAVE TO BE REPAIRED BY THE CONTRACTOR. ANY ADDITIONAL REPAIR AREAS SHALL BE REPAIRED AS DIRECTED AND APPROVED BY THE ENGINEER. ADDITIONAL REPAIR AREAS SHALL BE PAID FOR AT THE UNIT BID PRICE.

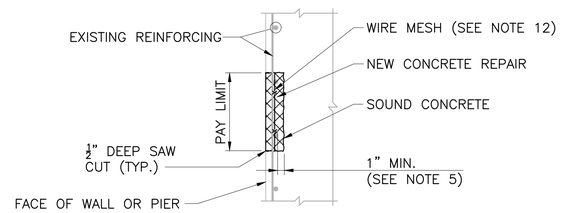

SECTION

TYPICAL WALL REPAIR
NOT TO SCALE

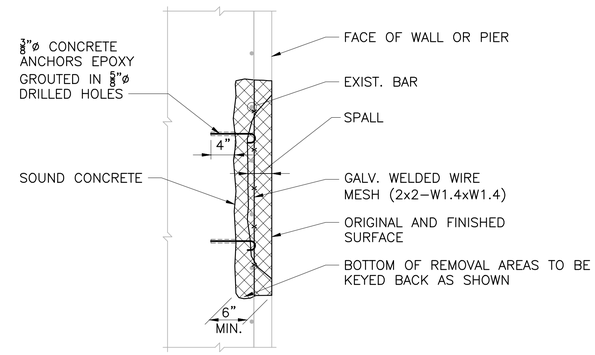

DEEP SPALL REPAIR DETAILS (> 6" DEEP)
NOT TO SCALE

REVISIONS		
NO.	DATE	BY

vhb
1 Cedar Street
Suite 400
Providence, RI 02903
401.272.8100

RHODE ISLAND
DEPARTMENT OF TRANSPORTATION

PRESERVATION OF
BRIDGE NOS. 575, 578, 704, 706, 707, AND 708
PROVIDENCE, RHODE ISLAND

CONCRETE REPAIR DETAILS

CHECKED BY _____ DATE _____ SCALE _____

0018C_V3_006_PATCHDETL

\\vhb\gbl\pro\Providence\72328.04\cadd\planset\Preservation - For Viaduct RFP\0018C_V3_006_PATCHDETL.dwg Plotted on Tuesday, January 7, 2020 10:51:52 AM

FED. ROAD DIV. NO.	STATE	FEDERAL AID PROJECT NO.	FISCAL YEAR	SHEET NO.	TOTAL SHEETS
	RI			A01	64

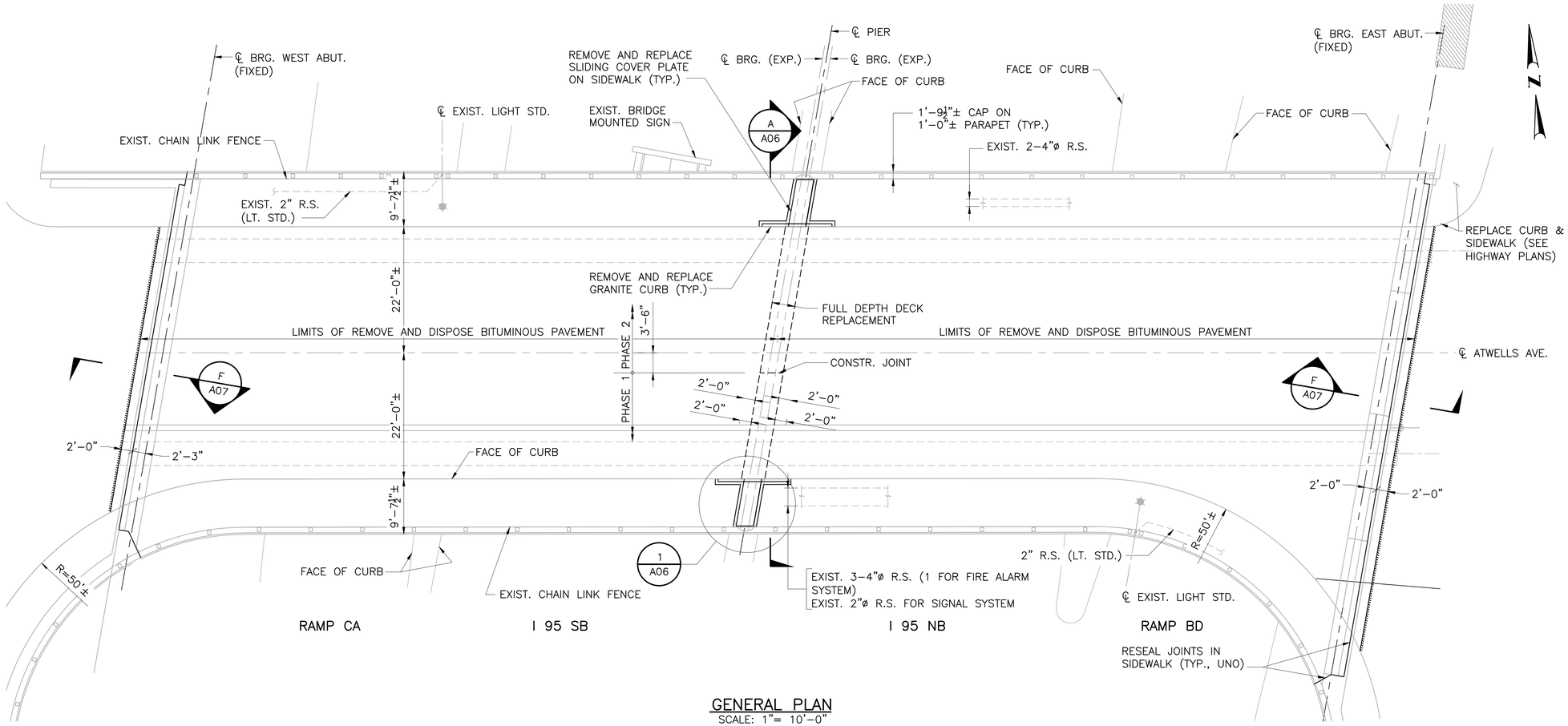

GENERAL PLAN
SCALE: 1"= 10'-0"

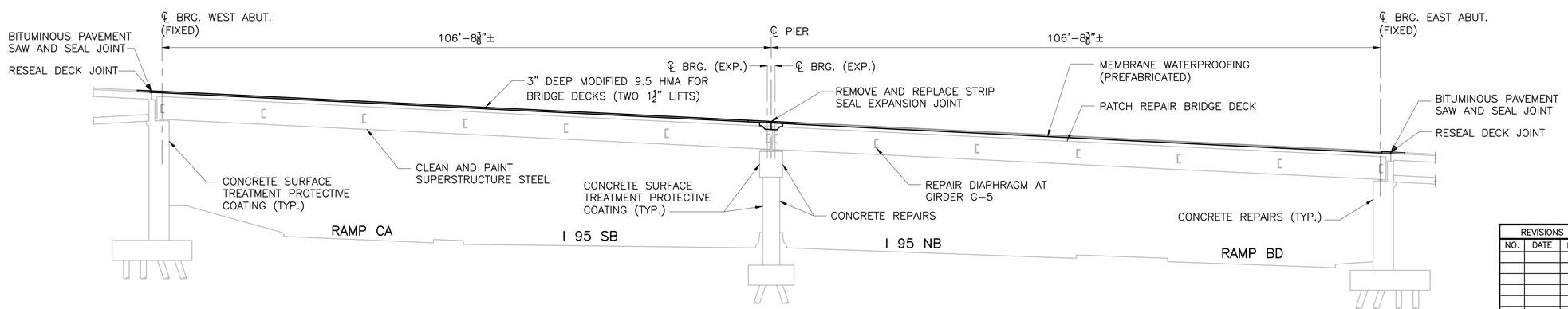

LONGITUDINAL SECTION
SCALE: 1"= 10'-0"

LEGEND
R.S. – RIGID STEEL CONDUIT

REVISIONS		
NO.	DATE	BY

RHODE ISLAND
DEPARTMENT OF TRANSPORTATION

PRESERVATION OF
BRIDGE NOS. 575, 578, 704, 706, 707, AND 708
PROVIDENCE, RHODE ISLAND

ATWELLS AVE. BRIDGE NO. 575 PRESERVATION

GENERAL PLAN AND LONGITUDINAL SECTION

CHECKED BY _____ DATE _____ SCALE _____

vhb
1 Cedar Street
Suite 400
Providence, RI 02903
401.272.8100

0018C_V3_A01_BGENERAL

\\vhb\gbl\pro\Providence\72328.04\cad\set\planset\Preservation - For Viaduct RFP\A-Atwells Avenue\0018C_V3_A01_BGENERAL.dwg Plotted on Tuesday, January 7, 2020 10:52:29 AM

FED. ROAD DIV. NO.	STATE	FEDERAL AID PROJECT NO.	FISCAL YEAR	SHEET NO.	TOTAL SHEETS
	RI			A02	64

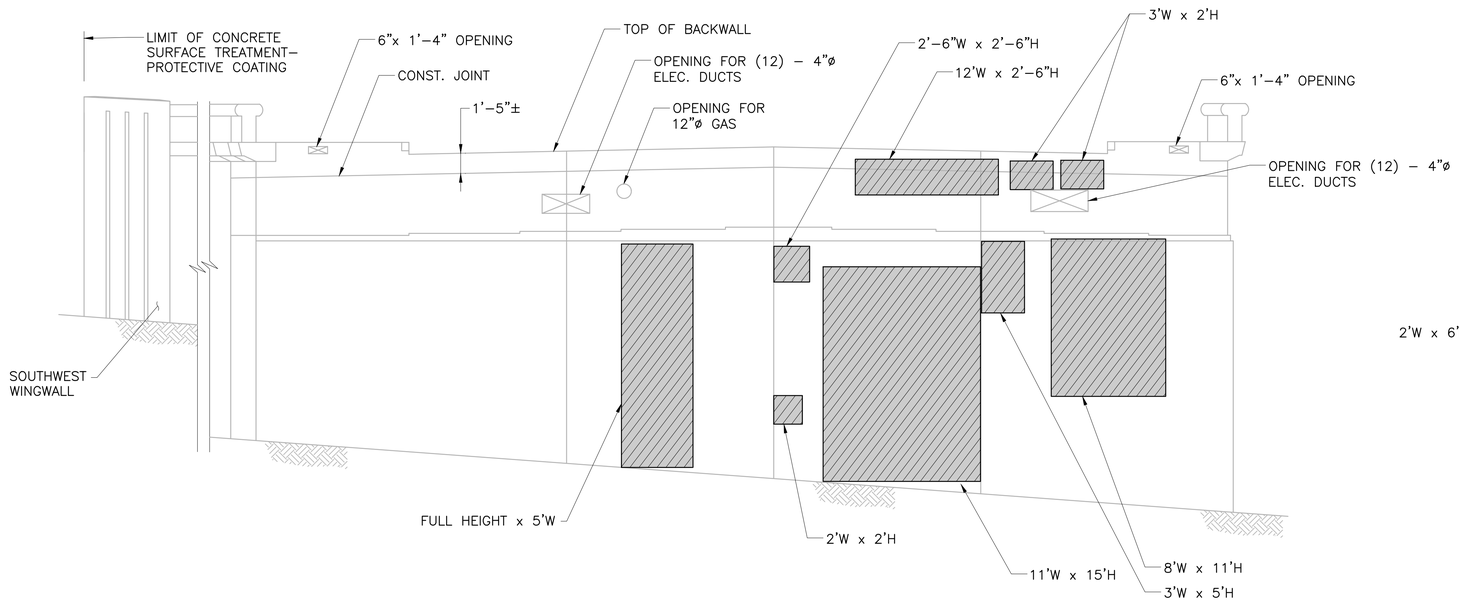

WEST ABUTMENT ELEVATION
SCALE: 1"= 5'–0"

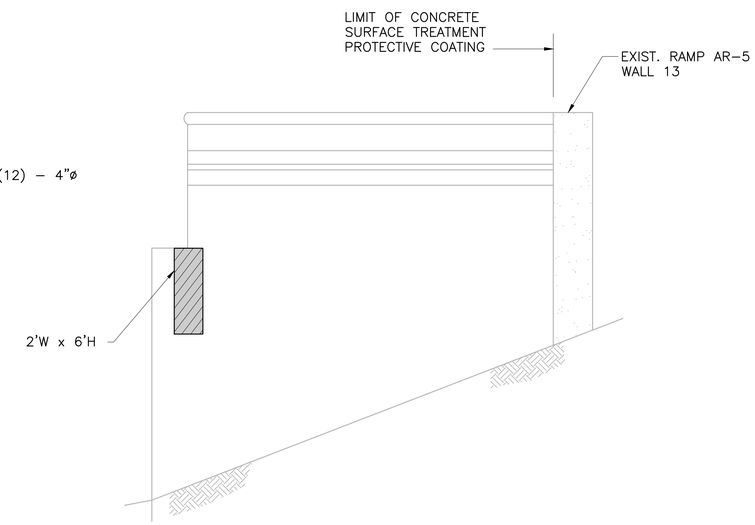

NORTHWEST WINGWALL
SCALE: 1"= 5'–0"

NOTE:

ALL EXPOSED CONCRETE SURFACES OF ABUTMENT SHALL RECEIVE CONCRETE SURFACE TREATMENT – PROTECTIVE COATING.

LEGEND

– REPAIR AREA

H – HIGH
W – WIDE

REVISIONS		
NO.	DATE	BY

RHODE ISLAND
DEPARTMENT OF TRANSPORTATION

PRESERVATION OF
BRIDGE NOS. 575, 578, 704, 706, 707, AND 708

PROVIDENCE, RHODE ISLAND

ATWELLS AVE. BRIDGE NO. 575 PRESERVATION

WEST ABUTMENT REPAIRS

vhb
1 Cedar Street
Suite 400
Providence, RI 02903
401.272.8100

CHECKED BY _____ DATE _____ SCALE _____

\\vhb\gbl\proj\Providence\72328.04\cadd\planset\Preservation - For Viaduct RFP\A-Atwells Avenue\0018C_V3_A02_WABUT.dwg Plotted on Tuesday, January 7, 2020 10:53:00 AM

FED. ROAD DIV. NO.	STATE	FEDERAL AID PROJECT NO.	FISCAL YEAR	SHEET NO.	TOTAL SHEETS
	RI			A03	64

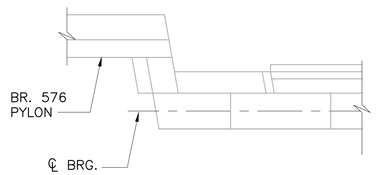

PARTIAL EAST ABUTMENT PLAN

SCALE: 1"= 10'-0"

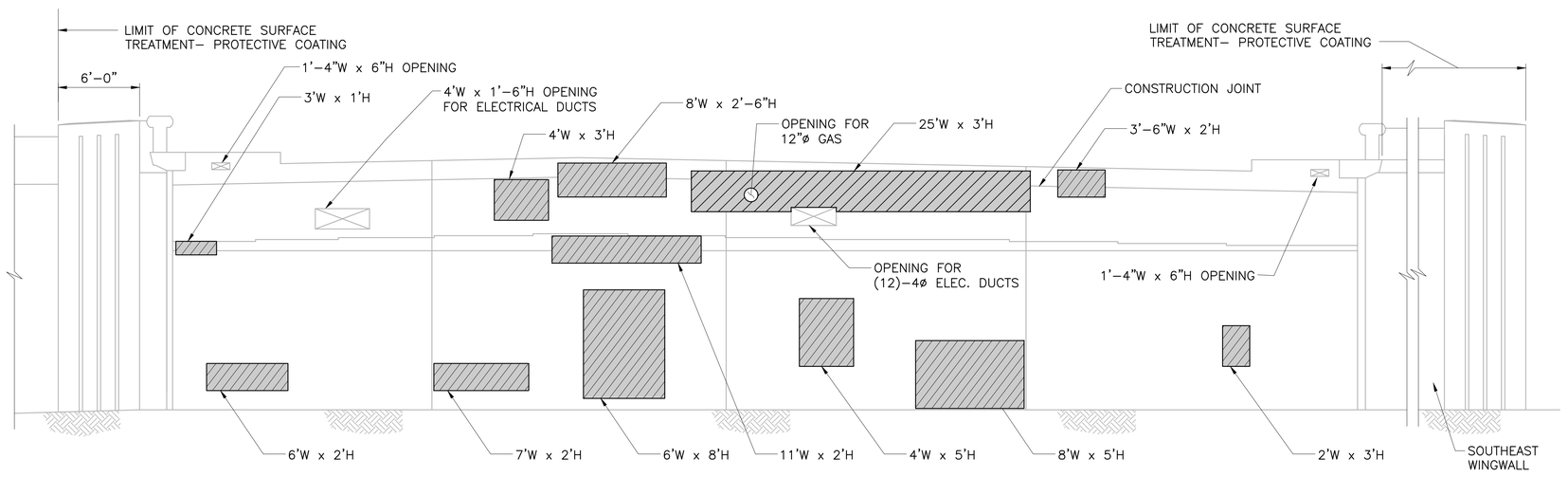

EAST ABUTMENT ELEVATION

SCALE: 1"= 5'-0"

NOTE:

ALL EXPOSED CONCRETE SURFACES OF ABUTMENT SHALL RECEIVE CONCRETE SURFACE TREATMENT – PROTECTIVE COATING.

LEGEND

– REPAIR AREA

H – HIGH
W – WIDE

REVISIONS		
NO.	DATE	BY

RHODE ISLAND
DEPARTMENT OF TRANSPORTATION

PRESERVATION OF
BRIDGE NOS. 575, 578, 704, 706, 707, AND 708

PROVIDENCE, RHODE ISLAND

ATWELLS AVE. BRIDGE NO. 575 PRESERVATION

EAST ABUTMENT REPAIRS

vhb
1 Cedar Street
Suite 400
Providence, RI 02903
401.272.8100

CHECKED BY _____ DATE _____ SCALE _____

0018C_V3_A03_EABUT

\\vhb\gbl\proj\Providence\72328.04\cad\st\planset\Preservation - For Viaduct RFP\A-Atwells Avenue\0018C_V3_A03_EABUT.dwg Plotted on Tuesday, January 7, 2020 10:53:26 AM

FED. ROAD DIV. NO.	STATE	FEDERAL AID PROJECT NO.	FISCAL YEAR	SHEET NO.	TOTAL SHEETS
	RI			A04	64

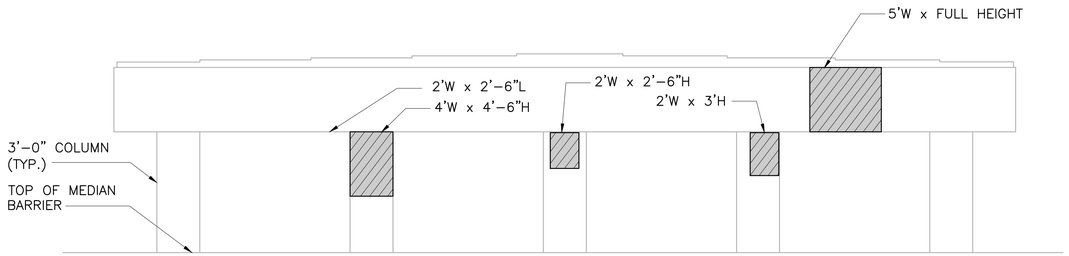

EAST ELEVATION

SCALE: 1"= 5'-0"

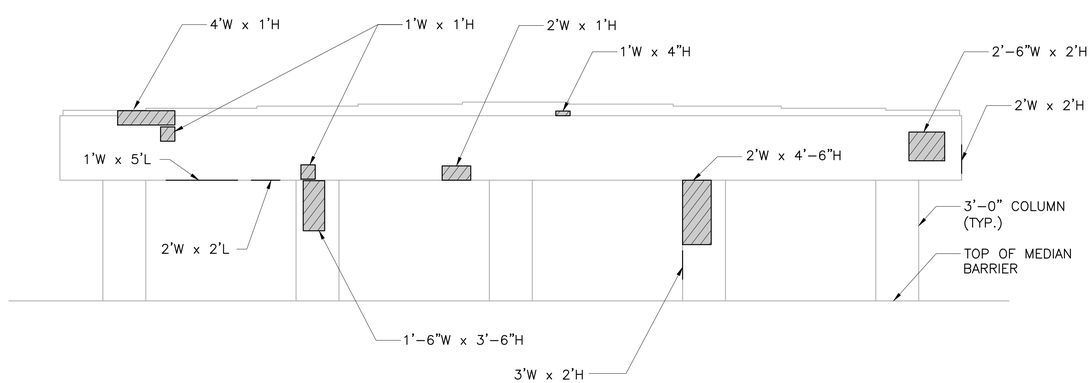

WEST ELEVATION

SCALE: 1"= 5'-0"

NOTE:

ALL EXPOSED CONCRETE SURFACES OF PIER SHALL RECEIVE CONCRETE SURFACE TREATMENT – PROTECTIVE COATING.

LEGEND

▨ – REPAIR AREA

H – HIGH
W – WIDE
L – LONG

REVISIONS		
NO.	DATE	BY

RHODE ISLAND
DEPARTMENT OF TRANSPORTATION

PRESERVATION OF
BRIDGE NOS. 575, 578, 704, 706, 707, AND 708

PROVIDENCE, RHODE ISLAND

ATWELLS AVE. BRIDGE NO. 575 PRESERVATION

PIER REPAIRS

CHECKED BY _____ DATE _____ SCALE _____

vhb
1 Cedar Street
Suite 400
Providence, RI 02903
401.272.8100

0018C_V3_A04_PIER

\\vhb\gbl\pro\Providence\72328.04\cad\set\planset\Preservation - For Viaduct RFP\A-Atwells Avenue\0018C_V3_A04_PIER.dwg Plotted on Tuesday, January 7, 2020 10:53:57 AM

FED. ROAD DIV. NO.	STATE	FEDERAL AID PROJECT NO.	FISCAL YEAR	SHEET NO.	TOTAL SHEETS
	RI			A05	64

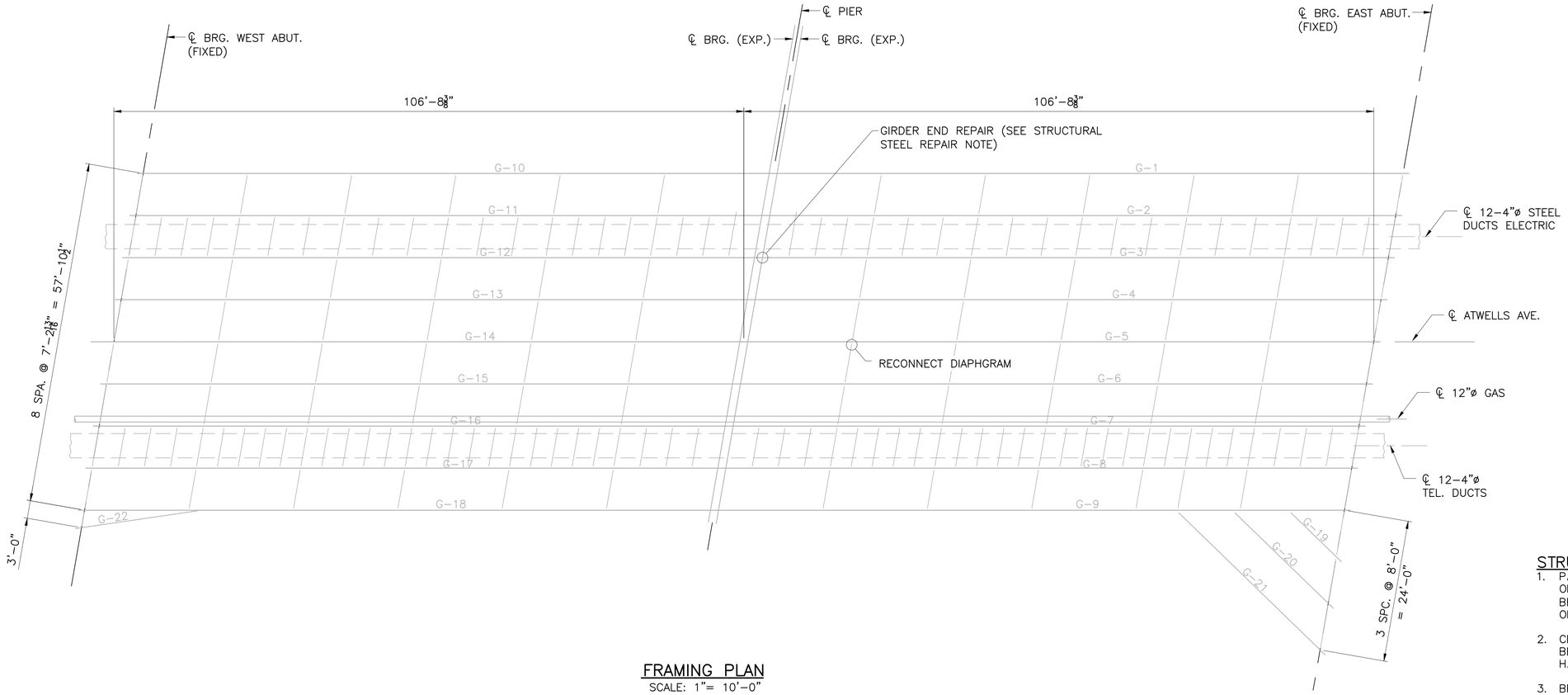

FRAMING PLAN

SCALE: 1"= 10'–0"

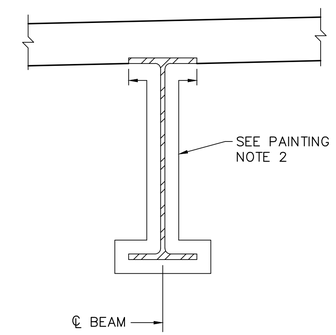

PAINT LIMIT DETAIL

N.T.S.

STRUCTURAL STEEL PAINTING NOTE

1. PAINT LIMITS SHOWN SHALL BE IN ACCORDANCE WITH SECTION 825 OF THE RHODE ISLAND STANDARD SPECIFICATIONS FOR ROAD AND BRIDGE CONSTRUCTION "PAINTING STRUCTURAL STEEL". THE COLOR OF THE FINAL COAT SHALL BE AS DIRECTED IN RFP PART 2.
2. CLEAN AND PAINT ALL STRUCTURAL STEEL INCLUDING ALL BEAMS, BEARINGS, DIAPHRAGMS, UTILITY SUPPORTS, ATTACHMENTS AND HARDWARE.
3. BRIDGE IDENTIFICATION AND UNDERCLEARANCE SIGNS ON THE WEB OF GIRDER G–9 AND G–10 SHALL BE REMOVED PRIOR TO PAINTING STRUCTURAL STEEL. REPLACEMENT SIGNS SHALL BE INSTALLED AT THE EXISTING LOCATION AFTER THE PAINTING WORK IS COMPLETED.

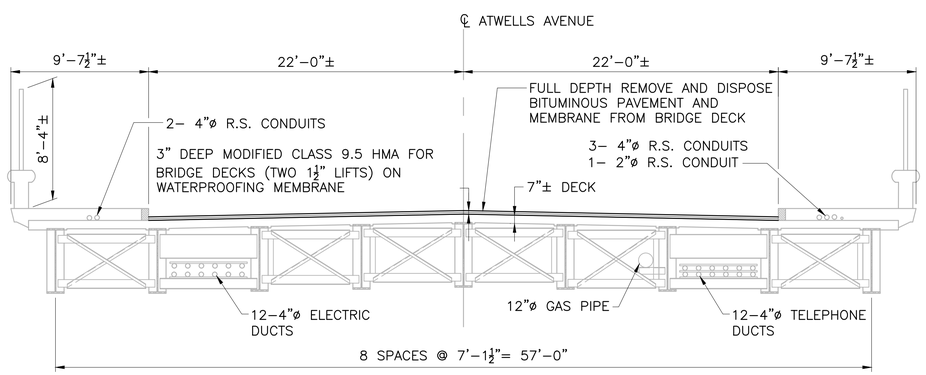

TRANSVERSE SECTION

SCALE: 1"= 5'–0"

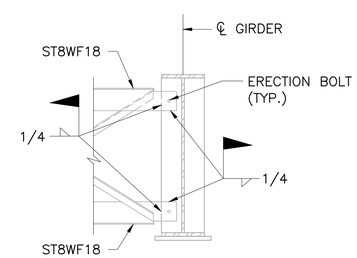

SEE FRAMING PLAN FOR LOCATION

TYP. DIAPHRAGM CONNECTION DETAIL – BRIDGE 575

SCALE: 1/2"= 1'–0"

STRUCTURAL STEEL REPAIR NOTE

1. THE DESIGN BUILD TEAM SHALL DESIGN, DEVELOP AND INSTALL GIRDER END REPAIR DETAILS FOR ANY GIRDER THAT EXHIBITS MORE THAN 10% SHEAR LOSS OR 20% BEARING LOSS. THE DESIGN BUILD TEAM SHALL REFERENCE THE LATEST BRIDGE INSPECTION REPORTS FOR BEAM END SECTION LOSSES. ADDITIONAL SECTION LOSS SHALL BE ASSUMED FROM THE SANDBLASTING DURING THE CLEANING OF THE GIRDER END THAT MAY RESULT IN A GIRDER END TO EXCEED THE LIMITING SECTION LOSS PERCENTAGES.

vhb
1 Cedar Street
Suite 400
Providence, RI 02903
401.272.8100

REVISIONS		
NO.	DATE	BY

RHODE ISLAND
DEPARTMENT OF TRANSPORTATION

PRESERVATION OF
BRIDGE NOS. 575, 578, 704, 706, 707, AND 708
PROVIDENCE, RHODE ISLAND

ATWELLS AVE. BRIDGE NO. 575 PRESERVATION

FRAMING PLAN

CHECKED BY _____ DATE _____ SCALE _____

0018C_V3_A05_FRAMING

I:\vhb\gbl\proj\Providence\72328.04\cad\st\planset\Preservation - For Viaduct RFP\A-Atwells Avenue\0018C_V3_A05_FRAMING.dwg Plotted on Tuesday, January 7, 2020 10:54:29 AM

FED. ROAD DIV. NO.	STATE	FEDERAL AID PROJECT NO.	FISCAL YEAR	SHEET NO.	TOTAL SHEETS
	RI			A06	64

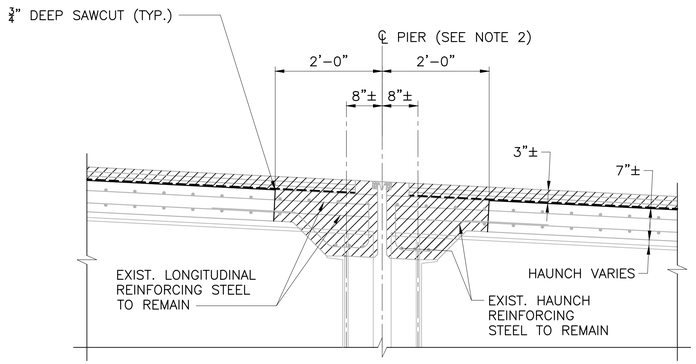

EXISTING

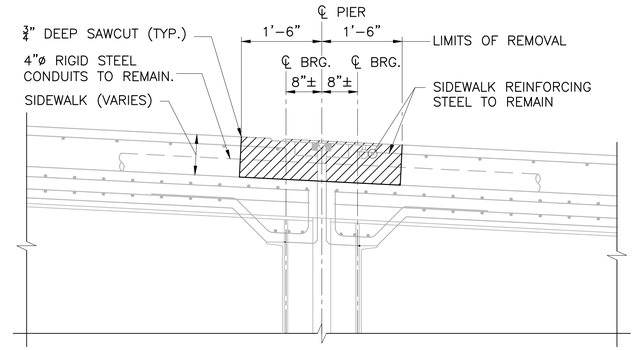

EXISTING

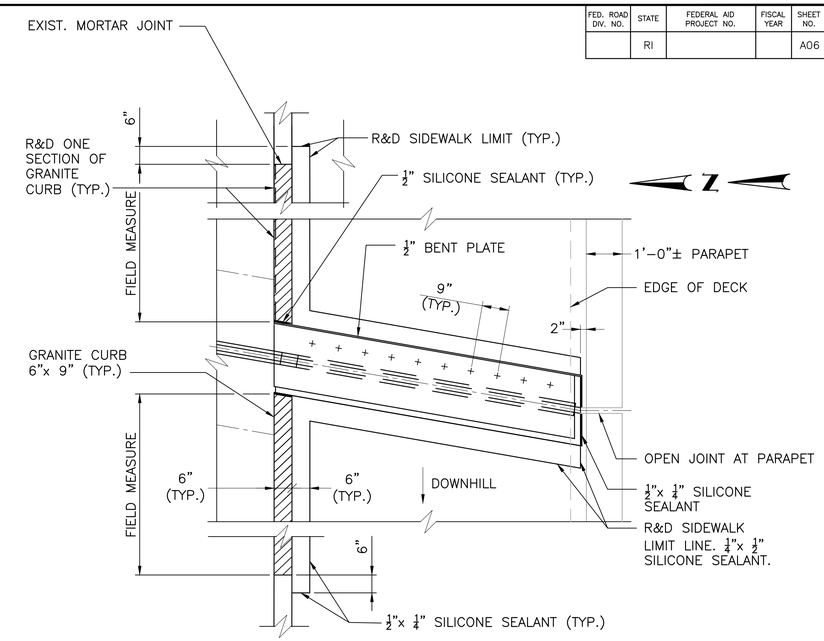

NOTE:
SOUTH SIDEWALK SHOWN, NORTH SIDEWALK SIMILAR.

DETAIL 1/A01
SCALE: 1/2"=1'–0"

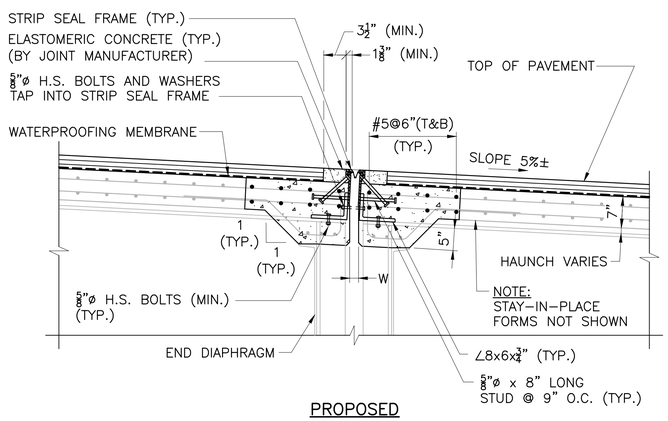

PROPOSED

SECTION B/–
SCALE: 3/4"=1'–0"

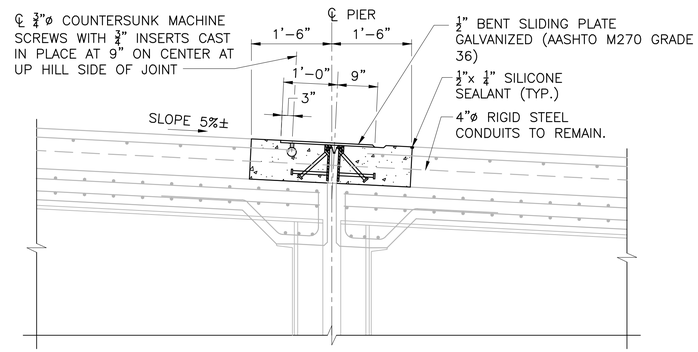

PROPOSED

SECTION C/–
SCALE: 3/4"=1'–0"

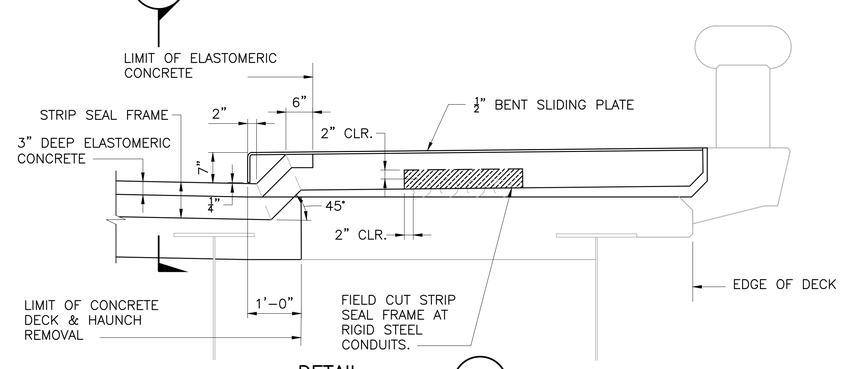

DETAIL 2/–
SCALE: 3/4"=1'–0"

SOUTH SIDEWALK SHOWN, NORTH SIDEWALK SIMILAR

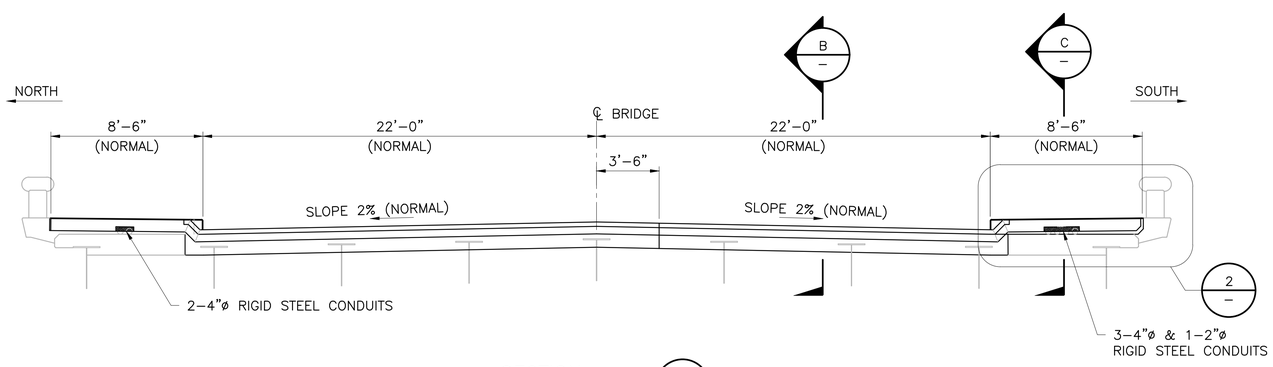

SECTION A/A01
SCALE: 1/4"=1'–0"

NOTE

1. FIELD CUTTING OF THE STRIP SEAL FRAME AT THE CONDUITS SHALL BE INCIDENTAL TO ITEM CODE 823.1760 "STRIP SEAL EXPANSION JOINT ASSEMBLIES"
2. JOINT IN WESTBOUND LANES SHOWN. JOINT IN EASTBOUND LANES HAS BEEN PAVED OVER.

LEGEND

REMOVE AND DISPOSE (R&D)

vhb
1 Cedar Street
Suite 400
Providence, RI 02903
401.272.8100

REVISIONS		
NO.	DATE	BY

RHODE ISLAND
DEPARTMENT OF TRANSPORTATION

PRESERVATION OF
BRIDGE NOS. 575, 578, 704, 706, 707, AND 708

PROVIDENCE, RHODE ISLAND

ATWELLS AVE. BRIDGE NO. 575 PRESERVATION

DECK JOINT REPAIRS 1

CHECKED BY _____ DATE _____ SCALE _____

0018C_V3_A06_JOINT01

\\vhb\gbl\proj\Providence\72328.04\cad\st\planset\Preservation - For Viaduct RFP\A-Atwells Avenue\0018C_V3_A06_JOINT01.dwg Plotted on Tuesday, January 7, 2020 10:54:49 AM

FED. ROAD DIV. NO.	STATE	FEDERAL AID PROJECT NO.	FISCAL YEAR	SHEET NO.	TOTAL SHEETS
	RI			A07	64

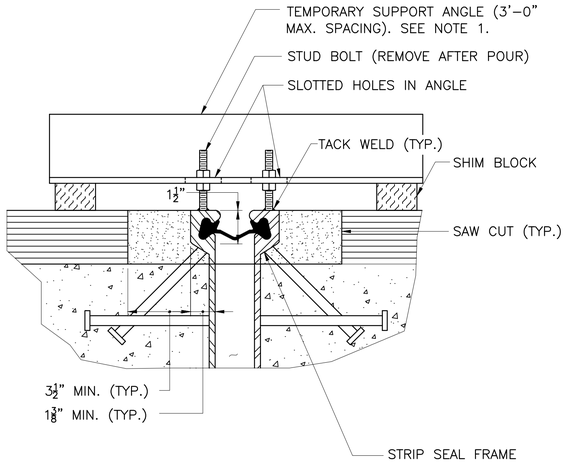

PAVEMENT DETAIL SHOWN. SIMILAR AT SIDEWALK.

TYPICAL INSTALLATION OF STRIP SEAL

SCALE: 1"= 1'–0"

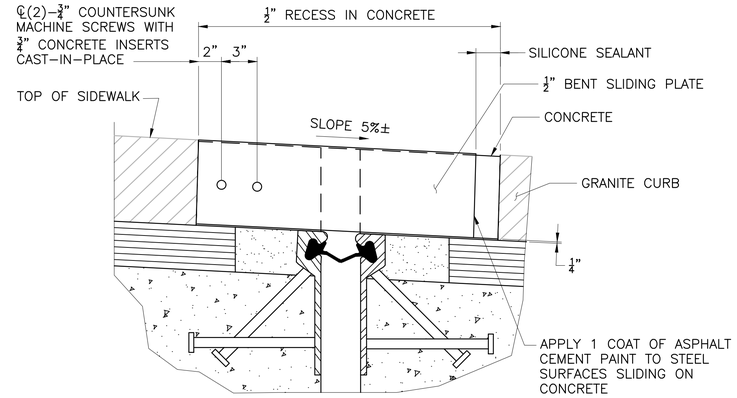

SECTION D / A06

NOT TO SCALE

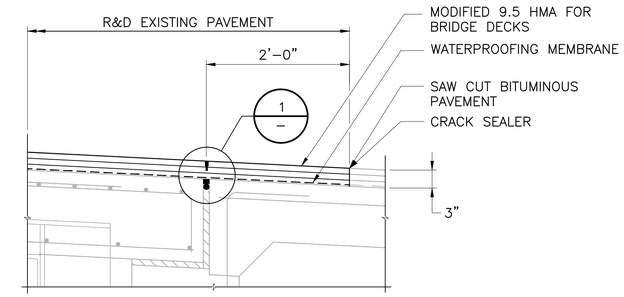

SECTION F / A01

NOT TO SCALE

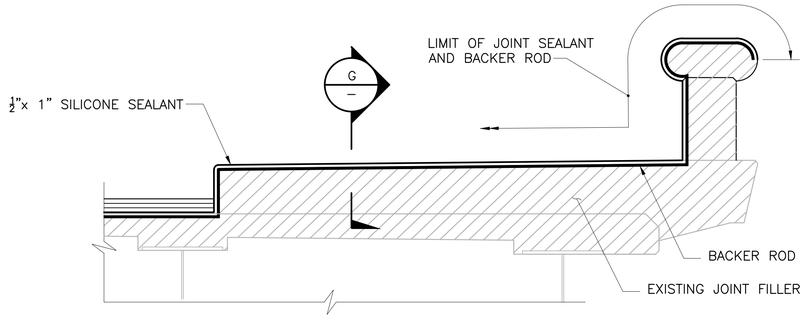

FIXED JOINT AT SIDEWALK

SCALE: 3/4"= 1'–0"

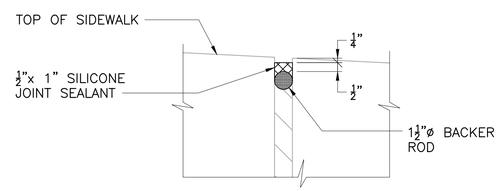

SECTION G / –

NOT TO SCALE

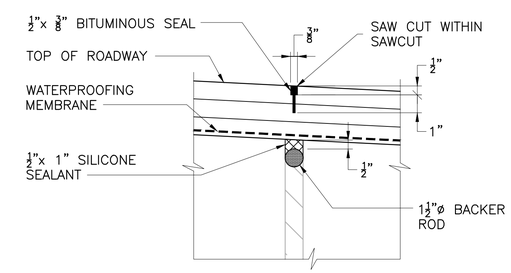

DETAIL 1 / –

SCALE: 3"=1'–0"

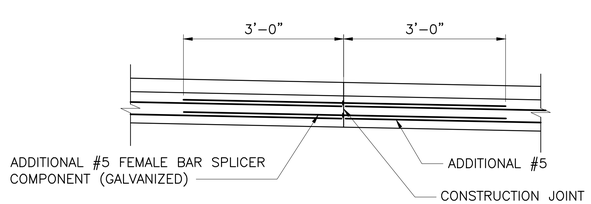

DECK AT PHASE LINE DETAIL

SCALE: 3/4"= 1'–0"

NOTES

1. TEMPORARY SUPPORT ANGLE LENGTH VARIES AT SIDEWALK – SEE DECK JOINT REPAIRS 1, SECTION C.

REVISIONS		
NO.	DATE	BY

vhb
1 Cedar Street
Suite 400
Providence, RI 02903
401.272.8100

RHODE ISLAND

DEPARTMENT OF TRANSPORTATION

PRESERVATION OF

BRIDGE NOS. 575, 578, 704, 706, 707, AND 708

PROVIDENCE, RHODE ISLAND

ATWELLS AVE. BRIDGE NO. 575 PRESERVATION

DECK JOINT REPAIRS 2

CHECKED BY _____ DATE _____ SCALE _____

0018C_V3_A07_JOINT02

\\vhb\gbl\proj\Providence\72328.04\cad\st\planset\Preservation - For Viaduct RFP\A-Atwells Avenue\0018C_V3_A07_JOINT02.dwg Plotted on Tuesday, January 7, 2020 10:55:05 AM

FED. ROAD DIV. NO.	STATE	FEDERAL AID PROJECT NO.	FISCAL YEAR	SHEET NO.	TOTAL SHEETS
	RI			A08	64

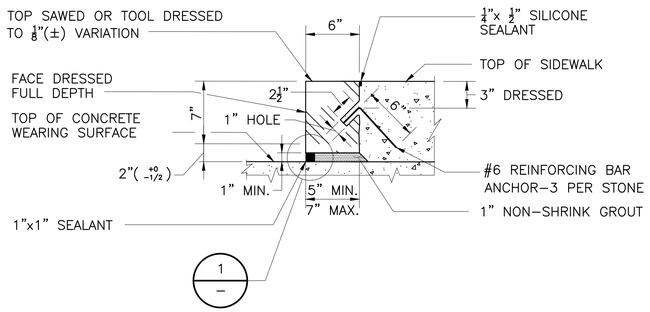

6"x9" VERTICAL FACE GRANITE CURB (CONCRETE WEARING SURFACE)

SCALE: 1 1/2"=1'-0"

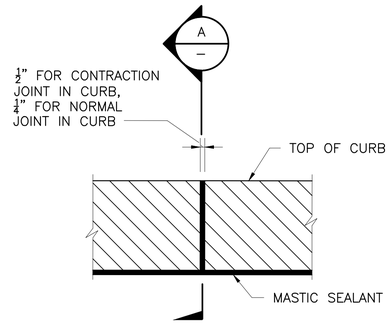

ELEVATION AT FACE OF CURB

NOT TO SCALE

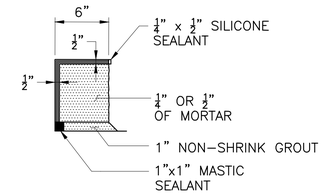

SECTION A/–

SCALE: 1 1/2"=1'-0"

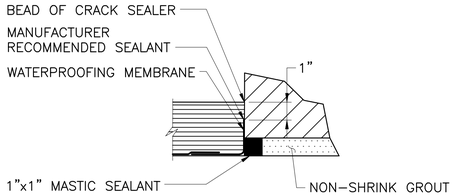

DETAIL 1/–

SCALE: 3"=1'-0"

NOTES

1. FOR CUTTING TOLERANCES ON GRANITE CURB SEE R.I.STANDARD SPECIFICATION M-09.05.
2. STRAIGHT CURB SHALL BE FURNISHED IN LENGTHS OF NOT LESS THAN 6 FEET OR GREATER THAN 10 FEET.

REVISIONS		
NO.	DATE	BY

RHODE ISLAND
DEPARTMENT OF TRANSPORTATION

PRESERVATION OF
BRIDGE NOS. 575, 578, 704, 706, 707, AND 708

PROVIDENCE, RHODE ISLAND

ATWELLS AVE. BRIDGE NO. 575 PRESERVATION

DECK JOINT REPAIRS 3

vhb
1 Cedar Street
Suite 400
Providence, RI 02903
401.272.8100

CHECKED BY _____ DATE _____ SCALE _____

0018C_V3_A08_JOINT03

\\vhb\gbl\proj\Providence\72328.04\cad\dst\planset\Preservation - For Viaduct RFP\A-Atwells Avenue\0018C_V3_A08_JOINT03.dwg Plotted on Tuesday, January 7, 2020 10:55:22 AM

FED. ROAD DIV. NO.	STATE	FEDERAL AID PROJECT NO.	FISCAL YEAR	SHEET NO.	TOTAL SHEETS
	RI			B01	47

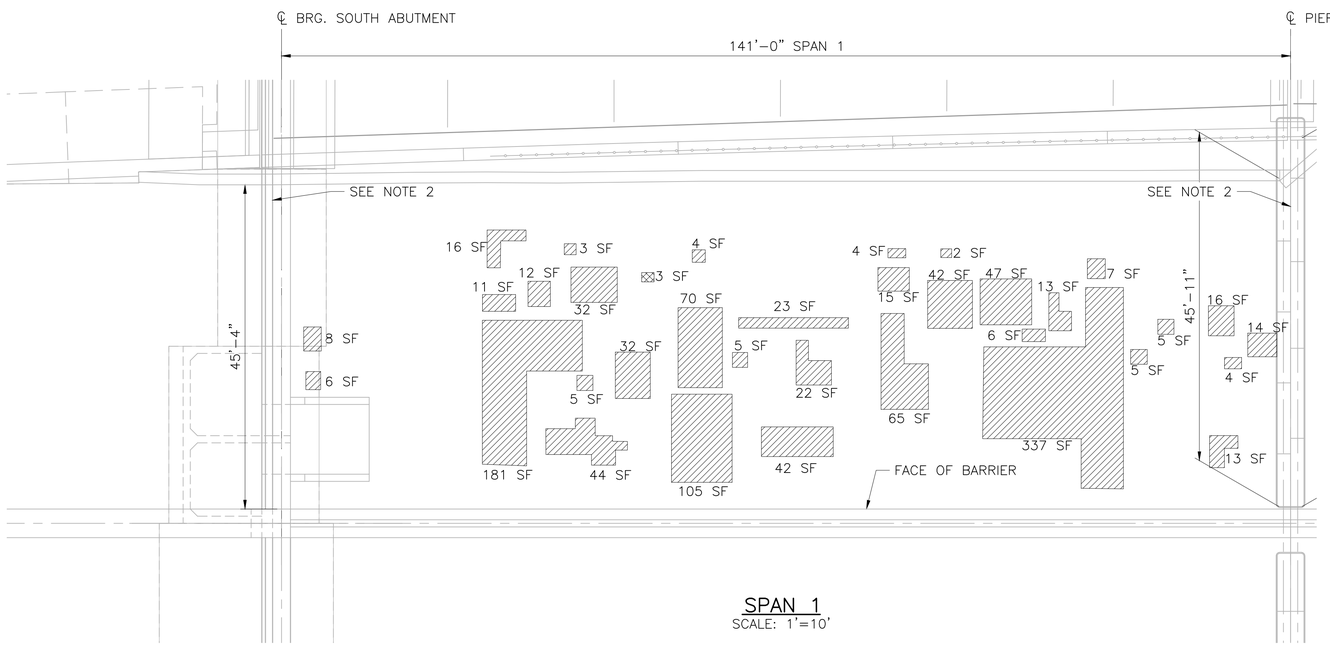

SPAN 1
SCALE: 1'=10'

NOTES:

1. REPAIR AREAS SHOWN ARE APPROXIMATE. THE CONTRACTOR IS RESPONSIBLE FOR LOCATING AND REPAIRING ALL DEFECTIVE DECK AREAS. THE CONTRACTOR WILL NOT BE COMPENSATED BY THE STATE FOR ADDITIONAL REPAIR AREAS OR DIFFERENCES IN REPAIR TYPE.
2. THE CONTRACTOR SHALL INSTALL / REPAIR EXISTING DECK JOINTS TO A CONDITION THAT IS SUITABLE FOR TEMPORARY TRAFFIC. SEE DECK JOINT DETAIL SHEETS FOR JOINT TYPES.

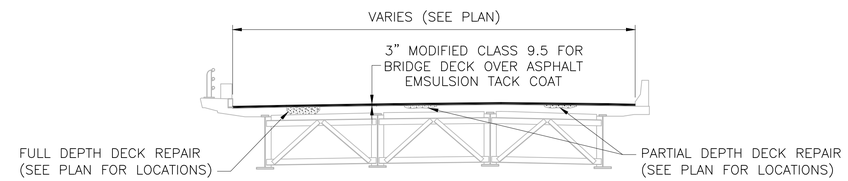

TYPICAL SECTION (SPANS 1–8)
SCALE: N.T.S.

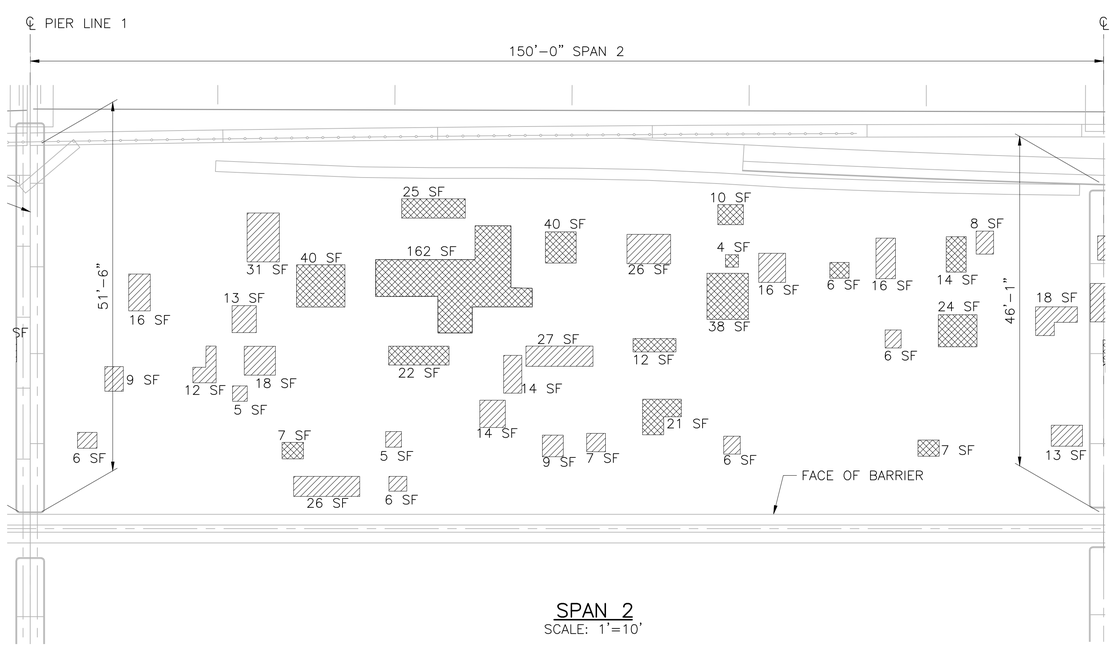

SPAN 2
SCALE: 1'=10'

REPAIR AREAS

THE CONTRACTOR SHALL ANTICIPATE AND INCLUDE AN ADDITIONAL 20% OF REPAIR AREA QUANTITY IN THEIR BID TO SUPPLEMENT THE REPAIR AREAS PROVIDED BELOW.

SPAN 1
PARTIAL DEPTH DECK REPAIR AREA TOTAL = 1216 SF
FULL DEPTH DECK REPAIR AREA TOTAL = 3 SF

SPAN 2
PARTIAL DEPTH DECK REPAIR AREA TOTAL = 327 SF
FULL DEPTH DECK REPAIR AREA TOTAL = 432 SF

LEGEND

– PARTIAL DEPTH DECK REPAIR

– FULL DEPTH DECK REPAIR

REVISIONS		
NO.	DATE	BY

RHODE ISLAND
DEPARTMENT OF TRANSPORTATION

PRESERVATION OF
BRIDGE NOS. 575, 578, 704, 706, 707, AND 708
PROVIDENCE, RHODE ISLAND

PROVIDENCE VIADUCT BRIDGE NO. 578
DECK REPAIRS

DECK REPAIR AREAS (1 OF 4)

CHECKED BY _____ DATE _____ SCALE _____

vhb
1 Cedar Street
Suite 400
Providence, RI 02903
401.272.8100

0018C_V3_B01_DECKPLN001

\\vhb\gbl\proj\Providence\72328.04\cad\dgn\planset\Preservation - For Viaduct RFPB-Providence Viaduct\0018C_V3_B01_DECKPLN001.dwg Plotted on Tuesday, January 7, 2020 10:55:56 AM

FED. ROAD DIV. NO.	STATE	FEDERAL AID PROJECT NO.	FISCAL YEAR	SHEET NO.	TOTAL SHEETS
	RI			B02	47

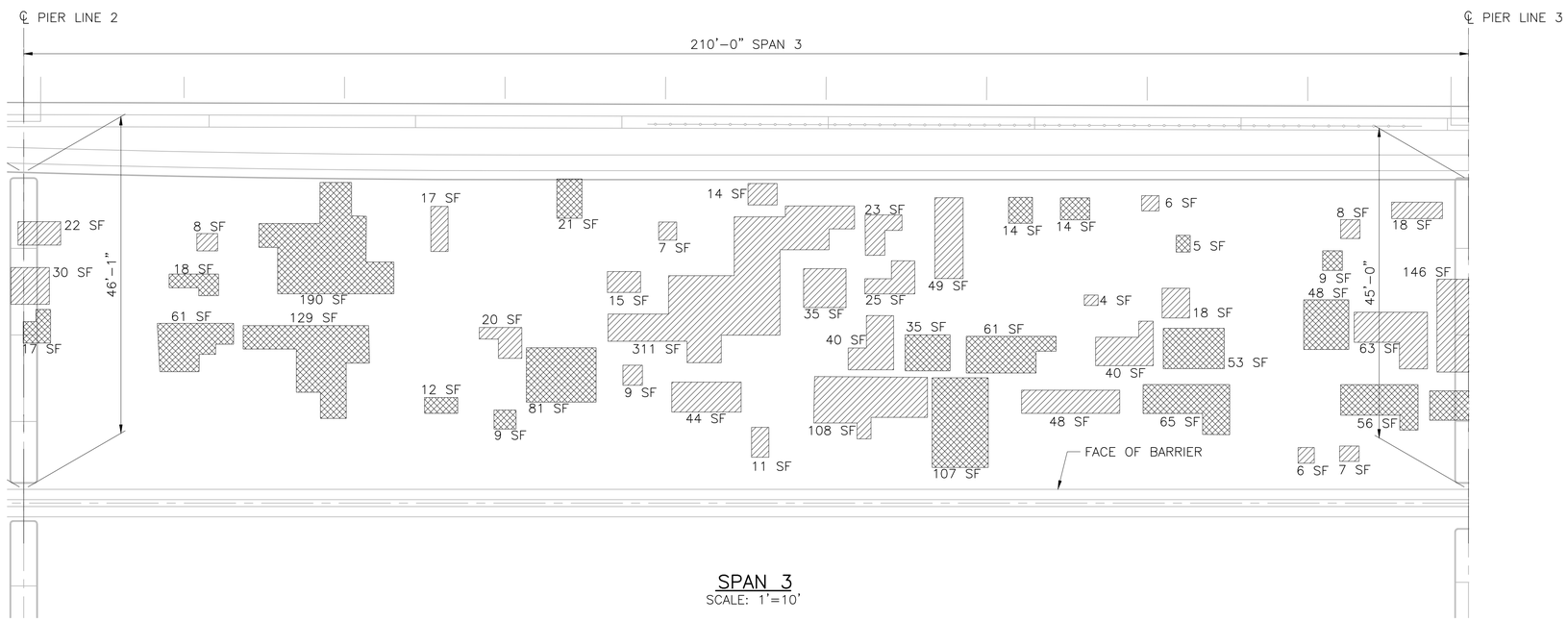

SPAN 3
SCALE: 1'=10'

NOTE:

1. SEE DECK REPAIR AREAS (1 OF 4) FOR NOTES.

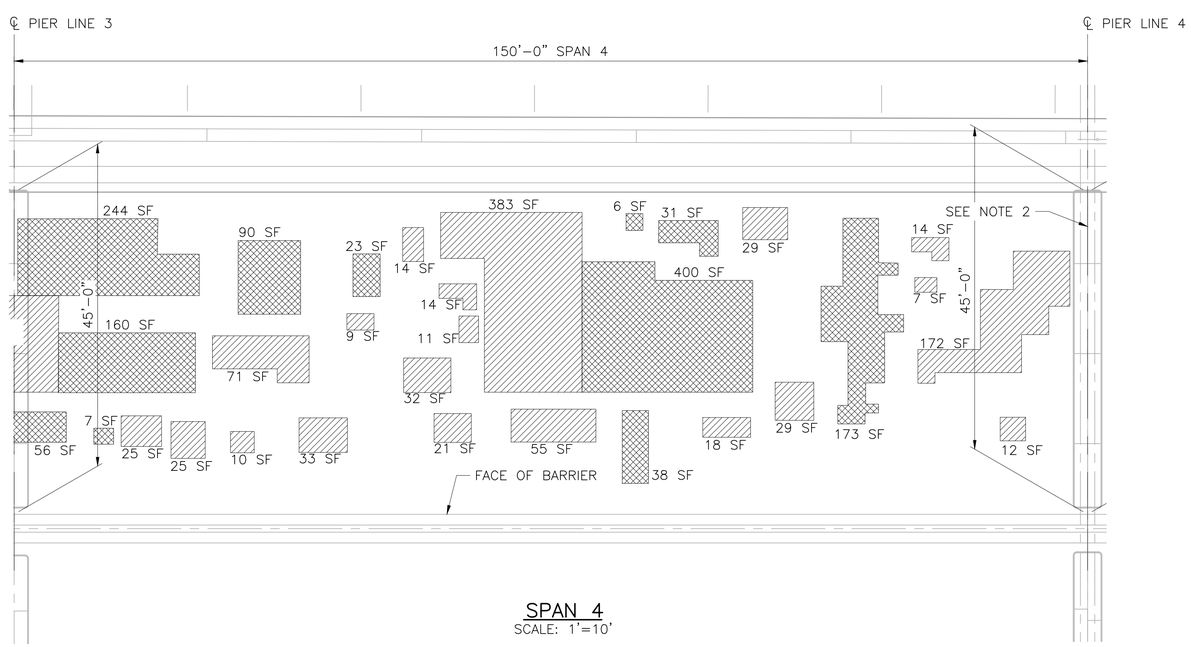

SPAN 4
SCALE: 1'=10'

REPAIR AREAS

THE CONTRACTOR SHALL ANTICIPATE AND INCLUDE AN ADDITIONAL 20% OF REPAIR AREA QUANTITY IN THEIR BID TO SUPPLEMENT THE REPAIR AREAS PROVIDED BELOW.

SPAN 3
PARTIAL DEPTH DECK REPAIR AREA TOTAL = 1152 SF
FULL DEPTH DECK REPAIR AREA TOTAL = 1005 SF

SPAN 4
PARTIAL DEPTH DECK REPAIR AREA TOTAL = 984 SF
FULL DEPTH DECK REPAIR AREA TOTAL = 1228 SF

LEGEND

– PARTIAL DEPTH DECK REPAIR

– FULL DEPTH DECK REPAIR

REVISIONS		
NO.	DATE	BY

RHODE ISLAND
DEPARTMENT OF TRANSPORTATION

PRESERVATION OF
BRIDGE NOS. 575, 578, 704, 706, 707, AND 708
PROVIDENCE, RHODE ISLAND

PROVIDENCE VIADUCT BRIDGE NO. 578
DECK REPAIRS

DECK REPAIR AREAS (2 OF 4)

CHECKED BY _____ DATE _____ SCALE _____

vhb
1 Cedar Street
Suite 400
Providence, RI 02903
401.272.8100

0018C_V3_B02_DECKPLN002

\\vhb\gbl\pro\Providence\72328.04\cad\dt\planset\Preservation - For Viaduct RFPB-Providence Viaduct\0018C_V3_B02_DECKPLN002.dwg Plotted on Tuesday, January 7, 2020 10:56:37 AM

FED. ROAD DIV. NO.	STATE	FEDERAL AID PROJECT NO.	FISCAL YEAR	SHEET NO.	TOTAL SHEETS
	RI			B03	47

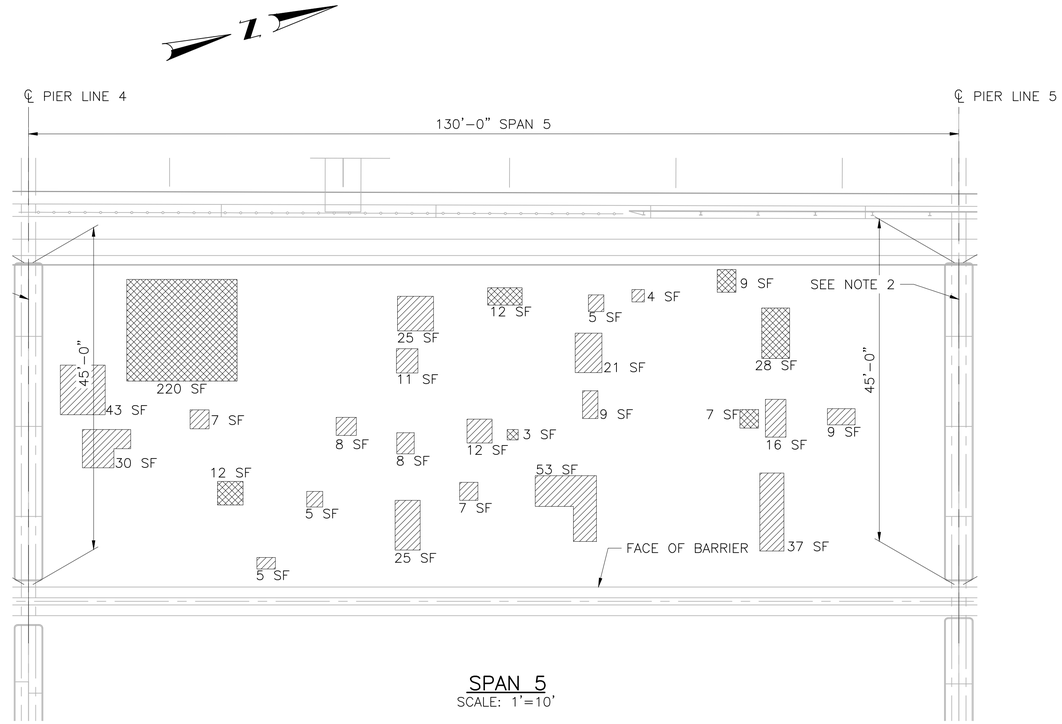

SPAN 5
SCALE: 1'=10'

NOTE:

1. SEE DECK REPAIR AREAS (1 OF 4) FOR NOTES.

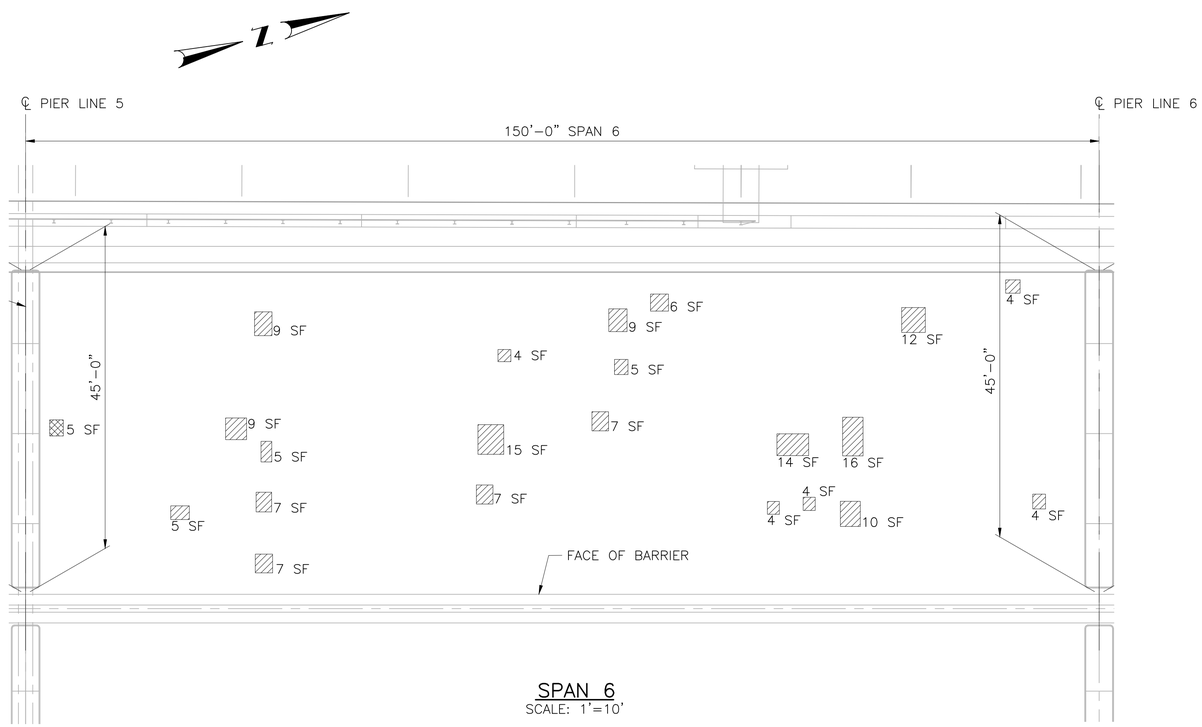

SPAN 6
SCALE: 1'=10'

REPAIR AREAS

THE CONTRACTOR SHALL ANTICIPATE AND INCLUDE AN ADDITIONAL 20% OF REPAIR AREA QUANTITY IN THEIR BID TO SUPPLEMENT THE REPAIR AREAS PROVIDED BELOW.

SPAN 5
PARTIAL DEPTH DECK REPAIR AREA TOTAL = 340 SF
FULL DEPTH DECK REPAIR AREA TOTAL = 291 SF

SPAN 6
PARTIAL DEPTH DECK REPAIR AREA TOTAL = 163 SF
FULL DEPTH DECK REPAIR AREA TOTAL = 5 SF

LEGEND

– PARTIAL DEPTH DECK REPAIR

– FULL DEPTH DECK REPAIR

vhb
1 Cedar Street
Suite 400
Providence, RI 02903
401.272.8100

REVISIONS		
NO.	DATE	BY

RHODE ISLAND
DEPARTMENT OF TRANSPORTATION

PRESERVATION OF
BRIDGE NOS. 575, 578, 704, 706, 707, AND 708
PROVIDENCE, RHODE ISLAND

PROVIDENCE VIADUCT BRIDGE NO. 578
DECK REPAIRS

DECK REPAIR AREAS (3 OF 4)

CHECKED BY _____ DATE _____ SCALE _____

0018C_V3_B03_DECKPLN003

\\vhb\gbl\pro\Providence\72328.04\cad\dgn\planset\Preservation - For Viaduct RFPB-Providence Viaduct\0018C_V3_B03_DECKPLN003.dwg Plotted on Tuesday, January 7, 2020 10:57:17 AM

FED. ROAD DIV. NO.	STATE	FEDERAL AID PROJECT NO.	FISCAL YEAR	SHEET NO.	TOTAL SHEETS
	RI			B04	47

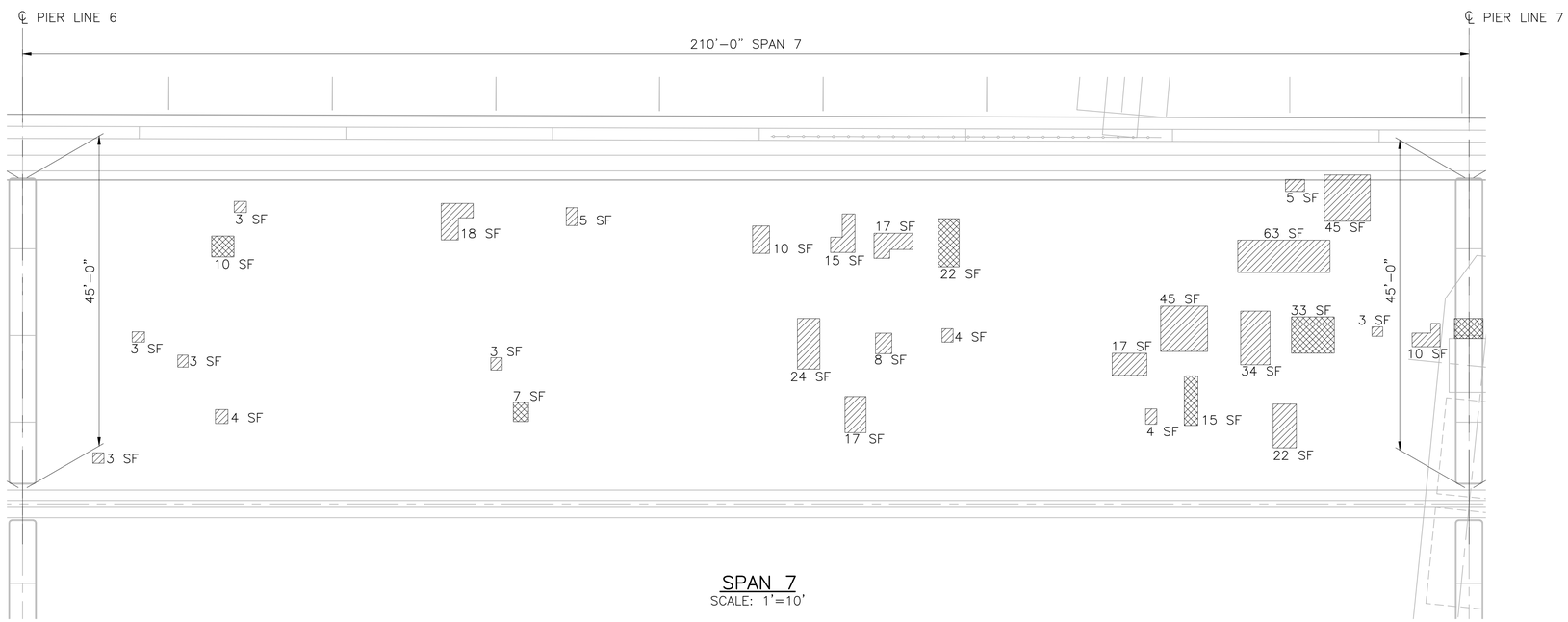

SPAN 7
SCALE: 1'=10'

NOTE:

1. SEE DECK REPAIR AREAS (1 OF 4) FOR NOTES.

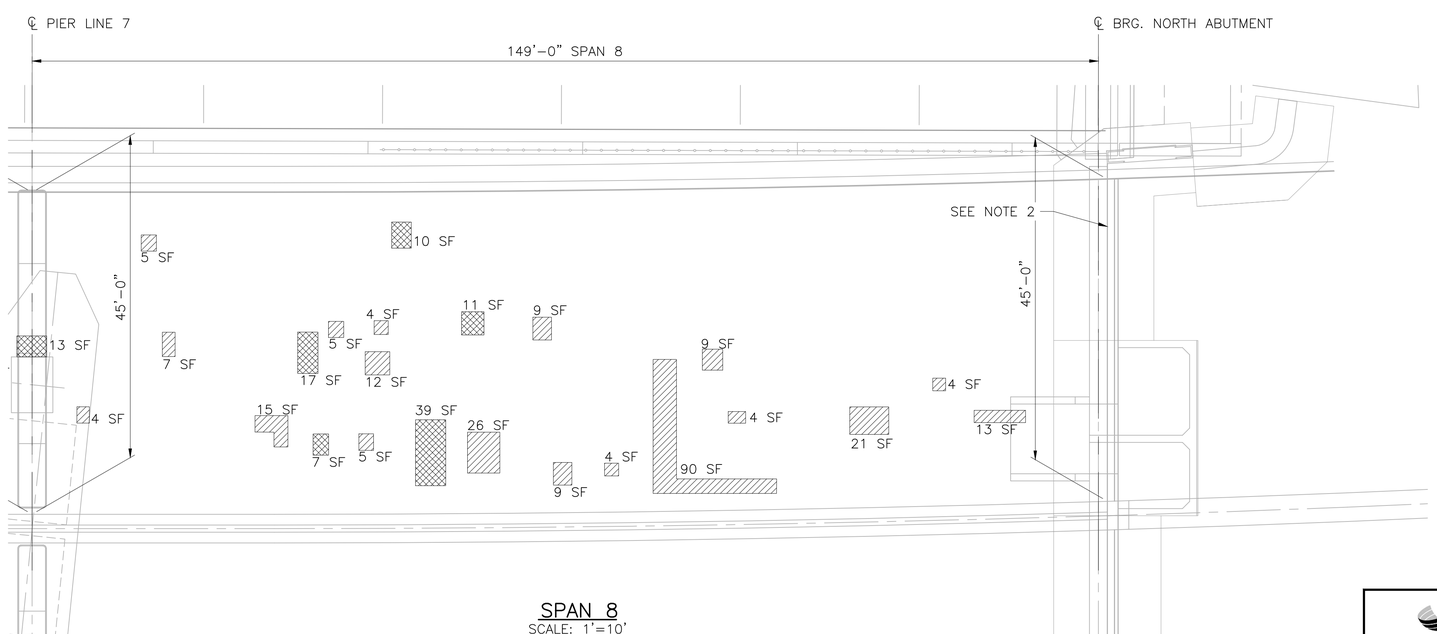

SPAN 8
SCALE: 1'=10'

REPAIR AREAS

THE CONTRACTOR SHALL ANTICIPATE AND INCLUDE AN ADDITIONAL 20% OF REPAIR AREA QUANTITY IN THEIR BID TO SUPPLEMENT THE REPAIR AREAS PROVIDED BELOW.

SPAN 7
PARTIAL DEPTH DECK REPAIR AREA TOTAL = 367 SF
FULL DEPTH DECK REPAIR AREA TOTAL = 87 SF

SPAN 8
PARTIAL DEPTH DECK REPAIR AREA TOTAL = 257 SF
FULL DEPTH DECK REPAIR AREA TOTAL = 97 SF

LEGEND

– PARTIAL DEPTH DECK REPAIR

– FULL DEPTH DECK REPAIR

REVISIONS		
NO.	DATE	BY

RHODE ISLAND
DEPARTMENT OF TRANSPORTATION

PRESERVATION OF
BRIDGE NOS. 575, 578, 704, 706, 707, AND 708
PROVIDENCE, RHODE ISLAND

PROVIDENCE VIADUCT BRIDGE NO. 578
DECK REPAIRS

DECK REPAIR AREAS (4 OF 4)

CHECKED BY _____ DATE _____ SCALE _____

vhb
1 Cedar Street
Suite 400
Providence, RI 02903
401.272.8100

0018C_V3_B04_DECKPLN004

\\vhb\gbl\proj\Providence\72328.04\cad\dgn\planset\Preservation - For Viaduct RFPB-Providence Viaduct\0018C_V3_B04_DECKPLN004.dwg Plotted on Tuesday, January 7, 2020 10:57:56 AM

FED. ROAD DIV. NO.	STATE	FEDERAL AID PROJECT NO.	FISCAL YEAR	SHEET NO.	TOTAL SHEETS
	RI			B05	47

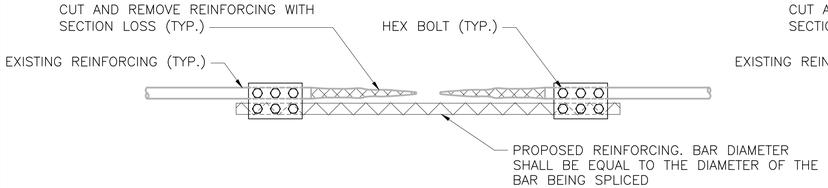

MECHANICAL COUPLER – OPTION 1

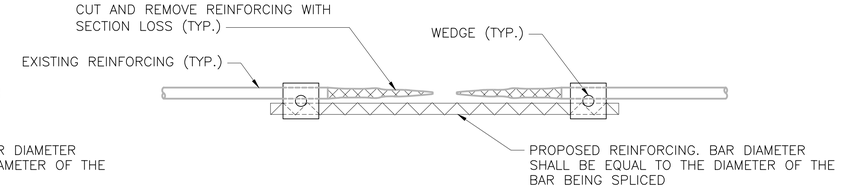

MECHANICAL COUPLER – OPTION 2

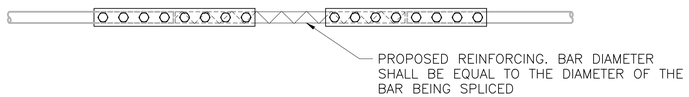

MECHANICAL COUPLER – OPTION 3

MECHANICAL COUPLER NOTES:

1. COVER TO SPLICER AND REINFORCING BAR SHALL NOT BE LESS THAN EXISTING REBAR COVER.
2. MECHANICAL COUPLERS SHALL BE SET WHERE NO SECTION LOSS IS PRESENT ON THE EXISTING REINFORCING.

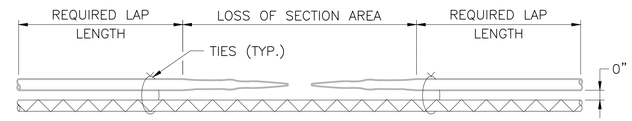

LAP CHART	
BAR	MIN. LAP
#4	1'–10"
#5	2'–3"
#6	2'–9"
#7	3'–7"

LAP SPLICE NOTES:

1. EXTEND THE CONCRETE REMOVAL LIMIT TO ACCOUNT FOR BAR LAP. (NO EXTRA PAYMENT FOR ADDITIONAL CONCRETE REMOVAL).
2. COVER FOR BOTH BARS IS THE SAME.
3. SEE EXISTING 1963 BRIDGE PLANS (RI C06351) FOR REBAR SIZE IN DECK.

LAP SPLICE OPTION

DECK REINFORCING STEEL REPAIR DETAILS

SCALE: N.T.S.

CONCRETE DECK REPAIR NOTES:

1. UNSOUND CONCRETE SHALL BE REMOVED ONLY TO THE DEPTH NECESSARY TO EXPOSE A BONDING SURFACE OF SOUND CONCRETE MATERIAL, BUT NOT LESS THAN $\frac{3}{4}$" BELOW TOP MAT OF REINFORCING STEEL.
2. ALL DETERIORATED AREAS TO BE REPAIRED SHALL BE MARKED AND IDENTIFIED BY THE CONTRACTOR. THE CONTRACTOR SHALL OBTAIN THE APPROVAL OF THE ENGINEER THAT ALL REPAIR AREAS ARE CORRECTLY MARKED PRIOR TO MAKING SAWCUTS FOR REMOVAL OF CONCRETE.
3. ALL DETERIORATED AREAS TO BE REPAIRED SHALL THEN BE OUTLINED WITH $\frac{1}{2}$" ($\pm\frac{1}{8}$") DEEP SAW–CUTS ON A RECTANGULAR SHAPE AROUND THE PERIPHERY OF THE DEFECT. THE ENGINEER WILL INSPECT THE SAWCUT AREAS PRIOR TO REMOVAL OF THE DETERIORATED CONCRETE. THE CONTRACTOR SHALL OBTAIN THE APPROVAL OF THE ENGINEER THAT ALL REPAIR AREAS ARE CORRECTLY SAWCUT PRIOR TO REMOVAL OF ANY CONCRETE.
4. THE CONTRACTOR SHALL CAREFULLY REMOVE SPALLED, LOOSE AND HOLLOW CONCRETE FROM WITHIN THE SAWCUT LIMITS. POWER TOOLS SHALL BE LIMITED TO PNEUMATIC HAMMERS OF NO MORE THAN 15 POUND CLASS. ANY OVERBREAKAGE OR DAMAGE BEYOND THE LIMITS OF THE APPROVED REPAIR SHALL BE REPAIRED BY THE CONTRACTOR AT NO ADDITIONAL COST TO THE STATE.
5. SAWCUTS AND DETERIORATED CONCRETE REMOVAL SHALL BE PERFORMED IN THE PRESENCE OF THE RESIDENT ENGINEER'S REPRESENTATIVE.
6. AFTER REMOVAL HAS BEEN COMPLETED, ALL BOND INHIBITING MATERIALS SUCH AS LOOSELY BONDED AGGREGATES, DIRT, OR GREASE SHALL BE REMOVED FROM THE SURFACE.
7. ALL NEW CONCRETE REPAIRS SHALL BE RESTORED TO ORIGINAL CONTOUR.
8. THE CONTRACTOR SHALL LOCATE EXISTING REINFORCING PRIOR TO DEMOLITION OF REPAIR AREA. THE EXISTING REINFORCING SHALL NOT BE DAMAGED.
9. ALL CORRODED REINFORCING BARS SHALL BE THOROUGHLY CLEANED TO REMOVE ALL RUST.
10. DURING REMOVAL OF DETERIORATED CONCRETE, IF THE CONTRACTOR'S OPERATIONS CAUSE ANY DAMAGE TO THE EXISTING STRUCTURE, HE SHALL BE REQUIRED TO REPAIR THE AREA TO THE SATISFACTION OF THE ENGINEER AT NO ADDITIONAL COST TO THE STATE.
11. THE BONDING SURFACES OF THE REPAIR AREA SHALL BE PREPARED IN ACCORDANCE WITH THE RIDOT STANDARD SPECIFICATION SECTION 818. THE SURFACES AGAINST WHICH CONCRETE IS TO BE PLACED SHALL BE KEPT WET FOR AT LEAST ONE HOUR AND THEN ALLOWED TO DRY TO A SATURATED SURFACE DRY CONDITION JUST PRIOR TO APPLICATION OF THE CONCRETE.

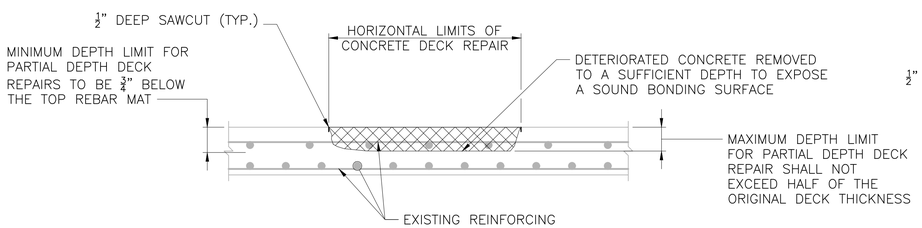

PARTIAL DEPTH DECK REPAIR

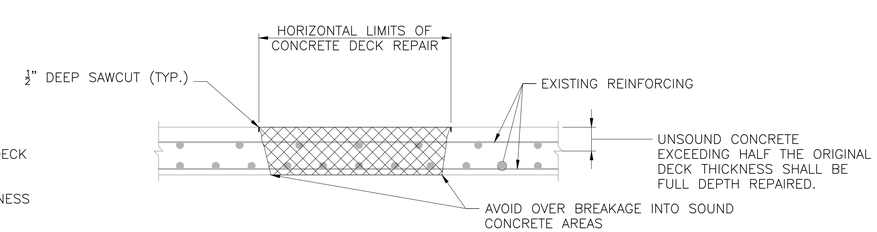

FULL DEPTH DECK REPAIR

NOTES:

1. TRAFFIC WILL NOT BE ALLOWED ON ANY AREAS WHERE THE CONTRACTOR HAS NOT PLACED AND FINISHED CONCRETE UNTIL THE MATERIAL HAS PROPERLY CURED AND HAS DEVELOPED THE REQUIRED STRENGTH AS DETERMINED BY STRENGTH TEST OR AS DETERMINED BY THE ENGINEER.
2. PRIOR TO REMOVAL OF CONCRETE INSTALL PROTECTIVE TIMBER SHIELDING.

EXPOSED CONCRETE DECK REPAIR DETAILS

SCALE: N.T.S.

REVISIONS		
NO.	DATE	BY

vhb
1 Cedar Street
Suite 400
Providence, RI 02903
401.272.8100

RHODE ISLAND
DEPARTMENT OF TRANSPORTATION

PRESERVATION OF
BRIDGE NOS. 575, 578, 704, 706, 707, AND 708
PROVIDENCE, RHODE ISLAND

PROVIDENCE VIADUCT BRIDGE NO. 578
DECK REPAIRS

CONCRETE DECK REPAIR

CHECKED BY _____ DATE _____ SCALE _____

0018C_V3_B05_CONCREP001

\\vhb\gbl\proj\Providence\72328.04\cad\st\planset\Preservation - For Viaduct RFPB-Providence Viaduct\0018C_V3_B05_CONCREP001.dwg Plotted on Tuesday, January 7, 2020 10:58:12 AM

FED. ROAD DIV. NO.	STATE	FEDERAL AID PROJECT NO.	FISCAL YEAR	SHEET NO.	TOTAL SHEETS
	RI			B06	47

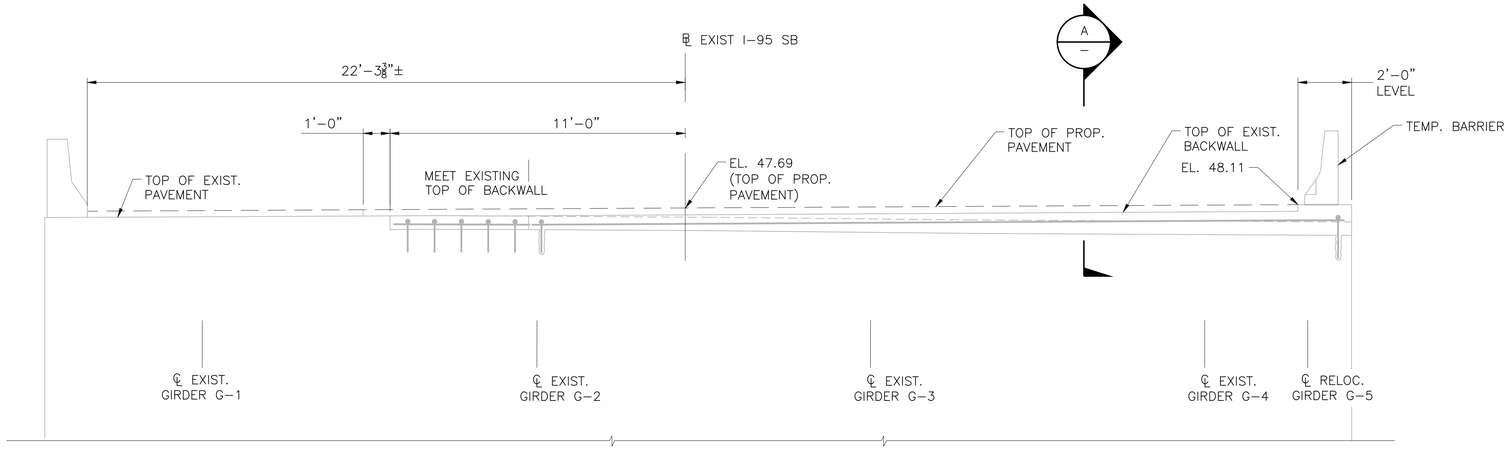

ELEVATION OF BACKWALL
SOUTH ABUTMENT
SCALE: 3/8"=1'-0"

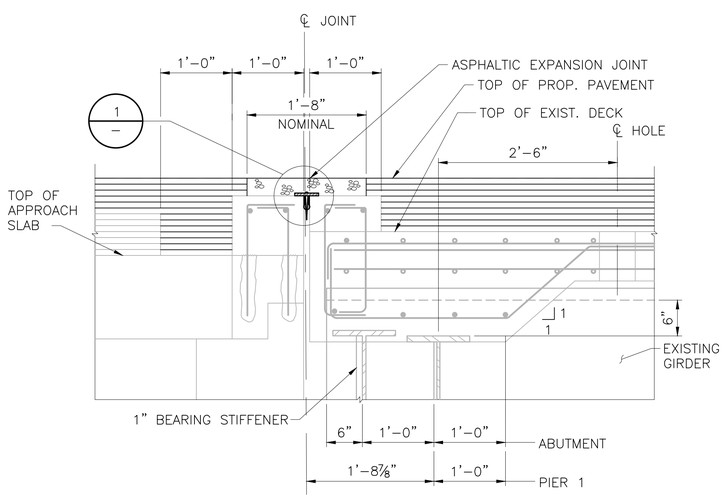

SECTION
SCALE: 1"=1'-0"
A
–

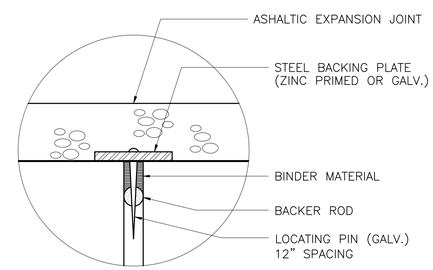

DETAIL
NOT TO SCALE
1
–

REVISIONS		
NO.	DATE	BY

RHODE ISLAND
DEPARTMENT OF TRANSPORTATION

PRESERVATION OF
BRIDGE NOS. 575, 578, 704, 706, 707, AND 708
PROVIDENCE, RHODE ISLAND

PROVIDENCE VIADUCT BRIDGE NO. 578
DECK REPAIRS

DECK JOINT DETAILS 1

CHECKED BY _____ DATE _____ SCALE _____

vhb
1 Cedar Street
Suite 400
Providence, RI 02903
401.272.8100

0018C_V3_B06_JOINTDET001

\\vhb\gbl\proj\Providence\72328.04\cadd\planset\Preservation - For Viaduct RFP\B-Providence Viaduct\0018C_V3_B06_JOINTDET001.dwg Plotted on Tuesday, January 7, 2020 10:58:29 AM

FED. ROAD DIV. NO.	STATE	FEDERAL AID PROJECT NO.	FISCAL YEAR	SHEET NO.	TOTAL SHEETS
	RI			B07	47

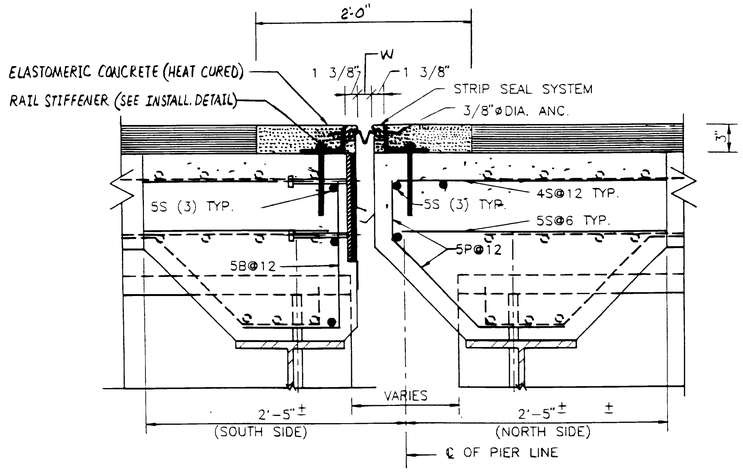

SECTION AT PIERS 1,4,AND 5

SCALE: 1 1/2"=1'-0"

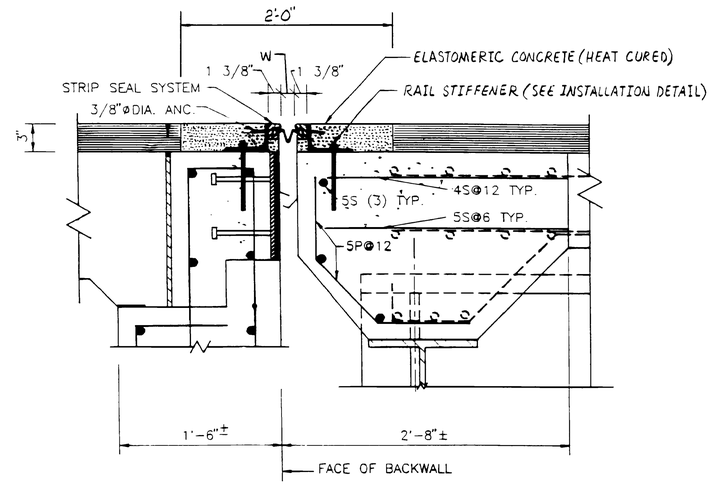

SECTION AT NORTH ABUTMENT

SCALE: 1 1/2"=1'-0"

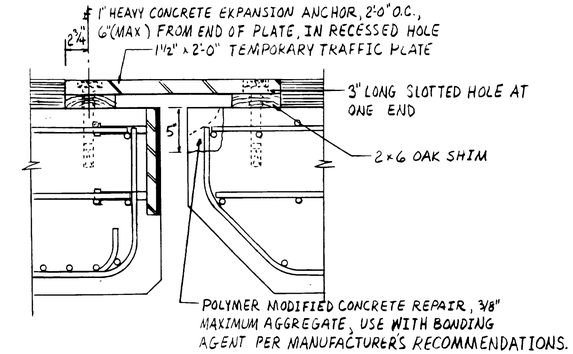

SECTION AT PIER 5
(NORTHBOUND LANES)

SCALE:1 1/2"=1-0"

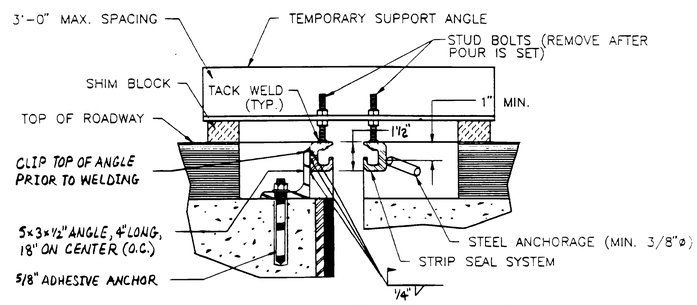

INSTALLATION OF STRIP SEAL

NOT TO SCALE

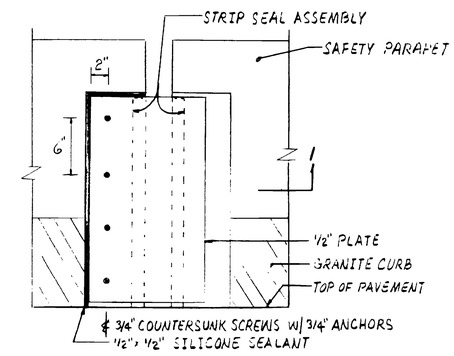

ELEVATION AT SAFETY PARAPET

SCALE: 1 1/2"=1-0"

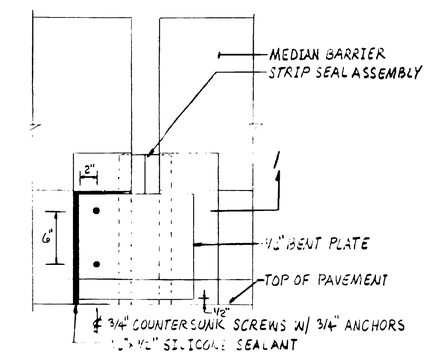

ELEVATION AT MEDIAN BARRIER

SCALE: 1 1/2"=1-0"

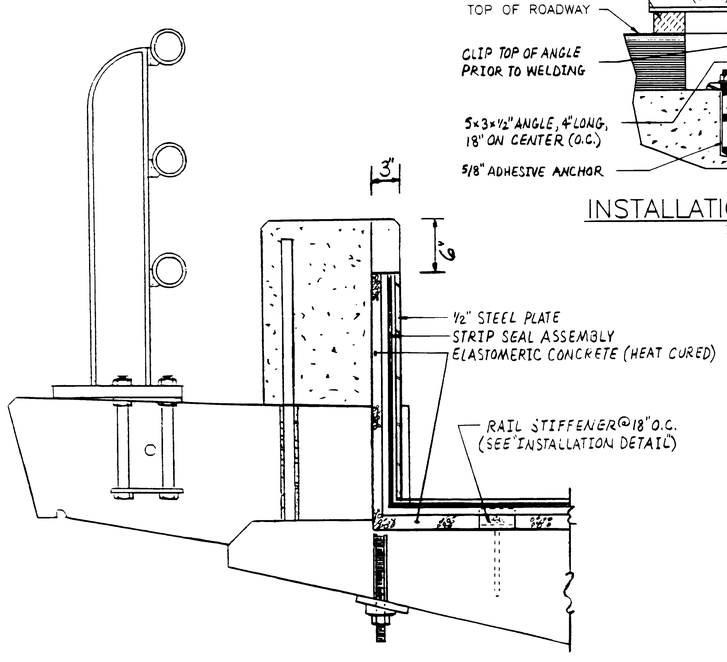

SECTION AT SAFETY PARAPET

SCALE: 1 1/2"=1-0"

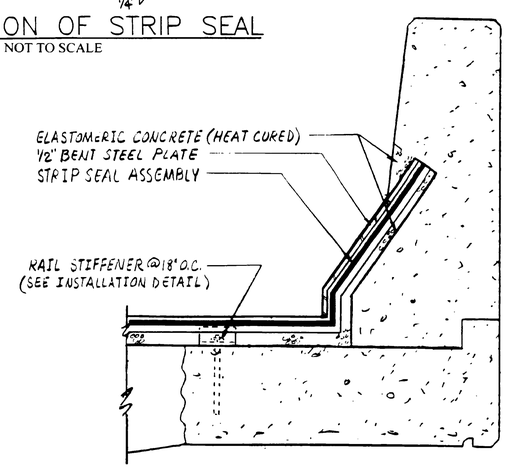

SECTION AT MEDIAN BARRIER

SCALE: 1 1/2"=1-0"

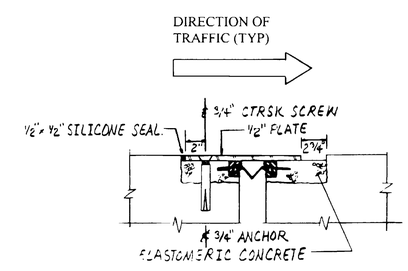

SECTION 1

SCALE:1 1/2"=1-0"

TEMPERATURE CHART - ALL LOCATIONS

MOVEMENT CLASSIFICATION	W (INCHES)				
	30 F	40 F	50 F	60 F	70 F
4 INCHES	2.375	2.125	1.875	1.625	1.375

REVISIONS		
NO.	DATE	BY

vhb
1 Cedar Street
Suite 400
Providence, RI 02903
401.272.8100

RHODE ISLAND
DEPARTMENT OF TRANSPORTATION

PRESERVATION OF
BRIDGE NOS. 575, 578, 704, 706, 707, AND 708
PROVIDENCE, RHODE ISLAND

PROVIDENCE VIADUCT BRIDGE NO. 578
DECK REPAIRS

DECK JOINT DETAILS 2

CHECKED BY _____ DATE _____ SCALE _____

0018C_V3_B07_JOINTDET002

\\vhb\gbl\proj\Providence\72328.04\cad\st\planset\Preservation - For Viaduct RFP\B-Providence Viaduct\0018C_V3_B07_JOINTDET002.dwg Plotted on Tuesday, January 7, 2020 10:58:47 AM

FED. ROAD DIV. NO.	STATE	FEDERAL AID PROJECT NO.	FISCAL YEAR	SHEET NO.	TOTAL SHEETS
	RI			C01	64

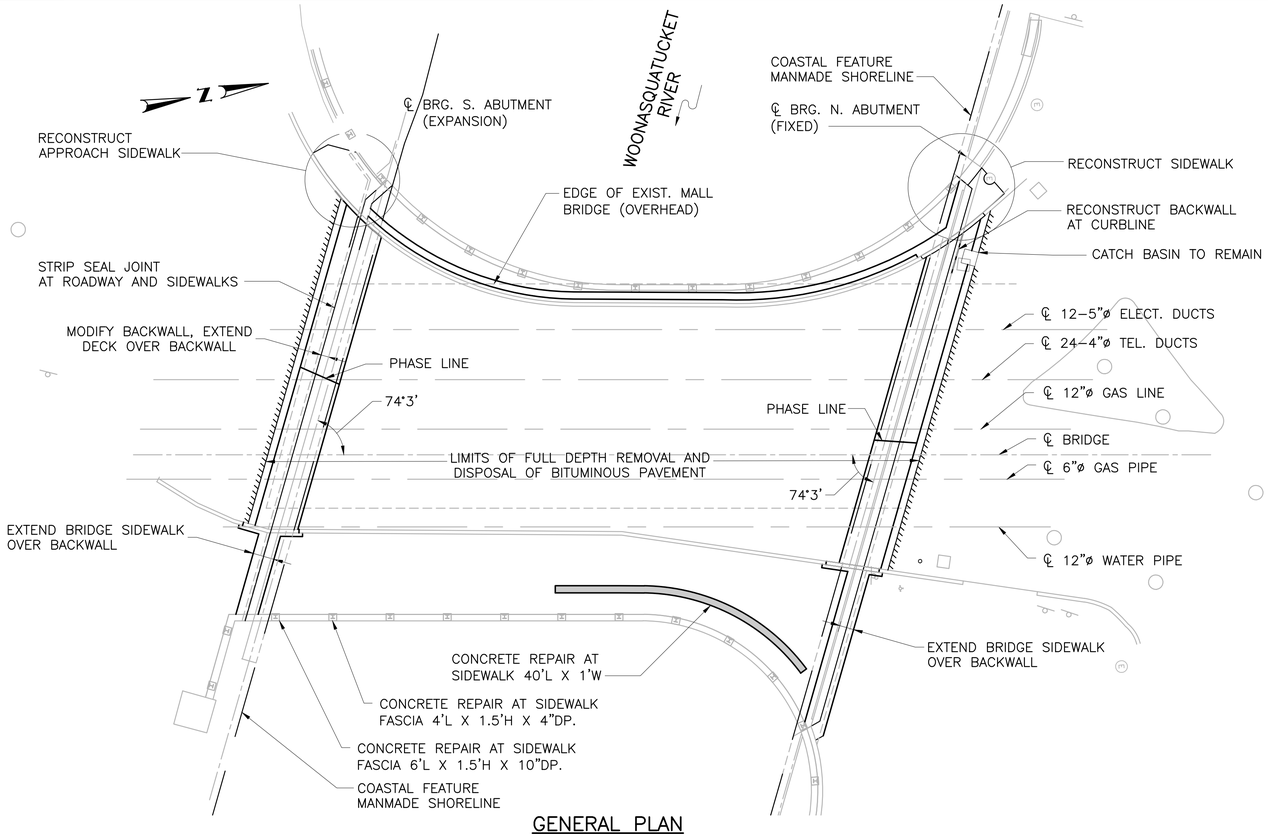

GENERAL PLAN

SCALE: 1"= 10'–0"

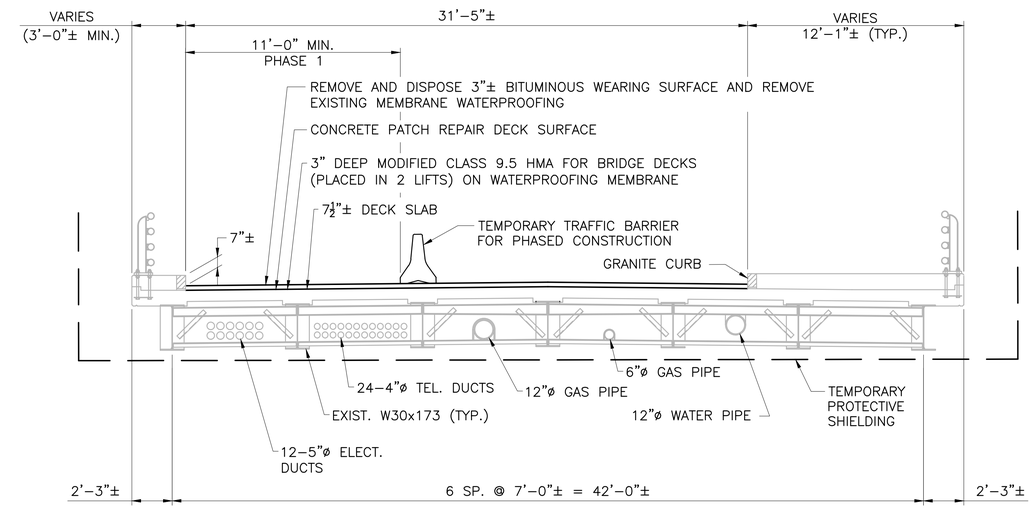

NOTE

PHASE 1 TEMPORARY BARRIER SHOWN, FOR PHASE 2 SEE TRAFFIC CONTROL PLANS, VOLUME 1.

EXISTING TRANSVERSE SECTION

SCALE: 1/4"=1'–0"

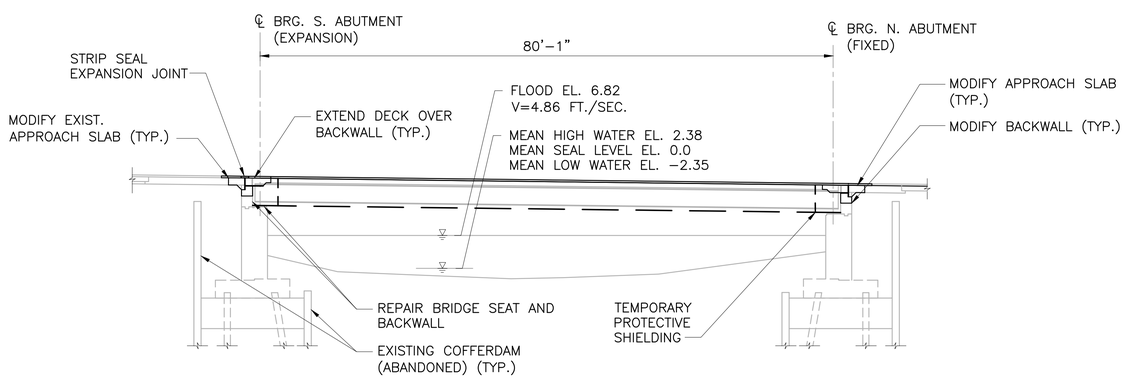

LONGITUDINAL SECTION

SCALE: 1"=10'–0"

NOTES

1. THE ENTIRE WORK AREA IS WITHIN THE 200' CONTIGUOUS AREA.
2. BOTTOM OF PROTECTIVE SHIELDING SHALL BE INSTALLED ABOVE ELEVATION 7.82 AND SUPPORTED FROM THE BRIDGE SUPERSTRUCTURE.
3. FLAT BOTTOMED RAFTS OR SIMILAR MAY BE USED FOR ACCESS BUT SHALL BE REMOVED WHEN NOT IN USE.

LEGEND

REPAIR AREA

H – HIGH
L – LONG
W – WIDE
DP – DEEP

vhb
1 Cedar Street
Suite 400
Providence, RI 02903
401.272.8100

REVISIONS		
NO.	DATE	BY

RHODE ISLAND
DEPARTMENT OF TRANSPORTATION

PRESERVATION OF
BRIDGE NOS. 575, 578, 704, 706, 707, AND 708

PROVIDENCE, RHODE ISLAND

PARK ST. BRIDGE NO. 704 REPAIR

GENERAL PLAN AND LONGITUDINAL SECTION

CHECKED BY _____ DATE _____ SCALE AS SHOWN

\\vhb\gbl\proj\Providence\72328.04\cad\stplanset\Preservation - For Viaduct RFP\C-Park Street\0018C_V3_C01_PARK_GENERAL.dwg Plotted on Tuesday, January 7, 2020 10:59:17 AM

FED. ROAD DIV. NO.	STATE	FEDERAL AID PROJECT NO.	FISCAL YEAR	SHEET NO.	TOTAL SHEETS
	RI			C02	64

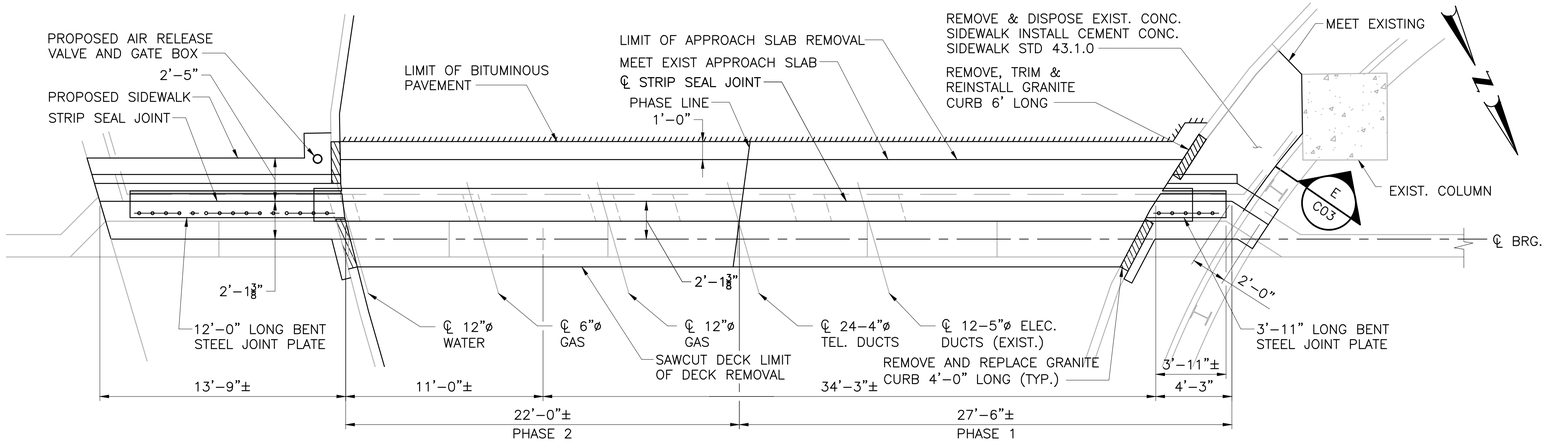

DECK PLAN

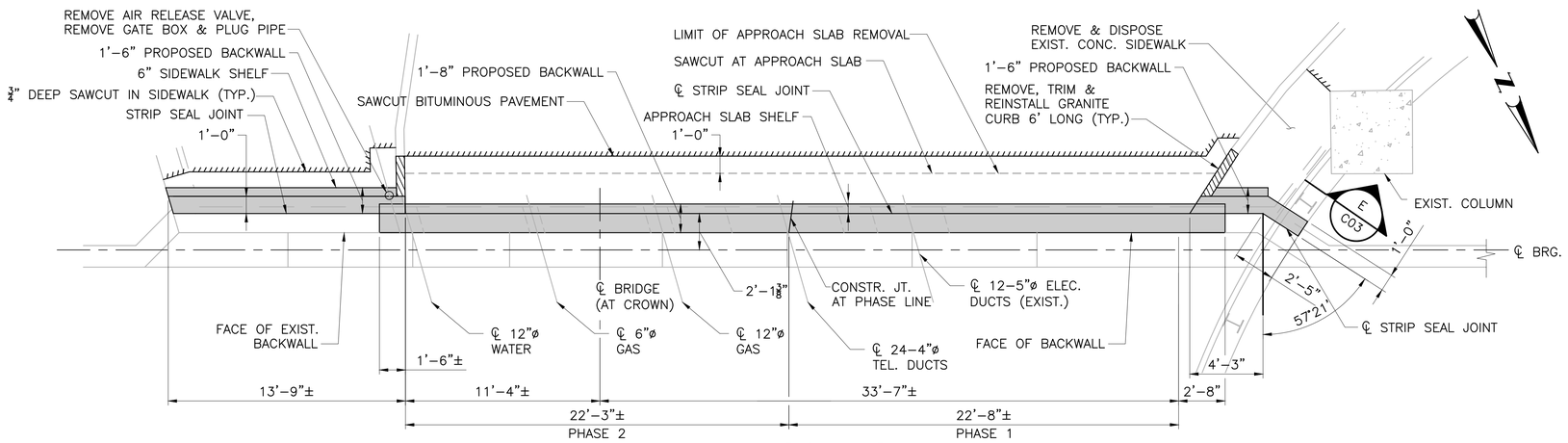

BACKWALL PLAN

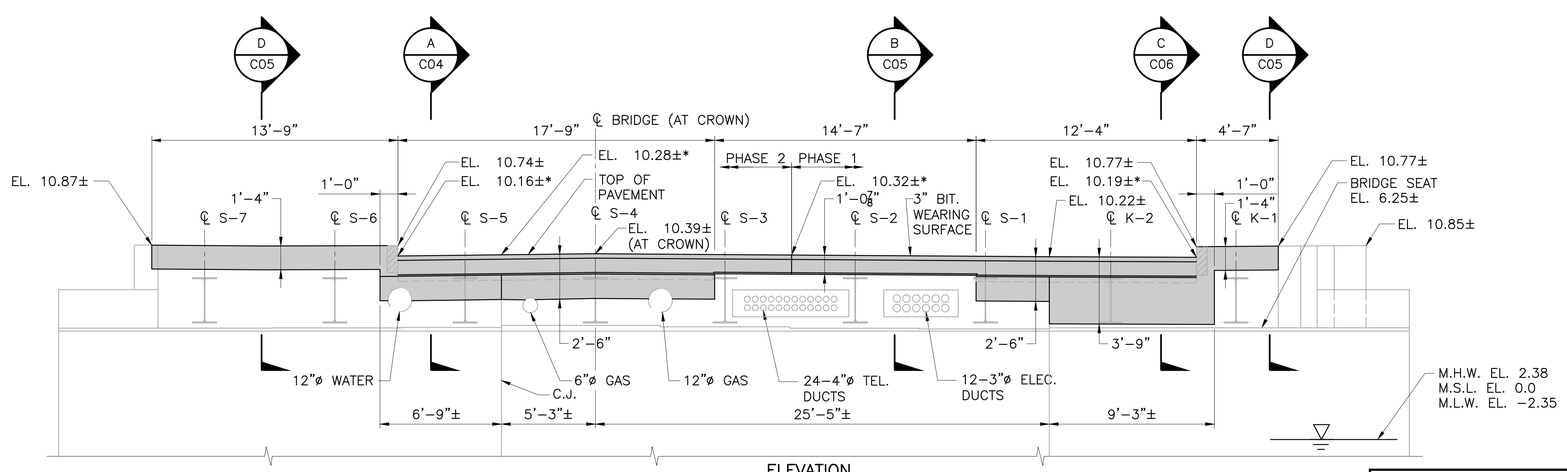

ELEVATION

SOUTH ABUTMENT PLAN AND ELEVATION

SCALE: 1/4"= 1'-0"

NOTE

1. CONTRACTOR SHALL FIELD VERIFY ALL ELEVATIONS AND DIMENSIONS OF BACKWALL AND DECK EXPANSION JOINT.
2. * ELEVATION IS AT TOP OF PAVEMENT. PROPOSED PAVEMENT THICKNESS=3" TO MATCH EXISTING. TOP OF DECK ELEVATION TO BE 3" LESS THAN TOP OF PAVEMENT ELEVATION.

LEGEND

NEW CONCRETE

C.J. CONTRACTION JOINT

vhb
1 Cedar Street
Suite 400
Providence, RI 02903
401.272.8100

REVISIONS		
NO.	DATE	BY

RHODE ISLAND
DEPARTMENT OF TRANSPORTATION

PRESERVATION OF
BRIDGE NOS. 575, 578, 704, 706, 707, AND 708
PROVIDENCE, RHODE ISLAND

PARK ST. BRIDGE NO. 704 REPAIR

SOUTH ABUTMENT MODIFICATIONS

CHECKED BY _____ DATE _____ SCALE AS SHOWN

0018C_V3_C02_PARK_SABUTL

\\vhb\gbl\pro\Providence\72328.04\cad\stylanset\Preservation - For Viaduct RFP\C-Park Street\0018C_V3_C02_PARK_SABUTL.dwg Plotted on Tuesday, January 7, 2020 10:59:33 AM

FED. ROAD DIV. NO.	STATE	FEDERAL AID PROJECT NO.	FISCAL YEAR	SHEET NO.	TOTAL SHEETS
	RI			C03	64

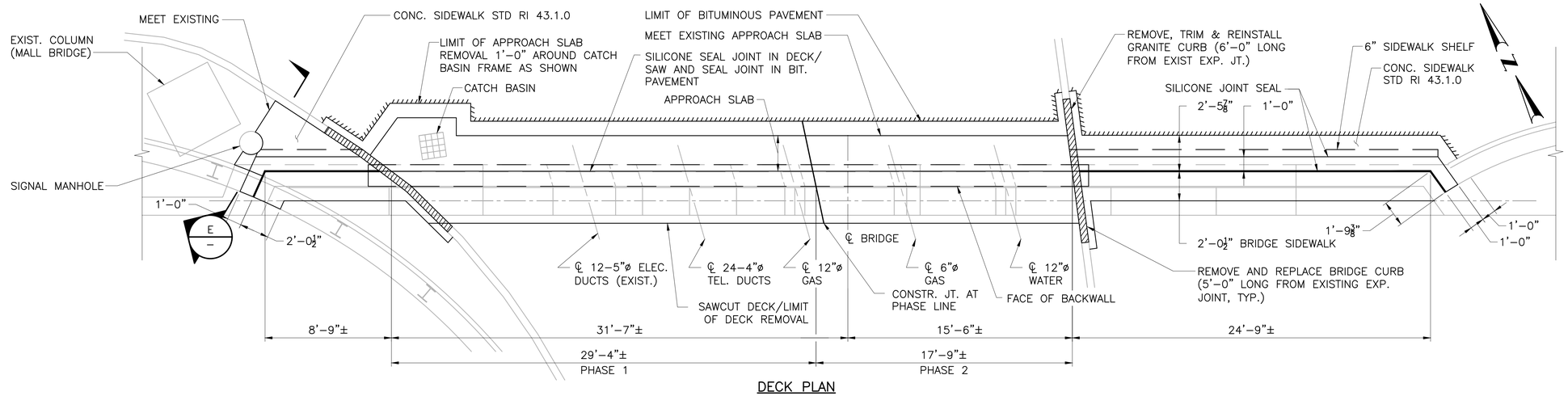

DECK PLAN

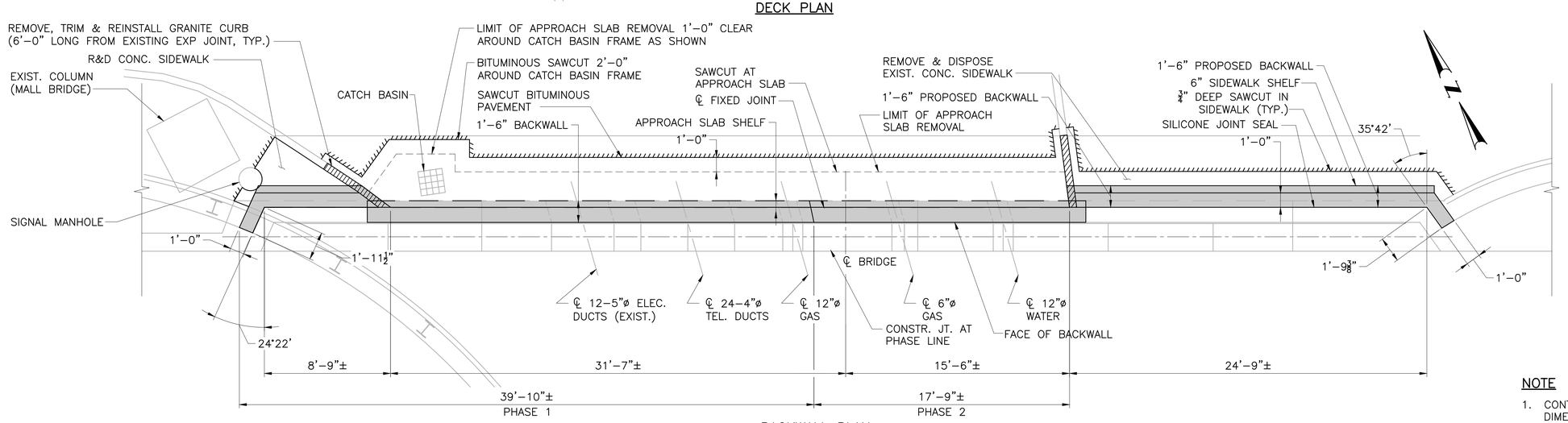

BACKWALL PLAN

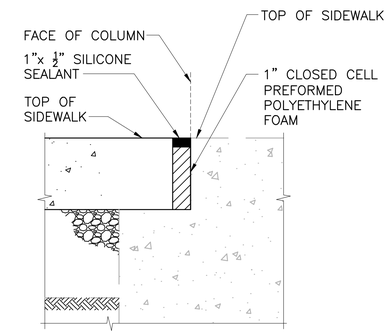

JOINT SEALANT AT SIDEWALK

SECTION E/C02 E/–
NOT TO SCALE

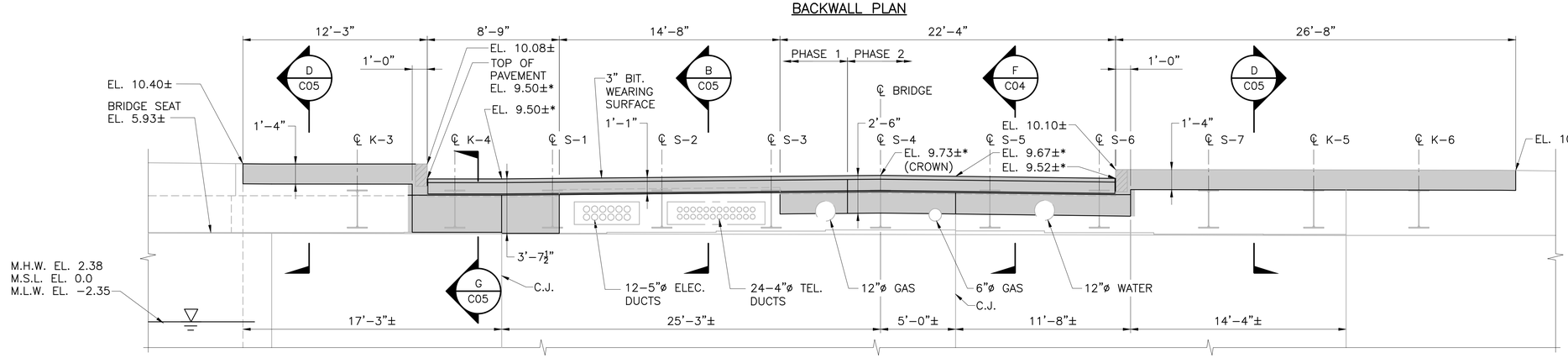

ELEVATION

NORTH ABUTMENT PLAN AND ELEVATION

SCALE: 1/4"= 1'-0"

NOTE

1. CONTRACTOR SHALL FIELD VERIFY ALL ELEVATIONS AND DIMENSIONS OF BACKWALL AND DECK EXPANSION JOINT.
2. * ELEVATION IS AT TOP OF PAVEMENT. PROPOSED PAVEMENT THICKNESS=3" TO MATCH EXISTING. TOP OF DECK ELEVATION TO BE 3" LESS THAN TOP OF PAVEMENT ELEVATION.

LEGEND

	NEW CONCRETE
C.J.	CONTRACTION JOINT

vhb
1 Cedar Street
Suite 400
Providence, RI 02903
401.272.8100

REVISIONS		
NO.	DATE	BY

RHODE ISLAND
DEPARTMENT OF TRANSPORTATION

PRESERVATION OF
BRIDGE NOS. 575, 578, 704, 706, 707, AND 708
PROVIDENCE, RHODE ISLAND

PARK ST. BRIDGE NO. 704 REPAIR

NORTH ABUTMENT MODIFICATIONS

CHECKED BY _____ DATE _____ SCALE AS SHOWN

0018C_V3_C03_PARK_NABUTL

\\vhb\gbl\proj\Providence\72328.04\cad\st\planset\Preservation - For Viaduct RFP\C-Park Street\0018C_V3_C03_PARK_NABUTL.dwg Plotted on Tuesday, January 7, 2020 10:59:52 AM

FED. ROAD DIV. NO.	STATE	FEDERAL AID PROJECT NO.	FISCAL YEAR	SHEET NO.	TOTAL SHEETS
	RI			C04	64

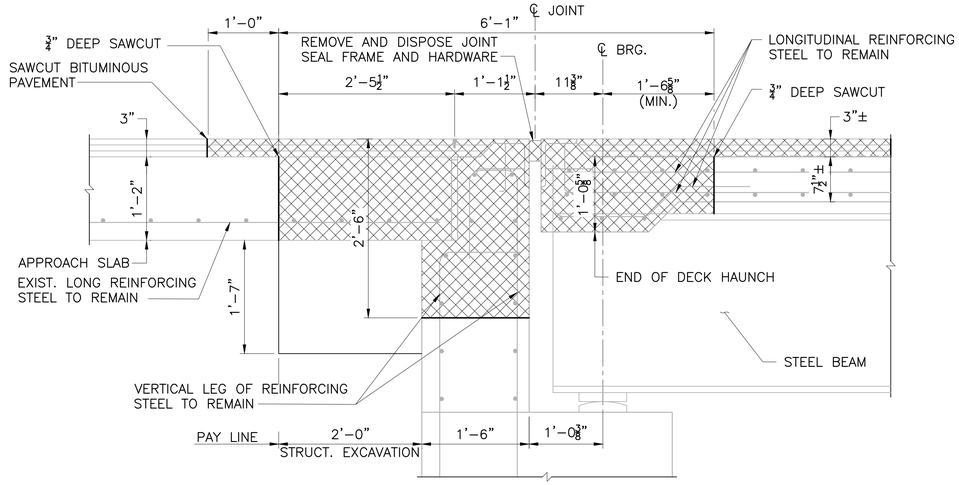

EXISTING

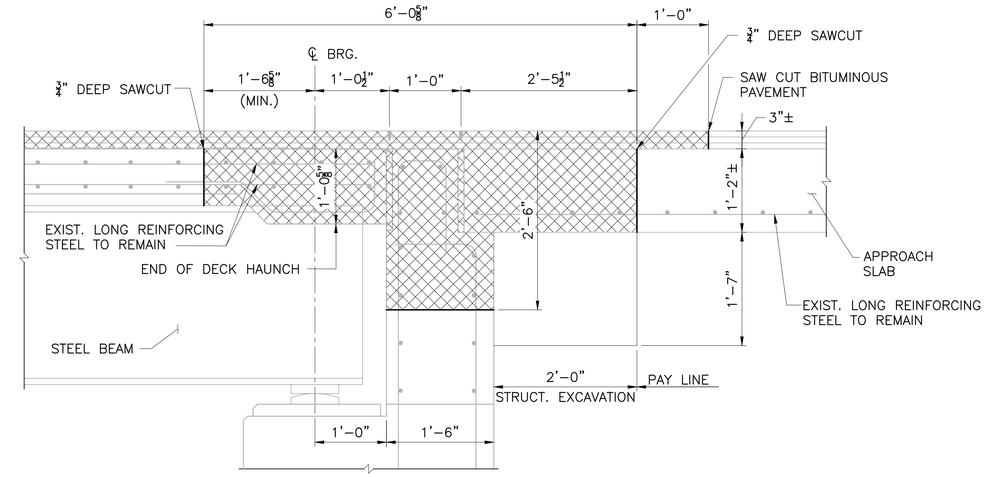

EXISTING

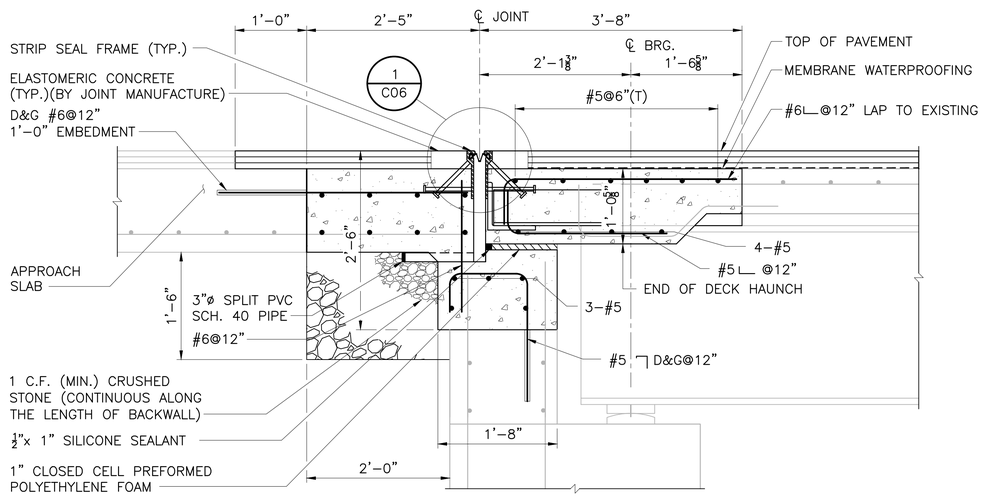

PROPOSED
SOUTH ABUTMENT BACKWALL REPAIR

SECTION (A / C02)
SCALE: 1"=1'-0"

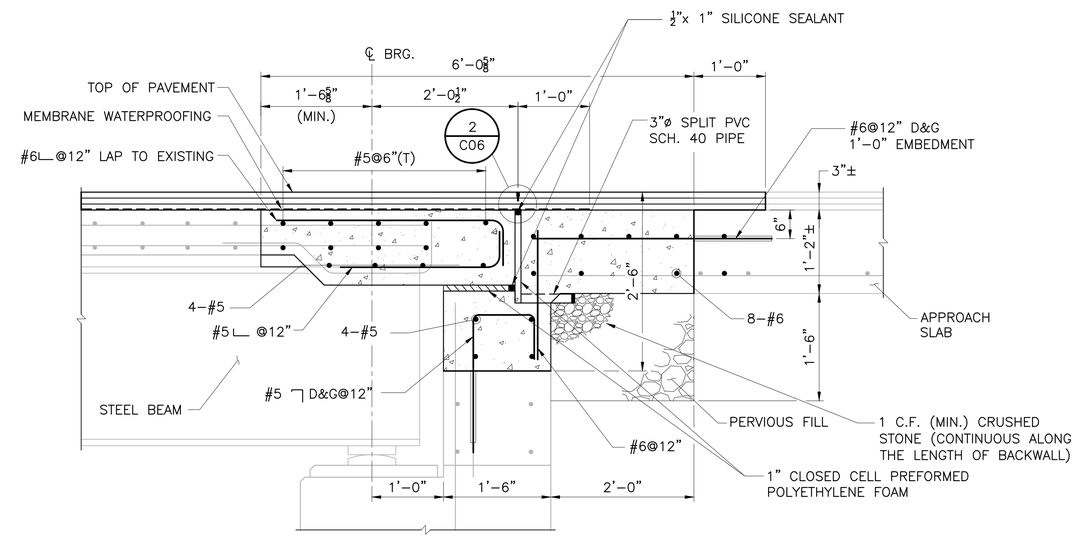

PROPOSED
NORTH ABUTMENT BACKWALL REPAIR

SECTION (F / C03)
SCALE: 1"=1'-0"

LEGEND

REMOVE AND DISPOSE (R&D)

NEW CONCRETE

vhb
1 Cedar Street
Suite 400
Providence, RI 02903
401.272.8100

REVISIONS		
NO.	DATE	BY

RHODE ISLAND
DEPARTMENT OF TRANSPORTATION

PRESERVATION OF
BRIDGE NOS. 575, 578, 704, 706, 707, AND 708
PROVIDENCE, RHODE ISLAND

PARK ST. BRIDGE NO. 704 REPAIR

BACKWALL REPAIR DETAILS 1

CHECKED BY _____ DATE _____ SCALE _____

\\vhb\gbl\proj\Providence\72328.04\cad\st\planset\Preservation - For Viaduct RFP\C-Park Street\0018C_V3_C04_PARK_BACKWALL001.dwg Plotted on Tuesday, January 7, 2020 11:00:08 AM

FED. ROAD DIV. NO.	STATE	FEDERAL AID PROJECT NO.	FISCAL YEAR	SHEET NO.	TOTAL SHEETS
	RI			C05	64

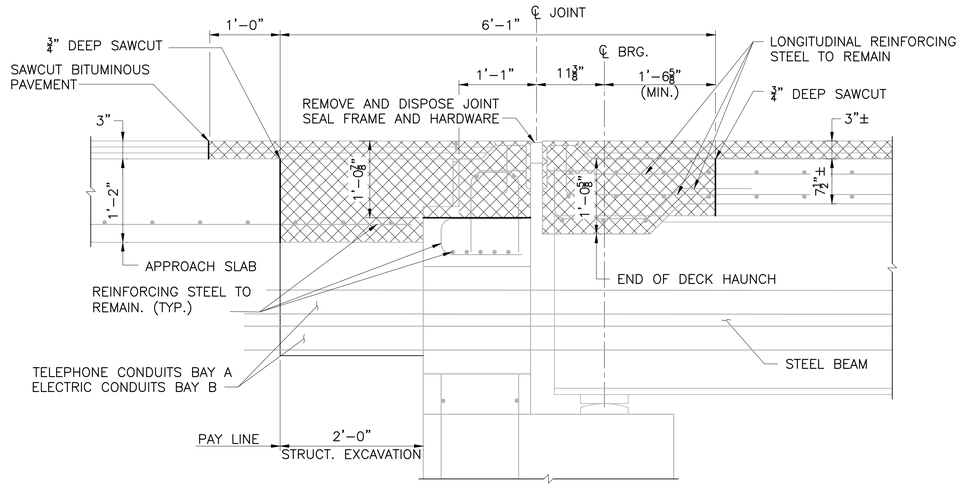

EXISTING

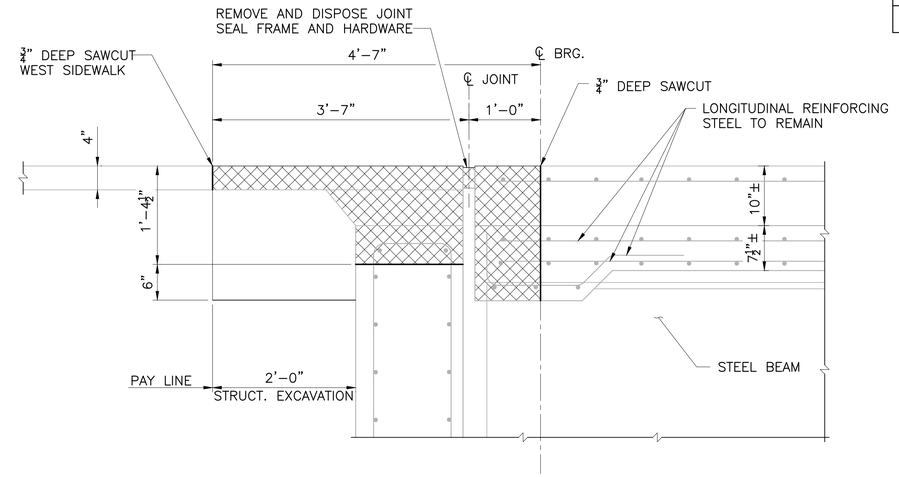

EXISTING

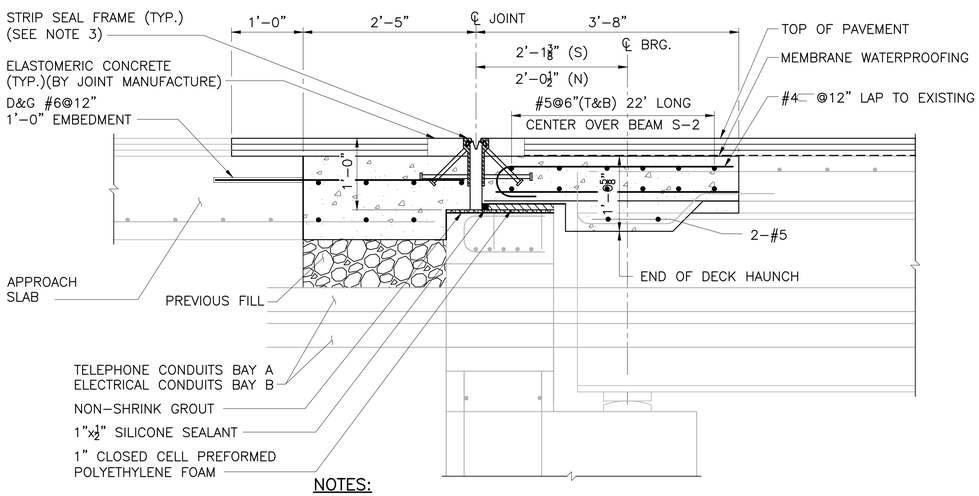

NOTES:
1. TREATMENT AT ELECTRIC AND TELEPHONE BAYS A & B.
2. SOUTH ABUTMENT SHOWN NORTH ABUTMENT SIMILAR.
3. STRIP SEAL JOINT AT SOUTH ABUTMENT SHOWN. NORTH ABUTMENT SIMILAR EXCEPT FOR JOINT TYPE.

PROPOSED
SOUTH ABUTMENT AND NORTH ABUTMENT BACKWALL REPAIR

SECTION B/C02 B/C03
SCALE: 1"=1'-0"

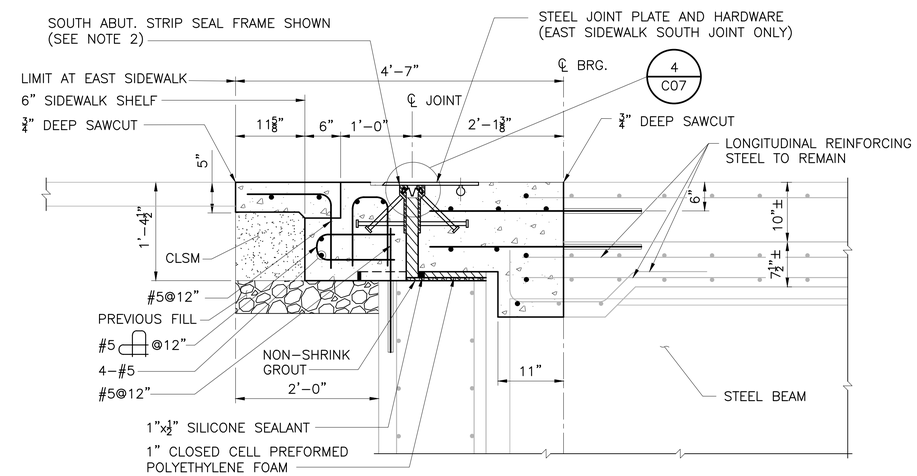

NOTES:
1. SECTION AT SIDEWALK. SOUTH ABUTMENT SHOWN NORTH ABUTMENT SIMILAR.
2. STRIP SEAL JOINT AT SOUTH ABUTMENT SHOWN. NORTH ABUTMENT SIMILAR EXCEPT FOR JOINT IN SIDEWALK.
3. SEE GENERAL PLAN FOR LIMITS OF APPROACH SIDEWALK

PROPOSED
SOUTH ABUTMENT AND NORTH ABUTMENT BACKWALL REPAIR

SECTION D/C02 D/C03
SCALE: 1"=1'-0"

LEGEND

REMOVE AND DISPOSE (R&D)

NEW CONCRETE

(S) DIMENSION AT SOUTH ABUTMENT

(N) DIMENSION AT NORTH ABUTMENT

vhb
1 Cedar Street
Suite 400
Providence, RI 02903
401.272.8100

REVISIONS		
NO.	DATE	BY

RHODE ISLAND
DEPARTMENT OF TRANSPORTATION

PRESERVATION OF
BRIDGE NOS. 575, 578, 704, 706, 707, AND 708
PROVIDENCE, RHODE ISLAND

PARK ST. BRIDGE NO. 704 REPAIR

BACKWALL REPAIR DETAILS 2

CHECKED BY _____ DATE _____ SCALE _____

0018C_V3_C05_PARK_BACKWALL002

\\vhb\gbl\proj\Providence\72328.04\cad\st\planset\Preservation - For Viaduct RFP\C-Park Street\0018C_V3_C05_PARK_BACKWALL002.dwg Plotted on Tuesday, January 7, 2020 11:00:23 AM

FED. ROAD DIV. NO.	STATE	FEDERAL AID PROJECT NO.	FISCAL YEAR	SHEET NO.	TOTAL SHEETS
	RI			C06	64

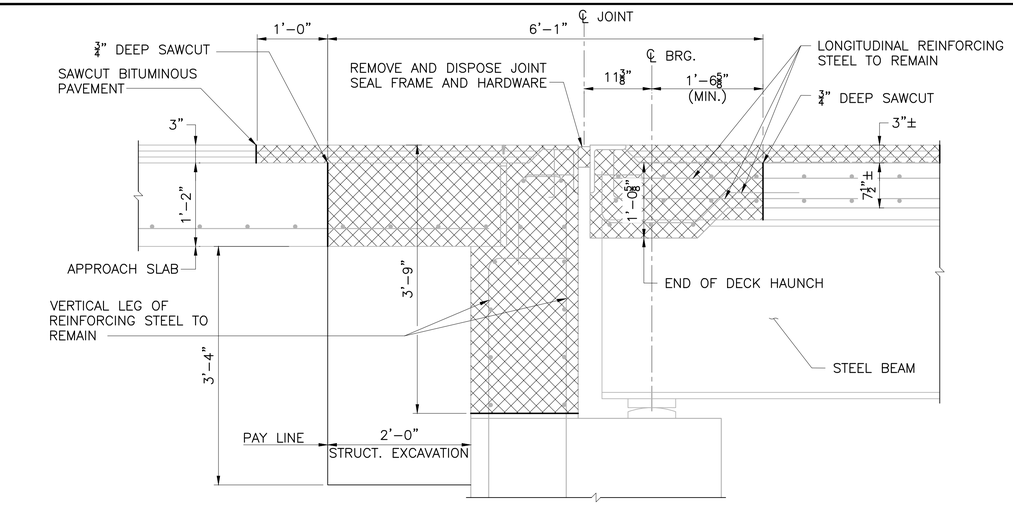

EXISTING

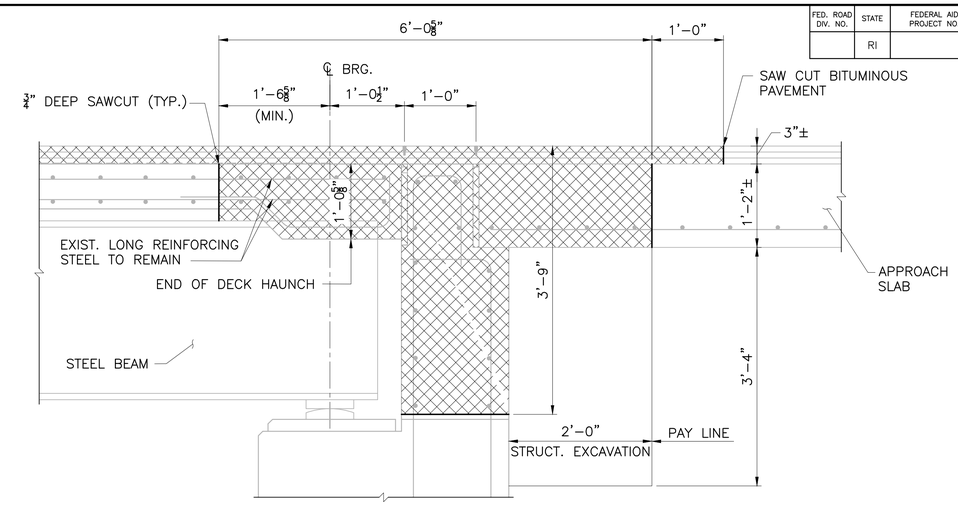

EXISTING

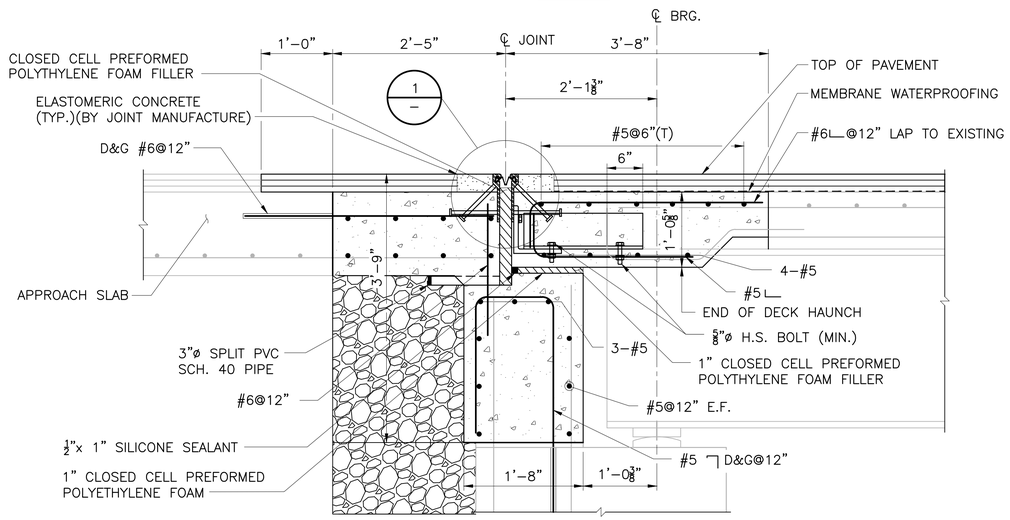

PROPOSED
SOUTH ABUTMENT BACKWALL REPAIR

SECTION C/C02
SCALE: 1"=1'-0"

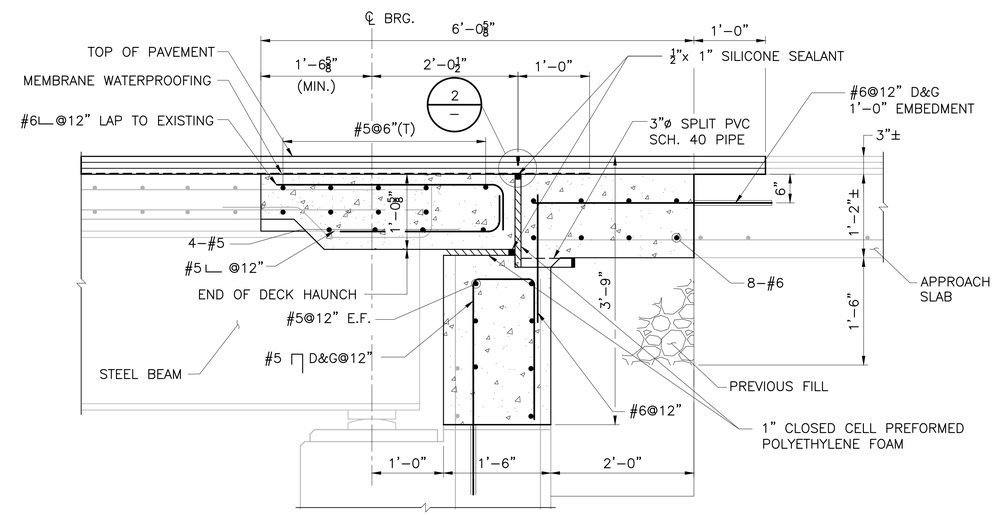

PROPOSED
NORTH ABUTMENT BACKWALL REPAIR

SECTION G/C03
SCALE: 1"=1'-0"

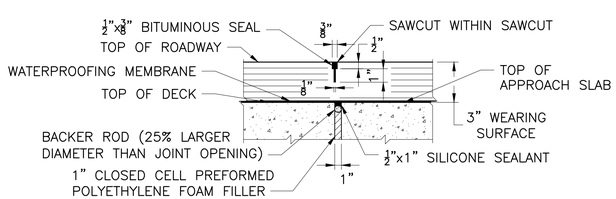

DETAIL 2/C04
SCALE: N.T.S.

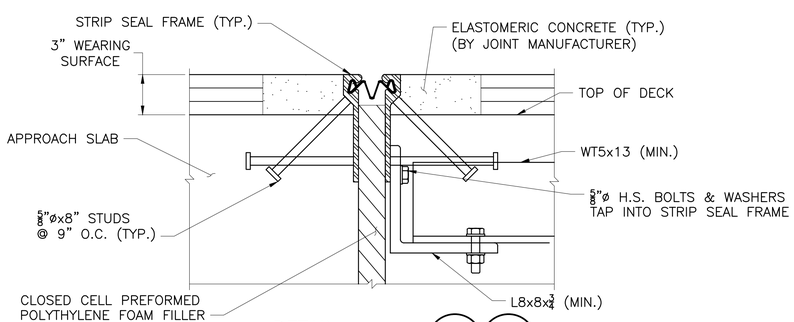

DETAIL 1/C04
SCALE: N.T.S.

LEGEND

REMOVE AND DISPOSE (R&D)

NEW CONCRETE

vhb
1 Cedar Street
Suite 400
Providence, RI 02903
401.272.8100

REVISIONS		
NO.	DATE	BY

RHODE ISLAND
DEPARTMENT OF TRANSPORTATION

PRESERVATION OF
BRIDGE NOS. 575, 578, 704, 706, 707, AND 708
PROVIDENCE, RHODE ISLAND

PARK ST. BRIDGE NO. 704 REPAIR

BACKWALL REPAIR DETAILS 3

CHECKED BY _____ DATE _____ SCALE _____

0018C_V3_C06_PARK_BACKWALL003

\\vhb\gbl\proj\Providence\72328.04\acad\st\planset\Preservation - For Viaduct RFP\C-Park Street\0018C_V3_C06_PARK_BACKWALL003.dwg Plotted on Tuesday, January 7, 2020 11:00:39 AM

FED. ROAD DIV. NO.	STATE	FEDERAL AID PROJECT NO.	FISCAL YEAR	SHEET NO.	TOTAL SHEETS
	RI			C07	64

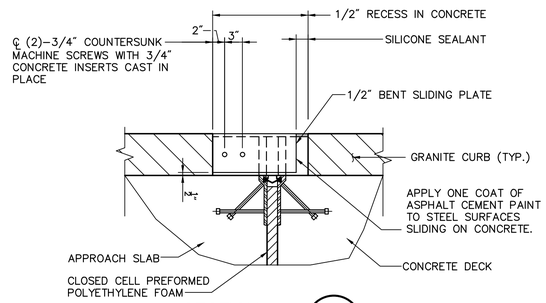

SECTION J / C08
SCALE: 1"=1'–0"

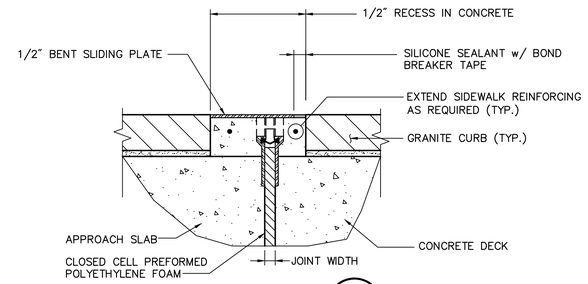

SECTION K / C08
SCALE: 1"=1'–0"

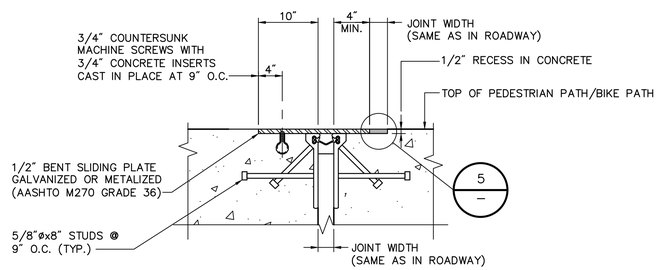

DETAIL 4 / C05
SCALE: 1"=1'–0"

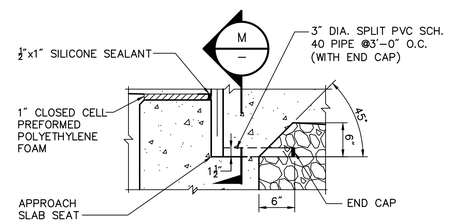

DETAIL 6 / –
SCALE: 1"=1'–0"

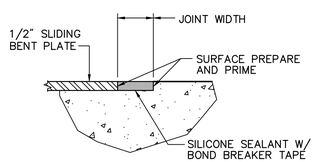

DETAIL 5 / –
SCALE: 1"=1'–0"

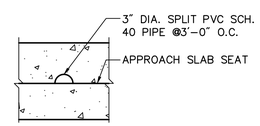

SECTION M / –
SCALE: 1"=1'–0"

REVISIONS		
NO.	DATE	BY

RHODE ISLAND
DEPARTMENT OF TRANSPORTATION

PRESERVATION OF
BRIDGE NOS. 575, 578, 704, 706, 707, AND 708
PROVIDENCE, RHODE ISLAND

PARK ST. BRIDGE NO. 704 REPAIR

EXPANSION JOINT DETAILS

vhb
1 Cedar Street
Suite 400
Providence, RI 02903
401.272.8100

CHECKED BY _____ DATE _____ SCALE _____

0018C_V3_C07_PARK_JNTDETL001

\\vhb\gbl\proj\Providence\72328.04\cad\st\planset\Preservation - For Viaduct RFP\C-Park Street\0018C_V3_C07_PARK_JNTDETL001.dwg Plotted on Tuesday, January 7, 2020 11:00:54 AM

FED. ROAD DIV. NO.	STATE	FEDERAL AID PROJECT NO.	FISCAL YEAR	SHEET NO.	TOTAL SHEETS
	RI			C08	64

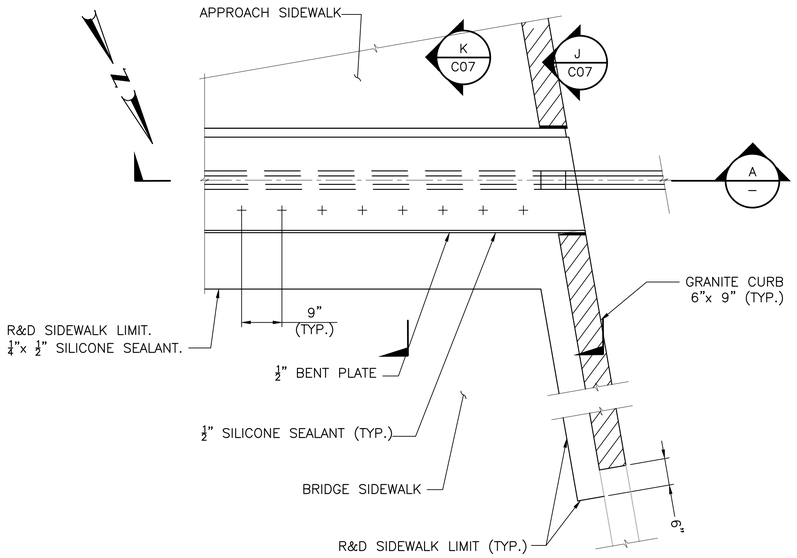

PLAN

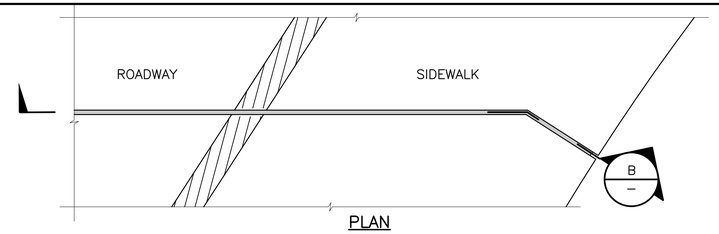

PLAN

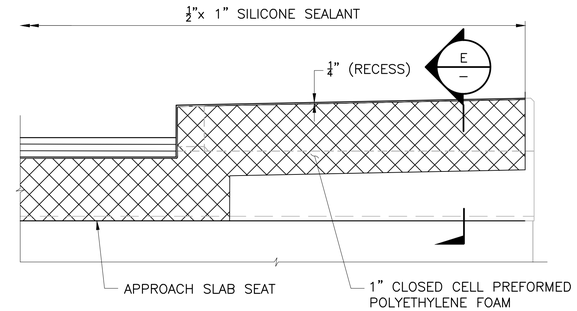

SECTION B –
SCALE: 3/4"=1'-0"

JOINT SEALANT LIMITS AT NORTH ABUTMENT

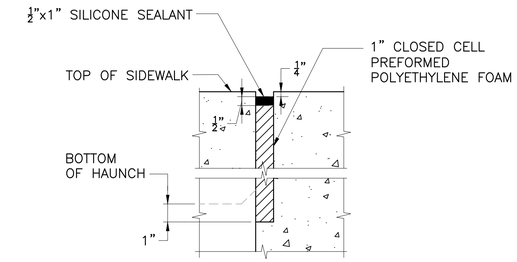

SECTION E –
SCALE: 3"=1'-0"

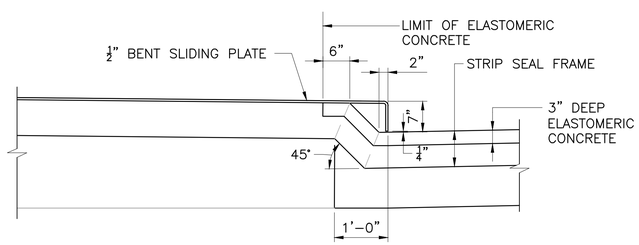

SECTION A –

EXPANSION JOINT AT SOUTH ABUTMENT
SCALE: 3/4"=1'-0"

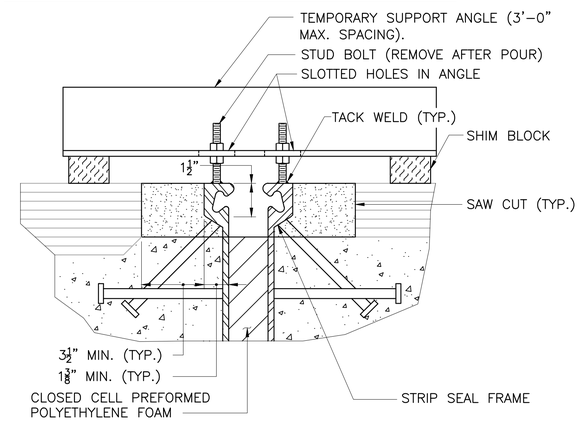

TYPICAL INSTALLATION OF STRIP SEAL

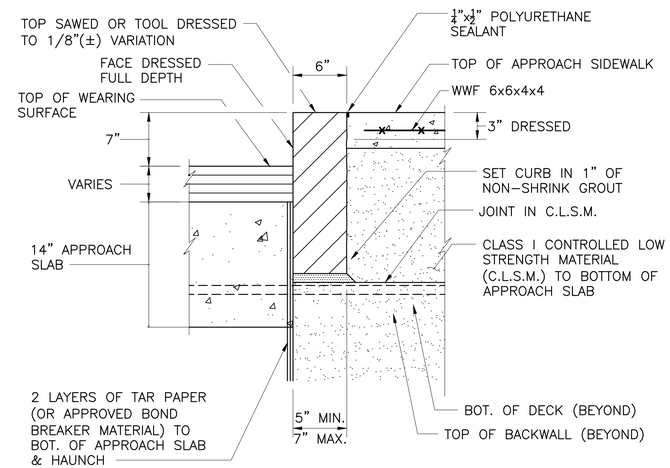

NOTE:
BEYOND LIMITS OF APPROACH SLAB, THE CURB AND APPROACH SLAB SIDEWALK ARE SET ON A GRAVEL BASE.

6"x18" GRANITE CURB AT ABUTMENT BACKWALL
SCALE: 1 1/2"=1'-0"

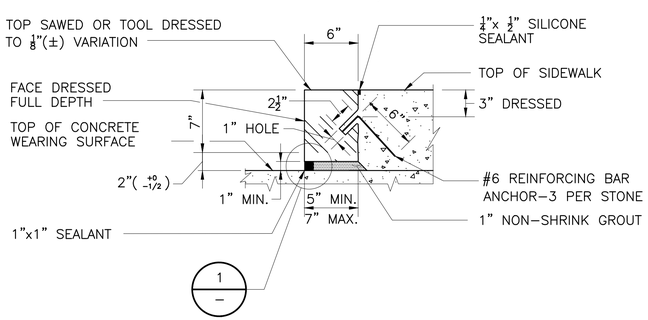

6"x9" VERTICAL FACE GRANITE CURB (CONCRETE WEARING SURFACE)
SCALE: 1 1/2"=1'-0"

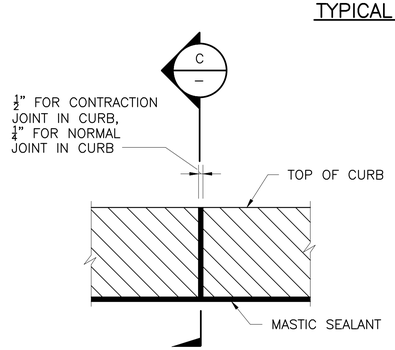

ELEVATION AT FACE OF CURB
NOT TO SCALE

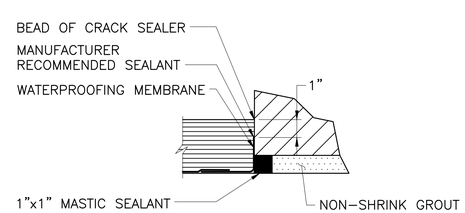

DETAIL 1 –
SCALE: 3"=1'-0"

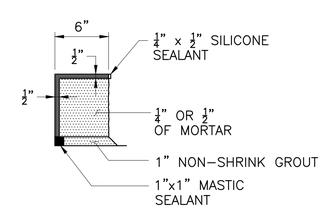

SECTION C –
SCALE: 1 1/2"=1'-0"

REVISIONS		
NO.	DATE	BY

RHODE ISLAND
DEPARTMENT OF TRANSPORTATION

PRESERVATION OF
BRIDGE NOS. 575, 578, 704, 706, 707, AND 708
PROVIDENCE, RHODE ISLAND

PARK ST. BRIDGE NO. 704 REPAIR

DECK JOINT DETAILS

CHECKED BY _____ DATE _____ SCALE AS SHOWN

vhb
1 Cedar Street
Suite 400
Providence, RI 02903
401.272.8100

0018C_V3_C08_PARK_JNTDETL002

\\vhb\gbl\proj\Providence\72328.04\cad\st\planset\Preservation - For Viaduct RFP\C-Park Street\0018C_V3_C08_PARK_JNTDETL002.dwg Plotted on Tuesday, January 7, 2020 11:01:43 AM

FED. ROAD DIV. NO.	STATE	FEDERAL AID PROJECT NO.	FISCAL YEAR	SHEET NO.	TOTAL SHEETS
	RI			C09	64

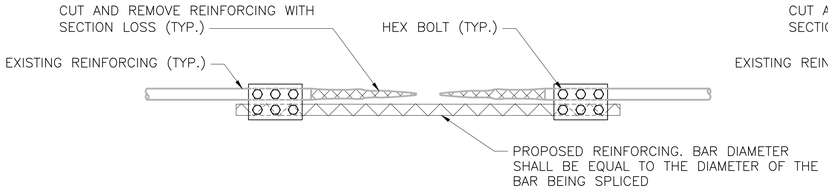

MECHANICAL COUPLER – OPTION 1

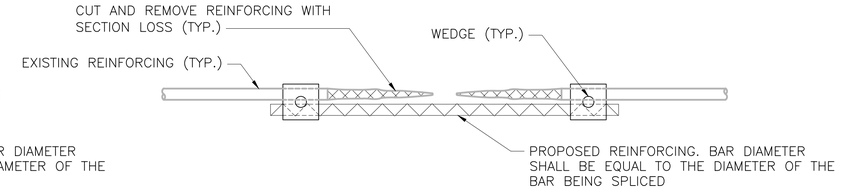

MECHANICAL COUPLER – OPTION 2

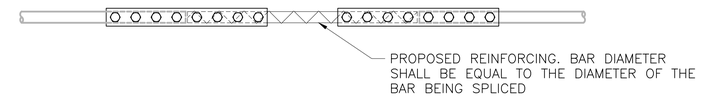

MECHANICAL COUPLER – OPTION 3

REPAIR QUANTITY NOTES:

1. REPAIR QUANTITIES ARE BASED ON THE LATEST RIDOT INSPECTION REPORT. ALL OF THE MAJOR DEFECTED AREAS KNOWN TO EXIST AT THE TIME OF THE INSPECTION HAVE BEEN SHOWN TO INDICATE APPROXIMATE EXTENT OF DETERIORATION THAT WILL HAVE TO BE REPAIRED BY THE CONTRACTOR.
2. DURING REMOVAL OF DETERIORATED CONCRETE, ANY ADDITIONAL REPAIR AREAS SHALL BE REPAIRED AS DIRECTED AND APPROVED BY THE ENGINEER. ADDITIONAL REPAIR AREAS SHALL BE PAID FOR AT THE UNIT BID PRICE.
3. THE REPAIR DIMENSIONS ARE IN LENGTH x WIDTH x THICKNESS

NOTES:

1. COVER TO SPLICER AND REINFORCING BAR SHALL NOT BE LESS THAN EXISTING REBAR COVER.
2. MECHANICAL COUPLERS SHALL BE SET WHERE NO SECTION LOSS IS PRESENT ON THE EXISTING REINFORCING.

DECK REINFORCING STEEL REPAIR DETAILS

SCALE: N.T.S.

CONCRETE DECK REPAIR NOTES:

1. UNSOUND CONCRETE SHALL BE REMOVED ONLY TO THE DEPTH NECESSARY TO EXPOSE A BONDING SURFACE OF SOUND CONCRETE MATERIAL, BUT NOT LESS THAN $\frac{3}{4}$" BELOW TOP MAT OF REINFORCING STEEL.
2. ALL DETERIORATED AREAS TO BE REPAIRED SHALL BE MARKED AND IDENTIFIED BY THE CONTRACTOR. THE CONTRACTOR SHALL OBTAIN THE APPROVAL OF THE ENGINEER THAT ALL REPAIR AREAS ARE CORRECTLY MARKED PRIOR TO MAKING SAWCUTS FOR REMOVAL OF CONCRETE.
3. ALL DETERIORATED AREAS TO BE REPAIRED SHALL THEN BE OUTLINED WITH $\frac{1}{2}$" ($\pm\frac{1}{8}$") DEEP SAW–CUTS ON A RECTANGULAR SHAPE AROUND THE PERIPHERY OF THE DEFECT. THE ENGINEER WILL INSPECT THE SAWCUT AREAS PRIOR TO REMOVAL OF THE DETERIORATED CONCRETE. THE CONTRACTOR SHALL OBTAIN THE APPROVAL OF THE ENGINEER THAT ALL REPAIR AREAS ARE CORRECTLY SAWCUT PRIOR TO REMOVAL OF ANY CONCRETE.
4. THE CONTRACTOR SHALL CAREFULLY REMOVE SPALLED, LOOSE AND HOLLOW CONCRETE FROM WITHIN THE SAWCUT LIMITS. POWER TOOLS SHALL BE LIMITED TO PNEUMATIC HAMMERS OF NO MORE THAN 15 POUND CLASS. ANY OVERBREAKAGE OR DAMAGE BEYOND THE LIMITS OF THE APPROVED REPAIR SHALL BE REPAIRED BY THE CONTRACTOR AT NO ADDITIONAL COST TO THE STATE.
5. SAWCUTS AND DETERIORATED CONCRETE REMOVAL SHALL BE PERFORMED IN THE PRESENCE OF THE RESIDENT ENGINEER'S REPRESENTATIVE.
6. AFTER REMOVAL HAS BEEN COMPLETED, ALL BOND INHIBITING MATERIALS SUCH AS LOOSELY BONDED AGGREGATES, DIRT, OR GREASE SHALL BE REMOVED FROM THE SURFACE.
7. CONCRETE REPAIRS SHALL BE IN ACCORDANCE WITH SECTION 817 OF THE STANDARD SPECIFICATIONS.
8. ALL NEW CONCRETE REPAIRS SHALL BE RESTORED TO ORIGINAL CONTOUR.
9. THE CONTRACTOR SHALL LOCATE EXISTING REINFORCING PRIOR TO DEMOLITION OF REPAIR AREA. THE EXISTING REINFORCING SHALL NOT BE DAMAGED.
10. ALL CORRODED REINFORCING BARS SHALL BE THOROUGHLY CLEANED TO REMOVE ALL RUST.
11. DURING REMOVAL OF DETERIORATED CONCRETE, IF THE CONTRACTOR'S OPERATIONS CAUSE ANY DAMAGE TO THE EXISTING STRUCTURE, HE SHALL BE REQUIRED TO REPAIR THE AREA TO THE SATISFACTION OF THE ENGINEER AT NO ADDITIONAL COST TO THE STATE.
12. THE BONDING SURFACES OF THE REPAIR AREA SHALL BE PREPARED IN ACCORDANCE WITH THE RIDOT STANDARD SPECIFICATION SECTION 818. THE SURFACES AGAINST WHICH CONCRETE IS TO BE PLACED SHALL BE KEPT WET FOR AT LEAST ONE HOUR AND THEN ALLOWED TO DRY TO A SATURATED SURFACE DRY CONDITION JUST PRIOR TO APPLICATION OF THE CONCRETE.

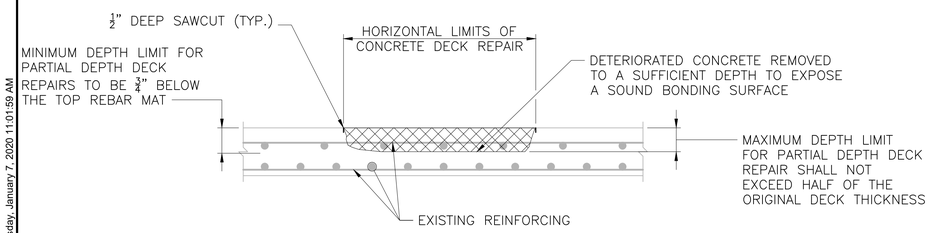

PARTIAL DEPTH DECK REPAIR

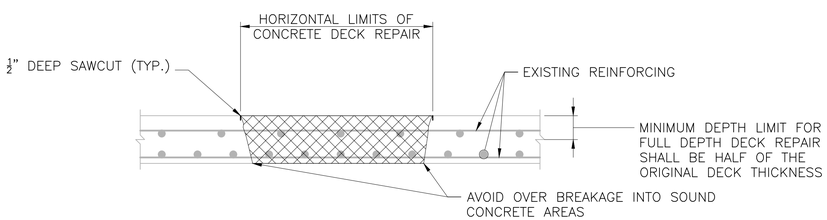

FULL DEPTH DECK REPAIR

NOTES:

1. TRAFFIC WILL NOT BE ALLOWED ON ANY AREAS WHERE THE CONTRACTOR HAS NOT PLACED AND FINISHED CONCRETE UNTIL THE MATERIAL HAS PROPERLY CURED AND HAS DEVELOPED THE REQUIRED STRENGTH AS DETERMINED BY STRENGTH TEST OR AS DETERMINED BY THE ENGINEER.
2. PRIOR TO REMOVAL OF CONCRETE INSTALL PROTECTIVE TIMBER SHIELDING. REFER TO BRIDGE PLAN SHEETS FOR LIMITS

CONCRETE DECK REPAIR DETAILS

SCALE: N.T.S.

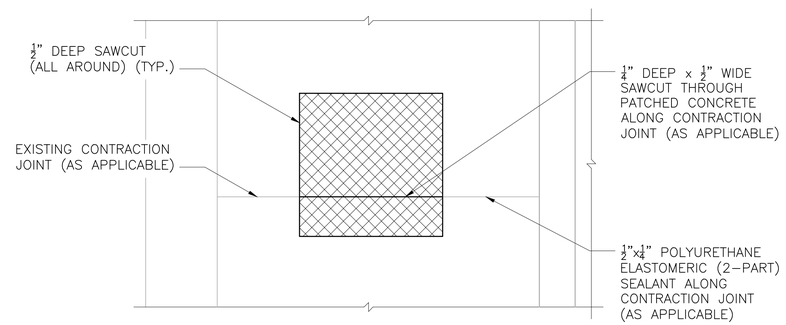

PLAN

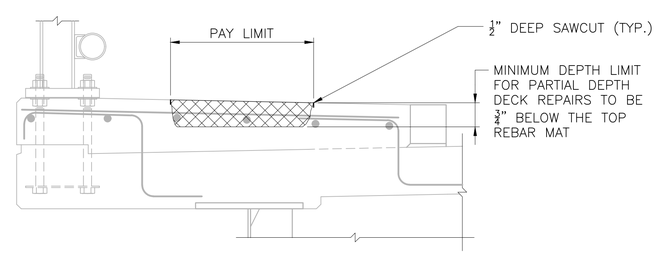

SECTION

NOTES:

1. EXISTING REBAR IS SHOW SCHEMATICALLY, ACTUAL LOCATION OF REBAR MAY VARY.
2. IF CORRODED REINFORCING THAT HAS LOST MORE THAN 25% OF IT'S ORIGINAL DIAMETER IS ENCOUNTERED, THEN A LAYER OF WIRE MESH SHALL BE CAST INTO THE NEW CONCRETE.

PARTIAL DEPTH SIDEWALK REPAIR

SCALE: N.T.S.

REVISIONS		
NO.	DATE	BY

RHODE ISLAND
DEPARTMENT OF TRANSPORTATION

PRESERVATION OF
BRIDGE NOS. 575, 578, 704, 706, 707, AND 708
PROVIDENCE, RHODE ISLAND

PARK ST. BRIDGE NO. 704 REPAIR
CONCRETE DECK REPAIR DETAILS

vhb
1 Cedar Street
Suite 400
Providence, RI 02903
401.272.8100

CHECKED BY _____ DATE _____ SCALE _____

0018C_V3_C09_PARK_CONCREP002

\\vhb\gbl\proj\Providence\72328.04\cad\st\planset\Preservation - For Viaduct RFP\C-Park Street\0018C_V3_C09_PARK_CONCREP002.dwg Plotted on Tuesday, January 7, 2020 11:01:59 AM

FED. ROAD DIV. NO.	STATE	FEDERAL AID PROJECT NO.	FISCAL YEAR	SHEET NO.	TOTAL SHEETS
	RI			D01	47

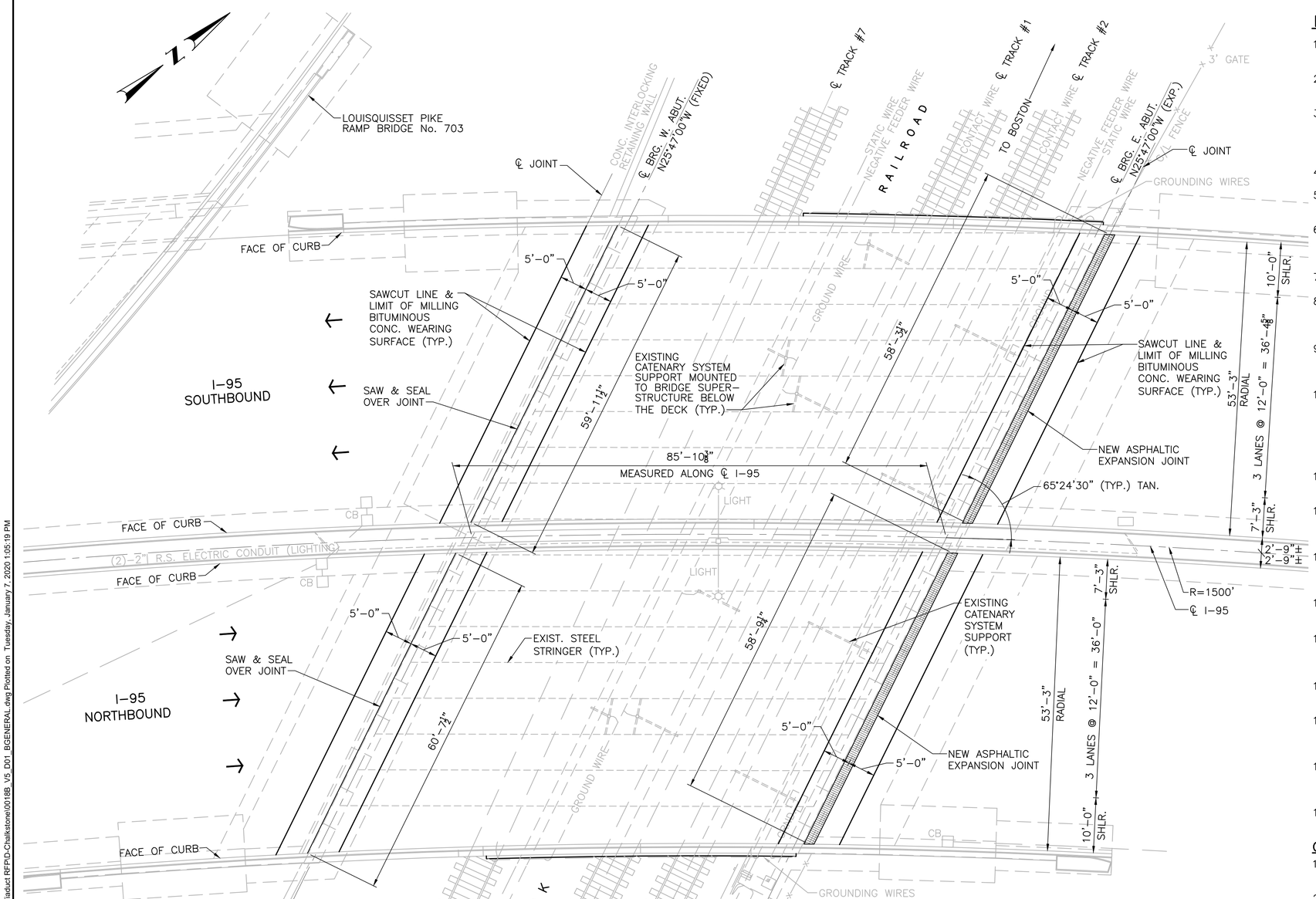

GENERAL PLAN
SCALE 1"=10'

RAILROAD NOTES

1. ANY ACCESS WITHIN 25' OF TRACKS OR WITH AN ACTIVITY THAT COULD POTENTIALLY FOUL THE TRACKS REQUIRES COORDINATION AND APPROVAL OF AMTRAK.
2. INSTALLATION AND REMOVAL OF TEMPORARY PROTECTION SHIELDING MUST BE ACCOMPLISHED AT NIGHT AND IN ACCORDANCE WITH AMTRAK SPECIFICATIONS.
3. CONTRACTOR SHOULD BE AWARE THAT THE NORTHEAST CORRIDOR TRACKS ARE ELECTRIFIED. ALL WORK ON RAILROAD PROPERTY MUST BE EXECUTED IN THE PRESENCE OF AN AMTRAK FLAGPERSON, CONSTRUCTION INSPECTOR, AND/OR A CLASS "A" EMPLOYEE FOR ELECTRIFICATION PROTECTION.
4. NO DEBRIS FROM DEMOLITION OPERATION SHALL BE STORED ON RAILROAD PROPERTY.
5. EXISTING GROUNDING AND BONDING PROTECTION SHALL BE MAINTAINED AT ALL TIMES. COORDINATE GROUNDING AND BONDING REQUIREMENTS WITH AMTRAK.
6. MINIMUM CLEARANCE FROM ALL ELEMENTS OF THE PROPOSED FALSEWORK AND DEMOLITION SHIELDS SHALL BE 18" FROM ANY LIVE PORTION OF THE OCS INCLUDING MESSENGER WIRE, CONTACT WIRE, NEGATIVE FEEDER AND STATIC WIRE.
7. CONSTRUCTION DISCHARGE MUST BE PREVENTED FROM FLOWING TOWARD THE RAILROAD.
8. COORDINATE ALL CONSTRUCTION ACTIVITIES AND DEMOLITION IN THE AMTRAK'S FACILITIES REGARDING PROTECTION OF CATENARY STRUCTURES AND WIRES, PASSENGER, COMMUTER AND FREIGHT RAIL SERVICE/SCHEDULE.
9. THE CONTRACTOR IS TO PROVIDE A SCHEDULE OF EACH OPERATION AND OBTAIN APPROVAL FROM AMTRAK SO THAT ANY INSTALLATION MAY BE PROPERLY SUPERVISED BY AMTRAK PERSONNEL.
10. THE CONTRACTOR SHALL TAKE MEASURES TO WORK SAFELY ON AN ACTIVE RAILROAD. ALL CONTRACTOR PERSONNEL WORKING ON AMTRAK RAILROAD'S R.O.W. SHALL MEET AMTRAK'S REQUIREMENTS FOR WORK ADJACENT TO AND AFFECTING AN ACTIVE RAILROAD AND BE GIVEN AMTRAK SAFETY TRAINING. EVERY INDIVIDUAL WHO ENTER AMTRAK PROPERTY MUST RECEIVE TRAINING AND BE QUALIFIED ON CONTRACTOR RWP. EACH INDIVIDUAL MUST HAVE THEIR OWN CONTRACTOR RWP CARD ON THEIR PERSON WHEN WORKING ON AMTRAK PROPERTY.
11. THE CONTRACTOR SHALL SUBMIT A WORKPLAN FOR AMTRAK APPROVAL, SHOWING A DETAILED WORK SCHEDULE AND ALL EQUIPMENT TO BE USED ON AMTRAK R.O.W.
12. ELECTRICAL OUTAGES DURING CONSTRUCTION, OUTSIDE OF PREDETERMINED INTERVALS, WILL NOT BE PERMITTED. THE CONTRACTOR SHALL SCHEDULE AND PERFORM ALL WORK IN A MANNER THAT DOES NOT INTERFERE WITH AMTRAK OPERATIONS.
13. THE CONSTRUCTION CONTRACTOR SHALL ACCOMPLISH ALL NECESSARY COORDINATION WITH OTHER RELATED CONSTRUCTION PHASES AND CONTRACTORS FOR THIS PROJECT INCLUDING AMTRAK FORCE ACCOUNT PERSONNEL.
14. BEFORE ANY WORK IS COMMENCED, COORDINATE WITH AMTRAK REGARDING REQUIREMENTS OF TRACK AND/OR POWER OUTAGES FOLLOWING ALL STANDARD PROCEDURES AND SAFETY RULES.
15. THE EXISTING AERIAL CONDUCTORS, INCLUDING BUT NOT LIMITED TO FEEDER LINES, CATENARY WIRING, AND ASSOCIATED SUPPORTS SHALL BE TREATED AS LIVE. NO WORK SHALL BE PERFORMED UNTIL A SITE SPECIFIC WORK PLAN (SSWP) IS APPROVED BY AMTRAK.
16. DURING THE CONSTRUCTION STAGING, PROVIDE REQUISITE WARNING SIGNS INDICATING UNWIRED OR DEAD SECTIONS.
17. BEFORE ANY ELECTRICAL SECTION IS ENERGIZED, ENSURE THAT ALL GROUNDED CONNECTIONS TO THE POWER SYSTEM AR REMOVED AND ALL AMTRAK SAFETY AND ENERGIZATION PROCEDURES ARE FOLLOWED.
18. THE CONTRACTOR SHALL COORDINATE WITH AMTRAK FOR SPECIFIC PROCEDURES REGARDING TEMPORARY INSULATION, SUPPORT, DEAD-ENDING, ETC. AS MAY BE NECESSARY TO MAINTAIN ELECTRICAL SERVICE.
19. CONTRACTOR TO PROVIDE DESIGN AS NEEDED FOR ALL TEMPORARY CONDTIONS TO FACILITATE CONSTRUCTION.

GENERAL NOTES

1. ALL WORK TO BE PERFORMED IN ACCORDANCE WITH THE MAINTENANCE AND PROTECTION OF TRAFFIC PLANS AND RESTRICTIONS NOTED IN THE CONTRACT.
2. ALL WORK IN, OVER, UNDER, WITHIN AND ADJACENT TO THE RAILROAD RIGHT-OF-WAY SHALL IN STRICT CONFORMANCE WITH ALL AMTRAK AND THE PROVIDENCE & WORCESTER RAILROAD COMPANY REQUIREMENTS.

LEGEND

- - - - - - - - EXISTING STRINGER
▨ ASPHALTIC PLUG JOINT

vhb
1 Cedar Street
Suite 400
Providence, RI 02903
401.272.8100

REVISIONS		
NO.	DATE	BY

RHODE ISLAND
DEPARTMENT OF TRANSPORTATION

PRESERVATION OF
BRIDGE NOS. 575, 578, 704, 706, 707, AND 708
PROVIDENCE, RHODE ISLAND

CHALKSTONE RAILROAD BRIDGE NO. 706
PRESERVATION
GENERAL PLAN

CHECKED BY _____ DATE _____ SCALE _____

0018B_V5_D01_BGENERAL

\\vhb\gbl\proj\Providence\72328.04\cadd\planset\Preservation - For Viaduct RFP\D-Chalkstone\0018B_V5_D01_BGENERAL.dwg Plotted on Tuesday, January 7, 2020 1:05:19 PM

FED. ROAD DIV. NO.	STATE	FEDERAL AID PROJECT NO.	FISCAL YEAR	SHEET NO.	TOTAL SHEETS
	RI			D02	47

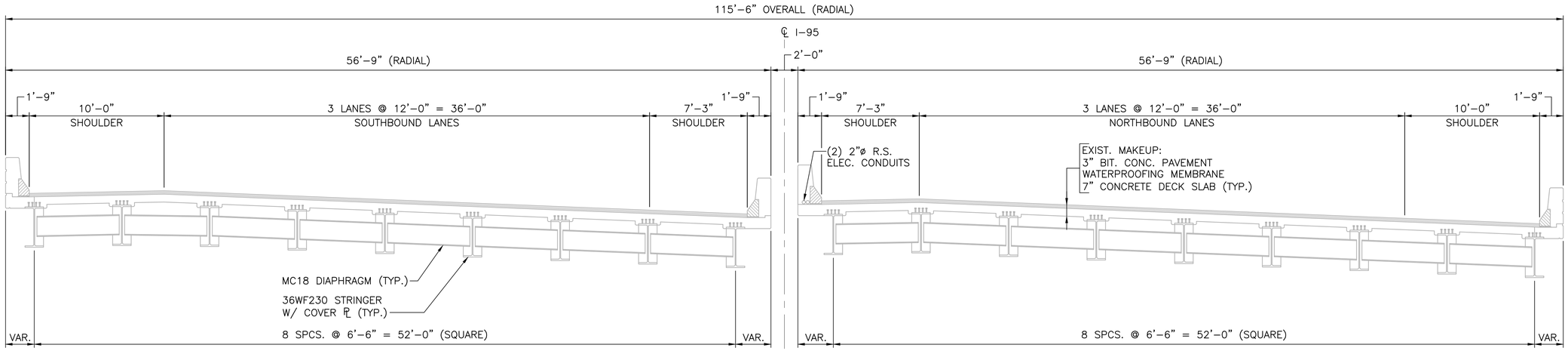

TRANSVERSE SECTION (LOOKING EAST)

SCALE: 1/4"=1'-0"

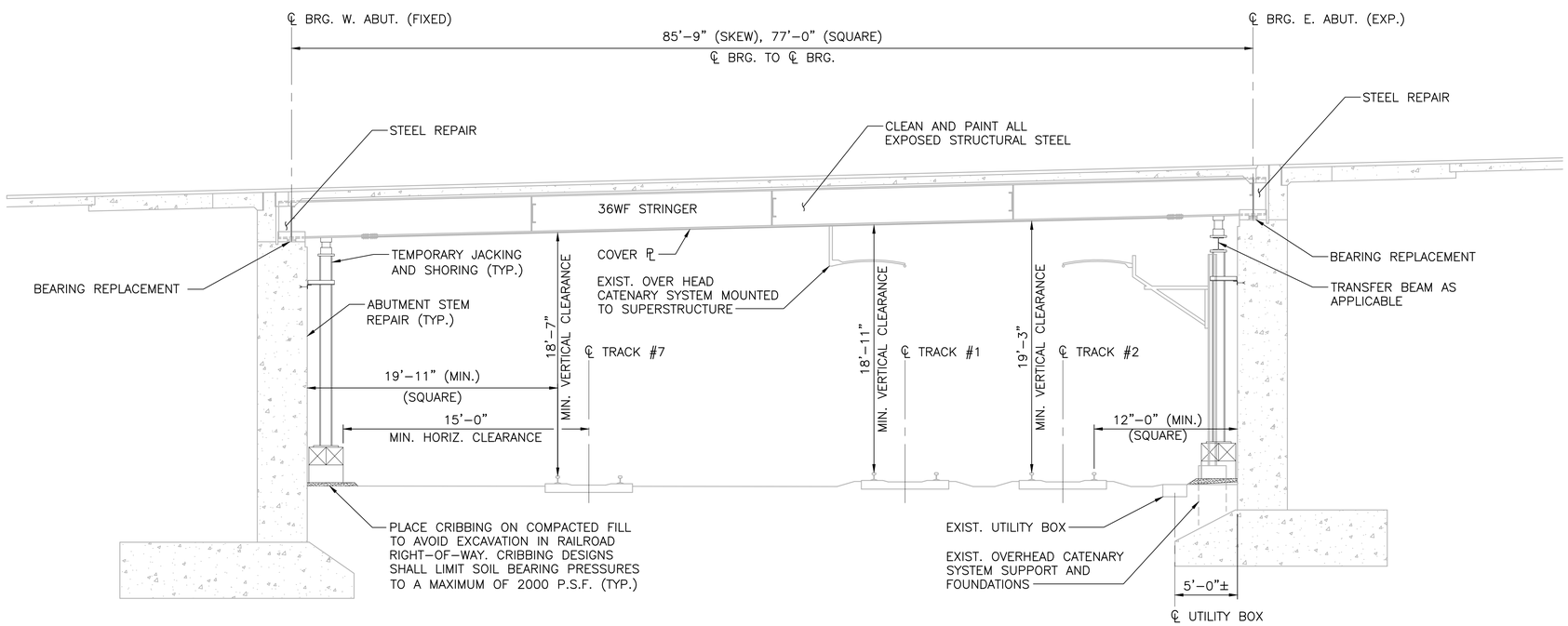

LONGITUDINAL SECTION (LOOKING NORTH)

SCALE: 3/16"=1'-0"

AMTRAK NOTES

1. THE CONTRACTOR SHALL CONTACT AMTRAK C&S PERSONNEL IN ADVANCE TO LOCATE ALL C&S CABLES, DUCT LINES, FACILITIES AND STRUCTURES. THE CONTRACTOR SHALL PROTECT ALL AMTRAK UTILITIES AND EQUIPMENT PRIOR TO AND DURING CONSTRUCTION.
2. ALL CONSTRUCTION ACTIVITIES SHALL NOT INTERFERE WITH THE PREVIEW OF ANY RAILROAD SIGNALS IN THIS AREA.

REVISIONS		
NO.	DATE	BY

RHODE ISLAND
DEPARTMENT OF TRANSPORTATION

PRESERVATION OF
BRIDGE NOS. 575, 578, 704, 706, 707, AND 708
PROVIDENCE, RHODE ISLAND

CHALKSTONE RAILROAD BRIDGE NO. 706
PRESERVATION

TYPICAL SECTIONS

vhb
1 Cedar Street
Suite 400
Providence, RI 02903
401.272.8100

CHECKED BY _____ DATE _____ SCALE _____

0018B_V5_D02_BTYPICAL

\\vhb\gbl\proj\Providence\72328.04\cad\stl\planset\Preservation - For Viaduct RFP\D-Chalkstone\0018B_V5_D02_BTYPICAL.dwg Plotted on Tuesday, January 7, 2020 11:02:29 AM

FED. ROAD DIV. NO.	STATE	FEDERAL AID PROJECT NO.	FISCAL YEAR	SHEET NO.	TOTAL SHEETS
	RI			D03	47

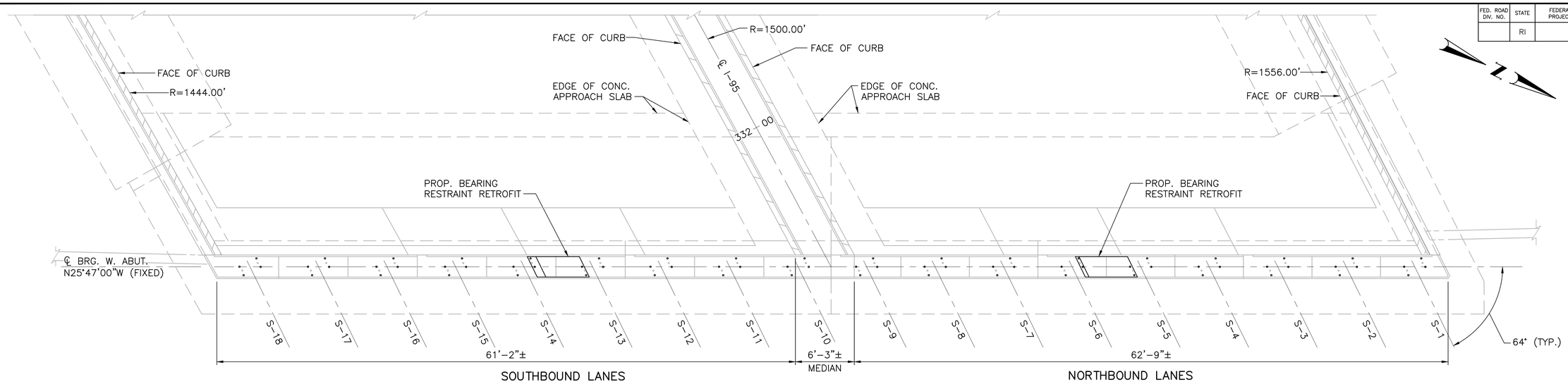

PLAN

SCALE 3/16"=1'-0"

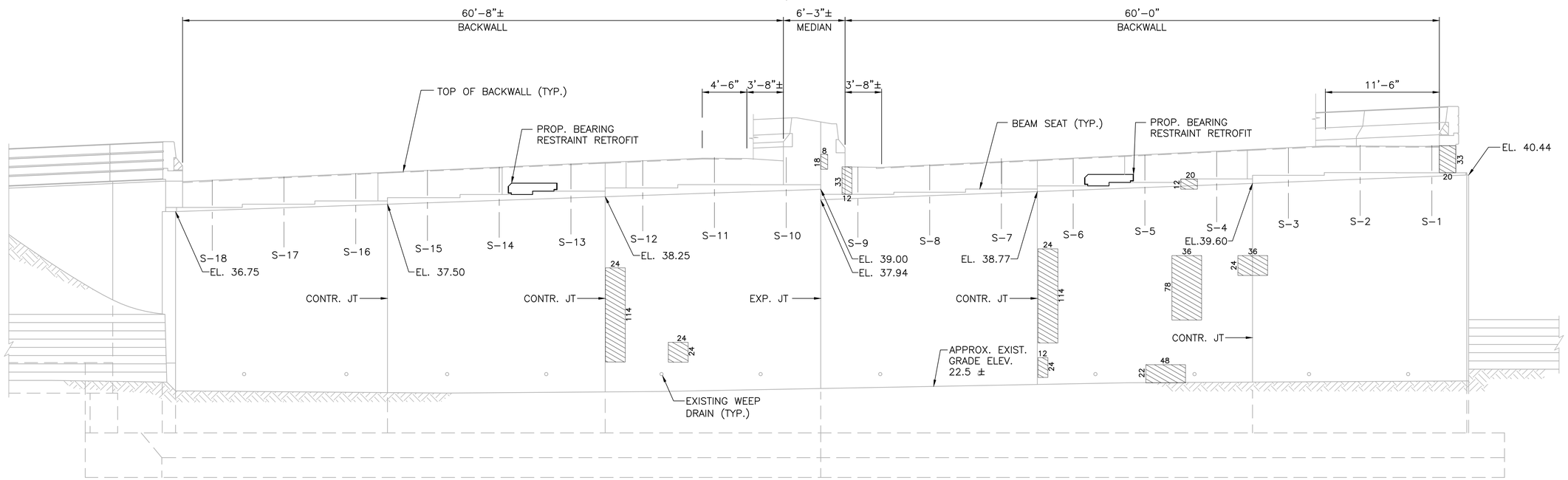

ELEVATION

SCALE 3/16"=1'-0"

WEST ABUTMENT

LEGEND:

CONCRETE REPAIR AREA (DIMENSIONS ARE SHOWN IN INCHES).

REVISIONS		
NO.	DATE	BY

RHODE ISLAND
DEPARTMENT OF TRANSPORTATION

PRESERVATION OF
BRIDGE NOS. 575, 578, 704, 706, 707, AND 708
PROVIDENCE, RHODE ISLAND

CHALKSTONE RAILROAD BRIDGE NO. 706
PRESERVATION
WEST ABUTMENT

CHECKED BY _____ DATE _____ SCALE _____

vhb
1 Cedar Street
Suite 400
Providence, RI 02903
401.272.8100

\\vhb\gb\proj\Providence\72328.04\cad\st\planset\Preservation - For Viaduct RFP\D-Chalkstone\0018B_V5_D03_ABUTPLAN001.dwg Plotted on Tuesday, January 7, 2020 11:02:46 AM

FED. ROAD DIV. NO.	STATE	FEDERAL AID PROJECT NO.	FISCAL YEAR	SHEET NO.	TOTAL SHEETS
	RI			D04	47

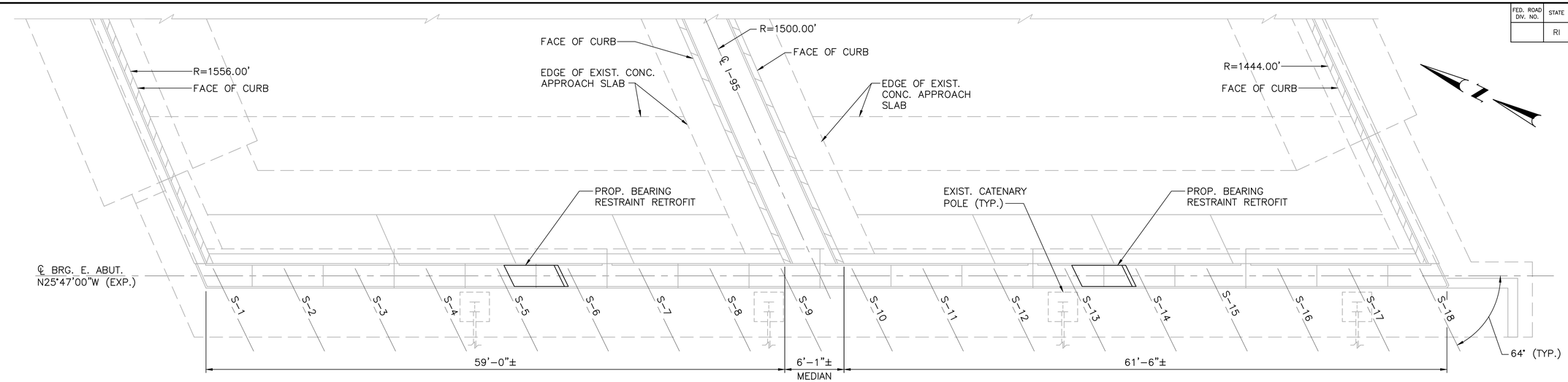

PLAN

SCALE 3/16"=1'-0"

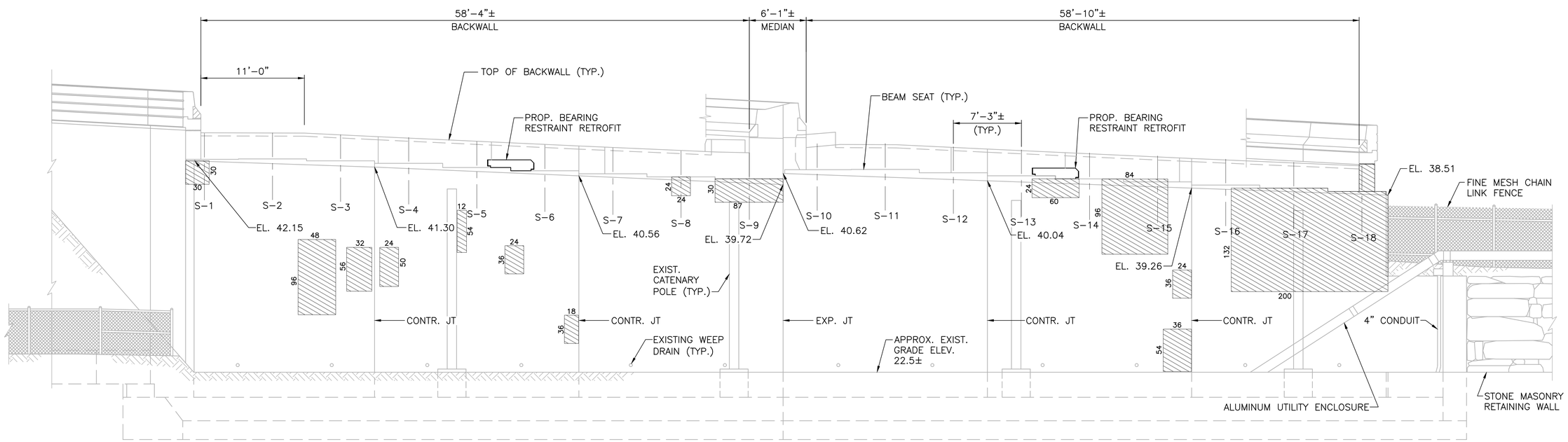

ELEVATION

SCALE 3/16"=1'-0"

EAST ABUTMENT

LEGEND:

CONCRETE REPAIR AREA (DIMENSIONS ARE SHOWN IN INCHES).

REVISIONS		
NO.	DATE	BY

RHODE ISLAND
DEPARTMENT OF TRANSPORTATION

PRESERVATION OF
BRIDGE NOS. 575, 578, 704, 706, 707, AND 708
PROVIDENCE, RHODE ISLAND

CHALKSTONE RAILROAD BRIDGE NO. 706
PRESERVATION
EAST ABUTMENT

vhb
1 Cedar Street
Suite 400
Providence, RI 02903
401.272.8100

CHECKED BY _____ DATE _____ SCALE _____

\\vhb\gb\proj\Providence\72328.04\cad\set\planset\Preservation - For Viaduct RFP\D-Chalkstone\0018B_V5_D04_ABUTPLAN002.dwg Plotted on Tuesday, January 7, 2020 11:03:02 AM

FED. ROAD DIV. NO.	STATE	FEDERAL AID PROJECT NO.	FISCAL YEAR	SHEET NO.	TOTAL SHEETS
	RI			D05	47

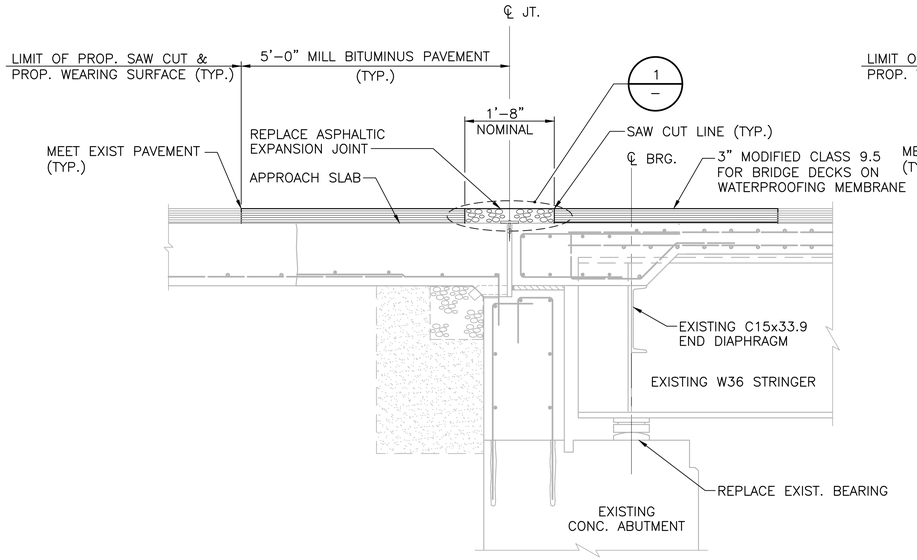

EXPANSION JOINT DETAIL AT EAST ABUTMENT
SCALE 3/4"=1'-0"

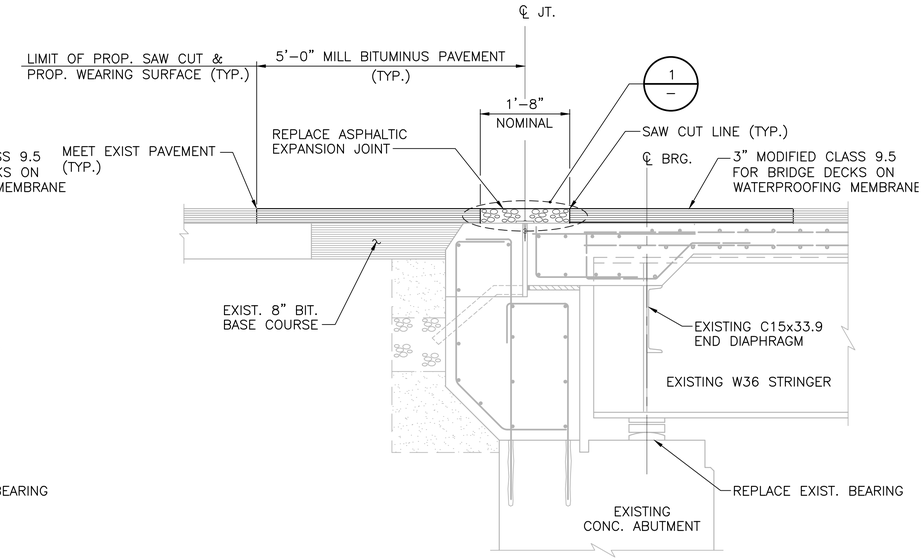

EXPANSION JOINT DETAIL AT EAST ABUTMENT MEDIAN
SCALE 3/4"=1'-0"

NOTE:

THE DESIGN BUILD TEAM SHALL SEAL THE JOINT IN THE BARRIER. REFER TO SHEETS E05 AND F05 FOR APPLICABLE DETAILS.

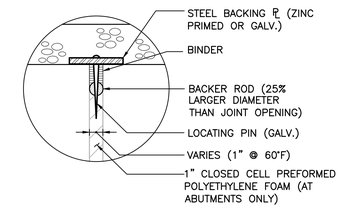

DETAIL 3 —
SCALE: 3" = 1'-0"

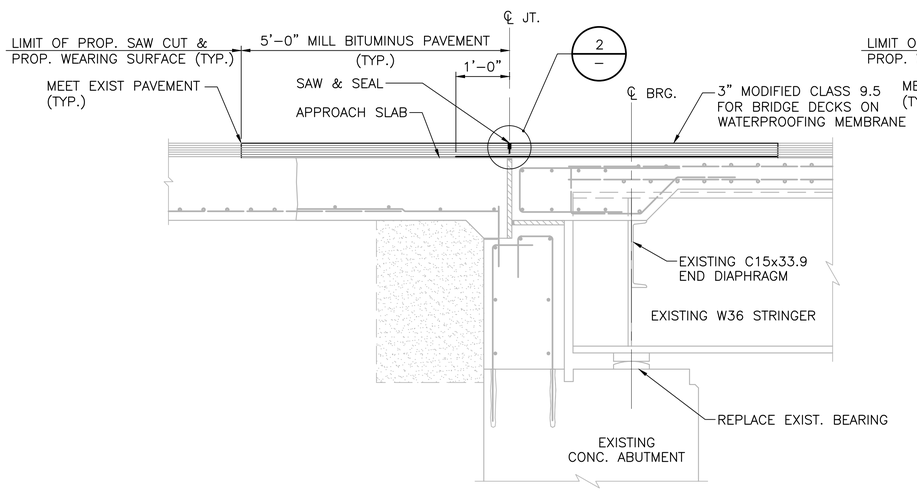

FIXED JOINT DETAIL AT WEST ABUTMENT
SCALE 3/4"=1'-0"

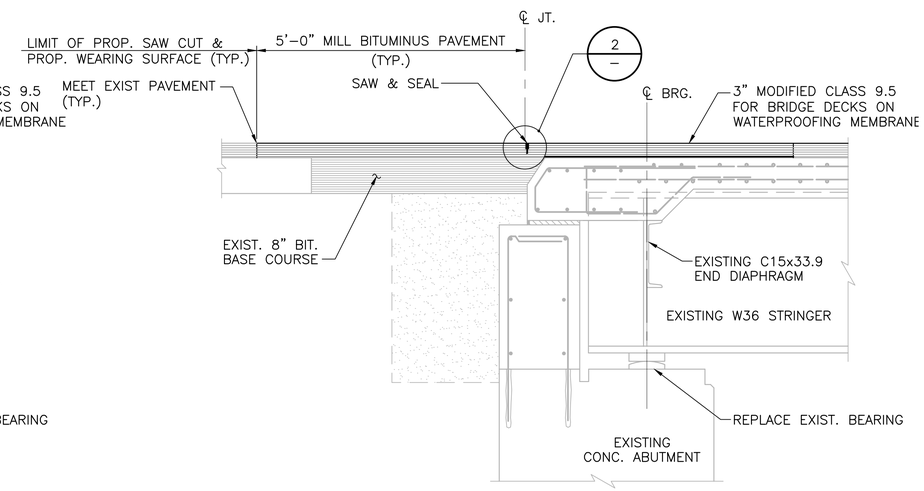

FIXED JOINT DETAIL AT WEST ABUTMENT MEDIAN
SCALE 3/4"=1'-0"

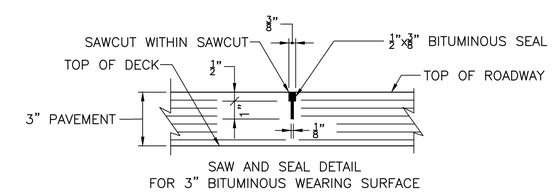

DETAIL 2 —
SCALE: 3"=1'-0"

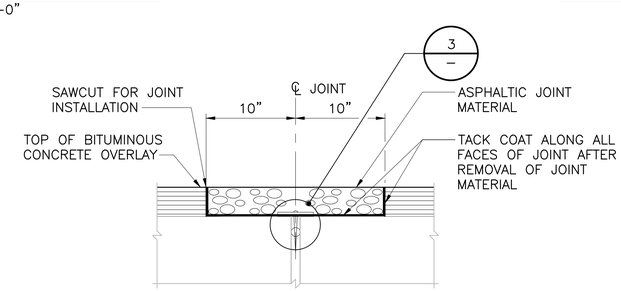

DETAIL 1 —
SCALE: 1 1/2"=1'-0"

vhb
1 Cedar Street
Suite 400
Providence, RI 02903
401.272.8100

REVISIONS		
NO.	DATE	BY

RHODE ISLAND
DEPARTMENT OF TRANSPORTATION

PRESERVATION OF
BRIDGE NOS. 575, 578, 704, 706, 707, AND 708
PROVIDENCE, RHODE ISLAND

CHALKSTONE RAILROAD BRIDGE NO. 706
PRESERVATION

JOINT REPAIR DETAILS

CHECKED BY _____ DATE _____ SCALE _____

0018B_V5_D05_JNTDETL

\\vhb\gbl\proj\Providence\72328.04\cad\st\planset\Preservation - For Viaduct RFP\D-Chalkstone\0018B_V5_D05_JNTDETL.dwg Plotted on Tuesday, January 7, 2020 1:09:29 PM

FED. ROAD DIV. NO.	STATE	FEDERAL AID PROJECT NO.	FISCAL YEAR	SHEET NO.	TOTAL SHEETS
	RI			D06	47

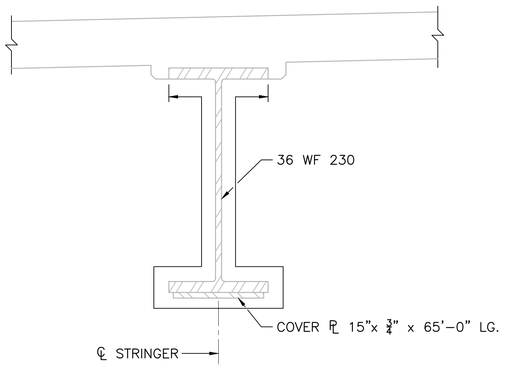

STRUCTURAL STEEL PAINTING NOTE

PAINTED LIMITS SHOWN SHALL BE IN ACCORDANCE WITH SECTION 825 OF THE RHODE ISLAND STANDARD SPECIFICATIONS FOR ROAD AND BRIDGE CONSTRUCTION "PAINTING STRUCTURAL STEEL". THE COLOR OF THE FINAL COAT SHALL BE AS DIRECTED IN RFP PART 2.

PAINT LIMIT DETAIL

N.T.S.

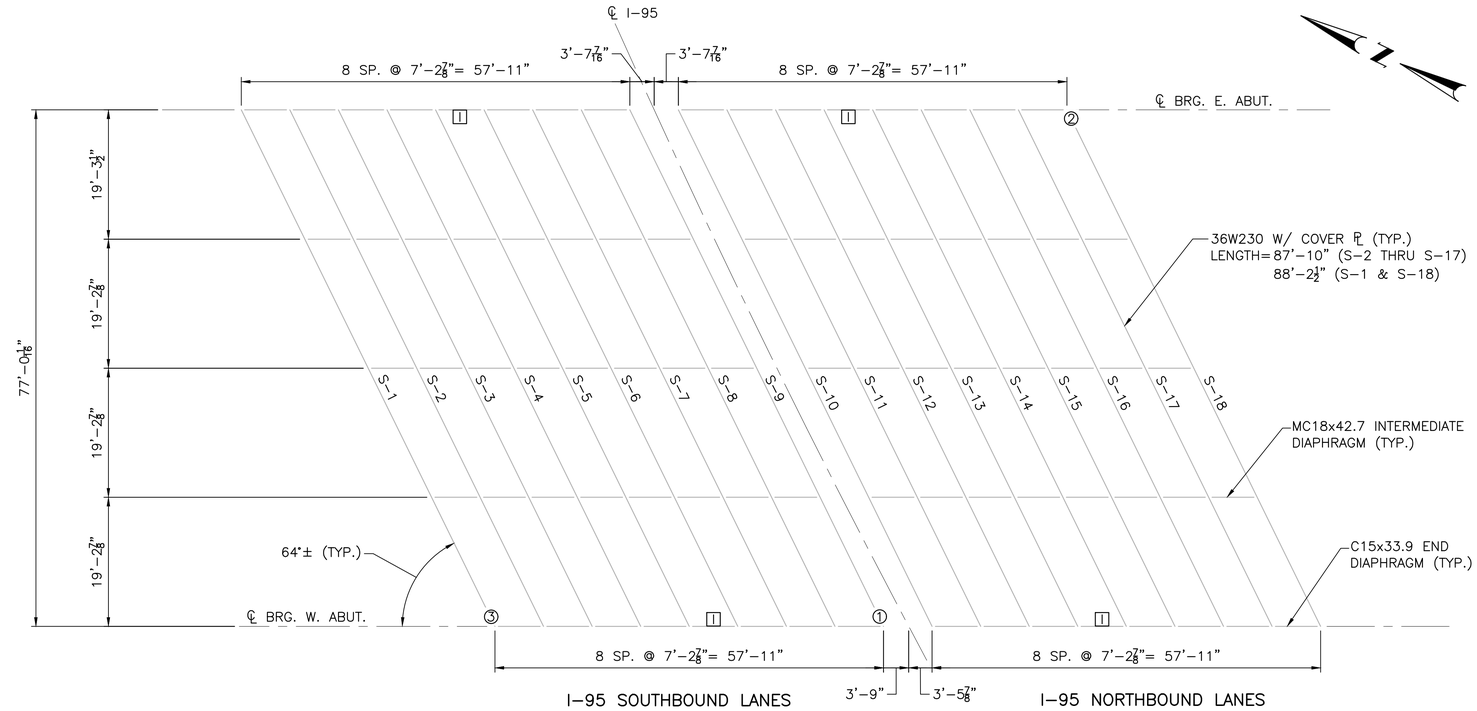

FRAMING PLAN

NOT TO SCALE

LEGEND

Ⓕ – REPAIR TYPE (SEE NOTE1)

[I] – BEARING RESTRAINT

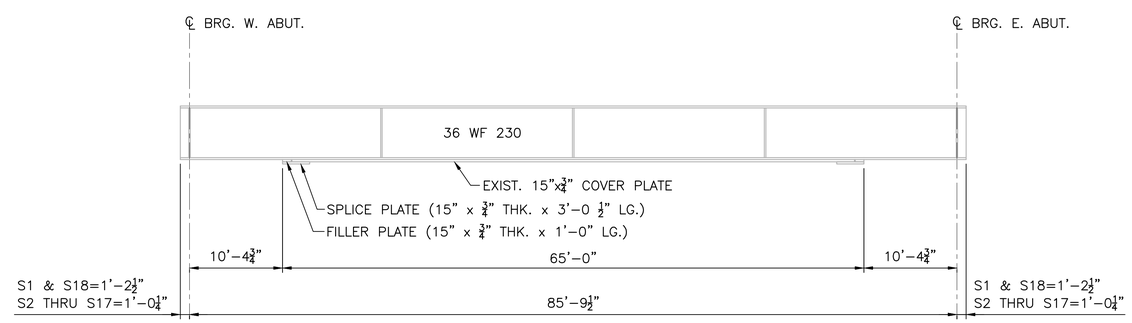

TYPICAL STRINGER ELEVATION

NOT TO SCALE

NOTE

1. THE DESIGN BUILD TEAM SHALL CARRY A COST IN THEIR BID FOR AN ADDITIONAL 2 BEAM END REPAIRS. THIS COST SHALL INCLUDE, BUT IS NOT LIMITED TO, FABRICATION, MATERIALS, LABOR AND DESIGN OF THE REPAIR PLATES.

REVISIONS		
NO.	DATE	BY

RHODE ISLAND
DEPARTMENT OF TRANSPORTATION

PRESERVATION OF
BRIDGE NOS. 575, 578, 704, 706, 707, AND 708

PROVIDENCE, RHODE ISLAND

CHALKSTONE RAILROAD BRIDGE NO. 706
PRESERVATION

FRAMING PLAN

CHECKED BY _____ DATE _____ SCALE _____

vhb
1 Cedar Street
Suite 400
Providence, RI 02903
401.272.8100

\\vhb\gbl\proj\Providence\72328.04\cadd\planset\Preservation - For Viaduct RFP\D-Chalkstone\0018B_V5_D06_FRAMING.dwg Plotted on Tuesday, January 7, 2020 11:03:33 AM

FED. ROAD DIV. NO.	STATE	FEDERAL AID PROJECT NO.	FISCAL YEAR	SHEET NO.	TOTAL SHEETS
	RI			D07	47

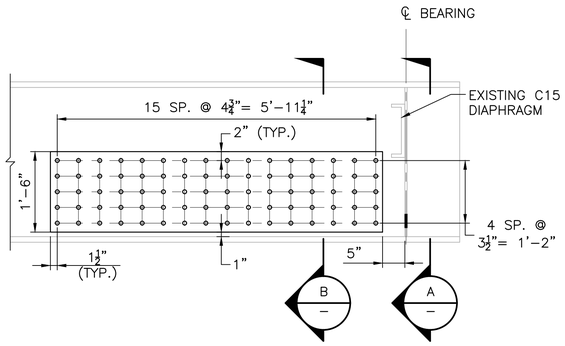

REPAIR LOCATION #1
STRINGER "S-9" AT WEST ABUT. – WEST FACE
SCALE: ¾"=1'-0"

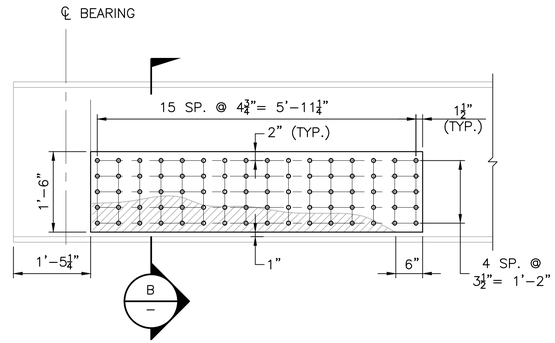

REPAIR LOCATION #1
STRINGER "S-9" AT WEST ABUT. – EAST FACE
SCALE: ¾"=1'-0"

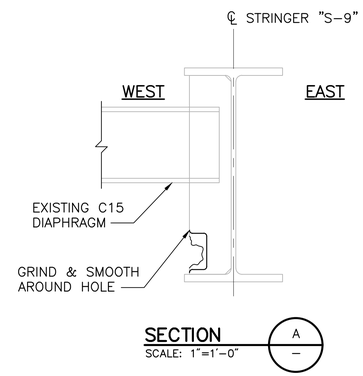

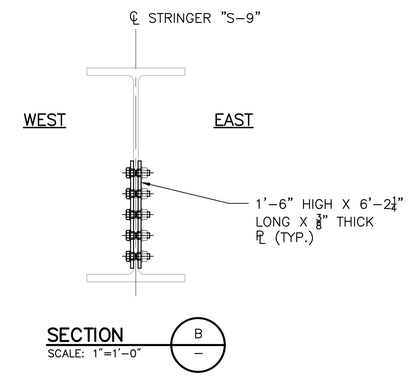

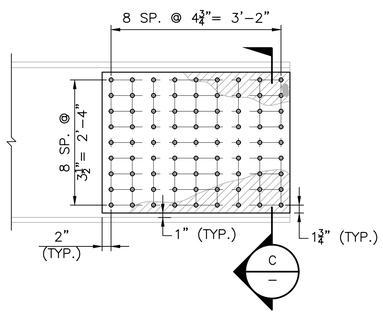

REPAIR LOCATION #2
STRINGER "S-18" AT EAST ABUT. – EAST FACE
SCALE: ¾"=1'-0"

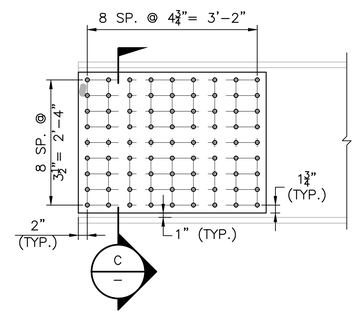

REPAIR LOCATION #2
STRINGER "S-18" AT EAST ABUT. – WEST FACE
SCALE: ¾"=1'-0"

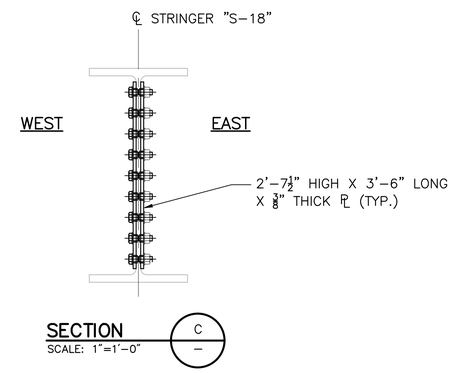

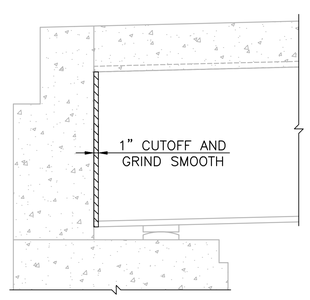

NOTE: EAST FACE SHOWN, WEST FACE SIMILAR

REPAIR LOCATION #3
STRINGER "S-1" AT WEST ABUT.
SCALE: ¾"=1'-0"

STRUCTURAL STEEL REPAIR NOTES:

1. STRUCTURAL STEEL REPAIR SHALL CONFORM TO SECTION 824.
2. ALL REPAIR AREAS SHALL BE THOROUGHLY CLEANED TO REMOVE RUST, DELAMINATIONS, CORROSIONS AND OTHER FOREIGN MATTER PRIOR TO PERFORMING ANY REPAIR.
3. THE CONTRACTOR SHALL OBTAIN ALL FIELD MEASUREMENT AS MAY BE DEEMED NECESSARY FOR THE PROPER FABRICATION AND FIT OF STEEL COMPONENTS. THE CONTRACTOR SHALL BE SOLELY RESPONSIBLE FOR THE FABRICATION AND FIT OF HIS WORK. FIELD MEASUREMENTS (HEIGHT AND WIDTH) OF HOLE AREAS SHALL BE FIELD VERIFIED BY RESIDENT ENGINEER AND SHALL BE SUBMITTED WITH SHOP DRAWINGS OF REPAIR PLATES.
4. ALL BOLTS SHALL BE ⅞" DIAMETER HIGH STRENGTH BOLTS CONFORMING TO ASTM A-325.
5. STRUCTURAL STEEL FOR REPAIRS SHALL CONFORM TO AASHTO DESIGNATION M270 GRADE 36.
6. ALL FIELD DRILLED AND SHOP BOLT HOLES SHALL HAVE A DIAMETER OF 15/16".
7. BOLTS SHALL BE TIGHTENED IN ACCORDANCE WITH THE RIDOT STANDARD SPECIFICATIONS, EXCEPT AT HEAVILY CORRODED PORTIONS, WHERE THE BOLTS SHALL BE SNUG TIGHTENED.
8. STRUCTURAL REPAIR STEEL SHALL BE PRIMED IN THE SHOP.
9. ALL EXISTING STEEL REPAIR AREAS SHALL BE PRIMED AFTER BLAST CLEANING. EXISTING AND NEW STEEL SHALL BE TOUCH-UP PRIMED AFTER DRILLING AND WELDING.
10. THE CONTRACTOR SHALL EXERCISE EXTREME CAUTION SO AS NOT TO REDUCE THE NET STEEL SECTION.
11. ALL REPAIRS TO STRUCTURAL STEEL SHALL BE PERFORMED WITH EXTREME CARE TO AVOID ANY DAMAGE TO EXISTING STRUCTURAL DESIGNATED TO REMAIN. IN THE EVENT THAT THE CONTRACTOR DAMAGES EXISTING STRUCTURAL STEEL DESIGNATED TO REMAIN, AS A RESULT OF THE CONTRACTOR OPERATION, THE CONTRACTOR SHALL REPAIR OR REPLACE THE DAMAGED STRUCTURAL STEEL TO THE SATISFACTION OF THE ENGINEER AT NO ADDITIONAL COST TO THE STATE.
12. FOR PAINTING LIMITS SEE THE FRAMING PLAN.

LEGEND

SECTION LOSS

vhb
1 Cedar Street
Suite 400
Providence, RI 02903
401.272.8100

REVISIONS		
NO.	DATE	BY

RHODE ISLAND
DEPARTMENT OF TRANSPORTATION

PRESERVATION OF
BRIDGE NOS. 575, 578, 704, 706, 707, AND 708
PROVIDENCE, RHODE ISLAND

CHALKSTONE RAILROAD BRIDGE NO. 706
PRESERVATION

STEEL REPAIR

CHECKED BY _____ DATE _____ SCALE _____

0018B_V5_D07_STEELREP

\\vhb\gbl\proj\Providence\72328.04\cad\st\planset\Preservation - For Viaduct RFP\ID-Chalkstone\0018B_V5_D07_STEELREP.dwg Plotted on Tuesday, January 7, 2020 11:03:49 AM

FED. ROAD DIV. NO.	STATE	FEDERAL AID PROJECT NO.	FISCAL YEAR	SHEET NO.	TOTAL SHEETS
	RI			D08	47

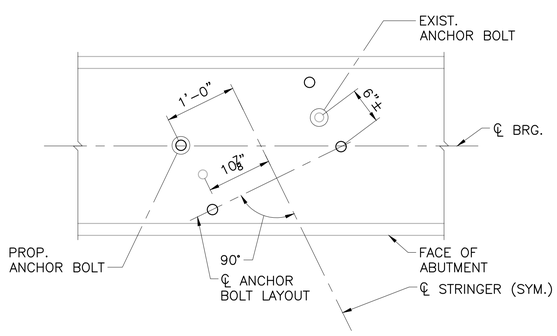

ANCHOR BOLT LAYOUT

NOT TO SCALE

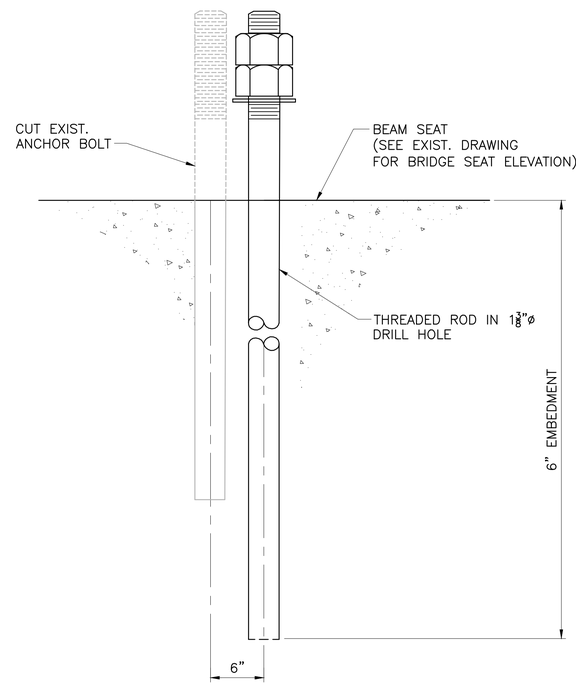

NOTES:

1. ANCHOR BOLTS SHALL BE SET ACCURATELY BY TEMPLATE.
2. REMOVE EXISTING ANCHOR BOLT TO ½" BELOW TOP OF CONCRETE BRIDGE SEAT. FILL HOLE WITH NON–SHRINK GROUT AND FINISH TO TOP OF CONCRETE BRIDGE SEAT.
3. ANCHOR BOLTS SHALL BE 1¼"ø HIT RE 500 ADHESIVE ANCHOR (OR APPROVED EQUAL)

ANCHOR BOLT DETAIL

NOT TO SCALE

ELASTOMERIC BEARING NOTES

1. ELASTOMER SHALL HAVE A SHEAR MODULUS OF G=0.16 ± 0.024 KSI, AND SHALL BE VULCANIZE BONDED TO THE SOLE PLATE.
2. ALL PLATES TO BE FLAT AND TRUE AFTER WELDING.
3. THICKNESS OF SOLE PLATE IS ALONG THE CENTERLINE BEARINGS AND STRINGER.
4. THE SOLE PLATE SHALL BE BEVELED TO MATCH THE LONGITUDINAL SLOPE OF THE STRINGER SO THAT THE BOTTOM SURFACE OF THE PLATE IS LEVEL AFTER THE APPLICATION OF FULL DEAD LOAD.
5. THE SOLE PLATES ARE TO BE ADJUSTED IN THE FIELD, AS NECESSARY, TO CENTER OVER THE BEARINGS AT 60° F AND THEN FIELD WELDED TO THE BOTTOM FLANGE.
6. THE STEEL LAMINATE USED IN THE ELASTOMERIC BEARING SHALL CONFORM TO ASTM A1011 GRADE 36.
7. STEEL SOLE PLATE SHALL CONFORM TO AASHTO M270 (ASTM A709) GRADE 50. PLATES SHALL BE ZINC METALIZED IN ACCORDANCE WITH AWS C2.2 WITH A MINIMUM THICKNESS OF 8 MILS.
8. WELDING SHALL PROGRESS IN SUCH MANNER SO AS TO PREVENT THE ELASTOMER OR THE BOND FROM BEING SUBJECTED TO TEMPERATURES HIGHER THAN 250° F.
9. SURFACES DAMAGED BY WELDING OR ERECTION OPERATIONS SHALL BE REPAIRED BY APPLICATION OF AN ORGANIC ZINC RICH PRIMER APPLIED IN ACCORDANCE WITH THE MANUFACTURER'S SPECIFICATIONS. THE ZINC RICH PRIMER SHALL BE ON THE R.I.D.O.T. APPROVED MATERIALS LIST.
10. ALL BEARINGS SHALL BE CLEARLY MARKED FOR EASY IDENTIFICATION DURING INSTALLATION.
11. BEARINGS SHALL CONSTITUTE ALL MATERIALS INCLUDING ANCHOR BOLTS, NON–SHRINK GROUT, CONNECTION BOLTS, NUTS, WASHERS, PLATES, ELASTOMERIC PADS, COATINGS, AND ALL LABOR AND TESTING NECESSARY FOR THE PROPER FABRICATION AND INSTALLATION OF SAME AS SHOWN ON THESE PLANS AND AS APPENDED BY SECTION 828 OF THE RHODE ISLAND STANDARD SPECIFICATION.
12. THE SOLE PLATE ASSEMBLIES SHALL BE METALIZED, EXCEPT FOR THE STAINLESS STEEL MATING SURFACE AND FOR ONE INCH WIDE STRIPS, WHERE THE SOLE PLATE SHALL BE WELDED TO THE FLANGE AFTER WELDING APPLY A GALVANIZING REPAIR PAINT WITH A MINIMUM DRY FILM THICKNESS OF 3 MIL TO THESE STRIPS.
13. ALL ANCHOR BOLTS SHALL BE ASTM DESIGNATION F 1554 GR 55 AND SHALL BE GALVANIZED IN ACCORDANCE WITH AASHTO DESIGNATION M232 OR METALIZED IN ACCORDANCE WITH SECTION M.05 OF THE 2010 RHODE ISLAND DEPARTMENT OF TRANSPORTATION STANDARD SPECIFICATIONS ROAD AND BRIDGE CONSTRUCTION AND ALL REVISIONS TO DATE.
14. THE MINIMUM TEMPERATURE SETTING RANGE FOR INSTALLATION OF THE EXPANSION BEARINGS WITHOUT NEED FOR ADJUSTMENT IS FROM 60 DEG TO 70 DEG F. SHOP DRAWINGS MUST INCLUDE TEMPERATURE CORRECTIONS FOR BEARING SETTING DURING STRINGER ERECTION.
15. PLACE FIXED SOLE PLATE ASSEMBLY SO THAT IT IS CENTERED AROUND ANCHOR BOLTS. CENTER THE ELASTOMERIC PAD UNDER THE SOLE PLATE.
16. WELDS SHALL TERMINATE 1/4" FROM EDGE OF PLATE.
17. THREADS OF THE HEX COUPLING SHALL BE PROTECTED FROM CONTAMINATION PRIOR TO INSTALLATION OF THREADED ANCHOR BOLTS.
18. HEX COUPLING SHALL BE METALIZED AND SHALL BE ABLE TO DEVELOP THE STRENGTH OF THE 1¼"ø ANCHOR BOLTS, MINIMUM GRADE 36 STEEL.
19. PRIOR TO SUBMITTING SHOP DRAWINGS OF BEARING ASSEMBLIES, FIELD VERIFY THE LOCATION OF THE EXISTING ANCHOR BOLTS. DRILLING AND GROUTING THE PROPOSED ANCHOR BOLTS SHALL NOT COMMENCE UNTIL THE BEARING ASSEMBLY SHOP DRAWINGS HAVE BEEN APPROVED.
20. THE CONTRACTOR SHALL FURNISH TWO (2) ADDITIONAL STEEL–REINFORCED ELASTOMERIC BEARINGS PADS FOR THE PURPOSE OF TESTING IN ACCORDANCE WITH SECTION 828 OF THE RI STANDARD SPECIFICATIONS. THE ADDITIONAL BEARINGS WILL BE PROVIDED IN ORDER TO ALLOW FOR ONE RANDOMLY SELECTED PAIR OF IDENTICAL BEARINGS TO BE SAMPLED FOR TESTING BY THE MATERIALS MANAGEMENT TECHNICIAN.

MAXIMUM BEARING SERVICE LOAD TABLE (KIPS)			
CHALKSTONE RR BRIDGE NO. 706 ABUTMENTS STRINGER NO.	DEAD LOAD (DL)	LIVE LOAD+ IMPACT (LL+I)	TOTAL (DL+LL)
S–1 AND S–18	92	80	172
S–9 AND S–10	92	80	172
S–2 THRU S–8 S–11 THRU S–17	83	87	170

REVISIONS		
NO.	DATE	BY

vhb
1 Cedar Street
Suite 400
Providence, RI 02903
401.272.8100

RHODE ISLAND
DEPARTMENT OF TRANSPORTATION

PRESERVATION OF
BRIDGE NOS. 575, 578, 704, 706, 707, AND 708
PROVIDENCE, RHODE ISLAND

CHALKSTONE RAILROAD BRIDGE NO. 706
PRESERVATION

BEARING DETAILS 1

CHECKED BY _____ DATE _____ SCALE _____

\\vhb\gbl\proj\Providence\72328.04\cad\st\planset\Preservation - For Viaduct RFP\D-Chalkstone\0018B_V5_D08_BEARDET001.dwg Plotted on Tuesday, January 7, 2020 11:04:04 AM

FED. ROAD DIV. NO.	STATE	FEDERAL AID PROJECT NO.	FISCAL YEAR	SHEET NO.	TOTAL SHEETS
	RI			D09	47

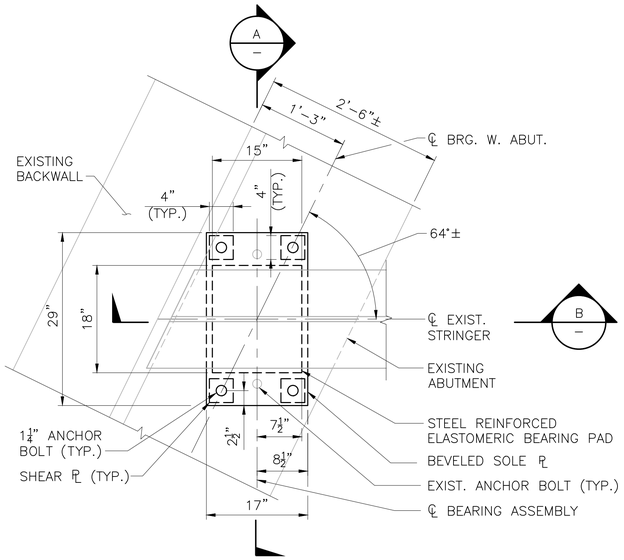

PLAN

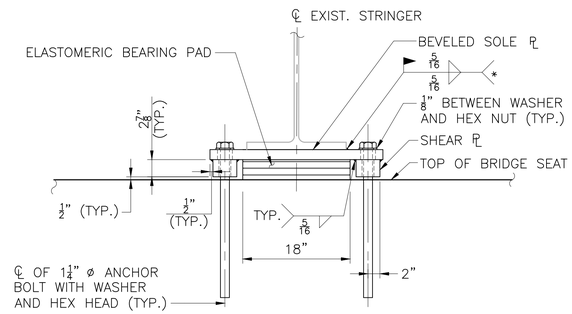

* WELDS SHALL TERMINATE ¼" FROM EDGE OF PLATE. SEAL REMAINING EDGES WITH SILICONE HIGHWAY JOINT SEALANT

SECTION A

FIXED BEARING

SCALE: 1"= 1'-0"

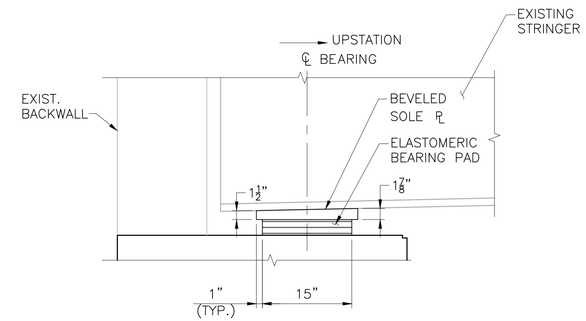

SECTION B

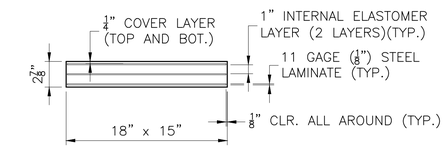

ELASTOMERIC BEARING PAD

SCALE: 1 1/2"= 1'-0"

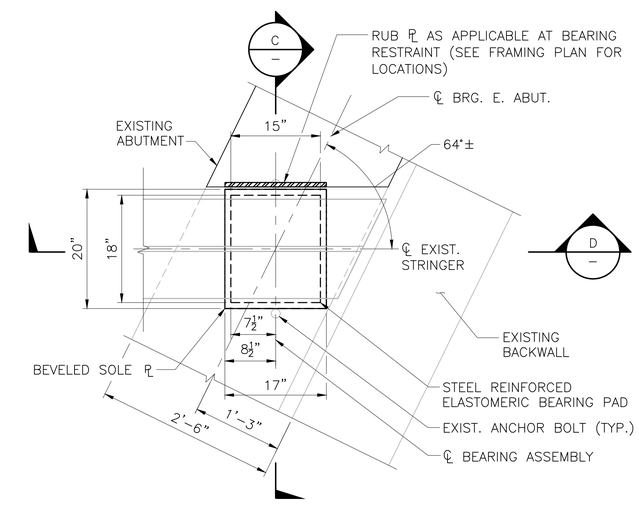

PLAN

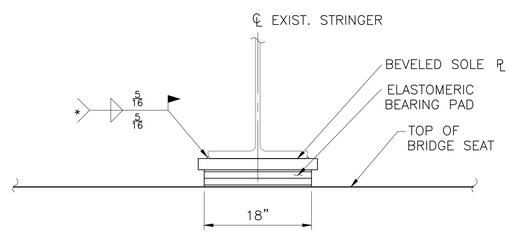

* WELDS SHALL TERMINATE ¼" FROM EDGE OF PLATE. SEAL REMAINING EDGES WITH SILICONE HIGHWAY JOINT SEALANT

SECTION C

EXPANSION BEARING

SCALE: 1"= 1'-0"

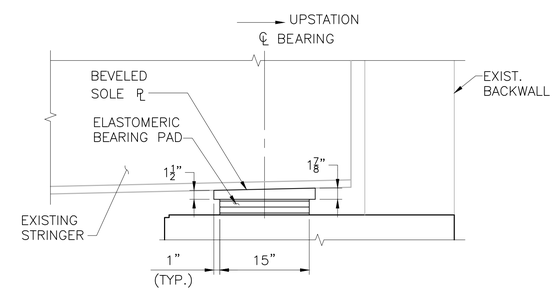

SECTION D

REVISIONS		
NO.	DATE	BY

RHODE ISLAND
DEPARTMENT OF TRANSPORTATION

PRESERVATION OF
BRIDGE NOS. 575, 578, 704, 706, 707, AND 708

PROVIDENCE, RHODE ISLAND

CHALKSTONE RAILROAD BRIDGE NO. 706
PRESERVATION

BEARING DETAILS 2

CHECKED BY _____ DATE _____ SCALE _____

vhb
1 Cedar Street
Suite 400
Providence, RI 02903
401.272.8100

0018B_V5_D09_BEARDET002

\\vhb\gb\proj\Providence\72328.04\cad\st\planset\Preservation - For Viaduct RFP\D-Chalkstone\0018B_V5_D09_BEARDET002.dwg Plotted on Tuesday, January 7, 2020 11:04:18 AM

FED. ROAD DIV. NO.	STATE	FEDERAL AID PROJECT NO.	FISCAL YEAR	SHEET NO.	TOTAL SHEETS
	RI			D10	47

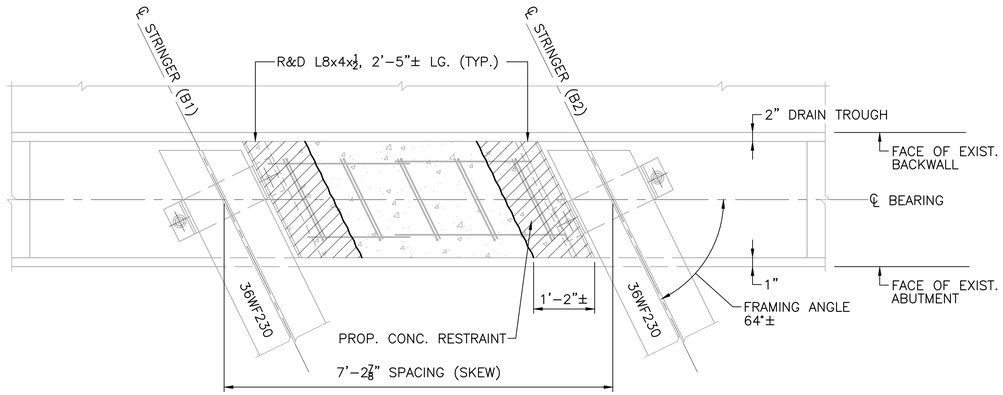

PLAN–EXISTING
SCALE 3/4"=1'–0"

NOTES

1. FOR BEARING RESTRAINT LOCATIONS, SEE FRAMING PLAN SHEET.
2. CARE MUST BE TAKEN DURING THE REMOVAL OF THE DESIGNATED PORTIONS OF THE STRUCTURE TO AVOID DAMAGING THE PORTIONS THAT ARE TO REMAIN IN PLACE OR RELOCATE. ANY DAMAGE CAUSED BY THE CONTRACTOR TO THE EXISTING STRUCTURE THAT IS DESIGNATED TO REMAIN IN PLACE, RELOCATE SHALL BE REPAIRED BY THE CONTRACTOR AT HIS OWN EXPENSE TO THE SATISFACTION OF THE ENGINEER.
3. DURING REMOVAL OF MASONRY, IF THE CONTRACTOR'S OPERATIONS CAUSE ANY DAMAGE TO THE EXISTING STRUCTURES TO REMAIN IN PLACE, RELOCATE OR NEW STRUCTURES, HE SHALL BE REQUIRED TO REPAIR THE AREA TO THE SATISFACTION OF THE ENGINEER AT NO ADDITIONAL COST TO THE STATE.
4. ALL CORRODED REINFORCING BARS TO REMAIN SHALL BE THOROUGHLY CLEANED TO REMOVE ALL RUST.
5. ALL EXPOSED REINFORCING SHALL BE COATED WITH ZINC RICH PRIMER.
6. PRIOR TO REMOVING CONCRETE PIER CAP, THE LIMITS SHALL BE DELINEATED BY A 6" DEEP SAW CUT.

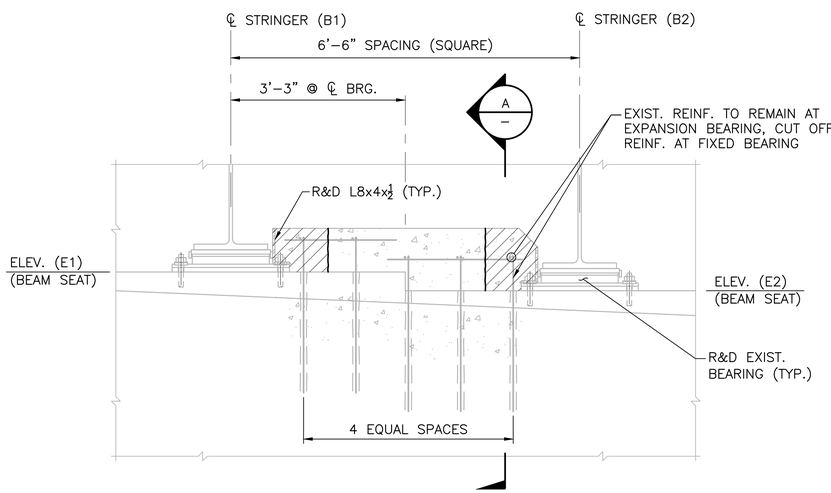

ELEVATION–EXISTING
SCALE 3/4"=1'–0"

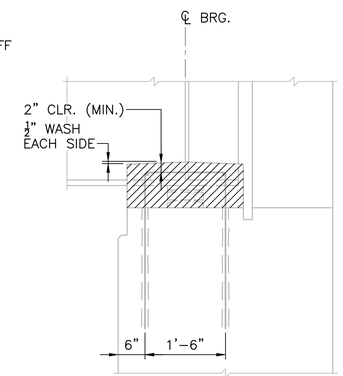

SECTION A
SCALE: 3/4"=1'–0"

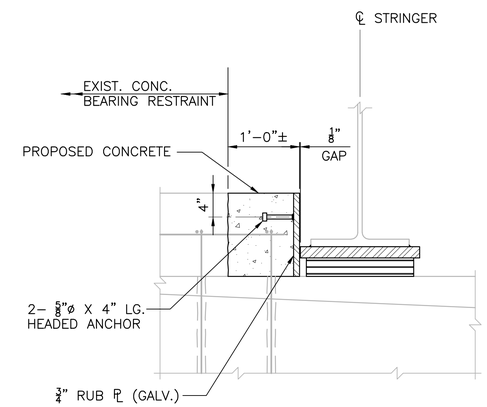

ELEVATION–PROPOSED EXPANSION BEARING
SCALE 1"=1'–0"

BEARING TRANSVERSE RESTRAINTS AT ABUTMENTS

TRANSVERSE RESTRAINT SCHEDULE – ABUTMENTS

	FRAMING BAY		BEARING SEAT ELEVATION (FT)	
	(B1)	(B2)	(E1)	(E2)
EAST ABUTMENT	S–5	S–6	41.45	41.10
	S–13	S–14	40.57	40.24
WEST ABUTMENT	S–14	S–13	38.48	38.81
	S–6	S–5	39.35	39.69

LEGEND

REMOVE AND DISPOSE

vhb
1 Cedar Street
Suite 400
Providence, RI 02903
401.272.8100

REVISIONS		
NO.	DATE	BY

RHODE ISLAND
DEPARTMENT OF TRANSPORTATION

PRESERVATION OF
BRIDGE NOS. 575, 578, 704, 706, 707, AND 708
PROVIDENCE, RHODE ISLAND

CHALKSTONE RAILROAD BRIDGE NO. 706
PRESERVATION

BEARING RESTRAINT DETAILS

CHECKED BY _____ DATE _____ SCALE _____

0018B_V5_D10_BEARREST

\\vhb\gbl\proj\Providence\72328.04\cad\st\planset\Preservation - For Viaduct RFP\D-Chalkstone\0018B_V5_D10_BEARREST.dwg Plotted on Tuesday, January 7, 2020 11:04:34 AM

FED. ROAD DIV. NO.	STATE	FEDERAL AID PROJECT NO.	FISCAL YEAR	SHEET NO.	TOTAL SHEETS
	RI			D11	47

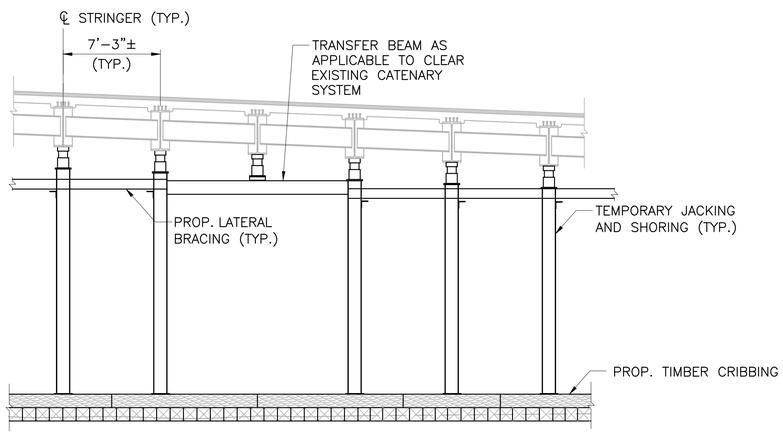

ELEVATION

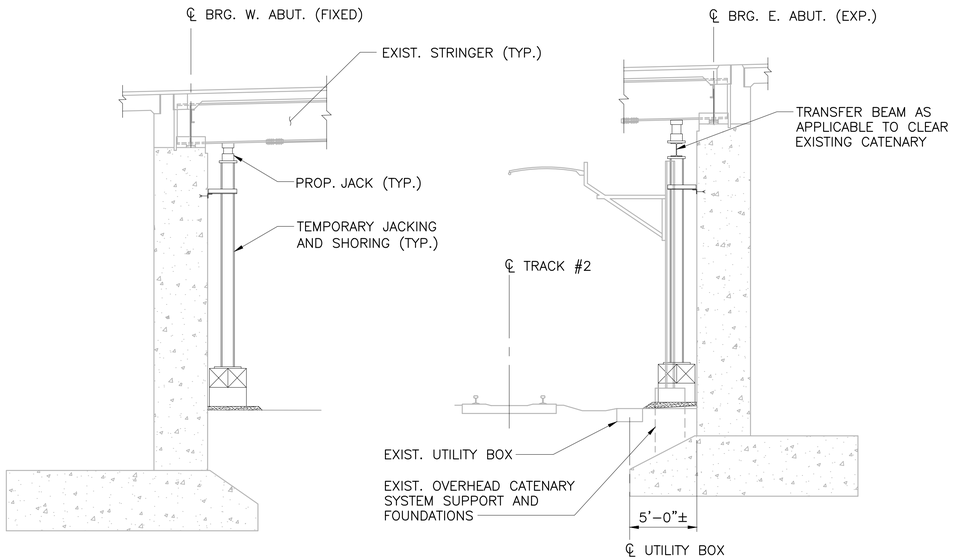

SECTION

TYPICAL SHORING DETAILS AT ABUTMENT

SCALE: 3/16"=1'-0"

CHALKSTONE RR BRIDGE NO. 706 ABUTMENTS	REACTION LOADS & MINIMUM JACK CAPACITIES (KIPS)		
STRINGER NO.	DEAD LOAD (DL)	LIVE LOAD+ IMPACT (LL+I)	JACK CAPACITY 1.5x(DL+LL)
S-1 AND S-18	92	80	258
S-9 AND S-10	92	80	258
S-2 THRU S-8 S-11 THRU S-17	83	87	255

TEMPORARY JACKING AND SHORING OF STRINGER NOTES

1. THE STRINGERS ARE TO BE TEMPORARILY JACKED AND SHORED TO PERFORM THE REPLACEMENT OF BEARING AND STEEL REPAIRS.
2. LOADS IN TABLE ARE APPROXIMATE TO WITHIN 10%. THEY ARE PROVIDED SUCH THAT IF THE ACTUAL FIELD JACKING LOADS EXCEED THESE VALUES. WORK SHALL STOP AND THE REASON INVESTIGATED PRIOR TO FURTHER JACKING.
3. TEMPORARY JACKING AND SHORING DETAILS SHOWN ARE SCHEMATIC IN NATURE.
4. THE JACKING AND SHORING ASSEMBLY SHALL HAVE A SAFETY FACTOR OF AT LEAST 1.5 ABOVE AND BEYOND THE MAXIMUM LOAD THE JACKS WILL BE SUBJECTED TO FOR THE DURATION OF THEIR USE.
5. THE CONTRACTOR SHALL SUBMIT STAMPED DESIGN CALCULATIONS AND SHOP DRAWINGS OF THE JACKING AND SHORING FOR REVIEW AND APPROVAL PRIOR TO CONSTRUCTION. THIS SUBMISSION SHALL INCLUDE A SEQUENCE OF CONSTRUCTION FOR THE JACKING OPERATION.
6. IT IS ASSUMED THAT WORK SHALL BE COORDINATED SUCH THAT ALL BEAMS WILL BE JACKED AND SHORED ONLY ONCE. JACKING AND SHORING SHALL BE MEASURED AND PAID FOR ONCE PER BEAM TO PERFORM ALL OF THE ABOVE WORK. THERE SHALL BE NO ADDITIONAL PAYMENT MADE TO JACK AND SHORE A BEAM TWICE AS A RESULT OF THE CONTRACTOR'S SEQUENCE OF CONSTRUCTION.
7. THE CONTRACTOR SHALL SIMULTANEOUSLY JACK ALL SPECIFIED STRINGERS ONLY THE AMOUNT REQUIRED TO RELIEVE THE LOAD.
8. ANY DAMAGE WHICH MAY OCCUR TO THE BRIDGE STRUCTURE AS A RESULT OF JACKING OR AS A RESULT OF THE CONTRACTOR'S OPERATIONS SHALL BE REPAIRED BY THE CONTRACTOR TO THE SATISFACTION OF THE ENGINEER AT NO ADDITIONAL COST TO THE STATE.
9. ALL WORK SHALL BE PERFORMED IN ACCORDANCE WITH AMTRAK SPECIFICATIONS.
10. ALL WORK ASSOCIATED WITH ESTABLISHING SOUND BEARING SURFACE AND RESTORING SITE TO ITS ORIGINAL CONDITION, INCLUDING EXCAVATION/BACKFILLING, SHALL BE INCLUDED IN THE COST OF THE JACKING AND SHORING ITEM. ALL RESTORATION SHALL BE COMPLETED TO THE SATISFACTION OF THE ENGINEER.
11. THE CONTRACTOR SHALL UTILIZE "DIG SAFE" AND SHALL BE AWARE OF THE PRESENCE OF EXISTING UNDERGROUND UTILITIES IN THE VICINITY OF THE PROPOSED TEMPORARY JACKING AND SHORING OF GIRDERS, WHICH ARE SHOWN ON THE INDIVIDUAL BRIDGE GENERAL PLANS. IN ORDER TO PREVENT DAMAGE TO EXISTING UTILITIES TO REMAIN, THE CONTRACTOR SHALL SUBMIT CRIBBING DESIGNS WHICH LIMIT THE BEARING PRESSURES TO A MAXIMUM OF 2000 POUNDS PER SQUARE FOOT.
12. THE JACKING AND SHORING SHALL BE PLACED PRIOR TO COMMENCEMENT OF WORK AND SHALL REMAIN IN PLACE UNTIL THE COMPLETION OF ALL REPAIR/REHABILITATION WORK.

vhb
1 Cedar Street
Suite 400
Providence, RI 02903
401.272.8100

REVISIONS		
NO.	DATE	BY

RHODE ISLAND
DEPARTMENT OF TRANSPORTATION

PRESERVATION OF
BRIDGE NOS. 575, 578, 704, 706, 707, AND 708
PROVIDENCE, RHODE ISLAND

CHALKSTONE RAILROAD BRIDGE NO. 706
PRESERVATION
TEMPORARY SHORING DETAILS

CHECKED BY _____ DATE _____ SCALE _____

0018B_V5_D11_TEMPSHOR

\\vhb\gbl\proj\Providence\72328.04\cad\st\planset\Preservation - For Viaduct RFP\D-Chalkstone\0018B_V5_D11_TEMPSHOR.dwg Plotted on Tuesday, January 7, 2020 11:04:50 AM

FED. ROAD DIV. NO.	STATE	FEDERAL AID PROJECT NO.	FISCAL YEAR	SHEET NO.	TOTAL SHEETS
	RI			E01	64

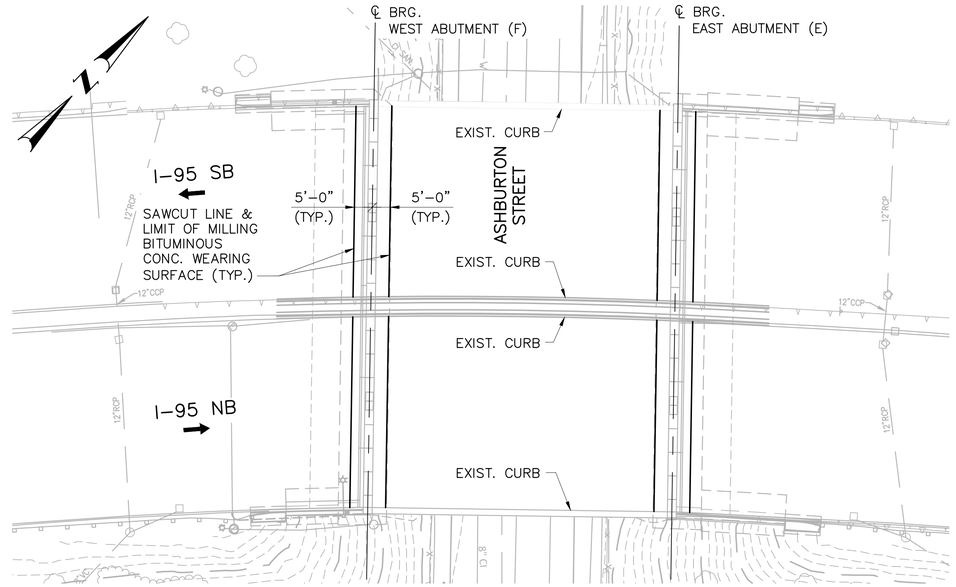

GENERAL PLAN
SCALE: 1"=20'

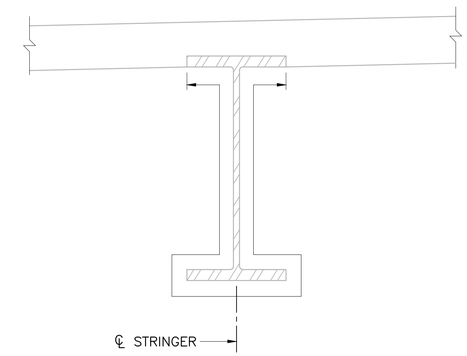

STRUCTURAL STEEL PAINTING NOTE

PAINTED LIMITS SHOWN SHALL BE IN ACCORDANCE WITH SECTION 825 OF THE RHODE ISLAND STANDARD SPECIFICATIONS FOR ROAD AND BRIDGE CONSTRUCTION "PAINTING STRUCTURAL STEEL". THE COLOR OF THE FINAL COAT SHALL BE AS DIRECTED IN RFP PART 2.

PAINT LIMIT DETAIL
N.T.S.

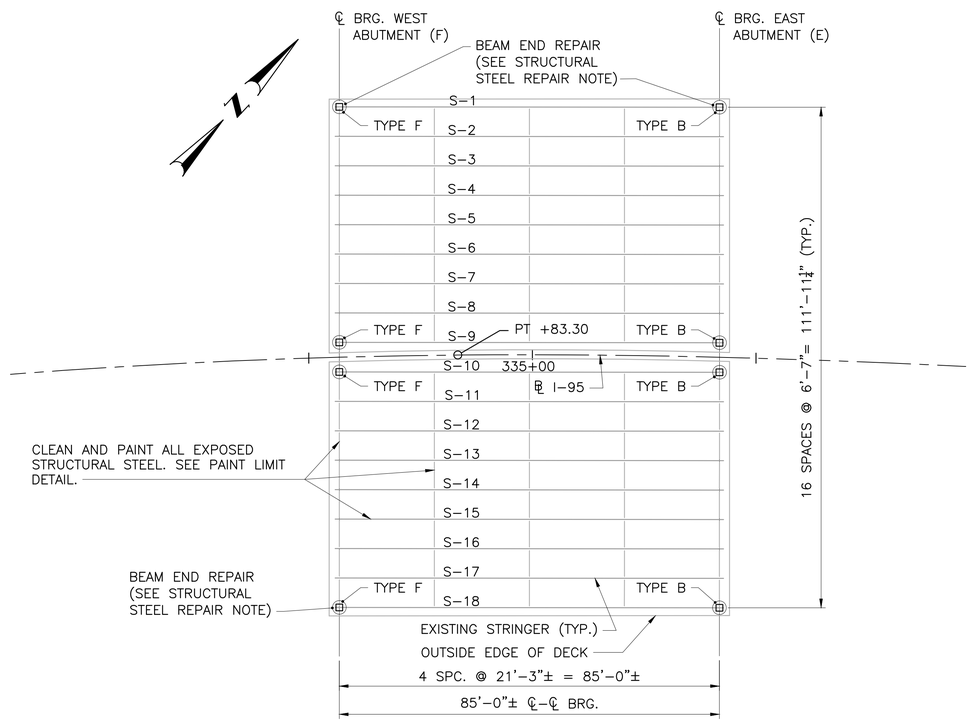

FRAMING PLAN
SCALE: 1/16"=1'-0"

STRUCTURAL STEEL REPAIR NOTE

1. THE DESIGN BUILD TEAM SHALL DESIGN, DEVELOP AND INSTALL BEAM END REPAIR DETAILS FOR ANY BEAM THAT EXHIBITS MORE THAN 10% SHEAR LOSS OR 20% BEARING LOSS. THE DESIGN BUILD TEAM SHALL REFERENCE THE LATEST BRIDGE INSPECTION REPORTS FOR BEAM END SECTION LOSSES. ADDITIONAL SECTION LOSS SHALL BE ASSUMED FROM THE SANDBLASTING DURING THE CLEANING OF THE BEAM END THAT MAY RESULT IN A BEAM END TO EXCEED THE LIMITING SECTION LOSS PERCENTAGES.

NOTES

1. REPLACE TYPE B EXPANSION BEARING AND TYPE F FIXED BEARINGS IN KIND. SEE STEEL REPAIR DETAIL SHEETS 1, 2 AND 3.
2. THE DESIGN BUILD TEAM SHALL CARRY A COST IN THEIR BID FOR AN ADDITIONAL 4 IN-KIND BEARING REPLACEMENTS. THIS COST SHALL INCLUDE, BUT IS NOT LIMITED TO, MATERIALS, LABOR, TEMPORARY SHORING AND JACKING REQUIRED TO REPLACE THE BEARING.

LEGEND

⊡ – REPLACE BEARING (SEE NOTE 2)

vhb
1 Cedar Street
Suite 400
Providence, RI 02903
401.272.8100

REVISIONS		
NO.	DATE	BY

RHODE ISLAND
DEPARTMENT OF TRANSPORTATION

PRESERVATION OF
BRIDGE NOS. 575, 578, 704, 706, 707, AND 708
PROVIDENCE, RHODE ISLAND

ASHBURTON ST. BRIDGE NO. 707 PRESERVATION

BRIDGE PLANS

CHECKED BY _____ DATE _____ SCALE _____

\\vhb\gbl\proj\Providence\72328.04\cad\dst\planset\Preservation - For Viaduct RFP\E-Ashburton Street\0018C_V3_E01_BGENERAL001.dwg Plotted on Tuesday, January 7, 2020 11:05:34 AM

FED. ROAD DIV. NO.	STATE	FEDERAL AID PROJECT NO.	FISCAL YEAR	SHEET NO.	TOTAL SHEETS
	RI			E02	64

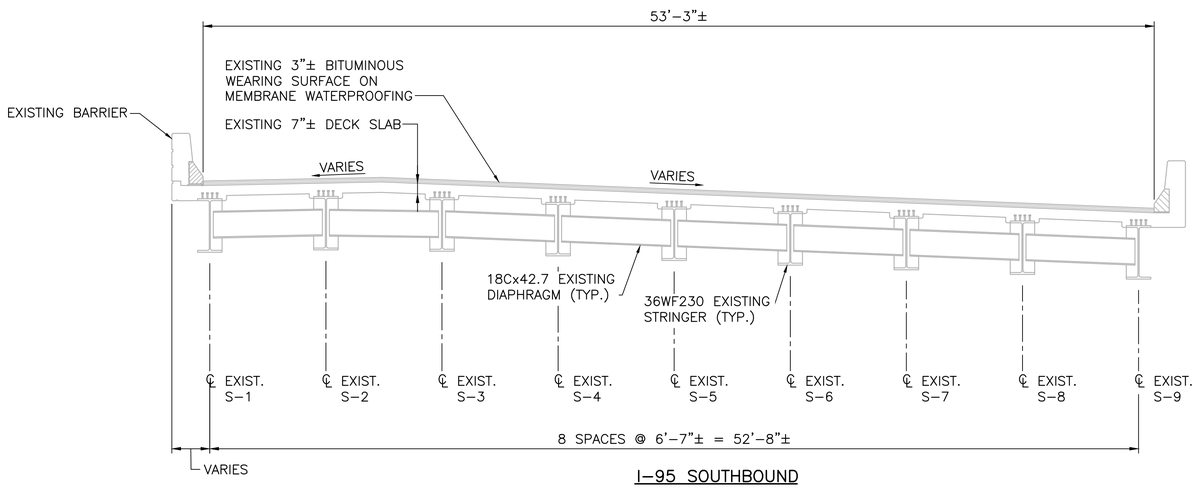

I-95 SOUTHBOUND

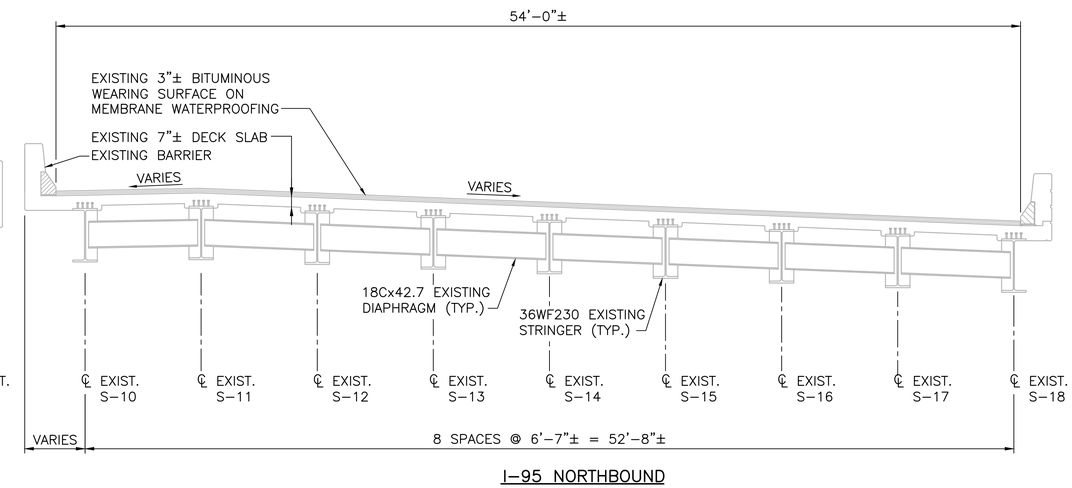

I-95 NORTHBOUND

TRANSVERSE SECTION

SCALE 1/4"=1'-0"

REVISIONS		
NO.	DATE	BY

RHODE ISLAND
DEPARTMENT OF TRANSPORTATION

PRESERVATION OF
BRIDGE NOS. 575, 578, 704, 706, 707, AND 708

PROVIDENCE, RHODE ISLAND

ASHBURTON ST. BRIDGE NO. 707 PRESERVATION

TRANSVERSE SECTION

vhb
1 Cedar Street
Suite 400
Providence, RI 02903
401.272.8100

CHECKED BY _____ DATE _____ SCALE _____

\\vhb\gbl\proj\Providence\72328.04\cad\st\planset\Preservation - For Viaduct RFP\E-Ashburton Street\0018C_V3_E02_BTYPICAL.dwg Plotted on Tuesday, January 7, 2020 11:05:58 AM

FED. ROAD DIV. NO.	STATE	FEDERAL AID PROJECT NO.	FISCAL YEAR	SHEET NO.	TOTAL SHEETS
	RI			E03	64

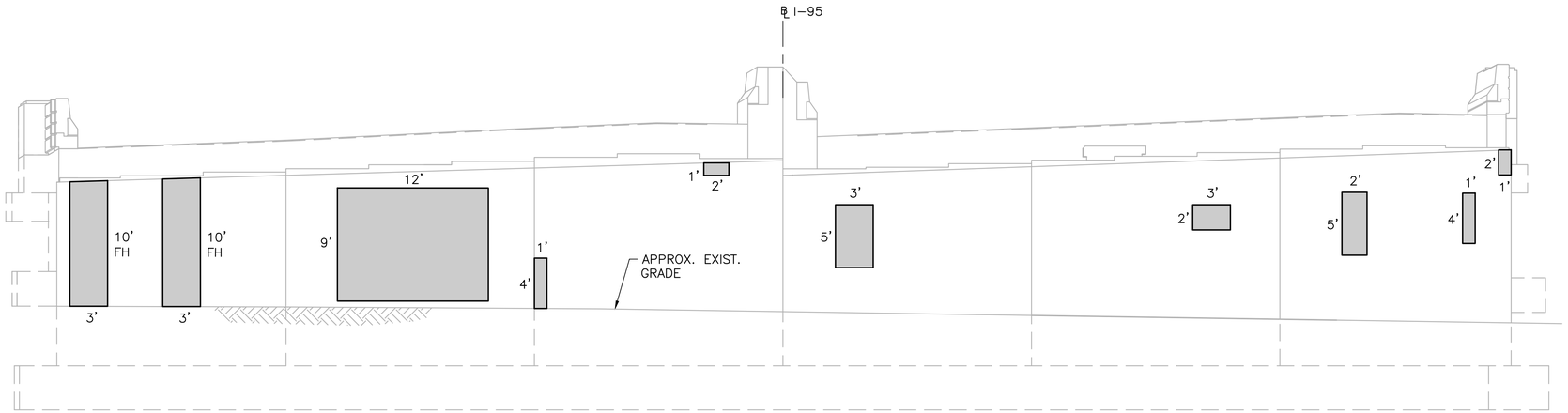

WEST ABUTMENT ELEVATION
SCALE: 3/16"=1'-0"

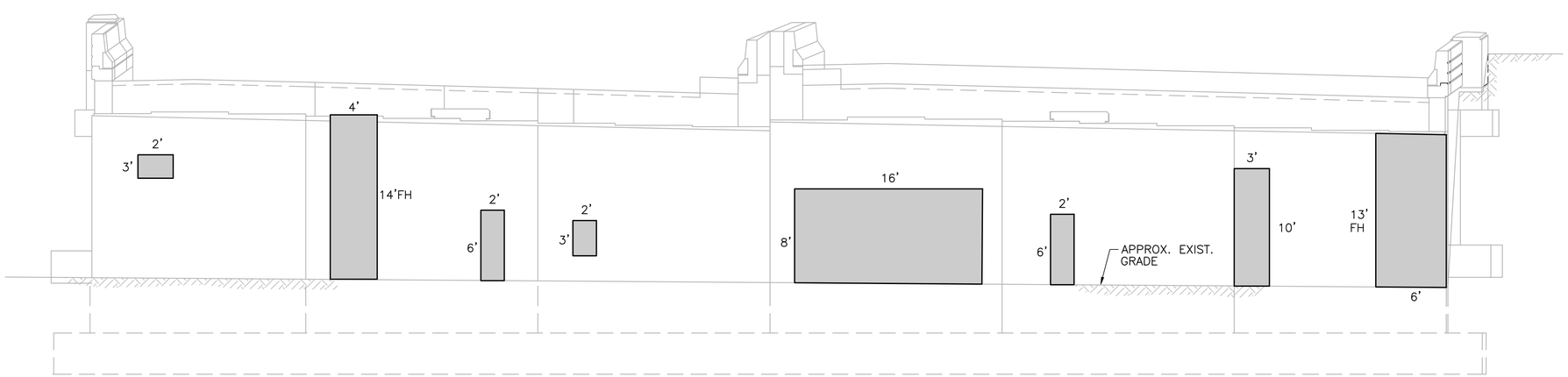

EAST ABUTMENT ELEVATION
SCALE: 3/16"=1'-0"

LEGEND

DENOTES AREA OF CONCRETE REPAIRS

REVISIONS		
NO.	DATE	BY

RHODE ISLAND
DEPARTMENT OF TRANSPORTATION

PRESERVATION OF
BRIDGE NOS. 575, 578, 704, 706, 707, AND 708
PROVIDENCE, RHODE ISLAND

ASHBURTON ST. BRIDGE NO. 707 PRESERVATION

WEST AND EAST ABUTMENT ELEVATIONS

vhb
1 Cedar Street
Suite 400
Providence, RI 02903
401.272.8100

CHECKED BY _____ DATE _____ SCALE _____

0018C_V3_E03_ABUTPLAN

\\vhb\gbl\proj\Providence\72328.04\cad\dgn\planset\Preservation - For Viaduct RFPIE-Ashburton Street\0018C_V3_E03_ABUTPLAN.dwg Plotted on Tuesday, January 7, 2020 11:06:23 AM

FED. ROAD DIV. NO.	STATE	FEDERAL AID PROJECT NO.	FISCAL YEAR	SHEET NO.	TOTAL SHEETS
	RI			E04	64

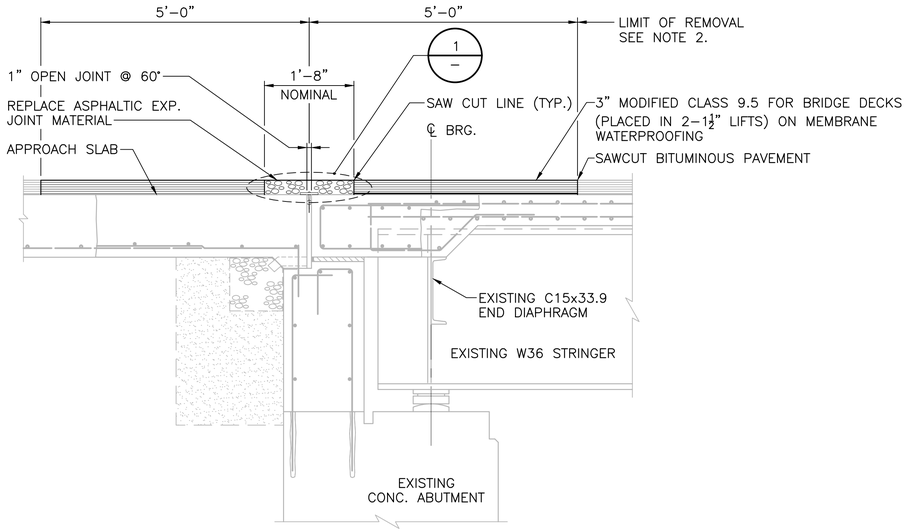

EXPANSION JOINT DETAIL AT EAST ABUTMENT

SCALE 3/4"=1'-0"

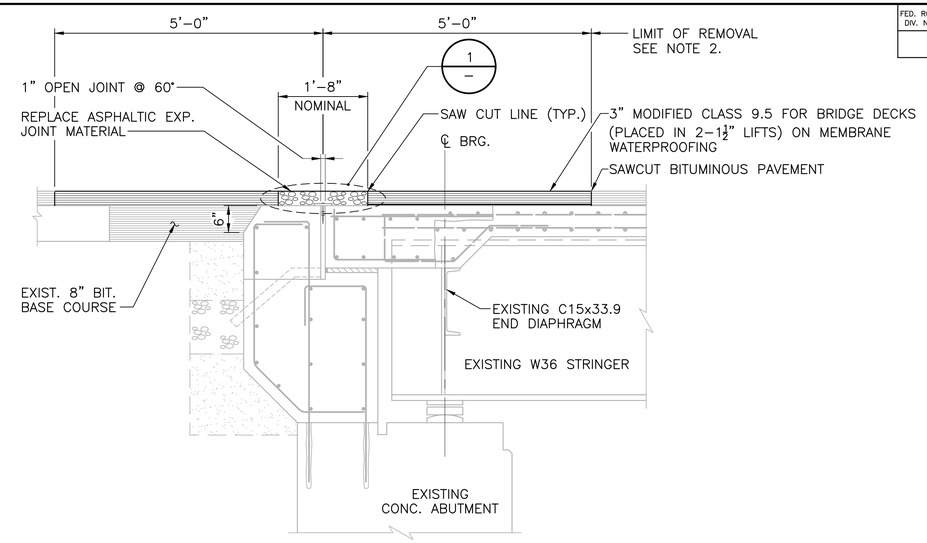

EXPANSION JOINT DETAIL AT EAST ABUTMENT MEDIAN

SCALE 3/4"=1'-0"

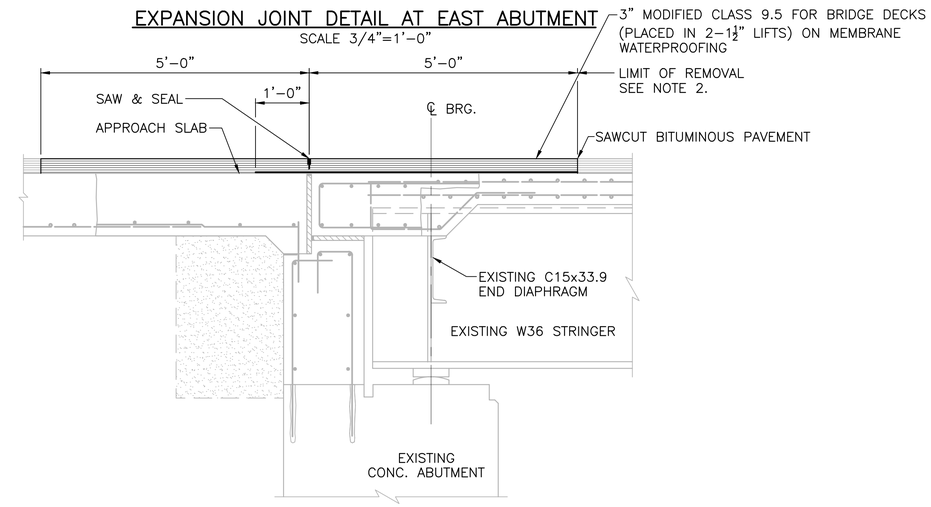

FIXED JOINT DETAIL AT WEST ABUTMENT

SCALE 3/4"=1'-0"

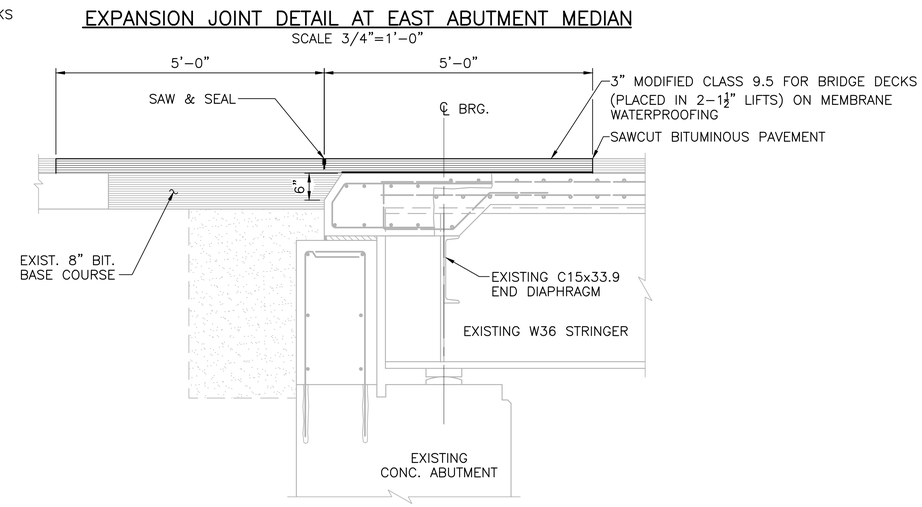

FIXED JOINT DETAIL AT WEST ABUTMENT MEDIAN

SCALE 3/4"=1'-0"

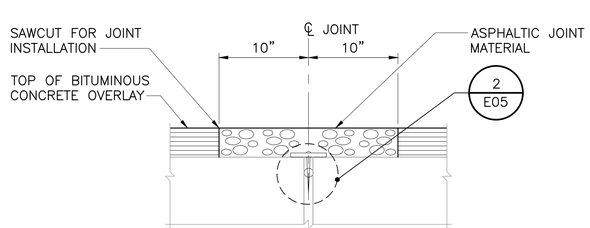

DETAIL

SCALE: 1 1/2"=1'-0"

1
–

NOTES

1. CONTRACTOR SHALL TAKE EXTREME CARE NOT TO DAMAGE EXISTING DECK AND APPROACH SLAB DURING THE PAVEMENT AND MEMBRANE REMOVAL OPERATIONS.

REVISIONS		
NO.	DATE	BY

RHODE ISLAND
DEPARTMENT OF TRANSPORTATION

PRESERVATION OF
BRIDGE NOS. 575, 578, 704, 706, 707, AND 708

PROVIDENCE, RHODE ISLAND

ASHBURTON ST. BRIDGE NO. 707 PRESERVATION

JOINT DETAILS 1

CHECKED BY _____ DATE _____ SCALE _____

vhb
1 Cedar Street
Suite 400
Providence, RI 02903
401.272.8100

\\vhb\gbl\proj\Providence\72328.04\cad\st\planset\Preservation - For Viaduct RFP\E-Ashburton Street\0018C_V3_E04_JNTDETL001.dwg Plotted on Tuesday, January 7, 2020 11:06:40 AM

FED. ROAD DIV. NO.	STATE	FEDERAL AID PROJECT NO.	FISCAL YEAR	SHEET NO.	TOTAL SHEETS
	RI			E05	64

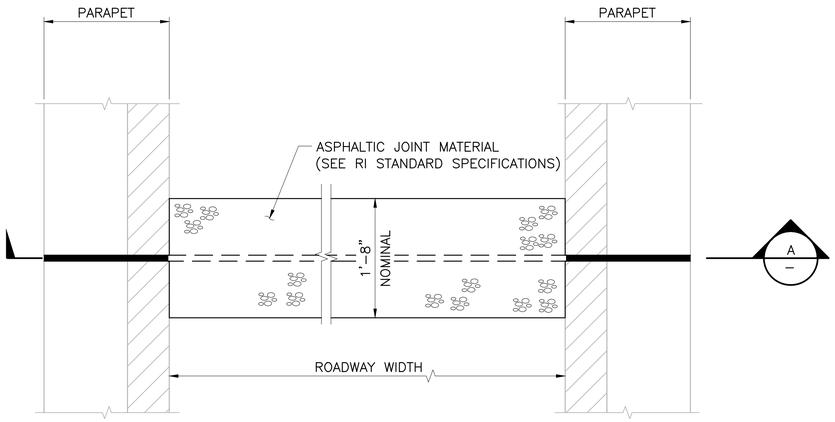

PLAN AT ROADWAY WITH SIDEWALKS
SCALE: 1" = 1'-0"

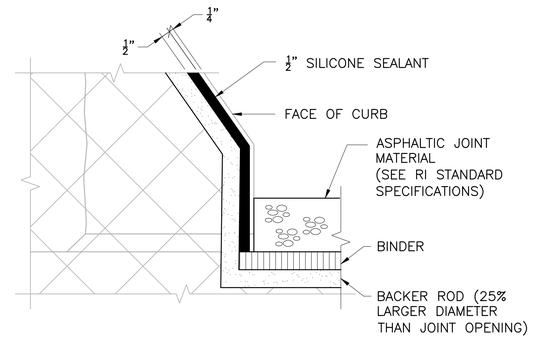

DETAIL 1 –
SCALE: 3"=1'-0"

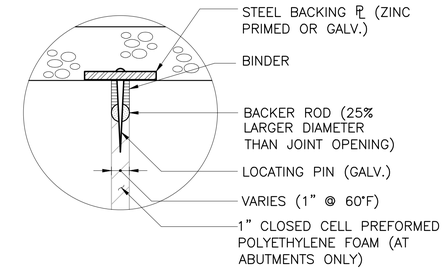

DETAIL 2 E04
SCALE: 3" = 1'-0"

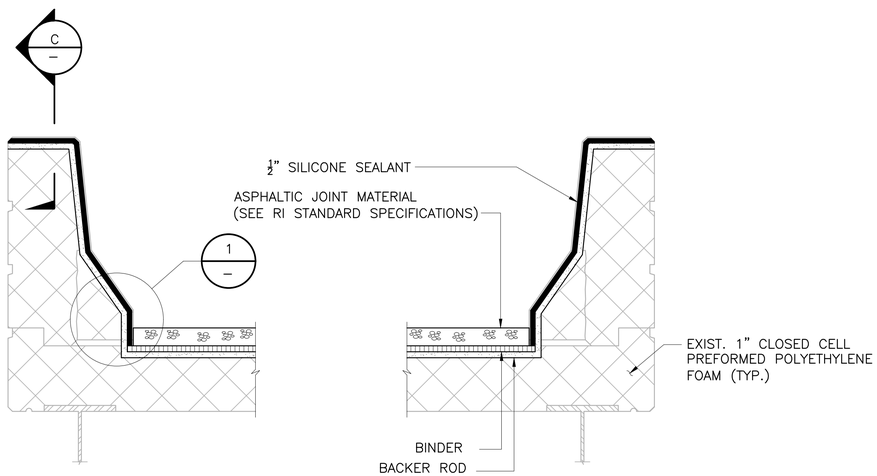

SECTION THRU ROADWAY WITH PARAPETS A –
SCALE: 1" = 1'-0"

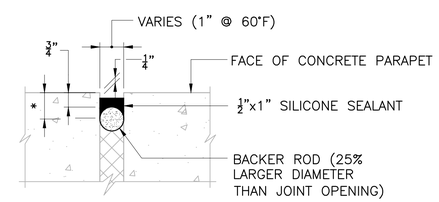

* PREPARE AND PRIME SURFACES PER MANUFACTURER'S RECOMMENDATIONS

SECTION C –
SCALE: 3"=1'-0"

REVISIONS		
NO.	DATE	BY

vhb
1 Cedar Street
Suite 400
Providence, RI 02903
401.272.8100

RHODE ISLAND
DEPARTMENT OF TRANSPORTATION

PRESERVATION OF
BRIDGE NOS. 575, 578, 704, 706, 707, AND 708
PROVIDENCE, RHODE ISLAND

ASHBURTON ST. BRIDGE NO. 707 PRESERVATION

JOINT DETAILS 2

CHECKED BY _____ DATE _____ SCALE _____

0018C_V3_E05_JNTDETL002

\\vhb\gbl\proj\Providence\72328.04\cad\st\planset\Preservation - For Viaduct RFP\E-Ashburton Street\0018C_V3_E05_JNTDETL002.dwg Plotted on Tuesday, January 7, 2020 11:06:54 AM

FED. ROAD DIV. NO.	STATE	FEDERAL AID PROJECT NO.	FISCAL YEAR	SHEET NO.	TOTAL SHEETS
	RI			E06	64

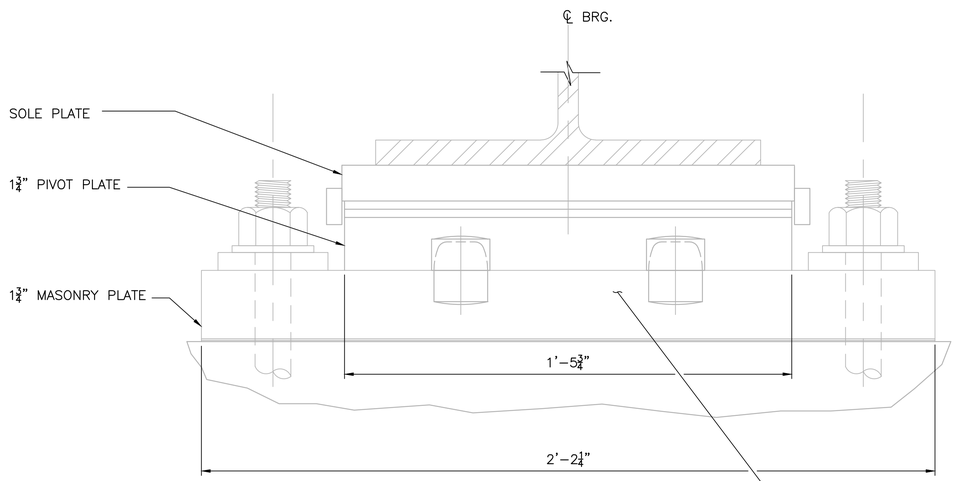

ELEVATION

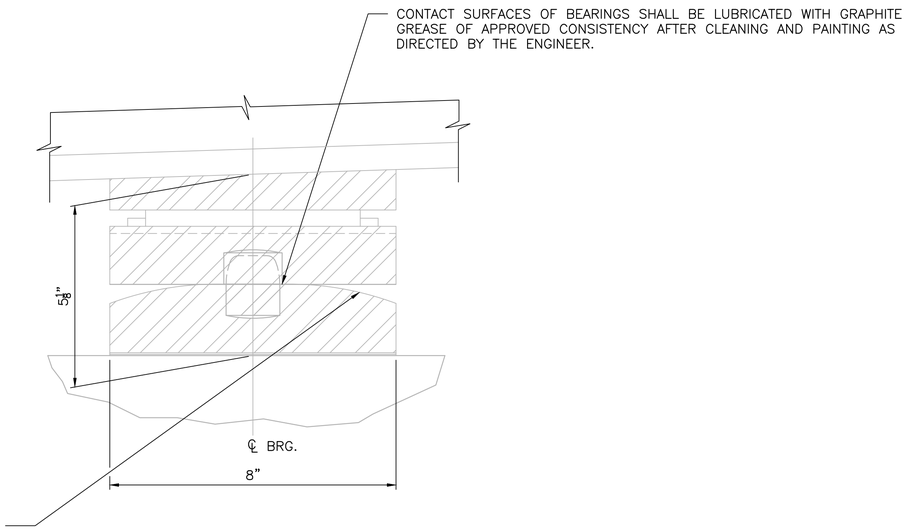

SECTION

EXISTING EXPANSION BEARING – TYPE B

SCALE: 1"= 6'–0"

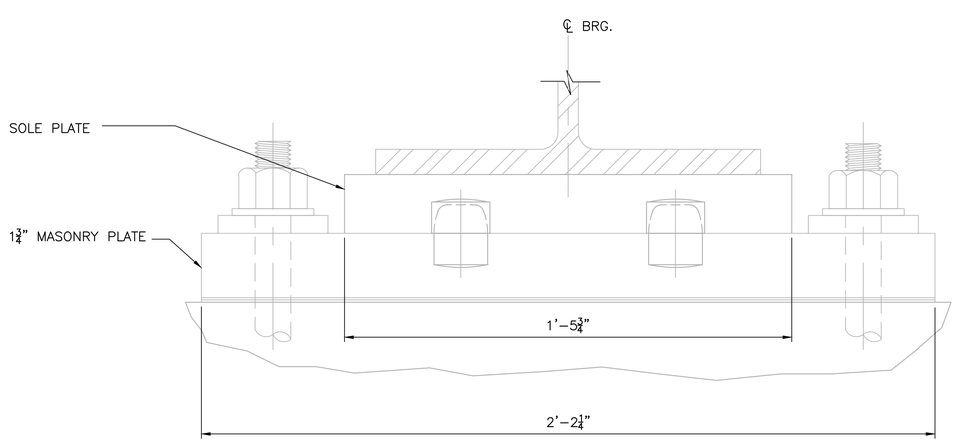

ELEVATION

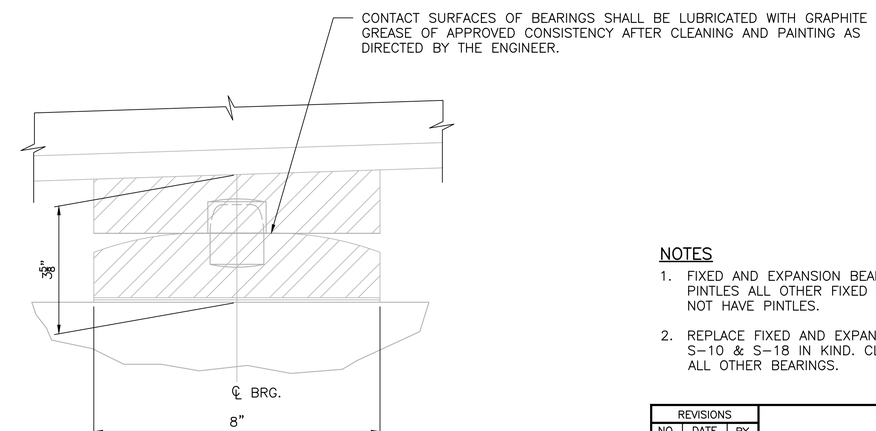

SECTION

EXISTING FIXED BEARING – TYPE F

SCALE: 1"= 1'–0"

NOTES

1. FIXED AND EXPANSION BEARINGS AT S–13 TO S–16 HAVE PINTLES ALL OTHER FIXED AND EXPANSION BEARINGS DO NOT HAVE PINTLES.
2. REPLACE FIXED AND EXPANSION BEARINGS S–1, S–9, S–10 & S–18 IN KIND. CLEAN AND PAINT AND LUBRICATE ALL OTHER BEARINGS.

REVISIONS		
NO.	DATE	BY

RHODE ISLAND
DEPARTMENT OF TRANSPORTATION

PRESERVATION OF
BRIDGE NOS. 575, 578, 704, 706, 707, AND 708

PROVIDENCE, RHODE ISLAND

ASHBURTON ST. BRIDGE NO. 707 PRESERVATION

STEEL DETAILS 1

vhb
1 Cedar Street
Suite 400
Providence, RI 02903
401.272.8100

CHECKED BY _____ DATE _____ SCALE _____

0018C_V3_E06_STEELDETL001

\\vhb\gbl\proj\Providence\72328.04\cad\stj\planset\Preservation - For Viaduct RFP\E-Ashburton Street\0018C_V3_E06_STEELDETL001.dwg Plotted on Tuesday, January 7, 2020 11:07:11 AM

FED. ROAD DIV. NO.	STATE	FEDERAL AID PROJECT NO.	FISCAL YEAR	SHEET NO.	TOTAL SHEETS
	RI			E07	64

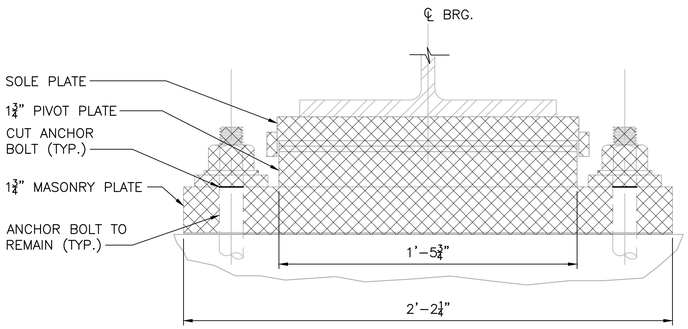

ELEVATION

EXISTING EXPANSION BEARING
SCALE: 1"= 6'-0"
(STRINGERS S–1, S–9, S–10, S–18)

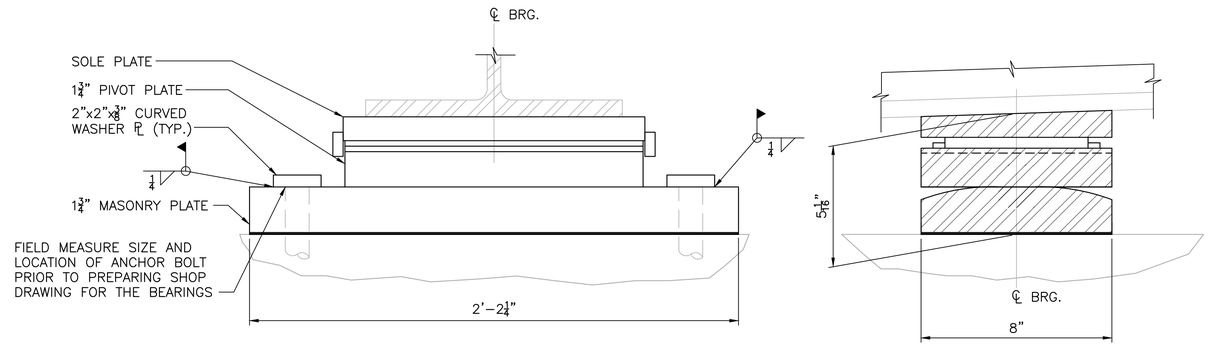

ELEVATION

SECTION

PROPOSED EXPANSION BEARING
SCALE: 1"= 6'-0"

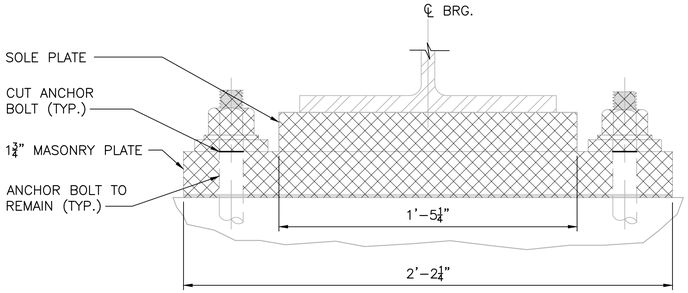

ELEVATION

EXISTING FIXED BEARING
SCALE: 3/8"= 1'-0"
(STRINGERS S–1, S–9, S–10, S–18)

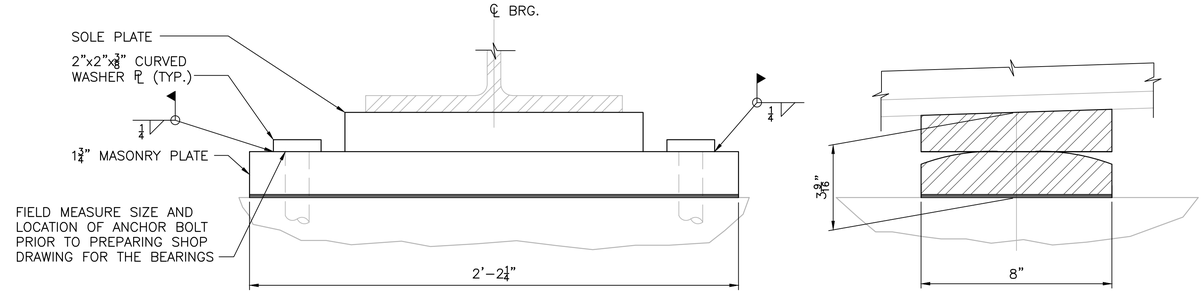

ELEVATION

SECTION

PROPOSED FIXED BEARING
SCALE: 3/8"= 1'-0"

NOTES

1. FIXED AND EXPANSION BEARINGS AT S–13 TO S–16 HAVE PINTLES ALL OTHER FIXED AND EXPANSION BEARINGS DO NOT HAVE PINTLES.
2. REPLACE FIXED AND EXPANSION BEARINGS S–1, S–9, S–10 & S–18. CLEAN AND PAINT AND LUBRICATE ALL OTHER BEARINGS.
3. BEARINGS SHALL BE REPLACED IN KIND. SEE STEEL DETAILS 3 AND STEEL DETAILS 4 FOR BEARING INFORMATION.

LEGEND

– REMOVE AND DISPOSE

vhb
1 Cedar Street
Suite 400
Providence, RI 02903
401.272.8100

REVISIONS		
NO.	DATE	BY

RHODE ISLAND
DEPARTMENT OF TRANSPORTATION

PRESERVATION OF
BRIDGE NOS. 575, 578, 704, 706, 707, AND 708
PROVIDENCE, RHODE ISLAND

ASHBURTON ST. BRIDGE NO. 707 PRESERVATION

STEEL DETAILS 2

CHECKED BY _____ DATE _____ SCALE _____

0018C_V3_E07_STEELDETL002

\\vhb\gbl\proj\Providence\72328.04\cad\st\planset\Preservation - For Viaduct RFP\E-Ashburton Street\0018C_V3_E07_STEELDETL002.dwg Plotted on Tuesday, January 7, 2020 11:07:26 AM

FED. ROAD DIV. NO.	STATE	FEDERAL AID PROJECT NO.	FISCAL YEAR	SHEET NO.	TOTAL SHEETS
	RI			E08	64

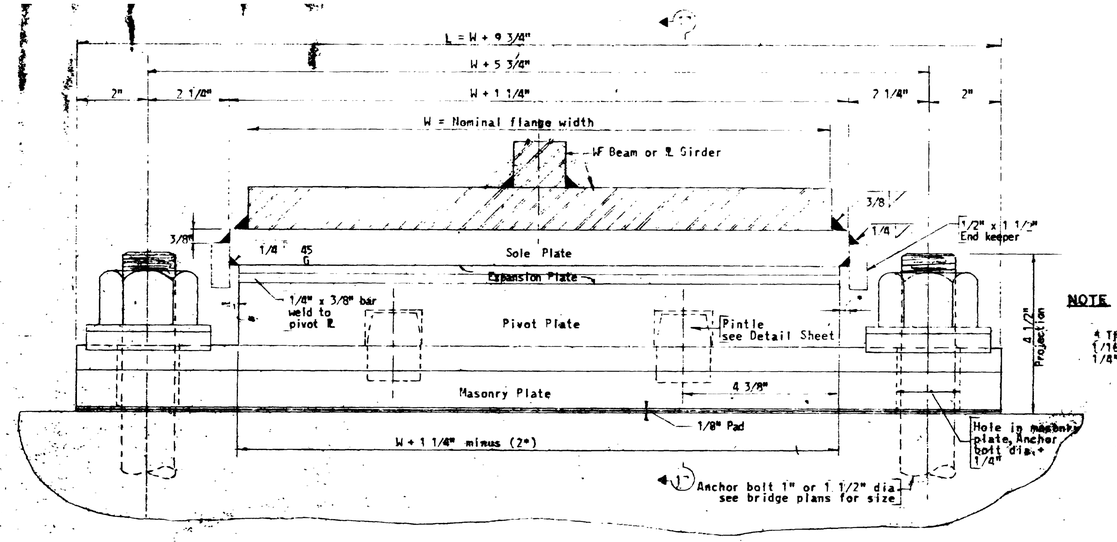

ELEVATION

NOTE

* This dimension to be; 1/16" for Type A
1/8" for Type B

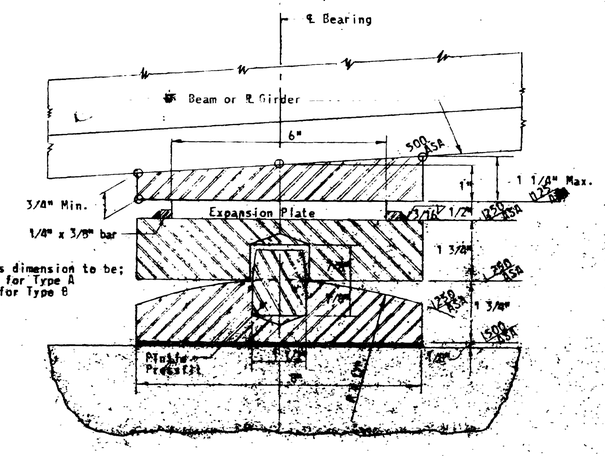

SECTION-17-17

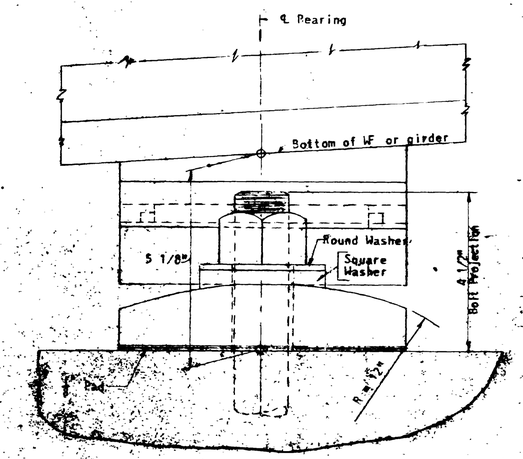

END VIEW

EXPANSION BEARING — TYPES A & B

SCALE: 6"=1'-0"

TYPE A—PREVENTS TRANSVERSE MOVEMENT

TYPE B—ALLOWS TRANSVERSE MOVEMENT

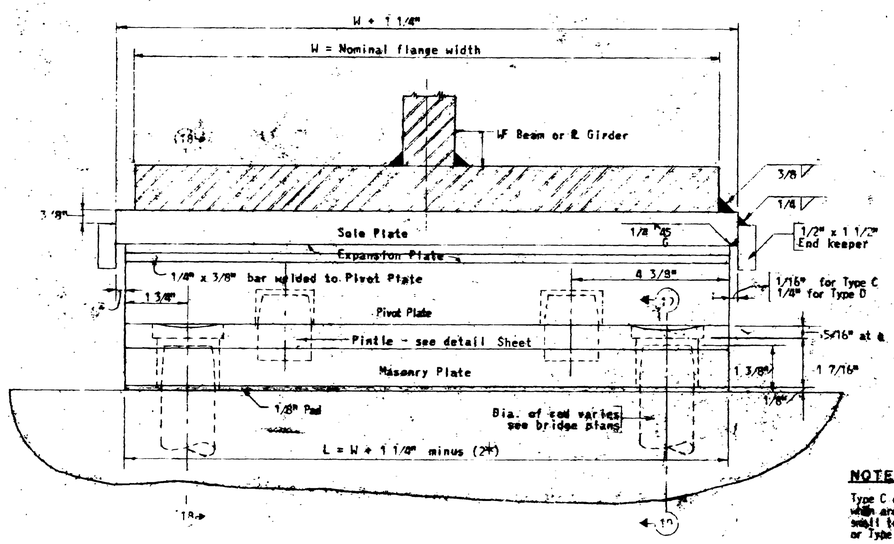

ELEVATION

NOTE

Type C or D bearing to be used when area of beam seat is too small to permit use of Type A or Type B.

NOTE

A. S. A. = American Standards Association

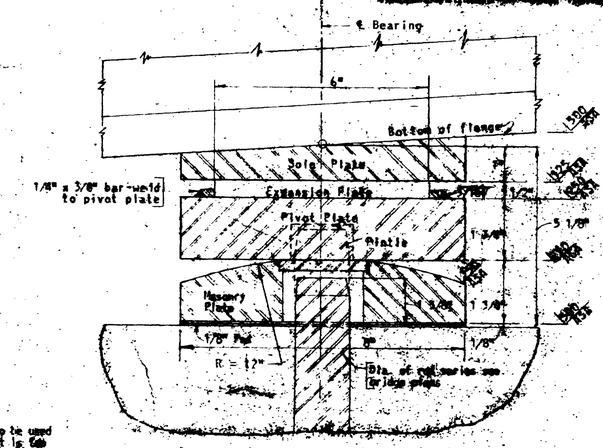

SECTION-18-18

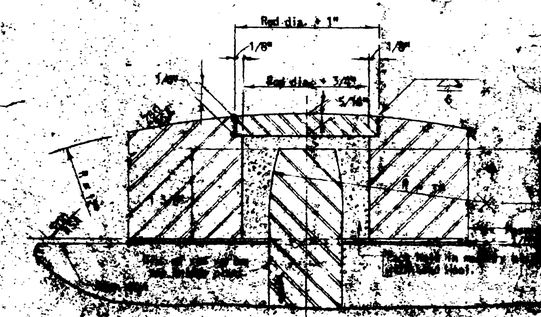

SECTION-19-19
SCALE FULL SIZE

EXPANSION BEARING — TYPES C & D

SCALE: 6"=1'-0"

TYPE C—PREVENTS TRANSVERSE MOVEMENTS

TYPE D—ALLOWS TRANSVERSE MOVEMENTS

NOTE

FOR INFORMATION ONLY, RIC #6291, SHEET B-10, EXPANSION BEARING DETAILS

vhb
1 Cedar Street
Suite 400
Providence, RI 02903
401.272.8100

REVISIONS		
NO.	DATE	BY

RHODE ISLAND
DEPARTMENT OF TRANSPORTATION

PRESERVATION OF
BRIDGE NOS. 575, 578, 704, 706, 707, AND 708
PROVIDENCE, RHODE ISLAND

ASHBURTON ST. BRIDGE NO. 707 PRESERVATION

STEEL DETAILS 3

CHECKED BY _____ DATE _____ SCALE _____

\\vhb\gbl\proj\Providence\72328.04\cad\sl\planset\Preservation - For Viaduct RFP\E-Ashburton Street\0018C_V3_E08_STEELDETL003.dwg Plotted on Tuesday, January 7, 2020 11:07:50 AM

FED. ROAD DIV. NO.	STATE	FEDERAL AID PROJECT NO.	FISCAL YEAR	SHEET NO.	TOTAL SHEETS
	RI			E09	64

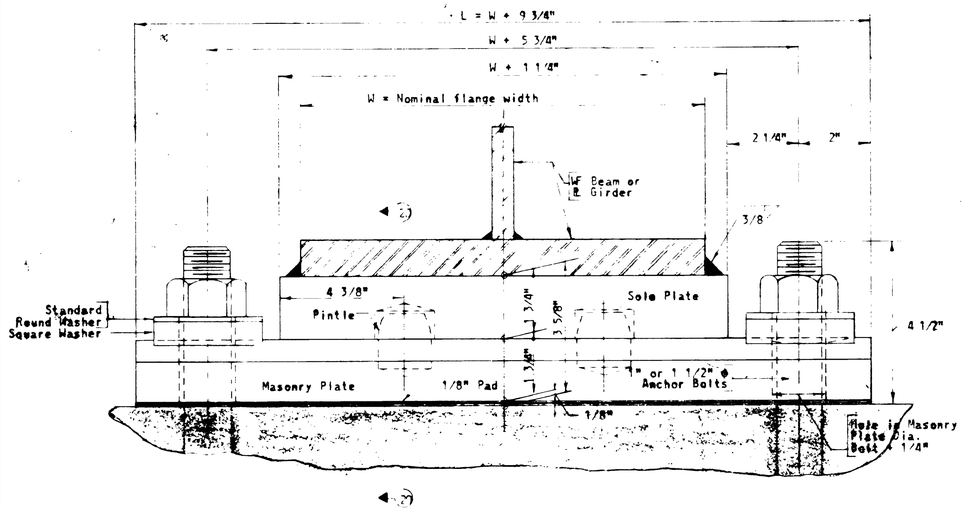

ELEVATION

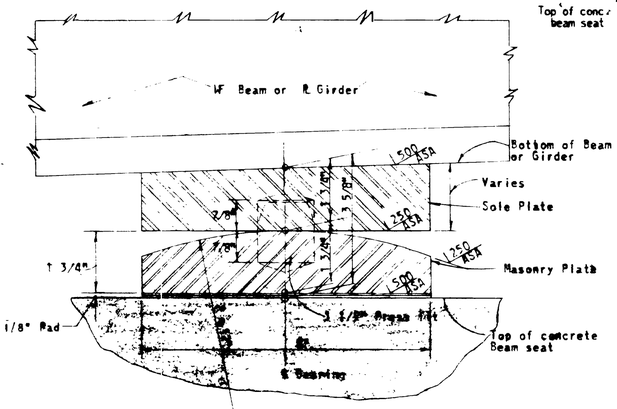

SECTION-20-20

FIXED BEARING – TYPES E & F

SCALE: 6" = 1'-0"

TYPE E – PREVENTS TRANSVERSE MOVEMENT–WITH PINTLES

TYPE F – ALLOWS TRANSVERSE MOVEMENT–NO PINTLES

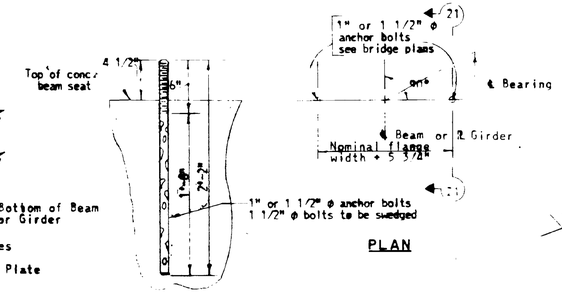

SECTION-21-21

PLAN

DETAIL OF ANCHOR BOLT

(NOT TO SCALE)

FOR TYPES A B E & F BEARINGS

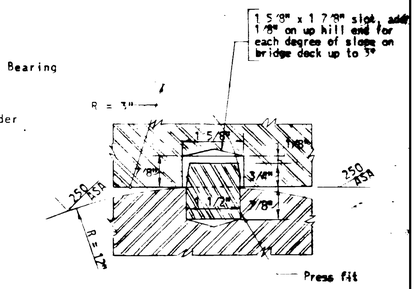

DETAIL OF PINTLE

SCALE 6" = 1'-0"

NOTE

Δ 6" FOR LOUISQUISSET PIKE RAMP BRIDGE

□ = 1'-7" ON LOUISQUISSET

O = 1'-8" ON LOUISQUISSET

☆ = 1'-6" ON LOUISQUISSET

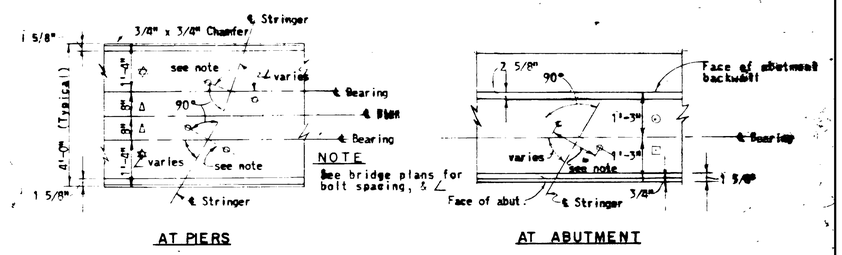

AT PIERS

AT ABUTMENT

TYPICAL ANCHOR BOLT LAYOUT

NOT TO SCALE

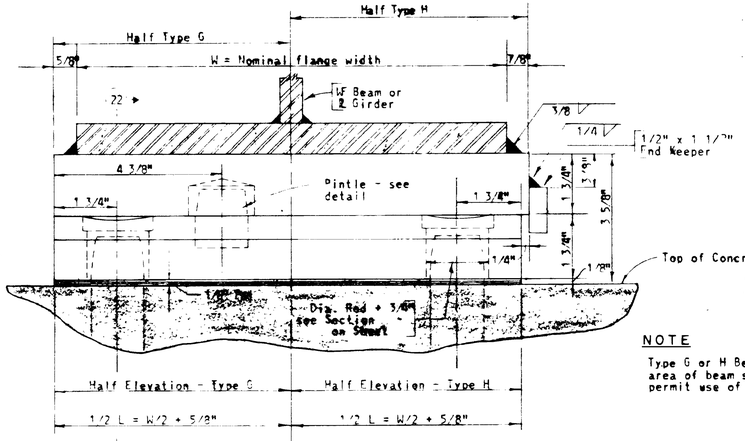

ELEVATION

NOTE

Type G or H Bearings to be used when area of beam seat is too small to permit use of Type E or F Bearings.

TYPE G – WITH PINTLES

TYPE H – NO PINTLES

FIXED BEARING – TYPES G & H

SCALE 6" = 1'-0"

TYPE G – PREVENTS TRANSVERSE MOVEMENT

TYPE H – ALLOWS TRANSVERSE MOVEMENT

NOTE

A.S.A. = American Standards Association. Measurement made in Micro inches.

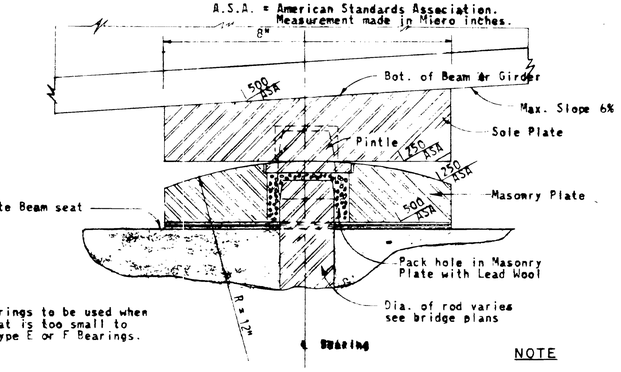

SECTION-22-22

NOTE

See Anchor Rod Detail on this sheet.

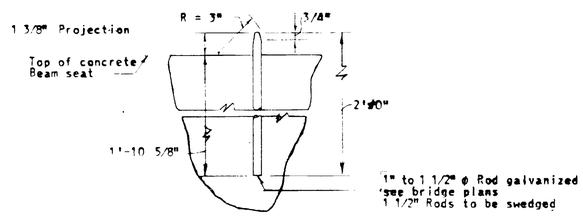

DETAIL OF ANCHOR ROD

NOT TO SCALE

FOR TYPES C, D, G & H BEARINGS

NOTE

FOR INFORMATION ONLY, RIC #6291, SHEET B–11, FIXED BEARING DETAILS

vhb
1 Cedar Street
Suite 400
Providence, RI 02903
401.272.8100

REVISIONS		
NO.	DATE	BY

RHODE ISLAND
DEPARTMENT OF TRANSPORTATION

PRESERVATION OF
BRIDGE NOS. 575, 578, 704, 706, 707, AND 708

PROVIDENCE, RHODE ISLAND

ASHBURTON ST. BRIDGE NO. 707 PRESERVATION

STEEL DETAILS 4

CHECKED BY _____ DATE _____ SCALE _____

0018C_V3_E09_STEELDETL004

\\vhb\gbl\proj\Providence\72328.04\cad\sts\plansetPreservation - For Viaduct RFP\E-Ashburton Street\0018C_V3_E09_STEELDETL004.dwg Plotted on Tuesday, January 7, 2020 11:08:07 AM

FED. ROAD DIV. NO.	STATE	FEDERAL AID PROJECT NO.	FISCAL YEAR	SHEET NO.	TOTAL SHEETS
	RI			E10	64

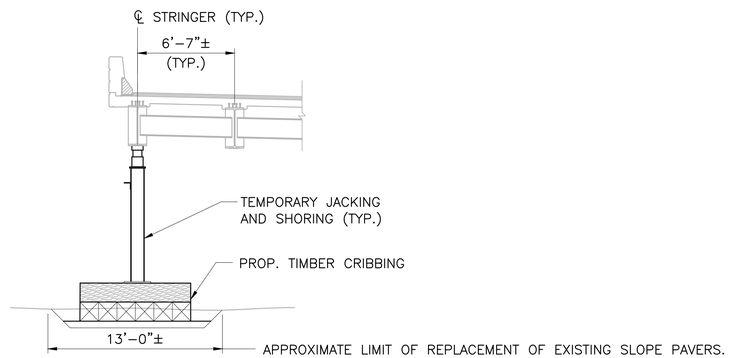

ELEVATION

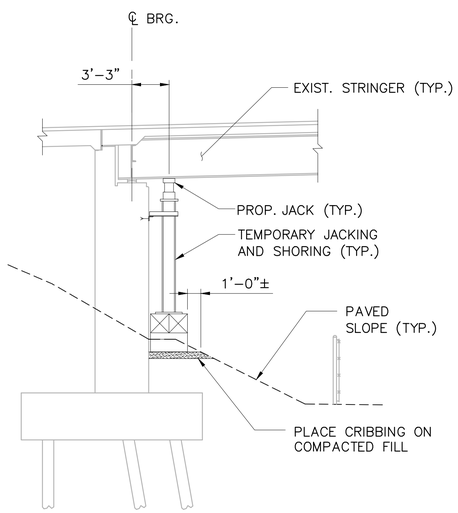

TYPICAL SECTION

TYPICAL SHORING DETAILS AT ABUTMENT

SCALE: 3/16"=1'–0"

TEMPORARY JACKING AND SHORING OF STRINGER NOTES

1. THE STRINGERS ARE TO BE TEMPORARILY JACKED AND SHORED TO PERFORM THE REPLACEMENT OF BEARING AND STEEL REPAIRS.
2. LOADS IN TABLE ARE APPROXIMATE TO WITHIN 10%. THEY ARE PROVIDED SUCH THAT IF THE ACTUAL FIELD JACKING LOADS EXCEED THESE VALUES. WORK SHALL STOP AND THE REASON INVESTIGATED PRIOR TO FURTHER JACKING.
3. TEMPORARY JACKING AND SHORING DETAILS SHOWN ARE SCHEMATIC IN NATURE.
4. THE JACKING AND SHORING ASSEMBLY SHALL HAVE A SAFETY FACTOR OF AT LEAST 1.5 ABOVE AND BEYOND THE MAXIMUM LOAD THE JACKS WILL BE SUBJECTED TO FOR THE DURATION OF THEIR USE.
5. THE CONTRACTOR SHALL SUBMIT STAMPED DESIGN CALCULATIONS AND SHOP DRAWINGS OF THE JACKING AND SHORING FOR REVIEW AND APPROVAL PRIOR TO CONSTRUCTION. THIS SUBMISSION SHALL INCLUDE A SEQUENCE OF CONSTRUCTION FOR THE JACKING OPERATION.
6. WORK SHALL BE COORDINATED SUCH THAT ALL BEAMS WILL BE JACKED AND SHORED ONLY ONCE. JACKING AND SHORING SHALL BE MEASURED AND PAID FOR ONCE PER BEAM TO PERFORM ALL OF THE ABOVE WORK. THERE SHALL BE NO ADDITIONAL PAYMENT MADE TO JACK AND SHORE A BEAM AS A RESULT OF THE CONTRACTOR'S SEQUENCE OF CONSTRUCTION.
7. THE CONTRACTOR SHALL JACK ALL SPECIFIED STRINGERS ONLY THE AMOUNT REQUIRED TO RELIEVE THE LOAD.
8. ANY DAMAGE WHICH MAY OCCUR TO THE BRIDGE STRUCTURE AS A RESULT OF JACKING OR AS A RESULT OF THE CONTRACTOR'S OPERATIONS SHALL BE REPAIRED BY THE CONTRACTOR TO THE SATISFACTION OF THE ENGINEER AT NO ADDITIONAL COST TO THE STATE.
9. ALL WORK SHALL BE PERFORMED IN ACCORDANCE WITH AMTRAK SPECIFICATIONS.
10. ALL WORK ASSOCIATED WITH ESTABLISHING SOUND BEARING SURFACE AND RESTORING SITE TO ITS ORIGINAL CONDITION, INCLUDING EXCAVATION/BACKFILLING, SHALL BE INCLUDED IN THE COST OF THE JACKING AND SHORING ITEM. ALL RESTORATION SHALL BE COMPLETED TO THE SATISFACTION OF THE ENGINEER.
11. THE CONTRACTOR SHALL UTILIZE "DIG SAFE" AND SHALL BE AWARE OF THE PRESENCE OF EXISTING UNDERGROUND UTILITIES IN THE VICINITY OF THE PROPOSED TEMPORARY JACKING AND SHORING OF GIRDERS, WHICH ARE SHOWN ON THE INDIVIDUAL BRIDGE GENERAL PLANS. IN ORDER TO PREVENT DAMAGE TO EXISTING UTILITIES TO REMAIN, THE CONTRACTOR SHALL SUBMIT CRIBBING DESIGNS WHICH LIMIT THE BEARING PRESSURES TO A MAXIMUM OF 2000 POUNDS PER SQUARE FOOT.
12. THE JACKING AND SHORING SHALL BE PLACED PRIOR TO COMMENCEMENT OF WORK AND SHALL REMAIN IN PLACE UNTIL THE COMPLETION OF ALL REPAIR/REHABILITATION WORK.

ASHBURTON BRIDGE NO. 707 ABUTMENTS	REACTION LOADS & MINIMUM JACK CAPACITIES (KIPS)		
STRINGER NO.	DEAD LOAD (DL)	LIVE LOAD+ IMPACT (LL+I)	JACK CAPACITY 1.5x(DL+LL)
S–1 AND S–18	67.00	84.00	227.00
S–9 AND S–10	67.00	84.00	227.00

REVISIONS		
NO.	DATE	BY

RHODE ISLAND
DEPARTMENT OF TRANSPORTATION

PRESERVATION OF
BRIDGE NOS. 575, 578, 704, 706, 707, AND 708

PROVIDENCE, RHODE ISLAND

ASHBURTON ST. BRIDGE NO. 707 PRESERVATION

TEMPORARY SHORING DETAILS

CHECKED BY _____ DATE _____ SCALE _____

vhb
1 Cedar Street
Suite 400
Providence, RI 02903
401.272.8100

\\vhb\gbl\proj\Providence\72328.04\cad\st\planset\Preservation - For Viaduct RFP\E-Ashburton Street\0018C_V3_E10_TEMPSHOR.dwg Plotted on Tuesday, January 7, 2020 11:08:21 AM

FED. ROAD DIV. NO.	STATE	FEDERAL AID PROJECT NO.	FISCAL YEAR	SHEET NO.	TOTAL SHEETS
	RI			F01	64

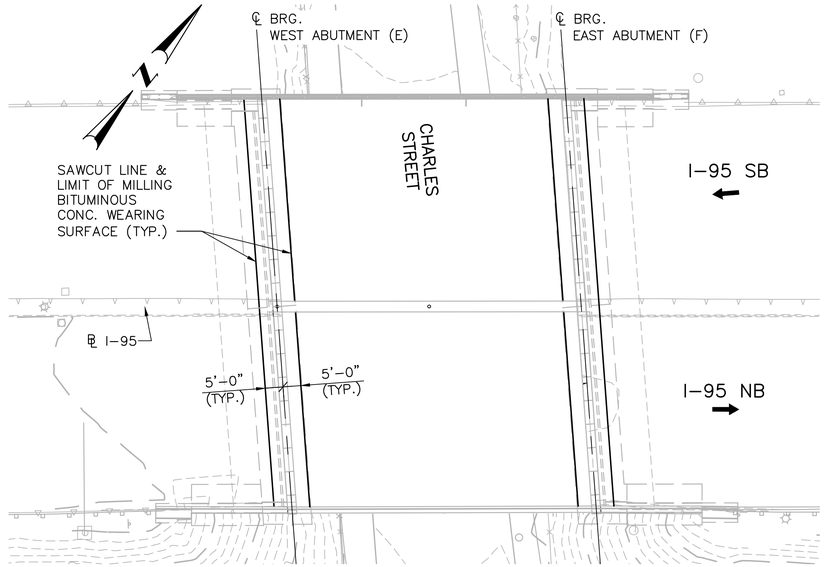

GENERAL PLAN
SCALE: 1"=20'

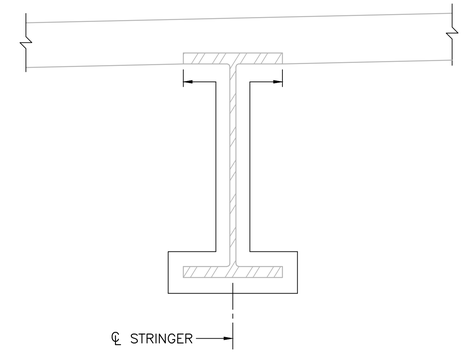

STRUCTURAL STEEL PAINTING NOTE

PAINTED LIMITS SHOWN SHALL BE IN ACCORDANCE WITH SECTION 825 OF THE RHODE ISLAND STANDARD SPECIFICATIONS FOR ROAD AND BRIDGE CONSTRUCTION "PAINTING STRUCTURAL STEEL". THE COLOR OF THE FINAL COAT SHALL BE AS DIRECTED IN RFP PART 2.

PAINT LIMIT DETAIL
N.T.S.

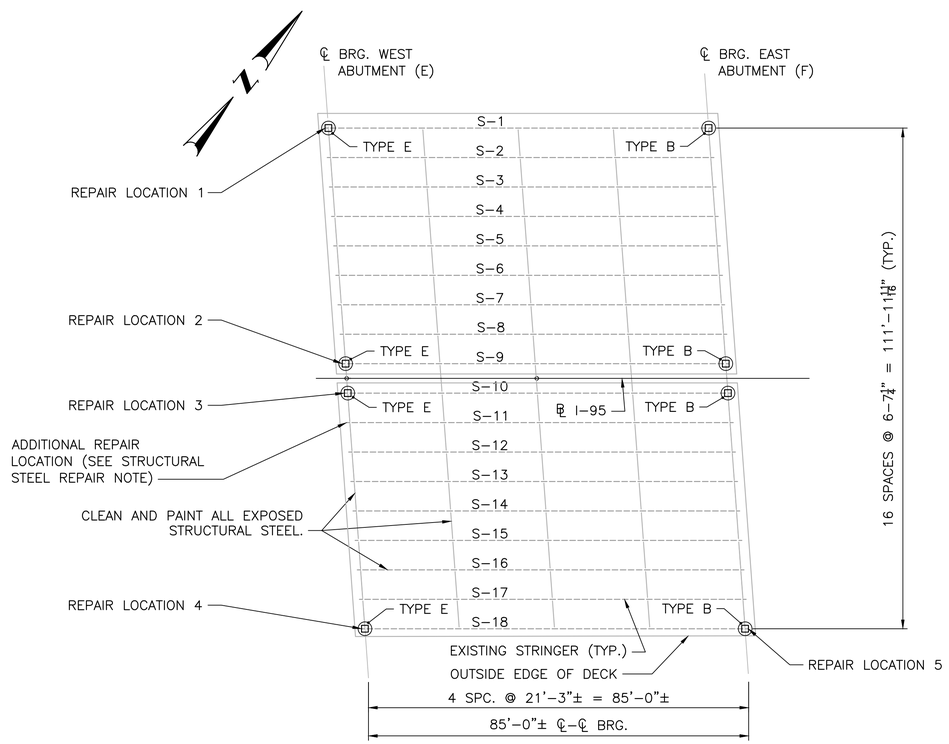

FRAMING PLAN
SCALE: 1/16"=1'–0"

STRUCTURAL STEEL REPAIR NOTE

1. THE DESIGN BUILD TEAM SHALL DESIGN, DEVELOP AND INSTALL BEAM END REPAIR DETAILS FOR ANY BEAM THAT EXHIBITS MORE THAN 10% SHEAR LOSS OR 20% BEARING LOSS. THE DESIGN BUILD TEAM SHALL REFERENCE THE LATEST BRIDGE INSPECTION REPORTS FOR BEAM END SECTION LOSSES. ADDITIONAL SECTION LOSS SHALL BE ASSUMED FROM THE SANDBLASTING DURING THE CLEANING OF THE BEAM END THAT MAY RESULT IN A BEAM END TO EXCEED THE LIMITING SECTION LOSS PERCENTAGES.

NOTES

1. REPLACE TYPE B EXPANSION BEARING AND TYPE F FIXED BEARINGS IN KIND. SEE STEEL REPAIR DETAIL SHEETS 1, 2 AND 3. SEE STEEL REPAIR SHEETS 4–7.
2. THE DESIGN BUILD TEAM SHALL CARRY A COST IN THEIR BID FOR AN ADDITIONAL 4 IN–KIND BEARING REPLACEMENTS. THIS COST SHALL INCLUDE, BUT IS NOT LIMITED TO, MATERIALS, LABOR, TEMPORARY SHORING AND JACKING REQUIRED TO REPLACE THE BEARING.
3. THE DESIGN BUILD TEAM SHALL CARRY A COST IN THEIR BID FOR AN ADDITIONAL 3 BEAM END REPAIRS. THE COST SHALL INCLUDE, BUT IS NOT LIMITED TO, FABRICATION, MATERIALS, LABOR AND DESIGN OF THE REPAIR PLATES.

LEGEND

⊡ – REPLACE BEARING (SEE NOTE 2)

vhb
1 Cedar Street
Suite 400
Providence, RI 02903
401.272.8100

REVISIONS		
NO.	DATE	BY

RHODE ISLAND
DEPARTMENT OF TRANSPORTATION

PRESERVATION OF
BRIDGE NOS. 575, 578, 704, 706, 707, AND 708
PROVIDENCE, RHODE ISLAND

CHARLES ST. BRIDGE NO. 708 PRESERVATION

BRIDGE PLANS

CHECKED BY _____ DATE _____ SCALE _____

\\vhbgbl\proj\Providence\72328.04\cad\st\planset\Preservation - For Viaduct RFP\F-Charles Street\0018C_V3_F01_BGENERAL.dwg Plotted on Tuesday, January 7, 2020 11:09:07 AM

FED. ROAD DIV. NO.	STATE	FEDERAL AID PROJECT NO.	FISCAL YEAR	SHEET NO.	TOTAL SHEETS
	RI			F02	64

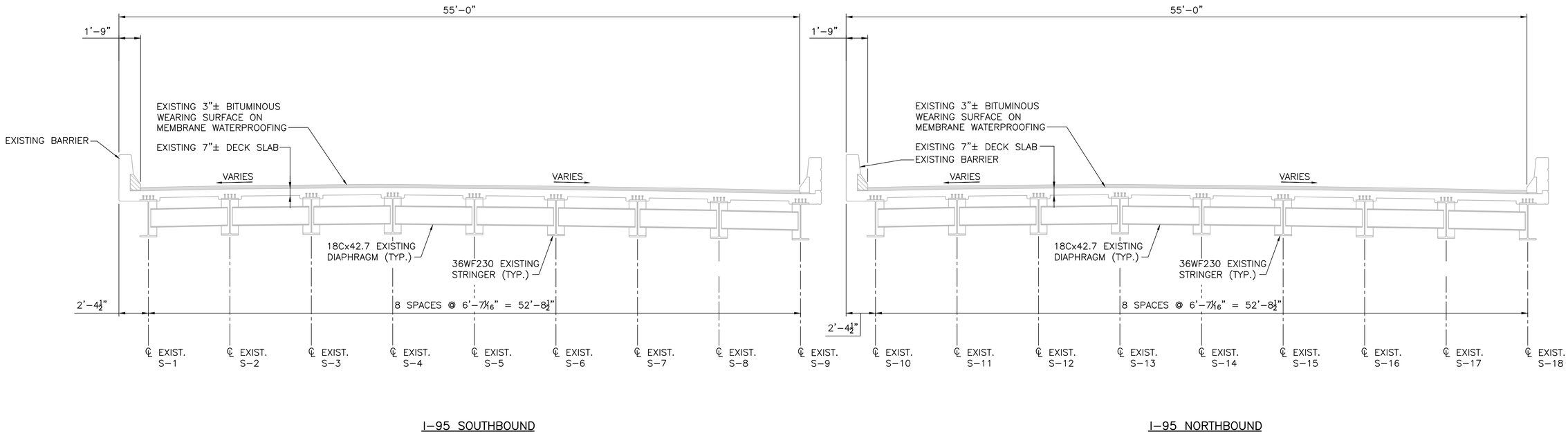

I–95 SOUTHBOUND

I–95 NORTHBOUND

TRANSVERSE SECTION

SCALE 1/4"=1'–0"

REVISIONS		
NO.	DATE	BY

RHODE ISLAND
DEPARTMENT OF TRANSPORTATION

PRESERVATION OF
BRIDGE NOS. 575, 578, 704, 706, 707, AND 708
PROVIDENCE, RHODE ISLAND

CHARLES ST. BRIDGE NO. 708 PRESERVATION

TRANSVERSE SECTION

CHECKED BY _____ DATE _____ SCALE _____

vhb
1 Cedar Street
Suite 400
Providence, RI 02903
401.272.8100

\\vhb\gbl\pro\Providence\72328.04\cadd\planset\Preservation - For Viaduct RFP\F-Charles Street\0018C_V3_F02_BTYPICAL.dwg Plotted on Tuesday, January 7, 2020 11:09:31 AM

FED. ROAD DIV. NO.	STATE	FEDERAL AID PROJECT NO.	FISCAL YEAR	SHEET NO.	TOTAL SHEETS
	RI			F03	64

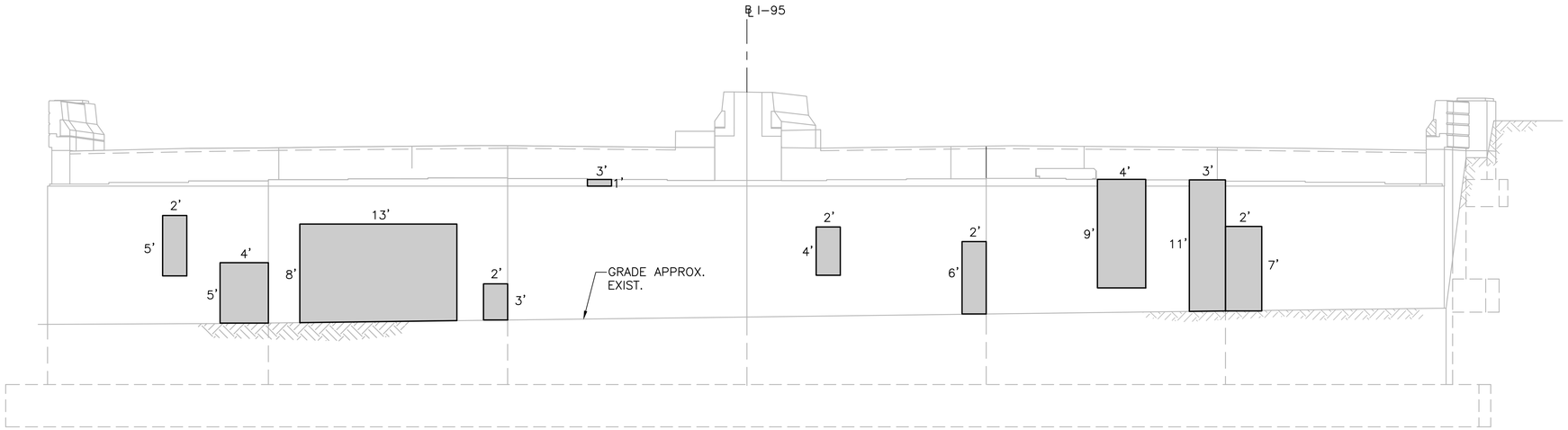

WEST ABUTMENT ELEVATION

SCALE 3/16"=1'-0"

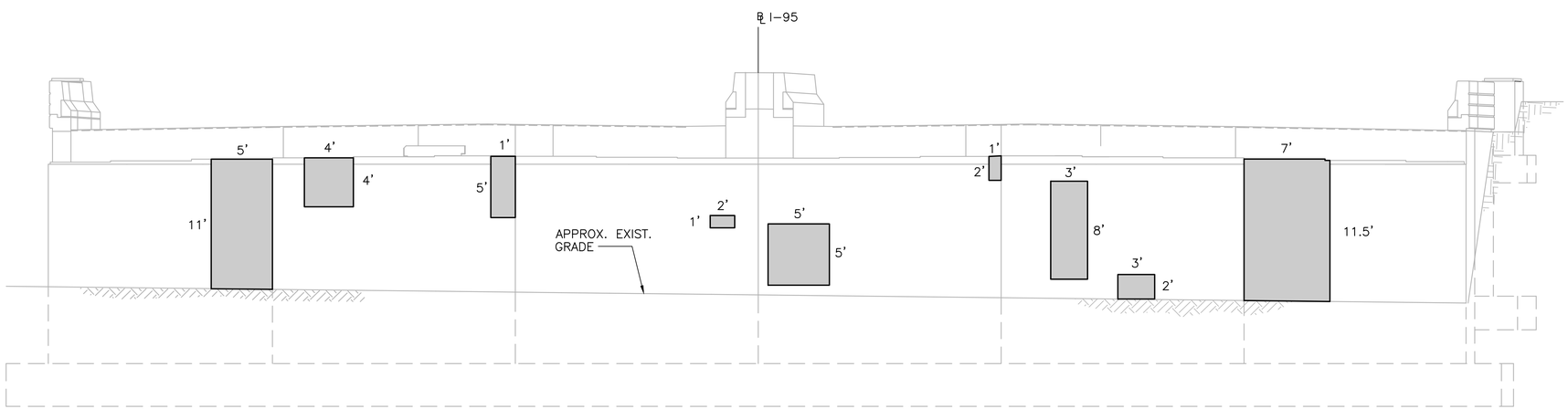

EAST ABUTMENT ELEVATION

SCALE 3/16"=1'-0"

LEGEND

DENOTES AREA OF CONCRETE REPAIRS

REVISIONS		
NO.	DATE	BY

RHODE ISLAND
DEPARTMENT OF TRANSPORTATION

PRESERVATION OF
BRIDGE NOS. 575, 578, 704, 706, 707, AND 708

PROVIDENCE, RHODE ISLAND

CHARLES ST. BRIDGE NO. 708 PRESERVATION

WEST AND EAST ABUTMENT ELEVATIONS

CHECKED BY _____ DATE _____ SCALE _____

vhb
1 Cedar Street
Suite 400
Providence, RI 02903
401.272.8100

\\vhb\gbl\proj\Providence\72328.04\cad\dgt\planset\Preservation - For Viaduct RFP\F-Charles Street\0018C_V3_F03_ABUTPLAN.dwg Plotted on Tuesday, January 7, 2020 11:09:59 AM

FED. ROAD DIV. NO.	STATE	FEDERAL AID PROJECT NO.	FISCAL YEAR	SHEET NO.	TOTAL SHEETS
	RI			F04	64

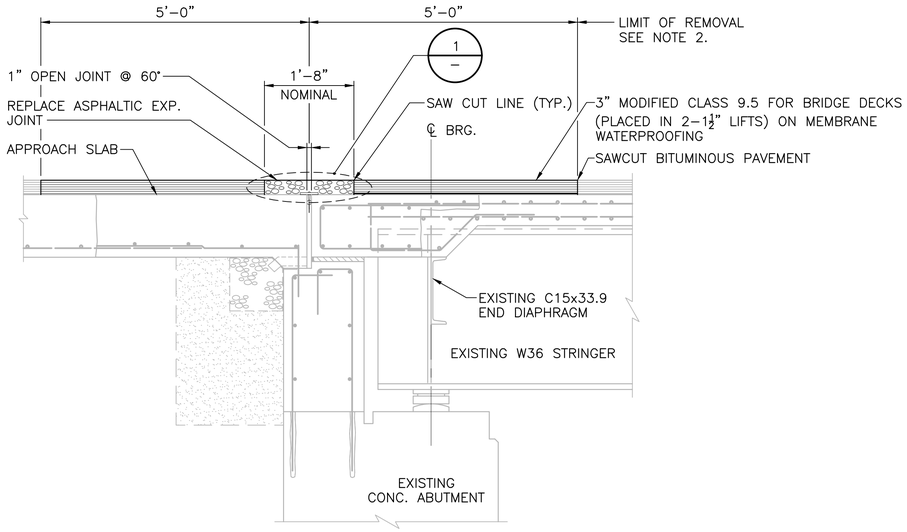

EXPANSION JOINT DETAIL AT WEST ABUTMENT

SCALE 3/4"=1'-0"

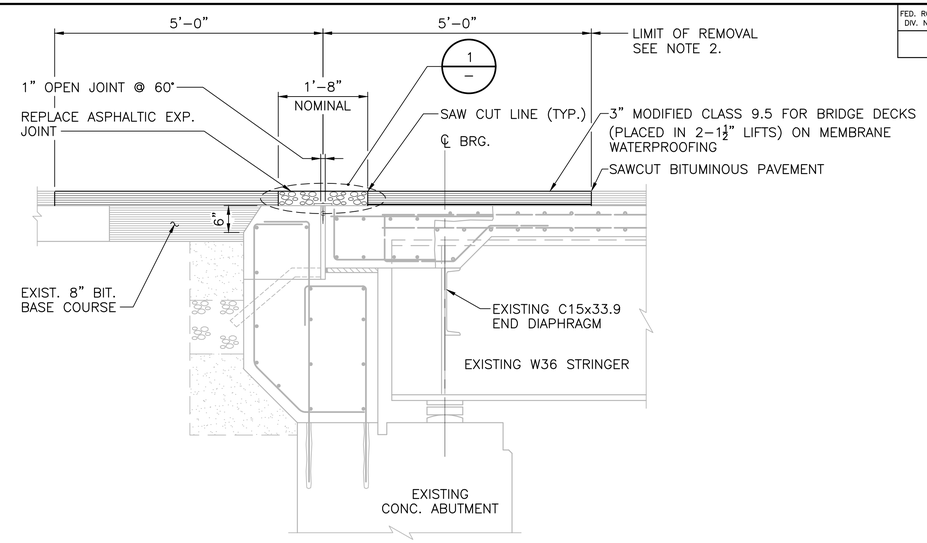

EXPANSION JOINT DETAIL AT WEST ABUTMENT MEDIAN

SCALE 3/4"=1'-0"

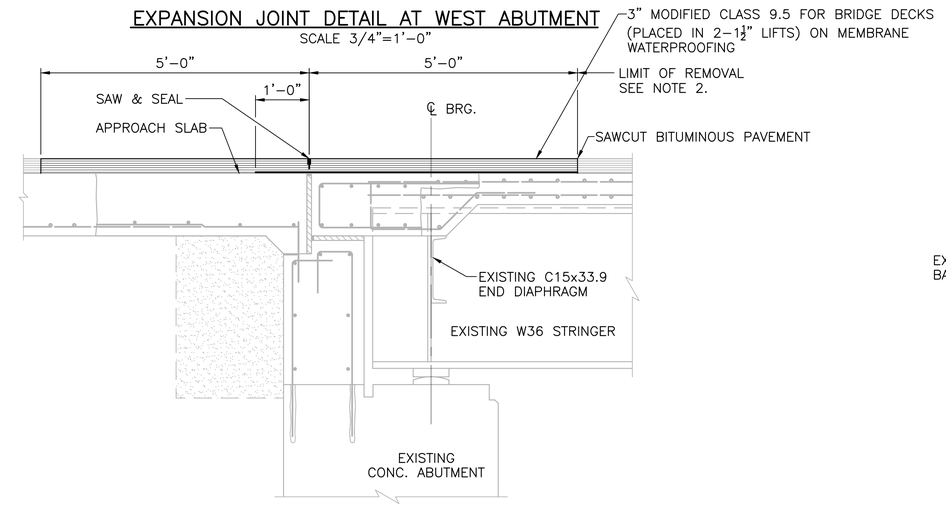

FIXED JOINT DETAIL AT EAST ABUTMENT

SCALE 3/4"=1'-0"

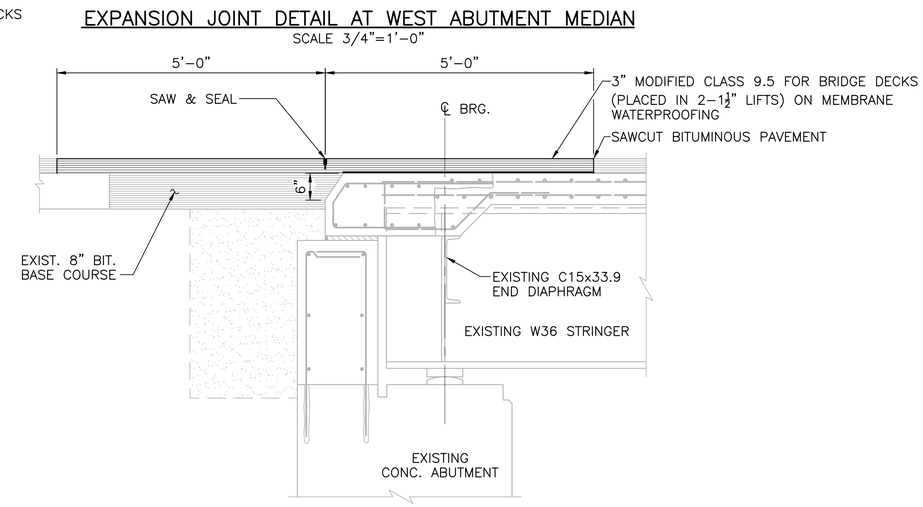

FIXED JOINT DETAIL AT EAST ABUTMENT MEDIAN

SCALE 3/4"=1'-0"

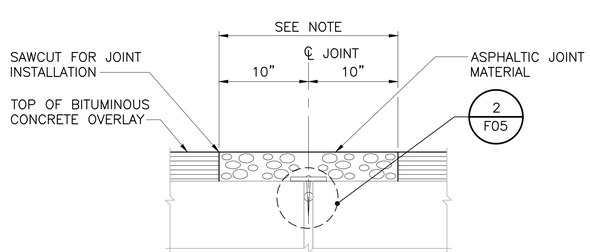

DETAIL 1/–

SCALE: 1 1/2"=1'-0"

NOTE: SAW CUT AND REMOVAL OF NEW BITUMINOUS CONCRETE OVERLAY AND MEMBRANE AND REPLACE WITH ASPHALTIC PLUG EXPANSION EXPANSION JOINT SYSTEM. TO BE PAID FOR UNDER ITEM "ASPHALTIC PLUG EXPANSION JOING SYSTEM".

NOTES

1. CONTRACTOR SHALL TAKE EXTREME CARE NOT TO DAMAGE EXISTING DECK AND APPROACH SLAB DURING THE PAVEMENT AND MEMBRANE REMOVAL OPERATIONS.

REVISIONS		
NO.	DATE	BY

vhb
1 Cedar Street
Suite 400
Providence, RI 02903
401.272.8100

RHODE ISLAND
DEPARTMENT OF TRANSPORTATION

PRESERVATION OF
BRIDGE NOS. 575, 578, 704, 706, 707, AND 708

PROVIDENCE, RHODE ISLAND

CHARLES ST. BRIDGE NO. 708 PRESERVATION

JOINT DETAILS 1

CHECKED BY _____ DATE _____ SCALE _____

\\vhb\gbl\proj\Providence\72328.04\cad\st\planset\Preservation - For Viaduct RFP\F-Charles Street\0018C_V3_F04_JNTDETL001.dwg Plotted on Tuesday, January 7, 2020 11:10:15 AM

FED. ROAD DIV. NO.	STATE	FEDERAL AID PROJECT NO.	FISCAL YEAR	SHEET NO.	TOTAL SHEETS
	RI			F05	64

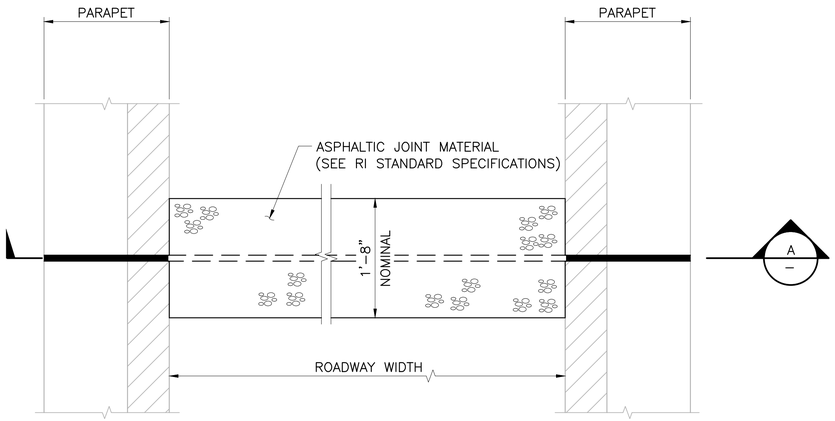

PLAN AT ROADWAY WITH SIDEWALKS
SCALE: 1" = 1'-0"

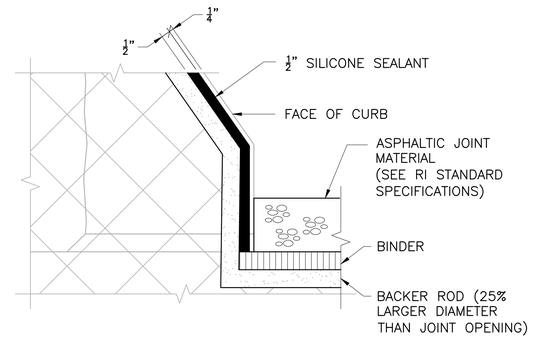

DETAIL 1 –
SCALE: 3"=1'-0"

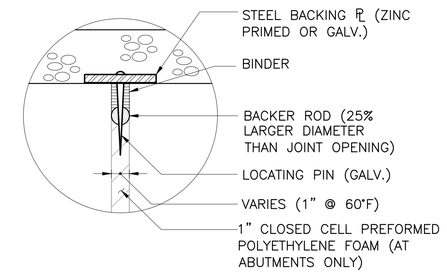

DETAIL 2 F04
SCALE: 3" = 1'-0"

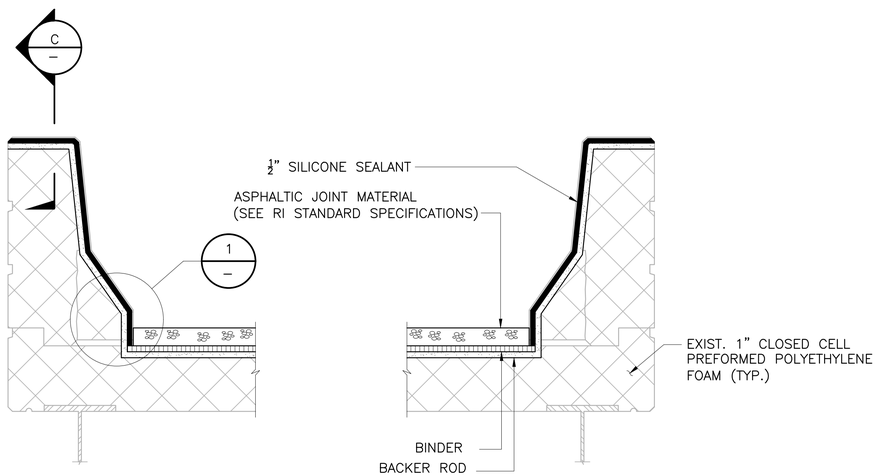

SECTION THRU ROADWAY WITH PARAPETS A –
SCALE: 1" = 1'-0"

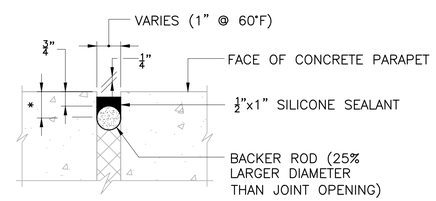

* PREPARE AND PRIME SURFACES PER MANUFACTURER'S RECOMMENDATIONS

SECTION C –
SCALE: 3"=1'-0"

REVISIONS		
NO.	DATE	BY

RHODE ISLAND
DEPARTMENT OF TRANSPORTATION

PRESERVATION OF
BRIDGE NOS. 575, 578, 704, 706, 707, AND 708
PROVIDENCE, RHODE ISLAND

CHARLES ST. BRIDGE NO. 708 PRESERVATION

JOINT DETAILS 2

CHECKED BY _____ DATE _____ SCALE _____

vhb
1 Cedar Street
Suite 400
Providence, RI 02903
401.272.8100

0018C_V3_F05_JNTDETL002

\\vhb\gbl\proj\Providence\72328.04\cad\st\planset\Preservation - For Viaduct RFP\F-Charles Street\0018C_V3_F05_JNTDETL002.dwg Plotted on Tuesday, January 7, 2020 11:10:29 AM

FED. ROAD DIV. NO.	STATE	FEDERAL AID PROJECT NO.	FISCAL YEAR	SHEET NO.	TOTAL SHEETS
	RI			F06	64

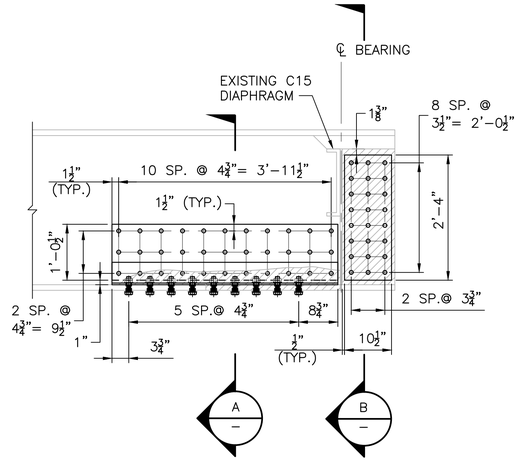

REPAIR LOCATION #1
STRINGER "S-1" AT WEST ABUT. – EAST FACE
SCALE: ¾"=1'-0"

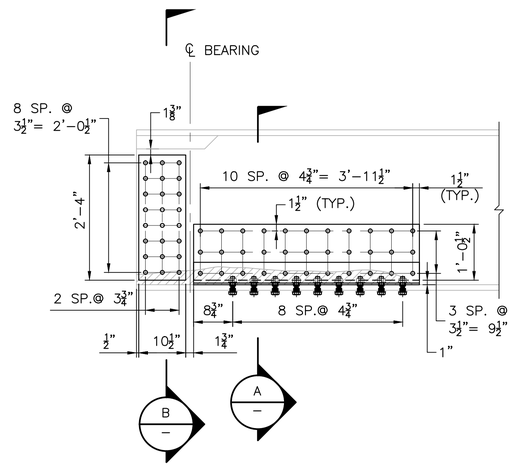

REPAIR LOCATION #1
STRINGER "S-1" AT WEST ABUT. – WEST FACE
SCALE: ¾"=1'-0"

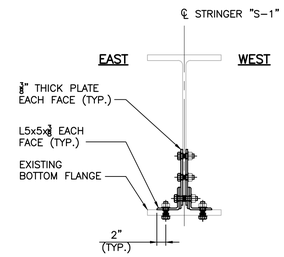

SECTION A
SCALE: 3/4"=1'-0"

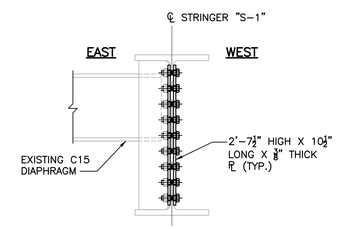

SECTION B
SCALE: 3/4"=1'-0"

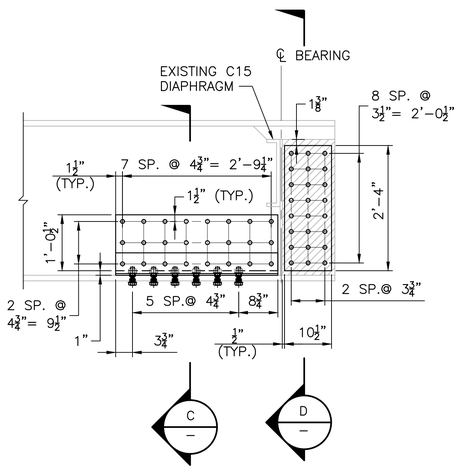

REPAIR LOCATION #2
STRINGER "S-1" AT EAST ABUT. – EAST FACE
SCALE: ¾"=1'-0"

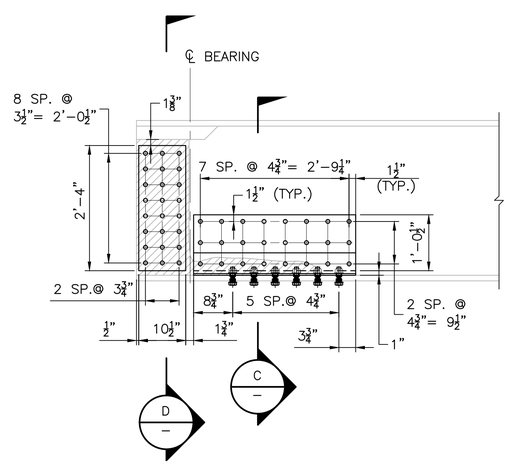

REPAIR LOCATION #2
STRINGER "S-1" AT EAST ABUT. – WEST FACE
SCALE: ¾"=1'-0"

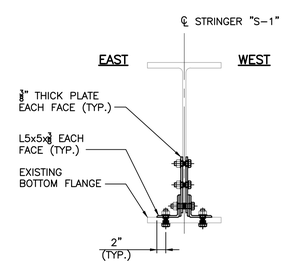

SECTION C
SCALE: 3/4"=1'-0"

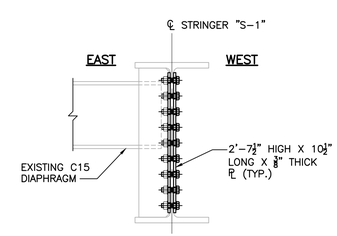

SECTION D
SCALE: 3/4"=1'-0"

STRUCTURAL STEEL REPAIR NOTES:

1. STRUCTURAL STEEL REPAIR SHALL CONFORM TO SECTION 824.
2. ALL REPAIR AREAS SHALL BE THOROUGHLY CLEANED TO REMOVE EXISTING PAINT, RUST, DELAMINATIONS, CORROSION PRODUCTS, AND OTHER FOREIGN MATTER, USING HAND TOOLS, POWER TOOLS, AND BLAST CLEANING AS NEEDED TO ACHIEVE SSPC-10 SURFACE AT THE CONNECTING SURFACE.
3. THE CONTRACTOR SHALL OBTAIN ALL FIELD MEASUREMENT AS MAY BE DEEMED NECESSARY FOR THE PROPER FABRICATION AND FIT OF STEEL COMPONENTS. THE CONTRACTOR SHALL BE SOLELY RESPONSIBLE FOR THE FABRICATION AND FIT OF HIS WORK. FIELD MEASUREMENTS (HEIGHT AND WIDTH) OF HOLE AREAS SHALL BE FIELD VERIFIED WITH THE RESIDENT ENGINEER AND SHALL BE SUBMITTED WITH SHOP DRAWINGS OF REPAIR PLATES.
4. ALL BOLTS SHALL BE ⅞" DIAMETER HIGH STRENGTH BOLTS CONFORMING TO ASTM A-325.
5. STRUCTURAL STEEL FOR REPAIRS SHALL CONFORM TO AASHTO DESIGNATION M270 GRADE 36.
6. ALL FIELD DRILLED AND SHOP BOLT HOLES SHALL HAVE A DIAMETER OF 15/16".
7. BOLTS SHALL BE TIGHTENED IN ACCORDANCE WITH THE RIDOT STANDARD SPECIFICATIONS, EXCEPT AT HEAVILY CORRODED PORTIONS, WHERE THE BOLTS SHALL BE SNUG TIGHTENED.
8. STRUCTURAL REPAIR STEEL SHALL BE PRIMED IN THE SHOP.
9. ALL EXISTING STEEL REPAIR AREAS SHALL BE PRIMED AFTER BLAST CLEANING. EXISTING AND NEW STEEL SHALL BE TOUCH-UP PRIMED AFTER DRILLING AND WELDING.
10. THE CONTRACTOR SHALL EXERCISE EXTREME CAUTION SO AS NOT TO REDUCE THE NET STEEL SECTION.
11. ALL REPAIRS TO STRUCTURAL STEEL SHALL BE PERFORMED WITH EXTREME CARE TO AVOID ANY DAMAGE TO EXISTING STRUCTURAL DESIGNATED TO REMAIN. IN THE EVENT THAT THE CONTRACTOR DAMAGES EXISTING STRUCTURAL STEEL DESIGNATED TO REMAIN, AS A RESULT OF THE CONTRACTOR OPERATION, THE CONTRACTOR SHALL REPAIR OR REPLACE THE DAMAGED STRUCTURAL STEEL TO THE SATISFACTION OF THE ENGINEER AT NO ADDITIONAL COST TO THE STATE.
12. THE HEADS OF ALL WEB AND BOTTOM FLANGE BOLTS SHALL FACE THE EXTERIOR OF THE STRINGER.

LEGEND

SECTION LOSS

HOLE

vhb
1 Cedar Street
Suite 400
Providence, RI 02903
401.272.8100

REVISIONS		
NO.	DATE	BY

RHODE ISLAND
DEPARTMENT OF TRANSPORTATION

PRESERVATION OF
BRIDGE NOS. 575, 578, 704, 706, 707, AND 708
PROVIDENCE, RHODE ISLAND

CHARLES ST. BRIDGE NO. 708 PRESERVATION

STEEL REPAIR 1

CHECKED BY _____ DATE _____ SCALE _____

0018C_V3_F06_STEELREP001

\\vhb\gbl\pro\Providence\72328.04\cad\stj\planset\Preservation - For Viaduct RFP\F-Charles Street\0018C_V3_F06_STEELREP001.dwg Plotted on Tuesday, January 7, 2020 11:10:50 AM

FED. ROAD DIV. NO.	STATE	FEDERAL AID PROJECT NO.	FISCAL YEAR	SHEET NO.	TOTAL SHEETS
	RI			F07	64

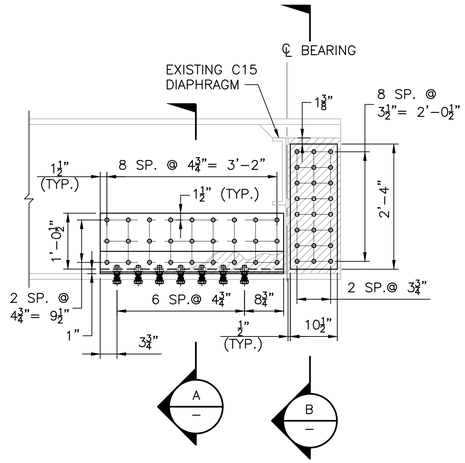

REPAIR LOCATION #3
STRINGER "S-9" AT WEST ABUT. - WEST FACE
SCALE: 3/4"=1'-0"

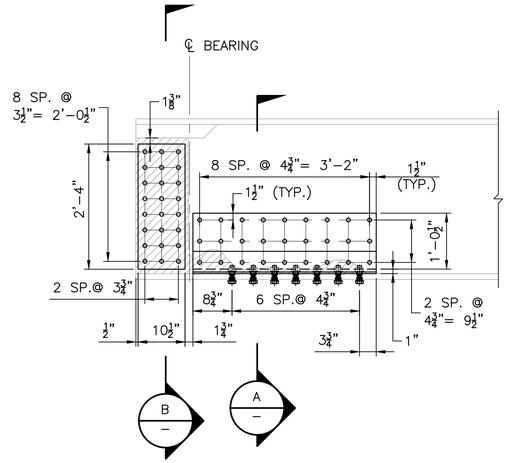

REPAIR LOCATION #3
STRINGER "S-9" AT WEST ABUT. - EAST FACE
SCALE: 3/4"=1'-0"

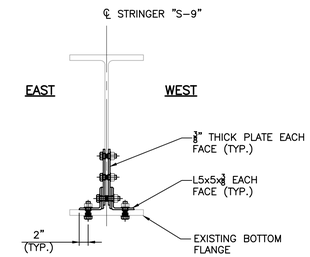

SECTION A
SCALE: 3/4"=1'-0"

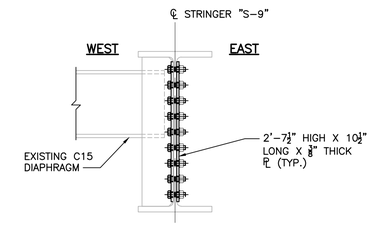

SECTION B
SCALE: 3/4"=1'-0"

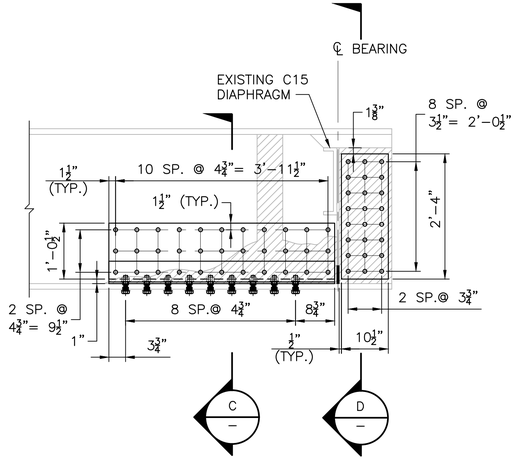

REPAIR LOCATION #4
STRINGER "S-18" AT WEST ABUT. - WEST FACE
SCALE: 3/4"=1'-0"

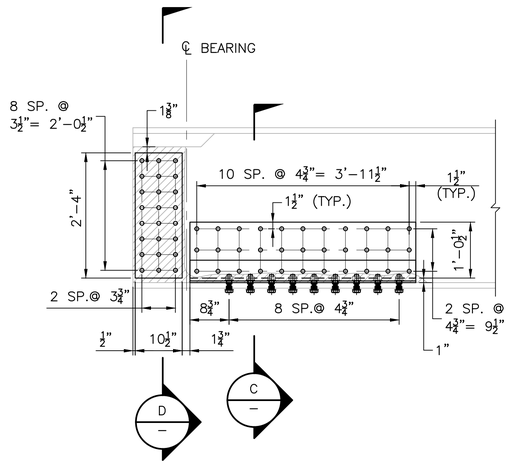

REPAIR LOCATION #4
STRINGER "S-18" AT WEST ABUT. - EAST FACE
SCALE: 3/4"=1'-0"

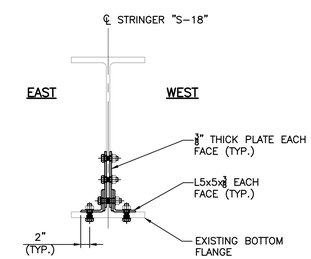

SECTION C
SCALE: 3/4"=1'-0"

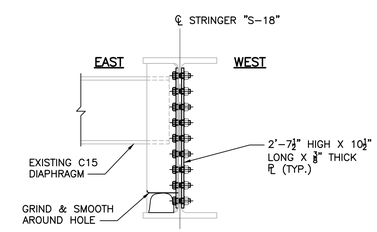

SECTION D
SCALE: 3/4"=1'-0"

LEGEND

SECTION LOSS

HOLE

vhb
1 Cedar Street
Suite 400
Providence, RI 02903
401.272.8100

REVISIONS		
NO.	DATE	BY

RHODE ISLAND
DEPARTMENT OF TRANSPORTATION

PRESERVATION OF
BRIDGE NOS. 575, 578, 704, 706, 707, AND 708
PROVIDENCE, RHODE ISLAND

CHARLES ST. BRIDGE NO. 708 PRESERVATION

STEEL REPAIR 2

CHECKED BY _____ DATE _____ SCALE _____

\\vhb\gbl\proj\Providence\72328.04\cad\st\planset\Preservation - For Viaduct RFP\F-Charles Street\0018C_V3_F07_STEELREP002.dwg Plotted on Tuesday, January 7, 2020 11:11:17 AM

FED. ROAD DIV. NO.	STATE	FEDERAL AID PROJECT NO.	FISCAL YEAR	SHEET NO.	TOTAL SHEETS
	RI			F08	64

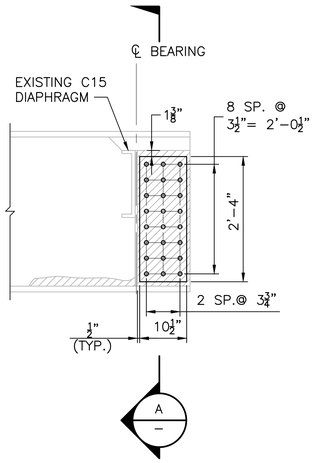

REPAIR LOCATION #5
STRINGER "S-18" AT EAST ABUT. – WEST FACE
SCALE: 3/4"=1'-0"

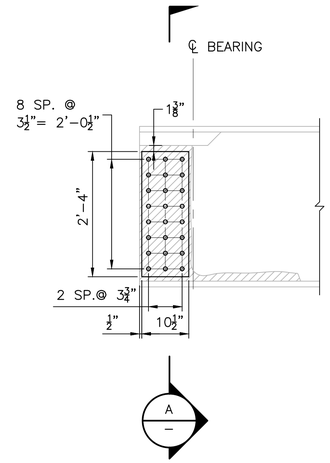

REPAIR LOCATION #5
STRINGER "S-18" AT EAST ABUT. – EAST FACE
SCALE: 3/4"=1'-0"

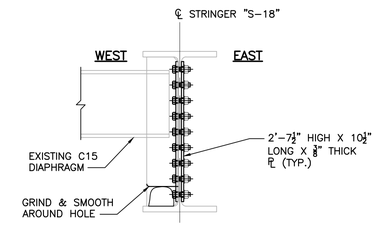

SECTION A
SCALE: 3/4"=1'-0"

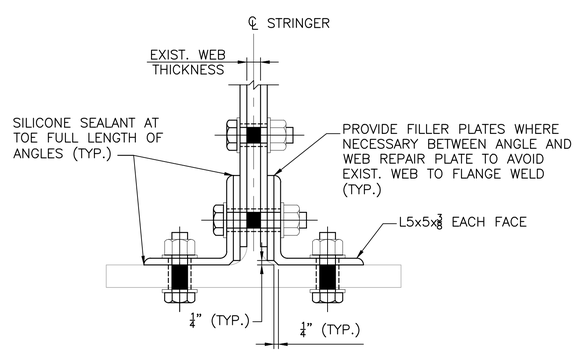

WEB TO FLANGE CONNECTION DETAIL
SCALE: 3"=1'-0"

LEGEND

SECTION LOSS

HOLE

vhb
1 Cedar Street
Suite 400
Providence, RI 02903
401.272.8100

REVISIONS		
NO.	DATE	BY

RHODE ISLAND
DEPARTMENT OF TRANSPORTATION

PRESERVATION OF
BRIDGE NOS. 575, 578, 704, 706, 707, AND 708
PROVIDENCE, RHODE ISLAND

CHARLES ST. BRIDGE NO. 708 PRESERVATION

STEEL REPAIR 3

CHECKED BY _____ DATE _____ SCALE _____

0018C_V3_F08_STEELREP003

\\vhb\gbl\proj\Providence\72328.04\cad\st\planset\Preservation - For Viaduct RFP\F-Charles Street\0018C_V3_F08_STEELREP003.dwg Plotted on Tuesday, January 7, 2020 11:11:50 AM

FED. ROAD DIV. NO.	STATE	FEDERAL AID PROJECT NO.	FISCAL YEAR	SHEET NO.	TOTAL SHEETS
	RI			F09	64

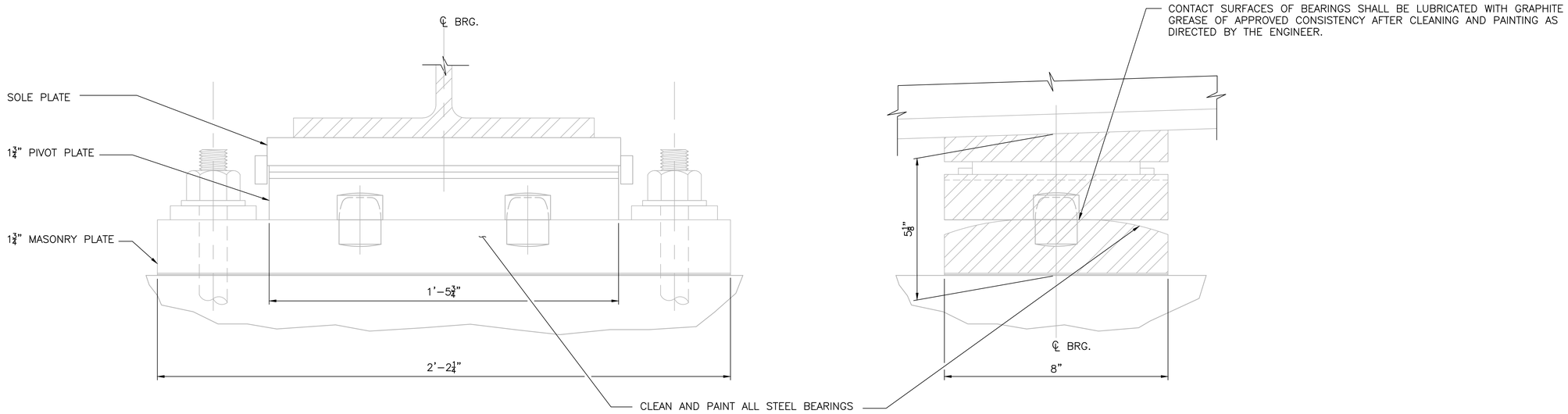

ELEVATION

SECTION

EXISTING EXPANSION BEARING – TYPE B

SCALE: 1"= 6'–0"

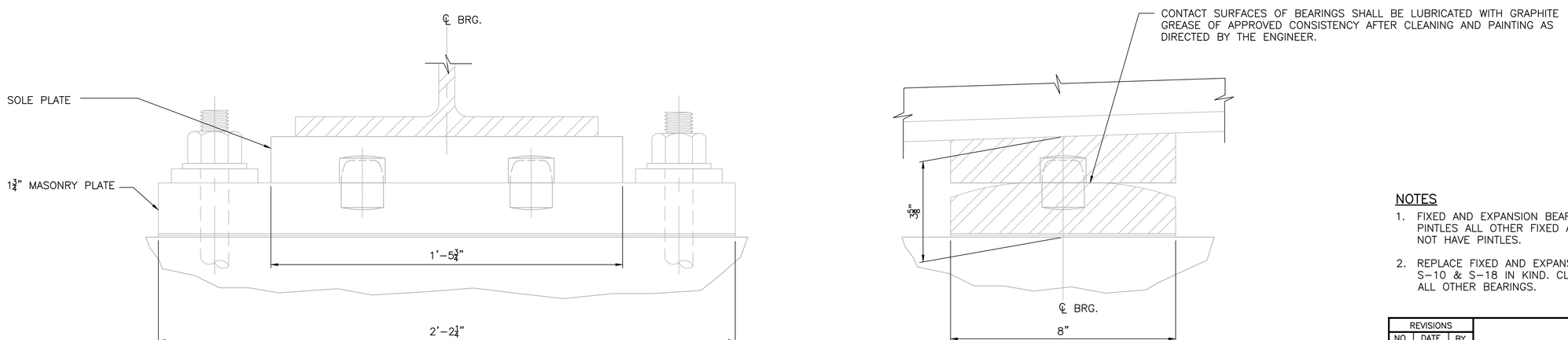

ELEVATION

SECTION

EXISTING FIXED BEARING – TYPE F

SCALE: 1"= 1'–0"

NOTES

1. FIXED AND EXPANSION BEARINGS AT S–13 TO S–16 HAVE PINTLES ALL OTHER FIXED AND EXPANSION BEARINGS DO NOT HAVE PINTLES.
2. REPLACE FIXED AND EXPANSION BEARINGS S–1, S–9, S–10 & S–18 IN KIND. CLEAN AND PAINT AND LUBRICATE ALL OTHER BEARINGS.

REVISIONS		
NO.	DATE	BY

RHODE ISLAND
DEPARTMENT OF TRANSPORTATION

PRESERVATION OF
BRIDGE NOS. 575, 578, 704, 706, 707, AND 708

PROVIDENCE, RHODE ISLAND

CHARLES ST. BRIDGE NO. 708 PRESERVATION

STEEL DETAILS 1

CHECKED BY _____ DATE _____ SCALE _____

vhb
1 Cedar Street
Suite 400
Providence, RI 02903
401.272.8100

0018C_V3_F09_STEELDETL001

\\vhb\gbl\proj\Providence\72328.04\cad\st\planset\Preservation - For Viaduct RFP\F-Charles Street\0018C_V3_F09_STEELDETL001.dwg Plotted on Tuesday, January 7, 2020 11:13:59 AM

FED. ROAD DIV. NO.	STATE	FEDERAL AID PROJECT NO.	FISCAL YEAR	SHEET NO.	TOTAL SHEETS
	RI			F10	64

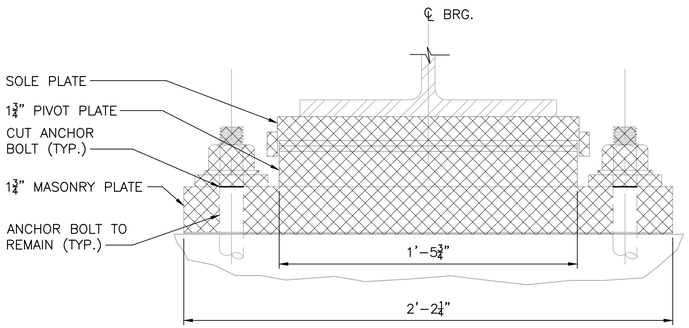

ELEVATION

EXISTING EXPANSION BEARING
SCALE: 4"= 1'–0"
(STRINGERS S–1, S–9, S–10, S–18)

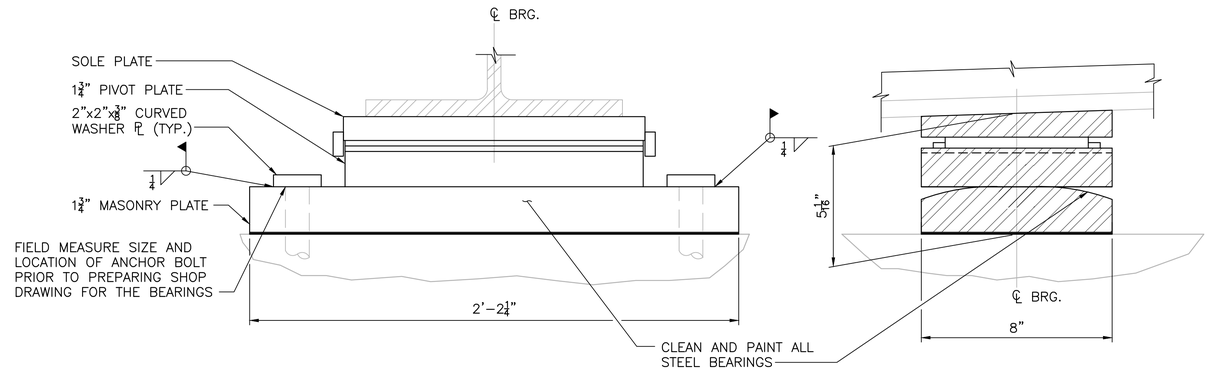

ELEVATION

SECTION

PROPOSED EXPANSION BEARING
SCALE: 4"= 1'–0"

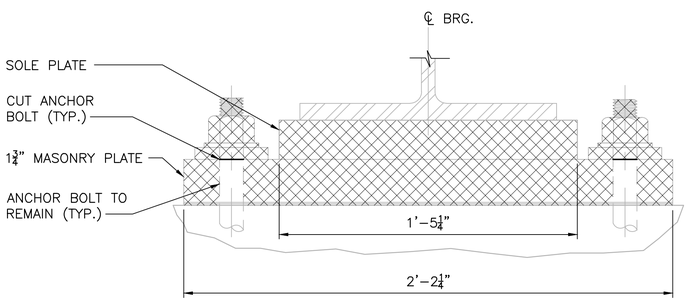

ELEVATION

EXISTING FIXED BEARING
SCALE: 4"= 1'–0"
(STRINGERS S–1, S–9, S–10, S–18)

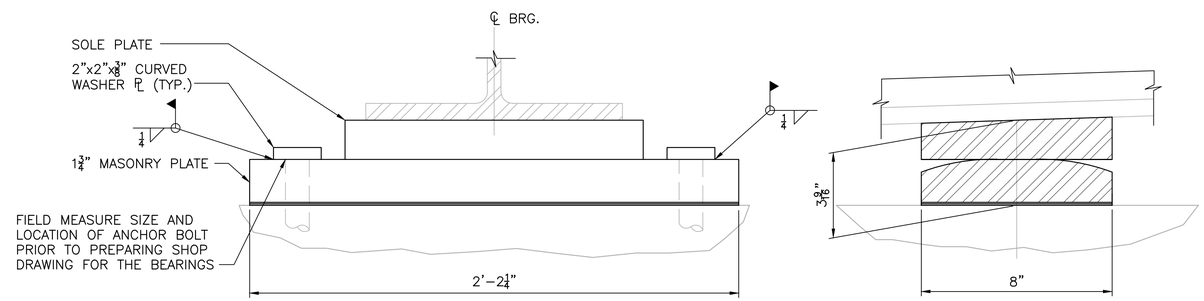

ELEVATION

SECTION

PROPOSED FIXED BEARING
SCALE: 4"= 1'–0"

NOTES

1. FIXED AND EXPANSION BEARINGS AT S–13 TO S–16 HAVE PINTLES ALL OTHER FIXED AND EXPANSION BEARINGS DO NOT HAVE PINTLES.
2. REPLACE FIXED AND EXPANSION BEARINGS S–1, S–9, S–10 & S–18 IN KIND. CLEAN AND PAINT AND LUBRICATE ALL OTHER BEARINGS.
3. BEARINGS SHALL BE REPLACED IN KIND. SEE STEEL DETAILS 3 AND STEEL DETAILS 4 FOR BEARING INFORMATION.

LEGEND

– REMOVE AND DISPOSE

vhb
1 Cedar Street
Suite 400
Providence, RI 02903
401.272.8100

REVISIONS		
NO.	DATE	BY

RHODE ISLAND
DEPARTMENT OF TRANSPORTATION

PRESERVATION OF
BRIDGE NOS. 575, 578, 704, 706, 707, AND 708
PROVIDENCE, RHODE ISLAND

CHARLES ST. BRIDGE NO. 708 PRESERVATION

STEEL DETAILS 2

CHECKED BY _____ DATE _____ SCALE _____

0018C_V3_F10_STEELDETL002

\\vhb\gbl\proj\Providence\72328.04\cad\st\planset\Preservation - For Viaduct RFP\F-Charles Street\0018C_V3_F10_STEELDETL002.dwg Plotted on Tuesday, January 7, 2020 11:14:21 AM

FED. ROAD DIV. NO.	STATE	FEDERAL AID PROJECT NO.	FISCAL YEAR	SHEET NO.	TOTAL SHEETS
	RI			F11	64

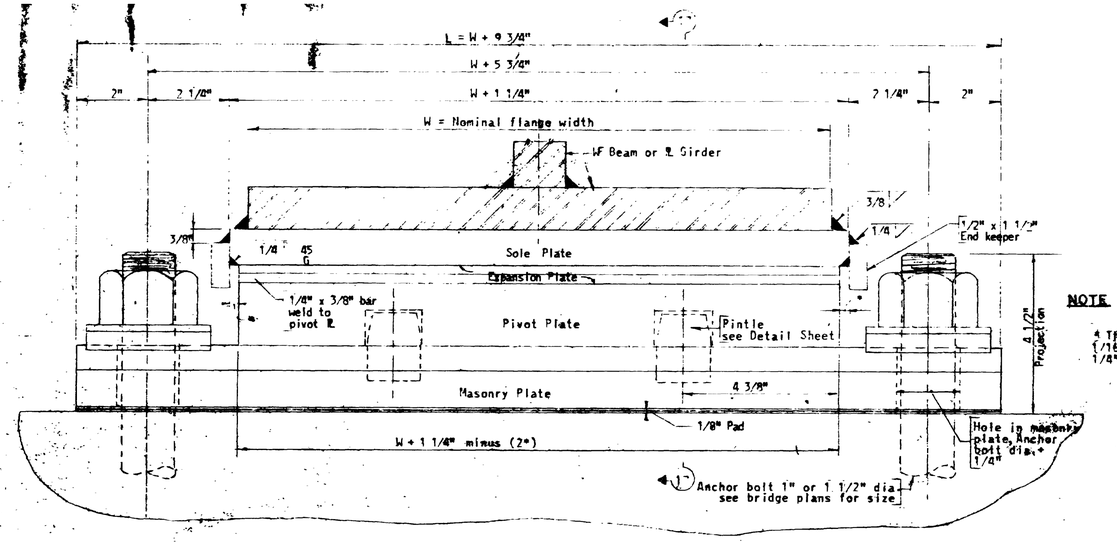

ELEVATION

NOTE

* This dimension to be; 1/16" for Type A 1/8" for Type B

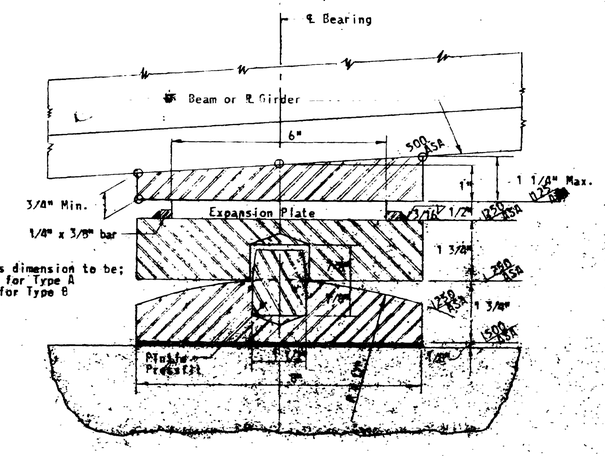

SECTION-17-17

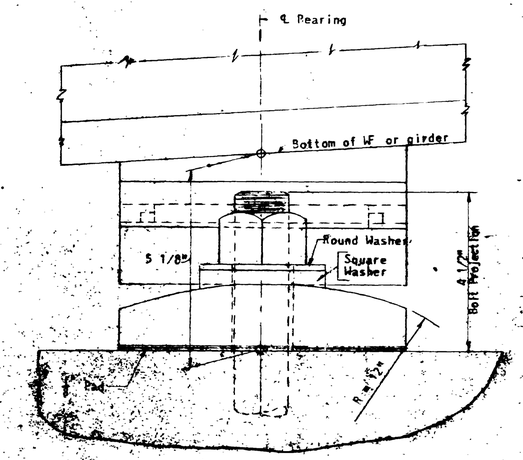

END VIEW

EXPANSION BEARING — TYPES A & B

SCALE: 6" = 1'-0"

TYPE A—PREVENTS TRANSVERSE MOVEMENT

TYPE B—ALLOWS TRANSVERSE MOVEMENT

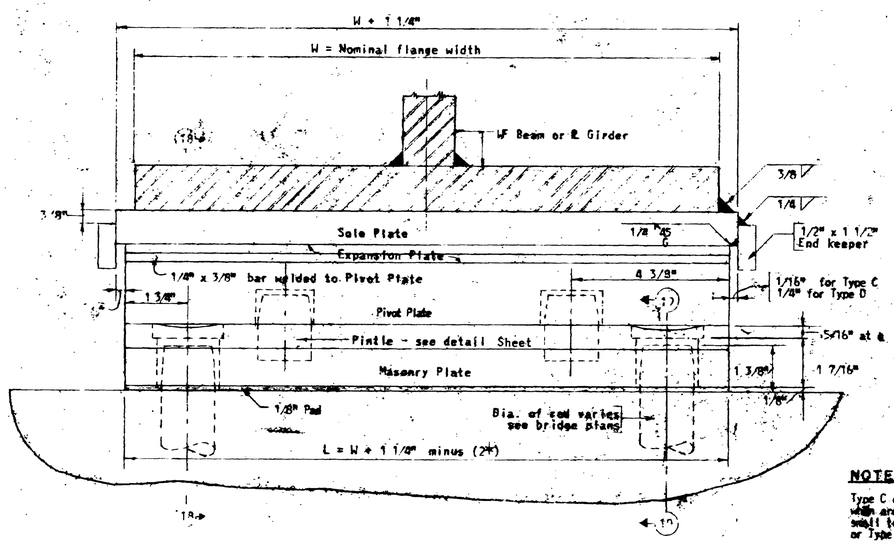

ELEVATION

NOTE

Type C or D bearing to be used when area of beam seat is too small to permit use of Type A or Type B.

NOTE

A. S. A. = American Standards Association

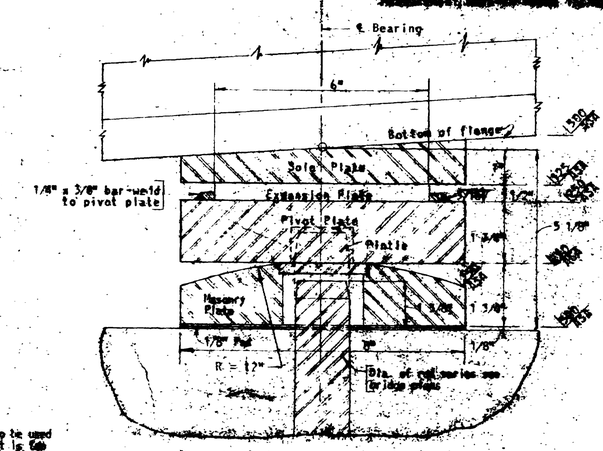

SECTION-18-18

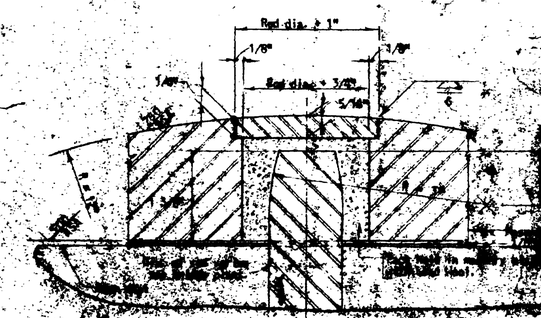

SECTION-19-19
SCALE FULL SIZE

EXPANSION BEARING — TYPES C & D

SCALE: 6" = 1'-0"

TYPE C—PREVENTS TRANSVERSE MOVEMENTS

TYPE D—ALLOWS TRANSVERSE MOVEMENTS

NOTE

FOR INFORMATION ONLY, RIC #6291, SHEET B-10, EXPANSION BEARING DETAILS

vhb
1 Cedar Street
Suite 400
Providence, RI 02903
401.272.8100

REVISIONS		
NO.	DATE	BY

RHODE ISLAND
DEPARTMENT OF TRANSPORTATION

PRESERVATION OF
BRIDGE NOS. 575, 578, 704, 706, 707, AND 708
PROVIDENCE, RHODE ISLAND

CHARLES ST. BRIDGE NO. 708 PRESERVATION

STEEL DETAILS 3

CHECKED BY _____ DATE _____ SCALE _____

\\vhb\gbl\proj\Providence\72328.04\cad\plans\Preservation - For Viaduct RFP\F-Charles Street\0018C_V3_F11_STEELDETL003.dwg Plotted on Tuesday, January 7, 2020 11:14:56 AM

FED. ROAD DIV. NO.	STATE	FEDERAL AID PROJECT NO.	FISCAL YEAR	SHEET NO.	TOTAL SHEETS
	RI			F12	64

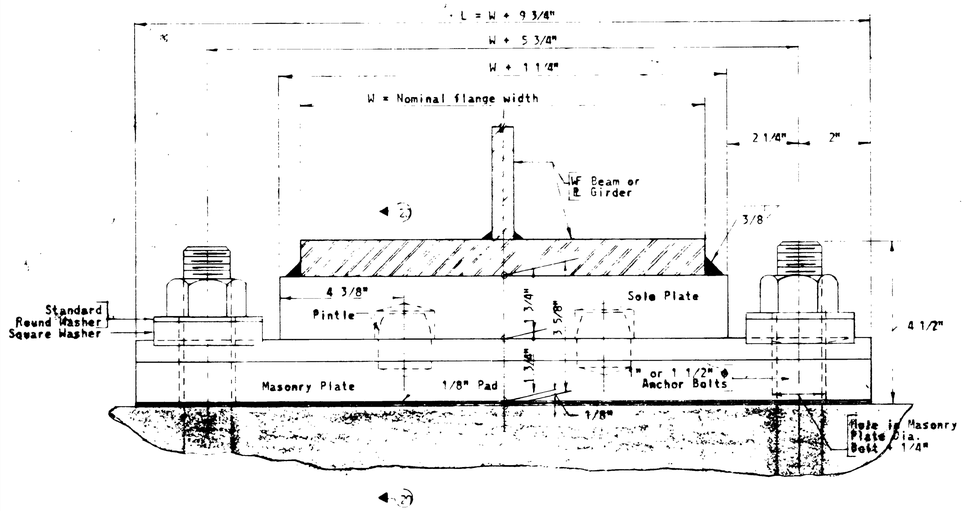

ELEVATION

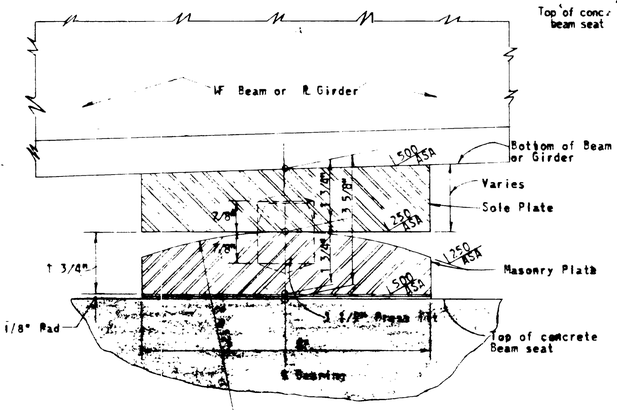

SECTION-20-20

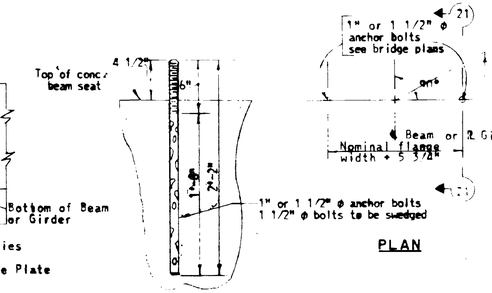

SECTION-21-21

PLAN

DETAIL OF ANCHOR BOLT

(NOT TO SCALE)

FOR TYPES A B E & F BEARINGS

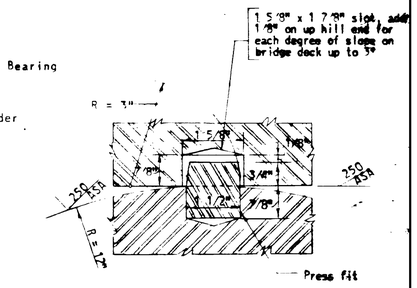

DETAIL OF PINTLE

SCALE 6" = 1'-0"

FIXED BEARING – TYPES E & F

SCALE: 6" = 1'-0"

TYPE E – PREVENTS TRANSVERSE MOVEMENT – WITH PINTLES

TYPE F – ALLOWS TRANSVERSE MOVEMENT – NO PINTLES

NOTE

Δ 6" FOR LOUISQUISSET PIKE RAMP BRIDGE

□ = 1'-7" ON LOUISQUISSET

O = 1'-8" ON LOUISQUISSET

☆ = 1'-6" ON LOUISQUISSET

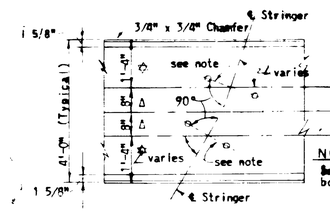

AT PIERS

NOTE

See bridge plans for bolt spacing, ⅜ ∠

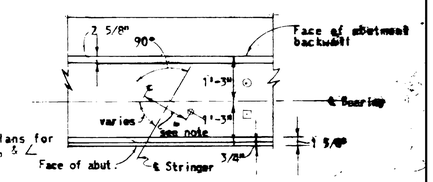

AT ABUTMENT

TYPICAL ANCHOR BOLT LAYOUT

NOT TO SCALE

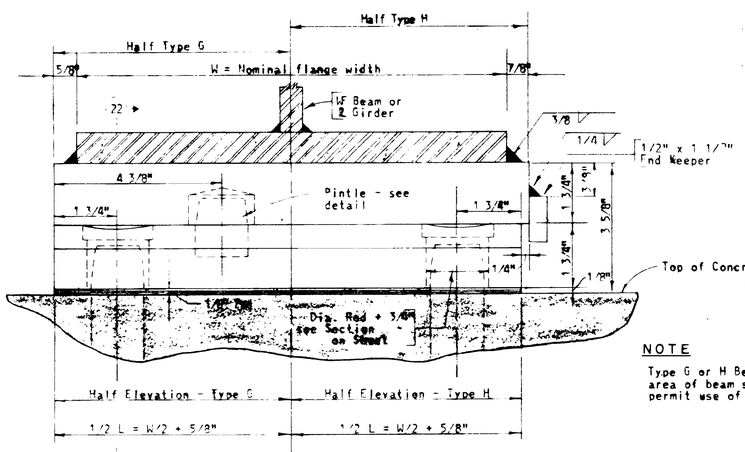

ELEVATION

NOTE

Type G or H Bearings to be used when area of beam seat is too small to permit use of Type E or F Bearings.

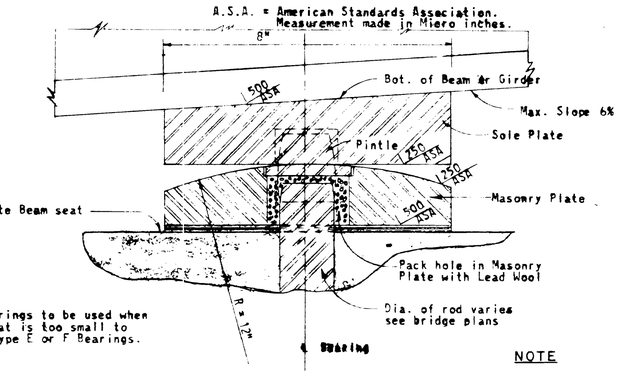

SECTION-22-22

NOTE

A.S.A. = American Standards Association. Measurement made in Micro inches.

NOTE

See Anchor Rod Detail on this sheet.

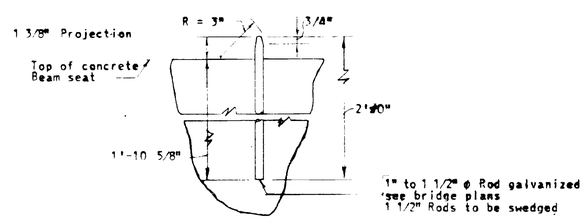

DETAIL OF ANCHOR ROD

NOT TO SCALE

FOR TYPES C, D, G & H BEARINGS

TYPE G – WITH PINTLES

TYPE H – NO PINTLES

FIXED BEARING – TYPES G & H

SCALE 6" = 1'-0"

TYPE G – PREVENTS TRANSVERSE MOVEMENT

TYPE H – ALLOWS TRANSVERSE MOVEMENT

NOTE

FOR INFORMATION ONLY, RIC #6291, SHEET B-11, FIXED BEARING DETAILS

vhb
1 Cedar Street
Suite 400
Providence, RI 02903
401.272.8100

REVISIONS		
NO.	DATE	BY

RHODE ISLAND
DEPARTMENT OF TRANSPORTATION

PRESERVATION OF
BRIDGE NOS. 575, 578, 704, 706, 707, AND 708
PROVIDENCE, RHODE ISLAND

CHARLES ST. BRIDGE NO. 708 PRESERVATION

STEEL DETAILS 4

CHECKED BY _____ DATE _____ SCALE _____

0018C_V3_F12_STEELDETL004

\\vhb\gb\proj\Providence\72328.04\cad\st\planset\Preservation - For Viaduct RFP\F-Charles Steel\0018C_V3_F12_STEELDETL004.dwg Plotted on Tuesday, January 7, 2020 11:15:19 AM

FED. ROAD DIV. NO.	STATE	FEDERAL AID PROJECT NO.	FISCAL YEAR	SHEET NO.	TOTAL SHEETS
	RI			F13	64

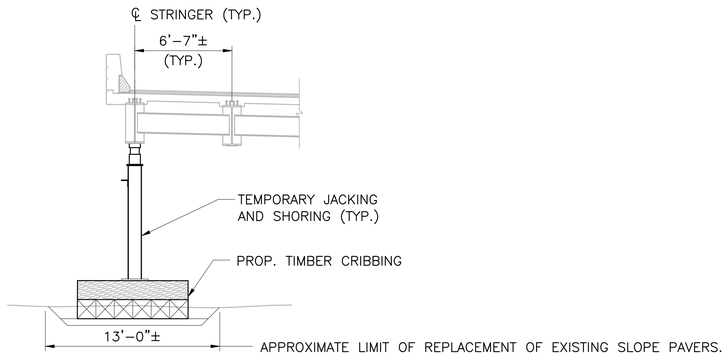

ELEVATION

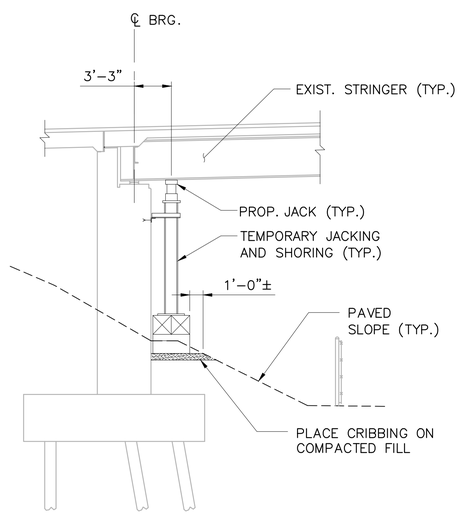

TYPICAL SECTION

TYPICAL SHORING DETAILS AT ABUTMENT

SCALE: 3/16"=1'–0"

CHARLES BRIDGE NO. 708 ABUTMENTS	REACTION LOADS & MINIMUM JACK CAPACITIES (KIPS)		
STRINGER NO.	DEAD LOAD (DL)	LIVE LOAD+ IMPACT (LL+I)	JACK CAPACITY 1.5x(DL+LL)
S–1 AND S–18	67.00	84.00	227.00
S–9 AND S–10	67.00	84.00	227.00

TEMPORARY JACKING AND SHORING OF STRINGER NOTES

1. THE STRINGERS ARE TO BE TEMPORARILY JACKED AND SHORED TO PERFORM THE REPLACEMENT OF BEARING AND STEEL REPAIRS.
2. LOADS IN TABLE ARE APPROXIMATE TO WITHIN 10%. THEY ARE PROVIDED SUCH THAT IF THE ACTUAL FIELD JACKING LOADS EXCEED THESE VALUES. WORK SHALL STOP AND THE REASON INVESTIGATED PRIOR TO FURTHER JACKING.
3. TEMPORARY JACKING AND SHORING DETAILS SHOWN ARE SCHEMATIC IN NATURE.
4. THE JACKING AND SHORING ASSEMBLY SHALL HAVE A SAFETY FACTOR OF AT LEAST 1.5 ABOVE AND BEYOND THE MAXIMUM LOAD THE JACKS WILL BE SUBJECTED TO FOR THE DURATION OF THEIR USE.
5. THE CONTRACTOR SHALL SUBMIT STAMPED DESIGN CALCULATIONS AND SHOP DRAWINGS OF THE JACKING AND SHORING FOR REVIEW AND APPROVAL PRIOR TO CONSTRUCTION. THIS SUBMISSION SHALL INCLUDE A SEQUENCE OF CONSTRUCTION FOR THE JACKING OPERATION.
6. IT IS ASSUMED THAT WORK SHALL BE COORDINATED SUCH THAT ALL BEAMS WILL BE JACKED AND SHORED ONLY ONCE. JACKING AND SHORING SHALL BE MEASURED AND PAID FOR ONCE PER BEAM TO PERFORM ALL OF THE ABOVE WORK. THERE SHALL BE NO ADDITIONAL PAYMENT MADE TO JACK AND SHORE A BEAM TWICE AS A RESULT OF THE CONTRACTOR'S SEQUENCE OF CONSTRUCTION.
7. THE CONTRACTOR SHALL SIMULTANEOUSLY JACK ALL SPECIFIED STRINGERS ONLY THE AMOUNT REQUIRED TO RELIEVE THE LOAD.
8. ANY DAMAGE WHICH MAY OCCUR TO THE BRIDGE STRUCTURE AS A RESULT OF JACKING OR AS A RESULT OF THE CONTRACTOR'S OPERATIONS SHALL BE REPAIRED BY THE CONTRACTOR TO THE SATISFACTION OF THE ENGINEER AT NO ADDITIONAL COST TO THE STATE.
9. ALL WORK SHALL BE PERFORMED IN ACCORDANCE WITH AMTRAK SPECIFICATIONS.
10. ALL WORK ASSOCIATED WITH ESTABLISHING SOUND BEARING SURFACE AND RESTORING SITE TO ITS ORIGINAL CONDITION, INCLUDING EXCAVATION/BACKFILLING, SHALL BE INCLUDED IN THE COST OF THE JACKING AND SHORING ITEM. ALL RESTORATION SHALL BE COMPLETED TO THE SATISFACTION OF THE ENGINEER.
11. THE CONTRACTOR SHALL UTILIZE "DIG SAFE" AND SHALL BE AWARE OF THE PRESENCE OF EXISTING UNDERGROUND UTILITIES IN THE VICINITY OF THE PROPOSED TEMPORARY JACKING AND SHORING OF GIRDERS, WHICH ARE SHOWN ON THE INDIVIDUAL BRIDGE GENERAL PLANS. IN ORDER TO PREVENT DAMAGE TO EXISTING UTILITIES TO REMAIN, THE CONTRACTOR SHALL SUBMIT CRIBBING DESIGNS WHICH LIMIT THE BEARING PRESSURES TO A MAXIMUM OF 2000 POUNDS PER SQUARE FOOT.
12. THE JACKING AND SHORING SHALL BE PLACED PRIOR TO COMMENCEMENT OF WORK AND SHALL REMAIN IN PLACE UNTIL THE COMPLETION OF ALL REPAIR/REHABILITATION WORK.

vhb
1 Cedar Street
Suite 400
Providence, RI 02903
401.272.8100

REVISIONS		
NO.	DATE	BY

RHODE ISLAND
DEPARTMENT OF TRANSPORTATION

PRESERVATION OF
BRIDGE NOS. 575, 578, 704, 706, 707, AND 708
PROVIDENCE, RHODE ISLAND

CHARLES ST. BRIDGE NO. 708 PRESERVATION

TEMPORARY SHORING DETAILS

CHECKED BY _____ DATE _____ SCALE _____

\\vhb\gb\proj\Providence\72328.04\cadset\planset\Preservation - For Viaduct RFP\F-Charles Street\0018C_V3_F13_TEMPSHOR.dwg Plotted on Tuesday, January 7, 2020 11:15:38 AM