STANDBY GENERATOR

THOMAS C. SLATER TRAINING SCHOOL BUILDING #23 , CRANSTON · RHODE ISLAND

DOA FACILITIES

FEBRUARY 1, 2019, REVISED MAY 6, 2019

PREPARED FOR

RHODE ISLAND DEPARTMENT OF ADMINISTRATION
ONE CAPITOL HILL
PROVIDENCE, RI 02908

PREPARED BY

FUSS & O'NEILL
317 IRON HORSE WAY, SUITE 204
PROVIDENCE, RI 02908
401.861.3070
www.fando.com

SHEET INDEX

SHEET No.	SHEET TITLE
GI-001	COVER SHEET
CN-001	CIVIL GENERAL NOTES & LEGEND
CS-100	INDEX PLAN
CS-101	CIVIL SITE DEMOLITION PLAN
CS-102	CIVIL SITE PLAN
CD-501	CIVIL SITE DETAILS
EA-100	ELECTRICAL SITE DEMOLITION PLAN
EA-101	ELECTRICAL SITE PLAN
EA-102	ELECTRICAL ROOM PLAN
EA-601	ONE-LINE DIAGRAM
EA-501 - EA-502	ELECTRICAL DETAILS
SA-501	STRUCTURAL NOTES & TYPICAL DETAILS

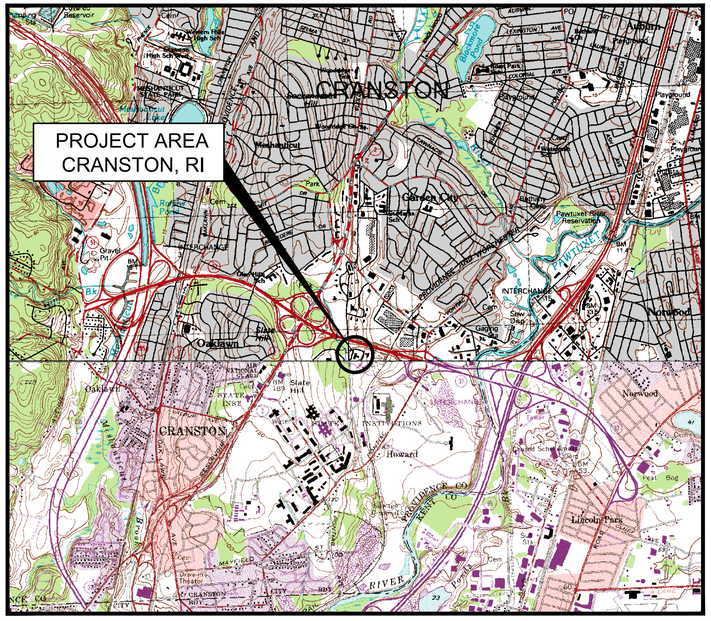

LOCATION MAP
SCALE: 1" = 2,000'

ISSUED FOR BIDDING 05/06/2019

PROJ. No.: 20170903.A20
DATE: FEBRUARY 1, 2019

GI-001

File Path: J:\DWG\P2017\0903\A20\Civil\Plan\20170903A20_COV01.dwg, Layout: GI-001, Plotted: Tuesday, May 07, 2019, User: sirons Plotter: AUTOCAD PDF (GENERAL DOCUMENTATION).PC3 CTB File: FO.STB

CIVIL LEGEND

EXIST	PROP	
		EDGE OF WATER
		EDGE OF PAVEMENT
		CONCRETE CURB
		CHAIN LINK FENCE
		GUARD RAIL
		TREE LINE
93		MINOR CONTOUR
90		MAJOR CONTOUR
x95.55		SPOT ELEVATION
		BUILDING
	D	DRAINAGE LINE
	S	SEWER LINE
	G	GAS LINE
	PE	UNDERGROUND PRIMARY ELECTRIC
	SE	UNDERGROUND SECONDARY ELECTRIC
CB		CATCH BASIN
DMH		DRAIN MANHOLE
SMH		SEWER MANHOLE
		ELECTRIC MANHOLE
		TELEPHONE MANHOLE
		LIGHT POST
		UTILITY POLE
		BOLLARD
		SIGN
	SF	SILT FENCE
		HAYBALES
		HAYBALE CHECK DAMS

ABBREVIATIONS:

GENERAL

APPROX	APPROXIMATE
BIT	BITUMINOUS PAVEMENT
BW	BOTTOM OF WALL
CC	CONCRETE CURB
CCB	CAPE CODE BERM
ELEV	ELEVATION
EXIST	EXISTING
GC	GRANITE CURB
MAX	MAXIMUM
MIN	MINIMUM
NTS	NOT TO SCALE
PCC	PRECAST CONCRETE CURB
PROP	PROPOSED
R&D	REMOVE AND DISPOSE
R&R	REMOVE AND RESET
R&S	REMOVE AND STACK
TOS	TOP OF SLOPE
TW	TOP OF WALL
TYP	TYPICAL
VGC	VERTICAL GRANITE CURB

UTILITY

CB	CATCH BASIN
CMP	CORRUGATED METAL PIPE
CPP	CORRUGATED POLYETHYLENE PIPE
DCB	DOUBLE CATCH BASIN
DI	DUCTILE IRON PIPE
F&G	FRAME AND GRATE
F&C	FRAME AND COVER
HDPE	HIGH DENSITY POLYETHYLENE
HYD	HYDRANT
INV	INVERT ELEVATION
PVC	POLYVINYL CHLORINE PIPE
RCP	REINFORCED CONCRETE PIPE
RD	ROOF DRAIN
SMH	SEWER MANHOLE
TSV	TAPPING SLEEVE, VALVE AND BOX
UP	UTILITY POLE

ELECTRICAL

Ø	PHASE
A	AMPERE
ATS	AUTOMATIC TRANSFER SWITCH
BLDG	BUILDING
BMS	BUILDING MANAGEMENT SYSTEM
C	CONDUIT
DISC	DISCONNECT SWITCH
D,R&R	DISCONNECT, REMOVE AND DISPOSE OF
DWG	DRAWING
EMT	ELECTRICAL METALLIC TUBING
FCO	FUSED CUTOUT
GFI	GROUND-FAULT INTERRUPTING
GND	GROUND
KW	KILOWATT
LBE	LOADBREAK
MCB	MAIN CIRCUIT BREAKER
NEC	NATIONAL ELECTRICAL CODE
OC	ON CENTER
PVC	POLYVINYL CHLORIDE
RECPT	RECEPTACLE
R&D	REMOVE AND DISPOSE
R&R	REMOVE AND REPLACE
REL	RELOCATE
RS	RIGID STEEL
RECEPT.	UNKNOWN
V	VOLTS
WP	WEATHERPROOF (NEMA 4X)
XFMR	TRANSFORMER

GENERAL NOTES:

1. EXISTING CONDITIONS:
   A. SURVEY:
   PROPERTY BOUNDARY AND TOPOGRAPHICAL INFORMATION WERE OBTAINED FROM A PLAN BY NATIONAL SURVEYORS-DEVELOPERS INC., DATED OCTOBER 2018.

   B. FLOOD ZONE:
   THE SUBJECT SITE LIES WITHIN ZONE X, AN AREA OF MINIMAL FLOOD HAZARD, FROM A 0.2-PERCENT ANNUAL-CHANCE FLOOD EVENT PER FLOOD INSURANCE RATE MAP (FIRM) PANEL NO. 44007C0427H and 44007C0314H, CITY OF CRANSTON.

   C. UTILITIES:
   THE LOCATIONS OF EXISTING UNDERGROUND UTILITIES SHOWN ARE APPROXIMATE ONLY AND HAVE NOT YET BEEN INDEPENDENTLY VERIFIED BY THE OWNER OR ITS REPRESENTATIVE. THE CONTRACTOR SHALL DETERMINE THE EXACT LOCATION OF ALL EXISTING UTILITIES PRIOR TO COMMENCING WORK, AND AGREES TO BE FULLY RESPONSIBLE FOR ANY AND ALL DAMAGES WHICH MAY BE OCCASIONED BY THE CONTRACTOR'S FAILURE TO EXACTLY LOCATE AND PRESERVE ANY AND ALL UNDERGROUND UTILITIES. THE CONTRACTOR IS TO CONTACT 'DIG SAFE' AT 1-888-344-7233, 72-HOURS PRIOR, EXCLUDING WEEKENDS AND HOLIDAYS, TO ANY EXCAVATION PERFORMED ON SITE.

2. MATERIAL:
   A. CURBING:
   CURBING SHALL BE CONCRETE (R.I. STD. 7.1.0)

   B. BITUMINOUS CONCRETE PAVEMENT:
   BITUMINOUS PAVEMENTS SHALL MEET REQUIREMENTS OF PART 400 OF THE STATE OF RHODE ISLAND STANDARD SPECIFICATIONS FOR ROAD AND BRIDGE CONSTRUCTION, 2018 EDITION, REVISIONS AND ALL CURRENT ADDENDA.

   C. CEMENT CONCRETE SIDEWALKS:
   ALL PORTLAND CEMENT CONCRETE USED IN THE CONSTRUCTION OF THE CEMENT CONCRETE SIDEWALKS SHALL BE CLASS A(AE) AND CONFORM TO THE REQUIREMENTS AS SET FORTH IN SUBSECTIONS 601.01.1 AND 601.03.1 OF THE LATEST EDITION OF THE RHODE ISLAND DEPARTMENT OF TRANSPORTATION STANDARD SPECIFICATIONS FOR ROAD AND BRIDGE CONSTRUCTION.

   D. LANDSCAPE AREAS:
   ALL SURFACED AREAS OR DISTURBED AREAS NOT SPECIFIED ON THE PLANS SHALL RECEIVE 4 INCHES OF TOPSOIL, SEED, MULCH, AND BE WATERED UNTIL A HEALTHY STAND OF GRASS IS OBTAINED.

3. UTILITIES:
   A. LOCATION AND ELEVATIONS:
   THE LOCATION AND ELEVATIONS OF ALL EXISTING UTILITIES AS SHOWN ON THESE PLANS ARE BASED ON THE INFORMATION IN THE EXISTING CONDITIONS SHALL BE VERIFIED BY THE CONTRACTOR PRIOR TO CONSTRUCTION.

GENERAL CONSTRUCTION REQUIREMENTS:

1. THE CONTRACTOR SHALL VERIFY THE PROPOSED LAYOUT WITH ITS RELATIONSHIP TO THE EXISTING SITE SURVEY. THE CONTRACTOR SHALL ALSO VERIFY ALL DIMENSIONS, SITE CONDITIONS, AND MATERIAL SPECIFICATIONS AND SHALL NOTIFY THE OWNER AND ENGINEER OF ANY ERRORS, OMISSIONS OR DISCREPANCIES BEFORE COMMENCING OR PROCEEDING WITH WORK.

2. THE CONTRACTOR SHALL BE RESPONSIBLE FOR OBTAINING ALL NECESSARY PERMITS, INSPECTIONS, BONDS, ETC. AND OTHER APPROVAL RELATED ITEMS WITH THE CITY OF CRANSTON. NO CONSTRUCTION SHALL COMMENCE UNTIL SUCH PERMITS HAVE BEEN SECURED.

3. METHODS AND MATERIALS USED IN THE CONSTRUCTION OF IMPROVEMENTS FOR THIS PROJECT SHALL CONFORM TO THE CURRENT CONSTRUCTION STANDARDS AND SPECIFICATIONS OF THE CITY OF CRANSTON AND THE RHODE ISLAND DEPARTMENT OF TRANSPORTATION.

4. DEVIATIONS OR CHANGES FROM THESE PLANS WILL NOT BE ALLOWED UNLESS APPROVED BY THE ENGINEER AND OWNER.

5. THE CONTRACTOR SHALL MAKE EXPLORATORY EXCAVATIONS AND LOCATE ANY EXISTING UTILITIES SUFFICIENTLY AHEAD OF CONSTRUCTION TO PERMIT REVISIONS TO PLANS IF NECESSARY. THE EXISTENCE AND/OR LOCATION OF UTILITIES SHOWN ON THESE PLANS MAY BE ONLY APPROXIMATELY CORRECT AND THE CONTRACTOR IS REQUIRED TO TAKE PRECAUTIONARY MEASURES TO PROTECT THE UTILITIES SHOWN HEREON AND ANY OTHER EXISTING UTILITIES NOT OF RECORD OR NOT SHOWN ON THESE PLANS. THE CONTRACTOR SHALL BE RESPONSIBLE FOR REPAIRING, AT HIS/HER EXPENSE, ANY EXISTING UTILITIES DAMAGED DURING CONSTRUCTION.

6. RELOCATION OF ANY UTILITIES SHALL BE AT THE OWNERS EXPENSE AND COMPLETED WITH THE UTILITY WORK. THE OWNER SHALL BE NOTIFIED AS TO THE RELOCATIONS REQUIRED PRIOR TO THE START OF CONSTRUCTION.

7. THE CONTRACTOR SHALL BE RESPONSIBLE FOR REPLACING, WITH MATCHING MATERIALS, ANY PAVEMENT, WALKS, CURBS, ETC. THAT MUST BE CUT OR THAT ARE DAMAGED DURING CONSTRUCTION.

8. AN APPROVED SET OF PLANS AND ALL APPLICABLE PERMITS MUST BE AVAILABLE AT THE CONSTRUCTION SITE.

9. CONTRACTOR AGREES THAT HE/SHE SHALL ASSUME SOLE AND COMPLETE RESPONSIBILITY FOR JOB SITE CONDITIONS DURING THE COURSE OF CONSTRUCTION OF THIS PROJECT, INCLUDING SAFETY OF ALL PERSONS AND PROPERTY; THAT THIS REQUIREMENT SHALL APPLY CONTINUOUSLY AND NOT BE LIMITED TO NORMAL WORKING HOURS; AND THAT THE CONTRACTOR SHALL DEFEND, INDEMNIFY AND HOLD THE OWNER AND THE ENGINEER HARMLESS FROM ANY AND ALL LIABILITY, REAL AND ALLEGED, IN CONNECTION WITH THE PERFORMANCE OF WORK ON THIS PROJECT, EXCEPTING FOR LIABILITY ARISING FROM "THE SOLE NEGLIGENCE OF THE OWNER OR THE ENGINEER."

10. THE STATE OF RHODE ISLAND STANDARD SPECIFICATIONS FOR ROAD AND BRIDGE CONSTRUCTION, 2018 EDITION, REVISIONS AND ALL CURRENT ADDENDA, AND THE RHODE ISLAND STANDARD DETAILS ARE MADE A PART HEREOF, AS IF ATTACHED HERETO.

11. CONTRACTOR SHALL IDENTIFY TREES TO BE REMOVED PRIOR TO CONSTRUCTION AND MARK THEM WITH CONSTRUCTION TAPE FOR REVIEW BY THE OWNER. CONTRACTOR SHALL NOT REMOVE TREES UNTIL REVIEWED AND APPROVED BY THE OWNER.

12. THE CONTRACTOR SHALL RESTORE DISTURBED AREAS TO ORIGINAL CONDITION. AREAS DAMAGED DURING CONSTRUCTION SHALL BE RESODDED, RESEEDED, OR OTHERWISE RESTORED TO THEIR ORIGINAL STATE. TREES AND OTHER EXISTING VEGETATION SHALL BE RETAINED WHEREVER FEASIBLE.

13. ALL EXCESS EXCAVATED MATERIALS, EXCESS FILL, EXCESS CONSTRUCTION MATERIALS, AND DEBRIS SHALL BE REMOVED FROM THE SITE AND SHALL BE DISPOSED OF IN ACCORDANCE WITH APPLICABLE LAWS.

SOIL EROSION AND SEDIMENT CONTROLS:

1. A SITE-SPECIFIC SOIL EROSION AND SEDIMENT CONTROL PLAN (SESC PLAN) HAS BEEN PREPARED TO PROVIDE GUIDANCE ON COMPLIANCE WITH THE SOIL EROSION AND SEDIMENT CONTROL HANDBOOK. INSPECTION REPORTS AND CORRECTIVE ACTION LOGS ARE NOT REQUIRED AS THE PROJECT IS NOT COVERED UNDER THE RIPDES PROGRAM.

SPILL PREVENTION AND RESPONSE PROCEDURE:

1. ANY INADVERTENT OR DELIBERATE DISCHARGE OF WASTE OIL OR ANY OTHER POLLUTANT TO THE STORMWATER DISPOSAL SYSTEM REQUIRES IMMEDIATE NOTIFICATION TO THE RIDEM OIL POLLUTION CONTROL PROGRAM AT (401) 277-2284, AS PER THE OIL POLLUTION CONTROL REGULATIONS. DURING NON-WORKING HOURS, NOTIFICATION OF SPILLS CAN BE MADE TO THE RIDEM DIVISION OF ENFORCEMENT AT (401) 222-3070 (THE 24-HOUR EMERGENCY RESPONSE PHONE NUMBER).

2. ANY INCIDENT OF GROUNDWATER CONTAMINATION RESULTING FROM THE IMPROPER DISCHARGE OF POLLUTANTS TO THE STORMWATER DISPOSAL SYSTEM SHALL BE THE RESPONSIBILITY OF THE PROPERTY OWNER AS WELL AS ANY OTHER PARTIES THAT THE RIDEM DETERMINES TO BE RESPONSIBLE FOR THE CONTAMINATION. PURSUANT TO STATE LAWS AND REGULATIONS, THE RIDEM MAY REQUIRE THE PROPERTY OWNER AND OTHER RESPONSIBLE PARTIES TO REMEDIATE ANY INCIDENTS THAT MAY ADVERSELY IMPACT GROUNDWATER QUALITY.

3. UPON TRANSFER OF THE PROPERTY, THE NEW OWNER SHALL BE INFORMED AS TO THE LEGAL RESPONSIBILITIES ASSOCIATED WITH DISPOSAL SYSTEM, AS INDICATED ABOVE.

4. THE PROPERTY OWNER SHALL BE RESPONSIBLE TO REMEDIATE INCIDENTS THAT ADVERSELY IMPACT GROUNDWATER QUALITY.

ISSUED FOR BIDDING 05/06/2019

No.	DATE	DESCRIPTION	DESIGNER	REVIEWER

SEAL

SCALE:
HORZ.: NOT TO SCALE
VERT.:
DATUM:
HORZ.:
VERT.:
0
GRAPHIC SCALE

FUSS & O'NEILL
317 IRON HORSE WAY, SUITE 204
PROVIDENCE, RI 02908
401.861.3070
www.fando.com

RHODE ISLAND DEPARTMENT OF ADMINISTRATION

CIVIL GENERAL NOTES & LEGEND

THOMAS C. SLATER TRAINING SCHOOL BUILDING #23

CRANSTON RHODE ISLAND

PROJ. No.: 20170903.A20
DATE: FEBRUARY 1, 2019

CN-001

File Path: j:\DWG\P2017\0903\A20\Civil\Plan\20170903A20_GEN01.dwg Layout: CN-001 Plotted: Tue, May 07, 2019 - 7:27 AM User: sirons
Plotter: AUTOCAD PDF (GENERAL DOCUMENTATION).PC3 CTB File: FO.STB
LAYER STATE:
MS VIEW:

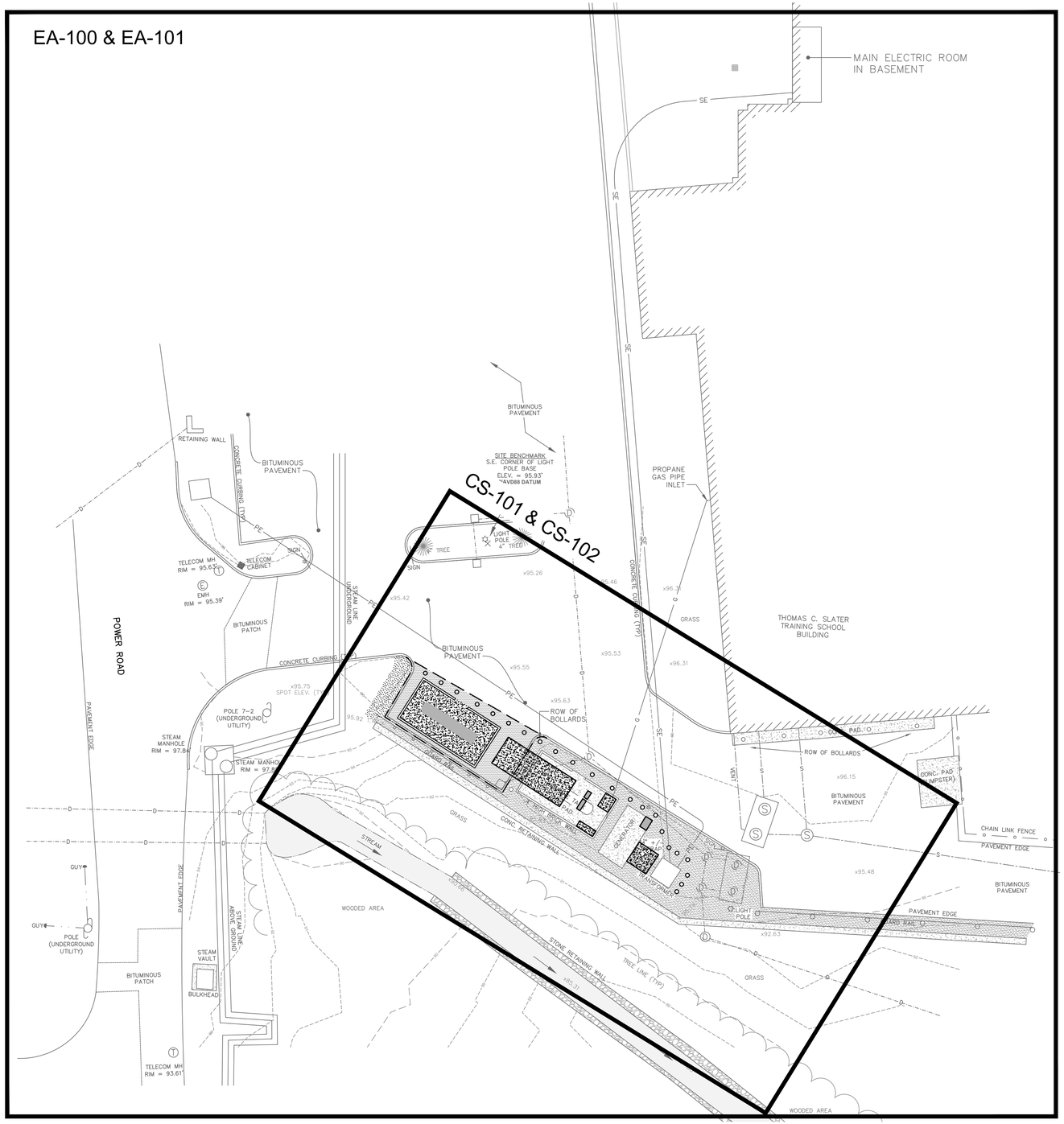

ISSUED FOR BIDDING 05/06/2019

File Path: j:\DWG\P2017\0903\A20\Civil\Plan\20170903A20_STP01.dwg Layout: CS-100 Plotted: Tue, May 07, 2019 - 7:27 AM User: sirons
Plotter: AUTOCAD PDF (GENERAL DOCUMENTATION).PC3 CTB File: FO.STB
MS VIEW:
LAYER STATE:

No.	DATE	DESCRIPTION	DESIGNER	REVIEWER

SEAL

SCALE:
HORZ.: 1"= 15'
VERT.:
DATUM:
HORZ.:
VERT.:
15 0 15
GRAPHIC SCALE

FUSS & O'NEILL
317 IRON HORSE WAY, SUITE 204
PROVIDENCE, RI 02908
401.861.3070
www.fando.com

RHODE ISLAND DEPARTMENT OF ADMINISTRATION

INDEX PLAN

THOMAS C. SLATER TRAINING SCHOOL BUILDING #23

CRANSTON RHODE ISLAND

PROJ. No.: 20170903.A20
DATE: FEBRUARY 1, 2019

CS-100

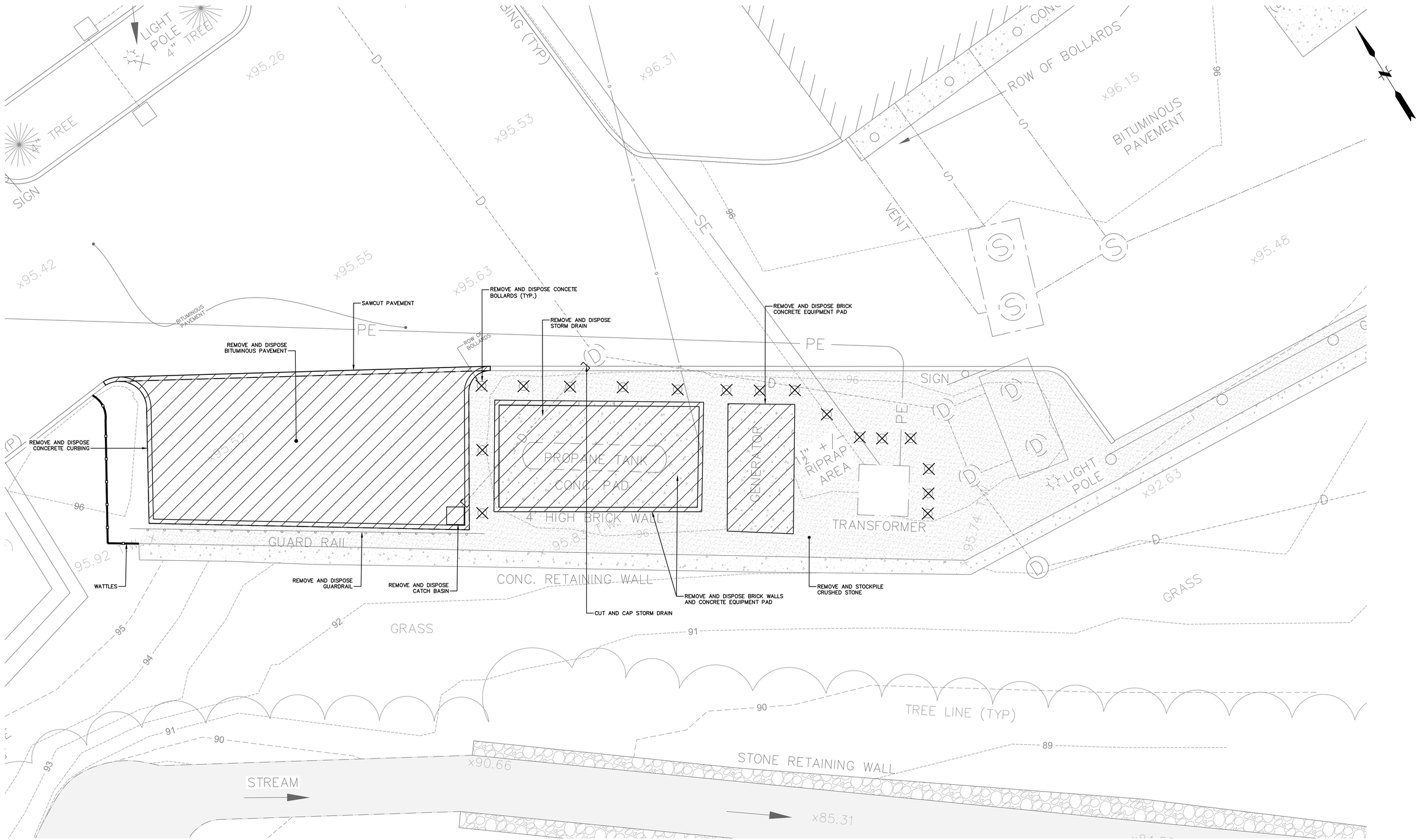

ISSUED FOR BIDDING 05/06/2019

No.	DATE	DESCRIPTION	DESIGNER	REVIEWER

SEAL

SCALE:
HORZ.: 1"= 5'
VERT.:
DATUM:
HORZ.:
VERT.:
5 0 5
GRAPHIC SCALE

FUSS & O'NEILL
317 IRON HORSE WAY, SUITE 204
PROVIDENCE, RI 02908
401.861.3070
www.fando.com

RHODE ISLAND DEPARTMENT OF ADMINISTRATION

CIVIL SITE DEMOLITION PLAN

THOMAS C. SLATER TRAINING SCHOOL BUILDING #23

CRANSTON RHODE ISLAND

PROJ. No.: 20170903.A20
DATE: FEBRUARY 1, 2019

CS-101

File Path: J:\DWG\P2017\0903\A20\Civil\Plan\20170903A20_STP01.dwg Layout: CS-101 Plotted: Tue, May 07, 2019 - 7:27 AM User: strons
Plotter: AUTOCAD PDF (GENERAL DOCUMENTATION).PC3 CTB File: FO.STB
MS VIEW:
LAYER STATE:

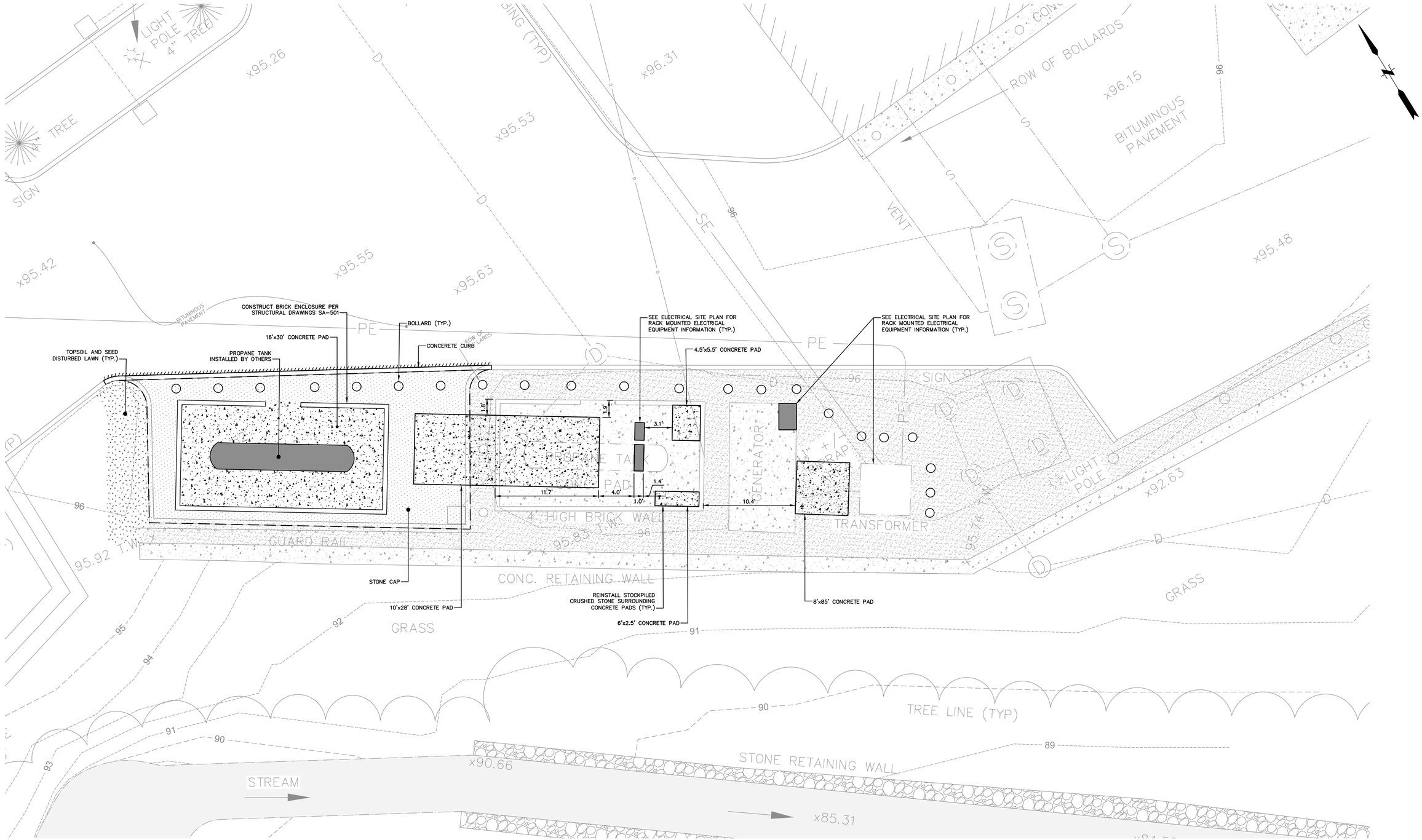

ISSUED FOR BIDDING 05/06/2019

No.	DATE	DESCRIPTION	DESIGNER	REVIEWER

SEAL

SCALE:
HORZ.: 1"= 15'
VERT.:
DATUM:
HORZ.:
VERT.:
15 0 15
GRAPHIC SCALE

FUSS & O'NEILL
317 IRON HORSE WAY, SUITE 204
PROVIDENCE, RI 02908
401.861.3070
www.fando.com

RHODE ISLAND DEPARTMENT OF ADMINISTRATION

SITE PLAN

THOMAS C. SLATER TRAINING SCHOOL BUILDING #23

CRANSTON RHODE ISLAND

PROJ. No.: 20170903.A20
DATE: FEBRUARY 1, 2019

CS-102

File Path: j:\DWG\P2017\0903\A20\Civil\Plan\20170903A20_STP01.dwg Layout: CS-102 Plotted: Tue, May 07, 2019 - 7:27 AM User: strons
Plotter: AUTOCAD PDF (GENERAL DOCUMENTATION).PC3 CTB File: FO.STB
LAYER STATE:
MS VIEW:

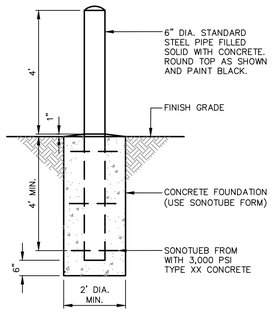

BOLLARD

NOT TO SCALE

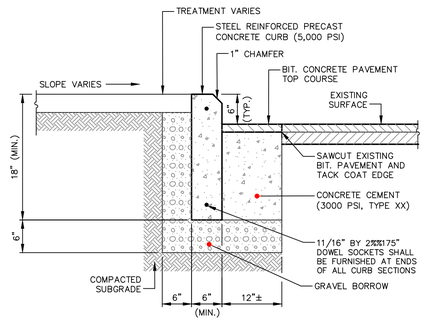

NOTES:

1. NEW CURBING INSTALLED ADJACENT TO EXISTING CURBING SHALL MATCH THE EXISTING REVEAL OR A MINIMUM OF 4 INCHES, WHICHEVER IS GREATER. IF ADJACENT EXISTING REVEAL IS LESS THAN 4 INCHES, THE FIRST SECTION OF NEW CURB SHALL TRANSITION TO 4-INCH REVEAL..
2. GRAVEL BORROW SHALL BE INSTALLED IN 6-INCH LIFTS AND COMPACTED TO 95-PERCENT MODIFIED PROCTOR.
3. UNSUITABLE MATERIAL WITHIN SUBGRADE SHALL BE REMOVED AND REPLACED WITH GRAVEL BORROW.

(PCC) CONCRETE CURB (SET IN EXISTING PAVEMENT)

NOT TO SCALE

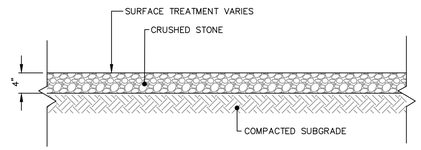

STONE CAP

NOT TO SCALE

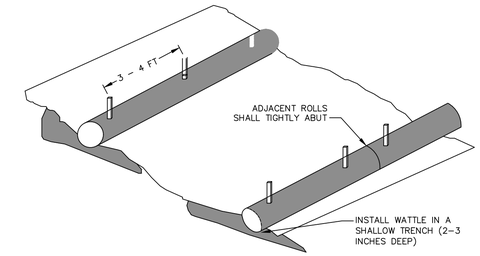

TYPICAL WATTLE INSTALLATION GUIDE

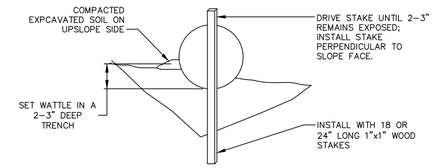

ENTRENCHMENT

NOTES:

1. WATTLES SHALL BE INSTALLED AT LOCATIONS AS INDICATED ON THE DRAWINGS.
2. WATTLES SHALL BE TRENCHED APPROXIMATE 2-3 INCHES AND STAKED SUCH THAT WATTLES DIRECTLY CONTACT SOIL AND PRECLUDE UNDERMINING OR BLOWOUTS. THE TRENCH SHALL BE APPROXIMATELY 9 INCHES WIDE. STAKES SHALL BE DRIVEN THROUGH THE CENTER OF THE WATTLE AT A SPACING OF 3-4 FEET ON CENTER AND NO GREATER THAN 6"FROM THE EACH END OF THE WATTLE. STAKES SHALL BE 1-INCH BY 1-INCH WOODEN STAKES WITH A LENGTH OF 18-24 INCHES. COMPACT SOIL EXCAVATED TO CREATE TRENCH ON UPHILL SIDE SIDE.
3. ENDS OF ADJACENT WATTLES SHALL BE TIGHTLY BUTTED OR OVERLAPPED SO THAT NO OPENING EXISTS FOR WATER TO PASS THROUGH. WATTLES SHALL BE FREE OF DAMAGE OR DEFECTS WHEN DELIVERED TO THE SHIPPER. NO VEHICLES SHALL BE DRIVEN OVER WATTLES.
4. WATTLES SHALL BE 12-INCH SEDIMAX-WS12 MANUFACTURED BY NORTH AMERICAN GREEN, OR APPROVED EQUAL.

WATTLES

NOT TO SCALE

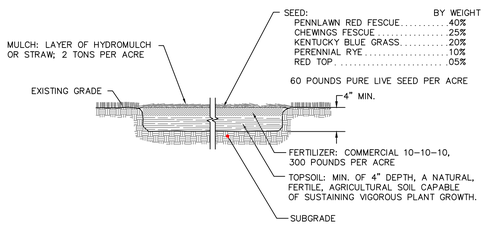

NOTES:

1. REUSE SURFACE SOIL STOCKPILED ON-SITE. VERIFY SUITABILITY OF STOCKPILED SURFACE SOIL TO PRODUCE TOPSOIL. CLEAN SURFACE SOIL OF ROOTS, PLANTS, SOD, STONES, CLAY LUMPS, AND OTHER EXTRANEOUS MATERIALS HARMFUL TO PLANT GROWTH.

1.1. SUPPLEMENT WITH IMPORTED OR MANUFACTURED TOPSOIL FROM OFF-SITE SOURCES WHEN QUANTITIES ARE INSUFFICIENT, OBTAIN TOPSOIL DISPLACED FROM NATURALLY WELL-DRAINED CONSTRUCTION OR MINING SITES WHERE TOPSOIL OCCURS AT LEAST 4 INCHES DEE.

2. TOPSOIL SHALL CONFORM TO ASTM D5268, WITH PH BETWEEN 5.5 AND 7, A MINIMUM OF 6 PERCENT ORGANIC MATERIAL CONTENT, FREE OF STONES 1 INCH OR LARGER AND FREE OF OTHER EXTRANEOUS MATERIALS. SHALL NOT BE OBTAINED FROM AGRICULTURAL LAND, BOGS, OR MARSHES.

TOPSOIL AND SEED DETAIL

NOT TO SCALE

ISSUED FOR BIDDING 05/06/2019

No.	DATE	DESCRIPTION	DESIGNER	REVIEWER

SEAL

SCALE: HORZ.: AS NOTED; VERT.:
DATUM: HORZ.: VERT.:
1 0 1 GRAPHIC SCALE

FUSS & O'NEILL
317 IRON HORSE WAY, SUITE 204
PROVIDENCE, RI 02908
401.861.3070
www.fando.com

RHODE ISLAND DEPARTMENT OF ADMINISTRATION

DETAILS

THOMAS C. SLATER TRAINING SCHOOL BUILDING #23

CRANSTON RHODE ISLAND

PROJ. No.: 20170903.A20
DATE: FEBRUARY 1, 2019

CD-501

File Path: J:\DWG\P\20170903\A20\Civil\Plan\20170903A20_DET01.dwg Layout: CD-501 Plotted: Tue, May 07, 2019 - 7:27 AM User: sirons
Plotter: AUTOCAD PDF (GENERAL DOCUMENTATION).PC3 CTB File: FO.STB
MS VIEW: LAYER STATE:

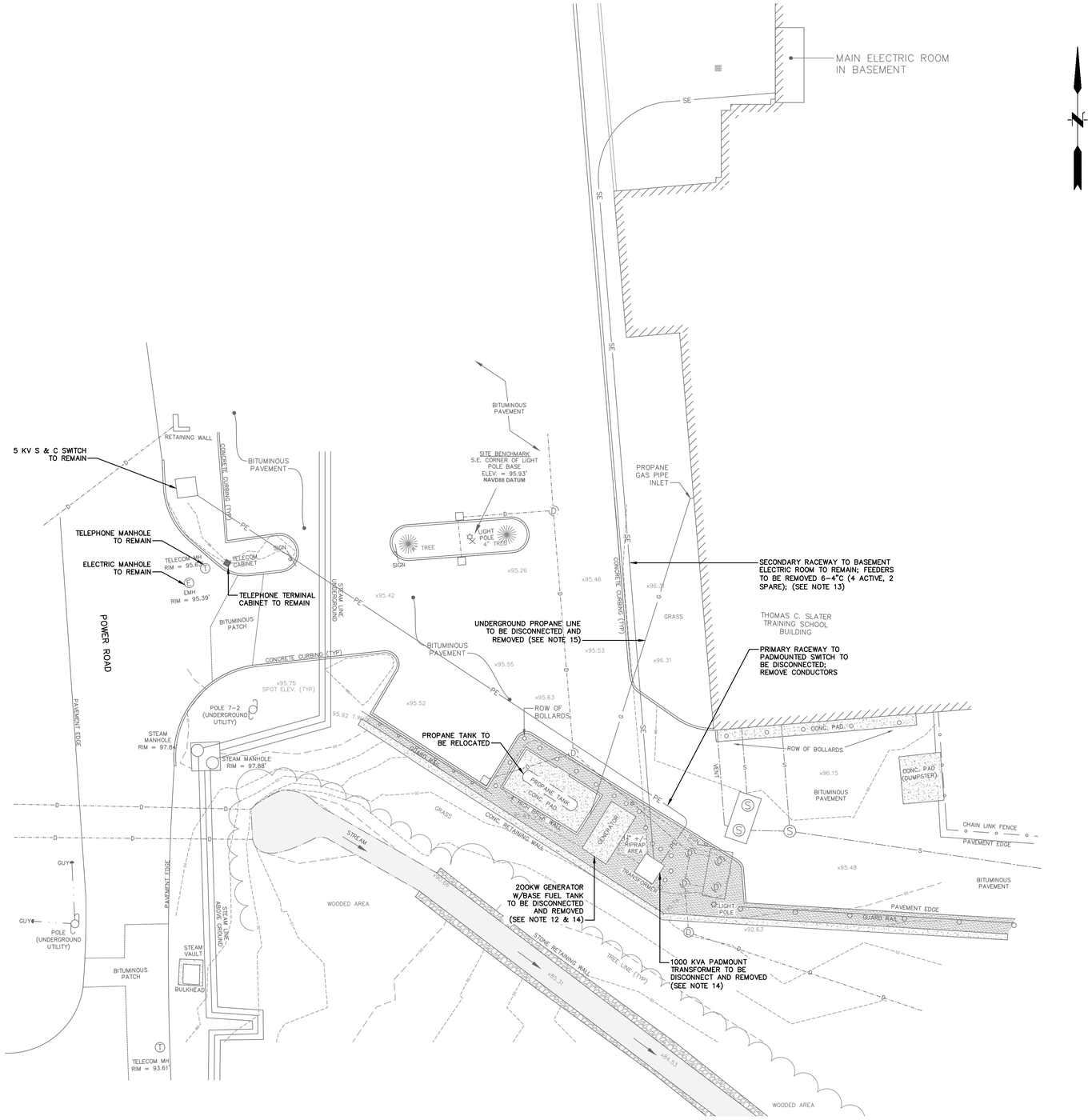

ELECTRICAL DEMOLITION NOTES:

1. DEMOLITION OF EXISTING ELECTRICAL SYSTEM SHALL BE PERFORMED IN A PHASED SYSTEM OF DECOMMISSIONING. THE ENTIRE NEW SYSTEM SHALL BE TESTED, APPROVED AND OPERATIONAL BEFORE CUT OVER OF THE NEW SYSTEM TO EXISTING EQUIPMENT THAT REMAINS.
2. EXISTING ELECTRICAL EQUIPMENT INDICATED ON PLANS HAS BEEN DERIVED FROM THE BEST AVAILABLE EXISTING DRAWINGS AND MUST BE FIELD VERIFIED PRIOR TO CONSTRUCTION AS REQUIRED. ANY EQUIPMENT THAT IS NOT IDENTIFIED AND CONFLICTS WITH CONSTRUCTION SHALL NOT BE DISCONNECTED AND SHALL BE BROUGHT TO THE ATTENTION OF THE OWNER/ENGINEER FOR DISPOSITION.
3. WHERE WIRING IS TO BE REMOVED, RELOCATED OR RECONNECTED, THE CONTRACTOR SHALL TAKE PRECAUTIONS AND ASSUME THAT THE CIRCUIT MAY BE ACTIVE. CONTRACTOR SHALL TEST, VERIFY AND SECURE ALL CIRCUITS BEFORE REMOVAL. UNKNOWN WIRING SHALL BE IDENTIFIED. ANY WIRING TO REMAIN SHALL BE VERIFIED BY THE CONTRACTOR, TAGGED AND IDENTIFIED AS REQUIRED.
4. EXISTING ELECTRICAL EQUIPMENT AND DEVICES TO BE REMOVED SHOWN SHALL BE REMOVED COMPLETELY INCLUDING ALL CONDUIT, WIRING AND ASSOCIATED APPURTENANCES BACK TO EXISTING SOURCE WHERE THE EXISTING SOURCE SHALL BE LABELED AS SPARE.
5. EXISTING CONDUITS TO BE REMOVED WHICH ARE EMBEDDED IN A CONCRETE SLAB SHALL HAVE THE WIRING REMOVED AND THE CONDUIT CUT FLUSH WITH CONCRETE AND SEALED IN AN APPROVED MANNER.
6. EXISTING ELECTRICAL EQUIPMENT AND WIRING TO REMAIN SHOWN SHALL BE PROTECTED FROM DAMAGE AS REQUIRED DURING THE CONSTRUCTION PERIOD AND LEFT IN GOOD WORKING ORDER AT COMPLETION. ANY EQUIPMENT DAMAGED SHALL BE REPLACED BY THE CONTRACTOR AT NO EXPENSE TO THE OWNER.
7. SYSTEM ARE REQUIRED TO REMAIN ACTIVE DURING CONSTRUCTION SHALL BE TEMPORARILY WIRED AS REQUIRED TO REMAIN ACTIVE THROUGHOUT THE CONSTRUCTION PERIOD UNTIL NEW SYSTEMS ARE INSTALLED, TESTED AND ACCEPTED.
8. IN CONDITIONS WHERE IN THE OPINION OF THE CONTRACTOR IT IS NOT CLEAR WHETHER EXISTING ELECTRICAL EQUIPMENT IS TO BE REMOVED OR REMAIN, IT SHOULD BE BROUGHT TO THE ATTENTION OF THE ENGINEER FOR REVIEW AND FINAL DECISION.
9. ANY DISRUPTION OF ANY ELECTRICAL SERVICE NECESSITATED BY THE ELECTRICAL REMOVATION SHALL BE COORDINATED WITH THE OWNER IN ORDER FOR PROPER NOTICE TO BE GIVEN PRIOR TO THE DISCONNECTION OF ANY SERVICE. ALL SHUTDOWNS SHALL BE PERFORMED OFF HOURS. ANY SHUTDOWN SHALL REQUIRE TEMPORARY GENERATOR FULL BUILDING CAPACITY.
10. EXISTING ELECTRICAL EQUIPMENT REMOVED SHALL BE BROKEN DOWN INTO MANAGEABLE LENGTHS FOR STORAGE, HANDLING AND DISPOSAL.
11. EXISTING ELECTRICAL EQUIPMENT REMOVED SHALL BE PROPERLY DISPOSED OF BY CONTRACTOR. NO ITEMS SHALL BE TURNED OVER TO STATE.
12. CONTRACTOR SHALL BE RESPONSIBLE FOR DISPOSAL OF DIESEL FUEL.
13. SECONDARY CONDUCTORS SHALL BE REMOVED ONCE TEMPORARY SERVICE IS IN PLACE.
14. ITEM TO BE TURNED OVER TO STATE. TRANSPORT TO PASTORE POWERHOUSE YARD.
15. PROVIDE NEW UNDERGROUND PROPANE LINE. NEW TANK SHALL BE IN SERVICE PRIOR TO DEMO PIPING SHALL BE 1 1/2" SCHEDULE 40 CARBON STEEL THREADED ASTM-A-106. LP PIPING TO BE INSTALLED PER LATEST INTERNATIONAL FUEL GAS CODE AND RI PLUMBING AND BUILDING CODE.
16. ALL WORK SHALL BE COORDINATED TO MINIMIZE THE NECESSITY OF POWER DISRUPTION TO EXTENT FEASIBLE.

ISSUED FOR BIDDING 05/06/2019

No.	DATE	DESCRIPTION	DESIGNER	REVIEWER

SEAL

SCALE: HORZ.: 1"= 15' VERT.:
DATUM: HORZ.: VERT.:
15 0 15 GRAPHIC SCALE

FUSS & O'NEILL
317 IRON HORSE WAY, SUITE 204
PROVIDENCE, RI 02908
401.861.3070
www.fando.com

RHODE ISLAND DEPARTMENT OF ADMINISTRATION

ELECTRICAL SITE DEMOLITION PLAN

THOMAS C. SLATER TRAINING SCHOOL BUILDING #23

CRANSTON RHODE ISLAND

PROJ. No.: 20170903.A20
DATE: FEBRUARY 1, 2019

EA-100

File Path: J:\DWG\P2017\0903\A20\Civil\Plan\20170903A20_STP01.dwg Layout: EA-100 Plotted: Tue, May 07, 2019 - 7:27 AM User: srons
Plotter: AUTOCAD PDF (GENERAL DOCUMENTATION).PC3 CTB File: FO.STB
MS VIEW:
LAYER STATE:

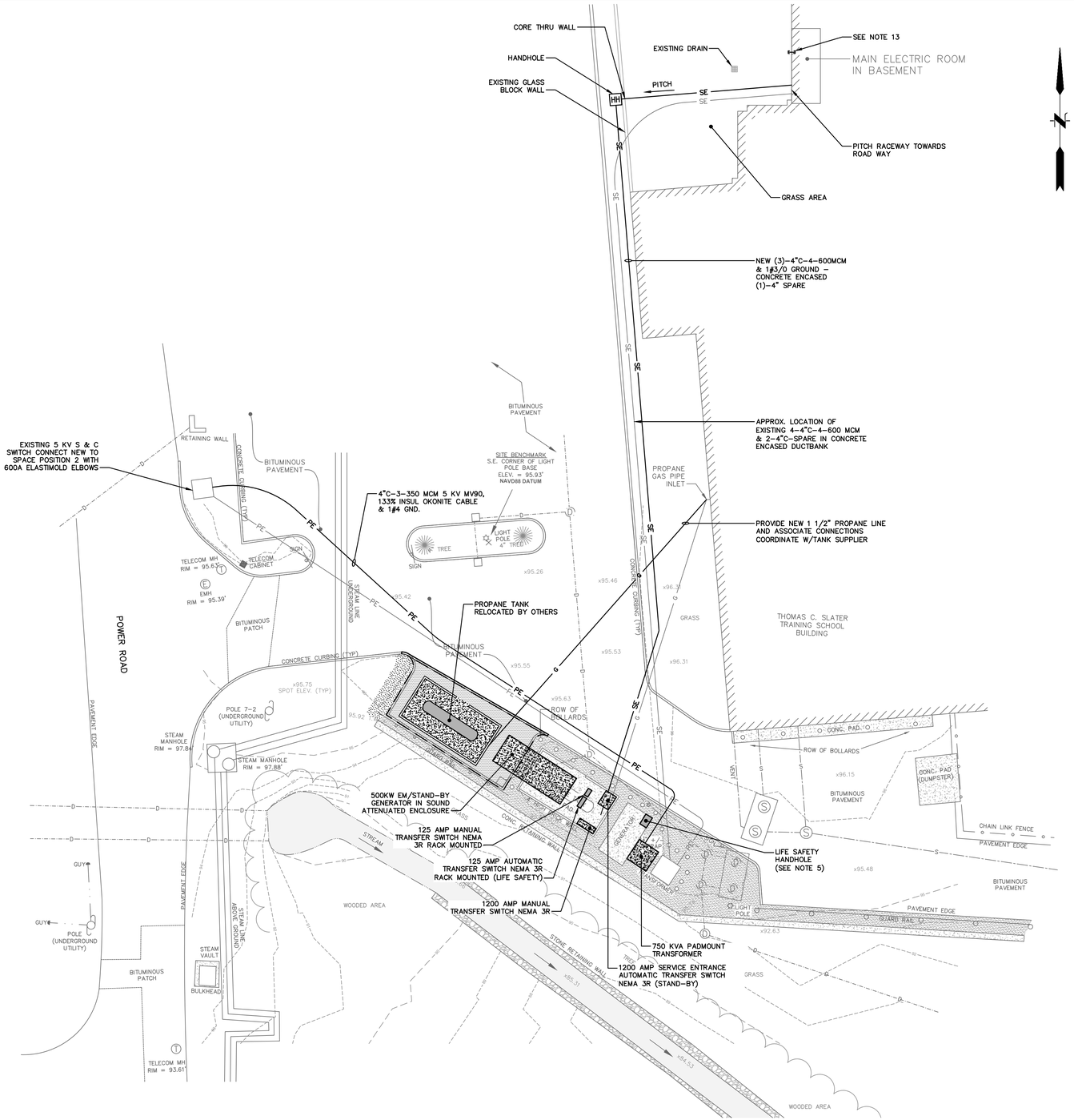

ELECTRICAL GENERAL NOTES:

1. ALL ELECTRICAL WORK SHALL BE INSTALLED IN ACCORDANCE WITH THE LATEST EDITION OF THE NATIONAL AND RHODE ISLAND ELECTRICAL CODES AND OTHER STATE OF RHODE ISLAND REQUIREMENTS AND THE NATIONAL ELECTRICAL SAFETY CODE C2.
2. FOR CLARITY PURPOSES EQUIPMENT NOT AFFECTED BY THIS PROJECT HAS NOT BEEN SHOWN. CONTRACTOR SHALL WORK WITHIN CONSTRAINTS OF EXISTING CONDITIONS.
3. ADDITIONAL JUNCTION / PULL BOXES SHALL BE FURNISHED AND INSTALLED AS REQUIRED.
4. ALL CONDUITS SHALL CONTAIN A GREEN SAFETY GROUND WIRE. BOND ALL PANELS, CABINETS, ENCLOSURES, CONDUITS, ETC., AS REQUIRED.
5. PROVIDE CONDUIT SLEEVES FILLED WITH AN APPROVED FIRE-RESISTANT MATERIAL WHERE FIRE-RATED WALLS ARE PENETRATED. PROVIDE WATERTIGHT CONDUIT SLEEVES WHERE EXTERIOR WALLS ARE PENETRATED EITHER ENTERING OR LEAVING A BUILDING.
6. ALL CUTTING, PATCHING AND FIRESTOPPING RELATED TO ELECTRICAL WORK SHALL BE THE RESPONSIBILITY OF THE ELECTRICAL CONTRACTOR.
7. ALL WIRING EXTENDED FROM SPLICE BOXES TO PANELBOARDS SHALL BE TERMINATED ON TERMINAL STRIPS IN SPLICE BOXES. PROVIDE CIRCUIT BRANCH CIRCUIT IDENTIFICATION WITHIN THE SPLICE BOX.
8. BRANCH CIRCUIT WIRING TO BE MODIFIED OR EXTENDED MAY NOT BE SHOWN BUT SHALL BE PROVIDED AS REQUIRED. MINIMUM WIRING SHALL BE 3/4"C-2#12, 1#12 GROUND. NO MORE THAN THREE PHASES MAY BE COMBINED IN A SINGLE HOMERUN AND EACH PHASE SHALL BE PROVIDED WITH AN INDIVIDUAL NEUTRAL.
9. ALL SPLICE BOXES WITH BRANCH CIRCUIT WIRING CONNECTED WITH WIRE NUTS SHALL BE PROVIDED WITH A NEW TERMINAL STRIP ENCLOSURE WITH ALL TERMINATIONS IDENTIFIED BY CIRCUIT DESIGNATION. WIRING WITHIN WIREWAYS FROM SPLICE BOX TO PANELBOARDS MAY EXCEED MAXIMUM FILL ALLOWED BY CODE CONTRACTOR SHALL VERIFY ACTUAL FILL AND PROVIDE ADDITIONAL WIREWAY AS INDICATED OR REQUIRED.
10. ALL NEW 5KV CABLES SHALL BE OKOGUARD - OKOSEAL TYPE MV1 105 350 MCM COPPER WITH 133% INSULATION.
11. GROUND GRID - INSTALL AS SHOWN. INSTALL #1/0, 7 STRANDED BARE COPPER WIRE LOOP 1'-0" BELOW GRADE. BOND ALL EXPOSED METALLIC CONDUIT, GROUND TRANSFORMER AT (2) OPPOSITE POINTS IN THE CABLE CONDUIT OPENING. INSTALL COPPER CLAD STEEL 3/4"x10'-0" GROUND RODS. ALL CONNECTIONS BELOW GRADE SHALL BE MADE BY EXOTHERMIC WELDS.
12. EXACT SIZE OF PAD TO BE PER TRANSFORMER MANUFACTURER REQUIREMENTS, SEE CIVIL DRAWINGS.
13. PROVIDE 2-4"C SLEEVES TO ELECTRIC ROOM FOR TEMPORARY SERVICE PROPERLY.
14. INTERCEPT EXISTING OUTGOING SIGNAL CIRCUITS.
15. CONTRACTOR SHALL HAVE LOCATION OF EXISTING UNDERGROUND UTILITIES UTILIZING GROUND PENETRATING RADAR.

ELECTRICAL LEGEND

——PE——	UNDERGROUND PRIMARY
——SE——	UNDERGROUND SECONDARY
– – – –E– – – –	EXISTING UNDERGROUND PRIMARY
——G——	NEW PROPANE

ISSUED FOR BIDDING 05/06/2019

No.	DATE	DESCRIPTION	DESIGNER	REVIEWER

SEAL

SCALE:
HORZ.: 1"= 15'
VERT.:
DATUM:
HORZ.:
VERT.:
15 0 15
GRAPHIC SCALE

FUSS & O'NEILL
317 IRON HORSE WAY, SUITE 204
PROVIDENCE, RI 02908
401.861.3070
www.fando.com

RHODE ISLAND DEPARTMENT OF ADMINISTRATION

ELECTRICAL SITE PLAN

THOMAS C. SLATER TRAINING SCHOOL BUILDING #23

CRANSTON RHODE ISLAND

PROJ. No.: 20170903.A20
DATE: FEBRUARY 1, 2019

EA-101

File Path: J:\DWG\P2017\0903\A20\Civil\Plan\20170903A20_STP01.dwg Layout: EA-101 Plotted: Tue, May 07, 2019 - 7:28 AM User: sirons
Plotter: AUTOCAD PDF (GENERAL DOCUMENTATION).PC3 CTB File: FO.STB
MS VIEW:
LAYER STATE:

NOTES:

1. DISCONNECT FOR TEMPORARY POWER.

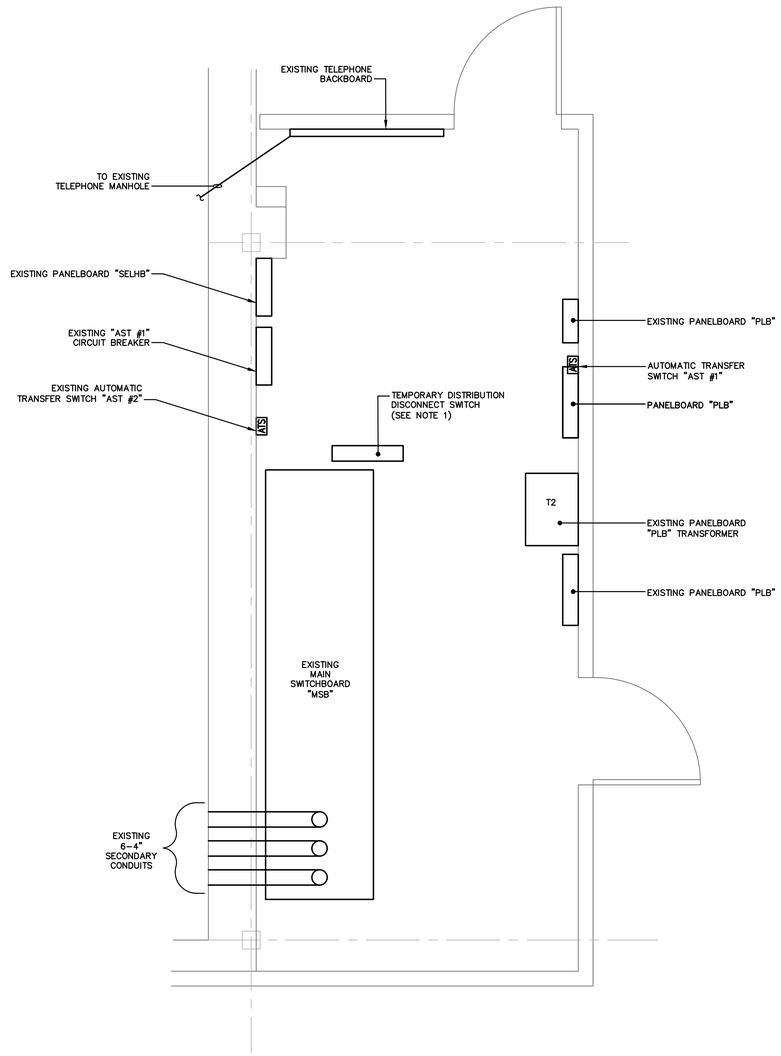

1 ELECTRICAL ROOM
SCALE: 1/2" = 1'-0"

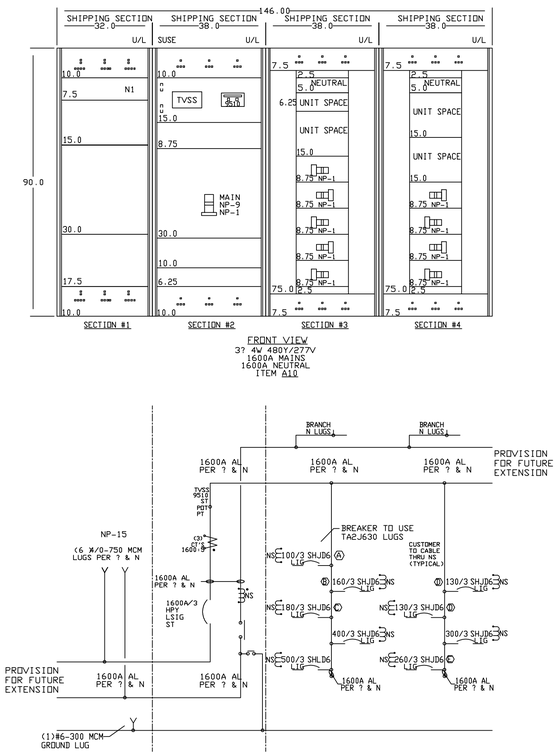

2 EXISTING MAIN SWITCHBOARD
NOT TO SCALE

ISSUED FOR BIDDING 05/06/2019

No.	DATE	DESCRIPTION	DESIGNER	REVIEWER

SEAL

SCALE: HORZ.: 1/2" = 1'-0" VERT.:
DATUM: HORZ.: VERT.:
0
GRAPHIC SCALE

FUSS & O'NEILL
317 IRON HORSE WAY, SUITE 204
PROVIDENCE, RI 02908
401.861.3070
www.fando.com

RHODE ISLAND DEPARTMENT OF ADMINISTRATION
ELECTRICAL ROOM PLAN
THOMAS C. SLATER TRAINING SCHOOL BUILDING #23
CRANSTON RHODE ISLAND

PROJ. No.: 20170903.A20
DATE: FEBRUARY 1, 2019
EA-102

File Path: J:\DWG\P2017\0903\A20\MEP\Electrical\20170903A20_ELE01.dwg Layout: EA-102 Plotted: Tue, May 07, 2019 - 7:28 AM User: sirons
Plotter: AUTOCAD PDF (GENERAL DOCUMENTATION).PC3 CTB File: FO.STB
MS VIEW:
LAYER STATE:

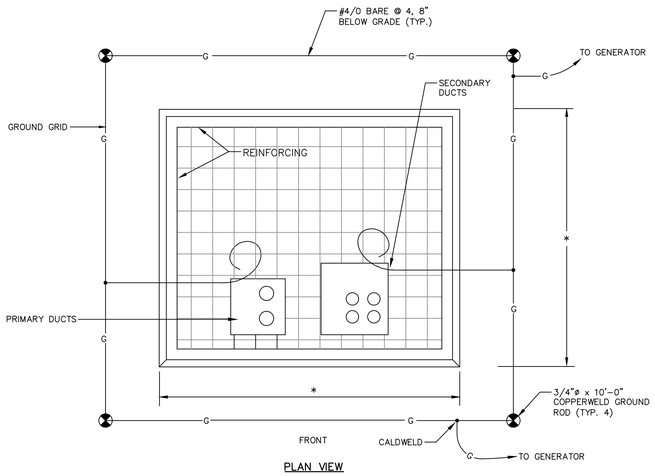

PLAN VIEW

* PAD DIMENSIONS SHALL BE PER MANUFACTURERS REQUIREMENTS.

TRANSFORMER PAD DETAIL

SCALE: N.T.S.

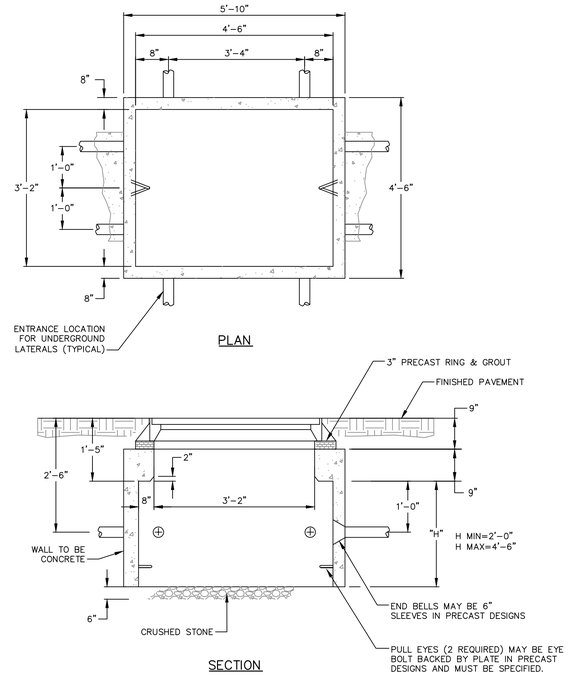

NOTE:

1. CONCRETE MINIMUM STRENGTH 5000#.
2. HANDHOLE FRAME RING AND COVER TO BE HEAVY DUTY AASHTO 20.

HEAVY DUTY HANDHOLE DETAILS

NOT TO SCALE

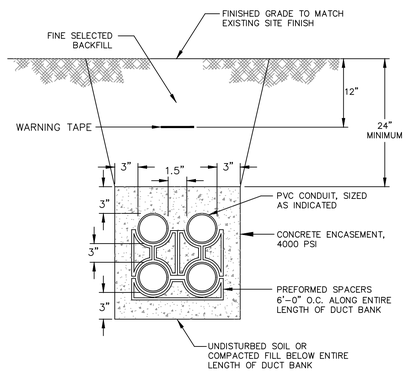

NOTES:

1. ALL DIMENSIONS ARE MINIMUM REQUIREMENTS.
2. CONCRETE ENCASEMENT.

TYPICAL DUCTBANK SECTION

SCALE: N.T.S.

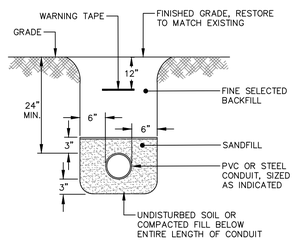

NOTES:

ALL DIMENSIONS ARE MINIMUM REQUIREMENTS.

TYPICAL SINGLE CONDUIT IN TRENCH DETAIL

SCALE: N.T.S.

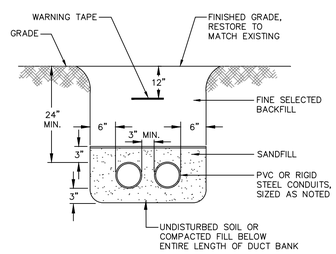

NOTES:

ALL DIMENSIONS ARE MINIMUM REQUIREMENTS.

TYPICAL MULTIPLE CONDUITS IN TRENCH DETAIL

SCALE: N.T.S.

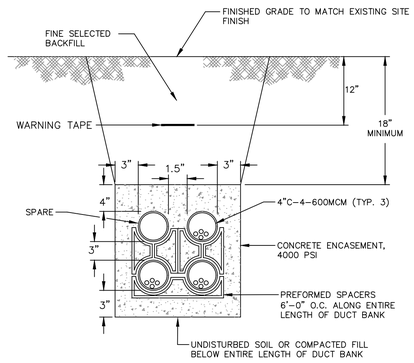

NOTES:

1. ALL DIMENSIONS ARE MINIMUM REQUIREMENTS.
2. CONCRETE ENCASEMENT.

DUCTBANK SECTION – SECONDARY

SCALE: N.T.S.

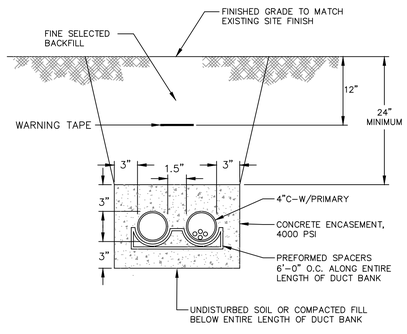

NOTES:

1. ALL DIMENSIONS ARE MINIMUM REQUIREMENTS.
2. CONCRETE ENCASEMENT.

DUCTBANK SECTION – PRIMARY

SCALE: N.T.S.

ISSUED FOR BIDDING 05/06/2019

No.	DATE	DESCRIPTION	DESIGNER	REVIEWER

SEAL

SCALE:
HORZ.:
VERT.:
DATUM:
HORZ.:
VERT.:
0
GRAPHIC SCALE

FUSS & O'NEILL
317 IRON HORSE WAY, SUITE 204
PROVIDENCE, RI 02908
401.861.3070
www.fando.com

RHODE ISLAND DEPARTMENT OF ADMINISTRATION

ELECTRICAL DETAILS

THOMAS C. SLATER TRAINING SCHOOL BUILDING #23

CRANSTON RHODE ISLAND

PROJ. No.: 20170903.A20
DATE: FEBRUARY 1, 2019

EA-501

File Path: j:\DWG\P\20170903\A20\MEP\Electrical\20170903A20_DET02_ELEC.dwg Layout: EA-501 Plotted: Tue, May 07, 2019 - 7:28 AM User: strons
Plotter: AUTOCAD PDF (GENERAL DOCUMENTATION).PC3 CTB File: FO.STB
LAYER STATE:
MS VIEW:

ELECTRICAL LEGEND

- FCO (3) — FUSED CUTOUT (3) NUMBER INDICATES NUMBER OF POLES
- 50 E — HIGH VOLTAGE SWITCH AND FUSE AS INDICATED
- TRANSFORMER – SIZED AS INDICATED
- DISCONNECT SWITCH
- PANELBOARD
- CIRCUIT BREAKER SIZED AS INDICATED
- LOADBREAK ELBOW (LBE)
- LOAD INTERUPTING SWITCH
- CABLE TERMINATION
- G — GENERATOR

NOTES:

1. EXISTING 4 SETS OF 4–600 IN 4"C & 2–4" SPARES DISCONNECT AND REMOVE EXISTING CONDUCTORS.
2. NOT USED.
3. EXISTING STAND–BY ATS; REMOVE INTERIOR, DISCONNECT AND REMOVE EMERGENCY SOURCE AND SPLICE NORMAL AND LOAD WIRES UTILIZING BOX AS SPLICE POINT. PROVIDE BLANK COVER.
4. EXISTING LIFE SAFETY TRANSFER SWITCH TO BE DISCONNECTED AND REMOVED. REMOVE EXISTING NORMAL AND LIFE SAFETY FEED ALONG WITH LOAD FEED TO 125A CIRCUIT BREAKER FEEDING ELH1. REFEED CIRCUIT BREAKER FROM NEW LIFE SAFETY TRANSFER SWITCH.
5. INTERCEPT WIRING AND SPLICE IN NEW HANDHOLE.
6. TEMPORARY POWER SERVICE FUSIBLE DISCONNECT SWITCH 800 AMP 480V, 3P FUSE @ 800A. THE CONTRACTOR SHALL HAVE THE OPTION OF PROVIDING A TEMPORARY GENERATOR (500 KW) AND MAINTAINING THROUGHOUT SHUTDOWN OR PROVIDING A TEMP TRANSFORMER. TEMP TRANSFORMER WOULD BE FED OFF EXTERIOR S&C SWITCH. CONTRACTOR WOULD BE RESPONSIBLE FOR ALL PROTECTIVE FENCING ROAD PLATING ETC.
7. PROVIDE PULLBOX ABOVE SWITCHBOARD FOR FACILITING NEW FEEDERS.
8. PROTECT SWITCHBOARD WHEN LOOPING ABOVE TO ROUTE NEW FEEDERS.
9. PROVIDE WITH SPD.
10. SEPERATE NEUTRAL CONDUCTOR FROM EQUIPMENT GROUNDING AND BONDING CONDUCTORS IN EXISTING MDP. PROVIDE NEW GROUND BARS & ISOLATED NEUTRAL BAR AS NECCESARY. BOND NEW GROUNDING ELECTRODE CONDUCTOR, FROM ATS, TO NEW GROUND BAR. MAINTAIN EXISTING GROUNDING ELECTRODE CONDUCTOR AND BONDING JUMPERS. CONNECT TO NEW GROUND BAR.
11. PROVIDE SIGNAGE AS REQUIRED PER NEC 700.7.
12. EXISTING GENERATOR AND SEPERATION OF SYSTEMS TO REMAIN UNTIL NEW SERVICE ONLINE.
13. #3/0 GND (GEC) SHALL BE TERMINATED TO NEW GROUNDING BUS AT EXISTING MDP.
14. CONNECT TO EXISTING WIRING TO EM PB'S IN MAIN CONTROL ROOM.
15. GENERATOR ANNUNCIATOR IS LOCATED IN CONTROL ROOM.

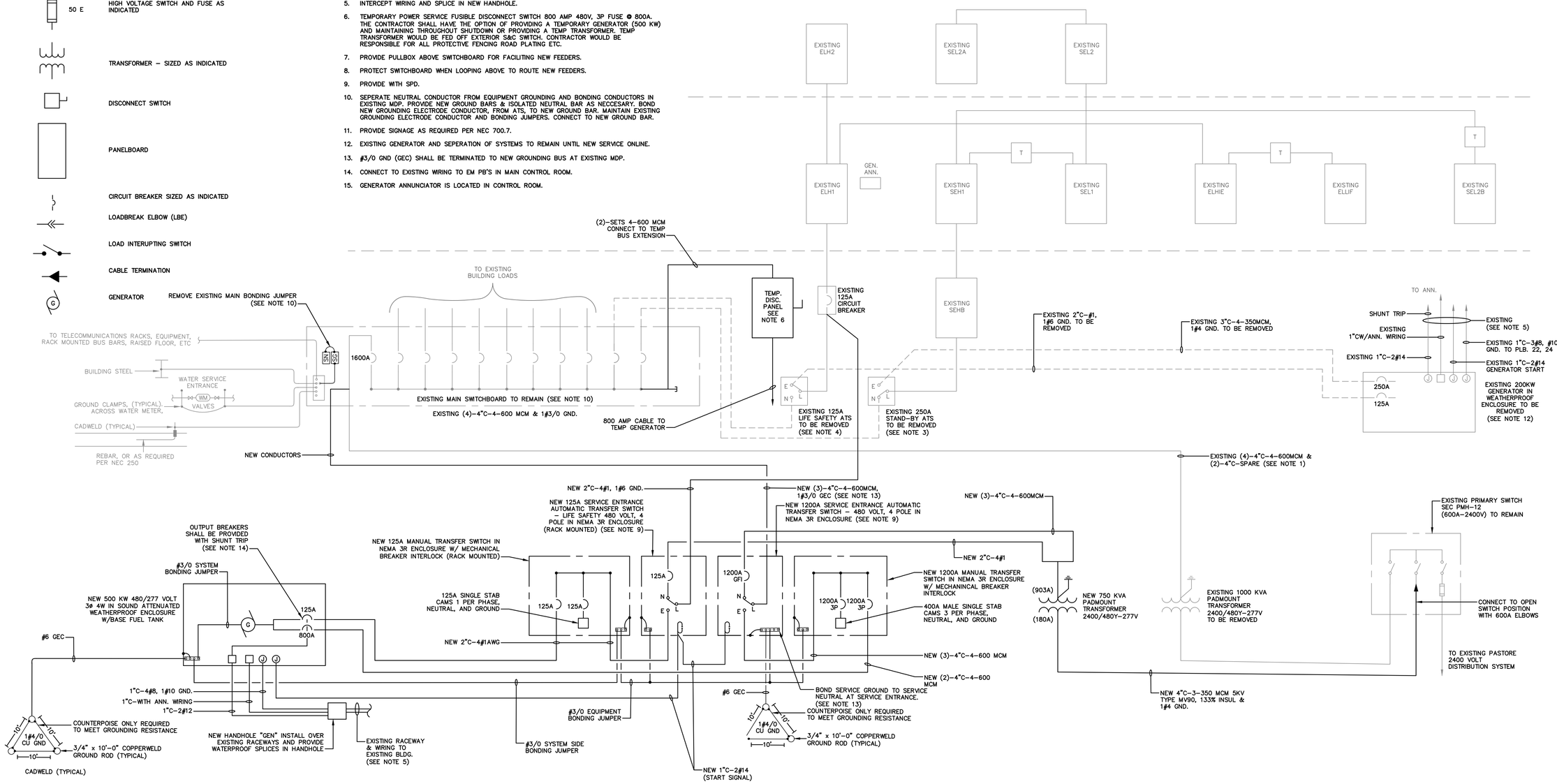

1 ONE–LINE
NOT TO SCALE

ISSUED FOR BIDDING 05/06/2019

File Path: J:\DWG\P2017\0903\A20\MEP\Electrical\20170903A20_ELE01.dwg Layout: EA-601 Plotted: Tue, May 07, 2019 - 7:28 AM User: sirons
Plotter: AUTOCAD PDF (GENERAL DOCUMENTATION).PC3 CTB File: FO.STB
LAYER STATE:
MS VIEW:

No.	DATE	DESCRIPTION	DESIGNER	REVIEWER

SEAL

SCALE: HORZ.: NOT TO SCALE; VERT.:
DATUM: HORZ.: VERT.:
1 0 1 GRAPHIC SCALE

FUSS & O'NEILL
317 IRON HORSE WAY, SUITE 204
PROVIDENCE, RI 02908
401.861.3070
www.fando.com

RHODE ISLAND DEPARTMENT OF ADMINISTRATION

ONE-LINE DIAGRAM

THOMAS C. SLATER TRAINING SCHOOL BUILDING #23

CRANSTON RHODE ISLAND

PROJ. No.: 20170903.A20
DATE: FEBRUARY 1, 2019

EA-601

STRUCTURAL GENERAL NOTES:

THE WORK SHOWN ON THESE DRAWINGS HAS BEEN DESIGNED IN ACCORDANCE WITH THE STRUCTURAL REQUIREMENTS FOR THE 2013 RHODE ISLAND STATE BUILDING CODE.

1. THE STRUCTURAL COMPONENTS HAVE BEEN DESIGNED FOR THE FOLLOWING LOADS:

   ELECTRICAL EQUIPMENT = SEE ELECTRICAL DRAWINGS

2. ALL STRUCTURAL WORK SHOWN OR SPECIFIED ON THESE DRAWINGS IS SUBJECT TO REVIEW BY THE STRUCTURAL ENGINEER OF RECORD. ASPECTS OF THE WORK FOUND NOT IN CONFORMANCE WITH THE STRUCTURAL DOCUMENTS SHALL BE CORRECTED AS DIRECTED BY THE ENGINEER.

3. THE TERM 'BEYOND' USED IN SECTION VIEWS OF STRUCTURAL ELEMENTS INDICATES THAT SAID ELEMENT IS NOT IN THE LINE OF THE SECTION CUT; HOWEVER, IT PROVIDES A GREATER UNDERSTANDING OF THE STRUCTURE.

4. THE CONTRACTOR SHALL SUBMIT SHOP DRAWINGS OF REINFORCING STEEL FOR REVIEW BEFORE PROCEEDING WITH WORK. THE CONTRACTOR SHALL CHECK ALL DIMENSIONS AND ACCEPT FULL RESPONSIBILITY FOR DIMENSIONAL CORRECTNESS. SHOP DRAWINGS SHALL BEAR THE REVIEW AND APPROVAL STAMP OF THE CONTRACTOR, IN ACCORDANCE WITH THE GENERAL CONDITIONS.

5. STRUCTURAL PLANS SHALL NOT BE REPRODUCED IN WHOLE OR IN PART FOR USE AS SHOP DRAWINGS OR ERECTION PLANS. (THERE WILL BE NO RELAXATION OF THIS RESTRICTION FOR ANY TRADE).

COLD WEATHER CONSTRUCTION PROCEDURES:

1. IT SHALL BE THE CONTRACTOR'S RESPONSIBILITY TO CONTINUOUSLY PROTECT SOILS, CONCRETE, MASONRY AND OTHER BUILDING MATERIALS FROM DAMAGE DUE TO COLD TEMPERATURES, UNTIL THE BUILDINGS HAVE BEEN TURNED OVER TO THE OWNER. THIS SHALL INCLUDE TEMPORARY ENCLOSURES, INSULATED BLANKETS AND TEMPORARY HEATING AS REQUIRED.

2. IT SHALL BE THE CONTRACTOR'S RESPONSIBILITY TO REPAIR AND/OR REPLACE ANY DAMAGED OR DEFECTIVE WORK, IN A MANNER APPROVED BY THE ENGINEER.

3. FOOTINGS SHALL NOT BE CONSTRUCTED ON FROZEN GROUND. ALL FROZEN SOIL SHALL BE REMOVED AND REPLACED WITH COMPACTED STRUCTURAL FILL OR COMPACTED CRUSHED STONE.

4. FROZEN MATERIALS OR MATERIALS CONTAINING ICE SHALL NOT BE USED.

5. ALL PROTECTIVE AND CORRECTIVE WORK SHALL BE DONE AT THE EXPENSE OF THE CONTRACTOR.

CONCRETE NOTES:

1. ALL CONCRETE WORK SHALL CONFORM TO ACI 301 "SPECIFICATIONS FOR STRUCTURAL CONCRETE FOR BUILDINGS".

2. ALL REINFORCING STEEL SHALL CONFORM TO ASTM A615 GRADE 60 AND BE DETAILED IN ACCORDANCE WITH ACI 315 "MANUAL OF STANDARD PRACTICE FOR DETAILING REINFORCED CONCRETE STRUCTURES".

3. REBARS SHALL HAVE A MINIMUM CONCRETE COVER AS FOLLOWS:
   - CONCRETE DEPOSITED AGAINST GROUND.....3 IN.
   - CONCRETE EXPOSED TO WEATHER OR IN CONTACT WITH GROUND:
     - FOR BARS #5 AND LARGER.....2 IN.
     - FOR BARS SMALLER THAN #5.....1½ IN.
   - CONCRETE NOT EXPOSED TO THE WEATHER OR THE GROUND:
     - SLABS AND WALLS.....¾ IN.

4. ALL REINFORCING BARS SHALL BE CONTINUOUS AND LAPPED A MINIMUM OF 48 BAR DIAMETERS AT ALL SPLICES, CORNERS, AND INTERSECTIONS UNLESS NOTED OTHERWISE.

5. ALL REINFORCEMENT SHALL BE SECURELY TIED IN ITS PROPOSED LOCATION PRIOR TO AND DURING PLACEMENT OF CONCRETE USING APPROVED CHAIRS, SPACERS AND TIE WIRE AS REQUIRED. NO BARS SHALL BE CUT OR OMITTED IN THE FIELD WITHOUT THE APPROVAL OF THE ENGINEER.

6. WELDED WIRE FABRIC SHALL CONFORM TO ASTM A 185, WITH A MINIMUM YIELD STRENGTH OF 75 KSI. LAP EDGES AND ENDS OF FABRIC SHEETS A MINIMUM OF ONE MESH SPACING PLUS 2 INCHES, AND WIRE TOGETHER. ALTERNATIVELY, SLABS-ON-GRADE MAY BE REINFORCED WITH FIBER REINFORCEMENT, SUCH AS FIBERMESH, APPLIED AT A DOSAGE RATE OF NO LESS THAN 1.5 LBS/CU YD.

7. CONCRETE FOR SLABS-ON-GRADE SHALL BE NORMAL WEIGHT CONCRETE AND SHALL DEVELOP A COMPRESSIVE STRENGTH OF 4,000 PSI IN 28 DAYS. CONCRETE SHALL HAVE A MAXIMUM AGGREGATE SIZE OF ¾ INCH, A MINIMUM CEMENT CONTENT OF 560 LBS/CU YD., AND A MAXIMUM SLUMP OF 4 INCHES.

8. ALL EXPOSED EDGES OF CONCRETE SHALL HAVE A ¾ INCH CHAMFER UNLESS NOTED OTHERWISE.

9. ALL CONCRETE EXPOSED TO THE WEATHER SHALL BE AIR-ENTRAINED.

10. SIZES AND LOCATIONS OF ALL REQUIRED EMBEDDED ITEMS FOR ALL TRADES SUCH AS ANCHOR BOLTS, PIPING SLEEVES, HOLDOWN ANCHORS, ETC., SHALL BE COORDINATED BY THE CONTRACTOR WITH OTHER TRADES.

11. MASONRY DOWELS: PROVIDE, PLACE, AND SPACE TO MATCH MASONRY REINFORCING.

12. CONCRETE SLAB SHALL BE PITCHED TO DRAIN AT 0.01 FT/FT MINIMUM TOWARD WALL OPENING.

MASONRY NOTES:

1. ALL HOLLOW CONCRETE MASONRY UNITS (C.M.U.) SHALL CONFORM TO ASTM C90, GRADE N, TYPE 1 AND ACI 530/ASCE 5/TMS 402-95.

2. ALL C.M.U. SHALL HAVE A COMPRESSIVE STRENGTH (f'm) OF 1500 PSI @ 28 DAYS, TESTED IN ACCORDANCE WITH ASTM C140. MORTAR FOR MASONRY SHALL BE TYPE S, PORTLAND CEMENT, CONFORMING TO ASTM C270. GROUT FOR MASONRY SHALL HAVE A COMPRESSIVE STRENGTH OF 2000 PSI, CONFORMING TO ASTM 476.

3. LAY C.M.U. IN RUNNING BOND USING TWO-CORE C.M.U. THROUGHOUT THE PROJECT EXCEPT WHERE SOLID C.M.U. IS SPECIFIED IN THE CONTRACT DOCUMENTS.

4. ALL GROUTING PROCEDURES SHALL CONFORM TO ACI 530.1/ASCE 6/TMS 602, ARTICLE 3.5. USE FINE GROUT WHEN FILLING BOND BEAMS AND CORES WHEN THE LEAST HORIZONTAL DIMENSION OF THE OPENING TO BE FILLED IS LESS THAN 4 INCHES. USE COARSE GROUT WHEN FILLING BOND BEAMS AND CORES WHEN THE LEAST HORIZONTAL DIMENSION OF THE OPENING TO BE FILLED IS GREATER THAN OR EQUAL TO 4 INCHES.

5. OPENINGS REQUIRED IN MASONRY ELEMENTS AND NOT SHOWN IN THE STRUCTURAL CONTRACT DOCUMENTS SHALL BE INSTALLED ONLY WITH THE SPECIAL APPROVAL OF THE ENGINEER AND WITH THE PROPER ADDITIONAL REINFORCING AS SHOWN IN THE CONTRACT DOCUMENTS.

6. PROTECT MASONRY WORK FROM HOT AND COLD WEATHER IN ACCORDANCE WITH ACI 530.1/ASCE 6/TMS 602, ARTICLE 1.8C (COLD WEATHER) AND 1.8D (HOT WEATHER).

7. ALL REINFORCING BARS SHALL BE ASTM A615 GRADE 60. ANY LAPS OR SPLICES SHALL BE A MIN. OF 48 BAR DIAMETERS OF THE LARGEST BAR UNLESS SHOWN OTHERWISE. CENTER ALL REINFORCEMENT IN THE BLOCK CELLS.

8. PROVIDE CRADLE TYPE REINFORCEMENT POSITIONS AT 6'-0" O.C. (MAX.) SPACING FOR BOND BEAMS. FOR VERTICAL REINFORCEMENT, PROVIDE REINFORCEMENT POSITIONERS AT TOP AND BOTTOM OF GROUT LIFTS AND AT 8'-0" (MAX.) SPACING IN-BETWEEN. SEE SPECIFICATIONS FOR HORIZONTAL REINFORCEMENT.

9. NOTES APPLY TO MASONRY SHOWN ON STRUCTURAL DRAWINGS AND SHALL BE THE MINIMUM REQUIREMENTS FOR MASONRY SHOWN ON THE ARCHITECTURAL DRAWINGS.

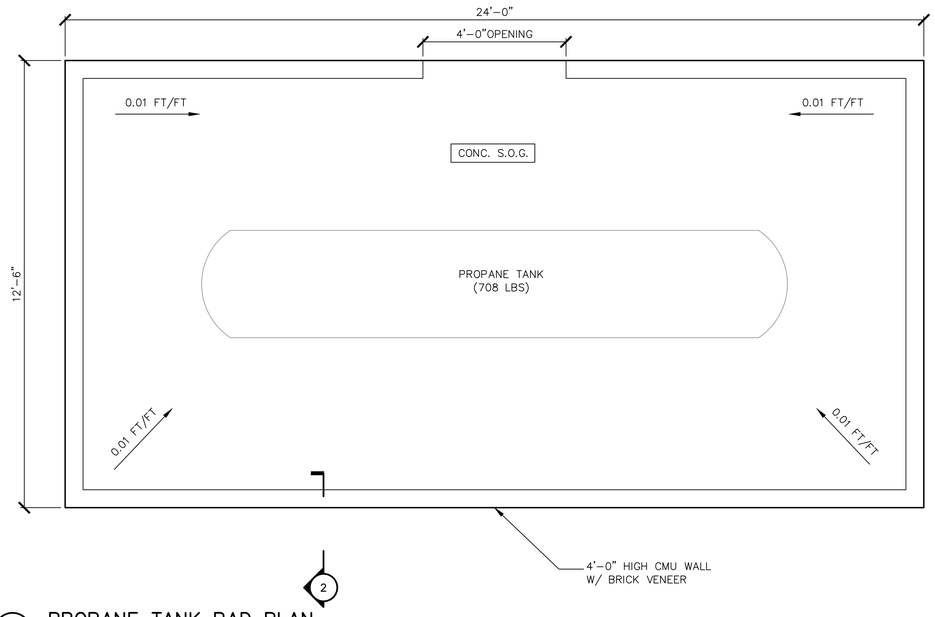

1 PROPANE TANK PAD PLAN
1/2" = 1'-0"

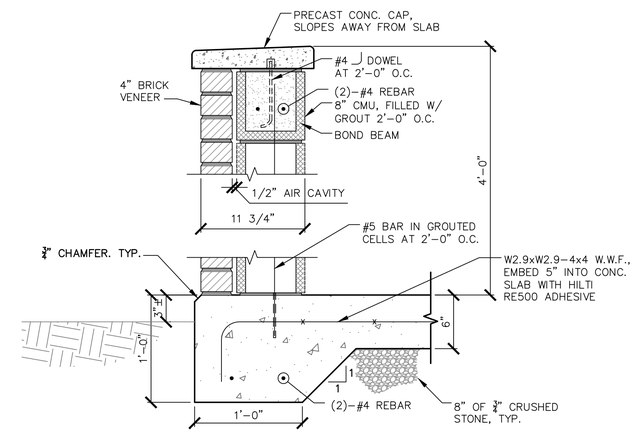

2 SECTION THRU CMU WALL
1-1/2" = 1'-0"

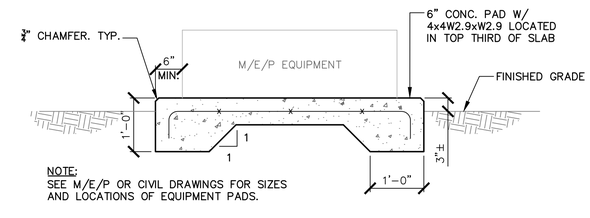

NOTE:
SEE M/E/P OR CIVIL DRAWINGS FOR SIZES AND LOCATIONS OF EQUIPMENT PADS.

3 TYPICAL EQUIPMENT PAD SECTION
3/4" = 1'-0"

ISSUED FOR BIDDING 05/06/2019

No.	DATE	DESCRIPTION	DESIGNER	REVIEWER
1.			XX/XX	XX

SEAL

SEAL

SCALE:
HORZ.: AS NOTED
VERT.:
DATUM:
HORZ.:
VERT.:
0
GRAPHIC SCALE

FUSS & O'NEILL
317 IRON HORSE WAY, SUITE 204
PROVIDENCE, RI 02908
401.861.3070
www.fando.com

RHODE ISLAND DEPARTMENT OF ADMINISTRATION

STRUCTURAL NOTES AND TYPICAL DETAILS

THOMAS C. SLATER TRAINING SCHOOL BUILDING #23

CRANSTON RHODE ISLAND

PROJ. No.: 20170903.A20
DATE: FEBRUARY 1, 2019

SA-501

File Path: J:\DWG\P2017\0903\A20\Structural\Plan\20170903.A20_STR01.dwg Layout: SA-501 Plotted: Tue, May 07, 2019 - 7:28 AM User: strons
Plotter: AUTOCAD PDF (GENERAL DOCUMENTATION).PC3 CTB File: FO.STB
MS VIEW:
LAYER STATE: