DRAWING LIST

A2.0 DECK PLAN
A2.1 FLOOR PLAN
A2.2 ROOF PLAN
A2.3 EXTERIOR ELEVATIONS
A2.4 BUILDING SECTIONS
A2.5 EXT ELEV / INT ELEV / DETAILS
A2.6 DOORS / MISC DETAILS

S1.0 TOP OF WALL FRAMING PLAN & DETAILS
S1.1 ROOF FRAMING PLAN
S2.0 FOUNDATION REPAIR, POST CONNECT DETAILS
S2.1 ROOF TRUSS, ROOF FRAMING DETAILS
S2.2 ROOF TRUSS, ROOF FRAMING DETAILS

M2.0 MECHANICAL FIRST FLOOR PLAN
M5.0 MECHANICAL DETAILS
M8.0 MECHANICAL SCHEDULES
P1.0 PLUMBING CRAWL SPACE, SAN W & V
P1.1 PLUMBING 1ST FLOOR, SAN W & V
P2.0 PLUMBING CRAWL SPACE, DOM HW & CW
P2.1 PLUMBING 1ST FLOOR, SAN W & V
P5.0 PLUMBING DETAILS
P8.0 PLUMBING SCHEDULES

E0.1 ELECTRICAL LEGEND, SCHEDULE & NOTES
E1.0 ELECTRICAL LIGHTING FIRST FLOOR PLAN
E1.1 ELECTRICAL FIRST FLOOR POWER PLAN
FA1.0 FIRE ALARM FIRST FLOOR PLAN

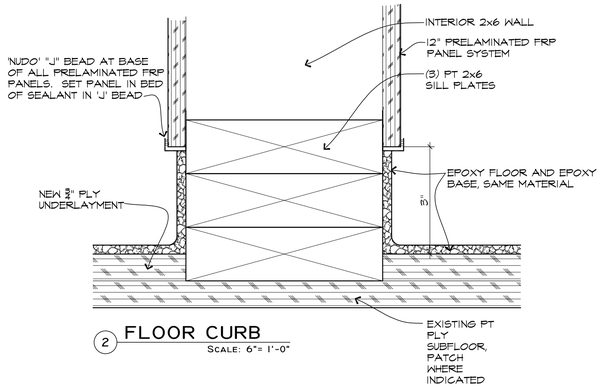

2 FLOOR CURB
SCALE: 6"= 1'-0"

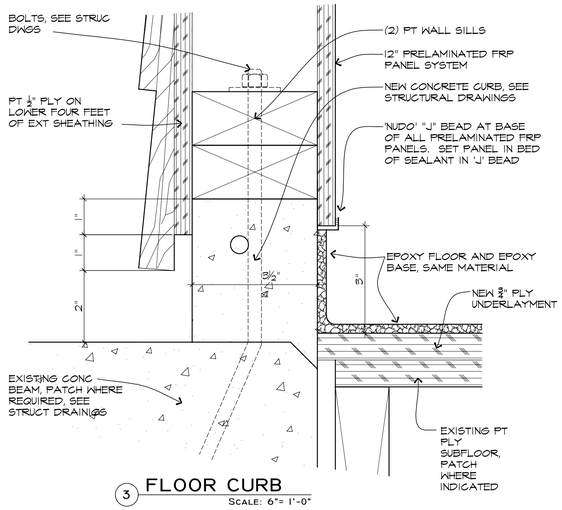

3 FLOOR CURB
SCALE: 6"= 1'-0"

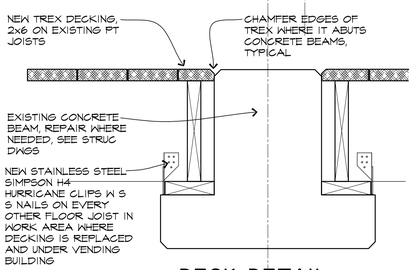

1 DECK DETAIL
SCALE: 1 1/2"= 1'-0"

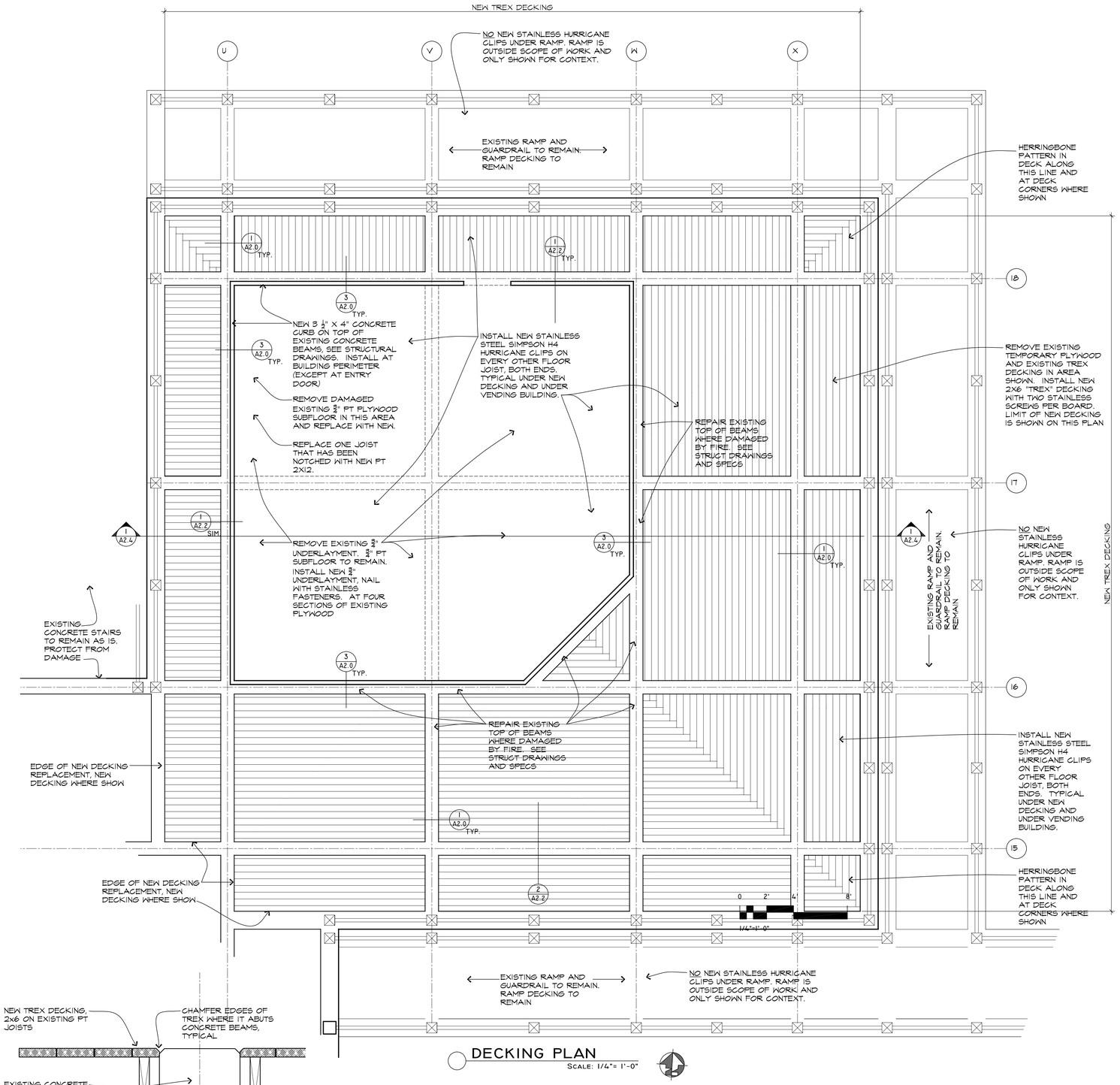

DECKING PLAN
SCALE: 1/4"= 1'-0"

BURGIN LAMBERT
ARCHITECTS
150 Bellevue Avenue
Newport, Rhode Island 02840
Tel: 401.847.3339
Fax: 401.847.3392
www.burginlambert.com

MISQUAMICUT STATE BEACH
VENDING BUILDING
Westerly, RI

REVISIONS:	PROJECT #: 1904
	DRAWN BY: RL
	DATE: 3/01/2019

DECK PLAN

A2.0

2019 © COPYRIGHT THIS DRAWING IS NOT TO BE USED FOR MAKING ANY REPRODUCTION, TRACING OR FOR CONSTRUCTION OF ANY BUILDING WITHOUT FIRST OBTAINING THE WRITTEN AUTHORIZATION FROM BURGIN LAMBERT ARCHITECTS, INC.

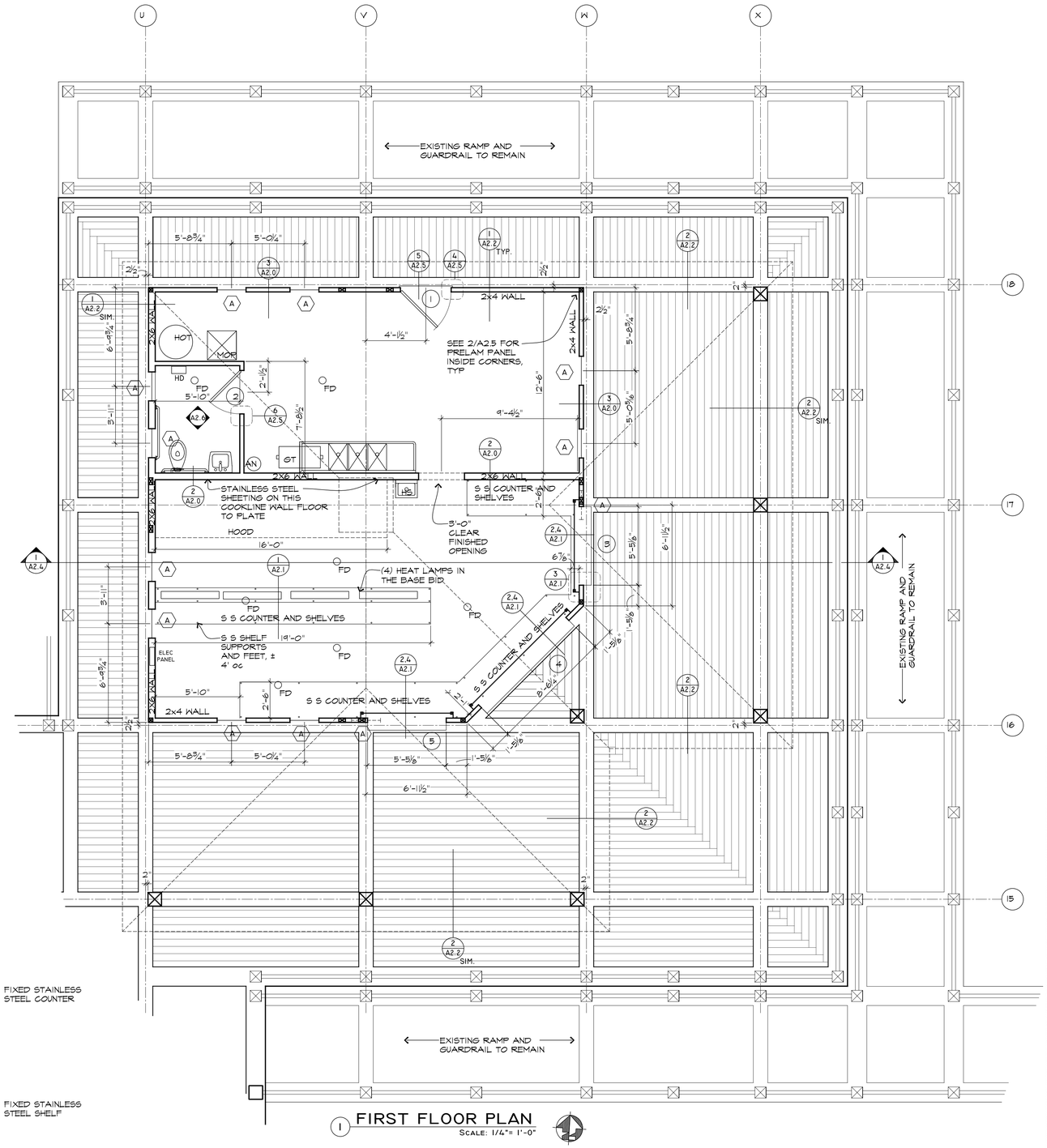

1 FIRST FLOOR PLAN
SCALE: 1/4"= 1'-0"

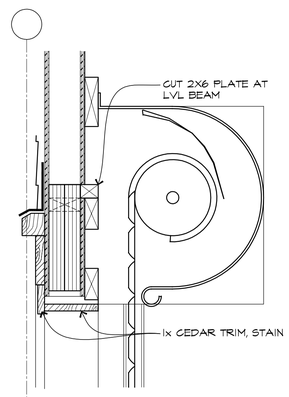

2 ROLL DOOR HEAD
SCALE: 1 1/2"= 1'-0"

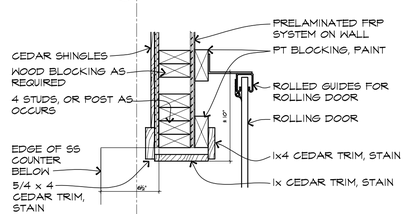

3 ROLL DOOR JAMB
SCALE: 1 1/2"= 1'-0"

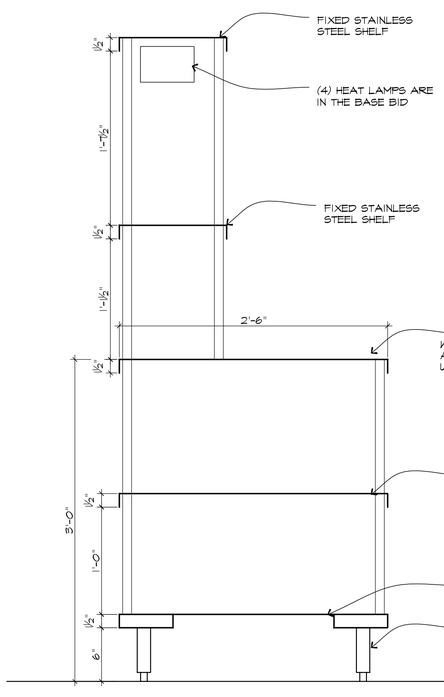

1 STAINLESS WORKTABLE
SCALE: 1 1/2"= 1'-0"

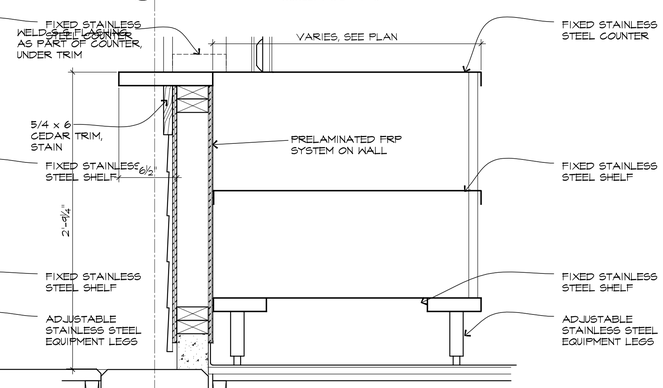

4 STAINLESS WORKTABLE
SCALE: 1 1/2"= 1'-0"

BURGIN LAMBERT
ARCHITECTS
150 Bellevue Avenue
Newport, Rhode Island 02840
Tel: 401.847.3339
Fax: 401.847.3392
www.burginlambert.com

MISQUAMICUT STATE BEACH
VENDING BUILDING
Westerly, RI

REVISIONS:	PROJECT #: 1904
	DRAWN BY: RL
	DATE: 3/01/2019

FLOOR PLAN

A2.1

2019 © COPYRIGHT THIS DRAWING IS NOT TO BE USED FOR MAKING ANY REPRODUCTION THEREOF, OR FOR CONSTRUCTION OF ANY BUILDING WITHOUT FIRST OBTAINING THE WRITTEN AUTHORIZATION FROM BURGIN LAMBERT ARCHITECTS, INC.

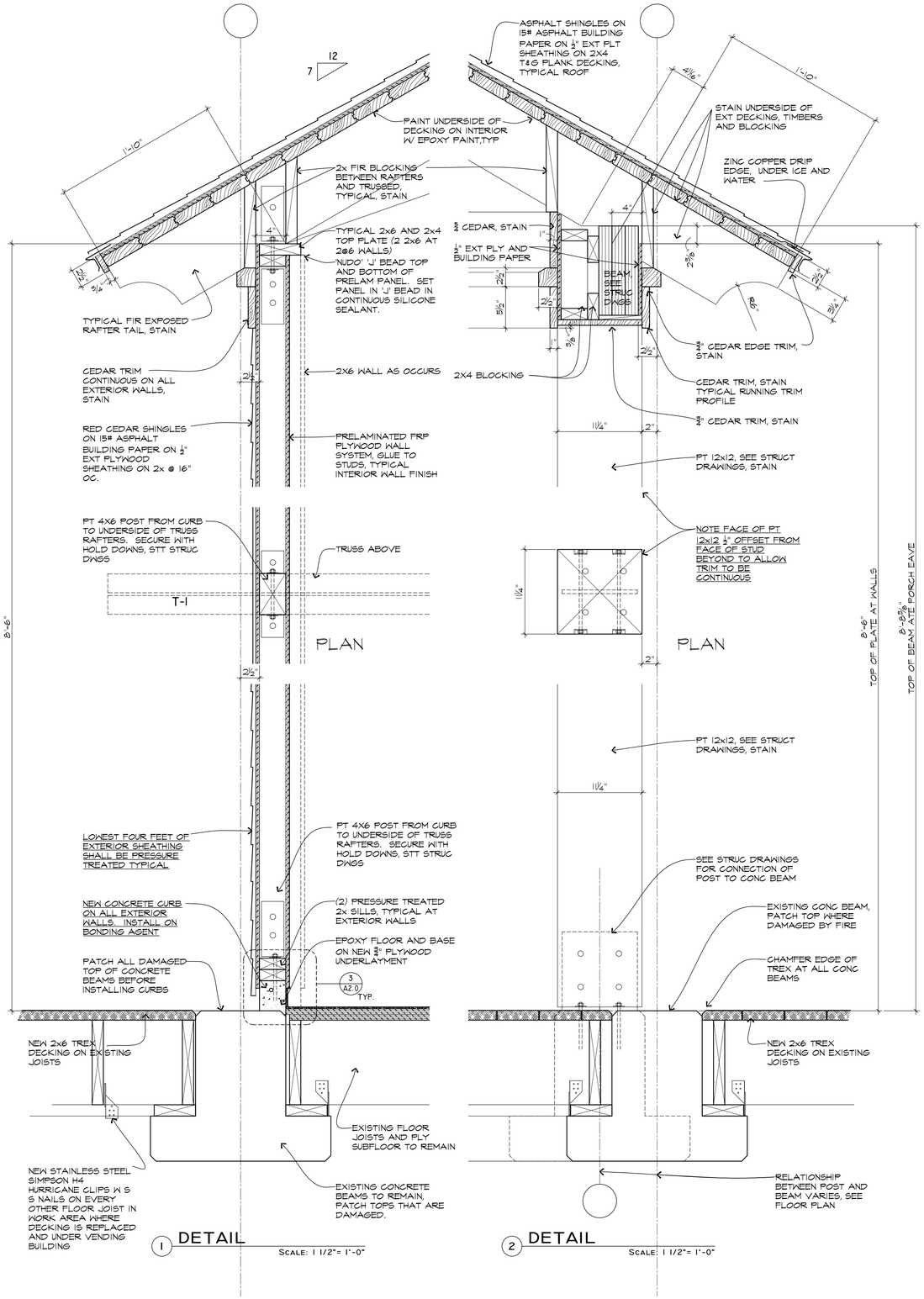

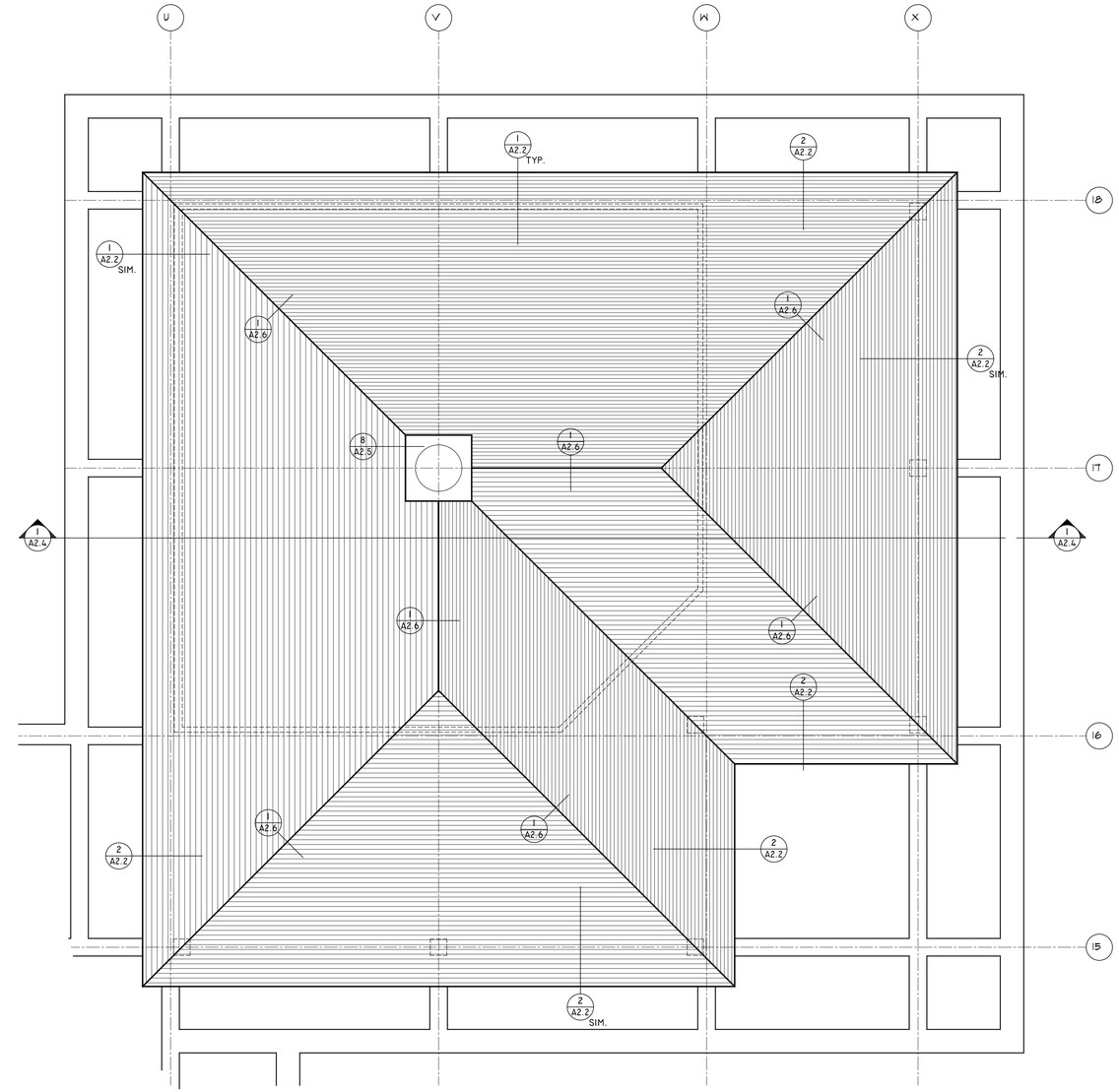

ROOF PLAN
SCALE: 1/4"= 1'-0"

BURGIN LAMBERT
ARCHITECTS
150 Bellevue Avenue
Newport, Rhode Island 02840
Tel: 401.847.3339
Fax: 401.847.3392
www.burginlambert.com

MISQUAMICUT STATE BEACH
VENDING BUILDING
Westerly, RI

REVISIONS:	PROJECT #: 1904
△	DRAWN BY: RL
△	DATE: 3/01/2019
△	
△	

ROOF PLAN

A2.2

2019 © COPYRIGHT THIS DRAWING IS NOT TO BE USED FOR MAKING ANY REPRODUCTIONS, TRACINGS OR FOR CONSTRUCTION OF ANY BUILDING WITHOUT FIRST OBTAINING THE WRITTEN AUTHORIZATION FROM BURGIN LAMBERT ARCHITECTS, INC.

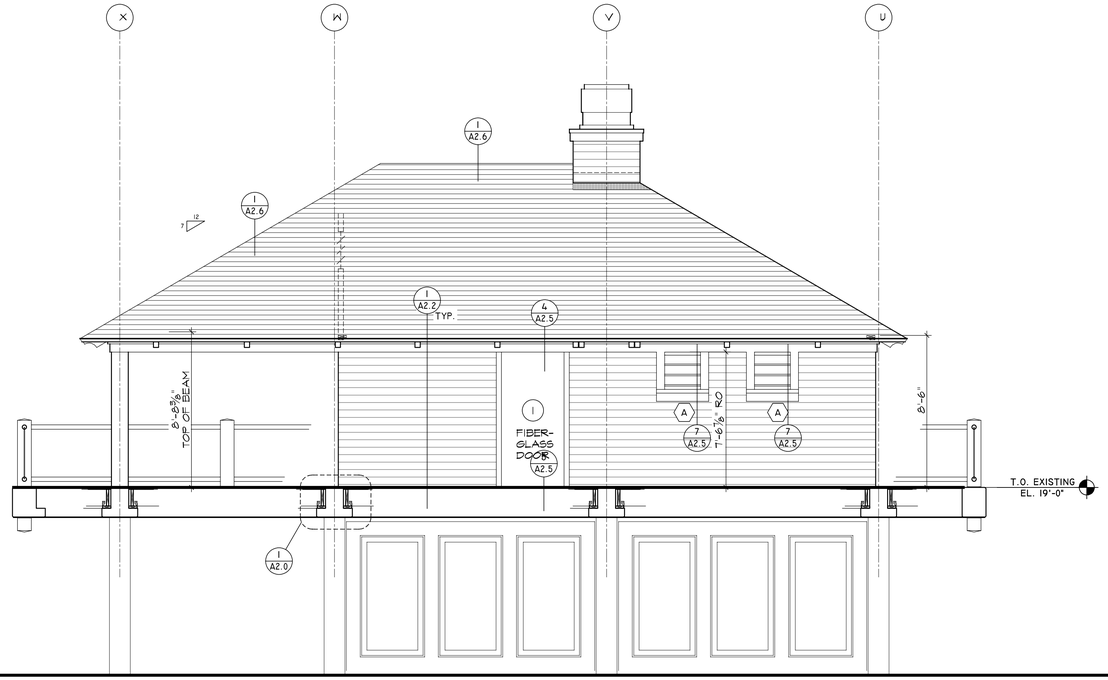

NORTH ELEVATION
SCALE: 1/4"= 1'-0"

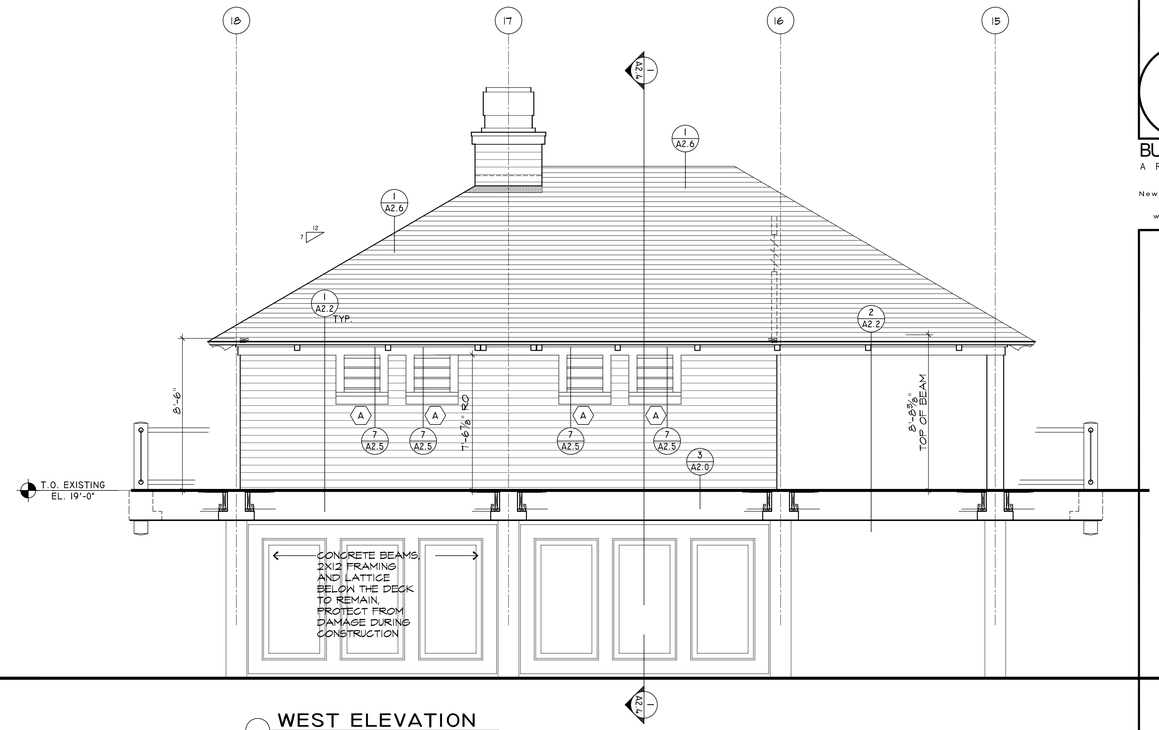

WEST ELEVATION
SCALE: 1/4"= 1'-0"

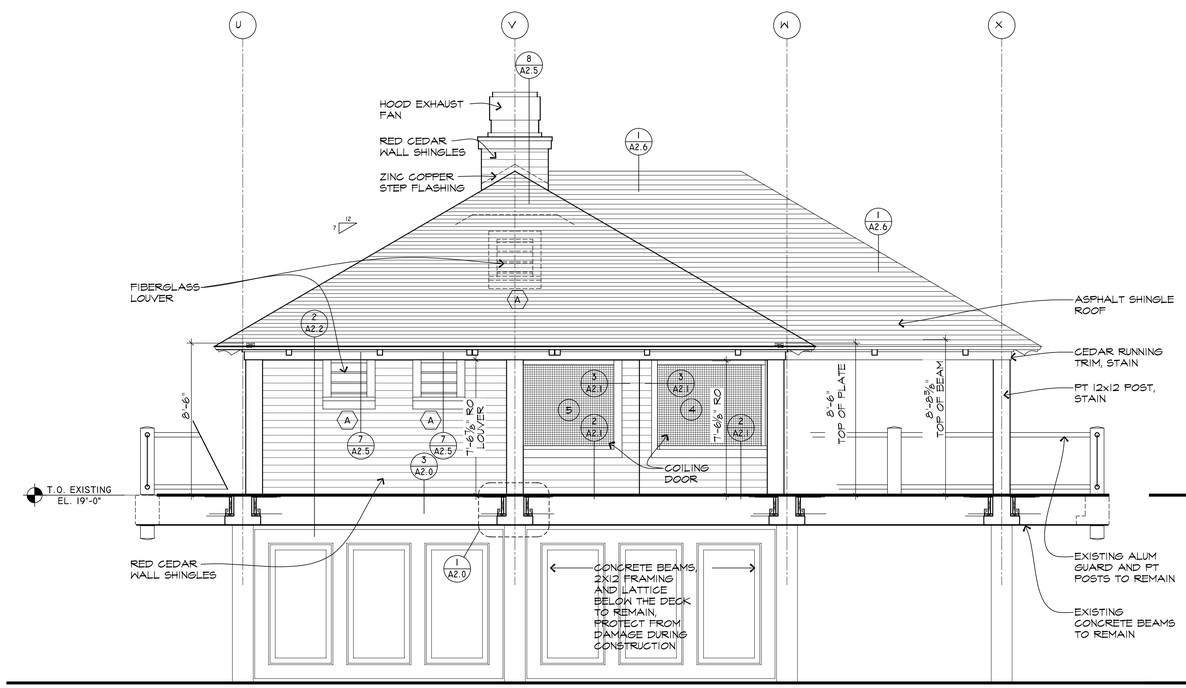

SOUTH ELEVATION
SCALE: 1/4"= 1'-0"

NOTES ARE TYPICAL FOR ALL EXTERIOR ELEVATIONS

0 2' 4' 8'
1/4"=1'-0"

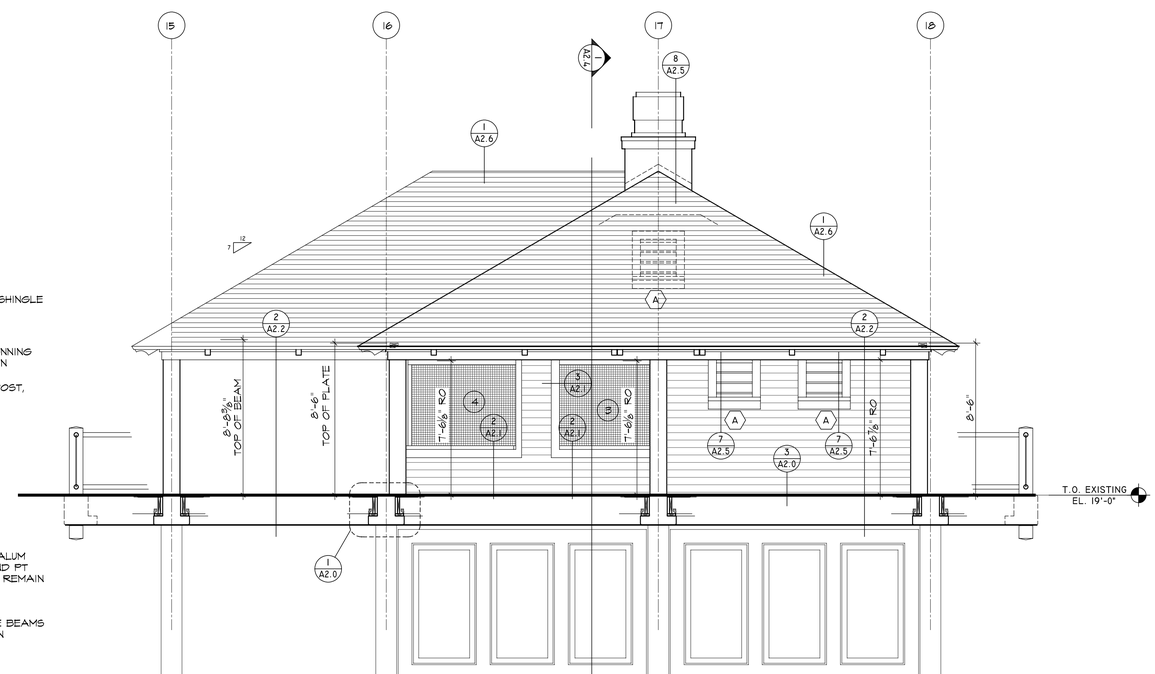

EAST ELEVATION
SCALE: 1/4"= 1'-0"

BURGIN LAMBERT
ARCHITECTS
150 Bellevue Avenue
Newport, Rhode Island 02840
Tel: 401.847.3339
Fax: 401.847.3392
www.burginlambert.com

MISQUAMICUT STATE BEACH
VENDING BUILDING
Westerly, RI

REVISIONS:	PROJECT #: 1904
	DRAWN BY: RL
	DATE: 3/01/2019

EXTERIOR ELEVATIONS

A2.3

2019 © COPYRIGHT: THIS DRAWING IS NOT TO BE USED FOR MAKING ANY REPRODUCTION THEREOF, OR FOR CONSTRUCTION OF ANY BUILDING WITHOUT FIRST OBTAINING THE WRITTEN AUTHORIZATION FROM BURGIN LAMBERT ARCHITECTS, INC.

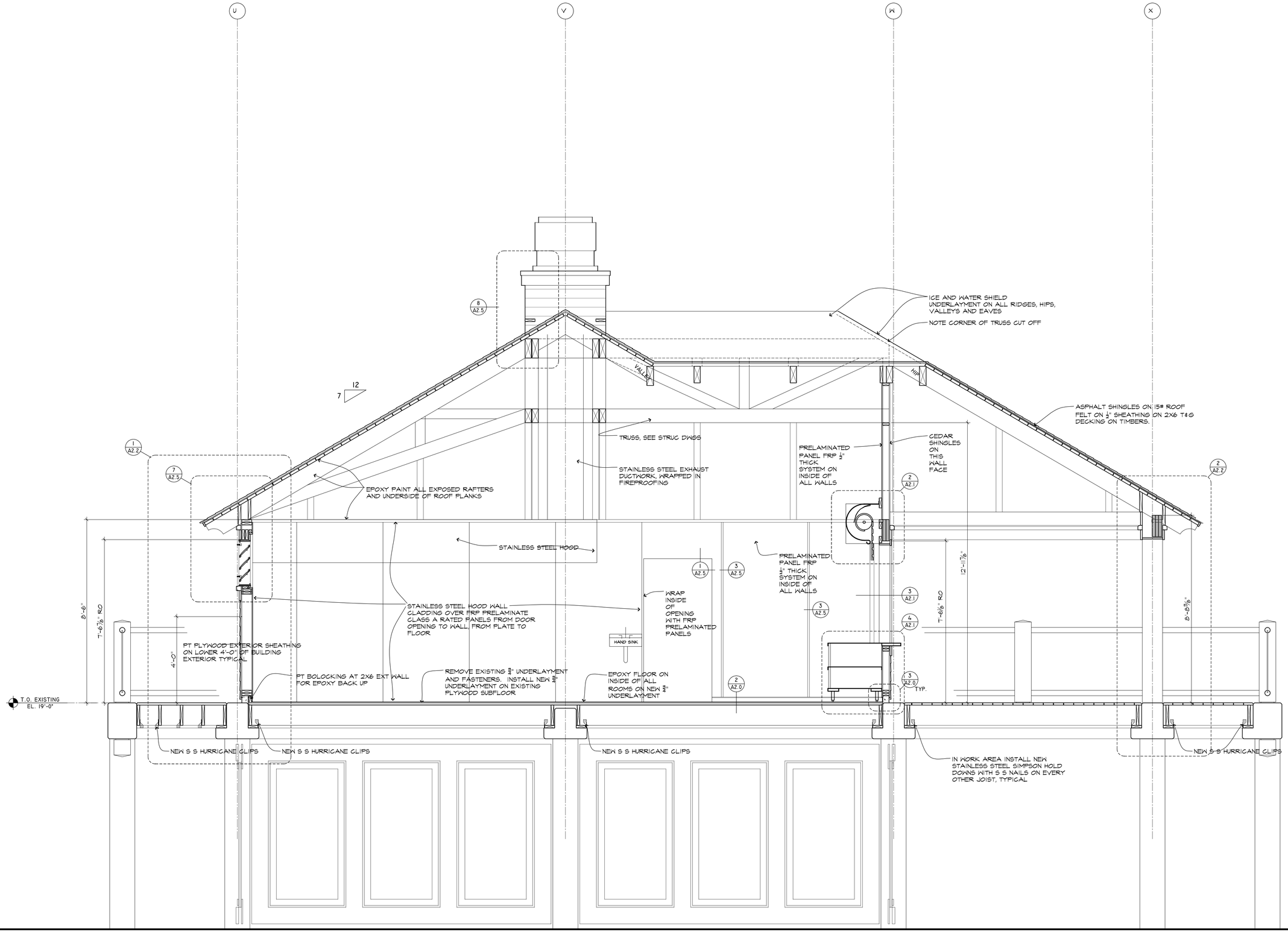

1 BUILDING SECTION
SCALE: 1/2"= 1'-0"

BURGIN LAMBERT
ARCHITECTS
150 Bellevue Avenue
Newport, Rhode Island 02840
Tel: 401.847.3339
Fax: 401.847.3392
www.burginlambert.com

MISQUAMICUT STATE BEACH
VENDING BUILDING
Westerly, RI

REVISIONS:	PROJECT #:
△	1904
△	DRAWN BY:
△	RL
△	DATE:
△	3/01/2019

BUILDING SECTION

A2.4

2019 © COPYRIGHT THIS DRAWING IS NOT TO BE USED FOR MAKING ANY REPRODUCTIONS, TRACINGS, OR FOR CONSTRUCTION OF ANY BUILDING WITHOUT FIRST OBTAINING THE WRITTEN AUTHORIZATION FROM BURGIN LAMBERT ARCHITECTS, INC.

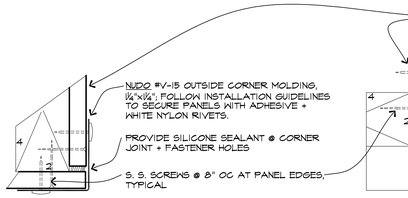

1 TYP. PANEL OUTSIDE CORNER DETAIL

SCALE: 6"=1'0"

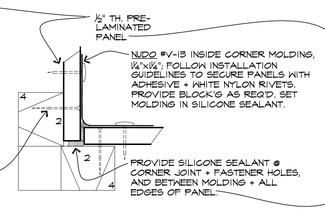

2 TYP. PANEL INSIDE CORNER DETAIL

SCALE: 6"=1'0"

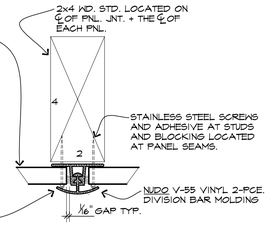

3 TYP. PRELAM. PANEL JOINT DETAIL

SCALE: 6"=1'0"

N.O.T.E.: INSTALL PRELAMINATED PANELS TO STUDS AND BLOCKING WITH GLUE AT ALL STUDS, PLATES AND BLOCKING AND S. S. NAILS AT THE PERIMITER OF ALL PANELS @8"OC. NO FASTENERS TO BE INSTALLED IN THE CENTER OF THE PANELS. INSTALL 2X WOOD BLOCKING AT ALL JOINTS IN PRELAMINATED PANELS. INSTALL PANELS IN ACCORDANCE WITH LAYOUTS SHOWN ON THE INTERIOR ELEVATIONS, INSTALL BLOCKING ACCORDINGLY. TYPICAL FOR ALL INSTALLATIONS.

DOOR SCHEDULE

COORDINATE ALL OPENING SIZES AND DETAILS WITH GENERAL CONTRACTOR AND FIELD MEASUREMENTS

No.	Type	Description	Door Size	Hardware	Details	Remarks
1	A	FIBERGLASS/GLASS	3'-6" x 7'-6 5/8" x 1 3/4"	SET 1	4/A2.5 5/A2.5	
2	A	FIBERGLASS/GLASS	3'-0" x 6'-8" x 1 3/4"	SET 2	6/A2.5	
3		OVERHEAD COILING		SEE SPEC		
4		OVERHEAD COILING		SEE SPEC		
5		OVERHEAD COILING		SEE SPEC		

LOUVER SCHEDULE

TAG	TYPE	FRAME (WxH)	R.O. (WxH)	DETAILS	REMARKS
A	FIBERGLASS LOUVER	2'-0"WX 2'-1"H	2'-1"WX 2'-1 1/2"H	7/A2.5	

DOOR HARDWARE

SET 1:
- (2) PAIR HINGES
- (2) PULLS
- (1) DEAD BOLT, KEY BOTH SIDES
- (1) CLOSER
- (1) THRESHOLD
- (2) STAINLESS KICKPLATES
- (1) DOORSTOP
- (1) HOLD OPEN
- (1) WEATHERSTRIPPING HEAD AND JAMBS
- (1) DOOR SWEEP W/ RAIN DEFLECTOR

SET 2:
- (2) PAIR HINGES
- (2) PULLS
- (1) DEAD BOLT, THUMBTURN ONE SIDE
- (1) CLOSER
- (2) STAINLESS KICKPLATES
- (1) DOORSTOP
- (1) HOLD OPEN

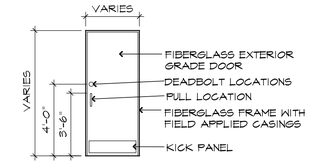

TYPE A

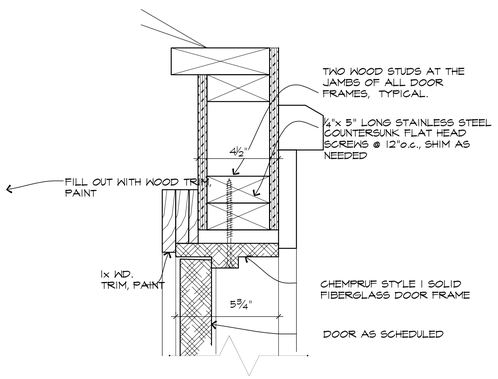

4 EXTERIOR DOOR

SCALE: 3"= 1'-0"

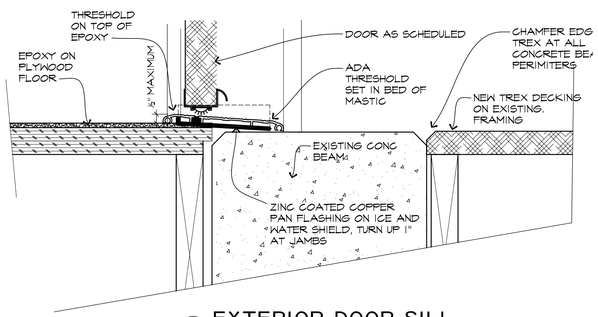

5 EXTERIOR DOOR SILL

SCALE: 3"= 1'-0"

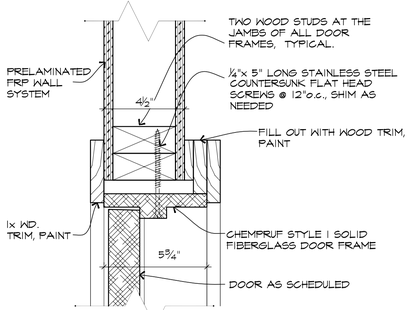

6 INTERIOR DOOR

SCALE: 3"= 1'-0"

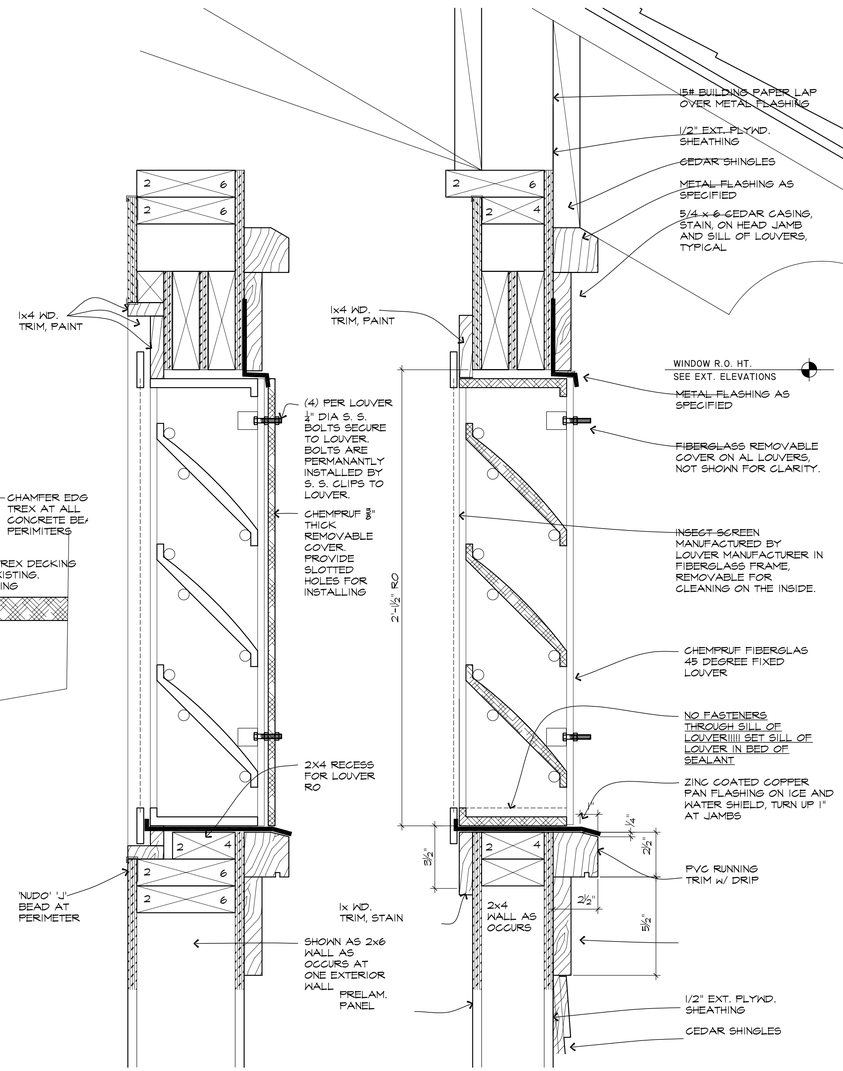

7 LOUVER DETAIL

SCALE: 3"= 1'-0"

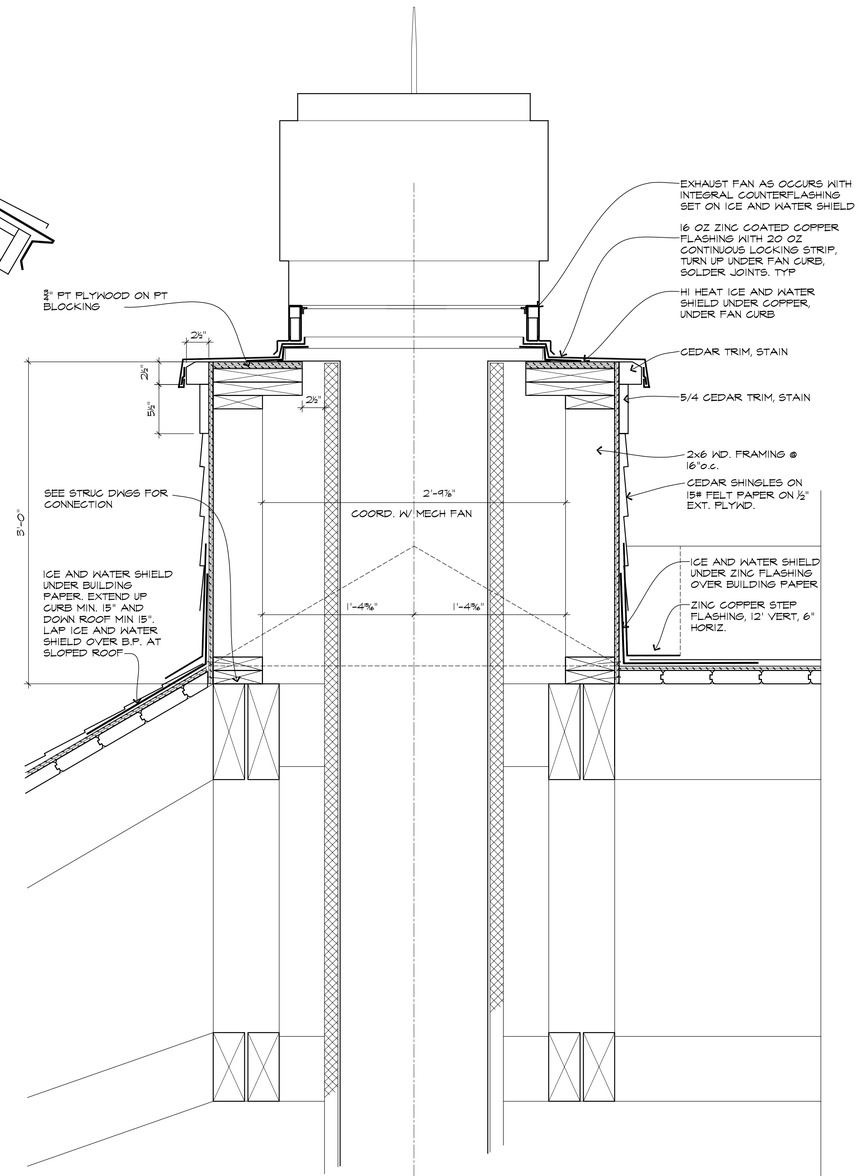

8 SECTION @ EXHAUST CHIMNEY

1 1/2"=1'-0"

BURGIN LAMBERT
ARCHITECTS
150 Bellevue Avenue
Newport, Rhode Island 02840
Tel: 401.847.3339
Fax: 401.847.3392
www.burginlambert.com

MISQUAMICUT STATE BEACH
VENDING BUILDING
Westerly, RI

REVISIONS:	PROJECT #: 1904
	DRAWN BY: RL
	DATE: 3/01/2019

DOORS
MISC.
DETAILS

A2.5

2019 © COPYRIGHT. THIS DRAWING IS NOT TO BE USED FOR MAKING ANY REPRODUCTION THEREOF, OR FOR CONSTRUCTION OF ANY BUILDING WITHOUT FIRST OBTAINING THE WRITTEN AUTHORIZATION FROM BURGIN LAMBERT ARCHITECTS, INC.

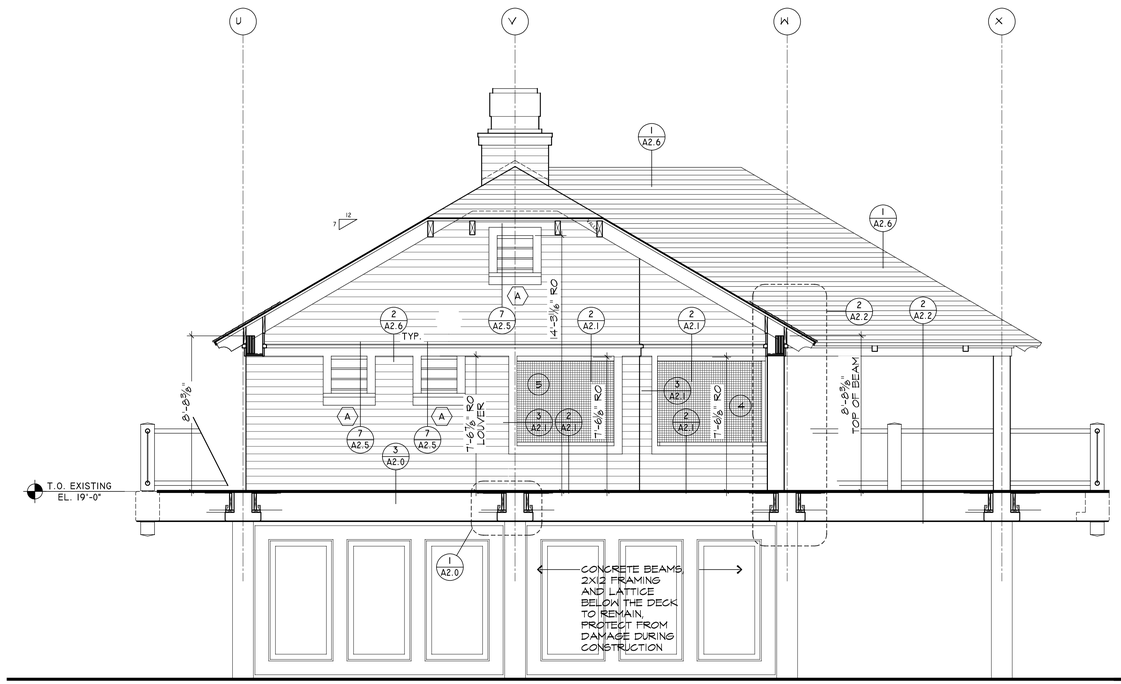

SOUTH ELEVATION
SCALE: 1/4"= 1'-0"

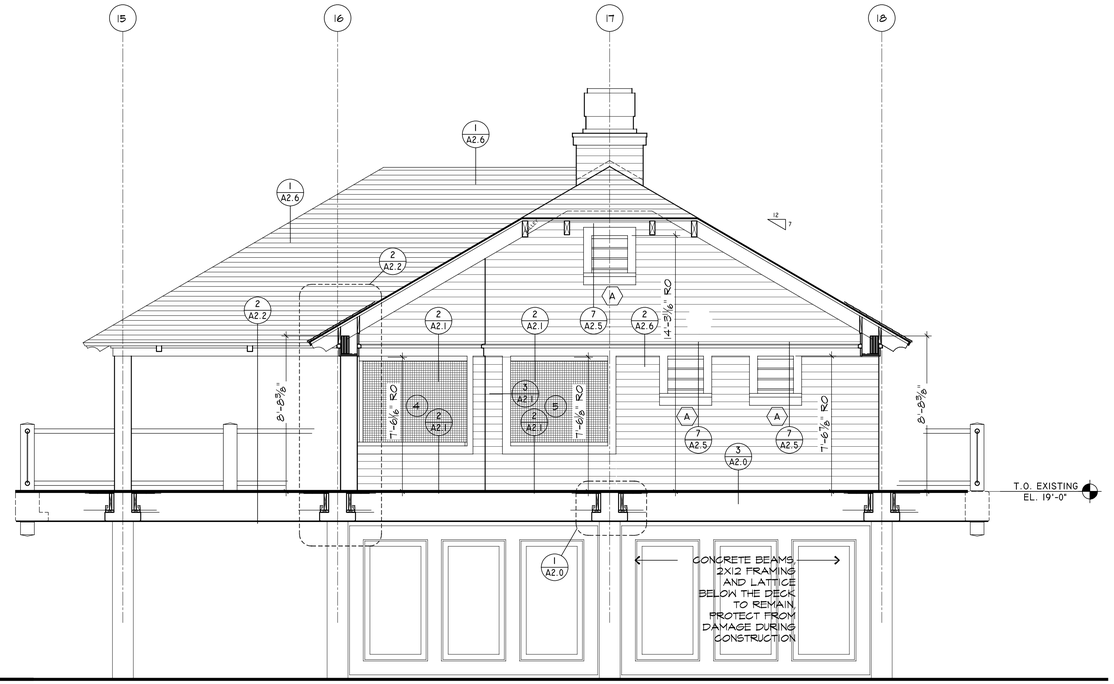

EAST ELEVATION
SCALE: 1/4"= 1'-0"

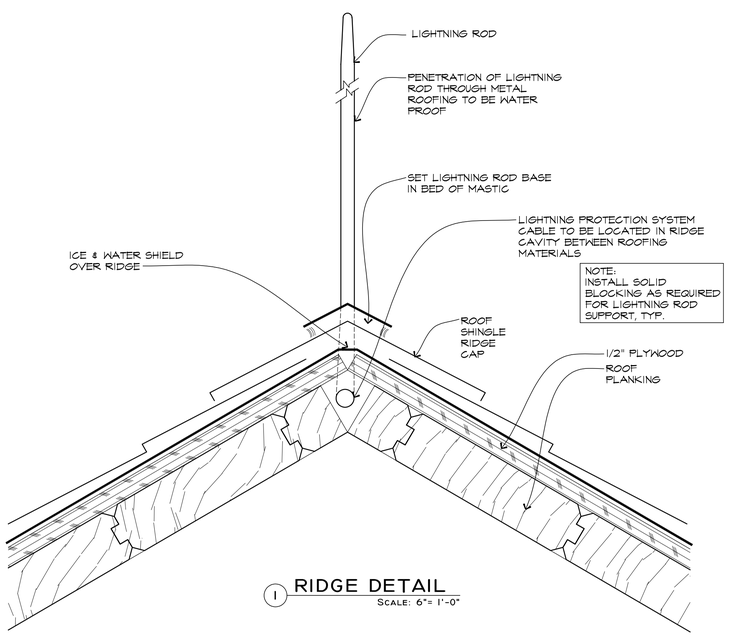

1 RIDGE DETAIL
SCALE: 6"= 1'-0"

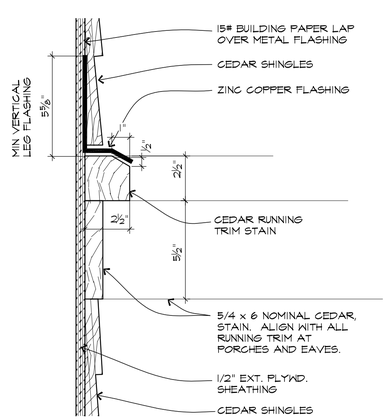

2 RUNNING TRIM DETAIL
SCALE: 3"= 1'-0"

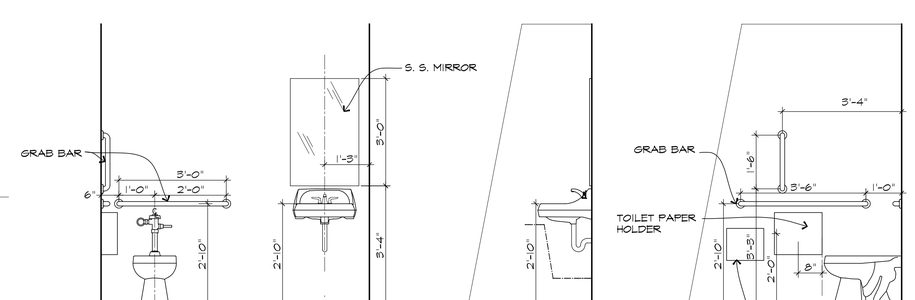

NOTE:
1. SOLID WD. WALL BLOCKING TO BE INSTALLED BEHIND ALL SURFACE MOUNTED ITEMS (TYP.)
2. REFER TO SPECIFICATION SECTION 10800

3 HANDICAP'D LAVATORY
SCALE: 1/2"= 1'-0"

BURGIN LAMBERT
ARCHITECTS
150 Bellevue Avenue
Newport, Rhode Island 02840
Tel: 401.847.3339
Fax: 401.847.3392
www.burginlambert.com

MISQUAMICUT STATE BEACH
VENDING BUILDING
Westerly, RI

REVISIONS:	PROJECT #: 1904
	DRAWN BY: RL
	DATE: 3/01/2019

EXT ELEV
INT ELEVS
DETAILS

A2.6

2019 © COPYRIGHT. THIS DRAWING IS NOT TO BE USED FOR MAKING ANY REPRODUCTION THEREOF, OR FOR CONSTRUCTION OF ANY BUILDING WITHOUT FIRST OBTAINING THE WRITTEN AUTHORIZATION FROM BURGIN LAMBERT ARCHITECTS, INC.

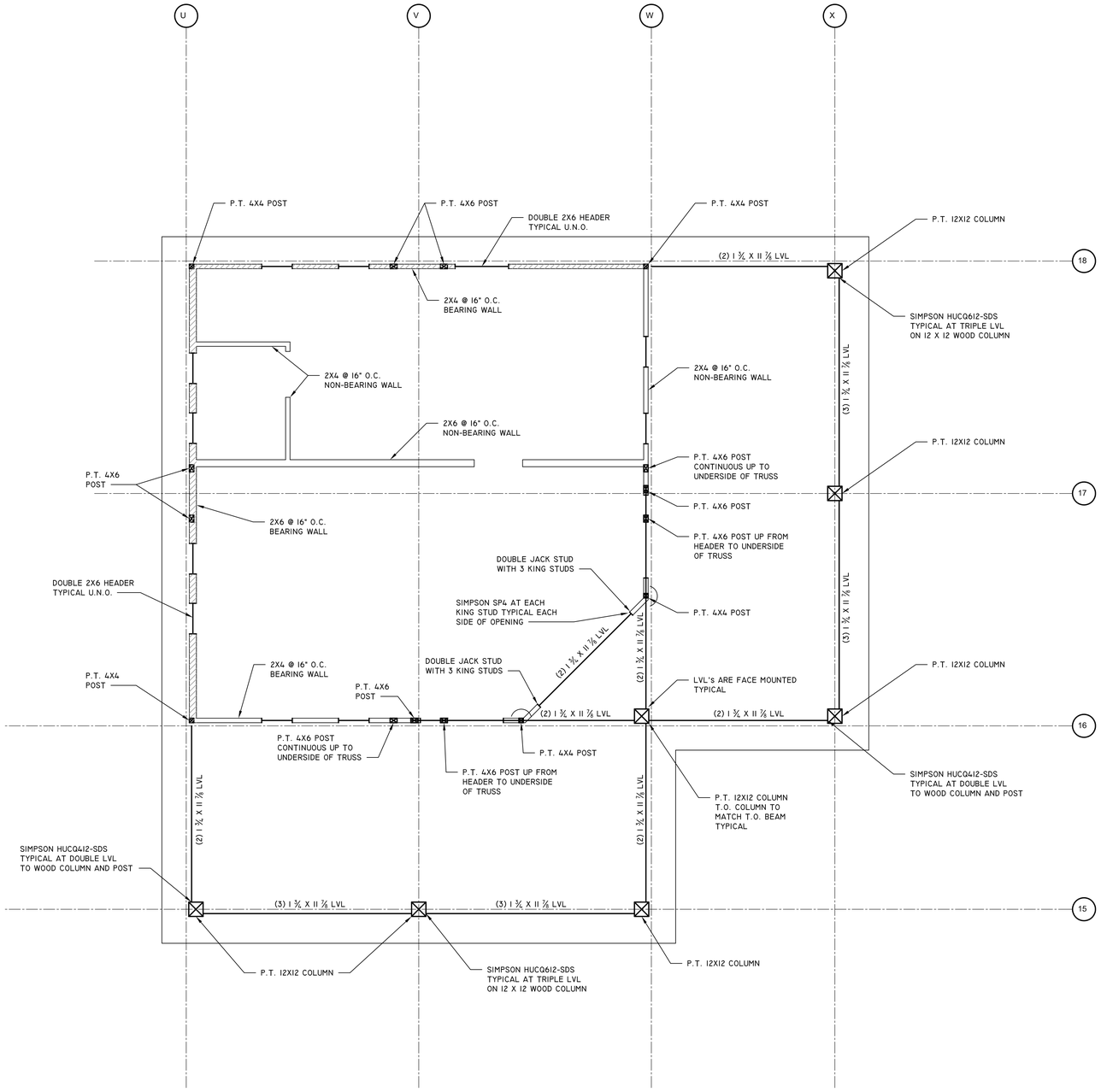

T.O. WALL / EAVE PLAN

SCALE: 1/4"= 1'-0"

BEAM CONTINUOUS OVER COLUMN

GENERAL NOTES - STRUCTURAL LUMBER, ENGINEERED LUMBER

1. ALL MATERIAL AND WORKMANSHIP SHALL BE IN ACCORDANCE WITH THE LATEST EDITION OF "TIMBER CONSTRUCTION STANDARDS" OF THE AMERICAN INSTITUTE OF TIMBER CONSTRUCTION AND THE "NATIONAL DESIGN SPECIFICATION FOR STRESS-GRADE LUMBER AND ITS FASTENINGS" OF THE NATIONAL FOREST PRODUCTS ASSOCIATION.

2. THE MINIMUM GRADES AND DESIGN VALUES REQUIRED FOR STRUCTURAL LUMBER SHALL BE: STUDS: CONSTRUCTION GRADE SPRUCE-PINE-FIR
FC=1000 PSI E=1,300,000 PSI
HEADERS: SPRUCE-PINE-FIR NO. 1/2 FB=875 PSI E=1,400,000 PSI
TRUSS & RAFTERS: SOUTHERN PINE, SELECT STRUCTURAL

3. ALL EXTERIOR AND INTERIOR BEARING WALL STUDS SHALL BE 2 X WOOD STUDS @ 16" O.C.

4. ALL MULTIPLE MEMBER BEAMS AND HEADERS SHALL BE SUPPORTED ON NOT LESS THAN AN EQUAL NUMBER OF STUDS AT EACH END, UNLESS NOTED OTHERWISE.

5. WOOD COLUMNS MADE WITH THREE OR MORE WOOD STUDS SHALL BE NAILED TOGETHER WITH 16d NAILS. NAIL SPACING SHALL BE IN 2 ROWS, SPACED 8" O.C. FROM BOTH SIDES STAGGERED 4" APART, SIMILAR AT (2) MEMBER POSTS WITH 10d NAILS.

6. ALL EXTERIOR OPENINGS SHALL HAVE NOT LESS THAN TWO JACK STUDS AND TWO FULL HEIGHT STUDS AT EACH SIDE OF THE OPENING. ALL INTERIOR BEARING WALL OPENINGS SHALL HAVE NOT LESS THAN TWO JACK STUDS AND ONE FULL HEIGHT STUD AT EACH SIDE OF THE OPENING UNLESS NOTED OTHERWISE.

7. ALL WOOD IN CONTACT WITH CONCRETE OR MASONRY SHALL BE PRESSURE TREATED WITH PRESERVATIVE.

8. EXTERIOR WALL SHEATHING SHALL BE MINIMUM 15/32 APA STRUCTURAL 1 RATED SHEATHING OR EXTERIOR GRADE. SHEATHING SHALL BE NAILED WITH 10D NAILS NOT LESS THAN 6" O.C. ON ALL PANEL EDGES.

9. ROOF DECK SHALL BE NOMINAL 2X6 T&G WOOD DECKING SEE ARCHITECTS DRAWINGS FOR NOTES.

10. LVL (MICROLLAM) SHALL HAVE THE FOLLOWING MINIMUM PROPERTIES: FB = 2600 PSI, FT = 1550 PSI, FC = 750 PSI FC = 2510 PSI, FV = 285 PSI, E = 1,900,000 PSI

11. LVL'S SHALL BE FREE OF FINGER JOINTS, SCARF JOINTS OR MECHANICAL CONNECTIONS FOR THE FULL LENGTH OF THE MEMBER.

12. ADHESIVE USED SHALL BE WATERPROOF, MEETING THE REQUIREMENTS OF ASTM D-2559-76.

13. EACH POST SUPPORTING T1 & T2 TRUSSES, REQUIRES SIMPSON HD5SS HOLD DOWNS AT EACH SIDE OF COLUMN, TYPICAL TOP AND BOTTOM.

14. DOUBLE STUD POSTS WITHIN WALL FRAMING ARE REQUIRED TO SUPPORT EACH 4X10 RAFTER.

15. ALL CLIPS, COMPONENTS, AND CONNECTIONS SHALL BE STAINLESS STEEL.

Component and Cladding Wind Pressure Table (Nominal Wind Speed)

Zone	Area				
	10 sq ft	20 sq ft	50 sq ft	100 sq ft	500 sq ft
1	-32.56 psf	-30.90 psf	-28.70 psf	-27.04 psf	-27.04 psf
2	-38.08 psf	-36.41 psf	-34.22 psf	-32.56 psf	-32.56 psf
3	-38.08 psf	-36.41 psf	-34.22 psf	-32.56 psf	-32.56 psf
4	-35.32 psf	-33.85 psf	-31.91 psf	-30.44 psf	-27.04 psf
5	-43.59 psf	-40.59 psf	-36.69 psf	-33.74 psf	-27.04 psf

	Soffit Overhangs				
2	-60.15 psf	-58.49 psf	-56.29 psf	-54.63 psf	-54.63 psf
3	-60.15 psf	-58.49 psf	-56.29 psf	-54.63 psf	-54.63 psf

Note: Zone 5 occurs within 8.67 ft of the corner of the building

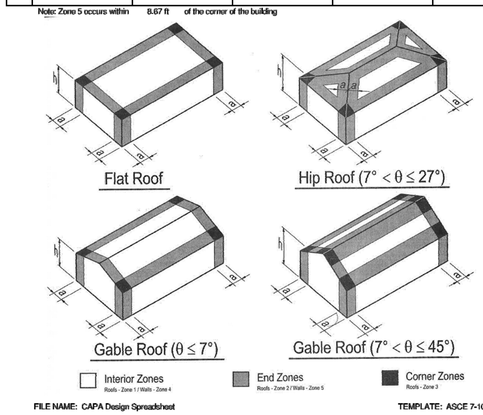

FILE NAME: CAPA Design Spreadsheet

TEMPLATE: ASCE 7-10 WIND LOAD

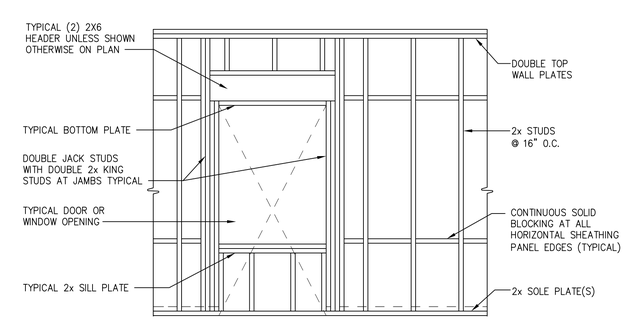

TYPICAL / HEADER / STUD WALL ASSEMBLY DETAIL

BURGIN LAMBERT
ARCHITECTS
150 Bellevue Avenue
Newport, Rhode Island 02840
Tel: 401.847.3339
Fax: 401.847.3392
www.burginlambert.com

MISQUAMICUT STATE BEACH VENDING BUILDING

Westerly, RI

REVISIONS:	PROJECT #: 19
	DRAWN BY: JMF
	DATE: 3/01/2019

TOP OF WALL FRAMING PLAN & DETAILS

S1.0

2019 © COPYRIGHT: THIS DRAWING IS NOT TO BE USED FOR MAKING ANY REPRODUCTION THEREOF, OR FOR CONSTRUCTION OF ANY BUILDING WITHOUT FIRST OBTAINING THE WRITTEN AUTHORIZATION FROM BURGIN LAMBERT ARCHITECTS, INC.

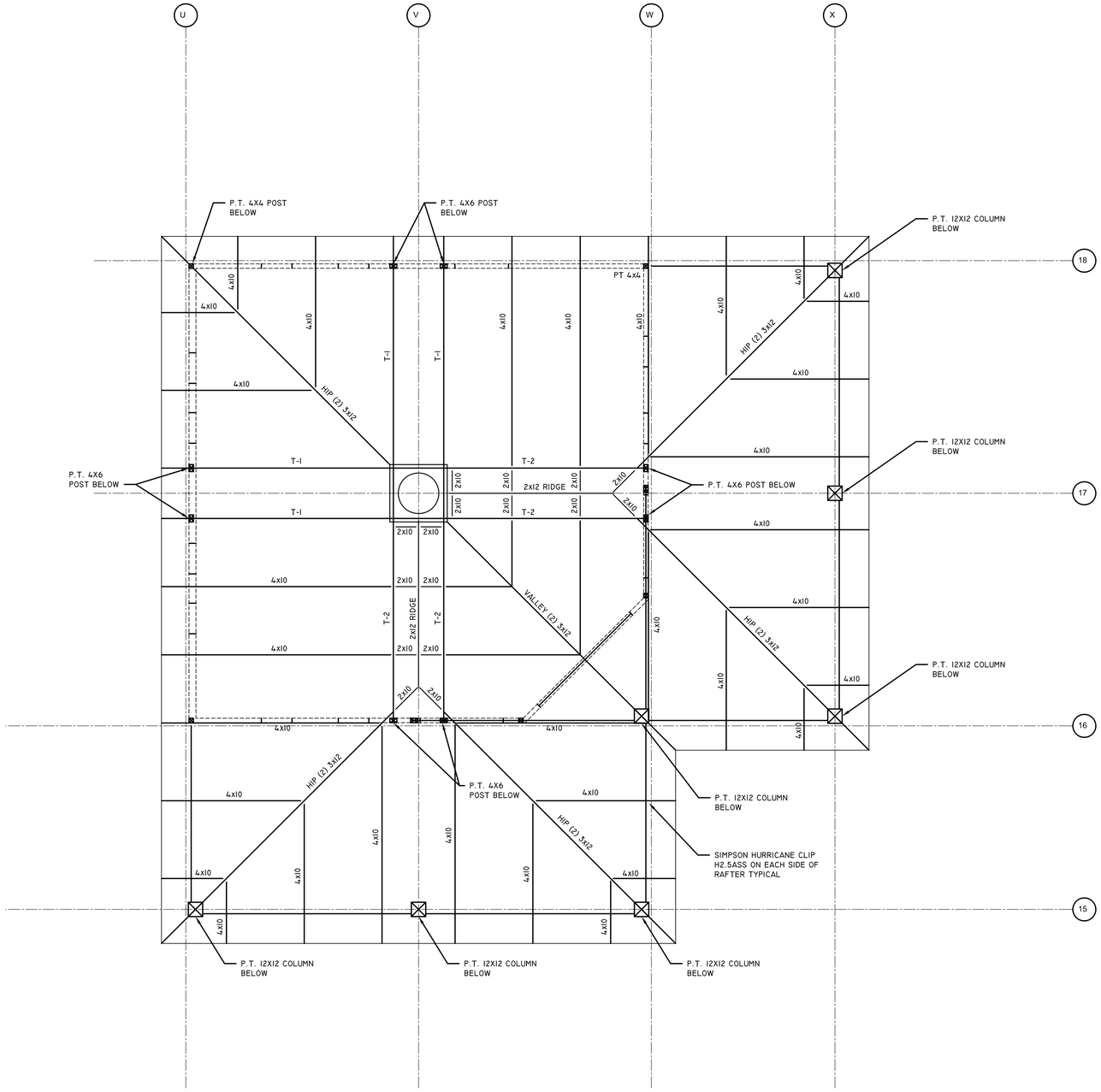

ROOF FRAMING PLAN

SCALE: 1/4"= 1'-0"

BURGIN LAMBERT
ARCHITECTS
150 Bellevue Avenue
Newport, Rhode Island 02840
Tel: 401.847.3339
Fax: 401.847.3392
www.burginlambert.com

MISQUAMICUT STATE BEACH VENDING BUILDING

Westerly, RI

REVISIONS:	PROJECT #: 19
	DRAWN BY: JMF
	DATE: 3/01/2019

ROOF FRAMING PLAN

S1.1

2019 © COPYRIGHT. THIS DRAWING IS NOT TO BE USED FOR MAKING ANY REPRODUCTION THEREOF, OR FOR CONSTRUCTION OF ANY BUILDING WITHOUT FIRST OBTAINING THE WRITTEN AUTHORIZATION FROM BURGIN LAMBERT ARCHITECTS, INC.

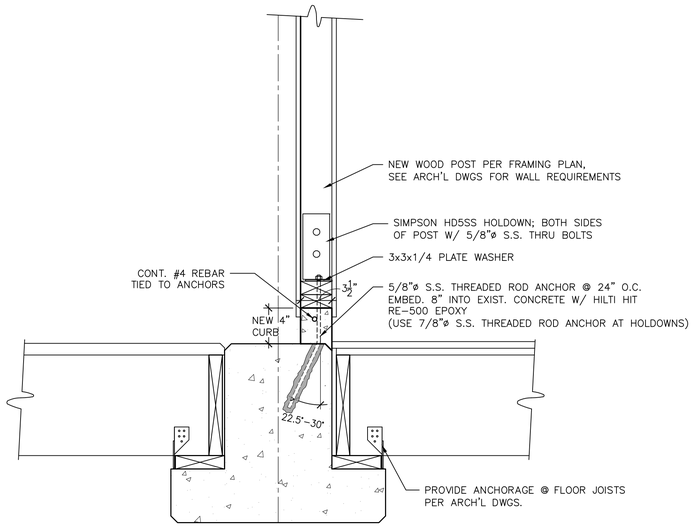

1 S2.0 DETAIL
SCALE: 1 1/2" = 1'-0"

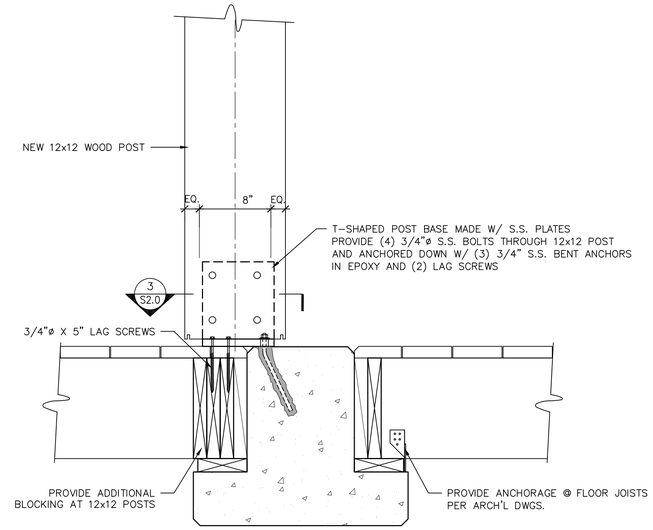

2 S2.0 DETAIL
SCALE: 1 1/2" = 1'-0"

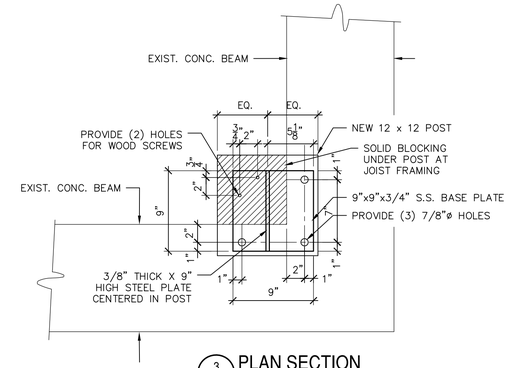

3 S2.0 PLAN SECTION
SCALE: 1 1/2" = 1'-0"

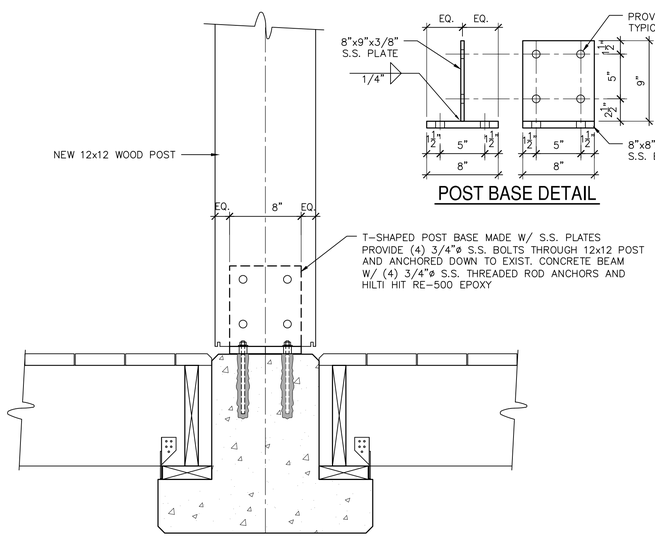

4 S2.0 DETAIL
SCALE: 1 1/2" = 1'-0"

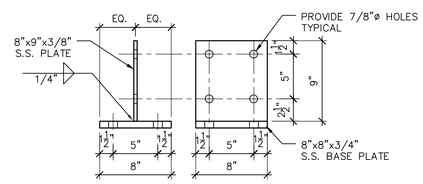

POST BASE DETAIL

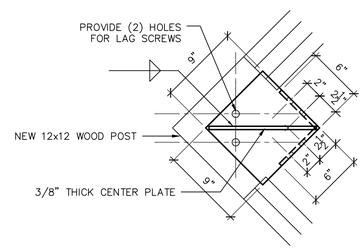

PLAN

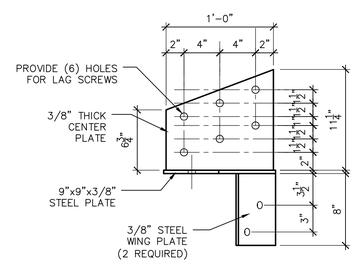

ELEVATION

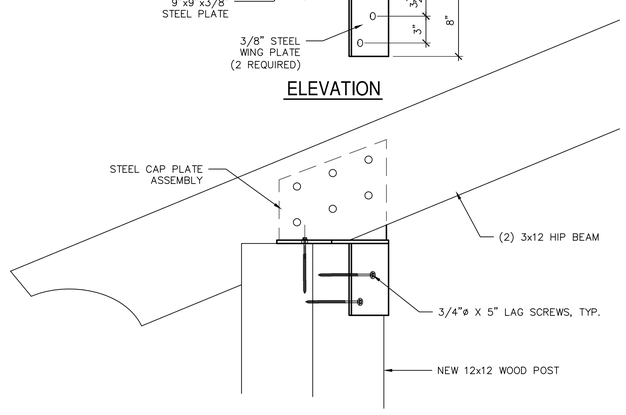

5 S2.0 HIP-TO-POST CONNECTION DETAIL
SCALE: 1 1/2" = 1'-0"

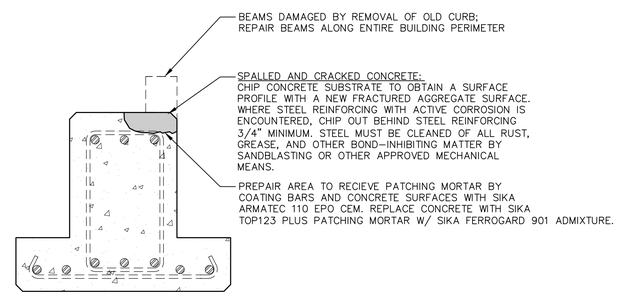

6 S2.0 SECTION AT EXISTING CONCRETE BEAM
SCALE: 1 1/2" = 1'-0"

BURGIN LAMBERT
ARCHITECTS
150 Bellevue Avenue
Newport, Rhode Island 02840
Tel: 401.847.3339
Fax: 401.847.3392
www.burginlambert.com

MISQUAMICUT STATE BEACH
VENDING BUILDING
Westerly, RI

REVISIONS:	PROJECT #: 19
	DRAWN BY: AJG
	DATE: 3/01/2019

FOUNDATION REPAIR DETAIL AND POST CONNECTION DETAILS

S2.0

2019 © COPYRIGHT THIS DRAWING IS NOT TO BE USED FOR MAKING ANY REPRODUCTION THEREOF, OR FOR CONSTRUCTION OF ANY BUILDING WITHOUT FIRST OBTAINING THE WRITTEN AUTHORIZATION FROM BURGIN LAMBERT ARCHITECTS, INC.

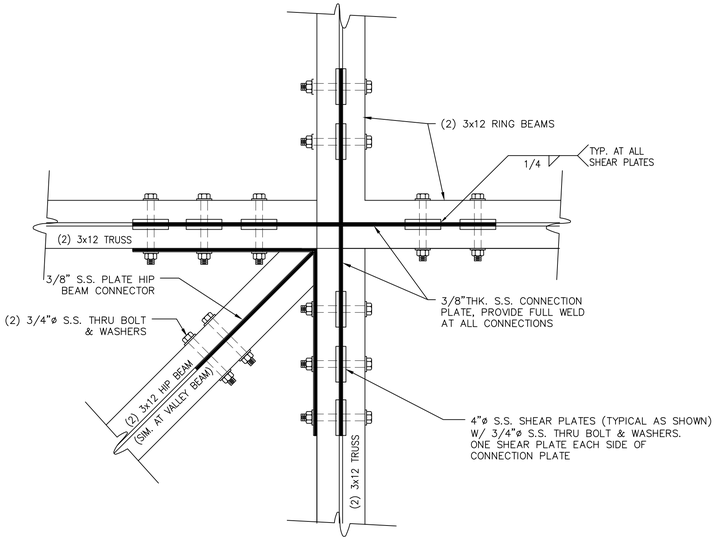

1 S2.1 PLAN-DETAIL AT TRUSS TOP CHORD CONNECTION
SCALE: 1 1/2" = 1'-0" (SIM. AT BOTTOM CHORD)

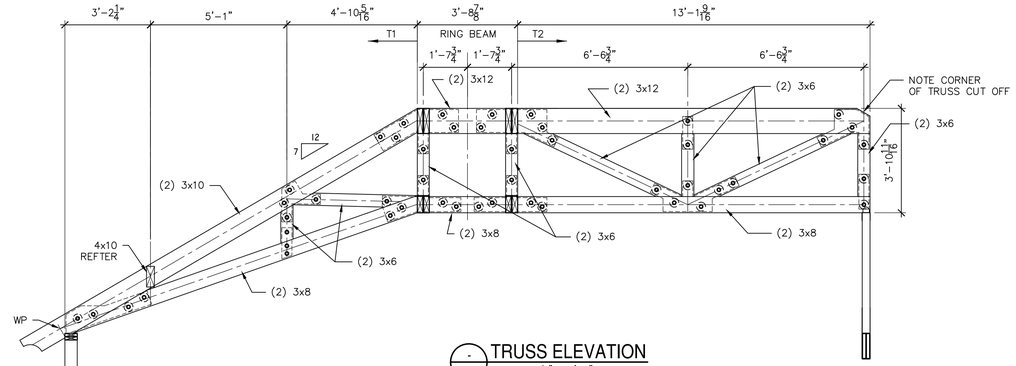

TRUSS ELEVATION
SCALE: 3/8" = 1'-0"

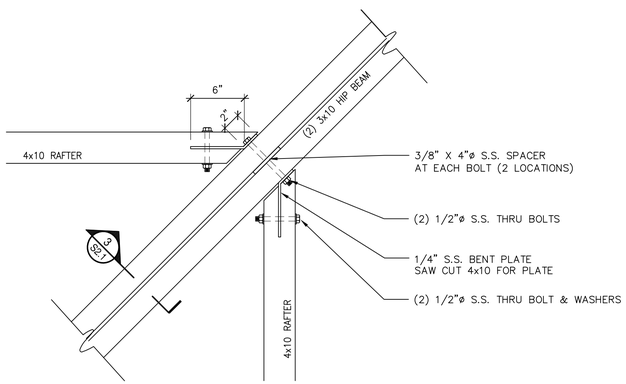

2 S2.1 PLAN-DETAIL
SCALE: 1 1/2" = 1'-0"

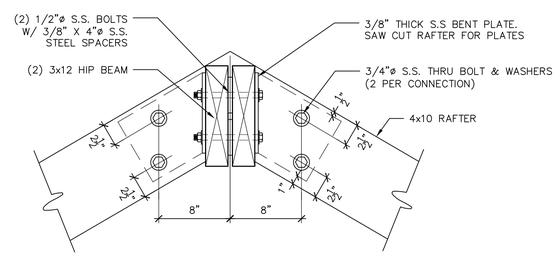

3 S2.1 SECTION
SCALE: 1 1/2" = 1'-0"

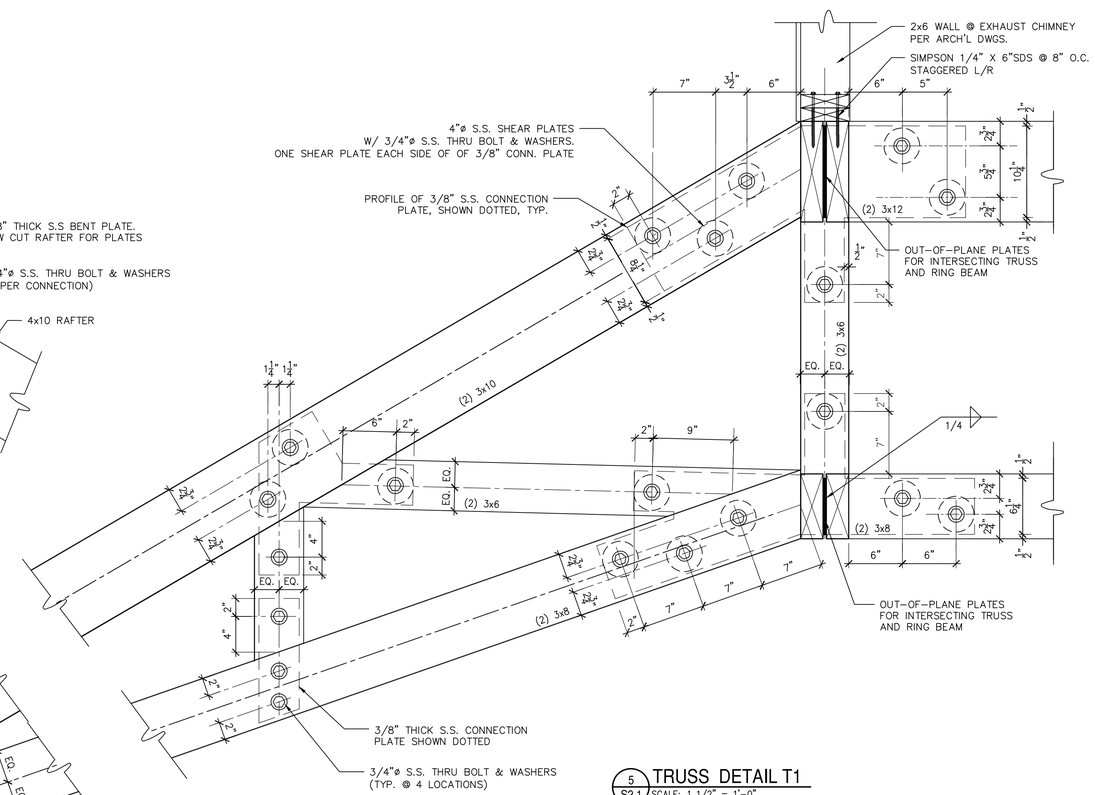

5 S2.1 TRUSS DETAIL T1
SCALE: 1 1/2" = 1'-0"

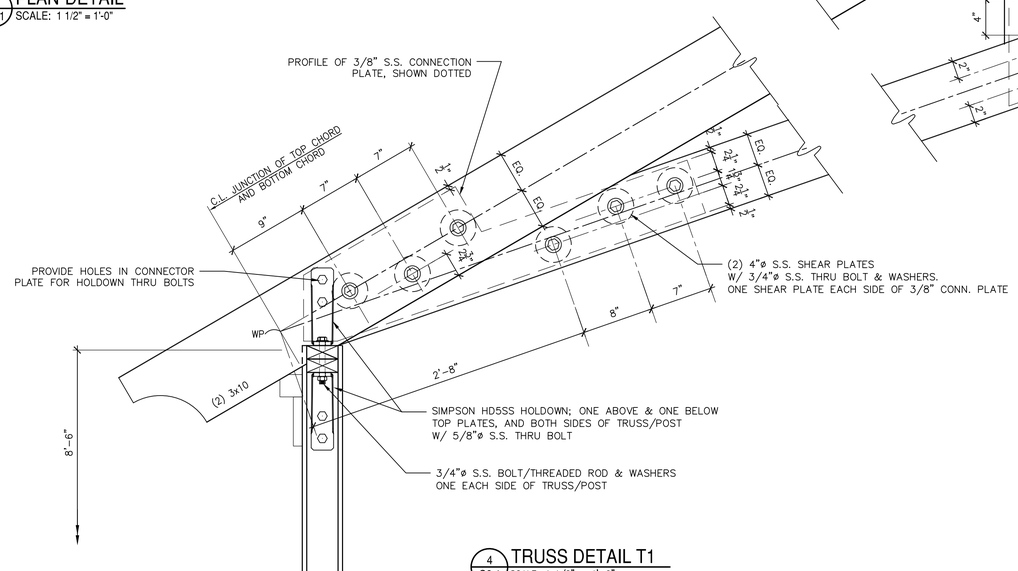

4 S2.1 TRUSS DETAIL T1
SCALE: 1 1/2" = 1'-0"

BURGIN LAMBERT
ARCHITECTS
150 Bellevue Avenue
Newport, Rhode Island 02840
Tel: 401.847.3339
Fax: 401.847.3392
www.burginlambert.com

MISQUAMICUT STATE BEACH VENDING BUILDING

Westerly, RI

REVISIONS:	PROJECT #: 19
	DRAWN BY: AJG
	DATE: 3/01/2019

ROOF TRUSS AND OTHER ROOF FRAMING DETAILS

S2.1

2019 © COPYRIGHT. THIS DRAWING IS NOT TO BE USED FOR MAKING ANY REPRODUCTION THEREOF, OR FOR CONSTRUCTION OF ANY BUILDING WITHOUT FIRST OBTAINING THE WRITTEN AUTHORIZATION FROM BURGIN LAMBERT ARCHITECTS, INC.

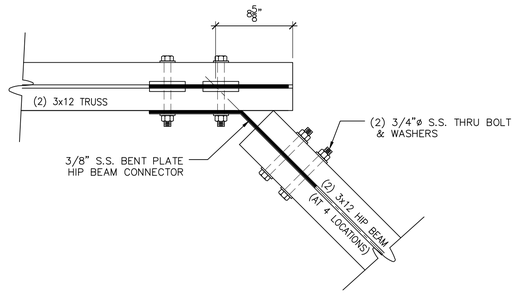

1 / S2.2 PLAN-DETAIL AT TRUSS TOP CHORD & HIP BEAM CONNECTION
SCALE: 1 1/2" = 1'-0"

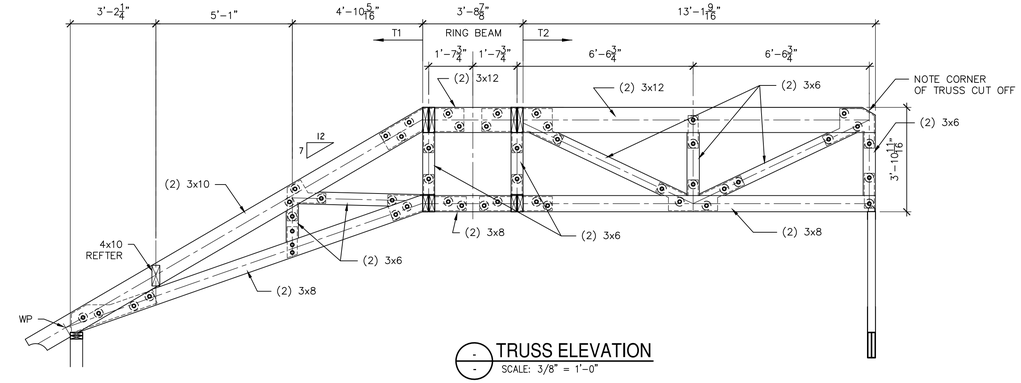

TRUSS ELEVATION
SCALE: 3/8" = 1'-0"

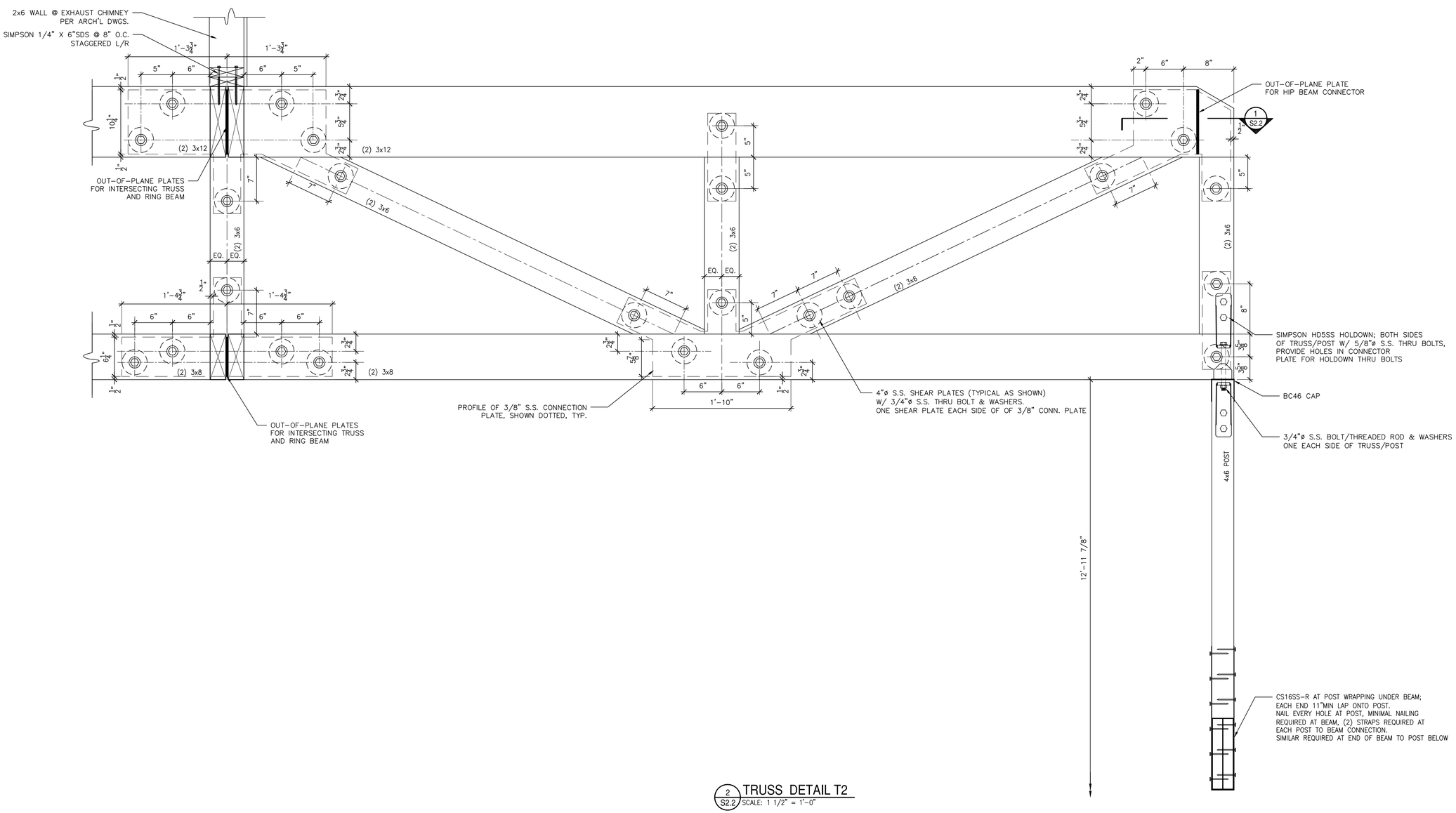

2 / S2.2 TRUSS DETAIL T2
SCALE: 1 1/2" = 1'-0"

BURGIN LAMBERT
ARCHITECTS
150 Bellevue Avenue
Newport, Rhode Island 02840
Tel: 401.847.3339
Fax: 401.847.3392
www.burginlambert.com

MISQUAMICUT STATE BEACH
VENDING BUILDING
Westerly, RI

REVISIONS:	PROJECT #: 19
	DRAWN BY: AJG
	DATE: 3/01/2019

ROOF TRUSS AND OTHER ROOF FRAMING DETAILS

S2.2

2019 © COPYRIGHT. THIS DRAWING IS NOT TO BE USED FOR MAKING ANY REPRODUCTION THEREOF, OR FOR CONSTRUCTION OF ANY BUILDING WITHOUT FIRST OBTAINING THE WRITTEN AUTHORIZATION FROM BURGIN LAMBERT ARCHITECTS, INC.

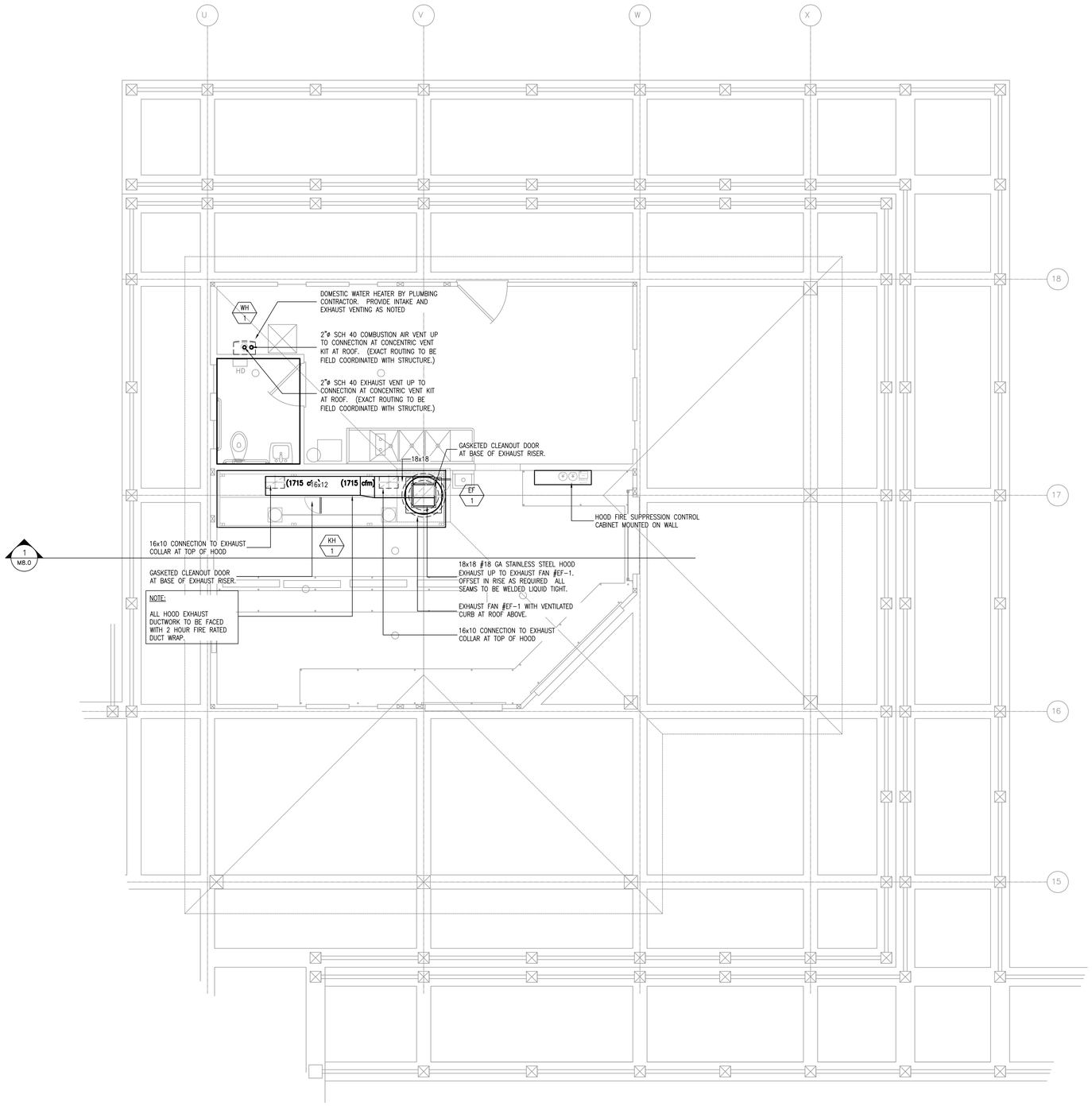

1 / M2.0 MECHANICAL: FIRST FLOOR PLAN

SCALE: 1/4" = 1'-0"

N

WILKINSON ASSOCIATES INC
CONSULTING ENGINEERS
615 jefferson boulevard warwick, rhode island 02886
telephone (401) 737-8362 fax (401) 738-2167
website: www.wilkinsonassociates.net

GENERAL NOTES

The drawings are generally diagrammatic and are intended to convey the scope of work and indicate general arrangement of equipment. The locations of all indicated items that are not fixed by dimension are approximate only.

Maintain maximum space conditions at all points. Where space conditions appear inadequate, notify the Architect before proceeding with the installation.

Coordinate the exact location of all materials with the work of other trades and with the existing conditions prior to installation.

All materials to be removed shall be removed from the project site in their entirety, including all hangers, supports and appurtenances.

The piping layout as indicated is schematic and diagrammatic in scope and is not intended to show all offsets which may be required. The exact pipe route shall be field coordinated.

Refer to Architectural Reflected Ceiling Plans and Interior Elevations for the exact location of registers and diffusers.

All system shut-downs shall be with prior approval of the Architect and Owner. Interruptions to services shall be scheduled to minimize down time.

Refer to the PROJECT SPECIFICATION for additional requirements.

BURGIN LAMBERT
ARCHITECTS
150 Bellevue Avenue
Newport, Rhode Island 02840
Tel: 401.847.3339
Fax: 401.847.3392
www.burginlambert.com

MISQUAMICUT STATE BEACH
VENDING BUILDING
Westerly, RI

REVISIONS:	PROJECT #: 19
	DRAWN BY: DMC RSW
	DATE: 2/19/2019

ROBERT S. WILKINSON
STATE OF RHODE ISLAND
No. 4589
HOPE
REGISTERED PROFESSIONAL ENGINEER

ISSUANCE:	DATE:
95% REVIEW SET	2019-02-21
COMPLETED	2019-03-04

MECHANICAL: 1st FLOOR PLAN

M2.0

2018 © COPYRIGHT. THIS DRAWING IS NOT TO BE USED FOR MAKING AND REPRODUCTION THEREOF, OR FOR CONSTRUCTION OF ANY BUILDING WITHOUT FIRST OBTAINING THE WRITTEN AUTHORIZATION FROM BURGIN LAMBERT ARCHITECTS, INC.

S:\Dropbox\D\19008 Misquamicut Beach Vending Pavilion\19008 - M1.0 Mechanical Plans.dwg
3/4/2019 11:23 AM

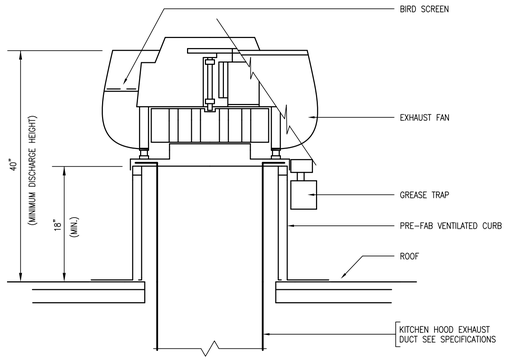

1 / M5.0 KITCHEN HOOD EXHAUST FAN DETAIL; UPBLAST TYPE

SCALE: NONE

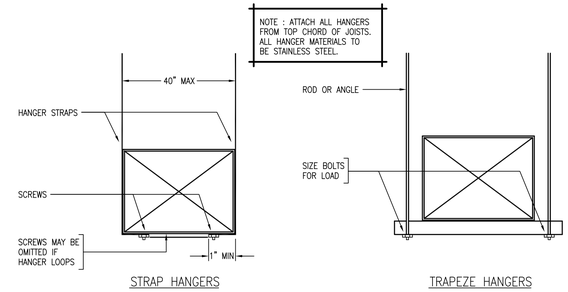

2 / M5.0 TYPICAL DUCT HANGER DETAIL

SCALE: NONE

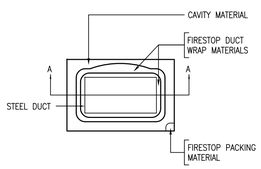

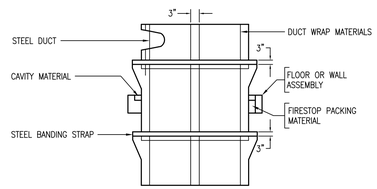

3 / M5.0 DUCT INSULATION DETAIL

SCALE: NONE

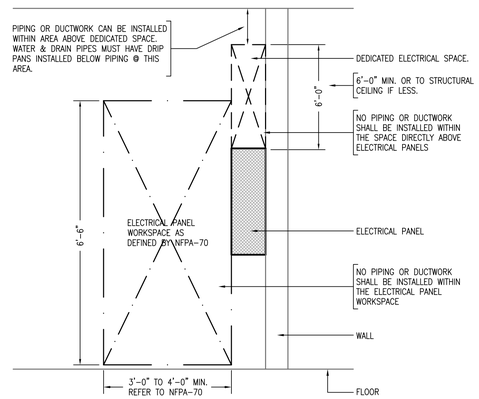

4 / M5.0 ELECTRICAL SYSTEMS COORDINATION DETAIL

SCALE: NONE

BURGIN LAMBERT
ARCHITECTS
150 Bellevue Avenue
Newport, Rhode Island 02840
Tel: 401.847.3339
Fax: 401.847.3392
www.burginlambert.com

MISQUAMICUT STATE BEACH
VENDING BUILDING
Westerly, RI

REVISIONS:	PROJECT #: 19
	DRAWN BY: DMC RSW
	DATE: 2/19/2019

ROBERT S. WILKINSON
STATE OF RHODE ISLAND
No. 4589
HOPE
REGISTERED PROFESSIONAL ENGINEER

ISSUANCE:	DATE:
95% REVIEW SET	2019-02-21
COMPLETED	2019-03-04

MECHANICAL: DETAILS

M5.0

2019 © COPYRIGHT: THIS DRAWING IS NOT TO BE USED FOR MAKING ANY REPRODUCTION, INDEED OR FOR CONSTRUCTION OF ANY BUILDING WITHOUT FIRST OBTAINING THE WRITTEN AUTHORIZATION FROM BURGIN LAMBERT ARCHITECTS, INC

3/4/2019 11:23 AM S:\Dropbox\D\19008 Misquamicut Beach Vending Pavilion\19008 - M1.0 Mechanical Plans.dwg

S:\D\+LIBRARY\SCHEDULES\FAN-EXHAUST

EXHAUST FAN SCHEDULE (EF X)

UNIT NO	SERVICE	TYPE	CFM	S.P.	HP	FRPM	DRIVE	SONES	ELECTRICAL	CONTROLS	MODEL
EF-1	KITCHEN HOOD	UPBLAST	3430	0.656"	2.0	1325	DIRECT	15.6	208V, 1ø	INTERLOCK WITH HOOD KH-1	CUE-180-VG*
EF-2	TOILET ROOM	CEILING	110	0.375"	12 W	960	DIRECT	0.4	120V, 1ø	LOCAL SWITCH	GREENHECK SP-A90-130-VG

*FAN TO BE COMPLETE WITH VENTILATED ROOF CURB WITH HINGED ACCESS AND SAFETY CABLES.

KITCHEN HOOD SCHEDULE (KH X)

UNIT NO	SERVICE	AIR QUANTITY		LENGTH	DEPTH	MODEL
		SUPPLY	EXHAUST			
KH-1	COOKING LINE	N/A	3430	192"	48"	GREENHECK GHEW

HOOD TO BE CONFIGURED FOR 0" CLEARANCE TO COMBUSTIBLES AND SHALL BE FIT WITH INTERNAL LED LIGHTING AND FACTORY MOUNTED ANSUL FIRE SUPPRESSION SYSTEM. (FIRE SUPPRESSION CONTROL CABINET CONFIGURED FOR REMOTE MOUNTING.)

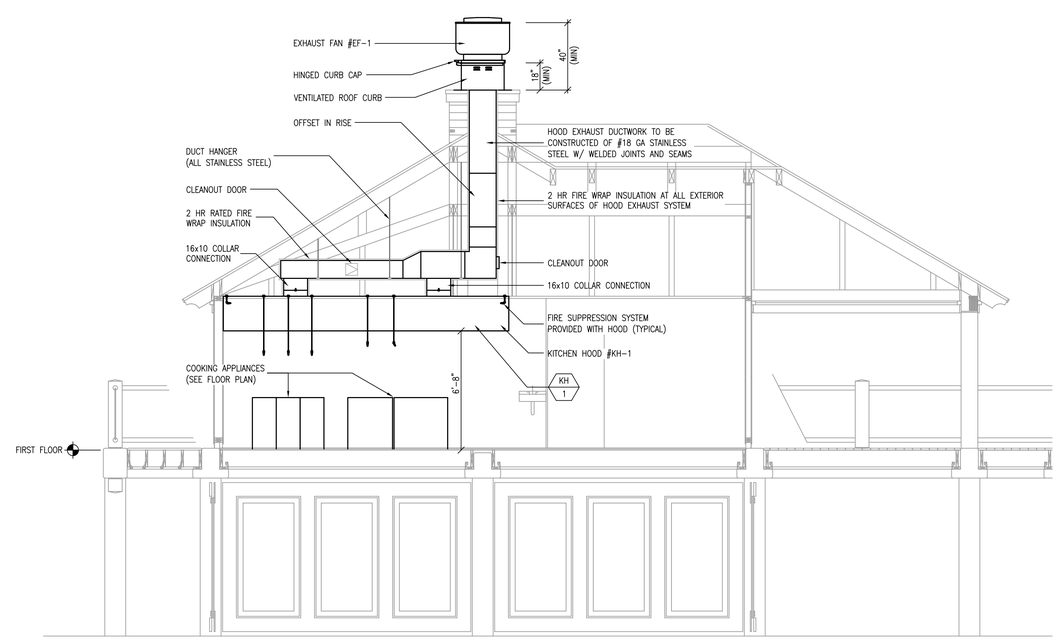

1 / M8.0 MECHANICAL SECTIONS @ KITCHEN HOOD

SCALE: 1/4" = 1'-0"

N

BURGIN LAMBERT ARCHITECTS
150 Bellevue Avenue
Newport, Rhode Island 02840
Tel: 401.847.3339
Fax: 401.847.3392
www.burginlambert.com

MISQUAMICUT STATE BEACH VENDING BUILDING

Westerly, RI

REVISIONS:	PROJECT #: 19
△	DRAWN BY: DMC RSW
△	
△	
△	DATE: 2/19/2019

ROBERT S. WILKINSON
STATE OF RHODE ISLAND
No. 4589
REGISTERED PROFESSIONAL ENGINEER

ISSUANCE:	DATE:
95% REVIEW SET	2019-02-21
COMPLETED	2019-03-04

MECHANICAL: SCHEDULES

M8.0

2019 © COPYRIGHT THIS DRAWING IS NOT TO BE USED FOR MAKING ANY REPRODUCTION THEREOF OR FOR CONSTRUCTION OF ANY BUILDING WITHOUT FIRST OBTAINING THE WRITTEN AUTHORIZATION FROM BURGIN LAMBERT ARCHITECTS, INC.

3/4/2019 11:23 AM S:\Dropbox\D\19008 Misquamicut Beach Vending Pavilion\19008 - M1.0 Mechanical Plans.dwg

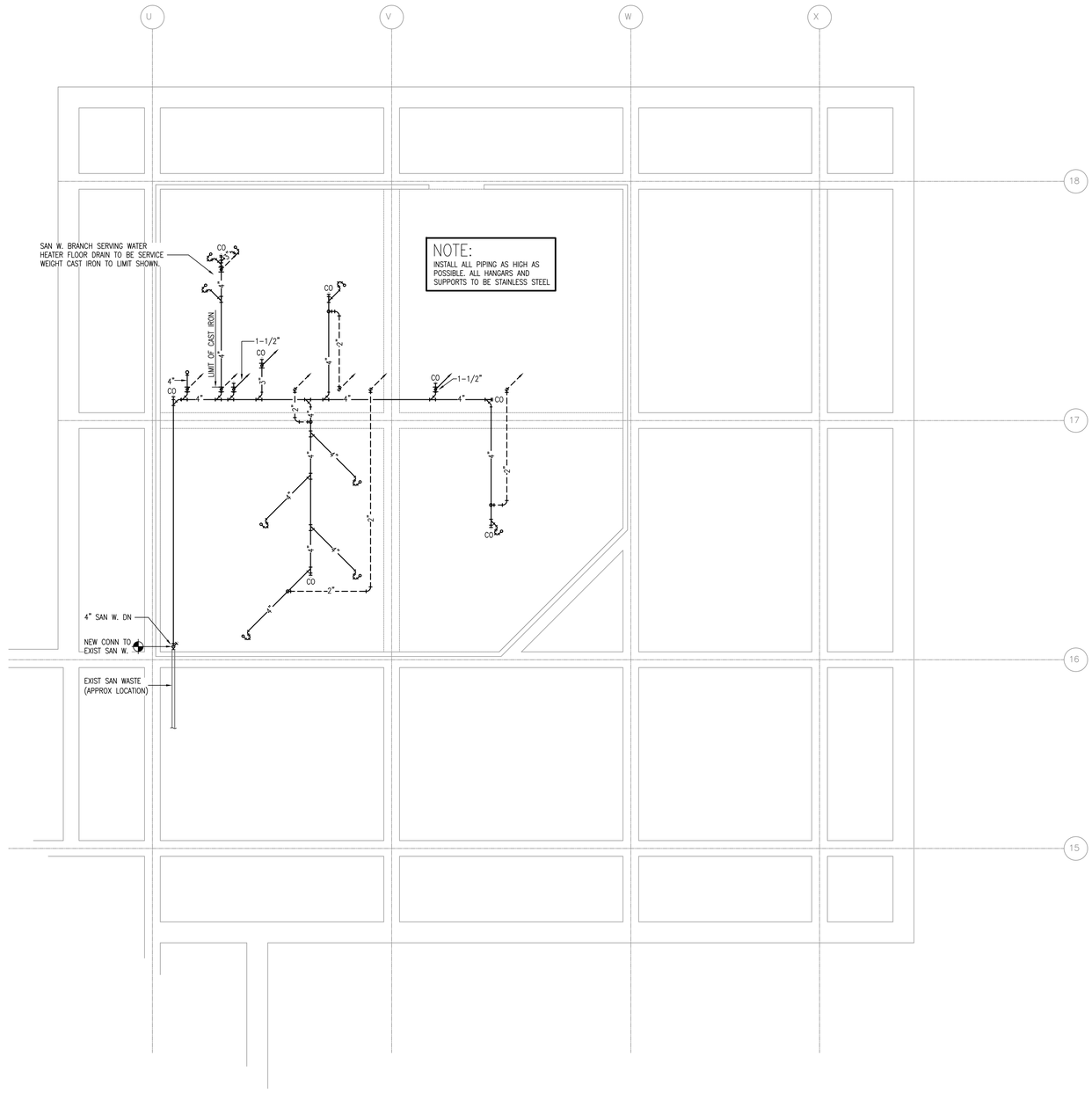

1 / P1.0 PLUMBING: CRAWL SPACE PLAN; SANITARY WASTE AND VENT

SCALE: 1/4" = 1'-0"

N

WILKINSON ASSOCIATES INC
CONSULTING ENGINEERS
615 jefferson boulevard warwick, rhode island 02886
telephone (401) 737-6362 fax (401) 738-2167
website: www.wilkinsonassociates.net

GENERAL NOTES

The drawings are generally diagrammatic and are intended to convey the scope of work and indicate general arrangement of equipment. The locations of all indicated items that are not fixed by dimension are approximate only.

Maintain maximum space conditions at all points. Where space conditions appear inadequate, notify the Architect before proceeding with the installation.

Coordinate the exact location of all materials with the work of other trades and with the existing conditions prior to installation.

All materials to be removed shall be removed from the project site in their entirety, including all hangers, supports and appurtenances.

The piping layout as indicated is schematic and diagrammatic in scope and is not intended to show all offsets which may be required. The exact pipe route shall be field coordinated. required to be clear of mechanical ducts.

Refer to Architectural Floor Plan for the exact location and Configuration of all plumbing fixtures.

All system shut-downs shall be with prior approval of the Architect and Owner. Interruptions to services shall be scheduled to minimize down time.

Refer to the PROJECT SPECIFICATION for additional requirements.

BURGIN LAMBERT
ARCHITECTS
150 Bellevue Avenue
Newport, Rhode Island 02840
Tel: 401.847.3339
Fax: 401.847.3392
www.burginlambert.com

MISQUAMICUT STATE BEACH
VENDING BUILDING
Westerly, RI

REVISIONS:	PROJECT #: 19
	DRAWN BY: DMC RSW
	DATE: 2/19/2019

ROBERT S. WILKINSON
STATE OF RHODE ISLAND
No. 4589
REGISTERED PROFESSIONAL ENGINEER

ISSUANCE:	DATE:
95% REVIEW SET	2019-02-21
COMPLETED	2019-03-04

PLUMBING: CRAWL SPACE, SAN W&V

P1.0

2019 © COPYRIGHT THIS DRAWING IS NOT TO BE USED FOR MAKING ANY REPRODUCTION THEREOF, OR FOR CONSTRUCTION OF AN BUILDING WITHOUT FIRST OBTAINING THE WRITTEN AUTHORIZATION FROM BURGIN LAMBERT ARCHITECTS, INC.

3/4/2019 11:22 AM S:\Dropbox\D\19008 Misquamicut Beach Vending Pavilion\19008 - P1.0 Plumbing Plans.dwg

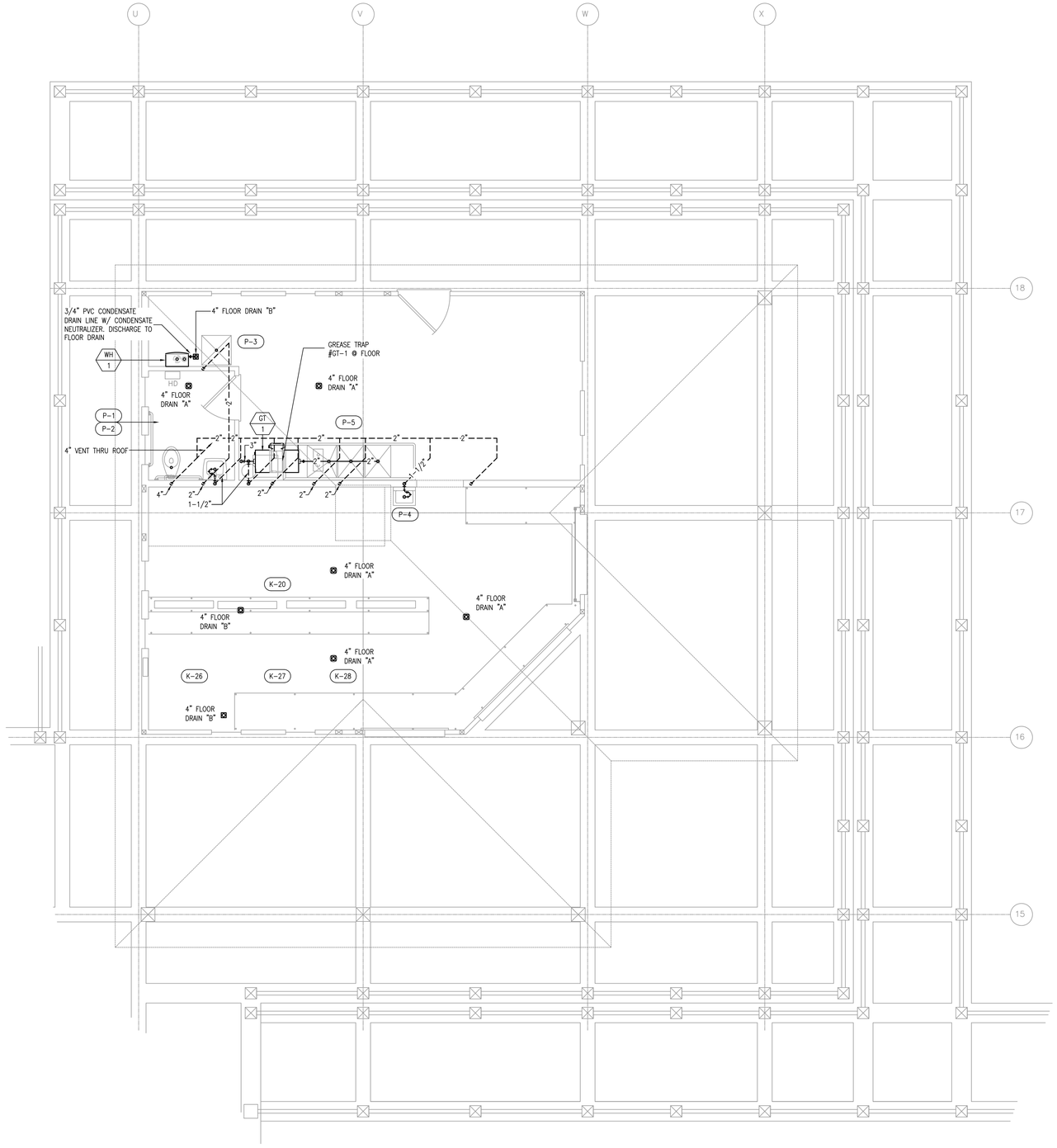

1 / P1.1 PLUMBING: FIRST FLOOR PLAN; SANITARY WASTE AND VENT

SCALE: 1/4" = 1'-0"

N

WILKINSON ASSOCIATES INC
CONSULTING ENGINEERS
615 jefferson boulevard warwick, rhode island 02886
telephone [401] 737-6362 fax [401] 738-2167
website: www.wilkinsonassociates.net

GENERAL NOTES

The drawings are generally diagrammatic and are intended to convey the scope of work and indicate general arrangement of equipment. The locations of all indicated items that are not fixed by dimension are approximate only.

Maintain maximum space conditions at all points. Where space conditions appear inadequate, notify the Architect before proceeding with the installation.

Coordinate the exact location of all materials with the work of other trades and with the existing conditions prior to installation.

All materials to be removed shall be removed from the project site in their entirety, including all hangers, supports and appurtenances.

The piping layout as indicated is schematic and diagrammatic in scope and is not intended to show all offsets which may be required. The exact pipe route shall be field coordinated. required to be clear of mechanical ducts.

Refer to Architectural Floor Plan for the exact location and Configuration of all plumbing fixtures.

All system shut-downs shall be with prior approval of the Architect and Owner. Interruptions to services shall be scheduled to minimize down time.

Refer to the PROJECT SPECIFICATION for additional requirements.

BURGIN LAMBERT
ARCHITECTS
150 Bellevue Avenue
Newport, Rhode Island 02840
Tel: 401.847.3339
Fax: 401.847.3392
www.burginlambert.com

MISQUAMICUT STATE BEACH VENDING BUILDING

Westerly, RI

REVISIONS:	PROJECT #: 19
	DRAWN BY: DMC RSW
	DATE: 2/19/2019

ROBERT S. WILKINSON
STATE OF RHODE ISLAND
No. 4589
REGISTERED PROFESSIONAL ENGINEER

ISSUANCE:	DATE:
95% REVIEW SET	2019-02-21
COMPLETED	2019-03-04

PLUMBING: 1st FLOOR, SAN W&V

P1.1

2019 © COPYRIGHT. THIS DRAWING IS NOT TO BE USED FOR MAKING ANY REPRODUCTION THEREOF, OR FOR CONSTRUCTION OF ANY BUILDING WITHOUT FIRST OBTAINING THE WRITTEN AUTHORIZATION FROM BURGIN LAMBERT ARCHITECTS, INC.

3/4/2019 11:22 AM S:\Dropbox\D\19008 Misquamicut Beach Vending Pavilion\19008 - P1.0 Plumbing Plans.dwg

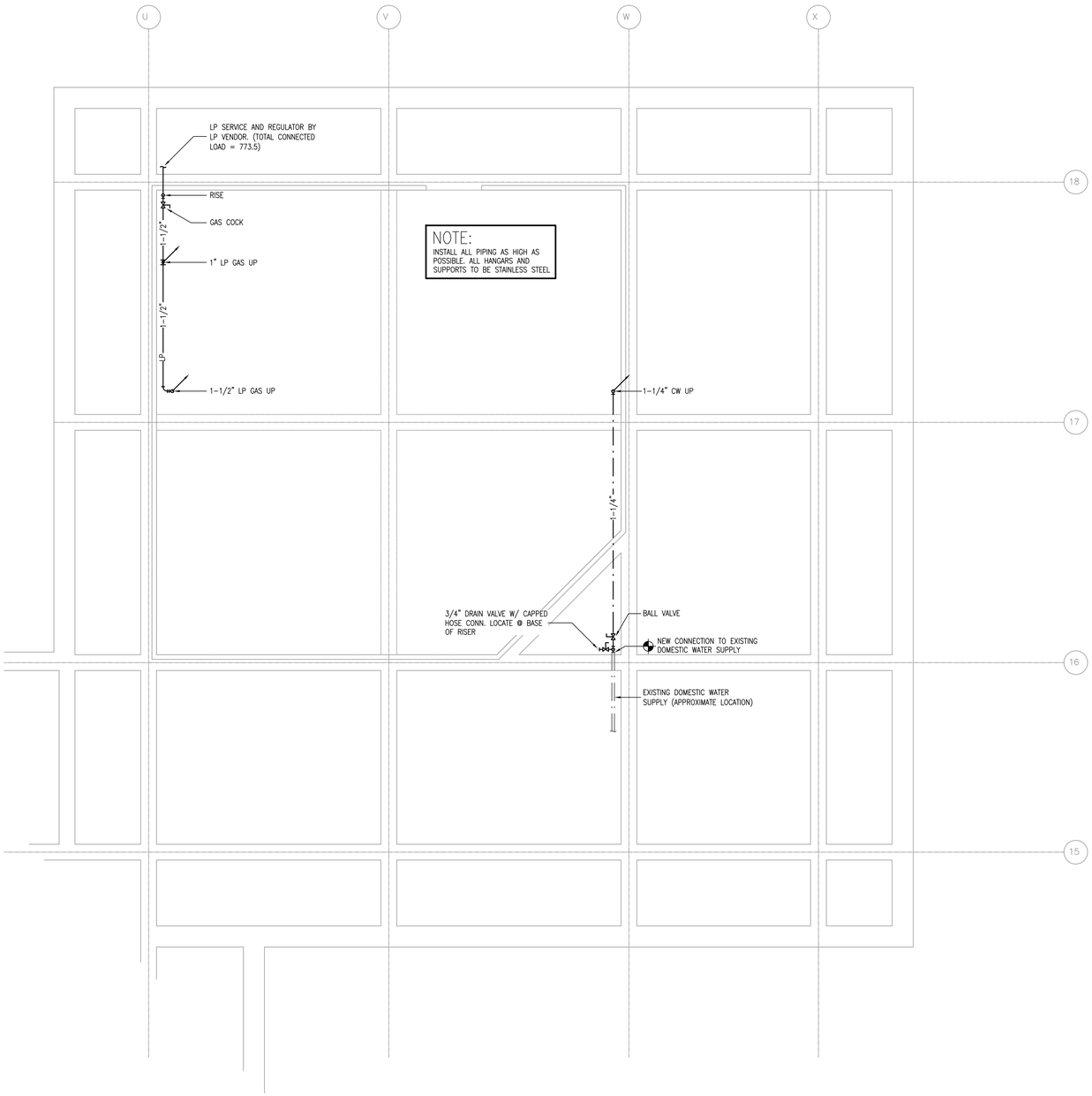

1 / P2.0 PLUMBING: CRAWL SPACE PLAN; DOMESTIC HOT & COLD WATER, LP GAS

SCALE: 1/4" = 1'-0"

N

WILKINSON ASSOCIATES INC
CONSULTING ENGINEERS
615 jefferson boulevard warwick, rhode island 02886
telephone (401) 737-6362 fax (401) 738-2167
website: www.wilkinsonassociates.net

GENERAL NOTES

The drawings are generally diagrammatic and are intended to convey the scope of work and indicate general arrangement of equipment. The locations of all indicated items that are not fixed by dimension are approximate only.

Maintain maximum space conditions at all points. Where space conditions appear inadequate, notify the Architect before proceeding with the installation.

Coordinate the exact location of all materials with the work of other trades and with the existing conditions prior to installation.

All materials to be removed shall be removed from the project site in their entirety, including all hangers, supports and appurtenances.

The piping layout as indicated is schematic and diagrammatic in scope and is not intended to show all offsets which may be required. The exact pipe route shall be field coordinated. required to be clear of mechanical ducts.

Refer to Architectural Floor Plan for the exact location and Configuration of all plumbing fixtures.

All system shut-downs shall be with prior approval of the Architect and Owner. Interruptions to services shall be scheduled to minimize down time.

Refer to the PROJECT SPECIFICATION for additional requirements.

BURGIN LAMBERT
ARCHITECTS
150 Bellevue Avenue
Newport, Rhode Island 02840
Tel: 401.847.3339
Fax: 401.847.3392
www.burginlambert.com

MISQUAMICUT STATE BEACH
VENDING BUILDING
Westerly, RI

REVISIONS:	PROJECT #: 19
	DRAWN BY: DMC RSW
	DATE: 2/19/2019

ROBERT S. WILKINSON
STATE OF RHODE ISLAND
No. 4589
HOPE
REGISTERED PROFESSIONAL ENGINEER

ISSUANCE:	DATE:
95% REVIEW SET	2019-02-21
COMPLETED	2019-03-04

PLUMBING: CRAWL SPACE, DOM H&CW

P2.0

2018 © COPYRIGHT. THIS DRAWING IS NOT TO BE USED FOR MAKING ANY REPRODUCTION THEREOF, OR FOR CONSTRUCTION OF ANY BUILDING WITHOUT FIRST OBTAINING THE WRITTEN AUTHORIZATION FROM BURGIN LAMBERT ARCHITECTS, INC

3/4/2019 11:22 AM S:\Dropbox\D\19008 Misquamicut Beach Vending Pavilion\19008 - P1.0 Plumbing Plans.dwg

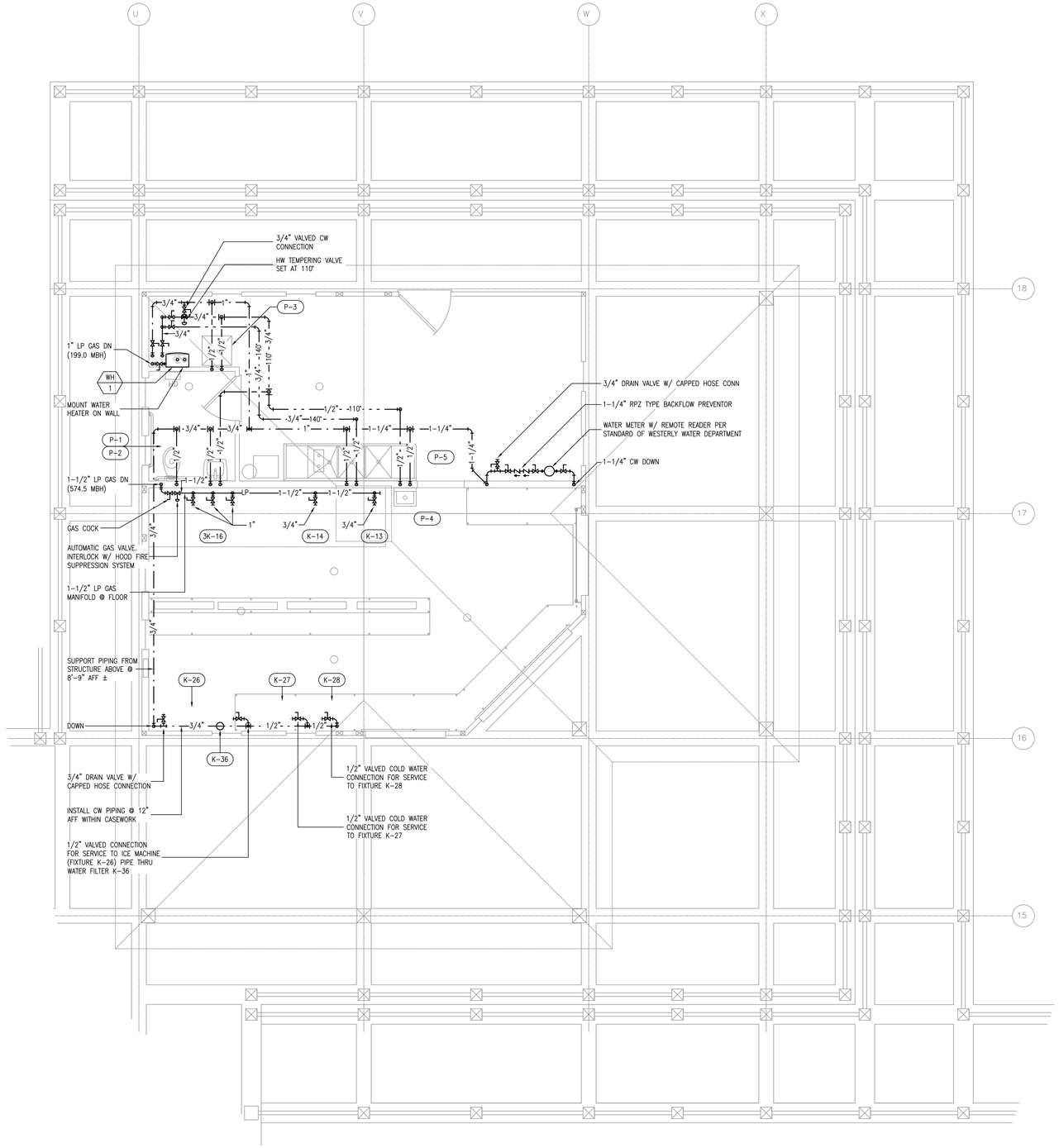

1 / P2.1 PLUMBING: FIRST FLOOR PLAN; DOMESTIC HOT & COLD WATER, LP GAS

SCALE: 1/4" = 1'-0"

N

WILKINSON ASSOCIATES INC
CONSULTING ENGINEERS
615 jefferson boulevard warwick, rhode island 02886
telephone (401) 737-6362 fax (401) 738-2167
website: www.wilkinsonassociates.net

GENERAL NOTES

The drawings are generally diagrammatic and are intended to convey the scope of work and indicate general arrangement of equipment. The locations of all indicated items that are not fixed by dimension are approximate only.

Maintain maximum space conditions at all points. Where space conditions appear inadequate, notify the Architect before proceeding with the installation.

Coordinate the exact location of all materials with the work of other trades and with the existing conditions prior to installation.

All materials to be removed shall be removed from the project site in their entirety, including all hangers, supports and appurtenances.

The piping layout as indicated is schematic and diagrammatic in scope and is not intended to show all offsets which may be required. The exact pipe route shall be field coordinated, required to be clear of mechanical ducts.

Refer to Architectural Floor Plan for the exact location and Configuration of all plumbing fixtures.

All system shut-downs shall be with prior approval of the Architect and Owner. Interruptions to services shall be scheduled to minimize down time.

Refer to the PROJECT SPECIFICATION for additional requirements.

BURGIN LAMBERT
ARCHITECTS
150 Bellevue Avenue
Newport, Rhode Island 02840
Tel: 401.847.3339
Fax: 401.847.3392
www.burginlambert.com

MISQUAMICUT STATE BEACH VENDING BUILDING

Westerly, RI

REVISIONS:	PROJECT #: 19
△	DRAWN BY: DMC RSW
△	
△	
△	DATE: 2/19/2019

ROBERT S. WILKINSON
STATE OF RHODE ISLAND
No. 4589
REGISTERED PROFESSIONAL ENGINEER

ISSUANCE:	DATE:
95% REVIEW SET	2019-02-21
COMPLETED	2019-03-04

PLUMBING: 1st FLOOR, SAN W&V

P2.1

2019 © COPYRIGHT THIS DRAWING IS NOT TO BE USED FOR MAKING ANY REPRODUCTION THEREOF OR FOR CONSTRUCTION OF ANY BUILDING WITHOUT FIRST OBTAINING THE WRITTEN AUTHORIZATION FROM BURGIN LAMBERT ARCHITECTS, INC.

S:\Dropbox\D\19008 Misquamicut Beach Vending Pavilion\19008 - P1.0 Plumbing Plans.dwg
3/4/2019 11:22 AM

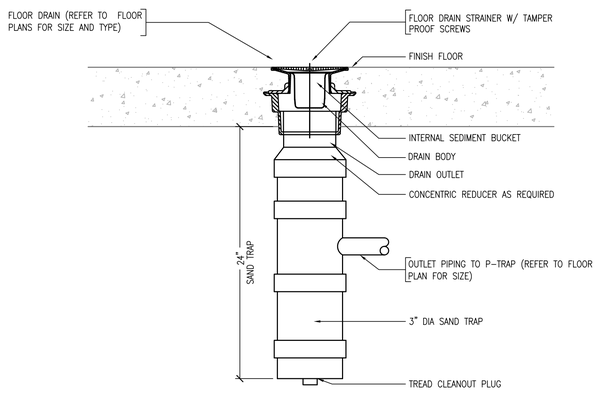

1 P5.0 DETAIL @ DRAIN DOWN TYPE "A" WITH SAND TRAP

SCALE: NONE

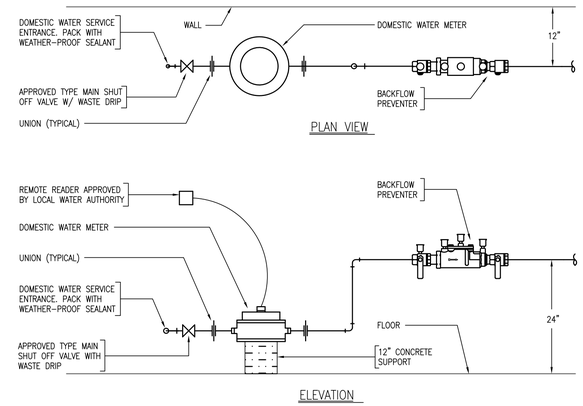

2 P5.0 TYPICAL WATER METER DETAIL: (W/ BACKFLOW PREVENTER)

SCALE: NONE

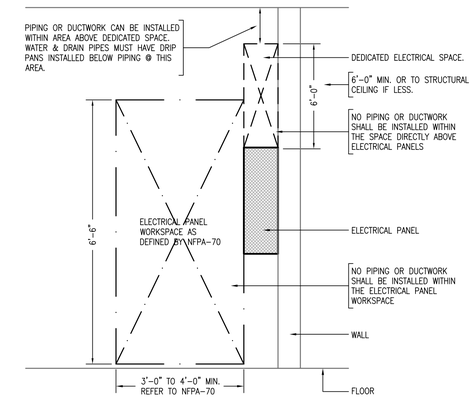

3 P5.0 ELECTRICAL SYSTEMS COORD. DETAIL

SCALE: NONE

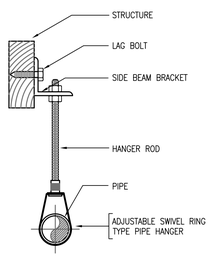

NOTES:
1. SIZE HANGER AND CLAMP TO ADEQUATELY SUPPORT LOAD.
2. FOR COPPER TUBING USE PLASTIC COATED HANGERS.
3. ALL HANGER COMPONENTS & BOLTYS TO BE STAINLESS STEEL.

BAND TYPE HANGER (PIPE SIZE 2" AND SMALLER)

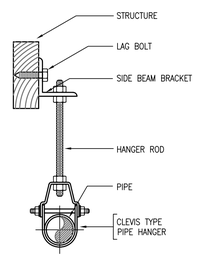

NOTES:
1. SIZE HANGER AND CLAMP TO ADEQUATELY SUPPORT LOAD.
2. FOR COPPER TUBING USE PLASTIC COATED HANGERS.
3. ALL HANGER COMPONENTS & BOLTYS TO BE STAINLESS STEEL.

CLEVIS TYPE HANGER (PIPE SIZE 2-1/2" AND LARGER)

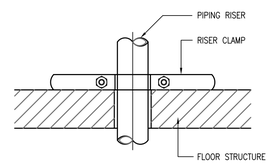

NOTES:
1. SIZE HANGER AND CLAMP TO ADEQUATELY SUPPORT LOAD.
2. FOR COPPER TUBING USE PLASTIC COATED HANGERS.
3. ALL HANGER COMPONENTS & BOLTYS TO BE STAINLESS STEEL.

RISER CLAMP

4 P5.0 TYPICAL PIPE HANGER DETAILS

SCALE: NONE

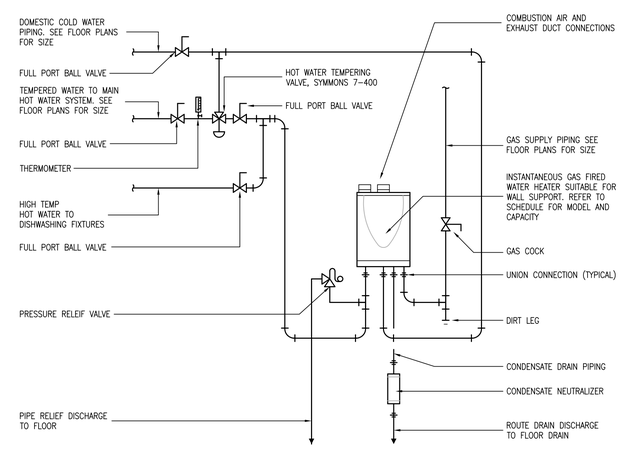

5 P5.0 TYPICAL CONNECTIONS TO INSTANTANEOUS WATER HEATER

SCALE: NONE

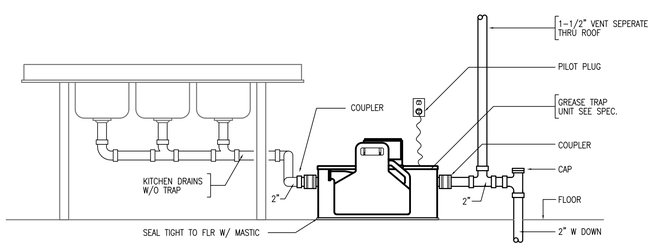

6 P5.0 TYPICAL GREASE TRAP SYSTEM

SCALE: NONE

BURGIN LAMBERT
ARCHITECTS
150 Bellevue Avenue
Newport, Rhode Island 02840
Tel: 401.847.3339
Fax: 401.847.3392
www.burginlambert.com

MISQUAMICUT STATE BEACH
VENDING BUILDING
Westerly, RI

REVISIONS:	PROJECT #: 19
	DRAWN BY: DMC RSW
	DATE: 2/19/2019

ROBERT S. WILKINSON
STATE OF RHODE ISLAND
No. 4589
HOPE
REGISTERED PROFESSIONAL ENGINEER

ISSUANCE:	DATE:
95% REVIEW SET	2019-02-21
COMPLETED	2019-03-04

PLUMBING: DETAILS

P5.0

2019 © COPYRIGHT THIS DRAWING IS NOT TO BE USED FOR MAKING ANY REPRODUCTION THEREOF, OR FOR CONSTRUCTION OF ANY BUILDING WITHOUT FIRST OBTAINING THE WRITTEN AUTHORIZATION FROM BURGIN LAMBERT ARCHITECTS, INC

S:\Dropbox\D\19008 Misquamicut Beach Vending Pavilion\19008 - P1.0 Plumbing Plans.dwg
3/4/2019 11:22 AM

FLOOR DRAIN SCHEDULE

TAG	APPLICATION	OUTLET DIAMETER	TRAP	BODY	STRAINER		SEDIMENT BASEKET	MODEL	NOTES
					TYPE	MATERIAL			
A	WOOD FLOOR / EPOXY FINISH	SEE DRWGS	DEEP SEAL	PVC	GRID SQUARE	POLISHED BRNZ	NO	FD2-PV3-ST	ZURN, FOR WOOD FLOOR DECK, WITH 5" x 5" SQUARE NICKEL BRONZE TOP AND EPOXY FLOOR FLANGE
B	WOOD FLOOR / EPOXY FINISH	SEE DRWGS	DEEP SEAL	PVC	FUNNEL	POLISHED BRNZ	NO	FD2-PV3-E	ZURN, FOR WOOD FLOOR DECK, WITH 7" DIA BRONZE FUNNEL TOP AND EPOXY FLOOR FLANGE

ALL FLOOR DRAINS SHALL BE FIT WITH SURE SEAL TRAP SEALING DEVICE AS MANUFACTURED BY RECTORSEAL-TRAP

INSTANTANEOUS GAS FIRED WATER HEATER SCHEDULE

UNIT NO	INPUT RATING		BURNER		WATER FLOW RATE		LWT	MINIMUM GAS PRESSURE		ELECTRICAL			MODEL	NOTES
	MIN (MBH)	MAX (MBH)	MATERIAL	TYPE	MIN (GPM)	MAX (GPM)	TEMP	NAT GAS	PROPANE	VOLTS	PHASE	AMPS		
WH-1	15.0	199.0	STAINLESS STEEL	CONDENSING	0.26	9.8	140°	3.5"	8.0"	120	1	4	RINNAI CU199ip	PROPANE FIRED

GREASE TRAP SCHEDULE

TAG	SERVICE	MATERIAL	FLOW RATING	SKIMMING RATE	RETENTION CAPACITY	SOLIDS CAPACITY	PIPING CONNS		ELECTRICAL		MODEL	NOTES
							INLET	OUTLET	VOLTAGE	AMPS		
GT-1	KITCHEN FIXTURES (SEE DRAWINGS	304 SS	50 GPM	9 LB/HR	108.4 LB	2.5 GAL	3"	3"	115V / 1ø	10.2	W-500-IS	THERMACO BIG DIPPER

KITCHEN EQUIPMENT CONNECTION SCHEDULE

K NO	FIXTURE	CONNECTIONS								MODEL	NOTES
		I.W.	SAN W.	SAN V.	C.W.	R.O.C.W.	HW 120°F	HW 180°F	LPG		
K-3	BATCH FREEZER	3/4"	–	–	3/4"	–	–	–	–	–	APPLIANCE BY OTHERS, PROVIDE CONNECTIONS ONLY
K-13	GRIDDLE, GAS COUNTERTOP	–	–	–	–	–	–	–	1/2"	–	APPLIANCE BY OTHERS, PROVIDE CONNECTIONS ONLY
K-14	CHARBROILER, GAS COUNTERTOP	–	–	–	–	–	–	–	1/2"	–	APPLIANCE BY OTHERS, PROVIDE CONNECTIONS ONLY
K-16	FRYER, DEEP FAT	–	–	–	–	–	–	–	1/2"	–	APPLIANCE BY OTHERS, PROVIDE CONNECTIONS ONLY
K-20	HOT FOOD TABLE	1"	–	–	–	–	–	–	–	–	APPLIANCE BY OTHERS, PROVIDE CONNECTIONS ONLY
K-26	ICE MAKER WITH BIN	3/4",1-3/8"	–	–	3/8"	–	–	–	1/2"	–	APPLIANCE BY OTHERS, PROVIDE CONNECTIONS ONLY
K-36	WATER TREATMENT UNIT	–	–	–	3/8"	–	–	–	–	–	APPLIANCE BY OTHERS, PROVIDE CONNECTIONS ONLY

PLUMBING FIXTURE SCHEDULE

P NO	FIXTURE	CONNECTIONS				MODEL	NOTES
		WASTE	VENT	C.W.	H.W.		
P-1	WATER CLOSET (ADA)	4"	2"	1/2"	–	2467.016 CADET RIGHT HEIGHT	AMERICAN STANDARD
P-2	LAVATORY (ADA)	1-1/2"	1-1/2"	1/2"	1/2"	0355.912 LUCERNE	AMERICAN STANDARD
P-3	MOP RECEPTOR	3"	1-1/2"	1/2"	1/2"	MSB 2424 MOLDED STONE	FIAT
P-4	HAND SINK	1-1/2"	1-1/2"	1/2"	1/2"	EHS-14	ELKAY
P-5	THREE COMPARTMENT SINK	2"	1-1/2"	1/2"	1/2"	14-3C16X20-2-24X	ELKAY

PLUMBING PIPING LEGEND

SYMBOL	PIPING TYPE
	EXISTING COLD WATER TO REMAIN, ABOVE GRADE
	EXISTING HOT WATER TO REMAIN, ABOVE GRADE
	EXISTING SANITARY WASTE TO REMAIN, ABOVE GRADE
	EXISTING SANITARY WASTE TO REMAIN, BELOW GRADE
LP	EXISTING LP GAS PIPING TO REMAIN
	NEW COLD WATER, ABOVE GRADE
	NEW HOT WATER, ABOVE GRADE
	NEW HOT WATER RECIRCULATING, ABOVE GRADE
	NEW SANITARY WASTE, ABOVE GRADE
SAN	NEW SANITARY WASTE, BELOW GRADE
	NEW SANITARY VENT, ABOVE GRADE
	NEW SANITARY VENT, BELOW GRADE
LP	NEW LP GAS PIPING
	NEW GATE VALVE
	NEW BALL VALVE
	NEW CHECK VALVE
	NEW PRESSURE REDUCING VALVE
	NEW MIXING VALVE
	NEW UNION
	NEW PIPING RISER/TAKEOFF UP
	NEW PIPING RISER/TAKEOFF DOWN
	NEW CLEANOUT
	NEW THERMOMETER
	NEW CAP
SAN	SANITARY WASTE
V	SANITARY VENT
CW	DOMESTIC COLD WATER
HW	DOMESTIC HOT WATER
HWR	DOMESTIC HOT WATER RECIRCULATING
P-1	FIXTURE NUMBER
SHT	SECTION NUMBER SECTION DESIGNATION SHEET NUMBER

BURGIN LAMBERT
ARCHITECTS
150 Bellevue Avenue
Newport, Rhode Island 02840
Tel: 401.847.3339
Fax: 401.847.3392
www.burginlambert.com

MISQUAMICUT STATE BEACH
VENDING BUILDING
Westerly, RI

REVISIONS:	PROJECT #: 19
	DRAWN BY: DMC RSW
	DATE: 2/19/2019

ROBERT S. WILKINSON
STATE OF RHODE ISLAND
No. 4589
REGISTERED PROFESSIONAL ENGINEER

ISSUANCE:	DATE:
95% REVIEW SET	2019-02-21
COMPLETED	2019-03-04

PLUMBING: SCHEDULES

P8.0

2019 © COPYRIGHT THIS DRAWING IS NOT TO BE USED OR MADE ANY REPRODUCTION THEREOF OR FOR CONSTRUCTION OF ANY BUILDING WITHOUT FIRST OBTAINING THE WRITTEN AUTHORIZATION FROM BURGIN LAMBERT ARCHITECTS, INC.

3/4/2019 11:23 AM S:\Dropbox\D\19008 Misquamicut Beach Vending Pavilion\19008 - P1.0 Plumbing Plans.dwg

LEGEND

- MOUNTING HEIGHTS SHALL BE AS INDICATED UNLESS SHOWN OTHERWISE ON ELECTRICAL DRAWINGS OR ARCHITECTURAL ELEVATIONS
- ALL SYMBOLS MAY NOT BE SHOWN ON PLANS

RACEWAYS AND WIRING

P4–1,3,5 — SINGLE PHASE HOMERUNS TO PANELBOARD. "P4" DENOTES PANEL, "1,3,5" DENOTES CIRCUIT NUMBERS, [(3) 20A, 1P CIRCUITS] NUMBER OF SLASH MARKS DENOTES NUMBER OF #12AWG CONDUCTORS IN MINIMUM 3/4"C. NO SLASH MARKS INDICATE 2#12 & 1#12G–3/4"C UNLESS INDICATED OTHERWISE.

P4–2, 20/3 — MULTI-POLE HOMERUN TO PANELBOARD. "P4" DENOTES PANEL, "2" DENOTES CIRCUIT NUMBER, 20 AMP 3 POLE C/B. NUMBER OF SLASH MARKS DENOTES NUMBER OF #12AWG CONDUCTORS IN MINIMUM 3/4"C.

NOTES:
1. GREEN GROUND CONDUCTOR NOT INDICATED BUT SHALL BE INCLUDED IN EACH RACEWAY. SIZE SHALL BE #12AWG UNLESS INDICATED OTHERWISE.

LIGHTING FIXTURES

A 2a — FLUORESCENT LIGHTING FIXTURE CEILING OR RECESSED MOUNTED. "A" DENOTES FIXTURE TYPE, "2" DENOTES CIRCUIT NUMBER, "a" DENOTES SWITCH CONTROL,

LIGHT FIXTURE WIRED TO CONSTANT–ON OR NORMAL EMERGENCY CIRCUIT

FLUORESCENT BARE LAMP STRIP OR INDUSTRIAL STRIP

INCANDESCENT OR COMPACT FLUORESCENT RECESSED OR SURFACE MOUNTED LIGHTING FIXTURE

WALL MOUNTED LIGHTING FIXTURE

WALL WASH OR DIRECTIONAL LIGHTING FIXTURE

CEILING MOUNTED ILLUMINATED EXIT SIGN, ARROWS AS INDICATED ON DRAWINGS

WALL MOUNTED ILLUMINATED EXIT SIGN – SHADING INDICATES FACE PLATE(S)

EB — EMERGENCY BATTERY UNIT

REMOTE EMERGENCY ONLY LIGHT HEADS – SINGLE OR DOUBLE AS SHOWN

WP — WEATHER PROOF EMERGENCY ONLY LIGHT FIXTURE

POLE MOUNTED SITE LIGHTING FIXTURE

TRACK LIGHTING AND HEADS, LENGTH OF TRACK AND QUANTITY OF HEADS AS SHOWN ON FLOOR PLANS

TOGGLE SWITCHES (MOUNTED 48" AFF)

Soc ab — SINGLE POLE TOGGLE SWITCH. "a" DENOTES FIXTURE CONTROL. "oc" DENOTES INTEGRAL OCCUPANCY SENSOR.

S3 — THREE WAY TOGGLE SWITCH

S4 — FOUR WAY TOGGLE SWITCH

SK — KEY OPERATED SWITCH

SP — SINGLE POLE TOGGLE SWITCH WITH PILOT LIGHT

SD — DIMMER SWITCH

OC — CEILING MOUNTED OCCUPANCY SENSOR LIGHTING CONTROL. REFER TO LIGHTING PLANS FOR EXACT CATALOG NUMBER

RECEPTACLES (MOUNTED 18" AFF OR AS INDICATED ON ARCHITECTURAL PLANS)

IG GFI 2 WP — DUPLEX RECEPTACLE, "2" DENOTES CIRCUIT NUMBER, "GFI" DENOTES GROUND FAULT CIRCUIT INTERRUPTER TYPE DEVICE, "IG" DENOTES ISOLATED GROUND TYPE DEVICE, "WP" DENOTES WEATHER PROOF COVER

DUPLEX RECEPTACLE MOUNTED 6" ABOVE COUNTER TOP OR AS INDICATED ON ARCHITECTURAL PLANS

DOUBLE DUPLEX RECEPTACLE MOUNTED 6" ABOVE COUNTER TOP OR AS INDICATED ON THE ARCHITECTURAL PLANS

DOUBLE DUPLEX RECEPTACLE

DUPLEX RECEPTACLE ONE HALF SWITCH CONTROLLED

EWC — GFI DUPLEX RECEPTACLE FOR ELECTRIC WATER COOLER

DUPLEX RECEPTACLE FLOOR MOUNTED

L6–30 — SPECIAL PURPOSE RECEPTACLE, "L6–30" DENOTES TYPE, SEE POWER PLANS FOR EXACT TYPES USED

12 — FACTORY WIRED, FIELD ASSEMBLED UL LISTED, MULTIOUTLET ASSEMBLY. "12" DENOTES SINGLE RECEPTACLES MOUNTED ON 12" CENTERS

FIELD WIRED, UL LISTED, OF MULTIOUTLET ASSEMBLY, QUANTITY AND TYPE DEVICES AS INDICATED

SINGLE RECEPTACLE

T — TAMPER RESISTANT DUPLEX RECEPTACLE

PP — POWER POLE ASSEMBLY

SURFACE MOUNTED RACEWAY, DIVIDED RACEWAY WITH DATA AND DUPLEX RECEPTACLES AS INDICATED

TELECOMMUNICATIONS (MOUNTED 18" AFF)

TELEPHONE OUTLET

W — TELEPHONE OUTLET MOUNTED 54"AFF

TELEPHONE OUTLET FLOOR MOUNTED

COMPUTER SYSTEM OUTLET

COMPUTER SYSTEM OUTLET, FLOOR MOUNTED

COMBINATION TELEPHONE/DATA OUTLET

T/D PP — COMBINATION TELEPHONE/DATA POWER POLE ASSEMBLY

NOTE: E.C. SHALL PROVIDE A DOUBLE GANG BACK BOX WITH SINGLE GANG REDUCER, 3/4" CONDUIT AND PULLSTRING STUBBED OUT ABOVE ACCESSIBLE CEILING.

FIRE ALARM SYSTEM

F — MANUAL PULL STATION MOUNTED 48" AFF

DH — MAGNETIC DOOR HOLD OPEN DEVICE

RI — REMOTE ALARM INDICATOR

FAA — FIRE ALARM ANNUNCIATOR

FAC — FIRE ALARM COMMUNICATOR

FPC — FIRE PUMP CONTROLLER

BATT — BATTERY CABINET

FACP — FIRE ALARM CONTROL PANEL

FATC — FIRE ALARM TERMINAL CABINET

AIM — ADDRESSABLE INPUT MONITOR MODULE

AOM — ADDRESSABLE OUTPUT CONTROL MODULE

ROTATING BEACON

ACCESS FEATURE–FIRE DEPARTMENT KEYBOX

PS — NOTIFICATION APPLIANCE CIRCUIT POWER SUPPLY SIZE PER MANUFACTURERS SYSTEM CALCULATIONS.

CO_2 — CARBON DIOXIDE DETECTOR

CO — CARBON MONOXIDE DETECTOR

HEAT DETECTOR/SENSOR ORIENTATION NOT TO BE CHANGED.

MB — FIRE ALARM MASTER BOX

S — SMOKE DETECTOR/SENSOR – BASIC SHAPE ORIENTATION NOT TO BE CHANGED

CD — COMBINATION HORN/VISIBLE CD= CANDELA RATING/SETTING

CD 1W — COMBINATION SPEAKER/VISIBLE W=WATTAGE CD= CANDELA RATING/SETTING

CD — VISIBLE ONLY (STROBE) – WALL MOUNT CD=CANDELA RATING/SETTING

FS — FLOW SWITCH (WATER), FURNISHED AND INSTALLED BY FIRE PROTECTION SUBCONTRACTOR, WIRED BY THE ELECTRICAL SUBCONTRACTOR.

SECURITY SYSTEM

TP — TOUCH PAD

PS — POWER SUPPLY – PROVIDE 3/4" PVC CONDUIT BACK TO TELEPHONE BACKBOARD, AND PROVIDE SEPARATE 120VAC CKT.

DS — DOOR SWITCH

M — MICROPHONE

NOTE:

PROVIDE ¾" PVC CONDUIT FROM SECURITY DEVICES TO POWER SUPPLY.

MISCELLANEOUS

J — JUNCTION BOX WITH FLEXIBLE CONNECTION TO EQUIPMENT

EF — EXHAUST FAN

CP — CONTROL PANEL

PB — PULL BOX – SIZED PER NEC FOR CONDUITS ENTERING AND LEAVING

FIRE RATED POKE–THRU WITH FLUSH MOUNTED DEVICES AS INDICATED

T/D — FIRE RATED POKE–THRU WITH FLEXIBLE CONNECTION TO FURNITURE SYSTEM "T/D" DENOTES TEL/DATA SYSTEM DEVICE

TV — CABLE TELEVISION OUTLET, WALL MOUNTED. E.C. SHALL PROVIDE 3/4" EMPTY CONDUIT WITH PULL STRING TO NEAREST ACCESSIBLE CEILING. PROVIDE FACEPLATE WITH TYPE "F" CONNECTOR AT BOX.

P WP — PUSHBUTTON AND PLATE, "WP" DENOTES WEATHERPROOF

C — 120 VOLT CLOCK HANGER OUTLET

C — CENTRAL SYSTEM CLOCK WIRED TO CORRECTIVE CLOCK WIRING SYSTEM 12" DIAMETER UNLESS OTHERWISE NOTED "SP" DENOTES SHATTER GUARD

C S — CLOCK/SPEAKER COMBINATION

B — BUZZER/BELL, LOW VOLTAGE

TL — LOW VOLTAGE TRANSFORMER

MUSHROOM TYPE PUSHBUTTON STATION FOR ACTIVATION OF SHUNT–TRIP DEVICE ON INDICATED CIRCUIT BREAKER

PC — PHOTO–CELL

TC — TIME CLOCK

KP — KEY PAD

POWER DISTRIBUTION EQUIPMENT

DISTRIBUTION PANEL

PANELBOARD, SURFACE MOUNTED

PANELBOARD, FLUSH MOUNTED

J — JUNCTION BOX, SIZED PER NEC

2 — MOTOR, "2" DENOTES HORSEPOWER

MAGNETIC MOTOR STARTER WITH ENCLOSURE, MINIMUM SIZE NEMA 1

P — MANUAL MOTOR STARTER WITH THERMAL OVERLOAD. "P" DENOTES PILOT LIGHT

30/3 — NON–FUSED DISCONNECT SWITCH: "30/3" DENOTES 30 AMP/3 POLE SWITCH

30/20/3 — FUSED DISCONNECT SWITCH: "30/20/3" DENOTES 30 AMP/3 POLE SWITCH, 20 AMP FUSES

COMBINATION MAGNETIC STARTER AND FUSED DISCONNECT SWITCH. SIZE OF STARTER, SWITCH AND FUSE AS REQUIRED

T — DRY–TYPE DISTRIBUTION TRANSFORMER

KT2 — "K" FACTOR DRY TYPE TRANSFORMER. "2" DENOTES SIZE

ATS — AUTOMATIC TRANSFER SWITCH

TVSS — TRANSIENT VOLTAGE SURGE SUPPRESSION

T — PAD MOUNTED TRANSFORMER

GROUND ROD, REFER TO PLANS FOR EXACT SIZE

MECHANICAL EQUIPMENT TAG ABBREVIATIONS

AH 1 — DENOTES EQUIPMENT TYPE; DENOTES UNIT NUMBER

ACC	AIR–COOLED CONDENSER
AHU	AIR HANDLING UNIT
B	BOILER
CH	CHILLER
CUH	CABINET UNIT HEATER
EBB	ELECTRIC BASEBOARD
EF	EXHAUST FAN
EH	EXHAUST HOOD
EWH	ELECTRIC WALL HEATER
FC	FAN COIL
HP	HEAT PUMP
MAU	MAKE–UP AIR UNIT
P	PUMP
RTU	ROOF TOP UNIT
UH	UNIT HEATER
VAV	VARIABLE AIR VOLUME BOX
WH	ELECTRIC WATER HEATER

ABBREVIATIONS

3R	NEMA 3R RATING
4X	NEMA 4X RATING
A	AMPERES
AFF	ABOVE FINISHED FLOOR
AFG	ABOVE FINISHED GRADE
AIC	AMPERE INTERRUPTING CAPACITY
ARCH	ARCHITECT
ATS	AUTOMATIC TRANSFER SWITCH
AWG	AMERICAN WIRE GAUGE
C	CONDUIT
C/B	CIRCUIT BREAKER
C.T.	CURRENT TRANSFORMER
CAT	CATALOG
CKT	CIRCUIT
CU	COPPER
DWG	DRAWING
E	WIRED ON EMERGENCY CIRCUIT
EC	ELECTRICAL CONTRACTOR
EM	EMERGENCY
ETD	EXISTING TO BE DEMOLISHED
ETR	EXISTING TO REMAIN
ETRL	EXISTING TO BE RELOCATED
ETRP	EXISTING TO BE REPLACED
G	GROUND
GC	GENERAL CONTRACTOR
GFI	GROUND FAULT INTERRUPTER
HVAC	HEATING, VENTILATION, AIR CONDITIONING CONTRACTOR
IG	ISOLATED GROUND
KCMIL	ONE THOUSAND CIRCULAR MILS
KVA	KILOVOLT–AMPERES
KVAR	KILOVOLT–AMPERES REACTIVE
KW	KILOWATTS
MCB	MAIN CIRCUIT BREAKER
MCC	MOTOR CONTROL CENTER
MLO	MAIN LUGS ONLY
NC	NORMALLY CLOSED
NEC	NATIONAL ELECTRICAL CODE
NL	NIGHT LIGHT
NO	NORMALLY OPEN
NTS	NOT TO SCALE
ø	PHASE
P	POLE
PC	PLUMBING CONTRACTOR
P.T.	POTENTIAL TRANSFORMER
PVC	POLYVINYL CHLORIDE
RL	NEW LOCATION OF RELOCATED DEVICE
SM	SURFACE MOUNT
ST	SHUNT TRIP
T/D	TEL/DATA
TEL	TELEPHONE
UG	UNDERGROUND
UNO	UNLESS NOTED OTHERWISE
V	VOLT
VIF	VERIFY IN FIELD
W	WATT
WP	WEATHERPROOF
XFMR	TRANSFORMER

LIGHTING FIXTURE SCHEDULE

TYPE	DESCRIPTION	MANUFACTURER & CATALOG NUMBER	LAMPS TYPE	LAMPS VOLTS	LAMPS WATTS	REMARKS
A	LED SUSPENDED FIXTURE 1'X8'	CREE CS SERIES# CS18–44L–35K–10V	LED	120V	44W	– –
B	LED SUSPENDED FIXTURE 1'X4'	CREE CS SERIES# CS14–22L–35K–10V	LED	120V	22W	
C	GLO–RAY HEAT LAMP	GLO–RAY# GRAH–48	LED	120V	44W	– –
EA	EXTERIOR LED WALL MOUNT	C–LITE# C–WM–A–WLAR–11L–50K–MB	LED	120V	14W	– –
	LED EXIT SIGN WITH INTEGRAL BATTERY BACK–UP	CONTECH LIGHTING# EXREM	LED	120V	2W	– –
EB	EMERGENCY BATTERY UNIT	EVENLITE# TCL–4–W–*	LED	120V	2W	– –

ALL PENDANT FIXTURES ARE TO BE HUNG WITH STAINLESS STEEL AIRCRAFT CABLE. REFER TO ARCH PLANS AND ELEVATIONS. PENDANT FIXTURES SHALL HAVE 3 HANGARS PER 8' FIXTURE. 2 PER 4' FIXTURE, AND #13 GA. CURLY WIRE FEED.

LIGHTING FIXTURE NOTES:

1. PROVIDE ACCESSORIES AND MOUNTING HARDWARE FOR ALL FIXTURES.
2. COLORS SHALL BE AS SELECTED BY ARCHITECT.
3. COORDINATE EXACT LOCATION WITH ARCHITECT PRIOR TO ROUGH–IN.
4. ALL COMPACT FLUORESCENT BALLASTS SHALL BE ELECTRONIC TYPE.
5. ALL LAMPS SHALL BE 3500°K.
6. E.C. SHALL COORDINATE THAT ALL DIMMER SWITCHES ARE COMPATIBLE WITH EACH FIXTURE INDICATED TO BE CONTROLLED AND PROVIDE DIMMER SWITCHES PER MANUFACTURER'S RECOMMENDATIONS AND REQUIREMENTS.

DEMOLITION AND REMOVAL WORK

A. REMOVE ALL ELECTRICAL EQUIPMENT, WIRING, AND OTHER ELECTRICAL WORK AS REQUIRED. DISCONNECT LOAD AND LINE END OF CONDUCTORS FEEDING DEVICES WHICH ARE TO BE REMOVED OR ABANDONED, REMOVE CONDUCTORS NO LONGER IN USE. CUT BACK TO FLOOR, WALL, OR CEILING AND PLUG BOTH ENDS OF CONCEALED CONDUITS MADE OBSOLETE BY THIS ALTERATION. REMOVE EXPOSED OR ABANDONED CIRCUITS AND OUTLETS. REMOVE MATERIAL AND EQUIPMENT AND DISPOSE OF AS DIRECTED.

B. WHEREVER IT IS REQUIRED TO DISCONNECT OR REMOVE ANY PART OF AN EXISTING CIRCUIT, IMMEDIATELY RECONNECT THAT CIRCUIT OR REESTABLISH SERVICE IN THE REMAINING PORTION OF THE CIRCUIT.

C. THE WORK SHALL ALSO INCLUDE THE REMOVAL OF MATERIALS AS DIRECTED. PRIOR TO REMOVING EQUIPMENT AND MATERIAL FROM PROJECT SITE, THE BUILDING MANAGER OR OWNER WILL INSPECT AND ADVISE WHICH ITEMS WILL BE STORED.

D. WHERE EXISTING RECEPTACLES AND/OR SWITCHES ARE LOCATED IN COLUMNS AND/OR EXTERIOR WALLS, AND ARE NOT TO BE REUSED, REMOVE RECEPTACLE AND CAP OUTLET BOX. RECEPTACLES SHOWN ON PARTITIONS TO BE REMOVED SHALL HAVE ALL WIRING AND CONDUIT REMOVED AS WELL.

E. WHERE PRESENT WORK IS DAMAGED IN THE EXECUTION OF THIS CONTRACT, OR WHERE OPENINGS ARE LEFT DUE TO THE REMOVAL OF CONDUITS, EQUIPMENT, OR APPARATUS, THE SAME SHALL BE REPAIRED OR CLOSED UP TO CORRESPOND IN MATERIAL, QUALITY, SHAPE, AND FINISH WITH THAT OR SIMILAR AND ADJOINING WORK, UNLESS OTHERWISE CALLED FOR.

F. SHOULD ANY DAMAGE DUE TO THE EXECUTION OF THIS CONTRACT OCCUR TO THE FURNITURE, FIXTURES, OR ANY OTHER EQUIPMENT OR APPARATUS, SUCH DAMAGES SHALL BE PROPERLY REPAIRED WITH THE SUPPLY OF NEW ARTICLES AND MADE GOOD WITHOUT EXTRA CHARGE.

G. WHERE REMOVAL OF EXISTING ELECTRICAL EQUIPMENT WILL RESULT IN OUTAGES IN AREA NOT TO BE DEMOLISHED, THIS CONTRACTOR SHALL COORDINATE IN ADVANCE AND OBTAIN THE APPROVAL OF THE BUILDING MANAGER OR OWNER.

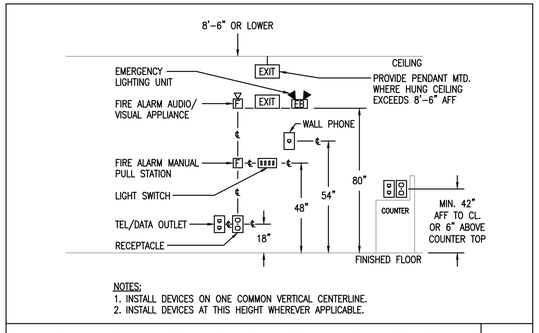

NOTES:
1. INSTALL DEVICES ON ONE COMMON VERTICAL CENTERLINE.
2. INSTALL DEVICES AT THIS HEIGHT WHEREVER APPLICABLE.

DETAIL OF TYPICAL DEVICE MOUNTING HEIGHTS — NTS

BRANCH CIRCUIT WIRING NOTES:

1. WIRING IS SHOWN ON DRAWINGS ONLY FOR SPECIFIC ROUTES OR SPECIAL CONDITIONS.
2. WIRING AND CONDUIT SHALL BE REQUIRED BETWEEN ALL OUTLETS INDICATED WITH CIRCUIT NUMBERS AND PANEL DESIGNATIONS.
3. ALL SWITCH CONTROLS SHALL BE PROVIDED WITH WIRING AND CONDUIT AS REQUIRED.
4. ALTHOUGH ALL BRANCH CIRCUIT WIRING AND CONDUIT IS NOT SHOWN, IT IS THE INTENT OF THESE DOCUMENTS THAT A COMPLETE BRANCH CIRCUIT WIRING SYSTEM BE INSTALLED.
5. A GREEN GROUNDING CONDUCTOR SHALL BE RUN WITH ALL CIRCUITS. VERIFY CONDUIT SIZE TO ENSURE IT CAN ACCOMMODATE ALL PHASE, NEUTRAL AND GROUND CONDUCTORS.
6. PROVIDE A NEUTRAL CONDUCTOR TO ALL NEW LIGHTING SWITCH BOXES PER NEC ARTICLE 404.2.
7. ALL 15A AND 20A, 125V RECEPTACLES IN NON–DWELLING TYPE OCCUPANCIES SHALL BE GFCI PROTECTED PER NEC ARTICLE 210.8(B).
8. ALL ARC FAULT CIRCUITS IN ALL LIVING UNITS SHALL BE PROVIDED WITH A SEPARATE NEUTRAL PER CIRCUIT.
9. WHERE EXISTING SWITCHES AND RECEPTACLES ARE INDICATED TO REMAIN, THIS CONTRACTOR SHALL REPLACE SAID DEVICE(S) AND DEVICE PLATE(S) WITH NEW TO MATCH THE NEW CONSTRUCTION. WHERE THEY ARE INDICATED AS RELOCATED, EXTEND BRANCH CIRCUIT WIRING TO NEW LOCATION AND PROVIDE NEW DEVICE AND DEVICE PLATE TO MATCH NEW CONSTRUCTION.
10. ALL SELF CONTAINED EMERGENCY LIGHTING UNITS AND EXIT LIGHTING SHALL BE CONNECTED TO THE NEAREST UNSWITCHED LIGHTING CIRCUIT IN THE BUILDING WITH 2 #12, #12G, 3/4" CONDUIT.

BER
BUILDING ENGINEERING RESOURCES, INC.
66 Main Street, N. Easton, MA 02356, T 508.230.0260, F 508.230.0265
100 Midway Road - Suite 23, Cranston, RI 02920, T 401.942.3500, F 401.228.6205
ber@ber-engineering.com www.ber-engineering.com

BURGIN LAMBERT ARCHITECTS
150 Bellevue Avenue
Newport, Rhode Island 02840
Tel: 401.847.3339
Fax: 401.847.3392
www.burginlambert.com

MISQUAMICUT STATE BEACH VENDING BUILDING

Westerly, RI

REVISIONS:	PROJECT #: 19
	DRAWN BY: NM
	DATE: 3/01/2019

ELECTRICAL - LEGEND, SCHEDULE, & NOTES

E0.1

2019 © COPYRIGHT. THIS DRAWING IS NOT TO BE USED FOR MAKING ANY REPRODUCTION THEREOF, OR FOR CONSTRUCTION OF ANY BUILDING WITHOUT FIRST OBTAINING THE WRITTEN AUTHORIZATION FROM BURGIN LAMBERT ARCHITECTS, INC.

GENERAL LIGHTING NOTES:

1. SEE DRAWING E0.1 FOR ELECTRICAL LEGEND AND GENERAL NOTES.
2. CIRCUIT NUMBER DESIGNATION ARE INTENDED TO ILLUSTRATE BRANCH WIRING CONFIGURATION ONLY.
3. PROVIDE "HOT" UNSWITCHED POWER AT ALL LIFE SAFETY BATTERY BALLASTS AND EXIT SIGNS. BRANCH CIRCUITS SHALL BE SUPPLIED WITH INTERNAL, 90 MINUTE, EMERGENCY BATTERY.
4. ELECTRICAL CONTRACTOR SHALL PROVIDE AND INSTALL ANY STEP DOWN TRANSFORMERS, WIRING, AND CONTROLS FOR LOW VOLTAGE LIGHTING WHERE NECESSARY.
5. CONTRACTOR SHALL COORDINATE ALL LIGHTING WITH NEW SYSTEMS ABOVE CEILING PRIOR TO INSTALLATION. CONTRACTOR SHALL RESOLVE ANY INSTALLATION CONFLICTS IN FIELD AND NOTIFY ARCHITECT AND ENGINEER OF CHANGE.
6. WHERE LIGHT FIXTURES ARE LOCATED WITHIN RATED CEILINGS OR WALLS, THE ELECTRICAL CONTRACTOR SHALL BE RESPONSIBLE FOR PROVIDING A UL APPROVED FIRE RATED ENCLOSURE. PROVIDE ELCO FIRE BOX OR APPROVED EQUAL.
7. COORDINATE WITH THE ARCHITECTURAL DRAWING THE CEILING TYPES AND PROVIDE IC RATING WERE REQUIRED.
8. ALL EXPOSED AND SURFACE MOUNTED RACEWAY SHALL BE WIREMOLD OR EQUAL. COORDINATE ROUTING WITH ARCHITECT.

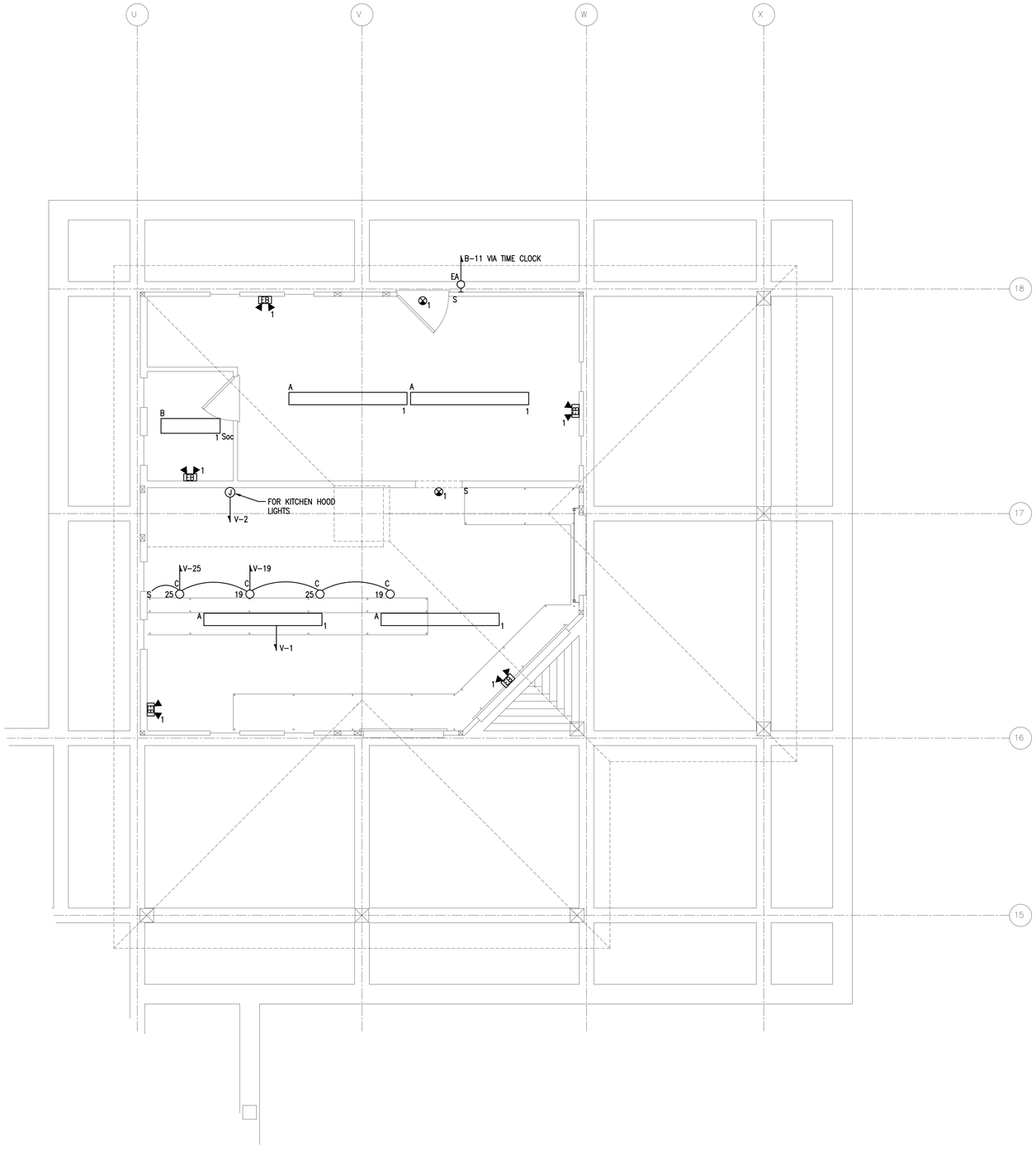

1 FIRST FLOOR PLAN
SCALE: 1/4"= 1'-0"

BURGIN LAMBERT
ARCHITECTS
150 Bellevue Avenue
Newport, Rhode Island 02840
Tel: 401.847.3339
Fax: 401.847.3392
www.burginlambert.com

MISQUAMICUT STATE BEACH
VENDING BUILDING
Westerly, RI

REVISIONS:	PROJECT #: 19
	DRAWN BY: NM
	DATE: 3/01/2019

ELECTRICAL - LIGHTING FIRST FLOOR PLAN

E1.0

B|E|R
BUILDING ENGINEERING RESOURCES, INC.
66 Main Street
N. Easton, MA 02356
T 508.230.0260
F 508.230.0265
100 Midway Road - Suite 23
Cranston, RI 02920
T 401.942.3500
F 401.228.6205
ber@ber-engineering.com
www.ber-engineering.com

2019 © COPYRIGHT THIS DRAWING IS NOT TO BE USED FOR MAKING ANY REPRODUCTION THEREOF, OR FOR CONSTRUCTION OF ANY BUILDING, WITHOUT FIRST OBTAINING THE WRITTEN AUTHORIZATION FROM BURGIN LAMBERT ARCHITECTS, INC.

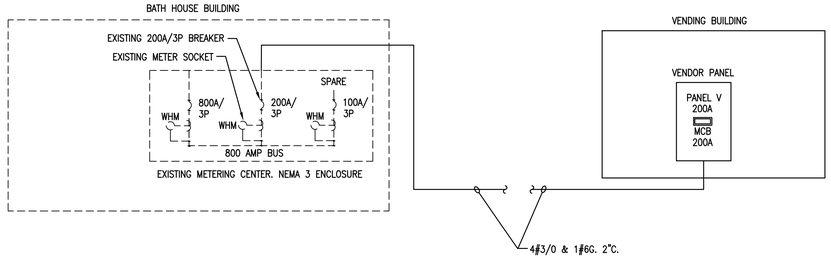

1 POWER RISER DIAGRAM
SCALE: NTS

PANELBOARD SCHEDULE

	PANEL:	PANEL V	VOLTS:	208Y/120		MOUNT:	SURFACE	GROUND BUS:	Y	
	MAIN:	200A	AMPS:	200A		AIC:	10,000	ISOLATED GROUND BUS:	N	
			PH/WIRE:	3/4		LOC.:	VENDING	200% NEUTRAL:	N	
	AMPS/		LOAD	LOAD BY PHASE, kVA			LOAD		AMPS/	
CIR.	POLES	DESCRIPTION OF LOAD	kVA	A	B	C	kVA	DESCRIPTION OF LOAD	POLES	CIR.
1	20A/1P	LIGHTS	0.21	0.81			0.60	KITCHEN HOOD LIGHTS	20A/1P	2
3	20A/1P	SONITROL PANEL	1.00		1.75		0.75	EF-1	20A/2P	4
5	20A/1P	GREASE TRAP	1.22			1.97	0.75			6
7	20A/1P	WH-1	0.48	1.48			1.00	FIRE CONTROL PANEL	20A/1P	8
9	20A/1P	HAND DRYER	0.60		1.60		1.00	CO2 MONITORING SYSTEM	20A/1P	10
11	20A/1P	SPARE	0.00			0.00	0.00	SPARE	20A/1P	12
13	25A/2P	COUNTER TOP OVEN	1.80	1.80			0.00	SPARE	20A/1P	14
15			1.80		2.40		0.60	GRIDDLE	20A/1P	16
17	20A/1P	FOOD WARMER	0.50			1.10	0.60	DEEP FAT FRYER	20A/1P	18
19	25A/1P	HEAT LAMPS	2.20	2.20			0.00	SPARE	20A/1P	20
21	20A/1P	WORKTOP FREEZER	1.20		2.70		1.50	HOT FOOD TABLE	20A/2P	22
23	20A/1P	SANDWICH UNIT	1.08			2.58	1.50			24
25	25A/1P	HEAT LAMPS	2.20	3.84			1.64	ICE MAKER WITH BIN	20A/2P	26
27	20A/1P	SPARE	0.00		1.64		1.64			28
29	20A/1P	SPARE	0.00			0.00	0.00	SPARE	20A/1P	30
31	20A/1P	SPARE	0.00	0.88			0.88	ICE CREAM CABINET	20A/1P	32
33	20A/1P	BEVERAGE DISPENSER	0.50		1.00		0.50	BEVERAGE DISPENSER	20A/1P	34
35	20A/1P	PRETZEL DISPLAY WARMER	1.47			1.47	0.00	SPARE	20A/1P	36
37	20A/1P	SPACE	0.00	1.00			1.00	RECEPT/FRIDGE	20A/1P	38
39	20A/1P	SPACE	0.00		1.00		1.00	RECEPT/FRIDGE	20A/1P	40
41	20A/1P	SPACE	0.00			0.00	0.00	SPARE	20A/1P	42
		CONNECTED kVA BY PHASE -		12.01	12.09	7.12		TOTAL CONNECTED KVA-	31.22	
								DEMAND FACTOR	1.00	
								TOTAL DEMAND KVA-	31.22	
								TOTAL DEMAND AMPERES-	86.66	

PANELBOARD SCHEDULE

PANEL DESIGNATION	VOLTS	PHASE	WIRES	MAINS MLO: MAIN LUGS ONLY MCB: MAIN CKT. BKR. BUS SIZE	OVERCURRENT DEVICE FRAME AMPS	OVERCURRENT DEVICE TRIP AMPS	BKR. POLES	BRANCH DEVICES BREAKER AMPS 15	20	25	30	40	50	60	70	* TOTAL POLES	MOUNTING S: SURFACE F: FLUSH	GROUND BUS	ADDITIONAL BRANCH C.B.'S	REMARKS
V	120/208	3	4	MLO	200	200	1		32	2						42	F	✓	–	–
							2		3	1										
							3		–											
–	–	–	–	–	–	–	1		–							–	–	✓	–	–
							2		–											
							3		–											

* INCLUDES SPACES

POWER PLAN GENERAL NOTES:

1. ALL SINGLE-PHASE RECEPTACLES RATED 150V TO GROUND OR LESS, 50A OR LESS, AND THREE-PHASE RECEPTACLES RATED 150V TO GROUND OR LESS 100A OR LESS, SHALL HAVE GROUND-FAULT CIRCUIT-INTERRUPTER PROTECTION FOR PERSONNEL PER NEC ARTICLE 210.8(B)(2). PROVIDE GFCI TYPE CIRCUIT BREAKERS, UNLESS SPECIFICALLY INDICATED OTHERWISE.
2. COLOR AND TYPE OF ALL DEVICES AND DEVICE PLATES SHALL BE APPROVED BY ARCHITECT PRIOR TO PURCHASE/INSTALLATION.

E.C. SHALL PROVIDE ALL RECEPTACLES, CAPS, AND POWER CORDS FOR ALL KITCHEN EQUIPMENT AS REQUIRED. RECEPTACLES, CAPS, AND POWER CORDS ARE TO BE PROVIDED ACCORDING TO THE EQUIPMENT MANUFACTURER'S SPECIFICATIONS AND SHALL COMPLY WITH ALL APPLICABLE CODES. RECEPTACLES INDICATED TO SERVE A SINGLE APPLIANCE SHALL BE SIMPLEX 5-20R AND WIRED TO A DEDICATED GFCI CIRCUIT BREAKER, UNLESS NOTED OTHERWISE. REFER TO POWER FLOOR PLAN

3. PROVIDE LOCKABLE, INDICATING TYPE CIRCUIT BREAKERS FOR APPLIANCE BRANCH CIRCUITS PER NEC ARTICLE 422.
4. E.C. SHALL PROVIDE CONNECTIONS DIRECTLY TO ALL KITCHEN EQUIPMENT ACCORDING TO THE MANUFACTURER'S INSTALLATION INSTRUCTIONS. ELECTRICAL CONNECTIONS SHALL COMPLY WITH ALL APPLICABLE CODES.
5. ALL SAFETY SWITCHES SHALL BE HEAVY DUTY TYPE. PROVIDE WEATHERPROOF SWITCHES WHERE SHOWN DENOTED AS "WP".
6. E.C. SHALL BE RESPONSIBLE FOR ALL WIRING OF THE EXHAUST HOOD AND THE ASSOCIATED EQUIPMENT AND COMPONENTS.
7. E.C. SHALL BE RESPONSIBLE FOR ALL INTERNAL WIRING OF THE WALK-IN COOLERS AND FREEZERS AND THEIR COMPONENTS.
8. PROVIDE WIRING FROM VFD IN HOOD CONTROL PANEL TO EXHAUST FAN EF-1. REFER TO KITCHEN DRAWINGS FOR WIRING DIAGRAM
9. ALL RECEPTACLES TO BE MARINE GRADE NON CORROSIVE.

REFER TO FINAL KITCHEN EQUIPMENT CONTRACT DRAWINGS FOR EXACT EQUIPMENT LOCATIONS, CONNECTION TYPES, AND DEVICE MOUNTING HEIGHTS

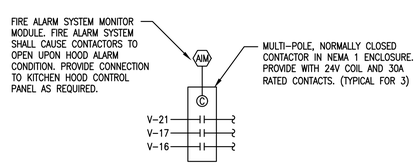

3 KICTHEN HOOD #1 CONTACTOR DETAIL
SCALE: NTS

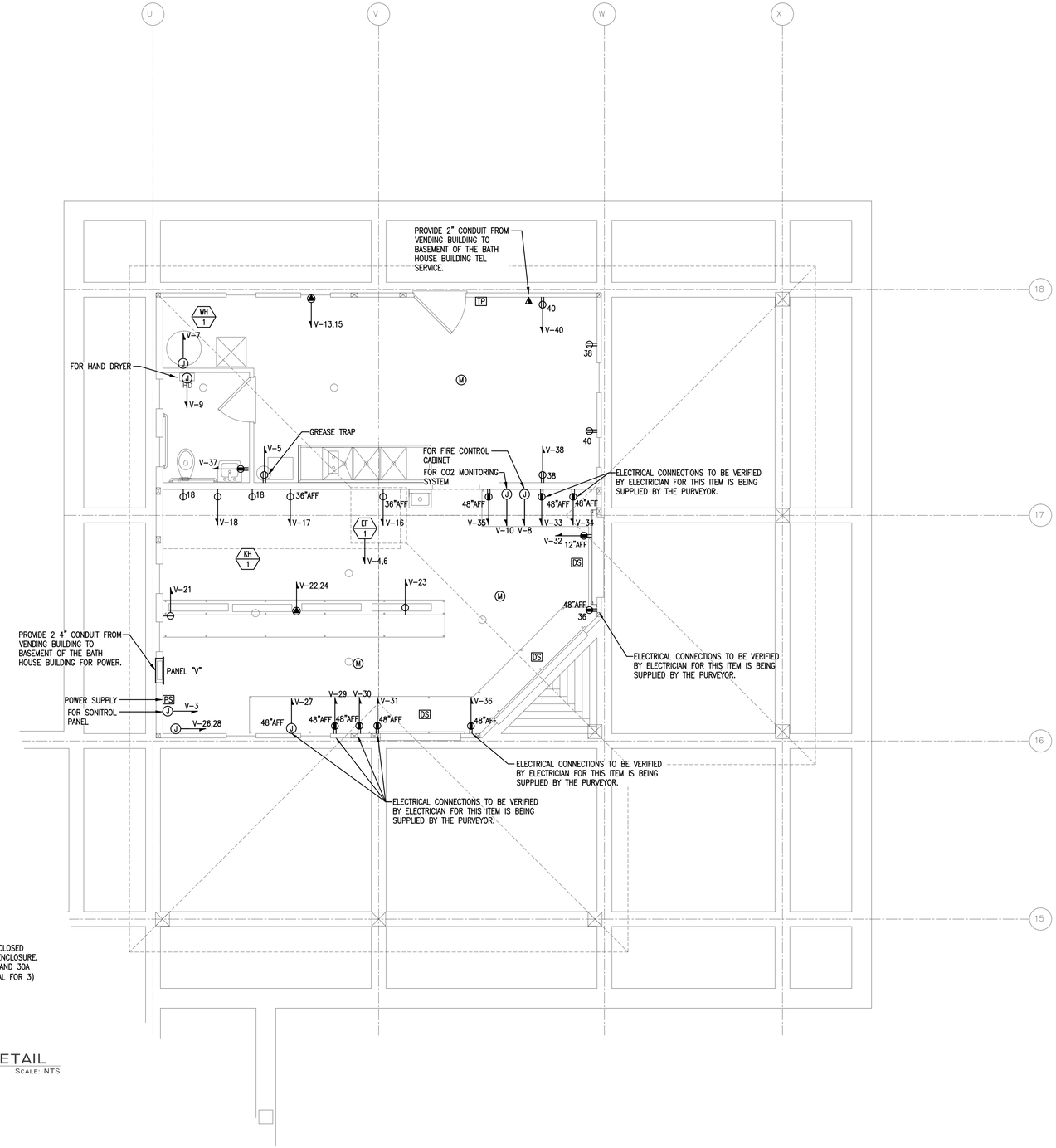

1 FIRST FLOOR PLAN
SCALE: 1/4"= 1'-0"

BURGIN LAMBERT
ARCHITECTS
150 Bellevue Avenue
Newport, Rhode Island 02840
Tel: 401.847.3339
Fax: 401.847.3392
www.burginlambert.com

MISQUAMICUT STATE BEACH
VENDING BUILDING
Westerly, RI

REVISIONS:	PROJECT #: 19
	DRAWN BY: NM
	DATE: 3/01/2019

ELECTRICAL - FIRST FLOOR POWER PLAN

E1.1

B|E|R
BUILDING ENGINEERING RESOURCES, INC.
66 Main Street
N. Easton, MA 02356
T 508.230.0260
F 508.230.0265
100 Midway Road - Suite 23
Cranston, RI 02920
T 401.942.3500
F 401.228.6205
ber@ber-engineering.com
www.ber-engineering.com

2019 © COPYRIGHT: THIS DRAWING IS NOT TO BE USED FOR MAKING ANY REPRODUCTION THEREOF, OR FOR CONSTRUCTION OF ANY BUILDING WITHOUT FIRST OBTAINING THE WRITTEN AUTHORIZATION FROM BURGIN LAMBERT ARCHITECTS, INC.

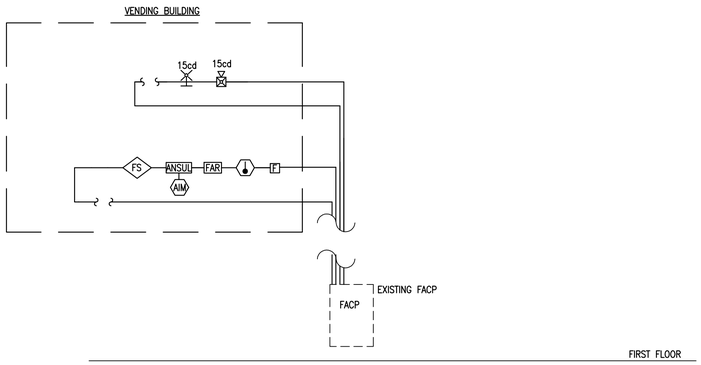

BUILDING FIRE ALARM RISER
N.T.S.

FIRE ALARM RISER NOTES:

1. REFER TO FLOOR PLAN FOR EXACT QUANTITIES AND LOCATIONS OF ALL DEVICES.
2. THE FIRE ALARM SYSTEM SHALL CONFORM WITH THE REQUIREMENTS OF THE RHODE ISLAND FIRE SAFETY CODE AND THE CITY OF WESTERLY FIRE DEPARTMENT. SHOP DRAWINGS SHALL BE SUBMITTED TO THE FIRE DEPARTMENT FOR APPROVAL.
3. ALL FIRE ALARM WORK SHALL BE IN ACCORDANCE WITH THE LATEST EDITIONS OF NFPA, STATE, AND LOCAL BUILDING CODES AND THE AMERICANS WITH DISABILITIES ACT (ADA).
4. PROVIDE REMOTE BOOSTER POWER SUPPLY PANELS AS REQUIRED.
5. PROVIDE FAULT ISOLATION MODULES ON THE SIGNAL LINE CIRCUIT TO PROTECT THE SYSTEM FROM LINE TO LINE FAULTS. MODULES SHALL BE PROVIDED AS REQUIRED, WITH A MINIMUM OF (1) MODULE PER EVERY 25 DEVICES.

FIRE ALARM GENERAL NOTES:

1. CONNECT ALL NEW FIRE ALARM DEVICES IN VENDING BUILDING TO EXISTING FACP.
2. MATCH EXISTING WIRING TO FIRE ALARM DEVICES.
3. REPROGRAM FACP TO INCLUDE NEW FIRE ALARM DEVICES.

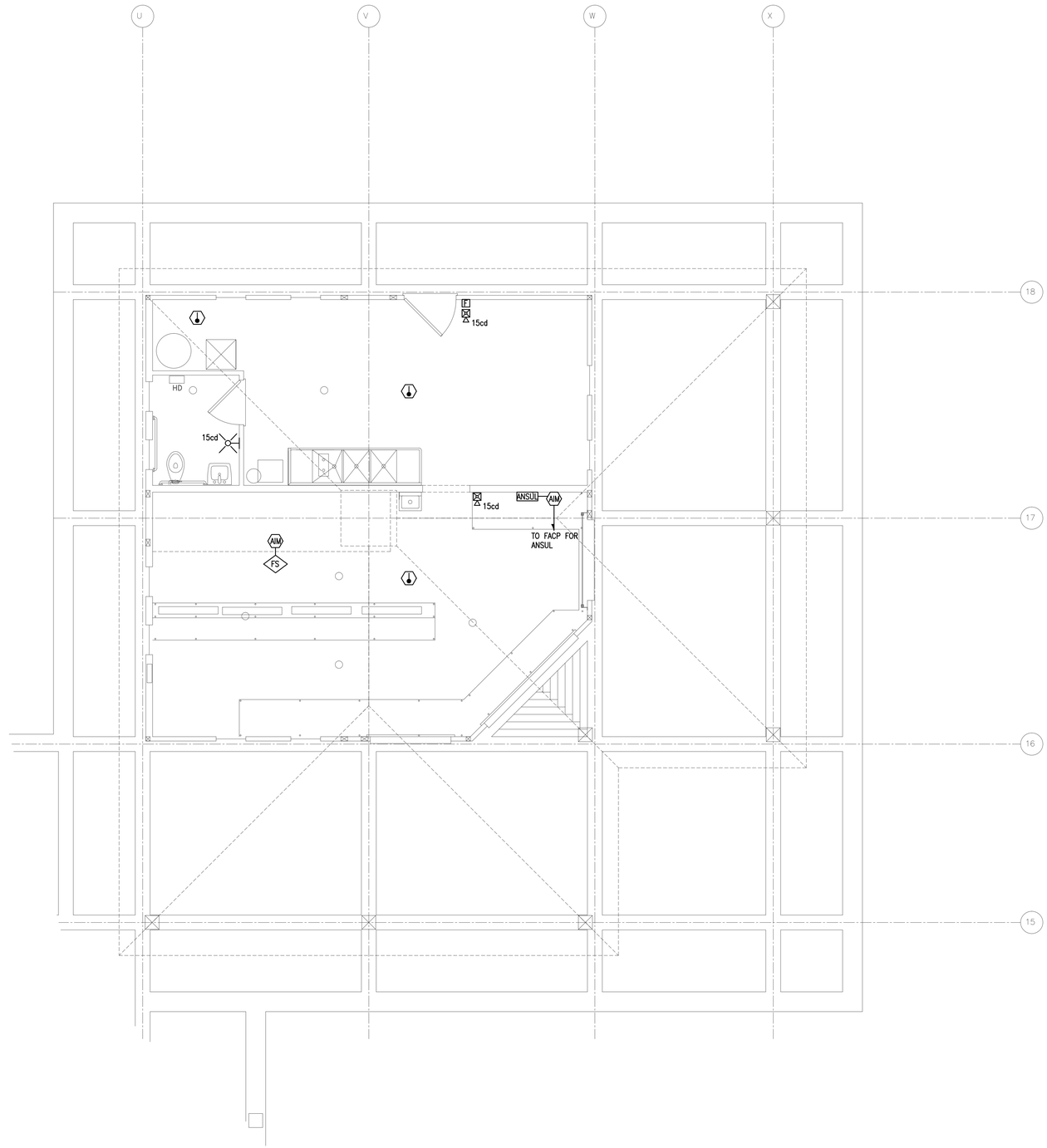

1 FIRST FLOOR PLAN
SCALE: 1/4"= 1'-0"

B|E|R
BUILDING ENGINEERING RESOURCES, INC.
66 Main Street
N. Easton, MA 02356
T 508.230.0260
F 508.230.0265
ber@ber-engineering.com
100 Midway Road - Suite 23
Cranston, RI 02920
T 401.942.3500
F 401.228.6205
www.ber-engineering.com

BURGIN LAMBERT
ARCHITECTS
150 Bellevue Avenue
Newport, Rhode Island 02840
Tel: 401.847.3339
Fax: 401.847.3392
www.burginlambert.com

MISQUAMICUT STATE BEACH
VENDING BUILDING
Westerly, RI

REVISIONS:	PROJECT #: 19
	DRAWN BY: NM
	DATE: 3/01/2019

FIRE ALARM - FIRST FLOOR PLAN

FA1.0

2019 © COPYRIGHT THIS DRAWING IS NOT TO BE USED FOR MAKING ANY REPRODUCTION THEREOF, OR FOR CONSTRUCTION OF ANY BUILDING WITHOUT FIRST OBTAINING THE WRITTEN AUTHORIZATION FROM BURGIN LAMBERT ARCHITECTS, INC.