The requirement reads as follows:

ALS/MWO shall be capable of operation using single phase 198-253 VAC, 50/60 Hz shore power in lieu of its primary power source (see spec. 3.4.3.1) (T).

Note: The single phase voltage range is to be inclusive of the following use cases: 120/240 VAC 60Hz three wire input, a 120/208 VAC 60Hz three wire input (2 legs of a 3 phase 208VAC generator), and a 230 VAC 50 Hz two wire input. The CONUS power has a plus/minus 5% tolerance, the OCONUS 230V power has a plus/minus 10% per CENELEC Harmonization Document HD 472 S1:1988

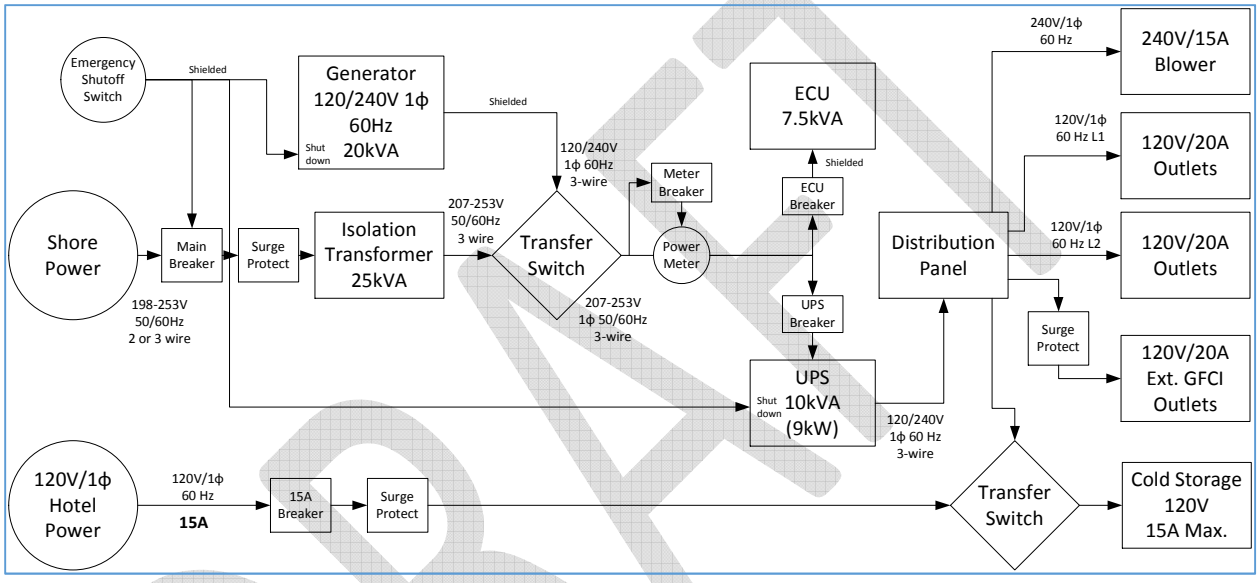

ALS MWO Electrical Architecture

There are three (3) different shore power connectors/pigtails supplied with the ALS MWO vehicle. Each adapter satisfies a single "Use Case", dependent upon the service supplied to the facility or incoming source of power.

The ALS MWO single phase voltage range of 198-253 VAC, 50/60 Hz includes the following 3 Use Cases:

1. 120/240 VAC 60Hz three wire input- single phase power for use in US
2. **120/208 VAC 50/60Hz three or four wire input – three phase power for use in US**
3. 230 VAC 50 Hz two wire input – single phase for use in OCONUS

This summary will focus on properly connecting the ALS MWO Use Case #2 shore power adapter. This Use Case, 120/208VAC 60Hz meets the requirement for standard utility power supplied in the US to commercial facilities.

(Pic of wiring diagram of W3 power pigtail)

CAUTION: Prior to connecting the ALS MWO vehicles to shore power, work with the installation Facilities Personnel to ensure that the facility is properly wired/equipped to provide the vehicle with a dedicated 100 Amp, 240V (198-253 VAC) single phase 50/60Hz, service.

- **Connecting the ALS MWO vehicle to shore power**

WARNING:

ONLY *Authorized/Certified Personnel (i.e. the Facilities Engineer and/or Facilities Certified Electrician/Technician should connect (hardwire) the ALS MWO pigtail to shore power at facility service panel*.

a. Locate the ALS MWO shore power pigtail adapter**. A Certified Electrician/Technician and/or Facility Authorized Personnel will hardwire/connect the ALS MWO dedicated shore power pigtail to the designated facility service panel.**

insert 1. actual picture of pigtail #2 – not connected with wires shown

CAUTION: Facilities Personnel will follow all governing SOP's associated with electrical hazards/installation to limit the risk to Personnel and/or vehicle.

(Insert pic at distribution panel- pigtail hanging- source from ADM)

NOTE: It is acceptable for the ALS MWO pigtail connector to remain connected to the service panel and hang freely with the cable pins covered when not connected to the ALS MWO vehicle.

b. Locate and visually inspect (fraying, dirt, wear, tears, etc.) the ALS MWO 25' 100 Amp power extension cable supplied with the ALS MWO vehicle. If the visual inspection was acceptable, connect the male end of the cable to the ALS MWO shore power pigtail adapter connected to the facility power panel dedicated to the ALS MWO System.

(Insert 2. picture of the actual 25' cable and wiring diagram W2, 100 Amp 25' the power cable assembly)

DRAFT

CAUTION:

It is important to note that due to the electrical wiring of the shore power pigtail connector, Users should ensure that ONLY the system provided 25’ ALS MWO 100 Amp power extension cable is connected to the ALS MWO shore power pigtail and the facility power. An existing connector will not work. (refer to pinout in table below)

Table depicts Shore Power 208V Phase A/Phase B Pigtail Adapter for US

MS90558C44412P Pin	Signal	Signal Name	Wire Gauge	Pig Tail Non-Terminated Wire
A	NC	No Connection	N/A	N/A
B	120V, Phase A	Phase A Input	2 AWG	120V, Phase A
C	120V, Phase B	Phase B Input	2 AWG	120V, Phase B
N	NC	No Connection	N/A	N/A
G1	GND	Ground	9 AWG	G1, G2, G3, G4, tied together to a single Ground
G2	GND	Ground	9 AWG	
G3	GND	Ground	9 AWG	
G4	GND	Ground	9 AWG	

DRAFT

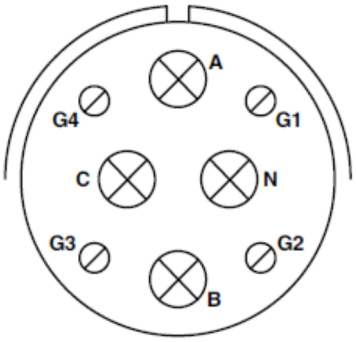

44-12, 44-13
Three phase AC, 4 wire, grounding

c. Connect the female end of the ALS MWO 25’ 100 Amp power extension cable assembly to the I/O panel shore power connector on the side of the vehicle.

DRAFT

MISC notes for inclusion?

Finally, based upon the initial feedback received, we are currently looking **to implement t**he following:

1. Proper cable labeling/tags and safety/warning signage on the vehicle (mitigate risk of improper hook up.) Labeling will include the facility distribution box/panel or 100 A breaker dedicated to the System only.

2. Ensure all applicable documentation includes the following verbiage (currently included in the TM) " The shore power electrical connection pigtail must be installed by a certified electrician. Failure to comply may result in serious injury or death to personnel"

3. 3. Provide the Units with a short "read-ahead" document (by email) to include schematic/drawings prior to receipt of the CALS system. A hard-copy of this information will be provided in the back of the TM

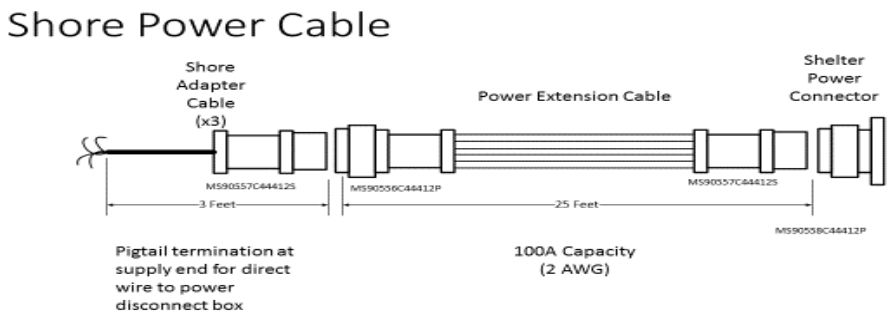

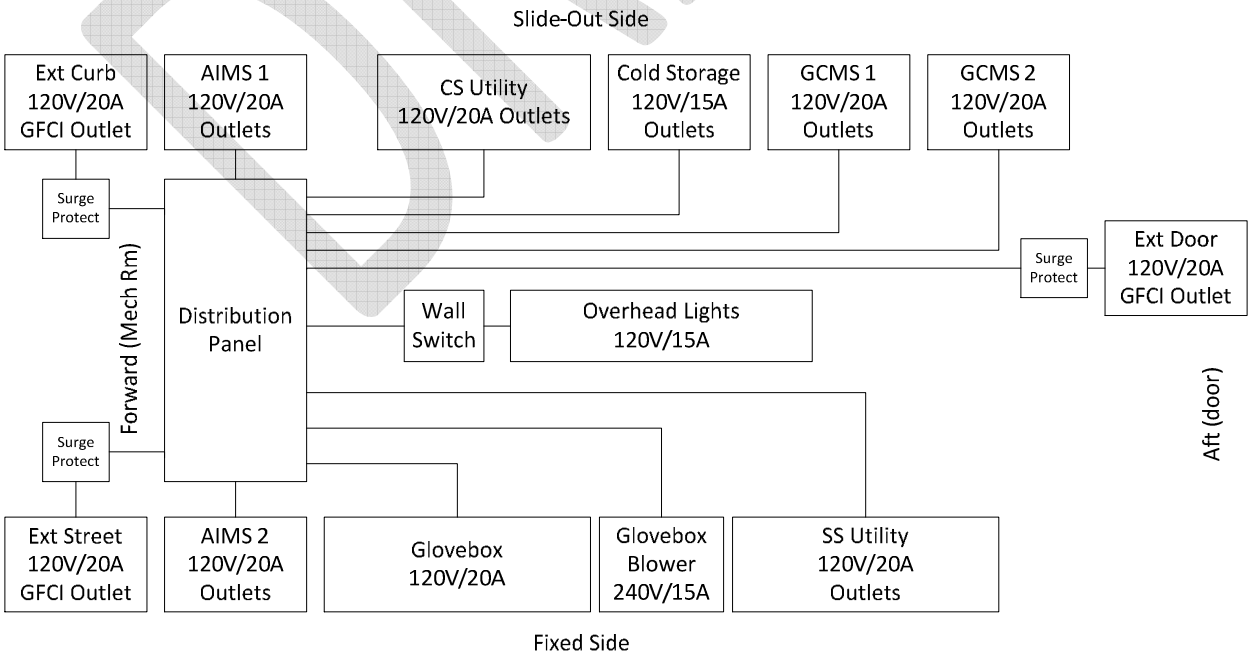

The Shelter includes a 25-kW rated isolation transformer which accepts 120/240V, 120/208V, and 240V inputs, provides a 120/240V output wired as shown in the figure below.

Transformer Wiring

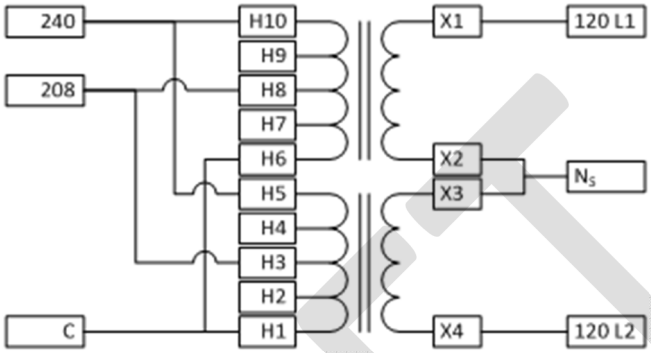

25kVA Isolation Transformer

DRAFT