RI ARMY NATIONAL GUARD

ADDITION TO BUILDING P-6

COVENTRY, RI

50 Holden Street · Providence, Rhode Island 02908
(401) 272-1730 · www.rgb.net

Architecture · Project Management · Interior Design

RGB architects

THE ROBINSON GREEN BERETTA CORPORATION — ARCHITECTURE, PROJECT MANAGEMENT & INTERIOR DESIGN

CONSULTANTS

NARRAGANSETT ENGINEERING INC. — CIVIL
C.A. PRETZER ASSOCIATES, INC. — STRUCTURAL
BUILDING ENGINEERING RESOURCES, INC. — MECHANICAL, ELECTRICAL, PLUMBING & FIRE PROTECTION

LIST OF DRAWINGS

REVISION DATE	SHEET #	SHEET NAME
	0000	COVER
	G001	ABBREVIATIONS
	G002	MATERIALS LIST
CIVIL		
	SV.01	EXISTING CONDITIONS PLAN
	C.01	SITE PLAN
	C.02	DETAILS
ARCHITECTURAL		
	A010	CODE REVIEW
	A030	FLOOR, WALL & ROOF CONSTRUCTION TYPES
	A101	FLOOR PLAN
	A102	ROOF PLAN
	A200	EXTERIOR ELEVATIONS
	A400	BUILDING SECTIONS
	A401	WALL SECTIONS
	A402	WALL SECTIONS
	A500	EXTERIOR SECTION DETAILS
	A501	EXTERIOR SECTION DETAILS
	A510	EXTERIOR PLAN & ROOF DETAILS
	A601	REFLECTED CEILING PLAN
	A901	FINISH SCHEDULE
	A910	DOOR & WINDOW FRAME SCHEDULE
	A921	OVERHEAD DOOR DETAILS
	A922	DOOR & TRENCH DRAIN DETAILS
STRUCTURAL		
	S101	FOUNDATION PLAN AND GENERAL NOTES
	S102	BUILDING SECTIONS
PLUMBING		
	P001	PLUMBING - LEGEND, NOTES & DETAILS
	P100	PLUMBING - FLOOR PLAN, SCHEDULES & KEYED NOTES
MECHANICAL		
	M100	MECHANICAL LEGEND, NOTES, SCHEDULES AND DETIALS
	M200	PARTIAL FLOOR PLAN - MECHANICAL
ELECTRICAL		
	E001	ELECTRICAL - LEGEND, SCHEDULE & NOTES
	E002	ELECTRICAL - SPECIFICATIONS
	E100	ELECTRICAL - POWER FLOOR PLAN
	E101	ELECTRICAL - LIGHTING FLOOR PLAN
	FA100	FIRE ALARM FLOOR PLAN

RI ARMY NATIONAL GUARD - 6336

STATUS: ISSUED FOR CONSTRUCTION

DATE: OCTOBER 31, 2017

ABBREVIATIONS

AFF	ABOVE FINISHED FLOOR
AF	ABOVE FLOOR
ACP	ACCESS PANEL
ACC	ACCESSORY, ACCESSORIES
ACOUS	ACOUSTICAL
ACT	ACOUSTIC CEILING TILE
ADH	ADHESIVE
ADJ	ADJUSTABLE
AGG	AGGREGATE (S)
A/C	AIR CONDITIONING
AVB	AIR/VAPOR BARRIER
AC	ALTERNATING CURRENT
ALT	ALTERNATE
ALUM	ALUMINUM
AT	ALUMINUM THRESHOLD
ANC	ANCHOR (S) ANCHORAGE (S)
AB	ANCHOR BOLTS
∠	ANGLE
ANOD	ANODIZED
ANT	ANTENNA (E)
APP	APPROVED, APPROVAL
APPROX	APPROXIMATE
AD	AREA DRAIN
@	AT
ATT	ATTACH, ATTACHMENT
ALD	AUTOMATIC LOUVER DAMPER
AVE	AVENUE
AVG	AVERAGE
BTB	BACK TO BACK
BM	BEAM
BMK	BENCH MARK
BG	BEARING
BPL	BEARING PLATE
BIT	BITUMINOUS
BC	BOTTOM OF CURB
BLK	BLOCK
BLKG	BLOCKING
BD	BOARD
BF	BOTTOM OF FOOTING
BO	BOTTOM OF
BOC	BOTTOM OF CURB
BS	BOTH SIDES
BW	BOTH WAYS
BOT	BOTTOM
BKT	BRACKET
BK	BRICK
BRG	BRIDGING, BRIDGE (D)
BTU	BRITISH THERMAL UNIT
BLDG	BUILDING
BUR	BUILT-UP ROOFING
CK	CHALK
CBT, CAB	CABINET
CPT	CARPET
CI	CAST IRON
CB	CATCH BASIN
CLG	CEILING
CTR	CENTER
CL, ℄	CENTERLINE
CTC	CENTER TO CENTER
C	CENTIGRADE (CELSIUS)
CT	CERAMIC TILE
CLF	CHAIN-LINK FENCE
CB	CHALKBOARD
CH, [	CHANNEL
CM	CENTIMETER
CV	CHECK VALVE
CHWR	CHILLED WATER RETURN
CHWS	CHILLED WATER SUPPLY
CKT	CIRCUIT
CO	CLEANOUT
CLR	CLEAR, CLEARANCES
CLS	CLOSURE
CW	COLD WATER
C,COL	COLUMN
COMP	COMPRESS (ED),(ION),(IBLE)
CONC	CONCRETE (PORTLAND CEMENT)
CMU	CONCRETE MASONRY UNITS
COND	CONDUIT
CX	CONNECTION
CONT	CONTINUOUS
CLL	CONTRACT LIMIT LINE
CONTR	CONTRACTOR
CJ	CONTROL JOINT
CFL	COUNTERFLASHING (S)
CS	COUNTERSINK, COUNTERSUNK
CU	CUBIC
CU	COPPER
CFM	CUBIC FEET PER MINUTE
CFS	CUBIC FEET PER SECOND
CF	CUBIC FEET
CU IN	CUBIC INCH
CY	CUBIC YARD
CYL	CYLINDER, CYLINDRICAL
DPR	DAMPER
DP	DAMPPROOF (ED),(ING)
DL	DEAD LOAD
DB	DECIBEL
DEG	DEGREE
DEM	DEMOLISH, DEMOLITION
DEP	DEPRESSED
DET	DETAIL
DIA or ϕ	DIAMETER
DIAG	DIAGONAL
DIM	DIMENSION
DC	DIRECT CURRENT
DCX	DISCONNECT (ION)
DPN	DISPENSER
DPL	DISPOSAL, DISPOSABLE
DR	DOOR
DBL	DOUBLE
DH	DOUBLE-HUNG
DTA	DOVETAIL ANCHOR
DTS	DOVETAIL ANCHOR SLOT
DN	DOWN
DS	DOWNSPOUT
D	DRAIN, DRAINAGE LINE
DI	DRAIN INLET
DT	DRAIN TILE
DWG,DRWG	DRAWING (S)
DF	DRINKING FOUNTAIN
DMH	DROP MANHOLE
EIFS	EXT. INSUL FINISH SYSTEM
EW	EACH WAY
EA	EACH
EFF	EFFICIENCY
E, ELECT.	ELECTRIC, ELECTRICAL
EP	ELECTRIC PANEL
EWC	ELECTRIC WATER COOLER
EL, ELEV	ELEVATION
ENC	ENCLOSE, ENCLOSURE
EQ, =	EQUAL (TO)
EQP, EQUIP	EQUIPMENT
EXH	EXHAUST
ED	EXHAUST DUCT
EF	EXHAUST FAN
EH	EXHAUST HOOD
EXIST.	EXISTING
EXP	EXPANSION
EXP	EXPOSED
EB	EXPANSION BOLT
EJ	EXPANSION JOINT
ET	EXTENDED, EXTENSION
EPS	EXTRUDED POLYSTYRENE
EXT	EXTERIOR
FAB	FABRICATE
FO	FACE OF
FS, FOS	FACE OF STUD
FAS	FASTEN, FASTENER
FPM	FEET PER MINUTE
FPS	FEET PER SECOND
FNDR	FEMININE NAPKIN DISPENSER UNIT
FNDP	FEMININE NAPKIN DISPOSAL UNIT
FF	FINISH FLOOR
FBD	FIBERBOARD
FGL	FIBERGLASS
FIL	FILLER (S)
FIN	FINISH
FFE	FINISH FLOOR ELEVATION
FFL	FINISH FLOOR LINE
FTR	FINNED TUBE RADIATION
FA	FIRE ALARM STATION
FDC	FIRE DEPARTMENT CONNECTION
FE	FIRE EXTINGUISHER
FEC, FXC	FIRE EXTINGUISHER CABINET
FHC	FIRE HOSE CABINET
FHR	FIRE HOSE RACK
FH	FIRE HYDRANT
FMN	FIRE MAIN
FP	FIREPROOF (ING)
FR	FIRE RESISTANT
FRC	FIRE-RESISTANT COATING
FRT	FIRE-RETARDANT TREATMENT
FSP	FIRE STANDPIPE
FXD	FIXED
FXT	FIXTURE
FLG	FLASHING
FHCS	FLAT HEAD COUNTERSUNK SCREW
FHWS	FLAT HEAD WOOD SCREW
FLX	FLEXIBLE
FLR	FLOOR, FLOORING
FD	FLOOR DRAIN
FGR	FLOOR GRILLE (REGISTER)
FLU	FLUORESCENT
FL	FLOW LINE
FT	FOOT, FEET
FC	FOOTCANDLES
FTG	FOOTING
FWK	FORMWORK
FND, FDN	FOUNDATION (WALL)
FR	FRAME (D),(ING)
FBO	FURNISHED BY OTHERS
F & I	FURNISH & INSTALL
FURR	FURRING
FUT	FUTURE
FAI	FRESH AIR INTAKE
FRP	FIBER REINFORCED PLASTIC
FSL	FUSIBLE LINK
GAL	GALLON (S)
GPH	GALLONS PER HOUR
GPM	GALLONS PER MINUTE
GPS	GALLONS PER SECOND
GALV	GALVANIZED
GI	GALVANIZED IRON
GST	GALVANIZED STEEL
G	GAS
GKT	GASKET (ED)
GAV	GATE VALVE
GA	GAUGE
GLB	GLASS BLOCK
GMU	GLAZED MASONRY UNITS
GB	GRAB BARS
GRD	GRADE, GRADING
GRT	GRANITE
GVL	GRAVEL
GR	GRILLE
GD	GROUND (ED)
GT	GROUT (ED)
GYP. BD.	GYPSUM WALLBOARD
GWB	GYPSUM WALLBOARD
GYL	GYPSUM LATH
GFRC	GLASS FIBER REINF. CONC.
GPL	GYPSUM PLASTER
HW	HAND HOLD
HA	HANGER
HBD	HARDBOARD
HC	HANDICAP(PED)
HDN	HARDENER (ED)
HDW	HARDWARE
HWD	HARDWOOD
HD	HEAD
HDR	HEADER
HDE	HEAT DETECTOR
HTG	HEATING
HAC	HEATING & AIR CONDITIONING
H & V	HEATING & VENTILATING
HVAC	HEATING, VENTILATING & AIR CONDITIONING
HVC	HEATING, VENTILATING, COOLING
Hz	HERTZ (CYCLES PER SECOND)
HPL	HIGH PRESSURE LAMINATE
HV	HIGH VOLTAGE
HWY	HIGHWAY
HO	HOLD OPEN
HCWD	HOLLOW CORE WOOD
HM	HOLLOW METAL
HMD	HOLLOW METAL DOOR
HMF	HOLLOW METAL FRAME
HK	HOOK (S)
HR	HOUR
HOR, HORZ.	HORIZONTAL
HP	HORSEPOWER
HB	HOSE BIBB
HW	HOT WATER
HWR	HOT WATER RETURN
HWC	HOT WATER, CIRCULATOR
HWF	HOT WATER FAUCET
HWH	HOT WATER HEATING
HWT	HOT WATER TANK
HYD	HYDRANT
IN	INCH
INCL	INCLUDING (ED),(SIVE)
INFO	INFORMATION
ID	INSIDE DIAMETER
INSL	INSULATE (D),(ATION)
IMC	INSULATED METAL CLAD
INT	INTERIOR, INTERNAL
INV	INVERT
IE	INVERT ELEVATION
IDM	ISOLATE DISC. METALS
JAN	JANITOR
JT	JOINT
JF	JOINT FILLER
JS	JOINT SEALER
J	JOIST
JCT	JUNCTION
JB	JUNCTION BOX
KVA	KILOVOLT-AMPERE
KW	KILOWATT
K	KIP
KD	KNOCK DOWN
LAB	LABORATORY
LAD	LADDER
LAM	LAMINATE (D)
LAT	LATERAL
LAV	LAVATORY
LB	LAG BOLT
LBL	LABEL
LBS, #	POUND'S
LCC	LEAD COATED COPPER
LDR	LEADER
LH	LEFT-HAND
LHOD	LESS WIDTH OF DOOR
LIN	LINEN
LP	LIGHT PROOF
LS	LIMESTONE
LTL	LINTEL
LL	LIVE LOAD
LW	LIGHT WEIGHT
LP	LOW PRESSURE
LOC	LOCATION
LKR	LOCKER
LG	LONG, LENGTH
LONG	LONGITUDINAL
L or LH	LONG SPAN STEEL JOIST
LVR	LOUVER
LV	LOW VOLTAGE
MB	MACHINE BOLT
MH	MANHOLE
MFD,MFR'D	MANUFACTURED
MFR	MANUFACTURER
MFG	MANUFACTURING
MBL	MARBLE
MK	MARK
MAS	MASONRY
MCJ	MASONRY CONTROL JOINT
MJ	MASONRY JOINT
MO	MASONRY OPENING
MTL	MATERIAL (S)
MAX	MAXIMUM
MC	MEDICINE CABINETS
MED	MEDIUM
MDF	MEDIUM DENSITY FIBERBOARD
MBR	MEMBER
MMB,MEMB	MEMBRANE
MTL	METAL
METC	METAL CLAD
ME	METAL EDGE
MRE	METAL ROOF DECK(ING)
M	METER (S)
MEZZ	MEZZANINE
MIC	MICROPHONE
MM	MILLIMETER
MWK	MILLWORK
MIN	MINIMUM
MIR	MIRROR
MIS	MISCELLANEOUS
MXV	MIXING VALVE
MOD	MODULAR
MLD	MOLDING
MDO	MEDIUM DENSITY OVERLAY
MT	MOUNT (ED), (ING)
MHT	MOUNTING HEIGHT
MUL	MULLION
NL	NAILABLE
NAT	NATURAL (FINISH)
NRC	NOISE-REDUCTION CO-EFFICIENT
NOM	NOMINAL
NC	NON-CORROSIVE
NIC	NOT IN THIS CONTRACT
NTS	NOT TO SCALE
NO,#	NUMBER
OC	ON-CENTER
K,L,H	OPEN-WEB STEEL JOIST
OPG, OPNG	OPENING
OPR	OPERATOR
OPP	OPPOSITE
O.H.,OPH	OPPOSITE HAND
OHS	OPPOSITE HAND SIMILAR
OSB	ORIENTED STRAND BOARD
OAE	OR APPROVED EQUAL
OZ	OUNCE (S)
OD	OUTSIDE DIAMETER
OA	OVERALL
OH	OVERHEAD
OHB	OVERHEAD BRACED
OHD	OVERHEAD DOOR
OF	OWNER FURNISHED
OFI	OWNER FURNISHED & INSTALLED
OFCI	OWNER FURNISH-CONTRACTOR INSTALL
OX	OXYGEN
PT	"P" TRAP
PNT, PTD	PAINT, PAINTED
PR	PAIR
PNL	PANEL
PAR, //	PARALLEL
PBD	PARTICLE BOARD
PTN	PARTITION
PCT or %	PERCENT (AGE)
PF	PERFORATED (D)
PERIM	PERIMETER
PERP, ⊥	PERPENDICULAR
P	PHASE
P&I	PROVIDE & INSTALL
PLAS	PLASTER
PL	PLATE
PLUMB	PLUMBING
PLYWD	PLYWOOD
PNU	PNEUMATIC
POL	POLISH (ED)
PE	PORCELAIN ENAMEL
PCF	POUNDS PER CUBIC FOOT
PLF	POUNDS PER LINEAR FOOT
PSF	POUNDS PER SQUARE FOOT
PSI	POUNDS PER SQUARE INCH
PIC	POURED INPLACE CONCRETE
PDF	POWER DRIVEN FASTENER (ING)
PCC	PRECAST CONCRETE
PREFAB	PREFABRICATED
PRN	PREFINISH (ED)
PRF	PREFORMED
PM	PREMOLDED
PRTTL	PRESSED METAL
PVT	PRIVATE
PROJ	PROJECT
PL, ℄	PROPERTY LINE
PUB	PUBLIC
PA	PUBLIC ADDRESS SYSTEM
PB	PULL BOX
PU	PULL, PULL CHAIN
PP	PUMP
PD	PUMP DISCHARGE
PIV	POST INDICATOR VALVE
PC	PHYSICALLY CHALLENGED
PVC	POLY VINYL CHLORIDE
QT	QUARRY TILE
RW	RACEWAY
RAD	RADIATOR, RADIATION
RA, R	RADIUS
R	RISER
RL	RAIL, RAILING
RR	RAILROAD
RECP	RECEPTACLE
REF	REFERENCE
RFL	REFLECTIVE
RE	REFER TO
REG	REGISTER
RFC	REINFORCE (D) (ING)
RC	REINFORCED CONCRETE
REQ,REQ'D	REQUIRE(ED), REQUIREMENTS
R & S	REMOVE AND SALVAGE
R & D	REMOVE AND DISPOSE
R & R	REMOVE AND REINSTALL
RESIL	RESILIENT
RTN	RETAIN (ED) (ER) (ING)
RVS, REV	REVERSE (SIDE)
REV	REVISE (ED), REVISION
RPM	REVOLUTIONS PER MINUTE
RPS	REVOLUTIONS PER SECOND
RH	RIGHT HAND
WC	WATER CLOSET
WHA	WATER HAMMER ARRESTOR
WP	WATERPROOF (ED), (ING)
WPT (WP)	WORK (ING) POINT
WST	WEATHERSTRIPPING
WE	WEEPHOLE
WWF	WELDED WIRE FABRIC
WID	WIDE, WIDTH
WFLF	WIDE-FLANGE BEAM
WG	WIRE GLASS
WM	WIRE MESH
W, W/	WITH
W/IN	WITHIN
WO, W/O	WITHOUT
WD	WOOD
WB	WOOD BASE
WBM	WOOD BEAM
WBO	WORK BY OTHERS
WBOR	WORK BY OWNER
WBT	WORK BY TENANT
WK	WORK
WKRM	WORKROOM
WI	WROUGHT IRON
XR	X-RAY
Y	WYE FITTING
Z	ZONE
ZC	ZINC COATED
ZS	ZEE STUD
STD	STANDARD
ST	STEEL
STIFF	STIFFENER
STN	STONE
STO	STORAGE
SD	STORM DRAIN
ST	STREET
S	STRUCTURAL
SIP	STRUCTURAL INSULATED PANEL
SUP	SUPPORT
SUSP	SUSPENDED
SAT	SUSPENDED ACOUSTIC TILE
SUSP CEIL	SUSPENDED CEILING
SYM	SYMMETRY (ICAL)
SYS	SYSTEM
TB	TACKBOARD
TEL	TELEPHONE
TV	TELEVISION
TMP, TEMP	TEMPER (ED)
TCV	TEMPERATURE CONTROL VALVE
TP	TEST PIT
TZ	TERRAZZO
THM	THERMOMETER
THS	THERMOSTAT
TH	THICK, THICKNESS
THR	THRESHOLD
TCL	TIME CLOCK
TOL	TOLERANCE
TG, T & G	TONGUE AND GROOVE
TO	TOP OF
TOC	TOP OF CONCRETE / CURB
TOS, TS	TOP OF STEEL
TOW	TOP OF WALL
TRANS	TRANSFORMER
TR	TRANSOM
TJI	TRUSS JOIST 'I' SECTION
TP	TURNING POINT
TYP	TYPICAL
TOM	TOP OF MASONRY
UHF	ULTRAHIGH FREQUENCY
UF	UNDERFLOOR (DUCT)
UG	UNDERGROUND
UL	UNDERWRITERS LABORATORY
UNF	UNFINISHED
UNO	UNLESS NOTED OTHERWISE
UH	UNIT HEATER
UK	UNIT KITCHEN
UV	UNIT VENTILATOR
UAS	UPWARD ACTING SECTIONAL
VJ	V-JOINTED
VA	VACUUM
VAB	VACUUM BREAKER
VB	VAPOR BARRIER
VP	VAPORPROOF
VNR	VENEER
VE	VENT
VR, VTR	VENT THROUGH ROOF
VTR	VENTILATOR
VER, VERT	VERTICAL
VHF	VERY HIGH FREQUENCY
VLF	VERY LOW FREQUENCY
VI	VIBRATION ISOLATOR
VNL	VINYL
VCT	VINYL COMPOSITION TILE
VB	VINYL BASE
VF	VINYL FABRIC
VQT	VINYL QUARTZ TILE
VS	VINYL SHEET
VT	VINYL TILE
VIT	VITREOUS
VC	VITRIFIED CLAY
V	VOLT (AGE)
VWC	VINYL WALLCOVERING
WN	WAINSCOT
WH	WALL-HUNG
WHY	WALL HYDRANT
WTW	WALL TO WALL
W	WASTE
WR	WASTE RECEPTACLES
WC	WATER CLOSET
WHA	WATER HAMMER ARRESTOR
WP	WATERPROOF (ED), (ING)
WPT (WP)	WORK (ING) POINT
WST	WEATHERSTRIPPING
WE	WEEPHOLE
WWF	WELDED WIRE FABRIC
WID	WIDE, WIDTH
WFLF	WIDE-FLANGE BEAM
WG	WIRE GLASS
WM	WIRE MESH
W, W/	WITH
W/IN	WITHIN
WO, W/O	WITHOUT
WD	WOOD
WB	WOOD BASE
WBM	WOOD BEAM
WBO	WORK BY OTHERS
WBOR	WORK BY OWNER
WBT	WORK BY TENANT
WK	WORK
WKRM	WORKROOM
WI	WROUGHT IRON
XR	X-RAY
Y	WYE FITTING
Z	ZONE
ZC	ZINC COATED
ZS	ZEE STUD

SYMBOLS

TITLE MARK

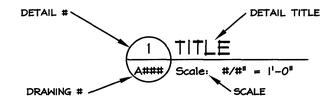

DETAIL MARK

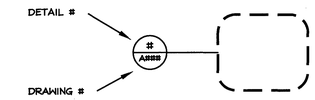

SECTION MARK

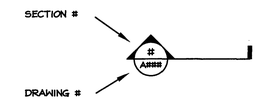

INTERIOR ELEVATION

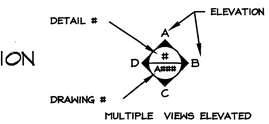

EXTERIOR ELEVATION

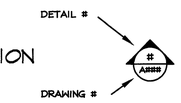

DOOR TAG

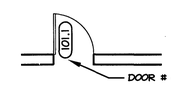

DOOR # = FIRST 3 NUMBERS DENOTE ROOM WHERE DOOR IS LOCATED
DECIMAL # INDICATES DOOR IN ROOM

WINDOW TAG

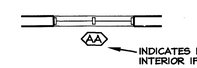

INDICATES WINDOW TYPE: IF LETTER, THEN INTERIOR IF NUMBER, THEN EXTERIOR

WORK NOTES

XXX — NOTES WITHOUT ARROW INDICATE ENTIRE SPACE/AREA

XXX — NOTES WITH ARROWS INDICATE SPECIFIC AREAS &/OR ITEMS

— MATERIAL NOTE
RE: A002 FOR LIST OF MATERIALS

PHYSICALLY CHALLENGED AND/OR HANDICAPPED ACCESSIBLE

NORTH — REF NORTH — PROJECT NORTH ARROWS

ROOM TAG

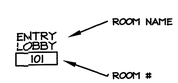

WALL CONSTRUCTION TAG

RE: DRAWING SHEET A030 FOR DESCRIPTION, DETAIL & MATERIAL

DIMENSIONS

DIMENSIONS ARE TO FOS UNO — 8'-0"

CENTER LINE
CENTER LINE BM
CENTER LINE COL — 8'-0" — C.L. BM. — C.L. COL.

FO CMU — 8'-0" — FO CMU — FO CMU

FO BRICK
FO CONC. — 8'-0" — FO BRICK FO CONC — FO BRICK FO CONC

ALIGN WORK &/or ITEMS — ALIGN

VERTICAL ELEVATION REFERENCE (ARCH REF. = 100'-0") — FIRST FLOOR ELEV = 23'-0"

This drawing is copyrighted and is subject to copyright protection as an "architectural work" under 17 U. S. C. Sec. 101 et seq. The protection includes but is not limited to the overall form as well as the arrangement and composition of spaces, materials, color and elements in the design. Under such protection, unauthorized use of this drawing may result in the cessation of construction or buildings being seized and/or monetary compensation being awarded to The Robinson Green Beretta Corporation (RGB).

Any reproduction, possession, or use of this drawing or any part thereof without the express written permission of RGB, is prohibited. Violators will be prosecuted to the full extent of the law.

© RGB 2017

Certification

Drawn by --

Checked by DLD

Revised on

50 Holden Street
Providence, Rhode Island 02908

Phone: (401) 272-1730
Fax: (401) 273-7156

E-mail: rgbinfo@rgb.net
www.rgb.net

RGB ARCHITECTS

Architecture · Project Management · Interior Design

Project

RI ARMY NATIONAL GUARD

ADDITION TO BUILDING P-6

COVENTRY, RI

Drawing Status

ISSUED FOR CONSTRUCTION

Issued On OCTOBER 31, 2017

Sheet Contents

ABBREVIATIONS

Project Number. 6336

Drawing No.

G001

Sheet of

Site Work

20 LAYER OF COMPACTED STONE/GRAVEL 6" U.N.O.
21 FINISH GRADE (Re: Civil Dwgs)
21A PAVING (CONCRETE OR ASPHALT) (Re: Civil Dwgs)
21B EARTH / LANDSCAPE / BEDDING (Re: Civil Dwgs)
22 not used
23 FENCING
23A GALV CHAIN LINK FENCING SYSTEM
23B ORNAMENTAL FENCING SYSTEM (Re: Civil Dwgs)
24 BELOW GRADE DRAINAGE SYSTEM
24A FOUNDATION 6" DIA HIGH DENSITY PERFORATED POLYETHELYENE PIPING W/ FILTER FABRIC WRAP
24B BELOW SLAB 6" DIA HIGH DENSITY PERFORATED POLYETHELYENE PIPING W/ FILTER FABRIC WRAP
24C FILTER FABRIC
24D SURFACE CLEANOUT IN 18" SQ X 6 CONC. PAD (Re: Civil Dwgs)
25 UNIT PAVERS FINISH SYSTEM

Concrete

30 CAST IN PLACE CONCRETE FOUNDATION SYSTEM (Re: Struct. Drwgs)
30A CONCRETE FOOTING (Re: Struct. Drwgs)
30B CONCRETE WALL (Re: Struct. Drwgs)
30C CONCRETE PIER (Re: Struct. Drwgs)
30D REINFORCING BAR (Re: Struct. Drwgs)
31 CAST IN PLACE CONCRETE SLAB (Re:Struct. Drwgs or as noted)
31A CONCRETE SLAB ON GRADE w/ W.W.F.
31B CONCRETE FLOOR SLAB w/ REINFORCING (Re: Struct. Drwgs)
31C CONCRETE MUD SLAB 3" MIN THICKNESS U.N.O.
31D CONCRETE SLAB ON METAL DECK (Re: Struct Drwgs)
32 CAST IN PLACE CONCRETE SIDEWALK w/ W.W.F (Re:Site Drwgs or as noted)
32A CONCRETE PAD w/ W.W.F. (Re:Site Drwgs or as noted)
33 PRECAST CONCRETE STRUCTURAL SYSTEM (Re: Struct. Drwgs)
33A PRECAST CONCRETE PLANK (Re: Struct. Drwgs)
34 CAST IN PLACE CONCRETE STRUCTURAL SYSTEM (Re: Struct. Drwgs)
34A CAST IN PLACE WALL (Re: Struct. Drwgs)
34B CAST IN PLACE BEAM (Re: Struct. Drwgs)
34C CAST IN PLACE COLUMN (Re: Struct. Drwgs)
35 ACCESSORIES
35A FIBROUS EXPANSION JOINT MATERIAL, 3/8" R-2 Min U.N.O.
36 GROUT, NON-SHRINK, NON METALLIC, 6000 PSI (Re: Struct. Drwgs)
37 ARCHITECTURAL PRECAST CONCRETE (Re: Struct. Drwgs)
38 GFRC GLASS FIBER REINFORCED CONCRETE SYSTEM
39 NOT USED

Masonry

40 BRICK
40A BRICK TYPE/ COLOR #1
40B BRICK TYPE/ COLOR #2
41 CMU
41A 4" CMU
41B 6" CMU
41C 8" CMU
41D 10" CMU
41E 12" CMU
41F 2" SOAP
42 GLAZED CMU
43 GROUND FACED CMU
44 STONE VENEER SYSTEM
44A SYNTHETIC
44B DOLOMITIC LIMESTONE
45 MASONRY ACCESSORIES
45A VENEER TIES @ 16" o.c.e.w. U.N.O.
45B VENEER TIES, SINGLE POST, @ 16" o.c.e.w. U.N.O.
45C HORIZONTAL JOINT REINFORCING @ 16" o.c. vert. U.N.O.
45D TIE / STRAP SECURED TO BEAM OR COLUMN @ 16" o.c. U.N.O.
45E ROD REINFORCING, 1/8" DIA Min. U.N.O.
45F ANCHOR STRAPS, 1/8" Min THICKNESS x 1" U.N.O.
45G DOVE TAIL ANCHOR SLOTS, CAST IN CONCRETE BACKUP @ 16" o.c. U.N.O.
45H BOND BREAKER, 30# FELT Min. U.N.O.
45J COMPRESSIBLE FILLER STRIP, 1/2" Min THICKNESS U.N.O.
45K EXTRUDED RUBBER CONTROL JOINT
45L WEEP HOLES, RECTANGULAR, PLASTIC, INSECT RESISTANT SPACING @ 24" O.C. @ BRICK AND 32" O.C. @ CMU U.N.O.
45M DRAINAGE NETTING SYSTEM VARY DEPTHS 6" TO 8" IN EACH 30" LENGTH
46 MASONRY LINTEL SYSTEM
46A CMU BOND BEAM w/ REINF. BARS Size as noted or Re: Struct. Drwgs
47 FLASHING SYSTEMS
47C COPPER LAMINATED FABRIC
47M SELF ADHERING MEMBRANE FLASHING
47S STAINLESS STEEL
48 GROUT CELL/VOIDS SOLID w/ 2500 PSI Min U.N.O. Re: Struct or as noted
48A PROVIDE W/ REINFORCING BAR #5 Min U.N.O. Re: Struct or as noted
49 not used

Metal

50 STRUCTURAL STEEL (Re: Structural Drwgs)
50B BEAM
50C COLUMN
50G GIRDER
50J JOIST
50T TRUSS
51 METAL DECK
51A ROOF DECK (Re: Structural Drwgs)
51B FLOOR DECK
51C CLOSURE ANGLE (POUR STOP) (Re: Structural Drwgs or as noted)
52 not used
53 MISCELLANEOUS SHAPES (size/shape as noted or Re: Struct. Drwgs)
53A ANGLE
53B BENT PLATE
53C CHANNEL
53D PLATE
53E TUBE
53F PIPE
53G SUPPORT ROD ALTHREAD ROD
53H ANCHOR BOLT
53J NELSON STUDS (size/shape as noted or Re: Struct. Drwgs)
54 LIGHT GAUGE FRAMING SYSTEM (Re: Struct or as noted)
54A STUD (Re: Struct or as noted)
54B JOIST / RAFTER (Re: Struct or as noted)
54C TRUSS SYSTEM (Re: Struct or as noted)
54D BRIDGING (Re: Struct or as noted)
55 MISCELLANEOUS METAL ITEMS, SIZE/SHAPE AS NOTED (shop painted)
55A METAL LADDER SHAPE & SIZE AS NOTED (GALV or shop primed/field painted)
55B GALV BOLLARD, 4000 PSI CONC. FILLED (GALV or shop primed/field painted)
55C METAL RAILING SYSTEM, SIZE AS NOTED
55E ROOF BLOCKING ATTACHMENT BOLTS THROUGH STEEL 3/8"x @ 12" O.C. w/ 2" WASHERS AT WOOD
55F ROOF BLOCKING ANCHOR BOLTS INTO CMU or MASONRY SYSTEM 3/8"x 6" (PLUS HOOK) @ 24" (size as noted)
55H UNISTRUT SUPPORT SYSTEM
56 PREFABRICATED EXPANSION JOINT SYSTEM
56A FLOOR
56B WALL
56C CEILING
57 METAL STAIR SYSTEM, PAINTED, CONCRETE PAN FILLED
57A PIPE RAILING, HANDRAIL 1-1/4" I.D. U.N.O.
57B STRINGER 3/8" PLATE MIN U.N.O. (shape & size as noted)
57C STRINGER 'C' CHANNEL 12 X 20.7 MIN U.N.O. (shop primed/field painted)
57D METAL GUARD RAILING SYSTEM
57E WOVEN WIRE PANEL SYSTEM OF OF MAX OPNG U.N.O.

Wood and Plastic

60 WOOD STUD &/or JOIST
60A 2 x 4 @ 16" o.c. U.N.O.
60B 2 x 6 @ 16" o.c. U.N.O.
60C 2 x 8 @ 16" o.c. U.N.O.
60D 2 x 10 @ 16" o.c. U.N.O.
60E 2 x 12 @ 16" o.c. U.N.O.
61 WOOD BLOCKING (size &/or spacing as shown or noted)
62 PRESSURE TREATED WOOD, 2 x MIN (size &/or spacing as shown or noted)
62A ROOF PERIMETER EDGE 5 1/2" MIN. (depth of insulation plus underlayment)xCont
62B FIRE RETARDANT TREATED WOOD (FRT) (size as noted)
62C WOOD CANT 3"x3"xCONT, U.N.O.
63 STRUCTURAL WOOD MEMBERS (Re: Struct. or as noted)
63A WOOD COLUMN
63B WOOD BEAM
63C LAMINATED TIMBER
63D LAMINATED VENEER LUMBER
63F FLITCH PLATE BEAM
63J WOOD JOIST
63T WOOD TRUSS (Re: Struct. or as noted)
64 PLYWOOD, EXTERIOR GRADE
64A 5/8" EXTERIOR GRADE
64B 3/4" EXTERIOR GRADE
64C 3/4" FRT, EXTERIOR GRADE
64D 3/4" MDO
64E 3/4" MDO W/ EDGE BAND
64M 3/4" MARINE GRADE
64R ROOF SHEATHING T & G
65 INTERIOR BOARD
65A 1/2"PLYWOOD
65B 3/4" PLYWOOD
65C 3/4" T & G PLYWOOD
65D PARTICLE BOARD (size as noted)
65E FLOORING UNDERLAYMENT (size as noted)
66 MILLWORK CUSTOM DESIGN (Species/finish as noted and/or specified)
66A WOOD FINISH, STAINED
66B WOOD FINISH, PAINTED
67 WOOD TRIM, INTERIOR
67A TRIM, STAINED
67B TRIM, PAINTED
68 EXTERIOR WOOD FINISH
68A SIDING
68B CLAPBOARD
68C TRIM (Species/finish as noted and/or specified)
68D PREFINISHED SIDING (finish & size as noted)
68F PLASTIC EXTERIOR TRIM WOOD (finish & size as noted)
69 SOLID SURFACE

Thermal & Moisture Protection

70 ROOFING SYSTEM (coordinate w/roof construction type(s))
70A MEMBRANE (by roofing manufacturer)
70B BATTEN STRIP, METAL (by roofing manufacturer)
70C CAP FLASHING (by roofing manufacturer)
70D WALL FLASHING (by roofing manufacturer)
70E DECK UNDERLAYMENT
70F DECK PROTECTION BOARD (by roofing manufacturer)
70G ROOF CRICKET STRUCTURE/SYSTEM
70H CANT STRIP
70J ROOF WALKING PADS (by roofing manufacturer)
70K ROOF VAPOR BARRIER SYSTEM COORDINATE DESIGN & TYPE w/ ROOFING MFR.
70L ROOFING EXPANSION JOINT ASSEMBLY/SYSTEM
70M COMPRESSIBLE FOAM ROD, 1" NOMINAL DIA. U.N.O.
70N FIBERGLASS ROOF SHINGLE SYSTEM, HURRICANE NAILING PATTERN
71 WEATHER/WATERPROOFING SYSTEMS
71A DAMPPROOFING MASTIC
71B AIR BARRIER (COMMERCIAL GRADE)
71C AIR/VAPOR BARRIER SYSTEM
71D VAPOR BARRIER (10 MIL POLY MIN U.N.O.)
71E FELT PAPER 30# MIN U.N.O.
71F ROOFING, WATERPROOF UNDERLAYMENT MEMBRANE (VALLEY, RIDGE, RAKE & EAVE) NON SLIP, 40 MIL. SELF ADHESIVE MEMBRANE
71G PARAPET CAP UNDERLAYMENT MEMBRANE, 40 MIL SELF ADHESIVE MEMBRANE
71H GUTTER LINER MEMBRANE, WATERPROOF, 30 MIL min. U.N.O.
71J BENTONITE WATERPROOFING PANELS & DRAINAGE SYSTEM
71K WATERPROOFING, 60 MIL SELF ADHESIVE MEMBRANE W/PROTECTION BOARD
71L FILTER FABRIC & DIMENSIONAL SYSTEM (HYDROSTATIC RELIEF)
71M IRONITE WATERPROOFING (FOR ELEVATOR PIT INTERIOR)
72 INSULATION, THERMAL, SOUND AND FIRE PROTECTION
72A 1" R- 5 min. EXTRUDED POLYSTYRENE INSULATION
72B 2" R-10 min. EXTRUDED POLYSTYRENE INSULATION
72C 2 1/8" +/- R-12 min. EXTRUDED POLYSTYRENE High R-value CAVITY INSULATION
72D 2" R-11 MIN. POLYISOCYANURATE INSULATION (ROOF INSULATION)
72F BATT INSULATION, R-13 (3 5/8" Thickness)
72G BATT INSULATION, R-21 (6" Thickness)
72H BATT INSULATION, R-24 (8" Thickness)
72J BATT INSULATION, R-30 (10" Thickness)
72K BATT INSULATION, R-36 (12" Thickness)
72L BATT INSULATION, W/CLASS I FOIL FACING VAPOR BARRIER
72M MINERAL WOOL INSULATION &/or FIRE SAFING UL RATED FOR INSTALLATION SHOWN
72N SOUND ATTENUATION INSULATION SIZE AS NOTED &/OR INDICAED
72P SPRAY ON FIRE PROTECTON SYSTEM, U.L. RATED AS INDICATED
72R RIGID FIRE PROTECTION SYSTEM, U.L. RATED AS INDICATED
72S SPRAY APPLIED THERMAL/ACOUSTICAL INSULATION
72T CONCEALED MINERAL WOOL FIBER Non-Combustible SEMI-RIGID INSULATION BOARD R-VALUE &/or THICKNESS AS NOTED
72Z LOW EXPANSION POLYURETHANE FOAM INSULATION. 2#/DENSITY CLASS I FINISH FIRE RATING. FILL VOID OR AS INDICATED.
73 SEALANT, INTERIOR, EXTERIOR &/OR FIRE RATED SYSTEMS
73A BACKER ROD/ROPE
73B 3/8" +/- SHIM SPACE DRAFT STOP W/LOW EXPANSION POLYURETHANE FOAM
73C SEALANT w/ BACKER ROD /ROPE
73D SEALANT & TERMINATION BAR
73E FIRE CAULKING SYSTEM, UL RATED AS INDICATED FOR APPLICATION SHOWN
74 TRIMS & FASCIAS, PARAPET CAPS, COPPINGS, MISC. METAL FLASHING (as noted or as noted)
74A ZINC COATED COPPER 16oz MIN U.N.O.
74B COPPER 20oz MIN U.N.O.
74C HOLD DOWN CLEATS, CONTINUOUS
74D GALV METAL, SIZE AS NOTED
74E GALV METAL, THRU SHEATHING FLASHING
74M SELF ADHERING MEMBRANE FLASHING
75 PREFINISHED METAL (ALUMINUM) SYSTEMS
75A PREFINISHED STANDING SEAM METAL ROOF SYSTEM
75B PREFINISHED, CONCEALED FASTENER METAL PANELS, SIDING SYSTEM
75C SUBFRAMING (GIRTS, CHANNELS, STUDS, JOIST, etc) (size or noted or shown)
75D SOFFIT PANEL SYSTEM PREFINISHED, CONCEALED FASTENER (size as noted or shown)
75E LANCED/VENTED PANELS (10sq IN/LF)
75F PREFINISHED TRIM PIECES
75G METAL CORNICE SYSTEM & SUPPORTS
75H PREFINISHED, CONCEALED FASTENER, INSULATED METAL PANEL SYSTEM
75J COMPOSITE PANEL SYSTEM (size as noted or shown)
76 PREFINISHED METAL (ALUMINUM)
76A FASCIA, PARAPET CAP, GRAVEL STOP
76B FLASHING &/or COUNTER FLASHING, REGLETS (profile & size as noted or shown)
76C CONTINUOUS HOLD DOWN CLIPS (size/color/finish as noted or shown)
76D METAL GUTTER SYSTEM
76E DOWNSPOUT, RECTANGULAR, CORRUGATED
77 EXTERIOR INSULATION FINISH SYSTEM (EIFS)
77A EIFS, 1" RIGID INSULATION
77B EIFS, 2" RIGID INSULATION
77C EIFS, 3" RIGID INSULATION
77D MESH, STANDARD DUTY
77E MESH , HEAVY DUTY
77G SYSTEM WEEPS/FLASHING TERMINATION
78 MISCELLANEOUS ITEMS/MATERIALS/ACCESSORIES
78A ROOF ACCESS HATCH
78B SPRING POLE MOUNT TO LADDER @ CENTER BACK SIDE

Doors & Windows

80 DOOR (size/type as noted in door schedule)
80A INSULATED METAL CLAD
80B HOLLOW METAL DOOR
80C WOOD DOOR, SOLID CORE
80E OVERHEAD UPWARD ACTING SECTIONAL
80F OVERHEAD COILING
80G OVERHEAD COILING COUNTER
80H OVERHEAD COILING GRILLE
80J ACOUSTICAL DOOR SYSTEM
81 DOOR FRAME/JAMB
81A HOLLOW METAL FRAME
81B ACOUSTICAL METAL FRAME
81C DOOR GUIDES, BETWEEN JAMB MOUNTING
81D DOOR GUIDES, FACE OF JAMB MOUNTING
82 ACCESS DOOR
82A ACCESS DOOR (U.L. roted in rated assemblies)
82B FLOOR ACCESS DOOR
82C CEILING ACCESS DOOR
83 WINDOW SYSTEMS
83A ALUMINUM WINDOW (size & glazing as noted in window schedule)
83H HOLLOW METAL FRAME (shop primed / field paint)
83S STEEL FRAME WINDOW (size & glazing as noted in window schedule)
83W WOOD WINDOW stained U.N.O. (size & glazing as noted in window schedule)
84 ALUMINUM STOREFRONT &/or CURTAIN WALL WINDOW SYSTEMS
84A ALUMINUM STOREFRONT SYSTEM (size & glazing as noted in window schedule)
84B ALUMINUM STOREFRONT SYSTEM DOOR
84C ALUMINUM CURTAIN WALL SYSTEM (size & glazing as noted in window schedule)
84D ALUMINUM WINDOW, OPERABLE, IN STOREFRONT/CURTAIN WALL SYSTEM
84E ALUMINUM SILL TRIM 0.060 min. U.N.O. (color to match 84A or 84C)
84F ALUMINUM TRIM &/or FLASHING 0.040 min. U.N.O (color to match 84A or 84C)
84G ALUMINUM SUB SILL &/or HEAD RECEIVER (color to match 84A or 84C)
84H CURTAIN WALL STRUCTURAL ATTACHMENT (design by curtain wall mfr)
84J MISC WINDOW EXTENSION TRIM (match window finish)
85 GLAZING (size & type as noted in window schedule)
85A SINGLE PANE (tempered where required by code)
85B INSULATED (tempered where required by code)
85C SPANDREL (tempered where required by code)
85D SPANDREL, INSULATED
85E FIRE RATED
85F WIRE
85G BULLET RESISTANT (with manufacturer etched ID)
85L LAMINATED
87 HARDWARE (Refer Door Schedule)
87A THRESHOLD, SET IN MASTIC
87B THRESHOLD, SET IN GROUT
87C RAIN HOOD/SHIELD
87D KEY CABINET, SURFACE MOUNTED, 100 KEY MIN
87E KNOX BOX; PER LOCAL FIRE DEPT. REQUIREMENTS, RECESS MOUNTED

Finishes

90 WALL BOARD (as noted or shown, Re: Construction Types)
90A 5/8" TYPE 'X' GYP. BD.
90B 1/2" TYPE 'X' GYP. BD.
90C 1/2" TILE BACKER BD.
91 SHEATHING BOARD
91A 5/8" TYPE 'X' FIBERGLASS FACED (water resistant) GYPSUM SHEATHING
91B 1/2" TYPE 'X' FIBERGLASS FACED (water resistant) GYPSUM SHEATHING
91C 1/2" CEMENT BOARD
92 METAL STUD (size & type to match construction type required)
92A 4"x 18 GAUGE @ 16" o.c. U.N.O. (as noted or shown, Re: Construction Types)
92B 6"x 18 GAUGE @ 16" o.c. U.N.O.
92C 2"x 2" x CONT x 20 GAUGE CLIP ANGLE U.N.O.
92D 7/8" FURRING CHANNEL @ 16" o.c. U.N.O.
92E 1/2" RESILIENT FURRING CHANNEL @ 16" o.c. U.N.O.
92F 2" ZEE STUD @ 24" O.C. horiz. U.N.O. (as noted or shown, Re: Construction Types)
92G 2"x 20 GAUGE STRAP
93 DRYWALL ACCESSORIES
93A CASING BEAD
93B CORNER BEAD
93C CONTROL JOINT
93J J BEAD
93L L BEAD
94 not used
95 CEILING, SUSPENDED
95A LAY-IN TILE
95B 5/8" TYPE 'X' GYP. BD. W/ CONCEALED SUSPENSION SYSTEM
95C GYPSUM BOARD
96 FLOOR FINISH
96A TILE, CERAMIC or PORCELAIN (Re: Finish Schedule/Reflected Ceiling Plan)
96B SHEET FLOORING
96C CARPET
96D VCT
96E RUBBER TILE (Re: Finish Schedule)
96F TERRAZZO
96H ATHLETIC: SYNTHETIC
96J ATHLETIC: WOOD
96K AEROBIC/DANCE: WOOD
96L EPOXY FLOOR FINISH
96M RUBBER TREADS &/or NOSING
96N BRASS ANGLE @ TILE EDGES
96P STONE (Re: Finish Schedule)
97 WALL FINISH
97A TILE, CERAMIC or PORCELAIN (size & shape as noted)
97B TILE TRIM PIECE
97C VINYL WALL COVERING
97D PAINT
97E TUB/SHOWER ENCLOSURE PANEL
97F PLASTIC / LAMINATE / CORK PANELS
97G FIBERGLASS REINFORCED PANELS (FRP)
97H WALL PROTECTION (Re: Finish Schedule)
98 BASE (match floor finish material)
98A TILE, COVE U.N.O.
98B VINYL
98C CARPET
98D WOOD
98E RUBBER
98F EPOXY COVE

Specialties

100 TOILET PARTITION, FLOOR MOUNTED, OVERHEAD BRACED
100A URINAL SCREEN
100B PARTITION, DOOR 24" WIDE
100C PARTITION, DOOR 34" WIDE
101 TOILET ACCESSORIES (Re: Toilet Accessory Schedule)
102 MISCELLANEOUS SPECIALTIES
102A FIRE EXTINGUISHER
102E PACKAGE PASS THRU UNIT
102F FLAGPOLE
102G TACKBOARD
102H CHALKBOARD
102K WHITE BOARD (Re: Color Schedule)
102L PROJECTION SCREEN
102M MAILBOX UNIT
102N METAL SHELVING
103 WOVEN WIRE PARTITION SYSTEM (For layout Re: Drwgs)
103A GATE, SWING
103B GATE, SLIDING
104 ARCHITECTURAL EXTERIOR LOUVER (For size, depth, type Re:Drwgs)
104A SUB SILL
105 METAL LOCKER SYSTEM (For size & depth Re: Drwgs)
106 SIGNAGE (For size & type Re: Drwgs)
106A SIGNAGE, INTERIOR
106B SIGNAGE, EXTERIOR
107 OPERABLE WALL PARTITION SYSTEM
107A HEAD TRACK ASSEMBLY (As shown or detailed)
107B TRACK SUPPORT STRUCTURE (size as noted & shown)
107C POCKET DOOR

Equipment

110 PROJECT UNIQUE EQUIPMENT (Re: Equipment Schedule)
111 KITCHEN EQUIPMENT RESTAURANT/COMMERCIAL (Re: Equipment Schedule)
112 RESIDENTIAL KITCHEN EQUIPMENT
112A REFRIGERATOR
112B UNDER COUNTER REFRIGERATOR
112C OVEN
112D COOKTOP
112E EXHAUST HOOD
112F MICROWAVE
112G DISHWASHER
112H RANGE
113 TRASH REMOVAL SYSTEM
113A COMPACTOR
113B CHUTE
113C ROOF VENT/RELIEF
113D DUMPSTER
114 PARKING EQUIPMENT
114A TICKET DISPENSER
114B CARD READER
114C GATE
114D ATTENDANT BOOTH
115 ATHLETIC EQUIPMENT
116 LOADING DOCK EQUIPMENT
116A DOCK BUMPER
116B DOCK SEAL
116C DOCK SHELTER
116D DOCK LEVELER, PIT MOUNT
116E WORK LIGHT
116F IMPACT DOOR
117 not used

Furnishings

120 FLOOR GRILLE w/ EDGE TRIM (Re: Furnishings Drwgs)
120A FLOOR GRILLE (SURFACE, SET IN TILE)
120B WALK OFF CARPET MAT
121 RESIDENTIAL CABINETRY, PREFINISHED, PREFABRICATED
121A BACKSPLASH, 4" U.N.O.
121B FINISHED END PANEL, FACE
121C HARDWARE, PULLS
121D OPEN SHELF, (NO DOOR PANEL)
121E COUNTERTOP & EDGE
121F END SPLASH
122 not used
123 not used
124 not used
125 WINDOW TREATMENT/COVERING
125A BLINDS VERTICAL
125B BLINDS HORIZONTAL
125C CURTAINS (Re: Furnishings Drwgs)
125D SHADES

Division 13 Special Construction

130 PREMANUFACTURED METAL BUILDING SYSTEM
130A STRUCTURAL FRAME
130B WIND FRAMING COLUMN
130C PURLIN OR GIRTS
130E METAL PANEL, CONCEALED FASTENERS, PREFINISHED
130F METAL PANEL, LINER SYSTEM, PREFINISHED
130G TRIM SYSTEM

Conveying Systems

140 ELEVATOR
140A DOOR FRAME SYSTEM
140B DOOR SYSTEM
140C EQUIPMENT
140D ACCESSORIES (Position Indicator, Call Button, etc.)
140E HOIST BEAM
140F SILL PIECE
140G RAIL SUPPORT BEAM
141 not used
142 ESCALATOR
142A GUARD RAIL, GLAZED
142B GUARD RAIL, METAL
142C MISC. TRIM &/OR CLOSURES
143 not used

Mechanical

150 PLUMBING FIXTURES (Re: Plumbing Drwgs)
150A PIPING
150B MISC. ITEM
151 SPRINKLER SYSTEM (Re: Fire Protection Drwgs)
152 STANDPIPE SYSTEM (Re: Fire Protection Drwgs)
153 not used
154 not used
155 HVAC EQUIPMENT &/or ITEM (Re: Mechanical Drwgs)
155A UNIT HEATER
155B BASE BOARD
155C CABINET UNIT
155D DUCTWORK
156 HVAC LOUVER (Re: Mechanical Drwgs)

Electrical

160 ELECTRICAL ITEM (Re: Electrical Drwgs)
160A LIGHTSWITCH
160B RECEPTACLE POWER, DATA &/or COMMUNICATION
161 MAIN ELECTRICAL DISTRIBUTION SYSTEM
162 CIRCUIT PANEL
163 not used
164 not used
165 SECURITY SYSTEM EQUIPMENT
165A CAMERA
165B CARD SWIPE, READER, etc.
165C KEY PAD (Re: Electrical Drwgs)
166 not used

NOTE:
THIS IS A STANDARD SHEET. SOME ITEMS MAY NOT APPLY TO THIS PROJECT. FOR ADDITIONAL INFORMATION RE.: SPECIFICATIONS

This drawing is copyrighted and is subject to copyright protection as an "architectural work" under 17 U. S. C. Sec. 101 et seq. The protection includes but is not limited to the overall form as well as the arrangement and composition of spaces, materials, color and elements in the design. Under such protection, unauthorized use of this drawing may result in the cessation of construction or buildings being seized and/or monetary compensation being awarded to The Robinson Green Beretta Corporation (RGB).

Any reproduction, possession, or use of this drawing or any part thereof without the express written permission of RGB, is prohibited. Violators will be prosecuted to the full extent of the law.

© RGB 2017

Certification

DAVID L. DESJARDINS No. 2160 REGISTERED ARCHITECT
10/31/17

Drawn by --
Checked by DLD
Revised on

50 Holden Street
Providence, Rhode Island 02908

Phone: (401) 272-1730
Fax: (401) 273-7156

E-mail: rgbinfo@rgb.net
www.rgb.net

RGB architects.
Architecture · Project Management · Interior Design

Project

RI ARMY NATIONAL GUARD

ADDITION TO BUILDING P-6

COVENTRY, RI

Drawing Status
ISSUED FOR CONSTRUCTION

Issued On OCTOBER 31, 2017

Sheet Contents
MATERIALS LIST

Project Number. 6336

Drawing No.
G002

Sheet of

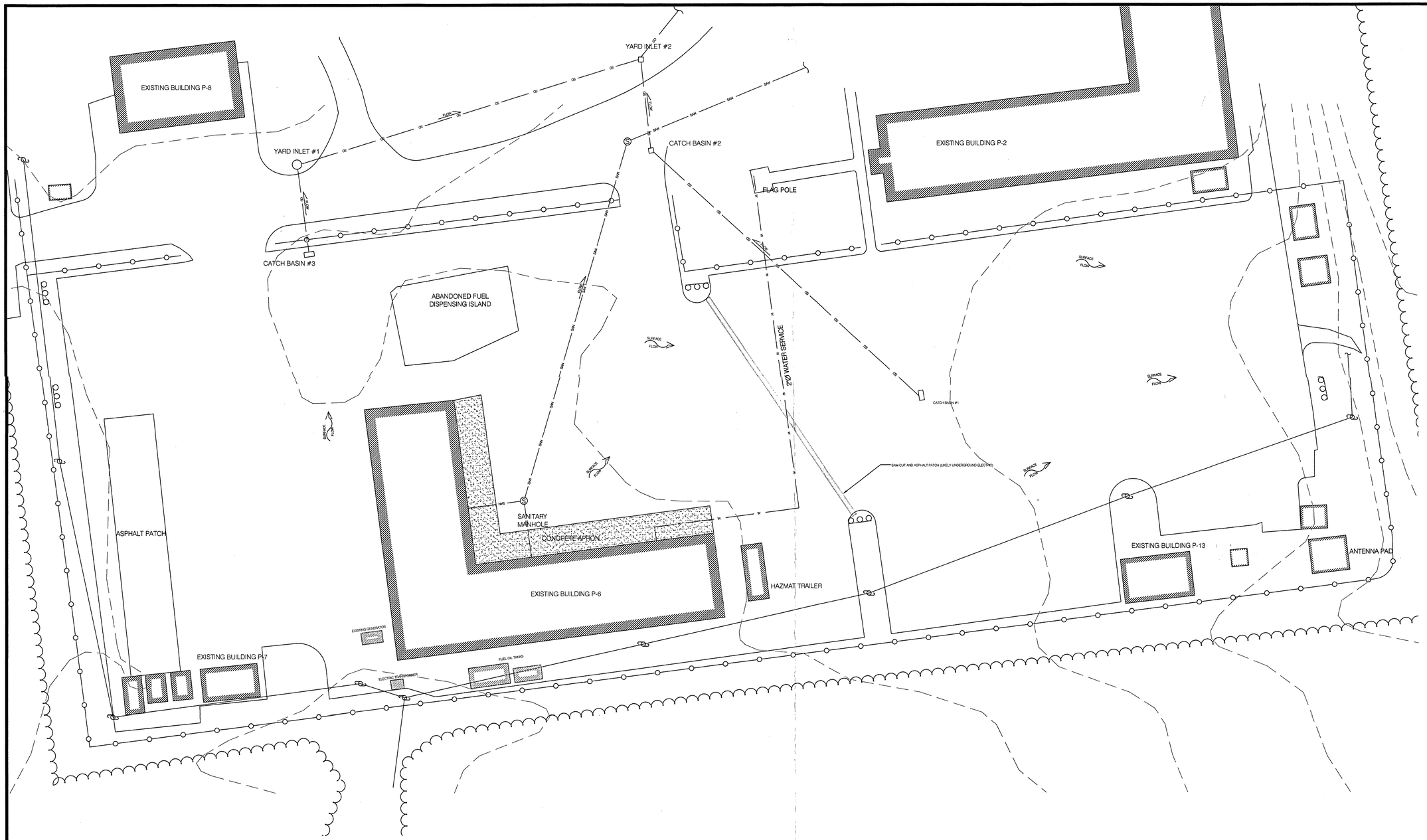

REFERENCE:

PLAN ENTITLED REPAIR/ALTERATION TO VARIOUS SQUADRON BUILDINGS, RHODE ISLAND AIR NATIONAL SITE PLAN AND DETAILS GUARD STATION COVENTRY, RHODE ISLAND DATED06/18/82 SCALE 1:40 BY DAVID PRESBREY ARCHITECTS
PLAN ENTITLED PHASE III UTILITY PLAN (AS-BUILT) DATED 11/29/1990 SCALE 1:20 BY GAROFALO & ASSOCIATES
PLAN ENTITLED ADD TO AND ALTER COMBINED AUTOMOTIVE MAINTENANCE / SUPPORT EQUIPMENT SHOP GRADING AND SITE LOCATION PLAN C-2 DATED 03/30/71 SCALE 1:20 BY DAVID PRESBREY ARCHITECTS AND GAROFALO & ASSOCIATES

UTILITIES:

ANY UTILITIES SHOW ON THIS PLAN HAVE LOCATED FROM AND EXISTING PLANS. THE SURVEYOR MAKES NOT GUARANTEE THAT THE UTILITIES SHOWN COMPRISE ALL SUCH OR ABANDONED. THE SURVEYOR DOES NOT WARRANT THAT THE UTILITIES SHOWN ARE THE EXACT LOCATION INDICATED ALTHOUGH THEY ARE LOCATED AS ACCURATELY AS POSSIBLE FORM ALL AVAILABLE INFORMATION (PLEASE CONTACT DIG SAFE PRIOR TO CONSTRUCTION AT PHONE NO. 1-888-DIG-SAFE AND OR ALL LOCAL UTILITY COMPANIES)

DATUM:

VERTICAL DATUM IS NAVD 88 U/N/O
HORIZONTAL DATUM IS RI STATE PLANE 83
CONTOUR DATA IS A COMPILATION OF FIELD SURVEY AND LIDAR COURTESY OF RIGIS SPRING 2011 NORTH EAST LIDAR PROJECT

FLOODPLAIN:

SITE IS NOT LOCATED WITH IN A FEMA SFHA PER MAP NO. 44009C0102J REVISED OCTOBER 16, 2013

LEGEND:

- EDGE OF PAVEMENT
- EXISTING GRADE CONTOUR
- EXISTING WATER
- SAN — EXISTING SANITARY
- GAS — EXISTING GAS
- EXISTING CHE
- EXISTING CHAIN LINK FENCE
- FLOW — PIPE FLOW DIRECTION
- SURFACE FLOW — SURFACE FLOW DIRECTION
- EXISTING STRUCTURE
- LIGHT POLE
- UTILITY POLE
- VEGETATION

This drawing is copyrighted and is subject to copyright protection as an "architectural work" under 17 U. S. C. Sec. 101 et seq. The protection includes but is not limited to the overall form as well as the arrangement and composition of spaces, materials, color and elements in the design. Under such protection, unauthorized use of this drawing may result in the cessation of construction or buildings being seized and/or monetary compensation being awarded to The Robinson Green Beretta Corporation (RGB).

Any reproduction, possession, or use of this drawing or any part thereof without the express written permission of RGB, is prohibited. Violators will be prosecuted to the full extent of the law.

© RGB 2017

Certification

DERICK HOPKINS
No. 11365
REGISTERED PROFESSIONAL ENGINEER
CIVIL

Drawn by DBH
Checked by DBH

Revised on

NARRAGANSETT ENGINEERING INC.
MAIN OFFICE:
3102 EAST MAIN ROAD,
PORTSMOUTH, RI 02871
TEL : (401) 683-6630
nei-cds.com

50 Holden Street
Providence, Rhode Island 02908

Phone: (401) 272-1730
Fax: (401) 273-7156

E-mail: rgbinfo@rgb.net
www.rgb.net

Architecture · Project Management · Interior Design

Project

RI ARMY NATIONAL GUARD

ADDITION TO BUILDING P-6

COVENTRY, RI

Drawing Status

ISSUED FOR CONSTRUCTION

Issued On 10/31/2017

Sheet Contents

EXISTING CONDITIONS PLAN

Project Number. 6336

Drawing No.

SV.01

Sheet of

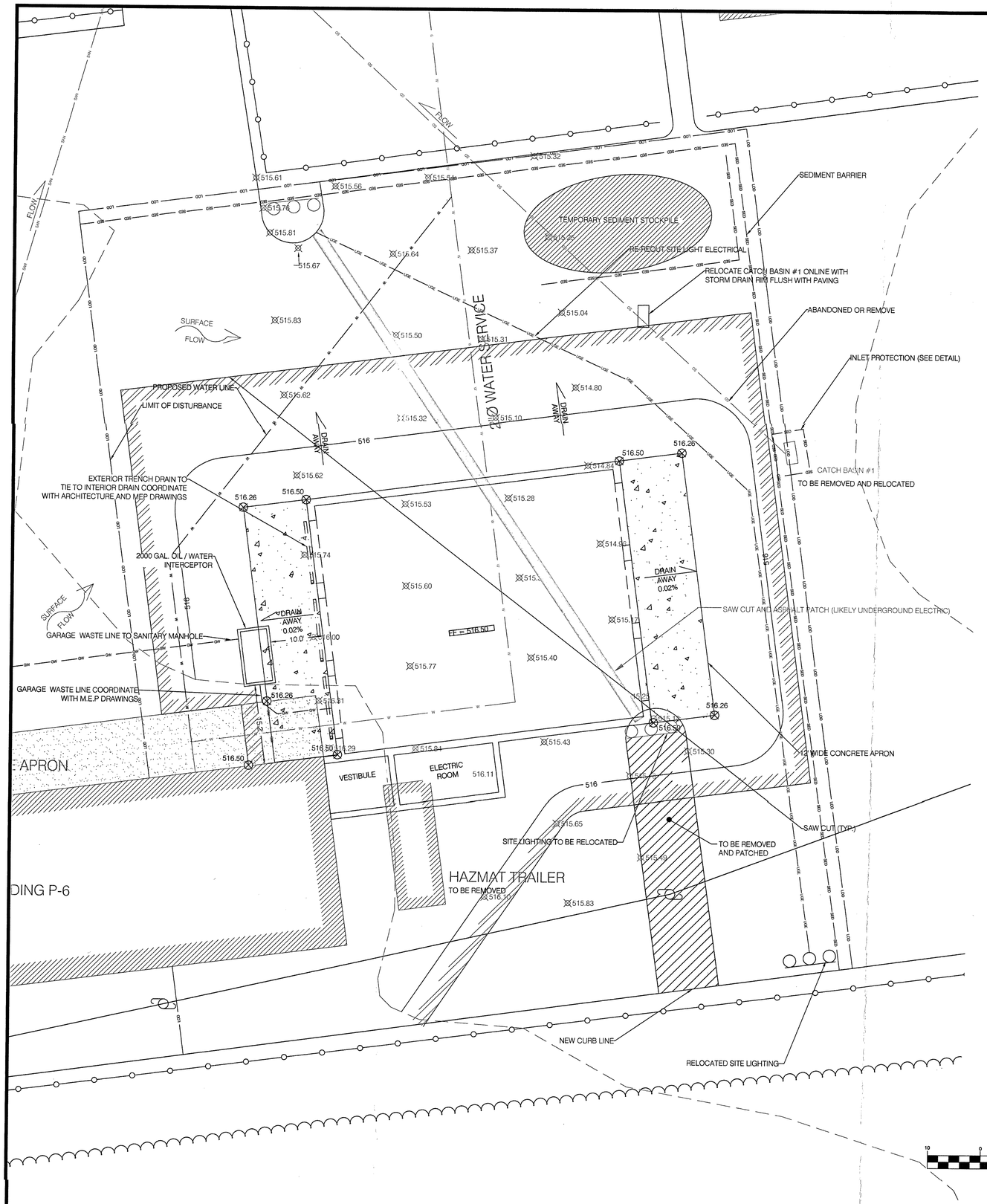

GENERAL NOTES:

1. THE STATE OF RHODE ISLAND STANDARD SPECIFICATION FOR ROAD AND BRIDGE CONSTRUCTION, 2004 EDITION, AND THE RHODE ISLAND STANDARD DETAILS ARE MADE A PART HEREOF AS FULLY AND COMPLETELY AS IF ATTACHED. ALL WORK SHALL CONFORM TO RHODE ISLAND STANDARD SPECIFICATION FOR ROAD AND BRIDGE CONSTRUCTION 2004 EDITION OR LATEST REVISION. THE 2004 EDITION OF THE STANDARD SPECIFICATION MAY BE OBTAINED AT THE RHODE ISLAND DEPARTMENT OF TRANSPORTATION.
2. IT SHALL BE THE CONTRACTOR'S SOLE RESPONSIBILITY TO APPLY FOR AND OBTAIN ANY AND ALL NECESSARY PERMITS, PAY ALL FEES AND POST ALL BONDS ASSOCIATED WITH THE SAME, AND COORDINATE WITH ARCHITECT OR ENGINEER AS NECESSARY
3. THE CONTRACTOR IS SOLELY RESPONSIBLE FOR THE SAFETY OF THE JOB SITE. THE CONTRACTOR SHALL PROVIDE TEMPORARY FENCING AND/OR BARRIERS AROUND ANY EXPOSED EXCAVATED AREAS IN ACCORDANCE WITH OSHA STANDARDS.
4. IN THE CASE THAT ANY DEVIATION / ALTERATION / OR IMPROVEMENT FROM THE APPROVED PLANS IS NECESSARY THE CONTRACTOR SHALL IMMEDIATELY CONTACT THE ENGINEER AND OWNER PRIOR TO OCCURRENCE OF DEVIATION
5. ALL WORK SHALL BE LIMITED TO THE AREAS WITHIN THE LIMIT OF DISTURBANCE DISPLAYED ON THESE PLANS OR PROPERTY LINE IF LIMIT OF DISTURBANCE IS UNCLEAR. ANY AREA DISTURBED OUTSIDE OF THE LIMIT OF DISTURBANCE SHALL BE REPAIRED AND RESTORED TO ITS ORIGINAL CONDITION AT NO COST TO THE OWNER OR ENGINEER, AND PREFORMED TO THE ENGINEERS SATISFACTION
6. ALL SITE WORK SHALL MEET OR EXCEED THE SITE WORK SPECIFICATION SHOWN ON THESE PLANS AND/OR ACCOMPANYING SPECIFICATIONS. THE CONTRACTOR SHALL BE RESPONSIBLE FOR DETERMINING IF ANY CONFLICTS WITH EXISTING CONDITIONS OR PROPOSED CONDITIONS EXIST. IF ANY CONFLICTS ARE DISCOVERED, THE CONTRACTOR SHALL NOTIFY THE OWNER AND ENGINEER PRIOR TO INSTALLATION OF ANY PORTION OF THE SITE WORK THAT WOULD BE AFFECTED
7. EXCAVATED ROCK SHALL BE REMOVED FROM THE SITE AND LEGALLY DISPOSED OF UNLESS OTHER ARRANGEMENTS ARE MADE WITH THE OWNER. SUITABLE ROCK MAY BE UTILIZED IN FILL AREAS WITH WRITTEN PERMISSION OF THE OWNERS REPRESENTATIVES
8. DEBRIS, ORGANICS AND OTHER UNSUITABLE MATERIALS UNCOVERED DURING THE COURSE OF SITE EXCAVATION SHALL BE REMOVED FROM THE SITE AND DISPOSED OF LEGALLY
9. THE CONTRACTOR SHALL BE SOLELY RESPONSIBLE FOR MAINTAINING THE INTEGRITY OF ALL EXISTING UTILITIES THAT SERVICE THE SITE AND NEIGHBORING AREAS. IF ANY DAMAGE OCCURS TO EXISTING UTILITIES IT SHALL BE THE CONTRACTORS RESPONSIBILITY TO PAY ALL COSTS ASSOCIATED WITH REPAIR OF UTILITIES AS DIRECTED BY THE ENGINEER, UTILITY OWNER, OR GOVERNING AGENCY
10. THE CONTRACTOR SHALL BE SOLELY RESPONSIBLE FOR QUANTITY TAKE-OFF IN COMPUTING ANY ESTIMATES
11. THE CONTRACTOR SHALL BE RESPONSIBLE FOR ESTABLISHING AND MAINTAINING ALL TEMPORARY SEDIMENTATION AND EROSION CONTROLS.
12. THE LOCATION OF EXISTING UTILITIES AS SHOWN ARE APPROXIMATE AND SHALL BE VERIFIED BY THE CONTRACTOR. "DIG SAFE" SHALL BE CONTACTED BY THE CONTRACTOR AS PART OF THIS VERIFICATION
13. NO EXCAVATION SHALL PROCEED UNTIL UTILITY COMPANIES ARE NOTIFIED IN ADVANCE
14. ALL TREE PROTECTION BY OTHERS UNLESS OTHERWISE NOTED
15. CONTRACTOR TO LOAM AND SEED ALL DISTURBED AREAS WITH APPROPRIATE SEED MIXTURES

GRADING AND UTILITIES NOTES:

1. THE CONTRACTOR SHALL BE RESPONSIBLE FOR VERIFYING THAT THE PROPOSED WORK SHOWN ON THESE PLANS DOES NOT CONFLICT WITH ANY EXISTING CONDITIONS OR OTHER PROPOSED WORK. IF CONFLICTS ARISE, THE CONTRACTOR SHALL NOTIFY THE OWNER AND ENGINEER PRIOR TO INSTALLATION OF ANY PORTION OF THE SITE WORK WHICH WOULD BE AFFECTED. NO FIELD ADJUSTMENTS IN THE LOCATION OF SITE ELEMENTS SHALL BE MADE WITHOUT THE ENGINEERS APPROVAL
2. WHERE AN EXISTING UTILITY IS FOUND TO CONFLICT WITH WORK, THE LOCATION, ELEVATION, SIZE AND MATERIAL SHALL BE ACCURATELY DETERMINED BY THE CONTRACTOR IMMEDIATELY AND THE INFORMATION FURNISHED TO THE ENGINEER FOR RESOLUTION. THE CONTRACTOR SHALL NOT CONTINUE WORK ON AFFECTED UTILITIES UNTIL THE CONFLICT IS RESOLVED
3. ALL WORK PERFORMED AND ALL MATERIALS FURNISHED SHALL CONFORM WITH THE LINE AND GRADES ON THE PLANS AND SITE WORK SPECIFICATIONS
4. AT ALL LOCATIONS WHERE EXITING CURBING OR PAVEMENT ABUT NEW CONSTRUCTION, THE EDGE OF THE EXISTING CURB OR PAVEMENT SHALL BE SAW CUT TO A CLEAN, SMOOTH EDGE. BLEND NEW PAVEMENT AND CURBS SMOOTHLY INTO EXISTING BY MATCHING LINES, GRADES AND JOINTS
5. ALL UTILITY COVERS, GRATES, AND THE LIKE SHALL BE BE FLUSH WITH THE SURROUNDING SURFACE OR PAVEMENT FINISH. RIM ELEVATIONS ARE APPROXIMATE AND FINAL ELEVATIONS ARE TO BE SET FLUSH AND CONSISTENT WITH GRADING
6. THE CONTRACTOR SHALL MAKE ALL ARRANGEMENTS FOR THE ALTERATION OF PRIVATE UTILITIES BY THE UTILITY COMPANY, AS REQUIRED.
7. THE CONTRACTOR SHALL PROTECT ALL UNDERGROUND UTILITY FACILITIES FROM EXCESSIVE VEHICULAR LOADING. ANY DAMAGE RESULTING TO THESE FACILITIES SHALL BE RESTORED TO THEIR ORIGINAL CONDITION AT THE CONTRACTORS EXPENSE
8. ALL WATER WORKS SHALL HAVE 5 FEET OF COVER
9. GAS, ELECTRIC, AND COMMUNICATIONS ROUTING ARE SUBJECT TO REVIEW AND APPROVAL BY UTILITY COMPANY
10. DURING CONSTRUCTION CONTRACTOR SHALL PROTECT EXITING UTILITIES BY PROVIDING TEMPORARY SUPPORTS OR SHEETING AS REQUIRED AT NOT ADDITIONAL COST TO THE OWNER
11. EXCAVATION REQUIRED WITHIN THE PROXIMITY OF EXISTING UTILITY LINES SHALL BE DONE BY HAND. CONTRACTOR SHALL REPAIR ANY DAMAGE TO EXISTING UTILITY LINE OR STRUCTURES INCURRED DURING CONSTRUCTION OPERATION AT NO COST TO THE OWNER
12. PITCH EVENLY BETWEEN ALL SPOT GRADES.
13. THE CONTRACTOR IS RESPONSIBLE FOR REMOVAL AND DISPOSAL OF ANY, ROCKS, DEBRIS, ORGANICS, OR THE LIKE UNCOVERED IN THE COURSE OF WORK.

DEMOLITION NOTES:

1. THE CONTRACTOR SHALL COORDINATE ALL DEMOLITION OF STRUCTURES, PAVEMENT, CONCRETE MATERIALS AND UTILITIES WITH THE PROPOSED SITE, UTILITY, LANDSCAPING, AND ARCHITECTURAL DRAWINGS
2. ALL NOTED UTILITIES TO BE REMOVED AND DISPOSED OF, RELOCATED OR CAPPED REPRESENT ALL KNOWN SITE CONDITIONS TO BE DEMOLISHED. CONTRACTOR SHALL COORDINATE ALL UNFORESEEN CONDITIONS WITH THE PROJECT ENGINEER, ARCHITECT, OWNER REPRESENTATIVE AND/OR AFFECTED UTILITIES COMPANY
3. THERE SHALL BE NO INTERRUPTION OF UTILITY SERVICE DURING THE CONSTRUCTION PROCESS WITHOUT THE WRITTEN PERMISSION OF THE OWNER OR OWNERS REPRESENTATIVE
4. WATER, SEWER, DRAINAGE AND OTHER SITE UTILITIES SERVICING THE EXITING FACILITIES ARE TO REMAIN ACTIVE UNTIL PROPOSED IMPROVEMENTS ARE CONSTRUCTED AND ONLINE. WHEN CONNECTION TO ACTIVE OR RELOCATED UTILITIES, SHUTDOWNS SHALL BE MINIMIZED AND COMPLETED OFF HOURS AND COORDINATED WITH THE OWNER OR OWNER REPRESENTATIVE.

EROSION AND SEDIMENT CONTROL NOTES:

1. ALL EROSION CONTROL SHALL BE IN ACCORDANCE WITH RHODE ISLAND SOIL EROSION AND SEDIMENT CONTROL HANDBOOK, LATEST REVISION
2. THE CONTRACTOR SHALL BE RESPONSIBLE FOR INSTALLATION AND MAINTENANCE OF ALL SEDIMENT AND EROSION CONTROL MEASURES SHOWN ON THESE PLANS
3. EROSION AND SEDIMENT CONTROL MEASURES SHALL BE INSPECTED AND MAINTAINED ONCE WEEKLY OR AFTER EVERY RAINFALL EVENT GREATER THAN 0.25 INCHES.
4. SEDIMENT BUILD UP GREATER THAN ONE-HALF THE BARRIER HEIGHT SHALL BE REMOVED AND DISPOSED OF PROPERLY AS REQUIRED. ANY SEDIMENT BUILD UP OUTSIDE OF THE SEDIMENT BARRIER SHALL BE REMOVED IMMEDIATELY
5. CONTRACTOR SHALL MAINTAIN A RESERVE OF EROSION CONTROL MATERIALS FOR EMERGENCY USE AND ROUTINE MAINTENANCE
6. THE CONTROLS SHOWN ON THESE PLANS ARE INTENDED AS MINIMUM MEASURES. ADDITIONAL MEASURES MAY BE REQUIRED AND SHALL BE IMPLEMENTED BY THE CONTRACTOR IF WARRANTED OR REQUESTED BY THE OWNER, OWNERS REPRESENTATIVE, ENGINEER, OR ANY APPLICABLE REGULATING AGENCY.
7. PRIOR TO THE START OF ANY LAND CLEARING / GRUBING OR OTHER CONSTRUCTION ACTIVITY THE PERIMETER CONTROLS SHALL BE PLACED, PROPERLY CONSTRUCTED AND CLEARLY VISIBLE. THESE CONTROLS SHALL REPRESENT THE LIMITS OF WORK AND WORKERS SHALL BE NOTIFIED THAT NO CONSTRUCTION ACTIVITY IS ALLOWED BEYOND THESE CONTROLS
8. IF OR AS POSSIBLE CONSTRUCTION SHALL BE PHASED TO LIMIT TO THE MAXIMUM EXTENT PRACTICABLE THE AMOUNT OF EXPOSED SOILS. ALL DISTURBED AREAS SHALL BE TEMPORARILY OR PERMANENTLY STABILIZED WITHIN 14 DAYS OF COMPLETION OF GRADING ACTIVITIES
9. THE CONTRACTOR SHALL SCHEDULE WORK IN A WAY TO ALLOW POSITIVE DRAINAGE OF SUBGRADE THROUGHOUT CONSTRUCTION
10. CONSTRUCTION ENTRANCES PER RIDOT STANDARD DETAIL 9.9.0 SHALL BE EMPLOYED AT ALL POINTS OF INGRESS AND EGRESS FROM THE SITE
11. TEMPORARY DIVERSIONS, SEDIMENT BASINS, AND TEMPORARY SWALES MAY BE USED AND SHALL BE SIZED ACCORDING TO THE RHODE ISLAND SOIL EROSION AND SEDIMENT CONTROL HANDBOOK
12. CATCH BASINS AND STORM DRAINS SHALL BE PROTECTED PER RIDOT STANDARD DETAIL 9.8.0 IN GRASSED AREAS OR SEDIMENT BAGS IN PAVED AREAS
13. TEMPORARY SEDIMENT STOCK PILES SHALL BE KEPT MOIST AND COVERED AT ALL TIMES. CALCIUM CHLORIDE SHALL ONLY BE USED IF AN APPROVAL FROM THE TOWN/CITY OR OTHER APPLICABLE AGENCY HAS BEEN GRANTED
14. DEWATERING FROM EXCAVATIONS WILL BE CONVEYED BY HOSE TO AN UPLAND AREAS AND DISCHARGED INTO A DEWATERING BASIN PER RIDOT STANDARD 9.7.0, HAYBALE CORRALS, OR SEDIMENTATION BAGS. THE CONTRACTOR SHALL ENSURE THAT NO CONTAMINATE IS PRESENT IN ANY WATERS PRIOR TO DISCHARGE FROM SITE AND IS RESPONSIBLE FOR ALL ENGINEERING, EQUIPMENT, MATERIAL AND LABOR REQUIRED FOR THE SITE WATER REMOVAL DURING CONSTRUCTION
15. CONSTRUCTION WASTE MATERIALS SHALL BE KEPT ON-SITE AND DISPOSED OF IN AN APPROVED AND APPROPRIATE MANNER IN ACCORDANCE WITH ALL APPLICABLE REGULATORY AGENCIES.
16. RIPRAP SHALL BE USED WHERE NECESSARY TO CONTROL EXIT VELOCITIES
17. NON MOBILE (I.E. TRACKED MACHINERY) SHALL BE MAINTAINED WITHIN THE LIMIT OF DISTURBANCE DEFINED BY SEDIMENT BARRIER
18. NEWLY VEGETATED AREAS SHALL BE REGULARLY INSPECTED AND MAINTAINED TO ENSURE ESTABLISHMENT OF APPROPRIATE VEGETATION
19. THE CONTRACTOR SHALL NOT REMOVE ANY EROSION AND SEDIMENTATION CONTROL MEASURES UNTIL FINAL ACCEPTANCE OF THE SITE HAS OCCURRED
20. ALL DRAINAGE STRUCTURES SHALL BE CLEARED OF ACCUMULATED SEDIMENT PRIOR TO THE FINAL SITE ACCEPTANCE

PAVEMENT AND SUBGRADE NOTES:

1. EXISTING FILL BENEATH PROPOSED PAVEMENT AREAS SHOULD BE STRIPPED TO A DEPTH OF 2.0± FEET BELOW EXISTING GRADE. PROOF-ROLLED, COMPACTED, AND APPROVED AS A RESULT PAVEMENT SUBGRADE WILL CONSIST OF COMPACTED SAND OR STRUCTURAL FILL (WHERE AND IF RAISES IN GRADE ARE NECESSARY)
2. AT A MINIMUM IT IS RECOMMENDED THAT A WOVEN GEOTEXTILE, SUCH AS MIRAFI 500X OR EQUAL, BE PLACED ON THE SUBGRADE PRIOR TO INSTALLATION OF THE AGGREGATE BASE COURSE WHERE DISTURBED AREAS ARE PRESENT AND FILL MATERIAL HAS BEEN PLACED
3. EVALUATION OF SUBGRADE MATERIAL DURING CONSTRUCTION MAY WARRANT OVER EXCAVATION OR STABILIZATION IN ADDITION TO THAT WHICH IS RECOMMENDED.
4. AREAS OF UNSUITABLE EXITING FILL MAY BE IDENTIFIED RUING PROOF-ROLLING, GRADING, AND OR TESTING
5. CONCRETE PADS ADDED TO PAVED AREAS ARE RECOMMENDED FOR THE LOADING AREA IN FRONT OF STRUCTURE. THE CONCRETE SECTION SHALL CONSIST OF A 6.5" THICK PROPERLY REINFORCED, AIR-ENTRAINED (5-7%), 3,500 PSI PORTLAND CEMENT SLAB WITH PROPER WATER TO CEMENT RATIO. THE BASE COURSE SHALL BE AT LEAST A 6" DENSE GRADED GRAVEL ON PROPERLY PREPARED SUBBASE. LONGITUDINAL AND TRAVERSE CONTRACTION JOINTS ARE RECOMMEND AT A MAXIMUM 15' WITH SUITABLE SEALANT

ASPHALTIC CONCRETE PAVEMENT

MATERIAL	PAVING AREAS	HMA CLASS	RIDOT STD.
WEARING COURSE ASPHALTIC CONCRETE	0'-1 1/2"	12.5	SECTION 401.04
BINDER COURSE ASPHALTIC CONCRETE	0'-2 1/2"	12.5	SECTION 401.04
AGGREGATE BASE	1'-0"	NA	SECTION 301

LEGEND:

EDGE OF PAVEMENT
EXISTING GRADE CONTOUR
EXISTING WATER
EXISTING SANITARY
EXISTING GAS
EXISTING OHE
EXISTING CHAIN LINK FENCE
PIPE FLOW DIRECTION
SURFACE FLOW DIRECTION
EXISTING STRUCTURE
LIGHT POLE
UTILITY POLE
VEGETATION
SEDIMENT BARRIER
LIMIT OF DISTURBANCE
EXISTING STRUCTURE

GRAPHIC SCALE
10 0 5 10 20 40
(IN FEET)
1 inch = 10 ft.

This drawing is copyrighted and is subject to copyright protection as an "architectural work" under 17 U. S. C. Sec. 101 et seq. The protection includes but is not limited to the overall form as well as the arrangement and composition of spaces, materials, color and elements in the design. Under such protection, unauthorized use of this drawing may result in the cessation of construction or buildings being seized and/or monetary compensation being awarded to The Robinson Green Beretta Corporation (RGB).

Any reproduction, possession, or use of this drawing or any part thereof without the express written permission of RGB, is prohibited. Violators will be prosecuted to the full extent of the law.

© RGB 2017

Certification

DERICK HOPKINS
No. 11385
REGISTERED PROFESSIONAL ENGINEER
CIVIL
10/31/17

Drawn by DBH
Checked by DBH

Revised on

NARRAGANSETT ENGINEERING INC.
MAIN OFFICE:
3102 EAST MAIN ROAD,
PORTSMOUTH, RI 02871
TEL : (401) 683-6630
nei-cds.com

50 Holden Street
Providence, Rhode Island 02908
Phone: (401) 272-1730
Fax: (401) 273-7156
E-mail: rgbinfo@rgb.net
www.rgb.net
Architecture · Project Management · Interior Design

Project

RI ARMY NATIONAL GUARD

ADDITION TO BUILDING P-6

COVENTRY, RI

Drawing Status
ISSUED FOR CONSTRUCTION

Issued On 10/31/2017

Sheet Contents
SITE PLAN

Project Number. 6336

Drawing No.
C.01

Sheet of

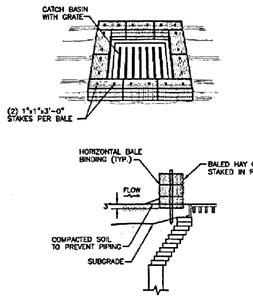

NOTES:
1. SHALL BE IN ACCORDANCE WITH SECTION 209 OF THE R.I. STANDARD SPECIFICATIONS.
2. THIS INLET PROTECTION CAN ALSO BE USED WHEN CONSTRUCTION SEQUENCING REQUIRES A CATCH BASIN TO BE EXPOSED TO SEDIMENT FROM THE SUBGRADE. THIS WILL BE ACHIEVED BY INSTALLING THE BALED HAY AS SHOWN ON THIS DETAIL INTO THE SUBGRADE.
3. THE PERIMETER CONFIGURATION OF THE BALED HAY WILL VARY DEPENDING ON THE PARTICULAR TYPE OF CATCH BASIN INLET BEING CONSTRUCTED. THE ENGINEER WILL PROVIDE SPECIFIC DIRECTION IN SUCH CASES.

RHODE ISLAND DEPARTMENT OF TRANSPORTATION

REVISIONS			BALED HAY CATCH BASIN INLET PROTECTION	R.I. STANDARD 9.8.0
NO.	BY	DATE		
			JUNE 15, 1998	

TEMPORARY SEDIMENT STOCKPILE

N.T.S

NOTES:
1. PRIOR TO CONSTRUCTION CONTRACTOR SHALL PREPARE PLAN INDICATING LOCATIONS OF SEDIMENT STOCKPILES FOR APPROVAL BY THE ENGINEER OR APPROPRIATE REGULATORY AUTHORITY
2. STOCKPILE SHALL NOT EXCEED GIVEN DIMENSIONS WITH OUT APPROVAL BY ENGINEER OR APPROPRIATE REGULATORY AUTHORITY
3. STOCKPILED MATERIAL NOT TO BE USED WITHIN 14 CALENDAR DAYS SHALL BE PLANTED WITH TEMPORARY SEED MIX RIDOT STD M.18.10.5 SEED MIX

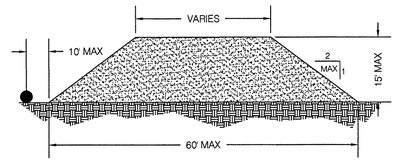

COMPOST FILTER SOCK DETAIL

N.T.S.

206.03.4 COMPOST FILTER SOCK.
(REF. RIDOT STD FOR ROAD AND BRIDGE CONSTRUCTION)
A. INSTALLATION. COMPOST FILTER SOCKS SHALL BE CONSTRUCTED AT THE LOCATIONS, AND IN ACCORDANCE WITH THE DETAILS INDICATED ON THE PLANS, OR AS DIRECTED BY THE ENGINEER. THE FOLLOWING STIPULATIONS ALSO APPLY:
1. COMPOST FILTER SOCKS MAY BE EITHER FABRICATED ON SITE OR DELIVERED TO THE SITE.
2. COMPOST MEDIA SHALL CONFORM TO AASHTO MP 9-06 AND RIDOT SECTION 206
3. TRENCHING IS NOT REQUIRED. COMPOST FILTER SOCKS SHALL BE PLACED OVER THE TOP OF GROUND.
WOODEN STAKES SHALL BE DRIVEN THROUGH THE CENTER OF THE FILTER SOCKS TO ANCHOR THEM TO THE GROUND. TO
ENSURE OPTIMUM PERFORMANCE, HEAVY VEGETATION SHALL BE CUT DOWN OR REMOVED, AND EXTREMELY UNEVEN
SURFACES SHALL BE GRADED TO ENSURE THAT THE COMPOST FILTER SOCK UNIFORMLY CONTACTS THE GROUND SURFACE.
4. FILTER SOCKS SHALL BE PLACED IN A CONTINUOUS LINE. WHERE ENDS INTERSECT THEY SHALL BE
SLEEVED TO CREATE AN INTERLOCK WITH A TWO (2) FOOT OVERLAP. AFTER ONE SECTION IS FILLED AND THE ENDS TIED OFF,
THE NEXT SECTION SHALL BE PULLED OVER THE TIED OFF END OF THE PREVIOUS SECTION, TO CREATE A 2 FOOT OVERLAP.
THE OVERLAP SHALL BE STAKED. THE INTERSECTING OVERLAPS SHALL BE CONSTRUCTED TO ENSURE THAT STORMWATER DOES
NOT BREAK THROUGH AT THESE INTERSECTION POINTS.

B. REMOVAL. THIS WORK, IF REQUIRED, SHALL INCLUDE THE REMOVAL OF THE COMPOST FILTER SOCK
AND STAKES. UNLESS BIODEGRADABLE, THE MESH FILTER SOCK MATERIAL SHALL BE CUT OPEN AND THE MESH REMOVED.
IN GENERAL, THE COMPOST FILTER MATERIAL MAY BE LEFT IN PLACE, HOWEVER THE MATERIAL WILL BE RAKED OUT LEVELED
TO SURROUNDING GRADES, THEN SEEDED. PRIOR TO SUCH REMOVAL, HOWEVER, ALL SILT, MUD AND DEBRIS ENTRAPPED
OUTSIDE OF THE COMPOST FILTER SOCK SHALL BE REMOVED AND THE AREA CLEANED UP IN ACCORDANCE WITH THE
APPLICABLE PROVISIONS OF SECTION 212 OF THESE SPECIFICATIONS. IMMEDIATELY UPON REMOVAL OF THE COMPOST

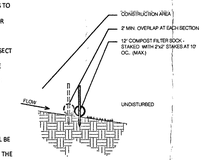

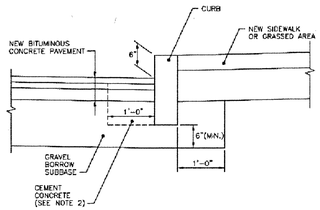

NOTES:
1. SHALL BE IN ACCORDANCE WITH SECTION 906 OF THE R.I. STANDARD SPECIFICATIONS.
2. CEMENT CONCRETE SHALL BE USED ONLY WHEN THE CURB IS SET AFTER THE BASE AND/OR BINDER COURSES ARE IN PLACE, OTHERWISE THE CEMENT CONCRETE WILL BE ELIMINATED AND THE GRAVEL BROUGHT UP TO BOTTOM OF THE BASE COURSE.

RHODE ISLAND DEPARTMENT OF TRANSPORTATION

REVISIONS			CURB SETTING DETAIL	R.I. STANDARD 7.5.0
NO.	BY	DATE		
1	M.P.	Mar. 05	JUNE 15, 1998	

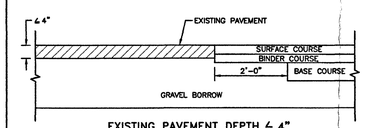

EXISTING PAVEMENT DEPTH ≤ 4"

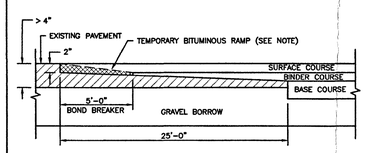

EXISTING PAVEMENT DEPTH > 4"

NOTE:
A BOND BREAKER (TAPERED OR EQUIVALENT) WILL BE PLACED 5'-0" FROM THE JOINT AND COVERED WITH THE BINDER COURSE AS THE TEMPORARY RAMP. PRIOR TO PLACING THE SURFACE COURSE, THE BINDER COURSE AND BOND BREAKER WILL BE REMOVED.

RHODE ISLAND DEPARTMENT OF TRANSPORTATION

REVISIONS			TRANSVERSE PAVEMENT CUT AND MATCH	R.I. STANDARD 47.1.1
NO.	BY	DATE		
			JUNE 15, 1998	

You created this PDF from an application that is not licensed to print to novaPDF printer (http://www.novapdf.com)

TYPICAL WATER TRENCH DETAIL:

NTS

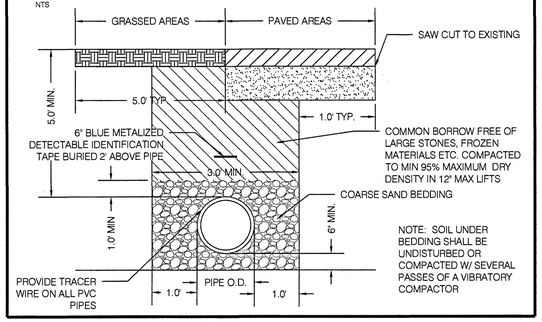

TYPICAL PAVING DETAIL:

NTS

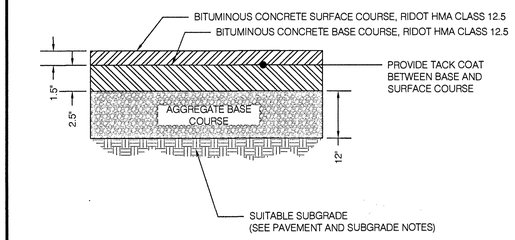

VEHICULAR CONCRETE PAVEMENT:

NTS

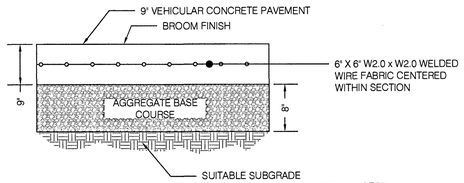

This drawing is copyrighted and is subject to copyright protection as an "architectural work" under 17 U. S. C. Sec. 101 et seq. The protection includes but is not limited to the overall form as well as the arrangement and composition of spaces, materials, color and elements in the design. Under such protection, unauthorized use of this drawing may result in the cessation of construction or buildings being seized and/or monetary compensation being awarded to The Robinson Green Beretta Corporation (RGB).

Any reproduction, possession, or use of this drawing or any part thereof without the express written permission of RGB, is prohibited. Violators will be prosecuted to the full extent of the law.

© RGB 2017

Certification

DERICK HOPKINS
No. 11385
REGISTERED PROFESSIONAL ENGINEER
CIVIL

Drawn by DBH
Checked by DBH

Revised on

NARRAGANSETT ENGINEERING INC.
MAIN OFFICE:
3102 EAST MAIN ROAD,
PORTSMOUTH, RI 02871
TEL : (401) 683-6630
nei-cds.com

50 Holden Street
Providence, Rhode Island 02908
Phone: (401) 272-1730
Fax: (401) 273-7156
E-mail: rgbinfo@rgb.net
www.rgb.net
Architecture · Project Management · Interior Design

Project

RI ARMY NATIONAL GUARD

ADDITION TO BUILDING P-6

COVENTRY, RI

Drawing Status
ISSUED FOR CONSTRUCTION

Issued On 5/10/17

Sheet Contents
DETAILS

Project Number. 6336

Drawing No.
C.02

Sheet of

CODE DATA

I. BUILDING & Fire CODE DATA

RHODE ISLAND STATE BUILDING CODES

SBC-01-2013	BUILDING CODE	IBC-2012 plus RI Amendments 2013 07 01
SBC-02-2013	RESIDENTIAL CODE	IRC-2012 plus RI Amendments 2013 07 01
SBC-03-2013	PLUMBING CODE	IPC-2012 plus RI Amendments 2013 07 01
SBC-04-2013	MECHANICAL CODE	IMC-2012 plus RI Amendments 2013 07 01
SBC-05-2014	ELECTRIC CODE	NFPA 2014 plus RI Amendments 2014 07 01
SBC-08-2013	ENERGY CONSERVATION CODE	IECC-2012 plus RI Amendments 2013 07 01
SBC-19-2010	FUEL GAS CODE	IFGC-2012 plus RI Amendments 2013 07 01

RI ACCESSIBILITY REGULATIONS
SBC-1 IBC-2012 Chapter 11;
ICC/ANSI A117.1 2009 plus RI Amendments 2010 07 01
AMERICANS w/ DISABILITIES ACT (ADA - 2010)

RHODE ISLAND FIRE SAFETY CODE (RIFSC - 2013)

RHODE ISLAND FIRE LAWS (RIFL)
TITLE 23, CHAPTERS 28.1 - 28.39

RULES & REGULATIONS PROMULGATED BY the Board of Appeals & Review
SECTIONS 1 THRU 15

RHODE ISLAND UNIFORM FIRE CODE (RIUFC - 2012)
NFPA 1-2012 plus RI AMENDMENTS

RHODE ISLAND LIFE SAFETY CODE (RILSC - 2012)
NFPA 101-2012 plus RI AMENDMENTS

ADDITIONAL APPLICABLE NFPA STANDARDS

NFPA 10 2010 STANDARD FOR PORTABLE FIRE EXTINGUISHERS
NFPA 72 2010 NATIONAL FIRE ALARM CODE PLUS RI AMENDMENTS
NFPA 220 2012 STANDARD OF TYPES OF BUILDING CONSTRUCTION
NFPA 701 1999 STANDARD METHOD OF FIRE TESTS FOR FLAME PROPAGATION OF TEXTILES

A. OCCUPANCY & USE IBC CHAPTER 3

SECTION 311 STORAGE GROUP S
311.3 Low-hazard storage, Group S-2

CONSTRUCTION TYPE: IIB (IBC TABLE 503) II(III) NFPA 220

BUILDING ELEMENT	RATING IN HOURS	
	IBC (table 601) IIB	NFPA 220 (table 4.1.1) II(III)
STRUCTURAL FRAME	0	0
BEARING WALLS		
EXTERIOR	0	0
INTERIOR	0	0
NON BEARING WALLS AND PARTITIONS EXTERIOR	0	0
NON BEARING WALLS AND PARTITIONS INTERIOR	0	0
FLOOR CONSTRUCTION INCLUDING SUPPORTING BEAMS AND JOISTS	0	0
ROOF CONSTRUCTION INCLUDING SUPPORTING BEAMS AND JOISTS	0	0

B. ALLOWABLE AREA AND HEIGHT

1. AREA IBC TABLE 503 FOR IIB CONSTRUCTION
GROUP S-2 = 26,000 SF

2. HEIGHT IBC TABLE 503 FOR IIB CONSTRUCTION
GROUP S-2 = 55 FEET

3. AREA AND HEIGHT CALCULATIONS
BUILDING AREA
FIRST LEVEL - TOTAL BUILDING AREA 3,239GSF

BUILDING HEIGHT
BASIC ALLOWABLE 3 STORIES, 55 FEET
PROPOSED HEIGHT 33 FEET

C. FIRE PROTECTION

1. FIRE ALARM SYSTEM
RI UNIFORM FIRE CODE 13.7 & 13.8 & NFPA 72 RI LIFE SAFETY CODE REQUIRES A FIRE ALARM SYSTEM.

D. OCCUPANCY LOADS

1. OCCUPANCY LOAD TYPES

	IBC TABLE 1004.1.2	NFPA 101 TABLE 7.3.1.2
STORAGE S-2	200 SF./PERSON GROSS	N/A

2. OCCUPANCY LOAD PER FLOOR

	AREA (GROSS)	OCCUPANCY
GROUND LEVEL	3,239 GSF	16 OCCUPANTS

E. EGRESS REQUIREMENTS

1. LENGTH OF TRAVEL - NFPA 101 TABLE 12.1.6 & SECTION 12.2.6 - IBC TABLE 1016.1

S S-2 STORAGE (w/o SPRINKLER SYSTEM)
IBC 300 LF
NFPA 101 300 LF

2. COMMON PATH - NFPA 101 TABLE A.7.6 - IBC SECTION 1014.3

NFPA 101 50 LF

3. MEANS OF EGRESS - IBC Section 1005.1

NUMBER AND WIDTH REQUIRED

DOOR WIDTH (w/o SPRINKLER SYSTEM)
IBC 0.2"/PERSON (32" MIN. CLEAR WIDTH)
NFPA 101

DOORS:
PROVIDED DESIGN WIDTH FOR EGRESS DOORS = 36 IN. EACH DOOR

F. SEISMIC CRITERIA

SEE STRUCTURAL DRAWINGS FOR SEISMIC REQUIREMENTS

G. STRUCTURAL LOADS

WIND SPEED = 105 MPH
ROOF SNOW LOAD = 30 PSF

H. ENERGY CONSERVATION (IECC)

BUILDING ENVELOPE REQUIREMENTS & DESIGN CRITERIA: OPAQUE ASSEMBLIES

	RI-IECC Table 402.2(1) Climate Zone 5	Proposed Design
Roofs		
Insulation entirely above deck	R-25 ci	--
Metal Buildings (w/ R-5 thermal blocks)	R-19 + R-11 LS	n/a
Attic and Other	R-38	n/a
Walls, Above Grade		
Mass	R-11.4 ci	n/a
Mass, Interior Insulation	R-7.6 ci	n/a
Metal Building	R-13 + R-13 ci	n/a
Metal Framed	R-13 + R-7.5 ci	--
Wood Framed and Other	R-13 + R-3.8ci or R-20	n/a
Walls, Below Grade		
Mass, exterior insulation	R-7.5 ci	n/a
Mass, interior insulation	--	n/a
** When heated slabs are placed below grade, below grade walls must meet the exterior insulation requirements for perimeter insulation according to the heated slab-on-grade construction*		.
Floors		
Mass	R-10 ci	**R-10 ci**
Metal Joist	-	n/a
Joist/Framing	R-30	n/a
Slab on Grade Floors		
Unheated Slabs	R-10 (for 24" below)	**R-10 (for 48" below)**
Heated Slabs	R-15 (for 36" below)	n/a
Opaque Doors		
Swinging	U-0.37	**U-0.37**
Roll-up or Sliding	R-4.75	**R-4.75/ U-0.20**

BUILDING ENVELOPE REQUIREMENTS & DESIGN CRITERIA: FENESTRATION ASSEMBLIES
Vertical Fenestration (40% max. of above-grade wall)

	RI-IECC Table 402.1.2 Zone 5 (humid)	Proposed Design n/a
Framing material other than metal	U-0.38	
Metal framing w/ or w/o thermal break		U-0.45
Curtain Wall / Storefront	U-0.45	U-0.45
Entrance Door	U-0.77	U-0.45
All Other (operable & fixed windows, and non-entrance doors)	U-00	
SHGC	All Frame Types	--
SHGC: PF<0.2	U-0.40	--
SHGC: 0.2≤PF<0.5	U-1.2	--
SHGC: PF≥0.5	U-1.6	n/a
Skylights		
Factory Assembled Fenestration Products		
U-Factor	n/a	n/a
SHGC	U-.40	n/a

SHGC= Solar Heat Gain Coefficient
VLT= Visible light transmittance
PF= Projection Factor.
PF=A/B
A= Distance measured horizontally from the furthest continuous extremity of any overhang, eave, or permanently attached shadlng devlce to the vertical surface of the glazing.
B= Distance measured vertically from the bottom of the glazing to the underside of the overhang, eave, or permanently attached shading device.

KEY

OCCUPANT LOAD INDICATOR

#,###
=

AREA OF BUSINESS USE
TOTAL OCCUPANTS
LOAD FACTOR FROM TABLE 1008.1.2

EGRESS ELEMENT LOAD INDICATOR

57
213

ACTUAL OCCUPANT LOAD PASSING THROUGH DOOR/STAIR
ALLOWABLE OCCUPANT LOAD OF DOOR/STAIR

TRAVEL DISTANCE
COMMON PATH OF TRAVEL
SMOKE WALL
30MIN. WALL
1HR WALL
2HR WALL

FIRE EXTINGUISHER LEGEND (NFPA 10)

FE #1 4A-60BC (UL RATING) SURFACE MOUNTED RETAINER BRACKET

LEGEND

SITE HYDRANT
EXIT EXIT SIGNAGE
FACP FIRE ALARM CONTROL PANEL
ANN. ANNUNCIATOR PANEL
V INSPECTORS TEST VALVE
F FIRE EXTINGUISHER
K KNOX BOX

This drawing is copyrighted and is subject to copyright protection as an "architectural work" under 17 U. S. C. Sec. 101 et seq. The protection includes but is not limited to the overall form as well as the arrangement and composition of spaces, materials, color and elements in the design. Under such protection, unauthorized use of this drawing may result in the cessation of construction or buildings being seized and/or monetary compensation being awarded to The Robinson Green Beretta Corporation (RGB).

Any reproduction, possession, or use of this drawing or any part thereof without the express written permission of RGB, is prohibited. Violators will be prosecuted to the full extent of the law.

© RGB 2017

Certification

DAVID L. DESIMONE No. 2152 REGISTERED ARCHITECT RI

Drawn by --
Checked by DLD

Revised on

50 Holden Street
Providence, Rhode Island 02908

Phone: (401) 272-1730
Fax: (401) 273-7156

E-mail: rgbinfo@rgb.net
www.rgb.net

RGB ARCHITECTS

Architecture · Project Management · Interior Design

Project

RI ARMY NATIONAL GUARD

ADDITION TO BUILDING P-6

COVENTRY, RI

Drawing Status
ISSUED FOR CONSTRUCTION

Issued On OCTOBER 31, 2017

Sheet Contents
CODE REVIEW

Project Number. 6336

Drawing No.
A010

Sheet of

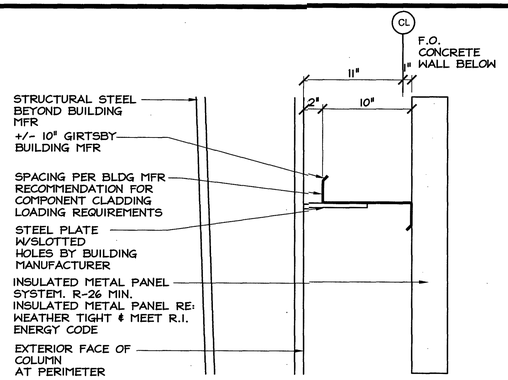

F PRE-MANUFACTURED METAL BUILDING SYSTEM

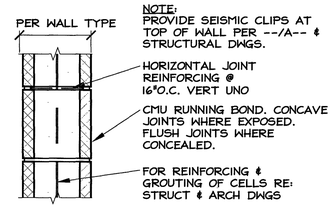

M8 8" CMU
TYPE D-2 CMU

1 / A030 EXTERIOR WALL CONSTRUCTION TYPES

Scale: 1 1/2" = 1'-0"

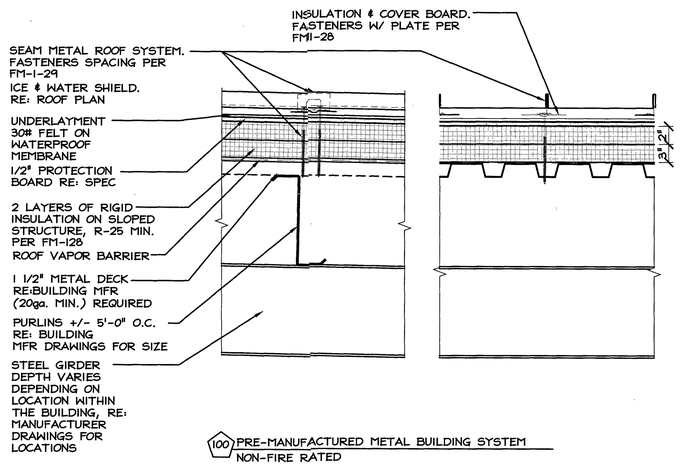

100 PRE-MANUFACTURED METAL BUILDING SYSTEM
NON-FIRE RATED

2 / A030 ROOF CONSTRUCTION TYPES

Scale: 1 1/2" = 1'-0"

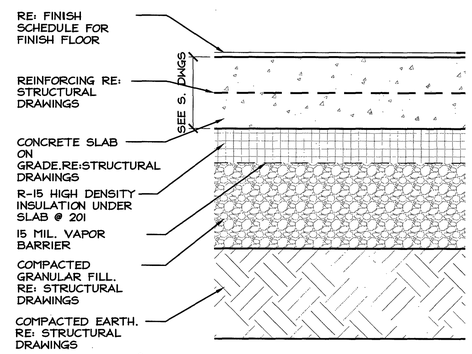

200 FLOOR ASSEMBLY: SLAB ON GRADE
NON-FIRE RATED

3 / A030 FLOOR CONSTRUCTION TYPES

Scale: 1 1/2" = 1'-0"

TYPICAL CONTROL JOINTS

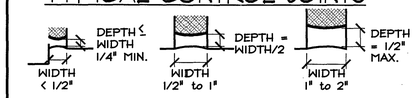

GENERAL NOTES:

1. ALL WALL SYSTEM 'R' & 'U' VALUES ARE BASED ON"
   -6" METAL STUD
   -8" NORMAL WEIGHT CMU
   -8" NORMAL WEIGHT CONCRETE
2. ALL VAPOR BARRIERS ARE TO BE 10MIL POLY MIN. U.N.O.

This drawing is copyrighted and is subject to copyright protection as an "architectural work" under 17 U. S. C. Sec. 101 et seq. The protection includes but is not limited to the overall form as well as the arrangement and composition of spaces, materials, color and elements in the design. Under such protection, unauthorized use of this drawing may result in the cessation of construction or buildings being seized and/or monetary compensation being awarded to The Robinson Green Beretta Corporation (RGB).

Any reproduction, possession, or use of this drawing or any part thereof without the express written permission of RGB, is prohibited. Violators will be prosecuted to the full extent of the law.

© RGB 2017

Certification

Drawn by –

Checked by DLD

Revised on

50 Holden Street
Providence, Rhode Island 02908

Phone: (401) 272-1730
Fax: (401) 273-7156

E-mail: rgbinfo@rgb.net
www.rgb.net

RGB architects

Architecture · Project Management · Interior Design

Project

RI ARMY NATIONAL GUARD

ADDITION TO BUILDING P-6

COVENTRY, RI

Drawing Status

ISSUED FOR CONSTRUCTION

Issued On OCTOBER 31, 2017

Sheet Contents

FLOOR, WALL & ROOF CONSTRUCTION TYPES

Project Number. 6336

Drawing No.

A030

Sheet of

GENERAL PLAN NOTES:

1. COORDINATE ALL WORK w/ CIVIL, STRUCTURAL, PLUMBING, MECHANICAL, ELECTRICAL, &/or OTHER DRAWINGS. NOTIFY ARCHITECT OF ANY DISCREPANCIES BEFORE PROCEEDING WITH WORK.
2. ALL DIMENSIONS ARE TO FACE OF STUD AND FACE OF MASONRY U.N.O.
3. AREA FOR STORAGE & SITE TRAILER IS TO BE COORDINATED W/OWNER. ALL DELIVERERS MUST BE CLEANED & REMOVED BY THE END OF THE DAY.
4. WALL TYPE M8 = CMU 8"
5. WALL TYPE F = FOUNDATION REFER TO STRUCTURE.
6. ALL DOOR FRAMES SHALL BE A MINIMUM OF 4" CLEAR FROM THE FACE OF ADJACENT WALL TO DOOR JAMB, U.N.O.
7. GC. SHALL COORDINATE THE INSTALLATION OF THE PREFABRICATED METAL BUILDING AND ALL IT'S COMPONENTS W/ ALL OTHER TRADES & BUILDING COMPONENTS.
8. ALL FLOORS TO SLOPE TO DRAIN AT 1/4" PITCH UNLESS NOTED OTHERWISE. MAX SLOPE TO BE 1/2"
9. GC SHALL NOT PLACE INTERIOR CONCRETE FLOOR SLAB UNTIL THE INSTALLATION OF STRUCTURAL FRAME, ROOF & EXTERIOR WALLS HAS BEEN COMPLETED.

PLAN WORK NOTES:

- A1 — FLOOR
- A1.1 — CONCRETE SLAB ON GRADE, RE: STRUCTURAL DWGS. SEAL CONCRETE SLAB, SLOPE TO TRENCH DRAIN AS INDICATED, TYP.
- A1.2 — 8" GALVANIZED STEEL CONCRETE FILLED BOLLARD, PROVIDE YELLOW POLYETHYLENE THERMOPLASTIC COVER. RE: A101 FOR LOCATIONS
- A1.3 — PREFABRICATED TRENCH DRAIN LINER, PIPING & GRATE. GRATE SHALL BE FOR HIGH LOADING. UNDER DRAIN CONCRETE SUPPORT W/ PERIMETER ANGLES AT ALL EDGES. RE: PLUMBING DWGS

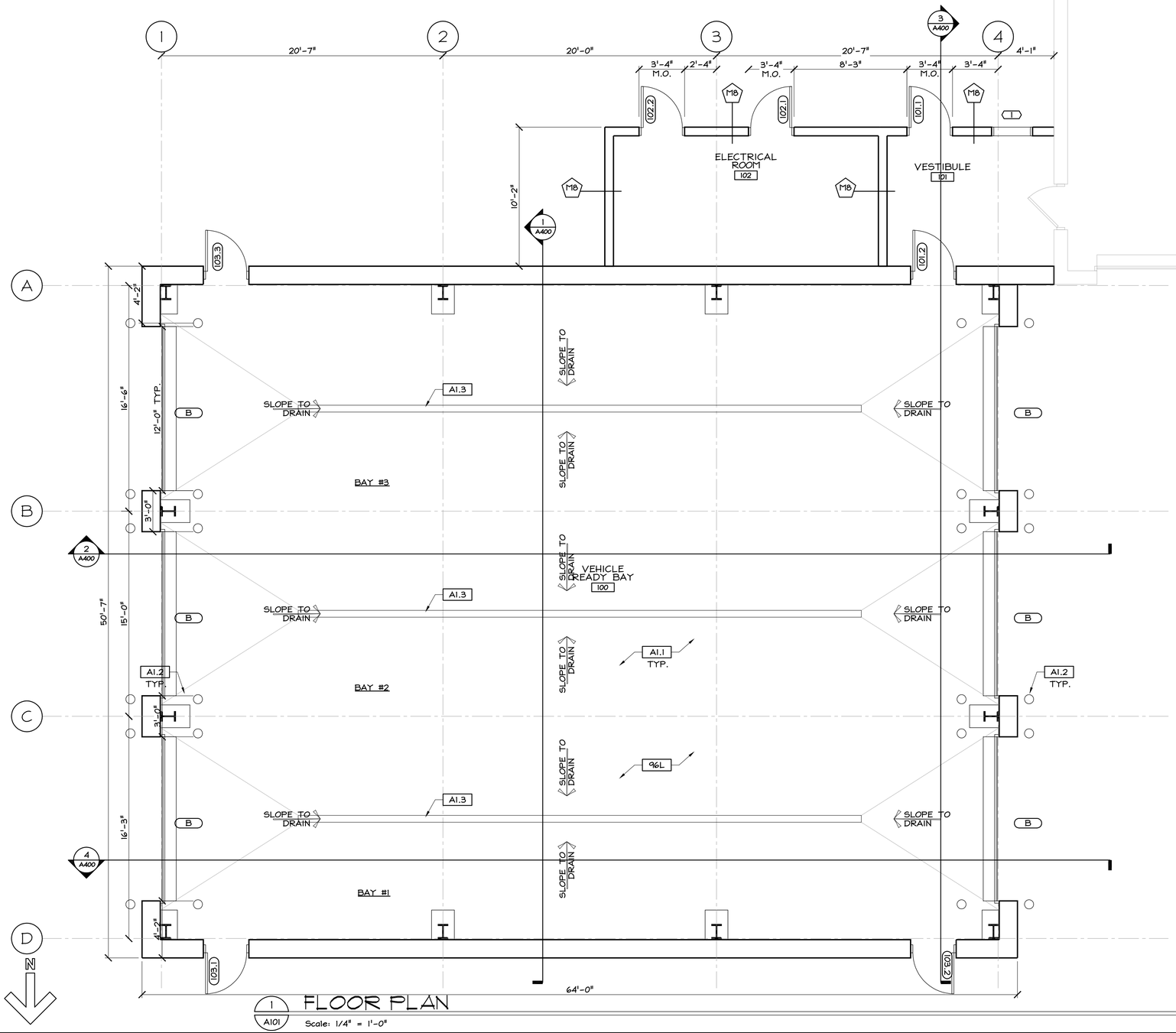

1 / A101 FLOOR PLAN
Scale: 1/4" = 1'-0"

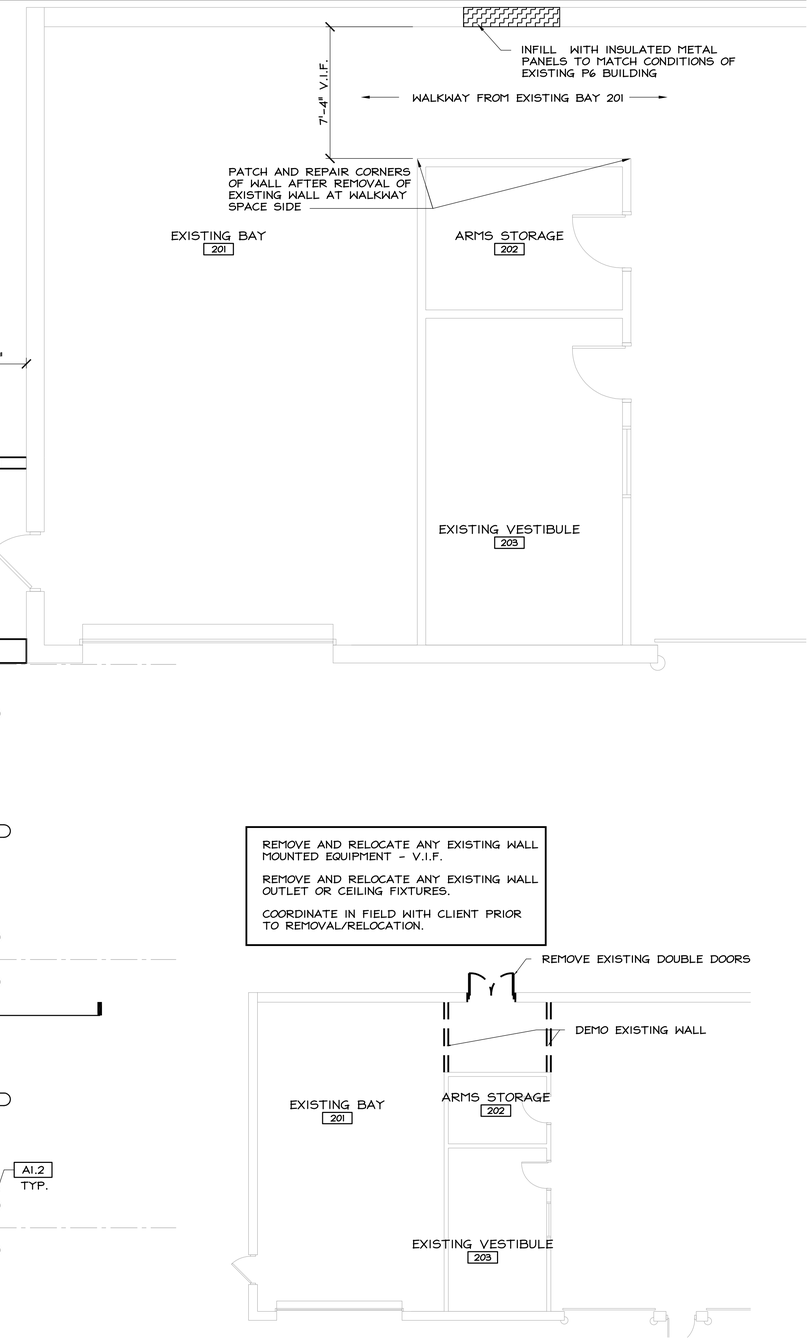

2 / A101 PARTIAL FLOOR PLAN - DEMO
Scale: 1/4" = 1'-0"

This drawing is copyrighted and is subject to copyright protection as an "architectural work" under 17 U. S. C. Sec. 101 et seq. The protection includes but is not limited to the overall form as well as the arrangement and composition of spaces, materials, color and elements in the design. Under such protection, unauthorized use of this drawing may result in the cessation of construction or buildings being seized and/or monetary compensation being awarded to The Robinson Green Beretta Corporation (RGB).

Any reproduction, possession, or use of this drawing or any part thereof without the express written permission of RGB, is prohibited. Violators will be prosecuted to the full extent of the law.

© RGB 2017

Certification

DAVID L. DeCUNHA No. 2152 REGISTERED ARCHITECT

Drawn by --

Checked by DLD

Revised on

50 Holden Street
Providence, Rhode Island 02908

Phone: (401) 272-1730
Fax: (401) 273-7156

E-mail: rgbinfo@rgb.net
www.rgb.net

RGB architects

Architecture · Project Management · Interior Design

Project

RI ARMY NATIONAL GUARD

ADDITION TO BUILDING P-6

COVENTRY, RI

Drawing Status

ISSUED FOR CONSTRUCTION

Issued On OCTOBER 31, 2017

Sheet Contents

FLOOR PLAN

Project Number. 6336

Drawing No.

A101

Sheet of

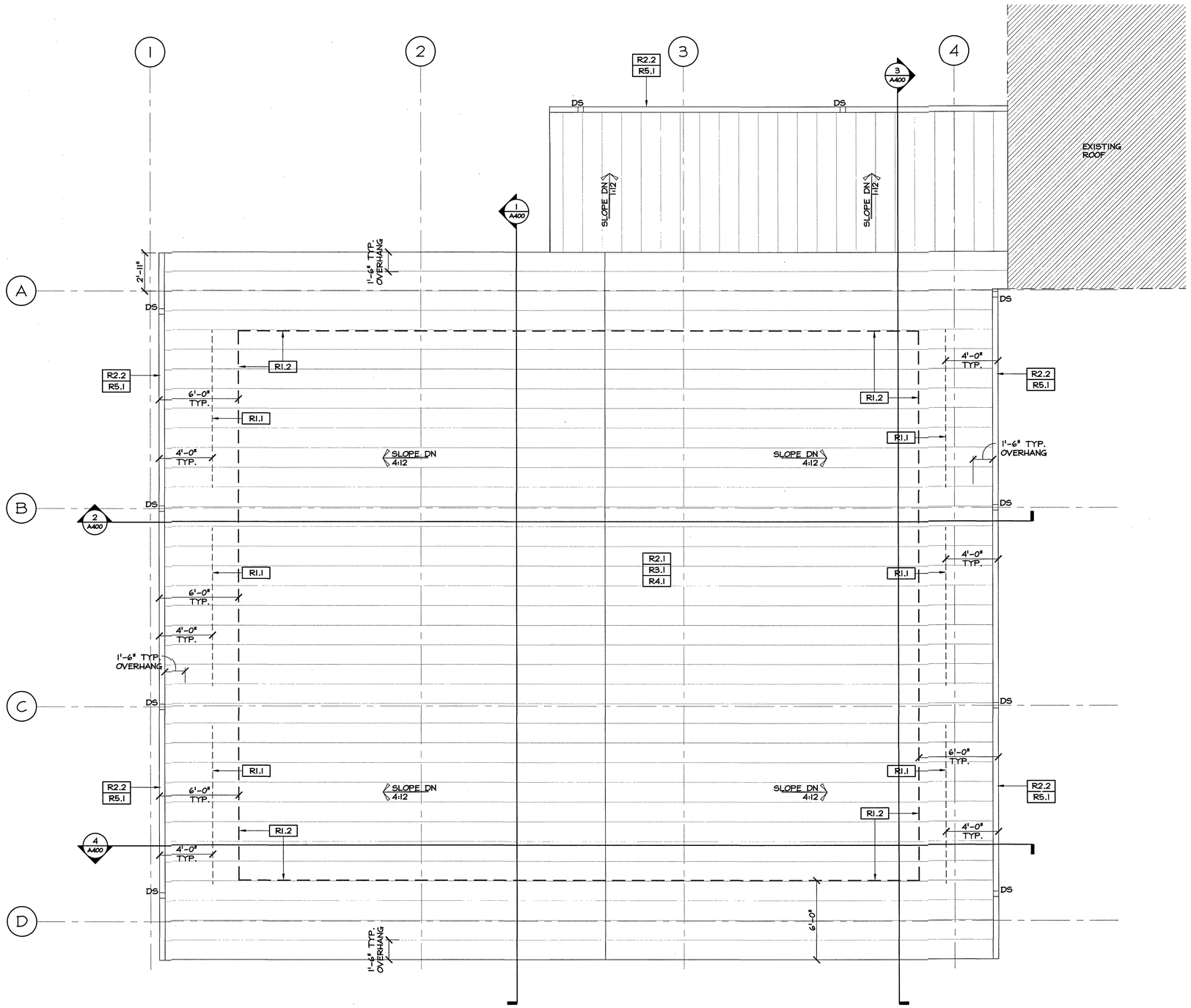

ROOF PLAN

1 / A102

Scale: 1/4" = 1'-0"

GENERAL ROOF NOTES:

1. NOT ALL PENETRATIONS MAY BE SHOWN. COORDINATE ALL WORK w/ STRUCTURAL, PLUMBING, MECHANICAL, ELECTRICAL &/or OTHER DRAWINGS.
2. ALL DIMENSIONS TO NEW CONSTRUCTION ARE TO FACE OF STUD AND FACE OF MASONRY U.N.O.
3. ALL NEW ROOF SYSTEMS ARE TYPE 100 U.N.O.
4. ARROW ⟶ DENOTES DOWNWARD SLOPE OF ROOF.
5. PROVIDE ROOF CRICKETS (TAPERED INSULATION) UPSLOPE OF ALL HVAC &/or OTHER ROOF TOP EQUIPMENT CURBS TO PREVENT PONDING OF WATER. SLOPE CRICKETS @ ±1/2"/FT (TYP)
6. PROVIDE NOM. 30" SQ WALKING PADS AROUND ALL ROOF TOP EQUIPMENT & AT ROOF ACCESS POINT(S). EXTENT OF WALKING PATH(S) ARE SHOWN. G.C. TO VERIFY EXACT QUANTITY.
7. CONTRACTOR TO LOCATE MECHANICAL EQUIPMENT 10' MINIMUM FROM ROOF EDGE(S) WITH FALL POTENTIAL UNLESS GUARD RAIL SYSTEM IS INDICATED.
8. COORDINATE ALL EQUIPMENT W/ LIGHTING PROTECTION. RE: E-DWGS

LEGEND:

- ROOF ELEVATION CHANGE
- PLUMBING VENT
- ROOF SCUTTLE
- SUPPLY/EXHAUST FAN
- DS — DOWNSPOUT
- MECHANICAL UNIT
- T.O.S. ?'-?" — TOP OF STEEL
- SLOPE DN: X:12 — ROOF SLOPE

ROOF WORK NOTES:

- **R1** ROOF ACCESSORIES
  - **R1.1** SNOWFENCE. RE: DETAIL xx/Axxx
  - **R1.2** ICE & WATER SHIELD
- **R2** ELECTRICAL (RE: E-DWGS FOR RELATED SCOPE)
  - **R2.1** PROVIDE PREFABRICATED ROOF BOOTS FOR ALL CONDUIT PENETRATIONS. COORDINATE W/ ELECTRICAL, PLUMBING & MECHANICAL DWGS. SET T.O. BOOT MIN. 10" ABOVE ROOF SEAL TO CONDUIT/PIPING WEATHER TIGHT.
  - **R2.2** INSTALL HEAT TRACE IN GUTTER. RE: E DWGS
- **R3** MECHANICAL (RE: M-DWGS FOR RELATED SCOPE)
  - **R3.1** FURNISH AND INSTALL CURB, ROOFING, FLASHING AND SEALANT TO MAKE PENETRATIONS WATER TIGHT TO ALL MECHANICAL EQUIPMENT. G.C. TO COORDINATE ELECTRICAL REQUIREMENTS AND PENETRATIONS NOT SHOWN ON ROOF PLAN. G.C. TO COORDINATE ADDITIONAL STEEL FRAMING WITH S-DWGS AND THE STEEL BUILDING SUBCONTRACTOR PRIOR TO INSTALLATION
- **R4** PLUMBING (RE: P-DWG'S FOR RELATED SCOPE)
  - **R4.1** FURNISH AND INSTALL THROUGH ROOF PENETRATIONS(S) FLASHING AND SEALANT TO MAKE PLUMBING PENETRATIONS WATER TIGHT. G.C. TO COORDINATE PLUMBING REQUIREMENTS AND PENETRATIONS NOT SHOWN ON ROOF PLAN.
- **R5** GUTTERS & DRAINAGE
  - **R5.1** PRE-FINISHED GUTTER w/ LEAF GUARD

This drawing is copyrighted and is subject to copyright protection as an "architectural work" under 17 U. S. C. Sec. 101 et seq. The protection includes but is not limited to the overall form as well as the arrangement and composition of spaces, materials, color and elements in the design. Under such protection, unauthorized use of this drawing may result in the cessation of construction or buildings being seized and/or monetary compensation being awarded to The Robinson Green Beretta Corporation (RGB).

Any reproduction, possession, or use of this drawing or any part thereof without the express written permission of RGB, is prohibited. Violators will be prosecuted to the full extent of the law.

© RGB 2017

Certification

Drawn by –

Checked by DLD

Revised on

50 Holden Street
Providence, Rhode Island 02908

Phone: (401) 272-1730
Fax: (401) 273-7156

E-mail: rgbinfo@rgb.net
www.rgb.net

RGB architects

Architecture · Project Management · Interior Design

Project

RI ARMY NATIONAL GUARD

ADDITION TO BUILDING P-6

COVENTRY, RI

Drawing Status

ISSUED FOR CONSTRUCTION

Issued On OCTOBER 31, 2017

Sheet Contents

ROOF PLAN

Project Number. 6336

Drawing No.

A102

Sheet of

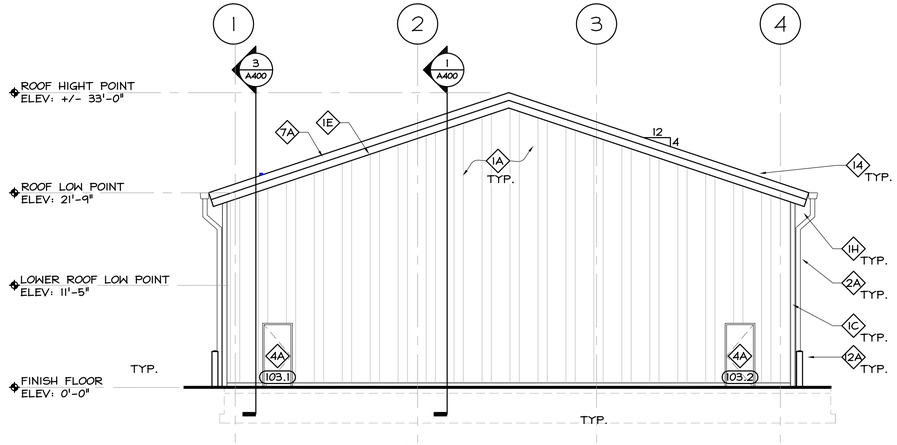

1 / A200 NORTH ELEVATION

Scale: 1/8" = 1'-0"

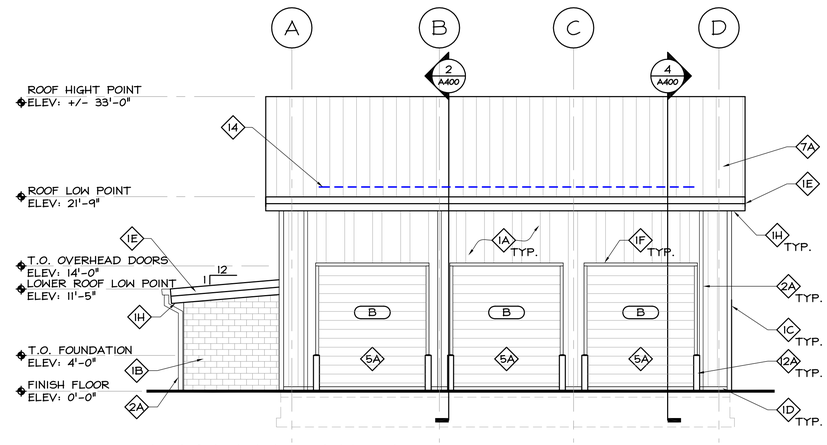

2 / A200 EAST ELEVATION

Scale: 1/8" = 1'-0"

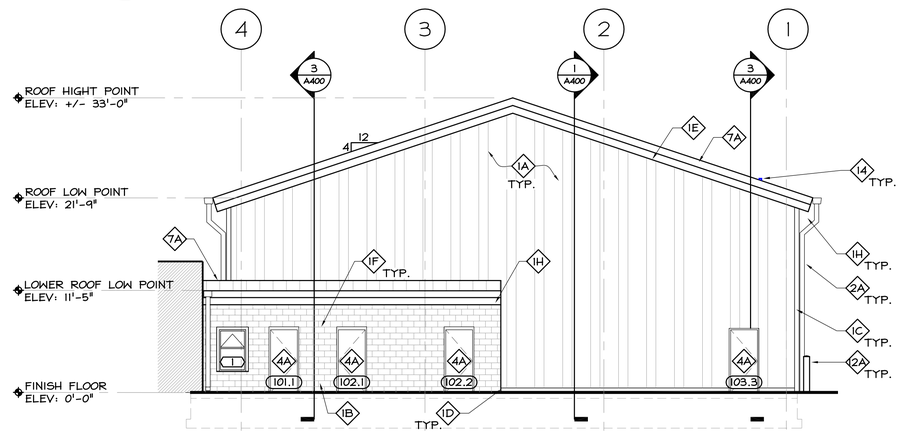

3 / A200 SOUTH ELEVATION

Scale: 1/8" = 1'-0"

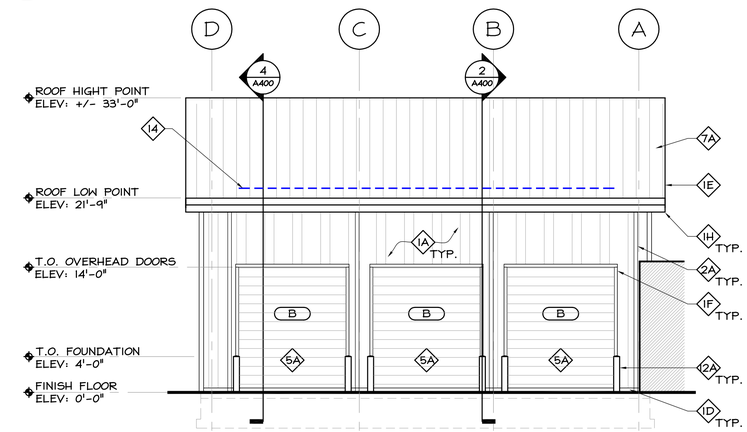

4 / A200 WEST ELEVATION

Scale: 1/8" = 1'-0"

EXTERIOR MATERIAL AND COLOR SCHEDULE

#	MATERIAL	DESCRIPTION
1A	VERTICAL METAL PANEL (INSULATED)	BASIS OF DESIGN: KINGSPAN MODEL: 300 MINOR RIB COLOR: PREMIUM METALIC FINISH: FLUROPAN CLASSIC II
1B	ARCHITECTURAL CMU - SMOOTH FACE	BASIS OF DESIGN: OLD CASTLE COLOR: CHARCOAL GRAY WITH INTEGRATED DRYBLOCK
1C	TRIM CORNER	BASIS OF DESIGN: METLSPAN MODEL: METLSPAN TRIM COLOR: TO BE SELECTED FROM MFR'S PREMIUM COLOR SELECTION FINISH: FLUROPAN CLASSIC II
1D	BASE TRIM AT VERTICAL METAL PANEL	BASIS OF DESIGN: METLSPAN MODEL: METLSPAN TRIM COLOR: TO BE SELECTED FROM MFR'S PREMIUM COLOR SELECTION FINISH: FLUROPAN CLASSIC II
1E	PRE-FINISHED ALUMINUM FASCIA	BASIS OF DESIGN: CARLISLE MODEL: SECURE EDGE COLOR: TO BE SELECTED FROM MFR'S PREMIUM COLOR SELECTION FINISH: FLUROPAN CLASSIC II
1F	WINDOW / DOOR TRIM &/ OR FLASHING	BASIS OF DESIGN: METLSPAN MODEL: METLSPAN TRIM COLOR: TO BE SELECTED FROM MFR'S PREMIUM COLOR SELECTION FINISH: FLUROPAN CLASSIC II
1H	SOFFIT METAL PANEL (INSULATED)	BASIS OF DESIGN: KINGSPAN MODEL: KS OPTIMO SMOOTH COLOR: PREMIUM METALLIC FINISH: FLUROPAN CLASSIC II
2A	GUTTER & DOWNSPOUT(S) WITH OFFSETS	BASIS OF DESIGN: MBCI COLOR: TO BE SELECTED FROM MFR'S PREMIUM COLOR SELECTION FINISH: FLUROPAN CLASSIC II
4A	INSULATED METAL CLAD DOOR	COLOR: TO BE SELECTED FROM MFR'S PREMIUM COLOR SELECTION FINISH: FLUROPAN CLASSIC II
5A	INSULATED OVERHEAD SERVICE COILING DOOR	COLOR: TO BE SELECTED FROM MFR'S PREMIUM COLOR SELECTION FINISH: FLUROPAN CLASSIC II

#	MATERIAL	DESCRIPTION
7A	STANDING SEAM METAL ROOF	COLOR: TO BE SELECTED FROM MFR'S PREMIUM COLOR SELECTION FINISH: FLUROPAN CLASSIC II
2A	BOLLARD WITH COVER	GALVANIZED STEEL, CONCRETE FILLED, PROVIDE POLYETHYLENE THERMOPLASTIC COVER COLOR: TBD, COORDINATE WITH OWNER & ARCHITECT
14	SNOW GUARD ICEBREAKER	COLOR: TO BE SELECTED FROM MFR'S PREMIUM COLOR SELECTION FINISH: FLUROPAN CLASSIC II

EXTERIOR ELEVATION NOTES:

1. NOT ALL EXTERIOR WALL PENETRATIONS, ITEMS, &/or COMPONENTS MAY BE INDICATED &/or SHOWN. RE: ALL DRAWINGS INCLUDING THE PLUMBING, MECHANICAL, ELECTRICAL DRAWINGS.
2. NOT ALL EXTERIOR WALL ELEVATIONS MAY BE SHOWN. COORDINATE w/ PLANS AND SECTIONS FOR ADDITIONAL EXTERIOR WORK. MATERIALS AND TEXTURES ARE CONTINUOUS IN AREAS WHERE WALL MAY BE CONCEALED BY OTHER BUILDING PROJECTIONS.
3. SUBMIT SAMPLES OF ALL EXTERIOR FINISH MATERIALS FOR REVIEW & APPROVAL PRIOR TO FABRICATING/CONSTRUCTION, TYPICAL.
4. FINISH GRADES SHOWN ARE APPROXIMATE. CONTRACTOR TO REVIEW & COORDINATE W/ SITE GRADING PLAN.
5. PAINT ALL EXPOSED EXTERIOR GALVANIZED PRIME STEEL LINTELS TO MATCH ADJACENT EXTERIOR FINISH COLOR, U.N.O.
6. PROVIDE PREFINISHED BACK PLATE @ ALL METAL FASCIA & TRIM JOINTS. BACK PLATE TO BE 8" MIN. WIDTH.
7. SEALANT/CAULKING COLORS TO MATCH ADJACENT FINISH LISTED IN REQUIRED PRIORITY. ARCHITECT TO APPROVE SAMPLE IN FIELD PRIOR TO INSTALLATION.
   A. SEALANT COLOR @ WINDOWS, STOREFRONT, TRANSLUCENT PANELS TO MATCH FRAME COLOR.
   B. SEALANT COLOR @ HOLLOW METAL FRAME TO MATCH FRAME COLOR.

This drawing is copyrighted and is subject to copyright protection as an "architectural work" under 17 U. S. C. Sec. 101 et seq. The protection includes but is not limited to the overall form as well as the arrangement and composition of spaces, materials, color and elements in the design. Under such protection, unauthorized use of this drawing may result in the cessation of construction or buildings being seized and/or monetary compensation being awarded to The Robinson Green Beretta Corporation (RGB).

Any reproduction, possession, or use of this drawing or any part thereof without the express written permission of RGB, is prohibited. Violators will be prosecuted to the full extent of the law.

© RGB 2017

Certification

Drawn by --

Checked by DLD

Revised on

50 Holden Street
Providence, Rhode Island 02908

Phone: (401) 272-1730
Fax: (401) 273-7156

E-mail: rgbinfo@rgb.net
www.rgb.net

RGB architects

Architecture · Project Management · Interior Design

Project

RI ARMY NATIONAL GUARD

ADDITION TO BUILDING P-6

COVENTRY, RI

Drawing Status

ISSUED FOR CONSTRUCTION

Issued On OCTOBER 31, 2017

Sheet Contents

EXTERIOR ELEVATIONS

Project Number. 6336

Drawing No.

A200

Sheet of

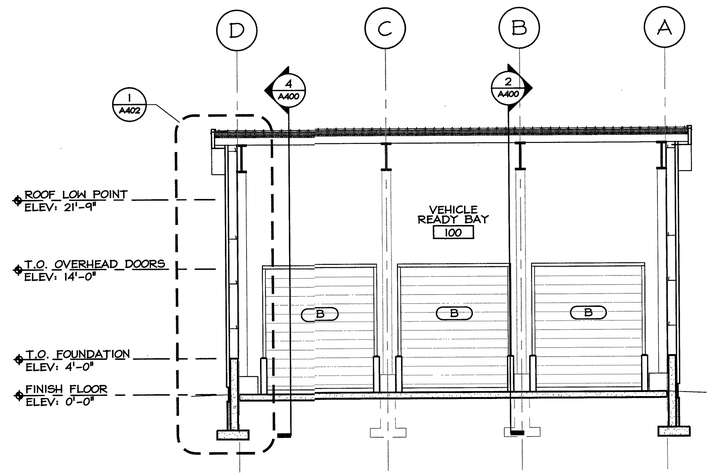

1 / A400 BUILDING SECTION

Scale: 1/8" = 1'-0"

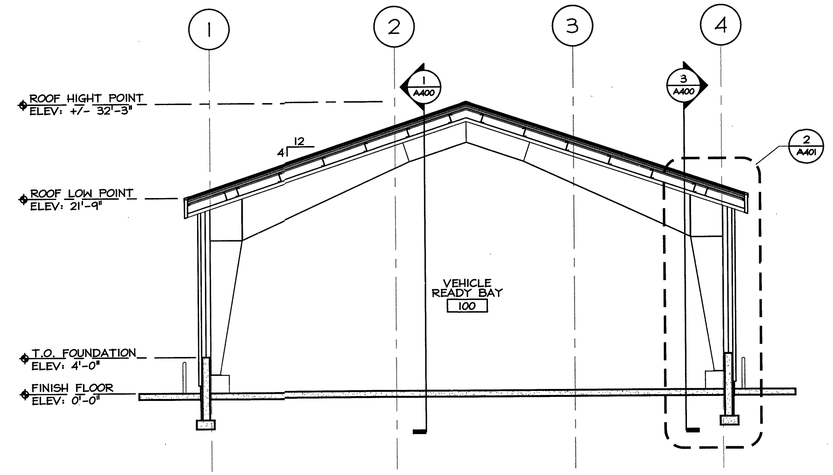

2 / A400 BUILDING SECTION

Scale: 1/8" = 1'-0"

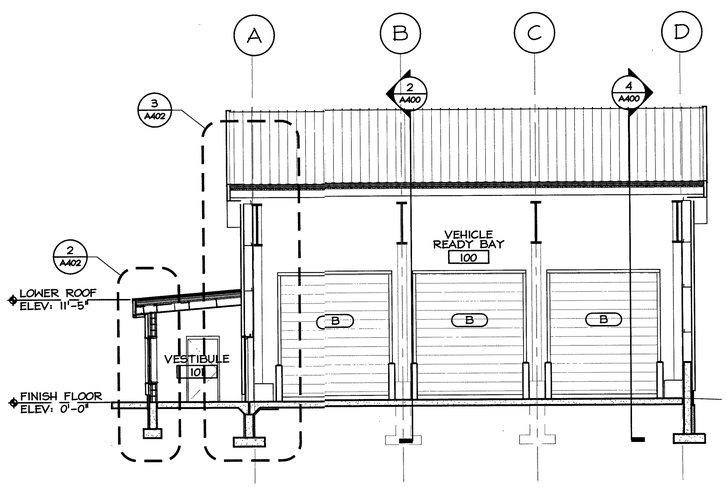

3 / A400 BUILDING SECTION

Scale: 1/8" = 1'-0"

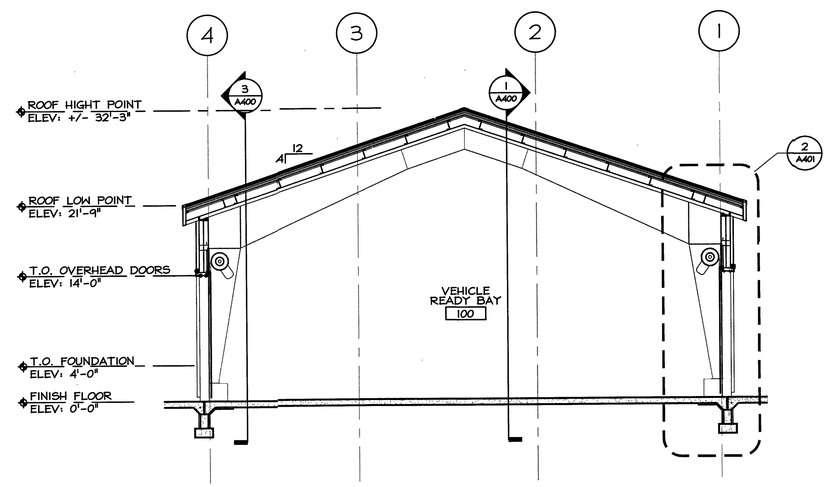

4 / A400 BUILDING SECTION

Scale: 1/8" = 1'-0"

This drawing is copyrighted and is subject to copyright protection as an "architectural work" under 17 U. S. C. Sec. 101 et seq. The protection includes but is not limited to the overall form as well as the arrangement and composition of spaces, materials, color and elements in the design. Under such protection, unauthorized use of this drawing may result in the cessation of construction or buildings being seized and/or monetary compensation being awarded to The Robinson Green Beretta Corporation (RGB).

Any reproduction, possession, or use of this drawing or any part thereof without the express written permission of RGB, is prohibited. Violators will be prosecuted to the full extent of the law.

© RGB 2017

Certification

DAVID L. DECLAIRE No. 2152 REGISTERED ARCHITECT

Drawn by --

Checked by DLD

Revised on

50 Holden Street
Providence, Rhode Island 02908

Phone: (401) 272-1730
Fax: (401) 273-7156

E-mail: rgbinfo@rgb.net
www.rgb.net

RGB architects

Architecture · Project Management · Interior Design

Project

RI ARMY NATIONAL GUARD

RHODE ISLAND NATIONAL GUARD SINCE 1668

ADDITION TO BUILDING P-6

COVENTRY, RI

Drawing Status

ISSUED FOR CONSTRUCTION

Issued On OCTOBER 31, 2017

Sheet Contents

BUILDING SECTIONS

Project Number. 6336

Drawing No.

A400

Sheet of

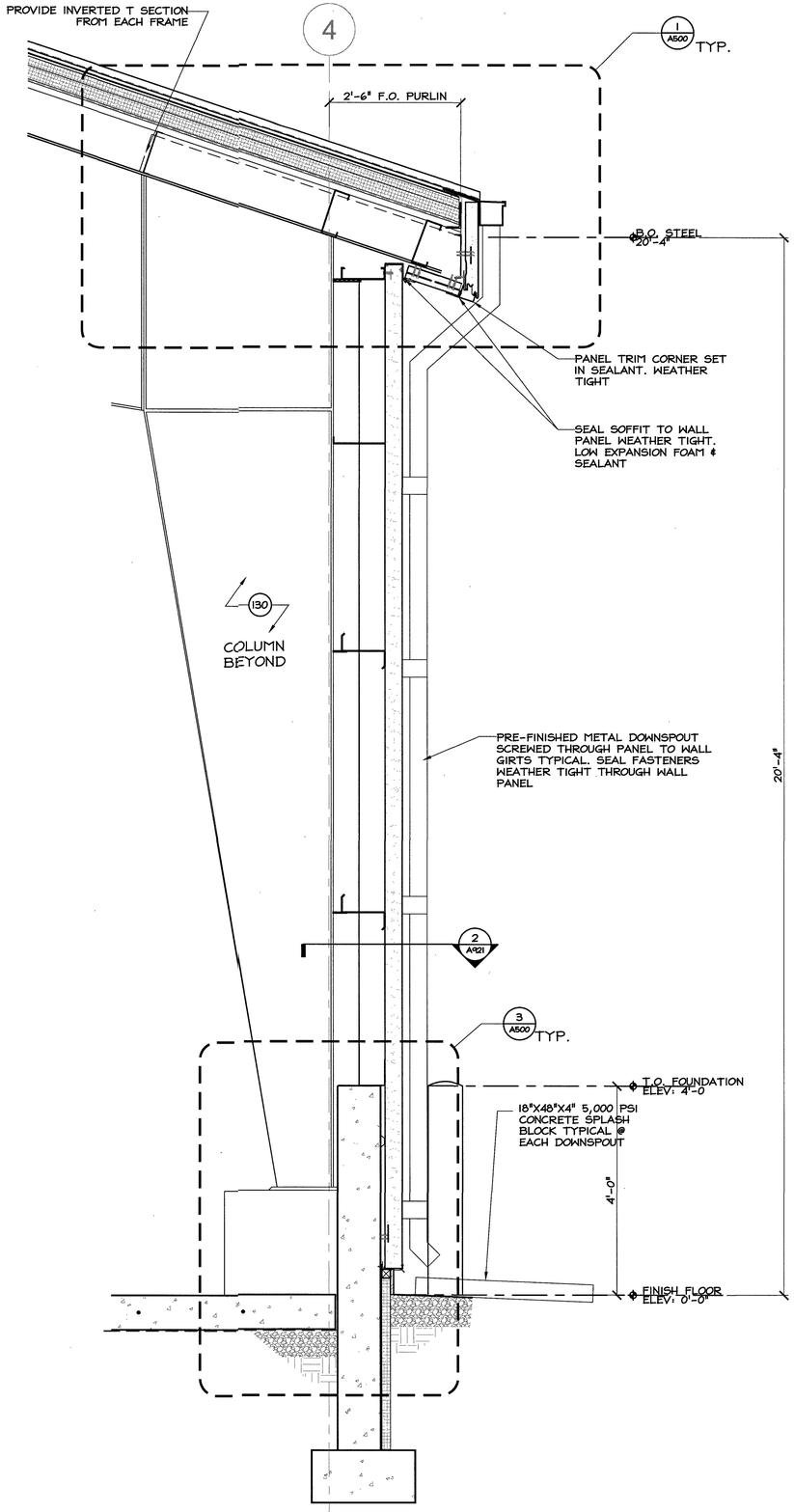

1 A401 WALL SECTION

Scale: 3/4" = 1'-0"

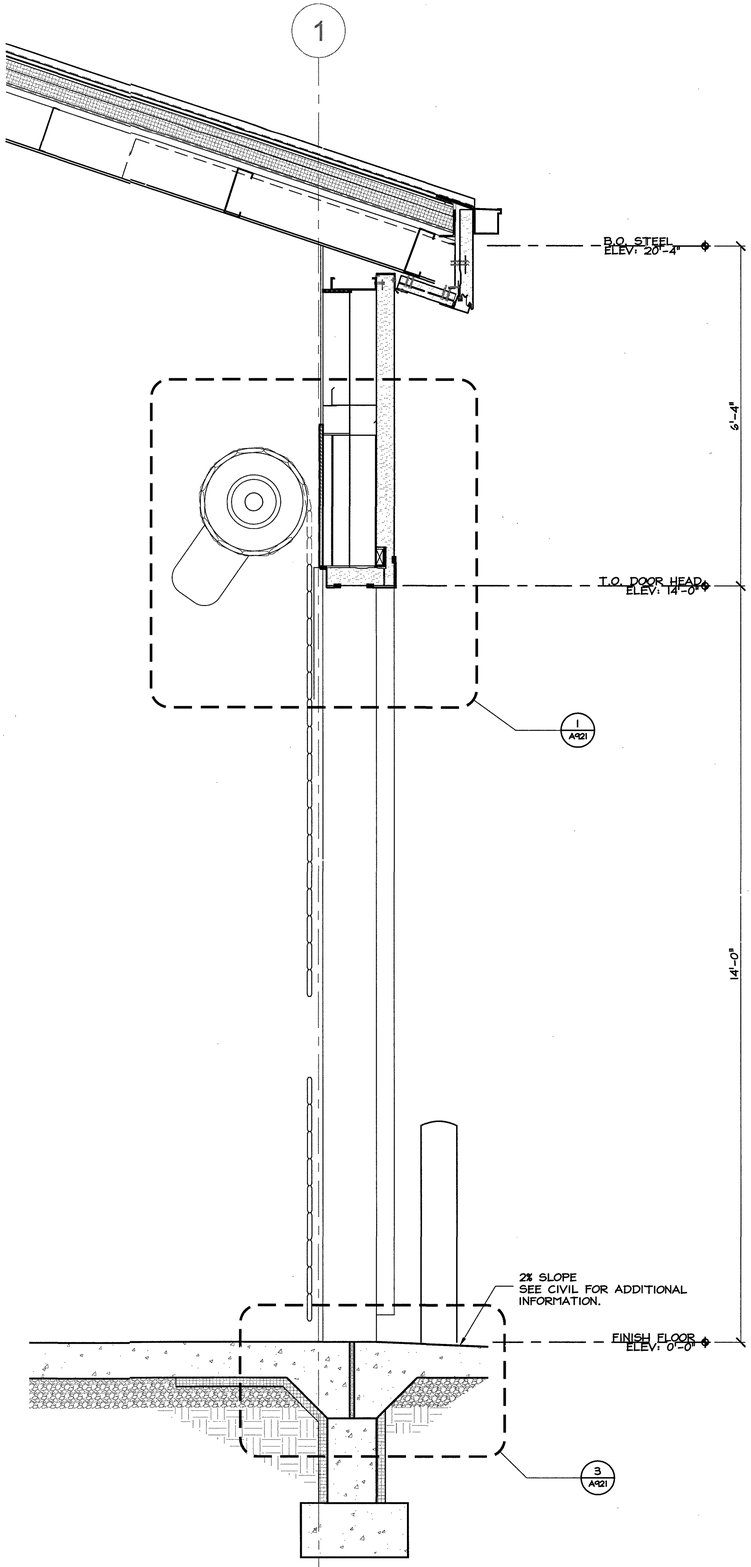

2 A401 WALL SECTION

Scale: 3/4" = 1'-0"

This drawing is copyrighted and is subject to copyright protection as an "architectural work" under 17 U. S. C. Sec. 101 et seq. The protection includes but is not limited to the overall form as well as the arrangement and composition of spaces, materials, color and elements in the design. Under such protection, unauthorized use of this drawing may result in the cessation of construction or buildings being seized and/or monetary compensation being awarded to The Robinson Green Beretta Corporation (RGB).

Any reproduction, possession, or use of this drawing or any part thereof without the express written permission of RGB, is prohibited. Violators will be prosecuted to the full extent of the law.

© RGB 2017

Certification

Drawn by --

Checked by DLD

Revised on

50 Holden Street
Providence, Rhode Island 02908

Phone: (401) 272-1730
Fax: (401) 273-7156

E-mail: rgbinfo@rgb.net
www.rgb.net

RGB architects

Architecture · Project Management · Interior Design

Project

RI ARMY NATIONAL GUARD

ADDITION TO BUILDING P-6

COVENTRY, RI

Drawing Status

ISSUED FOR CONSTRUCTION

Issued On OCTOBER 31, 2017

Sheet Contents

WALL SECTIONS

Project Number. 6336

Drawing No.

A401

Sheet of

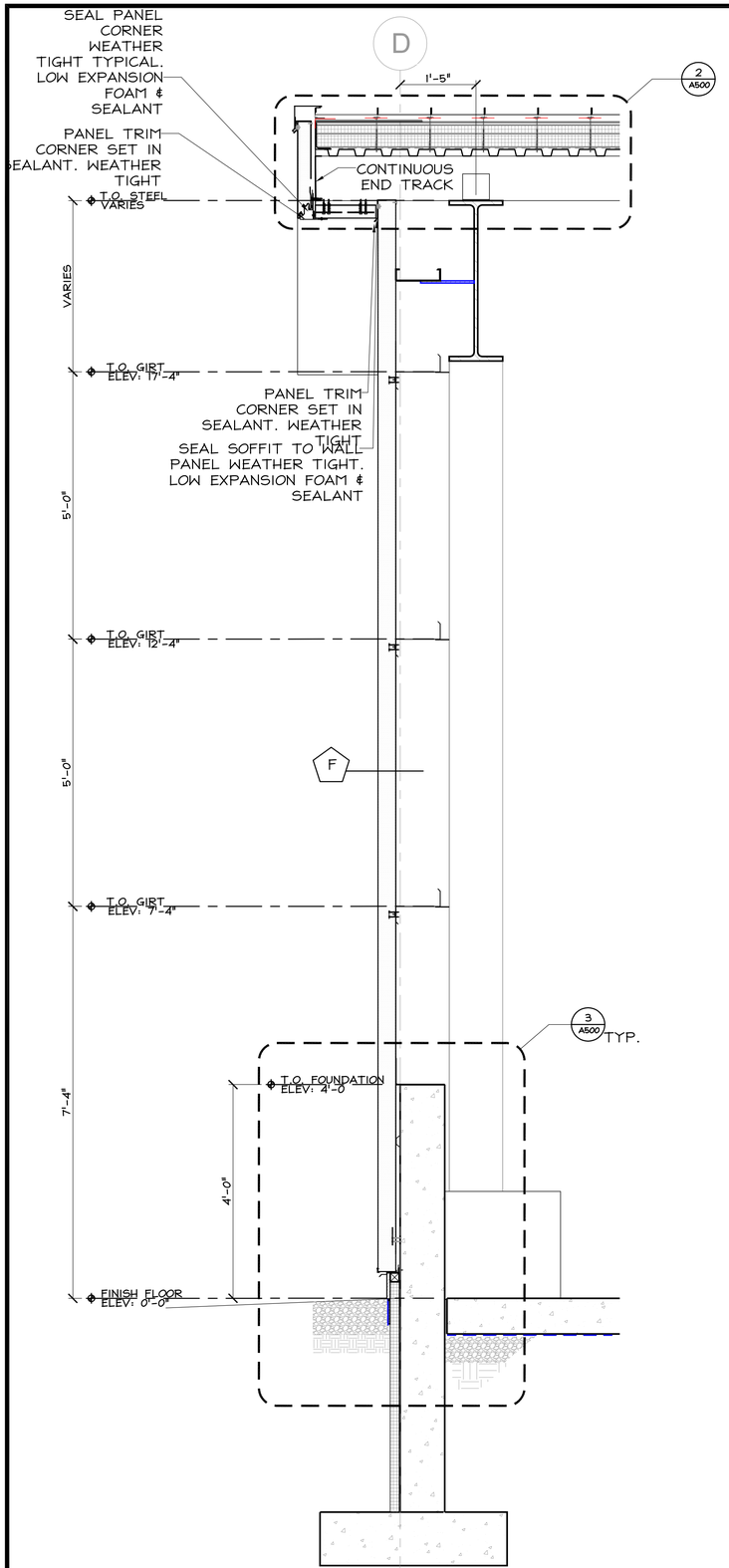

1 A402 WALL SECTION

Scale: 3/4" = 1'-0"

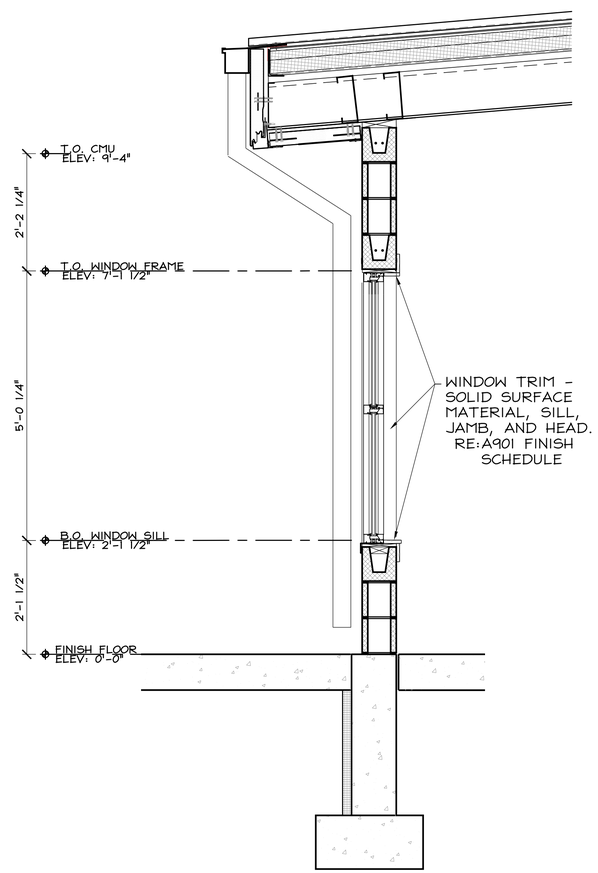

2 A402 WALL SECTION

Scale: 3/4" = 1'-0"

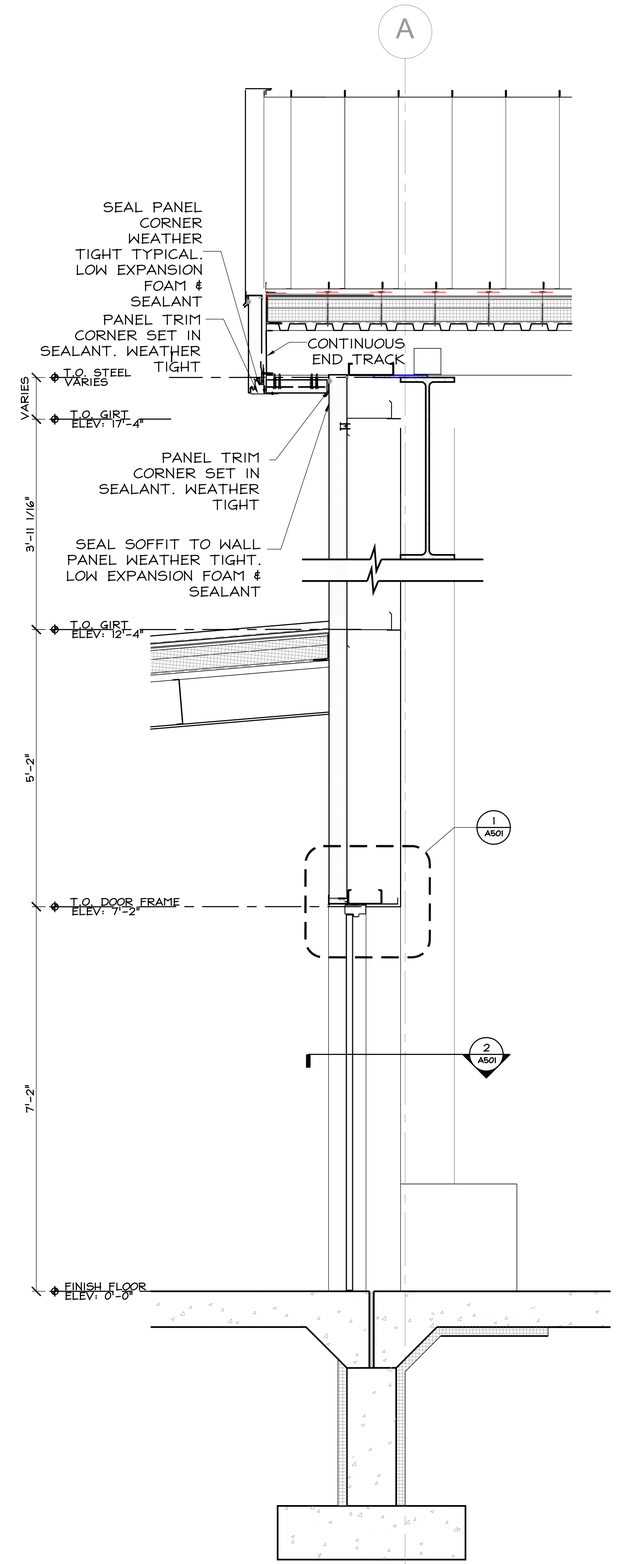

3 A402 WALL SECTION

Scale: 3/4" = 1'-0"

This drawing is copyrighted and is subject to copyright protection as an "architectural work" under 17 U. S. C. Sec. 101 et seq. The protection includes but is not limited to the overall form as well as the arrangement and composition of spaces, materials, color and elements in the design. Under such protection, unauthorized use of this drawing may result in the cessation of construction or buildings being seized and/or monetary compensation being awarded to The Robinson Green Beretta Corporation (RGB).

Any reproduction, possession, or use of this drawing or any part thereof without the express written permission of RGB, is prohibited. Violators will be prosecuted to the full extent of the law.

© RGB 2017

Certification

Drawn by --

Checked by DLD

Revised on

50 Holden Street
Providence, Rhode Island 02908

Phone: (401) 272-1730
Fax: (401) 273-7156

E-mail: rgbinfo@rgb.net
www.rgb.net

RGB architects

Architecture · Project Management · Interior Design

Project

RI ARMY NATIONAL GUARD

ADDITION TO BUILDING P-6

COVENTRY, RI

Drawing Status

ISSUED FOR CONSTRUCTION

Issued On OCTOBER 31, 2017

Sheet Contents

WALL SECTIONS

Project Number. 6336

Drawing No.

A402

Sheet of

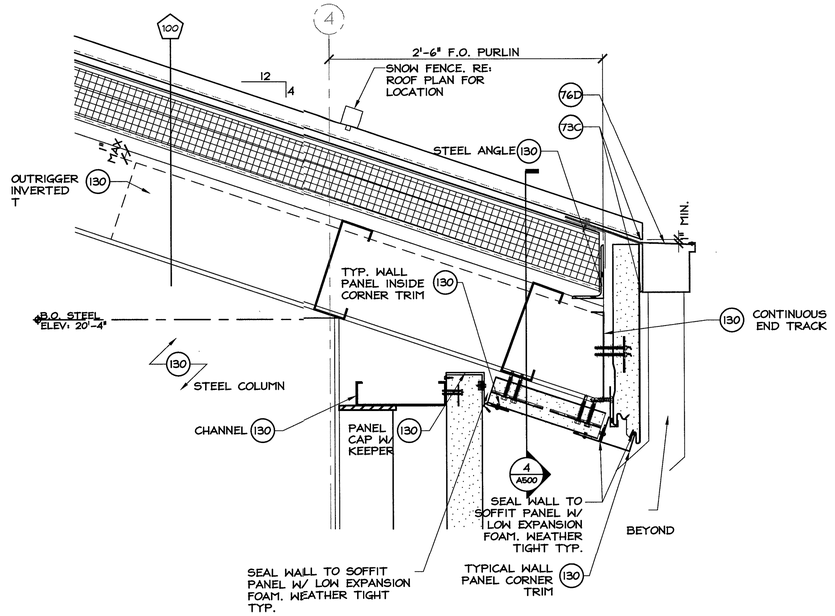

1 / A500 SECTION: ROOF EAVE W/ GUTTER

Scale: 1 1/2" = 1'-0"

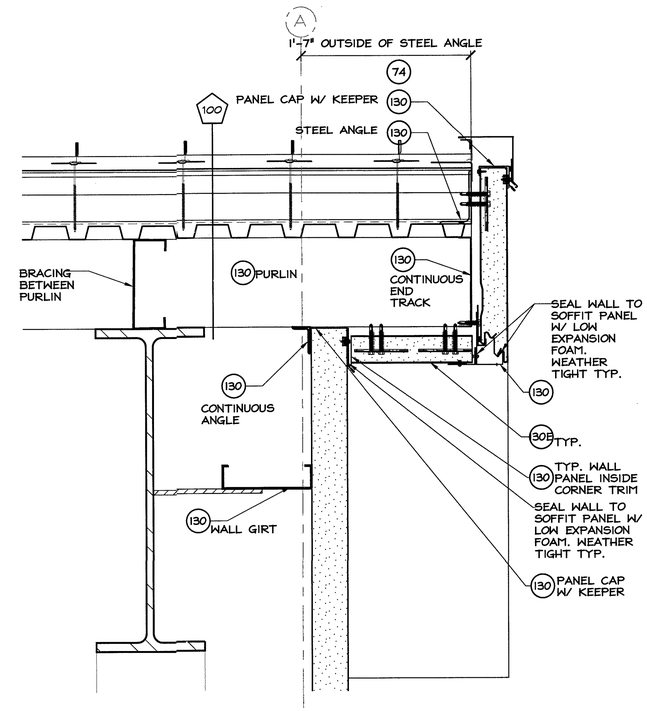

2 / A500 SECTION: ROOF EAVE W/O GUTTER

Scale: 1 1/2" = 1'-0"

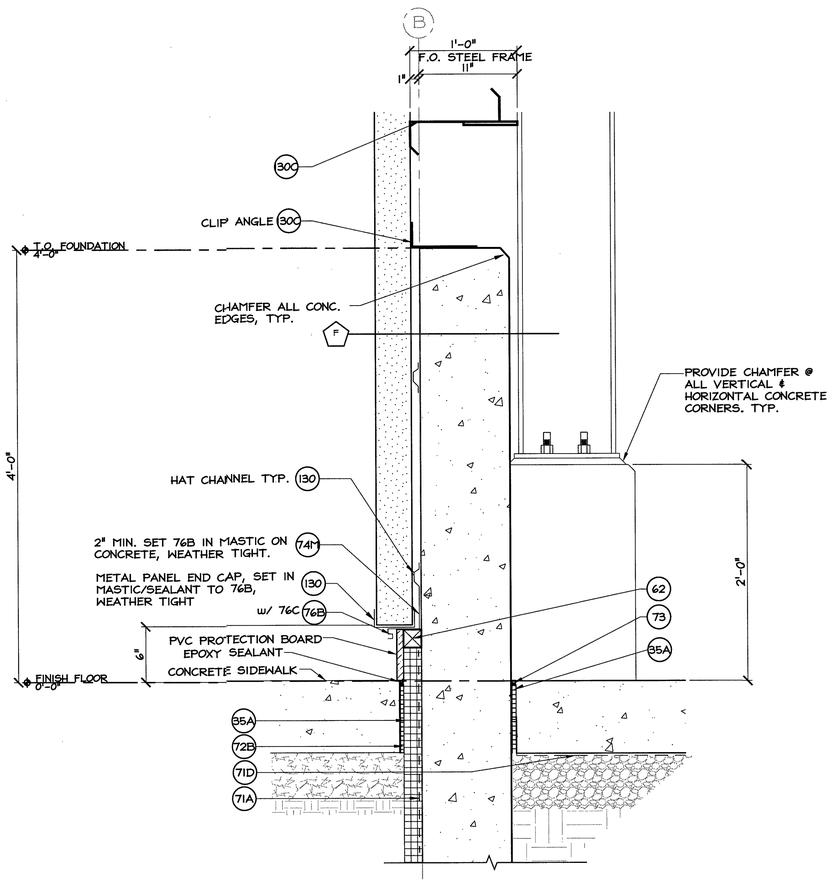

3 / A500 SECTION: FOUNDATION @ COLUMNS, TYP.

Scale: 1 1/2" = 1'-0"

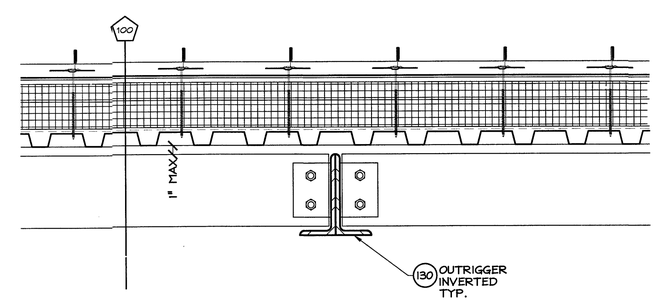

4 / A500 TYPICAL OVERHANG THRU OUTRIGGER

Scale: 1 1/2" = 1'-0"

This drawing is copyrighted and is subject to copyright protection as an "architectural work" under 17 U. S. C. Sec. 101 et seq. The protection includes but is not limited to the overall form as well as the arrangement and composition of spaces, materials, color and elements in the design. Under such protection, unauthorized use of this drawing may result in the cessation of construction or buildings being seized and/or monetary compensation being awarded to The Robinson Green Beretta Corporation (RGB).

Any reproduction, possession, or use of this drawing or any part thereof without the express written permission of RGB, is prohibited. Violators will be prosecuted to the full extent of the law.

© RGB 2017

Certification

Drawn by --

Checked by DLD

Revised on

50 Holden Street
Providence, Rhode Island 02908

Phone: (401) 272-1730
Fax: (401) 273-7156

E-mail: rgbinfo@rgb.net
www.rgb.net

RGB ARCHITECTS

Architecture · Project Management · Interior Design

Project

RI ARMY NATIONAL GUARD

ADDITION TO BUILDING P-6

COVENTRY, RI

Drawing Status

ISSUED FOR CONSTRUCTION

Issued On OCTOBER 31, 2017

Sheet Contents

EXTERIOR SECTION DETAILS

Project Number. 6336

Drawing No.

A500

Sheet of

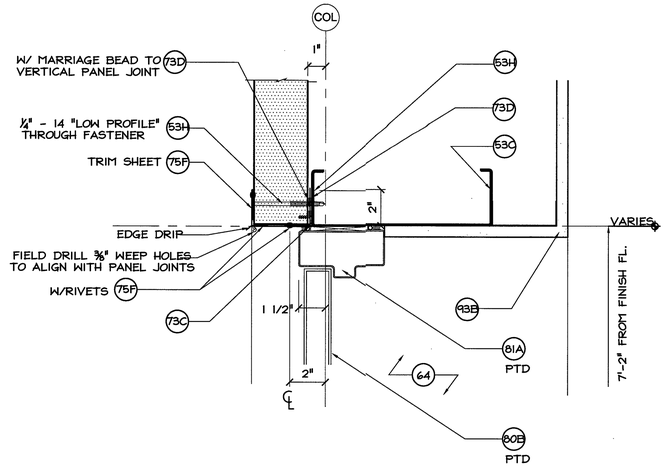

1 A501 SECTION: HOLLOW METAL DOOR HEAD

Scale: 3" = 1'-0"

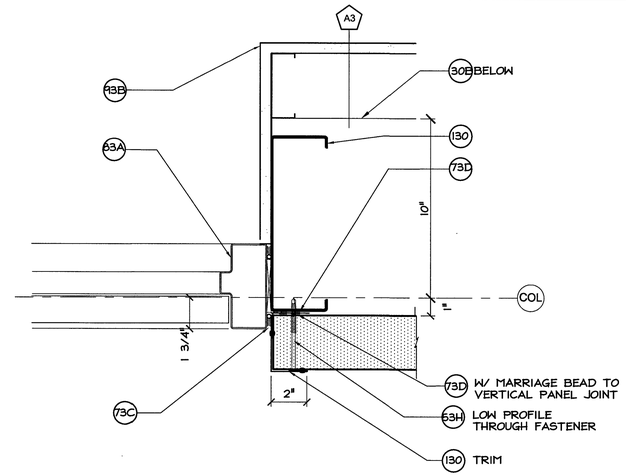

2 A501 HOLLOW METAL DOOR JAMB

Scale: 3" = 1'-0"

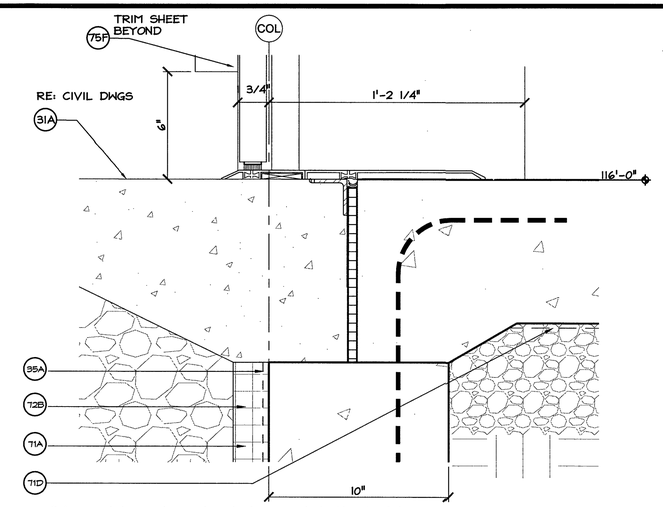

3 A501 SECTION: HOLLOW METAL DOOR SILL

Scale: 3" = 1'-0"

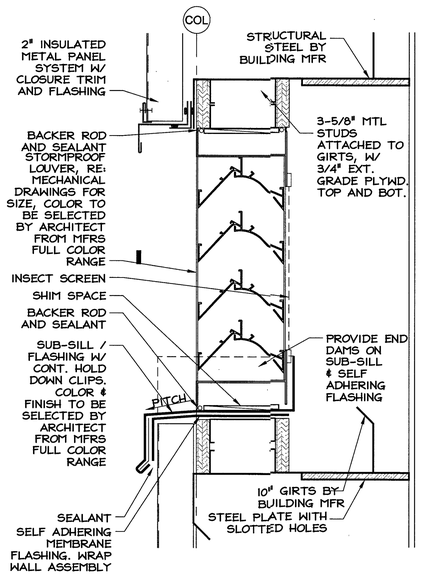

4 A502 SECTION: LOUVER

Scale: 3" = 1'-0"

This drawing is copyrighted and is subject to copyright protection as an "architectural work" under 17 U. S. C. Sec. 101 et seq. The protection includes but is not limited to the overall form as well as the arrangement and composition of spaces, materials, color and elements in the design. Under such protection, unauthorized use of this drawing may result in the cessation of construction or buildings being seized and/or monetary compensation being awarded to The Robinson Green Beretta Corporation (RGB).

Any reproduction, possession, or use of this drawing or any part thereof without the express written permission of RGB, is prohibited. Violators will be pn secuted to the full extent of the law.

© RGB 2017

Ce:tification

Drawn by --

Checked by DLD

Revised on

50 Holden Street
Providence, Rhode Island 02908

Phone: (401) 272-1730
Fax: (401) 273-7156

E-mail: rgbinfo@rgb.net
www.rgb.net

RGB ARCHITECTS

Architecture · Project Management · Interior Design

Project

RI ARMY NATIONAL GUARD

ADDITION TO BUILDING P-6

COVENTRY, RI

Drawing Status

ISSUED FOR CONSTRUCTION

Issued On OCTOBER 31, 2017

Sheet Contents

EXTERIOR SECTION DETAILS

Project Number. 6336

Drawing No.

A501

Sheet of

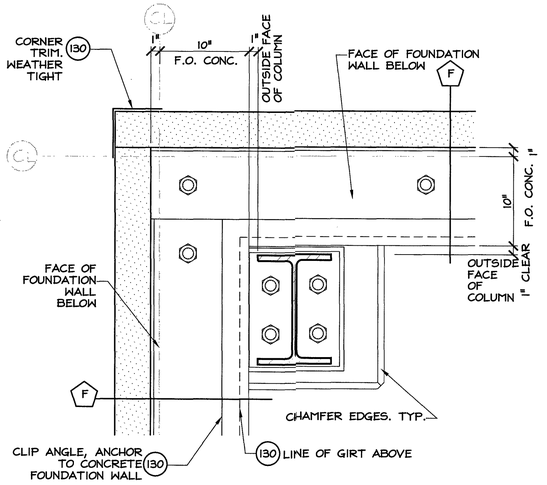

1 A510 PLAN: TYP. COLUMN @ CORNER

Scale: 1 1/2" = 1'-0"

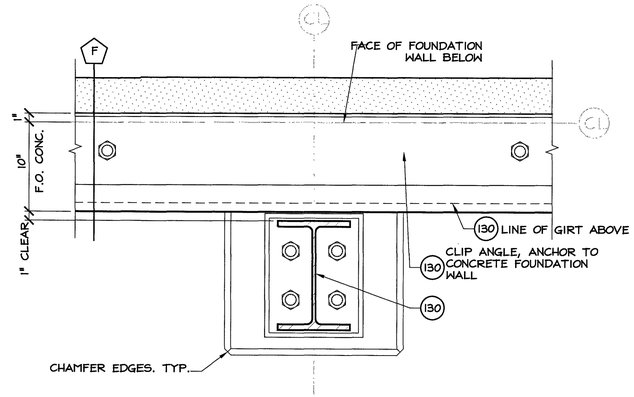

2 A510 PLAN: TYP. COLUMN

Scale: 1 1/2" = 1'-0"

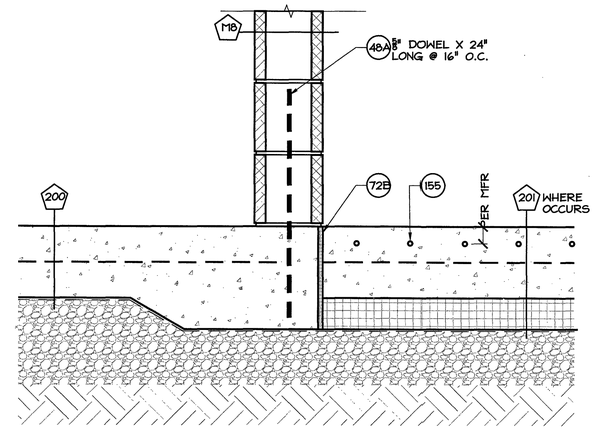

3 A510 SECTION: THERMAL BREAK @ SLAB

Scale: 1 1/2" = 1'-0"

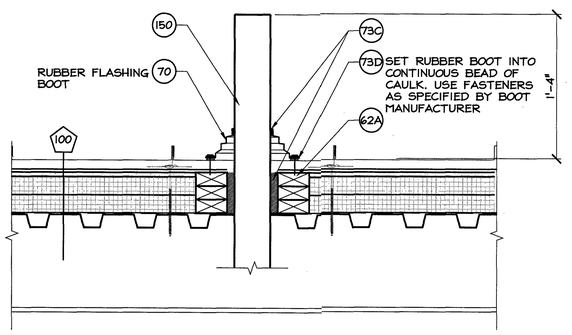

4 A510 ROOF SECTION: PLUMBING VENT

Scale: 1 1/2" = 1'-0"

This drawing is copyrighted and is subject to copyright protection as an "architectural work" under 17 U. S. C. Sec. 101 et seq. The protection includes but is not limited to the overall form as well as the arrangement and composition of spaces, materials, color and elements in the design. Under such protection, unauthorized use of this drawing may result in the cessation of construction or buildings being seized and/or monetary compensation being awarded to The Robinson Green Beretta Corporation (RGB).

Any reproduction, possession, or use of this drawing or any part thereof without the express written permission of RGB, is prohibited. Violators will be prosecuted to the full extent of the law.

© RGB 2017

Certification

Drawn by --

Checked by DLD

Revised on

50 Holden Street
Providence, Rhode Island 02908

Phone: (401) 272-1730
Fax: (401) 273-7156

E-mail: rgbinfo@rgb.net
www.rgb.net

RGB architects

Architecture · Project Management · Interior Design

Project

RI ARMY NATIONAL GUARD

ADDITION TO BUILDING P-6

COVENTRY, RI

Drawing Status

ISSUED FOR CONSTRUCTION

Issued On OCTOBER 31, 2017

Sheet Contents

EXTERIOR PLAN & ROOF DETAILS

Project Number. 6336

Drawing No.

A510

Sheet of

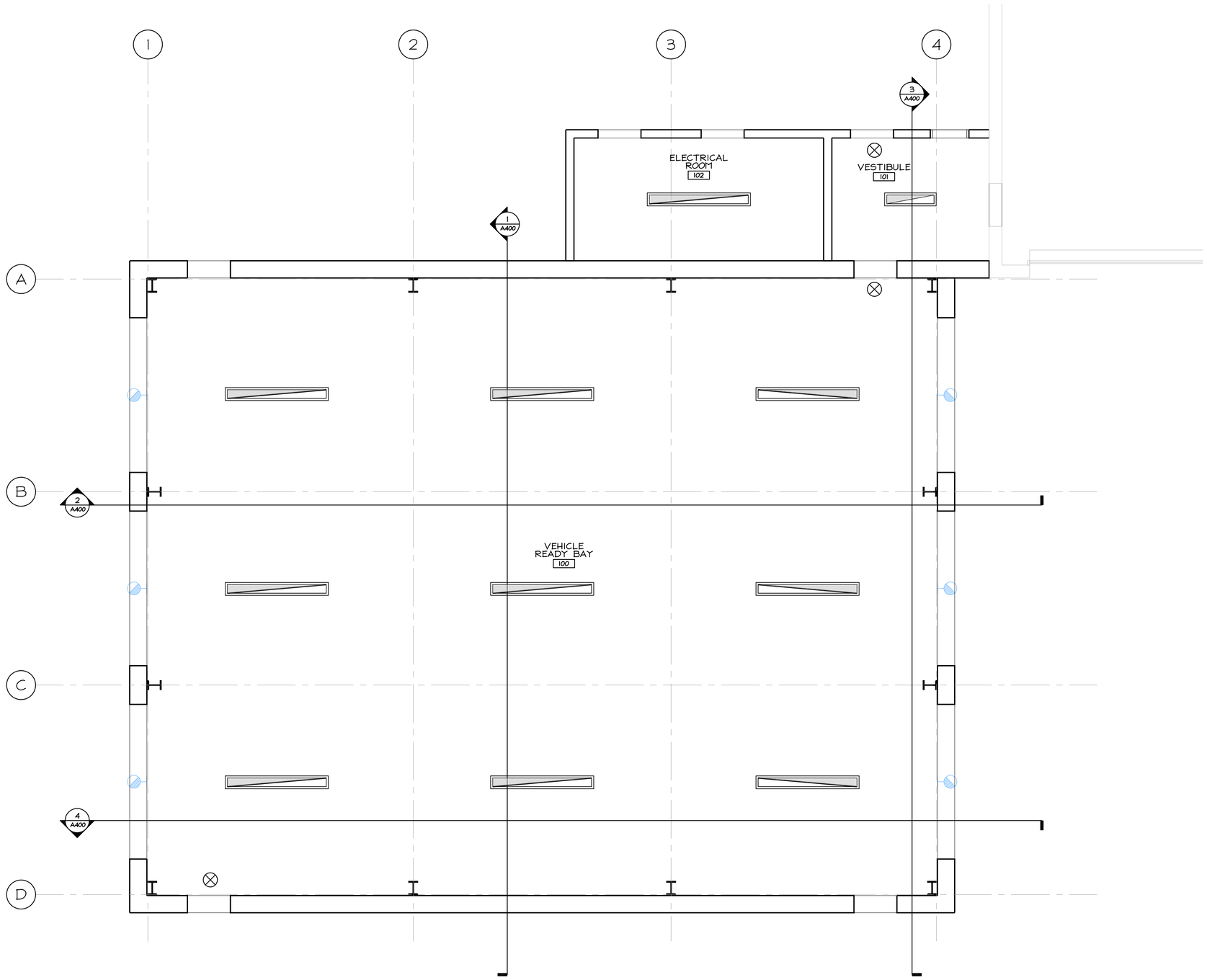

N

1 / A601 REFLECTED CEILING PLAN

Scale: 1/4" = 1'-0"

REFLECTED CEILING PLAN NOTES:

1. NOT ALL CEILING MOUNTED &/or SUSPENDED ITEMS, COMPONENTS, &/or WORK MAY BE SHOWN. CONTRACTOR TO COORDINATE w/ ALL DRAWINGS INCLUDING THE STRUCTURAL, PLUMBING, MECHANICAL & ELECTRICAL DRAWINGS. NOTIFY THE ARCHITECT OF ANY ADDITIONAL ITEMS &/or DISCREPANCIES BEFORE STARTING WORK.
2. ALL CEILING MOUNTED ITEMS ARE TO BE CENTERED IN CEILING TILES U.N.O.
3. SPRINKLER HEAD LAYOUT IS APPROXIMATE AND NOT ALL HEADS MAY BE SHOWN. COORDINATE w/ SPRINKLER DWGS AND NOTIFY ARCHITECT OF ANY DISCREPANCIES BEFORE STARTING WORK.
4. PROVIDE WHITE GROMMET TRIM @ ALL SUPPORT CABLE &/or WIRING PENETRATIONS FOR SUSPENDED ELEMENTS.

REFLECTED CEILING PLAN LEGEND:

- NEW GYPSUM BOARD SOFFIT OR GYPSUM BOARD CEILING
- NEW CEILING GRID
- 2X2 CEILING LIGHT. COORDINATE w/ ELECTRICAL DWGS
- 2X4 CEILING LIGHT. COORDINATE w/ ELECTRICAL DWGS
- PENDANT HUNG LIGHT COORDINATE w/ ELECTRICAL DWGS
- RECESSED OR SURFACE MOUNTED FLUORESCENT LIGHT FIXTURE. COORDINATE w/ ELECTRICAL DWGS
- SUSPENDED ELEMENT BELOW CEILING.
- NEW WALL MOUNTED UP/DN. LIGHT FIXTURE COORDINATE w/ ELECTRICAL DWGS
- NEW CEILING MOUNTED LIGHT COORDINATE w/ ELECTRICAL DWGS
- NEW CEILING MOUNTED HVAC SUPPLY DIFFUSER COORDINATE w/ MECHANICAL DWGS
- NEW CEILING MOUNTED HVAC RETURN DIFFUSER. COORDINATE w/ MECHANICAL DWGS.
- EXIT SIGN COORDINATE w/ ELECTRICAL DWGS
- SMOKE DETECTOR COORDINATE w/ ELECTRICAL DWGS
- HEAT DETECTOR COORDINATE w/ ELECTRICAL DWGS
- SPRINKLER HEAD COORDINATE w/ PLUMBING/SPRINKLER DWGS

REFLECTED CEILING PLAN WORK NOTES:

FOR PLAN NOTES RE:A101

XXX	NOTES WITHOUT AN ARROW INDICATE AN ENTIRE SPACE/AREA.
XXX	NOTES WITH AN ARROW(S) INDICATE SPECIFIC AREAS &/or ITEMS.
RCP1	2'X2' ACT SYSTEM ALL ACT CEILINGS @ 8'-0" A.F.F. U.N.O.
RCP2	GWB CEILING @ 8'-0", EPOXY PAINTED
RCP3	
RCP4	
RCP5	--
RCP6	--

This drawing is copyrighted and is subject to copyright protection as an "architectural work" under 17 U. S. C. Sec. 101 et seq. The protection includes but is not limited to the overall form as well as the arrangement and composition of spaces, materials, color and elements in the design. Under such protection, unauthorized use of this drawing may result in the cessation of construction or buildings being seized and/or monetary compensation being awarded to The Robinson Green Beretta Corporation (RGB).

Any reproduction, possession, or use of this drawing or any part thereof without the express written permission of RGB, is prohibited. Violators will be prosecuted to the full extent of the law.

© RGB 2017

Certification

DAVID L. DESILVERIO No. 2152 REGISTERED ARCHITECT

Drawn by --

Checked by DLD

Revised on

50 Holden Street
Providence, Rhode Island 02908

Phone: (401) 272-1730
Fax: (401) 273-7156

E-mail: rgbinfo@rgb.net
www.rgb.net

RGB architects

Architecture · Project Management · Interior Design

Project

RI ARMY NATIONAL GUARD

RHODE ISLAND NATIONAL GUARD SINCE 1639

ADDITION TO BUILDING P-6

COVENTRY, RI

Drawing Status

ISSUED FOR CONSTRUCTION

Issued On OCTOBER 31, 2017

Sheet Contents

REFLECTED CEILING PLAN

Project Number. 6336

Drawing No.

A601

Sheet of

ROOM FINISH SCHEDULE

MARK	ROOM NAME	FLOOR	BASE	WALLS	CEILING MATL	CEILING HEIGHT	REMARKS	MARK
100	VEHICLE READY BAY	96Z	98E	97L	95D, 95E		2, 3	100
101	VESTIBULE	96M	98E	97D	95D	8'	1	101
102	ELECTRICAL ROOM	96Z	--	--	--	8'	--	102

MATERIALS:

DIVISION 09 REF: G002

(95) CEILING, SUSPENDED
- (95A) 2 X 2 TEGULAR TILE ⅝" GRID
- (95B) -
- (95C) GYPSUM - PAINTED
- (95D) EXPOSED STRUCTURE - PAINTED
- (95E) SPRAYED ACOUSTICAL TREATMENT 1" THICK-WHITE

(96) FLOOR FINISH
- (96A) -
- (96B) -
- (96C) -
- (96D) VCT - 12 X 24 TILES
- (96E) -
- (96F) -
- (96H) -
- (96J) -
- (96K) -
- (96L) EPOXY POURED FLOORING - SLIP RESISTANT
- (96M) ENTRANCE MAT TILE
- (96N) ALUMINUM ANGLE @ ALL TILE EDGES
- (96P) STONE THRESHOLD
- (96Z) CONCRETE SEALED

(97) WALL FINISH
- (97A) TILE - 12 X 24 PORCELAIN
- (97B) ALUMINUM TILE TRIM EDGE PIECE
- (97C) -
- (97D) PAINT (P)
- (97E) TUB/SHOWER ENCLOSURE
- (97F) -
- (97G) -
- (97H) WALL PROTECTION
- (97J) -
- (97K) SEALED CMU BLOCK
- (97L) EPOXY PAINT
- (97Z) NO ADDITIONAL FINISH REQUIRED

(98) WALL BASE
- (98A) TILE/COVE
- (98B) -
- (98C) -
- (98D) EPOXY PAINT
- (98E) RUBBER 6"
- (98F) -
- (98L) EPOXY FLASH COVED BASE 8"
- (98Z) NO BASE FINISH REQUIRED

REMARK NOTES:

1. ENTRANCE MAT TILE 8'x4'

2. STRUCTURAL BEAMS AND COLUMNS TO BE PAINTED AS ACCENT COLOR.

3. TWO COLOR EPOXY PAINT - 0'-0" UP TO 8'-0" AFF FIRST COLOR, SECOND COLOR 8'-0" AFF TO CEILING.

INTERIOR FINISH NOTES:

1. G.C. SHALL SUBMIT MANUFACTURER'S COLOR SELECTION FOR ALL SPECIFIED MATERIALS (COLOR SCHEDULE TO BE PRESENTED UPON RECEIPT AND APPROVAL OF ALL SPECIFIED FINISHES).

2. G.C. SHALL INSTALL FRT WOOD BLOCKING AT ALL AREAS INDICATED TO RECEIVE WALL MOUNTED ITEMS, CABINETRY, SHELVING, TOILET ACCESSORIES, LOCKERS ETC.

3. REFER TO REFLECTED CEILING PLANS FOR CEILING HEIGHTS.

4. ALL SPECIFIED FINISHES SHALL BE CONTINUOUS BEHIND ALL MOUNTED OR APPLIED ITEMS, i.e.: MIRRORS, TACK BOARDS, ETC.

5. FOR MILLWORK FINISHES & DETAILS RE: ARCHITECTURAL DWGS A810.

6. SEE FLOOR FINISH PLANS FOR FLOORING PATTERNS. A901

7. 25 % OF ALL FLOOR AND WALL TILE WILL BE ACCENT COLORS AND LAID IN PATTERNS OR AS SHOWN IN PLAN.

8. ALL RUBBER BASE WILL BE STRAIGHT AT CARPETS AND COVED AT RESILIENT FLOORING.

9. TILE WAINSCOT SHALL BE MINIMUM 4'-6" ABOVE FINISHED FLOOR OR AS NOTED.

10. PAINT ALL EXPOSED DUCTS, CONDUITS, PIPING, ETC, NOT CONCEALED BY ROOM FINISHES. COORDINATE WITH MEP DRAWINGS.

11. PAINT ALL METAL HANDRAILS, RISERS, STAIR STRINGERS AND UNDERSIDE OF STAIR AT ALL EXPOSED AREAS.

12. GC AND VENDORS SHALL DETERMINE AVAILABILITY OF ALL FINISH MATERIALS. ANY DELIVERY SCHEDULE THAT POTENTIALLY MAY CAUSE COORDINATION PROBLEMS DURING THE FINAL STAGES OF CONSTRUCTION/INSTALLATION SHALL BE BROUGHT TO ATTENTION OF RGB, EARLY ON, FOR POSSIBLE REEVALUATION OF MATERIAL DESIGNATION. THE LACK OF A TIMELY ORDER DOES NOT CONSTITUTE A RE-SELECTION.

13. A MINIMUM QUANTITY OF TWO (2) 1'-0" X 1'-0" FINISH SAMPLES OF ALL SPECIFIED FINISHES AND CURRENT STOCK SHALL BE PROVIDED FOR APPROVAL PRIOR TO ORDERING.

14. GC SHALL ASSURE THAT NO ELECTRIC RECEPTACLE OR TELECOMMUNICATIONS OUTLET COVERPLATES HAVE BEEN INSTALLED PRIOR TO COMPLETION OF APPLICATION OF ANY WALL FINISH MATERIALS. ANY SUCH COVERPLATES OR SURFACE HARDWARE, ETC., IN PLACE, SHALL BE REMOVED PRIOR TO WALL FINISH APPLICATION.

15. UPON COMPLETION OF FINISH PHASE OF JOB, GC SHALL REMOVE ALL PAINT, WALLCOVERING PASTE, ETC., FROM WHERE IT HAS SPILLED, SPLASHED, OR SPATTERED.

16. GC SHALL INSTALL ALL WALL PROTECTION AND CORNER GUARDS AS SHOWN ON PLAN.

17. ALL FINISH FLOORING MATERIAL INSTALLATION SHALL BE PER MANUFACTURERS RECOMMENDATION. SEAMS SHALL BE TIGHT/INVISIBLE. GC SHALL PROVIDE AND MAINTAIN ADEQUATE PROTECTION FOR ALL NEWLY INSTALLED FLOORING MATERIALS FOR THE DURATION OF CONSTRUCTION AND REMOVE PROTECTION ONLY IMMEDIATELY BEFORE JOB COMPLETION, FLOOR WILL BE THOROUGHLY CLEANED OF ALL ADHESIVE, GROUT, CONSTRUCTION STAINS, ETC.

19. GC IS RESPONSIBLE FOR ALL FLASH PATCHING AND TO HAVE FLOOR IN CONDITION TO RECEIVE NEW FLOORING MATERIALS.

20. CARPET SUPPLIER/INSTALLER SHALL PROVIDE CURRENT STOCK SAMPLES OF SPECIFIED CARPET FINISHES FOR APPROVAL PRIOR TO ORDERING. PROVIDE TRANSITION STRIPS AS SPECIFIED OR NECESSARY (VINYL, IF NOT SPECIFIED).

21. GC, ALL VENDORS/SUBCONTRACTORS ARE RESPONSIBLE FOR FIELD VERIFICATION OF ALL DIMENSIONS, QUANTITIES ETC., OF THEIR RESPECTIVE WORK.

22. FOR FLOOR MATERIAL CHANGE LOCATIONS, RE: A911 DWGS &/OR FLOOR FINISH PLANS.

23. CARPET CONTRACTOR TO SUBMIT SEAMING DIAGRAMS FOR APPROVAL.

24. FOR WALL MATERIAL FINISH CHANGE LOCATIONS, RE: INTERIOR WALL ELEVATIONS.

25. FOR ADDITIONAL WORK REQUIRED, RE: INTERIOR WALL ELEVATION.

26. NOT ALL WALL OBJECTS MAY BE SHOWN. COORDINATE WITH MECH; PLUMBING; ELECTRICAL DRAWINGS ALSO REFER ARCHITECTURAL DWGS & SPECIFICATIONS FOR ADDITIONAL ITEMS.

FINISH MATERIAL SCHEDULE

TAG	DESCRIPTION	MANUFACTURER BASIS OF DESIGN	STYLE NAME/NUMBER BASIS OF DESIGN	COLOR NAME / NUMBER	FINISH / REMARKS
95A	ACOUSTICAL CEILING TILE	USG	MARS CLIMA PLUS HIGH NRC - SLT - 87200	WHITE	-
95C	PAINTED GYPSUM BOARD	BENJAMIN MOORE	ECOSPEC	NAVAJO WHITE	EGGSHELL FINISH
95D	EXPOSED STRUCTURE - PAINTED	BENJAMIN MOORE	ECOSPEC	NAVAJO WHITE	FLAT FINISH
96D	TBD	ARMSTRONG	RAFFIA & STRIATIONS	TBD	-
96L	EPOXY FLOORING - SLIP RESISTANT	DUR-A-FLEX	CRYL-A-CHIP MACRO	TBD	4 COLOR PATTERN
96M	ENTRANCE MAT TILE	LEES CARPET	STEP IN STYLE	TBD	-
96N	ALUMINUM EDGE STRIP	SCHLUTER	TBD	TBD	-
96Z	SEALED CONCRETE	COORDINATE w/ DIVISION 3	TBD	CLEAR	-
97D	PAINT	BENJAMIN MOORE	ECO SPEC	NAVAJO WHITE	EGGSHELL FINISH
97H	WALL PROTECTION	INPRO CORPORATION	TBD	NAVAJO WHITE	-
97K	SEALED CMU	TAG	TBD	NAVAJO WHITE	-
97L	EPOXY PAINT	BENJAMIN MOORE	TBD	NAVAJO WHITE	-
98E	RUBBER BASE - 6"	ROPPE	PINNICLE RUBBER BASE	TAN	-
SS-1	SOLID SURFACE	CORIAN	TBD	NAVAJO WHITE	INSTALL AT WINDOW SILL

This drawing is copyrighted and is subject to copyright protection as an "architectural work" under 17 U. S. C. Sec 101 et seq. The protection includes but is not limited to the overall form as well as the arrangement and composition of spaces, materials, color and elements in the design. Under such protection, unauthorized use of this drawing may result in the cessation of construction or buildings being seized and/or monetary compensation being awarded to The Robinson Green Beretta Corporation (RGB).

Any reproduction, possession, or use of this drawing or any part thereof without the express written permission of RGB, is prohibited. Violators will be prosecuted to the full extent of the law.

© RGB 2017

Certification

DAVID L. DESLANDES No. 2152 REGISTERED ARCHITECT

Drawn by –

Checked by DLD

Revised on

50 Holden Street
Providence, Rhode Island 02908

Phone: (401) 272-1730
Fax: (401) 273-7156

E-mail: rgbinfo@rgb.net
www.rgb.net

RGB architects

Architecture · Project Management · Interior Design

Project

RI ARMY NATIONAL GUARD

RHODE ISLAND NATIONAL GUARD SINCE 1668

ADDITION TO BUILDING P-6

COVENTRY, RI

Drawing Status

ISSUED FOR CONSTRUCTION

Issued On OCTOBER 31, 2017

Sheet Contents

FINISH SCHEDULE

Project Number. 6336

Drawing No.

A901

Sheet of

DOOR AND FRAME SCHEDULE

MARK	DOOR			FRAME							REQ'D FIRE RATING	HARDWARE SETS	REMARKS	MARK
							DETAIL							
	SIZE	TYPE	MATL	DEPTH	TYPE	MATL	HEAD	JAMB	SILL	MULL				
101.1	3'-0" x 7'-0" x 2"	1	IMC	6	1	HM	1/A501	2/A501	3/A501	--	N/A	SET 5	9	101.1
101.2	3'-0" x 7'-0" x 2"	1	IMC	6	2	HM	1/A501	2/A501	3/A501	--	N/A	SET 5	9	101.2
B	14'-0" x 12'-0" x 1"	3	HM	5	SL-1	HM	1/A921	2,4/A921	3/A921	--	N/A	--	12	B
102.1	3'-0" x 7'-0" x 2"	1	IMC	6	1	HM	1/A501	2/A501	3/A501	--	N/A	SET 5	9	102.1
102.2	3'-0" x 7'-0" x 2"	1	IMC	6	1	HM	1/A501	2/A501	3/A501	--	N/A	SET 5	9	102.2
103.1	3'-0" x 7'-0" x 2"	1	IMC	6	2	HM	1/A501	2/A501	3/A501	--	N/A	SET 5	9	103.1
103.2	3'-0" x 7'-0" x 2"	1	IMC	6	2	HM	1/A501	2/A501	3/A501	--	N/A	SET 5	9	103.2
103.3	3'-0" x 7'-0" x 2"	1	IMC	6	2	HM	1/A501	2/A501	3/A501	--	N/A	SET 5	9	103.3

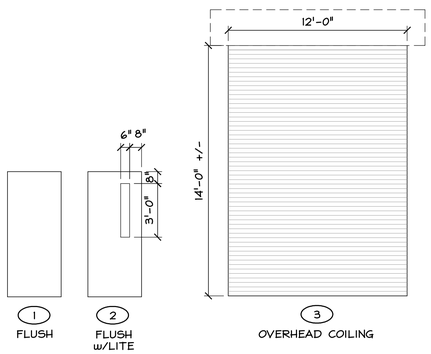

1 A910 ELEVATION DOOR TYPES

Scale: 1/4" = 1'-0"

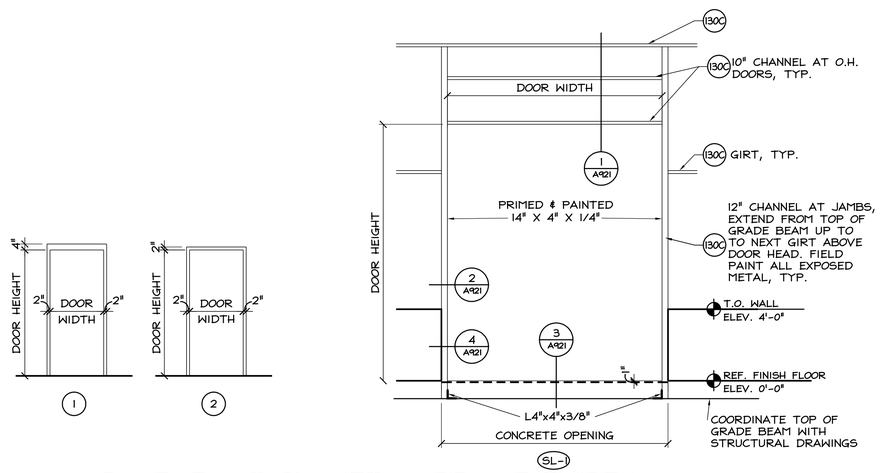

2 A910 ELEVATION METAL FRAME TYPES

Scale: 1/4" = 1'-0"

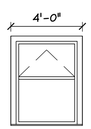

ALUM. STOREFRONT OPERABLE HOPPER W/ 1" INSULATED GLAZING

3 A910 WINDOW ELEVATIONS

Scale: 1/4" = 1'-0"

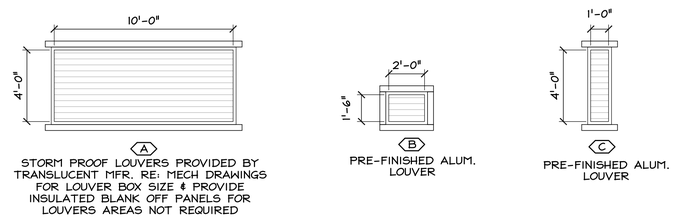

STORM PROOF LOUVERS PROVIDED BY TRANSLUCENT MFR. RE: MECH DRAWINGS FOR LOUVER BOX SIZE & PROVIDE INSULATED BLANK OFF PANELS FOR LOUVERS AREAS NOT REQUIRED

PRE-FINISHED ALUM. LOUVER

PRE-FINISHED ALUM. LOUVER

4 A910 LOUVER ELEVATIONS

Scale: 1/4" = 1'-0"

GENERAL NOTES:

GENERAL:

1. FOR DOOR HEAD, JAMB, & THRESHOLD DETAILS RE: A922 UNO.
2. WINDOW DIMENSIONS SHOWN ARE ROUGH OPENING &/or MASONRY OPENINGS.

DOORS:

1. EXTERIOR DOOR FINISHES UNLESS NOTED OTHERWISE
   ALUMINUM STOREFRONT: CLEAR ANODIZED
   HOLLOW METAL:FACTORY A60 GALV & PRIMED FOR FIELD PAINTING
2. INTERIOR DOOR FINISHES:
   A. ALUMINUM STOREFRONT:CLEAR ANODIZED
   B. HOLLOW METAL:FACTORY PRIMED FOR FIELD PAINTING UNO
3. QUICK SET KNOCK DOWN FRAMES ARE NOT ACCEPTABLE.
4. PRE-ASSEMBLIED FRAMES FULLY WELDED KNOCK DOWN FRAMES MEETING THE REQUIRED UL FIRE RATINGS REQUIRED ARE ACCEPTABLE FOR USE ON THIS PROJECT IF APPROVED PRIOR BY ARCHITECT IN WRITING.
5. FRAME PROFILE DEPTH DIMENSION GIVEN INCLUDES THE THROAT DIMENSION PLUS 1" [1/2" RETURNS BOTH SIDES] UNO RE: 1/A922
6. FIELD PAINT ALL METAL FRAMES w/ COLOR AS SELECTED BY THE ARCHITECT. RE: ARCHITECTURAL EXTERIOR ELEVATIONS &/or FINISH SCHEDULE.

HARDWARE:

1. SEE SPEC FOR HARDWARE SETS. SECTION 08 71 00
2. TYPICAL HARDWARE FINISH REQUIREMENTS UNO.
   HARDWARE FINISH: US26D
   KICK PLATES METAL FINISH: US26D
   WASH & TOILET ROOMS: US26
3. CLOSERS, THRESHOLDS, WEATHERSTRIPPING, ETC TO APPROXIMATE DOOR HARDWARE FINISH NOTED ABOVE.
4. CYLINDER FINISH IS TO MATCH FINISH OF ITEM IN WHICH CYLINDER IS INSTALLED IN UNO. (IE. STOREFRONT FRAME COLOR, EXIT DEVICE FINISH, LOCKSET FINISH, etc.
5. PROVIDE LEVER HANDLES @ ALL LATCHSETS, MATCH EXISTING MANUFATURER LOCKSETS, PANIC DEVICES, DUMMY LATCHSETS TYPICAL UNO.
6. TACTILE WARNING: PROVIDE MECHANICAL KNURLING WHERE REQUIRED (HIGH HAZARDS, ELECTRICAL & MECHANICAL ROOMS, ETC.) ABRASIVE COATINGS APPLIED ARE NOT ACCEPTABLE.
7. PROVIDE DOOR SILENCERS @ ALL DOORS NOT RECEIVING WEATHERSTRIPPING.
   SINGLE DOORS PROVIDE 3
8. PROVIDE FULL WEATHERSTRIPPING @ ALL EXTERIOR DOORS, HEAD, JAMBS, SILLS TYPICAL UNO.
9. PROVIDE ALUMINUM THRESHOLDS BY DOOR(S) WIDTH WHERE SHOWN ON PLANS, IN SILL DETAILS, &/or WHERE NOTED. TYPICAL.

REMARK NOTES:

1. A60 GALVANIZED HM FRAME & DOOR
2. PROVIDE INTEGRAL TACTILE WARNING ON KNOB/LEVER HANDLE
3. INSTALL FLOOR MOUNT DOOR STOP @ 8" FROM HINGE JAMB FOR 120" OPENING
4. HARDWARE BY DOOR MANUFACTURER & /OR SUPPLIER U.N.O.
5. ALL HARDWARE IS US32/STAINLESS STEEL FINISH THIS DOOR (i.e. HINGES & PULL)
6. PROVIDE SIGNAGE MEETING ADA REQUIREMENTS MOUNTED @ 48" MIN. & 60" MAX. A.F.F. ON WALL ADJACENT TO LATCH SIDE OF DOOR.
7. OVERHEAD DOOR (COILING) VERIFY R.O. DIMENSIONS WITH MFG. REQUIREMENTS. ALL TRACKS, SPRINGS, HARDWARE, WEATHERSTRIPPING, ETC. TO BE HEAVY DUTY AND FURNISHED AND INSTALLED BY THE DOOR SUPPLIER/MFGR.

This drawing is copyrighted and is subject to copyright protection as an "architectural work" under 17 U. S. C. Sec. 101 et seq. The protection includes but is not limited to the overall form as well as the arrangement and composition of spaces, materials, color and elements in the design. Under such protection, unauthorized use of this drawing may result in the cessation of construction or buildings being seized and/or monetary compensation being awarded to The Robinson Green Beretta Corporation (RGB).

Any reproduction, possession, or use of this drawing or any part thereof without the express written permission of RGB, is prohibited. Violators will be prosecuted to the full extent of the law.

© RGB 2017

Certification

Drawn by --

Checked by DLD

Revised on

50 Holden Street
Providence, Rhode Island 02908

Phone: (401) 272-1730
Fax: (401) 273-7156

E-mail: rgbinfo@rgb.net
www.rgb.net

RGB ARCHITECTS

Architecture · Project Management · Interior Design

Project

RI ARMY NATIONAL GUARD

ADDITION TO BUILDING P-6

COVENTRY, RI

Drawing Status

ISSUED FOR CONSTRUCTION

Issued On OCTOBER 31, 2017

Sheet Contents

DOOR & WINDOW FRAME SCHEDULE

Project Number. 6336

Drawing No.

A910

Sheet of

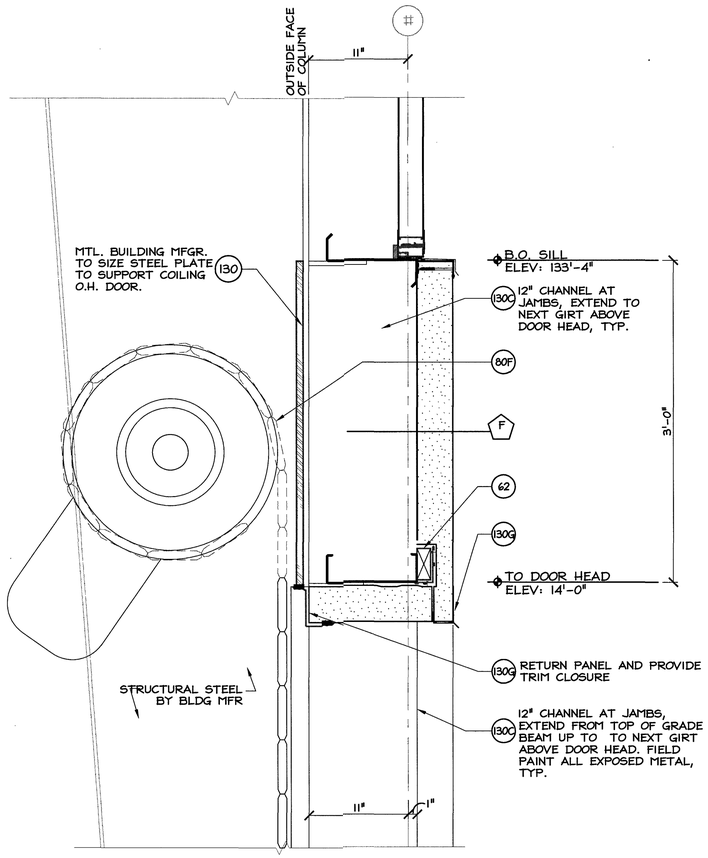

1 A921 TYPICAL OVERHEAD DOOR HEAD DETAIL

Scale: 1 1/2" = 1'-0" (SECTION DETAIL)

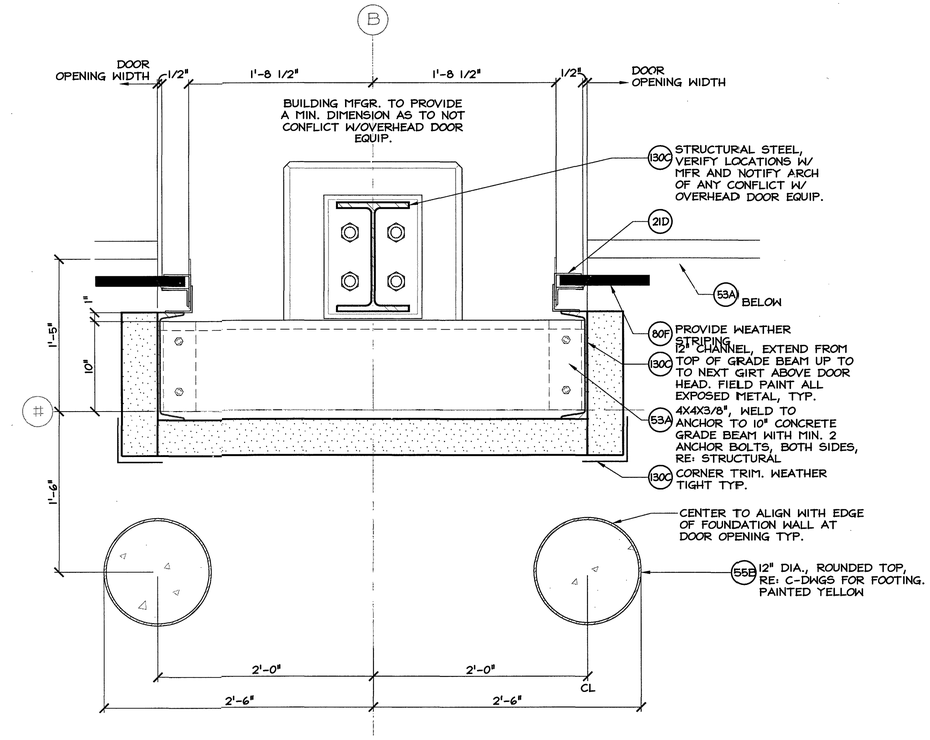

2 A921 OVERHEAD DOOR STEEL JAMB DETAIL @ 3'-0" AFF

Scale: 1 1/2" = 1'-0" (PLAN DETAIL)

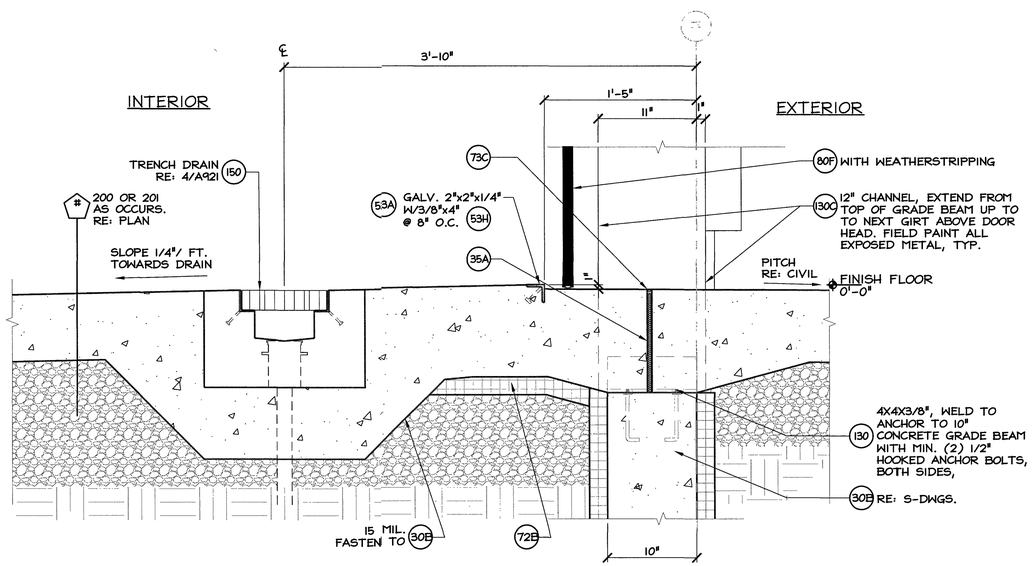

3 A921 TYP. OVERHEAD DOOR SILL DETAIL

Scale: 1 1/2" = 1'-0" (SECTION DETAIL)

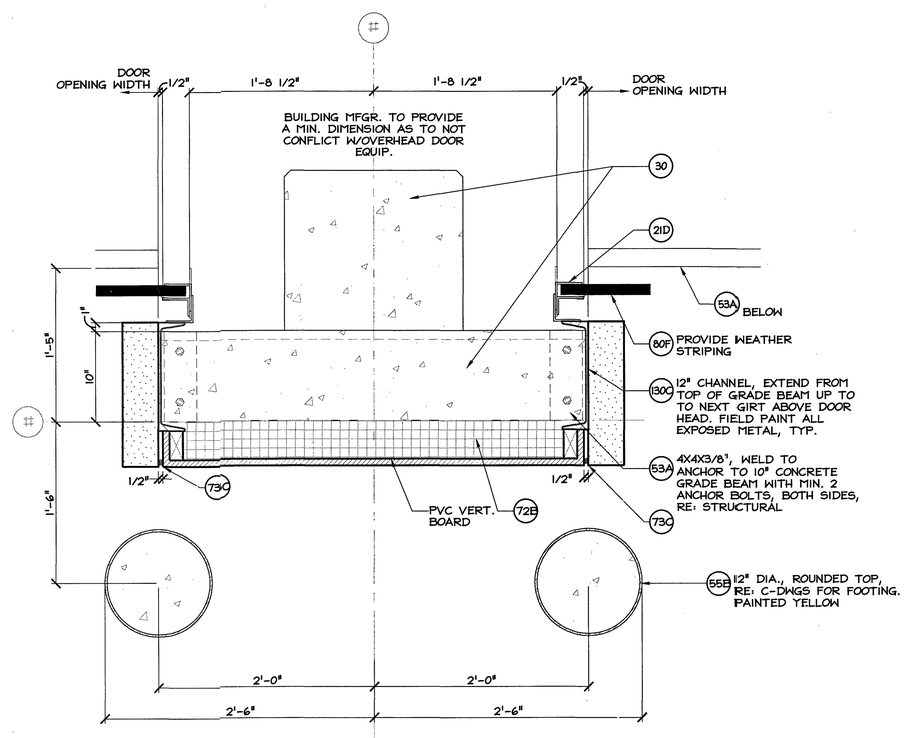

4 A921 OVERHEAD DOOR STEEL JAMB DETAIL @ 0'-6" AFF

Scale: 1 1/2" = 1'-0" (PLAN DETAIL)

This drawing is copyrighted and is subject to copyright protection as an "architectural work" under 17 U. S. C. Sec. 101 et seq. The protection includes but is not limited to the overall form as well as the arrangement and composition of spaces, materials, color and elements in the design. Under such protection, unauthorized use of this drawing may result in the cessation of construction or buildings being seized and/or monetary compensation being awarded to The Robinson Green Beretta Corporation (RGB).

Any reproduction, possession, or use of this drawing or any part thereof without the express written permission of RGB, is prohibited. Violators will be prosecuted to the full extent of the law.

© RGB 2017

Certification

Drawn by --

Checked by DLD

Revised on

50 Holden Street
Providence, Rhode Island 02908

Phone: (401) 272-1730
Fax: (401) 273-7156

E-mail: rgbinfo@rgb.net
www.rgb.net

RGB ARCHITECTS

Architecture · Project Management · Interior Design

Project

RI ARMY NATIONAL GUARD

ADDITION TO BUILDING P-6

COVENTRY, RI

Drawing Status

ISSUED FOR CONSTRUCTION

Issued On OCTOBER 31, 2017

Sheet Contents

OVERHEAD DOOR DETAILS

Project Number. 6336

Drawing No.

A921

Sheet of

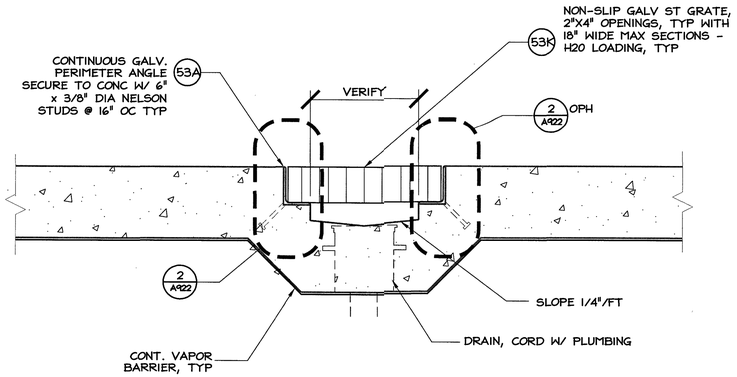

1 A922 TYP. TRENCH DRAIN GRATE SECTION

Scale: 1 1/2" = 1'-0"

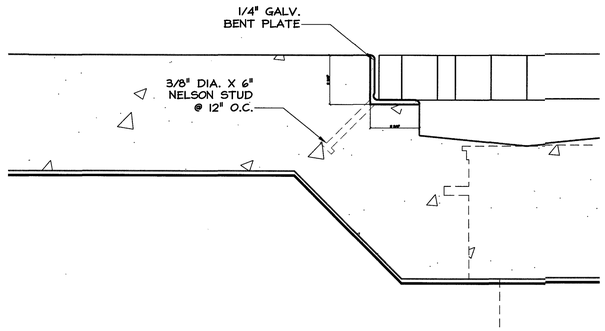

2 A922 GALV. STEEL GRATE ANCHOR

Scale: 3" = 1'-0"

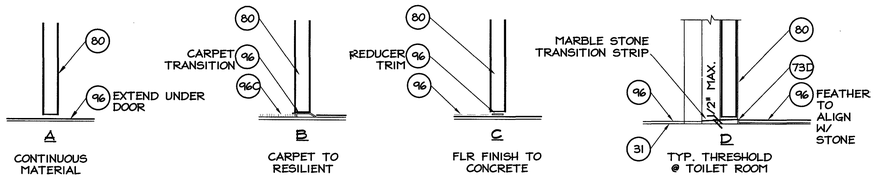

3 A922 TYP. INTERIOR DOOR SILLS

Scale: 1 1/2" = 1'-0" (SECTION DETAILS)

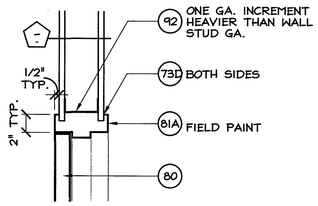

4 A922 TYP. HM HEAD @ STUD

Scale: 1 1/2" = 1'-0" (SECTION DETAIL)

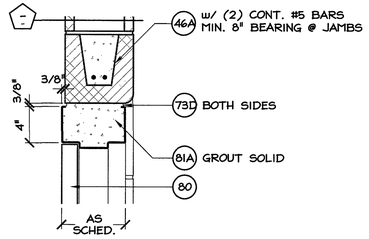

5 A922 TYP. HM HEAD @ CMU

Scale: 1 1/2" = 1'-0" (SECTION DETAIL)

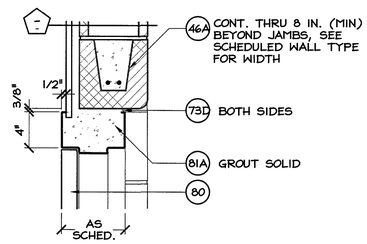

6 A922 HM HEAD @ FURRED CMU

Scale: 1 1/2" = 1'-0" (SECTION DETAIL)

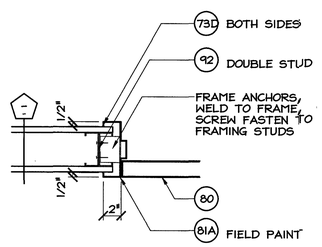

7 A922 TYP. HM JAMB @ STUD

Scale: 1 1/2" = 1'-0" (PLAN DETAIL)

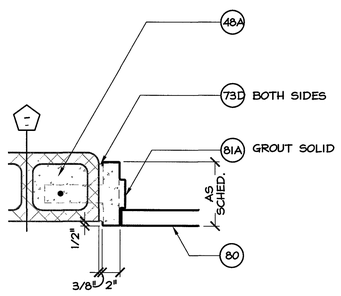

8 A922 TYP. HM JAMB @ CMU

Scale: 1 1/2" = 1'-0" (PLAN DETAIL)

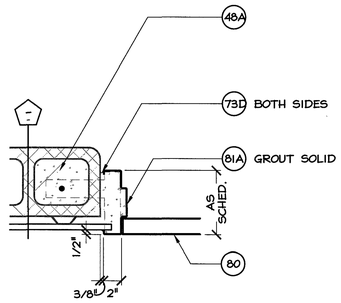

9 A922 HM JAMB @ FURRED CMU

Scale: 1 1/2" = 1'-0" (PLAN DETAIL)

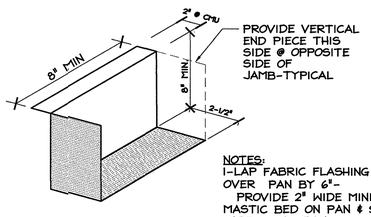

NOTES:
1-LAP FABRIC FLASHING OVER PAN BY 6"-
PROVIDE 2" WIDE MINIMUM MASTIC BED ON PAN & SEAL FABRIC TO PAN.
2-PROVIDE FLASHING PAN AT ALL EXTERIOR DOOR JAMBS AND OTHER LOCATIONS NOTED ON DWG'S

10 A922 TYP. PAN FLASHING

Scale: 1 1/2" = 1'-0" (AXON DETAIL)

This drawing is copyrighted and is subject to copyright protection as an "architectural work" under 17 U. S. C. Sec. 101 et seq. The protection includes but is not limited to the overall form as well as the arrangement and composition of spaces, materials, color and elements in the design. Under such protection, unauthorized use of this drawing may result in the cessation of construction of buildings being seized and/or monetary compensation being awarded to The Robinson Green Beretta Corporation (RGB).

Any reproduction, possession, or use of this drawing or any part thereof without the express written permission of RGB, is prohibited. Violators will be prosecuted to the full extent of the law.

© RGB 2017

Certification

Drawn by –

Checked by DLD

Revised on

50 Holden Street
Providence, Rhode Island 02908

Phone: (401) 272-1730
Fax: (401) 273-7156

E-mail: rgbinfo@rgb.net
www.rgb.net

RGB ARCHITECTS

Architecture · Project Management · Interior Design

Project

RI ARMY NATIONAL GUARD

ADDITION TO BUILDING P-6

COVENTRY, RI

Drawing Status

ISSUED FOR CONSTRUCTION

Issued On OCTOBER 31, 2017

Sheet Contents

DOOR & TRENCH DRAIN DETAILS

Project Number. 6336

Drawing No.

A922

Sheet of

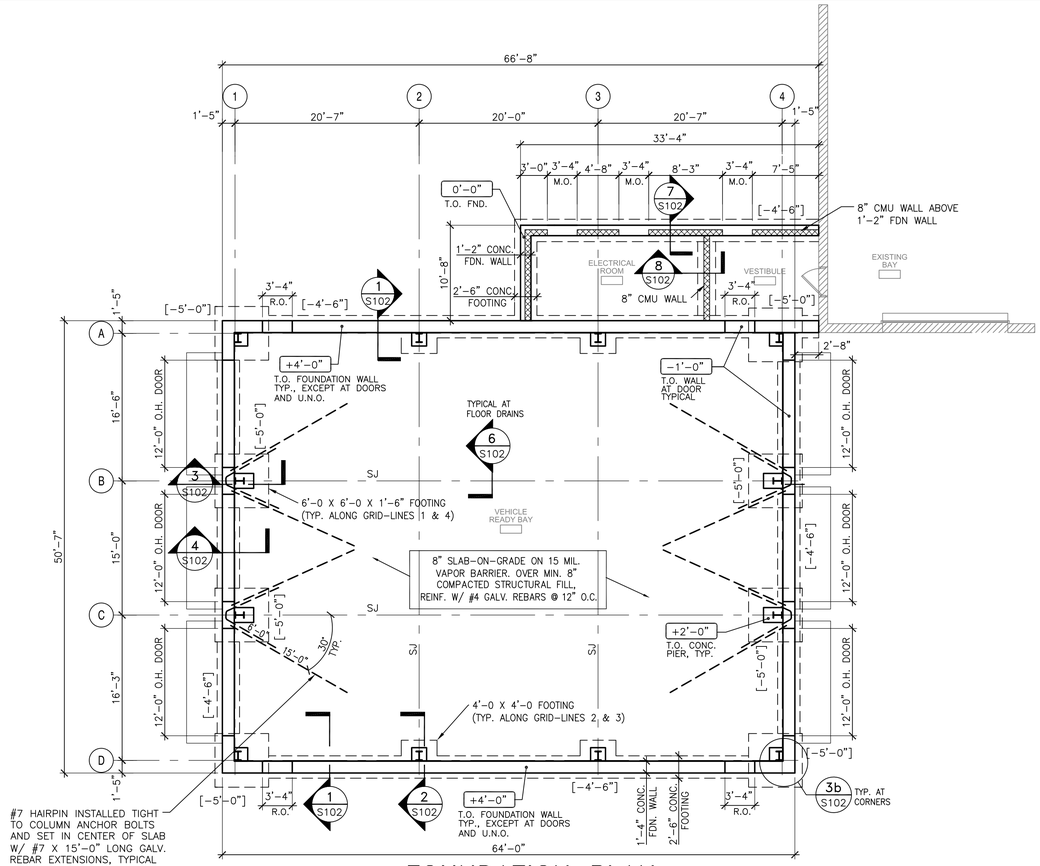

FOUNDATION PLAN

SCALE: 1/8"=1'-0"

NOTE:
1. CALLED ELEVATION 0'-0" (SEE CIVIL DRAWINGS FOR ACTUAL ELEVATION)
2. SJ = SHRINKAGE CONTROL JOINT
3. BOTTOM OF FOOTING AS NOTED [-X'-X"] ON PLAN.
4. LATERAL FORCE RESISTING SYSTEM TO BE DESIGNED BY METAL BUILDING MANUFACTURER.
5. ANCHOR BOLT SIZE, LENGTH, QUANTITY AND LOCATION AS SPECIFIED BY METAL BUILDING MANUFACTURER.
6. FOUNDATION MUST BE CHECKED FOR LOADS PROVIDED BY METAL BUILDING MANUFACTURER BEFORE CONSTRUCTION BEGINS.

GENERAL NOTES

DESIGN LOADS (EXCEPT AS NOTED):

BUILDING CODE: RHODE ISLAND STATE BUILDING CODE SBC-1 (2012 INTERNATIONAL BUILDING CODE W/ 2013 RI AMENDMENTS)

FOUNDATION CRITERIA:
GROUND SNOW: 30 PSF
FROST DEPTH: 4'-0"
SAFE SOIL BEARING CAPACITY: 3000 PSF (ASSUMED)

LATERAL FORCE RESISTING SYSTEM TO BE DESIGNED BY BUILDING MANUFACTURER.
NOTE: MINIMUM ROOF SNOW LOAD = 30 PSF

FOUNDATION NOTES:

1. ALL SOIL CONTAINING ORGANIC OR UNSUITABLE BEARING MATERIAL SHALL BE CLEARED FROM THE BUILDING FOOTPRINT.
2. ALL SOIL SUPPORTED FOOTINGS AND SLABS SHALL BE FOUNDED UPON COMPACTED NATURAL SUBGRADE OR COMPACTED BANK RUN GRAVEL FILL WITH A SAFE BEARING CAPACITY OF NOT LESS THAN 3000 PSF (ASSUMED). COORDINATE SITE SPECIFIC SUBGRADE PREPARATION REQUIREMENTS WITH OWNERS GEOTECHNICAL REPORT.
3. ROCK SHALL BE EXCAVATED A MINIMUM OF 12" BELOW BOTTOM OF FOOTING ELEVATION AND COVERED WITH A LAYER OF COMPACTED GRAVEL.
4. A MODIFIED PROCTOR TEST SHALL BE PERFORMED BY A SOILS TESTING LAB ON EACH TYPE OF SOIL TO BE COMPACTED.
5. SOIL SHALL BE COMPACTED TO NOT LESS THAN 95% OF MAXIMUM DRY DENSITY PER ASTM D1557 IN LIFTS NOT TO EXCEED 6" LOOSE DEPTH.
6. FIELD DENSITY TESTS SHALL BE PERFORMED BY AN INDEPENDENT SOILS TESTING LAB TO VERIFY COMPACTION. A COPY OF ALL TEST REPORTS SHALL BE FILED WITH THE ENGINEER.
7. BACKFILL SYMMETRICALLY AGAINST ALL FOUNDATION WALLS IN INCREMENTS NOT TO EXCEED 2 FEET MAXIMUM DIFFERENTIAL.
8. SEE PLUMBING AND ELECTRICAL DRAWINGS FOR UNDER FLOOR SYSTEMS AND SPECIAL GRANULAR FILL MATERIAL REQUIREMENTS.
9. NO FOOTINGS OR SLABS SHALL BE POURED INTO OR AGAINST SUBGRADE CONTAINING FREE WATER OR ICE.
10. ALL SLABS-ON-GRADE SHALL BE PLACED ON A 15 MIL. VAPOR BARRIER OVER A MIN. 8" COMPACTED STRUCTURAL FILL LAYER. COORDINATE ADDITIONAL SUBGRADE PREPARATION REQUIREMENTS WITH OWNERS GEOTECHNICAL REPORT.

CONCRETE NOTES:

1. ALL CONCRETE SHALL HAVE A COMPRESSIVE STRENGTH OF NOT LESS THAN 4000 PSI AT 28 DAYS.
2. ALL CONCRETE WALLS, FOOTINGS AND CONCRETE EXPOSED TO THE WEATHER SHALL CONTAIN AND APPROVED AIR ENTRAINING ADMIXTURE. AIR CONTENT SHALL BE 4 1/2% TO 7%.
3. ALL CONCRETE SHALL CONTAIN AN APPROVED WATER-REDUCING ADMIXTURE.
4. A SET OF FOUR (4) CONCRETE TEST CYLINDERS SHALL BE TAKEN BY AN INDEPENDENT CONCRETE TESTING LAB ON EACH DAY WHEN CONCRETE PLACEMENT EXCEEDS 5 CUBIC YARDS. ONE CYLINDER SHALL BE BROKEN AT 7 DAYS, TWO AT 28 DAYS, AND ONE AT 56 DAYS. A COPY OF ALL TEST REPORTS SHALL BE FILED WITH THE ARCHITECT.
5. NO CALCIUM CHLORIDE SHALL BE USED IN ANY CONCRETE.
6. A MIX DESIGN SHALL BE SUBMITTED FOR APPROVAL FOR EACH TYPE OF CONCRETE.
7. ALL REINFORCING BARS SHALL BE ASTM A-767 GRADE 60 GALVANIZED STEEL.
8. THE CONTRACTOR SHALL SUBMIT SHOP DRAWINGS FOR APPROVAL PRIOR TO FABRICATION, SHOWING REINFORCING DETAILS, STEEL SIZES, SPACING AND PLACEMENT OF REINFORCING.
9. ALL REINFORCING BAR SPLICES SHALL CONFORM TO REQUIREMENTS OF ACI 318, BUT IN NO CASE SHALL THEY BE LESS THAN 2'-0".
10. DOWELS SHALL MATCH SIZE AND SPACING OF MAIN REINFORCING.
11. CONSTRUCTION JOINTS IN ALL WALLS SHALL BE NOT FURTHER APART THAN 60 FEET IN ANY DIRECTION. SEE PLAN FOR LOCATION OF SLAB CONSTRUCTION AND/OR SHRINKAGE JOINTS.
12. COORDINATE ALL FOUNDATION PENETRATIONS WITH ARCHITECT, PLUMBING, MECHANICAL, ELECTRICAL CONTRACTORS AND LOCAL AGENCIES.
13. INTERIOR CONCRETE SURFACES, INCLUDING THE TOP OF WALLS, SHALL BE TREATED WITH A CORROSION INHIBITOR SUCH AS "SURTREAT" OR EQUAL IN ACCORDANCE WITH THE MANUFACTURERS REQUIREMENTS AND APPLICATION PROCEDURES.

MASONRY NOTES:

1. MASONRY WALLS ARE DESIGNED IN ACCORDANCE WITH NCMA "SPECIFICATIONS FOR THE CONSTRUCTION OF LOAD BEARING CONCRETE MASONRY", AND ACI BUILDING CODE ACI 530-11.
2. MASONRY SHALL BE HOLLOW CONCRETE UNITS CONFORMING TO ASTM C90 GRADE N-1, WITH AN AVERAGE NET AREA COMPRESSIVE STRENGTH OF 1900 PSI.
3. MORTAR SHALL CONFORM TO ASTM C270, TYPE S (LIME), AND BE PROPORTIONED TO YIELD A COMPRESSIVE STRENGTH OF 1800 PSI AT 28 DAYS BY THE PROPERTY METHOD. COMPRESSIVE STRENGTH RESULTS OF FIELD SAMPLED MORTAR IS TO BE USED TO EVALUATE MORTAR CONSISTENCY ONLY AND IS NOT A BASIS FOR REJECTING MORTAR QUALITY.
4. GROUT FOR REINFORCED MASONRY SHALL CONFORM TO ASTM C476, TYPE PL, AND HAVE A MINIMUM COMPRESSIVE STRENGTH OF 2000 PSI AT 28 DAYS WHEN FIELD TESTED IN ACCORDANCE WITH ASTM C1019.
5. MASONRY WALLS CONSTRUCTED AND TESTED IN ACCORDANCE WITH THESE PROCEDURES SHALL YIELD A NET AREA COMPRESSIVE STRENGTH OF f'm = 1900 PSI.
6. UNITS IN WALLS SHALL BE LAID IN FACE SHELL BED AND HEAD JOINTS.
7. PRIOR TO GROUTING CELLS, BARS AND CELLS SHALL BE INSPECTED BY THE TESTING AGENCY/ENGINEER. THE BASE OF EACH CELL IN WHICH A BAR IS PLACED MUST HAVE A CLEANOUT HOLE. THE DESIGN OF REINFORCED MASONRY CONSTRUCTION IS BASED ON ALLOWABLE STRESSES PREDICATED WITH INSPECTION PROVISIONS REQUIRING QUALIFIED MASONRY INSPECTION TO TAKE PLACE ON A CONTINUOUS BASIS WHENEVER MASONRY IS BEING PLACED.
8. REINFORCED MASONRY WALLS SHALL HAVE BOND BEAMS AT TOP OF WALL BOND BEAMS SHALL BE REINFORCED WITH 2-#5 HORIZONTAL BARS. BOND BEAM REINFORCING SHALL BE EXTENDED INTO AND BE CONTINUOUS WITH ALL INTERSECTING BOND BEAMS. MASONRY OPENINGS ABOVE 16" WIDE REQUIRE APPROVED LINTELS OR AS INDICATED ON THE DRAWINGS.
9. MASONRY BLOCK CELLS CONTAINING VERTICAL REINFORCING, MASONRY LINTEL BLOCKS, AND MASONRY BOND BEAMS CONTAINING HORIZONTAL REINFORCING SHALL BE GROUTED SOLID. FILLING CELLS WITH MORTAR IS UNACCEPTABLE.
10. PROVIDE (2)-#5 VERTICAL REINFORCING BARS ADJACENT TO WINDOWS AND DOOR OPENINGS AND AT ALL CORNERS AND DISCONTINUOUS EDGES, UNLESS NOTED OTHERWISE.
11. UNLESS NOTED OTHERWISE, ALL MASONRY WALLS SHALL BE REINFORCED VERTICALLY WITH MINIMUM #5 VERTICAL BARS AT 32" O.C.
12. STARTER COURSES OF ALL CMU WALLS SHALL BE GROUTED SOLID.
13. MINIMUM HORIZONTAL JOINT REINFORCING SHALL BE 9 GAGE GALVANIZED LADDER TYPE AT 16" O.C.
14. STANDARD LOW LIFT AND HIGH LIFT GROUTING PROCEDURES AS OUTLINED IN ACI-530-11 SHALL BE STRICTLY ADHERED TO.
15. THE MASONRY CONTRACTOR SHALL CLEAN EXPOSED MASONRY SURFACES OF ALL STAINS, EFFLORESCENCE, MORTAR OR GROUT DROPPINGS, AND DEBRIS.
16. COVER TOP OF UNFINISHED MASONRY WORK TO PROTECT IT FROM THE WEATHER.
17. COLD WEATHER CONSTRUCTION PRACTICES SHALL BE FOLLOWED WHEN AMBIENT AIR TEMPERATURE FALLS BELOW 40 DEGREES FOR THE TEMPERATURE OF MASONRY UNITS IS BELOW 40 DEGREES F. COLD WEATHER PRACTICE SHALL BE IN CONFORMANCE WITH THE SPECIFICATION FOR MASONRY STRUCTURES ACI 530.1-11/ASCE 6-11/TMS 602-11.
18. HOT WEATHER CONSTRUCTION PRACTICES SHALL BE FOLLOWED WHEN AMBIENT AIR TEMPERATURE EXCEEDS 100 DEGREES F. OR 90 DEGREES F. WITH A WIND VELOCITY GREATER THAN 8 MPH. HOT WEATHER PRACTICE SHALL BE IN CONFORMANCE WITH THE SPECIFICATION FOR MASONRY STRUCTURES ACI 530.1-11/ASCE 6-11/TMS 602-11.

This drawing is copyrighted and is subject to copyright protection as an "architectural work" under 17 U. S. C. Sec. 101 et seq. The protection includes but is not limited to the overall form as well as the arrangement and composition of spaces, materials, color and elements in the design. Under such protection, unauthorized use of this drawing may result in the cessation of construction or buildings being seized and/or monetary compensation being awarded to The Robinson Green Beretta Corporation (RGB).

Any reproduction, possession, or use of this drawing or any part thereof without the express written permission of RGB, is prohibited. Violators will be prosecuted to the full extent of the law.

© RGB 2017

Certification

THOMAS P. GRAFE
No. 4735
REGISTERED PROFESSIONAL ENGINEER

Drawn by AG
Checked by JM

Revised on

C.A. PRETZER ASSOCIATES INC.
STRUCTURAL ENGINEERS
50 Freeway Drive
Cranston, R.I. 02920
401-785-2690 FAX: 401-461-9360
DESIGN, CONSULTATION, INVESTIGATION

50 Holden Street
Providence, Rhode Island 02908
Phone: (401) 272-1730
Fax: (401) 273-7156
E-mail: rgbinfo@rgb.net
www.rgb.net
Architecture · Project Management · Interior Design

Project

RI ARMY NATIONAL GUARD

ADDITION TO BUILDING P-6

COVENTRY, RI

Drawing Status

ISSUED FOR CONSTRUCTION

Issued On 31 OCTOBER 2017

Sheet Contents

FOUNDATION PLAN AND GENERAL NOTES

Project Number. 6336

Drawing No.

S101

Sheet of

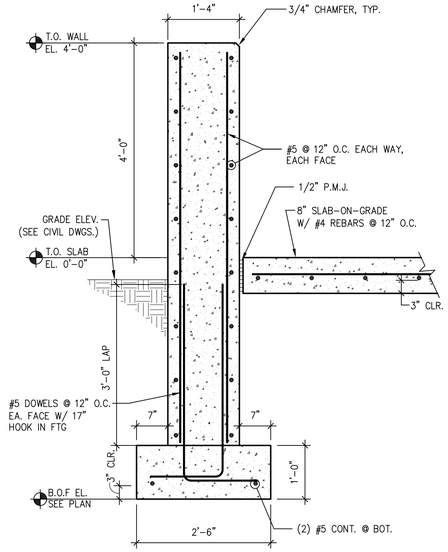

1 S102 FDN SECTION
SCALE: 3/4" = 1'-0"

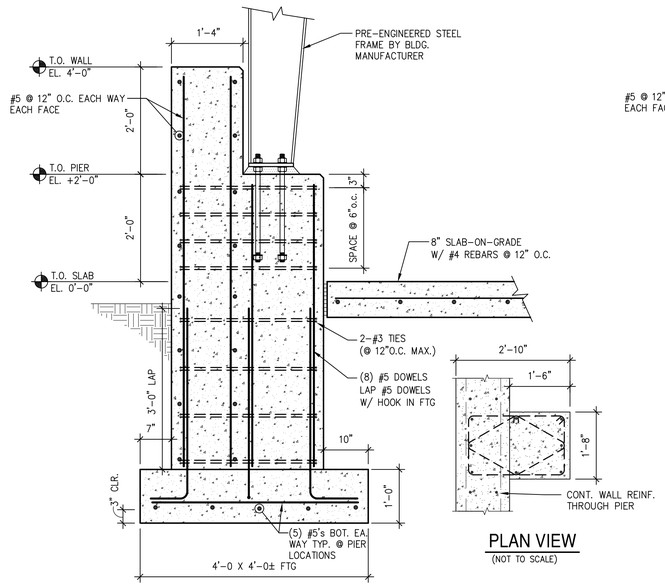

PLAN VIEW
(NOT TO SCALE)

2 S102 FDN SECTION @ PIERS ON GRID-LINES 2 & 3
SCALE: 3/4" = 1'-0"

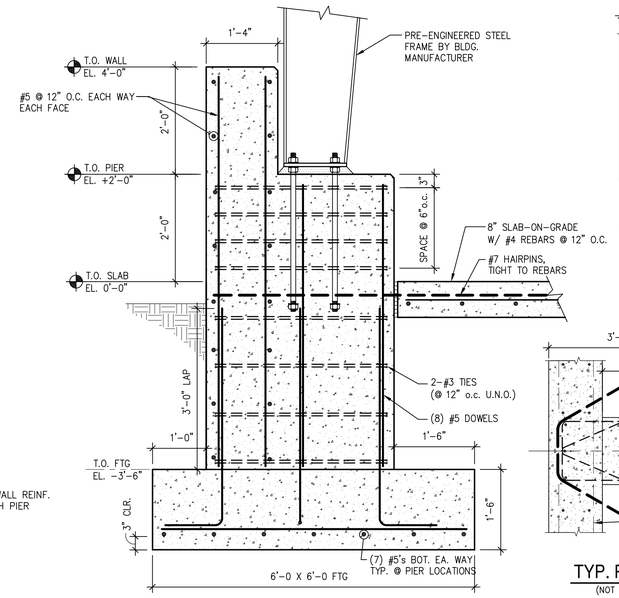

3 S102 FDN SECTION @ PIERS ON GRID-LINES 1 & 4
SCALE: 3/4" = 1'-0"

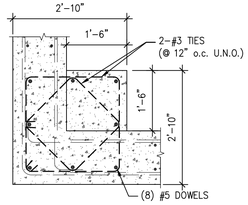

3b S102 PLAN AT TYP. CORNER
(NOT TO SCALE)

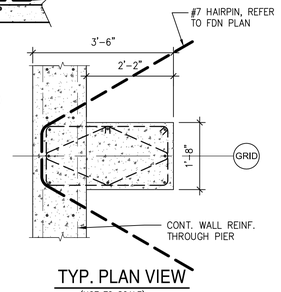

TYP. PLAN VIEW
(NOT TO SCALE)

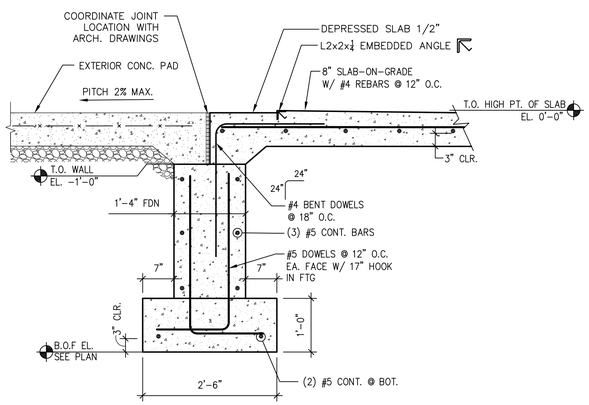

4 S102 FDN SECTION @ DOORWAY

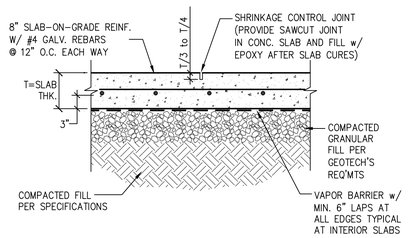

NOTES:
1. SAWCUT SHRINKAGE CONTROL JOINTS SHALL BE PROVIDED WITHIN 12 HRS. OF SLAB PLACEMENT, AS SOON AS CONCRETE IS CAPABLE OF SUPPORTING SAWCUTTING EQUIPMENT.
2. LOCATE SHRINKAGE CONTROL JOINTS AS INDICATED ON SLAB PLAN.
3. OPTIONALLY, THE SHRINKAGE JONTROL MAY SUBSTITUTE PREFABRICATED PLASTIC STRIPS INSTEAD OF SAWCUTTING. SUBMIT CATALOG CUTS FOR APPROVAL PRIOR TO USING.

5 S102 TYP. SLAB DETAIL @ VEHICLE READY BAY
SCALE: NONE

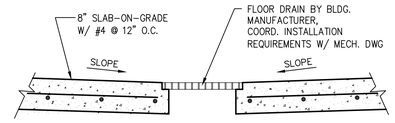

6 S102 FLOOR DRAIN IN SLAB DETAIL
SCALE: NONE

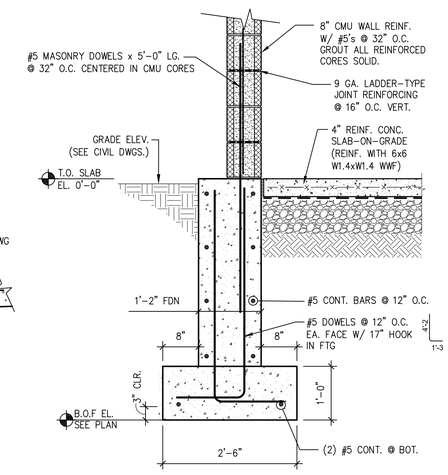

7 S102 FDN SECTION CMU WALL
SCALE: 3/4" = 1'-0"

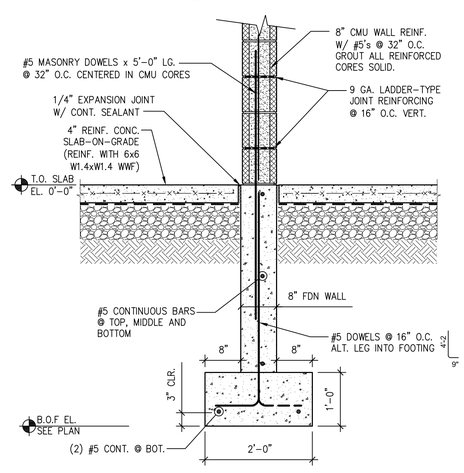

8 S102 FDN SECTION INTERIOR CMU WALL
SCALE: 3/4" = 1'-0"

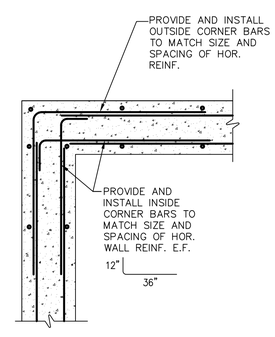

- S102 TYP. CONC. WALL CORNER
SCALE: NONE

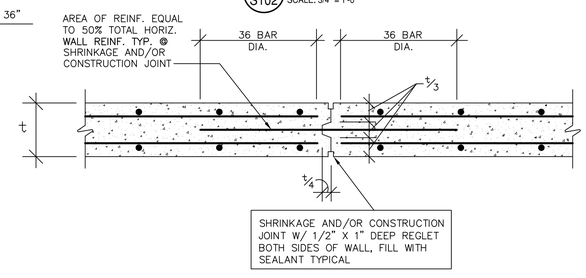

NOTE: MAXIMUM SPACING OF SHRINKAGE AND/OR CONST. JOINTS NOT TO EXCEED 60 FEET.

- S102 TYP. WALL SHRINKAGE AND/OR CONSTRUCTION JOINT
SCALE: NONE

This drawing is copyrighted and is subject to copyright protection as an "architectural work" under 17 U. S. C. Sec. 101 et seq. The protection includes but is not limited to the overall form as well as the arrangement and composition of spaces, materials, color and elements in the design. Under such protection, unauthorized use of this drawing may result in the cessation of construction or buildings being seized and/or monetary compensation being awarded to The Robinson Green Beretta Corporation (RGB).

Any reproduction, possession, or use of this drawing or any part thereof without the express written permission of RGB, is prohibited. Violators will be prosecuted to the full extent of the law.

© RGB 2017

Certification

Drawn by AG
Checked by JM
Revised on

C.A. PRETZER ASSOCIATES INC.
STRUCTURAL ENGINEERS
50 Freeway Drive
Cranston, R.I. 02920
401-785-2690 FAX: 401-461-9360
DESIGN, CONSULTATION, INVESTIGATION

50 Holden Street
Providence, Rhode Island 02908
Phone: (401) 272-1730
Fax: (401) 273-7156
E-mail: rgbinfo@rgb.net
www.rgb.net
Architecture · Project Management · Interior Design

Project
RI ARMY NATIONAL GUARD

ADDITION TO BUILDING P-6

COVENTRY, RI

Drawing Status
ISSUED FOR CONSTRUCTION

Issued On 31 OCTOBER 2017

Sheet Contents
BUILDING SECTIONS

Project Number. 6336

Drawing No.
S102

Sheet of

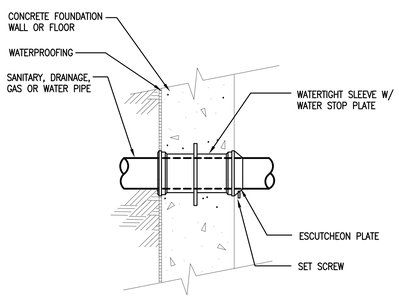

1 NEW CONSTRUCTION WATER TIGHT SLEEVE

NTS

NOTE:
FIRESTOP SEALANTS AND PIPING PENETRATIONS THROUGH FIRE RATED ASSEMBLIES SHALL COMPLY WITH THE UL FIRE RESISTANCE DIRECTORY.

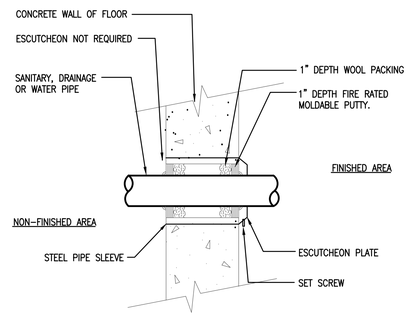

2 MASONRY WALL FIRE RATED SLEEVE

NTS

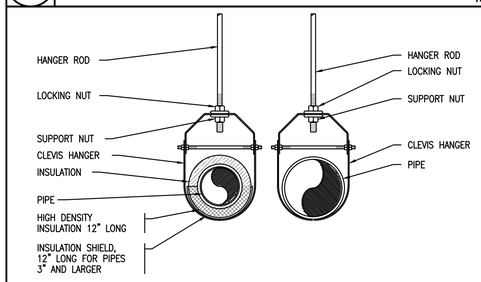

HANGER ROD SCHEDULE	
PIPE SIZE	ROD SIZE
UP TO 2"	3/8" DIA.
2 1/2" THRU 3"	1/2" DIA.
4" AND 5"	5/8"
6" – 8"	3/4"
10" & 12"	7/8"

HANGER ROD SPACING	
PIPE SIZE	MAX. ALLOWABLE SPACING
1"	7'
1 1/4"	8'
1 1/2"	9'
2"	10'
2 1/2"	11'

INSULATED AND NON INSULATED PLUMBING SYSTEMS

3 CLEVIS PIPE HANGER/ROD INSTALLATION

NTS

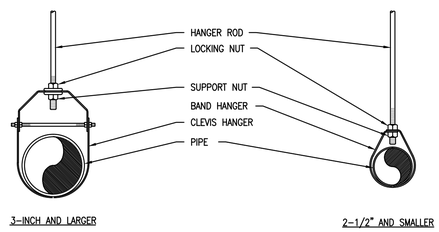

HANGER ROD SCHEDULE	
PIPE SIZE	ROD SIZE
UP TO 2"	3/8" DIA.
2 1/2" & 3"	1/2" DIA.
4" AND 5"	5/8"
6" – 8"	3/4"
10 & 12"	7/8"

HANGER ROD SPACING	
PIPE SIZE	MAX. ALLOWABLE SPACING
1"	7'
1 1/4"	8'
1 1/2"	9'
2"	10'
2 1/2"	11'
3" – 12"	12'

4 CLEVIS-BAND HANGER/ROD INSTALLATION

NTS

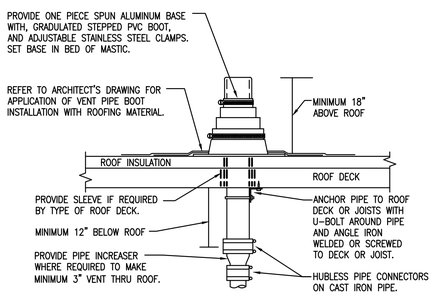

NOTE:
REFER TO PLANS FOR VTR PIPE SIZES AND LOCATIONS. LOCATE VENT THRU ROOF MINIMUM TEN FEET HORIZONTAL OR THREE FEET VERTICAL ABOVE ANY BUILDING OPENING OR FRESH AIR INTAKE, AND ONE FOOT FROM ANY VERTICAL SURFACE. PROVIDE 1" FIBERGLASS INSULATION WITH ALL-SERVICE JACKET ON VENT PIPE INSIDE BUILDING WITHIN SIX FEET OF VENT THRU ROOF LOCATION. VERIFY FLASHING AND COUNTER FLASHING WITH ROOFING CONTRACTOR.

5 VENT THRU ROOF DETAIL

NTS

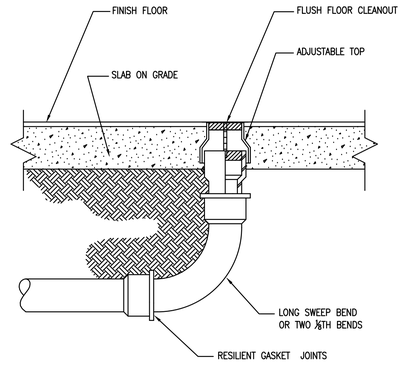

6 END OF RUN FCO INSTALLATION

NTS

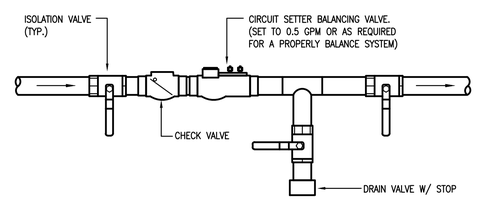

NOTE:
PROVIDE AND INSTALL A BALANCING VALVE ASSEMBLY (BVA) AT EACH DOMESTIC HOT WATER RETURN BRANCH LINE PRIOR TO THE CONNECTION TO THE DOMESTIC HOT WATER RETURN MAIN.

7 BALANCING VALVE ASSEMBLY DETAIL

NTS

GENERAL NOTES

1. GENERAL NOTES, SYMBOLS LIST AND DETAILS ARE APPLICABLE TO ALL PLUMBING DRAWINGS.
2. DRAWINGS ARE DIAGRAMMATIC: DETERMINE LOCATIONS OF SYSTEMS AND COMPONENTS IN FIELD. DO NOT SCALE DRAWINGS.
3. NEITHER ACCURACY NOR COMPLETION OF UTILITY LOCATIONS SHOWN ON DRAWINGS IS GUARANTEED. DETERMINE EXACT LOCATIONS OF EXISTING UTILITIES IN FIELD, WHETHER OR NOT SHOWN ON DRAWINGS. EXERCISE CAUTION AND IDENTIFY LOCATIONS OF UNMARKED UTILITY LINES AS NECESSARY TO PERFORM WORK OF THIS SECTION.
4. ALL PLUMBING WORK SHALL BE IN ACCORDANCE WITH THE PRESIDING PLUMBING CODE AND ALL APPLICABLE LOCAL CODES.
5. IT SHALL BE THE RESPONSIBILITY OF THIS CONTRACTOR TO COORDINATE WORK WITH THAT OF ALL OTHER TRADES, INCLUDING (BUT NOT LIMITED TO), ELECTRICAL, HVAC, PROCESS PIPING, FIRE PROTECTION, STRUCTURAL AND GENERAL ARCHITECTURE.
6. ANY INTERFERENCE SHALL BE BROUGHT TO THE ATTENTION OF THE CONSTRUCTION MANAGER, GENERAL CONTRACTOR, AND/OR THE OWNER'S REPRESENTATIVE, AND RESOLVED PRIOR TO THE INSTALLATION OF THE WORK INVOLVED.
7. ALL PIPING PENETRATING CEILINGS AND WALLS SHALL BE INSTALLED WITH CHROME (STAINLESS WHERE NOTED) PLATED ESCUTCHEONS AT THE PENETRATION. ALL PIPING PENETRATING EXTERIOR WALLS AND ROOFS SHALL BE FLASHED IN AN APPROVED MANNER AND SHALL BE SEALED WEATHERTIGHT. PIPING PENETRATING RATED PARTITIONS SHALL BE PROTECTED WITH UL LISTED SEALS OF EQUAL RATING AND AS REQUIRED BY LOCAL CODE AUTHORITY.
8. MANUFACTURERS' MODEL NUMBERS ARE SPECIFIED SOLELY TO ESTABLISH STANDARDS OF QUALITY FOR PERFORMANCE AND MATERIALS.
9. ALL PRODUCT INSTALLATION SHALL ADHERE TO THE MANUFACTURERS' RECOMMENDATIONS.
10. PROVIDE ACCESS PANELS FOR ALL EQUIPMENT THAT REQUIRES PERIODIC SERVICE AND FOR ALL VALVES.
11. CONTRACTOR SHALL COORDINATE ELECTRICAL CHARACTERISTICS AND REQUIREMENTS OF ALL PLUMBING EQUIPMENT WITH THE ELECTRICAL DRAWINGS, AND SHALL FURNISH EQUIPMENT WIRED FOR THE VOLTAGES SHOWN HEREIN.
12. ALL PLUMBING EQUIPMENT, PIPING, INSULATION, ETC., INSTALLED IN HVAC PLENUM SPACES SHALL MEET CODE REQUIREMENTS FOR SMOKE AND COMBUSTIBILITY.
13. PROVIDE SHUTOFF VALVES ON ALL BRANCH PIPING AND SUPPLIES TO INDIVIDUAL FIXTURES AND EQUIPMENT. PROVIDE BALL VALVES ON ALL WATER MAIN BRANCHES IN CORRIDORS AND WHERE INDICATED ON DRAWINGS. ALL VALVES SHALL BE ACCESSIBLE.
14. ALL SLEEVES THROUGH CONCRETE FLOORS AND ALL CORE DRILLING OF CONCRETE FLOORS AND WALLS SHALL BE BY THIS CONTRACTOR. CONCRETE PADS AND PLATFORMS FOR WORK OF THIS SECTION WILL BE PROVIDED BY GENERAL CONTRACTOR. PROVIDE INFORMATION AS NECESSARY TO COORDINATE WORK.
15. RUN PIPING CONCEALED WHERE POSSIBLE, UNLESS SPECIFIED OTHERWISE.
16. STRUCTURAL WELDING SHALL BE 1/4-INCH FILLET UNLESS REQUIRED OTHERWISE.
17. PROVIDE CLAMPS, OFFSETS, EXPANSION JOINTS, ANCHORS AND GUIDES AS NECESSARY TO PREVENT STRESS ON PIPING.
18. PROVIDE BALANCING VALVES AT SYSTEM LOOP RETURNS AND AT RETURN RISERS, PROVIDE SHUTOFF VALVES AT SYSTEM LOOP SUPPLIES AND SUPPLY RISERS.
19. PROVIDE VENTS AT HIGH POINTS IN PIPING SYSTEMS AND DRAIN VALVES AT LOW POINTS.
20. PROVIDE GAUGE FITTINGS AND THERMOMETER WELLS AT HOT WATER SUPPLY AND RETURN BRANCHES AND AT PUMP INLETS AND OUTLETS.
21. VERIFY EXACT SIZES, LOCATIONS, INVERTS AND ELEVATIONS PRIOR TO RUNNING ANY PIPING. REFER TO ARCHITECTURAL DRAWINGS FOR EXACT LOCATIONS OF ALL FIXTURES AND EQUIPMENT.
22. PIPE SUPPORTS FOR PLUMBING IN BUILDING SHAFTS ARE BY THIS CONTRACTOR. CAREFULLY COORDINATE WITH PLACEMENT OF STEEL GRATE SUPPORT BEAMS. SHAFT PIPE SUPPORT SHALL BEAR FROM WALL AND FROM FLOOR SUPPORT BEAMS.
23. GENERAL FLOOR CONTROL VALVES OF PIPED SERVICES SHALL BE IN THE PIPE SHAFTS UNLESS OTHERWISE INDICATED.
24. NO PIPING SHALL RUN OVER ELECTRICAL PANELS.
25. ALL PIPING THAT PENETRATES FLOORS OR FIRE RATED WALLS SHALL BE FIRE STOPPED W/ HILTI CAULKING PER MANUFACTURERS RECOMMENDATIONS.
26. ELECTRICAL SUB CONTRACTOR IS RESPONSIBLE FOR PROVIDING POWER TO ALL EQUIPMENT AND CONTROLS WITHIN THE PLUMBING SYSTEMS FOR THIS PROJECT.
27. PC TO ORGANIZE/LOCATE CUT OUTS FOR PIPING/CONDUITS RUNNING PERPENDICULAR TO THE FLOOR JOISTS PER GUIDELINES PROVIDED IN THE STRUCTURAL DRAWINGS.
28. COORDINATE ALL CEILING AND WALL MOUNTED FIXTURES AND EQUIPMENT WITH ARCHITECTURAL DRAWING. LOCATE FIXTURES AND EQUIPMENT AS INDICATED ON ARCHITECTURAL DRAWINGS WHERE ACCEPTABLE BY CODE.

PLUMBING LEGEND

ETR	LIGHT LINE INDICATES EXISTING PIPING TO REMAIN.
RE	REMOVE EXISTING PIPING
CTE	CONNECT TO EXISTING
C&C	CUT & CAP
CW	COLD WATER
CW	COLD WATER BELOW FLOOR OR BURIED
HW	HOT WATER
HW	HOT WATER BELOW FLOOR OR BURIED
HWR	HOT WATER RECIRCULATION
S or W	SOIL OR WASTE
S or W	SOIL OR WASTE BELOW FLOOR OR BURIED
GW	GARAGE WASTE BELOW FLOOR OR BURIED
V	VENT
V	VENT BELOW FLOOR OR BURIED
GV	GARAGE VENT
GV	GARAGE VENT BELOW FLOOR OR BURIED
CA	COMPRESSED AIR
	SHUT-OFF VALVE (WATER/AIR)
	SHUT-OFF VALVE (GAS)
CONT	CONTINUATION
	PIPE TEE UP
TEE	PIPE TEE DOWN
UP	PIPE ELBOW UP
DN/DR	PIPE ELBOW DOWN OR DROP/RISE
	CHECK VALVE
BVA	BALANCING VALVE ASSEMBLY
W&T	WASTE & TRAP
CO	CLEANOUT PLUG
FCO	FLUSH FLOOR CLEANOUT
WCO	WALL CLEANOUT
	CAPPED PIPE
	ARROW INDICATES DIRECTION OF FLOW
.01	ARROW INDICATES DIRECTION OF SLOPE
	UNION
HB	HOSE BIBB
TD	TRENCH DRAIN
VTR	VENT THRU ROOF
I.E./INV	INVERT ELEVATION
TYP	TYPICAL
VIF	VERIFY EXACT LOCATION, SIZE & INVERT IN FIELD
NTS	NOT TO SCALE
W&V	WASTE AND VENT
S&V	SOIL AND VENT
AFF	ABOVE FINISHED FLOOR
AFG	ABOVE FINISHED GRADE
FFE	FINSHED FLOOR ELEVATION
LPC	LIMIT OF PLUMBING CONTRACT
NIPC	NOT IN PLUMBING CONTRACT
GC	GENERAL CONTRACTOR
FPC	FIRE PROTECTION CONTRACTOR
PC	PLUMBING CONTRACTOR
EC	ELECTRICAL CONTRACTOR
HVAC	HVAC CONTRACTOR
S=.01	SLOPE = 1/8" PER FOOT
S=.02	SLOPE = 1/4" PER FOOT

This drawing is copyrighted and is subject to copyright protection as an "architectural work" under 17 U. S. C. Sec. 101 et seq. The protection includes but is not limited to the overall form as well as the arrangement and composition of spaces, materials, color and elements in the design. Under such protection, unauthorized use of this drawing may result in the cessation of construction or buildings being seized and/or monetary compensation being awarded to The Robinson Green Beretta Corporation (RGB).

Any reproduction, possession, or use of this drawing or any part thereof without the express written permission of RGB, is prohibited. Violators will be prosecuted to the full extent of the law.

© RGB 2017

Certification

Drawn by AG

Checked by ARV

Revised on

B|E|R
BUILDING ENGINEERING RESOURCES, INC.
66 Main Street
N. Easton, MA 02356
T 508.230.0260
F 508.230.0265
100 Midway Road - Suite 23
Cranston, RI 02920
T 401.942.3500
F 401.228.6205
ber@ber-engineering.com
www.ber-engineering.com

50 Holden Street
Providence, Rhode Island 02908

Phone: (401) 272-1730
Fax: (401) 273-7156

E-mail: rgbinfo@rgb.net
www.rgb.net

RGB ARCHITECTS

Architecture | Project Management | Interior Design

Project

RI ARMY NATIONAL GUARD

ADDITION TO BUILDING P-6

COVENTRY, RI

Drawing Status

ISSUED FOR CONSTRUCTION

Issued On: OCTOBER 31, 2017

Sheet Contents

PLUMBING - LEGEND, NOTES & DETAILS

Project Number.

Drawing No.

P001

Sheet of

DRAIN SCHEDULE

SYMBOL	TYPE	MANUFACTURER	MODEL	OUTLET	STRAINER	REMARKS
TD-1	FLOOR DRAIN	DURATRENCH	DTPF4-MDGS	4"	GALVANIZED STEEL	IRON EDGE RAIL CHANNEL SYSTEM, POLYESTER POLYMER CONCRETE BODY, 40"-0"LONG x 5"WIDE, STAINLESS STEEL HEEL-PROOF PERFORATED GRATE W/ 0.3" DIAMETER PERFORATIONS. INSTALL PER MANUFACTURER'S INSTRUCTIONS.

NOTES: ALL FLOOR/TRENCH DRAINS SHALL HAVE TRAP SEAL GASKETS EQUAL TO "SURE SEAL". INSTALLATIONS SHALL BE IN COMPLETE ACCORDANCE WITH STATE & LOCAL CODES.

PLUMBING FIXTURE SCHEDULE

SYMBOL	DESCRIPTION	FIXTURE				FIXTURE			SERVICES					REMARKS
		MANUFACTURER	MODEL	TYPE	SIZE	MANUFACTURER	MODEL	TYPE	S/W	V	CW	HW	TW	
HB-1	HOSE BIBB	LEONARD	SW-75-EVBD	WALL MOUNTED	25"x10"	-	-	-	-	-	3/4"	3/4"	3/4"	MANUAL WATER BLENDER HOSE RACK - TWO STOP AND CHECK VALVES W/ COLOR CODED HEAT RESISTANT HANDLES, MIXING CHAMBER, DIAL THERMOMETER, VACUUM BREAKER, HOSE CONNECTION & STAINLESS STEEL HOSE RACK. 125 PSI MAX WATER PRESSURE. COORDINATE MOUNTING HEIGHTS W/ ARCHITECT.

NOTES:
1. PROVIDE AND INSTALL ALL HANDICAPPED ACCESSIBLE FIXTURES PER ALL STATE & LOCAL CODES AND ADA REQUIREMENTS.
2. INSTALL ALL FIXTURES & EQUIPMENT PER MANUFACTURER'S INSTALLATION REQUIREMENTS.

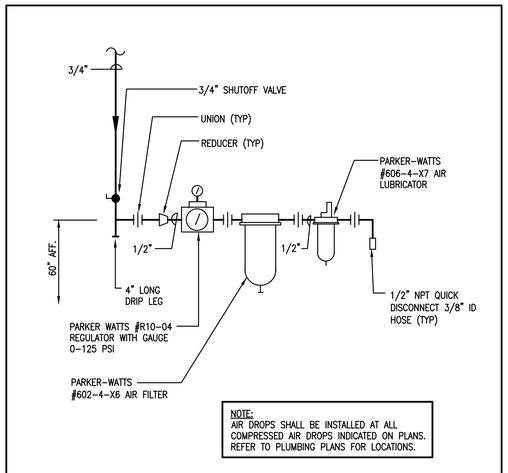

NOTE:
AIR DROPS SHALL BE INSTALLED AT ALL COMPRESSED AIR DROPS INDICATED ON PLANS. REFER TO PLUMBING PLANS FOR LOCATIONS.

1 AIR DROP DIAGRAM

NTS

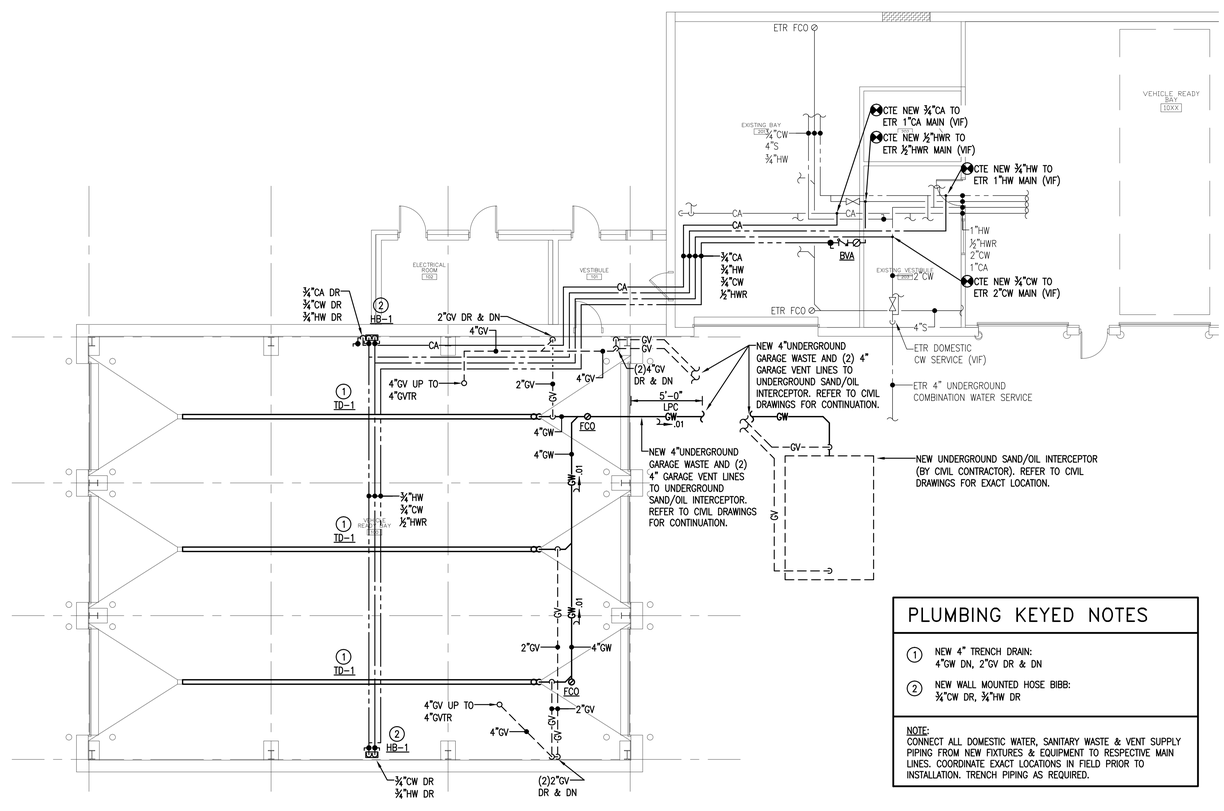

PLUMBING KEYED NOTES

1. NEW 4" TRENCH DRAIN: 4"GW DN, 2"GV DR & DN
2. NEW WALL MOUNTED HOSE BIBB: 3/4"CW DR, 3/4"HW DR

NOTE:
CONNECT ALL DOMESTIC WATER, SANITARY WASTE & VENT SUPPLY PIPING FROM NEW FIXTURES & EQUIPMENT TO RESPECTIVE MAIN LINES. COORDINATE EXACT LOCATIONS IN FIELD PRIOR TO INSTALLATION. TRENCH PIPING AS REQUIRED.

1 / P100 FLOOR PLAN

Scale: 1/8"=1'-0"

This drawing is copyrighted and is subject to copyright protection as an "architectural work" under 17 U. S. C. Sec. 101 et seq. The protection includes but is not limited to the overall form as well as the arrangement and composition of spaces, materials, color and elements in the design. Under such protection, unauthorized use of this drawing may result in the cessation of construction or buildings being seized and/or monetary compensation being awarded to The Robinson Green Beretta Corporation (RGB).

Any reproduction, possession, or use of this drawing or any part thereof without the express written permission of RGB, is prohibited. Violators will be prosecuted to the full extent of the law.

© RGB 2017

Certification

STEVEN A. KARAN
No. 6537
REGISTERED PROFESSIONAL ENGINEER (MECHANICAL)

Drawn by AG

Checked by ARV

Revised on

B|E|R
BUILDING ENGINEERING RESOURCES, INC.
66 Main Street
N. Easton, MA 02356
T 508.230.0260
F 508.230.0265
100 Midway Road - Suite 23
Cranston, RI 02920
T 401.942.3500
F 401.228.6205
ber@ber-engineering.com
www.ber-engineering.com

50 Holden Street
Providence, Rhode Island 02908

Phone: (401) 272-1730
Fax: (401) 273-7156

E-mail: rgbinfo@rgb.net
www.rgb.net

RGB architects

Architecture | Project Management | Interior Design

Project

RI ARMY NATIONAL GUARD

ADDITION TO BUILDING P-6

COVENTRY, RI

Drawing Status

ISSUED FOR CONSTRUCTION

Issued On: OCTOBER 31, 2017

Sheet Contents

PLUMBING - FLOOR PLAN, SCHEDULES & KEYED NOTES

Project Number.

Drawing No.

P100

Sheet of

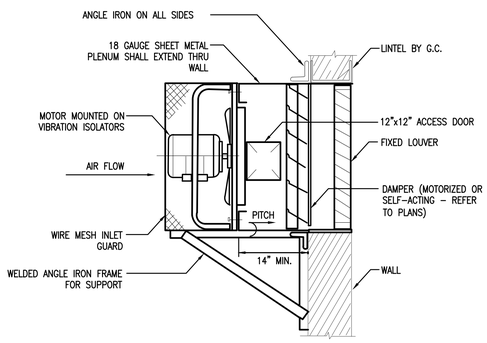

SIDEWALL PROPELLER FAN DETAIL | NTS

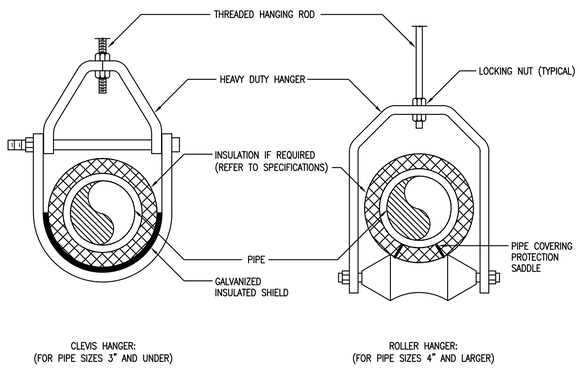

PIPE HANGER SUPPORT DETAIL | NTS

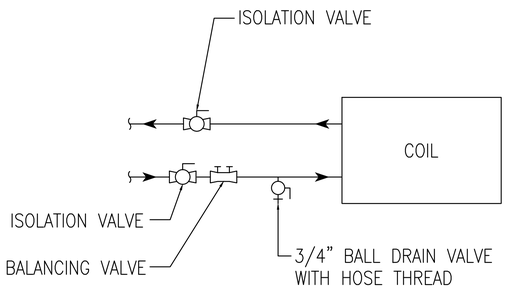

CUH & UH HYDRONIC PIPING DIAGRAM | NTS

PUMP SCHEDULE (P X)

GENERAL		PERFORMANCE						ELECTRICAL				PHYSICAL					REMARKS			
TAG	SERVICE	GPM	TDH (FT WG)	EFFICIENCY (%)	NPSH (FT WG)	HP	NON-OVER LOADING HP	RPM	HP	VOLTAGE	PHASE	INLET (IN)	OUTLET (IN)	MAXIMUM IMPELLER (IN)	IMPELLER (IN)	MANUFACTURER MODEL	TYPE	RATINGS	FEATURES	INSTALL
P-1	VEHICLE READY ADDITION	40	30	54	5	0.56	0.67	1750	0.75	208	3	1-1/2	1-1/2	5.9	5.86	TACO 1915	1	1 2	1 2	1

1 IN-LINE PUMP, CLOSE COUPLED
1 WATER AT 180°F
2 30% PROPYLENE GLYCOL AT 180°F
1 ANSI B16.1 CLASS 125 (175 PSIG AT 250°F)
2 ALL IRON
1 INSTALL PER PUMP MANUFACTURERS INSTALLATION INSTRUCTIONS.

UNIT HEATER SCHEDULE (UH X)

GENERAL		PERFORMANCE						ELECTRICAL					PHYSICAL	REMARKS			
TAG	LOCATION	MBH	GPM	WPD (FT WG)	LAT (°F)	CFM	FAN SPEED	HP	AMPS	MCA	VOLTAGE	PHASE	MANUFACTURER MODEL	TYPE	RATINGS	FEATURES	INSTALL
UH-1	PROPOSED VEHICLE READY BAY	149,118	17.4	1.06	106	3500	HIGH	1/3	–	–	115	1	STERLING HS-240	1	1	1 2 3 4	1 2
UH-2	PROPOSED VEHICLE READY BAY	149,118	17.4	1.06	106	3500	HIGH	1/3	–	–	115	1	STERLING HS-240	1	1	1 2 3 4	1 2
UH-3	ELECTRIC ROOM 102	8,030	.80	.80	91	245	HIGH	16 WATTS	–	–	115	1	STERLING HS-108A	1	1	1 2 3 4	1 2

1 HORIZONTAL
1 180°F LWT, 60°F EAT, 30% PROPYLENE GLYCOL
1 NON-FUSED DISCONNECT SWITCH
2 LINE VOLTAGE THERMOSTAT (UNIT MOUNTED)
3 EXPLOSION PROOF MOTOR
4 OSHA FAN GUARD
5 PHENOLIC COATING (BAKED)
1 SEE PIPING DETAIL ON THIS DRAWING
2 SELECT AUTOMATIC BALANCING VALVE FOR GPM INDICATED

FAN SCHEDULE (EF X)

GENERAL		PERFORMANCE				ELECTRICAL			PHYSICAL		REMARKS			
TAG	SERVICE	CFM	ESP (IN WG)	RPM	SONES	HP	VOLTAGE	PHASE	WEIGHT (LBS)	MANUFACTURER MODEL	TYPE	RATINGS	FEATURES	INSTALL
EF-1	CO AND NO2 EXHAUST	2,100	0.25	1725	11.8	1/4	120	1	37	GREENHECK SE1-14-432	1	1	1 2 3 4	1 2
EF-2	GARAGE EXHAUST	200	0.15	1650	4.2	1/40	115	1	22	GREENHECK SE1-8-428-P	1	1	1 2 3 4	1
EF-3	GARAGE MAKE-UP AIR	2,100	0.25	1750	30.0	1/4	120	1	148	GREENHECK SCS3-20-307-A4	2	1	1 2 3 4	1 2

1 SIDEWALL DIRECT DRIVE EXHAUST FAN
2 SIDEWALL DIRECT DRIVE SUPPLY FAN
1 SOUND PERFORMANCE CERTIFIED IN ACCORDANCE TO AMCA 301
1 OSHPD SIESMIC CERTIFIED
2 DAMPER w/ ACTUATOR (MATCH FAN VOLTAGE)
3 PERMATECTOR COATING
4 NON-FUSED DISCONNECT SWITCH
1 PER MANUFACTURES INSTRUCTIONS
2 INTERLOCK FAN OPERATION WITH GAS DETECTION SYSTEM

CABINET UNIT HEATER SCHEDULE (CUH 1)

GENERAL		PERFORMANCE			ELECTRICAL			PHYSICAL	REMARKS			
TAG	CAPACITY (MBH)	GPM	WPD (FT WG)	CFM	HP	VOLTAGE	PHASE	MANUFACTURER MODEL	TYPE	RATINGS	FEATURES	INSTALL
CUH-1	13.8	1.0	.09	185	1/15	120	1	STERLING W-1080-02	1	1	1 2 3 4 5	1

1 WALL MOUNTED
1 180°F EWT, 60°F EAT
1 DISCONNECT SWITCH
2 RIGHT HAND COIL CONNECTION
3 LEVELING LEGS
4 LIMITED ACCESS FASTENERS FOR FROM PANEL
5 COLOR TO BE SELECTED BY ARCHITECT
1 SEE PIPING DETAIL ON THIS DRAWING

GAS DETECTOR SCHEDULE (GD 1)

GD-1:
PROVIDE AND INSTALL VENTILATION CONTROL CO/NO2 MONITOR GAS DETECTOR SYSTEM
MANUFACTURED BY INTEC CONTROLS MODEL SPC3-1112, WITH:
AUDIBLE ALARM, SILENCE SWITCH, POWER/FAN ON INDICATOR, HIGH GAS CONCENTRATION INDICATOR.
INSTALL PER MANUFACTURERS INSTRUCTION AND INTERLOCK WITH EF-1 AND INTAKE MOTORIZED DAMPER MD-1

PIPING PLAN LEGEND

SYMBOL	DESCRIPTION
HWS	HOT WATER SUPPLY PIPING
HWR	HOT WATER RETURN PIPING
	ELBOW UP
	ELBOW DOWN
	TEE DOWN
	TEE UP
	PIPE GUIDE
	PIPE ANCHOR
	QUARTER TURN SHUT-OFF VALVE
	MANUAL BALANCING VALVE
	AUTOMATIC BALANCING VALVE
	EXPANSION JOINT
	FLOW DIRECTION
##-#	EQUIPMENT TAG
C	CO2 SENSOR
H	RELATIVE HUMIDITY SENSOR
S	SWITCH
T	THERMOSTAT OR TEMPERATURE SENSOR
T	THERMOSTAT GUARD w/ KEY LOCK
	CONTROL CONNECTION
	CONNECT TO EXISTING

PIPING PLAN GENERAL NOTES

1. UOI, BRANCH PIPES TO TERMINAL UNITS SHALL BE AS FOLLOWS:

GPM	BRANCH PIPES	GPM	BRANCH PIPES
0.0 TO 3.0	3/4"	19.1 TO 40.0	2"
3.1 TO 7.0	1"	40.1 TO 70.0	2-1/2"
7.1 TO 12.0	1-1/4"	70.1 TO 120.0	3"
12.1 TO 19.0	1-1/2"	120.1 TO 250.0	4"

This drawing is copyrighted and is subject to copyright protection as an "architectural work" under 17 U. S. C. Sec. 101 et seq. The protection includes but is not limited to the overall form as well as the arrangement and composition of spaces, materials, color and elements in the design. Under such protection, unauthorized use of this drawing may result in the cessation of construction or buildings being seized and/or monetary compensation being awarded to The Robinson Green Beretta Corporation (RGB).

Any reproduction, possession, or use of this drawing or any part thereof without the express written permission of RGB, is prohibited. Violators will be prosecuted to the full extent of the law.

© RGB 2017

Certification

STEVEN A. KARAN
No. 6537
REGISTERED PROFESSIONAL ENGINEER (MECHANICAL)

Drawn by JPK
Checked by GAA

Revised on

B|E|R
BUILDING ENGINEERING RESOURCES, INC.
66 Main Street
N. Easton, MA 02356
T 508.230.0260
F 508.230.0265
100 Midway Road - Suite 23
Cranston, RI 02920
T 401.942.3500
F 401.228.6205
ber@ber-engineering.com
www.ber-engineering.com

50 Holden Street
Providence, Rhode Island 02908
Phone: (401) 272-1730
Fax: (401) 273-7156
E-mail: rgbinfo@rgb.net
www.rgb.net
RGB ARCHITECTS
Architecture ÂProject Management ÂInterior Design

Project

RI ARMY NATIONAL GUARD

ADDITION TO BUILDING P-6

COVENTRY, RI

Drawing Status

ISSUED FOR CONSTRUCTION

Issued On: OCTOBER 31, 2017

Sheet Contents

MECHANICAL LEGEND, NOTES, SCHEDULES AND DETAILS.

Project Number.

Drawing No.

M100

Sheet of

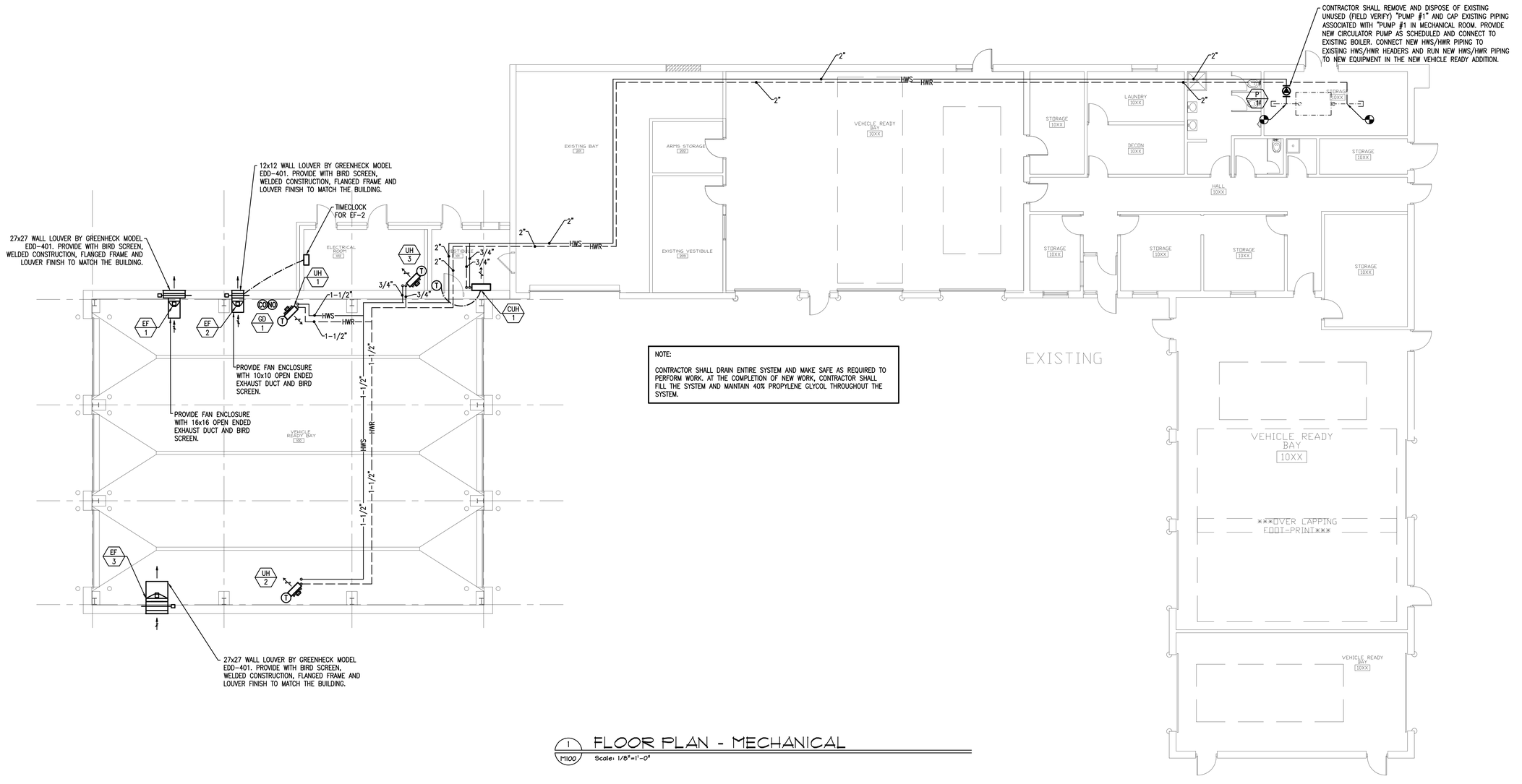

NOTE:

CONTRACTOR SHALL DRAIN ENTIRE SYSTEM AND MAKE SAFE AS REQUIRED TO PERFORM WORK. AT THE COMPLETION OF NEW WORK, CONTRACTOR SHALL FILL THE SYSTEM AND MAINTAIN 40% PROPYLENE GLYCOL THROUGHOUT THE SYSTEM.

1 / M100 FLOOR PLAN - MECHANICAL

Scale: 1/8"=1'-0"

This drawing is copyrighted and is subject to copyright protection as an "architectural work" under 17 U. S. C. Sec. 101 et seq. The protection includes but is not limited to the overall form as well as the arrangement and composition of spaces, materials, color and elements in the design. Under such protection, unauthorized use of this drawing may result in the cessation of construction or buildings being seized and/or monetary compensation being awarded to The Robinson Green Beretta Corporation (RGB).

Any reproduction, possession, or use of this drawing or any part thereof without the express written permission of RGB, is prohibited. Violators will be prosecuted to the full extent of the law.

© RGB 2017

Certification

STEVEN A. KARAN
No. 6537
REGISTERED PROFESSIONAL ENGINEER (MECHANICAL)

Drawn by JPK

Checked by GAA

Revised on

B|E|R
BUILDING ENGINEERING RESOURCES, INC.
66 Main Street
N. Easton, MA 02356
T 508.230.0260
F 508.230.0265
100 Midway Road - Suite 23
Cranston, RI 02920
T 401.942.3500
F 401.228.6205
ber@ber-engineering.com
www.ber-engineering.com

50 Holden Street
Providence, Rhode Island 02908

Phone: (401) 272-1730
Fax: (401) 273-7156

E-mail: rgbinfo@rgb.net
www.rgb.net

RGB architects

Architecture ÂProject Management ÂInterior Design

Project

RI ARMY NATIONAL GUARD

ADDITION TO BUILDING P-6

COVENTRY, RI

Drawing Status

ISSUED FOR CONSTRUCTION

Issued On: OCTOBER 31, 2017

Sheet Contents

FLOOR PLAN - MECHANICAL

Project Number.

Drawing No.

M200

Sheet of

LEGEND

* MOUNTING HEIGHTS SHALL BE AS INDICATED UNLESS SHOWN OTHERWISE ON ELECTRICAL DRAWINGS OR ARCHITECTURAL ELEVATIONS
* ALL SYMBOLS MAY NOT BE SHOWN ON PLANS

RACEWAYS AND WIRING

P4–1,3,5 — SINGLE PHASE HOMERUNS TO PANELBOARD. "P4" DENOTES PANEL, "1,3,5" DENOTES CIRCUIT NUMBERS, [(3) 20A, 1P CIRCUITS] NUMBER OF SLASH MARKS DENOTES NUMBER OF #12AWG CONDUCTORS IN MINIMUM 3/4"C. NO SLASH MARKS INDICATE 2#12 & 1#12G–3/4"C UNLESS INDICATED OTHERWISE.

P4–2 20/3 — MULTI–POLE HOMERUN TO PANELBOARD. "P4" DENOTES PANEL, "2" DENOTES CIRCUIT NUMBER, 20 AMP 3 POLE C/B. NUMBER OF SLASH MARKS DENOTES NUMBER OF #12AWG CONDUCTORS IN MINIMUM 3/4"C.

NOTES:
1. GREEN GROUND CONDUCTOR NOT INDICATED BUT SHALL BE INCLUDED IN EACH RACEWAY. SIZE SHALL BE #12AWG UNLESS INDICATED OTHERWISE.

— E — 2#10,#10G EMERGENCY ONLY WIRING
— CT — CABLE TRAY – REFER TO SPECIFICATIONS FOR REQUIREMENTS
— J — J HOOKS 3'–0" ON CENTER
— P — PRIMARY CONDUIT DUCT BANK
— S — SECONDARY CONDUIT DUCT BANK
— T — TELEPHONE SERVICE CONDUIT DUCT BANK
— CATV — CABLE TELEVISION CONDUIT DUCT BANK

LIGHTING FIXTURES

A 2a — FLUORESCENT LIGHTING FIXTURE CEILING OR RECESSED MOUNTED. "A" DENOTES FIXTURE TYPE, "2" DENOTES CIRCUIT NUMBER, "a" DENOTES SWITCH CONTROL,
LIGHT FIXTURE WIRED TO CONSTANT–ON OR NORMAL EMERGENCY CIRCUIT
FLUORESCENT BARE LAMP STRIP OR INDUSTRIAL STRIP
INCANDESCENT OR COMPACT FLUORESCENT RECESSED OR SURFACE MOUNTED LIGHTING FIXTURE
WALL MOUNTED LIGHTING FIXTURE
WALL WASH OR DIRECTIONAL LIGHTING FIXTURE
CEILING MOUNTED ILLUMINATED EXIT SIGN, ARROWS AS INDICATED ON DRAWINGS
WALL MOUNTED ILLUMINATED EXIT SIGN – SHADING INDICATES FACE PLATE(S)
EB — EMERGENCY BATTERY UNIT
REMOTE EMERGENCY ONLY LIGHT HEADS – SINGLE OR DOUBLE AS SHOWN

TOGGLE SWITCHES (MOUNTED 48" AFF)

Soc ab — SINGLE POLE TOGGLE SWITCH. "a" DENOTES FIXTURE CONTROL. "oc" DENOTES INTEGRAL OCCUPANCY SENSOR.
S3 — THREE WAY TOGGLE SWITCH
S4 — FOUR WAY TOGGLE SWITCH
SK — KEY OPERATED SWITCH
SP — SINGLE POLE TOGGLE SWITCH WITH PILOT LIGHT
SD — DIMMER SWITCH
OC — CEILING MOUNTED OCCUPANCY SENSOR LIGHTING CONTROL. REFER TO LIGHTING PLANS FOR EXACT CATALOG NUMBER

RECEPTACLES (MOUNTED 18" AFF OR AS INDICATED ON ARCHITECTURAL PLANS)

IG 2 GFI WP — DUPLEX RECEPTACLE, "2" DENOTES CIRCUIT NUMBER, "GFI" DENOTES GROUND FAULT CIRCUIT INTERRUPTER TYPE DEVICE, "IG" DENOTES ISOLATED GROUND TYPE DEVICE, "WP" DENOTES WEATHER PROOF COVER
DUPLEX RECEPTACLE MOUNTED 6" ABOVE COUNTER TOP OR AS INDICATED ON ARCHITECTURAL PLANS
DOUBLE DUPLEX RECEPTACLE MOUNTED 6" ABOVE COUNTER TOP OR AS INDICATED ON THE ARCHITECTURAL PLANS
DOUBLE DUPLEX RECEPTACLE
DUPLEX RECEPTACLE ONE HALF SWITCH CONTROLLED
EWC — GFI DUPLEX RECEPTACLE FOR ELECTRIC WATER COOLER
DUPLEX RECEPTACLE FLOOR MOUNTED
L6–30 — SPECIAL PURPOSE RECEPTACLE, "L6–30" DENOTES TYPE, SEE POWER PLANS FOR EXACT TYPES USED

TELECOMMUNICATIONS (MOUNTED 18" AFF)

TELEPHONE OUTLET
W — TELEPHONE OUTLET MOUNTED 54"AFF
TELEPHONE OUTLET FLOOR MOUNTED
COMPUTER SYSTEM OUTLET
COMPUTER SYSTEM OUTLET, FLOOR MOUNTED
COMBINATION TELEPHONE/DATA OUTLET
T/D PP — COMBINATION TELEPHONE/DATA POWER POLE ASSEMBLY

NOTE: E.C. SHALL PROVIDE A DOUBLE GANG BACK BOX WITH SINGLE GANG REDUCER, 3/4" CONDUIT AND PULLSTRING STUBBED OUT ABOVE ACCESSIBLE CEILING.

FIRE ALARM SYSTEM

F — MANUAL PULL STATION MOUNTED 48" AFF
M F — AUDIO/VISUAL ALARM MOUNTED 80" AFF. "M" DENOTES MINI–UNIT
VISUAL ONLY UNIT MOUNTED 80" AFF.
SD — SYSTEM SMOKE DETECTOR WITH SOUNDER BASE
HD 190° — 135' FIXED TEMPERATURE HEAT DETECTOR. "190°" INDICATES 190°F FIXED TEMPERATURE
TS — SPRINKLER TAMPER SWITCH FURNISHED AND INSTALLED BY THE FIRE PROTECTION SUBCONTRACTOR, WIRED BY THE ELECTRICAL SUBCONTRACTOR
FS — SPRINKLER WATER FLOW SWITCH FURNISHED AND INSTALLED BY THE FIRE PROTECTION SUBCONTRACTOR, WIRED BY THE ELECTRICAL SUBCONTRACTOR.

POWER DISTRIBUTION EQUIPMENT

DISTRIBUTION PANEL
PANELBOARD, SURFACE MOUNTED
PANELBOARD, FLUSH MOUNTED
J — JUNCTION BOX, SIZED PER NEC
2 — MOTOR, "2" DENOTES HORSEPOWER
MAGNETIC MOTOR STARTER WITH ENCLOSURE, MINIMUM SIZE NEMA 1
P — MANUAL MOTOR STARTER WITH THERMAL OVERLOAD. "P" DENOTES PILOT LIGHT
30/3 — NON–FUSED DISCONNECT SWITCH: "30/3" DENOTES 30 AMP/3 POLE SWITCH
30/20/3 — FUSED DISCONNECT SWITCH: "30/20/3" DENOTES 30 AMP/3 POLE SWITCH, 20 AMP FUSES
COMBINATION MAGNETIC STARTER AND FUSED DISCONNECT SWITCH. SIZE OF STARTER, SWITCH AND FUSE AS REQUIRED
GROUND ROD, REFER TO PLANS FOR EXACT SIZE

MISCELLANEOUS

J — JUNCTION BOX WITH FLEXIBLE CONNECTION TO EQUIPMENT
EF — EXHAUST FAN
CP — CONTROL PANEL
PB — PULL BOX – SIZED PER NEC FOR CONDUITS ENTERING AND LEAVING

MECHANICAL EQUIPMENT TAG ABBREVIATIONS

AH — DENOTES EQUIPMENT TYPE
1 — DENOTES UNIT NUMBER

ACC	AIR–COOLED CONDENSER
AHU	AIR HANDLING UNIT
B	BOILER
CH	CHILLER
CUH	CABINET UNIT HEATER
EBB	ELECTRIC BASEBOARD
EF	EXHAUST FAN
EH	EXHAUST HOOD
EWH	ELECTRIC WALL HEATER
FC	FAN COIL
HP	HEAT PUMP
MAU	MAKE–UP AIR UNIT
P	PUMP
RTU	ROOF TOP UNIT
UH	UNIT HEATER
VAV	VARIABLE AIR VOLUME BOX
WH	ELECTRIC WATER HEATER

ABBREVIATIONS

3R	NEMA 3R RATING
4X	NEMA 4X RATING
A	AMPERES
AFF	ABOVE FINISHED FLOOR
AFG	ABOVE FINISHED GRADE
AIC	AMPERE INTERRUPTING CAPACITY
ARCH	ARCHITECT
ATS	AUTOMATIC TRANSFER SWITCH
AWG	AMERICAN WIRE GAUGE
C	CONDUIT
C/B	CIRCUIT BREAKER
C.T.	CURRENT TRANSFORMER
CAT	CATALOG
CKT	CIRCUIT
CU	COPPER
DWG	DRAWING
E	WIRED ON EMERGENCY CIRCUIT
EC	ELECTRICAL CONTRACTOR
EM	EMERGENCY
ETD	EXISTING TO BE DEMOLISHED
ETR	EXISTING TO REMAIN
ETRL	EXISTING TO BE RELOCATED
ETRP	EXISTING TO BE REPLACED
G	GROUND
GC	GENERAL CONTRACTOR
GFI	GROUND FAULT INTERRUPTER
HVAC	HEATING, VENTILATION, AIR CONDITIONING CONTRACTOR
IG	ISOLATED GROUND
KCMIL	ONE THOUSAND CIRCULAR MILS
KVA	KILOVOLT–AMPERES
KVAR	KILOVOLT–AMPERES REACTIVE
KW	KILOWATTS
MCB	MAIN CIRCUIT BREAKER
MCC	MOTOR CONTROL CENTER
MLO	MAIN LUGS ONLY
NC	NORMALLY CLOSED
NEC	NATIONAL ELECTRICAL CODE
NL	NIGHT LIGHT
NO	NORMALLY OPEN
NTS	NOT TO SCALE
ø	PHASE
P	POLE
PC	PLUMBING CONTRACTOR
P.T.	POTENTIAL TRANSFORMER
PVC	POLYVINYL CHLORIDE
RL	NEW LOCATION OF RELOCATED DEVICE
SM	SURFACE MOUNT
ST	SHUNT TRIP
T/D	TEL/DATA
TEL	TELEPHONE
UG	UNDERGROUND
UNO	UNLESS NOTED OTHERWISE
V	VOLT
VIF	VERIFY IN FIELD
W	WATT
WP	WEATHERPROOF
XFMR	TRANSFORMER

LIGHTING FIXTURE SCHEDULE

TYPE	DESCRIPTION	MANUFACTURER & CATALOG NUMBER	LAMPS NUMBER	LAMPS TYPE	LAMPS VOLTS	LAMPS WATTS	REMARKS
A	8' LED STRIP	FLEX LIGHTING SOLUTIONS# ES40S–A1–23K–4MS–40–80–CL–LV–CRM–OCC20–CW–10V	1	LED	120	150	
A1	4' LED STRIP	XTRALITE# 4025TUINXXRFW	1	LED	120	25	
	LED EXIT SIGN WITH INTEGRAL BATTERY BACK–UP	EMERGI–LITE WPREMSNXR	1	LED	120	3.5	– –
EB	EMERGENCY BATTERY UNIT	EMERGI–LITE BECM36–2	2	HALOGEN	12	(2) 9	– –
WP	REMOTE EMERGENCY FIXTURE	EMERGI–LITE EF39DLA	2	LED	6	(2) 4	– –

* DENOTES FURNISHED BY OWNER, INSTALLED AND WIRED UNDER THIS CONTRACT.

LIGHTING FIXTURE NOTES:

1. PROVIDE ACCESSORIES AND MOUNTING HARDWARE FOR ALL FIXTURES.
2. COLORS SHALL BE AS SELECTED BY ARCHITECT.
3. COORDINATE EXACT LOCATION WITH ARCHITECT PRIOR TO ROUGH–IN.
4. E.C. SHALL COORDINATE THAT ALL DIMMER SWITCHES ARE COMPATIBLE WITH EACH FIXTURE INDICATED TO BE CONTROLLED AND PROVIDE DIMMER SWITCHES PER MANUFACTURER'S RECOMMENDATIONS AND REQUIREMENTS.

DEMOLITION AND REMOVAL WORK

A. REMOVE ALL ELECTRICAL EQUIPMENT, WIRING, AND OTHER ELECTRICAL WORK AS REQUIRED. DISCONNECT LOAD AND LINE END OF CONDUCTORS FEEDING DEVICES WHICH ARE TO BE REMOVED OR ABANDONED, REMOVE CONDUCTORS NO LONGER IN USE. CUT BACK TO FLOOR, WALL, OR CEILING AND PLUG BOTH ENDS OF CONCEALED CONDUITS MADE OBSOLETE BY THIS ALTERATION. REMOVE EXPOSED OR ABANDONED CIRCUITS AND OUTLETS. REMOVE MATERIAL AND EQUIPMENT AND DISPOSE OF AS DIRECTED.

B. WHEREVER IT IS REQUIRED TO DISCONNECT OR REMOVE ANY PART OF AN EXISTING CIRCUIT, IMMEDIATELY RECONNECT THAT CIRCUIT OR REESTABLISH SERVICE IN THE REMAINING PORTION OF THE CIRCUIT.

C. THE WORK SHALL ALSO INCLUDE THE REMOVAL OF MATERIALS AS DIRECTED. PRIOR TO REMOVING EQUIPMENT AND MATERIAL FROM PROJECT SITE, THE BUILDING MANAGER OR OWNER WILL INSPECT AND ADVISE WHICH ITEMS WILL BE STORED.

D. WHERE EXISTING RECEPTACLES AND/OR SWITCHES ARE LOCATED IN COLUMNS AND/OR EXTERIOR WALLS, AND ARE NOT TO BE REUSED, REMOVE RECEPTACLE AND CAP OUTLET BOX. RECEPTACLES SHOWN ON PARTITIONS TO BE REMOVED SHALL HAVE ALL WIRING AND CONDUIT REMOVED AS WELL.

E. WHERE PRESENT WORK IS DAMAGED IN THE EXECUTION OF THIS CONTRACT, OR WHERE OPENINGS ARE LEFT DUE TO THE REMOVAL OF CONDUITS, EQUIPMENT, OR APPARATUS, THE SAME SHALL BE REPAIRED OR CLOSED UP TO CORRESPOND IN MATERIAL, QUALITY, SHAPE, AND FINISH WITH THAT OR SIMILAR AND ADJOINING WORK, UNLESS OTHERWISE CALLED FOR.

F. SHOULD ANY DAMAGE DUE TO THE EXECUTION OF THIS CONTRACT OCCUR TO THE FURNITURE, FIXTURES, OR ANY OTHER EQUIPMENT OR APPARATUS, SUCH DAMAGES SHALL BE PROPERLY REPAIRED WITH THE SUPPLY OF NEW ARTICLES AND MADE GOOD WITHOUT EXTRA CHARGE.

G. WHERE REMOVAL OF EXISTING ELECTRICAL EQUIPMENT WILL RESULT IN OUTAGES IN AREA NOT TO BE DEMOLISHED, THIS CONTRACTOR SHALL COORDINATE IN ADVANCE AND OBTAIN THE APPROVAL OF THE BUILDING MANAGER OR OWNER.

BRANCH CIRCUIT WIRING NOTES:

1. WIRING IS SHOWN ON DRAWINGS ONLY FOR SPECIFIC ROUTES OR SPECIAL CONDITIONS.
2. WIRING AND CONDUIT SHALL BE REQUIRED BETWEEN ALL OUTLETS INDICATED WITH CIRCUIT NUMBERS AND PANEL DESIGNATIONS.
3. ALL SWITCH CONTROLS SHALL BE PROVIDED WITH WIRING AND CONDUIT AS REQUIRED.
4. ALTHOUGH ALL BRANCH CIRCUIT WIRING AND CONDUIT IS NOT SHOWN, IT IS THE INTENT OF THESE DOCUMENTS THAT A COMPLETE BRANCH CIRCUIT WIRING SYSTEM BE INSTALLED.
5. A GREEN GROUNDING CONDUCTOR SHALL BE RUN WITH ALL CIRCUITS. VERIFY CONDUIT SIZE TO ENSURE IT CAN ACCOMMODATE ALL PHASE, NEUTRAL AND GROUND CONDUCTORS.
6. PROVIDE A NEUTRAL CONDUCTOR TO ALL NEW LIGHTING SWITCH BOXES PER NEC ARTICLE 404.2.
7. ALL 15A AND 20A, 125V RECEPTACLES IN NON–DWELLING TYPE OCCUPANCIES SHALL BE GFCI PROTECTED PER NEC ARTICLE 210.8(B).
8. WHERE EXISTING SWITCHES AND RECEPTACLES ARE INDICATED TO REMAIN, THIS CONTRACTOR SHALL REPLACE SAID DEVICE(S) AND DEVICE PLATE(S) WITH NEW TO MATCH THE NEW CONSTRUCTION. WHERE THEY ARE INDICATED AS RELOCATED, EXTEND BRANCH CIRCUIT WIRING TO NEW LOCATION AND PROVIDE NEW DEVICE AND DEVICE PLATE TO MATCH NEW CONSTRUCTION.
9. ALL SELF CONTAINED EMERGENCY LIGHTING UNITS AND EXIT LIGHTING SHALL BE CONNECTED TOT HE NEAREST UNSWITCHED LIGHTING CIRCUIT IN THE BUILDING WITH 2 #12, #12G, 3/4" CONDUIT.

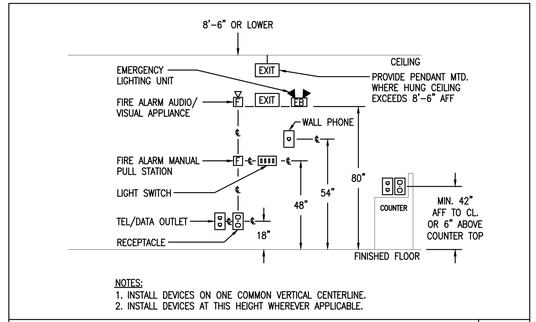

NOTES:
1. INSTALL DEVICES ON ONE COMMON VERTICAL CENTERLINE.
2. INSTALL DEVICES AT THIS HEIGHT WHEREVER APPLICABLE.

DETAIL OF TYPICAL DEVICE MOUNTING HEIGHTS — NTS

This drawing is copyrighted and is subject to copyright protection as an "architectural work" under 17 U. S. C. Sec. 101 et seq. The protection includes but is not limited to the overall form as well as the arrangement and composition of spaces, materials, color and elements in the design. Under such protection, unauthorized use of this drawing may result in the cessation of construction or buildings being seized and/or monetary compensation being awarded to The Robinson Green Beretta Corporation (RGB).

Any reproduction, possession, or use of this drawing or any part thereof without the express written permission of RGB, is prohibited. Violators will be prosecuted to the full extent of the law.

© RGB 2017

Certification

MARC R. PLANTE
No. 6397
REGISTERED PROFESSIONAL ENGINEER ELECTRICAL

Drawn by NM
Checked by DEC

Revised on

B|E|R
BUILDING ENGINEERING RESOURCES, INC.
66 Main Street
N. Easton, MA 02356
T 508.230.0260
F 508.230.0265
100 Midway Road - Suite 23
Cranston, RI 02920
T 401.942.3500
F 401.228.6205
ber@ber-engineering.com
www.ber-engineering.com

50 Holden Street
Providence, Rhode Island 02908

Phone: (401) 272-1730
Fax: (401) 273-7156

E-mail: rgbinfo@rgb.net
www.rgb.net

RGB ARCHITECTS

Architecture ÂProject Management ÂInterior Design

Project

RI ARMY NATIONAL GUARD

ADDITION TO BUILDING P-6

COVENTRY, RI

Drawing Status

ISSUED FOR CONSTRUCTION

Issued On: OCTOBER 31, 2017

Sheet Contents

ELECTRICAL - LEGEND, SCHEDULE & NOTES

Project Number.

Drawing No.

E001

Sheet of

MAIN DISTRIBUTION SCHEDULE

MIN. AIC = 65,000

PHASE: THREE | WIRE: FOUR | VOLTAGE: 120/208 | MAINS: 1000AMP

CKT NO	OVERCURRENT DEVICE FRAME	TRIP	POLE	DESCRIPTION OF LOAD	FEEDER SIZE	REMARKS
1	225	200	3	PANEL K	SEE RISER DIAGRAM	–
2	225	125	3	PANEL A	SEE RISER DIAGRAM	
3	225	200	3	PANEL B	SEE RISER DIAGRAM	
4	225	150	3	PANEL C	SEE RISER DIAGRAM	
5	225	150	3	PANEL D	SEE RISER DIAGRAM	
6	225	200	3	PANEL E	SEE RISER DIAGRAM	
7	225	100	3	PANEL F	SEE RISER DIAGRAM	
8	225	150	3	PANEL G	SEE RISER DIAGRAM	
9	225	150	3	PANEL H	SEE RISER DIAGRAM	
10						
11						

PANELBOARD SCHEDULE

PANEL DESIGNATION	VOLTS	PHASE	WIRES	MAINS MLO: MAIN LUGS ONLY MCB: MAIN CKT. BKR. BUS SIZE	OVERCURRENT DEVICE FRAME AMPS	TRIP AMPS	BKR. POLES	BRANCH DEVICES BREAKER AMPS 15	20	25	30	40	50	60	70	TOTAL POLES	* MOUNTING S: SURFACE F: FLUSH	ADDITIONAL BRANCH C.B.'S	REMARKS
K	120/208	3	4	200	200	MLO	1		18				8			60	S	–	PROVIDE (4) GFI 20A/1P BREAKERS
							2	–		1									
							3	6 –											

* INCLUDES SPACES

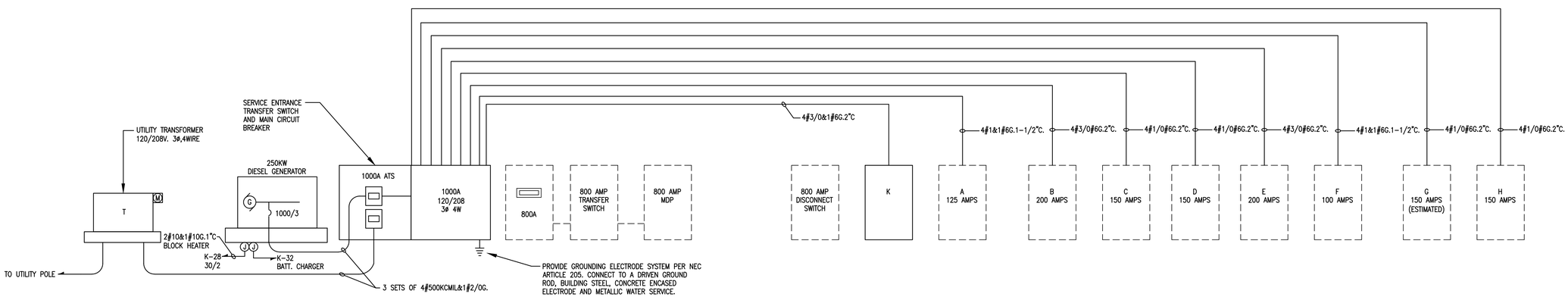

POWER RISER DIAGRAM

Scale: NTS

This drawing is copyrighted and is subject to copyright protection as an "architectural work" under 17 U. S. C. Sec. 101 et seq. The protection includes but is not limited to the overall form as well as the arrangement and composition of spaces, materials, color and elements in the design. Under such protection, unauthorized use of this drawing may result in the cessation of construction or buildings being seized and/or monetary compensation being awarded to The Robinson Green Beretta Corporation (RGB).

Any reproduction, possession, or use of this drawing or any part thereof without the express written permission of RGB, is prohibited. Violators will be prosecuted to the full extent of the law.

© RGB 2017

Certification

MARC R. PLANTE
No. 6397
REGISTERED PROFESSIONAL ENGINEER ELECTRICAL

Drawn by NM

Checked by DEC

Revised on

B|E|R
BUILDING ENGINEERING RESOURCES, INC.
66 Main Street
N. Easton, MA 02356
T 508.230.0260
F 508.230.0265
ber@ber-engineering.com
100 Midway Road - Suite 23
Cranston, RI 02920
T 401.942.3500
F 401.228.6205
www.ber-engineering.com

50 Holden Street
Providence, Rhode Island 02908

Phone: (401) 272-1730
Fax: (401) 273-7156

E-mail: rgbinfo@rgb.net
www.rgb.net

RGB architects

Architecture ÂProject Management ÂInterior Design

Project

RI ARMY NATIONAL GUARD

ADDITION TO BUILDING P-6

COVENTRY, RI

Drawing Status

ISSUED FOR CONSTRUCTION

Issued On: OCTOBER 31, 2017

Sheet Contents

PANELBOARD SCHEDULE & RISER DIAGRAMS

Project Number.

Drawing No.

E002

Sheet of

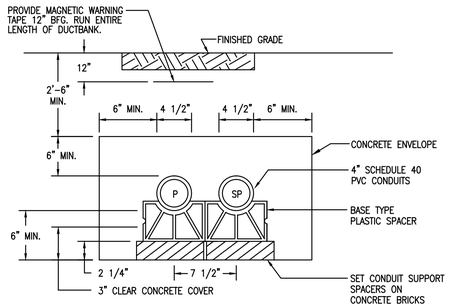

DUCTBANK DETAIL "A-A"
SCALE: NOT TO SCALE

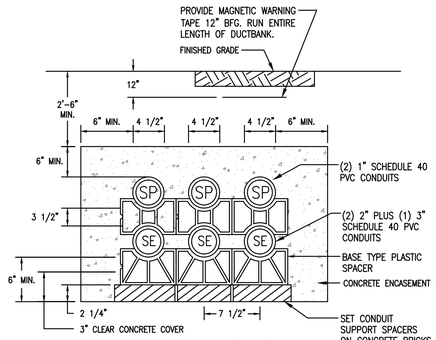

DUCTBANK DETAIL "B-B"
SCALE: NOT TO SCALE

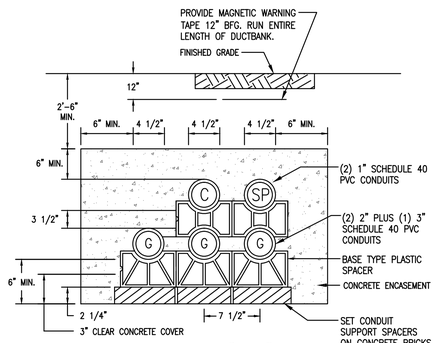

DUCTBANK DETAIL "C-C"
SCALE: NOT TO SCALE

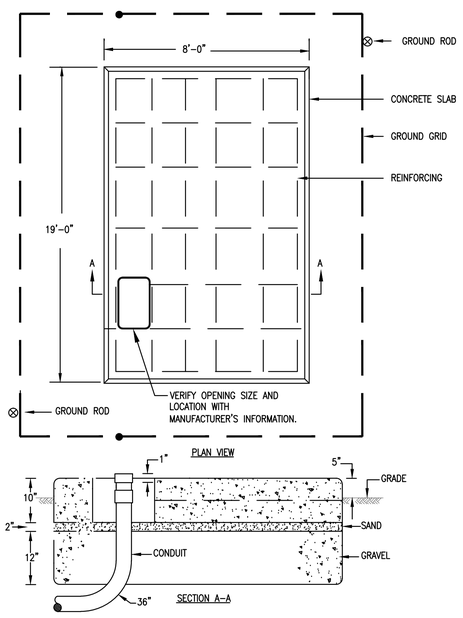

PADMOUNT GENERATOR – FOUNDATION NOTES:

1. ELECTRIC SUB-CONTRACTOR SHALL BE RESPONSIBLE FOR PROVIDING THE GENERATOR, CONDUIT, WIRING & GROUNDING ASSOCIATED WITH THE GENERATOR. THE GENERAL CONTRACTOR SHALL BE RESPONSIBLE FOR PROVIDING ALL EXCAVATION, FORMING, REBAR & CONCRETE ASSOCIATED WITH GENERATOR PAD. ALL WORK SHALL BE COORDINATE BETWEEN THE GENERAL CONTRACTOR & THE ELECTRICAL SUB-CONTRACTOR.

2. CONDUIT – INSTALL AS SHOWN BEFORE SLAB IS POURED. USE 36" RADIUS BENDS, WITH COUPLINGS, NIPPLES AND BUSHINGS AS REQUIRED. (MATERIAL MAY BE GALVANIZED STEEL, BLACK IRON, OR TYPE II FIBER OR PLASTIC.) TERMINATIONS OF CONDUITS SHALL BE LOCATED EXACTLY AS SHOWN, SOLID OR DOTTED, DEPENDING ON THE NUMBER OF DUCTS. tHE NIPPLE AND BUSHING SHOULD BE INSTALLED AFTER THE GENERATOR IS PLACED AND BEFORE THE CABLES ARE PULLED.

3. GROUND GRID – INSTALL #4/0 S.D. 7 STRAND BARE COPPER WIRE LOOP 1'-0" BELOW GRADE. BOND TO ALL EXPOSED METALLIC CONDUIT AND LEAVE 3'-0" OF WIRE ABOVE PAD FOR GROUNDING GENERATOR AT TWO OPPOSITE POINTS IN THE CABLE CONDUIT OPENINGS. PROVIDE PHOS-COPPER BRAZE CONNECTIONS, OR CADWELD, OR USE TWO APPROVED CONNECTORS PER JOINT. INSTALL TWO 10 FT. GALVANIZED STEEL (3'-4") GROUND RODS WHERE SHOWN. LEAVE GRID EXPOSED UNTIL INSPECTED BY THE ENGINEER.

4. THIS DETAIL SHALL BE USED FOR BIDDING PURPOSES ONLY. VERIFY EXACT GENERATOR SIZE, PAD SIZE, AND CONSTRUCTION DETAILS WITH GENERATOR MANUFACTURER AND OWNER PRIOR TO INSTALLATION.

EMERGENCY GENERATOR PAD DETAIL
SCALE: NOT TO SCALE

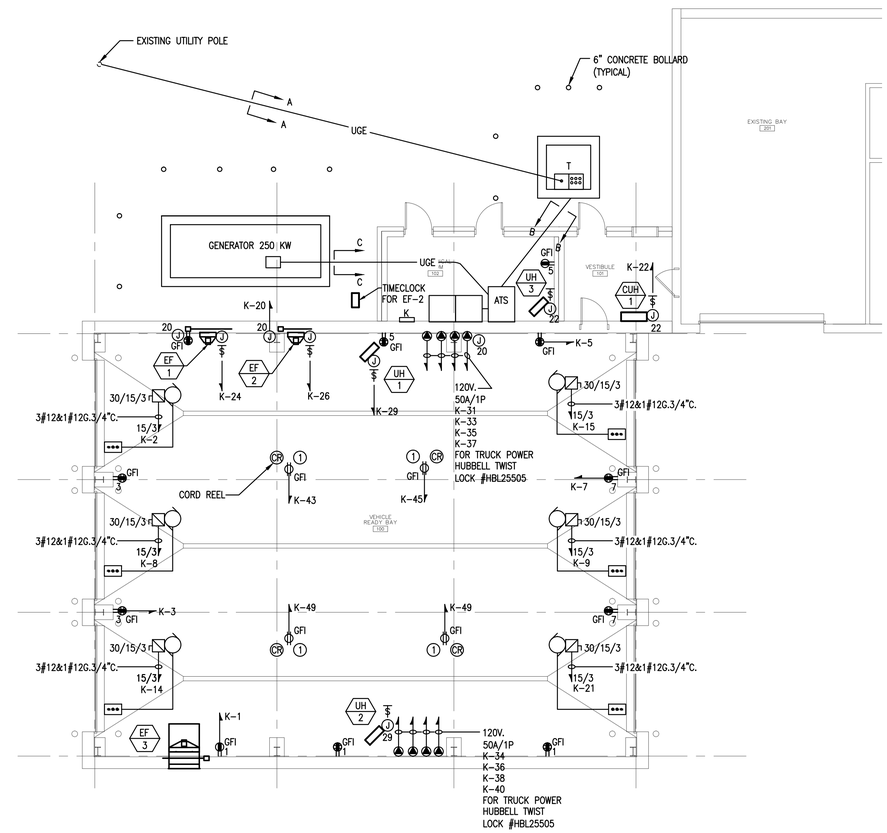

1 E100 FLOOR PLAN
Scale: 1/8"=1'-0"

KEYED NOTES:

1. PROVIDE RECEPTACLE AT CEILING FOR PLUG-IN CORD REEL. PROVIDE GFI CIRCUIT BREAKER. CORD REEL SHALL BE KH INDUSTRIES #RTBB3LW-1DD520-P12H.

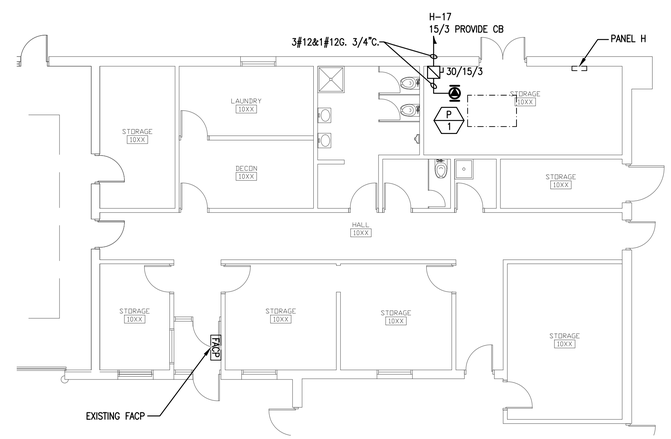

2 E100 FLOOR PLAN
Scale: 1/8"=1'-0"

This drawing is copyrighted and is subject to copyright protection as an "architectural work" under 17 U. S. C. Sec. 101 et seq. The protection includes but is not limited to the overall form as well as the arrangement and composition of spaces, materials, color and elements in the design. Under such protection, unauthorized use of this drawing may result in the cessation of construction or buildings being seized and/or monetary compensation being awarded to The Robinson Green Beretta Corporation (RGB).

Any reproduction, possession, or use of this drawing or any part thereof without the express written permission of RGB, is prohibited. Violators will be prosecuted to the full extent of the law.

© RGB 2017

Certification

MARC R. PLANTE
No. 6397
REGISTERED PROFESSIONAL ENGINEER ELECTRICAL

Drawn by NM

Checked by DEC

Revised on

B|E|R
BUILDING ENGINEERING RESOURCES, INC.
66 Main Street
N. Easton, MA 02356
T 508.230.0260
F 508.230.0265
ber@ber-engineering.com
100 Midway Road - Suite 23
Cranston, RI 02920
T 401.942.3500
F 401.228.6205
www.ber-engineering.com

50 Holden Street
Providence, Rhode Island 02908

Phone: (401) 272-1730
Fax: (401) 273-7156

E-mail: rgbinfo@rgb.net
www.rgb.net

RGB architects

Architecture ÂProject Management ÂInterior Design

Project

RI ARMY NATIONAL GUARD

ADDITION TO BUILDING P-6

COVENTRY, RI

Drawing Status

ISSUED FOR CONSTRUCTION

Issued On: OCTOBER 31, 2017

Sheet Contents

ELECTRICAL - POWER FLOOR PLAN

Project Number.

Drawing No.

E100

Sheet of

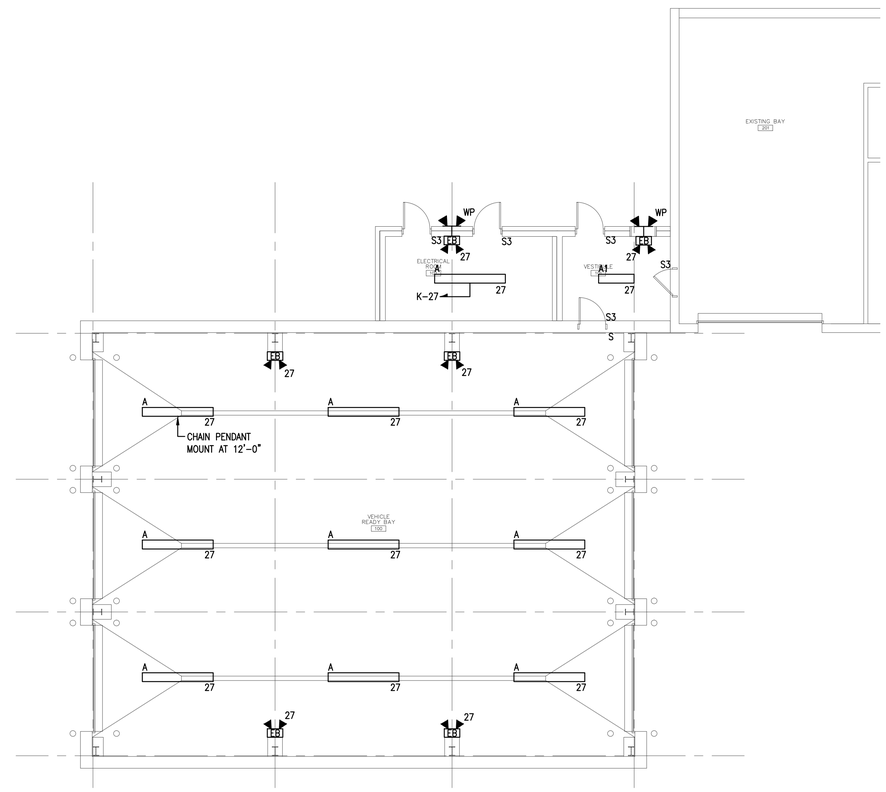

1 E101 FLOOR PLAN

Scale: 1/8"=1'-0"

This drawing is copyrighted and is subject to copyright protection as an "architectural work" under 17 U. S. C. Sec. 101 et seq. The protection includes but is not limited to the overall form as well as the arrangement and composition of spaces, materials, color and elements in the design. Under such protection, unauthorized use of this drawing may result in the cessation of construction or buildings being seized and/or monetary compensation being awarded to The Robinson Green Beretta Corporation (RGB).

Any reproduction, possession, or use of this drawing or any part thereof without the express written permission of RGB, is prohibited. Violators will be prosecuted to the full extent of the law.

© RGB 2017

Certification

MARC R. PLANTE
No. 6397
REGISTERED PROFESSIONAL ENGINEER ELECTRICAL

Drawn by NM

Checked by DEC

Revised on

B|E|R
BUILDING ENGINEERING RESOURCES, INC.
66 Main Street
N. Easton, MA 02356
T 508.230.0260
F 508.230.0265
ber@ber-engineering.com
100 Midway Road - Suite 23
Cranston, RI 02920
T 401.942.3500
F 401.228.6205
www.ber-engineering.com

50 Holden Street
Providence, Rhode Island 02908

Phone: (401) 272-1730
Fax: (401) 273-7156

E-mail: rgbinfo@rgb.net
www.rgb.net

RGB ARCHITECTS

Architecture Project Management Interior Design

Project

RI ARMY NATIONAL GUARD

ADDITION TO BUILDING P-6

COVENTRY, RI

Drawing Status

ISSUED FOR CONSTRUCTION

Issued On: OCTOBER 31, 2017

Sheet Contents

ELECTRICAL - LIGHTING FLOOR PLAN

Project Number.

Drawing No.

E101

Sheet of

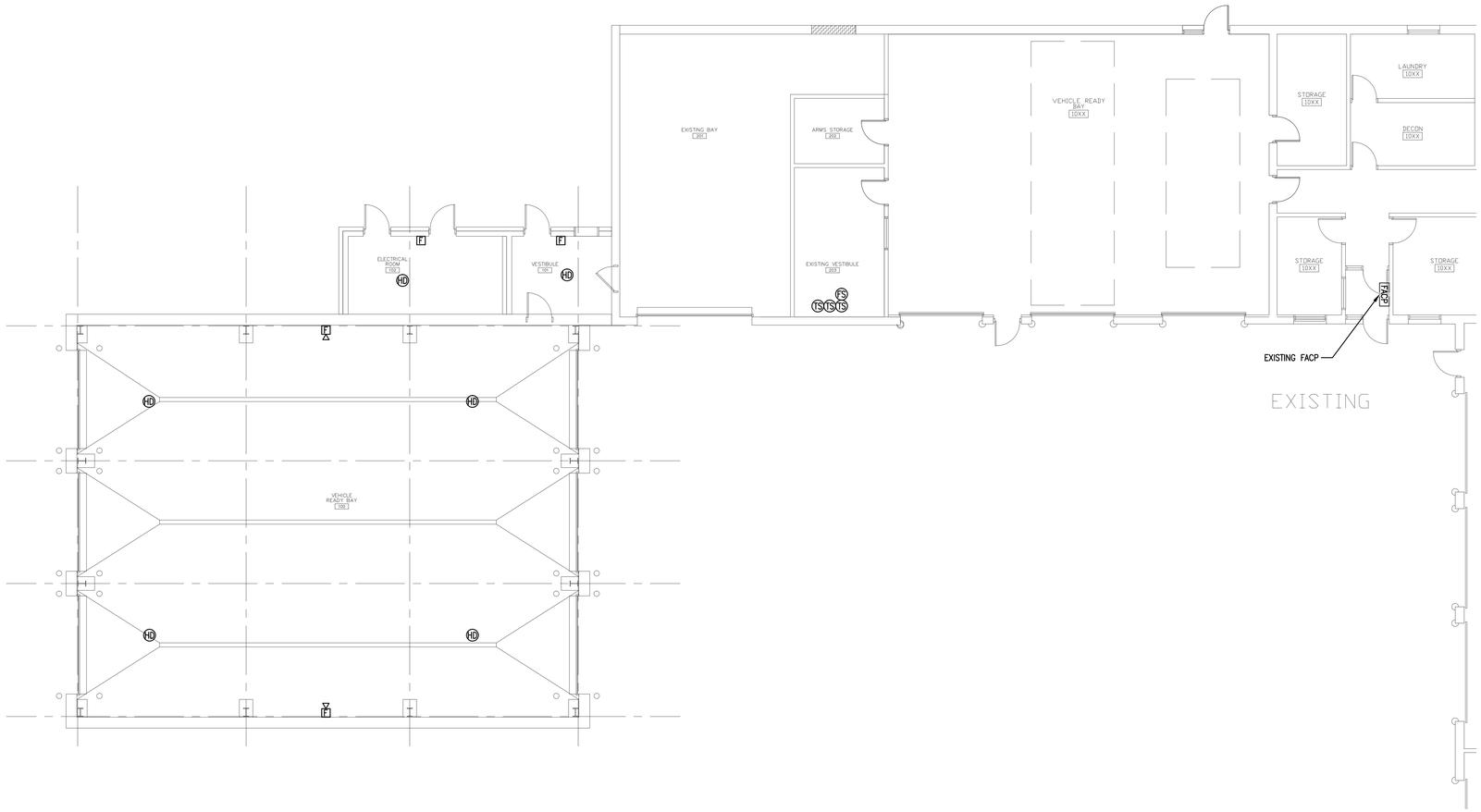

1 FA100 FLOOR PLAN

Scale: 1/8"=1'-0"

NOTES:

ALL FIRE ALARM DEVICES SHALL BE CONNECT TO THE EXISTING FIRE ALARM CONTROL PANEL. PROVIDE BATTERY BOOSTER FOR NEW AUDIO/VISUAL DEVICES.

This drawing is copyrighted and is subject to copyright protection as an "architectural work" under 17 U. S. C. Sec. 101 et seq. The protection includes but is not limited to the overall form as well as the arrangement and composition of spaces, materials, color and elements in the design. Under such protection, unauthorized use of this drawing may result in the cessation of construction or buildings being seized and/or monetary compensation being awarded to The Robinson Green Beretta Corporation (RGB).

Any reproduction, possession, or use of this drawing or any part thereof without the express written permission of RGB, is prohibited. Violators will be prosecuted to the full extent of the law.

© RGB 2017

Certification

MARC R. PLANTE
No. 6397
REGISTERED PROFESSIONAL ENGINEER ELECTRICAL

Drawn by NM

Checked by DEC

Revised on

B|E|R
BUILDING ENGINEERING RESOURCES, INC.
66 Main Street
N. Easton, MA 02356
T 508.230.0260
F 508.230.0265
100 Midway Road - Suite 23
Cranston, RI 02920
T 401.942.3500
F 401.228.6205
ber@ber-engineering.com
www.ber-engineering.com

50 Holden Street
Providence, Rhode Island 02908

Phone: (401) 272-1730
Fax: (401) 273-7156

E-mail: rgbinfo@rgb.net
www.rgb.net

RGB architects

Architecture Project Management Interior Design

Project

RI ARMY NATIONAL GUARD

ADDITION TO BUILDING P-6

COVENTRY, RI

Drawing Status

ISSUED FOR CONSTRUCTION

Issued On: OCTOBER 31, 2017

Sheet Contents

FIRE ALARM FLOOR PLAN

Project Number.

Drawing No.

FA100

Sheet of