RHODE ISLAND COLLEGE

JAMES P. ADAMS LIBRARY

600 Mount Pleasant Avenue
Providence, RI 02908

EDS JOB # 18202UC

ISSUED: OCTOBER 19, 2018

M.E.P ENGINEER:

ENGINEERING DESIGN SERVICES INCORPORATED
141 Industrial Highway Slatersville, RI 02876
Tel (401) 765-7659 Fax (401) 765-2984

ARCHITECT:

TORRADO ARCHITECTS

STRUCTURAL:

odeh engineers

CLIENT:

RHODE ISLAND COLLEGE 1854

RHODE ISLAND COLLEGE

600 MOUNT PLEASANT AVE
PROVIDENCE, RI 02908

DESIGN INDEX

M0.0 MECHANICAL LEGENDS & NOTES
M1.0 MECHANICAL FIRST FLOOR PLAN
M2.0 MECHANICAL FOURTH FLOOR PLAN
M3.0 MECHANICAL ROOF PLAN - DEMOLITION
M4.0 MECHANICAL ROOF PLAN - NEW WORK
M5.0 MECHANICAL DETAILS
M6.0 MECHANICAL SCHEDULES & DETAILS

E0.0 ELECTRICAL LEGENDS, NOTES AND DETAILS
E1.0 ELECTRICAL DEMOLITION PLAN
E2.0 ELECTRICAL ROOF NEW WORK PLAN

S1 PARTIAL ROOF PLAN, SECTIONS & GENERAL NOTES

DIVISION 0 SPECIFICATION
DIVISION 1 SPECIFICATION
DIVISION 23 SPECIFICATION
DIVISION 26 SPECIFICATION

APPLICABLE CODES:

SBC-1 RHODE ISLAND STATE BUILDING CODE
SBC-3 RHODE ISLAND STATE PLUMBING CODE
SBC-4 RHODE ISLAND STATE MECHANICAL CODE
SBC-5 RHODE ISLAND STATE ELECTRICAL CODE
SBC-8 RHODE ISLAND STATE ENERGY CONSERVATION CODE
RHODE ISLAND FIRE SAFETY CODE

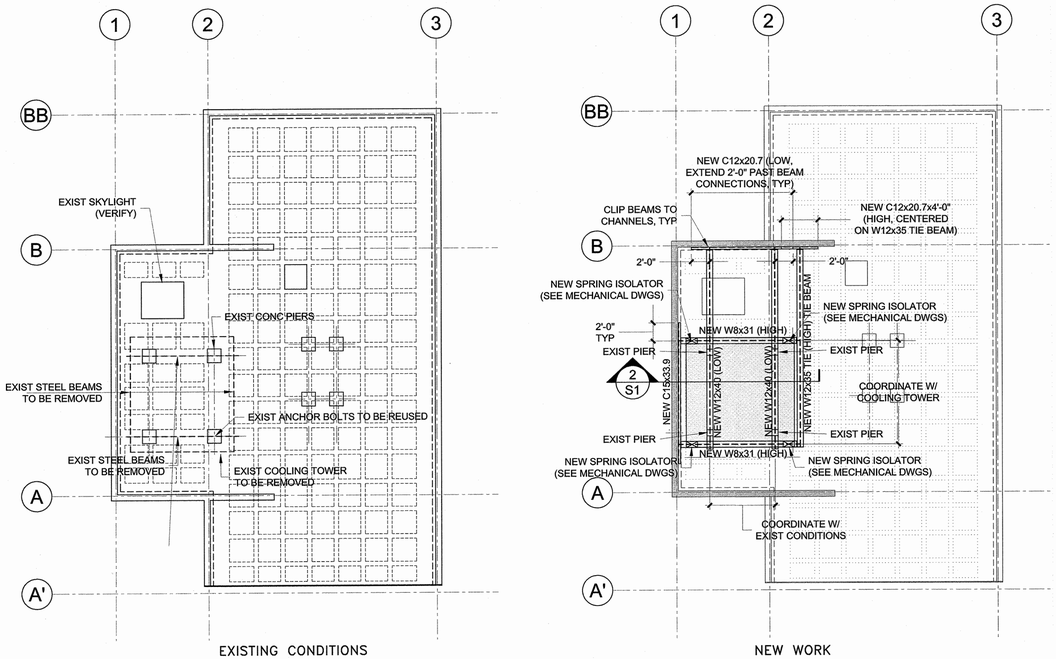

1 PARTIAL ROOF PLAN

1/8"=1'-0"

1. COORDINATE ALL DIMENSIONS WITH THE MECHANICAL REQUIREMENTS.
2. IT IS THE INTENT TO RE-USE THE EXISTING ANCHOR BOLTS. CAREFULLY REMOVE AND DISCARD THE EXISTING NUTS & WASHERS. PROVIDE ACCESS AND SUFFICIENT TIME FOR THE ENGINEER TO INSPECT THE EXISTING ANCHOR BOLTS.
3. VERIFY ALL EXISTING CONDITIONS BEFORE PROCEEDING WORK.
4. ALL NEW STEEL AND FASTENERS SHALL BE HOT DIP GALVANIZED UNO.
5. CONNECT NEW CHANNELS TO PARAPET WALL W/ ¾" STAINLESS STEEL HILTI KLWIK 3 EXPANSION BOLTS @ 24" O.C., STAGGERED TOP & BOTTOM, NET SPACING = 12" O.C. ADD 2 ADDITIONAL EXPANSION BOLTS AT THE ENDS OF EACH CHANNEL.
6. NEW SPRING ISOLATOR ASSEMBLY, INCLUDING CONNECTIONS, MUST BE ABLE TO RESIST ALL EQUIPMENT GRAVITY AND LATERAL LOADS, AND TRANSMIT SUCH LOADS TO THE SUPPORTING STEEL FRAMING.

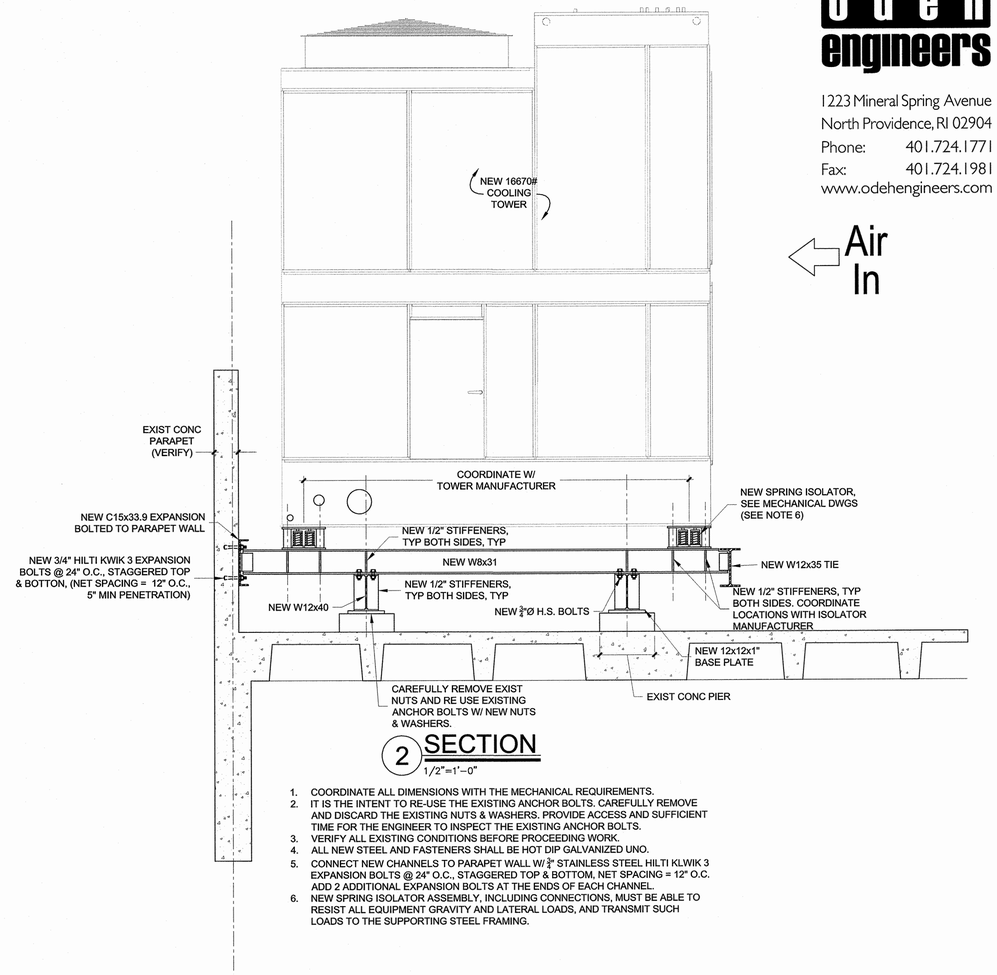

2 SECTION

1/2"=1'-0"

1. COORDINATE ALL DIMENSIONS WITH THE MECHANICAL REQUIREMENTS.
2. IT IS THE INTENT TO RE-USE THE EXISTING ANCHOR BOLTS. CAREFULLY REMOVE AND DISCARD THE EXISTING NUTS & WASHERS. PROVIDE ACCESS AND SUFFICIENT TIME FOR THE ENGINEER TO INSPECT THE EXISTING ANCHOR BOLTS.
3. VERIFY ALL EXISTING CONDITIONS BEFORE PROCEEDING WORK.
4. ALL NEW STEEL AND FASTENERS SHALL BE HOT DIP GALVANIZED UNO.
5. CONNECT NEW CHANNELS TO PARAPET WALL W/ ¾" STAINLESS STEEL HILTI KLWIK 3 EXPANSION BOLTS @ 24" O.C., STAGGERED TOP & BOTTOM, NET SPACING = 12" O.C. ADD 2 ADDITIONAL EXPANSION BOLTS AT THE ENDS OF EACH CHANNEL.
6. NEW SPRING ISOLATOR ASSEMBLY, INCLUDING CONNECTIONS, MUST BE ABLE TO RESIST ALL EQUIPMENT GRAVITY AND LATERAL LOADS, AND TRANSMIT SUCH LOADS TO THE SUPPORTING STEEL FRAMING.

I. GENERAL

1. ALL WORK SHALL CONFORM TO THE RHODE ISLAND STATE BUILDING CODE SBC-1, 11TH EDITION (INTERNATIONAL BUILDING CODE [IBC] 2012 WITH AMENDMENTS) AND ITS APPLICABLE REFERENCED STANDARDS (HEREIN REFERRED TO AS THE *BUILDING CODE*).
2. ALL REFERENCES TO THE CONTRACTOR IN THIS SET OF DRAWINGS REFER TO THE GENERAL CONTRACTOR, CONSTRUCTION MANAGER, AND OTHER PARTY OR PARTIES RESPONSIBLE FOR THE EXECUTION OF THE PROJECT.
3. ALL REFERENCES TO A PROFESSIONAL ENGINEER OR STRUCTURAL ENGINEER IN THIS SET OF DRAWINGS REFERS TO A PROFESSIONAL ENGINEER COMPETENT IN THE RESPECTIVE FIELD OF DESIGN WHO IS REGISTERED IN THE STATE IN WHICH THE PROJECT IS LOCATED.
4. IT IS THE RESPONSIBILITY OF THE CONTRACTOR TO VERIFY ALL EXISTING CONDITIONS AND DIMENSIONS AS THEY RELATE TO NEW CONSTRUCTION. REPORT ALL OBSERVATIONS AND ANY DISCREPANCIES TO THE MECHANICAL ENGINEER/ENGINEER OF RECORD AS A REQUEST FOR INFORMATION (RFI) BEFORE PROCEEDING WITH WORK.
5. IT IS THE RESPONSIBILITY OF THE CONTRACTOR TO PROVIDE FOR A SAFE AND EFFICIENT METHOD OF SHORING AND BRACING THE STRUCTURE DURING ALL CONSTRUCTION PHASES. ALL SHORING AND BRACING SHALL BE DESIGNED BY A PROFESSIONAL ENGINEER IN THE STATE IN WHICH THE PROJECT IS LOCATED. SUBMIT AN OUTLINE OF PROPOSED PROCEDURE AND ITS IMPACT ON THE BUILDING STRUCTURE FOR RECORD TO THE MECHANICAL ENGINEER/ENGINEER OF RECORD BEFORE PROCEEDING WITH WORK.
6. STRUCTURAL MEMBERS SHALL NOT BE MODIFIED WITHOUT WRITTEN APPROVAL FROM THE STRUCTURAL ENGINEER OF RECORD. ANY ANTICIPATED MODIFICATIONS TO THE CONSTRUCTION DOCUMENTS MUST BE SUBMITTED TO THE ENGINEER OF RECORD AS AN RFI FOR REVIEW AND COMMENT. IN THE EVENT OF A CONSTRUCTION OR FABRICATION ERROR, THE CONTRACTOR SHALL PREPARE A SKETCH AND CALCULATIONS, PREPARED BY A STRUCTURAL ENGINEER, DOCUMENTING THE PROPOSED CORRECTIVE ACTION AND SUBMIT IT TO THE ARCHITECT/ENGINEER OF RECORD FOR REVIEW AND APPROVAL PRIOR TO PERFORMING ANY CORRECTIVE WORK. ODEH ENGINEERS, INC. CANNOT CERTIFY ANY UNAUTHORIZED DEVIATIONS FROM THE CONSTRUCTION DOCUMENTS.
7. PRIOR TO REQUESTING A SITE VISIT BY ODEH ENGINEERS, INC. FOR OBSERVATION OF A COMPLETED STAGE OF CONSTRUCTION, THE CONTRACTOR SHALL SUBMIT A STATEMENT TO THE OWNER/ENGINEER OF RECORD THAT ALL WORK HAS BEEN COMPLETED IN CONFORMANCE WITH THE STRUCTURAL CONTRACT DRAWINGS AND SHOP DRAWINGS WITHOUT EXCEPTION, OR HAS BEEN PERFORMED WITH FORMAL WRITTEN EXCEPTIONS ORIGINATING FROM OR AUTHORIZED BY ODEH ENGINEERS, INC.
8. PRIOR TO RELEASE OF THE FINAL PROJECT CERTIFICATION TO THE BUILDING OFFICIAL, ODEH ENGINEERS, INC. REQUIRES A LETTER FROM THE CONTRACTOR'S PROJECT EXECUTIVE IN RESPONSIBLE CHARGE STATING THAT ALL WORK INDICATED ON THE STRUCTURAL DRAWINGS HAS BEEN PERFORMED WITHOUT EXCEPTION OR WAS PERFORMED WITH FORMAL WRITTEN EXCEPTIONS ORIGINATING FROM OR AUTHORIZED BY ODEH ENGINEERS, INC. IN ADDITION, ODEH ENGINEERS, INC. REQUIRES A LETTER FROM THE PRINCIPAL OF THE TESTING AND INSPECTIONS AGENCY CERTIFYING THAT ALL TESTING AND INSPECTIONS WORK HAS BEEN COMPLETED IN CONFORMANCE WITH THE PROJECT STATEMENT OF SPECIAL INSPECTIONS AND THAT ALL STRUCTURAL NONCONFORMANCE CONDITIONS FOUND HAVE BEEN BROUGHT INTO CONFORMANCE WITH THE PROJECT STRUCTURAL REQUIREMENTS PRIOR TO PROJECT COMPLETION.
9. THE TRADE CONTRACTORS SHALL SUBMIT SHOP AND ERECTION DRAWINGS AS WELL AS PRODUCT DATA (COLLECTIVELY KNOWN HEREIN AS "SHOP DRAWINGS") FOR REVIEW PRIOR TO PROCEEDING WITH FABRICATION AND/OR CONSTRUCTION.
   a. THE SHOP DRAWINGS SHALL BE PREPARED IN ACCORDANCE WITH THE LATEST EDITION OF THE CODE OF STANDARD PRACTICE FOR EACH RESPECTIVE TRADE IN CONJUNCTION WITH ADDITIONAL SHOP DRAWING REQUIREMENTS INDICATED ON THESE DRAWINGS.
   b. ALL SHOP DRAWINGS SHALL BE FULLY DEVELOPED BY THE TRADE CONTRACTORS OR BY AGENTS OF THE CONTRACTORS. CAD FILES, PHOTOCOPIES, OR OTHER REPRODUCTIONS OF THE CONTRACT DRAWINGS IN WHOLE OR IN PART SHALL NOT BE USED BY THE TRADE CONTRACTORS OR THEIR AGENTS FOR THE PREPARATION AND DEVELOPMENT OF SHOP DRAWINGS WITHOUT THE EXPRESSED WRITTEN CONSENT OF ODEH ENGINEERS, INC.
   c. ALL SUBMITTALS SHALL BE IN UNLOCKED PDF FORMAT WITH SEARCHABLE TEXT.
10. DO NOT SCALE OFF OF THESE DRAWINGS.

II. STRUCTURAL STEEL

1. ALL STEEL WORK SHALL BE IN CONFORMANCE WITH THE *BUILDING CODE* AS WELL AS WITH THE AMERICAN INSTITUTE OF STEEL CONSTRUCTION (AISC) SPECIFICATIONS AND ITS CODE OF STANDARD PRACTICE.
2. MATERIAL SPECIFICATIONS:
   - W. WT SHAPES.....ASTM A992 (50 KSI)
   - I. SHAPES. MISC. PLATES AND BARS .....ASTM A36
   - BOLTS .....ASTM F3125, GRADE A325/A490
3. ALL WELDING OPERATIONS SHALL BE PERFORMED BY AWS CERTIFIED WELDERS IN CONFORMANCE WITH ALL APPLICABLE REQUIREMENTS. ALL FIELD WELDS SHALL BE INSPECTED BY AN INDEPENDENT TESTING LAB. USE E70XX WELDING ELECTRODES.
4. GENERAL CONNECTION DESIGN REQUIREMENTS:
   A. UNLESS NOTED OTHERWISE, ALL STRUCTURAL STEEL CONNECTIONS SHALL BE DESIGNED BY A STRUCTURAL ENGINEER WORKING FOR THE STEEL FABRICATOR UTILIZING LOAD AND RESISTANCE FACTORED DESIGN (LRFD).
   B. IN THE ABSENCE OF END REACTIONS PROVIDED ON THE STRUCTURAL DRAWINGS, ALL STRUCTURAL STEEL SHEAR CONNECTIONS SHALL BE DESIGNED BASED UPON THE MEMBERS' TOTAL UNIFORM LOAD CAPACITY AS DETERMINED FROM THE LATEST EDITION OF THE AISC STEEL CONSTRUCTION MANUAL (LRFD) ACCORDING TO THE FOLLOWING CRITERIA:
      a. CANTILEVER BEAMS:
      - 1.0 x [TOTAL UNIFORM LOAD CAPACITY]
      b. ALL OTHER BEAMS:
      - 0.5 x [TOTAL UNIFORM LOAD CAPACITY]
      c. ALL POINT LOAD REACTIONS (E.G. TRANSFERRED COLUMNS) AND BRACE REACTIONS THAT ARE APPLIED TO THE MEMBER SHALL BE ADDED TO THESE SHEAR REACTIONS.
   C. BOLTED CONNECTIONS SHALL BE DESIGNED PER THE LATEST EDITION OF THE AISC STEEL CONSTRUCTION MANUAL (LRFD) AND THE RCSC SPECIFICATION FOR STRUCTURAL JOINTS USING MINIMUM 3/4" DIAMETER BOLTS WITH GRADES AS SPECIFIED ABOVE.
5. ALL EXPOSED STRUCTURAL STEEL AND CONNECTIONS SHALL BE HOT-DIP GALVANIZED, OR MAY BE PRIMED AND PAINTED WITH AN APPROVED EPOXY PAINT SYSTEM. ALL HOT-DIP GALVANIZING SURFACE PREPARATION AND OPERATIONS SHALL CONFORM TO ASTM A123 AND A153. REPAIR ALL CONNECTIONS AND SURFACES DAMAGED DURING TRANSPORTATION AND ERECTION PER ASTM A780.

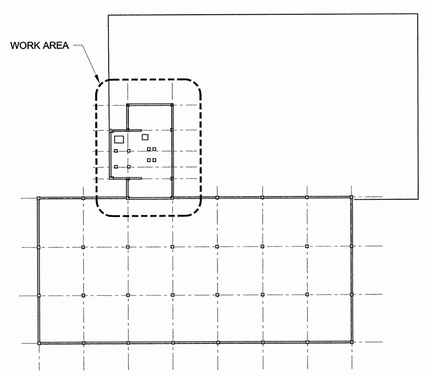

3 KEY PLAN

NO SCALE

odeh engineers
1223 Mineral Spring Avenue
North Providence, RI 02904
Phone: 401.724.1771
Fax: 401.724.1981
www.odehengineers.com

CERTIFICATION :

M. D. ODEH
No. 3082
REGISTERED PROFESSIONAL ENGINEER

THIS DRAWING IS A PART OF AN INTEGRATED SET OF CONSTRUCTION CONTRACT DOCUMENTS. REFER TO ALL DRAWINGS AND SPECIFICATIONS INCLUDING BUT NOT LIMITED TO "GENERAL CONDITIONS" "SUMMARY OF WORK", AND ANY APPLICABLE MANUFACTURERS TECHNICAL SPECIFICATIONS.

REFER TO ALL DRAWINGS FOR COMPLETE SCOPE OF WORK.

THIS DRAWING IS NOT TO BE SCALED OR USED AS AN AS-BUILT.

REV. NO.	DATE	DESCRIPTION
10-10-18		ISSUED FOR STATE REVIEW

ENGINEERING DESIGN SERVICES INCORPORATED
141 Industrial Highway Slatersville, RI 02876
Tel (401) 765-7659 Fax (401) 765-2984

PROJECT NAME:
RIC ADAMS LIBRARY HVAC UPGRADES

SHEET TITLE:
PARTIAL ROOF PLAN, SECTIONS & GENERAL NOTES

JOB NO.: 180202UC
DRAWN BY: BWV
CHECKED BY: MDO
DATE ISSUED: 09.21.2018
SCALE: AS NOTED

SHEET NO.:
S 1

GENERAL CONSTRUCTION NOTES:

1. ALL WORK IS TO BE PERFORMED IN STRICT COMPLIANCE WITH LOCAL CODES AND ALL OTHER REGULATIONS GOVERNING WORK OF THIS NATURE.
2. THE CONTRACTOR IS RESPONSIBLE FOR ALL WORK, MATERIALS, AND LABOR TO SATISFY A COMPLETE WORKING SYSTEM WHETHER SPECIFIED OR IMPLIED.
3. THIS CONTRACTOR, PRIOR TO SUBMITTING HIS BID, SHALL VISIT THE PROJECT SITE TO FAMILIARIZE HIMSELF WITH ALL EXISTING CONDITIONS. REQUESTS FOR COMPENSATION FOR EXTRA WORK, WHICH WOULD HAVE BEEN EVIDENT BY COMPLIANCE WITH THE PREVIOUS STATEMENT, WILL NOT BE CONSIDERED. THE CONTRACTOR SHALL CONDUCT A THOROUGH FIELD INVESTIGATION TO VERIFY WORK SHOWN ON THE DRAWINGS. THE DRAWINGS REFLECT THE BEST AVAILABLE INFORMATION FROM EXISTING PLANS AND SITE INVESTIGATIONS.
4. THE MECHANICAL PLANS ARE INTENDED TO BE DIAGRAMMATIC AND ARE BASED ON ONE MANUFACTURER'S EQUIPMENT. THEY ARE NOT INTENDED TO SHOW THE EXACT ROUTING OF SYSTEMS OR LOCATION OF COMPONENTS. THE EXACT LOCATIONS, DIMENSIONS AND ALL OTHER DETAILS OF EQUIPMENT ARE THE RESPONSIBILITY OF THIS CONTRACTOR. THIS CONTRACTOR SHALL VERIFY THE ACTUAL DIMENSIONS OF THE EQUIPMENT PROPOSED TO ENSURE THAT THE EQUIPMENT WILL FIT IN THE AVAILABLE SPACE. PROVIDE ALL DUCT AND PIPE TRANSITIONS REQUIRED FOR CONNECTION TO EQUIPMENT.
5. THIS CONTRACTOR SHALL FIELD VERIFY ALL DIMENSIONS AND EXISTING CONDITIONS PRIOR TO PROCEEDING WITH ANY WORK. WHERE DISCREPANCIES OCCUR BETWEEN THESE DOCUMENTS AND EXISTING CONDITIONS, THE DISCREPANCY SHALL BE REPORTED TO THE OWNER AND/OR ENGINEER FOR EXPEDITING AND RESOLVE.
6. ALL WORK SHALL BE PERFORMED IN A CLEAN AND WORKMANLIKE MANNER. CARE SHALL BE EXERCISED TO MINIMIZE ANY INCONVENIENCE OR DISTURBANCE TO OTHER AREAS OF THE BUILDING WHICH ARE TO REMAIN IN OPERATION. ISOLATE WORK AREAS BY MEANS OF TEMPORARY PARTITIONS AND/OR TARPS TO KEEP DUST AND DEBRIS WITHIN THE CONSTRUCTION AREA.
7. CLEAN THE JOB SITE DAILY AND REMOVE FROM THE PREMISES ANY DIRT AND DEBRIS CAUSED BY THE PERFORMANCE OF THE WORK INCLUDED IN THIS CONTRACT.
8. THE CONTRACTOR SHALL BE RESPONSIBLE FOR THE SAFEKEEPING OF HIS OWN PROPERTY ON THE JOB SITE. OWNER ASSUMES NO RESPONSIBILITY FOR PROTECTION OF PROPERTIES AGAINST FIRE, THEFT, AND ENVIRONMENTAL CONDITIONS.
9. THIS CONTRACTOR SHALL COORDINATE HIS WORK WITH ALL OTHER TRADES PRIOR TO FABRICATION, PURCHASE AND/OR INSTALLATION OF ALL WORK. ALL OFFSETS IN PIPING AND DUCTS TO AVOID OBSTRUCTIONS SHALL BE PROVIDED AT NO COST TO THE OWNER.
10. CONTRACTOR SHALL REFER TO THE COMPLETE SET OF CONTRACT DOCUMENTS INCLUDING SPECIFICATIONS AND OTHER TRADES FOR A FULL UNDERSTANDING OF ALL WORK REQUIRED.
11. WHERE USED THE TERM "PROVIDE" SHALL MEAN "FURNISH AND INSTALL".
12. PROVIDE ALL REQUIRED RIGGING TO ACCOMMODATE THE REMOVAL & INSTALLATION OF ALL EQUIPMENT.
13. PROVIDE ACCESS PANELS FOR ALL CONCEALED DAMPERS, VALVES, AND EQUIPMENT.
14. ALL EQUIPMENT AND MATERIALS SHALL BE AS SPECIFIED OR "APPROVED EQUAL" BY THE ENGINEER OR ARCHITECT.
15. REFER TO ARCHITECTURAL REFLECTED CEILING PLAN FOR EXACT LOCATION OF REGISTERS, DIFFUSERS, AND GRILLES.
16. CONTRACTOR SHALL SPRAY PAINT INSIDE OF DUCT BLACK, BEHIND ALL GRILLES AND REGISTERS.
17. ALL DUCTWORK AND PIPING SHALL BE INSTALLED AS INDICATED ON THE DRAWINGS IN A NEAT AND WORKMANLIKE MANNER AND BE SUPPORTED AS REQUIRED BY CODES. DUCTWORK AND PIPING SHALL BE SET UP AND DOWN AND OFFSET AS REQUIRED TO SUIT FIELD CONDITIONS. DIELECTRIC COUPLINGS SHALL BE USED WHERE DISSIMILAR METALS ARE JOINED.
18. IF A SECTION OF DUCT OR PIPE IS NOT LABELED FOR SIZE, THEN THE LARGER SIZE INDICATED ON THE DRAWINGS SHALL PREVAIL. SIZE OF DUCT RUN-OUTS TO DIFFUSERS SHALL EQUAL DIFFUSER NECK SIZE UNLESS OTHERWISE NOTED.
19. PROVIDE ALL NECESSARY TEMPORARY OR PERMANENT CAPS OR PLUGS FOR PIPING. DO NOT LEAVE PIPING OPEN ENDED.
20. SUCCESSFULLY PRESSURE TEST ALL REROUTED PIPING SYSTEMS. TEST SHALL BE PERFORMED AT TWICE SYSTEM OPERATING PRESSURES. REPAIR AND RETEST AS REQUIRED UNTIL SYSTEMS PROVE TIGHT.
21. ALL ROOF MOUNTED EQUIPMENT SHALL BE INSTALLED A MINIMUM OF 10' FROM THE ROOF EDGE. EQUIPMENT INSTALLED CLOSER THAN 10' SHALL REQUIRE THE INSTALLATION OF GUARD RAILS.
22. ALL CONCEALED ELECTRICAL CONNECTIONS SHALL BE HARD WIRED. PLUGS SHALL NOT BE USED AS A DISCONNECTING MEANS IN CONCEALED LOCATIONS.
23. DUCT SMOKE DETECTORS SHALL BE FURNISHED BY ELECTRICAL CONTRACTOR, INSTALLED IN THE DUCTWORK BY MECHANICAL CONTRACTOR AND WIRED BY THE ELECTRICAL CONTRACTOR.

GENERAL RENOVATION NOTES:

1. ALL SHUT DOWNS OF EXISTING SYSTEMS SHALL BE SCHEDULED AND APPROVED BY THE OWNER PRIOR TO COMMENCING WITH WORK.
2. NO DUCTWORK, PIPING, EQUIPMENT, ETC. SHALL BE REMOVED, DISCONNECTED, OR SHUT DOWN WITHOUT PRIOR REVIEW WITH THE OWNER AND/OR ENGINEER TO CONFIRM THAT AREAS TO REMAIN IN OPERATION WILL NOT BE AFFECTED. IF ANY AREAS NOT WITHIN THE SCOPE OF WORK ARE AFFECTED BY ANY SHUTDOWN, REMOVAL, OR DISCONNECTION, 1 WEEK NOTICE MUST BE GIVEN TO THE OWNER INDICATING WHICH AREAS WILL BE AFFECTED, WHEN THE PROPOSED SHUTDOWN WILL OCCUR, AND FOR HOW LONG A PERIOD.
3. USE OF THE OWNER'S ELEVATORS AND BUILDING CORRIDORS FOR HANDLING OF THE OWNER'S AND REMOVED EQUIPMENT AND MATERIALS SHALL BE AT THE DIRECTION OF THE OWNER AND SHALL BE COORDINATED WITH HIS OPERATIONS.
4. ALL ITEMS REMOVED SHALL BECOME PROPERTY OF THE OWNER AND SHALL BE DISPOSED OF AS PER OWNER'S INSTRUCTIONS, UNLESS INDICATED OTHERWISE. ALL ITEMS WHICH ARE NOT TO BE STORED ON SITE BY OWNERS SHALL BE REMOVED FROM THE BUILDING IMMEDIATELY.
5. DISCONNECT AND REMOVE ALL EXISTING EQUIPMENT, PIPING, DUCTWORK, FLUES, REGISTERS, SUPPORTS, HANGERS, AND ALL OTHER MECHANICAL COMPONENTS MADE OBSOLETE BY THIS PROJECT.
6. PRIOR TO RENOVATION, CONTRACTOR TO RECORD ALL SUPPLY & RETURN MAIN AIRFLOWS & HYDRONIC FLOWS AND SUBMIT A COPY TO THE ENGINEER. ALL READINGS SHALL BE PERFORMED BY A CERTIFIED NEBB CONTRACTOR. COMPARE NEW EQUIPMENT VALUES & ALERT DISCREPANCIES FOR ENGINEER FEEDBACK. AT THE END OF THE PROJECT EXISTING SYSTEMS SHALL BE BALANCED TO PRE-CONSTRUCTION VALUES OR ADJUSTED VALUES BASED ON PRE-CONSTRUCTION TESTING ENGINEERING FEEDBACK.
7. ALL NEW, RELOCATED, OR EXISTING EQUIPMENT AFFECTED BY THIS SCOPE OF WORK SHALL BE REBALANCED BEFORE BEING PLACED IN SERVICE.
8. PROVIDE ALL REQUIRED CUTTING AND PATCHING AS REQUIRED TO COMPLETE THE INSTALLATION OF NEW MECHANICAL SYSTEM. PATCH ALL SURFACES TO MATCH AND MAINTAIN ALL FIRE RATINGS.
9. EXISTING ROOF CUTTING, FLASHING, SEALING, PATCHING, ETC. TO BE ACCOMPLISHED BY A ROOFING CONTRACTOR APPROVED BY THE EXISTING ROOF MANUFACTURER AND INSTALLED IN ACCORDANCE WITH ROOF MANUFACTURER'S RECOMMENDATIONS SO AS NOT TO VOID ROOF WARRANTY.
10. EXISTING MATERIALS THAT ARE REMOVED SHALL NOT BE REUSED IN NEW SYSTEMS, EXCEPT WHERE INDICATED AS SUCH ON THE DRAWINGS. ALL MATERIALS AND EQUIPMENT LISTED AS NEW MUST BE NEW.
11. THE FIRE PROOFING OF THE EXISTING STRUCTURE IS NOT TO BE REMOVED FOR THE INSTALLATION OF HANGERS, SUPPORTS AND DUCTWORK ETC. IF FIRE PROOFING IS DAMAGED, IT SHALL BE REPAIRED AT THE EXPENSE OF THE TRADE.
12. ALL NEW DUCTWORK, PIPING & EQUIPMENT TO BE COORDINATED WITH THE EXISTING BUILDING FEATURES & NEW CEILING HEIGHTS PRIOR TO FABRICATION & INSTALLATION. PROVIDE ALL REQUIRED OFFSETS, TRANSITIONS, ETC... IN NEW & EXISTING SYSTEMS TO MAKE SYSTEMS COMPLETELY OPERATIONAL & CODE COMPLIANT.
13. PROVIDE SLEEVES & ESCUTCHEON PLATES WHERE PIPING & DUCTWORK PASSES THROUGH WALLS, FLOORS & CEILINGS. ESCUTCHEON PLATES TO BE PAINTED AS PER ARCHITECTS COLOR SELECTION.
14. CONTRACTOR TO X-RAY OR SONAR ALL FLOOR SLABS PRIOR TO MAKING ANY NEW PENETRATIONS. PENETRATIONS SHALL BE IN ACCORDANCE WITH STANDARD PENETRATIONS PRACTICES. CONSULT WITH STRUCTURAL ENGINEER PRIOR TO WORK BEING PERFORMED.
15. ASBESTOS CUTTING, REMOVAL ENCAPSULATING OR DISPOSAL IS NOT INCLUDED WITHIN THE SCOPE OF THIS PROJECT OR PROJECT DOCUMENTS. ALL ASBESTOS CONSIDERATIONS AND INVOLVEMENT ARE THE SOLE RESPONSIBILITY OF THE OWNER OUTSIDE THE SCOPE OF THIS PROJECT. THE PRESENCE OF ASBESTOS MATERIALS WITHIN THE WORKING AREAS OF THIS PROJECT HAVE NOT BEEN INVESTIGATED OR DETERMINED. REFER TO OWNER FOR ANY CLARIFICATIONS REGARDING THE PRESENCE OF ASBESTOS MATERIALS. HOWEVER, THE CONTRACTOR SHALL RE-INSULATE ANY EXISTING PIPING AT NEW "TIE-INS" WHERE EXISTING INSULATION WAS REMOVED. REFER TO OWNER FOR ABATEMENT PROCEDURES, ALL NEW WORK TO BE COORDINATED WITH OWNER'S CURRENT ABATEMENT PLAN.
16. REROUTE ANY CONDUIT, DUCTWORK, PIPING, ETC. AS REQ'D FOR NEW INSTALLATIONS. PROVIDE NEW PIPE INSULATION AS REQUIRED. MAKE COMPLETELY OPERATIONAL.
17. REWORK ANY EXISTING DUCTWORK & PIPING DISTRIBUTION AS REQUIRED TO ACCOMMODATE THE NEW ARCHITECTURAL LAYOUT, CEILING HEIGHTS, BUILDING FEATURES, MEP SYSTEMS, ETC... PROVIDE NEW OFFSETS, RISES, DROPS, ETC... AS REQUIRED.
18. PROVIDE TRANSFER DUCTS IN ANY WALLS THAT RESTRICTS THE RETURN AIR FROM GETTING BACK TO THE MAIN OPEN RETURN AIR DUCT OF ASSOCIATED EQUIPMENT. MAINTAIN ALL FIRE RATINGS.
19. CONTRACTOR SHALL CLEAN, CHANGE FILTERS, AND FULLY COMMISSION EXISTING EQUIPMENT SERVING RENOVATION.
20. DRAIN, FILL AND BALANCE ALL EXISTING WATER SYSTEMS AS REQUIRED TO ACCOMMODATE NEW SYSTEM INTERFACE. MAINTAIN EXISTING SYSTEM GLYCOL PERCENTAGE.
21. PRIOR TO HVAC WORK BEING PERFORMED: CONTRACTOR TO RECORD ALL AIR QUANTITIES & WATER FLOW RATES FROM EACH PIECE OF EXISTING HVAC EQUIPMENT IMPACTED / MODIFIED AS PART OF THE RENOVATION. ALL READINGS SHALL BE PERFORMED BY A CERTIFIED NEBB CONTRACTORCONTRACTOR TO SUBMIT ALL RECORDINGS TO ENGINEER FOR REVIEW AND COMMENTS.

MECHANICAL SYMBOL LEGEND

A / #	EQUIPMENT SYMBOL
C&C	CUT & CAP
CP	CUT POINT
	POINT OF CONNECTION BETWEEN NEW & EXISTING
	ISOLATION VALVE
	ISOLATION VALVE
DARK DASHED	EXISTING TO BE REMOVED
LIGHT 12x6	EXISTING TO REMAIN
DARK 12x6	NEW WORK
M	MOTORIZED DAMPER

HVAC DEMOLITION NOTES

1. PRIOR TO SUBMITTING BID, THE CONTRACTOR SHALL VISIT SITE AND IDENTIFY EXISTING CONDITIONS AND DIFFICULTIES THAT WILL AFFECT WORK OF THIS SECTION. NO COMPENSATION WILL BE GRANTED FOR ADDITIONAL WORK CAUSED BY UNFAMILIARITY WITH SITE CONDITIONS THAT ARE VISIBLE OR READILY CONSTRUED BY AN EXPERIENCED OBSERVER. THE DRAWINGS ARE INTENDED TO BE USED FOR INFORMATIONAL PURPOSES ONLY. THE CONTRACTOR IS NOT TO SCALE DRAWINGS OR ASSUME THAT ALL EQUIPMENT IS SHOWN.

2. COORDINATE ALL WORK WITH THE BUILDING OWNER.

3. REFER TO ALL CONSTRUCTION DOCUMENTS TO GAIN A COMPLETE UNDERSTANDING OF THE DEMOLITION WORK REQUIRED.

4. DISCONNECT & COMPLETELY REMOVE & DISCARD ALL EXISTING HVAC EQUIPMENT, CURBS, DUCTWORK DISTRIBUTION, PIPING, INSULATION, CONTROLS, SUPPORTS, ETC... MADE OBSOLETE WITHIN THE SCOPE OF THE PROJECT, UNLESS NOTED OTHERWISE. THIS CONTRACTOR SHALL OBTAIN ALL REQUIRED PERMITS AND PAY ALL RELATED FEES.

5. ALL OPENINGS SHALL BE KEPT PROPERLY SEALED UNTIL NEW WORK/PATCHING IS COMPLETE.

6. OWNER RESERVES THE OPTION OF SALVAGE RIGHTS TO ALL DEMOLISHED MATERIAL AND REMOVED EQUIPMENT. CONTRACTOR TO COORDINATE WITH OWNER'S REPRESENTATIVE TO OBTAIN A LIST OF MATERIALS OR EQUIPMENT TO BE TURNED OVER TO THE OWNER.

TYPICAL ABBREVIATIONS

GENERAL ABBREVIATIONS:

AAV	AUTOMATIC AIR VENT
ADD'L	ADDITIONAL
AFF	ABOVE FINISHED FLOOR
AMS	AIR FLOW MEASURING STATION
ALT	ALTITUDE OR ALTERNATE
AMP	AMPERE
AP	ACCESS PANEL
APD	AIR PRESSURE DROP
ARCH	ARCHITECT
ATC	AUTOMATIC TEMP. CONTROL
ATM	ATMOSPHERE
AVG	AVERAGE
BDD	BACKDRAFT DAMPER
BG	BLAST GATE DAMPER
BHP	BRAKE HORSEPOWER
BI	BACKWARDS INCLINED
BLDG	BUILDING
BMS	BUILDING MANAGEMENT SYSTEM
BOD	BOTTOM OF DUCT
BOP	BOTTOM OF PIPE
BSMT	BASEMENT
BTU	BRITISH THERMAL UNIT
BTH	BTU PER HOUR
CA	COMPRESSED AIR
CDW	CONDENSER WATER
CENT	CENTRIFUGAL
CF	CUBIC FEET
CFM	CUBIC FEET PER MINUTE
CL	CENTERLINE
C.L.	COLUMN LINE
CND	CONDENSATE
CLG	CEILING OR COOLING
C.O.	CLEAN-OUT
CO	CARBON MONOXIDE
CO2	CARBON DIOXIDE
COL	COLUMN
CONN	CONNECTION
CONTR	CONTRACTOR
CV	CONSTANT VOLUME
DB	DRY BULB TEMPERATURE
DEG	DEGREE DIRECT
DDC	DIGITAL CONTROL
DIA	DIAMETER
DIFF	DIFFUSER
DIM	DIMENSION
DN	DOWN
DP	DIFFERENTIAL PRESSURE
DWDI	DOUBLE WIDTH DOUBLE INLET
DX	DIRECT EXPANSION
EA	EACH OR EXHAUST AIR
EAT	ENTERING AIR TEMPERATURE
ECH	ELECTRIC CABINET HEATER
EFF	EFFICIENCY
ELEC	ELECTRICAL
ELEV	ELEVATION
EMER	EMERGENCY
EMS	ENERGY MANAGEMENT SYSTEM
ENT	ENTER
ESP	EXTERNAL STATIC PRESSURE
EWT	ENTERING WATER TEMPERATURE
EXH	EXHAUST
EXIST.	EXISTING
F	FAHRENHEIT OR FAN
FA	FREE AREA
FD	FIRE DAMPER (ACCESS DOOR)
FLA	FULL LOAD AMPS
FLEX	FLEXIBLE
FPM	FEET PER MINUTE
FPS	FEET PER SECOND
FRP	FIBERGLASS REINFORCED PLASTIC
FS	FLOW SWITCH
FT	FEET
FTR	FINNED TUBE RADIATION
G	GAS
GAL	GALLONS
GALV	GALVANIZED
GC	GENERAL CONTRACTOR
GPH	GALLONS PER HOUR
GPM	GALLONS PER MINUTE
GWB	GYPSUM WALL BOARD
HB	HOSE BIBB
HC	HEATING COIL
HEX	HEAT EXCHANGER
HGT	HEIGHT
HP	HORSEPOWER
HR	HOUR
HTG	HEATING
HPS	HIGH PRESSURE STEAM
HW	HOT WATER
HZ	HERTZ
ID	INSIDE DIAMETER
IN	INCHES
KW	KILOWATT
L	LENGTH
LAT	LEAVING AIR TEMPERATURE
LB	POUND
LF	LINEAR FEET
LD	LINEAR DIFFUSER
LPS	LOW PRESSURE STEAM
LRA	LOCKED ROTOR AMPS
LVD	LOUVERED DOOR
LVG	LEAVING
LWT	LEAVING WATER TEMPERATURE
MAX	MAXIMUM
MBH	THOUSAND BTH
MCA	MINIMUM CIRCUIT AMPS
MD	MOTOR OPERATED DAMPER
MECH	MECHANICAL
MEZZ	MEZZANINE
MFR	MANUFACTURER
MIN	MINIMUM
MPS	MEDIUM PRESSURE STEAM
MUA	MAKE-UP AIR
N/A	NOT APPLICABLE
NC	NORMALLY CLOSED
NC	NOISE CRITERIA
NIC	NOT IN CONTRACT
NO	NORMALLY OPEN
No.	NUMBER
NOM	NOMINAL
NTS	NOT TO SCALE
OA	OUTSIDE AIR
OD	OUTSIDE DIAMETER
ODP	OPEN DRIP PROOF
OED	OPEN END DUCT
OV	OUTLET VELOCITY
PD	PRESSURE DROP
PH	PHASE
PHC	PREHEAT COIL
PBG	PLUMBING
POS	PROVIDED BY OTHER SECTION
PSI	POUNDS PER SQUARE INCH
PSIA	PSI ABSOLUTE
PSID	PSI DIFFERENTIAL
PSIG	PSI GAUGE
PVC	POLYVINYL CHLORIDE
PRV	PRESSURE REDUCING VALVE
QTY	QUANTITY
R	RADIUS
RA	RETURN AIR
REG	REGISTER
RET	RETURN
REQD	REQUIRED
RH	RELATIVE HUMIDITY
RLA	RUNNING LOAD AMPS
RLL	REFRIGERANT LIQUID LINE
RM	ROOM
RPM	REVOLUTIONS PER MINUTE
RSL	REFRIGERANT SUCTION LINE
SA	SUPPLY AIR
SCH	SCHEDULE
SD	SMOKE DETECTOR
SEN	SENSIBLE
SHC	SENSIBLE HEAT CAPACITY
SP	STATIC PRESSURE
SPECS	SPECIFICATIONS
SQ	SQUARE
SF	SQUARE FEET
SS	STAINLESS STEEL
STL	STEEL
SUP	SUPPLY
SWSI	SINGLE WITH SINGLE INLET
T	TEMPERATURE
TEL	TELEPHONE
TEFC	TOT. ENCLOSED FAN COOLED
TEMP	TEMPERATURE
TSTAT	THERMOSTAT
TOD	TOP OF DUCT
TON	12,000 BTH
TOP	TOP OF PIPE
TOT	TOTAL
TSP	TOTAL STATIC PRESSURE
TYP	TYPICAL
V	VENT
VB	VACUUM BREAKER
VD	VOLUME DAMPER
V	VOLTS (ELECTRICAL)
VEL	VELOCITY
W	WIDTH OR WATT
W/	WITH
WB	WET BULB TEMPERATURE
WC	WATER COLUMN
WG	WATER GAUGE
WMS	WIRE MESH SCREEN
W/O	WITHOUT
WPD	WATER PRESSURE DROP
WTD	WATER TEMPERATURE DIFF.

CONTROLS ABBREVIATIONS:

ACD	AUTOMATIC CONTROL DAMPER
ACV	AUTOMATIC CONTROL VALVE
AMS	AIR FLOW MEASURING STATION
ALM	ALARM
ATC	AUTOMATIC TEMPERATURE CONTROL
ATS	AIR TEMPERATURE SENSOR
BD	BACKDRAFT DAMPER
BV	BYPASS VALVE
CO2	CARBON DIOXIDE SENSOR
CO	CARBON MONOXIDE SENSOR
CT	CURRENT TRANSFORMER
CV	CONTROL VALVE
DDC	DIRECT DIGITAL CONTROL
DPS	DIFFERENTIAL PRESSURE SWITCH
DPT	DIFFERENTIAL PRESSURE SENSOR
DPV	DIFF. PRESSURE BYPASS VALVE
DSD	DUCT MOUNTED SMOKE DETECTOR
DWDI	DOUBLE WIDTH DOUBLE INLET
ES	END SWITCH
FM	FLOW METER/TRANSMITTER
FZ	FREEZESTAT
H	HUMIDISTAT
H2	HYDROGEN SENSOR
HEPA	HIGH EFF. PARTICULATE AIR FILTER
HGB	HOT GAS BYPASS
HHL	HIGH HUMIDITY LIMIT SENSOR
HOA	HANDS-OFF AUTOMATIC SWITCH
HS	HUMIDITY SENSOR
HZ	HERTZ
LSPS	LOW STATIC PRESSURE SWITCH
LS	LEVEL SENSOR
MD	MOTORIZED DAMPER
NC	NORMALLY CLOSED (POWER LOSS)
NO	NORMALLY OPEN (POWER LOSS)
NOX	NITROGEN OXIDE
OAH	OUTSIDE AIR HUMIDITY SENSOR
OAT	OUTSIDE AIR TEMP. SENSOR
RH	RELATIVE HUMIDITY
S	SWITCH
SP	STATIC PRESSURE SENSOR
SD	SMOKE DETECTOR
SP	STATIC PRESSURE SENSOR
SPD	SPEED CONTROL
S/S	START/STOP
T	THERMOSTAT
TS	TEMPERATURE SENSOR
WTS	WATER TEMPERATURE SENSOR

EQUIPMENT ABBREVIATIONS:

AC	AIR CONDITIONING UNIT
ACU	AC CONDENSING UNIT
AHU	AIR HANDLING UNIT
AS	AIR SEPARATOR
B	BOILER
BB	BASE BOARD
BC	BRANCH CONTROLLER
BFW	BOILER FEED WATER UNIT
BP	BOILER PUMP
BT	BUFFER TANK
CAC	CRITICAL COOLING AC UNIT
CC	COOLING COIL
CCU	CC CONDENSING UNIT
CH	CHILLER
CP	CIRCULATOR PUMP
CT	COOLING TOWER
CUH	CABINET UNIT HEATER
CWC	CHILLED WATER COIL
DC	DRY COOLER
DEF	DISHWASHER EXHAUST FAN
E	EXHAUST GRILLE
EBB	ELECTRIC BASE BOARD
ECH	ELECTRIC CABINET HEATER
ECH	ELECTRIC CEILING HEATER
EF	EXHAUST FAN
ERV	ENERGY RECOVERY VENTILATOR
ET	EXPANSION TANK
EUH	ELECTRIC UNIT HEATER
F	FURNACE
FC	FAN COIL UNIT
FPB	FAN POWERED VAV
FT	FINTUBE
GMS	GLYCOL MAKE-UP SYSTEM
GUH	GAS FIRED UNIT HEATER
H	HUMIDIFIER
HP	HEAT PUMP
HPU	HP CONDENSING UNIT
HV	HEATING & VENTILATING UNIT
HWC	HOT WATER COIL
LV	LOUVER
KEF	KITCHEN EXHAUST FAN
MAU	MAKE-UP AIR UNIT
MCC	MOTOR CONTROL CENTER
P	PUMP
PTAC	PACKAGED TERMINAL AC UNIT
R	RETURN GRILLE
RHP	RADIANT HEATING PANEL
RTU	ROOF TOP UNIT
S	SUPPLY DIFFUSER
SA	SOUND ATTENUATOR
SAC	SPLIT AC UNIT
SHP	SPLIT HEAT PUMP
SF	SUPPLY FAN
T	TRANSFER GRILLE
UH	UNIT HEATER
UV	UNIT VENTILATOR
VAV	VARIABLE AIR VOLUME BOX
VFD	VARIABLE FREQUENCY DRIVE
WSHP	WATER SOURCE HEAT PUMP

CERTIFICATION :

WILLIAM T. MAYER III
STATE OF RHODE ISLAND
No. 7860
REGISTERED
PROFESSIONAL ENGINEER
MECHANICAL

THIS DRAWING IS A PART OF AN INTEGRATED SET OF CONSTRUCTION CONTRACT DOCUMENTS. REFER TO ALL DRAWINGS AND SPECIFICATIONS INCLUDING BUT NOT LIMITED TO "GENERAL CONDITIONS" "SUMMARY OF WORK", AND ANY APPLICABLE MANUFACTURERS TECHNICAL SPECIFICATIONS.

REFER TO ALL DRAWINGS FOR COMPLETE SCOPE OF WORK.

THIS DRAWING IS NOT TO BE SCALED OR USED AS AN AS-BUILT.

REV. NO.	DATE	DESCRIPTION
	10.10.18	ISSUED FOR STATE REVIEW
A	10.19.18	ISSUED FOR BID

ENGINEERING DESIGN SERVICES INCORPORATED
141 Industrial Highway Slatersville, RI 02876
Tel (401) 765-7659 Fax (401) 765-2984

PROJECT NAME:

RIC ADAMS LIBRARY HVAC UPGRADES

SHEET TITLE:

MECHANICAL LEGENDS & NOTES

JOB NO.: 180202UC

DRAWN BY: KB

CHECKED BY: WM

DATE ISSUED: 10.19.2018

SCALE: AS NOTED

SHEET NO.:

M0.0

1 M1.0 FIRST FLOOR PLAN
SCALE: 3/32"=1'-0"

KEYED NOTES:

A. REFURBISH EXISTING AIR HANDLING UNIT AND PROVIDE AN AQUIS CPR-SL COATING REFURBISHMENT SYSTEM (OR APPROVED EQUAL). REFER TO SPECIFICATION FOR WORK REQUIRED TO ACCOMPLISH NEW COATING APPLICATION. ANY COMPONENTS FOUND TO BE MISSING, DAMAGED OR INOPERABLE SHALL BE REPAIRED/REPLACED AND THIS COST APPLIED TO AIR HANDLING UNIT ALLOWANCE (SEE SPECIFICATION). AIR HANDLING UNIT SHALL BE COMPLETELY OPERATIONAL, CODE COMPLIANT & IN ACCORDANCE WITH THE COLLEGE STANDARDS. CONTRACTOR TO HAVE ALL SHUTDOWNS COORDINATED/APPROVED BY THE COLLEGE.

B. REMOVE & DISCARD EXISTING COOLING TOWER & ASSOCIATED SUPPORTS. DISCONNECT EXISTING POWER/CONTROL WIRING, PIPING, DRAINS, ETC. TO ACCOMMODATE THE INSTALLATION OF THE NEW COOLING TOWER. REFER TO STRUCTURAL PLANS FOR NEW STEEL SUPPORTS/DUNNAGE. RECONNECT ALL SERVICES AND PROVIDE ANY REQUIRED ADAPTORS, PIPING, POWER/CONTROL WIRING, CONTROLS, ETC., TO MAKE COMPLETELY OPERATIONAL & CODE COMPLIANT. ALL ROOF PENETRATIONS TO BE SEALED WEATHERTIGHT IN ACCORDANCE WITH ROOFING MANUFACTURERS REQUIREMENTS. REFER TO DETAILS ON DRAWING M-6.

C. REMOVE & DISCARD EXISTING ROOF EXHAUST FAN AND ASSOCIATED CURB TO ACCOMMODATE THE NEW EXHAUST FAN INSTALLATION. DISCONNECT EXISTING POWER/CONTROL WIRING, DUCTWORK, ETC. RECONNECT ALL SERVICES AND PROVIDE ALL REQUIRED ADAPTORS, TRANSITIONS, DUCTWORK, POWER OR CONTROL WIRING, CONTROLS, ETC., TO MAKE COMPLETELY OPERATIONAL & CODE COMPLIANT. ALL ROOF PENETRATIONS TO BE SEALED WEATHERTIGHT IN ACCORDANCE WITH ROOFING MANUFACTURERS REQUIREMENTS. REFER TO DETAILS ON DRAWINGS M-5 & 6.

D. REMOVE & DISCARD EXISTING INLINE EXHAUST FAN. DISCONNECT EXISTING POWER/CONTROL WIRING, DUCTWORK, SUPPORTS, ETC.. TO ACCOMMODATE THE INSTALLATION OF THE NEW EXHAUST FAN & CONTROLS. PROVIDE ALL REQUIRED, DUCTWORK, POWER/CONTROL WIRING, SUPPORTS, ETC., TO MAKE COMPLETELY OPERATIONAL & CODE COMPLIANT.

E. REMOVE & DISCARD EXISTING EXTERIOR DUCTWORK DISTRIBUTION AND ASSOCIATED INSULATION, DAMPERS, ACCESS DOORS, SUPPORTS, SLEEPERS, ETC. PROVIDE NEW EXTERIOR DUCTWORK DISTRIBUTION TO MATCH EXISTING. REFER TO DETAILS ON DRAWING M-5.

F. REMOVE & DISCARD EXISTING CONTROL DAMPER & ACTUATOR TO ACCOMMODATE NEW.

G. REMOVE & DISCARD EXISTING ROOF VENT AND ASSOCIATED CURB, DUCTWORK, ETC.. TO ACCOMMODATE THE NEW VENT INSTALLATION. PROVIDE REQUIRED ADAPTOR, CURB AND DUCTWORK AS REQUIRED. ALL ROOF PENETRATIONS TO BE SEALED WEATHERTIGHT IN ACCORDANCE WITH ROOFING MANUFACTURERS REQUIREMENTS.

H. REMOVE & DISCARD EXISTING GOOSENECK AND ASSOCIATED CURB TO ACCOMMODATE THE NEW ROOF HOOD INSTALLATION. PROVIDE REQUIRED CURB & DUCTWORK AS REQUIRED. ALL ROOF PENETRATIONS TO BE SEALED WEATHERTIGHT IN ACCORDANCE WITH ROOFING MANUFACTURERS REQUIREMENTS.

I. REMOVE & STORE EXISTING PENTHOUSE LOUVER ARRANGEMENT FOR INSTALLATION ON NEW EXTERIOR DUCTWORK DISTRIBUTION.

J. PROVIDE UNIT COST TO REPLACE EXISTING DUCTWORK INSULATION IN THE MECHANICAL ROOM.

K. PROVIDE UNIT COST TO REPLACE EXISTING PIPE INSULATION IN THE MECHANICAL ROOM.

L. REMOVE & DISCARD ALL ABANDONED CONDUITS, TUBING, SUPPORTS, DEVICES, ETC. WITHIN THE MECHANICAL ROOM.

M. REMOVE & DISCARD EXISTING DUCT MOUNTED STEAM COIL & ASSOCIATED VALVING. PROVIDE NEW DUCT MOUNTED STEAM COIL & ASSOCIATED PIPING, VALVING, TRAPS, SUPPORTS, INSULATION, ETC.. TO MAKE COMPLETELY OPERATIONAL, 2335 CFM, 30°F RISE, 1-1/2" STM, 1" COND. MATCH EXISTING SIZES & CAPACITIES.

N. CONTRACTOR TO CONFIRM THE RELIEF VENT DUCTWORK DISTRIBUTION IS OPEN TO EACH FLOOR'S RETURN AIR PLENUM AND THE AIRFLOW IS NOT RESTRICTED AND PROVIDE NECESSARY WORK TO ADDRESS ANY ISSUES. REFER TO SPECIFICATIONS FOR ALLOWANCE.

NOTE:
REFER TO SPECIFICATIONS FOR ALLOWANCES & UNIT COST PRICING

CERTIFICATION :

WILLIAM T. MAYER III
STATE OF RHODE ISLAND
No. 7860
REGISTERED PROFESSIONAL ENGINEER
MECHANICAL

THIS DRAWING IS A PART OF AN INTEGRATED SET OF CONSTRUCTION CONTRACT DOCUMENTS. REFER TO ALL DRAWINGS AND SPECIFICATIONS INCLUDING BUT NOT LIMITED TO "GENERAL CONDITIONS" "SUMMARY OF WORK", AND ANY APPLICABLE MANUFACTURERS TECHNICAL SPECIFICATIONS.

REFER TO ALL DRAWINGS FOR COMPLETE SCOPE OF WORK.

THIS DRAWING IS NOT TO BE SCALED OR USED AS AN AS-BUILT.

REV. NO.	DATE	DESCRIPTION
	10.10.18	ISSUED FOR STATE REVIEW
A	10.19.18	ISSUED FOR BID

ENGINEERING DESIGN SERVICES INCORPORATED
141 Industrial Highway Slatersville, RI 02876
Tel (401) 765-7659 Fax (401) 765-2984

PROJECT NAME:
RIC
ADAMS LIBRARY
HVAC UPGRADES

SHEET TITLE:
MECHANICAL
FIRST FLOOR PLAN

JOB NO.: 180202UC
DRAWN BY: KB
CHECKED BY: WM
DATE ISSUED: 10.19.2018
SCALE: AS NOTED

SHEET NO.:
M1.0

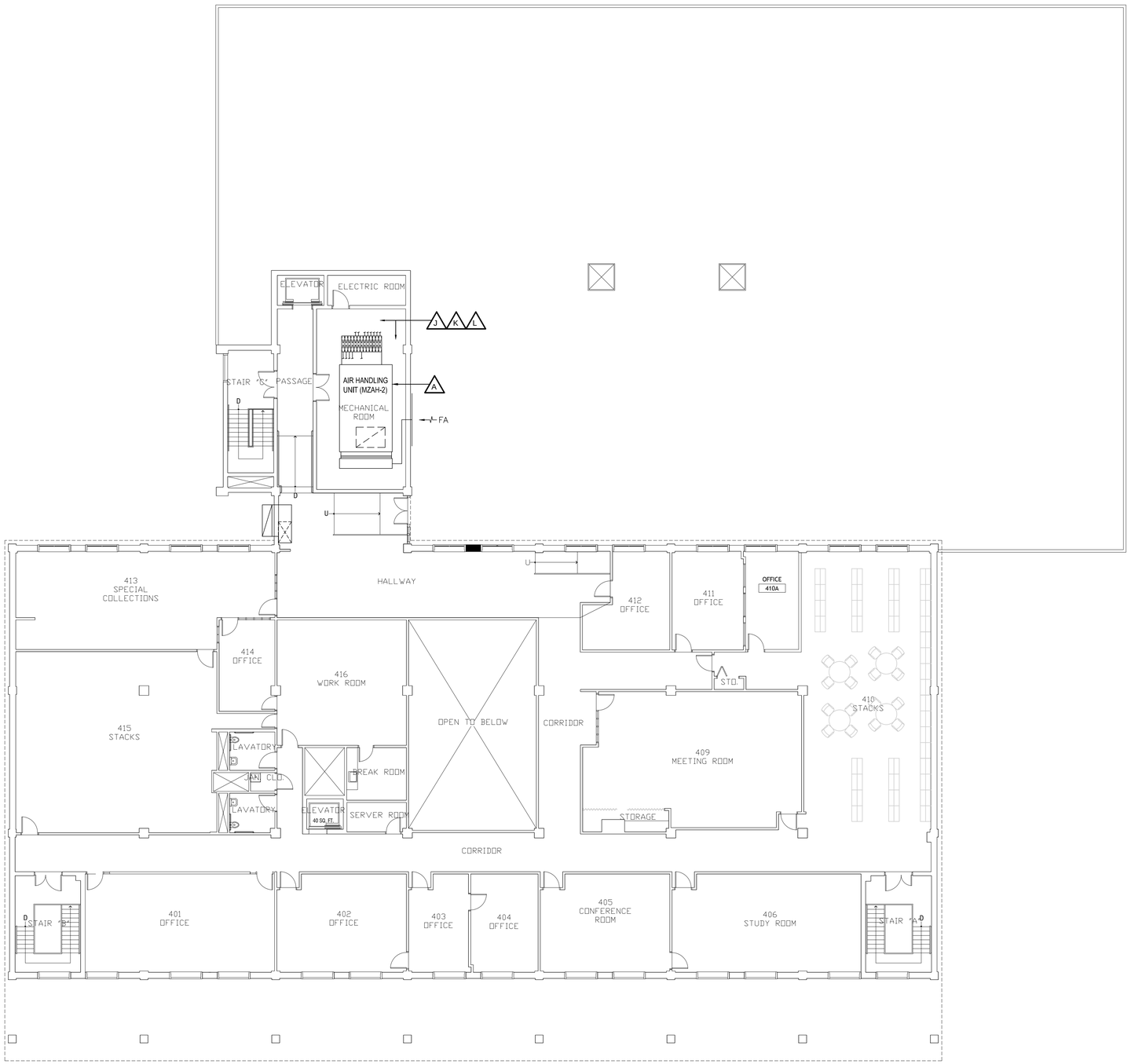

1 / M2.0 FOURTH FLOOR PLAN
SCALE: 3/32"=1'-0"

KEYED NOTES:

A. REFURBISH EXISTING AIR HANDLING UNIT AND PROVIDE AN AQUIS CPR-SL COATING REFURBISHMENT SYSTEM (OR APPROVED EQUAL). REFER TO SPECIFICATION FOR WORK REQUIRED TO ACCOMPLISH NEW COATING APPLICATION. ANY COMPONENTS FOUND TO BE MISSING, DAMAGED OR INOPERABLE SHALL BE REPAIRED/REPLACED AND THIS COST APPLIED TO AIR HANDLING UNIT ALLOWANCE (SEE SPECIFICATION). AIR HANDLING UNIT SHALL BE COMPLETELY OPERATIONAL, CODE COMPLIANT & IN ACCORDANCE WITH THE COLLEGE STANDARDS. CONTRACTOR TO HAVE ALL SHUTDOWNS COORDINATED/APPROVED BY THE COLLEGE.

B. REMOVE & DISCARD EXISTING COOLING TOWER & ASSOCIATED SUPPORTS. DISCONNECT EXISTING POWER/CONTROL WIRING, PIPING, DRAINS, ETC. TO ACCOMMODATE THE INSTALLATION OF THE NEW COOLING TOWER. REFER TO STRUCTURAL PLANS FOR NEW STEEL SUPPORTS/DUNNAGE. RECONNECT ALL SERVICES AND PROVIDE ANY REQUIRED ADAPTORS, PIPING, POWER/CONTROL WIRING, CONTROLS, ETC.. TO MAKE COMPLETELY OPERATIONAL & CODE COMPLIANT. ALL ROOF PENETRATIONS TO BE SEALED WEATHERTIGHT IN ACCORDANCE WITH ROOFING MANUFACTURERS REQUIREMENTS. REFER TO DETAILS ON DRAWING M-6.

C. REMOVE & DISCARD EXISTING ROOF EXHAUST FAN AND ASSOCIATED CURB TO ACCOMMODATE THE NEW EXHAUST FAN INSTALLATION. DISCONNECT EXISTING POWER/CONTROL WIRING, DUCTWORK, ETC. RECONNECT ALL SERVICES AND PROVIDE ALL REQUIRED ADAPTORS, TRANSITIONS, DUCTWORK, POWER OR CONTROL WIRING, CONTROLS, ETC.. TO MAKE COMPLETELY OPERATIONAL & CODE COMPLIANT. ALL ROOF PENETRATIONS TO BE SEALED WEATHERTIGHT IN ACCORDANCE WITH ROOFING MANUFACTURERS REQUIREMENTS. REFER TO DETAILS ON DRAWINGS M-5 & 6.

D. REMOVE & DISCARD EXISTING INLINE EXHAUST FAN. DISCONNECT EXISTING POWER/CONTROL WIRING, DUCTWORK, SUPPORTS, ETC.. TO ACCOMMODATE THE INSTALLATION OF THE NEW EXHAUST FAN & CONTROLS. PROVIDE ALL REQUIRED, DUCTWORK, POWER/CONTROL WIRING, SUPPORTS, ETC.. TO MAKE COMPLETELY OPERATIONAL & CODE COMPLIANT.

E. REMOVE & DISCARD EXISTING EXTERIOR DUCTWORK DISTRIBUTION AND ASSOCIATED INSULATION, DAMPERS, ACCESS DOORS, SUPPORTS, SLEEPERS, ETC. PROVIDE NEW EXTERIOR DUCTWORK DISTRIBUTION TO MATCH EXISTING. REFER TO DETAILS ON DRAWING M-5.

F. REMOVE & DISCARD EXISTING CONTROL DAMPER & ACTUATOR TO ACCOMMODATE NEW.

G. REMOVE & DISCARD EXISTING ROOF VENT AND ASSOCIATED CURB, DUCTWORK, ETC.. TO ACCOMMODATE THE NEW VENT INSTALLATION. PROVIDE REQUIRED ADAPTOR, CURB AND DUCTWORK AS REQUIRED. ALL ROOF PENETRATIONS TO BE SEALED WEATHERTIGHT IN ACCORDANCE WITH ROOFING MANUFACTURERS REQUIREMENTS.

H. REMOVE & DISCARD EXISTING GOOSENECK AND ASSOCIATED CURB TO ACCOMMODATE THE NEW ROOF HOOD INSTALLATION. PROVIDE REQUIRED CURB & DUCTWORK AS REQUIRED. ALL ROOF PENETRATIONS TO BE SEALED WEATHERTIGHT IN ACCORDANCE WITH ROOFING MANUFACTURERS REQUIREMENTS.

I. REMOVE & STORE EXISTING PENTHOUSE LOUVER ARRANGEMENT FOR INSTALLATION ON NEW EXTERIOR DUCTWORK DISTRIBUTION.

J. PROVIDE UNIT COST TO REPLACE EXISTING DUCTWORK INSULATION IN THE MECHANICAL ROOM.

K. PROVIDE UNIT COST TO REPLACE EXISTING PIPE INSULATION IN THE MECHANICAL ROOM.

L. REMOVE & DISCARD ALL ABANDONED CONDUITS, TUBING, SUPPORTS, DEVICES, ETC. WITHIN THE MECHANICAL ROOM.

M. REMOVE & DISCARD EXISTING DUCT MOUNTED STEAM COIL & ASSOCIATED VALVING. PROVIDE NEW DUCT MOUNTED STEAM COIL & ASSOCIATED PIPING, VALVING, TRAPS, SUPPORTS, INSULATION, ETC.. TO MAKE COMPLETELY OPERATIONAL. 2335 CFM, 30°F RISE, 1-1/2" STM, 1" COND. MATCH EXISTING SIZES & CAPACITIES.

N. CONTRACTOR TO CONFIRM THE RELIEF VENT DUCTWORK DISTRIBUTION IS OPEN TO EACH FLOOR'S RETURN AIR PLENUM AND THE AIRFLOW IS NOT RESTRICTED AND PROVIDE NECESSARY WORK TO ADDRESS ANY ISSUES. REFER TO SPECIFICATIONS FOR ALLOWANCE.

NOTE:
REFER TO SPECIFICATIONS FOR ALLOWANCES & UNIT COST PRICING

CERTIFICATION :

WILLIAM T. MAYER III
STATE OF RHODE ISLAND
No. 7860
REGISTERED PROFESSIONAL ENGINEER
MECHANICAL

THIS DRAWING IS A PART OF AN INTEGRATED SET OF CONSTRUCTION CONTRACT DOCUMENTS. REFER TO ALL DRAWINGS AND SPECIFICATIONS INCLUDING BUT NOT LIMITED TO "GENERAL CONDITIONS", "SUMMARY OF WORK", AND ANY APPLICABLE MANUFACTURERS TECHNICAL SPECIFICATIONS.

REFER TO ALL DRAWINGS FOR COMPLETE SCOPE OF WORK.

THIS DRAWING IS NOT TO BE SCALED OR USED AS AN AS-BUILT.

REV. NO.	DATE	DESCRIPTION
	10.10.18	ISSUED FOR STATE REVIEW
A	10.19.18	ISSUED FOR BID

ENGINEERING DESIGN SERVICES INCORPORATED
141 Industrial Highway Slatersville, RI 02876
Tel (401) 765-7659 Fax (401) 765-2984

PROJECT NAME:
RIC
ADAMS LIBRARY
HVAC UPGRADES

SHEET TITLE:
MECHANICAL
FOURTH FLOOR PLAN

JOB NO.: 180202UC
DRAWN BY: KB
CHECKED BY: WM
DATE ISSUED: 10.19.2018
SCALE: AS NOTED

SHEET NO.:
M2.0

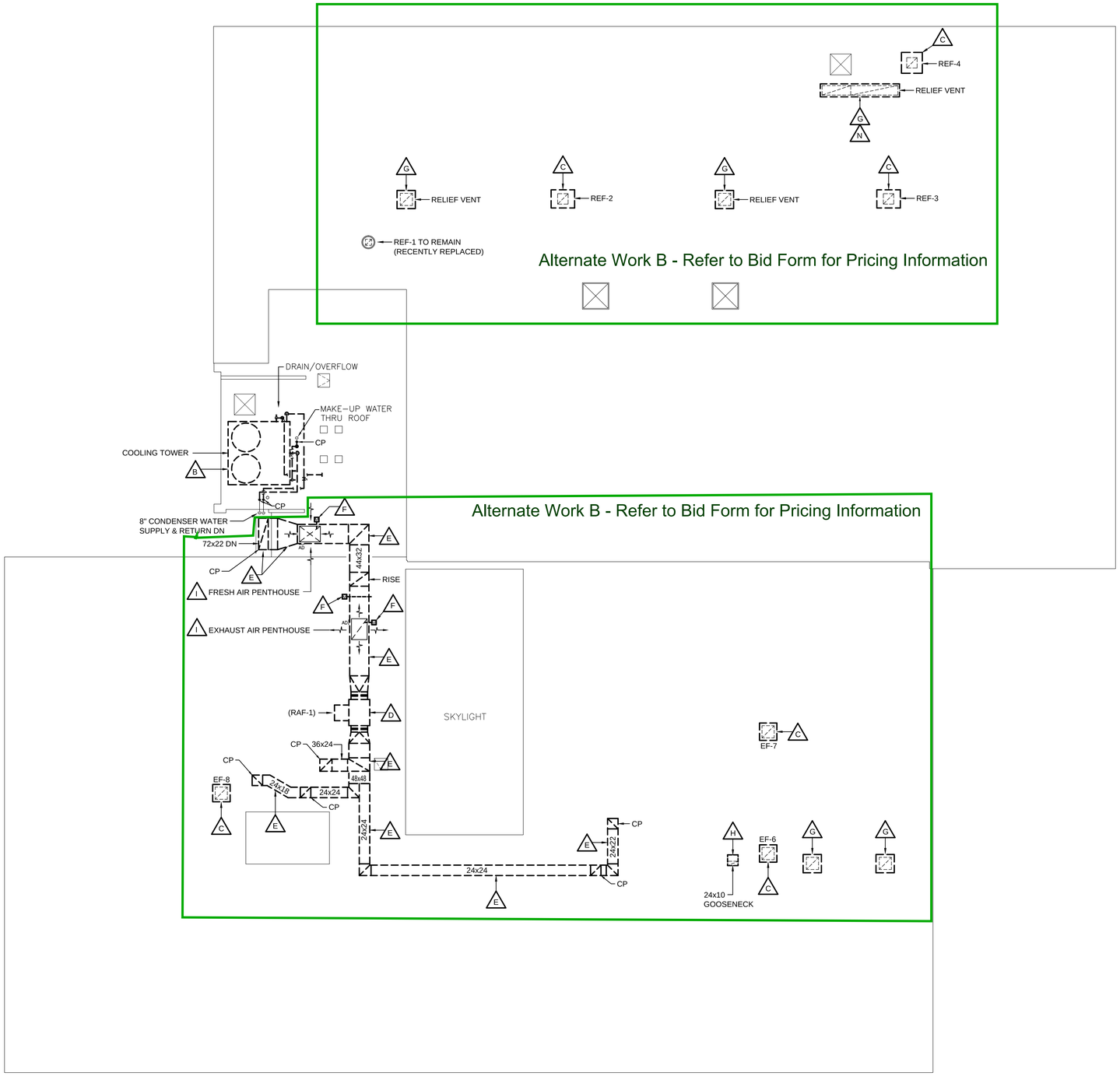

1 M3.0 ROOF PLAN - DEMOLITION
SCALE: 3/32"=1'-0"

KEYED NOTES:

A. REFURBISH EXISTING AIR HANDLING UNIT AND PROVIDE AN AQUIS CPR-SL COATING REFURBISHMENT SYSTEM (OR APPROVED EQUAL). REFER TO SPECIFICATION FOR WORK REQUIRED TO ACCOMPLISH NEW COATING APPLICATION. ANY COMPONENTS FOUND TO BE MISSING, DAMAGED OR INOPERABLE SHALL BE REPAIRED/REPLACED AND THIS COST APPLIED TO AIR HANDLING UNIT ALLOWANCE (SEE SPECIFICATION). AIR HANDLING UNIT SHALL BE COMPLETELY OPERATIONAL, CODE COMPLIANT & IN ACCORDANCE WITH THE COLLEGE STANDARDS. CONTRACTOR TO HAVE ALL SHUTDOWNS COORDINATED/APPROVED BY THE COLLEGE.

B. REMOVE & DISCARD EXISTING COOLING TOWER & ASSOCIATED SUPPORTS. DISCONNECT EXISTING POWER/CONTROL WIRING, PIPING, DRAINS, ETC. TO ACCOMMODATE THE INSTALLATION OF THE NEW COOLING TOWER. REFER TO STRUCTURAL PLANS FOR NEW STEEL SUPPORTS/DUNNAGE. RECONNECT ALL SERVICES AND PROVIDE ANY REQUIRED ADAPTORS, PIPING, POWER/CONTROL WIRING, CONTROLS, ETC.. TO MAKE COMPLETELY OPERATIONAL & CODE COMPLIANT. ALL ROOF PENETRATIONS TO BE SEALED WEATHERTIGHT IN ACCORDANCE WITH ROOFING MANUFACTURERS REQUIREMENTS. REFER TO DETAILS ON DRAWING M-6.

C. REMOVE & DISCARD EXISTING ROOF EXHAUST FAN AND ASSOCIATED CURB TO ACCOMMODATE THE NEW EXHAUST FAN INSTALLATION. DISCONNECT EXISTING POWER/CONTROL WIRING, DUCTWORK, ETC. RECONNECT ALL SERVICES AND PROVIDE ALL REQUIRED ADAPTORS, TRANSITIONS, DUCTWORK, POWER OR CONTROL WIRING, CONTROLS, ETC.. TO MAKE COMPLETELY OPERATIONAL & CODE COMPLIANT. ALL ROOF PENETRATIONS TO BE SEALED WEATHERTIGHT IN ACCORDANCE WITH ROOFING MANUFACTURERS REQUIREMENTS. REFER TO DETAILS ON DRAWINGS M-5 & 6.

D. REMOVE & DISCARD EXISTING INLINE EXHAUST FAN. DISCONNECT EXISTING POWER/CONTROL WIRING, DUCTWORK, SUPPORTS, ETC.. TO ACCOMMODATE THE INSTALLATION OF THE NEW EXHAUST FAN & CONTROLS. PROVIDE ALL REQUIRED, DUCTWORK, POWER/CONTROL WIRING, SUPPORTS, ETC.. TO MAKE COMPLETELY OPERATIONAL & CODE COMPLIANT.

E. REMOVE & DISCARD EXISTING EXTERIOR DUCTWORK DISTRIBUTION AND ASSOCIATED INSULATION, DAMPERS, ACCESS DOORS, SUPPORTS, SLEEPERS, ETC. PROVIDE NEW EXTERIOR DUCTWORK DISTRIBUTION TO MATCH EXISTING. REFER TO DETAILS ON DRAWING M-5.

F. REMOVE & DISCARD EXISTING CONTROL DAMPER & ACTUATOR TO ACCOMMODATE NEW.

G. REMOVE & DISCARD EXISTING ROOF VENT AND ASSOCIATED CURB, DUCTWORK, ETC.. TO ACCOMMODATE THE NEW VENT INSTALLATION. PROVIDE REQUIRED ADAPTOR, CURB AND DUCTWORK AS REQUIRED. ALL ROOF PENETRATIONS TO BE SEALED WEATHERTIGHT IN ACCORDANCE WITH ROOFING MANUFACTURERS REQUIREMENTS.

H. REMOVE & DISCARD EXISTING GOOSENECK AND ASSOCIATED CURB TO ACCOMMODATE THE NEW ROOF HOOD INSTALLATION. PROVIDE REQUIRED CURB & DUCTWORK AS REQUIRED. ALL ROOF PENETRATIONS TO BE SEALED WEATHERTIGHT IN ACCORDANCE WITH ROOFING MANUFACTURERS REQUIREMENTS.

I. REMOVE & STORE EXISTING PENTHOUSE LOUVER ARRANGEMENT FOR INSTALLATION ON NEW EXTERIOR DUCTWORK DISTRIBUTION.

J. PROVIDE UNIT COST TO REPLACE EXISTING DUCTWORK INSULATION IN THE MECHANICAL ROOM.

K. PROVIDE UNIT COST TO REPLACE EXISTING PIPE INSULATION IN THE MECHANICAL ROOM.

L. REMOVE & DISCARD ALL ABANDONED CONDUITS, TUBING, SUPPORTS, DEVICES, ETC. WITHIN THE MECHANICAL ROOM.

M. REMOVE & DISCARD EXISTING DUCT MOUNTED STEAM COIL & ASSOCIATED VALVING. PROVIDE NEW DUCT MOUNTED STEAM COIL & ASSOCIATED PIPING, VALVING, TRAPS, SUPPORTS, INSULATION, ETC.. TO MAKE COMPLETELY OPERATIONAL. 2335 CFM, 30°F RISE, 1-1/2" STM, 1" COND. MATCH EXISTING SIZES & CAPACITIES.

N. CONTRACTOR TO CONFIRM THE RELIEF VENT DUCTWORK DISTRIBUTION IS OPEN TO EACH FLOOR'S RETURN AIR PLENUM AND THE AIRFLOW IS NOT RESTRICTED AND PROVIDE NECESSARY WORK TO ADDRESS ANY ISSUES. REFER TO SPECIFICATIONS FOR ALLOWANCE.

NOTE:
REFER TO SPECIFICATIONS FOR ALLOWANCES & UNIT COST PRICING

CERTIFICATION :

WILLIAM T. MAYER III
STATE OF RHODE ISLAND
No. 7860
REGISTERED PROFESSIONAL ENGINEER
MECHANICAL

THIS DRAWING IS A PART OF AN INTEGRATED SET OF CONSTRUCTION CONTRACT DOCUMENTS. REFER TO ALL DRAWINGS AND SPECIFICATIONS INCLUDING BUT NOT LIMITED TO "GENERAL CONDITIONS" "SUMMARY OF WORK", AND ANY APPLICABLE MANUFACTURERS TECHNICAL SPECIFICATIONS.

REFER TO ALL DRAWINGS FOR COMPLETE SCOPE OF WORK.

THIS DRAWING IS NOT TO BE SCALED OR USED AS AN AS-BUILT.

REV. NO.	DATE	DESCRIPTION
	10.10.18	ISSUED FOR STATE REVIEW
A	10.19.18	ISSUED FOR BID

ENGINEERING DESIGN SERVICES INCORPORATED
141 Industrial Highway Slatersville, RI 02876
Tel (401) 765-7659 Fax (401) 765-2984

PROJECT NAME:
RIC
ADAMS LIBRARY
HVAC UPGRADES

SHEET TITLE:
MECHANICAL
ROOF PLAN -
DEMOLITION

JOB NO.: 180202UC
DRAWN BY: KB
CHECKED BY: WM
DATE ISSUED: 10.19.2018
SCALE: AS NOTED

SHEET NO.:
M3.0

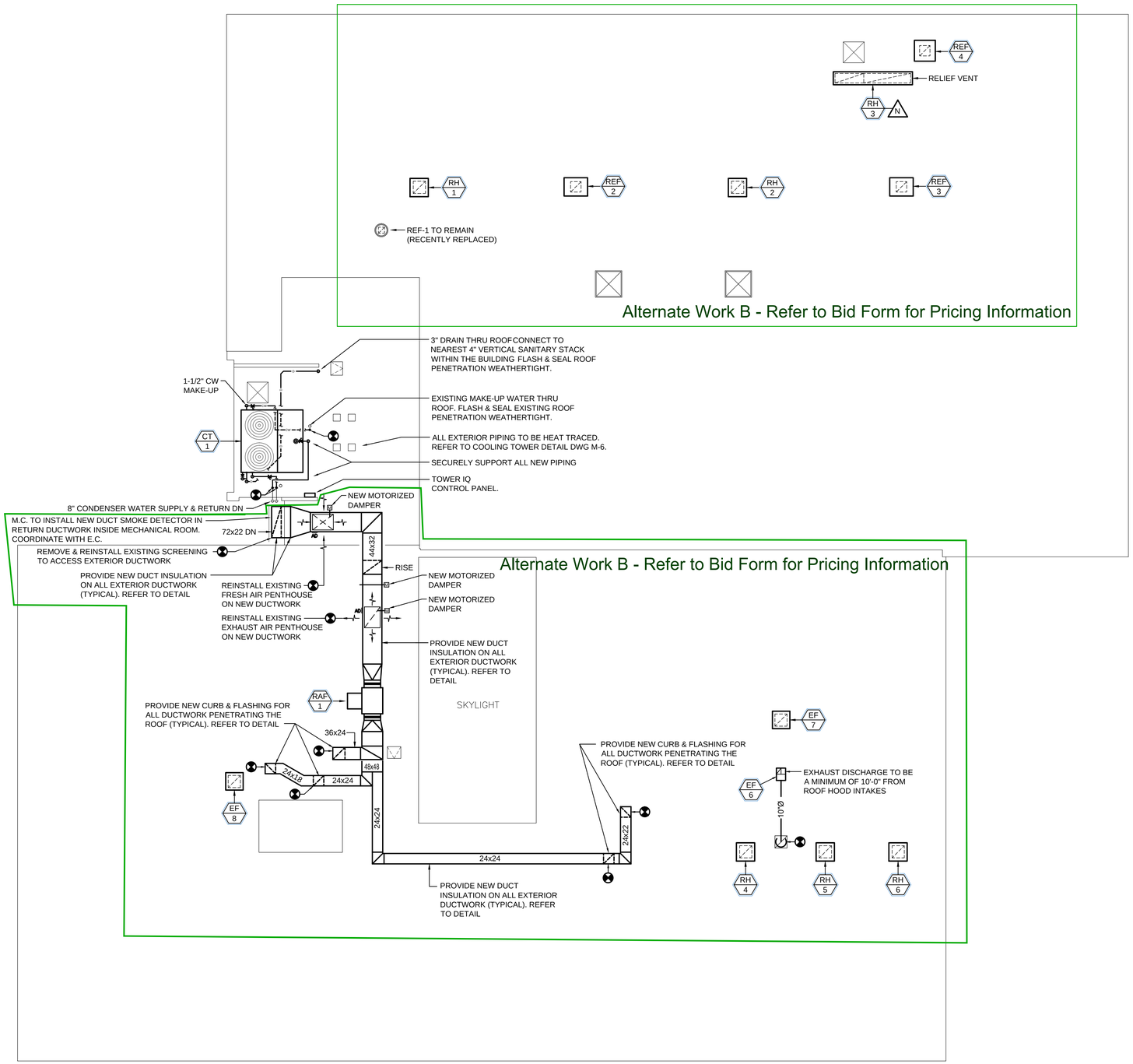

1 / M4.0 ROOF PLAN - NEW WORK
SCALE: 3/32"=1'-0"

KEYED NOTES:

A. REFURBISH EXISTING AIR HANDLING UNIT AND PROVIDE AN AQUIS CPR-SL COATING REFURBISHMENT SYSTEM (OR APPROVED EQUAL). REFER TO SPECIFICATION FOR WORK REQUIRED TO ACCOMPLISH NEW COATING APPLICATION. ANY COMPONENTS FOUND TO BE MISSING, DAMAGED OR INOPERABLE SHALL BE REPAIRED/REPLACED AND THIS COST APPLIED TO AIR HANDLING UNIT ALLOWANCE (SEE SPECIFICATION). AIR HANDLING UNIT SHALL BE COMPLETELY OPERATIONAL, CODE COMPLIANT & IN ACCORDANCE WITH THE COLLEGE STANDARDS. CONTRACTOR TO HAVE ALL SHUTDOWNS COORDINATED/APPROVED BY THE COLLEGE.

B. REMOVE & DISCARD EXISTING COOLING TOWER & ASSOCIATED SUPPORTS. DISCONNECT EXISTING POWER/CONTROL WIRING, PIPING, DRAINS, ETC. TO ACCOMMODATE THE INSTALLATION OF THE NEW COOLING TOWER. REFER TO STRUCTURAL PLANS FOR NEW STEEL SUPPORTS/DUNNAGE. RECONNECT ALL SERVICES AND PROVIDE ANY REQUIRED ADAPTORS, PIPING, POWER/CONTROL WIRING, CONTROLS, ETC.. TO MAKE COMPLETELY OPERATIONAL & CODE COMPLIANT. ALL ROOF PENETRATIONS TO BE SEALED WEATHERTIGHT IN ACCORDANCE WITH ROOFING MANUFACTURERS REQUIREMENTS. REFER TO DETAILS ON DRAWING M-6.

C. REMOVE & DISCARD EXISTING ROOF EXHAUST FAN AND ASSOCIATED CURB TO ACCOMMODATE THE NEW EXHAUST FAN INSTALLATION. DISCONNECT EXISTING POWER/CONTROL WIRING, DUCTWORK, ETC. RECONNECT ALL SERVICES AND PROVIDE ALL REQUIRED ADAPTORS, TRANSITIONS, DUCTWORK, POWER OR CONTROL WIRING, CONTROLS, ETC.. TO MAKE COMPLETELY OPERATIONAL & CODE COMPLIANT. ALL ROOF PENETRATIONS TO BE SEALED WEATHERTIGHT IN ACCORDANCE WITH ROOFING MANUFACTURERS REQUIREMENTS. REFER TO DETAILS ON DRAWINGS M-5 & 6.

D. REMOVE & DISCARD EXISTING INLINE EXHAUST FAN. DISCONNECT EXISTING POWER/CONTROL WIRING, DUCTWORK, SUPPORTS, ETC.. TO ACCOMMODATE THE INSTALLATION OF THE NEW EXHAUST FAN & CONTROLS. PROVIDE ALL REQUIRED, DUCTWORK, POWER/CONTROL WIRING, SUPPORTS, ETC.. TO MAKE COMPLETELY OPERATIONAL & CODE COMPLIANT.

E. REMOVE & DISCARD EXISTING EXTERIOR DUCTWORK DISTRIBUTION AND ASSOCIATED INSULATION, DAMPERS, ACCESS DOORS, SUPPORTS, SLEEPERS, ETC. PROVIDE NEW EXTERIOR DUCTWORK DISTRIBUTION TO MATCH EXISTING. REFER TO DETAILS ON DRAWING M-5.

F. REMOVE & DISCARD EXISTING CONTROL DAMPER & ACTUATOR TO ACCOMMODATE NEW.

G. REMOVE & DISCARD EXISTING ROOF VENT AND ASSOCIATED CURB, DUCTWORK, ETC.. TO ACCOMMODATE THE NEW VENT INSTALLATION. PROVIDE REQUIRED ADAPTOR, CURB AND DUCTWORK AS REQUIRED. ALL ROOF PENETRATIONS TO BE SEALED WEATHERTIGHT IN ACCORDANCE WITH ROOFING MANUFACTURERS REQUIREMENTS.

H. REMOVE & DISCARD EXISTING GOOSENECK AND ASSOCIATED CURB TO ACCOMMODATE THE NEW ROOF HOOD INSTALLATION. PROVIDE REQUIRED CURB & DUCTWORK AS REQUIRED. ALL ROOF PENETRATIONS TO BE SEALED WEATHERTIGHT IN ACCORDANCE WITH ROOFING MANUFACTURERS REQUIREMENTS.

I. REMOVE & STORE EXISTING PENTHOUSE LOUVER ARRANGEMENT FOR INSTALLATION ON NEW EXTERIOR DUCTWORK DISTRIBUTION.

J. PROVIDE UNIT COST TO REPLACE EXISTING DUCTWORK INSULATION IN THE MECHANICAL ROOM.

K. PROVIDE UNIT COST TO REPLACE EXISTING PIPE INSULATION IN THE MECHANICAL ROOM.

L. REMOVE & DISCARD ALL ABANDONED CONDUITS, TUBING, SUPPORTS, DEVICES, ETC. WITHIN THE MECHANICAL ROOM.

M. REMOVE & DISCARD EXISTING DUCT MOUNTED STEAM COIL & ASSOCIATED VALVING. PROVIDE NEW DUCT MOUNTED STEAM COIL & ASSOCIATED PIPING, VALVING, TRAPS, SUPPORTS, INSULATION, ETC., TO MAKE COMPLETELY OPERATIONAL. 2335 CFM, 30°F RISE, 1-1/2" STM, 1" COND. MATCH EXISTING SIZES & CAPACITIES.

N. CONTRACTOR TO CONFIRM THE RELIEF VENT DUCTWORK DISTRIBUTION IS OPEN TO EACH FLOOR'S RETURN AIR PLENUM AND THE AIRFLOW IS NOT RESTRICTED AND PROVIDE NECESSARY WORK TO ADDRESS ANY ISSUES. REFER TO SPECIFICATIONS FOR ALLOWANCE.

NOTE:
REFER TO SPECIFICATIONS FOR ALLOWANCES & UNIT COST PRICING

CERTIFICATION :

WILLIAM T. MAYER III
STATE OF RHODE ISLAND
No. 7860
REGISTERED
PROFESSIONAL ENGINEER
MECHANICAL

THIS DRAWING IS A PART OF AN INTEGRATED SET OF CONSTRUCTION CONTRACT DOCUMENTS. REFER TO ALL DRAWINGS AND SPECIFICATIONS INCLUDING BUT NOT LIMITED TO "GENERAL CONDITIONS" "SUMMARY OF WORK", AND ANY APPLICABLE MANUFACTURERS TECHNICAL SPECIFICATIONS.

REFER TO ALL DRAWINGS FOR COMPLETE SCOPE OF WORK.

THIS DRAWING IS NOT TO BE SCALED OR USED AS AN AS-BUILT.

REV. NO.	DATE	DESCRIPTION
	10.10.18	ISSUED FOR STATE REVIEW
A	10.19.18	ISSUED FOR BID

ENGINEERING DESIGN SERVICES INCORPORATED
141 Industrial Highway Slatersville, RI 02876
Tel (401) 765-7659 Fax (401) 765-2984

PROJECT NAME:
RIC
ADAMS LIBRARY
HVAC UPGRADES

SHEET TITLE:
MECHANICAL
ROOF PLAN - NEW WORK

JOB NO.: 180202UC
DRAWN BY: KB
CHECKED BY: WM
DATE ISSUED: 10.19.2018
SCALE: AS NOTED

SHEET NO.:
M4.0

NOTE:
REFER TO SMACNA: HVAC DUCT CONSTRUCTION STANDARDS FOR SUPPORT SPACING GUIDELINES.

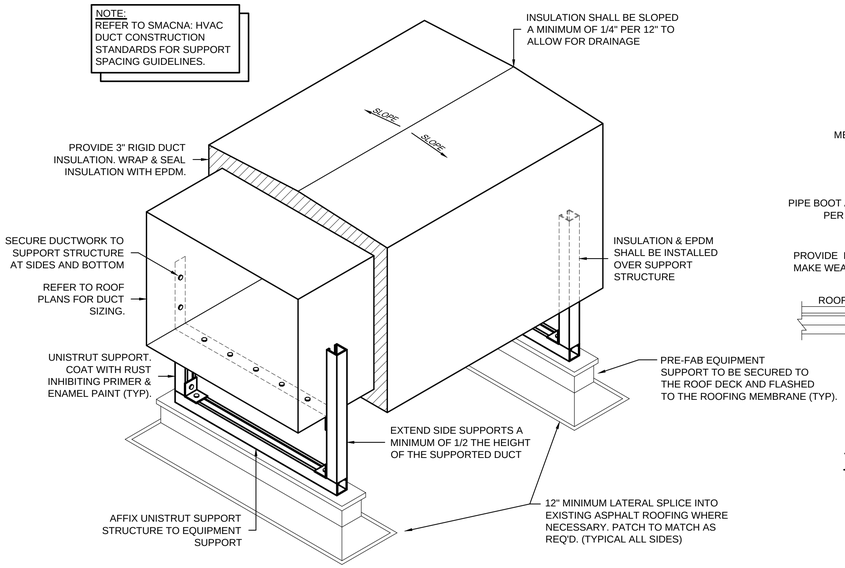

EXTERIOR DUCTWORK DETAIL
SCALE: NONE

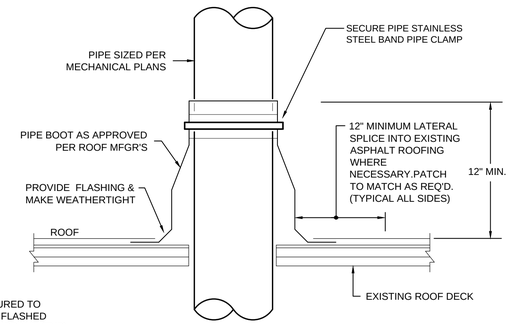

TYPICAL PIPE THRU ROOF DETAIL
NTS

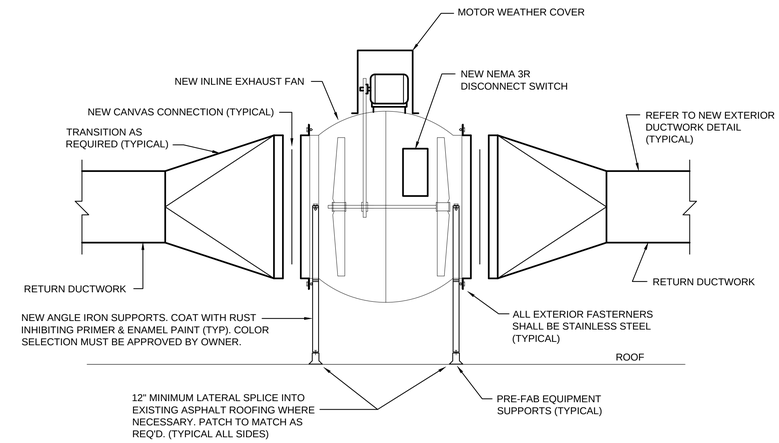

INLINE EXHAUST FAN INSTALLATION DETAIL
SCALE: NONE

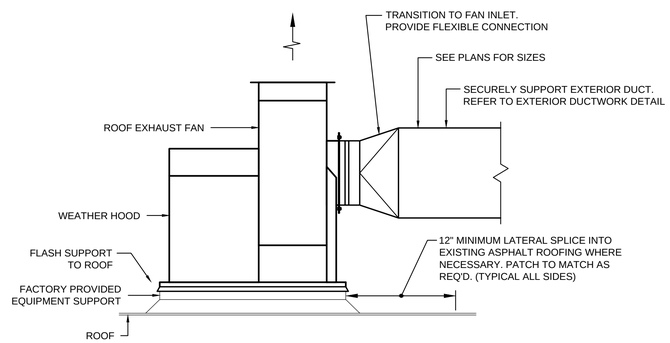

TYPICAL ROOF MOUNTED UTILITY EXHAUST FAN DETAIL
NO SCALE

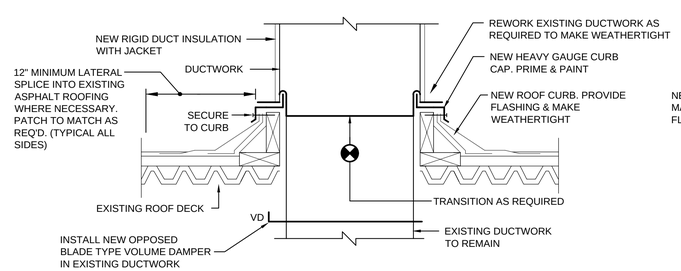

EXISTING DUCT THRU ROOF PENETRATION DETAIL
SCALE: NONE

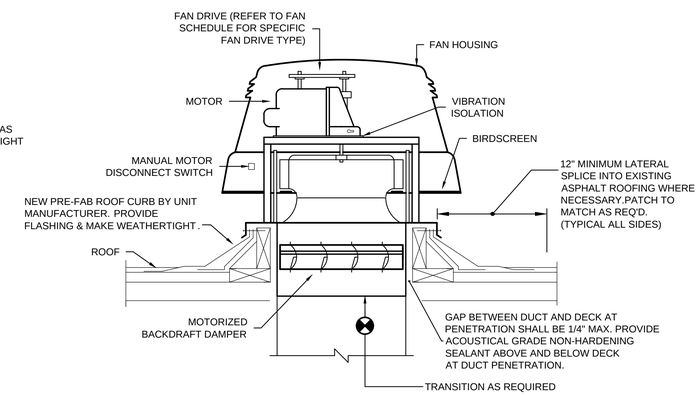

TYPICAL ROOF EXHAUST FAN DETAIL
NO SCALE

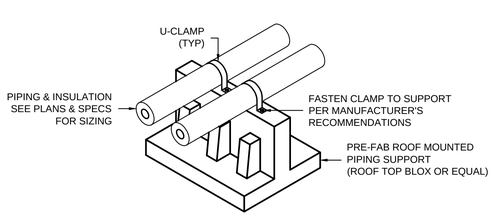

TYPICAL ROOF MOUNTED PIPING SUPPORT DETAIL
NTS

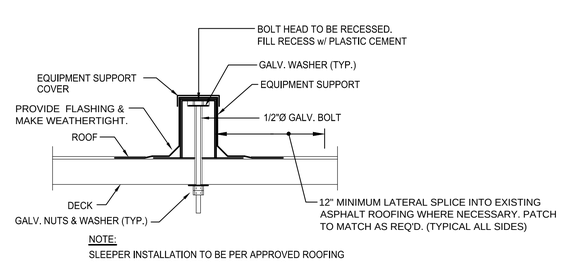

NOTE:
SLEEPER INSTALLATION TO BE PER APPROVED ROOFING SYSTEM MANUFACTURER'S REQUIREMENTS.

TYPICAL EQUIPMENT SUPPPORT DETAIL
NO SCALE

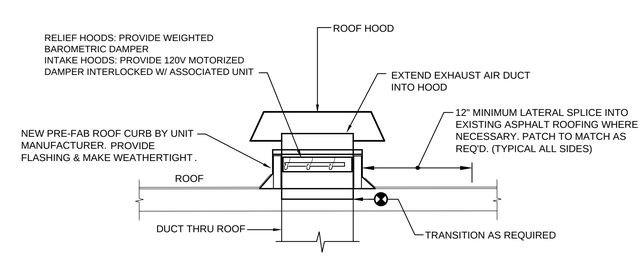

TYPICAL ROOF VENT DETAIL
NO SCALE

CERTIFICATION :

WILLIAM T. MAYER III
STATE OF RHODE ISLAND
No. 7860
REGISTERED PROFESSIONAL ENGINEER
MECHANICAL

THIS DRAWING IS A PART OF AN INTEGRATED SET OF CONSTRUCTION CONTRACT DOCUMENTS. REFER TO ALL DRAWINGS AND SPECIFICATIONS INCLUDING BUT NOT LIMITED TO "GENERAL CONDITIONS" "SUMMARY OF WORK", AND ANY APPLICABLE MANUFACTURERS TECHNICAL SPECIFICATIONS.

REFER TO ALL DRAWINGS FOR COMPLETE SCOPE OF WORK.

THIS DRAWING IS NOT TO BE SCALED OR USED AS AN AS-BUILT.

REV. NO.	DATE	DESCRIPTION
	10.10.18	ISSUED FOR STATE REVIEW
A	10.19.18	ISSUED FOR BID

ENGINEERING DESIGN SERVICES INCORPORATED
141 Industrial Highway Slatersville, RI 02876
Tel (401) 765-7659 Fax (401) 765-2984

PROJECT NAME:
RIC
ADAMS LIBRARY
HVAC UPGRADES

SHEET TITLE:
MECHANICAL DETAILS

JOB NO.: 180202UC
DRAWN BY: KB
CHECKED BY: WM
DATE ISSUED: 10.19.2018
SCALE: AS NOTED

SHEET NO.:
M5.0

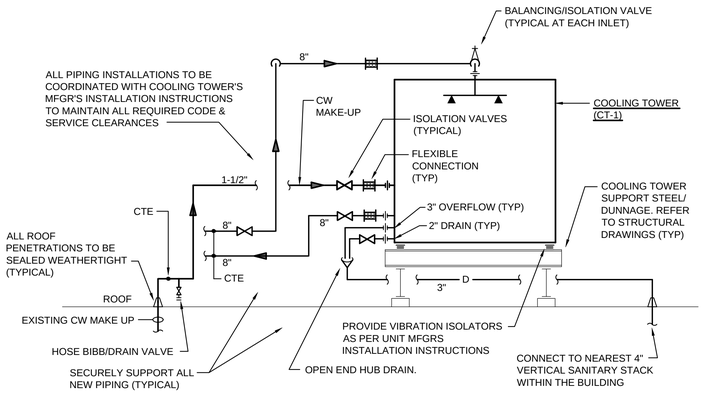

NOTE:
PROVIDE HEAT TRACE ON ALL EXTERIOR PIPING SERVING THE COOLING TOWER. FREEZE PROTECTION HEAT TRACE SYSTEM SHALL BE THERMON 5-FLX-1 WITH AN OPERATING VOLTAGE OF 120V. INCLUDE ALL APPURTENANT HARDWARE & INSTALL AS PER MFGRS INSTALLATION INSTRUCTIONS. PROVIDE (3) SEPARATE FREEZE PROTECTION HEAT TRACE SYSTEMS.

TYPICAL COOLING TOWER PIPING DETAIL

NTS

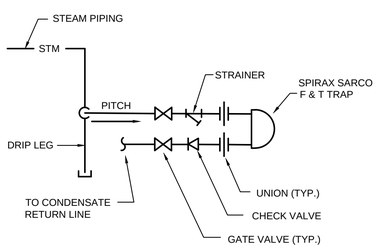

TYPICAL DRIP TRAP DETAIL

NO SCALE

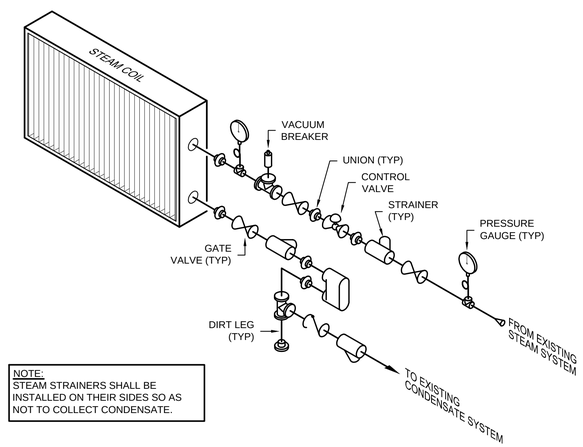

NOTE:
STEAM STRAINERS SHALL BE INSTALLED ON THEIR SIDES SO AS NOT TO COLLECT CONDENSATE.

TYPICAL STEAM COIL PIPING DETAIL

NO SCALE

COOLING TOWER SCHEDULE

(BASED ON BALTIMORE AIR COIL OR APPROVED EQUAL)

SYMBOL	SERIES 1500 MODEL	# OF UNITS	GPM	HW TEMP	WET BULB TEMP	CW TEMP	TOTAL PUMPING HEAD (PSI)	BASIN HEATER		MOTOR DATA				APPROX. WEIGHT (LBS)	NOTES
								KW	VOLTAGE	QTY	HP	TOTAL STANDARD FAN POWER	VOLTAGE		
CT-1	XES15E-1212-09HN	1	900	97.6°F	75.0°F	85°F	6.08	16	208V/3Ø	2	5 HP EA	10 HP/UNIT	208V/3Ø	16,670	1,2

NOTES:
1. PROVIDE WITH DISCONNECT NEMA-3R SWITCH AND VFDS. PROVIDE MFGR SUPPLIED EXTERIOR MOUNTED SINGLE POINT COOLING TOWER CONTROL PANEL TOWER IQ (ONE INCOMING POWER FEED FOR ALL OF THE ELECTRICAL COMPONENTS) COMPLETE W/ VFD'S, BYPASSES, PILOT LIGHTS, TEMPERATURE CONTROL, HOA, ALARMS, BMS INTERFACE, REQUIRED TRANSFORMERS, ETC… REFER TO ELECTRICAL PLANS FOR RATINGS & COORDINATE WITH E.C.
2. PROVIDE WITH MAKE-UP WATER VALVE w/ ADJUSTMENT FLOAT, ELECTRIC BASIN HEATER, LOW PRESSURE DROP EXIT STRAINERS, GALV. FAN GUARD, ACCESS DOOR, M2S-1E VIBRATION ISOLATORS W/ INTEGRAL SEISMIC RESTRAINT & INTERNAL ADJUSTMENT FOR 1" DEFLECTION, INTERNAL WALKWAY WITH ACCESS DOORS AT EACH SIDE, VIBRATION CUT-OUT SWITCH WITH REMOTE RESET, FACTORY AUTHORIZED SUPERVISION OF STARTUP & COMMISSIONING AND FACTORY WARRANTY.
3. PROVIDE WITH INTERNAL WALKWAY FOR SERVICE.
4. PROVIDE 1 YEAR SERVICE CONTRACT.
5. PROVIDE WITH PULSE PURE WATER TREATMENT SYSTEM (FORMERLY DOLPHIN, NOW EVAPCO). APPROVED ALTERNATE IS FLOW-TECH. CONTRACTOR TO INSTALL WATER TREATMENT SYSTEM IN 1ST FLOOR MECHANICAL ROOM ON CONDENSER WATER PIPE LOOP. PROVIDE NEW SECTION OF 8" DIA. x 3' LONG SCHEDULE 40 STEEL PIPE CONNECTED TO EXISTING CONDENSER WATER PIPE LOOP. INCLUDE ALL APPURTENANT HARDWARE & INSTALL SYSTEM AS PER MFGRS INSTALLATION INSTRUCTIONS. (A)

FAN SCHEDULE

(BASED ON GREENHECK OR APPROVED EQUAL)

SYMBOL	TYPE	MODEL	TYPE	DRIVE	CFM	ESP (IN)	MOTOR DATA		NOTES
							HP	VOLTAGE	
REF-2	EXHAUST	GB-220-7	ROOF	DIRECT	4150	.50	3/4	208V/3Ø *	1,2
REF-3	EXHAUST	GB-220-7	ROOF	DIRECT	4150	.50	3/4	208V/3Ø *	1,2
REF-4	EXHAUST	GB-220-7	ROOF	DIRECT	4075	.50	3/4	208V/3Ø *	1,2
EF-6	EXHAUST	CSW-9-BI-21	UTILITY	DIRECT	400	.375	1/4	120V/1Ø *	1,4
EF-7	EXHAUST	G-099-VG	ROOF	DIRECT	825	.50	1/4	120V/1Ø *	1,2
EF-8	EXHAUST	G-099-VG	ROOF	DIRECT	825	.50	1/4	120V/1Ø *	1,2
RAF-1	RETURN	QEID-27-90-B75	INLINE	DIRECT	14,400	1.25"	7.5	208V/3Ø *	1,3

NOTES:
1. PROVIDE STARTER & DISCONNECT. REFER TO ELECTRICAL PLANS FOR RATINGS & COORDINATE WITH E.C.
2. PROVIDE WITH 12"H INSULATED ROOF CURB, MOTORIZED BACKDRAFT DAMPER & UNIT MOUNTED SPEED CONTROLLER.
3. PROVIDE WITH BACKDRAFT DAMPER, EXTERIOR CONSTRUCTION, MOTOR COBER, NEMA-3R DISCONNECT & VFD.
4. PROVIDE UPBLAST DISCHARGE, MOTOR COVER, OUTLET GUARD, PERMATECTOR COATING, & EQUIPMENT SUPPORTS

* FIELD CONFIRM AND MATCH EXISTING VOLTAGE.

ROOF HOOD SCHEDULE

(BASED ON GREENHECK OR APPROVED EQUAL)

SYMBOL	MODEL	CFM	TYPE	THROAT		NOTES
				SIZE	SQFT	
RH-1	WRH LOUVERED PENTHOUSE	-	RELIEF	28x28	5.4	* 1
RH-2	WRH LOUVERED PENTHOUSE	-	RELIEF	28x28	5.4	* 1
RH-3	WRH LOUVERED PENTHOUSE	-	RELIEF	174x22	26.5	* 1
RH-4	GRS-12	750	INTAKE	12.25"Ø	2.52	* 2
RH-5	GRS-12	750	INTAKE	12.25"Ø	2.52	* 2
RH-6	GRS-12	750	INTAKE	12.25"Ø	2.52	* 2

NOTES:
1. PROVIDE WITH 12"H INSULATED ROOF CURB, BIRDSCREEN & WEIGHTED BAROMETRIC DAMPER (.05"WC) .
2. PROVIDE WITH 12"H INSULATED ROOF CURB, 120V MOTORIZED DAMPER (INTERLOCKED W/ ASSOCIATED UNIT VENTILATOR) AND BIRDSCREEN.

* FIELD CONFIRM SIZES AND MATCH EXISTING DIMENSIONS

Alternate Work B - Refer to Bid Form for Pricing Information

CERTIFICATION :

WILLIAM T. MAYER III
STATE OF RHODE ISLAND
No. 7860
REGISTERED PROFESSIONAL ENGINEER
MECHANICAL

THIS DRAWING IS A PART OF AN INTEGRATED SET OF CONSTRUCTION CONTRACT DOCUMENTS. REFER TO ALL DRAWINGS AND SPECIFICATIONS INCLUDING BUT NOT LIMITED TO "GENERAL CONDITIONS" "SUMMARY OF WORK", AND ANY APPLICABLE MANUFACTURERS TECHNICAL SPECIFICATIONS.

REFER TO ALL DRAWINGS FOR COMPLETE SCOPE OF WORK.

THIS DRAWING IS NOT TO BE SCALED OR USED AS AN AS-BUILT.

REV. NO.	DATE	DESCRIPTION
	10.10.18	ISSUED FOR STATE REVIEW
A	10.19.18	ISSUED FOR BID

ENGINEERING DESIGN SERVICES INCORPORATED
141 Industrial Highway Slatersville, RI 02876
Tel (401) 765-7659 Fax (401) 765-2984

PROJECT NAME:
RIC
ADAMS LIBRARY
HVAC UPGRADES

SHEET TITLE:
MECHANICAL SCHEDULES & DETAILS

JOB NO.: 180202UC
DRAWN BY: KB
CHECKED BY: WM
DATE ISSUED: 10.19.2018
SCALE: AS NOTED

SHEET NO.:
M6.0

TYPICAL ELECTRICAL NOTES

1. FURNISH LABOR, MATERIALS, EQUIPMENT AND SERVICES NECESSARY FOR THE PROPER AND COMPLETE INSTALLATION OF ALL ELECTRIC WORK SHOWN ON THE DRAWINGS AND HEREIN SPECIFIED.
2. ALL ITEMS NOT SHOWN ON THE DRAWINGS OR CALLED FOR IN THE SPECIFICATIONS, BUT WHICH ARE NECESSARY TO MAKE A COMPLETE ELECTRICAL INSTALLATION, SHALL BE FURNISHED AND INSTALLED AS PART OF THIS PROJECT.
3. ALL ELECTRICAL INSTALLATIONS AND GROUNDING SHALL BE IN STRICT ACCORDANCE WITH THE LATEST REQUIREMENTS OF THE LOCAL, STATE AND NATIONAL CODES.
4. OBTAIN AND PAY FOR ALL REQUIRED PERMITS AND INSPECTIONS.
5. MATERIALS AND WORKMANSHIP SHALL BE THE BEST OF THEIR RESPECTIVE KIND AND IN FULL ACCORDANCE WITH THE MOST MODERN ELECTRICAL CONSTRUCTION STANDARDS. ALL MATERIAL SHALL BE NEW, UNLESS OTHERWISE NOTED AND FREE OF ANY DEFECTS.
6. THE ELECTRICAL CONTRACTOR SHALL CLEAN AT THE END OF EACH DAY ALL AREAS WORKED IN. EMPTY BOXES, RUBBISH, AND OTHER CONSTRUCTION MATERIALS OF NO USE SHALL BE REMOVED FROM THE BUILDING.
7. ALL WORK SEQUENCES SHALL BE COORDINATED WITH THE G.C. AND SHALL BE COORDINATION WITH OTHER BUILDING TRADES AND G.C. BUILDING SCHEDULES.
8. ALL BRANCH CIRCUITS RATED AT 120 VOLTS, 20 AMPERES EXCEEDING 75 FEET SHALL BE MINIMUM #10 AWG.
9. THE ELECTRICAL CONTRACTOR (E.C.) SHALL COORDINATE WITH THE LOCAL UTILITY POWER COMPANY AND PROVIDE ALL MATERIAL & LABOR REQUIRED TO COMPLY WITH THE UTILITY POWER COMPANY'S REQUIREMENTS AND STANDARDS, PRIOR TO ORDERING ANY ELECTRICAL EQUIPMENT, SUCH AS, SWITCHGEAR, PANELS, TRANSFORMERS, DISCONNECT SWITCHES, ETC... E.C. SHALL CONFIRM METERING SEQUENCE (HOT OR COLD) AND MAKE THE APPROPRIATE PROVISIONS FOR THE APPROVED METERING SEQUENCE ARRANGEMENT. A.I.C. RATINGS, GROUNDING, BONDING, RACEWAYS, ETC... SHALL BE IN ACCORDANCE WITH THE UTILITY COMPANY'S STANDARDS.
10. THE ELECTRICAL CONTRACTOR (E.C.) SHALL COORDINATE WITH THE LOCAL TELEPHONE COMPANY AND PROVIDE ALL MATERIAL & LABOR REQUIRED TO COMPLY WITH THE TELEPHONE COMPANY'S REQUIREMENTS AND STANDARDS, PRIOR TO ODERING ANY ELECTRICAL EQUIPMENT, SUCH AS, TERMINAL BOARDS, GROUNDING, RACEWAYS, ETC...
11. ALL RECEPTACLE WITH "WP" DESIGNATION SHALL BE PROVIDED WITH A WEATHER-PROOF WHILE IN-USE ENCLOSURE. (TYPICAL)
12. ELECTRICAL CONTRACTOR TO ALLOW TIME FOR DIRECTIONAL ADJUSTMENT OF ALL LIGHT FIXTURES AS DIRECTED BY OWNER.
13. ALL RECEPTACLES SHALL BE LABELED INDICATING THEIR RESPECTIVE PANEL & CIRCUIT NUMBER.
14. AT EXISTING FLOOR SLABS AND WALLS TO BE CORE-DRILLED OR CUT, THE CONTRACTOR SHALL FIND AND MARK ALL EXISTING REINFORCING, PIPING, CONDUIT & FEEDERS, ETC IN BOTH FACES LOCATED BY MEANS OF X-RAY, PACH-OMETER, OR PROFOMETER. SUBMIT DRAWING SHOWING LOCATIONS OF EXISTING REBAR, PIPING AND/OR CONDUIT AND PROPOSED CORES AND/OR CUTS FOR REVIEW.
15. ALL PENETRATIONS FOR POWER RECEPTACLES, JUNCTION BOXES, TELEPHONE/DATA OUTLETS, SWITCHES, BACKBOXES, ETC.. LOCATED IN EXTERIOR WALLS SHALL BE PROVIDED WITH APPROPRIATE CAULKING AND GASKETS TO SEAL OFF AND PREVENT AIR LEAKAGE. FOLLOW CAULKING AND GASKET MANUFACTURERS INSTALLATION GUIDELINES TO ENSURE CORRECT AND EFFECTIVE INSTALLATION.

SEISMIC RESTRAINT NOTE

A. GENERAL: IT IS THE INTENT OF THIS SEISMIC SPECIFICATION TO KEEP ALL ELECTRIAL BUILDING SYSTEM COMPONENTS IN PLACE DURING A SEISMIC EVENT. ALL ELECTRICAL SYSTEMS MUST BE INSTALLED IN STRICT ACCORDANCE WITH SEISMIC CODES, COMPONENT MANUFACTURER'S AND BUILDING CONSTRUCTION STANDARDS. WHENEVER A CONFLICT OCCURS BETWEEN THE MANUFACTURER'S OR CONSTRUCTION STANDARDS, THE MOST STRINGENT SHALL APPLY.

B. THIS CONTRACTOR SHALL ENGAGE A PROFESSIONAL STRUCTURAL ENGINEER REGISTERED IN THE JURISDICTION OF THIS PROJECT TO REVIEW THE ENTIRE INSTALLATION TO DETERMINE ALL SEISMIC RESTRAINT REQUIREMENTS AND METHODS. CONTRACTOR SHALL SUBMIT A REPORT OUTLINING THE STRUCTURAL ENGINEER'S REVIEW AS WELL AS SEISMIC RESTRAINT SHOP DRAWINGS AND SUPPORTING CALCULATIONS PREPARED BY THE PROFESSIONAL STRUCTURAL ENGINEER FOR REVIEW BY THE ARCHITECT.

C. SEISMIC RESTRAINTS SHALL BE DESIGNED IN ACCORDANCE WITH SEISMIC FORCE LEVELS AS DETAILED IN THE APPLICABLE BUILDING CODE.

1. ALL EQUIPMENT, CONDUIT AND PULL BOXES SHALL BE ADEQUATELY RESTRAINED TO RESIST SEISMIC FORCES. RESTRAINT DEVICES SHALL BE DESIGNED AND SELECTED TO MEET SEISMIC REQUIREMENTS AS DEFINED IN THE LATEST ISSUE OF THE BOCA NATIONAL BUILDING CODE IN ACCORDANCE WITH THE APPLICABLE SEISMIC ZONE.
2. ANCHOR BOLT CALCULATORS, SIGNED AND STAMPED BY A REGISTERED PROFESSIONAL ENGINEER, SHALL BE SUBMITTED SHOWING ADEQUACY OF THE BOLT SIZING AND TYPE. STAMPED CALCULATIONS SHALL ALSO BE FURNISHED FOR ANCHORS ON RESTRAINT DEVICES, CABLES, ISOLATORS AND RIGIDLY MOUNTED EQUIPMENT.

TYPICAL FIRE STOPPING NOTES

A. GENERAL: FIRE STOPPING SHALL BE PROVIDED BY THIS CONTRACTOR FOR ALL FLOOR, CEILING AND FIRE RATED WALL PENETRATIONS FOR CONDUIT, SLEEVES AND/OR CABLING AS REQUIRED BY JOB CONDITIONS.

B. THE CONTRACTOR SHALL PROVIDE A FIRE STOP SYSTEM IN ACCORDANCE WITH THE FOLLOWING:

1. THE SYSTEM SHALL CONSIST OF A WATERBASED SEALANT AND SUITABLE DAMMING MATERIALS (WHERE REQUIRED) AND BE INSTALLED PER MANUFACTURER'S REQUIREMENTS.
2. THE SEALANT SUPPLIED SHALL BE A TWO STAGED INTUMESCENT AND CAPABLE OF EXPANDING UP TO 8 TIMES ITS ORIGINAL VOLUME.
3. THE SEALANT SUPPLIED SHALL CONTAIN NO ASBESTOS, NO FIBERGLASS, AND NO SOLVENTS NOT CORROSIVE MINERAL SALTS OF ANY KIND.
4. THE SEALANT SHALL FORM A SURFACE CAPABLE OF BEING SANDED AND PAINTED TO MATCH SURROUNDING SURFACES AND SHALL BE IMPERVIOUS TO WATER WHEN DRY.
5. THE FIRE STOP SYSTEM SHALL BE TESTED TO THE TIME/TEMPERATURE REQUIREMENTS OF ASTM E119 AND SHALL BE UL1479 (ASTM E814) AND CLASSIFIED FOR UP TO 3 HOURS.
6. THE FIRE STOP SEALANT SHALL BE SPECSEAL SEALANT AS MANUFACTURED BY SPECIFIED TECHNOLOGIES, INC. OR APPROVED EQUAL.
7. SPECIAL CARE SHALL BE TAKEN WITH ELECTRICAL SYSTEMS NOT TO COMPROMISE ANY OF THE BUILDING FIRE PARTITIONS, FLOORS, WALLS OR MEMBRANES. PROVIDE ALL FIRESTOPPING REQUIRED TO COMPLY WITH THE BUILDING CODE, THE ELECTRICAL CODE AND THE UL LISTING OF EACH ASSEMBLY. COORDINATE LOCATIONS AND TYPES OF MEMBRANES WITH ARCHITECT.

MECHANICAL EQUIPMENT ELECTRICAL CONNECTION SCHEDULE

XXX ## ITEM No.	DESCRPITION	LOCATION	EQUIPMENT CHARACTERISTICS					CIRCUIT	CIRCUIT BREAKER (HACR TYPE)	FEEDER & CONDUIT	DISCONNECT SWITCH				MANUAL MOTOR CONTROLLER	REMARKS
			VOLTS	PH	FREQ.	(KW)/HP	FLA				SIZE	FUSE	POLES	NEMA		
CT-1	COOLING TOWER	ROOF	208	3	60	-	113.0	EXIST	150A/3P	3#1/0 + 1#8 GND. IN 1-1/2" C.	200	150	3	3R	PROVIDE "WP" DISCONNECT SWITCH WITH FUSING AS INDICATED.	SEE KEYED NOTE "I" FOR ADDITIONAL INFORMATION.
REF-2	EXHAUST FAN	ROOF	208	3	60	3/4	-	EXISTING CIRCUIT BREAKER MADE FREE DURING DEMOLITION SHALL BE RE-USED TO FEED NEW HVAC EQUIPMENT.		3#12 + 1#12G. IN 3/4" C.	30	15	3	3R	PROVIDE "WP" DISCONNECT SWITCH WITH FUSING AS INDICATED.	E.C. SHALL PROVIDE NEW WIRING AND DISCONNECT SWITCH AS INDICATED ON THIS SCHEDULE. E.C. SHALL VERIFY EXACT LOCATION OF BREAKERS IN FIELD.
REF-3	EXHAUST FAN	ROOF	208	3	60	3/4	-			3#12 + 1#12G. IN 3/4" C.	30	15	3	3R	PROVIDE "WP" DISCONNECT SWITCH WITH FUSING AS INDICATED.	
REF-4	EXHAUST FAN	ROOF	208	3	60	3/4	-			3#12 + 1#12G. IN 3/4" C.	30	15	3	3R	PROVIDE "WP" DISCONNECT SWITCH WITH FUSING AS INDICATED.	
EF-6	EXHAUST FAN	ROOF	120	1	60	1/4	-			2#12 + 1#12G. IN 3/4" C.	-	-	-	-	PROVIDE WEATHERPROOF MOTOR RATED TOGGLE SWITCH WITH THERMAL OVERLOADS.	
EF-7	EXHAUST FAN	ROOF	120	1	60	1/4	-			2#12 + 1#12G. IN 3/4" C.	-	-	-	-	PROVIDE WEATHERPROOF MOTOR RATED TOGGLE SWITCH WITH THERMAL OVERLOADS.	
EF-8	EXHAUST FAN	ROOF	120	1	60	1/4	-			2#12 + 1#12G. IN 3/4" C.	-	-	-	-	PROVIDE WEATHERPROOF MOTOR RATED TOGGLE SWITCH WITH THERMAL OVERLOADS.	
RAF-1	RETURN FAN	ROOF	208	3	60	7.5	-			3#8 + 1#10G. IN 3/4" C.	-	-	-	-	PROVIDE WEATHERPROOF MOTOR RATED TOGGLE SWITCH WITH THERMAL OVERLOADS.	

NOTES:

1. COORDINATE WITH HVAC CONTRACTOR & DRAWINGS FOR EXACT LOCATIONS OF ALL MECHANICAL EQUIPMENT PRIOR TO INSTALLING ELECTRICAL COMPONENTS.
2. COORDINATE WITH PLUMBING CONTRACTOR & DRAWINGS FOR EXACT LOCATIONS OF ALL PLUMBING EQUIPMENT PRIOR TO INSTALLING ELECTRICAL COMPONENTS.
3. ALL DISCONNECTING MEANS SHALL BE SUPPLIED AND INSTALLED BY THE ELECTRICAL CONTRACTOR.
4. ALL STARTERS, VFD'S ETC. SHALL BE SUPPLIED AND INSTALLED BY THE MECHANICAL CONTRACTOR. ELECTRICAL CONTRACTOR SHALL WIRE ALL HVAC EQUIPMENT.
5. ALL HVAC CONTROL WIRING SHALL BE PROVIDED BY OTHERS.

Alternate Work B - Refer to Bid Form for Pricing Information

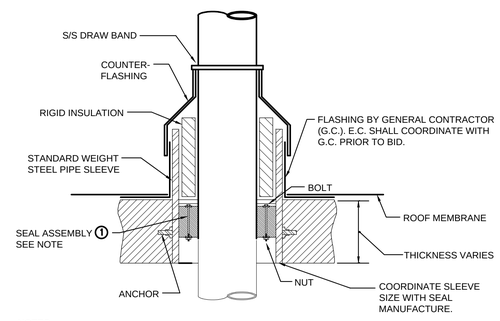

NOTES:

1. SEAL ASSEMBLY SHALL BE MODULAR MECHANICAL TYPE CONSISTING OF INTERLOCKING RUBBER LINK SHAPE TO CON-TENUOUSLY FILL IN THE ANNULAR SPACE BETWEEN PIPE OPENING. PRESSURE PLATES SHALL BE DELRIN PLASTIC. BOLTS AND NUTS SHALL BE 18.8 STAINLESS STEEL. SEALING ELEMENT SHALL BE EPDM RUBBER.
2. E.C. SHALL COORDINATE WITH ARCHITECT, OWNER AND EXISTING ROOF MANUFACTURER (IF APPLICABLE) AND PROVIDE ALL LABOR & MATERIAL FOR ELECTRICAL PENETRATIONS. ALL PENETRATIONS SHALL BE COORDINATED WITH ROOFING MANUFACTURER AS NOT TO VOID ANY EXISTING ROOF WARRANTIES.

CONDUIT THRU ROOF DETAIL

NOT TO SCALE

ABBREVIATIONS

A	AMPERES
ADA	AMERICANS WITH DISABILITIES ACT
AMPS	AMPERES
AFF	ABOVE FINISHED FLOOR
A/C	AIR CONDITIONING
AWG	AMERICAN WIRE GAGE
C	CONDUIT
C/B	CIRCUIT BREAKER
CF	COMPACT FLUORESCENT
CLG	CEILING
℄	CENTERLINE
DN	DOWN
DWG	DRAWING
E.C.	ELECTRICAL CONTRACTOR
EQ	EQUAL
ETR	EXISTING TO REMAIN
ER	EXISTING TO BE REMOVED
ERL	EXISTING TO BE RE-LOCATED
F.A.	FIRE ALARM
FACP	FIRE ALARM CONTROL PANEL
FLR	FLOOR
G.C.	GENERAL CONTRACTOR
GFCI	GROUND FAULT CIRCUIT INTERUPTER.
G	GROUND
GND	GROUND
HVAC	HEATING, VENTILATING, & & AIR CONDITIONING
JB	JUNCTION BOX
KVA	KILOVOLT-AMPERES
KW	KILOWATT
LTG	LIGHTING
MAX	MAXIMUM
M.C.	MECHANICAL CONTRACTOR
MECH	MECHANICAL
MIN	MINIMUM
MTD	MOUNTED
NAC	F.A. NOTIFICATION APPLIANCE CIRCUIT EXPANDER PANEL
NEC	NATIONAL ELECTRICAL CODE
NTS	NOT TO SCALE
P	POLE
P.C.	PLUMBING CONTRACTOR
PNL	PANEL
RE	RE-LOCATED DEVICE OR EQUIPMENT SHOWN IN NEW LOCATION
TYP	TYPICAL
UL	UNDERWRITERS LABATORY
UON	UNLESS OTHERWISE NOTED
UPS	UNINTERRUPTIBLE POWER SUPPLY
V	VOLTS
W	WATTS
WP	WEATHER-PROOF

CERTIFICATION :

RAYMOND W. DUSSEAULT III
STATE OF RHODE ISLAND
No. 7139
REGISTERED PROFESSIONAL ENGINEER (ELECTRICAL)

THIS DRAWING IS A PART OF AN INTEGRATED SET OF CONSTRUCTION CONTRACT DOCUMENTS. REFER TO ALL DRAWINGS AND SPECIFICATIONS INCLUDING BUT NOT LIMITED TO "GENERAL CONDITIONS", "SUMMARY OF WORK", AND ANY APPLICABLE MANUFACTURERS TECHNICAL SPECIFICATIONS.

REFER TO ALL DRAWINGS FOR COMPLETE SCOPE OF WORK.

THIS DRAWING IS NOT TO BE SCALED OR USED AS AN AS-BUILT.

REV. NO.	DATE	DESCRIPTION
	10.10.18	ISSUED FOR STATE REVIEW
A	10.19.18	ISSUED FOR BID

ENGINEERING DESIGN SERVICES INCORPORATED
141 Industrial Highway Slatersville, RI 02876
Tel (401) 765-7659 Fax (401) 765-2984

PROJECT NAME:

RIC ADAMS LIBRARY HVAC UPGRADES

SHEET TITLE:

ELECTRICAL
LEGENDS, NOTES AND DETAILS

JOB NO.: 180202UC

DRAWN BY: MJD

CHECKED BY: RWD

DATE ISSUED: 10.19.2018

SCALE: AS NOTED

SHEET NO.:

E0.0

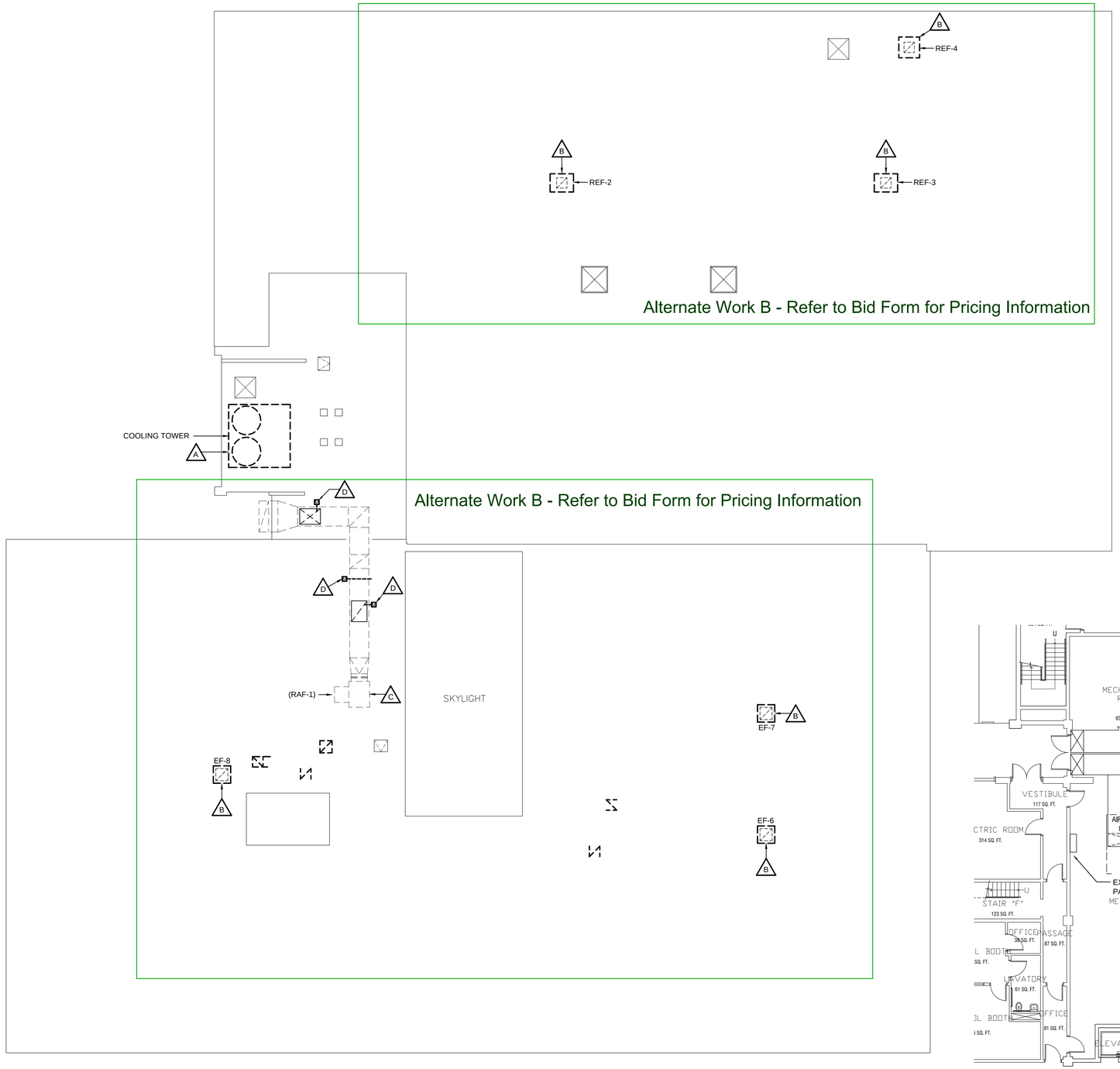

1 / E1.0 ROOF DEMOLITION PLAN
SCALE: 3/32"=1'-0"

KEYED NOTES:

A. E.C. SHALL REMOVE ALL WIRING AND DISCONNECTS ASSOCIATED WITH EXISTING COOLING TOWER. WIRING SHALL BE COMPLETELY REMOVED AND ALL DISCONNECTS AND WIRING REMOVED SHALL BE DISPOSED OF APPROPRIATELY. BREAKER(S) FEEDING COOLING TOWER SHALL BE REMOVED AND COVERED FOR FUTURE USE.

B. E.C. SHALL REMOVE ALL WIRING AND DISCONNECTS ASSOCIATED WITH EXISTING EXHAUST FAN. WIRING SHALL BE COMPLETELY REMOVED AND ALL WIRING AND DISCONNECTS SHALL BE DISPOSED OF APPROPRIATELY. CIRCUIT BREAKER FEEDING REMOVED EQUIPMENT SHALL REMAIN AND BE RE-USED FOR NEW EXHAUST FANS TO BE INSTALLED.

C. E.C. SHALL REMOVE ALL WIRING AND DISCONNECTS ASSOCIATED WITH EXISTING INLINE EXHAUST FAN. WIRING SHALL BE COMPLETELY REMOVED AND ALL WIRING AND DISCONNECTS SHALL BE DISPOSED OF APPROPRIATELY. CIRCUIT BREAKER FEEDING REMOVED EQUIPMENT SHALL REMAIN AND BE RE-USED FOR NEW INLINE EXHAUST FAN TO BE INSTALLED.

D. E.C. SHALL REMOVE ALL WIRING AND DISCONNECTS ASSOCIATED WITH EXISTING MOTORIZED DAMPER. WIRING SHALL BE COMPLETELY REMOVED AND ALL WIRING AND DISCONNECTS SHALL BE DISPOSED OF APPROPRIATELY. CIRCUIT BREAKER FEEDING REMOVED EQUIPMENT SHALL REMAIN AND BE RE-USED FOR NEW MOTORIZED DAMPER TO BE INSTALLED.

E. E.C. SHALL POWER NEW MOTORIZED DAMPERS. DAMPERS SHALL BE FED UTILIZING EXISTING BREAKERS MADE FREE DURING DEMOLITION. E.C. SHALL PROVIDE NEW WIRING CONSISTING OF: 2#12+1#12G IN 3/4" CONDUITS. VERIFY EXACT LOCATION OF DAMPERS IN FIELD.

F. E.C. SHALL PROVIDE POWER FOR NEW HEAT TRACE. E.C. SHALL USE EXISTING SPARE 20A, 1-POLE BREAKER LOCATED IN EXISTING 400A PANELBOARD. PROVIDE NEW WIRING CONSISTING OF: 2#12+1#12G IN 3/4" CONDUIT. E.C. SHALL VERIFY EXACT LOCATION OF PANELBOARD IN FIELD.

G. E.C. SHALL PROVIDE POWER FOR NEW MOTORIZED DAMPERS. E.C. SHALL USE EXISTING SPARE 20A, 1-POLE BREAKER LOCATED IN EXISTING 400A PANELBOARD. PROVIDE NEW WIRING CONSISTING OF: 2#12+1#12G IN 3/4" CONDUIT. E.C. SHALL VERIFY EXACT LOCATION OF PANELBOARD IN FIELD.

H. E.C. SHALL DISCONNECT ALL WIRING FEEDING EXISTING AIR HANDLING UNIT AND CAP WIRE ENDS DURING RENOVATION OF UNIT. UPON COMPLETION OF UNIT RENOVATION, E.C. SHALL RE-CONNECT EXISTING WIRING TO REFURBISHED AIR HANDLING UNIT.

I. E.C. SHALL PROVIDE POWER TO NEW COOLING TOWER. COOLING TOWER CIRCUIT SHALL BE FED FROM SPACE MADE AVAILABLE DURING DEMOLITION OF EXISTING COOLING TOWER. E.C. SHALL COORDINATE EXACT BREAKER REQUIREMENTS WITH OWNER, FACILITIES, AND PANELBOARD REPRESENTATIVES. NEW BREAKER SHALL BE COMPATIBLE WITH EXISTING PANELBOARD IN SPACE. PROVIDE BREAKER AND WIRING AS INDICATED ON MECHANICAL EQUIPMENT ELECTRICAL CONNECTION SCHEDULE. POWER SHALL BE FED TO NEW CONTROL PANEL AS INDICATED ON NEW WORK PLAN.

A J. E.C. SHALL PROVIDE NEW DEDICATED RECEPTACLE FOR NEW WATER TREATMENT EQUIPMENT. E.C SHALL PROVIDE A CIRCUIT RATED FOR 120V, 15A, 1-POLE WITH WIRING CONSISTING OF: 2#12+1#12G IN 3/4" CONDUIT. E.C. SHALL VERIFY EXACT NEMA CONFIGURATION OF RECEPTACLE WITH EQUIPMENT CUT SHEET.

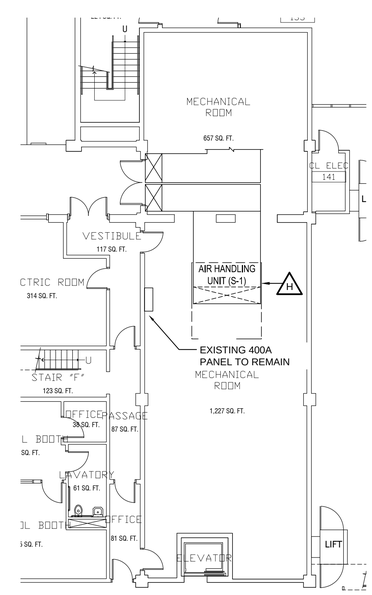

2 / E1.0 FIRST FLOOR MECHANICAL ROOM DEMO PLAN
SCALE: 3/32"=1'-0"

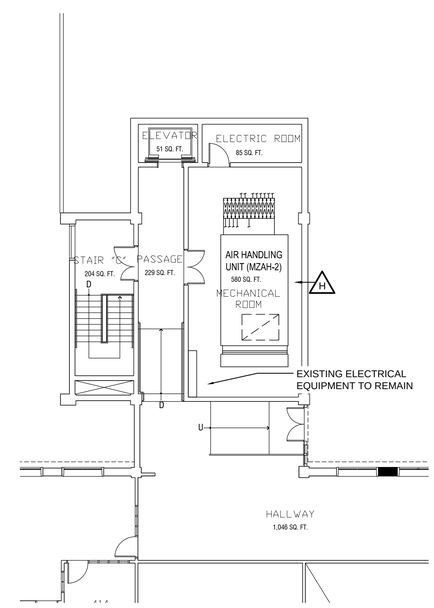

3 / E1.0 FOURTH FLOOR MECHANICAL ROOM DEMO PLAN
SCALE: 3/32"=1'-0"

CERTIFICATION :

RAYMOND W. DUSSEAULT III
STATE OF RHODE ISLAND
No. 7139
REGISTERED
PROFESSIONAL ENGINEER
(ELECTRICAL)

THIS DRAWING IS A PART OF AN INTEGRATED SET OF CONSTRUCTION CONTRACT DOCUMENTS. REFER TO ALL DRAWINGS AND SPECIFICATIONS INCLUDING BUT NOT LIMITED TO "GENERAL CONDITIONS", "SUMMARY OF WORK", AND ANY APPLICABLE MANUFACTURERS TECHNICAL SPECIFICATIONS.

REFER TO ALL DRAWINGS FOR COMPLETE SCOPE OF WORK.

THIS DRAWING IS NOT TO BE SCALED OR USED AS AN AS-BUILT.

REV. NO.	DATE	DESCRIPTION
	10.10.18	ISSUED FOR STATE REVIEW
A	10.19.18	ISSUED FOR BID

ENGINEERING DESIGN SERVICES INCORPORATED
141 Industrial Highway Slatersville, RI 02876
Tel (401) 765-7659 Fax (401) 765-2984

PROJECT NAME:

RIC ADAMS LIBRARY HVAC UPGRADES

SHEET TITLE:

ELECTRICAL DEMOLITION PLAN

JOB NO.:	180202UC
DRAWN BY:	MJD
CHECKED BY:	RWD
DATE ISSUED:	10.19.2018
SCALE:	AS NOTED

SHEET NO.:

E1.0

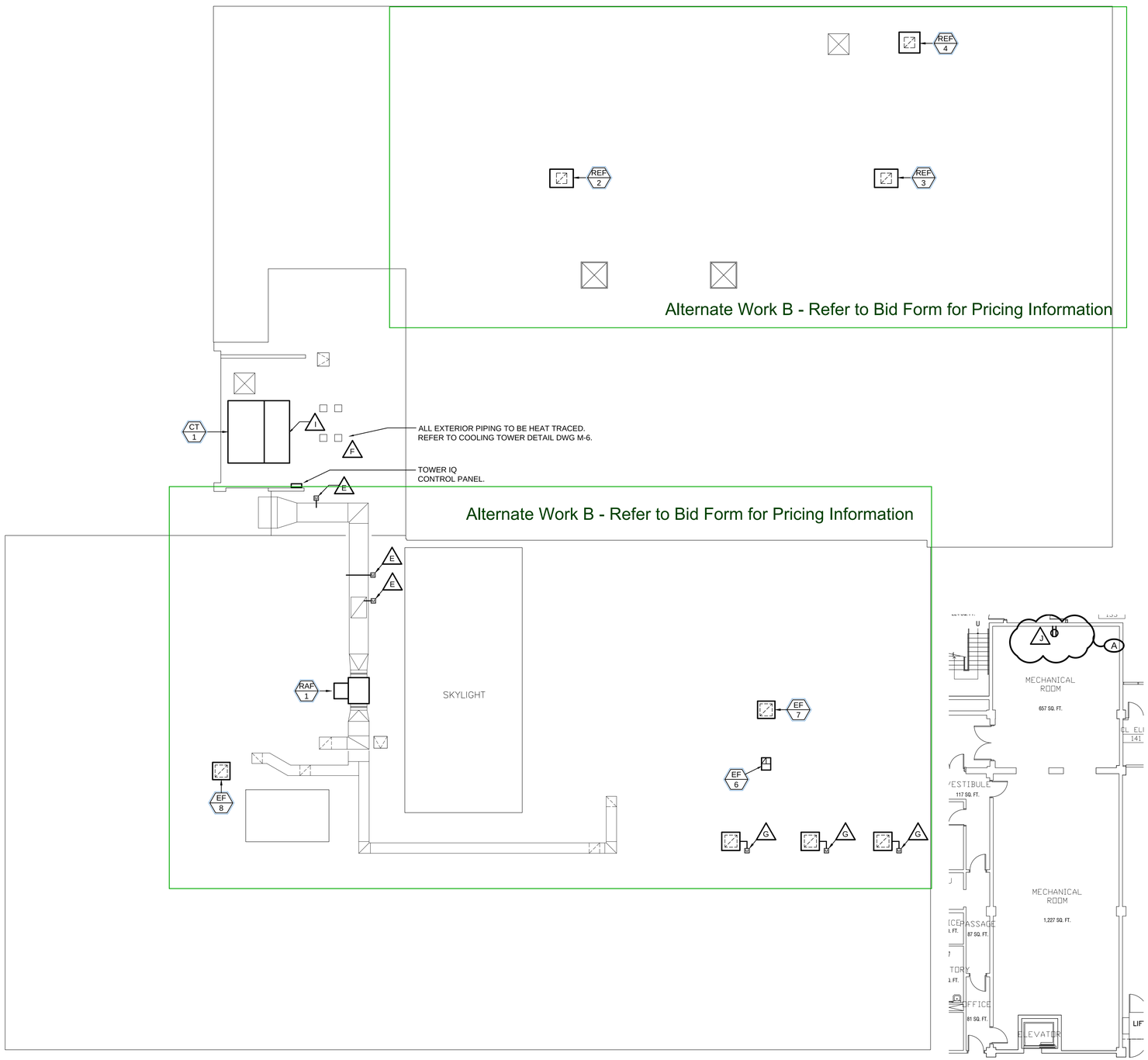

1 / E2.0 ROOF NEW WORK PLAN
SCALE: 3/32"=1'-0"

2 / E2.0 FIRST FLOOR MECHANICAL ROOM PLAN
SCALE: 3/32"=1'-0"

KEYED NOTES:

A. E.C. SHALL REMOVE ALL WIRING AND DISCONNECTS ASSOCIATED WITH EXISTING COOLING TOWER. WIRING SHALL BE COMPLETELY REMOVED AND ALL DISCONNECTS AND WIRING REMOVED SHALL BE DISPOSED OF APPROPRIATELY. BREAKER(S) FEEDING COOLING TOWER SHALL BE REMOVED AND COVERED FOR FUTURE USE.

B. E.C. SHALL REMOVE ALL WIRING AND DISCONNECTS ASSOCIATED WITH EXISTING EXHAUST FAN. WIRING SHALL BE COMPLETELY REMOVED AND ALL WIRING AND DISCONNECTS SHALL BE DISPOSED OF APPROPRIATELY. CIRCUIT BREAKER FEEDING REMOVED EQUIPMENT SHALL REMAIN AND BE RE-USED FOR NEW EXHAUST FANS TO BE INSTALLED.

C. E.C. SHALL REMOVE ALL WIRING AND DISCONNECTS ASSOCIATED WITH EXISTING INLINE EXHAUST FAN. WIRING SHALL BE COMPLETELY REMOVED AND ALL WIRING AND DISCONNECTS SHALL BE DISPOSED OF APPROPRIATELY. CIRCUIT BREAKER FEEDING REMOVED EQUIPMENT SHALL REMAIN AND BE RE-USED FOR NEW INLINE EXHAUST FAN TO BE INSTALLED.

D. E.C. SHALL REMOVE ALL WIRING AND DISCONNECTS ASSOCIATED WITH EXISTING MOTORIZED DAMPER. WIRING SHALL BE COMPLETELY REMOVED AND ALL WIRING AND DISCONNECTS SHALL BE DISPOSED OF APPROPRIATELY. CIRCUIT BREAKER FEEDING REMOVED EQUIPMENT SHALL REMAIN AND BE RE-USED FOR NEW MOTORIZED DAMPER TO BE INSTALLED.

E. E.C. SHALL POWER NEW MOTORIZED DAMPERS. DAMPERS SHALL BE FED UTILIZING EXISTING BREAKERS MADE FREE DURING DEMOLITION. E.C. SHALL PROVIDE NEW WIRING CONSISTING OF: 2#12+1#12G IN 3/4" CONDUITS. VERIFY EXACT LOCATION OF DAMPERS IN FIELD.

F. E.C. SHALL PROVIDE POWER FOR NEW HEAT TRACE. E.C. SHALL USE EXISTING SPARE 20A, 1-POLE BREAKER LOCATED IN EXISTING 400A PANELBOARD. PROVIDE NEW WIRING CONSISTING OF: 2#12+1#12G IN 3/4" CONDUIT. E.C. SHALL VERIFY EXACT LOCATION OF PANELBOARD IN FIELD.

G. E.C. SHALL PROVIDE POWER FOR NEW MOTORIZED DAMPERS. E.C. SHALL USE EXISTING SPARE 20A, 1-POLE BREAKER LOCATED IN EXISTING 400A PANELBOARD. PROVIDE NEW WIRING CONSISTING OF: 2#12+1#12G IN 3/4" CONDUIT. E.C. SHALL VERIFY EXACT LOCATION OF PANELBOARD IN FIELD.

H. E.C. SHALL DISCONNECT ALL WIRING FEEDING EXISTING AIR HANDLING UNIT AND CAP WIRE ENDS DURING RENOVATION OF UNIT. UPON COMPLETION OF UNIT RENOVATION, E.C. SHALL RE-CONNECT EXISTING WIRING TO REFURBISHED AIR HANDLING UNIT.

I. E.C. SHALL PROVIDE POWER TO NEW COOLING TOWER. COOLING TOWER CIRCUIT SHALL BE FED FROM SPACE MADE AVAILABLE DURING DEMOLITION OF EXISTING COOLING TOWER. E.C. SHALL COORDINATE EXACT BREAKER REQUIREMENTS WITH OWNER, FACILITIES, AND PANELBOARD REPRESENTATIVES. NEW BREAKER SHALL BE COMPATIBLE WITH EXISTING PANELBOARD IN SPACE. PROVIDE BREAKER AND WIRING AS INDICATED ON MECHANICAL EQUIPMENT ELECTRICAL CONNECTION SCHEDULE. POWER SHALL BE FED TO NEW CONTROL PANEL AS INDICATED ON NEW WORK PLAN.

A J. E.C. SHALL PROVIDE NEW DEDICATED RECEPTACLE FOR NEW WATER TREATMENT EQUIPMENT. E.C SHALL PROVIDE A CIRCUIT RATED FOR 120V, 15A, 1-POLE WITH WIRING CONSISTING OF: 2#12+1#12G IN 3/4" CONDUIT. E.C. SHALL VERIFY EXACT NEMA CONFIGURATION OF RECEPTACLE WITH EQUIPMENT CUT SHEET.

GENERAL NOTES:

BUILDING ELECTRICAL INFRASTRUCTURE RENOVATIONS OR ADDITIONS ARE NOT PART OF THIS SCOPE OF WORK.

E.C. SHALL COORDINATE LOCATIONS OF ALL MECHANICAL EQUIPMENT WITH HVAC CONTRACTOR PRIOR TO ANY WORK.

ALL HVAC EQUIPMENT SUPPLYING 2000 CFM OR GREATER REQUIRE A DUCT SMOKE DETECTOR ON THE SUPPLY AND RETURN DUCTWORK AS WELL AS A SHUT-DOWN RELAY TIED TO THE EXISTING FIRE ALARM CONTROL PANEL. E.C. SHALL FIELD VERIFY EXACT SMOKE DETECTOR MOUNTING AND WIRING IN FIELD. ALL NEW FIRE ALARM DEVICES SHALL BE COMPATIBLE WITH EXISTING FIRE ALARM CONTROL PANEL. FIRE ALARM CONTROL PANEL IS LOCATED ON THE FIRST FLOOR IN THE VESTIBULE. E.C. SHALL VERIFY EXACT LOCATION OF FIRE ALARM CONTROL PANEL IN FIELD.

EXISTING 400A PANELBOARD REFERENCE ON THESE DRAWINGS IS LOCATED ON THE FIRST FLOOR OF THE BUILDING IN THE MECHANICAL ROOM. FIELD VERIFY EXACT LOCATION OF PANEL IN FIELD.

CERTIFICATION :

RAYMOND W. DUSSEAULT III
STATE OF RHODE ISLAND
No. 7139
REGISTERED
PROFESSIONAL ENGINEER
(ELECTRICAL)

THIS DRAWING IS A PART OF AN INTEGRATED SET OF CONSTRUCTION CONTRACT DOCUMENTS. REFER TO ALL DRAWINGS AND SPECIFICATIONS INCLUDING BUT NOT LIMITED TO "GENERAL CONDITIONS" "SUMMARY OF WORK", AND ANY APPLICABLE MANUFACTURERS TECHNICAL SPECIFICATIONS.

REFER TO ALL DRAWINGS FOR COMPLETE SCOPE OF WORK.

THIS DRAWING IS NOT TO BE SCALED OR USED AS AN AS-BUILT.

REV. NO.	DATE	DESCRIPTION
	10.10.18	ISSUED FOR STATE REVIEW
A	10.19.18	ISSUED FOR BID

ENGINEERING DESIGN SERVICES INCORPORATED
141 Industrial Highway Slatersville, RI 02876
Tel (401) 765-7659 Fax (401) 765-2984

PROJECT NAME:
RIC
ADAMS LIBRARY
HVAC UPGRADES

SHEET TITLE:
ELECTRICAL
ROOF NEW WORK PLAN

JOB NO.: 180202UC
DRAWN BY: MJD
CHECKED BY: RWD
DATE ISSUED: 10.19.2018
SCALE: AS NOTED

SHEET NO.:
E2.0