CCRI WARWICK RENEWAL

ENTRY RAMP ENCLOSURE

400 EAST AVENUE, WARWICK RI 02886

COMMUNITY COLLEGE OF RHODE ISLAND

STRUCTURAL ENGINEER:
C.A. PRETZER ASSOCIATES
50 FREEWAY DRIVE
CRANSTON, RI 02920

LANDSCAPE ARCHITECT:
TRAVERSE LANDSCAPE ARCHITECTS
150 CHESTNUT STREET
PROVIDENCE, RI 02903

CIVIL ENGINEER:
PARE CORPORATION
8 BLACKSTONE VALLEY PL
LINCOLN, RI 02865

M/E/P + FP ENGINEER:
WOZNY BARBAR & ASSOCIATES, INC.
161 EXCHANGE STREET
PAWTUCKET, RI 02860

ARCHITECT:
BREWSTER THORNTON GROUP ARCHITECTS, LLP
150 CHESTNUT STREET
PROVIDENCE, RI 02903

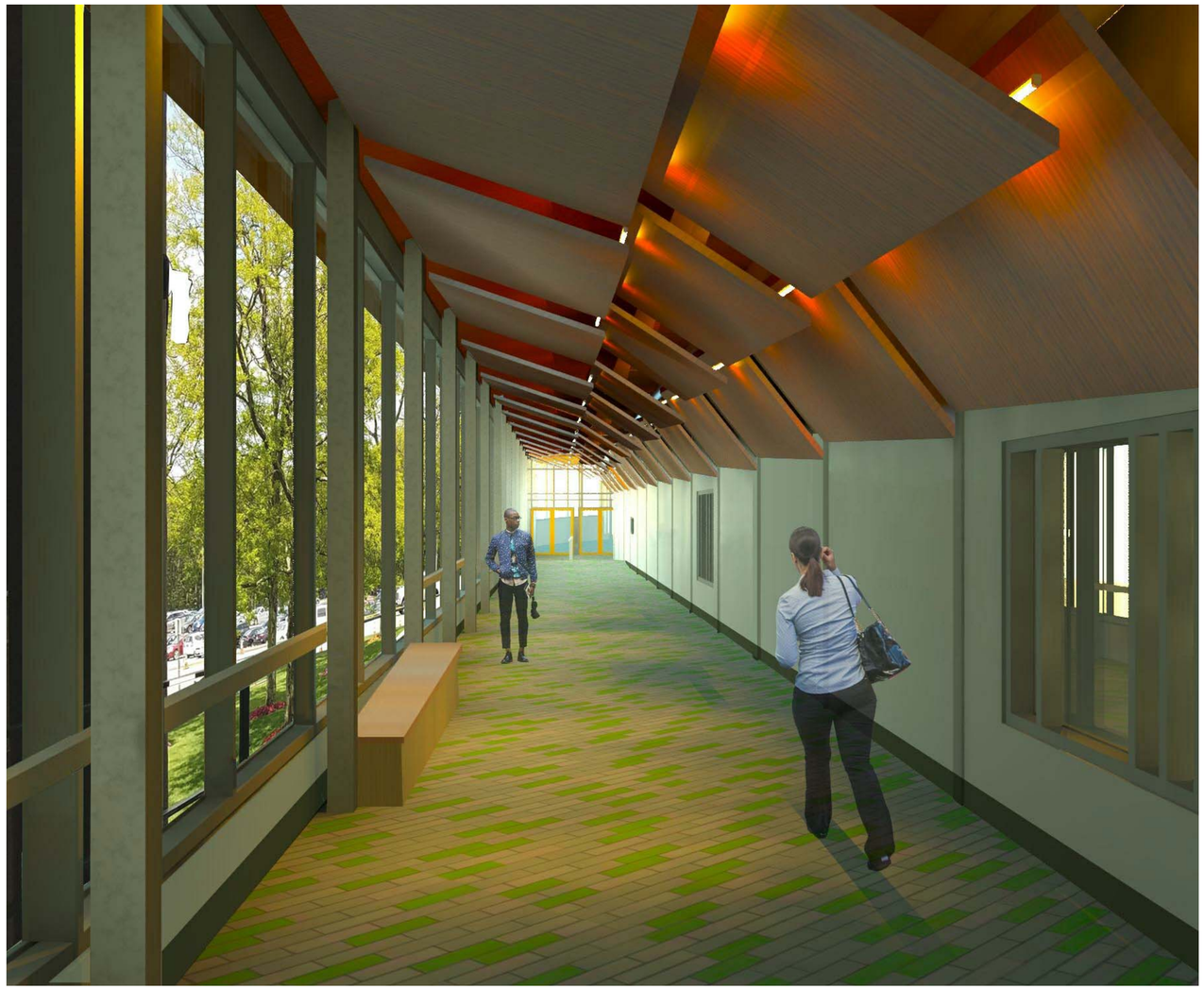

LOCUS MAP

BUILDING KEY PLAN

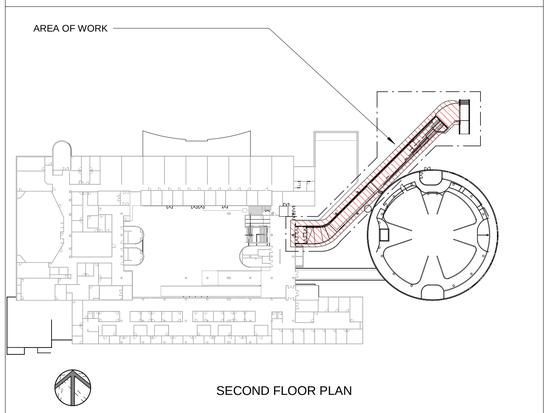

BREWSTER THORNTON GROUP ARCHITECTS LLP

November 1, 2018

1609A

G0.0

LEGEND

	BATT INSULATION		ENGINEERED WOOD (MDF, HDF, ETC.)		PLYWOOD
	BRICK		GLASS, SPECIALTY		RIGID INSULATION
	CONCRETE		GLASS, VERTICAL SURFACE		RUBBLE
	CONCRETE BLOCK		GYPSUM WALLBOARD		ASPHALT SHINGLES
	CULTURED STONE		MARBLE/ GRANITE		STEEL/METAL
	DISTURBED EARTH		MILLWORK		WOOD SHINGLES
	UNDISTURBED EARTH		PLASTIC/PVC		WOOD

DISCLAIMER: HATCH PATTERN SCALE ADJUSTS BY DRAWING SCALE. SEE OTHER DESIGN DISCIPLINES FOR ADDITIONAL LEGEND & SCHEDULE INFORMATION.

# / A#	EXTERIOR ELEVATION	ROOM NAME / ###	ROOM NAME AND MARK
# / # A# # / #	INTERIOR ELEVATION	L.O.C.	LIMITS OF CONSTRUCTION
# / A#	SECTION	#	DOOR MARK
# / A#	DETAIL	X	WALL TYPE
# / A#	DETAIL	X	WINDOW TYPE
# / A#	DETAIL KEY	X	KEY NOTE
# / A#	DETAIL CALLOUT		EXISTING PARTITION EXISTING CONSTRUCTION
NAME / EL. ELEVATION	BENCHMARK ELEVATION		NEW PARTITION
	SPOT ELEVATION	#	REVISION
	SPECIAL PLAN DETAIL	X/#	PHOTO SYMBOL
NORTH	PROJECT NORTH SYMBOL (DASHED INDICATES TRUE NORTH)	#	TOILET ACCESSORY MARK
			BREAK LINE
			REVISION CLOUD
# X OR	COLUMN GRID LINE NEW CONSTRUCTION		FIRE EXTINGUISHER CABINET (F.E.C.)

GENERAL NOTES

1. ALL WORK SHALL CONFORM TO ALL APPLICABLE CODES AND REGULATIONS IN EFFECT AT THE PROJECT SITE.
2. DO NOT SCALE DRAWINGS. FIELD VERIFY ALL DIMENSIONS.
3. THE CONTRACTOR SHALL REPORT ANY AND ALL DISCREPANCIES TO THE ARCHITECT FOR CLARIFICATION BEFORE PROCEEDING.
4. ALL DIMENSIONS OF NEW WORK ARE TO THE FACE OF CONCRETE AND MASONRY, AND THE CENTER OF METAL STUDS AND FRAME OPENINGS U.N.O.
5. DIMENSIONS NOTED TO EXISTING PLANES SHALL REFER TO THE FINISHED SURFACE OF THE WALL, FLOOR, OR CEILING PLANE, UNLESS NOTED OTHERWISE.
6. ALL ITEMS OF WORK ARE TO BE NEW UNLESS NOTED AS EXISTING.
7. CONTRACTOR SHALL VERIFY ALL DOOR AND WINDOW DIMENSIONS IN FIELD BEFORE PURCHASE.
8. ALL DRAWINGS AND SPECIFICATIONS ARE COMPLIMENTARY AND MUST BE USED AS A SET FOR COMPLETE CONSTRUCTION INFORMATION.
9. IT SHALL BE THE DUTY OF THE CONTRACTOR TO REQUEST FROM THE ARCHITECT ALL NECESSARY INTERPRETATION OF THE CONTRACT DOCUMENTS.
10. DIMENSIONS AND ELEVATIONS INDICATED ON THE DRAWINGS IN REFERENCE TO EXISTING STRUCTURES ARE THE BEST AVAILABLE DATA OBTAINABLE BUT ARE NOT GUARANTEED BY THE OWNER AND THE OWNER WILL NOT BE RESPONSIBLE FOR THEIR ACCURACY. THE CONTRACTOR SHALL FIELD CHECK AND VERIFY ALL DIMENSIONS, GRADES, LINES, LEVELS, OR OTHER CONDITIONS OF LIMITATIONS AT THE SITE TO AVOID CONSTRUCTION ERRORS. IF ANY WORK IS PERFORMED BY THE CONTRACTOR OR ANY OF HIS SUB-CONTRACTORS PRIOR TO ADEQUATE VERIFICATION OF APPLICABLE DATA, ANY RESULTANT EXTRA COST FOR ADJUSTMENT OF WORK AS REQUIRED TO CONFORM TO EXISTING LIMITATIONS SHALL BE ASSUMED BY THE CONTRACTOR WITHOUT REIMBURSEMENT OR COMPENSATION BY THE OWNER.
11. OMISSION FROM THE DRAWINGS AND SPECIFICATIONS OF ITEMS WHICH OBVIOUSLY ARE NEEDED TO PROPERLY PERFORM THE WORK, SUCH AS ATTACHMENTS, BOLTS, HANGERS, ETC., SHALL NOT RELIEVE THE CONTRACTOR FROM FURNISHING AND INSTALLING THEM.
12. IT IS INTENDED THAT ALL DIMENSIONS AND FIGURES ON THE DRAWINGS SHALL AGREE. THE CONTRACTOR SHALL CONFIRM THEM BEFORE STARTING THE WORK AND SHALL REPORT IN WRITING ALL DISCREPANCIES TO THE ARCHITECT FOR ADJUSTMENT.
13. PRIOR TO BEGINNING ANY MECHANICAL, ELECTRICAL, PLUMBING, OR FIRE PROTECTION WORK THE CONTRACTOR WILL PROVIDE COMPLETE CAD BASED COORDINATION DRAWINGS THAT CONFIRM ALL DESIRED CEILING HEIGHTS. ANY CONFLICTS THAT WILL AFFECT THE DESIGN INTENT OR DESIGNED CEILING HEIGHTS WILL BE REPORTED TO THE ARCHITECT PROMPTLY IN ADVANCE OF ENGAGING IN THE WORK.
14. AFTER THE CONTRACT HAS BEEN AWARDED, THE CONTRACTOR WILL SUBMIT A FULL BAR CHART TYPE SCHEDULE THAT WILL INDICATE ALL MAJOR AND MINOR MILESTONES FOR THE WORK. THE CONTRACTOR WILL ALSO SUBMIT A FULL SUBMITTAL AND SHOP DRAWING SCHEDULE FOR ALL COMPONENTS
15. ALL SUBMITTALS AND SHOP DRAWINGS WILL NEED TO BE STAMPED AS HAVING BEEN REVIEWED AND APPROVED BY THE CONTRACTOR FOR CONFORMANCE WITH THE PROJECT PRIOR TO SUBMITTING TO THE ARCHITECT. ANY SUBMITTAL WITHOUT THIS STAMP WILL BE PROMPTLY REJECTED AND RETURNED.
16. CHECKING OF THE SUBMITTALS AND SHOP DRAWINGS BY THE ARCHITECT IS ONLY FOR LIMITED GENERAL CONFORMANCE WITH THE INFORMATION GIVEN AND DESIGN CONCEPT EXPRESSED IN THE CONTRACT DOCUMENTS FOR THE PROJECT. THE CONTRACTOR IS RESPONSIBLE FOR QUANTITIES AND DIMENSIONS WHICH SHALL BE CONFIRMED AND CORRELATED AT THE JOBSITE; CONSTRUCTION MEANS, METHODS, PROCEDURES, TECHNIQUES, SEQUENCES, AND JOBSITE SAFETY; AND COORDINATION OF THEIR WORK WITH THAT OF THE OTHER TRADES.
17. CAREFULLY REVIEW THE SPECIFICATIONS FOR REQUIREMENTS RELATED TO FIELD APPROVED "MOCKUPS". ANY WORK BEGUN WITHOUT THE AUTHORIZATION OF AN APPROVED MOCKUP BY THE OWNER AND THE ARCHITECT IS AT THE CONTRACTOR'S RISK. UNSATISFACTORY WORK IS SUBJECT TO POSSIBLE REMOVAL AND REPLACEMENT AT THE CONTRACTOR'S EXPENSE.
18. IF DISCREPANCIES OCCUR BETWEEN THE DRAWINGS AND SPECIFICATIONS, CONSULT ARCHITECT FOR CLARIFICATION OF DESIRED METHOD. DURING THE BIDDING PHASE IF DISCREPANCIES ARE FOUND IN THE CONTRACT DOCUMENTS, CARRY THE AMOUNT OF WORK WHICH WOULD COME AT A GREATER COST.
19. CERTIFY AS PART OF EACH APPLICATION FOR PAYMENT THAT THE PROJECT RECORD DOCUMENTS "AS-BUILTS" ARE CURRENT AT THE TIME OF THE APPLICATION SUBMITTED. SUCH DRAWINGS ARE REQUIRED TO BE CURRENT AS A CONDITION OF APPROVING ANY PAYMENT TO THE CONTRACTOR OR SUB-CONTRACTOR.

COMMON ABBREVIATIONS

(USE OF PUNCTUATION IS OPTIONAL)

ABV	ABOVE		
A/C.	AIR CONDITION	INSUL.	INSULATION
ACC.	ACCESS(IBLE)	INT.	INTERIOR
ACT	ACOUSTICAL CEILING TILE	J.C.	JANITOR'S CLOSET
ADA	AMERICANS WITH DISABILITY ACT	J-BOX	JUNCTON BOX
ADDL	ADDITIONAL	JT	JOINT
ADJ.	ADJUSTABLE (OR) ADJACENT	K.B.	KNOX BOX
A/E	ARCHITECT/ENGINEER	KIT.	KITCHEN
A.S.F	ABOVE SUBFLOOR	LAB.	LABORATORY
A.F.F.	ABOVE FINISH FLOOR	LAV.	LAVATORY
AHJ	AUTHORITY HAVING JURISDICTION	LB	POUND(S)
AL./ALUM.	ALUMINUM	LCC	SEE Z.C.C.
ALT.	ALTERNATE	L.E.D.	LIGHT EMITTING DIODE
ANOD.	ANODIZED	LF	LIGHT FIXTURE
ARCH.	ARCHITECT(URAL)	L.H.	LEFT HAND
A.P.	ACCESS PANEL	LIB.	LIBRARY
APP.	APPROXIMATE	LIN	LINOLEUM
APT	APARTMENT	LKR	LOCKER
APPROX.	APPROXIMATE	LVL	LAMINATED VENEER LUMBER
ASI	ARCHITECT'S SUPPLEMENTAL INSTRUCTION	LOC.	LOCATION
		LVR	LOUVER
AUTO.	AUTOMATIC	MACH.	MACHINE
AUX.	AUXILIARY	MAS.	MASONRY
BAS	BUILDING AUTOMATION SYSTEM	MAT.	MATERIAL
BD	BOARD	MAX.	MAXIMUM
BDRM	BEDROOM	MECH.	MECHANICAL
BITUM.	BITUMINOUS	MED.	MEDIUM
BLDG	BUILDING	MEMB	MEMBRANE
BLW	BELOW	MDF	MEDIUM DENSITY FIBERBOARD
BSMT	BASEMENT	MIL	MILLIMETER
BOTT.	BOTTOM	MIN.	MINIMUM
B.O.F	BOTTOM OF FOOTING	MISC.	MISCELLANEOUS
B.O.	BLOW OFF VENT	M.O.	MASONRY OPENING
BLKG	BLOCKING	M.R.	MOISTURE RESISTANT
BIT.	BITUMEN OR BITUMENOUS	MTL	METAL
BLUEBD	BLUEBOARD (VENEER PLASTER BASE)	N.A.	NOT APPLICABLE
		NAT.	NATURAL
BRK	BRICK	N.C.	NOISE CRITERIA
BRZ	BRONZE	N.I.C.	NOT IN CONTRACT
BTWN	BETWEEN	NKL	NICKEL
CAB.	CABINET	NOM.	NOMINAL
C.F.M.F.	COLD-FORMED METAL FRAMING	NO	NUMBER
CG	COLUMN GRID	NR	NOT RATED
C.L.	CENTER LINE	N.R.C.	NOISE REDUCTION COEFFICIENT
CLL	CONTRACT LIMIT LINE	N.T.S.	NOT TO SCALE
CLO	CLOSET	O.C.	ON CENTER
CLG	CEILING	O.H.	OPPOSITE HAND
CLR	CLEAR(ANCE)	OPNG	OPENING
C.J.	CONTROL JOINT	OPP	OPPOSITE
CMU	CONCRETE MASONRY UNIT	ORIG.	ORIGINAL
CO	CASED OPENING	OHD	OVERHEAD
COL.	COLUMN	OZ.	OUNCE
COMP.	COMPRESS(ED), (ION). (IBLE)	PCC	PRE-CAST CONCRETE
CONC.	CONCRETE	PERP	PERPENDICULAR
CONST.	CONSTRUCTION	PL	PLATE
CONT.	CONTINU(E), (OUS)	PLAM	PLASTIC LAMINATE
COORD.	COORDINATE	PNL	PANEL
CPT	CARPET	PNT	PAINT
CPR	COPPER	PPL	PEOPLE
C.T.	CERAMIC TILE	PTD	PAINTED
C.U.H.	CABINET UNIT HEATER	PR	PAIR
DBL	DOUBLE	PREP	PREPARATION
DEMO	DEMO(LISH), (LITION)	P.T.	PRESSURE TREATED
DEG	DEGREES	PTN	PARTITION
DET.	DETAIL	PWD	PLYWOOD
D.F.	DRINKING FOUNTAIN	P.V.	PLUMBING VENT
DH	DOUBLE HUNG	Q.T.	QUARRY TILE
DIA.	DIAMETER	R#	RADIUS
DIAG.	DIAGONAL	R	RISER
DIM.	DIMENSION	R.B.	RESILENT BASE
DISP.	DISPOSE	RCP	REFLECTED CEILING PLAN
DN	DOWN	R&D	REMOVE & DISPOSE
DR	DOOR	R.D.	ROOF DRAIN
DS	DOWNSPOUT	RE:	REFER TO
DTL	DETAIL	REF.	REFER
DWG	DRAWING	REFR	REFRIGERATOR
DWGS	DRAWINGS	REQ.	REQUIRE(D)
DX	DUPLEX	RES.	RESILIENT
EA.	EACH	REV.	REVISION
EIFS	EXTERIOR INSULATION AND FINISH SYSTEM	R.H.	RIGHT HAND
EL.	ELEVATION	RM	ROOM
ELEC.	ELECTRIC(AL)	R.O.	ROUGH OPENING
ELEV.	ELEVATOR	RWB	RUBBER WALL BASE
EMER.	EMERGENCY	SCHED.	SCHEDULE
EMS	EMERGENCY MANAGEMENT SYSTEM	SD	SIDE
		SECT.	SECTION
E.J.	EXPANSION JOINT	SF	SQUARE FEET
E.O.S.	EDGE OF SLAB	S.GASKET	SMOKE GASKET
EQ	EQUAL	SGL	SAFETY GLASS
EQUIP	EQUIPMENT	SHGC	SOLAR HEAT GAIN COEFICIENT
ETR	EXISTING TO REMAIN	SHT	SHEET
EV	EXHAUST VENT	SHTH	SHEATHING
EX.	EXISTING	SIM.	SIMILAR
EXIST.	EXISTING	SPEC.	SPEC (-IFIED) (-IFICATION)
EXG	EXISTING	SRL	SUBMITTAL REVIEW LETTER
EXT.	EXTERIOR	SQ.	SQUARE
F.A.	FIRE ALARM	S.S.	STAINLESS STEEL
F.A.R.	FLOOR AREA RATIO	S.S.M.	SOLID SURFACE MATERIAL
F.C.U.	FAN COIL UNIT	STC	SOUND TRANSMISSION COEFFICIENT
F.D.	FLOOR DRAIN	STD	STANDARD
F.E.	FIRE EXTINGUISHER	STOR.	STORAGE
FEC	FIRE EXTINGUISHER CABINET	STL	STEEL
FF&E	FURNITURE, FIXTURE, AND EQUIPMENT	STRUCT.	STRUCTURAL
		SUSP.	SUSPEND(ED)
FGL	FIBERGLASS	SYS.	SYSTEM
FIN.	FINISH	T	TREAD
FIN.CLG	FINISH CEILING	T&G	TONGUE AND GROOVE
FIN.FLR	FINISH FLOOR	TEL.	TELEPHONE
FIN.SCH	FINISH SCHEDULE	TEMP	TEMPORARY
FIXT.	FIXTURE	TGL	TEMPERED GLASS
FLR.	FLOOR	THK	THICK(NESS)
FLUOR.	FLUORESCENT	THRESH	THRESHOLD
FND.	FOUNDATION	T.O.	TOP OF _____
F.O.	FACE OF _____	T.O.F.	TOP OF FOOTING
F.P.	FIRE PROTECTION	T.O.S.	TOP OF SHELF
F.RATING	FIRE RATING	T.O.W.	TOP OF WALL
FR	FIRE RETARDANT	TS	TUBE STEEL
FRP	FIRE RETARDANT FIBERGLASS PANELS	TSTAT	THERMOSTAT
		TYP.	TYPICAL
FRT	FIRE RETARDANT TREATED	TZ	TERRAZZO
FT	FEET	U.H.	UNIT HEATER
FTG	FOOTING	U.N.O.	UNLESS NOTED OTHERWISE
FURN.	FURNITURE	V.A.T.	VINYL ASBESTOS TILE
GA	GAGE/GAUGE	VCT	VINYL COMPOSITION TILE
GALV	GALVANIZED	VWC	VINYL WALL COVERING
GB	GRAB BAR	VERT.	VERTICAL
GL	GLASS	V.I.F.	VERIFY IN FIELD
GLAM	GLUE LAMINATED BEAM	V.R.	VAPOR RETARDER
GLZ	GLAZING	W/	WITH
GWB	GYPSUM BOARD	W.C.	WATER CLOSET
HC	HANDICAP	WD	WOOD
HDF	HIGH DENSITY FIBERBOARD	WDW	WINDOW
HM	HOLLOW METAL	WWF	WELDED WIRE FABRIC
HDW	HARDWARE	Z.C.C.	ZINC COATED COPPER
HOR.	HORIZONTAL	@	AT
HPL	HIGH-PRESSURE LAMINATE	&	AND
HR	HOUR		
HT	HEIGHT		
IN.	INCHES		
INCL.	INCLUDE(D),(ING)		
INFO.	INFORMATION		

SHEET LIST

Series	Sheet Number	Sheet Name
GENERAL		
GENERAL	G0.0	COVER
GENERAL	G0.1	LEGEND, GEN. NOTES, AND COMMON ABBREVIATIONS
GENERAL	G1.00	CODE SUMMARY & EGRESS PLAN
GENERAL	G1.02	WALL TYPES / ENERGY CODE SUMMARY
CIVIL		
CIVIL	C1.1	NOTES & LEGEND
CIVIL	C2.1	DEMOLITION, EROSION AND SEDIMENT CONTROL PLAN
CIVIL	C3.1	GENERAL PLAN
CIVIL	C4.1	GRADING PLAN
CIVIL	C5.1	DRAINAGE & UTILITY PLAN
CIVIL	C6.1	CIVIL DETAILS 1
CIVIL	C6.2	CIVIL DETAILS 2
LANDSCAPE		
LANDSCAPE	L-100	HARDSCAPE PLAN
LANDSCAPE	L-200	DETAILS
LANDSCAPE	L-300	LANDSCAPE PLAN
LANDSCAPE	L-301	LANDSCAPE DETAILS
STRUCTURE		
STRUCTURE	S1.0	GENERAL NOTES
STRUCTURE	S2.0	ENTRY RAMP FOUNDATION PLAN
STRUCTURE	S2.1	FOUNDATION SECTIONS AND DETAILS
STRUCTURE	S2.2	FOUNDATION SECTIONS AND DETAILS
STRUCTURE	S3.0	ENTRY RAMP ROOF FRAMING PLAN
STRUCTURE	S3.1	STEEL SECTIONS AND DETAILS
STRUCTURE	S5.0	ENTRY RAMP REPAIR PLAN & SECTIONS
STRUCTURE	S5.1	ENTRY RAMP REPAIR PLAN & SECTIONS
STRUCTURE	S5.2	ENTRY RAMP REPAIR SPECIFICATIONS
ARCHITECTURAL		
ARCHITECTURAL	D1.1	DEMOLITION PLAN
ARCHITECTURAL		
ARCHITECTURAL	A1.1	FLOOR PLAN
ARCHITECTURAL	A1.2	ROOF PLAN
ARCHITECTURAL	A1.3	MEMBRANE ROOF FASTENING PATTERN
ARCHITECTURAL	A1.4	REFLECTED CEILING PLAN
ARCHITECTURAL	A2.0	EXTERIOR ELEVATIONS
ARCHITECTURAL	A2.1	AXONOMETRIC DIAGRAMS
ARCHITECTURAL	A3.1	BUILDING SECTIONS
ARCHITECTURAL	A3.2	BUILDING SECTIONS
ARCHITECTURAL	A4.0	ENLARGED FLOOR PLANS
ARCHITECTURAL	A4.1	ENLARGED FLOOR PLANS
ARCHITECTURAL	A4.2	WALL SECTIONS
ARCHITECTURAL	A4.3	WALL SECTIONS
ARCHITECTURAL	A4.4	WALL SECTION DETAILS
ARCHITECTURAL	A4.5	WALL SECTION DETAILS
ARCHITECTURAL	A4.6	WALL SECTION DETAILS
ARCHITECTURAL	A4.7	WALL PLAN DETAILS
ARCHITECTURAL	A4.8	CEILING DETAILS
ARCHITECTURAL	A5.0	INTERIOR ELEVATIONS
ARCHITECTURAL	A5.1	INTERIOR ELEVATIONS
ARCHITECTURAL	A5.2	FINISH FLOOR PLAN & SCHEDULE
ARCHITECTURAL	A6.0	CURTAIN WALL ELEVATIONS
ARCHITECTURAL	A6.1	CURTAIN WALL DOOR TYPES, & SCHEDULES
ARCHITECTURAL	A6.2	CURTAIN WALL ENTRANCE DETAILS
ARCHITECTURAL	A6.3	CURTAIN WALL DETAILS
ARCHITECTURAL	A7.1	MISCELLANEOUS DETAILS
ARCHITECTURAL	A7.2	ALTERNATE DETAILS - COLLAPSIBLE BOLLARDS
FIRE PROTECTION		
FIRE PROTECTION	FP0.0	FIRE PROTECTION LEGEND & NOTES
FIRE PROTECTION	FPD1.0	DEMOLITION FIRE PROTECTION PLAN
FIRE PROTECTION	FP1.0	NEW FIRE PROTECTION PLAN
MECHANICAL		
MECHANICAL	M0.0	SYMBOL LEGEND AND SCHEDULES
MECHANICAL	M1.0	SECOND FLOOR RAMP MECHANICAL PLAN
MECHANICAL	M2.0	MECHANICAL DETAILS
MECHANICAL	M3.0	MECHANICAL DETAILS
ELECTRICAL		
ELECTRICAL	E0.0	SYMBOL LEGEND
ELECTRICAL	E1.0	ELECTRICAL DEMOLITION FLOOR PLAN
ELECTRICAL	E2.0	ELECTRICAL GROUND LEVEL FLOOR PLAN
ELECTRICAL	E3.0	ELECTRICAL NEW LIGHTING FLOOR PLAN
ELECTRICAL	E4.0	ELECTRICAL NEW POWER AND SYSTEMS FLOOR PLAN
ELECTRICAL	E5.0	ELECTRICAL FIRE ALARM FLOOR PLAN
ELECTRICAL	E6.0	ELECTRICAL SCHEDULES

CCRI WARWICK RENEWAL
ENTRY RAMP ENCLOSURE
400 EAST AVENUE, WARWICK RI 02886

BREWSTER THORNTON GROUP ARCHITECTS LLP
150 Chestnut Street
Providence, RI
02903
Tel: 401.861.1600
Fax 401.861.5588

BARBARA J. THORNTON No. 1868 REGISTERED ARCHITECT

JOB NO.	DATE
1609A	November 1, 2018

ISSUE :

NO.	REVISION DESCRIPTION	DATE

SHEET TITLE
LEGEND, GEN. NOTES, AND COMMON ABBREVIATIONS

SHEET
G0.1

11/7/2018 9:26:19 AM

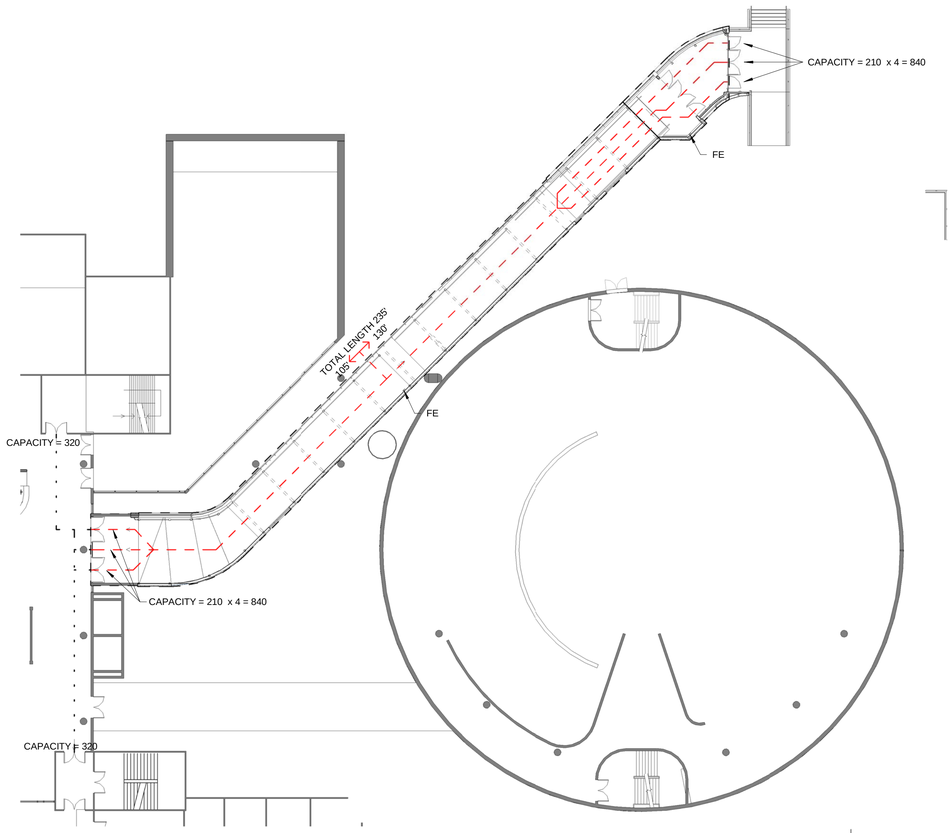

2 G1.00 EGRESS FLOOR PLAN
Scale: 1" = 20'-0"

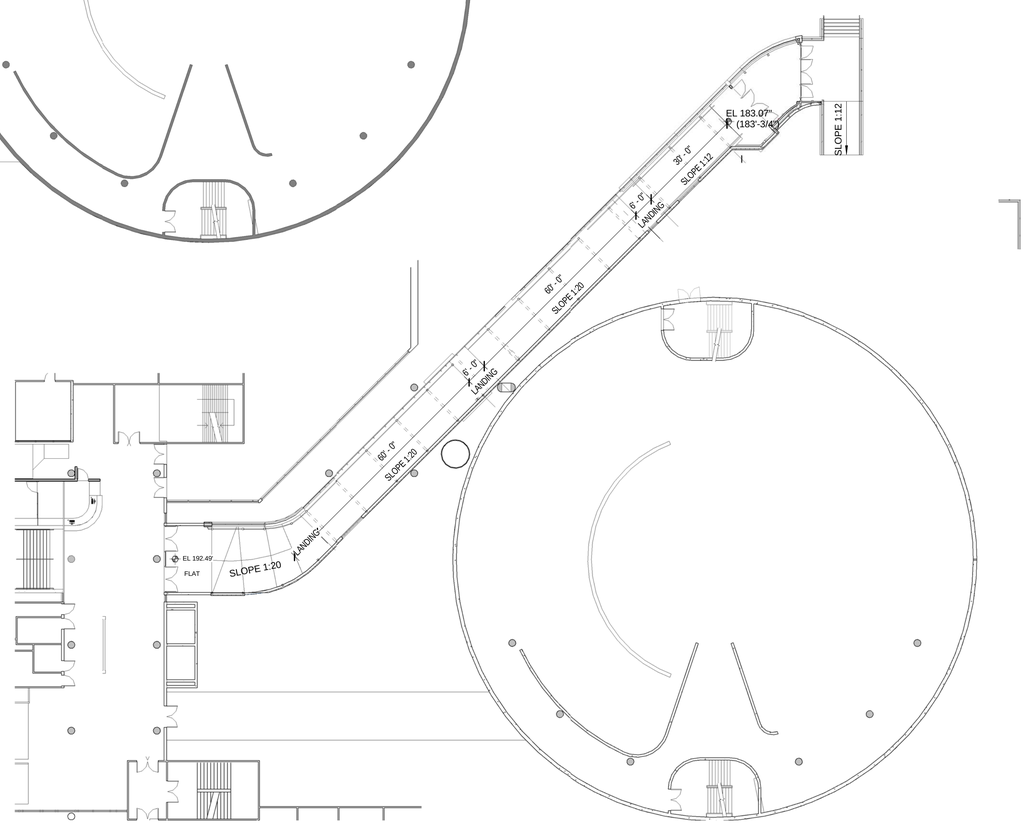

1 G1.00 ACCESSIBILITY FLOOR PLAN
Scale: 1" = 20'-0"

LEGEND

FIRE EXTINGUISHER	F.E.
EGRESS PATH	
ROOM DESIGNATION	RM NAME / NUMBER / RM / ## OCC
EGRESS ANNOTATION (DIRECTION + # OCC.)	##
CAPACITY OF EGRESS OPENING	CAPACITY = ##
EXISTING TO REMAIN	
NEW CONSTRUCTION	

CODE SUMMARY

APPLICABLE CODES

Rhode Island State Rehabilitation Building and Fire Code for Existing Buildings and Structures, SRC-1-2002 (SRC)
Rhode Island State Building Code, SBC-1-2013 (IBC 2012, amended 7/1/13) (SBC)
Rhode Island Fire Safety Code 2013 (NFPA 101 Life Safety Code 2012, amended 1/1/13) (FSC)

BUILDING INFORMATION

SQUARE FOOTAGE:	3,170 Square Feet of Renovated Space + 575 Square Feet of Added Space = 3,745 Gross SF
SCOPE OF WORK:	Proposed scope of work is a **Renovation** and **Addition** as defined by the Rhode Island Rehab Code. Scope of work Includes repair and enclosure of entry ramp to second level with a vestibule addition.

OCCUPANCY CLASS *(SBC CHAPTER 3 / FSC CHAPTER 6)*

CLASSIFICATION:	**BUSINESS GROUP, B** (Educational Occupancies for students above the 12th grade)
ACCESSORY USE:	N/A
INCIDENTAL USES:	N/A
OCCUPANCY SEPARATION:	None Required

TYPES OF CONSTRUCTION *(SRC CHAPTER 5 & CHAPTER 8 / SBC CHAPTER 6 / FSC CHAPTER 8)*

TYPES OF CONSTRUCTION	**SBC**	**FSC**	SRC 501.3; SRC 501.4; SRC 801.0; SBC TABLE 601; FSC TABLE A.8.2.1.2
	Type IIB	**TYPE II - 000**	

FIRE & SMOKE PROTECTION *(SRC CHAPTER 5 & CHAPTER 8 / SBC CHAPTERS 7, 8, 9 / FSC CHAPTER 8)*

COMPONENT	SBC	FSC	Existing and Proposed construction meets the minimum fire resistance requirements.	SRC 501.3; SRC 501.4; SRC 803.0; SBC TABLE 601; FSC TABLE A.8.2.1.2
STRUCTURAL FRAME	0 HR	0 HR		
BEARING WALLS (EXTERIOR)	0 HR	0 HR		
BEARING WALLS (INTERIOR)	0 HR	0 HR		
NON-BEARING WALLS	0 HR	0 HR		
FLOOR	0 HR	0 HR		
ROOF	0 HR	0 HR		

EXTERIOR WALL OPENING PROTECTION	Fire separation distance not required (Single building on a lot): Degree of opening proection: Unprotected, Sprinklered Allowable Area: Not required	SRC 501.3; SRC 501.4; SRC 803.0; SBC 705.8

MEANS OF EGRESS *(SRC CHAPTER 5 & CHAPTER 8 / SBC CHAPTER 10 / FSC CHAPTER 7)*

	REQUIRED	PROVIDED	REFERENCE
CEILING HEIGHT	80" (Minimum headroom below protruding objects)	84" (Minimum headroom below ceiling panels)	SRC 501.3; SRC 501.4; SRC 801.0; SBC 1003.3
OCCUPANT LOAD	**BUSINESS**: 100 Gross Square Feet Per Person		SRC 501.3; SRC 801.0; SBC (TABLE 1004.1.2)
CORRIDORS EGRESS WIDTH	0.2"/Occupant, but not less than 44"	148"	SRC 501.3; SRC 801.0; SBC 1005.3.2 & 1018.2; FSC 7.3.4
DOORS WIDTH	32" Minimum Clear Width	168" - (4) 42" Doors	SRC 501.3; SRC 801.0; SBC 1008; FSC 7.2.1
TRAVEL REQUIREMENTS			
COMMON PATH OF TRAVEL	100 FEET	Less than 100 feet	SRC 501.3; SRC 801.0;SBC 1014.3
DEAD END	50 FEET	Not Applicable	SRC 501.3; SRC 801.0;SBC 1018.4
EXIT ACCESS TRAVEL DISTANCE	300 FEET	Less than 300 feet	SRC 501.3; SRC 801.0; SBC 1016.2
CORRIDOR FIRE RESISTANCE RATING	0 HR required if occupant load is greater than 30 with automatic sprinkler system.	0 HR (Fully Sprinklered)	SRC 501.3; SRC 803.0; SBC TABLE 1018.1; FSC 8.2.3
MINIMUM NUMBER OF EXITS	Occpant Load 1-500 requires a minimum of 2 exits per story. Occupant load greater than 50 requires minimum of 2 exits per space.	Existing building minimum exits are unchanged.	SRC 501.3; SRC 801.0; SBC TABLE 1021.2(2); FSC 7.4 SRC 501.3; SRC 801.0; SBC TABLE 1015.1 FSC 7.4

ACCESSIBILITY SUMMARY

(SRC CHAPTER 10 / SBC CHAPTERS 10 & 11)

	REQUIRED	PROVIDED	REFERENCES
RAMP SLOPE	Ramps used as part of a means of egress shall have a running slope not steeper than 1:12 (8%)	1:12	SBC 3411.8.5 SBC 1010.3
CROSS SLOPE	1:48 (2%)	Flat inside, < 2% outside	SBC 1010.4
VERTICAL RISE	30"	30"	SBC 1010.5
MINIMUM DIMENSIONS	WIDTH: 36" HEADROOM: 80"	Yes	SBC 1010.6
LANDINGS			SBC 1010.7
SLOPE	1:48 (2%) in any direction	Flat inside, < 2% outside	SBC 1010.7.1
LENGTH	60" MIN.	6'	SBC 1010.7.3
RAMP SURFACE	The surface of ramps shall be of slip resistant materials that are securely attached	Carpet tile inside, broom finish conc. outside	SBC 1010.8.1
HANDRAILS	Ramps with a rise greater than 6" shall have handrails on both sides	Yes	SBC 1010.9

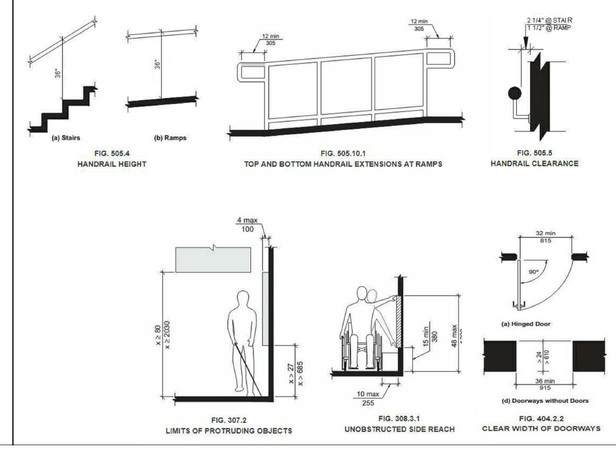

CCRI WARWICK RENEWAL ENTRY RAMP ENCLOSURE

400 EAST AVENUE, WARWICK RI 02886

BREWSTER THORNTON GROUP ARCHITECTS LLP
150 Chestnut Street
Providence, RI
02903
Tel: 401.861.1600
Fax: 401.861.5588

JOB NO.	DATE
1609A	November 1, 2018

ISSUE :

NO.	REVISION DESCRIPTION	DATE

SHEET TITLE
CODE SUMMARY & EGRESS PLAN

SHEET
G1.00

11/6/2018 4:54:17 PM

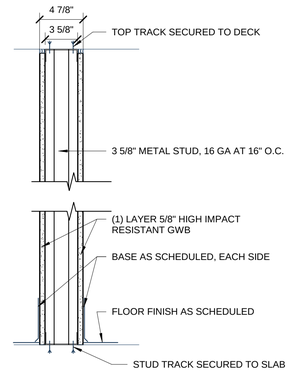

TYPE B WALL, SECTION

TYPE B2 - GWB AND FINISHES, ONE SIDE ONLY
TYPE B3 - PLASTER W/ METAL LATH AND HPL, ONE SIDE ONLY

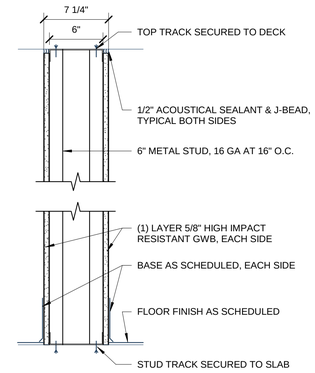

TYPE A WALL, SECTION

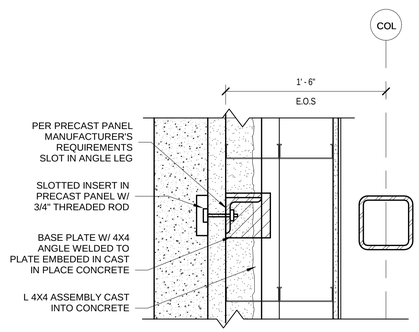

TYPICAL WALL TYPE "CC" PLAN

EXTERIOR WALL FINISH - PRECAST CONCRETE PANEL

GENERALLY LOCATED ALONG THE EXTERIOR PERIMETER OF THE ENCLOSED ENTRY RAMP (SIDEWALK-SIDE).

PRECAST PANEL, SECURED WITH SUBFRAMING. ALL PANEL FASTENING REQUIREMENTS AND STEEL SUPPORT TO BE ENGINEERED BY PANEL MANUFACTURER.

1. OUTSIDE AIR
2. 5" PRECAST CONCRETE PANEL
3. 5" OPEN CELL SPRAYFOAM INSULATION (AIR BARRIER)
4. (2) 6" METAL FRAMING
5. 5/8" INTERIOR GYPSUM BOARD
6. PROTECTIVE WALL COVERING
7. INTERIOR AIR FILM

EXTERIOR ASSEMBLY R-VALUE: 0.17 + 3.5 + 17.5 + 0.56 + 0.68 = 22.41

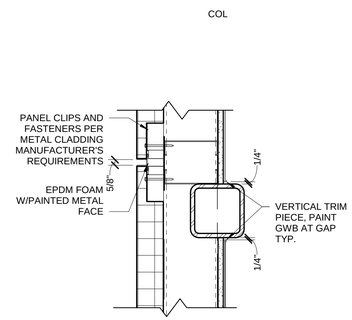

TYPICAL WALL TYPE "BB" PLAN

EXTERIOR WALL FINISH - INSULATED METAL PANEL ON METAL STUD BACKUP

GENERALLY LOCATED ALONG THE EXTERIOR PERIMETER OF THE ENCLOSED ENTRY RAMP (THEATRE-SIDE).

ALL METAL CLADDING FASTENING REQUIREMENTS AND STEEL SUPPORT TO BE ENGINEERED BY PANEL MANUFACTURER.

1. OUTSIDE AIR
2. 3" INSULATED METAL PANEL W/ INTEGRAL AIR BARRIER
3. 6" METAL FRAMING, 16 GA AT 16 O.C.
4. 5/8" INTERIOR GYPSUM BOARD
5. PROTECTIVE WALL COVERING (UPTO 7'-0" AFF.)
6. INTERIOR AIR FILM

EXTERIOR ASSEMBLY R-VALUE: 0.17+ 22 + 0.56 +0.68 = 23.41

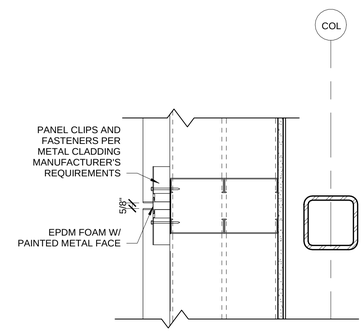

TYPICAL WALL TYPE "AA" PLAN

EXTERIOR WALL FINISH - INSULATED METAL PANEL ON METAL STUD BACKUP

GENERALLY LOCATED ALONG THE EXTERIOR PERIMETER OF THE ENCLOSED ENTRY RAMP (SIDEWALK-SIDE).

ALL METAL CLADDING FASTENING REQUIREMENTS AND STEEL SUPPORT TO BE ENGINEERED BY PANEL MANUFACTURER.

WALL ASSEMBLY:
1. OUTSIDE AIR
2. 3" INSULATED METAL PANEL W/ INTEGRAL AIR BARRIER
3. (2) 6" METAL FRAMING, 16 GA AT 16 O.C.
4. 5/8" INTERIOR GYPSUM BOARD
5. PROTECTIVE WALL COVERING (UPTO 7'-0" AFF.)
6. INTERIOR AIR FILM

EXTERIOR ASSEMBLY R-VALUE: 0.17+ 22 + 0.56 +0.68 = 23.41

ENERGY CODE SUMMARY

APPLICABLE CODES

ENERGY CODE:	2013 RHODE ISLAND STATE ENERGY CONSERVATION CODE 2012 INTERNATIONAL ENERGY CONSERVATION CODE 2012 INTERNATIONAL GREEN CONSTRUCTION CODE
COMPLIANCE APPROACH:	PRESCRIPTIVE
BUILDING USE:	HIGHER EDUCATION / BUSINESS
BUILDING OWNERSHIP:	COMMUNITY COLLEGE OF RHODE ISLAND
PROJECT TYPE:	NEW BUILDING / RENOVATION

CLIMATE ZONE - TABLE C301.3

EXTERIOR DESIGN CONDITIONS	VALUE
COUNTY	KENT
CLIMATE ZONE	5
MOISTURE DESIGNATION	A-MOIST
WINTER, DESIGN DRY-BULB (DEGREE F)	5
SUMMER DESIGN DRY-BULB	89
SUMMER DESIGN WET-BULB	73
DEGREE DAYS HEATING	5950
DEGREE DAYS COOLING	811

RHODE ISLAND CLIMATE ZONE DEFINITION - TABLE C301.3(2)

ZONE NUMBER	THERMAL CRITERIA	
	IP UNITS	SI UNITS
5	5400<HDD65 F<7200	3000<HDD18 C<4000

INTERIOR DESIGN CONDITIONS. THE INTERIOR DESIGN TEMPERATURE USED FOR ENERGY LOAD CALCULATIONS SHALL BE A MAXIMUM OF 72 DEGREES F (22 C) FOR COOLING.

OPAQUE THERMAL ENVELOPE REQUIREMENTS - TABLE C402.1.2

	2012 IECC REQUIREMENT BASE CODE	2012 IGCC REQUIREMENT (+10 PERCENT)	ACTUAL
ROOFS			
INSULATION ENTIRELY ABOVE DECK	U-0.039 R-25.6	U-0.0351 R-28.1	U-0.033 ci R-30.3
WALLS - ABOVE GRADE			
METAL-FRAMED & OTHER	U-0.064 R-15.6	U-0.0576 R- 17.36	U-0.045 ci R-23.41
WALLS - BELOW GRADE			
BELOW GRADE WALL	C-0.119	C-0.107	R12 ci
FLOORS			
MASS	U-0.074	U-0.066	U-0.063
SLAB-ON-GRADE FLOORS			
UNHEATED SLABS	F-0.54	F-0.48	F-0.48
OPAQUE DOORS			
SWINGING	U-0.37	U-0.33	U-0.33

BUILDING ENVELOPE REQUIREMENTS: VERTICAL FENESTRATION - TABLE C402.3

	2012 IECC REQUIREMENT BASE CODE	2012 IGCC REQUIREMENT (+10 PERCENT)	ACTUAL
U-FACTOR			
FIXED FENESTRATION	0.38	0.342	0.34
ENTRANCE DOORS (EXTERIOR)	0.77	0.693	0.68
SHGC			
SHGC	0.40	0.36	0.36

THIS PROJECT IS EXEMPT FROM THE REQUIRMENTS OF TITLE 37 PUBLIC PROPERTY AND WORKS CHAPTER 37-24 THE GREEN BUILDING ACT SECTION 37-24-4, AS THE PROJECT INCLUDES:
3,170 SQ FT OF RENOVATED SPACE + 575 SQ FT OF ADDED SPACE = 3,745 GROSS SF
HOWEVER, THE BUILDING THERMAL ENVELOPE EXCEEDS THE REQUIREMENTS OF TABLES C402.1.2 AND C402.3 OF THE INTERNATIONAL ENERGY CONSERVATION CODE BY NOT LESS THAN 10 PERCENT, AS GOOD PRACTICE.

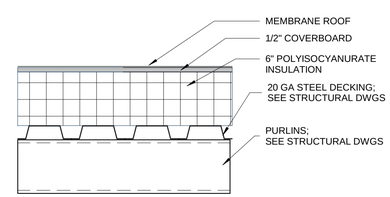

B - TYPICAL MEMBRANE ROOF ASSEMBLY

ROOF NAV # 209896-0-0

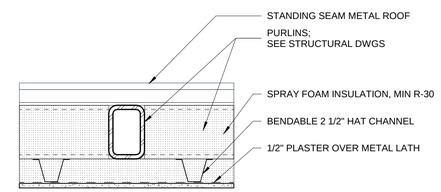

A - TYPICAL MEMBRANE ROOF ASSEMBLY

ROOF NAV # 193-0-0, SIM W/FM REVIEW

CCRI WARWICK RENEWAL ENTRY RAMP ENCLOSURE

400 EAST AVENUE, WARWICK RI 02886

BREWSTER THORNTON GROUP ARCHITECTS LLP
150 Chestnut Street
Providence, RI
02903
Tel: 401.861.1600
Fax: 401.861.5588

JOB NO. 1609A
DATE November 1, 2018

ISSUE :

NO.	REVISION DESCRIPTION	DATE

SHEET TITLE
WALL TYPES / ENERGY CODE SUMMARY

SHEET
G1.02

11/6/2018 4:54:44 PM

REFERENCE

PROJECT LOCATION: COMMUNITY COLLEGE OF RHODE ISLAND, 400 EAST AVENUE, WARWICK, RHODE ISLAND

1. EXISTING CONDITIONS PLAN COMPILED FROM THE FOLLOWING SOURCES:

   • PLAN ENTITLED "WARWICK, RI EXISTING CONDITIONS PREPARED FOR BREWSTER THORNTON GROUP, CLASS III SURVEY OF COMMUNITY COLLEGE OF RHODE ISLAND KNIGHT CAMPUS EAST AVE." PREPARED BY MARSH & LONG SURVEYING, INC. OF SMITHFIELD, RHODE ISLAND, DATED JULY 3, 2014.

   • PLAN ENTITLED "RHODE ISLAND JUNIOR COLLEGE – KNIGHT CAMPUS WARWICK RI" DESIGN PLANS PREPARED BY PERKINS & WILL AND PROVIDED BY COMMUNITY COLLEGE OF RHODE ISLAND.

   • SUPPLEMENTAL PLAN ENTITLED "WARWICK, RI EXISTING CONDITIONS PREPARED FOR PARE CORP., SURVEY OF A PORTION OF COMMUNITY COLLEGE OF RHODE ISLAND KNIGHT CAMPUS EAST AVE." PREPARED BY MARSH & LONG SURVEYING, INC. OF SMITHFIELD, RHODE ISLAND, DATED JANUARY 19, 2017 AND REVISED MARCH 23, 2018.

   • PROPOSED UPGRADES PER THE "TRAFFIC SAFETY UPGRADES, CCRI KNIGHT CAMPUS ENTRY RENEWAL" PROJECT THAT WAS COMPLETED AUGUST 2017.

   • PROPOSED UPGRADES PER THE "KNIGHT CAMPUS, CCRI RENEWAL–PHASE 1" PROJECT DATED OCTOBER 20, 2014.

2. DATUM REFERENCED, NAVD 88.

GENERAL NOTES

1. THE STATE OF RHODE ISLAND STANDARD SPECIFICATIONS FOR ROAD AND BRIDGE CONSTRUCTION, 2013 EDITION, AND THE RHODE ISLAND STANDARD DETAILS ARE MADE A PART HEREOF AS FULLY AND COMPLETELY AS IF ATTACHED HERETO. ALL WORK SHALL CONFORM TO RHODE ISLAND STANDARD SPECIFICATIONS FOR ROAD AND BRIDGE CONSTRUCTION 2013 EDITION WITH LATEST REVISIONS. THE 2013 EDITION OF THE STANDARD SPECIFICATIONS MAY BE OBTAINED FROM THE RHODE ISLAND DEPARTMENT OF TRANSPORTATION.
2. THE CONTRACTOR SHALL MAKE ALL NECESSARY CONSTRUCTION NOTIFICATIONS AND APPLY FOR AND OBTAIN ALL NECESSARY CONSTRUCTION PERMITS, PAY ALL FEES AND POST ALL BONDS ASSOCIATED WITH THE SAME, AND COORDINATE WITH THE OWNER'S REPRESENTATIVE AS REQUIRED.
3. THE CONTRACTOR SHALL BE SOLELY RESPONSIBLE FOR JOB SITE SAFETY. THE CONTRACTOR SHALL PROVIDE TEMPORARY FENCING AND/OR BARRIERS AROUND ALL OPEN EXCAVATED AREAS IN ACCORDANCE WITH OSHA STANDARDS.
4. IF ANY DEVIATION OR ALTERATION OF THE WORK PROPOSED ON THESE DRAWINGS IS REQUIRED, THE CONTRACTOR IS TO IMMEDIATELY CONTACT AND COORDINATE WITH THE OWNER AND OWNER'S REPRESENTATIVE.
5. ANY AREA OUTSIDE OF THE LIMIT OF WORK THAT IS DISTURBED SHALL BE RESTORED TO ITS ORIGINAL CONDITION AT NO COST TO THE OWNER.
6. ALL SITE WORK SHALL MEET OR EXCEED THE SITE WORK SPECIFICATIONS PREPARED FOR THIS PROJECT. THE CONTRACTOR SHALL BE RESPONSIBLE FOR VERIFYING THAT THE PROPOSED IMPROVEMENTS SHOWN ON THE PLANS DO NOT CONFLICT WITH ANY KNOWN EXISTING OR OTHER PROPOSED IMPROVEMENTS. IF ANY CONFLICTS ARE DISCOVERED, THE CONTRACTOR SHALL NOTIFY THE OWNER PRIOR TO INSTALLATION OF ANY PORTION OF THE SITE WORK WHICH WOULD BE AFFECTED.
7. UNDERGROUND UTILITIES WERE COMPILED FROM AVAILABLE RECORD PLANS AND ABOVE GROUND LOCATIONS. BEFORE COMMENCING ANY SITE WORK ACTIVITIES CONTACT "DIG SAFE" AT 1–888–DIG–SAFE. CONTRACTOR SHALL PROVIDE AN UNDERGROUND UTILITY LOCATOR TO MARK THE LOCATION OF ALL EXISTING UTILITIES WITHIN THE LIMIT OF DISTURBANCE PRIOR TO COMMENCING WORK. CONTRACTOR SHALL PROVIDE A PLAN IN AUTOCAD FORMAT PREPARED BY A LAND SURVEYOR REGISTERED IN THE STATE OF RHODE ISLAND DEPICTING ALL EXISTING UTILITIES AND MARKINGS PROVIDED BY THE UNDERGROUND UTILITY LOCATOR IN RELATION TO PERMANENT SITE FEATURES.
8. CONTRACTOR SHALL COORDINATE LOCATION OF ALL UTILITIES (LINES, DUCTS, CONDUITS, SLEEVES, FOOTINGS, ETC.) WITH LOCATIONS OF PROPOSED LANDSCAPE ELEMENTS (TREE ROOTBALLS, PROPOSED CURBING OR LIGHTING FOOTINGS, ETC.). CONTRACTOR SHALL REPORT ANY DISCREPANCIES TO THE OWNER'S REPRESENTATIVE PRIOR TO CONTINUING WORK. EXCAVATION REQUIRED WITHIN PROXIMITY OF UTILITY LINES OR WITHIN DRIPLINES OF EXISTING TREES TO REMAIN SHALL BE DONE BY HAND. ANY DAMAGE AND INCURRED COSTS DUE TO FAILURE OF THE CONTRACTOR TO CONTACT THE PROPER AUTHORITIES SHALL BE BOURNE BY THE CONTRACTOR.
9. ANY DAMAGE TO EXISTING UNDERGROUND UTILITIES OR STRUCTURES SHALL BE THE CONTRACTOR'S RESPONSIBILITY. COSTS OF SUCH DAMAGE SHALL BE THE CONTRACTOR'S RESPONSIBILITY. NO EXCAVATION SHALL BE DONE UNTIL COMPANIES ARE PROPERLY NOTIFIED IN ADVANCE. NOTE THAT NOT ALL EXISTING UNDERGROUND UTILITIES ARE SHOWN. IT IS THE CONTRACTOR'S RESPONSIBILITY TO CONTACT ALL RESPECTIVE UTILITY COMPANIES AND AN UNDERGROUND UTILITY LOCATOR TO VERIFY AND LOCATE EXISTING UTILITIES.
10. THE CONTRACTOR SHALL BE RESPONSIBLE TO REPAIR ALL DAMAGE AND/OR DISTURBANCE TO EXISTING ADJACENT LANDS BEYOND THE LIMIT OF DISTURBANCE. ACTUAL DAMAGE TO THESE AREAS, CAUSED BY THE CONTRACTOR, SHALL BE REPAIRED TO THE SATISFACTION OF THE OWNER'S REPRESENTATIVE AT NO ADDITIONAL COST TO THE OWNER.
11. THE CONTRACTOR SHALL BE RESPONSIBLE FOR ALL DAMAGE AND/OR DISTURBANCE TO EXISTING TREES AND SHRUBS NOT OTHERWISE DESIGNATED FOR REMOVAL.
12. PLANTS DESIGNATED TO REMAIN SHALL BE PROTECTED BY THE PLACEMENT OF A TREE PROTECTION FENCE ENCLOSURE AROUND SHRUBS OR AT THE DRIP LINE OF EACH TREE. PLACE ADDITIONAL TREE PROTECTION AT ALL OTHER LOCATIONS WHERE TREES AND/OR SHRUBS MAY BE JEOPARDIZED BY CONSTRUCTION ACTIVITIES.
13. IT IS THE RESPONSIBILITY OF THE CONTRACTOR TO MAINTAIN VEHICULAR AND PEDESTRIAN TRAFFIC AND COORDINATE EFFORTS WITH THE COLLEGE FOR THE DURATION OF CONSTRUCTION.

DEMOLITION NOTES

1. THE CONTRACTOR SHALL COORDINATE ALL DEMOLITION OF STRUCTURES, PAVEMENT AND CONCRETE MATERIALS, AND UTILITIES WITH APPROPRIATE PROPOSED SITE GENERAL, UTILITY, AND LANDSCAPING DRAWINGS.
2. ALL NOTED UTILITIES TO BE REMOVED AND DISPOSED OF, RELOCATED OR CAPPED REPRESENT ALL KNOWN SITE CONDITIONS TO BE DEMOLISHED. CONTRACTOR TO COORDINATE ALL UNFORESEEN CONDITIONS WITH THE OWNER'S REPRESENTATIVE AND/OR RESPECTIVE UTILITY COMPANIES PRIOR TO PROCEEDING WITH WORK.
3. THERE SHALL BE NO INTERRUPTION OF UTILITY SERVICE DURING THE CONSTRUCTION OPERATION WITHOUT THE APPROVAL OF THE OWNER. IT IS THE RESPONSIBILITY OF THE CONTRACTOR TO MAINTAIN UTILITY OPERATIONS OR COORDINATE OUTAGES WITH THE OWNER AND APPROPRIATE UTILITY COMPANY.
4. WATER, SEWER, DRAINAGE AND OTHER SITE UTILITIES SERVICING THE EXISTING FACILITIES ARE TO REMAIN ACTIVE THROUGHOUT CONSTRUCTION. WHEN CONNECTING TO ACTIVE OR RELOCATED UTILITIES, SHUTDOWNS SHALL BE MINIMIZED AND COMPLETED OFF HOURS AND COORDINATED WITH THE OWNER.

GRADING AND UTILITY NOTES

1. THE CONTRACTOR SHALL BE RESPONSIBLE FOR VERIFYING THAT THE PROPOSED IMPROVEMENTS SHOWN ON THE PLANS DO NOT CONFLICT WITH ANY KNOWN EXISTING OR OTHER PROPOSED IMPROVEMENTS. IF CONFLICTS ARE DISCOVERED, THE CONTRACTOR SHALL NOTIFY THE OWNER AND THE OWNER'S REPRESENTATIVE PRIOR TO INSTALLATION OF ANY PORTION OF THE SITE WORK WHICH WOULD BE AFFECTED. NO FIELD ADJUSTMENTS IN THE LOCATION OF SITE ELEMENTS SHALL BE MADE WITHOUT THE OWNER'S REPRESENTATIVE APPROVAL.
2. ALL WORK PERFORMED AND ALL MATERIALS FURNISHED SHALL CONFORM WITH THE LINES AND GRADES ON THE PLANS AND SITE WORK SPECIFICATIONS.
3. AT ALL LOCATIONS WHERE EXISTING CURBING OR PAVEMENT ABUT NEW CONSTRUCTION, THE EDGE OF THE EXISTING CURB OR PAVEMENT SHALL BE SAW CUT TO A CLEAN, SMOOTH EDGE. BLEND NEW PAVEMENT AND CURBS SMOOTHLY INTO EXISTING BY MATCHING LINES, GRADES AND JOINTS.
4. ALL UTILITY COVERS, GRATES, ETC. SHALL BE ADJUSTED TO BE FLUSH WITH THE SURROUNDING SURFACE OR PAVEMENT FINISH GRADE. RIM ELEVATIONS OF STRUCTURES AND MANHOLES ARE APPROXIMATE. FINAL ELEVATIONS ARE TO BE SET FLUSH AND CONSISTENT WITH THE GRADING PLANS.
5. ALL DRAINAGE PIPES SHALL BE 6" SDR–35 PVC EXCEPT WHERE NOTED OTHERWISE.
6. THE CONTRACTOR SHALL MAKE ALL ARRANGEMENTS FOR THE ALTERATION OF PRIVATE UTILITIES BY THE UTILITY COMPANIES, AS REQUIRED.
7. EXCAVATED ROCK SHALL BE REMOVED FROM THE SITE AND LEGALLY DISPOSED OF UNLESS OTHER ARRANGEMENTS ARE MADE WITH THE OWNER. ROCK OF ADEQUATE HARDNESS AND SIZE MAY BE UTILIZED IN FILL AREAS WITH WRITTEN APPROVAL OF THE OWNER'S REPRESENTATIVES.
8. WHERE AN EXISTING UTILITY IS FOUND TO CONFLICT WITH THE PROPOSED WORK, THE LOCATION, ELEVATION AND SIZE OF THE UTILITY SHALL BE ACCURATELY DETERMINED WITHOUT DELAY BY THE CONTRACTOR AND THE INFORMATION FURNISHED TO THE OWNER'S REPRESENTATIVE FOR RESOLUTION.
9. THE CONTRACTOR SHALL PROTECT ALL UNDERGROUND TEL/DATA DUCT BANKS, ELECTRICAL DUCT BANKS, DRAINAGE, SEWER AND UTILITY FACILITIES FROM EXCESSIVE VEHICULAR LOADS DURING CONSTRUCTION. ANY DAMAGE TO THESE FACILITIES RESULTING FROM CONSTRUCTION LOADS WILL BE RESTORED TO ORIGINAL CONDITION BY THE CONTRACTOR AT NO ADDITIONAL EXPENSE TO THE OWNER.
10. ALL WATER WORKS SHALL HAVE 5 FEET OF MINIMUM COVER.
11. DURING CONSTRUCTION OPERATIONS, THE CONTRACTOR SHALL PROTECT EXISTING UTILITIES BY PROVIDING TEMPORARY SUPPORTS OR SHEETING AS REQUIRED AT NO ADDITIONAL COST TO THE OWNER.
12. EXCAVATION REQUIRED WITHIN THE PROXIMITY OF EXISTING UTILITY LINES SHALL BE DONE BY HAND. CONTRACTOR SHALL REPAIR ANY DAMAGE TO EXISTING UTILITY LINES OR STRUCTURES INCURRED DURING CONSTRUCTION OPERATIONS AT NO COST TO THE OWNER.
13. PITCH EVENLY BETWEEN SPOT GRADES. ALL PAVED AREAS MUST PITCH TO DRAIN AT A MIN. OF 1/8" PER FOOT UNLESS SPECIFIED.
14. THE PROPOSED WALKWAYS SHALL HAVE A MAXIMUM CROSS SLOPE OF 2% AND RUNNING SLOPE OF 5% AS SHOWN ON CONSTRUCTION DETAILS AND GRADING PLAN.
15. ALL GRADING AT ACCESSIBLE ROUTES SHALL COMPLY WITH THE RULES AND REGULATIONS OF THE AMERICANS WITH DISABILITIES ACT (ADA) OF 2010, LATEST EDITION
16. THE CONTRACTOR IS RESPONSIBLE FOR ALL EQUIPMENT, MATERIAL, AND LABOR REQUIRED TO CLEAN OUT EXISTING CATCH BASINS AND PIPING PRIOR TO COMMENCING WORK AND AT THE END OF THE PROJECT, AS NEEDED.

LAYOUT NOTES

1. CONTRACTOR SHALL CONTRACT WITH A RHODE ISLAND REGISTERED LAND SURVEYOR TO PROVIDE CONSTRUCTION LAYOUT, AND TO PERFORM BENCHMARK FIELD LEVEL VERIFICATION AND COORDINATE LAYOUT CHECK PRIOR TO CONSTRUCTION. CONTRACTOR TO CONTACT PARE CORPORATION IF ANY DISCREPANCIES ARE FOUND.
2. ALL LINES ARE PERPENDICULAR OR PARALLEL TO THE LINES FROM WHICH THEY ARE MEASURED UNLESS OTHERWISE INDICATED.
3. ACCESSIBLE RAMPS SHALL BE PER THE AMERICANS WITH DISABILITIES ACT (ADA) ACCESSIBILITY GUIDELINES.
4. CENTER WALKWAYS ON DOORWAYS THEY SERVE.
5. DIMENSIONS TO SITE OR BUILDING WALLS ARE TO THE OUTSIDE (OR EXPOSED) FACE OF WALL UNLESS OTHERWISE NOTED. DIMENSIONS OF PARKING SPACES AND DRIVEWAYS ARE FROM FACE OF CURB TO FACE OF CURB.
6. SEE LANDSCAPE PLANS FOR WALKWAY JOINTING AND SCORING PATTERNS.

EROSION AND SEDIMENTATION CONTROL NOTES

1. THE CONTRACTOR SHALL BE RESPONSIBLE FOR ESTABLISHING AND MAINTAINING ALL TEMPORARY SEDIMENT AND EROSION CONTROLS IN ACCORDANCE WITH THE RHODE ISLAND EROSION AND SEDIMENT CONTROL HANDBOOK, 2014 EDITION OR LATEST REVISION.
2. THE EROSION AND SEDIMENTATION CONTROLS SHOWN ON THE PLANS ARE INTENDED TO REPRESENT THE MINIMUM CONTROLS NECESSARY TO MEET ANTICIPATED SITE CONDITIONS. ADDITIONAL MEASURES SHALL BE IMPLEMENTED AS CONDITIONS WARRANT OR AS DIRECTED BY THE OWNER OR OWNER'S REPRESENTATIVE.
3. REQUIRED PERIMETER CONTROL SHALL BE PROPERLY ESTABLISHED, CLEARLY VISIBLE AND IN OPERATION PRIOR TO INITIATING ANY LAND CLEARING ACTIVITY AND/OR OTHER CONSTRUCTION RELATED WORK. SUCH FACILITIES SHALL REPRESENT THE LIMIT OF WORK. WORKERS SHALL BE INFORMED THAT NO CONSTRUCTION ACTIVITY IS TO OCCUR BEYOND THE LIMIT OF WORK AT ANY TIME THROUGHOUT THE CONSTRUCTION PERIOD.
4. AS FEASIBLE, CONSTRUCTION SHALL BE PHASED TO LIMIT THE AREA OF EXPOSED SOIL AND THE DURATION OF EXPOSURE. ALL DISTURBED AREAS WILL BE TEMPORARILY AND/OR PERMANENTLY STABILIZED WITHIN 14 DAYS FOLLOWING COMPLETION OF GRADING ACTIVITIES.
5. THE CONTRACTOR SHALL INSPECT AND MAINTAIN ALL EROSION AND SEDIMENTATION CONTROL MEASURES AS SPECIFIED IN THE GENERAL PERMIT THROUGHOUT THE CONSTRUCTION PERIOD.
6. EROSION AND SEDIMENTATION CONTROL MEASURES SHALL BE INSPECTED AND MAINTAINED ON A WEEKLY BASIS AND AFTER EACH STORM EVENT OF 0.25 INCH OR GREATER DURING CONSTRUCTION TO ENSURE THAT CHANNELS, DITCHES AND PIPES ARE CLEAR OF DEBRIS AND THAT THE EROSION CONTROL BARRIERS ARE INTACT.
7. CLEAN AND MAINTAIN SEDIMENTATION CONTROL BARRIERS WHEN SEDIMENT ACCUMULATES TO ONE HALF THE HEIGHT OF THE BARRIER. MATERIAL COLLECTED FROM THE SEDIMENTATION BARRIER SHALL BE REMOVED AS NECESSARY AND DISPOSED IN AN UPLAND AREA.
8. WEEKLY INSPECTION LOGS SHALL BE PREPARED BY THE CONTRACTOR AND SUBMITTED TO THE COMMUNITY COLLEGE OF RHODE ISLAND FACILITIES DEPARTMENT FOR RECORD. CONTACT MARK LIBUTTI – COLLEGE PROJECT MANAGER, AT (401) 825–2380 FOR ADDITIONAL COORDINATION PRIOR TO COMMENCING WORK. A COPY OF ALL WEEKLY INSPECTIONS SHALL BE STORED IN THE JOB SITE TRAILER PER RIPDES REQUIREMENTS.
9. THE CONTRACTOR SHALL MAINTAIN A SUFFICIENT RESERVE OF VARIOUS EROSION CONTROL MATERIALS ONSITE AT ALL TIMES FOR EMERGENCY PURPOSES OR ROUTINE MAINTENANCE.
10. THE CONTRACTOR SHALL SCHEDULE HIS WORK TO ALLOW THE FINISHED SUB GRADE ELEVATIONS TO DRAIN PROPERLY WITHOUT PUDDLING. SPECIFICALLY, ALLOW WATER TO ESCAPE WHERE PROPOSED CURB MAY RETAIN RUNOFF PRIOR TO PAVING. PROVIDE TEMPORARY POSITIVE DRAINAGE, AS REQUIRED, TO STABILIZED DISCHARGE POINTS.
11. SOIL AND OTHER MATERIALS RESULTING FROM SITE CLEARING MAY BE RECYCLED AND/OR REUSED ON THE SITE AS APPROPRIATE. WASTE MATERIALS SHALL BE REMOVED FROM THE SITE AND LEGALLY DISPOSED.
12. ANTI–TRACKING PADS (RIDOT STD. 9.9.0) SHALL BE ESTABLISHED AT ALL POINTS OF INGRESS AND EGRESS.
13. TEMPORARY DIVERSION (TD) MAY CONSIST OF A DITCH OR SWALE, OR MAY BE ACHIEVED USING WOOD CHIP PILES, COIR LOGS, OR SIMILAR MATERIALS.
14. TEMPORARY SEDIMENT TRAPS (TST) AND TEMPORARY SWALES (TS) SHALL BE SIZED BY THE CONTRACTOR USING THE PARAMETERS CONTAINED IN THE RHODE ISLAND SOIL EROSION AND SEDIMENT CONTROL MANUAL.
15. DUST SHALL BE CONTROLLED BY SPRINKLING OR OTHER APPROVED METHODS AS NECESSARY, OR AS DIRECTED BY THE OWNER OR OWNER'S REPRESENTATIVE.
16. CATCH BASINS AND STORM DRAINS SHALL BE PROTECTED WITH HAY BALES (RIDOT STD 9.8.0) OR SEDIMENT BAGS IN PAVED AREAS UNTIL CONTRIBUTING AREA IS PERMANENTLY STABILIZED.
17. DEWATERING WASTEWATER PUMPED FROM EXCAVATIONS SHALL BE CONVEYED BY HOSE TO AN UPLAND AREA AND DISCHARGED INTO A DEWATERING BASIN (RIDOT STD 9.7.0), HAY BALE CORRALS, OR SEDIMENTATION BAGS. THE CONTRACTOR SHALL TEST THE DEWATERING WASTEWATER FOR CONTAMINANTS PRIOR TO DISCHARGING. THE CONTRACTOR IS RESPONSIBLE FOR ALL ENGINEERING, EQUIPMENT, MATERIAL, AND LABOR REQUIRED FOR THIS PROJECT PROPOSED SITE WATER REMOVAL DURING CONSTRUCTION.
18. CONSTRUCTION SITE WASTE MATERIALS SHALL BE PROPERLY CONTAINED ONSITE AND DISPOSED OFF SITE AT A LOCATION IN ACCORDANCE WITH THE LOCAL AND STATE REGULATIONS.
19. RIPRAP OR OTHER VELOCITY CONTROL DEVICES SHALL BE USED WHERE NECESSARY TO CONTROL EROSION.
20. ANY EQUIPMENT THAT IS NOT READILY MOBILE (TRACK MACHINERY) SHALL BE PARKED WITHIN THE PROJECT LIMIT OF DISTURBANCE. LARGE AND/OR BULKY MATERIALS WILL BE STORED SUCH THAT THEY WILL NOT INTERFERE WITH THE ONGOING CONSTRUCTION ACTIVITY AND EROSION CONTROL MEASURES.
21. NEWLY VEGETATED AREAS SHALL BE REGULARLY INSPECTED AND MAINTAINED TO ENSURE THE ESTABLISHMENT OF STABLE VEGETATED SURFACES.
22. THE CONTRACTOR SHALL NOT REMOVE ANY HAY BALES, COMPOST FILTER SOCKS OR OTHER EROSION CONTROLS UNTIL THE CONTRIBUTING AREA IS PERMANENTLY STABILIZED.
23. ALL DRAINAGE STRUCTURES SHALL BE CLEARED OF ACCUMULATED SEDIMENT PRIOR TO ACCEPTANCE OF THE FINAL PROJECT.
24. CONTRACTOR SHALL COMPLY WITH ALL CONDITIONS OF THE RIPDES GENERAL PERMIT AND ALL OTHER PERMITS OBTAINED FOR THIS PROJECT. CONTRACTOR SHALL COMPLETE ALL RESPONSIBILITIES ASSOCIATED WITH THE SOIL EROSION AND SEDIMENT CONTROL PLAN PREPARED FOR THIS PROJECT.

STORMWATER MANAGEMENT SYSTEM INSPECTION AND MAINTENANCE NOTES

DURING CONSTRUCTION

1. THE CONTRACTOR SHALL REMOVE SEDIMENT AND DEBRIS FROM ALL CATCH BASINS, MANHOLES, AND THE DRAINAGE SYSTEM ON A ROUTINE BASIS, IMMEDIATELY FOLLOWING SITE STABILIZATION, AND PRIOR TO PROJECT COMPLETION AND ACCEPTANCE.
2. THE CLOSED DRAINAGE SYSTEM AND ASSOCIATED STRUCTURES SHALL BE CLEANED AND FLUSHED BY THE CONTRACTOR AT THE COMPLETION OF CONSTRUCTION, AND THE CONTRACTOR SHALL BE RESPONSIBLE FOR INSPECTION AND MAINTENANCE OF THE DRAINAGE SYSTEM UNTIL ACCEPTANCE OF THE SYSTEM BY THE ENGINEER AND THE OWNER. FOLLOWING ACCEPTANCE OF THE PROPOSED DRAINAGE SYSTEM PROPOSED FOR THIS SITE, THE OWNER OF THE SITE SHALL BE RESPONSIBLE FOR THE LONG–TERM INSPECTION, OPERATION, AND MAINTENANCE OF THE DRAINAGE SYSTEM.
3. ANY ACCUMULATION OF PONDING WATER IN AREAS WITHIN THE LIMITS OF DISTURBANCE, OTHER THAN DESIGNATED AREAS, SHALL BE REMOVED ACCORDINGLY AND PREVENTED IN THE FUTURE.

POST CONSTRUCTION

1. TRASH, LITTER, SEDIMENT AND OTHER DEBRIS SHALL BE REMOVED FROM ANY STORM WATER FACILITY (INCLUDING DRYWELL, INLET AND OUTLET STRUCTURES, AND THE STORMWATER TREATMENT SYSTEM) AT LEAST TWICE A YEAR, PREFERABLY SPRING AND FALL, AT THE COST OF THE OWNER.
2. THE PARKING LOT AND DRIVES SHALL BE SWEPT BY THE OWNER AS EARLY AS POSSIBLE EVERY SPRING AND ONCE IN THE FALL TO REMOVE SEDIMENTS.
3. ALL CLEANING AND MAINTENANCE OF DRAINAGE SYSTEM BMP'S SHALL BE THE RESPONSIBILITY OF THE PROPERTY OWNER.

LEGEND

EXISTING		PROPOSED
	EDGE OF PAVEMENT	
	CURBING	
HR	HANDICAP RAMP CURB CUT	
D	DRAIN LINE	D
S	SEWER LINE	
W	WATER LINE	W
G	GAS LINE	
E	ELECTRIC LINE	
	DRAIN MANHOLE	DMH XX
	ELECTRIC MANHOLE	
	SEWER MANHOLE	
	TELEPHONE MANHOLE	
	UNKNOWN MANHOLE	
	CATCH BASIN	
	HYDRANT	
	WATER GATE	
	GAS GATE	
FDC	FIRE DEPARTMENT CONNECTION	
LP	LIGHT POLE	
FP	LIGHT POLE	
	HANDICAP PARKING SPOT	
	BOLLARD	
100	CONTOUR	175
× 142.44	SPOT GRADE	× 175.5
	TREES	
	BUILDING	
	SUPPORT COLUMNS	
	REPRESENT EXTERIOR FACE OF CONCRETE	
	SAWCUT LINE	
	COMPOST FILTER SOCK	
	SAND BAG	
	LIMIT OF DISTURBANCE	L.O.D.
	ENCLOSURE	

7.1.0	PRECAST CONCRETE CURB – R.I. STD. 7.1.0
7.3.0	GRANITE CURB – R.I. STD. 7.3.0
9.1.0	BALED HAY EROSION CHECK – R.I. STD. 9.1.0
9.7.0	DEWATERING BASIN – R.I. STD. 9.7.0
9.9.0	CONSTRUCTION ACCESS – R.I. STD. 9.9.0

ATG	= ADJUST TO GRADE
BC	= BITUMINOUS CONCRETE PAVEMENT (SEE DETAIL)
CFS	= COMPOST FILTER SOCK (SEE DETAIL)
CM	= SAWCUT AND MATCH
CP	= CEMENT CONCRETE PAD
CTE	= CONNECT TO EXISTING
DC	= REMOVE AND DISPOSE CURB
DCW	= REMOVE AND DISPOSE CONCRETE WALK
DFP	= REMOVE AND DISPOSE FLEXIBLE PAVEMENT
DTP	= DRIP LINE TREE PROTECTION (SEE DETAIL)
ETR	= EXISTING TO REMAIN, PROTECT DURING CONSTRUCTION
LS	= LOAM AND SEED (REFER TO LANDSCAPE DRAWINGS)
RTAD	= REFER TO ARCHITECTURAL DRAWINGS
RTLD	= REFER TO LANDSCAPE DRAWINGS
RTMD	= REFER TO MECHANICAL DRAWINGS
RTSD	= REFER TO STRUCTURAL DRAWINGS
R&D	= REMOVE AND DISPOSE
R&R	= REMOVE AND RESET
R&S	= REMOVE AND STOCKPILE
SB	= SANDBAG EROSION CONTROL BARRIER (SEE DETAIL)
TIP	= TEMPORARY INLET PROTECTION (SEE DETAIL)
TST	= TEMPORARY SEDIMENT TRAP
VCP	= VEHICULAR CONCRETE PAVEMENT

AD	AREA DRAIN	MAX.	MAXIMUM
BIT.	BITUMINOUS	MIN.	MINIMUM
BC	BOTTOM OF CURB	MON.	MONITORING
BMP	BEST MANAGEMENT PRACTICE	MUTCD	MANUAL OF UNIFORM TRAFFIC CONTROL DEVICES, LATEST EDITION
BW	BOTTOM OF WALL	O.C.	ON CENTER
CB	4' DIA. CATCH BASIN UNLESS OTHERWISE NOTED	OWS	OIL WATER SEPARATOR
CHDPE	CORRUGATED HIGH DENSITY POLYETHYLENE PIPE	PERF.	PERFORATED
		PVC	POLYVINYL CHLORIDE
CI	CAST IRON	RCP	REINFORCED CONCRETE PIPE
CLDI	CEMENT–LINED DUCTILE IRON	R.I.D.O.T.	RHODE ISLAND DEPARTMENT OF TRANSPORTATION
CO	CLEAN OUT		
CONC.	CONCRETE	R.I. STD.	RHODE ISLAND STANDARD
DEMO	DEMOLITION	R=X'	RADIUS
DIA.	DIAMETER	SDR	STANDARD DIMENSIONAL RATIO
DMH	DRAIN MANHOLE	SMH	SEWER MANHOLE
EMH	ELECTRICAL MANHOLE	STA	ROADWAY STATION
EP	EDGE OF PAVEMENT	SWL	SINGLE WHITE LINE
EXIST., EX	EXISTING	TC	TOP OF CURB
EXCB	EXISTING CATCH BASIN	TMH	TELEPHONE MANHOLE
EXDMH	EXISTING DRAIN MANHOLE	TW	TOP OF WALL
FDC	FIRE DEPARTMENT CONNECTION	(TYP.)	TYPICAL
FF	FINISHED FLOOR ELEVATION	UE	UNDERGROUND ELECTRIC
FND.	FOUND	VC	VITROUS CLAY
FP	FLAG POLE	w/	WITH
FT	FOOT	WF	WETLAND FLAG
GRAN.	GRANITE	YDCB	YARD DRAIN
HDPE	HIGH DENSITY POLYETHYLENE PIPE		
HR	HANDICAP RAMP		
INV.	INVERT		
LF	LINEAR FOOT		
LP	LIGHT POLE		

PARE

PARE CORPORATION
ENGINEERS - SCIENTISTS - PLANNERS
8 BLACKSTONE VALLEY PLACE
LINCOLN, RI 02865
401-334-4100

CCRI WARWICK RENEWAL ENTRY RAMP ENCLOSURE

400 EAST AVENUE, WARWICK RI 02886

BREWSTER THORNTON GROUP ARCHITECTS LLP

150 Chestnut Street
Providence, RI
02903
Tel: 401.861.1600
Fax 401.861.5588

DAVID L. POTTER
No. 8665
11.01.18
REGISTERED PROFESSIONAL ENGINEER (CIVIL)

JOB NO.	DATE
1609A	November 1, 2018

ISSUE :

NO.	REVISION DESCRIPTION	DATE

SHEET TITLE

NOTES & LEGEND

SHEET

C1.1

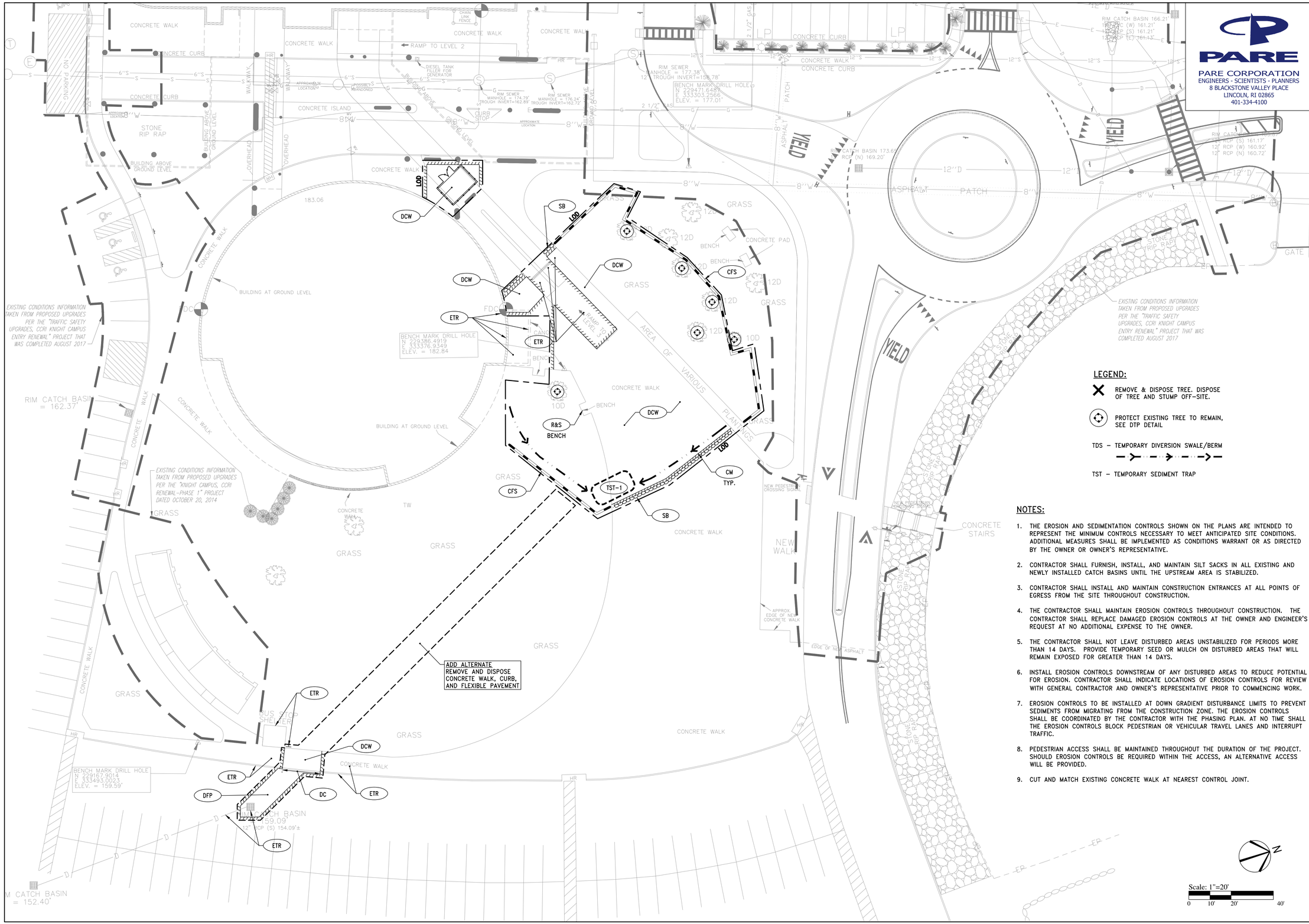

LEGEND:

- ✕ REMOVE & DISPOSE TREE. DISPOSE OF TREE AND STUMP OFF-SITE.
- PROTECT EXISTING TREE TO REMAIN, SEE DTP DETAIL
- TDS – TEMPORARY DIVERSION SWALE/BERM
- TST – TEMPORARY SEDIMENT TRAP

NOTES:

1. THE EROSION AND SEDIMENTATION CONTROLS SHOWN ON THE PLANS ARE INTENDED TO REPRESENT THE MINIMUM CONTROLS NECESSARY TO MEET ANTICIPATED SITE CONDITIONS. ADDITIONAL MEASURES SHALL BE IMPLEMENTED AS CONDITIONS WARRANT OR AS DIRECTED BY THE OWNER OR OWNER'S REPRESENTATIVE.
2. CONTRACTOR SHALL FURNISH, INSTALL, AND MAINTAIN SILT SACKS IN ALL EXISTING AND NEWLY INSTALLED CATCH BASINS UNTIL THE UPSTREAM AREA IS STABILIZED.
3. CONTRACTOR SHALL INSTALL AND MAINTAIN CONSTRUCTION ENTRANCES AT ALL POINTS OF EGRESS FROM THE SITE THROUGHOUT CONSTRUCTION.
4. THE CONTRACTOR SHALL MAINTAIN EROSION CONTROLS THROUGHOUT CONSTRUCTION. THE CONTRACTOR SHALL REPLACE DAMAGED EROSION CONTROLS AT THE OWNER AND ENGINEER'S REQUEST AT NO ADDITIONAL EXPENSE TO THE OWNER.
5. THE CONTRACTOR SHALL NOT LEAVE DISTURBED AREAS UNSTABILIZED FOR PERIODS MORE THAN 14 DAYS. PROVIDE TEMPORARY SEED OR MULCH ON DISTURBED AREAS THAT WILL REMAIN EXPOSED FOR GREATER THAN 14 DAYS.
6. INSTALL EROSION CONTROLS DOWNSTREAM OF ANY DISTURBED AREAS TO REDUCE POTENTIAL FOR EROSION. CONTRACTOR SHALL INDICATE LOCATIONS OF EROSION CONTROLS FOR REVIEW WITH GENERAL CONTRACTOR AND OWNER'S REPRESENTATIVE PRIOR TO COMMENCING WORK.
7. EROSION CONTROLS TO BE INSTALLED AT DOWN GRADIENT DISTURBANCE LIMITS TO PREVENT SEDIMENTS FROM MIGRATING FROM THE CONSTRUCTION ZONE. THE EROSION CONTROLS SHALL BE COORDINATED BY THE CONTRACTOR WITH THE PHASING PLAN. AT NO TIME SHALL THE EROSION CONTROLS BLOCK PEDESTRIAN OR VEHICULAR TRAVEL LANES AND INTERRUPT TRAFFIC.
8. PEDESTRIAN ACCESS SHALL BE MAINTAINED THROUGHOUT THE DURATION OF THE PROJECT. SHOULD EROSION CONTROLS BE REQUIRED WITHIN THE ACCESS, AN ALTERNATIVE ACCESS WILL BE PROVIDED.
9. CUT AND MATCH EXISTING CONCRETE WALK AT NEAREST CONTROL JOINT.

PARE
PARE CORPORATION
ENGINEERS - SCIENTISTS - PLANNERS
8 BLACKSTONE VALLEY PLACE
LINCOLN, RI 02865
401-334-4100

CCRI WARWICK RENEWAL ENTRY RAMP ENCLOSURE

400 EAST AVENUE, WARWICK RI 02886

BREWSTER THORNTON GROUP ARCHITECTS LLP
150 Chestnut Street
Providence, RI 02903
Tel: 401.861.1600
Fax 401.861.5588

DAVID L. POTTER
No. 8665
11-01-18
REGISTERED PROFESSIONAL ENGINEER (CIVIL)

JOB NO.	DATE
1609A	November 1, 2018

ISSUE :

NO.	REVISION DESCRIPTION	DATE

SHEET TITLE

DEMOLITION, EROSION AND SEDIMENT CONTROL PLAN

SHEET

C2.1

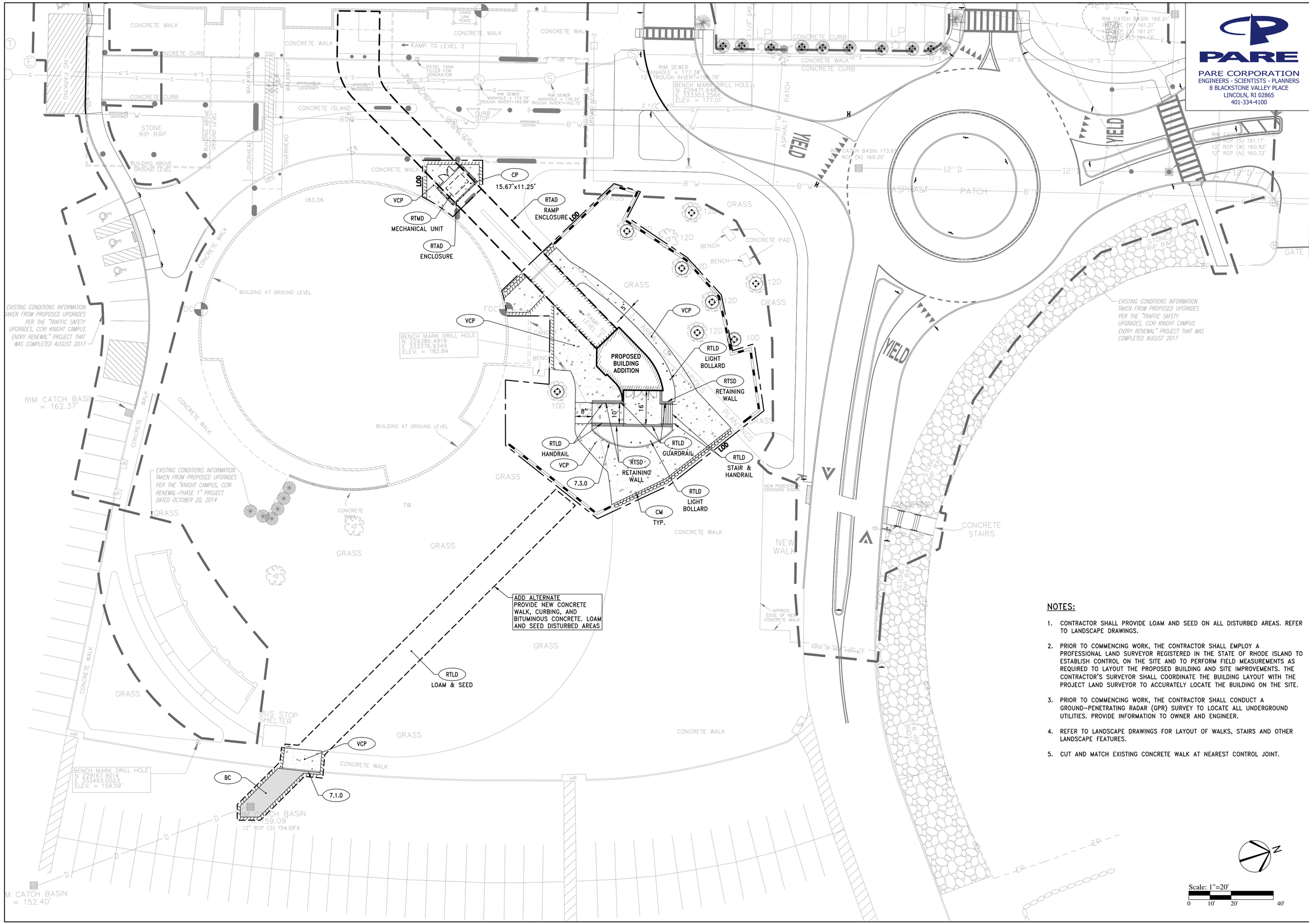

NOTES:

1. CONTRACTOR SHALL PROVIDE LOAM AND SEED ON ALL DISTURBED AREAS. REFER TO LANDSCAPE DRAWINGS.
2. PRIOR TO COMMENCING WORK, THE CONTRACTOR SHALL EMPLOY A PROFESSIONAL LAND SURVEYOR REGISTERED IN THE STATE OF RHODE ISLAND TO ESTABLISH CONTROL ON THE SITE AND TO PERFORM FIELD MEASUREMENTS AS REQUIRED TO LAYOUT THE PROPOSED BUILDING AND SITE IMPROVEMENTS. THE CONTRACTOR'S SURVEYOR SHALL COORDINATE THE BUILDING LAYOUT WITH THE PROJECT LAND SURVEYOR TO ACCURATELY LOCATE THE BUILDING ON THE SITE.
3. PRIOR TO COMMENCING WORK, THE CONTRACTOR SHALL CONDUCT A GROUND-PENETRATING RADAR (GPR) SURVEY TO LOCATE ALL UNDERGROUND UTILITIES. PROVIDE INFORMATION TO OWNER AND ENGINEER.
4. REFER TO LANDSCAPE DRAWINGS FOR LAYOUT OF WALKS, STAIRS AND OTHER LANDSCAPE FEATURES.
5. CUT AND MATCH EXISTING CONCRETE WALK AT NEAREST CONTROL JOINT.

PARE
PARE CORPORATION
ENGINEERS - SCIENTISTS - PLANNERS
8 BLACKSTONE VALLEY PLACE
LINCOLN, RI 02865
401-334-4100

CCRI WARWICK RENEWAL
ENTRY RAMP ENCLOSURE

400 EAST AVENUE, WARWICK RI 02886

BREWSTER THORNTON GROUP ARCHITECTS LLP
150 Chestnut Street
Providence, RI
02903
Tel: 401.861.1600
Fax 401.861.5588

DAVID L. POTTER
No. 8665
REGISTERED PROFESSIONAL ENGINEER (CIVIL)

JOB NO.	DATE
1609A	November 1, 2018

ISSUE :

NO.	REVISION DESCRIPTION	DATE

SHEET TITLE
GENERAL PLAN

SHEET
C3.1

PARE
PARE CORPORATION
ENGINEERS - SCIENTISTS - PLANNERS
8 BLACKSTONE VALLEY PLACE
LINCOLN, RI 02865
401-334-4100

CCRI WARWICK RENEWAL
ENTRY RAMP ENCLOSURE

400 EAST AVENUE, WARWICK RI 02886

BREWSTER THORNTON GROUP ARCHITECTS LLP
150 Chestnut Street
Providence, RI
02903
Tel: 401.861.1600
Fax: 401.861.5588

DAVID L. POTTER
No. 8665
REGISTERED PROFESSIONAL ENGINEER (CIVIL)
11.01.18

JOB NO.	DATE
1609A	November 1, 2018

ISSUE :

NO.	REVISION DESCRIPTION	DATE

SHEET TITLE
GRADING PLAN

SHEET
C4.1

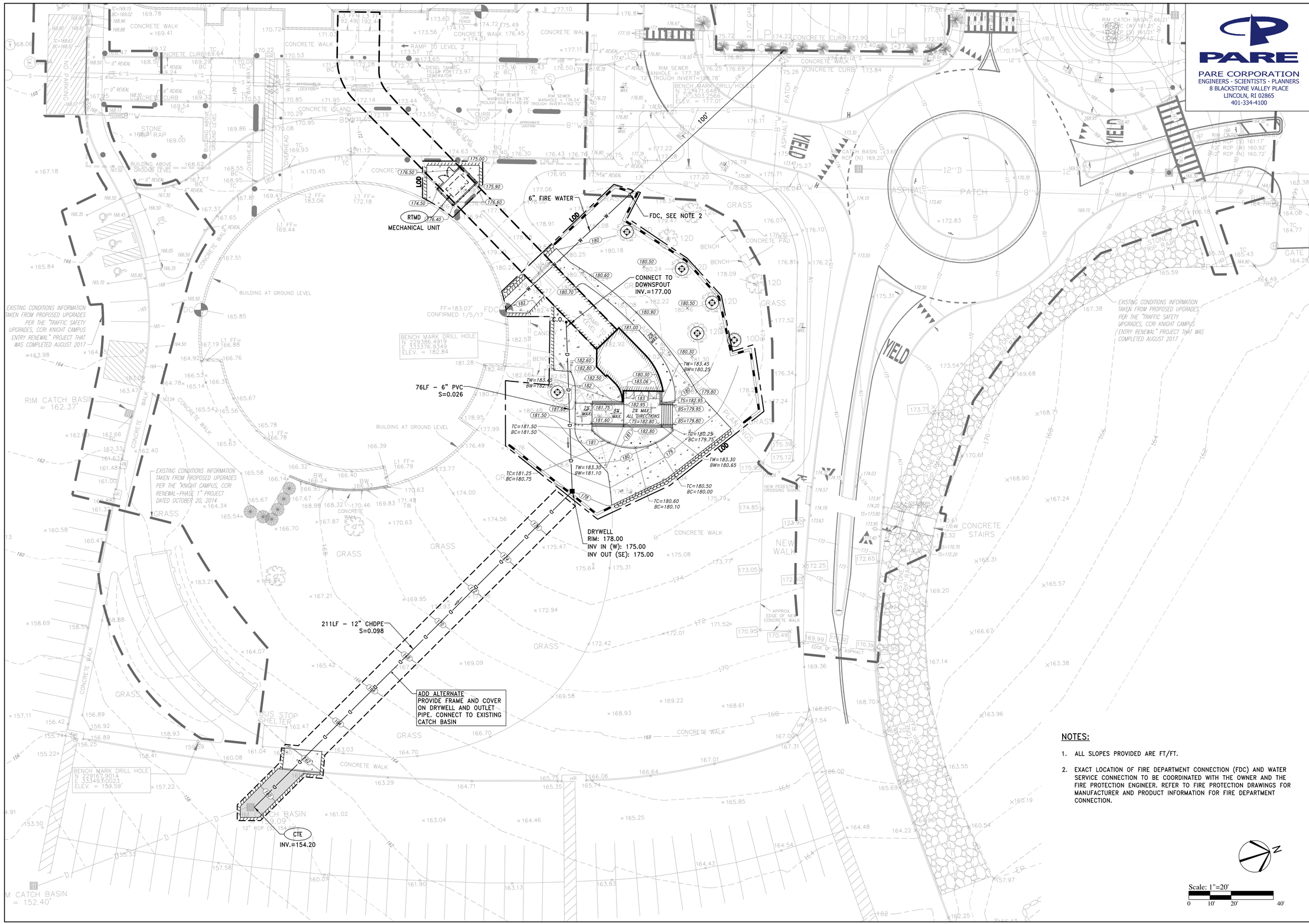

PARE

PARE CORPORATION
ENGINEERS - SCIENTISTS - PLANNERS
8 BLACKSTONE VALLEY PLACE
LINCOLN, RI 02865
401-334-4100

CCRI WARWICK RENEWAL
ENTRY RAMP ENCLOSURE

400 EAST AVENUE, WARWICK RI 02886

BREWSTER THORNTON GROUP ARCHITECTS LLP

150 Chestnut Street
Providence, RI
02903
Tel: 401.861.1600
Fax 401.861.5588

DAVID L. POTTER
No. 8665
REGISTERED PROFESSIONAL ENGINEER (CIVIL)

JOB NO.	DATE
1609A	November 1, 2018

ISSUE :

NO.	REVISION DESCRIPTION	DATE

NOTES:

1. ALL SLOPES PROVIDED ARE FT/FT.
2. EXACT LOCATION OF FIRE DEPARTMENT CONNECTION (FDC) AND WATER SERVICE CONNECTION TO BE COORDINATED WITH THE OWNER AND THE FIRE PROTECTION ENGINEER. REFER TO FIRE PROTECTION DRAWINGS FOR MANUFACTURER AND PRODUCT INFORMATION FOR FIRE DEPARTMENT CONNECTION.

SHEET TITLE

DRAINAGE & UTILITY PLAN

SHEET

C5.1

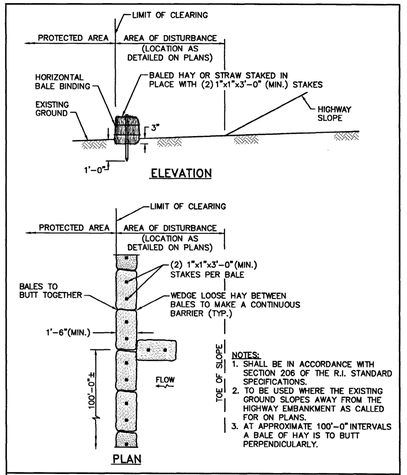

RHODE ISLAND DEPARTMENT OF TRANSPORTATION

REVISIONS		
NO.	BY	DATE

BALED HAY EROSION CHECK

CHIEF ENGINEER TRANSPORTATION — CHIEF DESIGN ENGINEER TRANSPORTATION — JUNE 15, 1998 ISSUE DATE

R.I. STANDARD 9.1.0

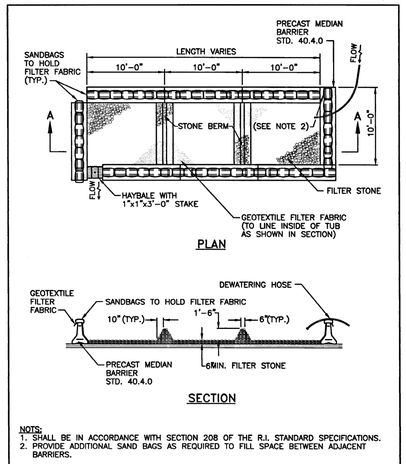

NOTS:
1. SHALL BE IN ACCORDANCE WITH SECTION 208 OF THE R.I. STANDARD SPECIFICATIONS.
2. PROVIDE ADDITIONAL SAND BAGS AS REQUIRED TO FILL SPACE BETWEEN ADJACENT BARRIERS.

RHODE ISLAND DEPARTMENT OF TRANSPORTATION

REVISIONS		
NO.	BY	DATE

DEWATERING BASIN

CHIEF ENGINEER TRANSPORTATION — CHIEF DESIGN ENGINEER TRANSPORTATION — JUNE 15, 1998 ISSUE DATE

R.I. STANDARD 9.7.0

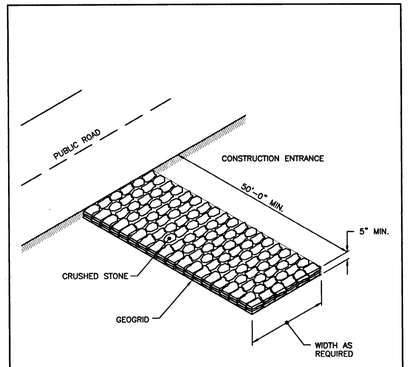

NOTE:
SHALL BE IN ACCORDANCE WITH SECTION 211 OF THE R.I. STANDARD SPECIFICATIONS.

RHODE ISLAND DEPARTMENT OF TRANSPORTATION

REVISIONS		
NO.	BY	DATE

CONSTRUCTION ACCESS

CHIEF ENGINEER TRANSPORTATION — CHIEF DESIGN ENGINEER TRANSPORTATION — JUNE 15, 1998 ISSUE DATE

R.I. STANDARD 9.9.0

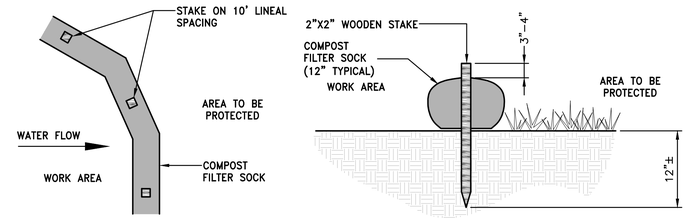

NOTES:
1. COMPOST/ SOIL/ ROCK/ SEED FILL TO MEET APPLICATION REQUIREMENTS.
2. COMPOST MATERIAL TO BE REMOVED OR DISPERSED ON SITE AS DETERMINED BY ENGINEER.

CFS COMPOST FILTER SOCK DETAIL
NOT TO SCALE

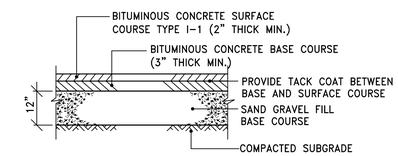

NOTES:
1. THE THICKNESS OF THE PROPOSED PAVEMENT COURSE SHALL MATCH THE EXISTING PAVEMENT. PROVIDE THE MINIMUM THICKNESS SHOWN.
2. SUBMIT JOB MIX FORMULAS TO ENGINEER FOR APPROVAL PRIOR TO PLACEMENT

BC TYPICAL PAVEMENT DETAIL
NOT TO SCALE

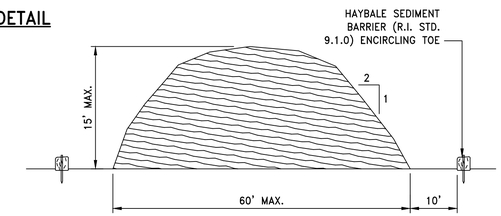

NOTES:
1. STOCKPILE AREA SHALL NOT EXCEED SPECIFIED DIMENSIONS WITHOUT APPROVAL FROM ENGINEER.
2. STOCKPILED ERODIBLE MATERIAL THAT WILL NOT BE USED FOR GREATER THAN 21 DAYS SHALL BE SEEDED WITH GRASS SEED MIX IMMEDIATELY FOLLOWING PLACEMENT.
3. THE CONTRACTOR SHALL STOCKPILE ALL ERODIBLE MATERIAL AT A LOCATION IDENTIFIED BY THE OWNER ON URI CCRI KNIGHT CAMPUS PROPERTY.

ERODIBLE MATERIAL STOCKPILE
NOT TO SCALE

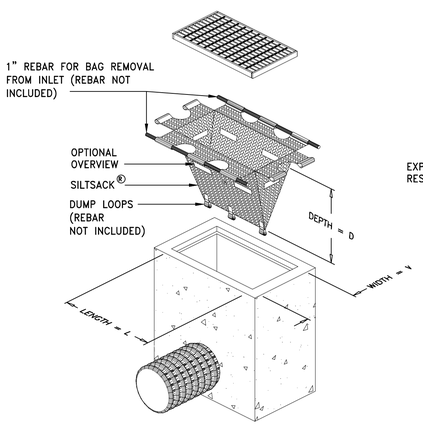

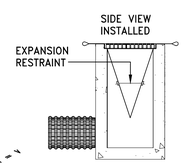

INSTALLATION DETAIL

TIP TEMPORARY INLET PROTECTION
NOT TO SCALE

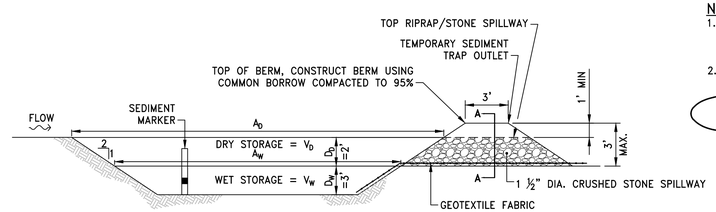

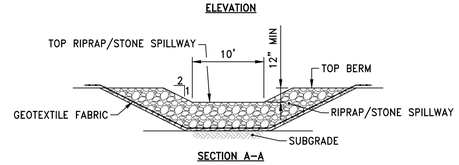

NOTES:
1. TEMPORARY SEDIMENT TRAPS SHALL BE CLEANED OR REMOVED EVERY 6 MONTHS.
2. RIPRAP SHALL MEET RIDOT STANDARD SPECIFICATION M.10.03.2.
3. STONE SHALL MEET RIDOT STANDARD SPECIFICATION M.01.09 TABLE I, COLUMN V (FILTER STONE).
4. SEDIMENT MARKER SHALL BE INSTALLED SUCH THAT TOP OF BLACK ENAMEL BAND IS 1.5' FROM THE BOTTOM OF THE SEDIMENT TRAP.

TST #	L_W (FT)	W_W (FT)	A_W (SF)	V_W (CF)	V_D (CF)	TOTAL STORAGE $V_W + V_D$ (CF)
TST-1	20	10	200	510	704	1214

TST TEMPORARY SEDIMENT TRAP DETAIL
NOT TO SCALE

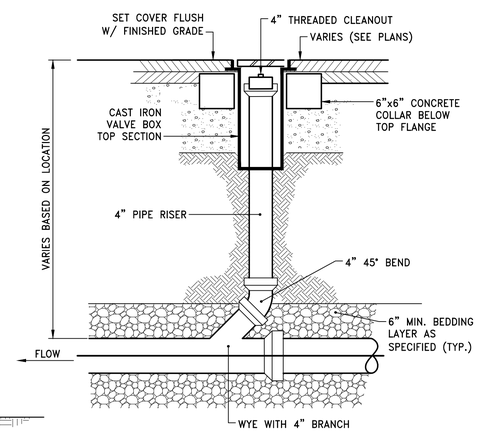

CLEANOUT DETAIL
NOT TO SCALE

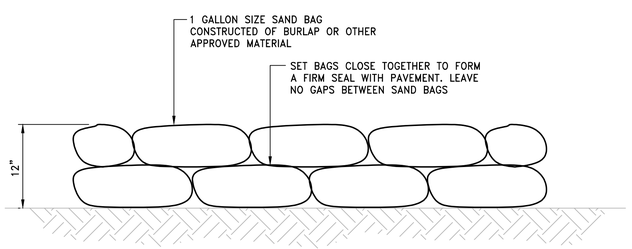

SB SAND BAG EROSION CONTROL BARRIER
NOT TO SCALE

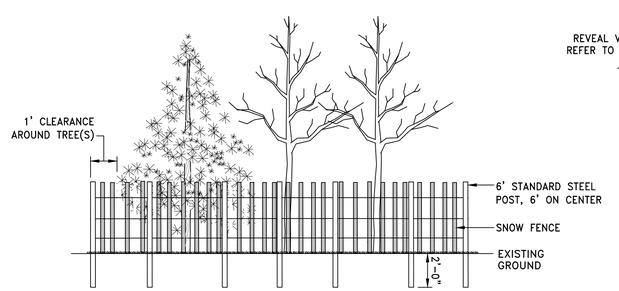

NOTE:
1. MAY BE USED FOR ONE OR MORE TREES.

DTP DRIPLINE TREE PROTECTION DETAIL
NOT TO SCALE

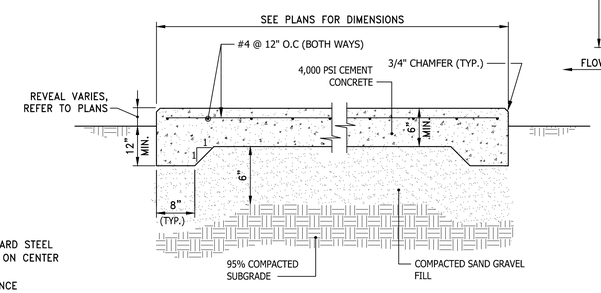

NOTES:
1. REINFORCING TO BE #4 GRADE 60 BARS AND SHALL CONFORM TO ASTM STANDARD A-615 OF THE LATEST DATA. REINFORCING RODS TO BE LOCATED IN THE CENTER OF THE SLAB, WITH A MINIMUM OF 2" CLEARANCE FROM FACE OF CONCRETE.
2. CONTRACTOR SHALL COORDINATE LOCATIONS OF OPENINGS, FENCE POSTS, OR OTHER FEATURES IN SLAB.

CP CEMENT CONCRETE PAD
NOT TO SCALE

PARE
PARE CORPORATION
ENGINEERS - SCIENTISTS - PLANNERS
8 BLACKSTONE VALLEY PLACE
LINCOLN, RI 02865
401-334-4100

CCRI WARWICK RENEWAL ENTRY RAMP ENCLOSURE

400 EAST AVENUE, WARWICK RI 02886

BREWSTER THORNTON GROUP ARCHITECTS LLP
150 Chestnut Street
Providence, RI
02903
Tel: 401.861.1600
Fax 401.861.5588

DAVID L. POTTER
No. 8665
REGISTERED PROFESSIONAL ENGINEER (CIVIL)

JOB NO.	DATE
1609A	November 1, 2018

ISSUE :

NO.	REVISION DESCRIPTION	DATE

SHEET TITLE
CIVIL DETAILS 1

SHEET
C6.1

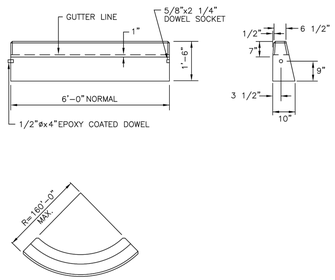

CIRCULAR CURB

NOTES:
1. SHALL BE IN ACCORDANCE WITH SECTION 906 OF THE R.I. STANDARD SPECIFICATIONS.
2. MINIMUM LENGTH OF STRAIGHT OR CIRCULAR FILLER PIECES TO BE 3'-0".
3. EXPOSED SURFACES TO HAVE A SPONGE FLOAT FINISH.
4. CIRCULAR CURB IS REQUIRED ON CURVES WITH RADII OF 160'-0" OR LESS. STRAIGHT CURB TO BE USED ON CURVES OF MORE THAN 160'-0" RADIUS.
5. EXPOSED EDGES TO HAVE A 3/4" CHAMFER.

RHODE ISLAND DEPARTMENT OF TRANSPORTATION

REVISIONS			PRECAST CONCRETE CURB	R.I. STANDARD 7.1.0
NO.	BY	DATE		
1	MLP	Mar 05	JUNE 15, 1998 (ISSUE DATE)	

CHIEF ENGINEER TRANSPORTATION — CHIEF DESIGN ENGINEER TRANSPORTATION

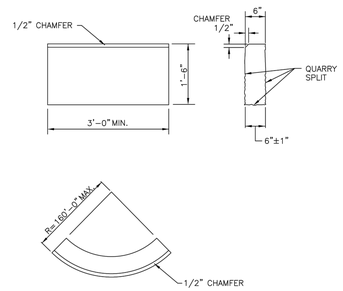

CIRCULAR CURB

NOTES:
1. SHALL BE IN ACCORDANCE WITH SECTION 906 OF THE R.I. STANDARD SPECIFICATIONS.
2. TOP SURFACE TO BE DRESSED BY SAW. REMAINDER MAY BE QUARRY SPLIT.
3. MINIMUM LENGTH OF STRAIGHT OR CIRCULAR PIECES TO BE 3'-0".
4. CIRCULAR CURB IS REQUIRED ON CURVES WITH RADII OF 160'-0" OR LESS. STRAIGHT CURB TO BE USED ON CURVES OF MORE THAN 160'-0" RADIUS.

RHODE ISLAND DEPARTMENT OF TRANSPORTATION

REVISIONS			GRANITE CURB	R.I. STANDARD 7.3.0
NO.	BY	DATE		
1	MLP	Mar 2005	JUNE 15, 1998 (ISSUE DATE)	
2	MLP	Sep 2012		

CHIEF ENGINEER TRANSPORTATION — CHIEF DESIGN ENGINEER TRANSPORTATION

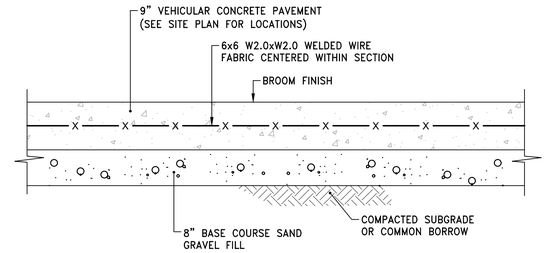

VCP **VEHICULAR CONCRETE PAVEMENT**
NOT TO SCALE

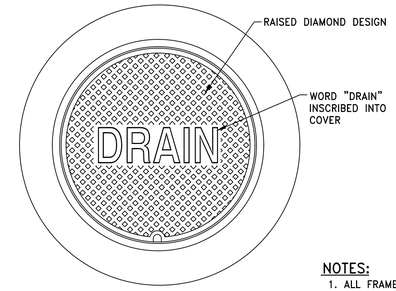

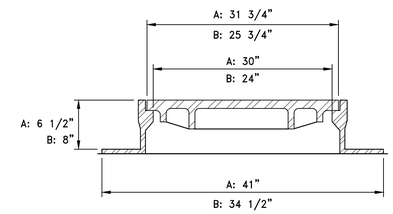

DRAIN MANHOLE FRAME & COVER
NOT TO SCALE

NOTES:
1. ALL FRAMES AND COVERS SHALL MEET H-20 LOADING CRITERIA.
2. PROVIDE:
   A: 30" DIA. DRAIN MANHOLE FRAME AND COVER SHALL BE NEENAH FOUNDRY, INC. MODEL #R-1557 OR APPROVED EQUIVALENT.
   B: 24" DIA. DRAIN MANHOLE FRAME AND COVER SHALL BE NEENAH FOUNDRY, INC. MODEL #R-1556 OR APPROVED EQUIVALENT.
3. ALL DRAIN MANHOLES SHALL HAVE 24" DIA. DRAIN MANHOLE COVER UNLESS NOTED OTHERWISE.

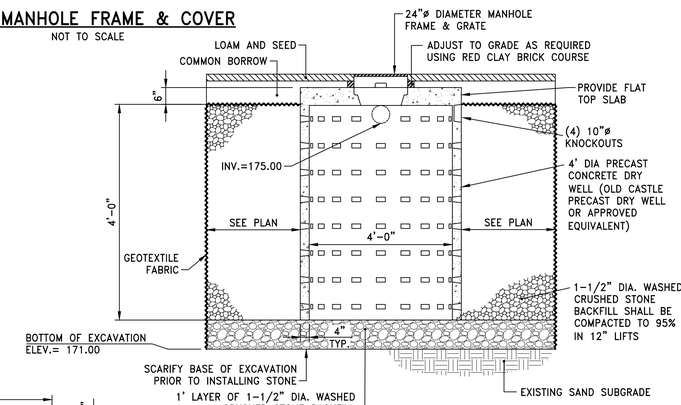

SECTION A-A

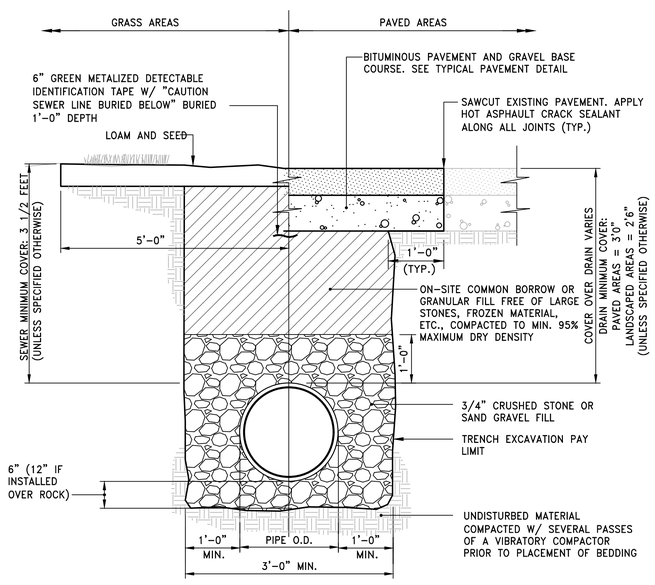

NOTES:
1. WHERE THE DISTANCE BETWEEN THE SAWCUT AND EDGE OF PAVEMENT IS 3' OR LESS, THE CONTRACTOR SHALL REPLACE THE PAVEMENT FROM THE TRENCH EDGE TO THE EXISTING EDGE OF PAVEMENT.
2. 3/4" DIA. CRUSHED STONE SHALL BE USED AS BEDDING WHERE TRENCH IS BELOW THE GROUND WATER TABLE.

GRAVITY DRAIN TRENCH DETAIL
NOT TO SCALE

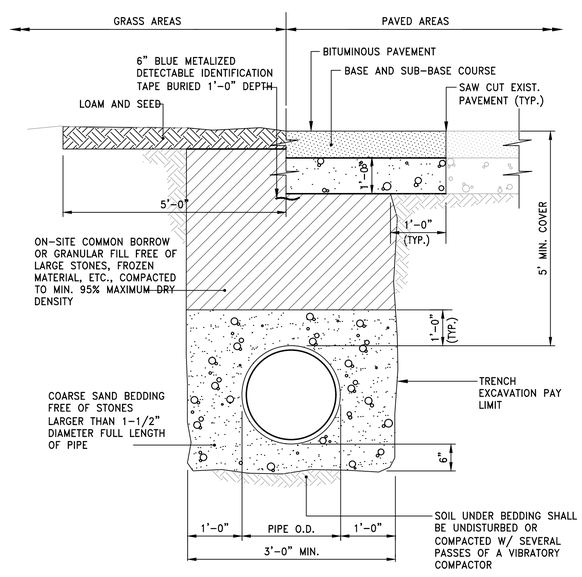

NOTES:
1. WHERE THE DISTANCE BETWEEN THE SAWCUT AND EDGE OF PAVEMENT IS 3' OR LESS, THE CONTRACTOR SHALL REPLACE THE PAVEMENT FROM THE TRENCH EDGE TO THE EXISTING EDGE OF PAVEMENT.
2. 3/4" DIA. CRUSHED STONE SHALL BE USED AS BEDDING WHERE TRENCH IS BELOW THE GROUND WATER TABLE.

TYPICAL WATER MAIN TRENCH DETAIL
NOT TO SCALE

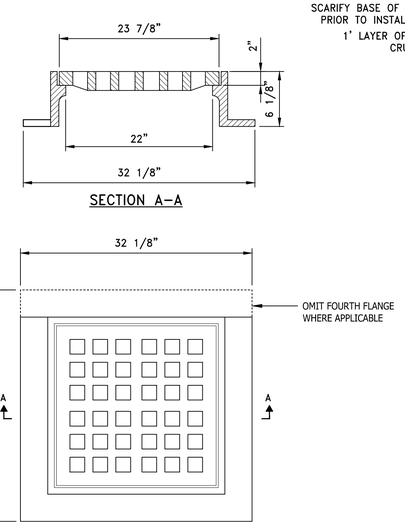

SECTION A-A

PLAN

NOTES:
1. NEENAH FOUNDRY R-3405-A OR EQUIVALENT.
2. FRAME AND GRATE SHALL MEET H-20 LOADING CRITERIA.

SQUARE CATCH BASIN FRAME & GRATE
NOT TO SCALE

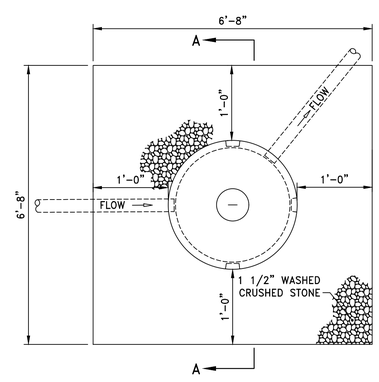

PLAN

NOTES:
1. CONTRACTOR SHALL NOTIFY ENGINEER 72 HOURS PRIOR TO EXCAVATING DRYWELL TO COORDINATE BOTTOM INSPECTION.
2. FOLLOWING BOTTOM INSPECTION, CONTRACTOR MAY PLACE BACKFILL AS DEPICTED ON THE DETAIL.

DRYWELL DETAIL
NOT TO SCALE

PARE
PARE CORPORATION
ENGINEERS - SCIENTISTS - PLANNERS
8 BLACKSTONE VALLEY PLACE
LINCOLN, RI 02865
401-334-4100

CCRI WARWICK RENEWAL ENTRY RAMP ENCLOSURE

400 EAST AVENUE, WARWICK RI 02886

BREWSTER THORNTON GROUP ARCHITECTS LLP
150 Chestnut Street
Providence, RI
02903
Tel: 401.861.1600
Fax 401.861.5588

DAVID L. POTTER No. 8665 REGISTERED PROFESSIONAL ENGINEER (CIVIL) 11.01.18

JOB NO.	DATE
1609A	November 1, 2018

ISSUE :

NO.	REVISION DESCRIPTION	DATE

SHEET TITLE
CIVIL DETAILS 2

SHEET
C6.2

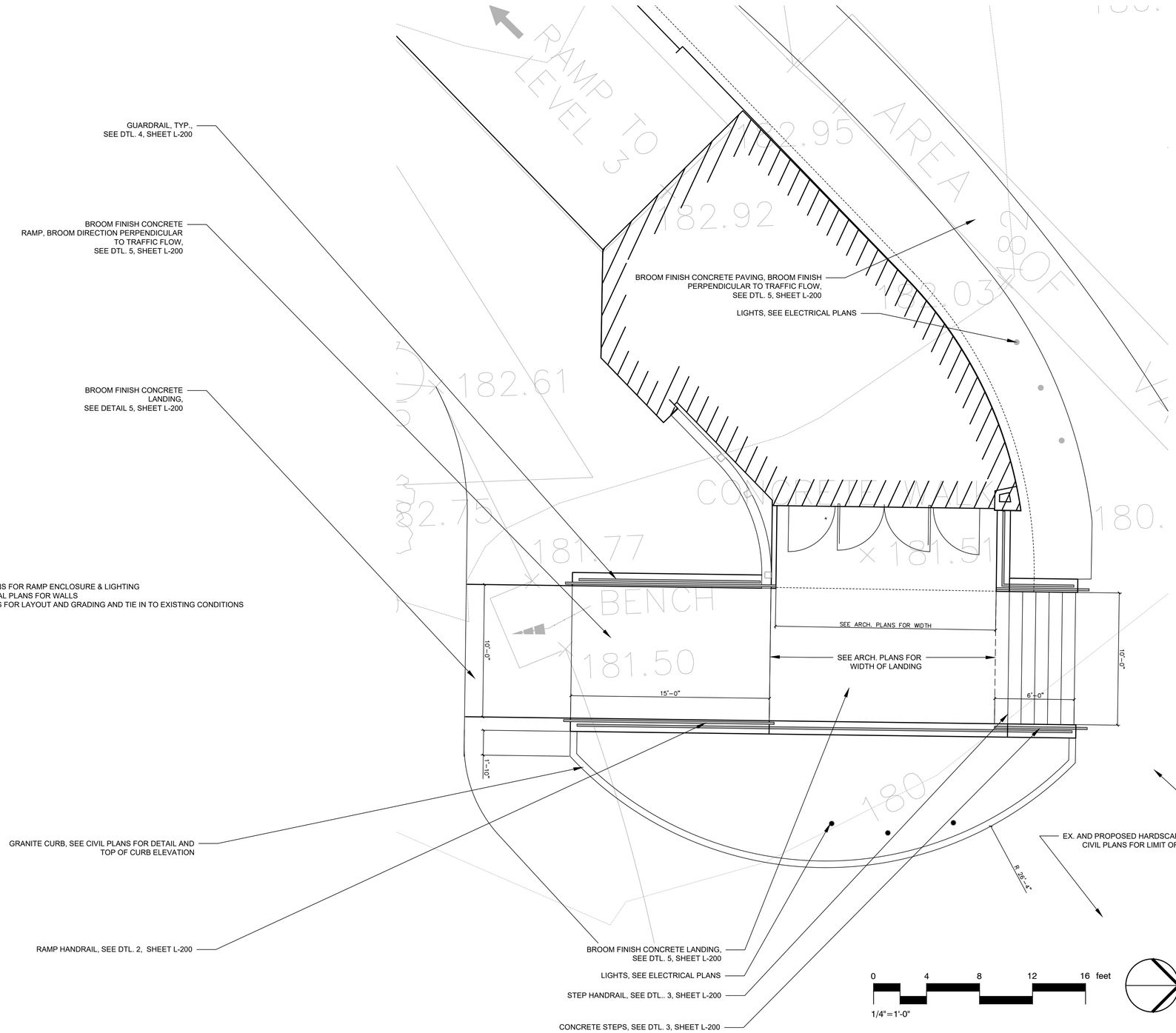

NOTES:
1. SEE ARCH. PLANS FOR RAMP ENCLOSURE & LIGHTING
2. SEE STRUCTURAL PLANS FOR WALLS
3. SEE CIVIL PLANS FOR LAYOUT AND GRADING AND TIE IN TO EXISTING CONDITIONS

CCRI WARWICK RENEWAL
ENTRY RAMP ENCLOSURE

400 EAST AVENUE, WARWICK RI 02886

TRAVERSE
landscape architects
150 Chestnut Street, 4th Floor
Providence, RI 02903

JOB NO.	DATE
1609A	November 1, 2018

ISSUE : Owner Review Set

NO.	REVISION DESCRIPTION	DATE

SHEET TITLE

HARDSCAPE PLAN

SHEET

L-100

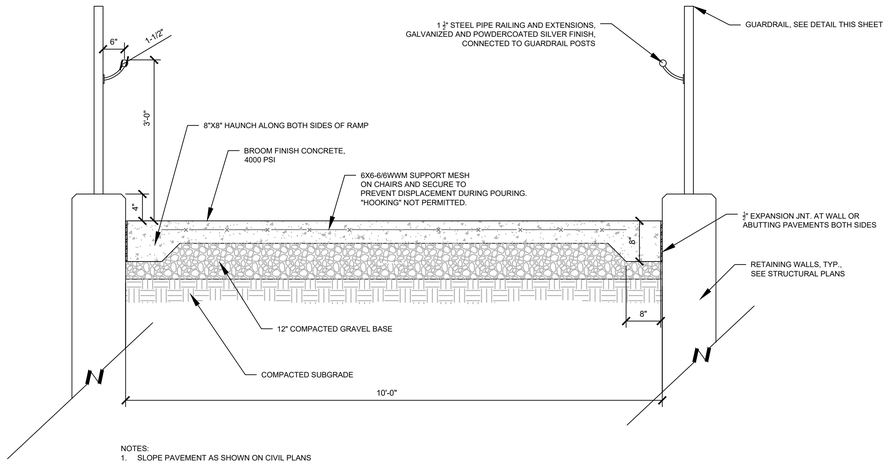

NOTES:
1. SLOPE PAVEMENT AS SHOWN ON CIVIL PLANS

1 SECTION - RAMP AND HANDRAIL
3/4" = 1'-0"

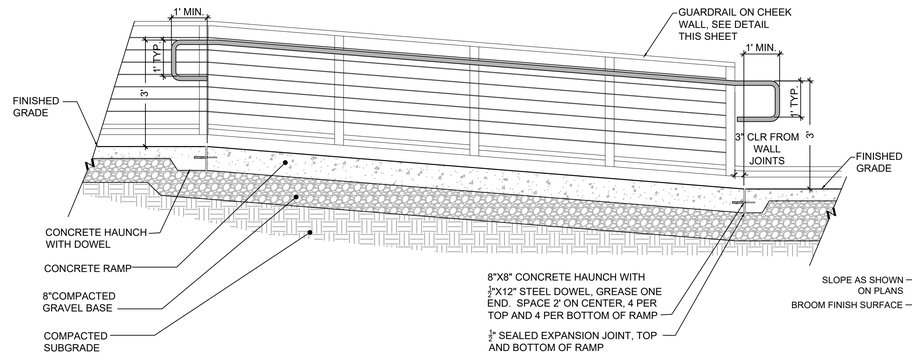

2 ELEVATION - CCRI HANDRAIL/GUARDRAIL AT RAMP
1/2" = 1'-0"

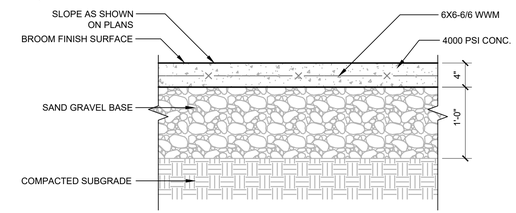

NOTES:
1. JOINTS SHALL BE TOOLED PER DETAILS AND SHALL BE PLACED AS FOLLOWS UNLESS OTHERWISE NOTED ON THE PLANS.
2. EXPANSION JOINTS SHALL BE 20' O.C. UNLESS OTHERWISE NOTED ON THE PLANS.
3. CONTROL JOINTS SHALL BE 5' O.C. UNLESS OTHERWISE NOTED ON THE PLANS.
4. BROOM FINISH SHALL BE PERPENDICULAR TO PEDESTRIAN TRAFFIC FLOW UNLESS OTHERWISE NOTED ON THE PLANS.
5. CONTROL JOINTS SHALL BE SAWCUT

5 BROOM FINISH CONCRETE PAVING
1" = 1'-0"

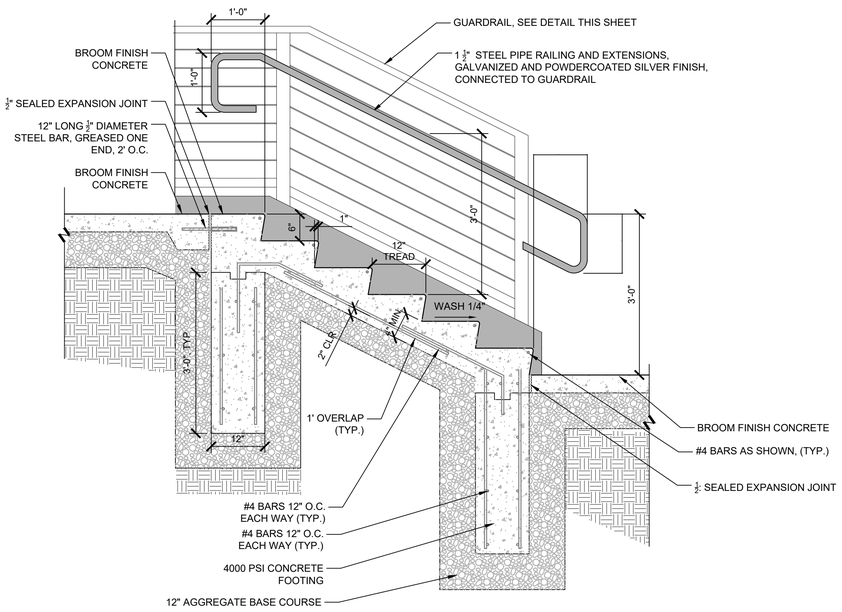

3 SECTION - CCRI CONCRETE STEPS AND HANDRAIL
3/4" = 1'-0"

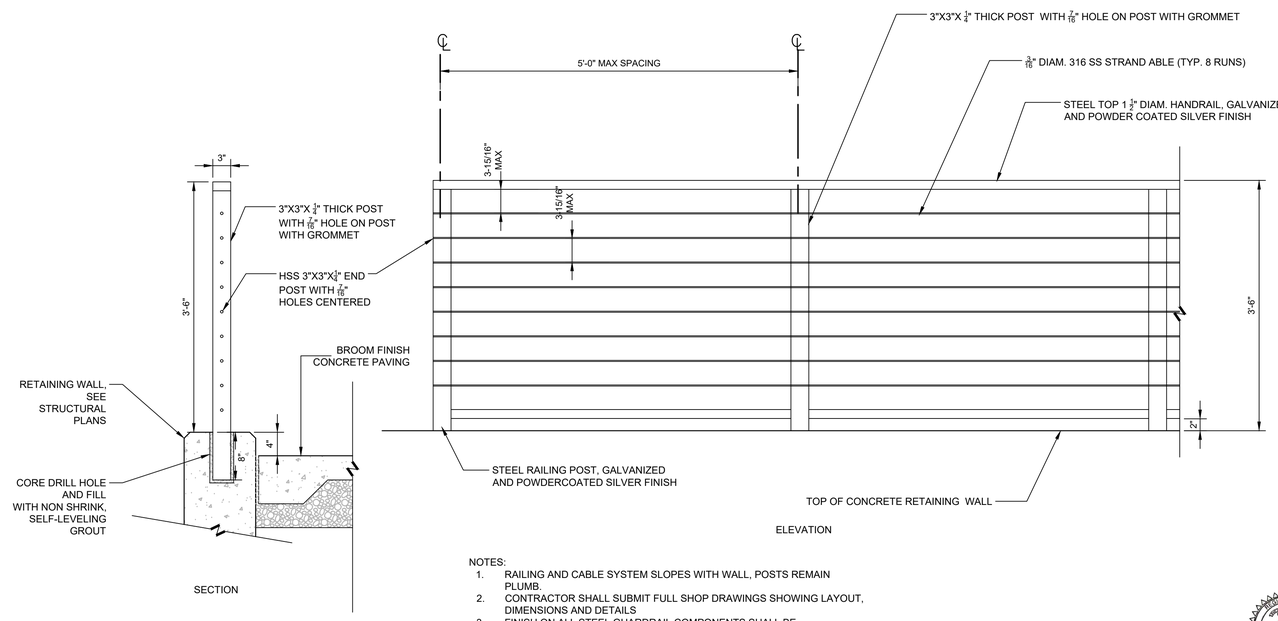

NOTES:
1. RAILING AND CABLE SYSTEM SLOPES WITH WALL, POSTS REMAIN PLUMB.
2. CONTRACTOR SHALL SUBMIT FULL SHOP DRAWINGS SHOWING LAYOUT, DIMENSIONS AND DETAILS
3. FINISH ON ALL STEEL GUARDRAIL COMPONENTS SHALL BE POWERCOATED SILVER FINISH. ALL GUARDRAIL AND HANDRAIL COMPONENTS SHALL MEET CURRENT ADA REGULATIONS FOR DIMENSIONS, LAYOUT AND LOAD CAPACITIES.

4 SECTION/ELEVATION - CCRI GUARDRAIL
1" = 1'-0"

CCRI WARWICK RENEWAL ENTRY RAMP ENCLOSURE

400 EAST AVENUE, WARWICK RI 02886

TRAVERSE landscape architects
150 Chestnut Street, 4th Floor
Providence, RI 02903

JOB NO.	DATE
1609A	November 1, 2018

ISSUE : Owner Review Set

NO.	REVISION DESCRIPTION	DATE

SHEET TITLE

DETAILS

SHEET

L-200

PLANT SCHEDULE

TREES	BOTANICAL NAME / COMMON NAME	CONT		QTY	REMARKS
JC	Juniperus virginiana `Canaertii` / Canaerti Juniper	6/7' B&B		1	
SHRUBS	**BOTANICAL NAME / COMMON NAME**	**CONT**		**QTY**	**REMARKS**
CK2	Cornus sericea `Kelseyi` / Kelseyi Dogwood	18-24"		27	
FB	Fothergilla gardenii `Blue Mist` / Blue Mist Fothergilla	#3		7	
IG	Ilex glabra `Shamrock` / Inkberry	30"-36"		25	
GRASSES	**BOTANICAL NAME / COMMON NAME**	**CONT**		**QTY**	**REMARKS**
PH	Pennisetum alopecuroides `Hameln` / Hameln Dwarf Fountain Grass	#2		37	
GROUND COVERS	**BOTANICAL NAME / COMMON NAME**	**CONT**	**SPACING**	**QTY**	**REMARKS**
LC	Liriope spicata / Creeping Lily Turf	#1	18" o.c.	23	

LANDSCAPE NOTES:

1. All plant material must be tagged in the ground, at the nursery by the Landscape Architect. All plant material shall be commercially obtained and shall meet the American Association of Nurseryman standards for nursery stock, latest edition, and its amendments. Plant only during season normal to the particular variety. All plant inspections will be at the expense of the contractor. Permanent seals will be required.
2. Planting beds shall be excavated to a minimum depth of 12" and new laom and compost (50/50 mix) shall be incorporated into the planting bed to meet surrounding grades unless otherwise noted or detailed. Cover all planting beds with 3" shredded hardwood bark mulch within a seventy-two hour period after planting. See plan for bed layout.
3. All plant materials furnished by the contractor shall be guaranteed for a period of one year from final acceptance of landscape work.
4. The contractor is responsible for keeping the site clean of miscellaneous debris throughout the construction period. All waste material is to be disposed of immediately to an off-site location, unless otherwise indicated on the plans.
5. The contractor shall perform all work in accordance with all local, state, and federal regulations, and shall obtain all necessary permits for this project.
6. Loam: Loam moved during the course of construction shall be retained and distributed within the site in accordance with the landscape plan. Stockpiled loam shall not be mixed with any subsoil, noxious weeds or unsuitable materials. All excess loam shall remain on the property of the owner. New loam if required to provide the specified depth, shall be a fertile, friable medium textured sandy loam free of material toxic to healthy plant growth. Loam shall also be free of all stumps, roots, stones and other extraneous matter an inch (1") or greater in diameter. The pH shall be between 6.5 and 7.5. Organic content shall be a minimum of 5%.
7. Lawn Preparation: Remove all debris and other inorganic materials on the prepared subgrade, reshape and dress any damaged or eroded area prior to spreading the loam. Scarify and loosen subgrade in any areas where compaction may have occurred. Spread stockpiled and off-site loam on all disturbed areas to produce a depth of 4" unless otherwise noted on the plans. Fine grade loamed areas to produce a smooth and unbroken finish grade to the required depth. Apply a starter fertilizer (10-20-10) at a rate of 20 lbs. per 1000 square feet and lime at a rate of 40 lbs. per 1000 square feet unless otherwise noted on the plans or in the specifications. Once spread, the fertilizer and lime shall be thoroughly incorporated into the loam. The loam shall be rolled, and depression shall be top dressed and raked to create a smooth surface.
8. Seeding: Seeding shall take place between March 15 and May 31 or August 15 and October 15 only. Seed shall be pure, live, fresh seed from commercial sources meeting and labeled in accordance with State and Federal rules and regulations. The seed mixture shall be as noted on this sheet.

   Seeded areas shall, at a minimum, include all areas of the site that have been disturbed or are barren unless otherwise noted on the plans. Seed shall be applied at the rates indicated per seed mix.
9. Protection of Existing Plantings: Maximum effort should be made to save tree or other plant specimens which are large for their species, rare to the area, or of special horticultural or landscape value. Contact owner/landscape architect before removing any specimen of this type unless otherwise noted on the plans. No material or temporary soil deposits shall be placed within the drip line of shrubs or trees designated on the landscape plan to be retained. Protective barriers are to be installed around each plant and/or group of plants that are to remain on the site. Barriers shall not be supported by the plants they are protecting, but shall be self supporting. They shall be of minimum of four feet (4') high and constructed of a durable material, such as snow or silt fence, that will last until construction is completed.
10. Pruning: The contractor shall employ a certified arborist to prune any existing roots or branches carefully prune branches in the way of construction by using only approved methods and tools. The use of axes for trimming or spurs for climbing will not be permitted.
11. Disturbed Areas: Any areas disturbed during the course of construction are to be restored to original (or better) condition by contractor before completion of the project, and are subject to approval by landscape architect and owner. All grass areas disturbed during construction shall be york raked to remove stones and loamed and seeded as per specifications.
12. Layout: All notes and dimensions are typical unless otherwise noted. All dimensions are square (parallel or perpendicular) unless otherwise noted. The contractor shall notify the owner/owner's representative immediately in the event of any discrepancies found in the contract documents and/or in the field, or of conditions uncovered in the work which are not reflected in the plans.
13. Cleaning: Contractor is responsible for keeping site clean of miscellaneous debris throughout the construction period. All waste material is to be disposed of immediately to an off-site location, unless otherwise indicated on the plan.

IRRIGATION NOTES:

1. Exiting irrigation controller located on wall near underpass.
2. Existing water supply is 2-inch domestic service from within building.
3. Use existing spare wire from existing irrgiation controller for CCRI knight campus. Make all wire splices using dby-6 waterproof splice kits in valve boxes (2 new zones required, minimum).
4. Use existing sleeves under driveway for irrigation pipe and/or valve wire. For new hardscapes, coordinate with site contractor to provide two (2) sch 40 pvc 6-inch sleeves extending 18 inches into landscape.
5. Sprinkler zones shall use 12-inch pop-up spray bodies with head-to-head coverage for shrub and groundcover planting beds. Connect heads to lateral with clamped swing pipe to npt x barbed fitting. Sprinkler bodies shall have pressure regulation to 30 psi and drain check valves. Set heads flush with grade.
6. Drip zones shall come with filter and pressure regulation as part of a complete kit. Use integral check valve drip tubing spaced as required for complete planter bed coverage. Provide automatic flush valves at ends of drip zones in 6-inch round valve boxes. Provide check valves on supply headers with slopes greater than 4 feet. Install drip tubing perpendicular to slope (along lines of same elevation).
7. Program new zones so as to not conflict with existing programs. Schedule irrigation based on site conditions (sun/shade, soil, and plant type). Where possible, use cycle-soak feature to prevent runoff.
8. Submit all catalog cuts and specifications sheets of product to be installed for review by owner's representative. Provide shop drawing of irrigation layout for expanded system for review by owner's representative.
9. Provide as-built red-line sketch plan of expanded irrigation system to owner and owner's representative.
10. Guarantee expanded irrigation system for one (1) year after owner signoff.

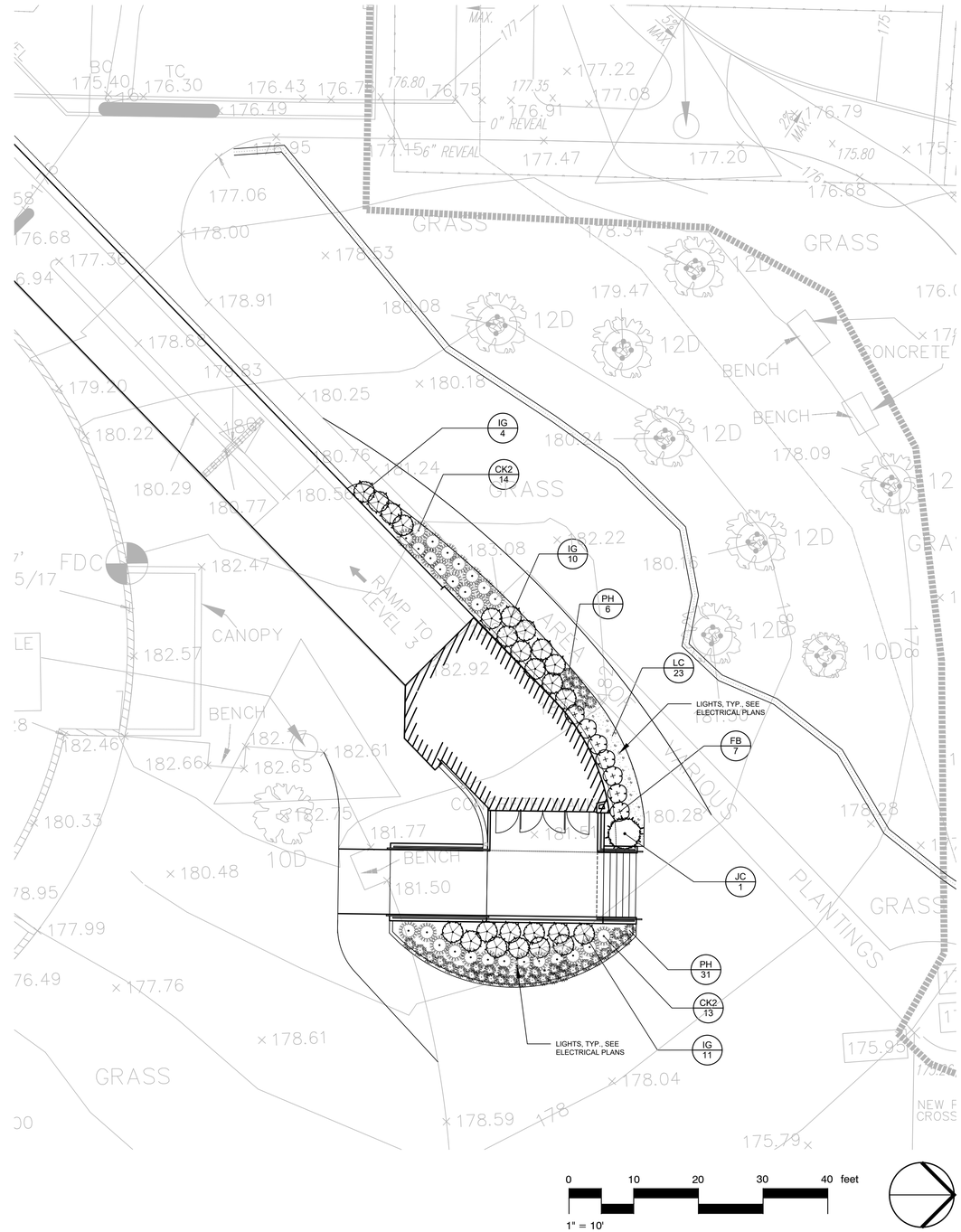

CCRI WARWICK RENEWAL ENTRY RAMP ENCLOSURE

400 EAST AVENUE, WARWICK RI 02886

BREWSTER THORNTON GROUP ARCHITECTS LLP
150 Chestnut Street
Providence, RI
02903
Tel: 401.861.1600
Fax: 401.861.5588

TRAVERSE landscape architects
150 Chestnut Street, 4th Floor
Providence, RI 02903

JOB NO.	DATE
1609A	November 1, 2018

ISSUE : **Owner's Review Set**

NO.	REVISION DESCRIPTION	DATE

SHEET TITLE

LANDSCAPE PLAN

SHEET

L-300

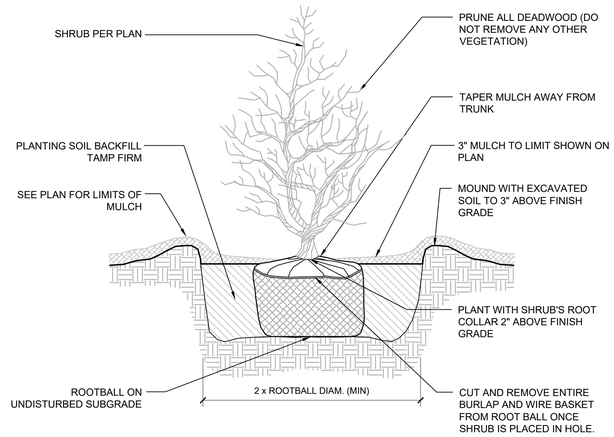

1 SHRUB PLANTING

NTS

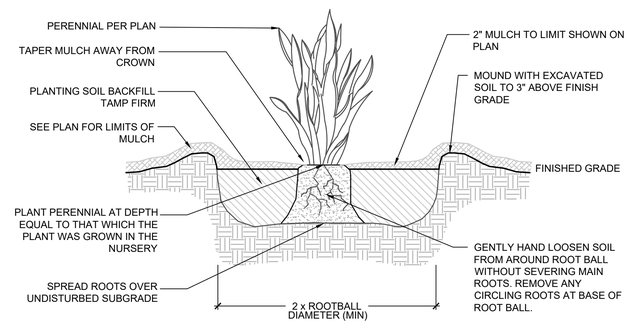

2 GRASS OR PERENNIAL PLANTING

NTS

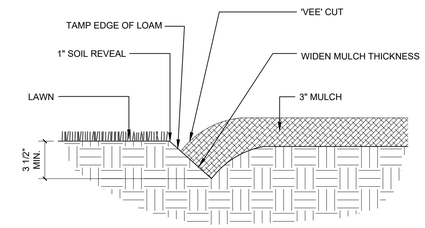

NOTES:
1. LOCATE BEDLINE AS SHOWN ON PLAN.
2. LANDSCAPE ARCHITECT TO APPROVE ALL BEDLINES.

3 PLANTING BEDLINE EDGE

NTS

P-CC-09

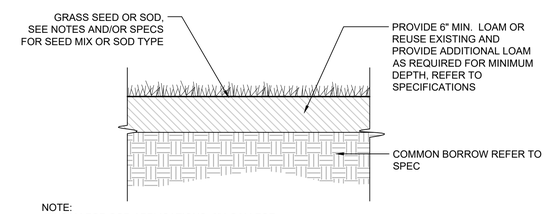

NOTE:
4" LOAM FOR SOD APPLICATIONS, 6" LOAM FOR SEED APPLICATIONS

4 LOAM & SEED OR LOAM & SOD

NTS

CCRI WARWICK RENEWAL
ENTRY RAMP ENCLOSURE

400 EAST AVENUE, WARWICK RI 02886

TRAVERSE
landscape architects
150 Chestnut Street, 4th Floor
Providence, RI 02903

JOB NO.	DATE
1609A	November 1, 2018

ISSUE : **Owner's Review Set**

NO.	REVISION DESCRIPTION	DATE

SHEET TITLE

LANDSCAPE DETAILS

SHEET

L-301

4/23/2018 4:56:12 PM

GENERAL NOTES – DESIGN LOADS

BUILDING IS DESIGNED USING THE "RHODE ISLAND STATE BUILDING CODE", SBC–1–2013 (IBC 2012 W/ RI SBC–2013 AMENDMENTS)

ROOF LIVE LOADS:
GROUND SNOW LOAD_____30 PSF
FLAT ROOF SNOW LOAD (Pf)_____30 PSF

WIND LOADS
ULTIMATE WIND SPEED _____(V ult.) 146 MPH
NOMINAL WIND SPEED_____(V asd.) 113 MPH
WIND EXPOSURE CATEGORY_____ C

SEISMIC LOADS:
SEISMIC COEFFICIENTS:
S_s = 0.174g S_{DS} = 0.188g
S_1 = 0.060g S_{D1} = 0.096g
TL = 6 SEC.

SEISMIC IMPORTANCE FACTOR Ie _____1.25
SITE CLASS _____D
RISK CATEGORY _____III
SEISMIC DESIGN CATEGORY _____B

SEISMIC FORCE RESISTING SYSTEM:
SHALL BE ORDINARY STEEL CONCENTRICALLY BRACED FRAMES.

FOUNDATIONS:
FROST DEPTH_____3'–4" MINIMUM
PRESUMED SOIL BEARING CAPACITY____3000 PSF

C. A. Pretzer Associates, Inc.
Engineers
50 Freeway Drive
CRANSTON, RHODE ISLAND 02920
(401) 785-2690 FAX: (401) 461-9360

JOB: CCRI Canopy			216550.20
SHEET NO.	2	OF	XX
CALCULATED BY:	JRM	Date:	5-Jul-18
CHECKED BY:		Date:	
SCALE:		NONE	

Component and Cladding Wind Pressure Table (Nominal Wind Speed)

Zone	Area				
	10 sq ft	20 sq ft	50 sq ft	100 sq ft	500 sq ft
1	-28.62 psf	-27.89 psf	-26.93 psf	-26.20 psf	-26.20 psf
2	-48.03 psf	-42.91 psf	-36.16 psf	-31.05 psf	-31.05 psf
3	-72.28 psf	-59.87 psf	-43.46 psf	-31.05 psf	-31.05 psf
4	-28.38 psf	-27.22 psf	-25.68 psf	-24.52 psf	-21.83 psf
5	-34.93 psf	-32.61 psf	-29.54 psf	-27.22 psf	-21.83 psf
	Soffit Overhangs				
2	-45.60 psf	-44.87 psf	-43.90 psf	-43.17 psf	-31.05 psf
3	-72.28 psf	-57.68 psf	-38.37 psf	-23.77 psf	-23.77 psf

Note: Zone 5 occurs within 6.80 ft of the corner of the building

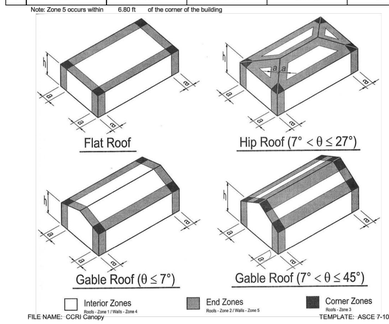

FILE NAME: CCRI Canopy

TEMPLATE: ASCE 7-10 WIND LOAD

FOUNDATION NOTES:

1. GENERAL CONTRACTOR TO BE RESPONSIBLE TO REMOVE ALL SOIL CONTAINING ORGANIC OR UNSUITABLE BEARING MATERIAL FROM THE BUILDING FOOTPRINT. THERE MAY BE UP TO 5–FEET OF UNSUITABLE MATERIAL TO BE REMOVED FROM BUILDING FOOTPRINT.
2. ALL SOIL SUPPORTED FOOTINGS SHALL BE FOUNDED UPON NATURAL SUBGRADE OR 6" MINIMUM COMPACTED STRUCTURAL FILL EXTENDING DOWN TO THE NATURAL SUBGRADE WITH A SAFE BEARING CAPACITY OF NOT LESS THAN 3000 PSF. COORDINATE SITE SPECIFIC SUBGRADE PREPARATION REQUIREMENTS WITH GEOTECHNICAL REPORT.
3. ROCK SHALL BE EXCAVATED A MINIMUM OF 4" BELOW BOTTOM OF FOOTING ELEVATION AND COVERED WITH A LAYER OF COMPACTED GRAVEL.
4. A MODIFIED PROCTOR TEST SHALL BE PERFORMED BY A SOILS TESTING LAB ON EACH TYPE OF SOIL TO BE COMPACTED.
5. SOIL SHALL BE COMPACTED TO NOT LESS THAN 95% OF MAXIMUM DRY DENSITY PER ASTM D1557 IN LIFTS NOT TO EXCEED 6" LOOSE DEPTH.
6. FIELD DENSITY TESTS SHALL BE PERFORMED BY AN INDEPENDENT SOILS TESTING LAB TO VERIFY COMPACTION. A COPY OF ALL TEST REPORTS SHALL BE FILED WITH THE ARCHITECT.
7. BACKFILL SYMMETRICALLY AGAINST ALL FOUNDATION WALLS IN INCREMENTS NOT TO EXCEED 2 FEET MAXIMUM DIFFERENTIAL. UNLESS FINAL GRADING ON CIVIL/SITE PLANS SHOW A HIGHER DIFFERENTIAL.
8. SEE PLUMBING AND ELECTRICAL DRAWINGS FOR UNDER FLOOR SYSTEMS AND SPECIAL GRANULAR FILL MATERIAL REQUIREMENTS.
9. NO FOOTINGS OR SLABS SHALL BE POURED INTO OR AGAINST SUBGRADE CONTAINING FREE WATER OR ICE.
10. ALL SLABS–ON–GRADE SHALL BE PLACED ON A 15 MIL. VAPOR BARRIER OVER MIN. 6" COMPACTED STRUCTURAL FILL LAYER, COORDINATE ADD'L SUBGRADE PREPARATION REQUIREMENTS WITH GEOTECHNICAL REPORT.

CONCRETE NOTES:

1. ALL CONCRETE SHALL HAVE A COMPRESSIVE STRENGTH OF NOT LESS THAN 4000 PSI AT 28 DAYS.
2. ALL CONCRETE WALLS AND CONCRETE EXPOSED TO THE WEATHER SHALL CONTAIN AN APPROVED AIR ENTRAINING ADMIXTURE. AIR CONTENT SHALL BE 4 1/2% TO 7%.
3. ALL CONCRETE SHALL CONTAIN AN APPROVED WATER–REDUCING ADMIXTURE.
4. A SET OF FOUR (4) CONCRETE TESTS CYLINDERS SHALL BE TAKEN BY AN INDEPENDENT CONCRETE TESTING LAB ON EACH DAY WHEN CONCRETE PLACEMENT EXCEEDS 5 CUBIC YARDS. ONE CYLINDER SHALL BE BROKEN AT 7 DAYS, TWO AT 28 DAYS, AND ONE AT 56 DAYS. A COPY OF ALL TEST REPORTS SHALL BE FILED WITH THE ARCHITECT.
5. NO CALCIUM CHLORIDE SHALL BE USED IN ANY CONCRETE.
   NO ACCELERANT ADMIXTURES SHALL BE USED IN ANY CONCRETE.
6. A MIX DESIGN SHALL BE SUBMITTED FOR APPROVAL FOR EACH TYPE OF CONCRETE.
7. ALL REINFORCING BARS SHALL BE ASTM A–615 GRADE 60 UNLESS NOTED OTHERWISE.
8. SHOP DRAWINGS SHOWING REINFORCING DETAILS, INCLUDING STEEL SIZES, SPACING AND PLACEMENT, SHALL BE SUBMITTED BY THE CONTRACTOR FOR APPROVAL PRIOR TO FABRICATION.
9. ALL REINFORCING BAR LAP SPLICES SHALL CONFORM TO REQUIREMENTS OF ACI 318, BUT IN NO CASE SHALL THEY BE LESS THAN 2'–0".
10. DOWELS SHALL MATCH SIZE AND SPACING OF MAIN REINFORCING.
11. CONSTRUCTION JOINTS IN ALL WALLS SHALL BE NOT FURTHER APART THAN 60 FEET IN ANY DIRECTION. SEE PLAN FOR LOCATION OF SLAB CONSTRUCTION AND/OR SHRINKAGE JOINTS.
12. ALL WELDED WIRE FABRIC SHALL CONFORM TO ASTM A–185, Fy=60 KSI
13. ALL WELDED WIRE FABRIC SHALL BE LAPPED TWO (2) FULL MESH PANELS AT SIDES AND ENDS AND BE SECURELY WIRED TOGETHER.
14. SEE ARCHITECTURAL DRAWINGS FOR TYPE AND LOCATION OF ALL FLOOR FINISHES, FLOOR DEPRESSIONS AND CUT OUTS.
15. COORDINATE ALL FOUNDATION PENETRATIONS WITH ARCHITECT, PLUMBING, MECHANICAL, ELECTRICAL CONTRACTORS AND LOCAL AGENCIES.
16. AFTER REMOVAL OF FOUNDATION FORMS, ALL CONCRETE ABOVE GRADE SHOULD BE "RUBBED SMOOTH FINISH"

STRUCTURAL STEEL:

1. ALL DETAILING, FABRICATION AND ERECTION SHALL CONFORM TO THE AISC SPECIFICATIONS AND CODES, LATEST EDITION.
2. BASE PLATES AND MISC. STRUCTURAL STEEL SHALL BE ASTM A–36, Fy = 36 KSI. ALL SQUARE AND RECTANGULAR HOLLOW STRUCTURAL SECTIONS (HSS) SHALL BE ASTM A–500 GRADE B FY MINIMUM 46 KSI.
3. ALL ANCHOR BOLTS AND THREADED RODS SHALL CONFORM TO THE REQUIREMENTS OF ASTM F1554.
4. ALL BOLTS, NUTS AND WASHERS SHALL CONFORM TO THE REQUIREMENTS OF ASTM A–325 OR F–1852 FOR 3/4" DIAMETER HIGH STRENGTH BOLTS UNLESS NOTED OTHERWISE.
5. NO CONNECTION SHALL CONSIST OF LESS THAN TWO 3/4" DIAMETER BOLTS OR WELDS DEVELOPING A MINIMUM OF 10,000 POUNDS UNLESS NOTED OTHERWISE.
6. THE CONTRACTOR SHALL BE RESPONSIBLE FOR THE CONTROL OF ALL ERECTION PROCEDURES AND SEQUENCES WITH RELATION TO TEMPERATURE DIFFERENTIALS AND STABILITY.
7. AFTER FABRICATION, ALL STEEL SHALL BE CLEANED OF ALL RUST, LOOSE MILL SCALE AND OTHER FOREIGN MATERIALS AND RECEIVE ONE COAT OF APPROVED PRIMER PAINT.
8. THE FABRICATOR SHALL FURNISH SHOP AND ERECTION DRAWINGS AND OBTAIN APPROVAL PRIOR TO FABRICATING ANY STRUCTURAL STEEL.
9. SUBMIT P.E. STAMPED AND CONTRACTOR APPROVED SHOP DRAWINGS FOR ENGINEER OF RECORD REVIEW AND APPROVAL PRIOR TO FABRICATION.
10. REFER TO ARCHITECTURAL DRAWINGS FOR FIREPROOFING REQUIREMENTS OF ALL STEEL.
11. ALL MOMENT CONNECTIONS SHALL BE DESIGNED BY P.E. REGISTERED IN THE STATE OF RHODE ISLAND. SUBMIT STAMPED DRAWINGS AND CALCULATIONS FOR REVIEW.
12. ALL WELDING ELECTRODES SHALL BE E70XX.
13. ALL WELDING SHALL BE DONE BY CERTIFIED WELDERS AND SHALL CONFORM TO THE AWS "CODE FOR ARC AND GAS WELDING IN BUILDING CONSTRUCTION", LATEST EDITION.
14. ALL FILLET WELDS SHALL BE A MINIMUM OF 1/4" UNLESS NOTED OTHERWISE.
15. ALL WELDS SHALL BE VISUALLY INSPECTED AND ALL FULL PENETRATION WELDS SHALL BE INSPECTED BY MAGNETIC PARTICLE TESTING.

STEEL DECK NOTES:

1. ALL STEEL DECKING SHALL CONFORM TO THE STEEL DECK INSTITUTE (SDI) APPLICABLE SPECIFICATIONS AND REQUIREMENTS. INSTALLATION SHALL BE PER THE MANUFACTURER'S RECOMMENDATIONS IN ACCORDANCE WITH SDI SPECIFICATIONS.
2. STEEL DECK SHALL BE STORED OFF THE GROUND AT THE JOBSITE, AND BE PROTECTED FROM THE ELEMENTS WITH A WATERPROOF COVERING WHERE REQUIRED.
3. DECK SHEETS SHALL BE PLACED IN ACCORDANCE WITH APPROVED ERECTION LAYOUT DRAWINGS SUPPLIED BY THE DECK MANUFACTURER AND IN CONFORMANCE WITH THE MANUFACTURER'S STANDARDS.
4. ALL STEEL TO BE USED FOR DECKING SHALL BE GALVANIZED.
5. UNLESS NOTED OTHERWISE ON PLANS, THE FOLLOWING DECKING SHALL BE PROVIDED;
   a) NUCOR VULCRAFT ROOF DECK 1 1/2"–18 GA. GALVANIZED TYPE B (OR FM APPROVED STEEL DECK).
6. THE ERECTOR SHALL ESTABLISH A WELDING PROCEDURE FOR THE WELDING OF THE STEEL DECKING TO THE STRUCTURAL STEEL FOR THE PARTICULAR GAGE USED. PRIOR TO START OF ERECTION OF STEEL DECK, EACH WELDER SHALL BE QUALIFIED USING THIS PROCEDURE AS WITNESSED BY THE TESTING LABORATORY.
7. ALL ENDS OF METAL DECK PANELS SHALL BE LAPPED TWO (2) INCHES AND BOTH PANELS SHALL BE WELDED TO THE SUPPORTING STRUCTURE.
8. FOR CONNECTION OF THE DECK TO THE SUPPORTING STRUCTURE, WELD WASHERS SHALL BE USED WITH ARC SPOT WELDS ON ALL DECK UNITS WITH METAL THICKNESS LESS THAN 0.028 INCHES (22 GAGE) (0.71 MM). WELD WASHERS SHALL BE A MINIMUM THICKNESS OF 0.050 INCHES (1.27 MM) AND HAVE A NOMINAL 3/8 INCH (10 MM) DIAMETER HOLE. WELD WASHERS SHALL NOT BE USED BETWEEN SUPPORTS ALONG THE SIDELAPS.
9. WHERE WELD WASHERS ARE NOT REQUIRED, A MINIMUM VISIBLE 5/8 INCH (16 MM) DIAMETER ARC SPOT WELD OR ARC SEAM WELD OF EQUAL PERIMETER SHALL BE USED. WELD METAL SHALL PENETRATE ALL LAYERS OF DECK MATERIAL AT END LAPS AND SHALL HAVE GOOD FUSION TO THE SUPPORTING MEMBERS.
   WELD SHALL BE PATTERN 36/4 IN THE FIELD AREA OF THE DECK.
   THE PERIMETER EDGES OF DECK SHALL BE FASTENED WITH (1) ⅝" WELD AT 6" O.C. OR (2) ⅝" WELD AT 12" O.C.
   CORNER AREAS, SHALL BE FASTENED WITH ¾" WELDS AT 6" ON CENTER OR FM APPROVED DECK FASTENERS.

LIGHT GAGE STEEL FRAMING NOTES:

1. ALL DESIGN, DETAILING, FABRICATION, AND ERECTION OF LIGHT GAGE FRAMING SHALL BE IN ACCORDANCE WITH AMERICAN IRON AND STEEL INSTITUTE "SPECIFICATIONS FOR THE DESIGN OF COLD–FORMED STEEL STRUCTURAL MEMBERS", LATEST EDITION, AND THE MANUFACTURER'S DETAILS AND SPECIFICATIONS.
2. FOR STUD DESIGNATIONS AND MINIMUM DESIGN PROPERTIES. REFER TO MARINO/WARE INDUSTRIES, INC.
3. STEEL STUDS AT EXTERIOR WALLS SHALL BE 6" x 18 GA. (1⅝" FL.) TYPE SW SPACED @ 16" O.C. WITH 6" X 18 GA. TRACK TYPICAL, FASTENED TO CONC. WITH (2) 5/32" DIA. POWDER ACTUATED FASTENERS @ 16" O.C. UNLESS NOTED OTHERWISE.
4. HEADERS OVER EXTERIOR WALL OPENINGS 8 FEET OR LESS SHALL BE A MINIMUM OF (2) 8SW16 STEEL STUDS WITH 6SW16 STEEL TRACK AT TOP AND BOTTOM.
5. ALL LIGHT GAGE FRAMING SHALL BE GALVANIZED AND SHALL CONFORM TO ASTM A663 GRADE 33 WITH A MINIMUM YIELD STRESS OF 33,000 PSI FOR 18 GA. AND THINNER.
6. PROVIDE STUD WALL BRIDGING PER MANUFACTURER'S REQUIREMENTS. PROVIDE BRIDGING AT A MINIMUM OF 4'–0" O.C. WHERE THERE IS NO SHEATHING AND WITHIN 12" FROM DEFLECTION TRACK AT TOP OF WALL.

THOMAS P. GRAFE
No. 2735
REGISTERED PROFESSIONAL ENGINEER

CCRI WARWICK RENEWAL
ENTRY RAMP ENCLOSURE
400 EAST AVENUE, WARWICK RI 02886

BREWSTER THORNTON GROUP ARCHITECTS LLP
150 Chestnut Street
Providence, RI
02903
Tel: 401.861.1600
Fax 401.861.5588

C.A. PRETZER ASSOC. INC.
STRUCTURAL ENGINEERS
50 Freeway Drive
Cranston, R.I. 02920
TEL. 401-785-2690 FAX: 401-461-9360
DESIGN, CONSULTATION, INVESTIGATION

JOB NO.	DATE
1609A	November 1, 2018

ISSUE :

NO.	REVISION DESCRIPTION	DATE

SHEET TITLE
GENERAL NOTES

SHEET
S1.0

File Location: C:\Users\jims-PC\Documents\CAPA Job Files\BTG\216550.40 CCRI RAMP REDO\STRUCTURAL REDO\216550.20 CAPA-CCRI_ENTRY RAMP 11.1.2018.dwg, Printed on: 11/7/2018, by: Jim Ferreira

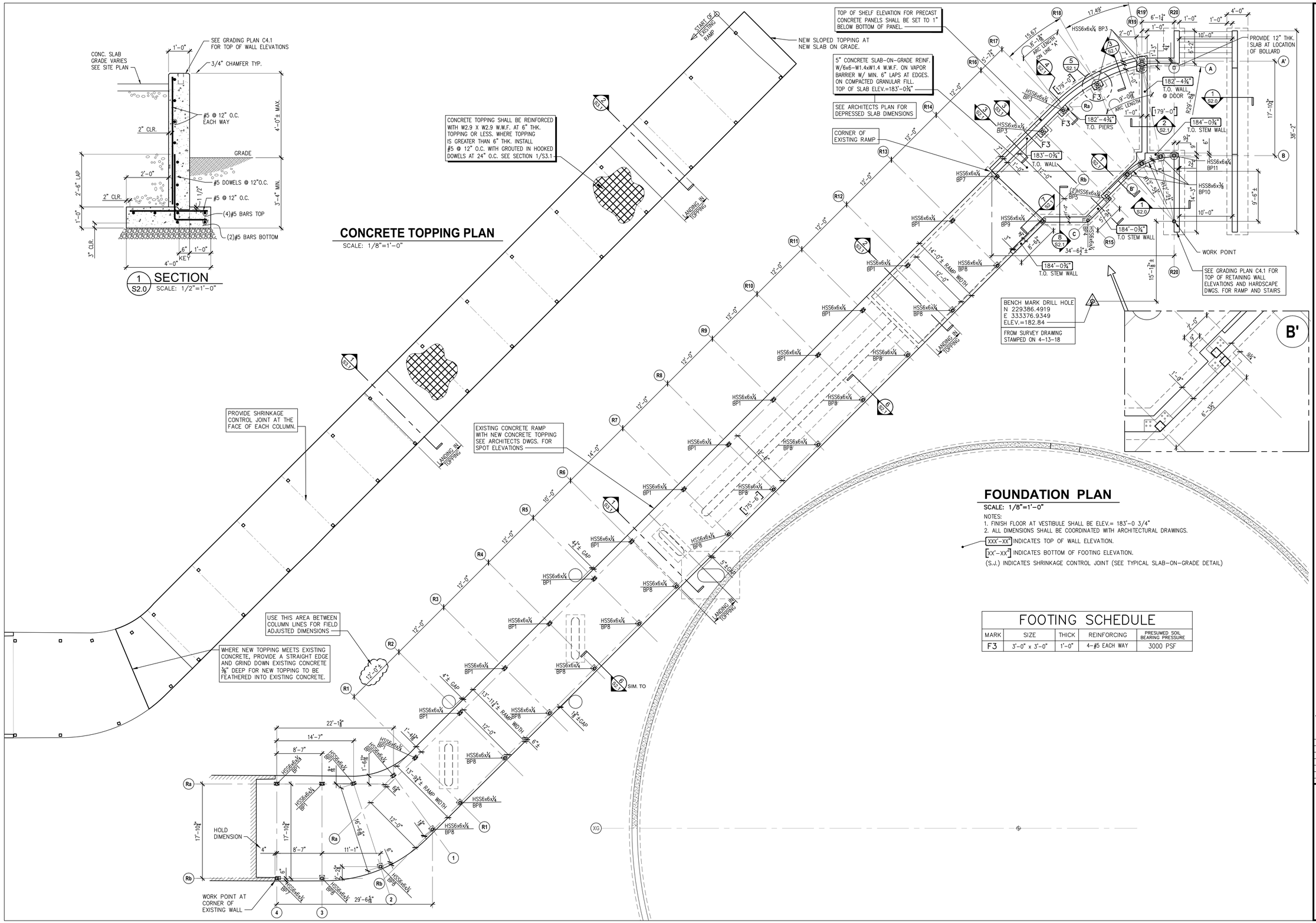

FOOTING SCHEDULE

MARK	SIZE	THICK	REINFORCING	PRESUMED SOIL BEARING PRESSURE
F3	3'-0" x 3'-0"	1'-0"	4-#5 EACH WAY	3000 PSF

THOMAS P. GRAFE No. 3735 REGISTERED PROFESSIONAL ENGINEER

CCRI WARWICK RENEWAL ENTRY RAMP ENCLOSURE

400 EAST AVENUE, WARWICK RI 02886

BREWSTER THORNTON GROUP ARCHITECTS LLP
150 Chestnut Street
Providence, RI
02903
Tel: 401.861.1600
Fax 401.861.5588

C.A. PRETZER ASSOC. INC.
STRUCTURAL ENGINEERS
50 Freeway Drive
Cranston, R.I. 02920
TEL. 401-785-2690 FAX: 401-461-9360
DESIGN, CONSULTATION, INVESTIGATION

JOB NO. 1609A
DATE November 1, 2018

ISSUE :

NO.	REVISION DESCRIPTION	DATE

SHEET TITLE
ENTRY RAMP FOUNDATION PLAN

SHEET
S2.0

File Location: C:\Users\Jims-PC\Documents\CAPA Job Files\BTG\216550.40 CCRI RAMP REDO\STRUCTURAL REDO\216550.20 CAPA-CCRI_ENTRY RAMP 11.1.2018.dwg, Printed on: 11/7/2018, by: Jim Ferreira

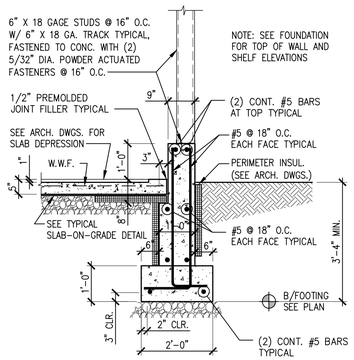

1 S2.1 SECTION
SCALE: 1/2"=1'-0"

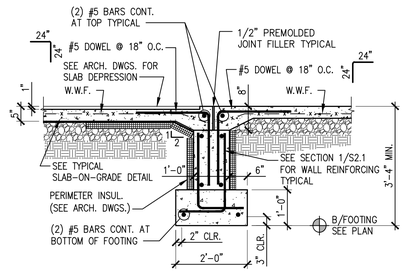

2 S2.1 SECTION
SCALE: 1/2"=1'-0"

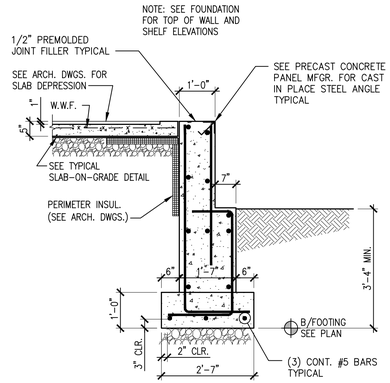

3 S2.1 SECTION
SCALE: 1/2"=1'-0"

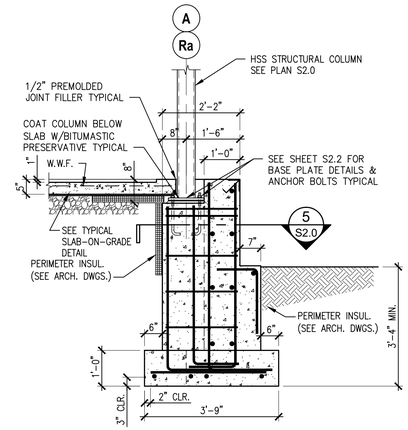

4 S2.1 SECTION
SCALE: 1/2"=1'-0"

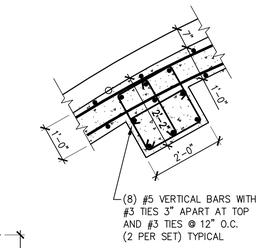

5 S2.1 SECTION
SCALE: 1/2"=1'-0"

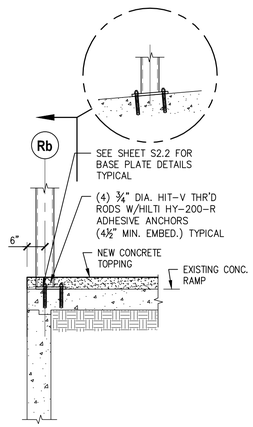

6 S2.1 SECTION
SCALE: 1/2"=1'-0"

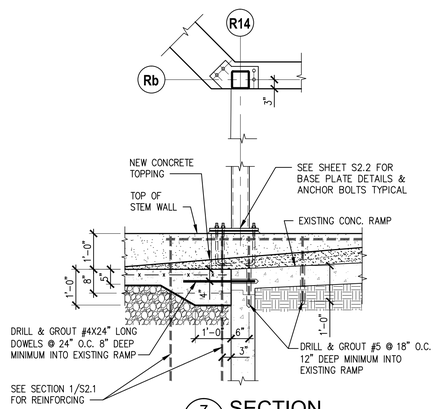

7 S2.1 SECTION
SCALE: 1/2"=1'-0"

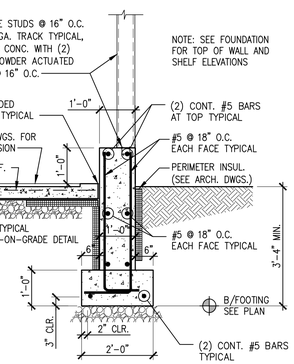

8 S2.1 SECTION
SCALE: 1/2"=1'-0"

THOMAS P. GRAFE
No. 2735
REGISTERED PROFESSIONAL ENGINEER

CCRI WARWICK RENEWAL ENTRY RAMP ENCLOSURE

400 EAST AVENUE, WARWICK RI 02886

BREWSTER THORNTON GROUP ARCHITECTS LLP
150 Chestnut Street
Providence, RI
02903
Tel: 401.861.1600
Fax 401.861.5588

C.A. PRETZER ASSOC. INC.
STRUCTURAL ENGINEERS
50 Freeway Drive
Cranston, R.I. 02920
TEL. 401-785-2690 FAX: 401-461-9360
DESIGN, CONSULTATION, INVESTIGATION

JOB NO.	DATE
1609A	November 1, 2018

ISSUE :

NO.	REVISION DESCRIPTION	DATE

SHEET TITLE
FOUNDATION SECTIONS AND DETAILS

SHEET
S2.1

File Location: C:\Users\Jims-PC\Documents\CAPA Job Files\BTG\216550.40 CCRI RAMP REDO\STRUCTURAL REDO\216550.20 CAPA-CCRI_ENTRY RAMP 11.1.2018.dwg, Printed on: 11/7/2018, by: Jim Ferreira

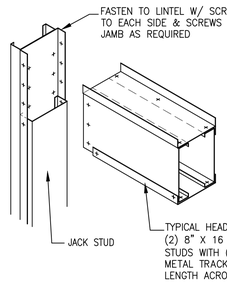

HEAD DETAIL

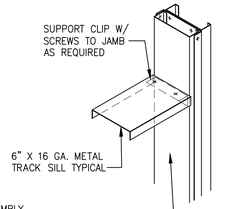

SILL DETAIL

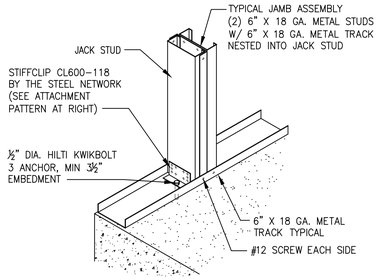

JAMB DETAIL

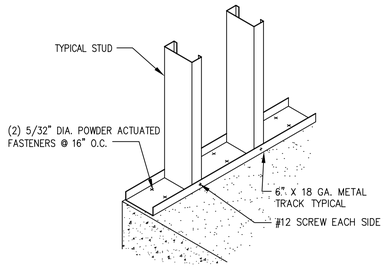

STUD WALL BASE DETAIL

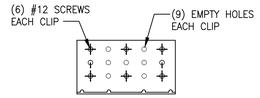

CL600-118 ATTACHMENT PATTERN

NOT TO SCALE

1 S2.2 TYPICAL METAL STUD DETAILS

SCALE: 3/4"=1'-0"

ANCHOR BOLT DETAILS

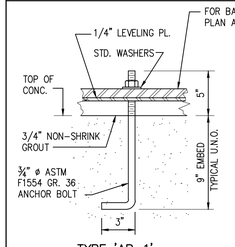

TYPE 'AB-1'

N.T.S.

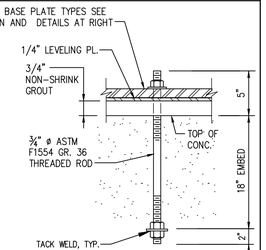

TYPE 'AB-2'

N.T.S.

NOTES:
1.) ALL BASE PLATES SHALL BEAR ON 1/4" LEVELING PLATE ON 3/4" NON-SHRINK GROUT TYPICAL

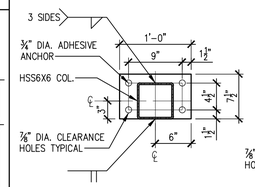

BASE PLATE TYPE "BP1"
7½" x ¾" x 1'-0"

BASE PLATE TYPE BP1

SCALE: 1"= 1'-0"

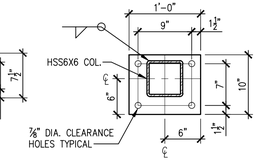

BASE PLATE TYPE "BP2"
10" x ¾" x 1'-0"

BASE PLATE TYPE BP2

SCALE: 1"= 1'-0"

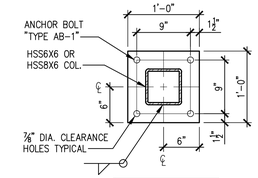

BASE PLATE TYPE "BP3"
12" x ¾" x 1'-0"

BASE PLATE TYPE BP3

SCALE: 1"= 1'-0"

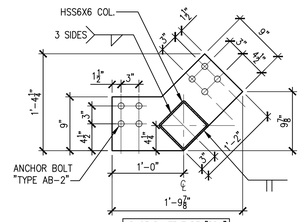

BASE PLATE TYPE "BP4"
1'-4¾" x ¾" x 1'-9⅞"

BASE PLATE TYPE BP4

SCALE: 1"= 1'-0"

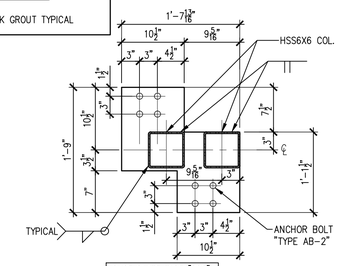

BASE PLATE TYPE "BP5"
1'-9" x ¾" x 1'-7 13/16"

BASE PLATE TYPE BP5

SCALE: 1"= 1'-0"

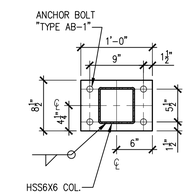

BASE PLATE TYPE "BP6"
8½" x ¾" x 1'-0"

BASE PLATE TYPE BP6

SCALE: 1"= 1'-0"

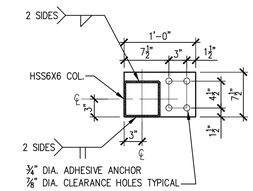

BASE PLATE TYPE "BP7"
7½" x ¾" x 1'-0"

BASE PLATE TYPE BP7

SCALE: 1"= 1'-0"

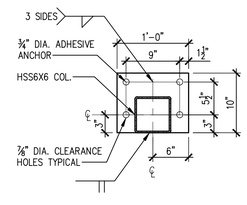

BASE PLATE TYPE "BP8"
10" x ¾" x 1'-0"

BASE PLATE TYPE BP8

SCALE: 1"= 1'-0"

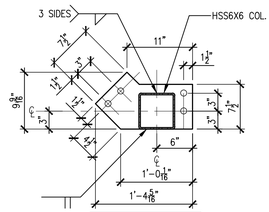

BASE PLATE TYPE "BP9"
9 9/16" x ¾" x 1'-4 5/16"

BASE PLATE TYPE BP9

SCALE: 1"= 1'-0"

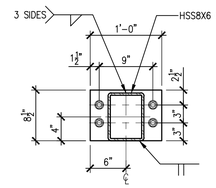

BASE PLATE TYPE "BP10"
8½" x ¾" x 1'-0"

BASE PLATE TYPE BP10

SCALE: 1"= 1'-0"

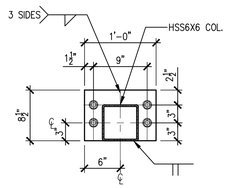

BASE PLATE TYPE "BP11"
8½" x ¾" x 1'-0"

BASE PLATE TYPE BP11

SCALE: 1"= 1'-0"

NOTES:
1. SAWCUT SHRINKAGE CONTROL JOINTS SHALL BE PROVIDED WITHIN 12 HRS. OF SLAB PLACEMENT, AS SOON AS CONCRETE IS CAPABLE OF SUPPORTING SAW-CUTTING EQUIPMENT.
2. LOCATE SHRINKAGE CONTROL JOINTS AS INDICATED ON SLAB PLAN, OR AT MAXIMUM SPACING OF 20 FT. O.C. IF NOT INDICATED ON PLANS. RESULTING SHAPE SHALL NOT BE GREATER THAN 400 S.F. NOR EXCEED A 1.5 : 1 LENGTH TO WIDTH RATIO.
3. OPTIONALLY, THE CONTRACTOR MAY SUBSTITUTE PRE-FABRICATED PLASTIC STRIPS INSTEAD OF SAW-CUTTING. SUBMIT CATALOG CUTS FOR APPROVAL PRIOR TO USING.
4. INSTALLATION OF ALL NON-STRUCTURAL CONCRETE SLABS-ON-GRADE SHALL CONFORM TO ALL REQUIREMENTS OF THE LATEST ADDITIONS OF BOTH, ACI-360 AND ACI-302

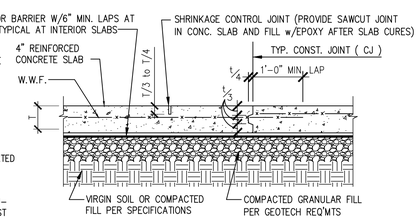

TYP. SLAB-ON-GRADE DETAIL

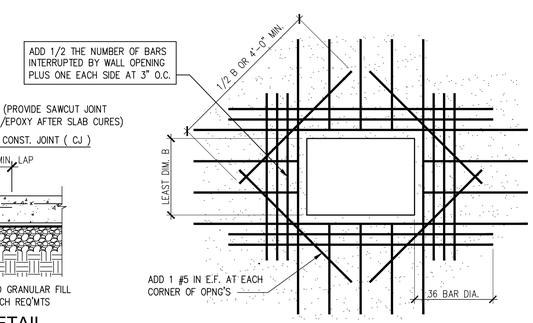

TYP. WALL OPENING DETAIL

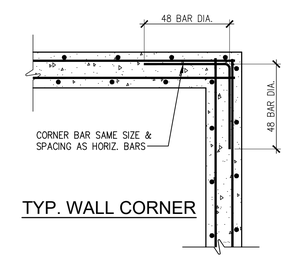

TYP. WALL CORNER

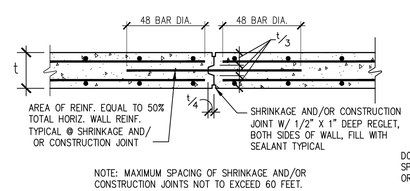

NOTE: MAXIMUM SPACING OF SHRINKAGE AND/OR CONSTRUCTION JOINTS NOT TO EXCEED 60 FEET.

TYPICAL WALL SHRINKAGE AND/OR CONSTRUCTION JOINT

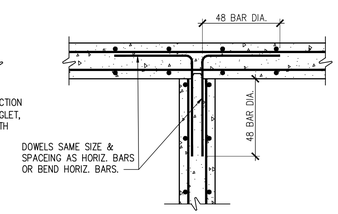

TYP. WALL INTERSECTION

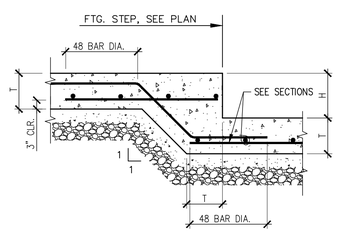

TYP. FOOTING STEP

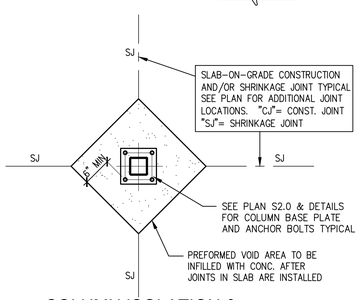

COLUMN ISOLATION & SJ JOINT TERMINATION

THOMAS P. GRAFE
No. 4735
REGISTERED PROFESSIONAL ENGINEER

CCRI WARWICK RENEWAL ENTRY RAMP ENCLOSURE

400 EAST AVENUE, WARWICK RI 02886

BREWSTER THORNTON GROUP ARCHITECTS LLP
150 Chestnut Street
Providence, RI
02903
Tel: 401.861.1600
Fax 401.861.5588

C.A. PRETZER ASSOC. INC.
STRUCTURAL ENGINEERS
50 Freeway Drive
Cranston, R.I. 02920
TEL. 401-785-2690 FAX: 401-461-9360
DESIGN, CONSULTATION, INVESTIGATION

JOB NO.	DATE
1609A	November 1, 2018

ISSUE :

NO.	REVISION DESCRIPTION	DATE

SHEET TITLE

FOUNDATION SECTIONS AND DETAILS

SHEET

S2.2

File Location: C:\Users\Jims-PC\Documents\CAPA Job Files\BTG\216550.40 CCRI RAMP REDO\STRUCTURAL REDO\216550.20 CAPA-CCRI_ENTRY RAMP 11.1.2018.dwg, Printed on: 11/7/2018, by: Jim Ferreira

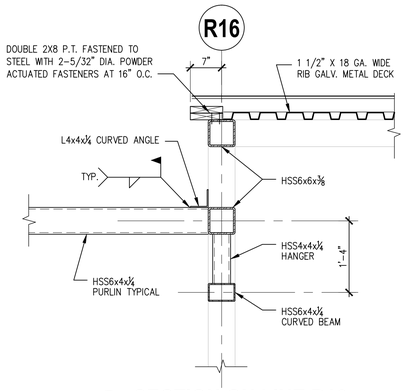

1 S3.0 **SECTION ON LINE R16**
SCALE: 3/4"=1'-0"

2 S3.0 **SECTION AT EAVE NOTCH**
SCALE: 3/4"=1'-0"

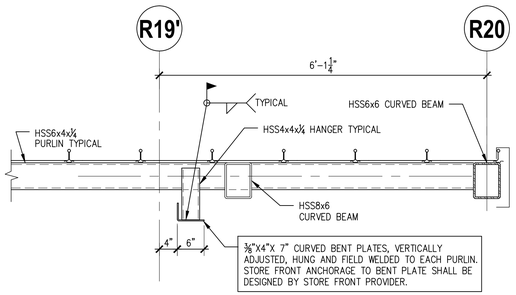

3 S3.0 **SECTION ON LINE R19**
SCALE: 3/4"=1'-0"

4 S3.0 **TIE OFF SECTION**
SCALE: 3/4"=1'-0"

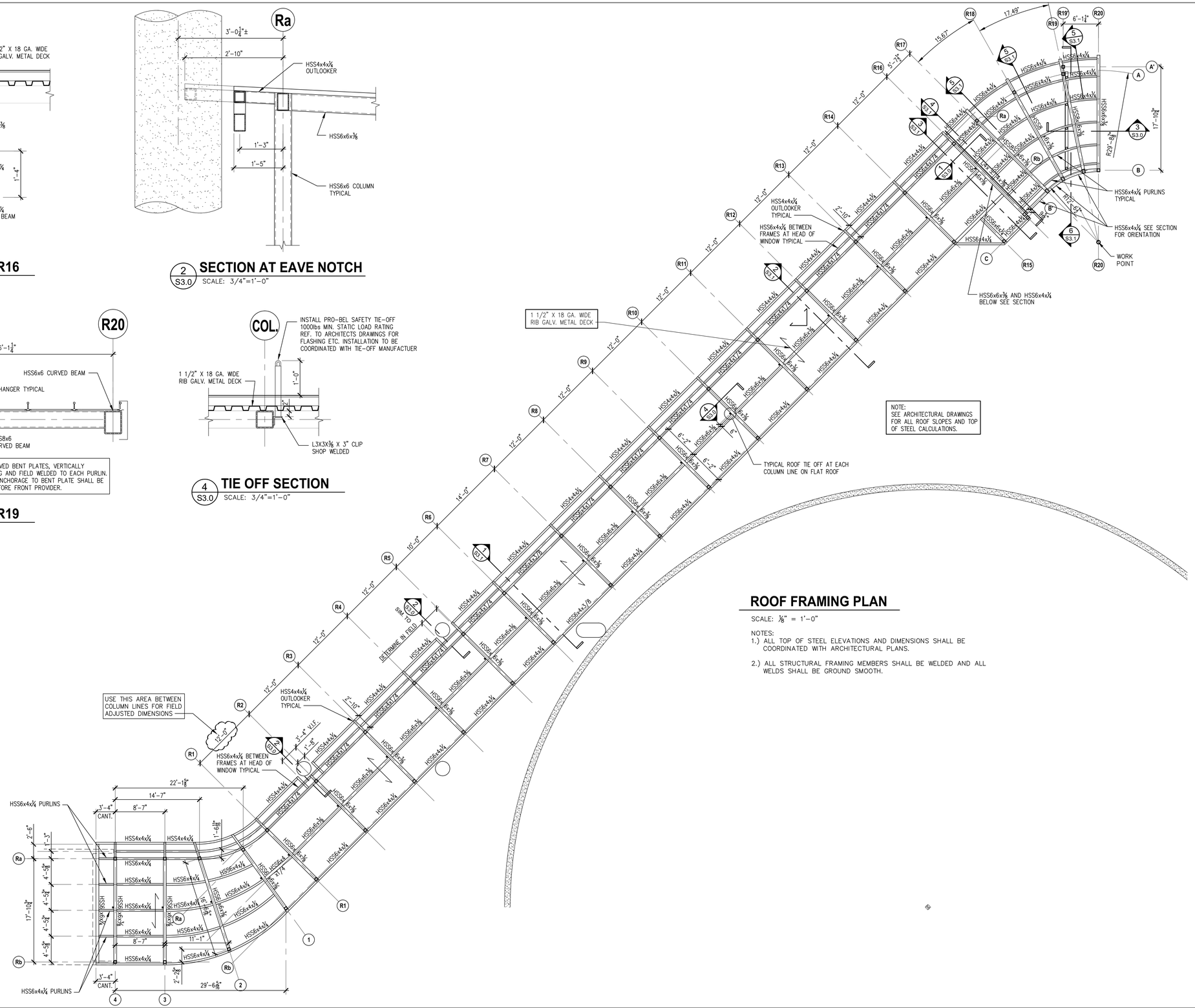

NOTE:
SEE ARCHITECTURAL DRAWINGS FOR ALL ROOF SLOPES AND TOP OF STEEL CALCULATIONS.

ROOF FRAMING PLAN

SCALE: ⅛" = 1'-0"

NOTES:
1.) ALL TOP OF STEEL ELEVATIONS AND DIMENSIONS SHALL BE COORDINATED WITH ARCHITECTURAL PLANS.

2.) ALL STRUCTURAL FRAMING MEMBERS SHALL BE WELDED AND ALL WELDS SHALL BE GROUND SMOOTH.

THOMAS P. GRAFE
No. 3735
REGISTERED PROFESSIONAL ENGINEER

CCRI WARWICK RENEWAL ENTRY RAMP ENCLOSURE

400 EAST AVENUE, WARWICK RI 02886

BREWSTER THORNTON GROUP ARCHITECTS LLP
150 Chestnut Street
Providence, RI
02903
Tel: 401.861.1600
Fax 401.861.5588

C.A. PRETZER ASSOC. INC.
STRUCTURAL ENGINEERS
50 Freeway Drive
Cranston, R.I. 02920
TEL 401-785-2690 FAX: 401-461-9360
DESIGN, CONSULTATION, INVESTIGATION

JOB NO.	DATE
1609A	November 1, 2018

ISSUE :

NO.	REVISION DESCRIPTION	DATE

SHEET TITLE
ENTRY RAMP ROOF FRAMING PLAN

SHEET
S3.0

File Location: C:\Users\Jims-PC\Documents\CAPA Job Files\BTG\216550.40 CCRI RAMP REDO\STRUCTURAL REDO\216550.20 CAPA-CCRI_ENTRY RAMP 11.1.2018.dwg, Printed on: 11/7/2018, by: Jim Ferreira

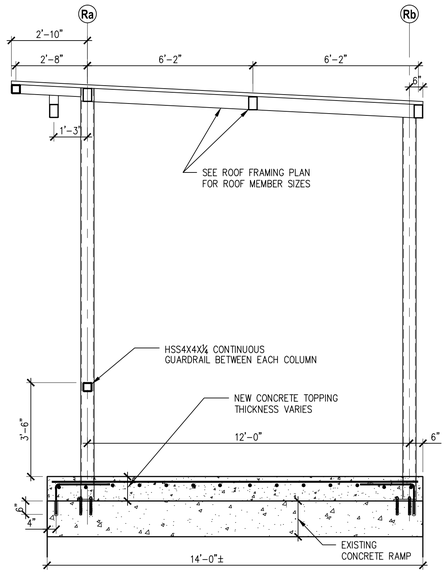

1 S3.1 **SECTION AT RAMP**
SCALE: 3/8"=1'-0"

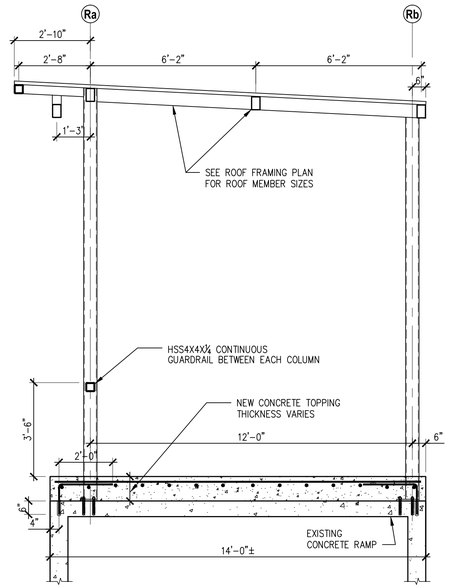

2 S3.1 **SECTION AT RAMP**
SCALE: 3/8"=1'-0"

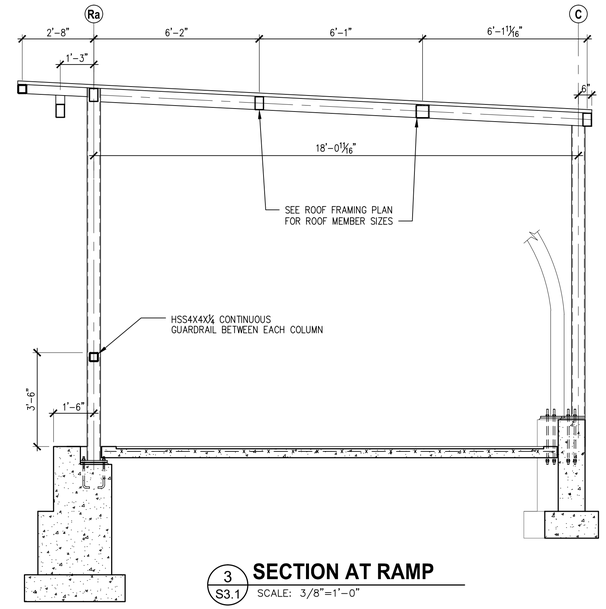

3 S3.1 **SECTION AT RAMP**
SCALE: 3/8"=1'-0"

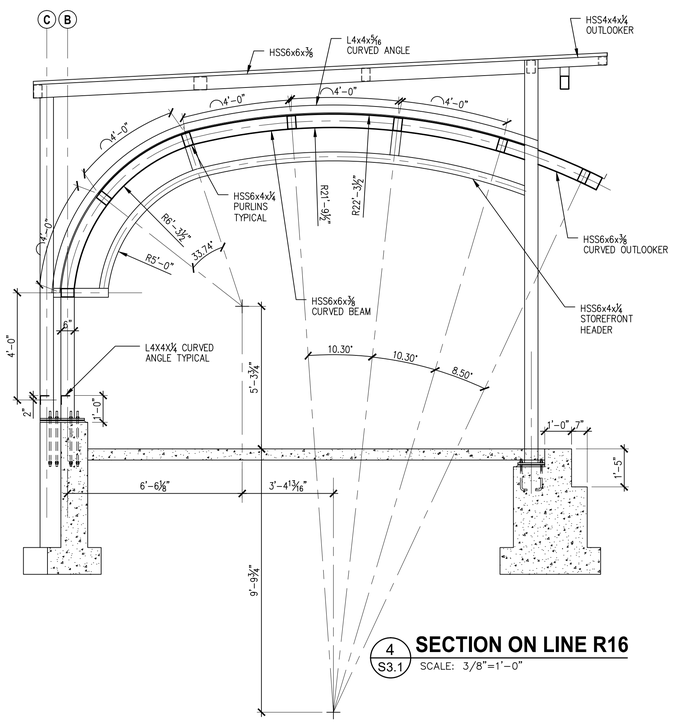

4 S3.1 **SECTION ON LINE R16**
SCALE: 3/8"=1'-0"

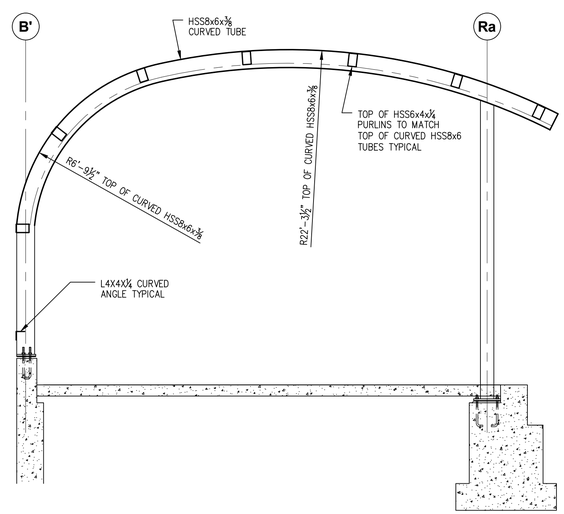

5 S3.1 **SECTION ON LINE R17,R18 & R19**
SCALE: 3/8"=1'-0"

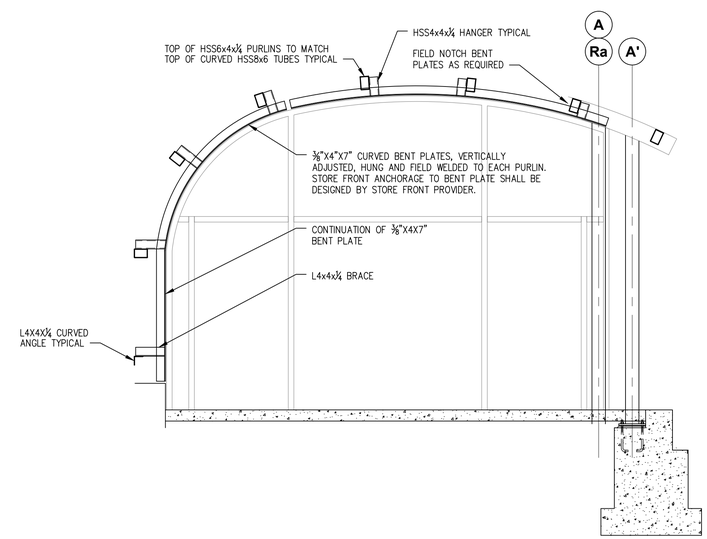

6 S3.1 **HEADER DETAIL NEAR LINE R19'**
SCALE: N.T.S.

THOMAS P. GRAFE
No. 3735
REGISTERED PROFESSIONAL ENGINEER

CCRI WARWICK RENEWAL ENTRY RAMP ENCLOSURE

400 EAST AVENUE, WARWICK RI 02886

BREWSTER THORNTON GROUP ARCHITECTS LLP
150 Chestnut Street
Providence, RI
02903
Tel: 401.861.1600
Fax 401.861.5588

C.A. PRETZER ASSOC. INC.
STRUCTURAL ENGINEERS
50 Freeway Drive
Cranston, R.I. 02920
TEL 401-785-2690 FAX: 401-461-9360
DESIGN, CONSULTATION, INVESTIGATION

JOB NO.	DATE
1609A	November 1, 2018

ISSUE :

NO.	REVISION DESCRIPTION	DATE

SHEET TITLE
STEEL SECTIONS AND DETAILS

SHEET
S3.1

File Location: C:\Users\Jims-PC\Documents\CAPA Job Files\BTG\216550.40 CCRI RAMP REDO\STRUCTURAL REDO\216550.20 CAPA-CCRI_ENTRY RAMP 11.1.2018.dwg, Printed on: 11/7/2018, by: Jim Ferreira

PHOTO–A

PHOTO–B

PHOTO–C

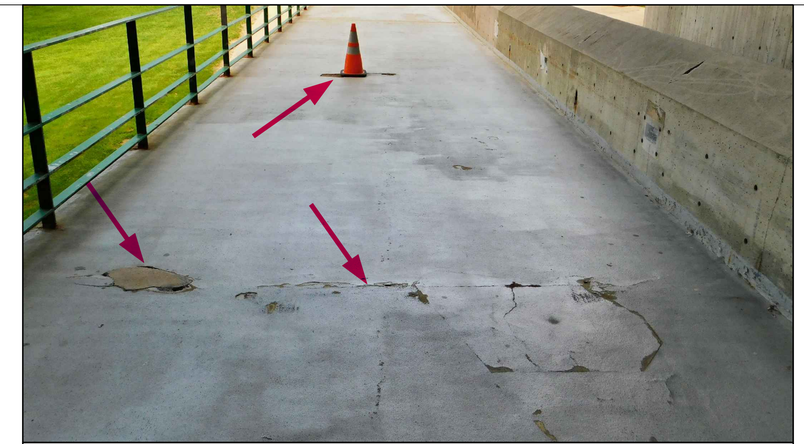

PHOTO–C.1

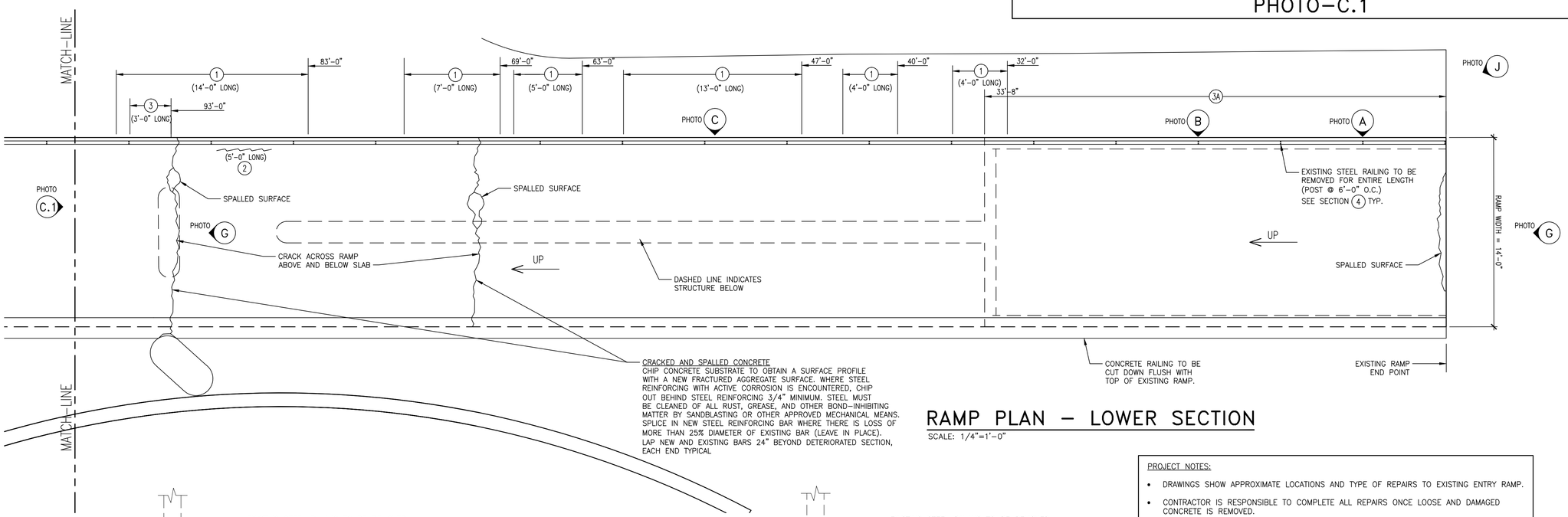

RAMP PLAN – LOWER SECTION

SCALE: 1/4"=1'–0"

PROJECT NOTES:

- DRAWINGS SHOW APPROXIMATE LOCATIONS AND TYPE OF REPAIRS TO EXISTING ENTRY RAMP.
- CONTRACTOR IS RESPONSIBLE TO COMPLETE ALL REPAIRS ONCE LOOSE AND DAMAGED CONCRETE IS REMOVED.
- THE EXTENT OF ACTUAL REPAIR MAY EXCEED LENGTH OF AREA INDICATED ON DRAWINGS.
- CONTRACTOR TO SUBMIT "UNIT COST" FOR REPAIR TO CONCRETE AND STEEL REINFORCING FOR ADDITIONAL WORK.

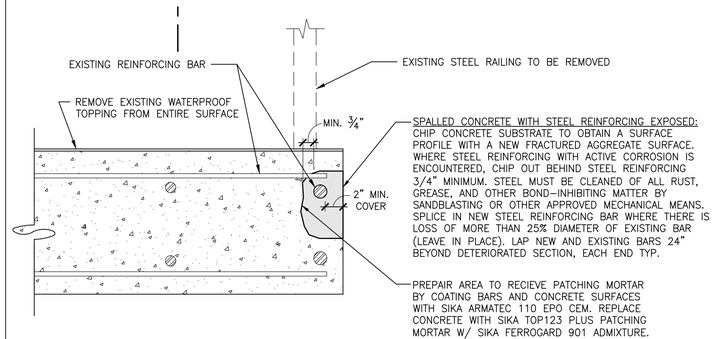

1 SECTION THRU RAMP SHOWING SIDE REPAIR

SCALE: 1 1/2"=1'–0"

NOTE: EXPOSED REBAR TO BE FIELD VERIFIED

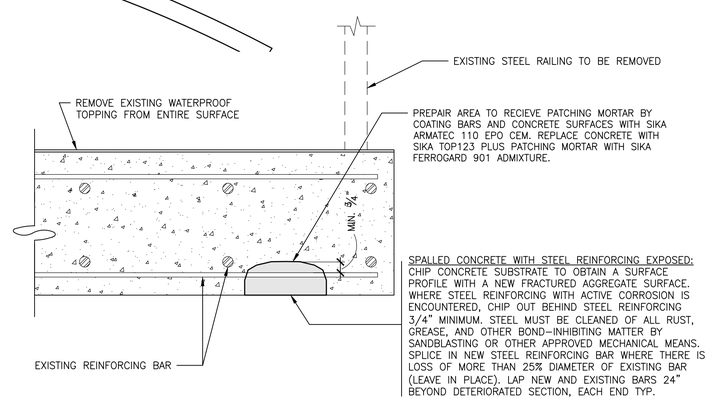

2 SECTION THRU RAMP SHOWING BOTTOM REPAIR

SCALE: 1 1/2"=1'–0"

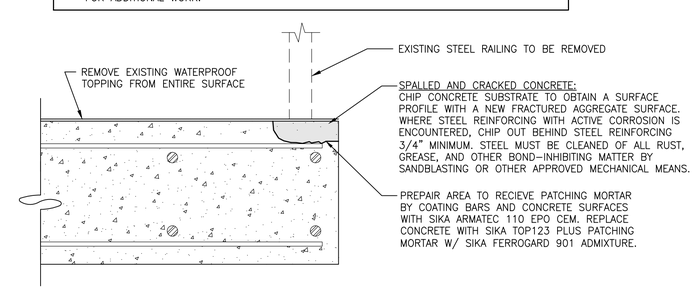

3 SECTION AT CORNER AT UPPER PORTION OF RAMP

SCALE: 1 1/2"=1'–0"

THOMAS P. GRAFE
No. 3735
REGISTERED PROFESSIONAL ENGINEER

CCRI WARWICK RENEWAL ENTRY RAMP ENCLOSURE

400 EAST AVENUE, WARWICK RI 02886

BREWSTER THORNTON GROUP ARCHITECTS LLP
150 Chestnut Street
Providence, RI
02903
Tel: 401.861.1600
Fax 401.861.5588

C.A. PRETZER ASSOC. INC.
STRUCTURAL ENGINEERS
50 FREEWAY DRIVE
Cranston, R.I. 02920
TEL. 401-785-2690 FAX: 401-461-9360
DESIGN, CONSULTATION, INVESTIGATION

JOB NO. 1609A

DATE November 1, 2018

ISSUE :

NO.	REVISION DESCRIPTION	DATE

SHEET TITLE

ENTRY RAMP REPAIR PLAN & SECTIONS

SHEET

S5.0

File Location: C:\Users\jms-PC\Documents\CAPA Job Files\BTG\216550.20 CCRI RAMP REPAIR\216550.20 CCRI ENTRY RAMP REPAIRS\216550.20 CCRI ENTRY RAMP REPAIR owner review set 10.31.2018.dwg, Printed on: 11/5/2018, by: Jim Ferreira

PHOTO–G

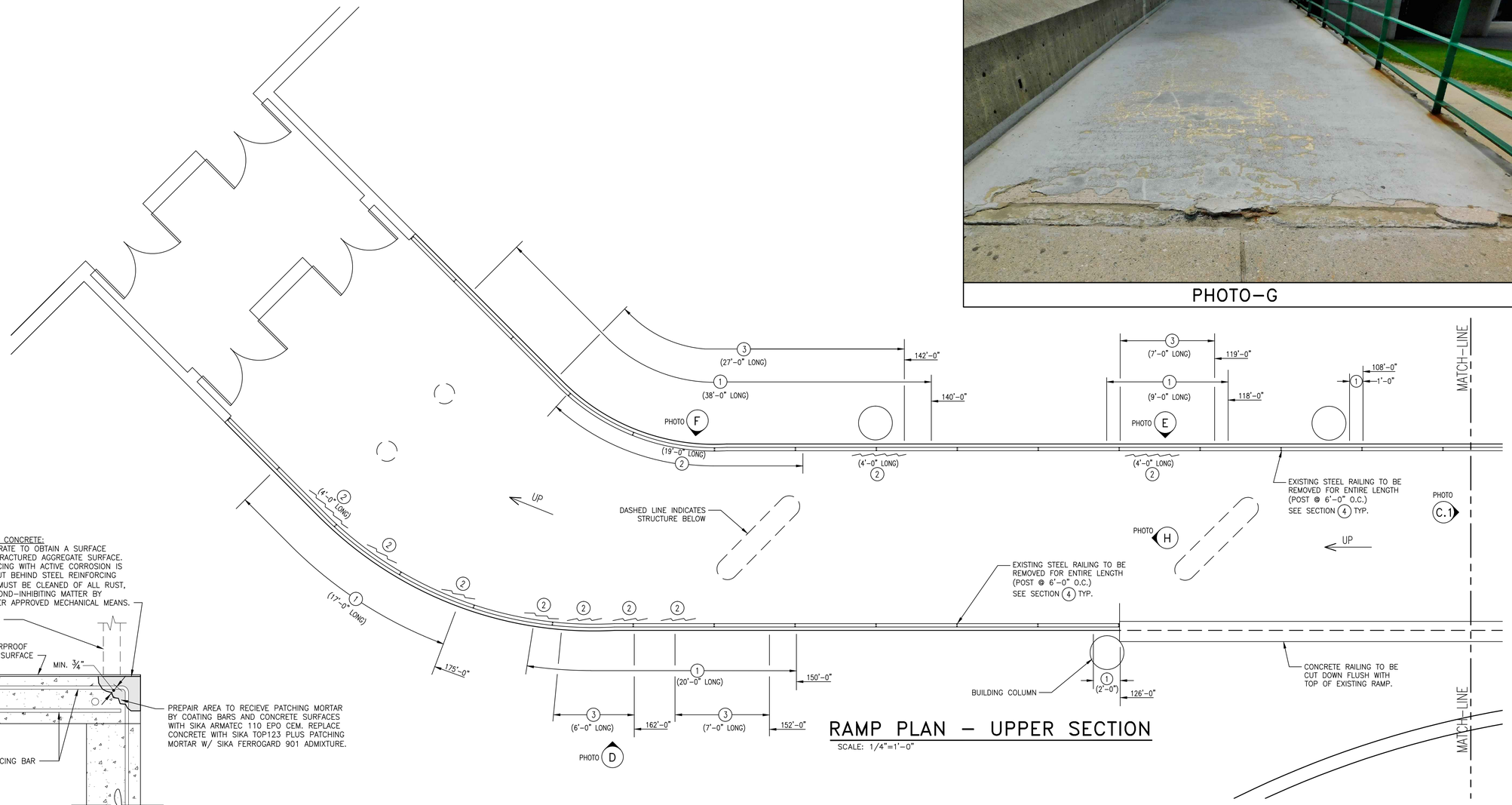

RAMP PLAN – UPPER SECTION

SCALE: 1/4"=1'–0"

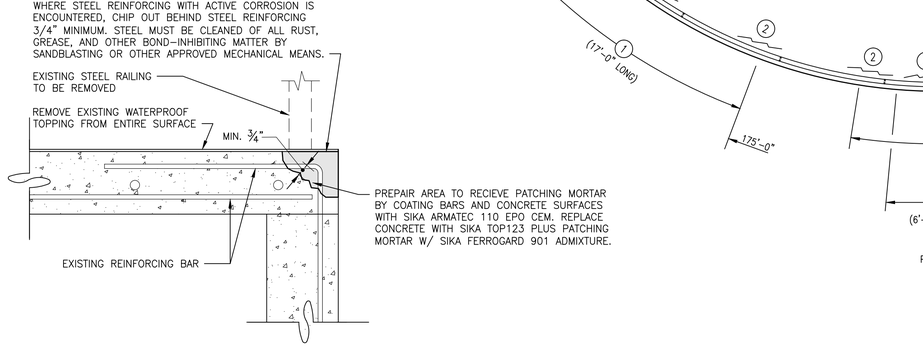

3A CORNER AT LOWER PORTION OF RAMP

SCALE: 1 1/2"=1'–0"

PHOTO–D

PHOTO–E

PHOTO–F

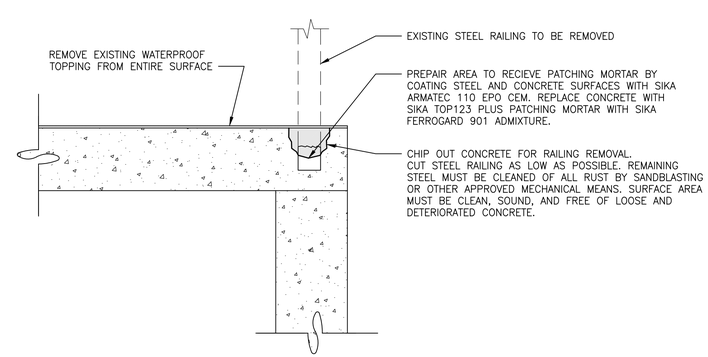

4 SECTION THRU RAMP AT STEEL RAILING

SCALE: 1 1/2"=1'–0"

THOMAS P. GRAFE
No. 2735
LICENSED
PROFESSIONAL ENGINEER

CCRI WARWICK RENEWAL ENTRY RAMP ENCLOSURE

400 EAST AVENUE, WARWICK RI 02886

BREWSTER THORNTON GROUP ARCHITECTS LLP
150 Chestnut Street
Providence, RI
02903
Tel: 401.861.1600
Fax 401.861.5588

C.A. PRETZER ASSOC. INC.
STRUCTURAL ENGINEERS
50 FREEWAY DRIVE
Cranston, R.I. 02920
TEL. 401-785-2690 FAX. 401-461-9360
DESIGN, CONSULTATION, INVESTIGATION

JOB NO. 1609A
DATE November 1, 2018

ISSUE :

NO.	REVISION DESCRIPTION	DATE

SHEET TITLE
ENTRY RAMP REPAIR PLAN & SECTIONS

SHEET
S5.1

File Location: C:\Users\Jims-PC\Documents\CAPA Job Files\BTG\216550.20 CCRI RAMP REPAIR\216550.20 CCRI ENTRY RAMP REPAIRS\216550.20 CCRI ENTRY RAMP REPAIR owner review set 10.31.2018.dwg, Printed on: 11/5/2018, by: Jim Ferreira

Construction

Product Data Sheet
Edition 4.10.2015
SikaTop® 123 PLUS

TESTED PER ICRI GUIDELINE FOR INORGANIC REPAIR MATERIAL DATA SHEET PROTOCOL GUIDELINE NO. 320.3R

SikaTop® 123 PLUS

Two-component, polymer-modified, cementitious, non-sag mortar plus Sika FerroGard® 901 penetrating corrosion inhibitor

Description
SikaTop® 123 PLUS is a two-component, polymer-modified, Portland cement-based, fast-setting, non-sag mortar. It is a high performance repair mortar for vertical and overhead surfaces and offers the additional benefit of Sika FerroGard® 901, a penetrating corrosion inhibitor included in its formulation.

Where to Use
- On grade, above and below grade on concrete and mortar.
- On vertical and overhead surfaces.
- As a structural repair material for parking structures, industrial plants, walkways, bridges, tunnels, dams and ramps.
- Approved for repairs over cathodic protection systems

Advantages
- Extremely low shrinkage **proven by four industry standard test methods.**
- High compressive and flexural strengths.
- Increased freeze/thaw durability and resistance to deicing salts.
- Compatible with coefficient of thermal expansion of concrete - Passes ASTM C 884.
- Increased density - improved carbon dioxide resistance (carbonation) without adversely affecting water vapor transmission (not a vapor barrier).
- Enhanced with Sika FerroGard® 901, a penetrating corrosion inhibitor - reduces corrosion even in the adjacent concrete.
- USDA certifiable for incidental food contact
- ANSI/NSF Standard 61 potable water approved compliant.

Coverage
0.39 cu. ft./ unit.

Packaging
Component 'A' - 1-gal. plastic jug; 4/carton. **Component 'B'** - 44-lb. multi-wall bag.

Typical Data ***(Material and curing conditions @ 73°F (23°C) and 50% R.H.)***
RESULTS MAY DIFFER BASED UPON STATISTICAL VARIATIONS DEPENDING UPON MIXING METHODS AND EQUIPMENT, TEMPERATURE, APPLICATION METHODS, TEST METHODS, ACTUAL SITE CONDITIONS AND CURING CONDITIONS.

Shelf Life	One year in original, unopened packaging.		
Storage Conditions	Store dry at 40°-95°F. Condition material to 65°-75°F before using. Protect Component 'A' from freezing. If frozen, discard.		
Color	Concrete gray when mixed.		
Mixing Ratio	Plant-proportioned kit, mix entire unit.		
Application Time	Approximately 15 minutes.		
Finishing Time	20-60 minutes		
Note:	All times start after adding Component 'B' to Component 'A' and are highly affected by temperature, relative humidity, substrate temperature, wind, sun and other job site conditions.		
Density (wet mix)	**ASTM C 138**		132 lbs./ft³ (2.2 kg./l)
Flexural Strength	**ASTM C 293**	28 days	1,500 psi
Split Tensile	**ASTM C 496**	28 days	900 psi
Bond Strength	**ASTM C 882 (modified)**	28 days	2,000 psi
Compressive Strength	**ASTM C 109**		
		1 day	3,000 psi
		7 days	4,000 psi
		28 days	6,000 psi
Shrinkage	**ASTM C 157 (mod. ICRI 320.3R)**		
Specimen Size 1x1x11-1/4"		28 days	0.05%
Specimen Size 3x3x11-1/4"		28 days	0.038%
Ring Test (days)	**ASTM C 1581**		>70 days
Ring Test - Average Max Strain	**ASTM C 1581**		-36 µstrain
Ring Test - Average Stress Strain	**ASTM C 1581**		4.92 psi/day
Ring Test - Potential for Cracking	**ASTM C 1581**		Low
Baenzinger Block		90 days	No cracking
Freeze/Thaw Durability (300 cycles)	**ASTM C 666**		98%
Cl Permeability (coul)	**ASTM C 1202**		<500 Coulombs.
Direct Bond Strength	**ASTM C 1583**	28 days	500 psi (substrate failure)
Modulus of Elasticity	**ASTM C 531**		2.94 x 10^6 psi
Initial Set Time (min)	**ASTM C 266**		20-40
Final Set Time (min)	**ASTM C 266**		<75

PRIOR TO EACH USE OF ANY SIKA PRODUCT, THE USER MUST ALWAYS READ AND FOLLOW THE WARNINGS AND INSTRUCTIONS ON THE PRODUCT'S MOST CURRENT PRODUCT DATA SHEET, PRODUCT LABEL AND SAFETY DATA SHEET WHICH ARE AVAILABLE ONLINE AT HTTP://USA.SIKA.COM/ OR BY CALLING SIKA'S TECHNICAL SERVICE DEPARTMENT AT 800.933.7452 NOTHING CONTAINED IN ANY SIKA MATERIALS RELIEVES THE USER OF THE OBLIGATION TO READ AND FOLLOW THE WARNINGS AND INSTRUCTIONS FOR EACH SIKA PRODUCT AS SET FORTH IN THE CURRENT PRODUCT DATA SHEET, PRODUCT LABEL AND SAFETY DATA SHEET PRIOR TO PRODUCT USE.

A110

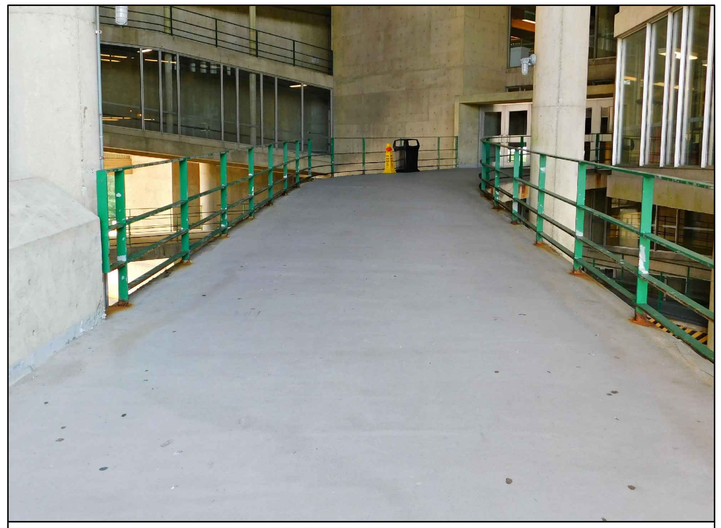

PHOTO–H

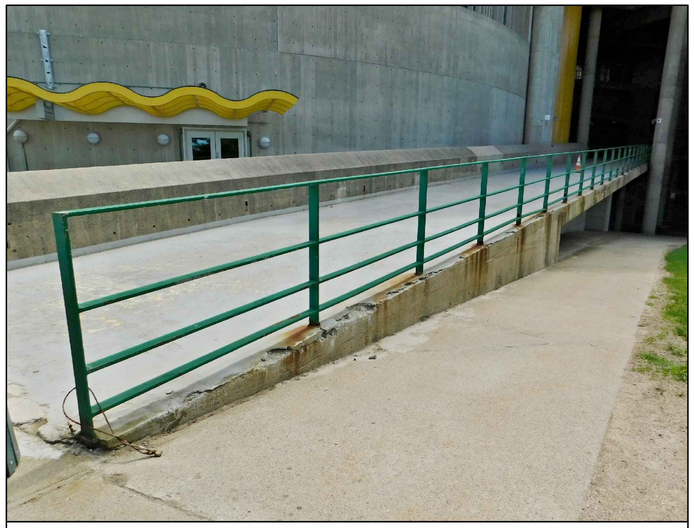

PHOTO–J

Construction

How to Use

Substrates
Concrete, mortar, and masonry products.

Surface Preparation
Remove all deteriorated concrete, dirt, oil, grease and all bond inhibiting materials from surface. Be sure repair area is not less than 1/8 inch in depth. Preparation work should be done by high pressure water blast, scabbler, or other appropriate mechanical means to obtain an exposed aggregate surface with a minimum surface profile of ±1/16 inch (CSP-5). Saturate surface with clean water. Substrate should be saturated surface dry (SSD) with no standing water during application.

Reinforcing Steel: Steel reinforcement should be thoroughly prepared by mechanical cleaning to remove all traces of rust. Where corrosion has occurred due to the presence of chlorides, the steel should be high-pressure washed with clean water after mechanical cleaning. For priming of reinforcing steel use Sika® Armatec® 110 EpoCem (consult Product Data Sheet).

Priming Concrete Substrate: Prime the prepared substrate with a brush or sprayed applied coat of Sika® Armatec® 110 EpoCem (consult Product Data Sheet). Alternately, a scrub coat of SikaTop® 123 PLUS can be applied prior to placement of the mortar. The repair mortar has to be applied into the wet scrub coat before it dries.

Mixing
Pour Component 'A' into mixing container. Add Component 'B' while mixing continuously. Mix mechanically with a low-speed drill (400 - 600 rpm) and mixing paddle or mortar mixer. Mix to a uniform consistency, maximum 3 minutes. Manual mixing can be tolerated only for less than a full unit. Thorough mixing and proper proportioning of the two components is necessary.

Application
SikaTop® 123 PLUS must be scrubbed into the substrate, filling all pores and voids. Force material against edge of repair, working toward center. After filling repair, consolidate, then screed. Material may be applied in multiple lifts. The thickness of each lift, not to be less than 1/8 inch minimum or more than 1.5 inches maximum. Where multiple lifts are required score top surface of each lift to produce a roughened surface for next lift. Allow preceding lift to reach initial set, 30 minutes minimum, before applying fresh material. Saturate surface of the lift with clean water. Scrub fresh mortar into preceding lift. Allow mortar or concrete to set to desired stiffness, then finish with wood or sponge float for a smooth surface.

Tooling & Finishing
As per ACI recommendations for portland cement concrete, curing is required. Moist cure with wet burlap and polyethylene, a fine mist of water or a water based*, compatible curing compound (ASTM C 309 complaint). Curing compounds adversely affect the adhesion of following lifts of mortar, leveling mortar or protective coatings. Moist curing should commence immediately after finishing. If necessary protect newly applied material from direct sunlight, wind, rain and frost.
*Pretesting of curing compound is recommended.

Limitations
- Application thickness: Minimum 1/8 inch (3 mm). Maximum in one lift - 1.5 in. (38 mm).
- Minimum ambient and surface temperatures 45°F (7°C) and rising at time of application.
- Do not use solvent-based curing compound.
- Size, shape and depth of repair must be carefully considered and consistent with practices recommended by ACI or ICRI. For additional information, contact Technical Service.
- For additional information on substrate preparation, refer to ICRI Guideline No. 310.2R re: Polymer Overlays and Concrete Repair.
- If aggressive means of substrate preparation is employed, substrate strength should be tested in accordance with ACI 503 Appendix A prior to the repair application.
- As with all cement based materials, avoid contact with aluminum to prevent adverse chemical reaction and possible product failure. Insulate potential areas of contact by coating aluminum bars, rails, posts etc. with an appropriate epoxy such as Sikadur® 32, Hi-Mod.

PRIOR TO EACH USE OF ANY SIKA PRODUCT, THE USER MUST ALWAYS READ AND FOLLOW THE WARNINGS AND INSTRUCTIONS ON THE PRODUCT'S MOST CURRENT PRODUCT DATA SHEET, PRODUCT LABEL AND SAFETY DATA SHEET WHICH ARE AVAILABLE ONLINE AT HTTP://USA.SIKA.COM/ OR BY CALLING SIKA'S TECHNICAL SERVICE DEPARTMENT AT 800.933.7452 NOTHING CONTAINED IN ANY SIKA MATERIALS RELIEVES THE USER OF THE OBLIGATION TO READ AND FOLLOW THE WARNINGS AND INSTRUCTIONS FOR EACH SIKA PRODUCT AS SET FORTH IN THE CURRENT PRODUCT DATA SHEET, PRODUCT LABEL AND SAFETY DATA SHEET PRIOR TO PRODUCT USE.

KEEP CONTAINER TIGHTLY CLOSED. KEEP OUT OF REACH OF CHILDREN. NOT FOR INTERNAL CONSUMPTION. FOR INDUSTRIAL USE ONLY. FOR PROFESSIONAL USE ONLY.

For further information and advice regarding transportation, handling, storage and disposal of chemical products, users should refer to the actual Safety Data Sheets containing physical, ecological, toxicological and other safety related data. Read the current actual Safety Data Sheet before using the product. In case of emergency, call CHEMTREC at 1-800-424-9300, International 703-527-3887.

Prior to each use of any Sika product, the user must always read and follow the warnings and instructions on the product's most current Product Data Sheet, product label and Safety Data Sheet which are available online at http://usa.sika.com/ or by calling Sika's Technical Service Department at 800-933-7452. Nothing contained in any Sika materials relieves the user of the obligation to read and follow the warnings and instruction for each Sika product as set forth in the current Product Data Sheet, product label and Safety Data Sheet prior to product use.

SIKA warrants this product for one year from date of installation to be free from manufacturing defects and to meet the technical properties on the current Product Data Sheet if used as directed within shelf life. User determines suitability of product for intended use and assumes all risks. Buyer's sole remedy shall be limited to the purchase price or replacement of product exclusive of labor or cost of labor. NO OTHER WARRANTIES EXPRESS OR IMPLIED SHALL APPLY INCLUDING ANY WARRANTY OF MERCHANTABILITY OR FITNESS FOR A PARTICULAR PURPOSE. SIKA SHALL NOT BE LIABLE UNDER ANY LEGAL THEORY FOR SPECIAL OR CONSEQUENTIAL DAMAGES. SIKA SHALL NOT BE RESPONSIBLE FOR THE USE OF THIS PRODUCT IN A MANNER TO INFRINGE ON ANY PATENT OR ANY OTHER INTELLECTUAL PROPERTY RIGHTS HELD BY OTHERS. SALE OF SIKA PRODUCTS ARE SUBJECT SIKA'S TERMS AND CONDITIONS OF SALE AVAILABLE AT HTTP://USA.SIKA.COM/ OR BY CALLING SIKA.

Visit our website at usa.sika.com **1-800-933-SIKA NATIONWIDE**
Regional Information and Sales Centers. For the location of your nearest Sika sales office, contact your regional center.

Sika Corporation
201 Pollitt Avenue
Lyndhurst, NJ 07071
Phone: 800-933-7452
Fax: 201-933-6225

Sika Canada Inc.
601 Delmar Avenue
Pointe-Claire
Quebec H9R 4A9
Phone: 514-697-2610
Fax: 514-694-3087

Sika Mexicana S.A. de C.V.
Carretera Libre Celaya Km. 8.5
Fraco. Industrial Balvanera
Corregidora, Querétaro
C.P. 76920
Phone: 52 442 2385800
Fax: 52 442 2250537

Sika, SikaRepair, and SikaLatex are registered trademarks. Printed in Canada.

BUILDING TRUST

PRODUCT DATA SHEET

Sika® Armatec® 110 EpoCem

BONDING PRIMER AND REINFORCEMENT CORROSION PROTECTION

PRODUCT DESCRIPTION

Sika® Armatec® 110 EpoCem is a cementitious epoxy resin compensated 3-component, solvent-free, coating material with corrosion inhibitor, used as bonding primer and reinforcement corrosion protection.

USES

- Suitable in concrete repair as corrosion protection for reinforcement
- Suitable as a bonding primer on mortar, steel, and on placing fresh, plastic concrete to existing hardened concrete
- Protection to reinforcing steel in areas of thin concrete cover

CHARACTERISTICS / ADVANTAGES

- Contains EpoCem® technology - improved bonding agent
- Extended open times for repair mortars
- Excellent adhesion to concrete and steel
- Contains corrosion inhibitor
- Good resistance to water and chloride penetration
- High shear strength
- Long pot life
- Can be brushed on or applied using spray gun
- Can be used exterior on-grade
- Excellent bonding bridge for cement or epoxy based repair mortars
- High strength, unaffected by moisture when cured
- Non-flammable, solvent free

PRODUCT INFORMATION

Chemical Base	Portland cement, epoxy resin, selected aggregates and additives.			
Packaging	**Unit**	**A**	**B**	**C**	**ABC**
	3.5 gal (13.2 L)	47.6 fl. oz. (1,407 ml)	122.1 fl. oz. (3,611 ml)	46.82 lb (21.3 kg)	A + B in carton, C in bag
	1.65 gal (6.2 L)	22.7 fl. oz. (672 ml)	57.6 fl. oz. (1,704 ml)	4 bags, 5.5 lb (2.5 kg)	Factory-proportioned units in a pail
Appearance / Color	Component A		White liquid		
	Component B		Colourless liquid		
	Component C		Gray powder		
Shelf Life	12 months from date of production if stored properly in original, unopened and undamaged sealed packaging				

Storage Conditions	Store dry at 40–95 °F (4–35 °C). If components A and B are frozen, discard. Protect component C from humidity.		

TECHNICAL INFORMATION

Compressive Strength	3 days	4,500 psi (31.0 MPa)	(ASTM C-109) 73 °F (23 °C) 50 % R.H.
	7 days	6,500 psi (44.8 MPa)	
	28 days	8,500 psi (58.6 MPa)	
Flexural Strength	28 days	1,250 psi (8.6 MPa)	(ASTM C-348) 73 °F (23 °C) 50 % R.H.
Splitting Tensile Strength	28 days	600 psi (4.1 MPa)	(ASTM C-496) 73 °F (23 °C) 50 % R.H.
Tensile Adhesion Strength	**Bond of steel reinforcement on concrete**		
	Sika® Armatec® 110 EpoCem coated	625 psi (4.3 MPa)	(ASTM C-1583)
	Epoxy coated	508 psi (3.5 MPa)	
	Plain reinforcement	573 psi (4.0 MPa)	
Slant Shear Strength	**Bonding agent properties** (14 d. moist cure, plastic to hardened concrete)		
	Wet on wet	2,800 psi (19.3 MPa)	(ASTM C-882)
	24 hr. open time	2,600 psi (17.9 MPa)	
Permeability to Water Vapor	Control	7.32×10^{-10} ft/sec	
	145 psi (10 bar)	8.92×10^{-13} ft/sec	
Diffusion Resistance to Water Vapor	μH_2O ~100		
Permeability to CO2	μCO_2 ~14,000		
Corrosion Test	Time-to-Corrosion Study • Sika® Armatec® 110 EpoCem more than tripled the time to corrosion • Reduced corrosion rate by over 40%		

APPLICATION INFORMATION

Fresh Mortar Density	A+B+C ~125 lb/ft³ (~2.0 kg/l)		
Coverage	**Bonding agent**	80 ft.²/gal. (7.4 m²/l) ~ 20 mils	
	Corrosion Protection	40 ft.²/gal. (3.7 m²/l) ~ 20 mils	
	(Coverage figures do not include allowance for surface profile and porosity or material waste)		
Layer Thickness		**Min.thickness**	**Coat**
	Bonding agent	20 mils	
	Corrosion Protection	20 mils each	2
Product Temperature	65°-75°F (18°-24°C)		
Ambient Air Temperature	40–95 °F (5–35 °C)		
Substrate Temperature	40–95 °F (5–35 °C)		
Pot Life	~ 90 minutes		

BUILDING TRUST

Waiting Time / Overcoating	Sika repair mortars and non-fast setting concrete can be applied on Sika® Armatec® 110 EpoCem within a maximum time of:

Temperature	Maximum Waiting Time
80°- 95 °F (26°- 35 °C)	6 hours
65°-79 °F (18°- 26 °C)	12 hours
50°- 64° F (10°- 17° C)	16 hours
40°- 49° F (4°- 9° C)	wet-on-wet

APPLICATION INSTRUCTIONS

SUBSTRATE QUALITY / PRE-TREATMENT

Concrete:
- Free from dust, loose material, surface contamination and materials which reduce bond or prevent suction or wetting by repair materials.
- Delaminated, weak, damaged and deteriorated concrete and where necessary sound concrete shall be removed by suitable means.
- Substrate must be Saturated Surface Dry (SSD) with no standing water.

Steel reinforcement:
- Rust, scale, mortar, concrete, dust and other loose and deleterious material which reduces bond or contributes to corrosion shall be removed by blast cleaning or other means of mechanical abrasion and reinforcement.
- Should be fully exposed and have all corrosion removed.

MIXING

- Sika® Armatec® 110 EpoCem can be mixed with a low speed (< 250 rpm) electric drill mixer.
- Shake components A and B thoroughly before opening.
- Pour liquid components A and B into a suitable mixing vessel and mix for 30 seconds.
- While still mixing components A and B slowly add powder component C.
- Mix the three components together for a minimum 3 minutes unil blend is unifrom and free of lumps, minimising addition of air.
- Mix only the quantity that you can be applied whthin the pot life
- DO NOT ADD WATER

APPLICATION

As reinforcement corrosion protection:
- Apply by stiff-bristle brush or spray at 80 ft² /gal.
- Take special care to properly coat the underside of the totally exposed steel.
- Allow coating to dry 2-3 hours at 73°F, then apply a second coat at the same coverage.
- Allow to dry again before the repair mortar or concrete is applied.
- Pour or place repair within 7 days

As a bonding primer:
- Apply using a stiff-bristle brush or broom. To achieve good bond, Sika® Armatec® 110 EpoCem must be applied well into the substrate, filling all pores and ensure complete coverage of all surface irregularities (minimum layer thickness 1/64" (0.5 mm).
- Spray apply with Goldblatt Pattern Pistol or equal equipment.
- Apply the freshly mixed patching mortar or concrete wet on wet, or up to the maximum recommended open time, onto the bonding slurry.

CURING TREATMENT

Sika® Armatec® 110 EpoCem must be protected against contamination and rain until application of the repair mortar.

CLEANING OF TOOLS

Clean all tools and application equipment with water immediately after use. Hardened material can only be mechanically removed.

LIMITATIONS

- Avoid application in direct sun and/or strong wind and/or rain.
- Do not add water.
- Not a vapor barrier.
- Apply only to sound, prepared substrates.
- Not recommended for use with expansive grouts and SikaQuicks
- Use of semi-dry mortars onto Sika® Armatec® 110 EpoCem must be applied "wet on wet".
- When used in overhead applications with hand placed patching mortars, use "wet on wet" for maximum mortar built thickness.
- Substrate profile as specified by the overlay or repair material is still required.
- As with all cement based materials, avoid contact with aluminum to prevent adverse chemical reaction and possible product failure. Insulate potential areas of contact by coating aluminum bars, rails, posts etc. with an appropriate epoxy such as Sikadur® Hi-Mod 32.

BASIS OF PRODUCT DATA

Results may differ based upon statistical variations depending upon mixing methods and equipment, temperature, application methods, test methods, actual site conditions and curing conditions.

BUILDING TRUST

THOMAS P. GRAFE
No. 3735
REGISTERED PROFESSIONAL ENGINEER

CCRI WARWICK RENEWAL
ENTRY RAMP ENCLOSURE
400 EAST AVENUE, WARWICK RI 02886

BREWSTER THORNTON GROUP ARCHITECTS LLP
150 Chestnut Street
Providence, RI
02903
Tel: 401.861.1600
Fax 401.861.5588

C.A. PRETZER ASSOCIATES, INC. EST. 1973 CAPA
C.A. PRETZER ASSOC. INC.
STRUCTURAL ENGINEERS
50 FREEWAY DRIVE
Cranston, R.I. 02920
TEL. 401-785-2690 FAX: 401-461-9369
DESIGN, CONSULTATION, INVESTIGATION

JOB NO.	DATE
1609A	November 1, 2018

ISSUE :

NO.	REVISION DESCRIPTION	DATE

SHEET TITLE
ENTRY RAMP REPAIR SPECIFICATIONS

SHEET
S5.2

File Location: C:\Users\jims-PC\Documents\CAPA Job Files\BT\21216550.20 CCRI RAMP REPAIR\21216550.20 CCRI ENTRY RAMP REPAIR owner review set 10.31.2018.dwg, Printed on: 11/5/2018, by: Jim Ferreira

DEMOLITION KEYNOTES

NO.	KEYNOTES
D01	EXISTING DOORS AND STOREFRONT TO BE REMOVED. PATCH WALL WHERE EXISTING STOREFRONT IS REMOVED.
D02	STEEL HANDRAIL & SUPPORTS TO BE REMOVED FULL LENGTH RE: S5.0
D03	LINE OF EXISTING COLUMN BELOW (ETR)
D05	PREPARE AREA FOR NEW CONCRETE SLAB ON GRADE RE: STRUCTURAL FOUNDATION PLAN
D06	DISCONNECT ELECTRICAL & DEMO LIGHTS IN WALL
D07	CONCRETE RAILING TO BE REMOVED FULL LENGTH, SEE S5.0, INCLUDING PATH LIGHTING
D09	REMOVE SURROUNDING FRAME & WALL TO CONCRETE
D10	PATCH FLOOR & WALLS @ REMOVED DOOR AREAS
D11	SEE FIRE PROTECTION & CIVIL DWGS, FOR FDS RELOCATION SCOPE. REFER TO DEMOLITION DRAWINGS TO PATCH CONCRETE WALL AND FLOOR AFTER REMOVAL.
D12	PREPARE EXISTING CONCRETE FLOOR FOR NEW CONCRETE TOPPING COMPOUND, TYP.

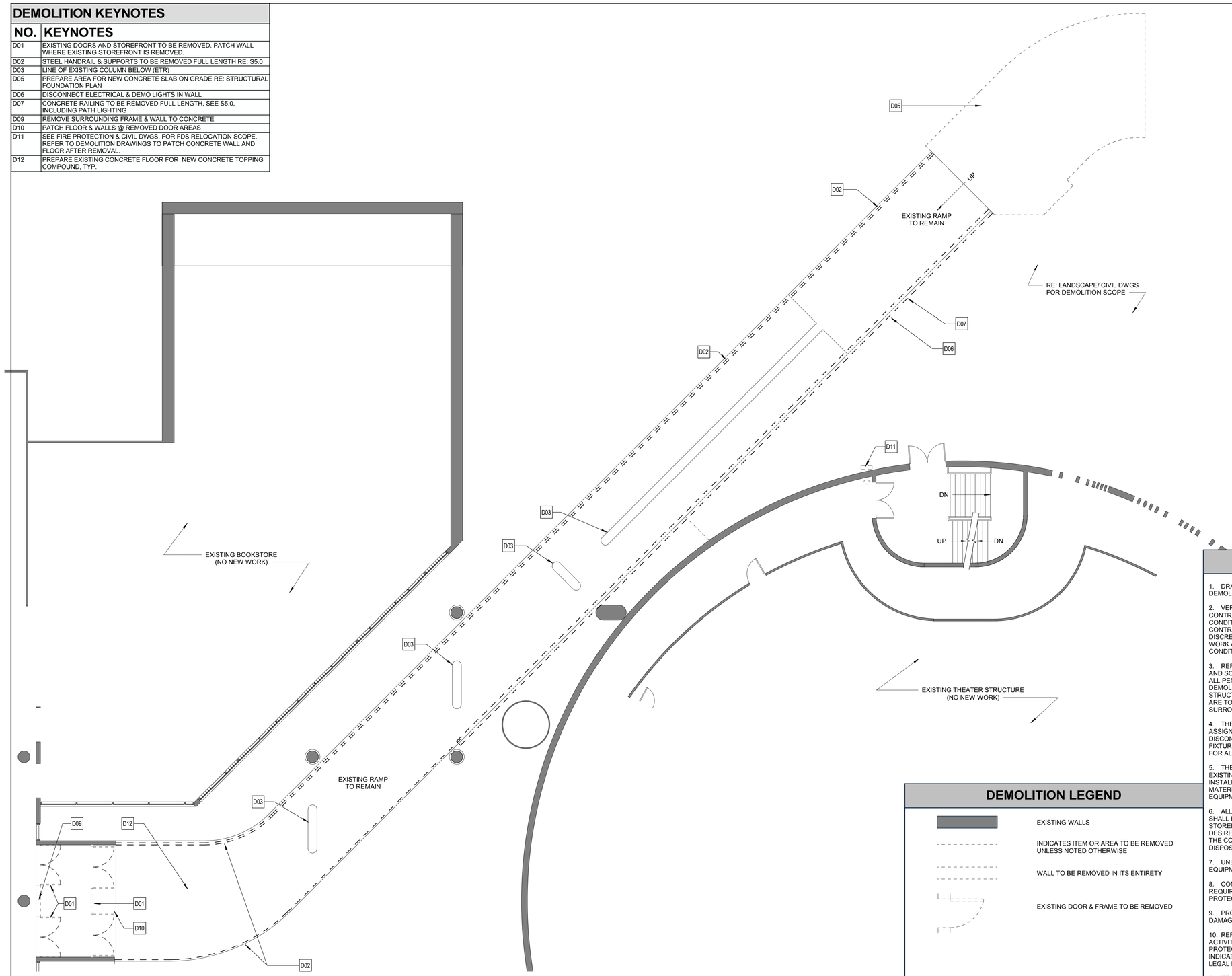

1 / D1.1 ENTRY RAMP DEMOLITION PLAN
Scale: 1/8" = 1'-0"

SEE C, S, FP, M & E DRAWINGS FOR ADDITIONAL DEMOLITION SCOPE.

SEE S5.0. S5.1, & S5.2 FOR REPAIR SCOPE WHICH REQUIRES SPECIFIC AREAS OF CONCRETE REMOVAL & REPAIR

DEMOLITION LEGEND

- EXISTING WALLS
- INDICATES ITEM OR AREA TO BE REMOVED UNLESS NOTED OTHERWISE
- WALL TO BE REMOVED IN ITS ENTIRETY
- EXISTING DOOR & FRAME TO BE REMOVED

GENERAL DEMOLITION NOTES

1. DRAWINGS ARE FOR ILLUSTRATIVE PURPOSES ONLY AND MAY NOT SHOW ALL DEMOLITION WORK REQUIRED TO COMPLETE THE CONTRACT WORK.

2. VERIFY ALL GIVEN DIMENSIONS AND CLEARANCES IN FIELD PRIOR TO WORK. THE CONTRACTOR SHALL VISIT THE SITE AND FAMILIARIZE THEMSELVES WITH ALL FIELD CONDITIONS TO DETERMINE THE EXTENT OF DEMOLITION, REMOVAL AND REPAIR. THE CONTRACTOR SHALL IMMEDIATELY NOTIFY THE ARCHITECT OF ANY ERRORS, OMISSIONS, DISCREPANCIES OR HIDDEN FIELD CONDITIONS WHICH PREVENT THE EXECUTION OF THE WORK AS SHOWN. EXTRA COMPENSATION FOR INADEQUATE EXAMINATION OF EXISTING CONDITIONS SHALL NOT BE CONSIDERED.

3. REFER TO ALL CONTRACT DOCUMENTS INCLUDING, BUT NOT LIMITED TO DRAWINGS AND SCOPE OF WORK FOR COORDINATION AND ADDITIONAL DEMOLITION INFORMATION. ALL PENETRATIONS IN WALLS OR FLOORS RESULTING FROM DEMOLITION OR OVER-DEMOLITION (AS REQUIRED TO PROPERLY INSTALL NEW WORK) OF ANY EXISTING STRUCTURAL, MECHANICAL, ELECTRICAL, FIRE PROTECTION, OR PLUMBING EQUIPMENT ARE TO BE PATCHED WITH NEW MATERIAL TO MATCH EXISTING AND FINISHED TO MATCH SURROUNDING FINISHED CONSTRUCTION.

4. THE GENERAL CONTRACTOR IS REQUIRED TO COORDINATE THE DEMOLITION WORK ASSIGNED TO THE SUB-TRADES, INCLUDING BUT NOT LIMITED TO ALL UTILITY DISCONNECTS, CUTOFF CAPPING, REMOVAL, DISMANTLING OR DISMOUNTING OF FIXTURES, EQUIPMENT, WIRING, PIPING, ETC. GENERAL CONTRACTOR IS RESPONSIBLE FOR ALL REMOVAL AND DISPOSAL.

5. THE GENERAL CONTRACTOR SHALL BE FULLY RESPONSIBLE FOR REMOVING ALL EXISTING MATERIALS WHICH WOULD OTHERWISE INTERFERE WITH THE PROPER INSTALLATION OR FUNCTION OF THE NEW WORK, WHETHER OR NOT SUCH EXISTING MATERIALS OR CONDITIONS HAVE BEEN INDICATED. THIS INCLUDES ALL ABANDONED EQUIPMENT AND FINISHES.

6. ALL MATERIALS AND ITEMS TO BE REMOVED AND NOT RE-USED ON THIS PROJECT SHALL REMAIN THE PROPERTY OF THE OWNER AND SHALL BE TRANSPORTED TO AND STORED IN A PLACE DESIGNATED BY THE OWNER. IF, HOWEVER, THE OWNER DOES NOT DESIRE TO RETAIN POSSESSION OF ANY ITEMS, THEY SHALL BECOME THE PROPERTY OF THE CONTRACTOR WHO SHALL REMOVE THEM FROM THE PREMISES AND LEGALLY DISPOSE THEREOF.

7. UNLESS INDICATED OTHERWISE, THE OWNER WILL REMOVE ALL MOVEABLE EQUIPMENT AND FURNISHINGS.

8. CONTRACTOR SHALL PROVIDE TEMPORARY SHORING AT ALL LOCATIONS AS REQUIRED TO COMPLETE THE SCOPE OF WORK. PROVIDE WEATHERTIGHT, SECURE PROTECTION @ REMOVED DOOR.

9. PROTECT EXISTING TO REMAIN AREAS DURING CONSTRUCTION. PATCH & REPAIR ANY DAMAGE CAUSED DURING CONSTRUCTION.

10. REFER TO SPECIFICATIONS FOR REQUIREMENTS PERTAINING TO DEMOLITION ACTIVITIES, INCLUDING NOTIFICATION TO THE OWNER. PROVIDE TEMPORARY PROTECTION REQUIREMENTS, AND SPECIFIC DEMOLITION PROVISIONS FOR ALL ITEMS INDICATED ON DRAWINGS FOR DEMOLITION THAT ALLOW FOR SAFE, SANITARY AND LEGAL DISPOSAL OFF OF THE PROPERTY.

11. WHERE EXISTING FLOORING HAS BEEN REMOVED, THE GENERAL CONTRACTOR WILL BE REQUIRED TO CLEAN, PREPARE AND PATCH THE EXISTING FLOOR SLAB OR SUBSTRATE TO MATCH

CCRI WARWICK RENEWAL
ENTRY RAMP ENCLOSURE

400 EAST AVENUE, WARWICK RI 02886

BREWSTER THORNTON GROUP ARCHITECTS LLP
150 Chestnut Street
Providence, RI
02903
Tel: 401.861.1600
Fax 401.861.5588

BARBARA J. THORNTON No. 1868 REGISTERED ARCHITECT

JOB NO.	DATE
1609A	November 1, 2018

ISSUE :

NO.	REVISION DESCRIPTION	DATE

SHEET TITLE
DEMOLITION PLAN

SHEET
D1.1

11/7/2018 9:45:09 AM

PLAN SCOPE NOTES - 1ST FLOOR

NO.	KEYNOTES
100	SPLAYED CURTAIN MULLION WALL ALONG RAMP
101	BUILT IN CASEWORK BENCH SEATING, SEE DETAIL 4/A4.5
102	INTERIOR RAMP HANDRAIL AT ALONG HC ACCESSIBLE RAMP
103	EDGE OF EXISTING RAMP
104	LCD SCREEN
105	"PORT HOLE" VIEWING WINDOW
106	EXISTING DUCT SHAFT TO REMAIN
107	DASHED LINES INDICATE EXISTING STRUCTURE BELOW
108	ADA PADDLE - SURFACE MOUNTED ON 6" SQUARE POST (42" H)
109	ADA PADDLE W/ CAMERA ABOVE SEE ELECTRICAL DRAWINGS
110	ADA PADDLE - WALL MOUNTED
111	PATCH/ REPAIR WALL WHERE EXG. VESTIBULE DOORS WERE
112	EXTENT OF ROOF ABOVE
113	COLUMN WORK POINT, SEE STRUCTURAL DWGS
114	SITE RAMP, SEE LANDSCAPE DRAWINGS
116	FIRE ESTINGUISHER
117	FDC CONNECTION TO BE RELOCATED SEE CIVIL AND FP DWGS
118	LOCATION OF SCREEND & GATED HVAC UNIT AND UNDER RAMP STRUCTURE. sEE MECHANICAL DRAWINGS
119	EXISTING WALL AND ROOF TO REMAIN
120	INTERIOR RAMP GUARDRAIL AT 42" HEIGHT ALONG 1:20 SLOPED RAMP. SEE STRUCTURAL DWGS.
121	TWO WAY COMMUNICATION DEVICE SEE ELECTRICAL DRAWINGS
123	ROOF GUTTER

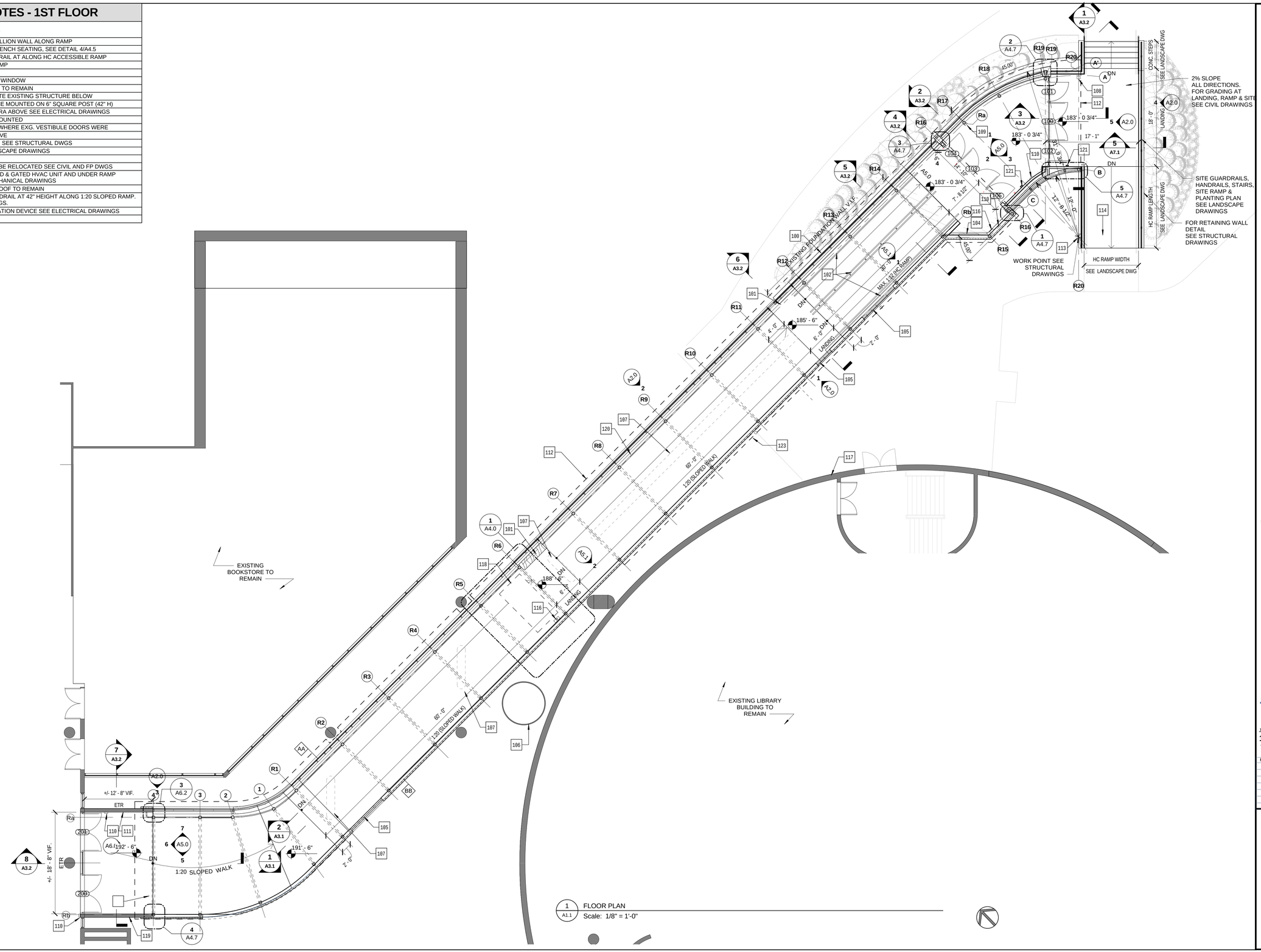

1 A1.1 FLOOR PLAN
Scale: 1/8" = 1'-0"

CCRI WARWICK RENEWAL ENTRY RAMP ENCLOSURE

400 EAST AVENUE, WARWICK RI 02886

BREWSTER THORNTON GROUP ARCHITECTS LLP
150 Chestnut Street
Providence, RI
02903
Tel: 401.861.1600
Fax: 401.861.5588

JOB NO. 1609A
DATE November 1, 2018
ISSUE :

NO.	REVISION DESCRIPTION	DATE

SHEET TITLE
FLOOR PLAN

SHEET
A1.1

11/6/2018 4:55:55 PM

ROOF KEYNOTES LEGEND

NO.	KEYNOTES
R01	EXIST. CONC. ROOF
R02	ROOF TIE-OFFS SEE DETAIL 5/A4.6, FOR STRUCTURAL ATTACHMENT SEE STRUCTURAL DRAWINGS
R03	TPO MEMBRANE ROOF
R04	EXTERIOR WALL BELOW
R05	ROOF LEADER
R06	SS METAL ROOF ATTACHED TO STRUCTURAL FRAME
R07	ROOF GUTTER
R08	SNOWGUARD

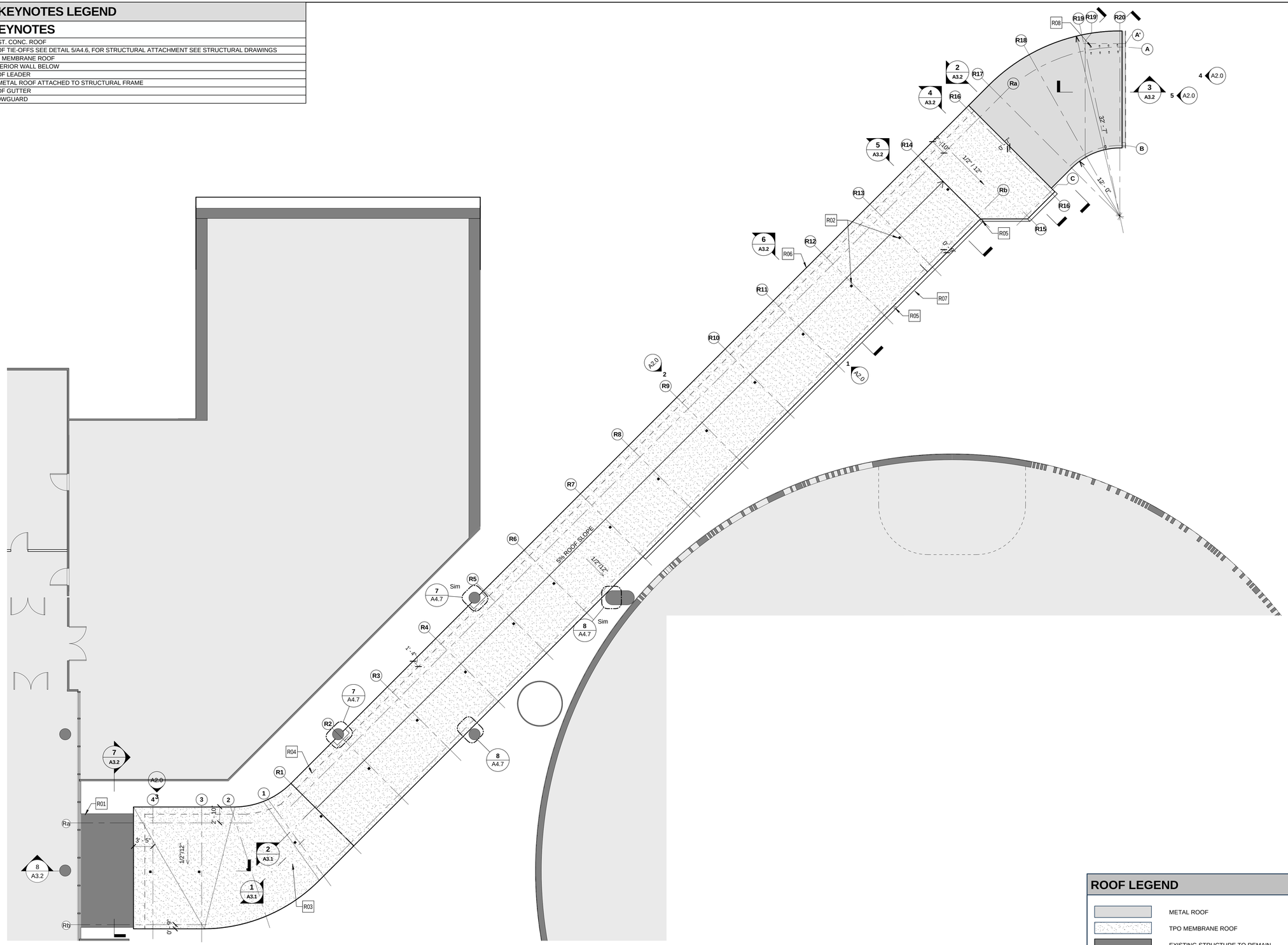

1 A1.2 ENTRY RAMP ROOF PLAN
Scale: 1/8" = 1'-0"

ROOF LEGEND

- METAL ROOF
- TPO MEMBRANE ROOF
- EXISTING STRUCTURE TO REMAIN
- ROOF TIE-OFF
- SNOWGUARD

CCRI WARWICK RENEWAL
ENTRY RAMP ENCLOSURE

400 EAST AVENUE, WARWICK RI 02886

BREWSTER THORNTON GROUP ARCHITECTS LLP
150 Chestnut Street
Providence, RI
02903
Tel: 401.861.1600
Fax 401.861.5588

BARBARA J. THORNTON 1358 REGISTERED ARCHITECT

JOB NO.	DATE
1609A	November 1, 2018

ISSUE :

NO.	REVISION DESCRIPTION	DATE

SHEET TITLE
ROOF PLAN

SHEET
A1.2

11/6/2018 4:57:50 PM

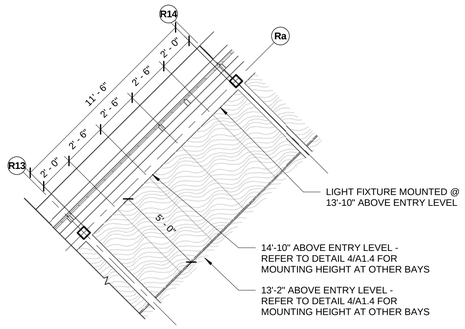

7 / A1.4 TYP. PANEL TYPE A
Scale: 1/4" = 1'-0"

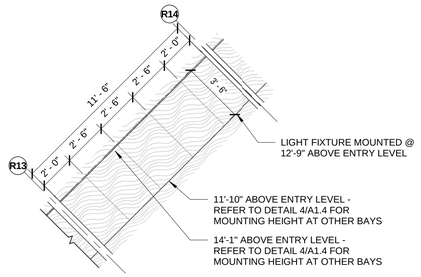

6 / A1.4 TYP. PANEL TYPE B
Scale: 1/4" = 1'-0"

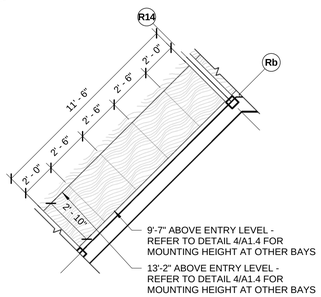

5 / A1.4 TYP. PANEL TYPE C
Scale: 1/4" = 1'-0"

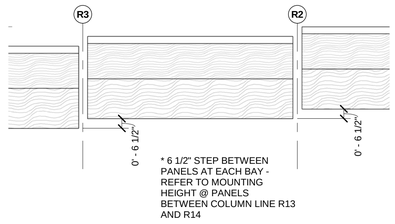

4 / A1.4 LONGITUDINAL BUILDING SECTION A-A - Callout 1
Scale: 1/4" = 1'-0"

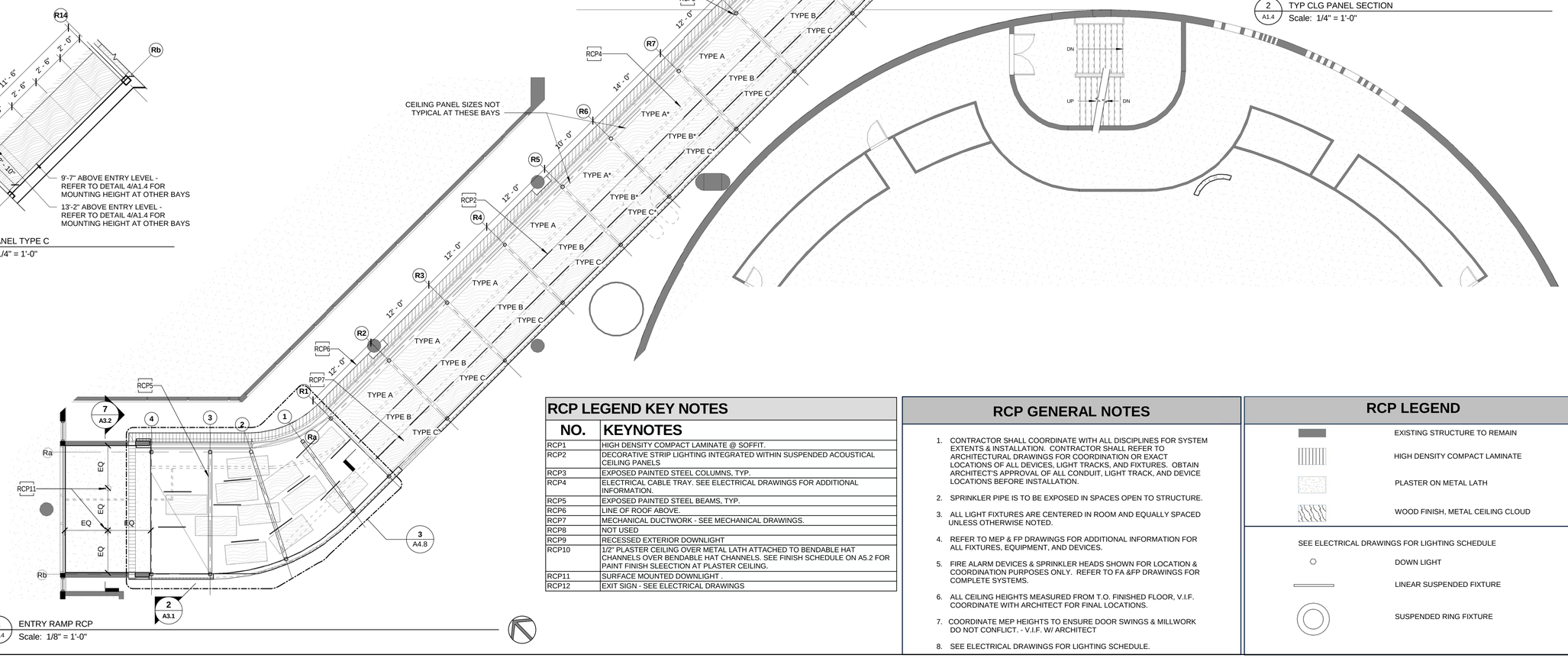

REFER TO LANDSCAPE AND ELECTRICAL DRAWINGS FOR SITE LIGHTING.

REFER TO ELECTRICAL DRAWINGS FOR ALL EXTERIOR LIGHTS UNDER RAMP.

2 / A1.4 TYP CLG PANEL SECTION
Scale: 1/4" = 1'-0"

1 / A1.4 ENTRY RAMP RCP
Scale: 1/8" = 1'-0"

RCP LEGEND KEY NOTES

NO.	KEYNOTES
RCP1	HIGH DENSITY COMPACT LAMINATE @ SOFFIT.
RCP2	DECORATIVE STRIP LIGHTING INTEGRATED WITHIN SUSPENDED ACOUSTICAL CEILING PANELS
RCP3	EXPOSED PAINTED STEEL COLUMNS, TYP.
RCP4	ELECTRICAL CABLE TRAY. SEE ELECTRICAL DRAWINGS FOR ADDITIONAL INFORMATION.
RCP5	EXPOSED PAINTED STEEL BEAMS, TYP.
RCP6	LINE OF ROOF ABOVE.
RCP7	MECHANICAL DUCTWORK - SEE MECHANICAL DRAWINGS.
RCP8	NOT USED
RCP9	RECESSED EXTERIOR DOWNLIGHT
RCP10	1/2" PLASTER CEILING OVER METAL LATH ATTACHED TO BENDABLE HAT CHANNELS OVER BENDABLE HAT CHANNELS. SEE FINISH SCHEDULE ON A5.2 FOR PAINT FINISH SLEECTION AT PLASTER CEILING.
RCP11	SURFACE MOUNTED DOWNLIGHT .
RCP12	EXIT SIGN - SEE ELECTRICAL DRAWINGS

RCP GENERAL NOTES

1. CONTRACTOR SHALL COORDINATE WITH ALL DISCIPLINES FOR SYSTEM EXTENTS & INSTALLATION. CONTRACTOR SHALL REFER TO ARCHITECTURAL DRAWINGS FOR COORDINATION OR EXACT LOCATIONS OF ALL DEVICES, LIGHT TRACKS, AND FIXTURES. OBTAIN ARCHITECT'S APPROVAL OF ALL CONDUIT, LIGHT TRACK, AND DEVICE LOCATIONS BEFORE INSTALLATION.
2. SPRINKLER PIPE IS TO BE EXPOSED IN SPACES OPEN TO STRUCTURE.
3. ALL LIGHT FIXTURES ARE CENTERED IN ROOM AND EQUALLY SPACED UNLESS OTHERWISE NOTED.
4. REFER TO MEP & FP DRAWINGS FOR ADDITIONAL INFORMATION FOR ALL FIXTURES, EQUIPMENT, AND DEVICES.
5. FIRE ALARM DEVICES & SPRINKLER HEADS SHOWN FOR LOCATION & COORDINATION PURPOSES ONLY. REFER TO FA &FP DRAWINGS FOR COMPLETE SYSTEMS.
6. ALL CEILING HEIGHTS MEASURED FROM T.O. FINISHED FLOOR, V.I.F. COORDINATE WITH ARCHITECT FOR FINAL LOCATIONS.
7. COORDINATE MEP HEIGHTS TO ENSURE DOOR SWINGS & MILLWORK DO NOT CONFLICT. - V.I.F. W/ ARCHITECT
8. SEE ELECTRICAL DRAWINGS FOR LIGHTING SCHEDULE.

RCP LEGEND

EXISTING STRUCTURE TO REMAIN

HIGH DENSITY COMPACT LAMINATE

PLASTER ON METAL LATH

WOOD FINISH, METAL CEILING CLOUD

SEE ELECTRICAL DRAWINGS FOR LIGHTING SCHEDULE

DOWN LIGHT

LINEAR SUSPENDED FIXTURE

SUSPENDED RING FIXTURE

CCRI WARWICK RENEWAL ENTRY RAMP ENCLOSURE

400 EAST AVENUE, WARWICK RI 02886

BREWSTER THORNTON GROUP ARCHITECTS LLP
150 Chestnut Street
Providence, RI
02903
Tel: 401.861.1600
Fax: 401.861.5588

JOB NO. 1609A
DATE November 1, 2018

ISSUE :

NO.	REVISION DESCRIPTION	DATE

SHEET TITLE
REFLECTED CEILING PLAN

SHEET
A1.4

11/6/2018 5:00:25 PM

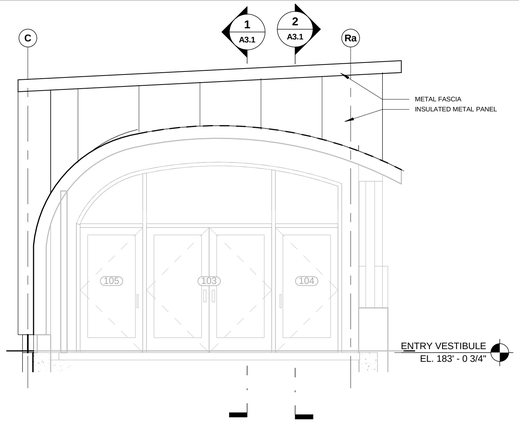

6 A2.0 ELEVATION
Scale: 1/4" = 1'-0"

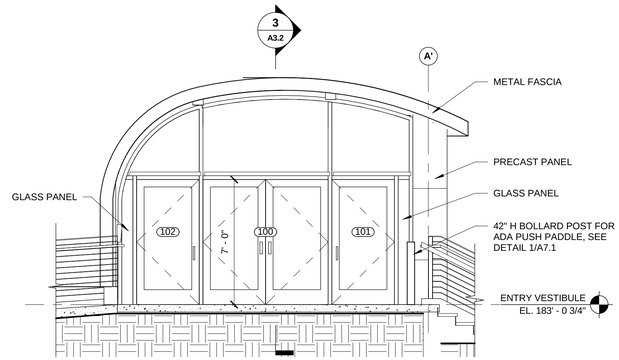

5 A2.0 ENTRY VESTIBULE EAST ELEVATION
Scale: 1/4" = 1'-0"

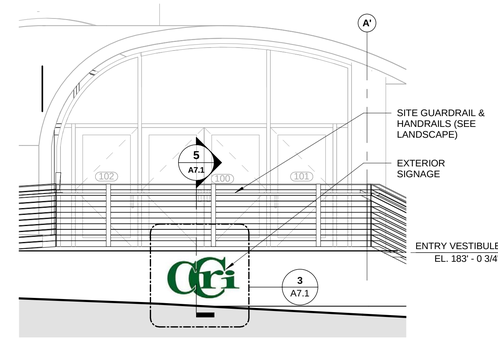

4 A2.0 ENTRY SIGNAGE ELEVATION
Scale: 1/4" = 1'-0"

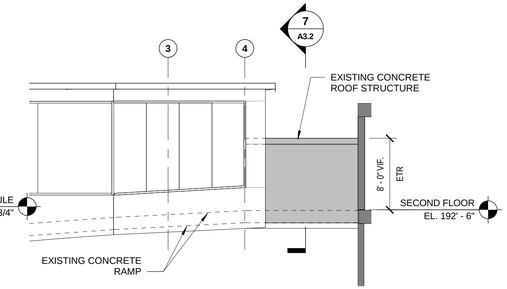

3 A2.0 NORTH ELEVATION TOP OF RAMP
Scale: 1/8" = 1'-0"

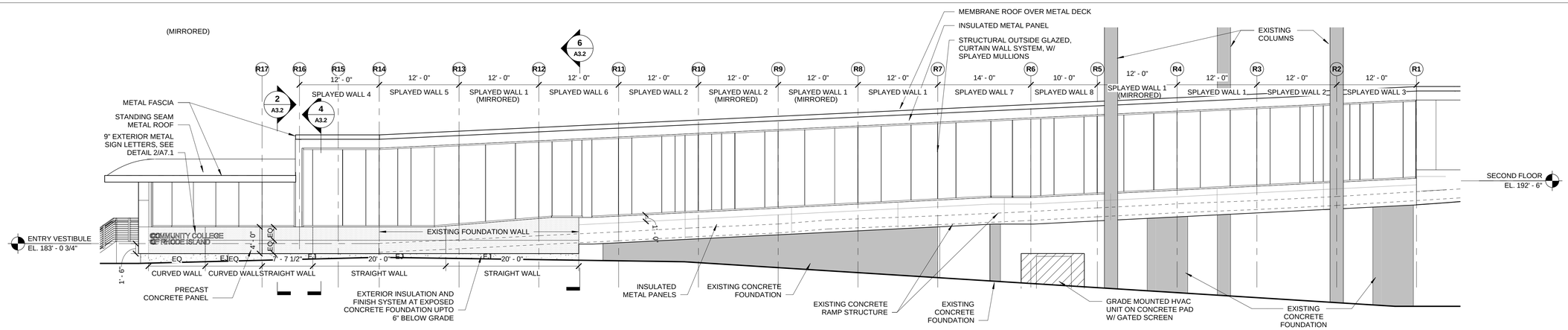

2 A2.0 NORTHWEST ELEVATION
Scale: 1/8" = 1'-0"

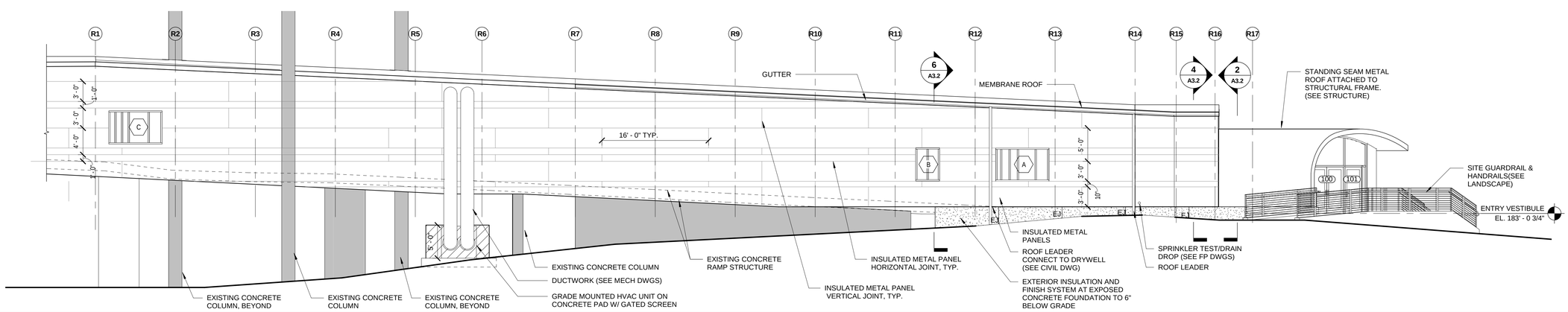

1 A2.0 SOUTHEAST ELEVATION
Scale: 1/8" = 1'-0"

CCRI WARWICK RENEWAL
ENTRY RAMP ENCLOSURE

400 EAST AVENUE, WARWICK RI 02886

BREWSTER THORNTON GROUP ARCHITECTS LLP
150 Chestnut Street
Providence, RI
02903
Tel: 401.861.1600
Fax 401.861.5588

BARBARA J. THORNTON No. 1868 REGISTERED ARCHITECT

JOB NO.	DATE
1609A	November 1, 2018

ISSUE :

NO.	REVISION DESCRIPTION	DATE

SHEET TITLE
EXTERIOR ELEVATIONS

SHEET
A2.0

11/6/2018 5:01:13 PM

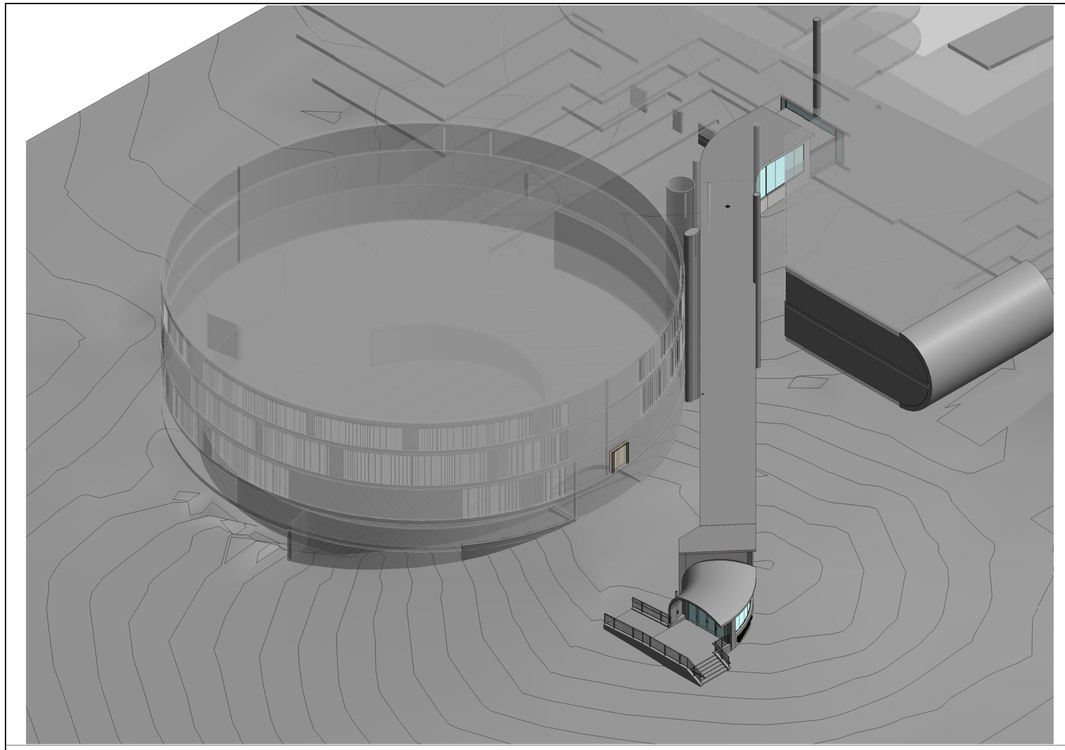

4 A2.1 AXONOMETRIC - VIEW 1 LOOKING SOUTHWEST
Scale:

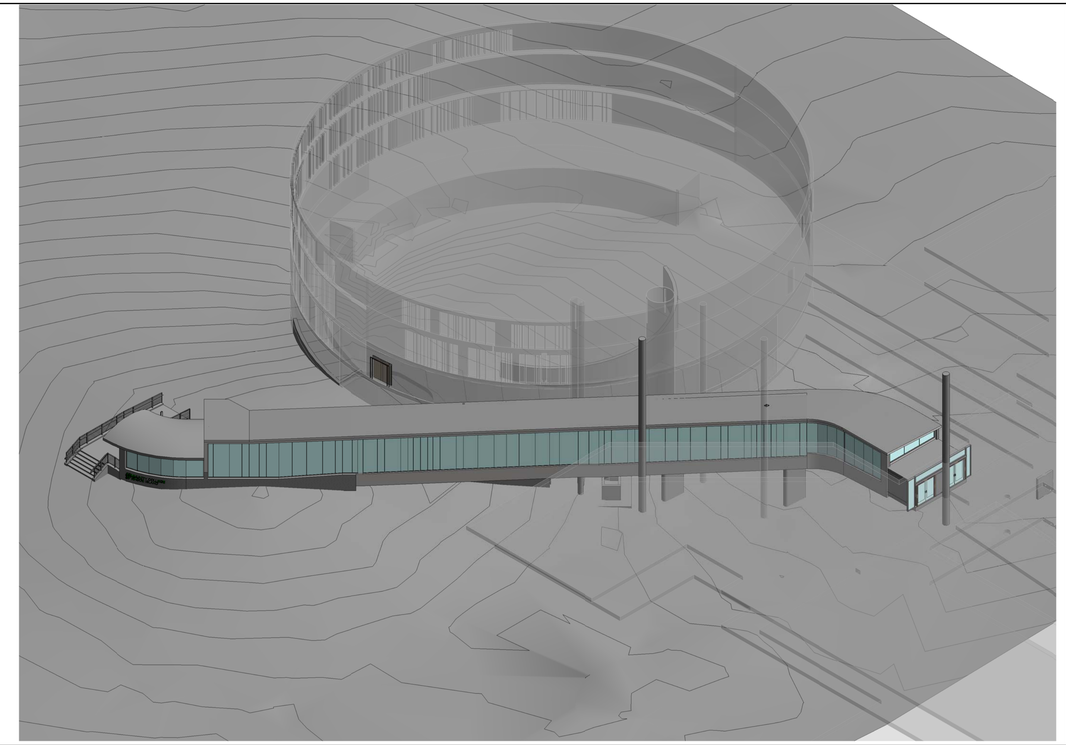

3 A2.1 AXONOMETRIC - VIEW 2 LOOKING SOUTHEAST
Scale:

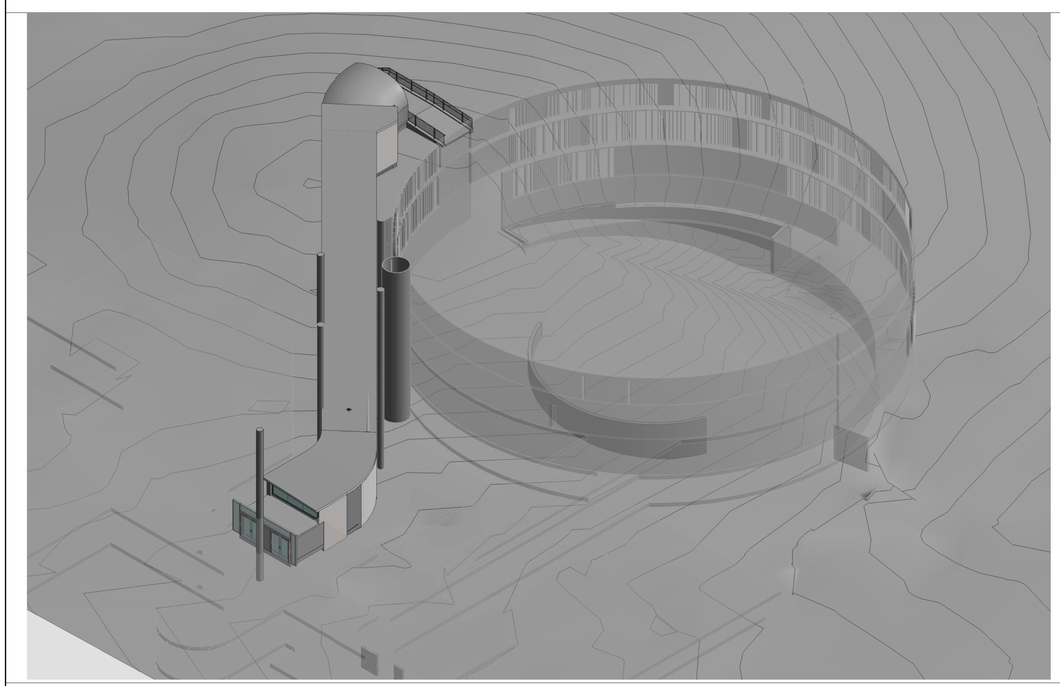

2 A2.1 AXONOMETRIC - VIEW 3 LOOKING NORTHEAST
Scale:

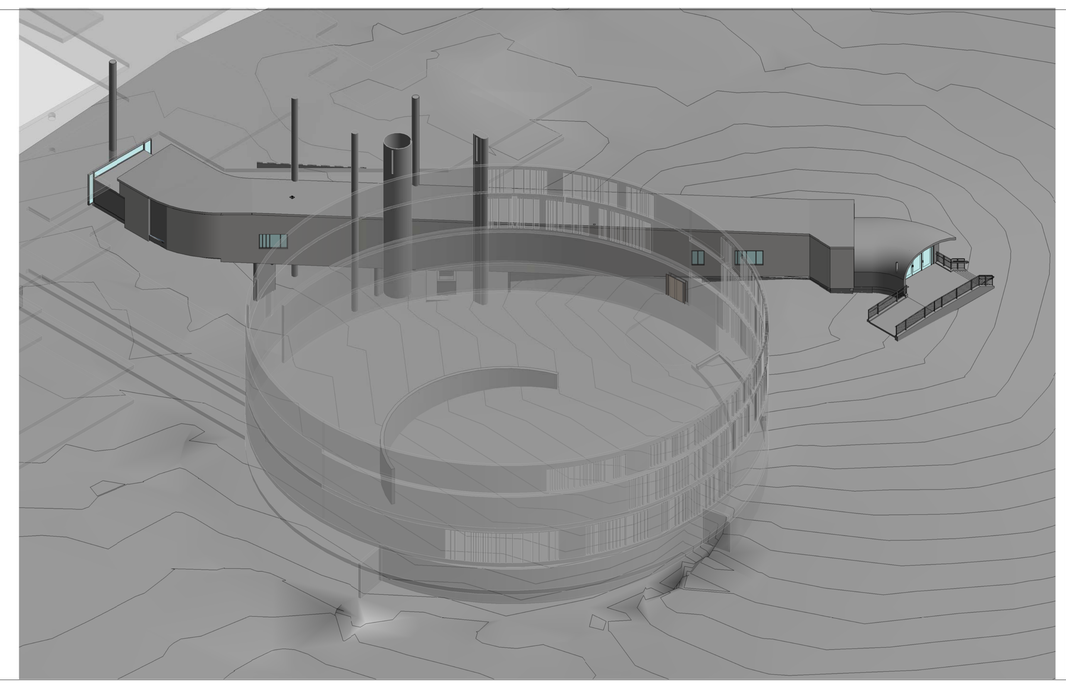

1 A2.1 AXONOMETRIC - VIEW 4 LOOKING NORTHWEST
Scale:

CCRI WARWICK RENEWAL
ENTRY RAMP ENCLOSURE

400 EAST AVENUE, WARWICK RI 02886

BREWSTER THORNTON GROUP ARCHITECTS LLP

150 Chestnut Street
Providence, RI
02903
Tel: 401.861.1600
Fax: 401.861.5588

BARBARA J. THORNTON No. 1868 REGISTERED ARCHITECT

JOB NO.	DATE
1609A	November 1, 2018

ISSUE :

NO.	REVISION DESCRIPTION	DATE

SHEET TITLE
AXONOMETRIC DIAGRAMS

SHEET
A2.1

11/6/2018 5:01:45 PM

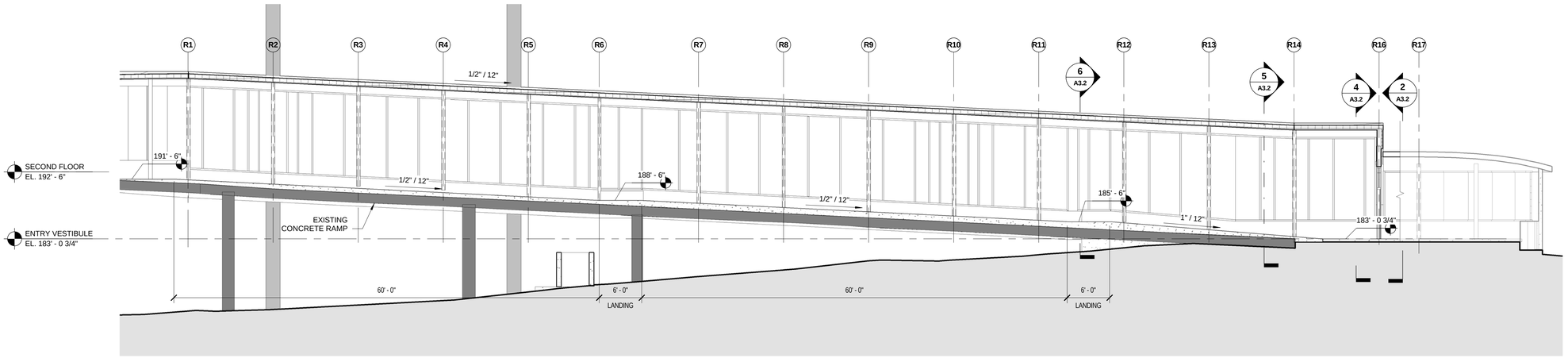

2 / A3.1 LONGITUDINAL BUILDING SECTION B-B
Scale: 1/8" = 1'-0"

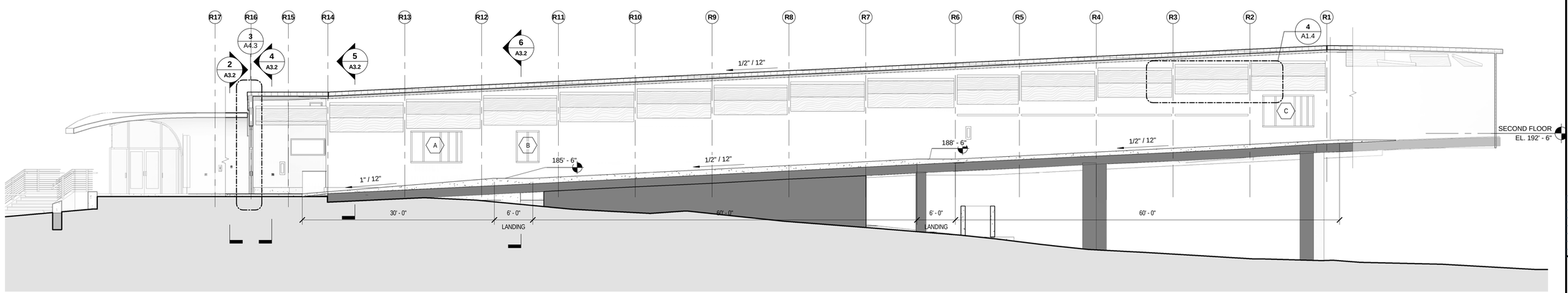

1 / A3.1 LONGITUDINAL BUILDING SECTION A-A
Scale: 1/8" = 1'-0"

CCRI WARWICK RENEWAL
ENTRY RAMP ENCLOSURE

400 EAST AVENUE, WARWICK RI 02886

BREWSTER THORNTON GROUP ARCHITECTS LLP
150 Chestnut Street
Providence, RI
02903
Tel: 401.861.1600
Fax: 401.861.5588

JOB NO. 1609A
DATE November 1, 2018

ISSUE :

NO.	REVISION DESCRIPTION	DATE

SHEET TITLE
BUILDING SECTIONS

SHEET
A3.1

11/6/2018 5:02:25 PM

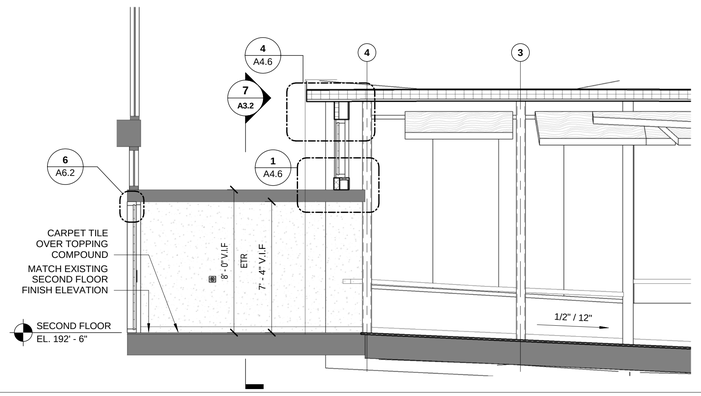

8 A3.2 SECTION THROUGH EXISTING ENTRY OF MAIN BUILDING
Scale: 1/4" = 1'-0"

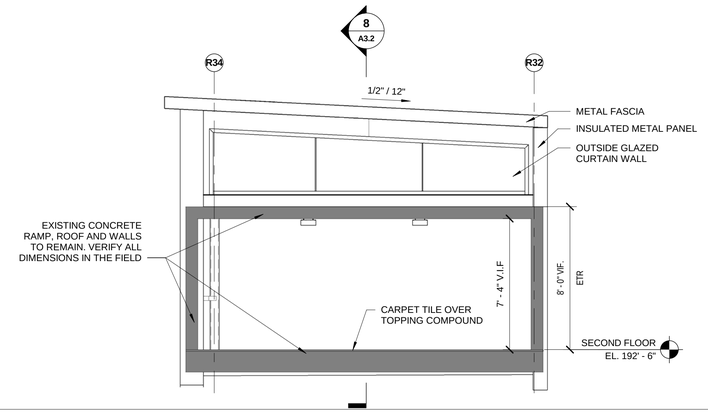

7 A3.2 TRANSVERSE SECTION G-G
Scale: 1/4" = 1'-0"

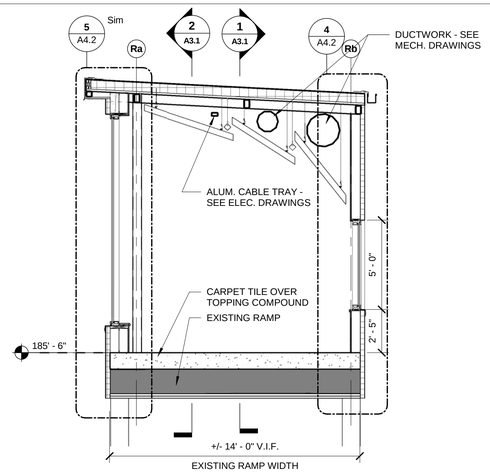

6 A3.2 TRANSVERESE SECTION C-C
Scale: 1/4" = 1'-0"

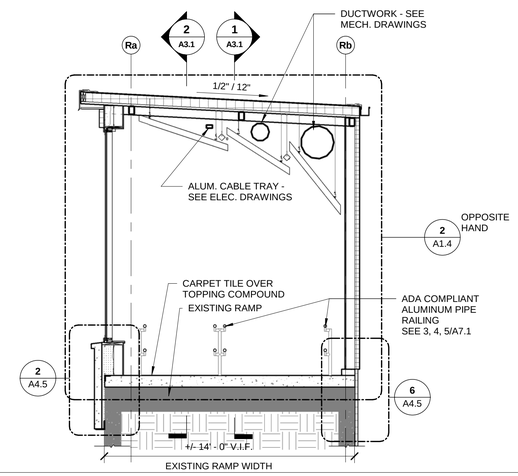

5 A3.2 SECTION THROUGH ENTRY RAMP A-A
Scale: 1/4" = 1'-0"

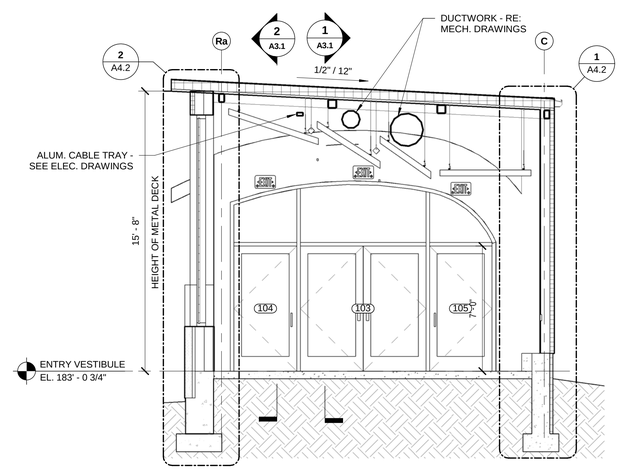

4 A3.2 TRANSVERSE SECTION A-A
Scale: 1/4" = 1'-0"

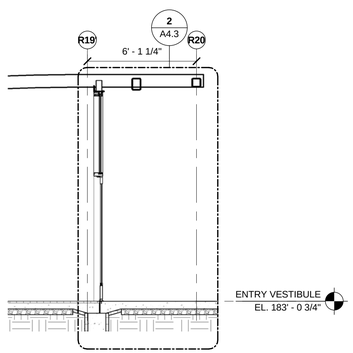

3 A3.2 SECTION THRU ENTRY CURTAIN WALL
Scale: 1/4" = 1'-0"

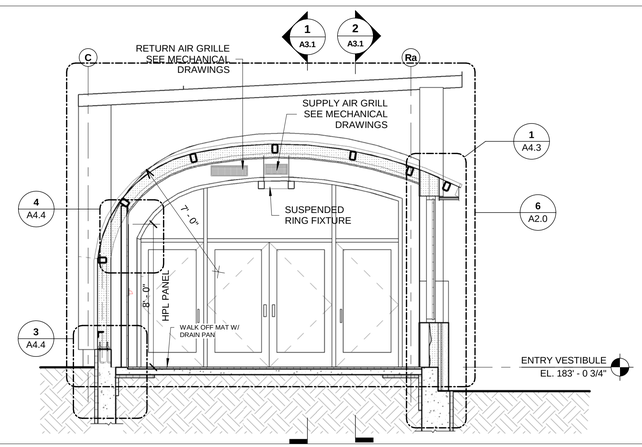

2 A3.2 VESTIBULE SECTION B-B
Scale: 1/4" = 1'-0"

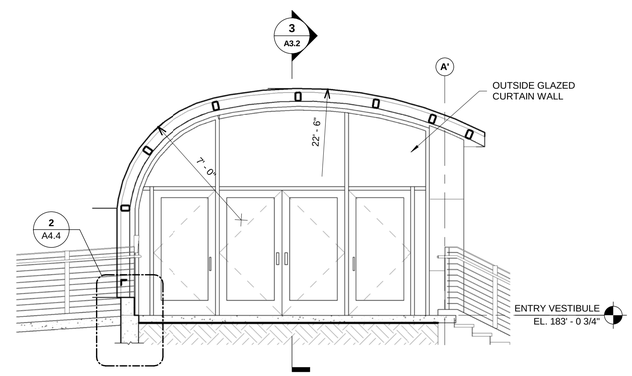

1 A3.2 TRANSVERSE SECTION F-F1
Scale: 1/4" = 1'-0"

CCRI WARWICK RENEWAL
ENTRY RAMP ENCLOSURE

400 EAST AVENUE, WARWICK RI 02886

BREWSTER THORNTON GROUP ARCHITECTS LLP
150 Chestnut Street
Providence, RI
02903
Tel: 401.861.1600
Fax 401.861.5588

BARBARA J. THORNTON
No. 1868
REGISTERED ARCHITECT

JOB NO.	DATE
1609A	November 1, 2018

ISSUE :

NO.	REVISION DESCRIPTION	DATE

SHEET TITLE
BUILDING SECTIONS

SHEET
A3.2

11/6/2018 5:03:53 PM

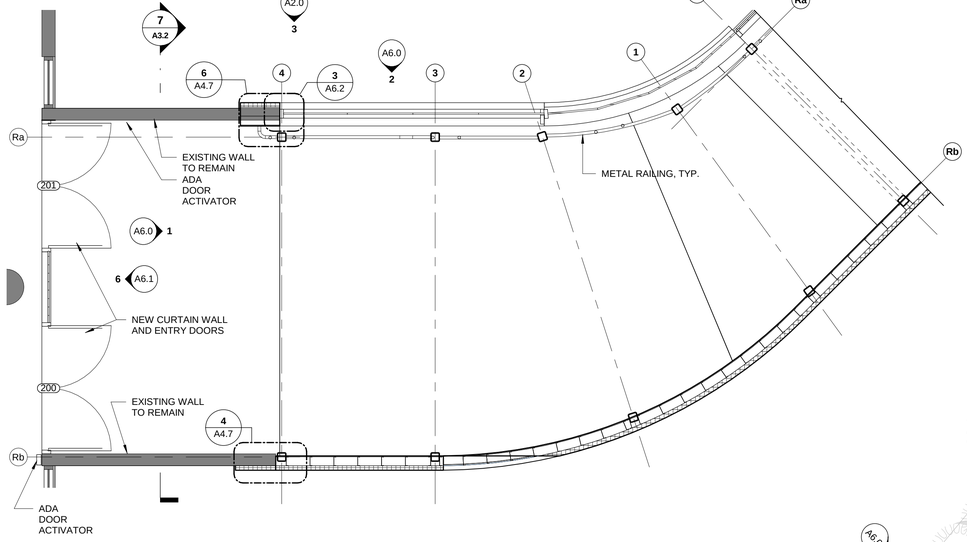

4 A4.0 ENLARGED RAMP PLAN AT TOP OF RAMP
Scale: 1/4" = 1'-0"

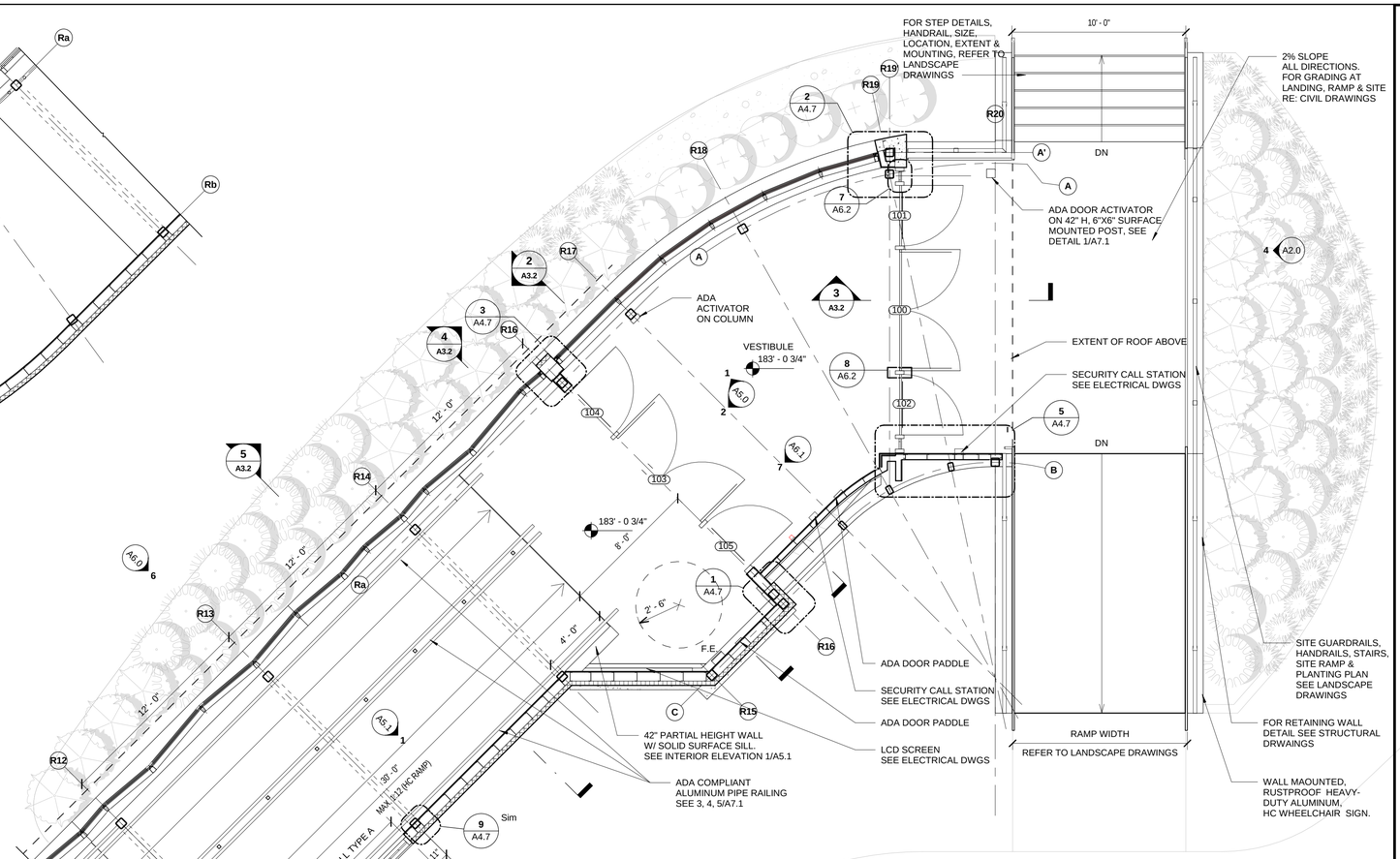

3 A4.0 ENCLOSED ENTRY RAMP VESTIBULE
Scale: 1/4" = 1'-0"

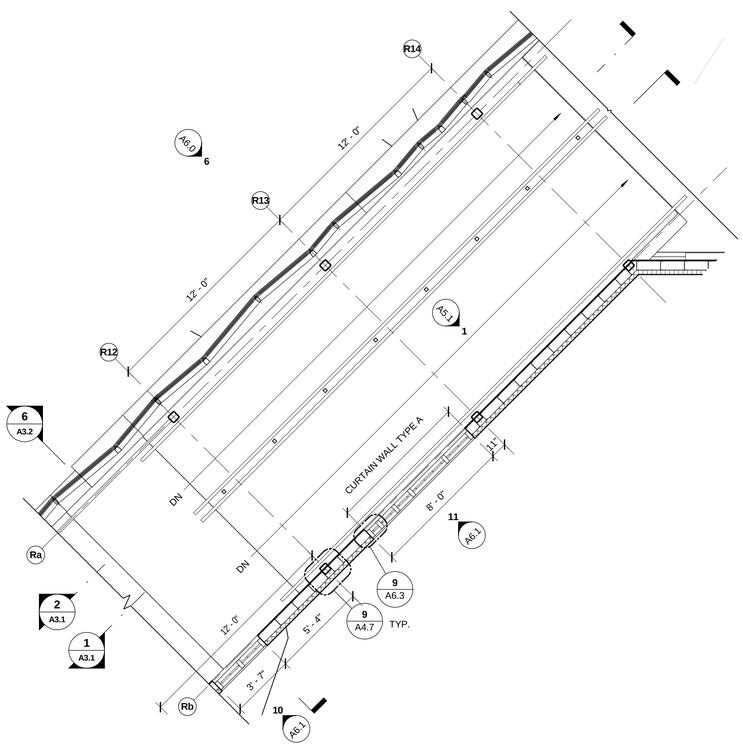

2 A4.0 ENLARGED RAMP PLAN
Scale: 1/4" = 1'-0"

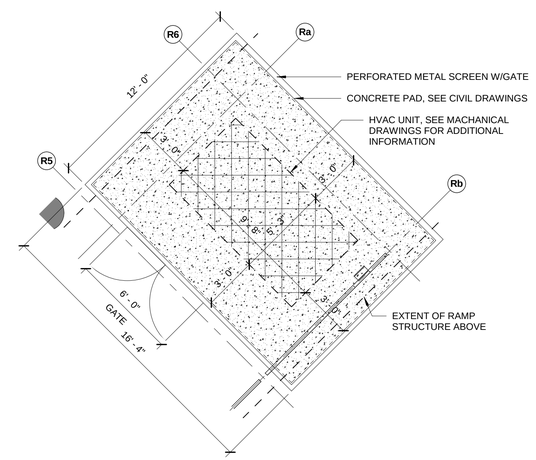

1 A4.0 HVAC UNIT LAYOUT
Scale: 1/4" = 1'-0"

CCRI WARWICK RENEWAL ENTRY RAMP ENCLOSURE

400 EAST AVENUE, WARWICK RI 02886

BREWSTER THORNTON GROUP ARCHITECTS LLP
150 Chestnut Street
Providence, RI
02903
Tel: 401.861.1600
Fax: 401.861.5588

JOB NO.	DATE
1609A	November 1, 2018

ISSUE :

NO.	REVISION DESCRIPTION	DATE

SHEET TITLE
ENLARGED FLOOR PLANS

SHEET
A4.0

11/6/2018 5:04:30 PM

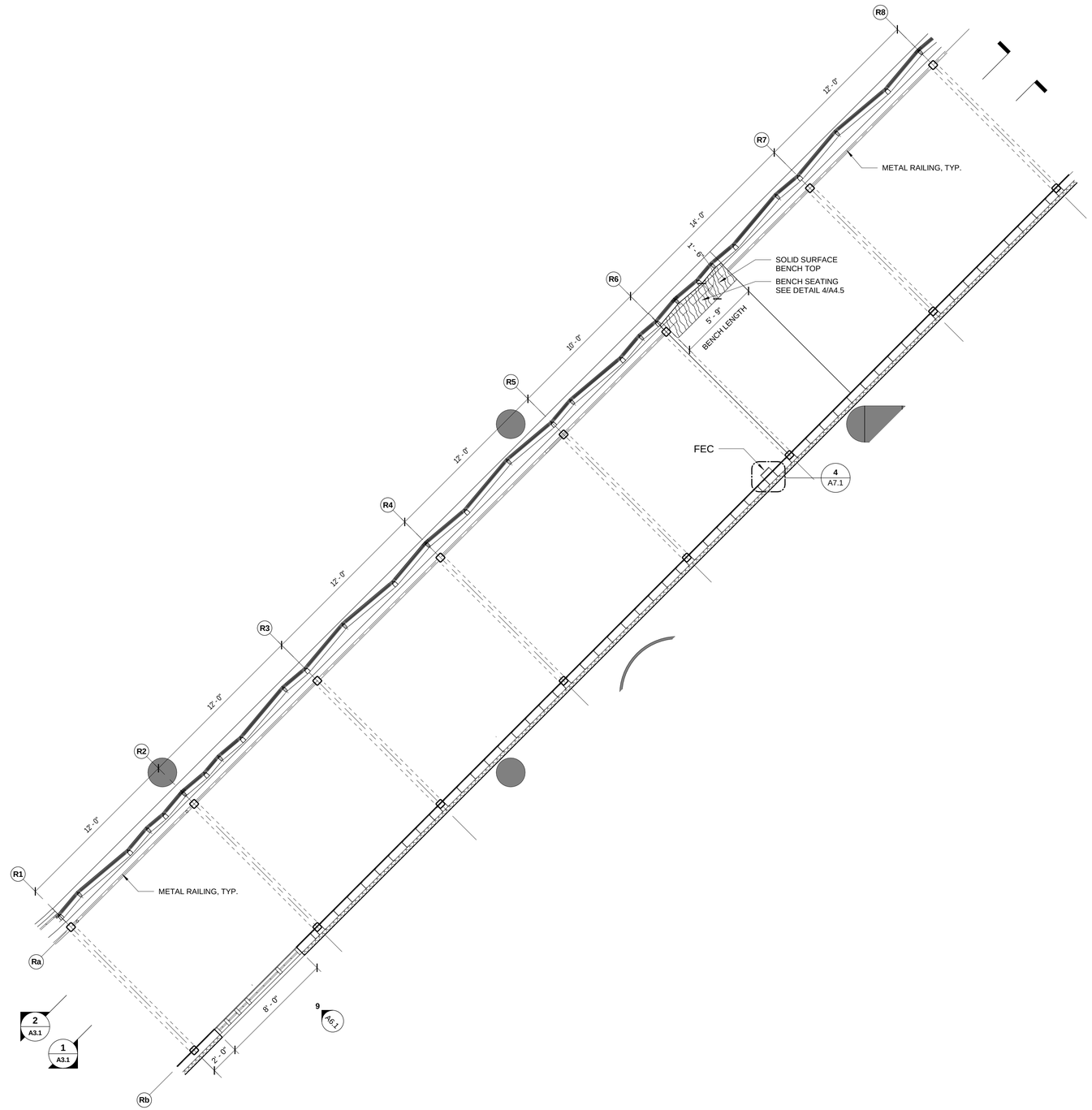

1 / A4.1 TYPICAL ENLARGED PLAN DETAIL @ RAMP
Scale: 1/4" = 1'-0"

CCRI WARWICK RENEWAL
ENTRY RAMP ENCLOSURE

400 EAST AVENUE, WARWICK RI 02886

BREWSTER THORNTON GROUP ARCHITECTS LLP
150 Chestnut Street
Providence, RI
02903
Tel: 401.861.1600
Fax 401.861.5588

BARBARA J. THORNTON
No. 1368
REGISTERED ARCHITECT

JOB NO.	DATE
1609A	November 1, 2018

ISSUE :

NO.	REVISION DESCRIPTION	DATE

SHEET TITLE
ENLARGED FLOOR PLANS

SHEET
A4.1

11/6/2018 5:05:02 PM

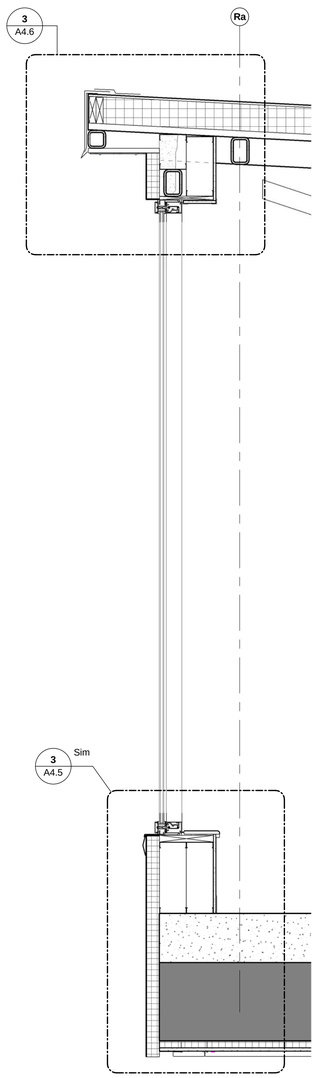

5 A4.2 WALL SECTION 4
Scale: 3/4" = 1'-0"

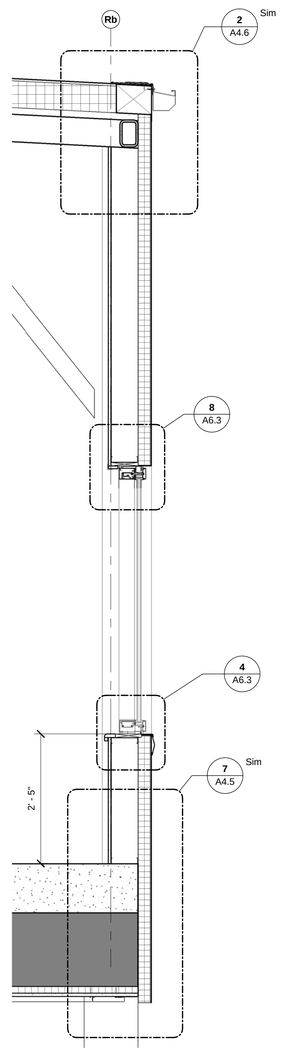

4 A4.2 WALL SECTION 2
Scale: 3/4" = 1'-0"

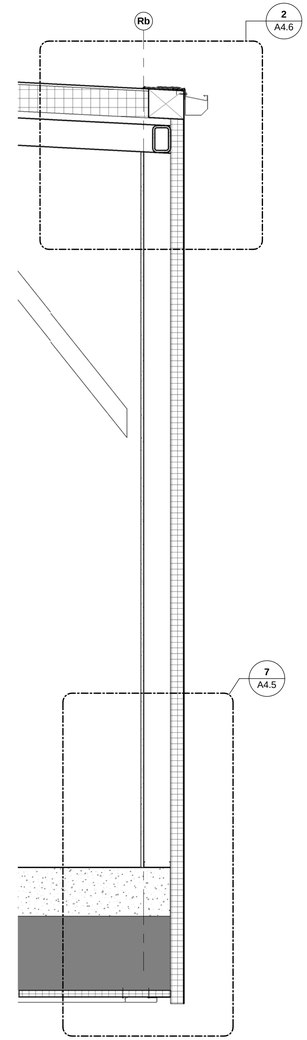

3 A4.2 WALL SECTION 3
Scale: 3/4" = 1'-0"

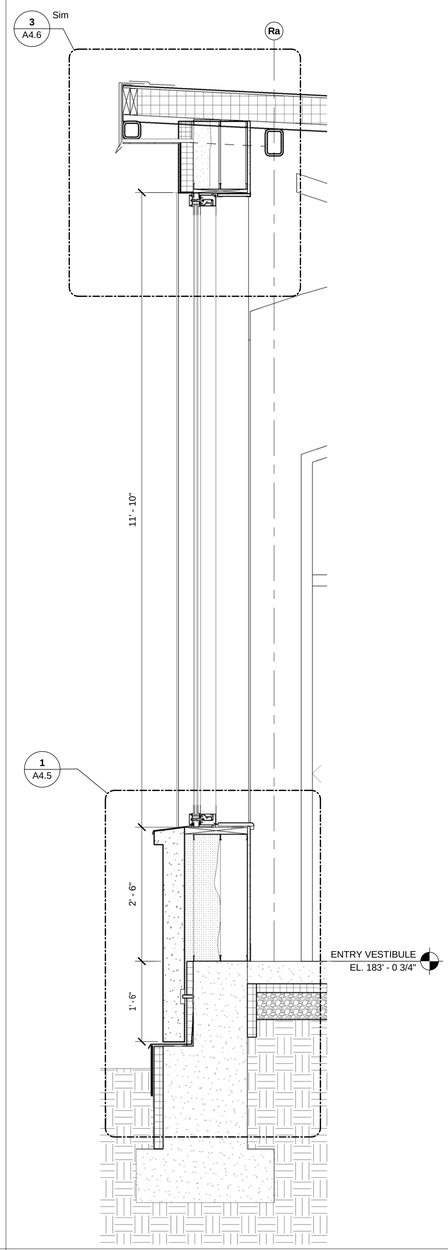

2 A4.2 WALL SECTION 5
Scale: 3/4" = 1'-0"

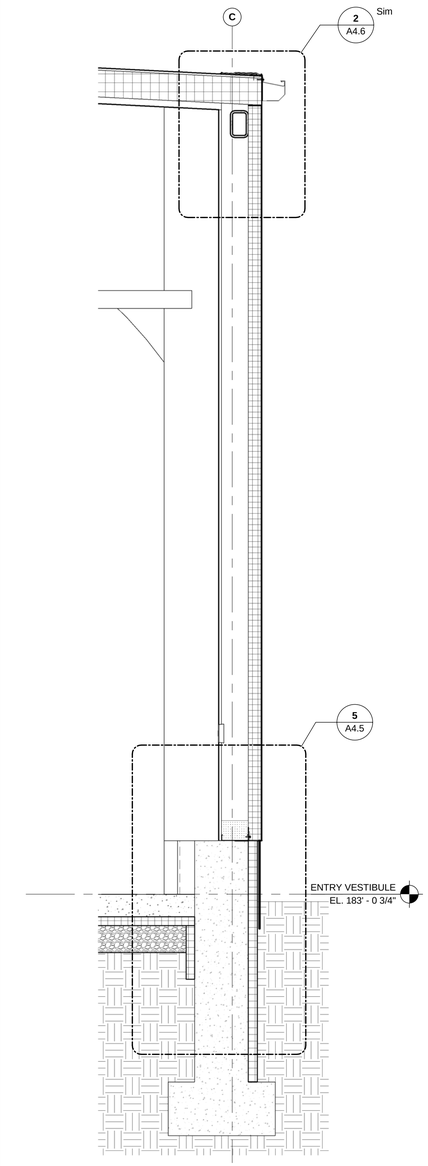

1 A4.2 WALL SECTION 6
Scale: 3/4" = 1'-0"

CCRI WARWICK RENEWAL
ENTRY RAMP ENCLOSURE

400 EAST AVENUE, WARWICK RI 02886

BREWSTER THORNTON GROUP ARCHITECTS LLP
150 Chestnut Street
Providence, RI
02903
Tel: 401.861.1600
Fax: 401.861.5588

BARBARA J. THORNTON 1868 REGISTERED ARCHITECT

JOB NO.	DATE
1609A	November 1, 2018

ISSUE :

NO.	REVISION DESCRIPTION	DATE

SHEET TITLE
WALL SECTIONS

SHEET
A4.2

11/6/2018 5:06:16 PM

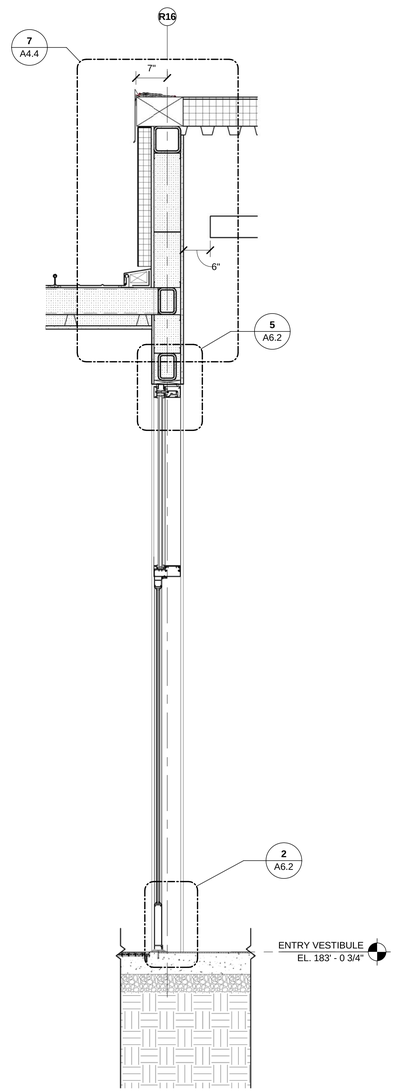

3 A4.3 WALL SECTION 8
Scale: 3/4" = 1'-0"

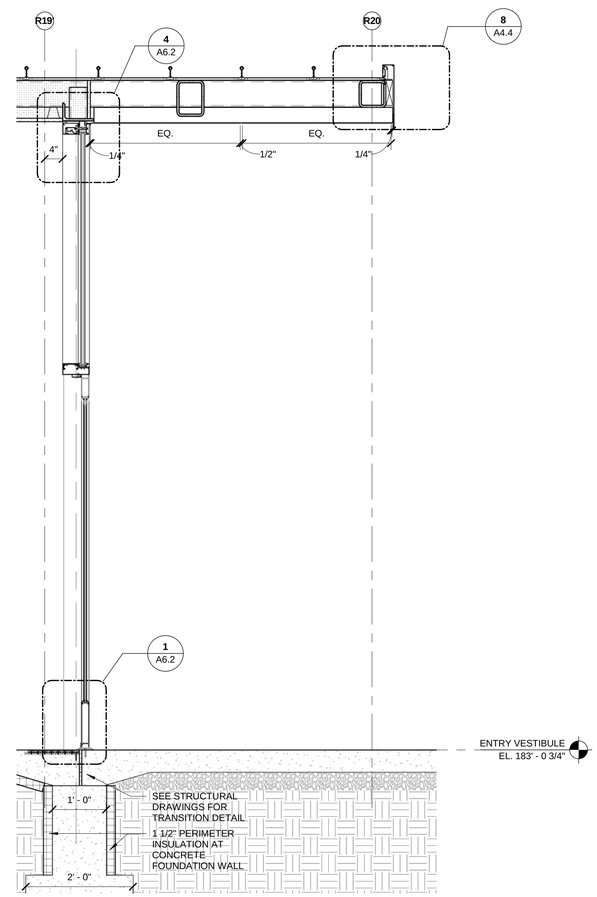

2 A4.3 FRONT ENTRY DOOR SILL
Scale: 3/4" = 1'-0"

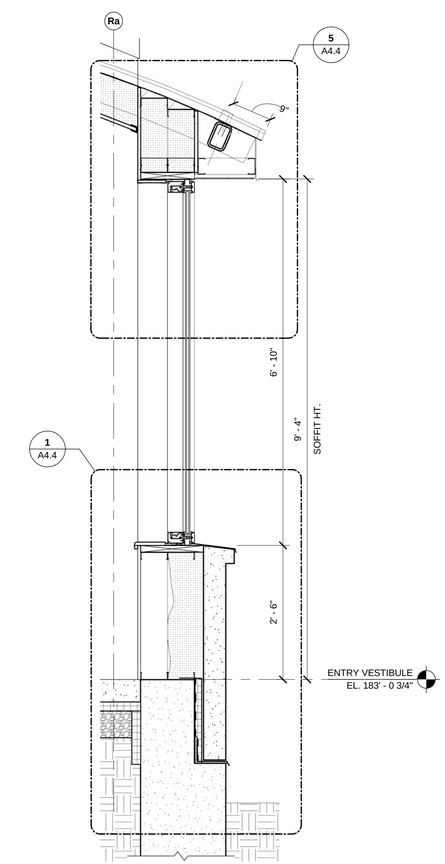

1 A4.3 WALL SECTION 1
Scale: 3/4" = 1'-0"

CCRI WARWICK RENEWAL
ENTRY RAMP ENCLOSURE

400 EAST AVENUE, WARWICK RI 02886

BREWSTER THORNTON GROUP ARCHITECTS LLP
150 Chestnut Street
Providence, RI
02903
Tel: 401.861.1600
Fax: 401.861.5588

JOB NO. 1609A
DATE November 1, 2018

ISSUE :

NO.	REVISION DESCRIPTION	DATE

SHEET TITLE
WALL SECTIONS

SHEET
A4.3

11/6/2018 5:07:22 PM

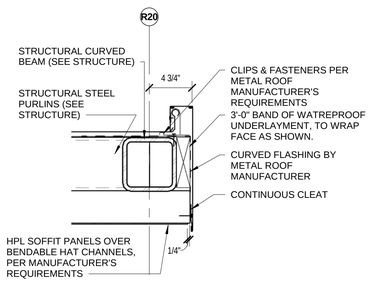

8 / A4.4 FASCIA DETAIL - METAL ROOF
Scale: 1 1/2" = 1'-0"

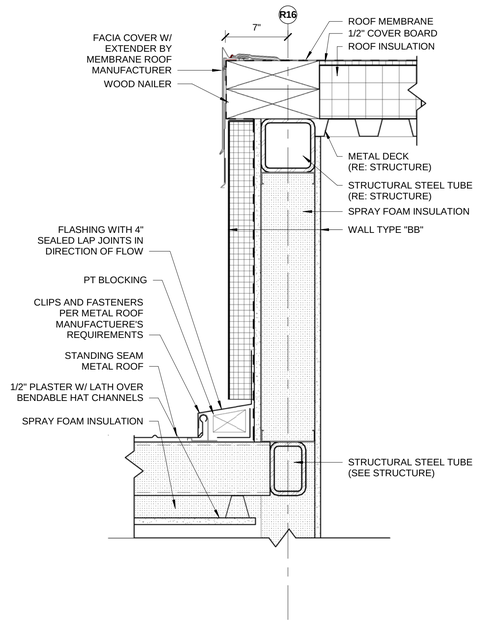

7 / A4.4 ROOF TRANSITION DETAIL
Scale: 1 1/2" = 1'-0"

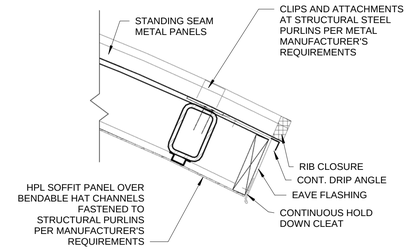

6 / A4.4 EAVE DETAIL @ HPL PANEL
Scale: 1 1/2" = 1'-0"

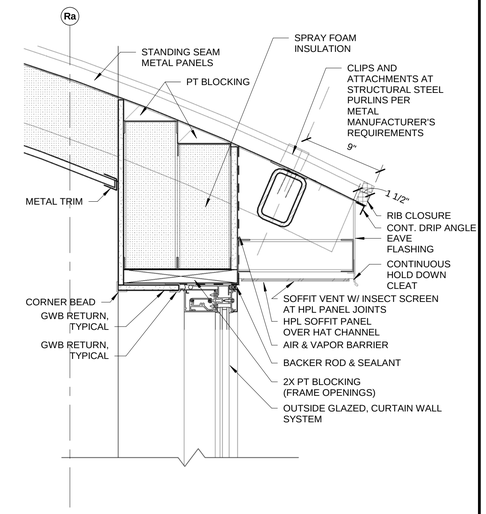

5 / A4.4 EAVE DETAIL - METAL ROOF
Scale: 1 1/2" = 1'-0"

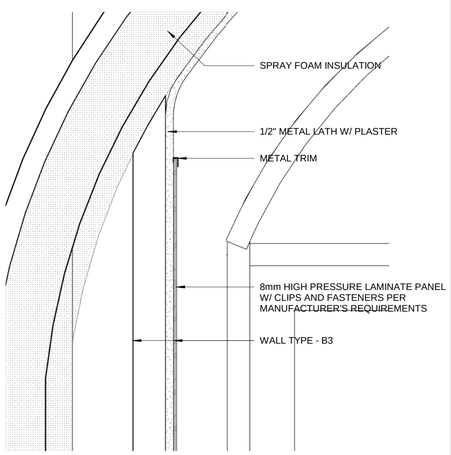

4 / A4.4 VESTIBULE - HPL TO PLASTER TRANSITION
Scale: 1 1/2" = 1'-0"

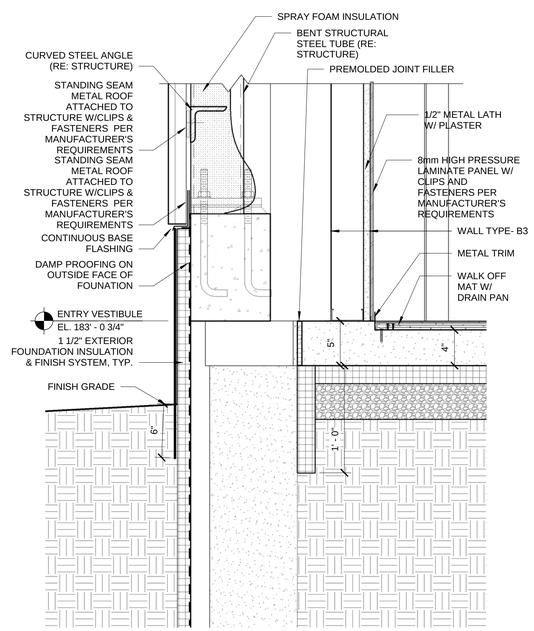

3 / A4.4 METAL ROOF AT FOUNDATION
Scale: 1 1/2" = 1'-0"

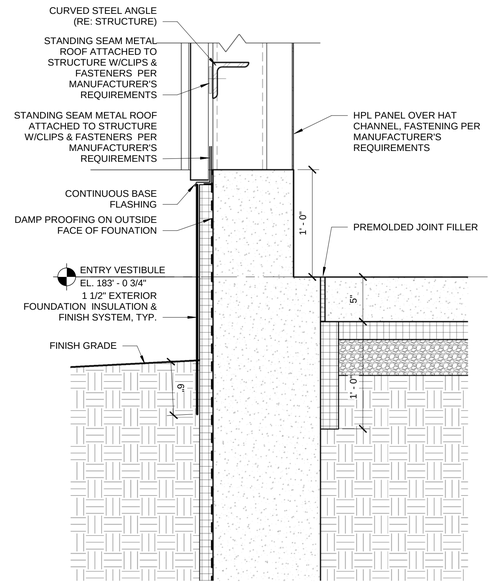

2 / A4.4 HPL BASE DETAIL
Scale: 1 1/2" = 1'-0"

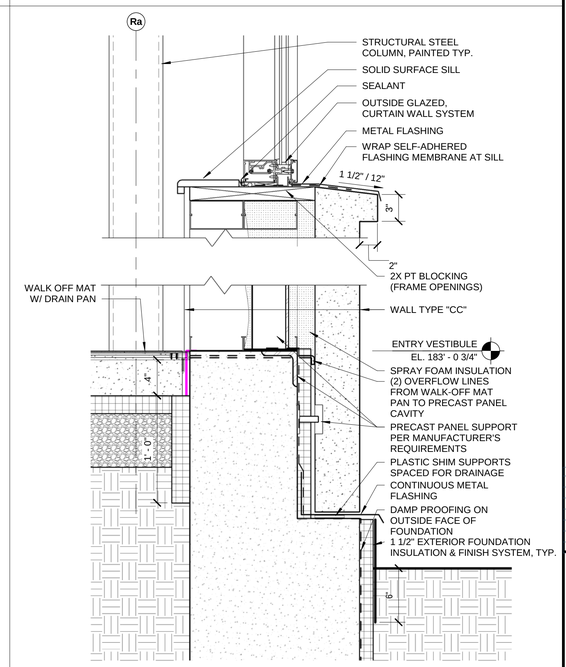

1 / A4.4 PRECAST PANEL AT SILL AND FOUNDATION (W/CONDENSATE DRAIN OPTION @ WALK-OFF MAT)
Scale: 1 1/2" = 1'-0"

CCRI WARWICK RENEWAL
ENTRY RAMP ENCLOSURE

400 EAST AVENUE, WARWICK RI 02886

BREWSTER THORNTON GROUP ARCHITECTS LLP
150 Chestnut Street
Providence, RI
02903
Tel: 401.861.1600
Fax 401.861.5588

BARBARA J. THORNTON
No. 1868
REGISTERED ARCHITECT

JOB NO. 1609A
DATE November 1, 2018

ISSUE :

NO.	REVISION DESCRIPTION	DATE

SHEET TITLE
WALL SECTION DETAILS

SHEET
A4.4

11/6/2018 5:08:05 PM

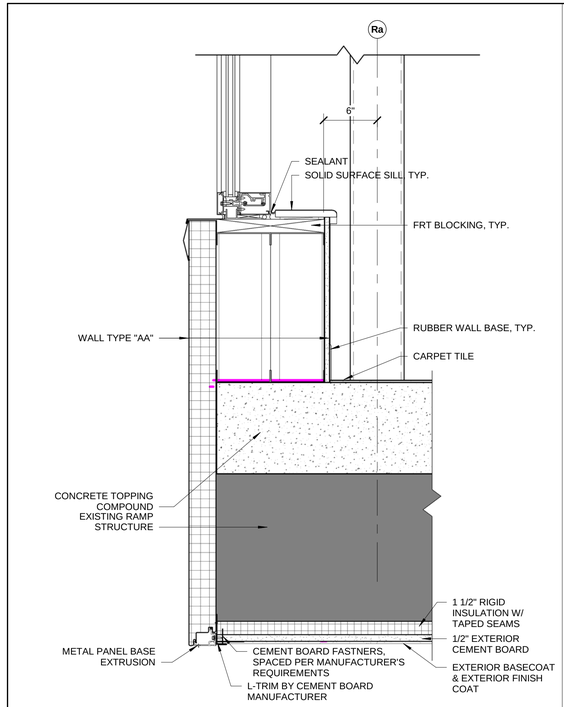

8 / A4.5 TYPICAL CURTAIN WALL BASE DETAIL ALONG RAMP - ALTERNATE SOFFIT DETAIL
Scale: 1 1/2" = 1'-0"

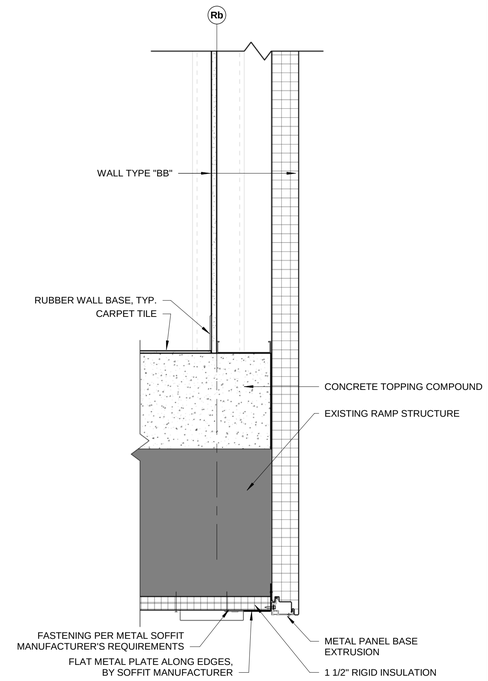

7 / A4.5 TYPICAL BASE DETAIL ALONG RAMP WALL
Scale: 1 1/2" = 1'-0"

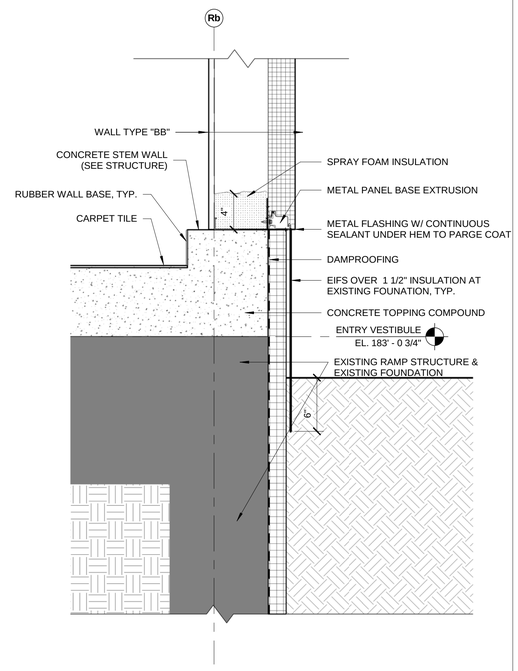

6 / A4.5 METAL PANEL AT EXISTING FOUNDATION
Scale: 1 1/2" = 1'-0"

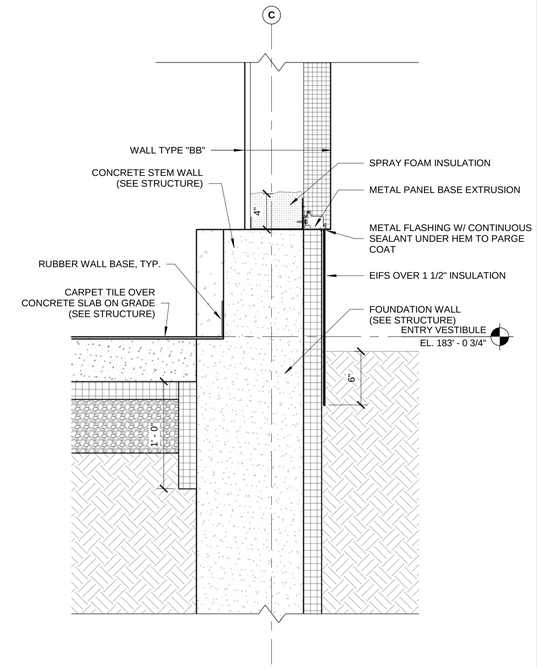

5 / A4.5 METAL PANEL AT FOUNDATION
Scale: 1 1/2" = 1'-0"

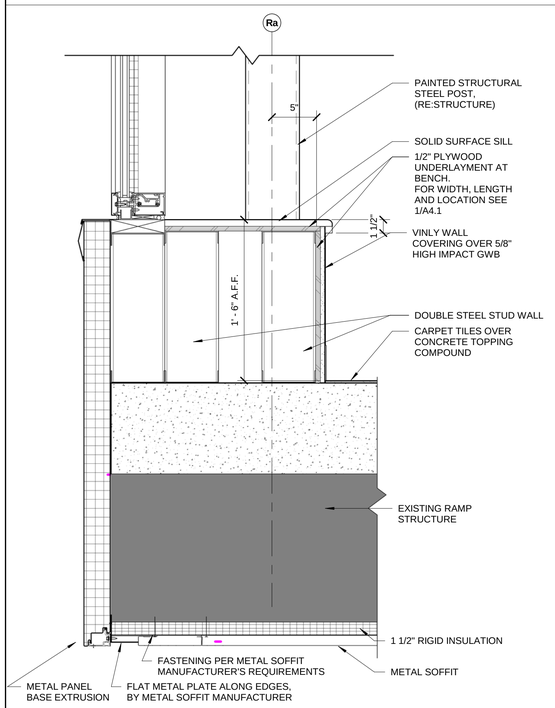

4 / A4.5 CURTAIN WALL BASE DETAIL AT INTERMEDIATE SEATING
Scale: 1 1/2" = 1'-0"

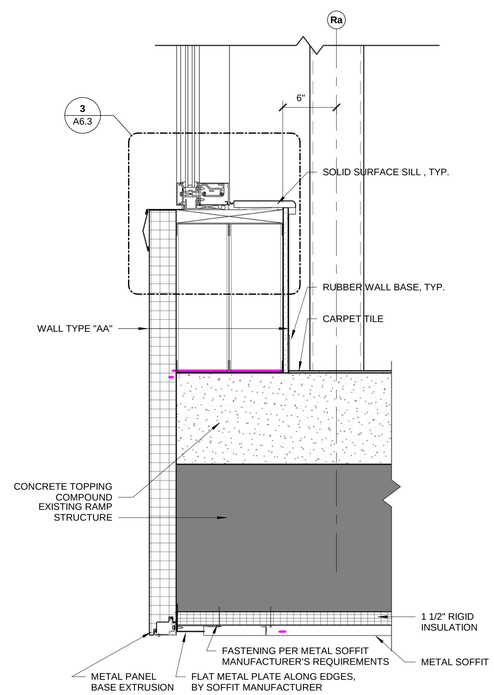

3 / A4.5 TYPICAL CURTAIN WALL BASE DETAIL ALONG RAMP - SEE ALSO DETAIL 8/A4.5
Scale: 1 1/2" = 1'-0"

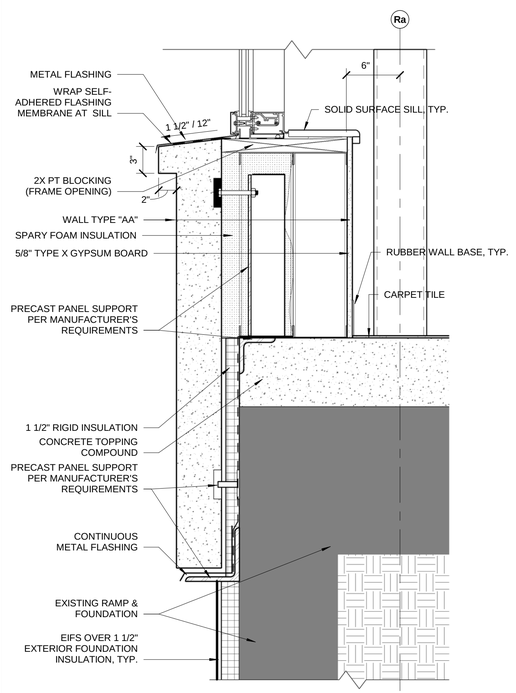

2 / A4.5 PRECAST PANEL AT EXISTING FOUNDATION
Scale: 1 1/2" = 1'-0"

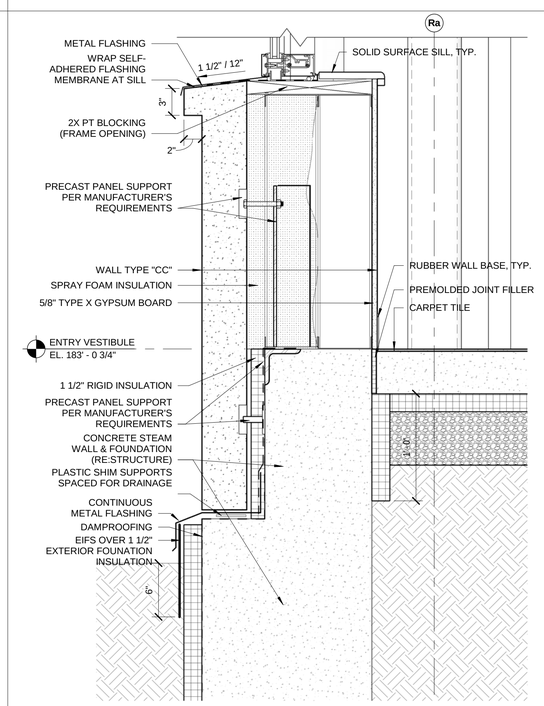

1 / A4.5 PRECAST PANEL AT FOUNDATION
Scale: 1 1/2" = 1'-0"

CCRI WARWICK RENEWAL
ENTRY RAMP ENCLOSURE

400 EAST AVENUE, WARWICK RI 02886

BREWSTER THORNTON GROUP ARCHITECTS LLP
150 Chestnut Street
Providence, RI
02903
Tel: 401.861.1600
Fax: 401.861.5588

JOB NO.	DATE
1609A	November 1, 2018

ISSUE :

NO.	REVISION DESCRIPTION	DATE

SHEET TITLE
WALL SECTION DETAILS

SHEET
A4.5

11/6/2018 5:08:40 PM

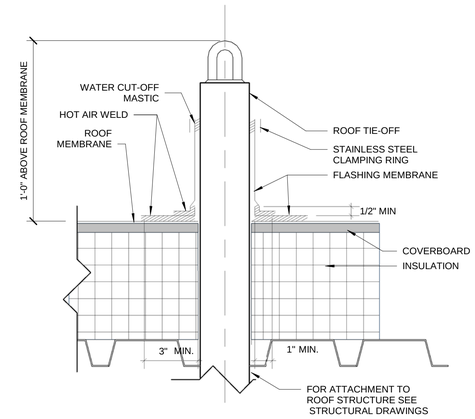

5 / A4.6 ROOF TIE-OFF DETAIL
Scale: 3" = 1'-0"

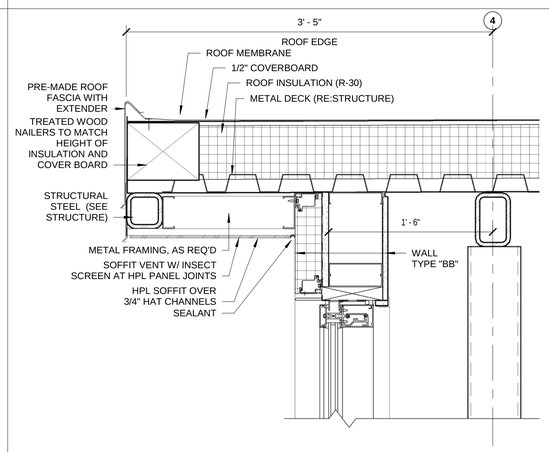

4 / A4.6 CURTAIN WALL HEAD DETAIL AT TRANSOM
Scale: 1 1/2" = 1'-0"

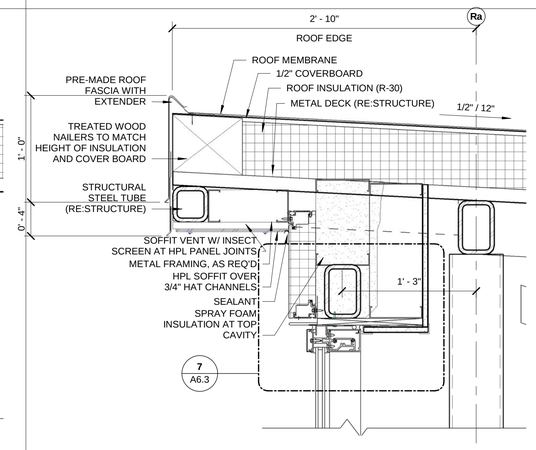

3 / A4.6 EAVE DETAIL - MEMBRANE ROOF
Scale: 1 1/2" = 1'-0"

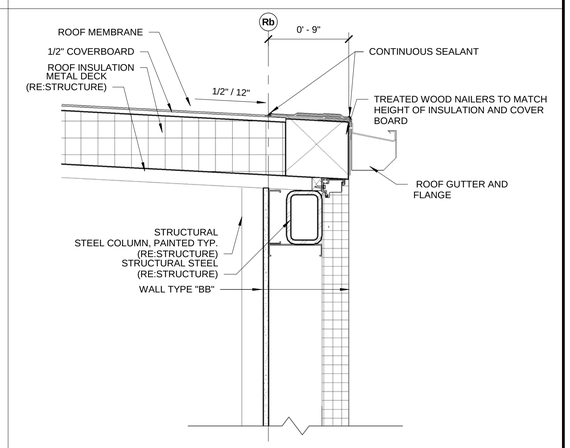

2 / A4.6 MEMBRANE ROOF GUTTER DETAIL
Scale: 1 1/2" = 1'-0"

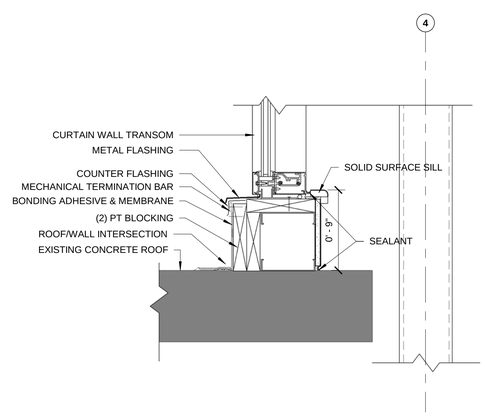

1 / A4.6 CURTAIN WALL SILL DETAIL AT EXISTING CONCRETE ROOF
Scale: 1 1/2" = 1'-0"

CCRI WARWICK RENEWAL
ENTRY RAMP ENCLOSURE

400 EAST AVENUE, WARWICK RI 02886

BREWSTER THORNTON GROUP ARCHITECTS LLP
150 Chestnut Street
Providence, RI
02903
Tel: 401.861.1600
Fax: 401.861.5588

BARBARA J. THORNTON
No. 1868
REGISTERED ARCHITECT

JOB NO.	DATE
1609A	November 1, 2018

ISSUE :

NO.	REVISION DESCRIPTION	DATE

SHEET TITLE
WALL SECTION DETAILS

SHEET
A4.6

11/6/2018 5:09:22 PM

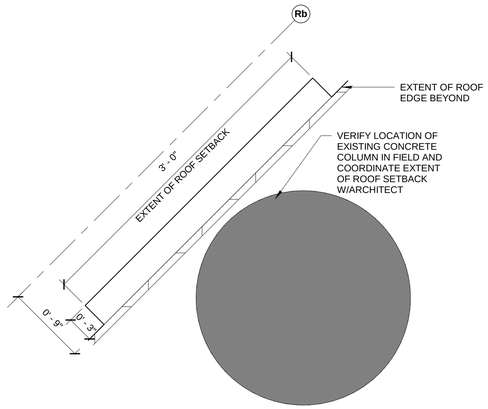

8 / A4.7 PLAN DETAIL @ TPO ROOF AND EXISTING CONCRETE COLUMN (SOUTH)
Scale: 1 1/2" = 1'-0"

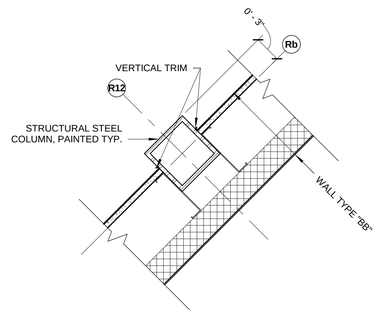

9 / A4.7 PLAN DETAIL AT COLUMN ALONG GRIDLINE Rb
Scale: 1 1/2" = 1'-0"

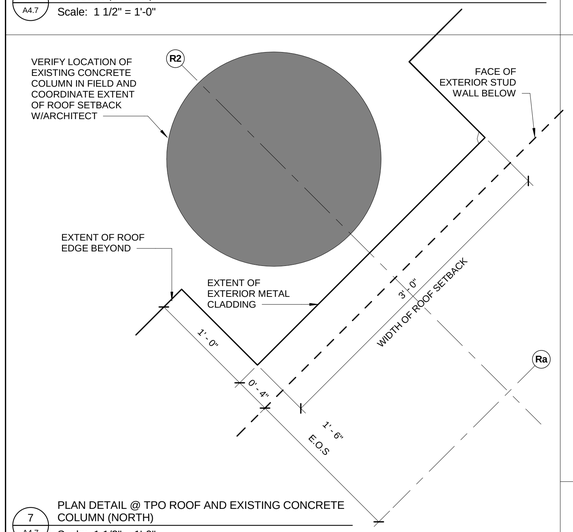

7 / A4.7 PLAN DETAIL @ TPO ROOF AND EXISTING CONCRETE COLUMN (NORTH)
Scale: 1 1/2" = 1'-0"

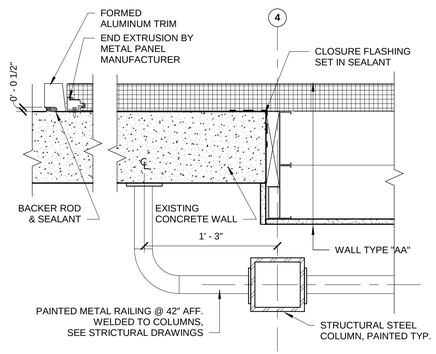

6 / A4.7 PLAN DETAIL @ METAL PANEL TO EXISTING CONCRETE WALL
Scale: 1 1/2" = 1'-0"

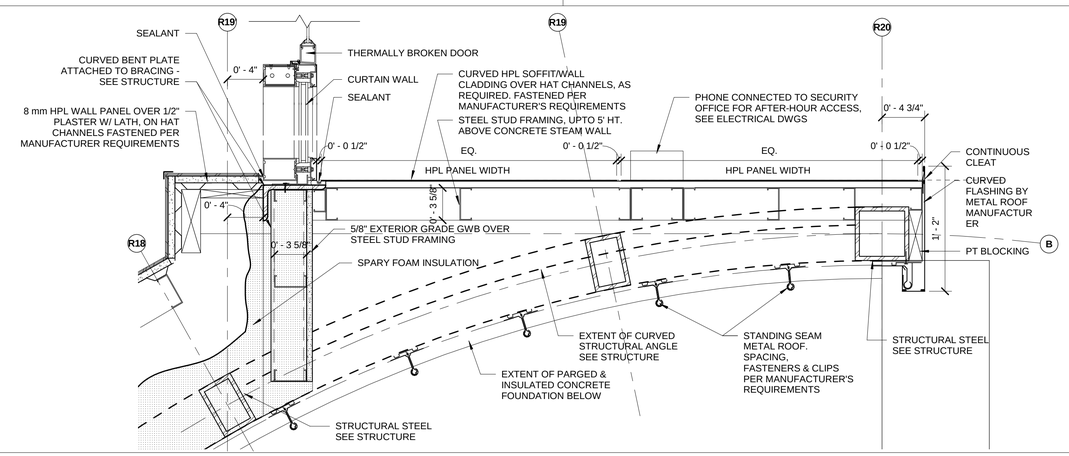

5 / A4.7 TRESPA PLAN DETAIL @ ENTRANCE OVERHANG
Scale: 1 1/2" = 1'-0"

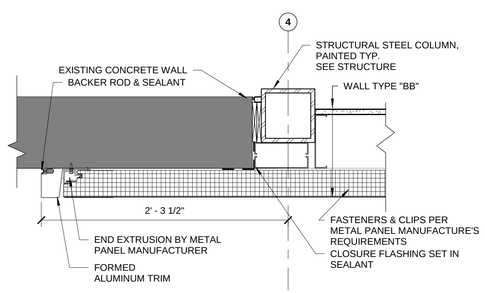

4 / A4.7 PLAN DETAIL @ INSULATED METAL PANEL TO EXISTING CONCRETE WALL
Scale: 1 1/2" = 1'-0"

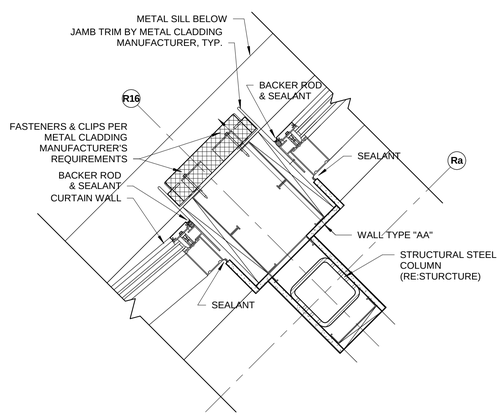

3 / A4.7 ENLARGED ENTRY VESTIBULE PLAN - Callout 4
Scale: 1 1/2" = 1'-0"

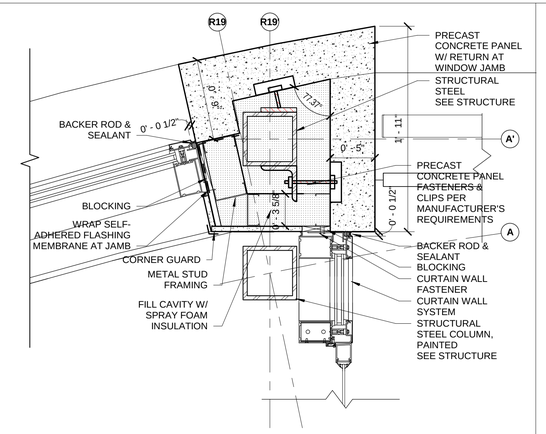

2 / A4.7 ENLARGED ENTRY VESTIBULE PLAN AT CONCRETE WALL
Scale: 1 1/2" = 1'-0"

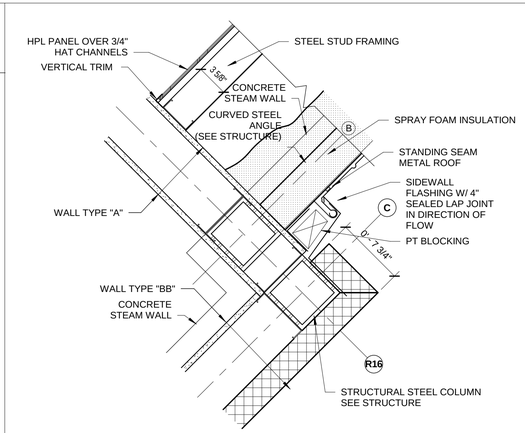

1 / A4.7 ENLARGED ENTRY VESTIBULE PLAN - Callout 3
Scale: 1 1/2" = 1'-0"

CCRI WARWICK RENEWAL
ENTRY RAMP ENCLOSURE

400 EAST AVENUE, WARWICK RI 02886

BREWSTER THORNTON GROUP ARCHITECTS LLP
150 Chestnut Street
Providence, RI
02903
Tel: 401.861.1600
Fax: 401.861.5588

JOB NO.	DATE
1609A	November 1, 2018

ISSUE :

NO.	REVISION DESCRIPTION	DATE

SHEET TITLE
WALL PLAN DETAILS

SHEET
A4.7

11/6/2018 5:17:28 PM

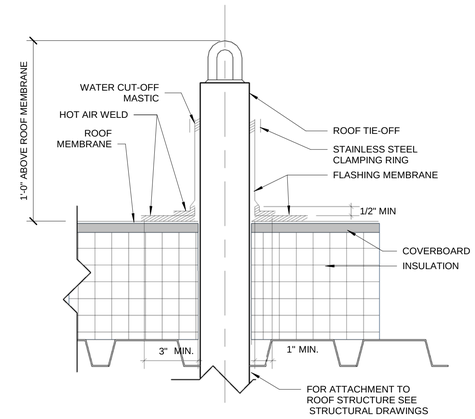

5 / A4.6 ROOF TIE-OFF DETAIL
Scale: 3" = 1'-0"

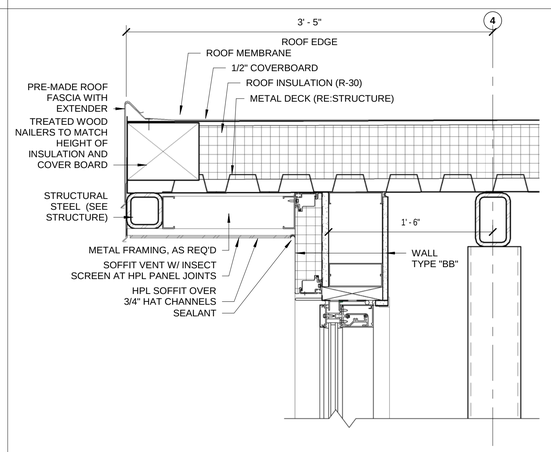

4 / A4.6 CURTAIN WALL HEAD DETAIL AT TRANSOM
Scale: 1 1/2" = 1'-0"

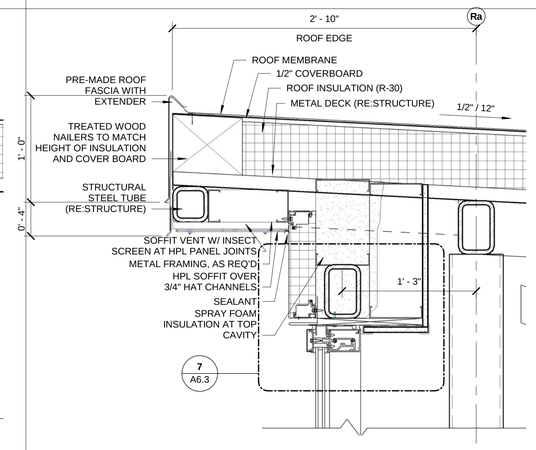

3 / A4.6 EAVE DETAIL - MEMBRANE ROOF
Scale: 1 1/2" = 1'-0"

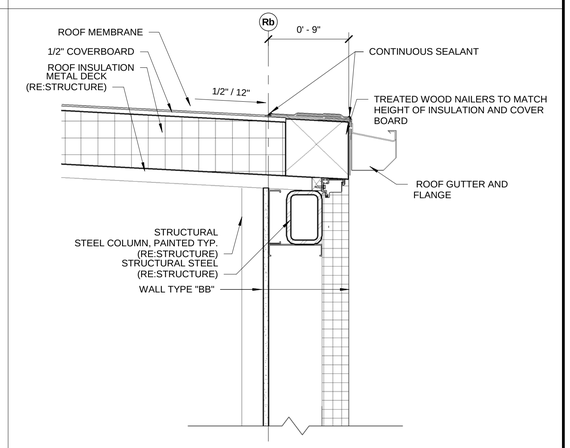

2 / A4.6 MEMBRANE ROOF GUTTER DETAIL
Scale: 1 1/2" = 1'-0"

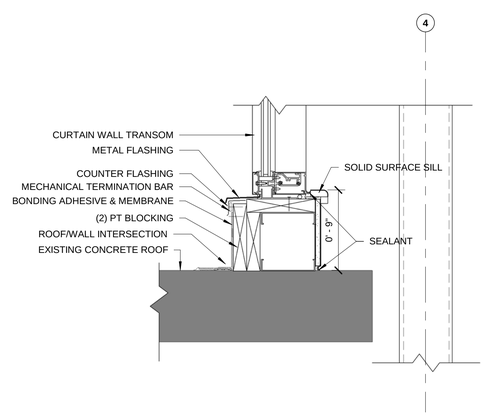

1 / A4.6 CURTAIN WALL SILL DETAIL AT EXISTING CONCRETE ROOF
Scale: 1 1/2" = 1'-0"

CCRI WARWICK RENEWAL
ENTRY RAMP ENCLOSURE

400 EAST AVENUE, WARWICK RI 02886

BREWSTER THORNTON GROUP ARCHITECTS LLP
150 Chestnut Street
Providence, RI
02903
Tel: 401.861.1600
Fax: 401.861.5588

JOB NO. 1609A
DATE November 1, 2018
ISSUE :

NO.	REVISION DESCRIPTION	DATE

SHEET TITLE
WALL SECTION DETAILS

SHEET
A4.6

11/6/2018 5:18:03 PM

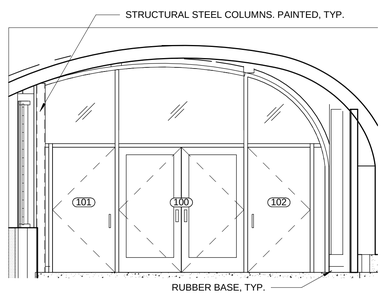

8 A5.0 VESTIBULE ELEVATION - EAST
Scale: 1/4" = 1'-0"

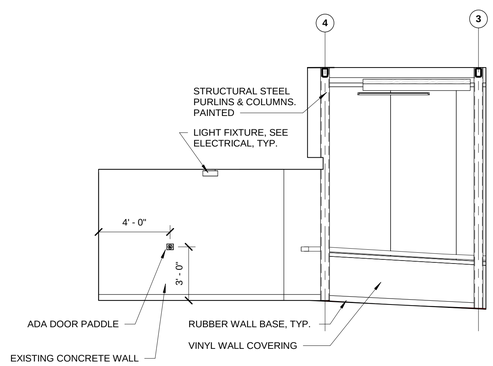

7 A5.0 TOP OF RAMP ELEVATION - NORTH
Scale: 1/4" = 1'-0"

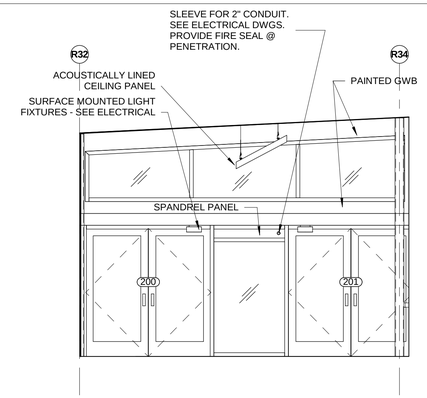

6 A5.0 TOP OF RAMP ELEVATION - WEST
Scale: 1/4" = 1'-0"

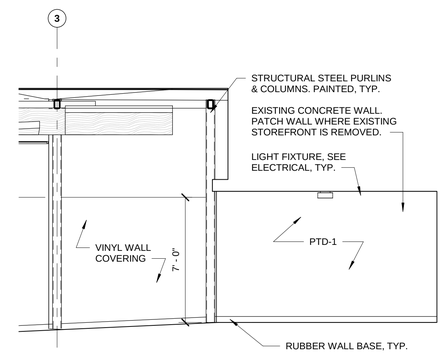

5 A5.0 TOP OF RAMP ELEVATION - SOUTH
Scale: 1/4" = 1'-0"

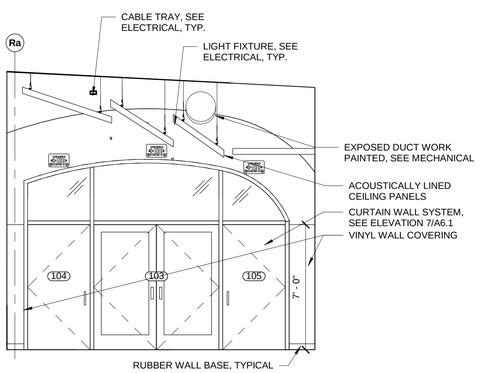

4 A5.0 ENTRY RAMP INTERIOR ELEVATION - EAST
Scale: 1/4" = 1'-0"

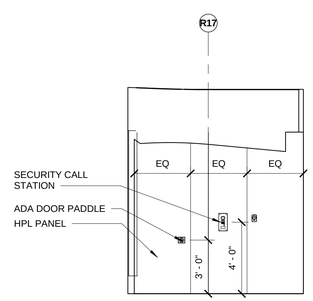

3 A5.0 VESTIBULE INTERIOR ELEVATION - SOUTH
Scale: 1/4" = 1'-0"

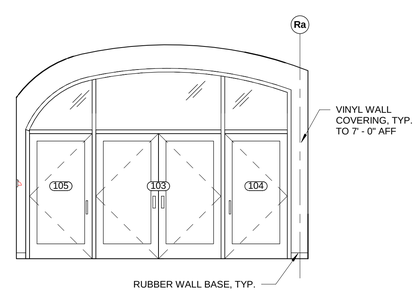

2 A5.0 VESTIBULE INTERIOR ELEVATION - WEST
Scale: 1/4" = 1'-0"

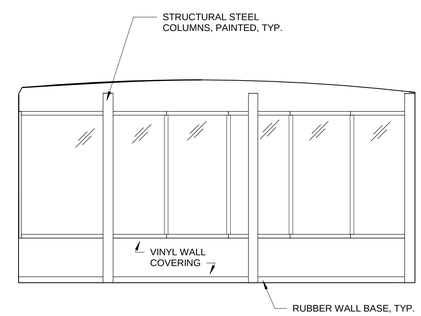

1 A5.0 INTERIOR VESTIBULE ELEVATION - NORTH
Scale: 1/4" = 1'-0"

CCRI WARWICK RENEWAL
ENTRY RAMP ENCLOSURE

400 EAST AVENUE, WARWICK RI 02886

BREWSTER THORNTON GROUP ARCHITECTS LLP
150 Chestnut Street
Providence, RI
02903
Tel: 401.861.1600
Fax: 401.861.5588

JOB NO.	DATE
1609A	November 1, 2018

ISSUE :

NO.	REVISION DESCRIPTION	DATE

SHEET TITLE
INTERIOR ELEVATIONS

SHEET
A5.0

11/6/2018 5:18:48 PM

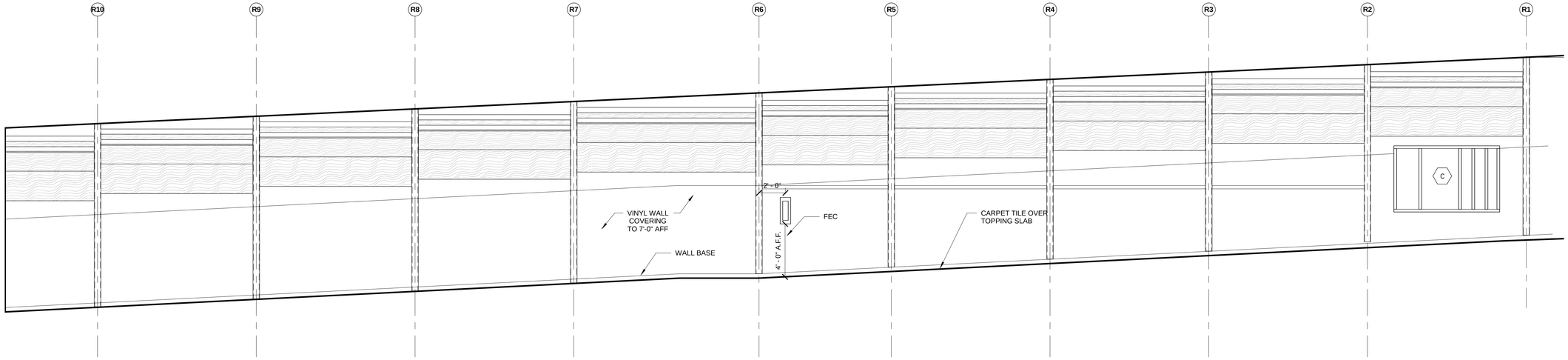

2 A5.1 ENTRY RAMP INTERIOR ELEVATION - SOUTH 1
Scale: 1/4" = 1'-0"

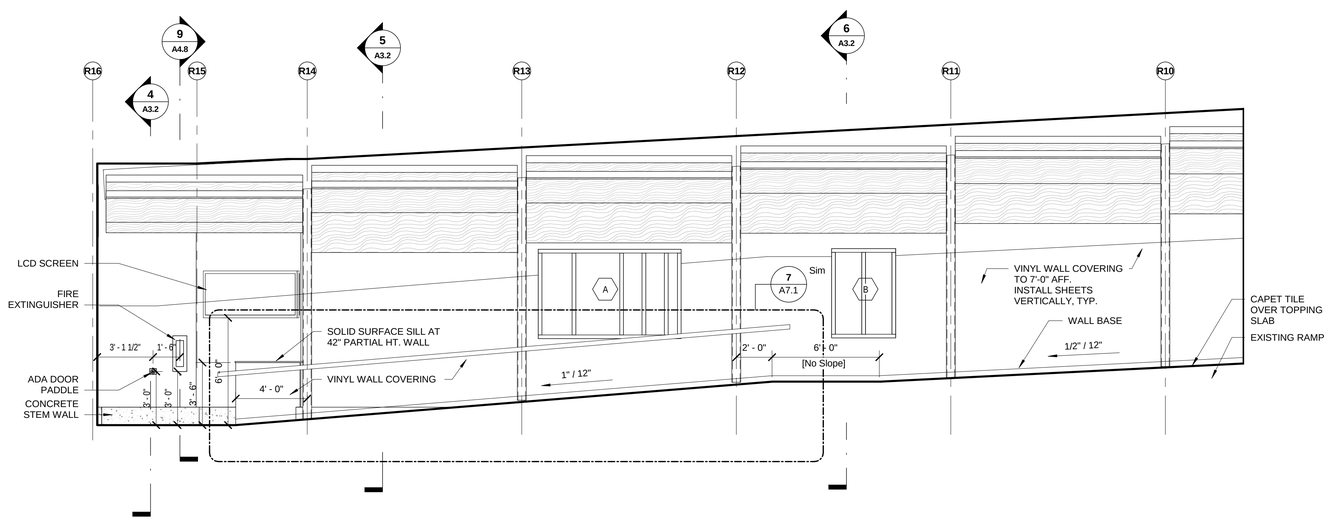

1 A5.1 ENTRY RAMP INTERIOR ELEVATION - SOUTH 2
Scale: 1/4" = 1'-0"

HEIGHTS OF DEVICES, U.N.O.

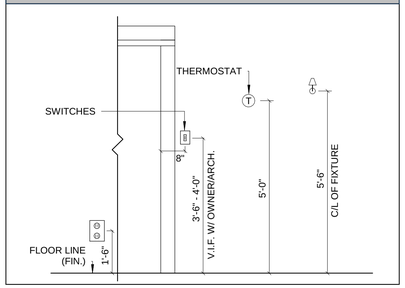

CCRI WARWICK RENEWAL
ENTRY RAMP ENCLOSURE

400 EAST AVENUE, WARWICK RI 02886

BREWSTER THORNTON GROUP ARCHITECTS LLP
150 Chestnut Street
Providence, RI
02903
Tel: 401.861.1600
Fax: 401.861.5588

JOB NO.	DATE
1609A	November 1, 2018

ISSUE :

NO.	REVISION DESCRIPTION	DATE

SHEET TITLE
INTERIOR ELEVATIONS

SHEET
A5.1

11/6/2018 5:21:20 PM

FINISH SCHEDULE

NAME	FLOOR	WALLS BASE	NORTH	EAST	SOUTH	WEST	CEILING	COMMENTS
ENTRY VESTIBULE	WALKOFF	RB	VWC/PTD-1	-	HPL-1	VWC/PTD-1	MTL CLOUD	LIMIT VINYL WALL COVERING TO 7'-0" AFF
RAMP ENCLOSURE	CPT-1/CPT-2	RB	VWC/PTD-1	VWC/PTD1	VWC/:PTD-1	-	MTL CLOUD	LIMIT VINYL WALL COVERING TO 7'-0" AFF

FINISH NOTES:

1. ALL EXPOSED STEEL SHALL BE PAINTED
2. WALL PAINT TO BE PT-1 UNLESS NOTED OTHERWISE
3. EXPOSED CONCRETE TO BE CLEANED AND SEALED

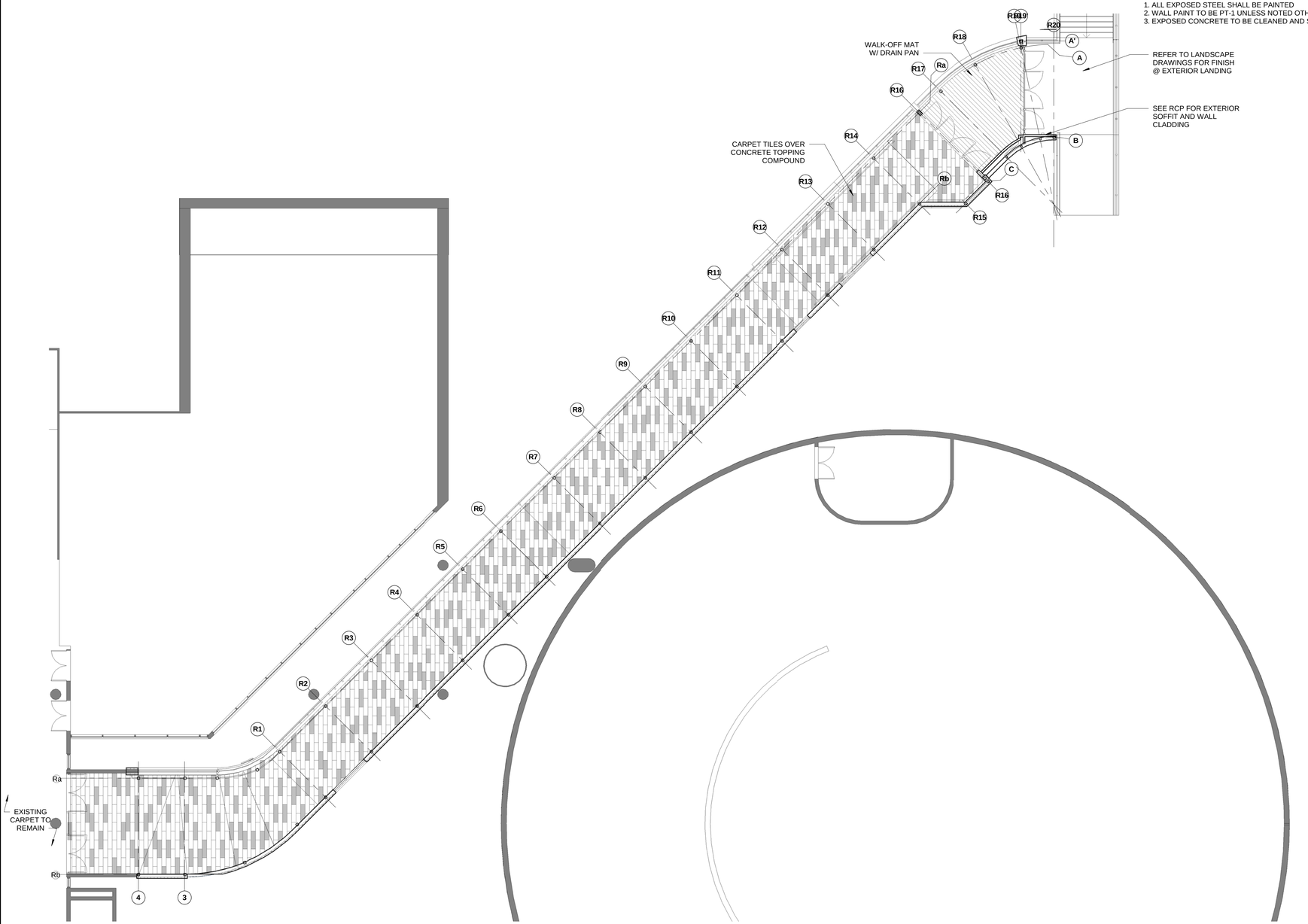

1 / A5.2 FINISH FLOOR PLAN
Scale: 1" = 10'-0"

FINISH LEGEND

- CPT - 1
- CPT - 2
- WALKOFF MAT W/ DRAIN PAN

CCRI WARWICK RENEWAL ENTRY RAMP ENCLOSURE

400 EAST AVENUE, WARWICK RI 02886

BREWSTER THORNTON GROUP ARCHITECTS LLP
150 Chestnut Street
Providence, RI
02903
Tel: 401.861.1600
Fax: 401.861.5588

BARBARA J. THORNTON No. 1868 REGISTERED ARCHITECT

JOB NO.	DATE
1609A	November 1, 2018

ISSUE :

NO.	REVISION DESCRIPTION	DATE

SHEET TITLE
FINISH FLOOR PLAN & SCHEDULE

SHEET
A5.2

11/6/2018 5:22:09 PM

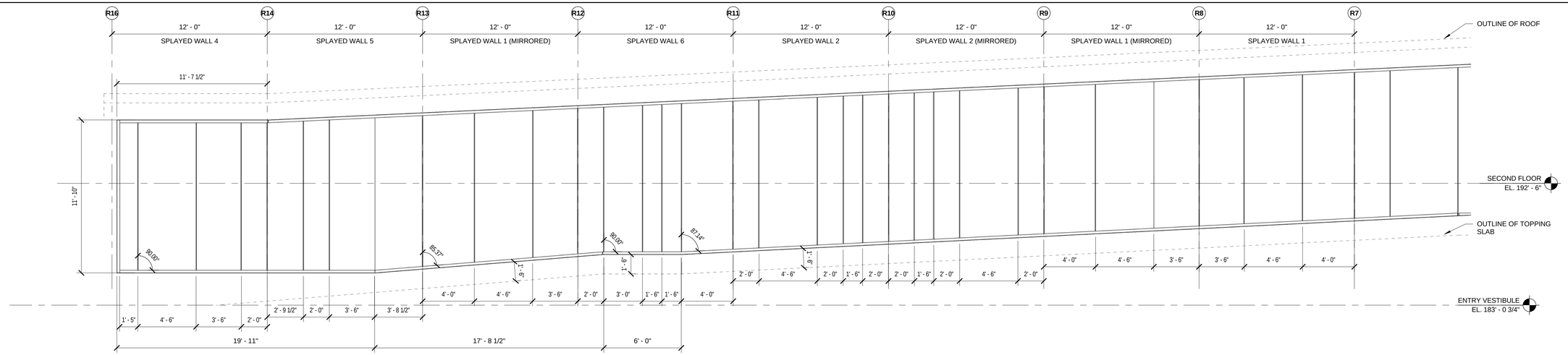

6 A6.0 ENTRY RAMP CURTAIN WALL 3
Scale: 1/4" = 1'-0"

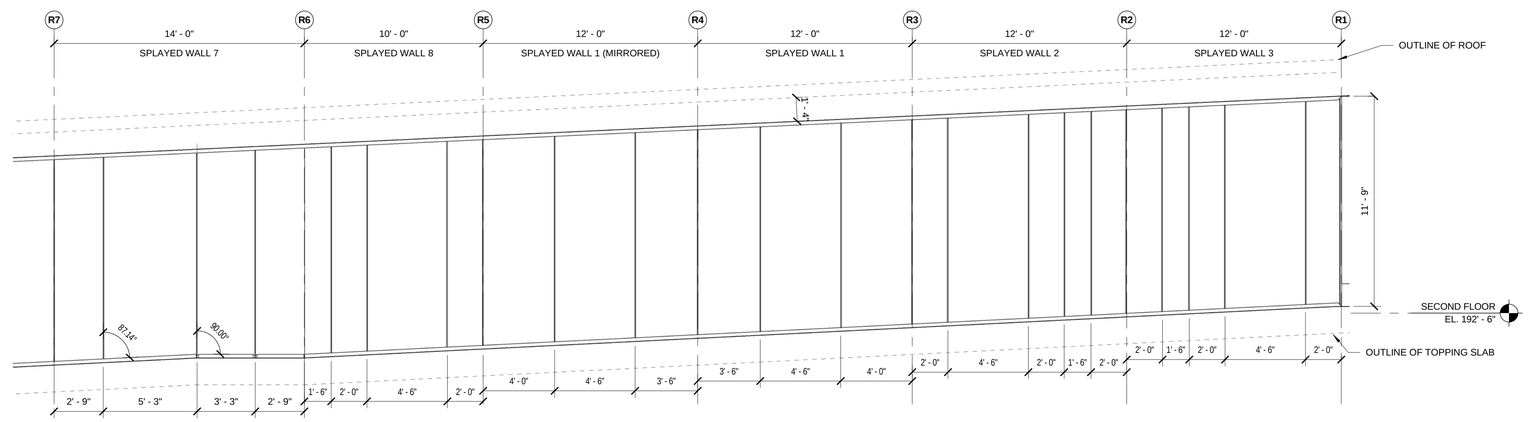

5 A6.0 ENTRY RAMP SPLAYED CURTAIN WALL 2
Scale: 1/4" = 1'-0"

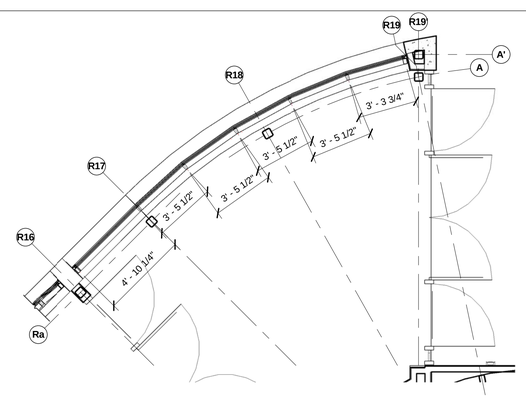

4 A6.0 CURTAIN WALL PLAN AT ENTRY VESTIBULE
Scale: 1/4" = 1'-0"

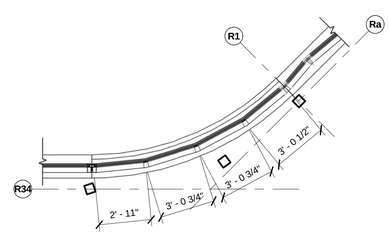

3 A6.0 CURTAIN WALL PLAN @ CURVED ENTRY RAMP
Scale: 1/4" = 1'-0"

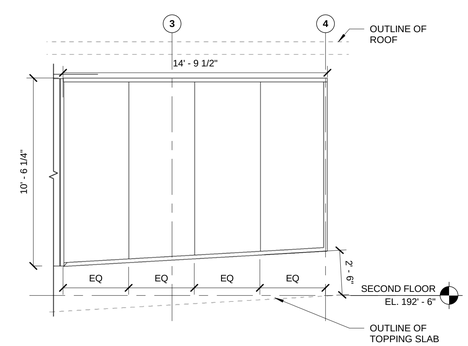

2 A6.0 ENTRY RAMP CURTAIN WALL ELEVATION
Scale: 1/4" = 1'-0"

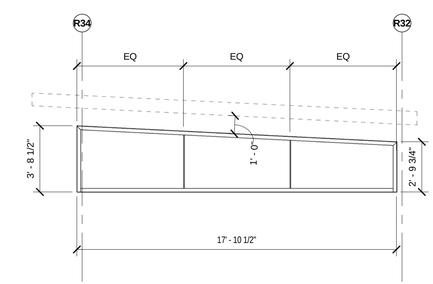

1 A6.0 ENTRY RAMP TRANSOM CURTAIN WALL
Scale: 1/4" = 1'-0"

CCRI WARWICK RENEWAL
ENTRY RAMP ENCLOSURE

400 EAST AVENUE, WARWICK RI 02886

BREWSTER THORNTON GROUP ARCHITECTS LLP
150 Chestnut Street
Providence, RI
02903
Tel: 401.861.1600
Fax: 401.861.5588

JOB NO.	DATE
1609A	November 1, 2018

ISSUE :

NO.	REVISION DESCRIPTION	DATE

SHEET TITLE
CURTAIN WALL ELEVATIONS

SHEET
A6.0

11/6/2018 5:22:37 PM

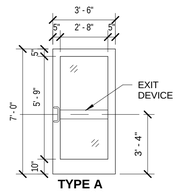

TYPE A
EXTERIOR CURTAIN WALL

DOOR TYPES

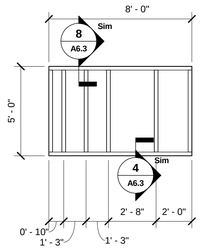

11 A6.1 CURTAIN WALL TYPE A
Scale: 1/4" = 1'-0"

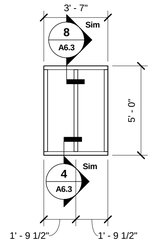

10 A6.1 CURTAIN WALL TYPE B
Scale: 1/4" = 1'-0"

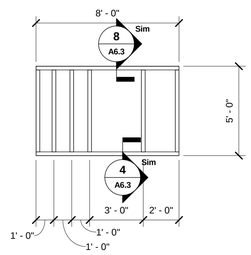

9 A6.1 CURTAIN WALL TYPE C
Scale: 1/4" = 1'-0"

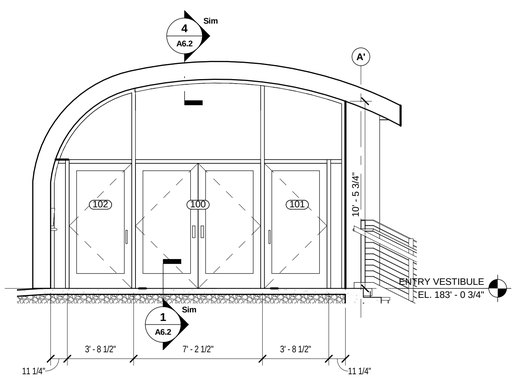

8 A6.1 ENTRY VESTIBULE CURTAIN WALL
Scale: 1/4" = 1'-0"

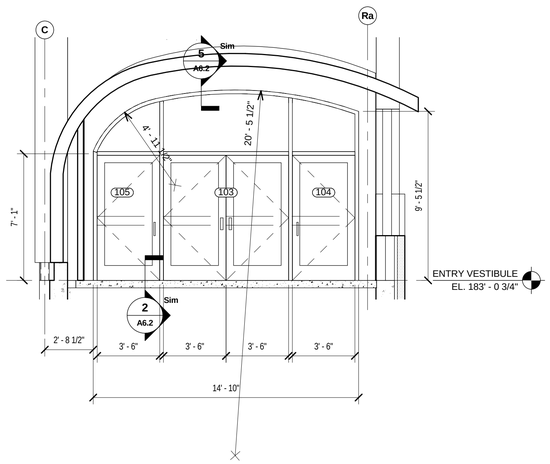

7 A6.1 RAMP/ ENTRY CURTAIN WALL
Scale: 1/4" = 1'-0"

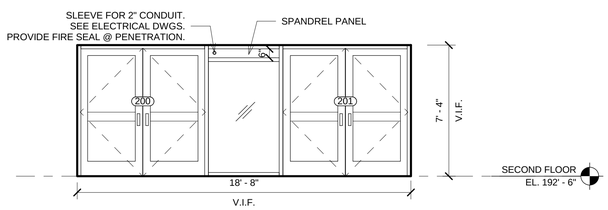

6 A6.1 SECOND FLOOR CURTAIN WALL WEST ELEVATION
Scale: 1/4" = 1'-0"

DOOR SCHEDULE

DOOR NO.	DOOR TYPE	DOOR MATERIAL	WIDTH	HEIGHT	THICKNESS	FRAME MATERIAL	H.W.	NOTES
100	A	ALUM/GLASS	7' - 0"	7' - 0"	1 3/4"	ALUMINUM	02	(2) 3'-6" DOORS ; THERMALLY BROKEN
101	A	ALUM/GLASS	3' - 6"	7' - 0"	1 3/4"	ALUMINUM	01A	THERMALLY BROKEN
102	A	ALUM/GLASS	3' - 6"	7' - 0"	1 3/4"	ALUMINUM	01	THERMALLY BROKEN
103	A	ALUM/GLASS	7' - 0"	7' - 0"	1 3/4"	ALUMINUM	02	(2) 3'-6" DOORS
104	A	ALUM/GLASS	3' - 6"	7' - 0"	1 3/4"	ALUMINUM	01A	
105	A	ALUM/GLASS	3' - 6"	7' - 0"	1 3/4"	ALUMINUM	01	
200	A	ALUM/GLASS	7' - 0"	7' - 2"	1 3/4"	ALUMINUM	03	(2) 3'-6" DOORS
201	A	ALUM/GLASS	7' - 0"	7' - 2"	1 3/4"	ALUMINUM	04	(2) 3'-6" DOORS

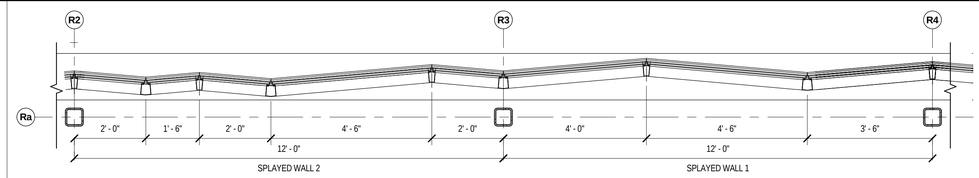

5 A6.1 SPLAYED CURTAIN WALL 1 AND 2
Scale: 1/2" = 1'-0"

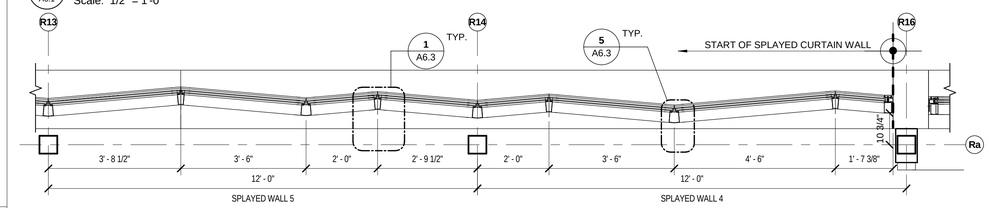

4 A6.1 SPLAYED CURTAIN WALL 4 AND 5
Scale: 1/2" = 1'-0"

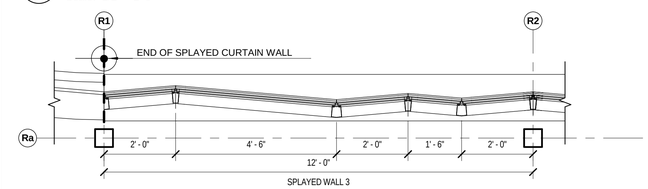

3 A6.1 SPLAYED CURTAIN WALL 3
Scale: 1/2" = 1'-0"

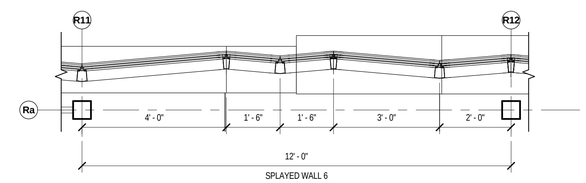

2 A6.1 SPLAYED CURTAIN WALL 6
Scale: 1/2" = 1'-0"

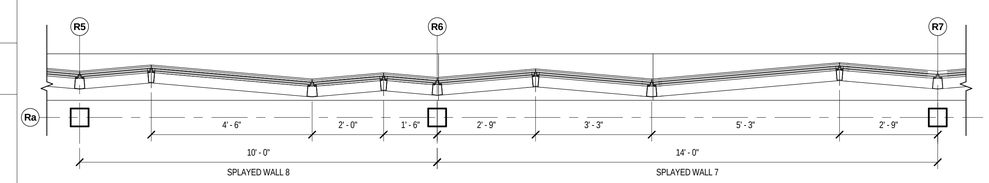

1 A6.1 SPLAYED CURTAIN WALL 7 AND 8
Scale: 1/2" = 1'-0"

CCRI WARWICK RENEWAL
ENTRY RAMP ENCLOSURE

400 EAST AVENUE, WARWICK RI 02886

BREWSTER THORNTON GROUP ARCHITECTS LLP
150 Chestnut Street
Providence, RI
02903
Tel: 401.861.1600
Fax: 401.861.5588

JOB NO.	DATE
1609A	November 1, 2018

ISSUE :

NO.	REVISION DESCRIPTION	DATE

SHEET TITLE
CURTAIN WALL DOOR TYPES, & SCHEDULES

SHEET
A6.1

11/6/2018 5:22:59 PM

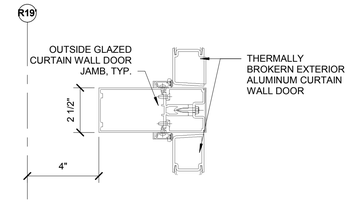

8 A6.2 CURTAIN WALL DOOR JAMB DETAIL
Scale: 3" = 1'-0"

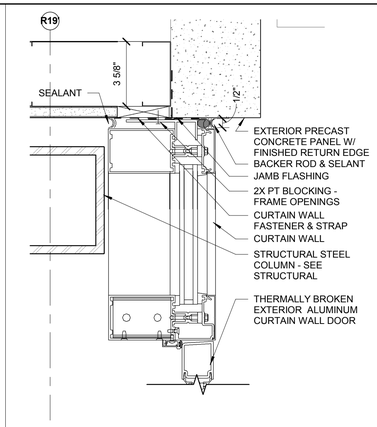

7 A6.2 JAMB DETAIL BTWN DOUBLE AND SINGLE ENTRY DOORS
Scale: 3" = 1'-0"

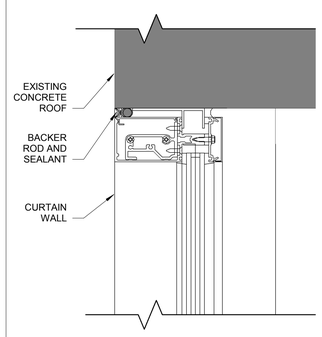

6 A6.2 CURTAIN WALL HEAD AT EXISTING VESTIBULE
Scale: 3" = 1'-0"

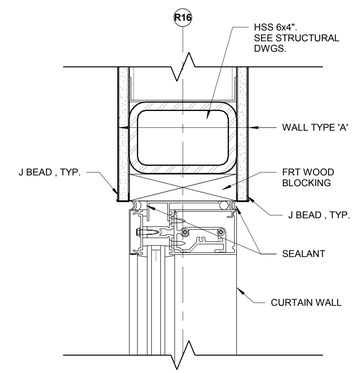

5 A6.2 CURTAIN WALL HEAD @ FRONT ENTRY
Scale: 3" = 1'-0"

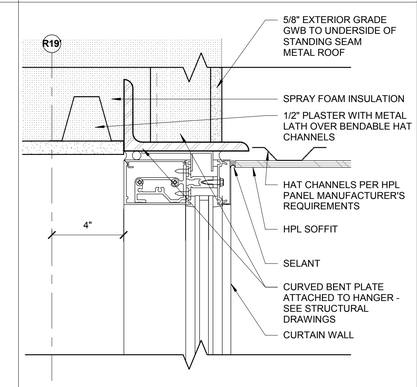

4 A6.2 FRONT ENTRY CURTAIN WALL HEAD
Scale: 3" = 1'-0"

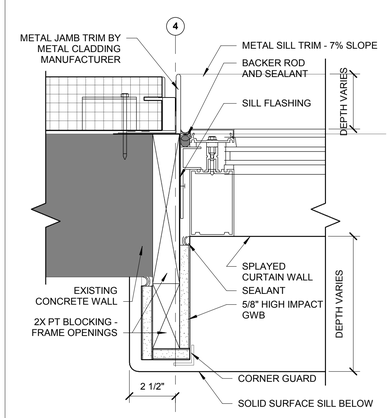

3 A6.2 PLAN DETAIL @ CURTAIN WALL TO EXISTING CONCRETE WALL
Scale: 3" = 1'-0"

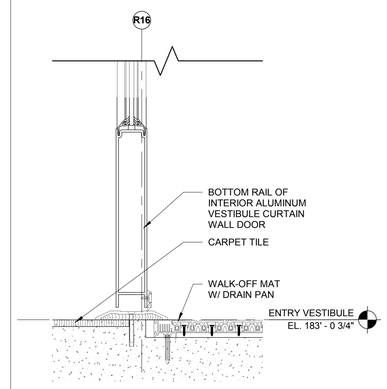

2 A6.2 DOOR - BOTTOM RAIL
Scale: 3" = 1'-0"

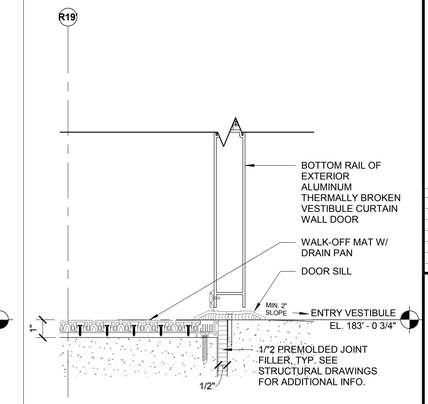

1 A6.2 FRONT ENTRY DOOR SILL - THERMAL
Scale: 3" = 1'-0"

CCRI WARWICK RENEWAL ENTRY RAMP ENCLOSURE

400 EAST AVENUE, WARWICK RI 02886

BREWSTER THORNTON GROUP ARCHITECTS LLP
150 Chestnut Street
Providence, RI
02903
Tel: 401.861.1600
Fax: 401.861.5588

BARBARA J. THORNTON 1868 REGISTERED ARCHITECT

JOB NO.	DATE
1609A	November 1, 2018

ISSUE :

NO.	REVISION DESCRIPTION	DATE

SHEET TITLE
CURTAIN WALL ENTRANCE DETAILS

SHEET
A6.2

11/7/2018 9:11:17 AM

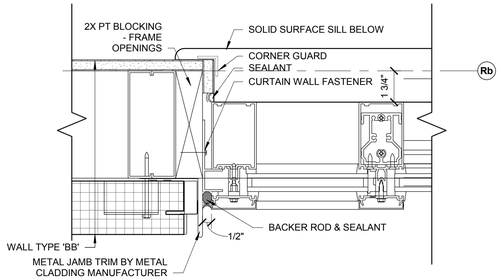

9 / A6.3 TYP. JAMB DETAIL @ CURTAIN WALL WINDOW
Scale: 3" = 1'-0"

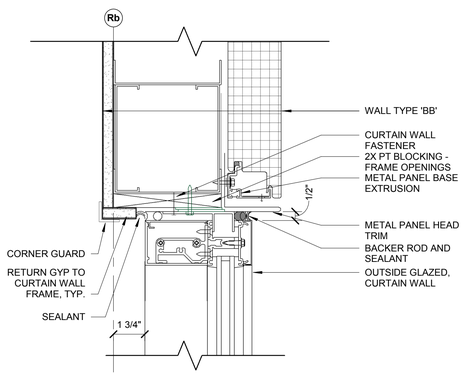

8 / A6.3 CURTAIN WALL WINDOW HEAD @ METAL PANEL
Scale: 3" = 1'-0"

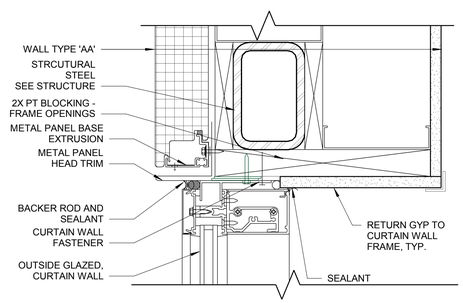

7 / A6.3 CURTAINWALL HEAD DETAIL 2
Scale: 3" = 1'-0"

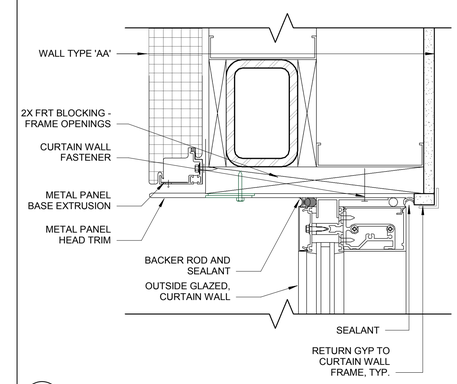

6 / A6.3 CURTAIN WALL HEAD DETAIL 1
Scale: 3" = 1'-0"

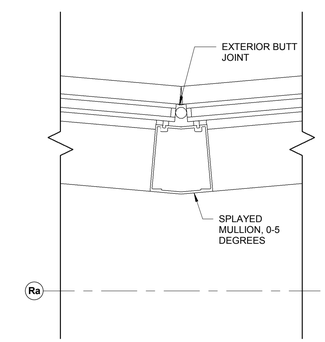

5 / A6.3 TYPICAL SPLAYED WINDOW JAMB DETAIL
Scale: 3" = 1'-0"

NOTE: METAL SILL TRIM TO BE FIT ON SITE TO VARIED CONDITIONS ALONG SPLAYED CURTAIN WALL

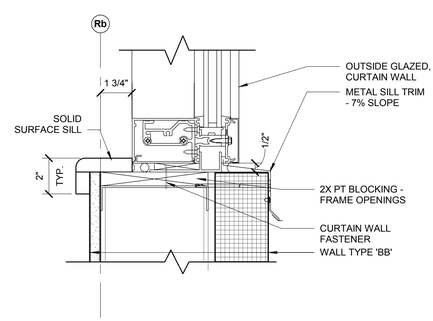

4 / A6.3 CURTAIN WALL WINDOW SILL, TYP.
Scale: 3" = 1'-0"

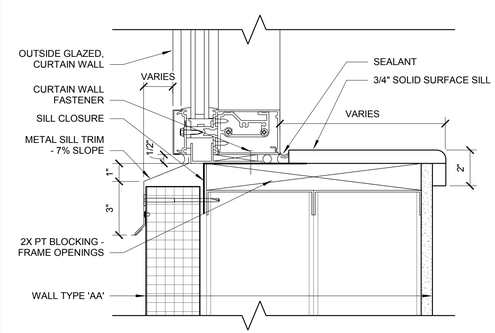

3 / A6.3 CURTAIN WALL SILL DETAIL 2 - OUTERMOST SPLAY
Scale: 3" = 1'-0"

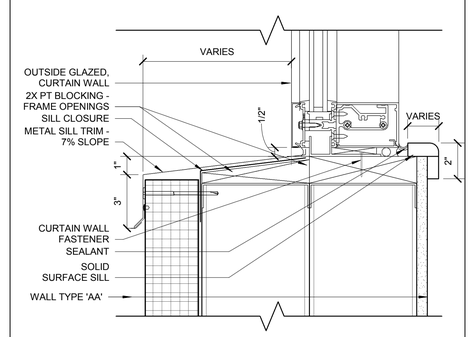

2 / A6.3 CURTAIN WALL SILL DETAIL 1 - INNERMOST SPLAY
Scale: 3" = 1'-0"

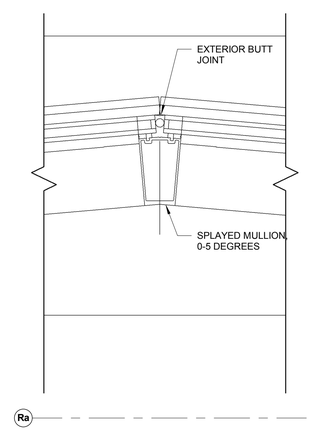

1 / A6.3 TYPICAL SPLAYED WINDOW JAMB DETAIL 2
Scale: 3" = 1'-0"

CCRI WARWICK RENEWAL
ENTRY RAMP ENCLOSURE

400 EAST AVENUE, WARWICK RI 02886

BREWSTER THORNTON GROUP ARCHITECTS LLP
150 Chestnut Street
Providence, RI
02903
Tel: 401.861.1600
Fax: 401.861.5588

BARBARA J. THORNTON No. 1868 REGISTERED ARCHITECT

JOB NO.	DATE
1609A	November 1, 2018

ISSUE :

NO.	REVISION DESCRIPTION	DATE

SHEET TITLE
CURTAIN WALL DETAILS

SHEET
A6.3

11/7/2018 11:16:46 AM

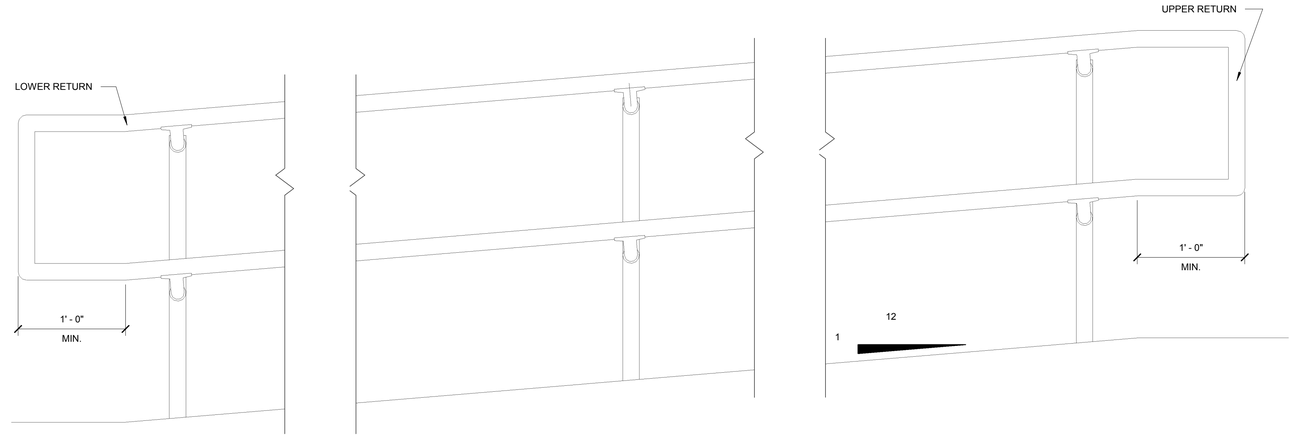

7 / A7.1 ADA HANDRAIL ELEVATION
Scale: 1 1/2" = 1'-0"

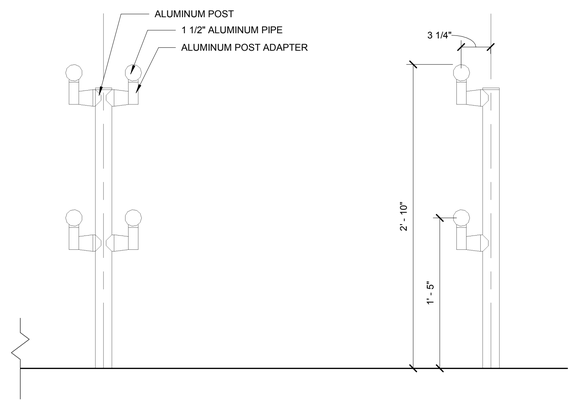

6 / A7.1 ADA HANDRAIL SECTION
Scale: 1 1/2" = 1'-0"

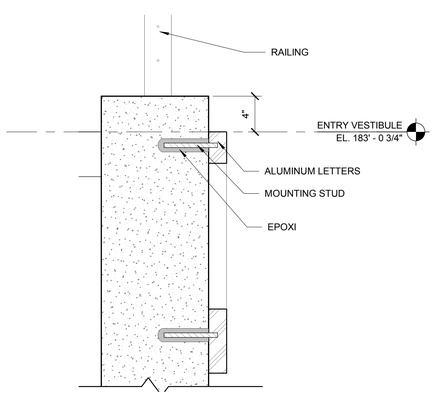

5 / A7.1 EXTERIOR LOGO ANCORAGE DETAIL
Scale: 1 1/2" = 1'-0"

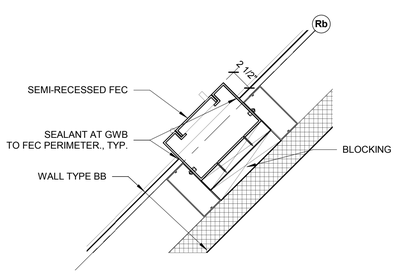

4 / A7.1 SEMI RECESSED FIRE ESTINGUISHER CABINET
Scale: 1 1/2" = 1'-0"

COLOR, FINISH, SIZING AND PROPORTIONS
OF LETTERS TO CONFORM CCRI STANDARDS

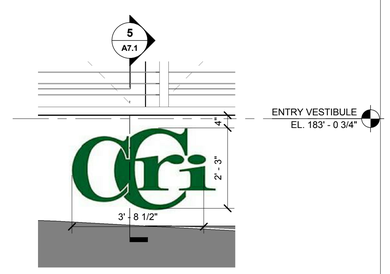

3 / A7.1 ENLARGED ENTRY SIGNAGE ELEVATION
Scale: 1/2" = 1'-0"

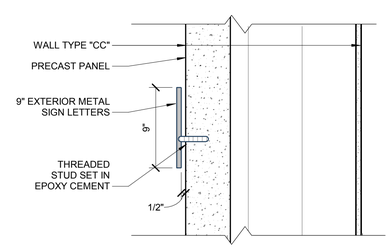

2 / A7.1 SIGNAGE MOUNTING DETAIL (AT PRECAST PANEL)
Scale: 1 1/2" = 1'-0"

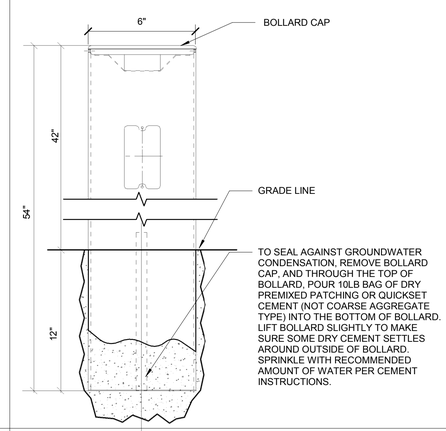

1 / A7.1 ADA DOOR PADDLE POST MOUNTING DETAIL
Scale: 3" = 1'-0"

CCRI WARWICK RENEWAL
ENTRY RAMP ENCLOSURE

400 EAST AVENUE, WARWICK RI 02886

BREWSTER THORNTON GROUP ARCHITECTS LLP
150 Chestnut Street
Providence, RI
02903
Tel: 401.861.1600
Fax: 401.861.5588

JOB NO. 1609A
DATE November 1, 2018

ISSUE :

NO.	REVISION DESCRIPTION	DATE

SHEET TITLE
MISCELLANEOUS DETAILS

SHEET
A7.1

11/6/2018 5:57:22 PM

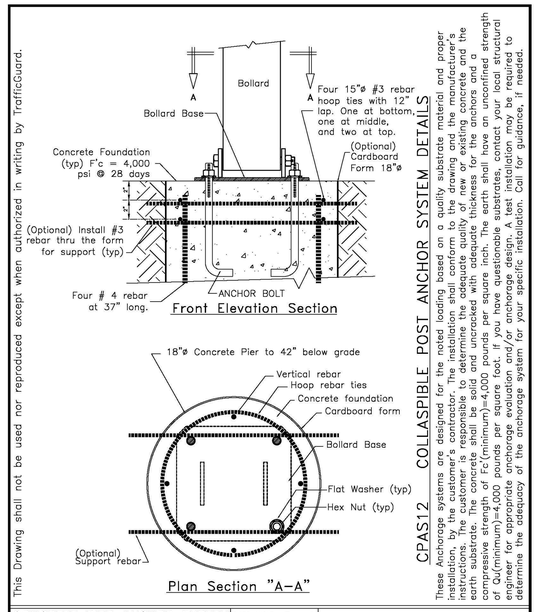

This Drawing shall not be used nor reproduced except when authorized in writing by TrafficGuard.

CPAS12 COLLASPIBLE POST ANCHOR SYSTEM DETAILS

These Anchorage systems are designed for the noted loading based on a quality substrate material and proper installation, by the customer's contractor. The installation shall conform to the drawing and the manufacturer's instructions. The customer is responsible to determine the adequate quality of new or existing concrete and the earth substrate. The concrete shall be solid and uncracked with adequate thickness for the anchors and a compressive strength of F'c(minimum)=4,000 pounds per square inch. The earth shall have an ultimate strength of Qu(minimum)=4,000 pounds per square foot. If you have questionable substrates, contact your local structural engineer for appropriate anchorage evaluation and/or anchorage design. A test installation may be required to determine the adequacy of the anchorage system for your specific installation. Call for guidance, if needed.

CONCRETE PIER ANCHOR SYSTEM DETAIL DRAWING CPAS12

THIRD ANGLE PROJECTION — Do not scale from drawing

TrafficGuard®
Toll Free
P.O. Box 201, Geneva, IL. 60134
Bus: 1.877.727.7347 Fax: 1.800.814.7194

Rev.	Date	by	Description	Action	by
2	11.14.10	wkz	Locking Pins & Note	Design	wkz
1	–	–	–	Drawn	wkz
				Checked	wkz

Deg. Scale: nts | Assembly Shipping Weight: 84 Pounds | Drawing Number: CPAS12
Copywrite: 2010
Dwg. Size: Letter | Drawing Date: 12.10.10 | Sheet: 2 of 2

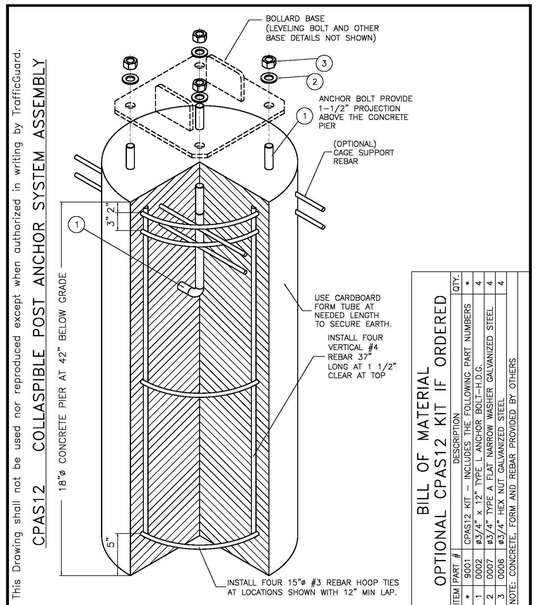

This Drawing shall not be used nor reproduced except when authorized in writing by TrafficGuard.

CPAS12 COLLASPIBLE POST ANCHOR SYSTEM ASSEMBLY

BILL OF MATERIAL
OPTIONAL CPAS12 KIT IF ORDERED

ITEM	PART #	DESCRIPTION	QTY.
*	9001	CPAS12 KIT – INCLUDES THE FOLLOWING PART NUMBERS	*
*	0002	8"x8"x3/8" FLANGE PLATE, ASTM A36 STEEL	4
2	0007	#3/4" TYPE A FLAT NARROW WASHER GALVANIZED STEEL	4
3	0008	#3/4" HEX NUT GALVANIZED STEEL	4

NOTE: CONCRETE, FORM AND REBAR PROVIDED BY OTHERS

CONCRETE PIER ANCHOR SYSTEM INSTALLATION DRAWING CPAS12

THIRD ANGLE PROJECTION — Do not scale from drawing

TrafficGuard®
Toll Free
P.O. Box 201, Geneva, IL. 60134
Bus: 1.877.727.7347 Fax: 1.800.814.7194

Rev.	Date	by	Description	Action	by
2	11.14.10	wkz	Locking Pins & Note	Design	wkz
1	–	–	–	Drawn	wkz
				Checked	wkz

Deg. Scale: nts | Assembly Shipping Weight: 84 Pounds | Drawing Number: CPAS12
Copywrite: 2010
Dwg. Size: Letter | Drawing Date: 12.10.10 | Sheet: 1 of 2

COLLAPSIBLE BOLLARDS - PRODUCT INFO.

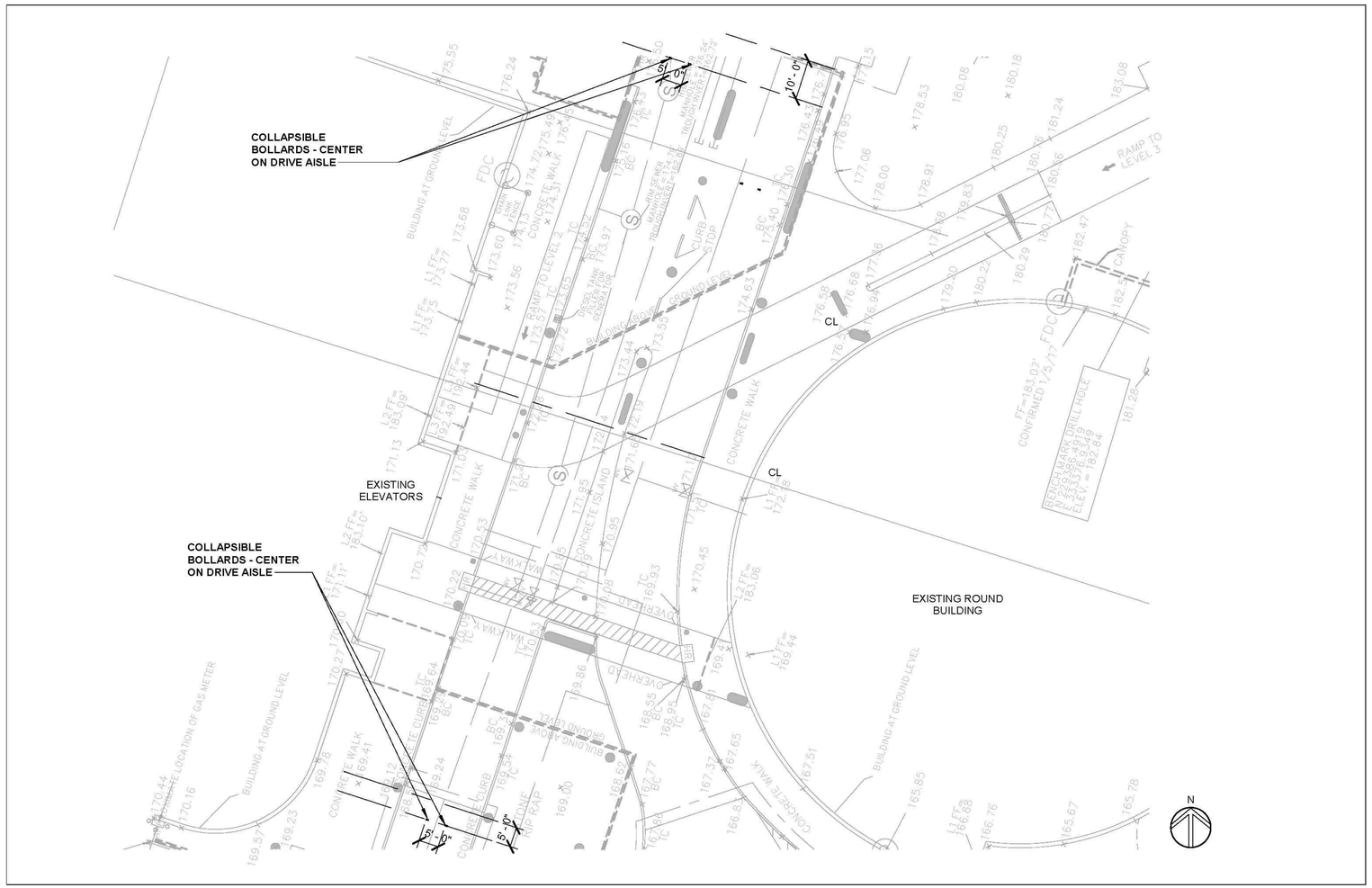

COLLAPSIBLE BOLLARDS - LOCATION PLAN

CCRI WARWICK RENEWAL ENTRY RAMP ENCLOSURE

400 EAST AVENUE, WARWICK RI 02886

BREWSTER THORNTON GROUP ARCHITECTS LLP
150 Chestnut Street
Providence, RI
02903
Tel: 401.861.1600
Fax: 401.861.5588

BARBARA J. THORNTON REGISTERED ARCHITECT 1868

JOB NO. 1609A
DATE November 1, 2018

ISSUE :

NO.	REVISION DESCRIPTION	DATE

SHEET TITLE
ALTERNATE DETAILS - COLLAPSIBLE BOLLARDS

SHEET
A7.2

11/6/2018 6:00:29 PM

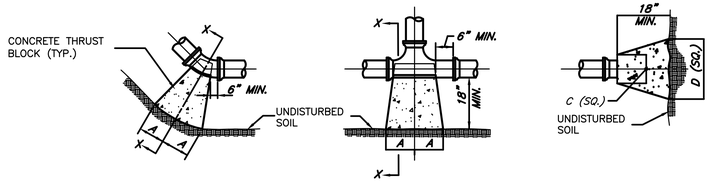

PLAN BENDS

PLAN TEES

PLAN PLUGS

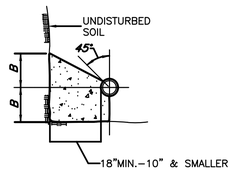

SECTION X–X
BENDS & TEES

SIZE	1/4" BENDS		1/8" BENDS		1/16" BENDS		TEES		PLUGS	
	A	B	A	B	A	B	A	B	C	D
4"	12"	8"	8"	9"	6"	8"	8"	10"	8"	18"
6"	16"	10"	9"	10"	6"	8"	10"	12"	10"	21"

NOTES:
1. ALL CEMENT TO BE 3000 PSI PORTLAND CEMENT.
2. ALL WORK IS TO BE IN ACCORDANCE WITH WATER COMPANY STANDARDS.
3. THRUST BLOCK DIMENSIONS SHOWN ARE MINIMUM AND ARE BASED ON SOIL BEARING CAPACITY OF 3000 PSF AND STATIC WATER PRESSURE OF 100 PSI. WHERE SOIL BEARING CAPACITY IS LESS THAN 3000 PSF OR EXCAVATION LIMITS ENCOUNTERED DURING CONSTRUCTION MAKE IT UNFEASIBLE TO PLACE THRUST BLOCKS AGAINST UNDISTURBED EARTH, THE CONTRACTOR SHALL PLACE SPECIAL REACTION BLOCKS OF SUFFICIENT WEIGHT TO RESIST THE FULL THRUST OF THE LINE UNDER TEST AND OPERATING PRESSURES.

TYPICAL THRUST BLOCKS
SCALE: NONE

NOTE:

LOCATED AS DIRECTED ON SITE PLAN COORDINATE INSTALLATION WITH LOCAL FIRE DEPARTMENT REQUIREMENTS

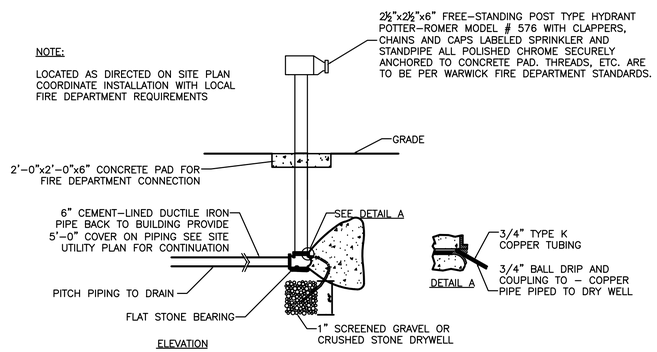

DETAIL POST TYPE FIRE DEPARTMENT CONNECTION
SCALE: NONE

GENERAL NOTES

1. THE WORK COVERED CONSISTS OF FURNISHING ALL LABOR AND MATERIALS NECESSARY TO INSTALL, COMPLETE AND READY THE FIRE PROTECTION SYSTEM FOR CONTINUOUS OPERATION.
2. ALL EQUIPMENT AND MATERIALS FURNISHED UNDER THE FIRE PROTECTION SUB–CONTRACT, LABOR AND TESTING PERFORMED HEREIN SHALL BE IN COMPLETE ACCORDANCE WITH THE NFPA, THE LOCAL AUTHORITIES, THE NATIONAL FIRE PROTECTION ASSOCIATION AND INSURANCE REGULATIONS AND REQUIREMENTS GOVERNING SUCH WORK.
3. ANY AND ALL PERMITS REQUIRED FOR INSTALLATION OF ANY MATERIAL SHALL BE OBTAINED AS PART OF THE SPECIFICATIONS INCLUDING ALL FEES OR EXPENSES INCURRED.
4. SPRINKLER DENSITY AND AREA OF APPLICATION SHALL BE IN ACCORDANCE WITH NFPA 13–2013.
5. THE SPRINKLER CONTRACTOR SHALL PREPARE WORKING DRAWINGS OF THE SPRINKLER WORK AND OBTAIN APPROVALS FROM THE WARWICK FIRE DEPARTMENT PRIOR TO INSTALLATION.
6. ROUTING OF SPRINKLER MAINS, BRANCHES AND HEADS SHALL BE THOROUGHLY COORDINATED WITH THE OTHER TRADES AND BUILDING STRUCTURE PRIOR TO SUBMISSION OF COORDINATED SHOP DRAWINGS.
7. PAY ALL FEES ASSOCIATED WITH ALL FIRE PROTECTION AND FIRE ALARM DEACTIVATIONS AND REACTIVATIONS.
8. SUBMIT TO THE ENGINEER FOR APPROVAL STAMPED AND SIGNED SPRINKLER FABRICATION DRAWINGS PRIOR TO THE START OF WORK.
9. THE DESIGN DRAWINGS INDICATE SPRINKLERS IN TYPICAL APARTMENTS AND THE HYDRAULICALLY MOST REMOTE AREAS ONLY. SPRINKLER CONTRACTOR SHALL PROVIDE SHOP DRAWINGS INDICATION ALL REQUIRED SPRINKLERS IN ACCORDANCE WITH NFPA REQUIREMENTS AND DESIGN CRITERIA PROVIDED.

FIRE PROTECTION LEGEND

SYMBOL	DESCRIPTION
	NEW WET SPRINKLER PIPING
	EXISTING WET SPRINKLER PIPING
	SPRINKLER TEST/DRAIN PIPING
	UPRIGHT SPRINKLER
	CONCEALED SPRINKLER
	SIDEWALL SPRINKLER
	ELBOW DOWN OR DROP
	CAP OR END OF PIPE
	CONTINUATION MARK
	EXISTING TO BE REMOVED (PIPING)
	EXISTING TO BE REMOVED (SPRINKLER)
ETR	EXISTING TO REMAIN
CTE	CONNECT TO EXISTING
FDC	UNDERGROUND PIPING
FDC	FIRE DEPARTMENT CONNECTION

WB&A
Wozny/Barbar & Associates, Inc.
CONSULTING ENGINEERS
1076 Washington Street
Hanover, MA 02339
Tel: (781) 826-4144
Fax: (781) 924-5792
www.wbaengineers.com
161 Exchange Street
3rd Floor
Pawtucket, RI 02860

CCRI WARWICK RENEWAL ENTRY RAMP ENCLOSURE
400 EAST AVENUE, WARWICK RI 02886

BREWSTER THORNTON GROUP ARCHITECTS LLP
150 Chestnut Street
Providence, RI
02903
Tel: 401.861.1600
Fax: 401.861.5588

Z.M. WOZNY
REGISTERED PROFESSIONAL ENGINEER

JOB NO.	DATE
1609A	November 1, 2018

ISSUE :

NO.	REVISION DESCRIPTION	DATE

SHEET TITLE

FIRE PROTECTION LEGEND AND NOTES

SHEET

FP0.0

11/6/2018 9:54:41 AM

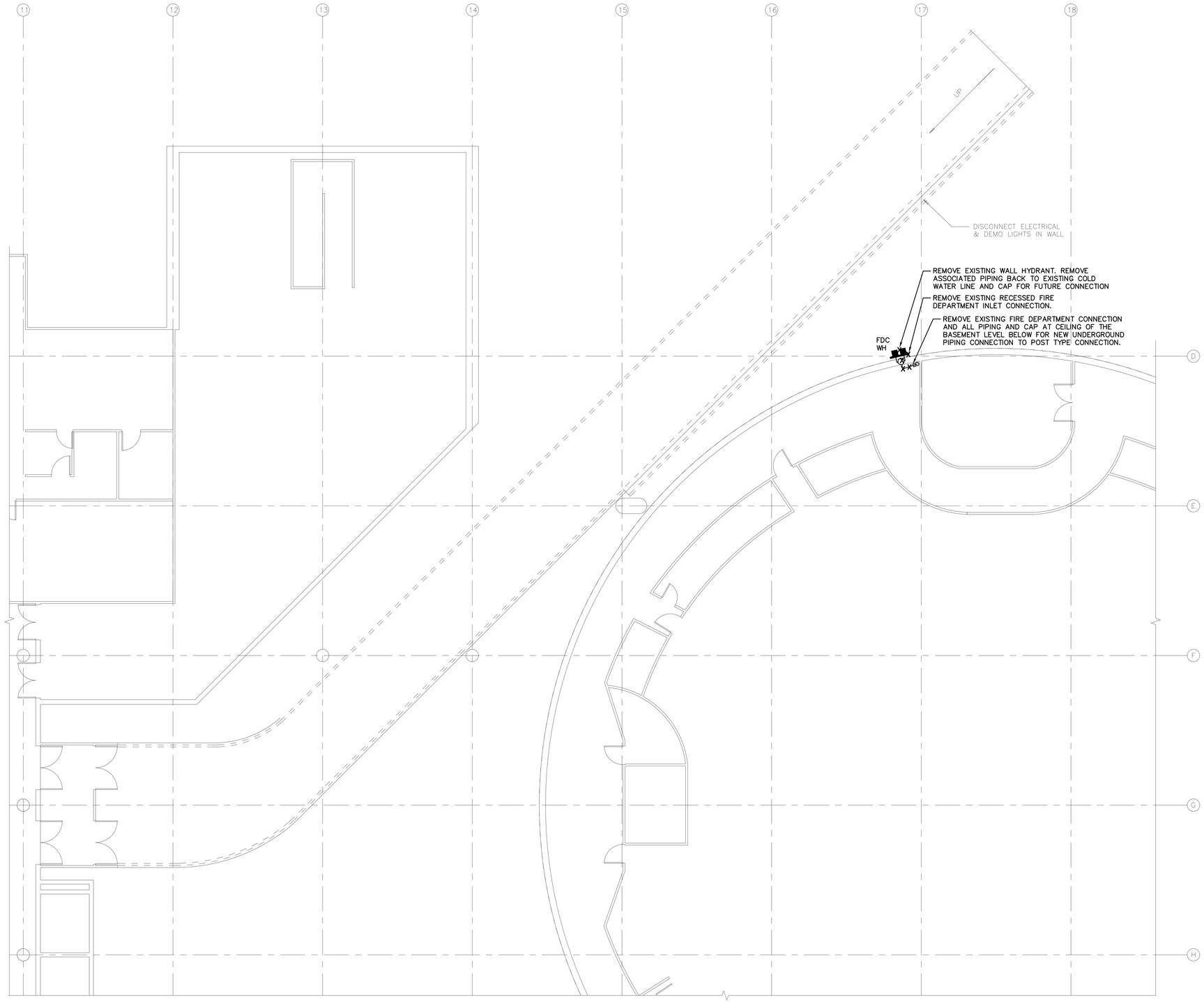

1 DEMOLITION FIRE PROTECTION PLAN
SCALE: 1/8" = 1'-0"

CCRI WARWICK RENEWAL
ENTRY RAMP ENCLOSURE

400 EAST AVENUE, WARWICK RI 02886

BREWSTER THORNTON GROUP ARCHITECTS LLP
150 Chestnut Street
Providence, RI
02903
Tel: 401.861.1600
Fax: 401.861.5588

Z.M. WOZNY
REGISTERED PROFESSIONAL ENGINEER

JOB NO.	DATE
1609A	November 1, 2018

ISSUE :

NO.	REVISION DESCRIPTION	DATE

SHEET TITLE

DEMOLITION FIRE PROTECTION PLAN

SHEET

FPD1.0

WB&A
Wozny/Barbar & Associates, Inc.
CONSULTING ENGINEERS
1076 Washington Street
Hanover, MA 02339
Tel: (781) 826-4144
Fax: (781) 924-5792
www.wbaengineers.com
161 Exchange Street
3rd Floor
Pawtucket, RI 02860

11/6/2018 9:54:42 AM

NOTE:
INSTALL ALL NEW SPRINKLERS AND MODIFY EXISTING PIPING AS NECESSARY TO SUIT NEW SPRINKLER LOCATIONS BELOW CLOUD CEILING. REFER TO ARCHITECTURAL DRAWINGS FOR ELEVATIONS AND CEILING HEIGHTS.

NOTE:
INSTALL UPRIGHT SPRINKLERS IN CEILING IF COMBUSTIBLE CONSTRUCTION 6" OR GREATER.

NOTE:
CONTRACTOR TO COORDINATE DEMOLITION OF THE SPRINKLER WITH THE OWNER AND ENSURE WORK DOES NOT IMPACT COVERAGE IN OCCUPIED SPACES.

IF OCCUPIED SPACES ARE DISCONNECTED CONTRACTOR TO RECONNECT SPACES FOR PROPER SPRINKLER COVERAGE.

DEMO NOTE:
REMOVE EXISTING SPRINKLERS, PIPE HANGERS AND ALL ASSOCIATED PIPING BACK TO SPRINKLER MAIN (TYP).

NOTE:
ALL SYSTEM SHUT DOWNS ARE TO BE COORDINATED WITH OWNER AND LOCAL FIRE DEPARTMENT. SYSTEM IS TO BE OPERATIONAL AT THE END OF EACH DAY.

FIRE PROTECTION NOTES:

1. THE WORK COVERED CONSISTS OF FURNISHING ALL LABOR AND MATERIALS NECESSARY TO INSTALL, COMPLETE AND READY FOR CONTINUOUS OPERATION, THE FIRE PROTECTION SYSTEMS, APPARATUS AND EQUIPMENT FOR THIS PROJECT.
2. ALL EQUIPMENT AND MATERIALS FURNISHED UNDER THE FIRE PROTECTION SUB-CONTRACT, LABOR AND TESTING PERFORMED HEREIN SHALL BE IN COMPLETE ACCORDANCE WITH THE STATE BUILDING CODE, ALL LOCAL CODES AND REGULATIONS, NATIONAL FIRE PROTECTION ASSOCIATION, INSURANCE REGULATIONS AND REQUIREMENTS GOVERNING SUCH WORK.
3. ANY AND ALL PERMITS REQUIRED FOR INSTALLATION OF ANY MATERIAL SHALL BE OBTAINED AS PART OF THE WORK OF THE SPECIFICATION INCLUDING ALL FEES OR EXPENSES INCURRED.
4. SPRINKLER HEADS ARE SHOWN ON THE FOLLOWING DRAWINGS AS A GUIDE AND AID TO THE CONTRACTOR IN PREPARATION OF THE FABRICATION DRAWINGS. MODIFICATION TO THE HEAD SPACING WILL BE ALLOWED AT NO COST TO THE PROJECT SUBJECT TO THE ENGINEERS APPROVAL AND CONTINUED COMPLIANCE WITH NFPA 13, FM GLOBAL DATA SHEET 3-26 AND 2-0.
5. COORDINATE ALL REQUIRED SYSTEM SHUTDOWNS AND PAY ALL FEES ASSOCIATED WITH ALL DEACTIVATIONS AND REACTIVATIONS OF THE FIRE ALARM SYSTEM. CONTRACTOR TO COORDINATE WITH OWNER 7 DAYS PRIOR TO SYSTEM SHUTDOWN. HEAT DETECTOR SYSTEM TO REMAIN OPERATIONAL WHILE SPRINKLERS ARE DISABLED.
6. EXISTING SPRINKLER HEADS SHALL REMAIN UNLESS NOTED OTHERWISE.
7. SUBMIT WORKING PLANS/COORDINATION DRAWINGS AND HYDRAULIC CALCULATIONS IN ACCORDANCE WITH FM GLOBAL DATA SHEET 3-26 AND 2-0 IN ADDITION TO NFPA 13 GUIDELINES.
8. BEFORE SUBMITTING BID, VISIT AND CAREFULLY EXAMINE SITE TO IDENTIFY EXISTING CONDITIONS AND DIFFICULTIES THAT WILL AFFECT WORK OF THIS SECTION. NO EXTRA PAYMENT WILL BE ALLOWED FOR ADDITIONAL WORK CAUSED BY UNFAMILIARITY WITH SITE CONDITIONS THAT ARE VISIBLE OR READILY CONSTRUED BY EXPERIENCED OBSERVER. SITE VISIT IS PARTICULARLY IMPORTANT BECAUSE THIS IS RENOVATION WORK.
9. BEFORE STARTING WORK IN A PARTICULAR AREA OF THE PROJECT, VISIT SITE AND EXAMINE CONDITIONS UNDER WHICH WORK MUST BE PERFORMED INCLUDING PREPARATORY WORK DONE UNDER OTHER SECTIONS OR CONTRACTS OR BY OWNER. REPORT CONDITIONS THAT MIGHT AFFECT WORK ADVERSELY IN WRITING THROUGH CONTRACTOR TO ARCHITECT. DO NOT PROCEED WITH WORK UNTIL DEFECTS HAVE BEEN CORRECTED AND CONDITIONS ARE SATISFACTORY. COMMENCEMENT OF WORK SHALL BE CONSTRUED AS COMPLETE ACCEPTANCE OF EXISTING AND PREPARATORY WORK.
10. EXISTING SPRINKLERS ABOVE CEILING TO REMAIN.
11. PROPERLY SUPPORT ALL EXISTING PIPING TO REMAIN WHILE DEMOLITION AND NEW WORK IS BEING COMPLETED.
12. GENERAL CONTRACTOR IS TO INCLUDE IN HIS PRICE ALL COSTS ASSOCIATED WITH COLLEGES WARRANTEE SUBS, FSI AND ENCORE FIRE PROTECTION IN HIS BASE BID PRICE. PRICE TO INCLUDE ALL WORK INDICATED ON PLANS AND SPECIFICATIONS ALONG WITH ALL SHUT-DOWN REQUIREMENTS AND ASSOCIATED COSTS FOR SHUT-DOWNS AND FIRE WATCHES AS SPECIFIED. SPRINKLER CONTRACTOR IS RESPONSIBLE FOR ENSURING THAT DEMOLITION OF EXISTING PIPING DOES NOT IMPACT COVERAGE TO OCCUPIED SPACES ALL REPAIRS NECESSARY PROVIDE PROPER SPRINKLER COVERAGE ARE TO BE MADE AT NO ADDITIONAL COST TO COLLEGE.

NOTE:
COORDINATE SPRINKLER LAYOUT WITH SLOPED CEILING DESIGN FINAL HEAD LOCATION AND PIPING LAYOUT IS TO BE APPROVED BY ARCHITECT PRIOR TO STARTING PIPE INSTALLATION.

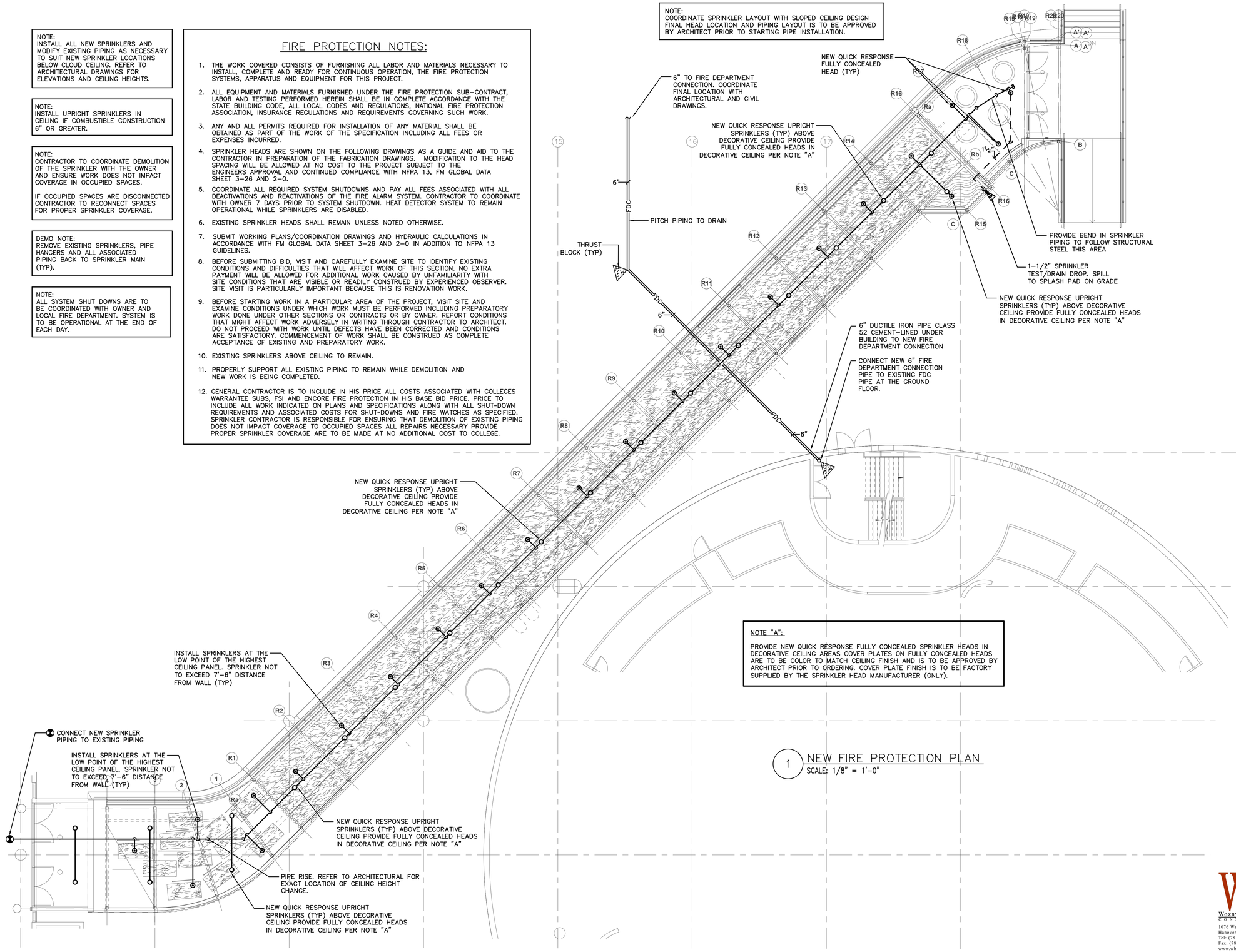

NOTE "A":

PROVIDE NEW QUICK RESPONSE FULLY CONCEALED SPRINKLER HEADS IN DECORATIVE CEILING AREAS COVER PLATES ON FULLY CONCEALED HEADS ARE TO BE COLOR TO MATCH CEILING FINISH AND IS TO BE APPROVED BY ARCHITECT PRIOR TO ORDERING. COVER PLATE FINISH IS TO BE FACTORY SUPPLIED BY THE SPRINKLER HEAD MANUFACTURER (ONLY).

1 NEW FIRE PROTECTION PLAN
SCALE: 1/8" = 1'-0"

CCRI WARWICK RENEWAL ENTRY RAMP ENCLOSURE

400 EAST AVENUE, WARWICK RI 02886

BREWSTER THORNTON GROUP ARCHITECTS LLP
150 Chestnut Street
Providence, RI
02903
Tel: 401.861.1600
Fax: 401.861.5588

Z.M. WOZNY
REGISTERED PROFESSIONAL ENGINEER

JOB NO.	DATE
1609A	November 1, 2018

ISSUE :

NO.	REVISION DESCRIPTION	DATE

SHEET TITLE

NEW FIRE PROTECTION PLAN

WB&A
Wozny/Barbar & Associates, Inc.
CONSULTING ENGINEERS
1076 Washington Street
Hanover, MA 02339
Tel: (781) 826-4144
Fax: (781) 924-5792
www.wbaengineers.com
161 Exchange Street
3rd Floor
Pawtucket, RI 02860

SHEET
FP1.0

11/6/2018 9:54:43 AM

HEAT PUMP																				
UNIT TAG	SERVING	SUPPLY AIR FLOW (CFM)	MAX FRESH AIR (CFM)	DUCT CONF.	ESP (IN. WG)	COOLING PACKAGED DX					HEATING CAPACITY		ELECTRICAL DATA					DIMENSIONS LXWXH (INCH)	WEIGHT (LB)	DESIGN BASED ON
						TOTAL CAPACITY (MBH)	SENSIBLE CAPACITY (MBH)	EDT (°F)	LDT (°F)	REF.	CAPACITY @ 47 °F (MBH)	CAPACITY @ 5 °F (MBH)	MCA	MOP	V	PH	HZ			
HP-1	RAMP	4000	400	HORIZONTAL SUPPLY/RETURN	1.4	123	94	80	58	R-410A	116	56	28	30	460	3	60	10'X5'X5'	2000	CARRIER 50HCQD12A 2M6-2A5J0

NOTES:
1. PROVIDE NEC COMPLIANT ELECTRICAL DISCONNECT SUITABLE FOR OUTDOOR USE.
2. PROVIDE MERV 13 FILTERS.
3. PROVIDE FACTORY MOUNT RETURN AIR DUCT SMOKE DETECTOR.
4. PROVIDE DIFFERNTIAL ENTHALPY ECONOMIZER CONTROL.
5. PROVIDE PROGRAMMABLE THERMOSTAT.
6. PROVIDE A FIVE-YEAR WARRANTY ON THE COMPRESSORS OF THE RTU.
7. THE UNIT SHALL HAVE HINGED DOOR ACCESS FOR ALL THE PANELS.
8. THE FINAL LOCATIONS OF ALL EQUIPMENT SHALL BE APPROVED BY THE BUILDING OWNER AND ARCHITECT.
9. DESIRED SPACE INDOOR CONDITIONS & LOADS ARE BASED ON OWNER/ARCHITECT REQUIREMENTS (80 °F FOR SUMMER, 55 °F FOR WINTER).

GRILLE & REGISTER SCHEDULE							
SYMBOL	SELECTION RANGE (CFM)	MODULE FACE SIZE	FRAME TYPE	ACCESSORIES	MANUFACTURE/MODEL #	NC OR PRESSURE DROP NOT TO EXCEED	REMARKS
LD-1	UP TO 400	6"X60"	NOTE 2	N/A	TITUS TBD	25 NC	ALUMINUM CONSTRUCTION
SG-1	UP TO 400	VARIES	SURFACE	N/A	TITUS 272FL SERIES	25 NC	ALUMINUM CONSTRUCTION
TG-1	SEE DWGS	VARIES	SURFACE	N/A	TITUS 25RL SERIES	25 NC	ALUMINUM CONSTRUCTION
RG-1	UP TO 1100	VARIES	HORIZONTAL	N/A	TITUS TBD	25 NC	ALUMINUM CONSTRUCTION

NOTES:
1. ALL GRILLS SHALL BE SUPPLIED WITH A VOLUME CONTROL DAMPER ACCESSIBLE THROUGH THE GRILL.
2. MOUNT IN-BETWEEN CLOUD OPENINGS. MAKE FLUSH WITH CLOUDS. INSTALL AT SAME ANGLE AS CLOUDS.
3. ALL DIFFUSER & REGISTERS SHALL BE SUPPLIED WITH BORDER TO SUIT ACTUAL INSTALLATION (I.E. T-BAR CEILING, SURFACE MOUNT IN GYPSUM WALL OR CEILING OR DUCT MOUNTING).
4. THE COLOR AND STYLE OF ALL DIFFUSERS, REGISTERS, AND GRILLES SHALL BE APPROVED BY THE ARCHITECT AND OWNER.
5. ALL SUPPLY LINEARS SHALL BE PROVIDED WITH A MANUFACTURER PROVIDED PLENUM BOX C/W ACOUSTICAL LINER (BLACK). ALL SUPPLY LINEARS SHALL BE PROVIDED WITH A MANUFACTURER. PROVIDED VOLUME CONTROL DAMPER ACCESSIBLE THROUGH THE SLOT. ALL SUPPLY LINEARS SHALL BE PROVIDED WITH ADJUSTABLE SLOTS TO ALLOW FOR THROW CONFIGURATION. THE SLOT STYLE SHALL BE 2 SLOTS, EACH 1.5" WIDE.
6. ALL TRANSFER GRILLES SHALL BE OVERSIZED TO ALLOW FOR AIRFLOW VELOCITY AT 400 FPM.

HVAC Ductwork Symbols & Abbreviations

SYMBOL	DESCRIPTION
	NEW PIPING, DUCTWORK, EQUIPMENT, ETC. (LINE WEIGHT)
	INDICATES ACOUSTICAL DUCTLINER REQUIRED.
	CONNECT NEW TO EXISTING
	SUPPLY/OUTSIDE AIR DUCT UP
	RETURN/EXHAUST DUCT UP
	SUPPLY/OUTSIDE AIR DUCT DOWN
	RETURN/EXHAUST DUCT DOWN
	EXHAUST DUCT UP
	SUPPLY DIFFUSER
	RETURN/EXHAUST REGISTER
FSD	COMBINATION FIRE/SMOKE DAMPER
FD	FIRE DAMPER
VD	MANUAL VOLUME DAMPER
BBD	BACK DRAFT DAMPER
MD	MOTORIZED DAMPER
TC	TIME CLOCK
S	SWITCH SERVING FAN
T	THERMOSTAT
TC	THERMOSTAT CONTROLLER FOR AVERAGING THERMOSTAT
H	HUMIDISTAT
TS	REMOTE AVERAGING THERMOSTAT SENSOR
	UNDER CUT DOOR
B.D.D.	BACK DRAFT DAMPER
BHP	BRAKE HORSEPOWER
BTUH	BRITISH THERMAL UNIT PER HOUR
CD	CEILING DIFFUSER/CONDENSATE
CFM	CUBIC FEET PER MINUTE
CO	CLEANOUT
CUH	CABINET UNIT HEATER
DB	DRY BULB TEMPERATURE °F
DN	DOWN
EF	EXHAUST FAN
EWT	ENTERING WATER TEMPERATURE
EXH	EXHAUST
FLA	FULL LOAD AMPS
GC	GENERAL CONTRACTOR
FPM	FEET PER MINUTE
GPM	GALLONS PER MINUTE
HP	HORSE POWER
LAT	LEAVING AIR TEMPERATURE
LD	LINEAR DIFFUSER
LWT	LEAVING WATER TEMPERATURE
MBH	THOUSAND BTU PER HOUR
NIC	NOT IN CONSTRUCTION
NO	NORMALLY OPEN
NTS	NOT TO SCALE
OA	OUTSIDE AIR
OBD	OPPOSED BLADE DAMPER
PD	PRESSURE DROP
PSI	POUNDS PER SQUARE INCH
RG	RETURN GRILLE
RPM	REVOLUTIONS PER MINUTE
SP	STATIC PRESSURE (INCHES OF WATER)
TYP	TYPICAL
VD	VOLUME DAMPER
WB	WET-BULB TEMPERATURE °F
WMS	WIRE MESS SCREEN

HVAC Piping Symbols

SYMBOL	DESCRIPTION
RS	REFRIGERANT SUCTION LINE
RL	REFRIGERANT LIQUID LINE
HWS	HOT WATER SUPPLY
HWR	HOT WATER RETURN
CD	CONDENSATE DRAIN
	DIRECTION OF DOWNWARD PITCH 1/8"/FOOT
	DIRECTION OF FLOW
	ELBOW TURNED DOWN
	ELBOW TURNED UP
	BALL VALVE
	BALL DRAIN VALVE WITH HOSE BIB, CAP & CHAIN
	GATE VALVE
	ANGLE VALVE (SHOWN IN SECTION DWGS)
	ANGLE VALVE (SHOWN ON DWG PLANS)
	BUTTERFLY VALVE
	GLOBE VALVE
	CHECK VALVE
	TWO-WAY AUTOMATIC CONTROL VALVE
	THREE-WAY AUTOMATIC CONTROL VALVE
	MANUAL AIR VENT
	AUTOMATIC AIR VENT WITH ISOLATION VALVE
	THERMOMETER
	PRESSURE GAUGE WITH BALL VALVE
	TEMPERATURE/PRESSURE WELL ("PETE'S PLUG")
	COMBINATION FLOW METER/BALANCE VALVE & SHUT-OFF (CIRCUIT SETTER)
	UNION-SCREWED
	BLIND FLANGE (END OF SYSTEM)
	END CAP-SCREWED
	TOP TAKE-OFF
	BOTTOM TAKE-OFF
	FLEXIBLE CONNECTION (SINGLE LINE PIPING)
	FLEXIBLE CONNECTION (DOUBLE LINE PIPING)
	VIBRATION ISOLATORS FLOOR MOUNTED & HANGING TYPE

HVAC Equipment Designations

SYMBOL	DESCRIPTION
	EQUIPMENT TAG DESIGNATION NOTE: THE HEXAGON SYMBOL SHALL BE USED FOR ALL EQUIPMENT CALLOUTS REQUIRING ELECTRICAL POWER HOOK-UP.
	EQUIPMENT TAG DESIGNATION/ACTIVE LENGTH FOR FIN-TUBE
	EQUIPMENT TAG CFM AMOUNT NECK SIZE NOTE: THE SQUARE SYMBOL SHALL BE USED FOR ALL EQUIPMENT CALLOUTS THAT DO NOT REQUIRE ELECTRICAL POWER.

HVAC GENERAL NOTES

1. THE FOLLOWING NOTES ARE GENERAL IN NATURE. IF A CONFLICT OCCURS BETWEEN THESE NOTES AND THE SPECIFICATIONS, THE MORE STRINGENT SHALL APPLY.

2. EXAMINE ALL DRAWINGS AND THE SPECIFICATION FOR THE WORK REQUIREMENTS OF THIS SECTION.

3. HVAC WORK IS INDICATED DIAGRAMMATICALLY. EXACT LOCATIONS OF ALL COMPONENTS SHALL BE DETERMINED IN THE FIELD AND BY ACTUAL BUILDING CONDITIONS. EQUIPMENT OR DUCTS INTERFERING WITH OTHER INSTALLATIONS SHALL BE RELOCATED AS REQUIRED AT NO ADDITIONAL COST TO THE OWNER. THERMOSTAT LOCATIONS SHALL BE APPROVED BY THE ARCHITECT BEFORE THE INSTALLATION.

4. ALL WORK SHALL MEET OR EXCEED THE LATEST REQUIREMENTS OF ALL NATIONAL, STATE, COUNTRY MUNICIPAL AND OTHER AUTHORITIES EXERCISING JURISDICTION OVER CONSTRUCTION WORK OF THE PROJECT. ALL REQUIRED PERMITS SHALL BE OBTAINED, PAID FOR, AND MADE AVAILABLE AT THE COMPLETION OF THE WORK.

5. INSTALLATION PROCEDURES, METHODS, AND CONDITIONS SHALL COMPLY WITH THE LATEST REQUIREMENTS OF THE FEDERAL OCCUPATIONAL SAFETY AND HEALTH ACT (OSHA).

6. THE HVAC CONTRACTOR SHALL GUARANTEE WORK IN WRITING FOR ONE YEAR FROM DATE OF FINAL ACCEPTANCE AGAINST DEFECTS IN MATERIALS, WORKMANSHIP AND INSTALLATION. THE HVAC CONTRACTOR SHALL CORRECT DEFECTIVE WORK AT NO ADDITIONAL COST TO THE OWNER AND PROVIDE EQUIPMENT WARRANTIES TO THE OWNER IN FULL FORCE. PROVIDE 5-YEAR WARRANTY ON COMPRESSORS.

7. PRIOR TO PURCHASING ANY EQUIPMENT OR MATERIALS, THE PRODUCT DATA SHALL BE SUBMITTED FOR REVIEW. ALL EQUIPMENT AND MATERIALS SHALL BE NEW AND WITHOUT BLEMISH OR DEFECT. SUBSTITUTED EQUIPMENT OR OPTIONAL EQUIPMENT WHERE PERMITTED AND APPROVED, MUST CONFORM TO SPACE REQUIREMENTS. ANY SUBSTITUTED EQUIPMENT THAT CANNOT MEET SPACE REQUIREMENTS, WHETHER APPROVED OR NOT, SHALL BE REPLACED AT THE CONTRACTOR'S EXPENSE.

8. THE HEATING, VENTILATING AND AIR CONDITIONING TRADE IS REQUIRED TO SUPPLY ALL NECESSARY SUPERVISION AND COORDINATION INFORMATION TO ANY OTHER TRADES WHO ARE TO SUPPLY WORK TO ACCOMMODATE THE HEATING, VENTILATING AND AIR CONDITIONING INSTALLATIONS. WORK SHALL BE PERFORMED IN COOPERATION WITH OTHER TRADES ON THE PROJECT AND SO SCHEDULED AS TO ALLOW TIMELY AND EFFICIENT COMPLETION OF THE PROJECT.

9. CUTTING, CORING, DRILLING AND PATCHING OF HOLES AND OPENINGS IN ALL THE STRUCTURAL WALLS FOR THE WORK OF SUB-TRADES SHALL BE PERFORMED BY THE PARTICULAR SUBCONTRACTOR WHEN THE LARGEST DIMENSION OF THE OPENING IS 8 INCHES OR LESS. IF THE LARGEST DIMENSION OF THE OPENING EXCEEDS 8 INCHES, THE GENERAL CONTRACTOR SHALL PERFORM THE CUTTING AND PATCHING FOR THE WORK OF THE SUBCONTRACTOR. ALL SUCH WORK SHALL BE COORDINATED WITH THE G.C.

10. PROVIDE 6-INCH TALL CONCRETE PADS FOR CONDENSING UNITS AND OTHER OUTDOOR EQUIPMENT. PROVIDE STEEL PLATFORMS AND SUPPORTS AS REQUIRED TO COMPLETE SAFE AND CODE-COMPLIANT COMPLETE SYSTEM INSTALLATION.

11. ALL WORK SHALL BE INSTALLED SO THAT PARTS REQUIRING PERIODIC INSPECTION, OPERATION, MAINTENANCE AND REPAIR ARE READILY ACCESSIBLE. MINOR DEVIATION FROM THE DRAWINGS MAY BE MADE TO ACCOMPLISH THIS, BUT CHANGES OF SUBSTANTIAL MAGNITUDE SHALL NOT BE MADE PRIOR TO WRITTEN APPROVAL FROM THE ENGINEER.

12. THE DRAWINGS ARE DIAGRAMMATIC. THE CONTRACTOR SHALL REVIEW EQUIPMENT INSTALLATION MANUAL TO UNDERSTAND THE EQUIPMENT SERVICE SPACE REQUIRED BEFORE WORK IS COMMENCED. THIS CONTRACTOR SHALL COORDINATE LOCATION OF ACCESS PANELS IN CEILINGS, WALLS, FLOORS ETC WITH GC. THE PANELS SHALL BE FURNISHED BY HVAC CONTRACTOR AND INSTALLED BY GC.

13. THIS TRADE SHALL COORDINATE DUCT AND EQUIPMENT INSTALLATION WITH EXISTING EQUIPMENT, DUCTS, AND PIPING. THIS TRADE SHALL COORDINATE ALL CONFLICTS WITH OTHER TRADES IN THE FIELD PRIOR TO INSTALLATION AT NOT EXTRA COST TO THE OWNER.

14. THE AIR HANDLING UNITS SHALL BE PROVIDED WITH SECONDARY CONDENSATE DRAINS AS REQUIRED BY THE INTERNATIONAL MECHANICAL CODE (IMC), SECTION 307. EACH SECONDARY DRAIN PAN SHALL BE PROVIDED WITH A CONDENSATE OVERFLOW SWITCH. THE SWITCH SHALL SHUT OFF THE UNIT IN THE EVENT THAT PRIMARY DRAIN IS BLOCKED.

15. REFER TO ARCHITECTS DRAWINGS FOR THERMOSTAT MOUNTING HEIGHTS.

16. BUILDING HEATING SYSTEM IS ACCEPTABLE FOR USE DURING CONSTRUCTION. AFTER USED CLEAN SYSTEM/DUCTWORK AND REPLACE FILTERS.

17. PROVIDE COORDINATION DRAWING TO OWNER BEFORE CONSTRUCTION.

WB&A
Wozny/Barbar & Associates, Inc.
CONSULTING ENGINEERS
1076 Washington Street
Hanover, MA 02339
Tel: (781) 826-4144
Fax: (781) 924-5792
www.wbaengineers.com
161 Exchange Street
3rd Floor
Pawtucket, RI 02860

CCRI WARWICK RENEWAL ENTRY RAMP ENCLOSURE

400 EAST AVENUE, WARWICK RI 02886

BREWSTER THORNTON GROUP ARCHITECTS LLP
150 Chestnut Street
Providence, RI 02903
Tel: 401.861.1600
Fax: 401.861.5588

Z.M. WOZNY
REGISTERED PROFESSIONAL ENGINEER

JOB NO.	DATE
1609A	November 1, 2018

ISSUE :

NO.	REVISION DESCRIPTION	DATE
	DT	
	TB	
	AS NOTED	

SHEET TITLE

SYMBOL LEGEND AND SCHEDULES

SHEET

M0.0

11/6/2018 10:33:53 AM

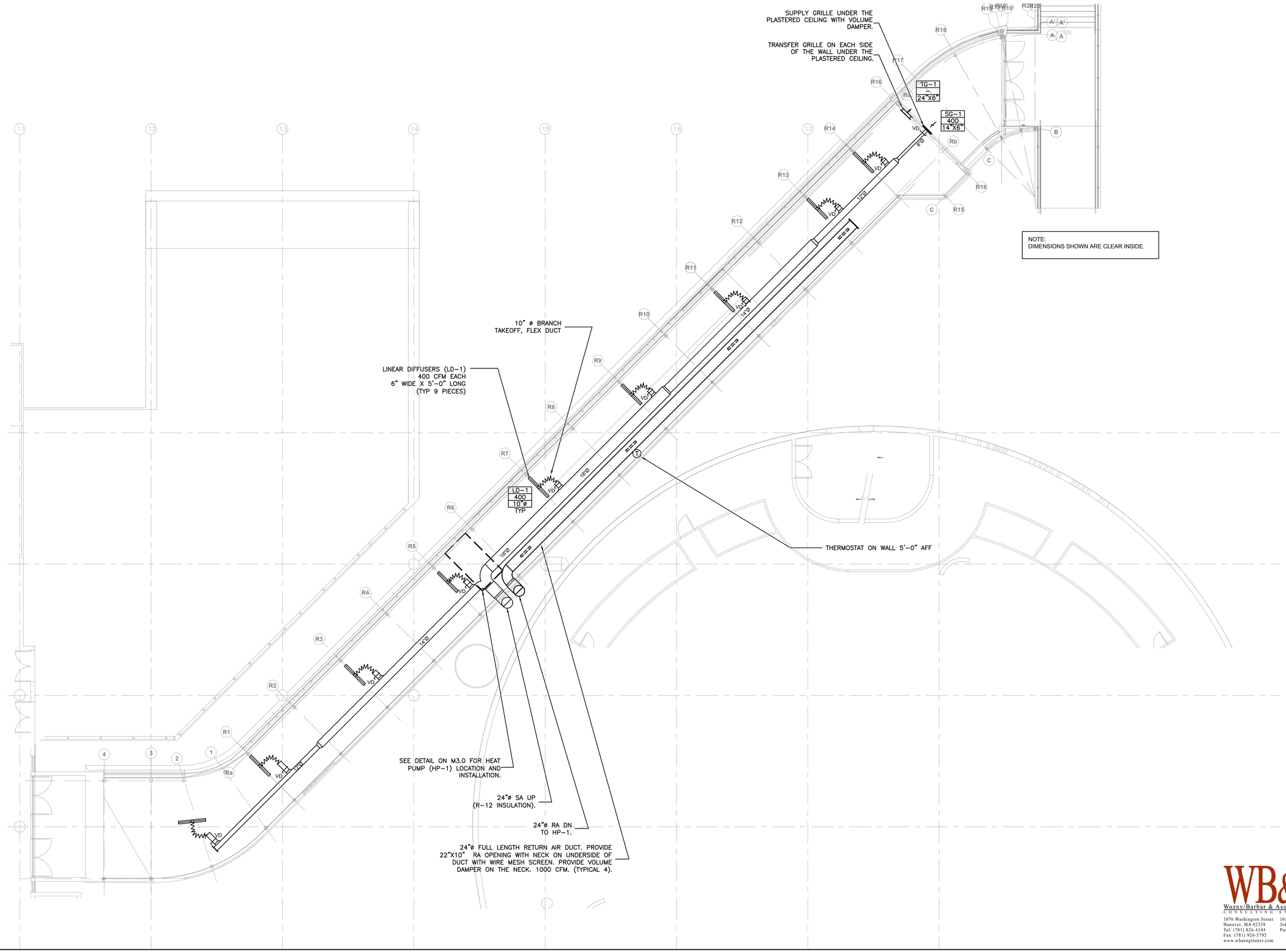

CCRI WARWICK RENEWAL
ENTRY RAMP ENCLOSURE

400 EAST AVENUE, WARWICK RI 02886

BREWSTER THORNTON GROUP ARCHITECTS LLP
150 Chestnut Street
Providence, RI
02903
Tel: 401.861.1600
Fax: 401.861.5588

Z.M. WOZNY
REGISTERED PROFESSIONAL ENGINEER

JOB NO.	DATE
1609A	November 1, 2018

ISSUE :

NO.	REVISION DESCRIPTION	DATE
	DT	
	TB	
	2'=1'	

SHEET TITLE

SECOND FLOOR RAMP MECHANICAL PLAN

SHEET

M1.0

WB&A
Wozny/Barbar & Associates, Inc.
CONSULTING ENGINEERS
1076 Washington Street
Hanover, MA 02339
Tel: (781) 826-4144
Fax: (781) 924-5792
www.wbaengineers.com
161 Exchange Street
3rd Floor
Pawtucket, RI 02860

11/6/2018 10:33:54 AM

DUCT SIZE	HOLE SIZE	MINIMUM DUCT HEIGHT
6x4	7.5x5.5	7.5
10x4	11.5x5.5	7.5
16x4	17.5x5.5	7.5
24x4	25.5x5.5	7.5
6x5	7.5x6.5	8.5
10x5	11.5x6.5	8.5
16x5	17.5x6.5	8.5
24x5	25.5x6.5	8.5
6x6	7.5x7.5	9.5
10x6	11.5x7.5	9.5
16x6	17.5x7.5	9.5
24x6	25.5x7.5	9.5
8x8	9.5x9.5	11.5
16x8	17.5x9.5	11.5
24x8	25.5x9.5	11.5
10x10	11.5x11.5	13.5
16x10	17.5x11.5	13.5
24x10	25.5x11.5	13.5

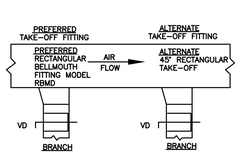

NOTES:

ALL ROUND AND RECTANGULAR BELLMOUTH FITTINGS SHALL BE INCLUDED WITH THE FOL-LOWING STANDARD FEATURES:

1. NEOPRENE GASKET TO MINIMIZE AIR LEAKAGE.
2. PRE-DRILLED HOLES FOR QUICK MOUNTING.
3. CONSTRUCTED OF HEAVY DUTY GALVANIZED STEEL

OPTIONAL FEATURES SHALL INCLUDE THE FOLLOWING:

1. 26 GAUGE GALVANIZED QUADRANT VOLUME DAMPER WITH TIGHT FITTING GASKETING TO MINIMIZE LEAKAGE AT DAMPER PIVOT POINTS.
2. HEAVY DUTY HARDWARE IS AVAILABLE FOR APPLICATIONS WITH INCREASED STATIC PRESSURE.

01 ALTERNATE RECTANGULAR BRANCH DUCT TAKE-OFF

Scale: None

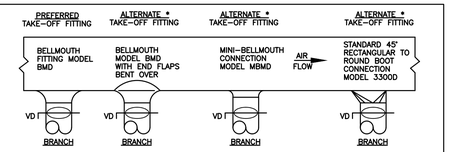

ALTERNATE FITTINGS TO BE USED WHEN DUCT HEIGHT DOES NOT PERMIT THE USE OF THE FULL SIZE BELLMOUTH.

DUCT SIZE	HOLE SIZE	MINIMUM DUCT HEIGHT
5"	8"	9"
6"	9"	10"
7"	10"	11"
8"	11"	12"
9"	12"	13"
10"	13"	14"
12"	15"	16"
14"	17"	18"
16"	19"	20"

DUCT SIZE	HOLE SIZE	MINIMUM DUCT HEIGHT
5"	–	–
6"	7"	9"
7"	–	–
8"	9"	11"
9"	–	–
10"	11"	13"
12"	–	–
14"	–	–
16"	–	–

DUCT SIZE	HOLE SIZE	MINIMUM DUCT HEIGHT
5"	5"x10"	7"
6"	6"x12"	8"
7"	6"x12"	8"
8"	6.5"x12"	8.5"
9"	6.5"x14"	8.5"
10"	6.5"x16"	8.5"
12"	8.5"x18"	10"
14"	10"x20"	10.5"
16"	–	–

02 ALTERNATE ROUND BRANCH DUCT TAKE-OFF

Scale: None

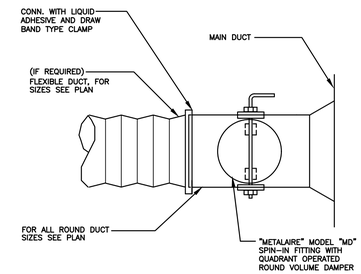

VOLUME CONTROL DAMPERS MAY NOT BE SHOWN ON DRAWING. PROVIDE VOLUME DAMPERS AT ALL BRANCH DUCTWORK AS REQUIRED TO PERFORM FINAL BALANCING.

03 ROUND BRANCH DUCT TAKE-OFF DETAIL

Scale: None

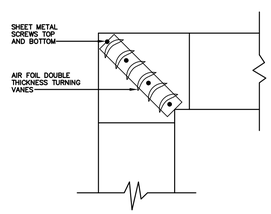

04 TYPICAL 90° DUCT ELBOW DETAIL

Scale: None

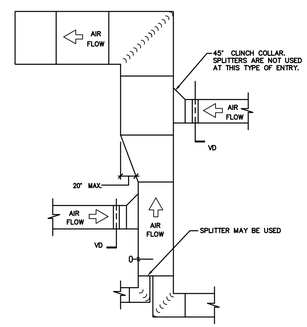

05 TYPICAL EXHAUST OR RETURN DUCT DETAIL

Scale: None

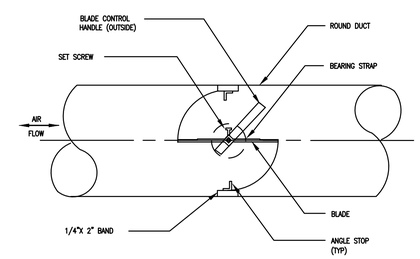

06 VOLUME CONTROL DAMPER DETAIL

Scale: None

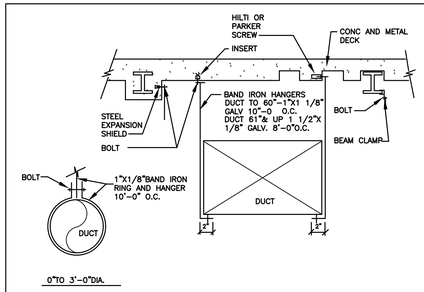

NOTE:

DUCTWORK LARGER THAN 6 SQUARE FEET OR 28" DIAMETER SHALL BE SEISMICALLY BRACED.

07 STANDARD HANGING DETAIL

Scale: None

SQUARE NECK SIZE	ROUND DUCT SIZE
6"X6"	4"ø
6"X6"	6"ø
9"X9"	8"ø
12"X12"	10"ø
15"X15"	12"ø
15"X15"	14"ø

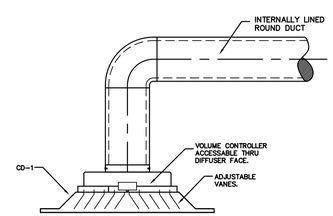

08 TYPICAL DUCT-MOUNTED SUPPLY DIFFUSER DETAIL

Scale: None

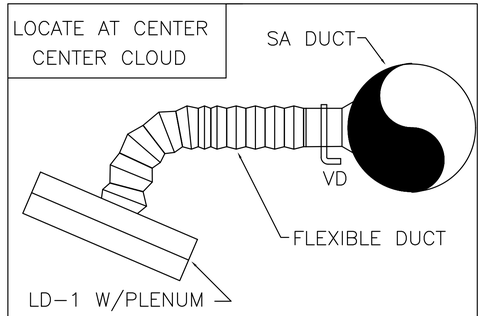

09 LINEAR DIFFUSER DETAIL

Scale: None

WB&A
Wozny/Barbar & Associates, Inc.
CONSULTING ENGINEERS
1076 Washington Street
Hanover, MA 02339
Tel: (781) 826-4144
Fax: (781) 924-5792
www.wbaengineers.com
161 Exchange Street
3rd Floor
Pawtucket, RI 02860

CCRI WARWICK RENEWAL ENTRY RAMP ENCLOSURE

400 EAST AVENUE, WARWICK RI 02886

BREWSTER THORNTON GROUP ARCHITECTS LLP
150 Chestnut Street
Providence, RI
02903
Tel: 401.861.1600
Fax: 401.861.5588

Z.M. WOZNY
NO. 9000
REGISTERED PROFESSIONAL ENGINEER

JOB NO.	DATE
1609A	November 1, 2018

ISSUE :

NO.	REVISION DESCRIPTION	DATE
	DT	
	TB	
	AS NOTED	

SHEET TITLE

MECHANICAL DETAILS

SHEET

M2.0

11/6/2018 10:33:54 AM

NOTES:

1. PROVIDE ATTACHMENT TO BLDG. STRUCTURE TO RESIST LATERAL WIND LOADS. CONTRACTOR SHALL PROVIDE STAMPED DETAIL DRAWINGS SHOWING INTERCONNECTION WITH BLDG. PROVIDE ALL CALCULATIONS.
2. PROVIDE DUCT SUPPORTS. CONTRACTOR SHALL PROVIDE STAMPED DETAIL DRAWINGS SHOWING ATTACHMENT TO BLDG. PROVIDE ALL CALCULATIONS,.
3. PROVIDE DOUBLE-WALL DUCT WITH R-12 INSULATION. INNER LINER SHALL BE GALVANIZED STEEL; OUTER JACKET SHALL BE ALUMINUM.
4. PROVIDE ALUMINUM CLOSURE COLLAR. CAULK WATERTIGHT.
5. PROVIDE 6" CONCRETE PADW/WELDED WIRE REINFORCING.
6. PROVIDE 1" LINER AND 2" POLYISOCYANURATE RIGID INSULATION. PROVIDE ALUMINUM JACKET. CAULK WATERTIGHT.
7. HEAT PUMP SHALL BE INSTALLED TO KEEP CONDENSING SECTION AS CLOSE AS POSSIBLE TO THE EDGE.
8. NO SIDE OBSTRUCTIONS SHALL BE APPLIED TO THE UNIT. ALL SERVICE CLEARANCES SHALL BE AS PER MANUFACTURER'S RECOMMENDATIONS.

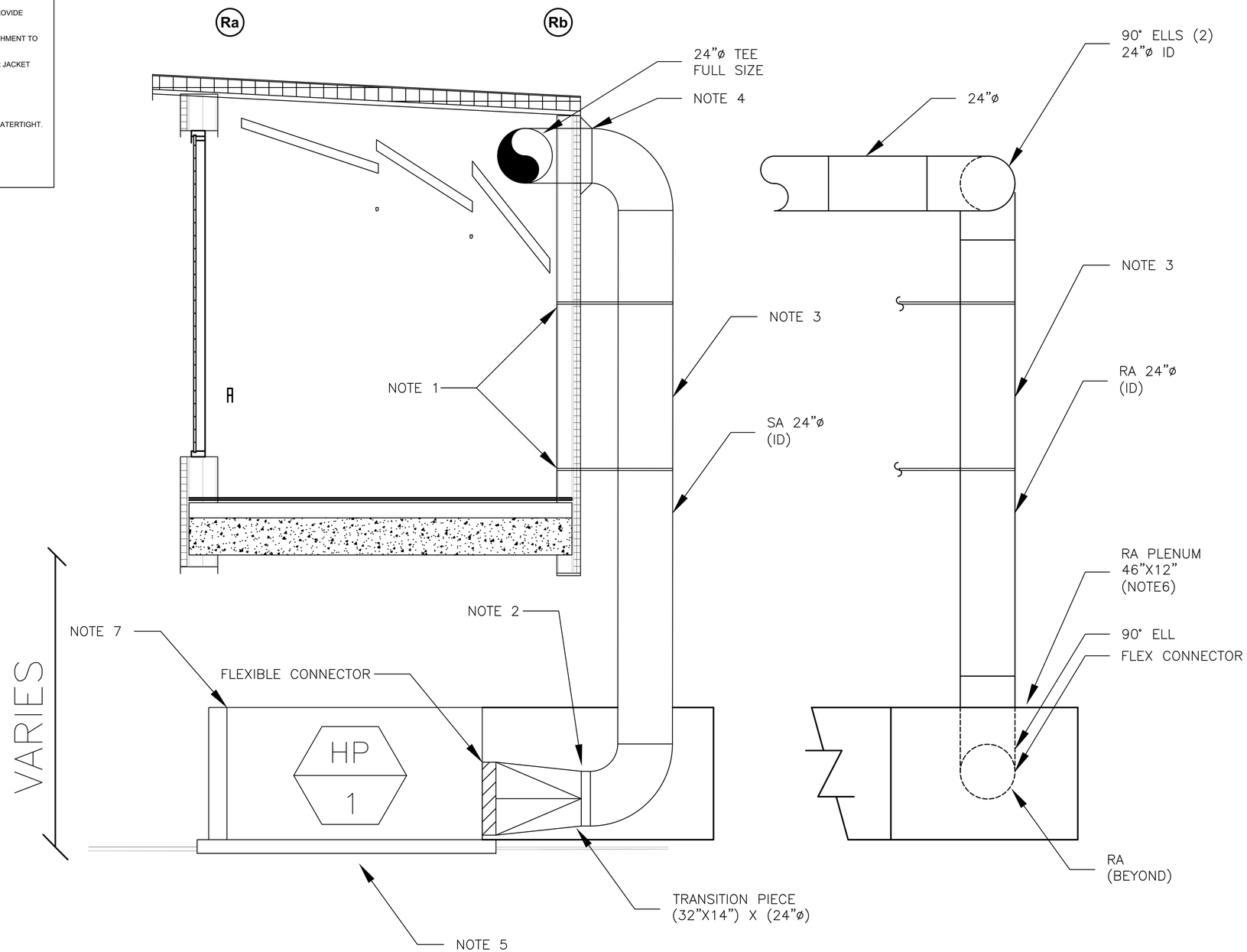

SECTION VIEW

N.T.S.

WB&A
Wozny/Barbar & Associates, Inc.
CONSULTING ENGINEERS
1076 Washington Street
Hanover, MA 02339
Tel: (781) 826-4144
Fax: (781) 924-5792
www.wbaengineers.com
161 Exchange Street
3rd Floor
Pawtucket, RI 02860

CCRI WARWICK RENEWAL ENTRY RAMP ENCLOSURE

400 EAST AVENUE, WARWICK RI 02886

BREWSTER THORNTON GROUP ARCHITECTS LLP
150 Chestnut Street
Providence, RI
02903
Tel: 401.861.1600
Fax: 401.861.5588

Z.M. WOZNY
REGISTERED PROFESSIONAL ENGINEER

JOB NO.	DATE
1609A	November 1, 2018

ISSUE :

NO.	REVISION DESCRIPTION	DATE
	DT	
	TB	
	N.T.S.	

SHEET TITLE

MECHANICAL DETAILS

SHEET

M3.0

11/6/2018 10:33:55 AM

LIGHTING FIXTURES

SYMBOL	DESCRIPTION	NOTES
FP 1a / FP 1a / FP 1a / FP 1a / FP 1a / FP 1a	WALL OR CEILING MOUNTED LIGHTING FIXTURE	UPPER CASE LETTERS INDICATE FIXTURE TYPE. REFER TO FIXTURE SCHEDULE FOR MANUFACTURER SUBSCRIPT LOWER CASE LETTERS INDICATE SWITCH CONTROL ASSOCIATIONS SHADING OF FIXTURES THUS: INDICATES FIXTURE ON NIGHT/EMERGENCY CIRCUIT OR EMERGENCY BATTERY BACK UP BALLAST WHERE APPLICABLE. CONTRACTOR SHALL CONFIRM LOCATION OF REMOTE EMERGENCY BALLAST WITH ARCHITECT PRIOR TO PURCHASE AND INSTALLATION. EMERGENCY BALLAST SHALL BE SIMILAR TO BODINE B300T OR B30 WITH INTEGRAL INDICATOR LIGHT TEST SWITCH. PROVIDE 2 LAMP APPLICATION WHERE APPLICABLE.
	EXTERIOR POLE MOUNTED FIXTURE	CONTRACTOR SHALL FURNISH AND INSTALL EMERGENCY TRANSFER RELAY ON ALL SWITHCED EMERGENCY FIXTURES
		CONTRACTOR SHALL PROVIDE ALL MOUNTING HARDWARE APPLICABLE TO CEILING, WALL, AND FLOOR TYPE INTO WHICH FIXTURE IS INSTALLED CONTRACTOR SHALL COORDINATE MOUNTING HEIGHT WITH ARCHITECTURAL INTERIOR/EXTERIOR ELEVATIONS CONTRACTOR SHALL COORDINATE AND CONFIRM K RATING OF LAMPS TO ACHIVE COLOR AS DESIRED PER ARCHITECT AND OWNER/TENANT CONTRACTOR SHALL FURNISH AND SUPPLY ANY STEP DOWN TRANSFORMERS FOR ANY LOW VOLTAGE LIGHTING CONTRACTOR SHALL FURNISH AND INSTALL 0–10V DIMMING BALLAST FOR LED FIXTURES.

EXIT/EMERGENCY LIGHTING

SYMBOL	DESCRIPTION	NOTES
INV	EMERGENCY LIGHTING INVERTER	ALL EMERGENCY BATTERY PACKS SHALL HAVE REMOTE HEAD CAPABILITY UNLESS NOTED OTHERWISE
	DUAL REMOTE EMERGENCY LIGHTING HEAD	
	CEILING MOUNTED EXIT SIGN	ALL EXIT SIGNS SHALL BE FURNISHED WITH INTERNAL, 90 MINUTE BATTERY UNLESS NOTED OTHERWISE.
	WALL MOUNTED EXIT SIGN	APPLICATION OF SHADED QUADRANTS AND ARROWS THUS: INDICATE LETTERED FACE AND DIRECTIONAL CHEVERONS AS REQUIRED

SWITCHING/LIGHTING/DEVICE CONTROL

SYMBOL	DESCRIPTION	NOTES	
S_{WP}	SINGLE POLE SWITCH	20A 120–277V AC "WP" – INDICATES WEATHER PROOF	SUBSCRIPT LOWER CASE LETTERS INDICATE SWITCH CONTROL ASSOCIATIONS SUBSCRIPT UPPER CASE LETTERS DENOTE SWITCH TYPE AS LISTED IN NON–STANDARD SWITCHES UNLESS NOTED OTHERWISE SWITCHES SHALL BE MOUNTED 48" TO CENTER LINE AFF
SP	SINGLE POLE SWITCH WITH PILOT LIGHT		
S2	DOUBLE POLE SWITCH		
S3	THREE–WAY SWITCH		
S4	FOUR–WAY SWITCH		
ST	SPRING WOUND INTERVAL TIME SWITCH WITHOUT HOLD	TORK OR EQUAL 30 MIN MAX	
PC	20 AMP PHOTOCELL		
D	UNIVERSAL VOLTAGE SLIDE DIMMER	LEVITON RENOIR II SERIES OR EQUAL 120V – 1500W 277V – 3463W	PROVIDE 0–10V DIMMER WHERE REQUIRED FOR LED LIGHTING FIXTURES
OS	CEILING MOUNTED CORRIDOR OCCUPANCY SENSOR (80' oc)	WATT STOPPER: W–2000H	CONTRACTOR SHALL FURNISH AND INSTALL ALL NECESSARY POWER PACKS, RELAYS, CABLES, CONTROL MODULES, AND CONTACTORS TO COMPLETE SYSTEM INSTALLATION SUBSCRIPT LOWER CASE LETTERS INDICATE SWITCH LEG CONTROL CONTRACTOR SHALL COORDINATE AND CONFIRM ALL SENSOR SETTING AND TIME DELAYS WITH OWNER OR TENANTS REPRESENTATIVE
OS	CEILING MOUNTED DUAL TECHNOLOGY OCCUPANCY SENSOR (1,600 sf)	WATT STOPPER: DT–300	
OS	CEILING MOUNTED OCCUPANCY SENSOR WHEATHERPROOF	WATT STOPPER: FS–305/FS–355 FS–LZW	
OS	WALL MOUNTED DUAL TECHNOLOGY OCCUPANCY SENSOR	WATT STOPPER: DW–200 SERIES	
OS ab	WALL MOUNTED DUAL TECHNOLOGY DUAL RELAY SENSOR	WATT STOPPER: DSW–302	
OS	WALL MOUNTED DIMMABLE OCCUPANCY SENSOR	WATT STOPPER: PW–100D	FURNISH AND INSTALL BALLAST COMPATIBLE WITH DIMMABLE SENSOR
OS	CEILING MOUNTED ON/OFF DAYLIGHT HARVEST SENSOR	WATT STOPPER: LMLS–105	
TC	7 DAY ASTRONOMICAL PROGRAMMABLE TIME CLOCK	TORK OR EQUAL	
LV	LOW VOLTAGE 1, 3, AND 4 WAY MOMENTARY SWITCH	WATT STOPPER: DCC2 SERIES	CONTRACTOR SHALL FURNISH AND INSTALL ALL NECESSARY POWER PACKS, RELAYS, CABLES, CONTROL MODULES, WIRING, AND CONTACTORS TO COMPLETE SYSTEM INSTALLATION
LCRP	LIGHTING CONTROL RELAY PANEL	WATT STOPPER: LPB SERIES	
MS	GUEST ROOM CARD KEY SWITCH	WATT STOPPER: HS SERIES	

TELECOMMUNICATION SYSTEMS

SYMBOL	DESCRIPTION	NOTES
MHNC	MODULAR HOME NETWORK CENTER PROVIDE (1) DEDICATED 120V CIRCUIT & DOUBLE DUPLEX RECEPTACLE	MODULAR HOME NETWORKING PANEL SHALL BE LEVITON 47606–NMT IN 47605–140 ENCLOSURE OR EQUAL WITH 120V. RECEPTACLE
	WALL MOUNTED DATA OUTLET	4"x4" SQUARE OUTLET BOX WITH 1"C BACK TO DEMARK CLOSET. CONFIRM LOCATION OF CLOSET WITH ARCHITECT
	WALL MOUNTED COMBINATION TEL/DATA OUTLET	P – DENOTES PUBLIC PAY PHONE W – DENOTES POWER FEED F – DENOTES MODULAR FURNITURE BEZEL (2)VOICE,(2)DATA OUTLETS BY OTHERS
	WALL MOUNTED TEL OUTLET	
T	FIRE RATED FURNITURE FEED POKE THROUGH DEVICE FOR TEL/DATA CONNECTIONS TO ELECTRIFIED FURNITURE	
T	4" SQUARE OUTLET BOX WITH 1 1/2" GROMMETTED HOLE COVERPLATE FOR TEL/DATA CONNECTION TO ELECTRIFIED FURNITURE PARTITIONS, MOUNTED 8" AFF	
TV	WALL MOUNTED CABLE TV OUTLET	4"x4" SQUARE OUTLET BOX WITH 1" CONDUIT STUBBED 6" ABOVE ACCESSIBLE CEILING SEE ARCH PLAN FOR MOUNTING HEIGHT
—CT—	CABLE TRAY	12" WIDE, 4" DEEP, CENTER SPLINE EQUAL TO WIREMOLD SPECMATE. PROVIDE ALL CONNECTORS AND HARDWARE FOR INSTALLATION OF LAYOUT SHOWN

WIRING DEVICES – RECEPTACLES

SYMBOL	DESCRIPTION	NOTES
1	WALL DUPLEX CONVENIENCE OUTLET MTD 18" AFF	20A/125V, 2P, 3W, GNDG., NEMA 5–20R SHADING OF SYMBOL THUS:
	CEILING MOUNTED DUPLEX CONVENIENCE OUTLET	INDICATES RECEPTACLE WITH EACH HALF SEPARATELY WIRED. (HALF CONSTANT HALF SWITCH CONTROLLED.)
1G	ISOLATED GROUND DUPLEX CONVENIENCE OUTLET	"1"– INDICATES CIRCUIT NUMBER SUBSCRIPT LOWER CASE LETTERS INDICATE SWITCH CONTROL ASSOCIATIONS
	WALL DOUBLE DUPLEX CONVENIENCE OUTLET	SHADING OF SYMBOL THUS:
	INDIVIDUAL RUN TURNING UP	THE WIRING DIAGRAM, QUANTITY AND SIZE OF THE WIRES AND CONDUIT REPRESENT A SUGGESTED ARRANGEMENT BASED UPON SELECTED STANDARD COMPONENTS OF ELECTRICAL EQUIPMENT. MODIFICATIONS ACCEPTABLE TO THE CONSTRUCTION MANAGER MAY BE MADE BY THE CONTRACTOR TO ACCOMMODATE EQUIPMENT ACTUALLY PURCHASED. THE BASIC SEQUENCE AND METHOD OF CONTROL MUST BE MAINTAINED AS INDICATED ON THE DRAWINGS AND/OR SPECIFICATIONS.
H	HOSPITAL GRADE DUPLEX CONVENIENCE OUTLET	INDICATES RECEPTACLE MTD 6" ABOVE COUNTER TO CENTER LINE OR 48" AFF UNLESS NOTED OTHERWISE. CONFIRM DEVICE MOUNTING HEIGHT WITH ARCHITECTURAL INTERIOR ELEVATION PLANS "WP" – INDICATES WEATHER PROOF
	WALL MTD SINGLE CONVENIENCE OUTLET	"GFI" DENOTES SELF REGULATING GROUND FAULT INTERRUPTING TYPE RECEPTACLE ALL POWER OUTLET FACEPLATES SHALL BE LABELED WITH CIRCUIT NUMBER AND PANEL DESIGNATION FEEDING OUTLET
USB	DUPLEX RECEPTACLE WITH (2) USB PORTS	HUBBELL: USB20X2 OR EQUAL CONFIRM DEVICE AND FACEPLATE COLOR WITH ARCHITECT
H 9	WALL MOUNTED SPECIAL PURPOSE POWER RECEPTACLE	NUMERAL WITHIN SQUARE DENOTES RECEPTACLE TYPE AS LISTED IN SCHEDULE OF NON–STANDARD RECEPTACLES
P	FIRE RATED FURNITURE FEED POKE THRUGH DEVICE FOR POWER CONNECTIONS TO ELECTRIFIED FURNITURE	
HP	4" SQUARE OUTLET BOX TO OUTLETS LOCATED IN FURNITURE PARTITIONS (SEE FLOOR PLANS)	

WIRING DEVICES – MISCELLANEOUS

SYMBOL	DESCRIPTION	NOTES
PP	2 CHANNEL PWR/DATA POWER POLE WITH ELEC DEVICES AND PLATES	WIREMOLD AMDPT SERIES OR EQUAL
	2 PIECE SURFACE MTD RACEWAY WITH 20A DUPLEX RECEPTACLES SPACING AS SHOWN ON ELECTRICAL PLANS	WIREMOLD OR EQUAL
	2 PIECE MULTI–CHANNEL RACEWAY WITH 20A DUPLEX RECEPTACLES AND DATA OUTLETS SPACING AS SHOWN ON ELECTRICAL PLANS	WIREMOLD OR EQUAL
FSR VI	FLUSH FLOOR MOUNTED POWER/DATA CONVIENCE RECEPTACLES	POKE THRU APPLICATION: 2 HOUR RATED. WIREMOLD RC SERIES OR EQUAL. COORDINATE FINAL POWER AND TEL/DATA TERMINATIONS WITH TENANT FLOOR TRENCH APPLICATION: DEEP RECTANGULAR CAST IRON BOX WIREMOLD OR EQUAL PROVIDE 1"C FROM TEL/DATA TO 6" AFF. CONTRACTOR SHALL SUPPLY ALL COVERS AND FACE PLATES SPECIFIC TO SERIES

JUNCTION BOXES

SYMBOL	DESCRIPTION	NOTES
J	CEILING MOUNTED JUNCTION BOX	
HJ	WALL MOUNTED JUNCTION BOX	
J	SURFACE MOUNTED JUNCTION BOX	
J	FLUSH FLOOR MOUNTED JUNCTION BOX	
PB	PULL BOX	
J	JUNCTION BOX WITH FLEXIBLE CONNECTION TO EQUIPMENT	P – DENOTES POWER FEED C – DENOTES COMMUNICATIONS FEED

MOTORS AND CONTROLS

SYMBOL	DESCRIPTION	NOTES	
	MOTOR	COMPLETE INFO. FOR MOTOR IS INDICATED BY APPLICATION OF INDEXING SYMBOLS REFERENCE TO SCHEDULE OF MECHANICAL EQUIPMENT	COMPLETE INFORMATION FOR CONTROL ITEMS IS INDICATED BY THE APPLICATION OF INDEXING SYMBOL REFERENCE APPLIED TO ASSOCIATED EQUIP.
	MAGNETIC MOTOR STARTER COMPLETE W/ THERMAL OVERLOAD PROTECTION	SUBSCRIPT INDICATES NEMA SIZE	
	MANUAL MOTOR STARTER (THERMAL OVERLOAD SWITCH)		
VFD	VARIABLE FREQUECY DRIVE	REFER TO HVAC SCHEDULE FOR MOTOR LOAD HORSEPOWER SIZE	
CP	CONTROL PANEL (MECHANICAL EQUIP)	FURNISHED AND INSTALLED BY OTHERS. WIRED BY THE ELECTRICAL CONTRACTOR	

DISTRIBUTION EQUIPMENT

SYMBOL	DESCRIPTION	NOTES
	SURFACE MOUNTED PANEL	
	FLUSH MOUNTED PANEL	
TVSS	SURGE SUPPRESSION	PROVIDE PER SPECIFICATIONS
T	TRANSFORMER	SEE ELECTRICAL PLANS FOR KVA RATING
	GROUNDING PER SPECIFICATION	
M	METER SOCKET AND METER	METER SOCKET PROVIDED BY CONTRACTOR PROVIDED BY LOCAL UTILITY CO.
	OVERCURRENT AND/OR SWITCHING DEVICE "WP" – INDICATES WEATHER PROOF	COMPLETE INFORMATION FOR DEVICES IS INDICATED BY APPLICATION OF TAG SYMBOLS 30 – INDICATES UNFUSED SWITCH 30 – FRAME SIZE 30/15 – INDICATES FUSED SWITCH 30 – FRAME SIZE 15 – FUSE SIZE CB – INDICATES ENCLOSED CIRCUIT BREAKER 30/15 CB – INDICATES COMBINATION FUSED SWITCH AND STARTER 30 – FRAME SIZE 15 – FUSE SIZE CB – INDICATES COMBINATION ENCLOSED CIRCUIT BREAKER AND STARTER
	WALL MOUNTED EMERGENCY POWER OFF BUTTON WITH SHIELD	SAFETY TECHNOLOGY INTERNATIONAL OR EQUAL

BRANCH CIRCUITRY

SYMBOL	DESCRIPTION	NOTES
	LIGHTING AND APPLIANCE BRANCH CIRCUITRY CONCEALED ABOVE	ARROW HEAD INDICATES HOME RUN CIRCUITRY TO 20A–1P CIRCUIT BREAKER (UNLESS NOTED OTHERWISE) NUMBER OF ARROW HEADS INDICATE NUMBER OF BRANCH POLES REQUIRED IN PANEL CROSS MARKS INDICATE NUMBER OR NO. 12 WIRES IN 3/4" CONDUIT PLUS GROUND. ABSENCE OF CROSSMARKS INDICATES 2@12, 1@12 GROUND HOME RUNS ARE INDICATED THUS: LL2 – 1, 3, 5
	LIGHTING AND APPLIANCE BRANCH RUN EXPOSED	
	INDIVIDUAL RUN TURNING UP	"LL2" DENOTES PANEL DESIGNATION. "1,3,5" DENOTES CIRCUIT NO'S 1,3,5 CONTAINING 20A. 1P. CB'S IN PANELBOARD
	INDIVIDUAL RUN TURNING DOWN	CONDUIT RUNS REQUIRING CIRCUIT BREAKER GREATER THAN 20A–1P WIRE SIZE GREATER THAN NO. 12 AND CONDUIT SIZE GREATER THAN 3/4" ARE NOTED NOTED THUS: LL2–1, 3, 5 50A 3P 4 #4, 1 #8 GROUND 1–1/4" CONDUIT
	INDIVIDUAL RUN TURNING UP&DOWN	

GENERAL CIRCUITRY

SYMBOL	DESCRIPTION	NOTES
	BUSWAY	
	CIRCUIT BREAKER BUS PLUG, BREAKERS AS INDICATED	
	BUSWAY FEED/ LUG CONNECTION	
	IDENTIFICATION OF INDIVIDUAL RUN OTHER THAN BRANCH CIRCUITRY OR SECONDARY FEEDERS	PE – PRIMARY ELECTRIC SE – SECONDARY ELECTRIC TEL – TELEPHONE TV – TELEVISION CATV – CABLE TELEVISION E – EMERGENCY

SECONDARY FEEDERS

SYMBOL	DESCRIPTION	NOTES
	FEEDER RUN CONCEALED ABOVE	ARROW HEAD INDICATES HOME RUN TO PANEL BOARD
	FEEDER RUN CONCEALED BELOW	FEEDER SIZING SHOWN ON POWER RISER DIAGRAM
	FEEDER RUN AS PER SPECIFIC NOTATION	

TAG SYMBOLS

SYMBOL	DESCRIPTION	NOTES
	INDEX SYMBOL	HEXAGONAL SYMBOLS CONTAINING TWO UPPER CASE LETTERS INDICATE REFERENCE TO A SCHEDULE OF SPECIAL EQUIPMENT HEXAGONAL SYMBOLS CONTAINING UPPER CASE LETTERS AND NUMERICALS INDICATE REFERENCE TO SCHEDULE OF MECHANICAL EQUIPMENT HEXAGONAL SYMBOLS CONTAINING NUMERICALS ONLY INDICATE REFERENCE TO AN EXPLANATION OF ELECTRICAL WORK REQUIREMENT
	GANGING CROSS REFERENCE	THE NOTED INDICATION ADJACENT TO A DEVICE DENOTES THAT THE DEVICE IS TO BE GANGED IN A BOX WITH ANOTHER DEVICE SIMILARLY NOTED AT THE SAME LOCATION ON ANOTHER DRAWING
( )	SPECIAL MOUNTING HEIGHT INDICATIONS	DIMENSION NOTED IN PARENTHESIS ADJACENT TO ANY ITEM OF THE DRAWINGS INDICATES THE HEIGHT OF IT'S HORIZONTAL CENTERLINE ABOVE FINISHED FLOOR
•	MOUNTING HEIGHT REFERENCE TO ARCHITECTURAL DRAWINGS	
	LINE INDICATING PHYSICAL SIZE OF ELECTRICAL ITEMS	INDICATION USED CIRCUMSCRIBING OTHER SYMBOLS TO DELINEATE PHYSICAL SIZE
	DETAIL TITLE ANNOTATION INDICATING DETAIL NUMBER	
	WIRING DEVICE GANGING SYMBOL	GANGING SYMBOL SHOWN IN CIRCUITRY RUN IN COMBINATION WITH ANY WIRING DEVICE SYMBOL THUS: S S S DENOTES WIRING DEVICES WHICH ARE TO BE GANGED IN A COMMON PLATE OUTLET

NURSE / EMERGENCY CALL SYSTEMS

SYMBOL	DESCRIPTION	NOTES
NC	NURSE CALL PATIENT PULL CHORD	
NC	NURSE CALL PATIENT DOME LIGHT	
NC	NURSE CALL DUTY STAFF STATION	
NCAP	NURSE CALL ANNUNCIATOR PANEL	
EC	EMERGENCY CALL PULL CHORD	
EC	EMERGENCY CALL DOME LIGHT	
EC	EMERGENCY CALL REMOTE STATION	
ECCP	EMERGENCY CALL COMMUNICATION PANEL	

AREA OF RESCUE/REFUGE SYSTEM

SYMBOL	DESCRIPTION	NOTES	
ARCU	VANDAL RESISTANT AREA OF RESCUE MAIN CONTROL PANEL	CORNELL: 9–4304 SERIES OR EQUAL	CONTRACTOR SHALL FURNISH AND INSTALL ALL NECESSARY POWER PACKS AND EXPANSION SWITCHES TO COMPLETE SYSTEM. PROVIDE 120V POWER AT EACH DEVICE CONFIRM ARCU ZONE QUANTITY WITH RB STATION QUANTITIES ON FLOOR PLANS POWER PACK: CORNELL: 9–5248A WITH BATTERY OR P–512243A WITH LIFE SAFETY CIRCUIT OR EQUAL
ARA	AREA OF RESCUE INDICATOR LIGHT WITH BATTERY BACKUP	CORNELL: SN–B SERIES OR EQUAL	
RB	VANDAL RESISTANT AREA OF RESCUE CALL STATION	CORNELL: 42018/V SERIES OR EQUAL	

FIRE ALARM SYSTEM

SYMBOL	DESCRIPTION	NOTES
F	MANUAL FIRE ALARM PULL STATION	
	FIRE FIGHTER FIRE EMERG PHONE	
	VISUAL ONLY FIRE ALARM DEVICE	
F	COMBINATION AUDIO AND VISUAL FIRE ALARM DEVICE	
F	CEILING MOUNTED AUDIO AND VISUAL FIRE ALARM DEVICE	
S	WALL MOUNTED FIRE ALARM SPEAKER	
LF	LOW FREQUENCY ALARM 520HZ IN ALL ROOMS USED FOR SLEEPING	
BS	LOW FREQUENCY ALARM GENERATOR WITH BED SHAKER	
S	WALL MOUNTED FIRE ALARM SPEAKER AND STROBE	
M	WALL MOUNTED MINI–HORN	
M	WALL MOUNTED FIRE ALARM MINI–HORN/STROBE	
F	FIRE ALARM MASTER BOX	
K	KNOX BOX	
R	ROTATING FIRE ALARM BEACON LIGHT	
EB	ELECTRIC BELL PROVIDE (1) DEDICATED 120V CIRCUIT	
FACP	FIRE ALARM CONTROL PANEL	
FAA	FIRE ALARM ANNUNCIATOR PANEL	
RTS	REMOTE TEST STATION	
RI	REMOTE INDICATOR ALARM DEVICE	
S	SMOKE DETECTOR	DETECTOR TYPE SUBSCRIPT: L – LOCAL 120V DETECTOR R – RECEIVER UNIT T – TRANSMITTER UNIT D – IN DUCT DETECTOR E – ELEVATOR RECALL B – BEAM TYPE PHOTOELECTRIC SA – SUPPLY AIR DUCT DETECTOR RA – RETURN AIR DUCT DETECTOR CO – COMBINATION SMOKE/CARBON MONOXIDE DETECTOR
H	HEAT DETECTOR	
S H	WALL MOUNTED SMOKE OR HEAT DETECTOR	
FS TS PS	SPRINKLER SYSTEM MONITOR FS WATER FLOW TS TAMPER SWITCH PS DRY ALARM PRESSURE SWITCH	MONITOR TYPE: MM – MONITORING MODULE CM – CONTROL MODULE
DH	MAGNETIC DOOR HOLDER	PROVIDE CONNECTION TO DOOR HARDWARE INTEGRAL HOLDERS
SK	SMOKE EXHAUST FAN KEY SWITCH	
I	ADDRESSABLE CONTROL OR MONITOR MODULE	MODULE SUBSCRIPT TYPE: C – CONTROL MODULE M – MONITOR MODULE

EXISTING ELECTRICAL EQUIPMENT

SYMBOL	DESCRIPTION	NOTES
ETR	EXISTING TO REMAIN	ALL EXISTING TO REMAIN LIGHTING SHALL BE CLEANED AND RELAMPED
X	EXISTING EQUIPMENT TO BE REMOVED	CONTRACTOR SHALL VERIFY THAT ALL EXISTING TO REMAIN ELECTRICAL DEVICES ARE OPERATIONAL & FUNCTIONAL. IF ETR DEVICES ARE NOT OPERATIONAL, IT SHALL BE REPLACED WITH A NEW DEVICE OF THAT TYPE. ALL REPLACED DEVICES SHALL MATCH EXISTING
XR	EXISTING EQUIPMENT TO BE REMOVED AND RELOCATED	CONTRACTOR SHALL EXTEND AND CONNECT EXISTING WIRING TO NEW LOCATION OF RELOCATED EQUIPMENT. CONTRACTOR SHALL REPLACE EXISTING WIRING BACK TO SOURCE IF NECESSARY IF EXISTING WIRING DOES NOT REACH RELOCATED EQUIPMENT. CONTRACTOR SHALL EVALUATE CONDITION OF EXISTING WIRING AND REPLACE IF NECESSARY.
RX	NEW LOCATION OF RELOCATED EXISTING EQUIPMENT	
RR	REMOVE EXISTING DEVICE AND REINSTALL NEW DEVICE IN SAME LOCATION	
F	DOTTED DENOTES EXISTING ELECTRICAL EQUIPMENT	

SECURITY/INTERCOM/ACCESS SYSTEMS

SYMBOL	DESCRIPTION	NOTES
DB PB	ILLUMINATED DOOR BELL PUSH BUTTON	EDWARDS C200 SERIES KIT OR EQUAL
DB C	DOOR BELL CHIME/BELL	CONTRACTOR SHALL PROVIDE 120V AT CHIME/BELL LOCATION
CR	CARD READER	UNLESS NOTED OTHERWISE, CONTRACTOR SHALL FURNISH AND INSTALL BACKBOX AT DEVICE LOCATION AND 1" CONDUIT ABOVE NEAREST ACCESSIBLE CEILING
KP	KEY PAD	
DC	DOOR CONTACT	CONTRACTOR SHALL PROVIDE 120V AT ALL MAIN SYSTEM PANEL LOCATIONS
ES	AD–400 WIRELESS LOCK	
LA	LOCAL DOOR ALARM	
PB	ADA PUSH BUTTON	
MD	CEILING MOUNTED MOTION DETECTOR	
SP	CEILING MOUNTED PUBLIC ADDRESS SPEAKER	
CCTV	CLOSED CIRCUIT TELEVISION CAMERA	
HC	HANDICAP ACCESS PUSH BUTTON	
PIM	PIM400 WIRELESS DOOR CONTROLLER	
IAP	INTRUSION ALARM PANEL	
MTP	MAIN VIDEO INTERCOM PANEL	REFER TO SPECIFICATIONS
IS	VIDEO INTERCOM STATION TALK/ACCESS	
VC	INTERCOM SPEAKER VOLUME CONTROL	

GENERAL NOTES

1. ALL CONDUITS AND EQUIPMENT SHALL BE INSTALLED AND GROUND IN ACCORDANCE WITH THE LATEST RULES AND REGULATIONS OF THE APPLICABLE LOCAL AND NATIONAL CODES.
2. CONDUIT RUNS ARE SHOWN DIAGRAMATICALLY ONLY AND SHALL BE INSTALLED IN A MANNER TO PREVENT CONFLICTS WITH EQUIPMENT AND STRUCTURAL CONDITIONS. EXPOSED CONDUITS SHALL BE INSTALLED PARRALEL TO BEAMS AND WALLS. EMPTY CONDUITS SHALL HAVE NYLON PULL LINE
3. CONDUITS SHALL BE TERMINATED SO AS TO PERMIT NEAT CONNECTIONS TO MOTORS AND OTHER EQUIPMENT.
4. NO CONDUIT SMALLER THAN 3/4". NOR WIRE SIZE SMALLER THAN NO. 12 A.W.G. FOR POWER SHALL BE USED UNLESS OTHERWISE NOTED.
5. THE WIRING DIAGRAMS, QUANTITY AND SIZE OF THE WIRES AND CONDUIT REPRESENT A SUGGESTED ARRANGEMENT BASED UPON SELECTED STANDARD COMPONENTS OF ELECTRICAL EQUIPMENT. MODIFICATIONS ACCEPTABLE TO THE CONSTRUCTION MANAGER MAY BE MADE BY THE CONTRACTOR TO ACCOMMODATE EQUIPMENT ACTUALLY PURCHASED. THE BASIC SEQUENCE AND METHOD OF CONTROL MUST BE MAINTAINED AS INDICATED ON THE DRAWINGS AND/OR SPECIFICATIONS.
6. SWITCHES SHALL BE MOUNTED 4'–0" ABOVE FINISHED FLOOR UNLESS OTHERWISE NOTED. RECEPTACLES SHALL BE MOUNTED 18" AFF
7. ALL SURFACE MOUNTED PANELS AND PANELBOARDS ON THE INSIDE OF EXTERIOR WALLS ABOVE GRADE OR IN OTHER LOCATIONS CONSIDERED AS DAMP, SHALL BE MOUNTED 50 #S TO MAINTAIN A 1/4" AIR SPACE BETWEEN THE ENCLOSURE AND THE WALL.
8. ALL PANELBOARDS SHALL BE MOUNTED SO THAT THE DISTANCE FROM THE TOP CIRCUIT BREAKER OPERATING HANDLE TO THE FLOOR SHALL NOT EXCEED 6'–6"
9. LIGHTING FIXTURES SHALL BE MOUNTED ACCORDING TO THE MOUNTING HEIGHT GIVEN ON THE DRAWINGS, WITH THE DISTANCE BEING MEASURED FROM THE BOTTOM OF THE LIGHTING FIXTURE TO THE FINISHED FLOOR.
10. FOR LOCATION OF HVAC, PLUMBING, FIRE PROTECTION, AND MISCELLANEOUS EQUIPMENT SEE RESPECTIVE TRADE DRAWINGS.
11. ALL CONDUIT RUNS CROSSING EXPANSION JOINTS SHALL HAVE EXPANSION OR EXPANSION AND DEFLECTION TYPE FITTINGS AS REQUIRED. FOR EXACT LOCATIONS OF EXPANSION JOINTS SEE STRUCTURAL DRAWINGS.
12. ALL MOTOR STARTER CONTROL TRANSFORMERS SHALL BE SIZED TO PROVIDE SUFFICIENT VOLT–AMPERE CAPACITY FOR OPERATING ALL ELECTRICAL DEVICES ASSOCIATED WITH CONTROL OF THE MOTOR, IN ADDITION TO THE STARTER COIL. IT SHALL INCLUDE RELAYS, TIMERS, MOTOR HEATERS, INDICATING LIGHTS, ETC.
13. CONDUIT AND WIRE (NOT SHOWN) FOR FIXTURES, SWITCHES AND/OR RECEPTACLES SHALL BE FURNISHED AND INSTALLED BY THE ELECTRICAL CONTRACTOR AND SHALL BE:
    a. 3/4" (MIN.) CONDUIT RUN
    1. EXPOSED IN UNFINISHED AREAS.
    2. CONCEALED ABOVE HUNG CEILINGS AND IN WALLS IN FINISHED AREAS.
    b. NO.12 (MIN.) Cu WIRE (MIN.) TYPE "THWN/THHN" NO. OF WIRES AS REQUIRED.
14. FOR EQUIPMENT PAD CONSTRUCTION DETAILS SEE STRUCTURAL DRAWINGS.
15. ALL 120V BRANCH CIRCUITS GREATER THAN 100 LINEAR FEET SHALL BE #10AWG MIN.
16. THE ELECTRICAL CONTRACTOR SHALL PROVIDE LAYOUTS FOR ALL ELECTRICAL ROOMS BASED ON ACTUAL EQUIPMENT OF MANUFACTURER SELECTED, SUBMIT FOR REVIEW PRIOR TO INSTALLATION.
17. PROVIDE ELECTRICAL OUTLET PLATE GASKET SEALS AT RECEPTACLES, SWITCHES AND OTHER ELECTRICAL BOXES ON EXTERIOR WALLS AND ON INTERIOR WALLS BETWEEN CONDITIONED AND NON–CONDITIONED SPACES.
18. THE ELECTRICAL CONTRACTOR SHALL SUBMIT A PLAN FOR APPROVAL SHOWING ALL ELECTRICAL, TELEPHONE, SECURITY, FIRE ALARM, COMMUNICATION AND OTHER SYSTEMS CONDUITS IN SLAB AND ABOVE CEILING ETC.. COORDINATE WITH OTHER TRADES AND BUILDING'S STRUCTURE TO AVOID ANY CONFLICT.
19. ALL TERMINATION LUGS SHALL BE SIZED ACCORDINGLY TO ACCOMMODATE INDICATED CONDUCTORS.
20. THE ELECTRICAL CONTRACTOR SHALL SUBMIT PLANS FOR APPROVAL SHOWING ALL COMMUNICATIONS EQUIPMENT AND DEVICES THROUGHOUT THE BUILDING. THE ELECTRICAL CONTRACTOR SHALL ALSO LABEL AND IDENTIFY ALL CONDUITS THAT SERVE DIFFERNT SYSTEMS.
21. REFER TO THE ARCHITECTURAL REFLECTED CEILING PLANS AND ELEVATIONS FOR EXACT LOCATIONS OF ALL LIGHT FIXTURES.
22. COORDINATE LOCATIONS OF ALL LIGHT FIXTURES IN MECHANICAL AND ELECTRICAL ROOMS WITH LAYOUT OF EQUIPMENT, PIPING AND DUCTWORK.
23. ALL EXIT SIGNS SHALL BE UNSWITCHED.
24. ALL SWITCHED LIGHT FIXTURES CIRCUITED TO A NORMAL/EMERGENCY CIRCUIT ARE TO BE WIRED WITH AN EMERGENCY BY–PASS RELAY.
25. ALL 20 AMPERE, SINGLE POLE CIRCUITS SHALL BE PROVIDED WITH A SEPARATE FULL SIZE NEUTRAL CONDUCTOR.
26. CONFIRM EXACT POWER REQUIREMENTS AND CONNECTION LOCATIONS FOR ALL EQUIPMENT WITH THE PLUMBING, FIRE PROTECTION, HVAC AND GENERAL CONTRACTOR
27. PROVIDE AN SOU KIT FOR ALL MECH EQUIPMENT RATED LESS THAN 1/2HP (TYP)
28. CERTAIN SYMBOLS IN THE SYMBOL LIST DO NOT APPEAR ELSEWHERE IN THE DRAWINGS. SUCH SYMBOLS ARE INCLUDED TO PERMIT INTERPRETATIONS TO BE MADE IN THE EVENT OF DESIGN CHANGES.
29. ELECTRICAL CONTRACTOR SHALL MAINTAIN RATING OF ANY CEILING, WALL, FLOOR OR ANY BUILDING STRUCTURE THAT ANY ELECTRICAL SYSTEM PENETRATES. SEE ARCHITECTURAL PLAN FOR RATINGS.

ABBREVIATIONS

ABBR	ABBREVIATIONS	L	LENGTH
A/AMP	AMPERE	LA	LIGHTNING ARRESTOR
AC	ALTERNATING CURRENT	LP	LIGHTING PANEL
A/C	AIR CONDITIONING	LTG	LIGHTING
AFF	ABOVE FINISHED FLOOR	LV	LOW VOLTAGE
AFG	ABOVE FINISHED GRADE		
ARCH	ARCHITECTURAL	M	METER
ATC	AUTOMATIC TEMPERATURE CONTROL	MM	MILLIMETER
		MCB	MAIN CIRCUIT BREAKER
ATS	AUTOMATIC TRANSFER SWITCH	MEC	MASS ELECTRIC COMPANY
AUTO	AUTOMATIC	MECH	MECHANICAL
		MFR	MANUFACTURER
BAT	BATTERY	MLO	MAIN LUG ONLY
BIS	BYPASS ISOLATOR SWITCH	MISC	MISCELLANEOUS
		MTD	MOUNTED
C	CONDUIT		
CATV	CABLE TELEVISION	N	NEUTRAL
CAB	CABINET	N/C	NORMALLY CLOSED
CB	CIRCUIT BREAKER	NEC

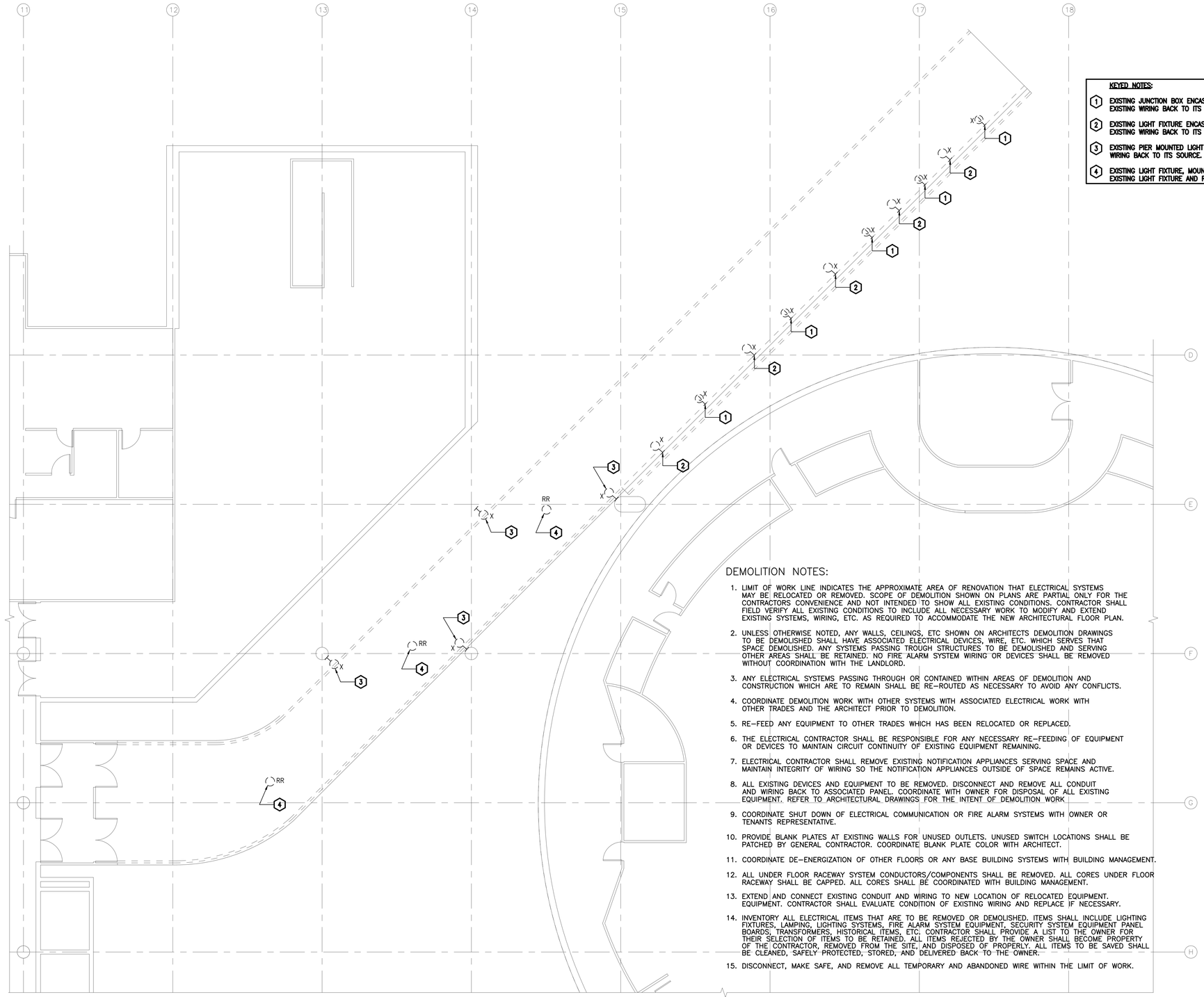

KEYED NOTES:

1. EXISTING JUNCTION BOX ENCASED IN EXISTING CONCRETE WALL. REMOVE EXISTING WIRING BACK TO ITS SOURCE.
2. EXISTING LIGHT FIXTURE ENCASED IN EXISTING CONCRETE WALL. REMOVE EXISTING WIRING BACK TO ITS SOURCE.
3. EXISTING PIER MOUNTED LIGHT FIXTURE TO BE REMOVED. REMOVE EXISTING WIRING BACK TO ITS SOURCE.
4. EXISTING LIGHT FIXTURE, MOUNTED TO UNDERSIDE OF RAMP. REMOVE EXISTING LIGHT FIXTURE AND REPLACE WITH NEW.

DEMOLITION NOTES:

1. LIMIT OF WORK LINE INDICATES THE APPROXIMATE AREA OF RENOVATION THAT ELECTRICAL SYSTEMS MAY BE RELOCATED OR REMOVED. SCOPE OF DEMOLITION SHOWN ON PLANS ARE PARTIAL ONLY FOR THE CONTRACTORS CONVENIENCE AND NOT INTENDED TO SHOW ALL EXISTING CONDITIONS. CONTRACTOR SHALL FIELD VERIFY ALL EXISTING CONDITIONS TO INCLUDE ALL NECESSARY WORK TO MODIFY AND EXTEND EXISTING SYSTEMS, WIRING, ETC. AS REQUIRED TO ACCOMMODATE THE NEW ARCHITECTURAL FLOOR PLAN.
2. UNLESS OTHERWISE NOTED, ANY WALLS, CEILINGS, ETC SHOWN ON ARCHITECTS DEMOLITION DRAWINGS TO BE DEMOLISHED SHALL HAVE ASSOCIATED ELECTRICAL DEVICES, WIRE, ETC. WHICH SERVES THAT SPACE DEMOLISHED. ANY SYSTEMS PASSING TROUGH STRUCTURES TO BE DEMOLISHED AND SERVING OTHER AREAS SHALL BE RETAINED. NO FIRE ALARM SYSTEM WIRING OR DEVICES SHALL BE REMOVED WITHOUT COORDINATION WITH THE LANDLORD.
3. ANY ELECTRICAL SYSTEMS PASSING THROUGH OR CONTAINED WITHIN AREAS OF DEMOLITION AND CONSTRUCTION WHICH ARE TO REMAIN SHALL BE RE-ROUTED AS NECESSARY TO AVOID ANY CONFLICTS.
4. COORDINATE DEMOLITION WORK WITH OTHER SYSTEMS WITH ASSOCIATED ELECTRICAL WORK WITH OTHER TRADES AND THE ARCHITECT PRIOR TO DEMOLITION.
5. RE-FEED ANY EQUIPMENT TO OTHER TRADES WHICH HAS BEEN RELOCATED OR REPLACED.
6. THE ELECTRICAL CONTRACTOR SHALL BE RESPONSIBLE FOR ANY NECESSARY RE-FEEDING OF EQUIPMENT OR DEVICES TO MAINTAIN CIRCUIT CONTINUITY OF EXISTING EQUIPMENT REMAINING.
7. ELECTRICAL CONTRACTOR SHALL REMOVE EXISTING NOTIFICATION APPLIANCES SERVING SPACE AND MAINTAIN INTEGRITY OF WIRING SO THE NOTIFICATION APPLIANCES OUTSIDE OF SPACE REMAINS ACTIVE.
8. ALL EXISTING DEVICES AND EQUIPMENT TO BE REMOVED. DISCONNECT AND REMOVE ALL CONDUIT AND WIRING BACK TO ASSOCIATED PANEL. COORDINATE WITH OWNER FOR DISPOSAL OF ALL EXISTING EQUIPMENT. REFER TO ARCHITECTURAL DRAWINGS FOR THE INTENT OF DEMOLITION WORK
9. COORDINATE SHUT DOWN OF ELECTRICAL COMMUNICATION OR FIRE ALARM SYSTEMS WITH OWNER OR TENANTS REPRESENTATIVE.
10. PROVIDE BLANK PLATES AT EXISTING WALLS FOR UNUSED OUTLETS. UNUSED SWITCH LOCATIONS SHALL BE PATCHED BY GENERAL CONTRACTOR. COORDINATE BLANK PLATE COLOR WITH ARCHITECT.
11. COORDINATE DE-ENERGIZATION OF OTHER FLOORS OR ANY BASE BUILDING SYSTEMS WITH BUILDING MANAGEMENT.
12. ALL UNDER FLOOR RACEWAY SYSTEM CONDUCTORS/COMPONENTS SHALL BE REMOVED. ALL CORES UNDER FLOOR RACEWAY SHALL BE CAPPED. ALL CORES SHALL BE COORDINATED WITH BUILDING MANAGEMENT.
13. EXTEND AND CONNECT EXISTING CONDUIT AND WIRING TO NEW LOCATION OF RELOCATED EQUIPMENT. EQUIPMENT. CONTRACTOR SHALL EVALUATE CONDITION OF EXISTING WIRING AND REPLACE IF NECESSARY.
14. INVENTORY ALL ELECTRICAL ITEMS THAT ARE TO BE REMOVED OR DEMOLISHED. ITEMS SHALL INCLUDE LIGHTING FIXTURES, LAMPING, LIGHTING SYSTEMS, FIRE ALARM SYSTEM EQUIPMENT, SECURITY SYSTEM EQUIPMENT PANEL BOARDS, TRANSFORMERS, HISTORICAL ITEMS, ETC. CONTRACTOR SHALL PROVIDE A LIST TO THE OWNER FOR THEIR SELECTION OF ITEMS TO BE RETAINED. ALL ITEMS REJECTED BY THE OWNER SHALL BECOME PROPERTY OF THE CONTRACTOR, REMOVED FROM THE SITE, AND DISPOSED OF PROPERLY. ALL ITEMS TO BE SAVED SHALL BE CLEANED, SAFELY PROTECTED, STORED, AND DELIVERED BACK TO THE OWNER.
15. DISCONNECT, MAKE SAFE, AND REMOVE ALL TEMPORARY AND ABANDONED WIRE WITHIN THE LIMIT OF WORK.

1 EXISTING ELECTRICAL PLAN

SCALE: 1/8" = 1'-0"

CCRI WARWICK RENEWAL
ENTRY RAMP ENCLOSURE

400 EAST AVENUE, WARWICK RI 02886

BREWSTER THORNTON GROUP ARCHITECTS LLP
150 Chestnut Street
Providence, RI
02903
Tel: 401.861.1600
Fax: 401.861.5588

Z.M. WOZNY
REGISTERED PROFESSIONAL ENGINEER

JOB NO.	DATE
1609A	November 1, 2018

ISSUE :

NO.	REVISION DESCRIPTION	DATE

SHEET TITLE

ELECTRICAL DEMOLITION FLOOR PLAN

SHEET

E1.0

WB&A
Wozny/Barbar & Associates, Inc.
CONSULTING ENGINEERS
1076 Washington Street
Hanover, MA 02339
Tel: (781) 826-4144
Fax: (781) 924-5792
www.wbaengineers.com
161 Exchange Street
3rd Floor
Pawtucket, RI 02860

11/6/2018 1:22:04 PM

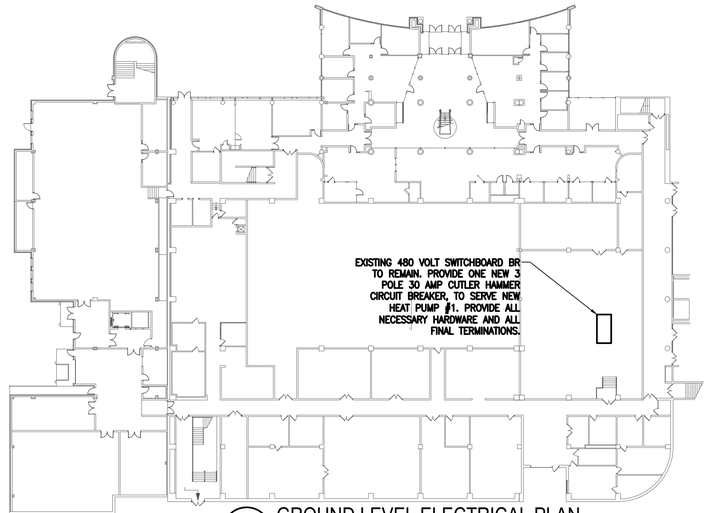

1 GROUND LEVEL ELECTRICAL PLAN

SCALE: 1" = 30'-0"

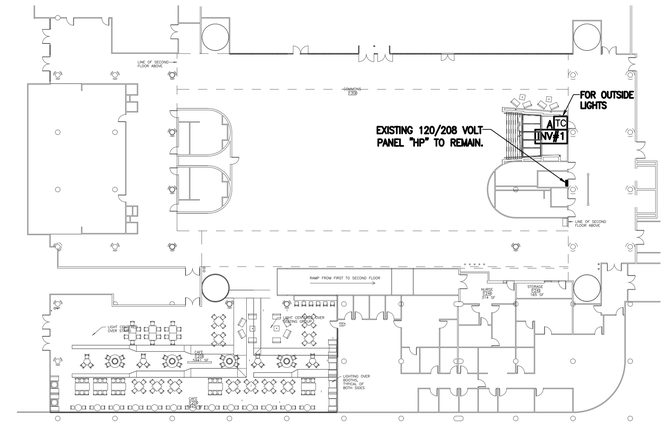

2 FIRST FLOOR ELECTRICAL PLAN

SCALE: 1" = 30'-0"

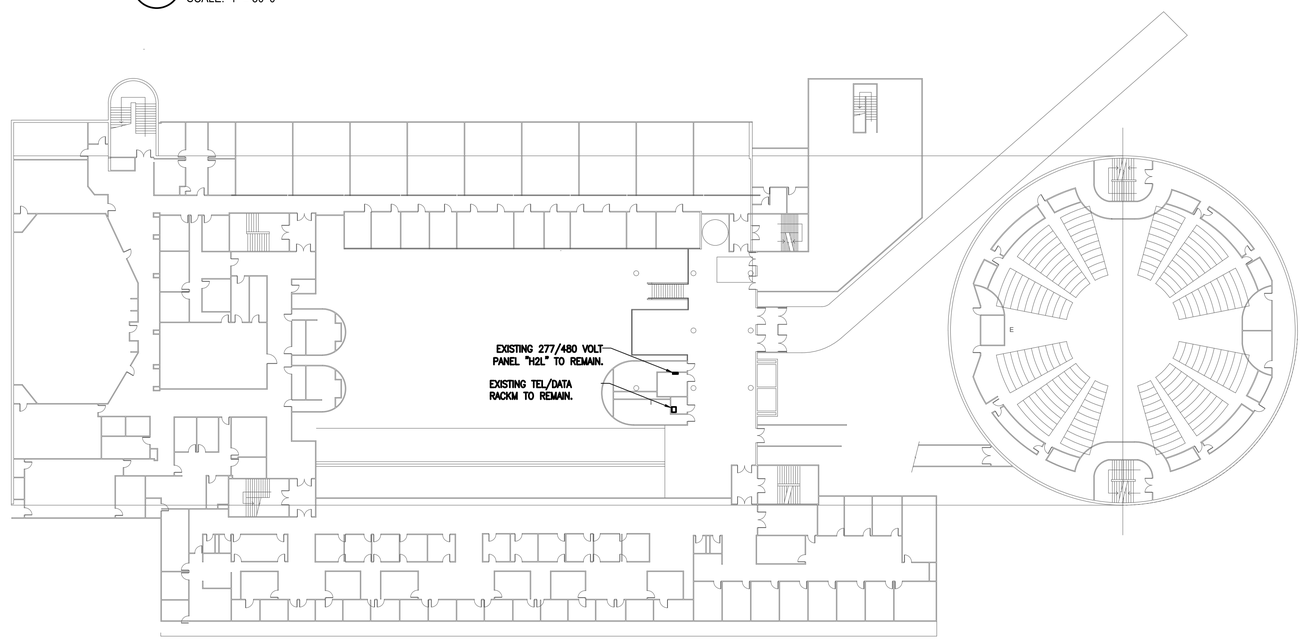

3 SECOND FLOOR ELECTRICAL PLAN

SCALE: 1" = 30'-0"

CCRI WARWICK RENEWAL ENTRY RAMP ENCLOSURE

400 EAST AVENUE, WARWICK RI 02886

BREWSTER THORNTON GROUP ARCHITECTS LLP
150 Chestnut Street
Providence, RI
02903
Tel: 401.861.1600
Fax: 401.861.5588

Z.M. WOZNY
REGISTERED PROFESSIONAL ENGINEER

JOB NO.	DATE
1609A	November 1, 2018

ISSUE :

NO.	REVISION DESCRIPTION	DATE

SHEET TITLE

ELECTRICAL GROUND LEVEL FLOOR PLAN

SHEET

E2.0

WB&A
Wozny/Barbar & Associates, Inc.
CONSULTING ENGINEERS
1076 Washington Street
Hanover, MA 02339
Tel: (781) 826-4144
Fax: (781) 924-5792
www.wbaengineers.com
161 Exchange Street
3rd Floor
Pawtucket, RI 02860

11/6/2018 1:22:10 PM

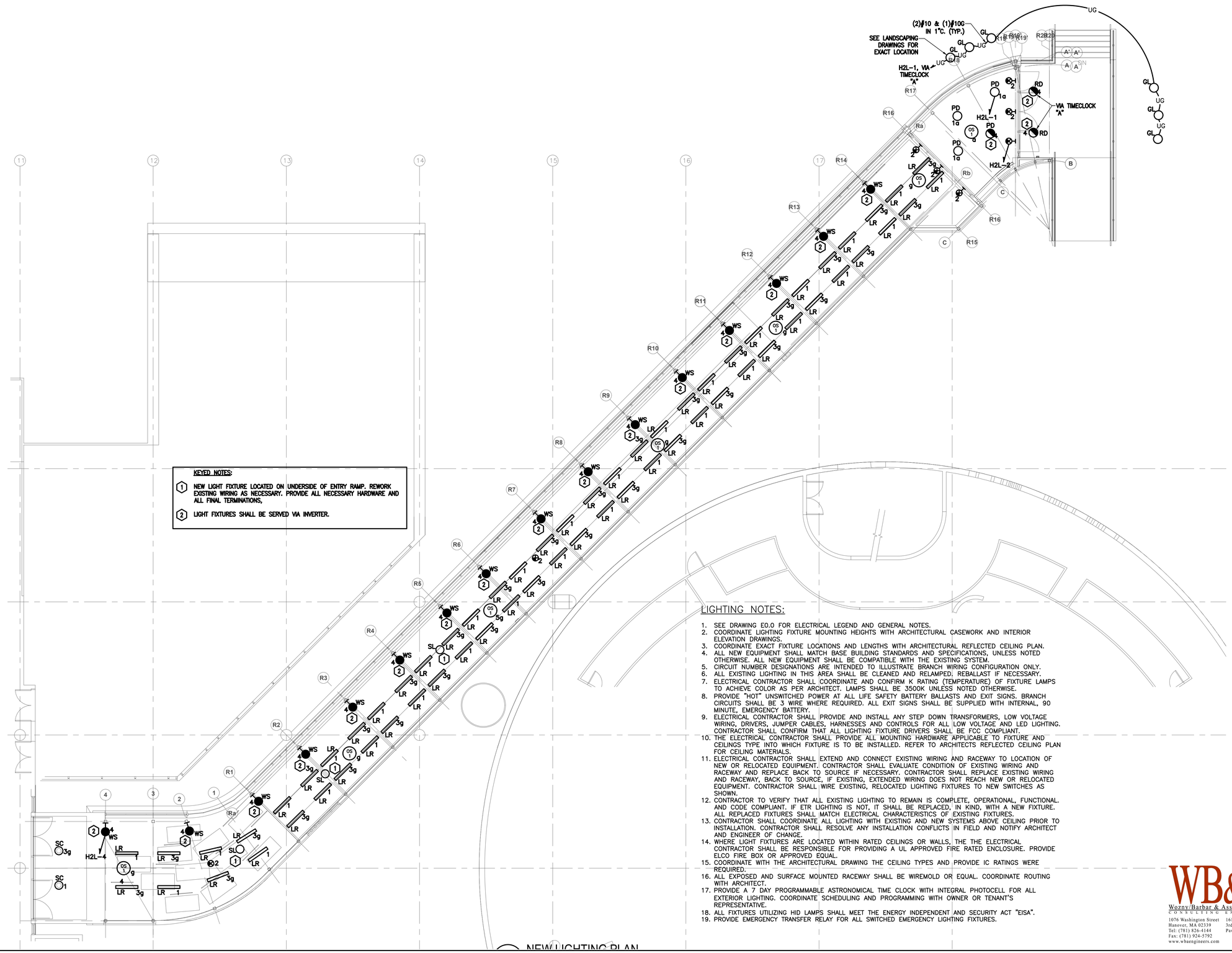

KEYED NOTES:

1. NEW LIGHT FIXTURE LOCATED ON UNDERSIDE OF ENTRY RAMP. REWORK EXISTING WIRING AS NECESSARY. PROVIDE ALL NECESSARY HARDWARE AND ALL FINAL TERMINATIONS,
2. LIGHT FIXTURES SHALL BE SERVED VIA INVERTER.

NEW LIGHTING PLAN

LIGHTING NOTES:

1. SEE DRAWING E0.0 FOR ELECTRICAL LEGEND AND GENERAL NOTES.
2. COORDINATE LIGHTING FIXTURE MOUNTING HEIGHTS WITH ARCHITECTURAL CASEWORK AND INTERIOR ELEVATION DRAWINGS.
3. COORDINATE EXACT FIXTURE LOCATIONS AND LENGTHS WITH ARCHITECTURAL REFLECTED CEILING PLAN.
4. ALL NEW EQUIPMENT SHALL MATCH BASE BUILDING STANDARDS AND SPECIFICATIONS, UNLESS NOTED OTHERWISE. ALL NEW EQUIPMENT SHALL BE COMPATIBLE WITH THE EXISTING SYSTEM.
5. CIRCUIT NUMBER DESIGNATIONS ARE INTENDED TO ILLUSTRATE BRANCH WIRING CONFIGURATION ONLY.
6. ALL EXISTING LIGHTING IN THIS AREA SHALL BE CLEANED AND RELAMPED; REBALLAST IF NECESSARY.
7. ELECTRICAL CONTRACTOR SHALL COORDINATE AND CONFIRM K RATING (TEMPERATURE) OF FIXTURE LAMPS TO ACHIEVE COLOR AS PER ARCHITECT. LAMPS SHALL BE 3500K UNLESS NOTED OTHERWISE.
8. PROVIDE "HOT" UNSWITCHED POWER AT ALL LIFE SAFETY BATTERY BALLASTS AND EXIT SIGNS. BRANCH CIRCUITS SHALL BE 3 WIRE WHERE REQUIRED. ALL EXIT SIGNS SHALL BE SUPPLIED WITH INTERNAL, 90 MINUTE, EMERGENCY BATTERY.
9. ELECTRICAL CONTRACTOR SHALL PROVIDE AND INSTALL ANY STEP DOWN TRANSFORMERS, LOW VOLTAGE WIRING, DRIVERS, JUMPER CABLES, HARNESSES AND CONTROLS FOR ALL LOW VOLTAGE AND LED LIGHTING. CONTRACTOR SHALL CONFIRM THAT ALL LIGHTING FIXTURE DRIVERS SHALL BE FCC COMPLIANT.
10. THE ELECTRICAL CONTRACTOR SHALL PROVIDE ALL MOUNTING HARDWARE APPLICABLE TO FIXTURE AND CEILINGS TYPE INTO WHICH FIXTURE IS TO BE INSTALLED. REFER TO ARCHITECTS REFLECTED CEILING PLAN FOR CEILING MATERIALS.
11. ELECTRICAL CONTRACTOR SHALL EXTEND AND CONNECT EXISTING WIRING AND RACEWAY TO LOCATION OF NEW OR RELOCATED EQUIPMENT. CONTRACTOR SHALL EVALUATE CONDITION OF EXISTING WIRING AND RACEWAY AND REPLACE BACK TO SOURCE IF NECESSARY. CONTRACTOR SHALL REPLACE EXISTING WIRING AND RACEWAY, BACK TO SOURCE, IF EXISTING, EXTENDED WIRING DOES NOT REACH NEW OR RELOCATED EQUIPMENT. CONTRACTOR SHALL WIRE EXISTING, RELOCATED LIGHTING FIXTURES TO NEW SWITCHES AS SHOWN.
12. CONTRACTOR TO VERIFY THAT ALL EXISTING LIGHTING TO REMAIN IS COMPLETE, OPERATIONAL, FUNCTIONAL, AND CODE COMPLIANT. IF ETR LIGHTING IS NOT, IT SHALL BE REPLACED, IN KIND, WITH A NEW FIXTURE. ALL REPLACED FIXTURES SHALL MATCH ELECTRICAL CHARACTERISTICS OF EXISTING FIXTURES.
13. CONTRACTOR SHALL COORDINATE ALL LIGHTING WITH EXISTING AND NEW SYSTEMS ABOVE CEILING PRIOR TO INSTALLATION. CONTRACTOR SHALL RESOLVE ANY INSTALLATION CONFLICTS IN FIELD AND NOTIFY ARCHITECT AND ENGINEER OF CHANGE.
14. WHERE LIGHT FIXTURES ARE LOCATED WITHIN RATED CEILINGS OR WALLS, THE THE ELECTRICAL CONTRACTOR SHALL BE RESPONSIBLE FOR PROVIDING A UL APPROVED FIRE RATED ENCLOSURE. PROVIDE ELCO FIRE BOX OR APPROVED EQUAL.
15. COORDINATE WITH THE ARCHITECTURAL DRAWING THE CEILING TYPES AND PROVIDE IC RATINGS WERE REQUIRED.
16. ALL EXPOSED AND SURFACE MOUNTED RACEWAY SHALL BE WIREMOLD OR EQUAL. COORDINATE ROUTING WITH ARCHITECT.
17. PROVIDE A 7 DAY PROGRAMMABLE ASTRONOMICAL TIME CLOCK WITH INTEGRAL PHOTOCELL FOR ALL EXTERIOR LIGHTING. COORDINATE SCHEDULING AND PROGRAMMING WITH OWNER OR TENANT'S REPRESENTATIVE.
18. ALL FIXTURES UTILIZING HID LAMPS SHALL MEET THE ENERGY INDEPENDENT AND SECURITY ACT "EISA".
19. PROVIDE EMERGENCY TRANSFER RELAY FOR ALL SWITCHED EMERGENCY LIGHTING FIXTURES.

WB&A
Wozny/Barbar & Associates, Inc.
CONSULTING ENGINEERS
1076 Washington Street
Hanover, MA 02339
Tel: (781) 826-4144
Fax: (781) 924-5792
www.wbaengineers.com
161 Exchange Street
3rd Floor
Pawtucket, RI 02860

CCRI WARWICK RENEWAL
ENTRY RAMP ENCLOSURE

400 EAST AVENUE, WARWICK RI 02886

BREWSTER THORNTON GROUP ARCHITECTS LLP
150 Chestnut Street
Providence, RI
02903
Tel: 401.861.1600
Fax 401.861.5588

Z.M. WOZNY
REGISTERED PROFESSIONAL ENGINEER

JOB NO.	DATE
1609A	November 1, 2018

ISSUE :

NO.	REVISION DESCRIPTION	DATE

SHEET TITLE

ELECTRICAL NEW LIGHTING FLOOR PLAN

SHEET

E3.0

11/6/2018 1:22:18 PM

POWER/COMM NOTES:

1. SEE DRAWING E0.0 FOR ELECTRICAL LEGEND AND GENERAL NOTES.
2. COORDINATE EXACT ELECTRICAL DEVICE MOUNTING HEIGHTS AND LOCATIONS WITH ARCHITECTURAL CASEWORK OR ARCHITECTURAL INTERIOR/EXTERIOR ELEVATION DRAWINGS.
3. COORDINATE AND CONFIRM COLOR OF RECEPTACLE FACEPLATES AND DEVICES WITH ARCHITECT
4. ALL NEW EQUIPMENT SHALL MATCH BASE BUILDING STANDARDS AND SPECIFICATIONS, UNLESS NOTED OTHERWISE. ALL NEW EQUIPMENT SHALL BE COMPATIBLE WITH THE EXISTING SYSTEM.
5. CIRCUIT NUMBER DESIGNATIONS ARE INTENDED TO ILLUSTRATE BRANCH WIRING CONFIGURATION ONLY.
6. ELECTRICAL CONTRACTOR SHALL CONFIRM AND COORDINATE ELECTRICAL CONNECTION AND WIRING SCHEME WITH FURNITURE VENDOR PRIOR TO INSTALLATION. CONFIRM POINT OF CONNECTION WITH ARCHITECT. FURNISH AND INSTALL STAINLESS STEEL PLATE AND 1" FLEXIBLE METAL CONDUIT CONNECTION TO FURNITURE.
7. DEVICES SHALL BE COORDINATED WITH THE DEPTH OF NEW PARTITIONS.
8. CONTRACTOR SHALL COORDINATE ALL NEW EQUIPMENT POWER REQUIREMENTS AND NEMA PLUG CONFIGURATION WITH OWNER AND/OR TENANTS REPRESENTATIVE PRIOR TO INSTALLATION. FURNISH AND INSTALL ADDITIONAL EQUIPMENT TO COMPLETE INSTALLATION.
9. CONTRACTOR TO VERIFY THAT ALL EXISTING TO REMAIN ELECTRICAL DEVICES AND EQUIP ARE OPERATIONAL, FUNCTIONAL, AND CODE COMPLIANT. IF ETR DEVICES ARE NOT, THEY SHALL BE REPLACED, IN KIND, WITH A NEW DEVICE. ALL REPLACED DEVICES SHALL MATCH EXISTING DEVICES UNLESS NOTED OTHERWISE.
10. ALL POWER/DATA OUTLET FACEPLATES SHALL BE LABELED WITH CIRCUIT NUMBER FEEDING OUTLET AND PANEL DESIGNATION. LABEL STYLE AND SIZE SHALL MATCH BASE BUILDING STANDARDS. CONTRACTOR SHALL COORDINATE COLOR, SIZE AND METHOD OF LABELING WITH ARCHITECT.
11. ELECTRICAL CONTRACTOR SHALL CONFIRM AND COORDINATE QUANTITY AND SIZE OF ALL AUDIO/VISUAL RACEWAYS AND JUNCTION BOXES WITH AUDO/VISUAL SUB-CONSULTANT.
12. ELECTRICAL CONTRACTOR SHALL EXTEND AND CONNECT EXISTING WIRING AND RACEWAY TO LOCATION OF NEW OR RELOCATED EQUIPMENT. CONTRACTOR SHALL EVALUATE CONDITION OF EXISTING WIRING AND RACEWAY AND REPLACE BACK TO SOURCE IF NECESSARY. CONTRACTOR SHALL REPLACE EXISTING WIRING AND RACEWAY, BACK TO SOURCE, IF EXISTING, EXTENDED WIRING DOES NOT REACH NEW OR RELOCATED EQUIPMENT.
13. ALL EXTERIOR AND SURFACE MOUNTED CONDUIT SHALL BE GALVANIZED RIGID STEEL, UNLESS NOTED OTHERWISE. COORDINATE ROUTING OF CONDUIT(S) WITH ARCHITECT. ALL WIRING SHALL BE CONCEALED. ANY WIRING THAT CANNOT BE CONCEALED SHALL BE REVIEWED WITH THE ARCHITECT PRIOR TO INSTALLATION.
14. ELECTRICAL CONTRACTOR SHALL PROVIDE FIRE STOPPING PUTTY PADS FOR BACK TO BACK DEVICES WITHIN THE SAME STUD BAY OF COMMON WALL BETWEEN UNITS AND COMMON CORRIDORS.
15. ELECTRICAL CONTRACTOR SHALL PROVIDE AIR TIGHT BACKBOXES AND GASKETED COVER PLATES FOR ALL DEVICES LOCATED ON EXTERIOR WALLS.
16. CONTRACTOR SHALL FURNISH AND INSTALL RECESSED, DUAL GANG, TV BOX AT ALL WALL MOUNTED TV AND MONITOR LOCATIONS. CONFIRM MOUNTING HEIGHT WITH ARCHITECT. CONFIRM ALL AUDIO/VISUAL AND TEL/DATA CONNECTIONS WITH OWNER AND SUB-CONSULTANTS.
17. PANEL BOARD CLEARANCE ZONE (36" IN FRONT 6" EACH SIDE) NO CASWEORK OR FIXED EQUIPMENT SHALL BE INSTALLED ABOVE OR BELOW PANEL WITHIN THIS ZONE. CONTRACTOR SHALL COORDINATE AND RESOLVE ANY CONFLICTS WITH ARCHITECT PRIOR TO INSTALLATION OF PANELBORD, EQUIPMENT AND CASEWORK.
18. CONTRACTOR SHALL FURNISH AND INSTALL ACCESSIBLE, REMOTE TEST SWITCH STATIONS FOR GFI RECEPTACLES THAT WOULD NOT BE ACCESSIBLE DUE TO REFRIGERATORS, VENDING MACHINES, EQUIPMENT, ETC. CONFIRM LOCATIONS OF REMOTE TEST STATIONS WITH ARCHITECT.
19. CONTRACTOR SHALL FURNISH AND INSTALL GFCI PROTECTION FOR ALL SINGLE PHASE RECEPTACLES RATED 50A OR LESS NOT EXCEEDING 150V TO GROUND AND THREE PHASE RECEPTACLES RATED 100A OR LESS NOT EXCEEDING 150V TO GROUND INSTALLED IN ALL BATHROOMS, KITCHENS, ROOFTOPS, OUTDOORS, LOCKER ROOMS, GARAGES, CRAWL SPACES.

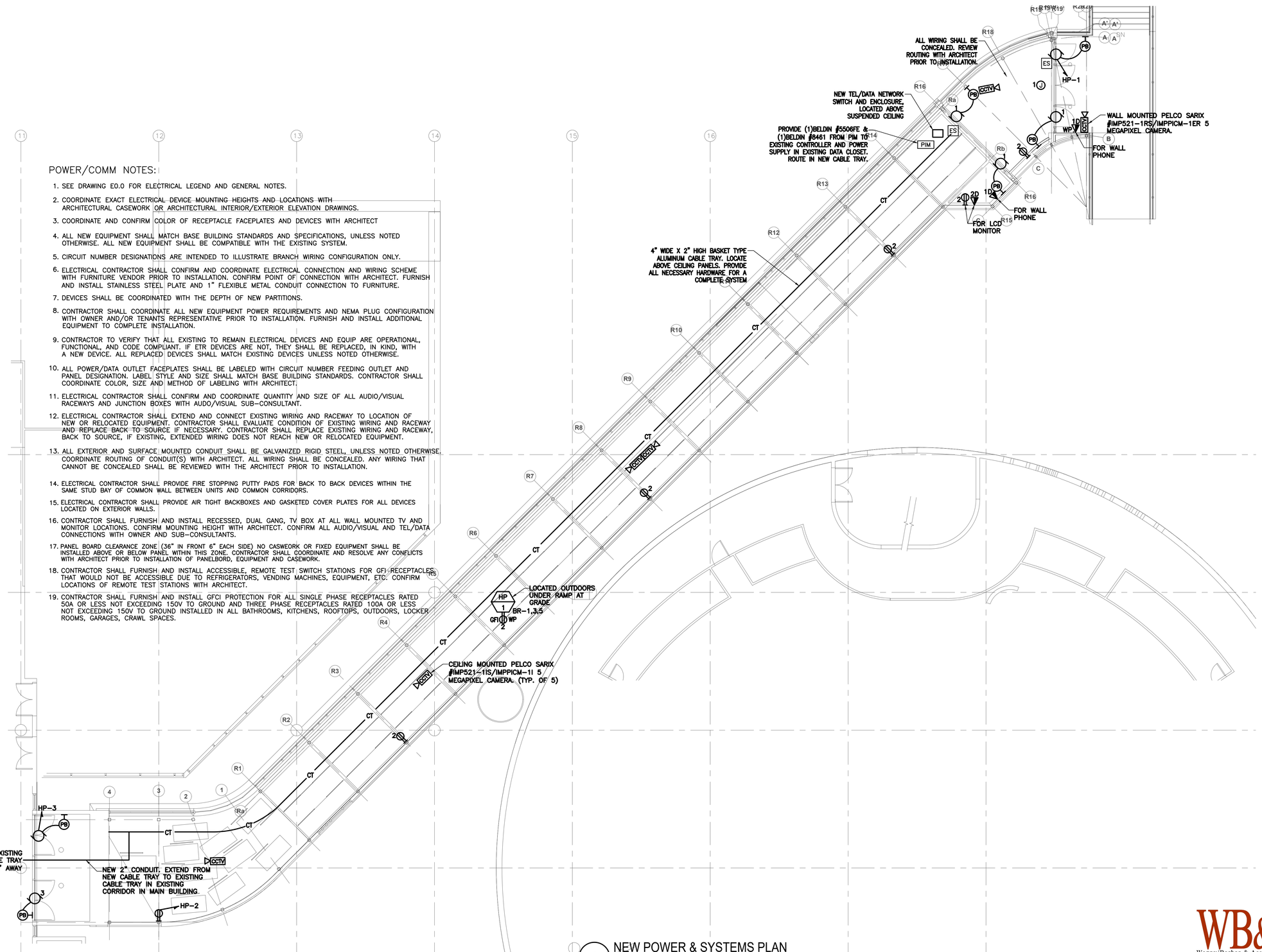

1 NEW POWER & SYSTEMS PLAN

SCALE: 1/8" = 1'-0"

CCRI WARWICK RENEWAL ENTRY RAMP ENCLOSURE

400 EAST AVENUE, WARWICK RI 02886

BREWSTER THORNTON GROUP ARCHITECTS LLP

150 Chestnut Street
Providence, RI
02903
Tel: 401.861.1600
Fax: 401.861.5588

Z.M. WOZNY
REGISTERED PROFESSIONAL ENGINEER

WB&A
Wozny/Barbar & Associates, Inc.
CONSULTING ENGINEERS

1076 Washington Street
Hanover, MA 02339
Tel: (781) 826-4144
Fax: (781) 924-5792
www.wbaengineers.com

161 Exchange Street
3rd Floor
Pawtucket, RI 02860

JOB NO.	DATE
1609A	November 1, 2018

ISSUE :

NO.	REVISION DESCRIPTION	DATE

SHEET TITLE

ELECTRICAL NEW POWER AND SYSTEMS FLOOR PLAN

SHEET

E4.0

11/6/2018 1:22:23 PM

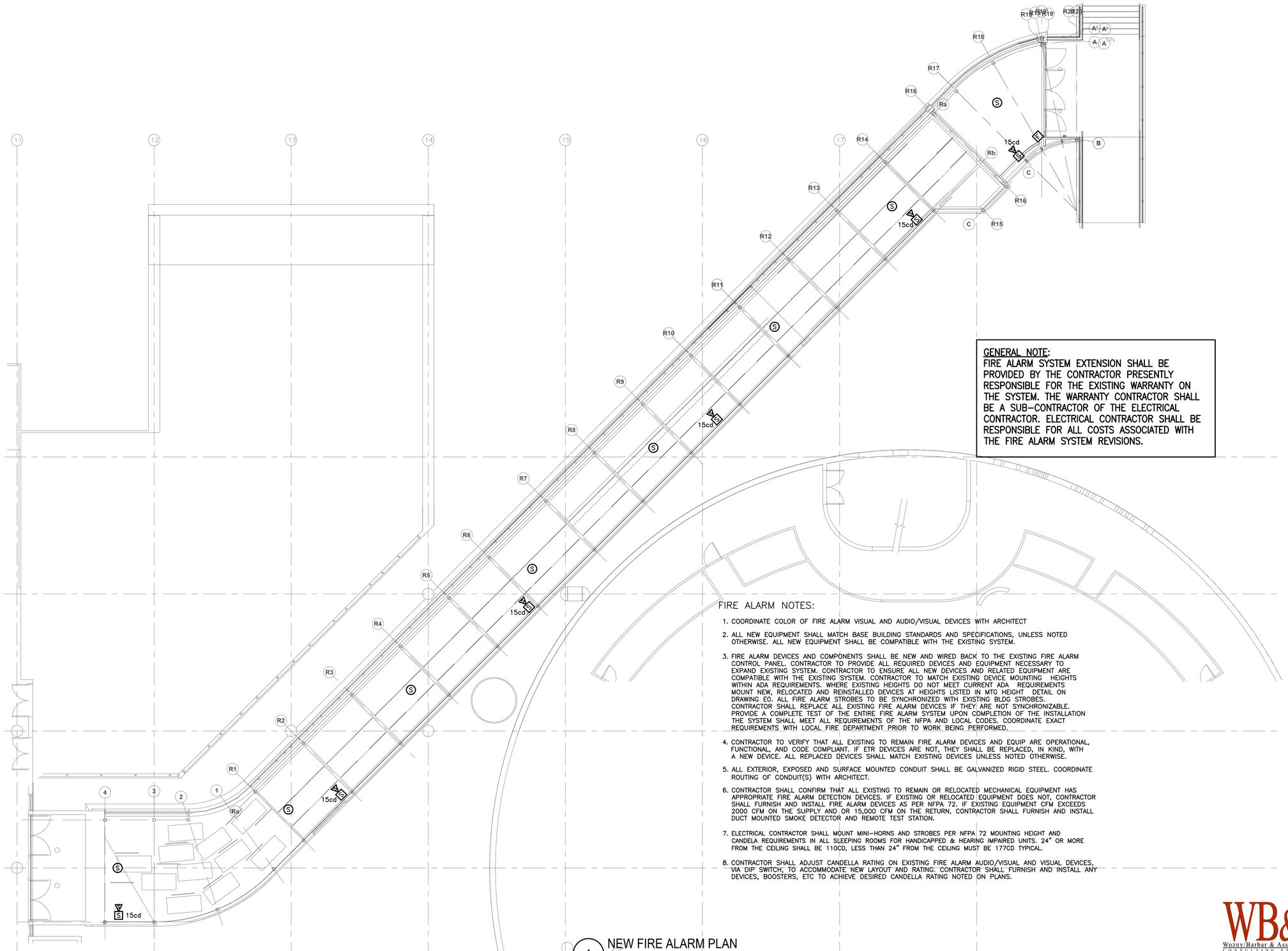

GENERAL NOTE:
FIRE ALARM SYSTEM EXTENSION SHALL BE PROVIDED BY THE CONTRACTOR PRESENTLY RESPONSIBLE FOR THE EXISTING WARRANTY ON THE SYSTEM. THE WARRANTY CONTRACTOR SHALL BE A SUB-CONTRACTOR OF THE ELECTRICAL CONTRACTOR. ELECTRICAL CONTRACTOR SHALL BE RESPONSIBLE FOR ALL COSTS ASSOCIATED WITH THE FIRE ALARM SYSTEM REVISIONS.

FIRE ALARM NOTES:

1. COORDINATE COLOR OF FIRE ALARM VISUAL AND AUDIO/VISUAL DEVICES WITH ARCHITECT
2. ALL NEW EQUIPMENT SHALL MATCH BASE BUILDING STANDARDS AND SPECIFICATIONS, UNLESS NOTED OTHERWISE. ALL NEW EQUIPMENT SHALL BE COMPATIBLE WITH THE EXISTING SYSTEM.
3. FIRE ALARM DEVICES AND COMPONENTS SHALL BE NEW AND WIRED BACK TO THE EXISTING FIRE ALARM CONTROL PANEL. CONTRACTOR TO PROVIDE ALL REQUIRED DEVICES AND EQUIPMENT NECESSARY TO EXPAND EXISTING SYSTEM. CONTRACTOR TO ENSURE ALL NEW DEVICES AND RELATED EQUIPMENT ARE COMPATIBLE WITH THE EXISTING SYSTEM. CONTRACTOR TO MATCH EXISTING DEVICE MOUNTING HEIGHTS WITHIN ADA REQUIREMENTS. WHERE EXISTING HEIGHTS DO NOT MEET CURRENT ADA REQUIREMENTS MOUNT NEW, RELOCATED AND REINSTALLED DEVICES AT HEIGHTS LISTED IN MTG HEIGHT DETAIL ON DRAWING E0. ALL FIRE ALARM STROBES TO BE SYNCHRONIZED WITH EXISTING BLDG STROBES. CONTRACTOR SHALL REPLACE ALL EXISTING FIRE ALARM DEVICES IF THEY ARE NOT SYNCHRONIZABLE. PROVIDE A COMPLETE TEST OF THE ENTIRE FIRE ALARM SYSTEM UPON COMPLETION OF THE INSTALLATION THE SYSTEM SHALL MEET ALL REQUIREMENTS OF THE NFPA AND LOCAL CODES. COORDINATE EXACT REQUIREMENTS WITH LOCAL FIRE DEPARTMENT PRIOR TO WORK BEING PERFORMED.
4. CONTRACTOR TO VERIFY THAT ALL EXISTING TO REMAIN FIRE ALARM DEVICES AND EQUIP ARE OPERATIONAL, FUNCTIONAL, AND CODE COMPLIANT. IF ETR DEVICES ARE NOT, THEY SHALL BE REPLACED, IN KIND, WITH A NEW DEVICE. ALL REPLACED DEVICES SHALL MATCH EXISTING DEVICES UNLESS NOTED OTHERWISE.
5. ALL EXTERIOR, EXPOSED AND SURFACE MOUNTED CONDUIT SHALL BE GALVANIZED RIGID STEEL. COORDINATE ROUTING OF CONDUIT(S) WITH ARCHITECT.
6. CONTRACTOR SHALL CONFIRM THAT ALL EXISTING TO REMAIN OR RELOCATED MECHANICAL EQUIPMENT HAS APPROPRIATE FIRE ALARM DETECTION DEVICES. IF EXISTING OR RELOCATED EQUIPMENT DOES NOT, CONTRACTOR SHALL FURNISH AND INSTALL FIRE ALARM DEVICES AS PER NFPA 72. IF EXISTING EQUIPMENT CFM EXCEEDS 2000 CFM ON THE SUPPLY AND OR 15,000 CFM ON THE RETURN, CONTRACTOR SHALL FURNISH AND INSTALL DUCT MOUNTED SMOKE DETECTOR AND REMOTE TEST STATION.
7. ELECTRICAL CONTRACTOR SHALL MOUNT MINI-HORNS AND STROBES PER NFPA 72 MOUNTING HEIGHT AND CANDELA REQUIREMENTS IN ALL SLEEPING ROOMS FOR HANDICAPPED & HEARING IMPAIRED UNITS. 24" OR MORE FROM THE CEILING SHALL BE 110CD, LESS THAN 24" FROM THE CEILING MUST BE 177CD TYPICAL.
8. CONTRACTOR SHALL ADJUST CANDELLA RATING ON EXISTING FIRE ALARM AUDIO/VISUAL AND VISUAL DEVICES, VIA DIP SWITCH, TO ACCOMMODATE NEW LAYOUT AND RATING. CONTRACTOR SHALL FURNISH AND INSTALL ANY DEVICES, BOOSTERS, ETC TO ACHIEVE DESIRED CANDELLA RATING NOTED ON PLANS.

1 NEW FIRE ALARM PLAN
SCALE: 1/8" = 1'-0"

WB&A
Wozny/Barbar & Associates, Inc.
CONSULTING ENGINEERS
1076 Washington Street
Hanover, MA 02339
Tel: (781) 826-4144
Fax: (781) 924-5792
www.wbaengineers.com
161 Exchange Street
3rd Floor
Pawtucket, RI 02860

CCRI WARWICK RENEWAL
ENTRY RAMP ENCLOSURE

400 EAST AVENUE, WARWICK RI 02886

BREWSTER THORNTON GROUP ARCHITECTS LLP
150 Chestnut Street
Providence, RI
02903
Tel: 401.861.1600
Fax: 401.861.5588

Z.M. WOZNY
REGISTERED PROFESSIONAL ENGINEER

JOB NO.	DATE
1609A	November 1, 2018

ISSUE :

NO.	REVISION DESCRIPTION	DATE

SHEET TITLE

ELECTRICAL FIRE ALARM FLOOR PLAN

SHEET
E5.0

11/6/2018 1:22:29 PM

MECHANICAL EQUIPMENT CONNECTION SCHEDULE

ITEM	EQUIPMENT DESCRIPTION	ELECTRICAL RATING								TYPE OF CONNECTION REQUIRED														FEEDER INFORMATION	REMARKS
		HP	MCA	KW	VOLTAGE	PH	PANEL	CIRCUIT	C/B SIZE	NOTE 1 GFI	NOTE 2 WP	NOTE 3 GFI WP			DIRECT CONN				VFD	WP	RTS	S D	CM		
HP 1	HEAT PUMP		28		480	3	SEE FLOOR PLAN	SEE SCHEDULE	30A-3P							✓				✓	✓	✓	✓	(3)#1 & (1)#6G IN 1.25"C	

PANELBOARD SCHEDULE

PANEL DESIGNATION	VOLTS	PHASE	WIRES	MAINS MLO = MAIN LUGS ONLY: BUS SIZE	OVERCURRENT DEVICE: TRIP	OVERCURRENT DEVICE: FRAME	BKR POLES	BRANCH DEVICES BREAKER AMPS 15	20	25	30	40	50	60	70	TOTAL POLES	MOUNTING S=SURFACE F=FLUSH	ADDITIONAL CIRCUIT BREAKERS	REMARKS
EXISTING PANEL HP	120/208	3	4	100	MLO	MLO	1P		30							30	S		ALL CIRCUIT BREAKERS ARE EXISTING TO REMAIN
							2P												
							3P												
EXISTING PANEL H2L	277/480	3	4	200	MLO	MLO	1P		42							42	S		ALL CIRCUIT BREAKERS ARE EXISTING TO REMAIN
							2P												
							3P												

LIGHTING FIXTURE SCHEDULE

MOUNTING	FLUORESCENT	LED	EXIT	
RECESSED	FR	LR	XR	
CEILING/SURFACE	FC	LC	XC	
PENDANT/SUSPENDED	FP	LP	XP	
WALL	FW	LW	XW	
TRACK	FT	LT		

TYPE	DESCRIPTION	MANUFACTURER & CATALOG NUMBER	LAMPS NUMBER	LAMPS TYPE	INPUT VOLTS	INPUT WATTS	REMARKS
LR	4 FOOT LINEAR NARROW LED	BIRCHWOOD #KEL-LED-125-HLO -35-4-FW-277 -EB-CSS	1	LED	277	24	
RD	RECESSED LED DOWNLIGHT	INTENSE #SS6G3DR-L5-358-C-SF	1	LED	277	32	
SC	SURFACE MOUNT LED	ECLIPSE LIGHTING #CK-S-LED2S-3K-277-CBA	1	LED	277	25	
WS	WALL SCONCE	B-K LIGHTING # AR-LED-RM-X53-WFL -CBA-12-B-3	1	LED	277	10	
SL	SURFACE MOUNT WET LOCATION LIGHT FIXTURE	CREE #C-CP-A-SQ-79L-40K-CBA	1	LED	277	74	
GL	GROUND MOUNTED FLOODLIGHT	FXLUMINAIRE #LC-6	1	LED	277	10	
PD	24" LED PENDANT RING	LUMUS #RP-UP-24	1	LED	277	35	
	PENDANT MOUNTED SELF CONTAINED EXIT LIGHT	EVENLITE #TLXEMGUW/ PENDANT	1	LED	277	3	COORDINATE MOUNTING HEIGHT WITH ARCHITECT PRIOR TO INSTALLATION
INV#1	WALL MOUNTED 250W EMERGENCY LIGHTING INVERTER	EVENLITE #LM-52-LC-V2	1	LED	277	525	

LEGEND OF FEEDER SIZES– COPPER CONDUCTORS

TAG	CONDUCTORS (3 PHASE, 3 WIRE) WITH GROUND	RACEWAY SIZE	TAG	CONDUCTORS (3 PHASE, 4 WIRE) WITH GROUND	RACEWAY SIZE	NOMINAL AMPACITY RATING
30-3G	3#10 & 1#10 GND.	3/4"	30-4G	4#10 & 1#10 GND.	3/4"C.	30
50-3G	3#8 & 1#10 GND.	3/4"	50-4G	4#8 & 1#10 GND.	3/4"C.	50
60-3G	3#6 & 1#10 GND.	3/4"	60-4G	4#6 & 1#10 GND.	1"	60
100-3G	3#3 & 1#8 GND.	1 1/4"	100-4G	4#2 & 1#8 GND.	1 1/4"	100
125-3G	3#1 & 1#6 GND.	1 1/4"	125-4G	4#1 & 1#6 GND.	1 1/2"	125
150-3G	3#1/0 & 1#6 GND.	1 1/2"	150-4G	4#1/0 & 1#6 GND.	2"	150
175-3G	3#2/0 & 1#6 GND.	2"	175-4G	4#2/0 & 1#6 GND.	2"	175
200-3G	3#3/0 & 1#6 GND.	2"	200-4G	4#3/0 & 1#6 GND.	2"	200
225-3G	3#4/0 & 1#4 GND.	2"	225-4G	4#4/0 & 1#4 GND.	2 1/2"	225
250-3G	3#250 KCMIL & 1#4 GND.	2 1/2"	250-4G	4#250 KCMIL & 1#4 GND.	2 1/2"	250
300-3G	3#350 KCMIL & 1#4 GND.	2 1/2"	300-4G	4#350 KCMIL & 1#4 GND.	3"	300
350-3G	3#500 KCMIL & 1#3 GND.	3"	350-4G	4#500 KCMIL & 1#3 GND.	4"	350
400-3G	3#500 KCMIL & 1#3 GND.	3"	400-4G	4#500 KCMIL & 1#3 GND.	4"	400
600-3G	6#350 KCMIL & 2#1 GND.	2-3"	600-4G	8#350 KCMIL & 2#1 GND.	2-3"	600
800-3G	6#600 KCMIL & 3#1/0 GND.	2-3"	800-4G	8#600 KCMIL & 3#1/0 GND.	2-3 1/2"	800
1000-3G	9#400 KCMIL & 3#2/0 GND.	3-3"	1000-4G	12#400 KCMIL & 3#2/0 GND.	3-3"	1000
1200-3G	9#600 KCMIL & 3#3/0 GND.	3-3"	1200-4G	12#600 KCMIL & 3#3/0 GND.	3-3 1/2"	1200
1600-3G	12#600 KCMIL & 4#4/0 GND.	4-3"	1600-4G	16#600 KCMIL & 4#4/0 GND.	4-3 1/2"	1600

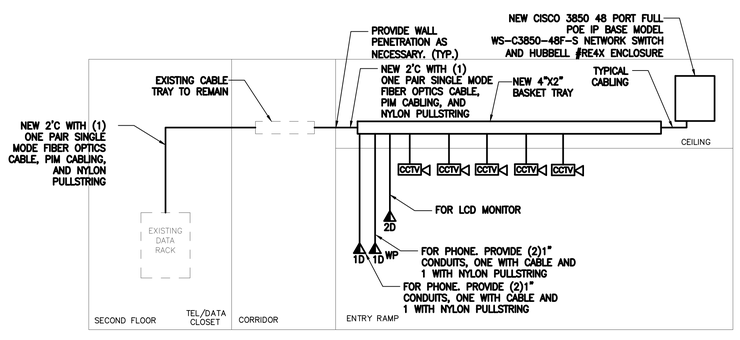

TEL/DATA/CCTV DETAIL

NTS

NOTES:

1. ALL CABLING SHALL INSTALLED IN 1" CONDUIT, WITH INSULATING BUSHINGS ON BOTH ENDS.
2. CONTRACTOR SHALL BE PANDUIT AND MOHAWK CERTIFIED.
3. "2D" INDICATES (2) MOHAWK#M57193 ADVANCENET CABLE 4 PAIR #23 AWG UTP CAT6E+ PLENUM CABLE TO EACH TEL/DATA OUTLET. CABLE SHALL BE BLUE IN COLOR. CABLE FOR THE CCTV AND "1D" SHALL BE THE SAME, BUT THE QUANTITY SHALL BE ONE CABLE FOR EACH CAMERA, AND THE CABLE SHALL BE YELLOW. INSTALL IN STRICT ACCORDANCE WITH THE GENERAL ELECTRICAL SPECIFICATIONS.
4. PROVIDE BLUE PANDUIT #CJ6X88TGBU MINI-COM TX6 10GIG JACK MODULES.
5. PROVIDE PANDUIT #CFPSL4EIY SINGLE GANG SLOPED FACEPLATES.
6. LABEL BOTH ENDS OF EACH CABLE PER CCRI STANDARDS.
7. ROUTE CABLING TO NEW NETWORK SWITCH ABOVE THE CEILING. TERMINATE BOTH ENDS OF ALL CABLES. TEST ALL CABLES FOR CONFORMANCE TO CAT 6e AND CCRI SPECIFICATIONS.

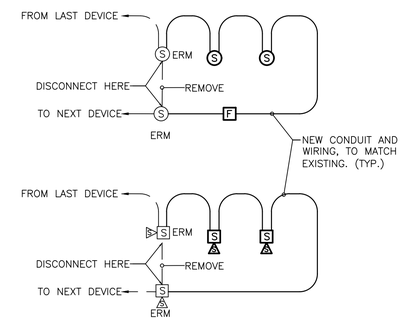

1 FIRE ALARM SYSTEM DETAIL

SCALE: No Scale

CCRI WARWICK RENEWAL ENTRY RAMP ENCLOSURE

400 EAST AVENUE, WARWICK RI 02886

BREWSTER THORNTON GROUP ARCHITECTS LLP
150 Chestnut Street
Providence, RI
02903
Tel: 401.861.1600
Fax: 401.861.5588

Z.M. WOZNY
REGISTERED PROFESSIONAL ENGINEER

WB&A
Wozny/Barbar & Associates, Inc.
CONSULTING ENGINEERS
1076 Washington Street
Hanover, MA 02339
Tel: (781) 826-4144
Fax: (781) 924-5792
www.wbaengineers.com
161 Exchange Street
3rd Floor
Pawtucket, RI 02860

JOB NO. 1609A

DATE November 1, 2018

ISSUE :

NO.	REVISION DESCRIPTION	DATE

SHEET TITLE

ELECTRICAL SCHEDULES

SHEET

E6.0

11/6/2018 1:22:33 PM