STANDBY GENERATORS

HARRINGTON HALL, CRANSTON · RHODE ISLAND

STEDMAN GOVERNMENT CENTER, WAKEFIELD · RHODE ISLAND

DOA FACILITIES

APRIL 2018, REVISED JULY 9, 2018

PREPARED FOR

RHODE ISLAND DEPARTMENT OF ADMINISTRATION

ONE CAPITOL HILL
PROVIDENCE, RI 02908

PREPARED BY

FUSS & O'NEILL

317 IRON HORSE WAY, SUITE 204
PROVIDENCE, RI 02908
401.861.3070
www.fando.com

SHEET INDEX

SHEET No.	SHEET TITLE
GI-001	COVER SHEET
00-E-1	NOTES, LEGEND, AND DETAILS
00-E-2	ELECTRICAL DETAILS
00-E-3	ELECTRICAL DETAILS
58-E-1	HARRINGTON BUILDING #58 ELECTRICAL SITE PLAN AND ELECTRICAL ROOM PLANS
58-E-2	HARRINGTON BUILDING #58 ONE-LINE DIAGRAMS
ST-E-1	STEDMAN BUILDING ELECTRICAL SITE PLAN AND ELECTRIC ROOM PLAN
ST-E-2	STEDMAN BUILDING ONE-LINE DIAGRAMS

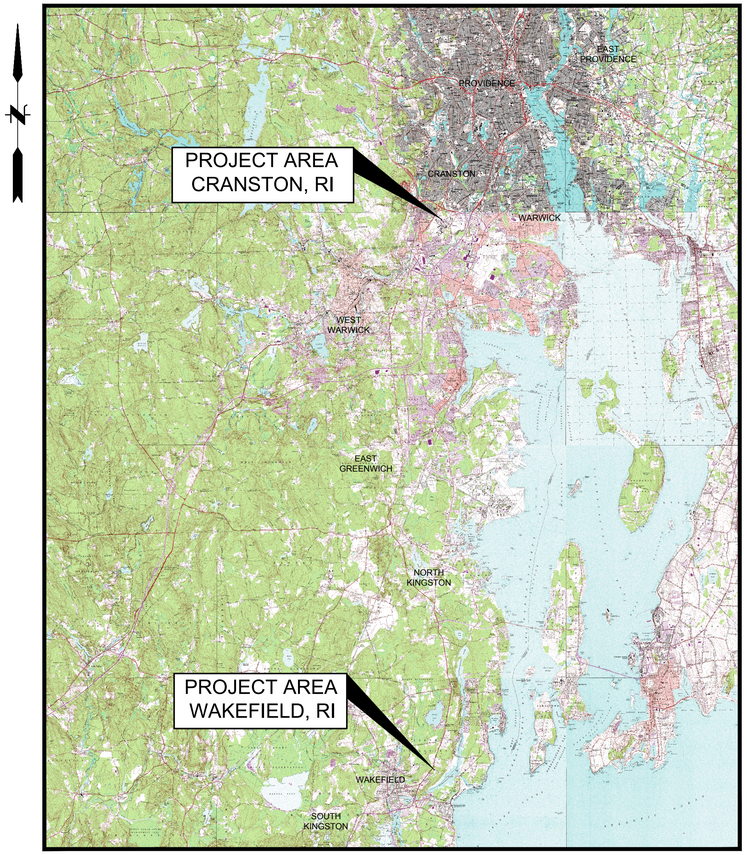

LOCATION MAP

SCALE: 1" = 14,000'

ISSUED FOR BID 07/09/2018

PROJ. No.: 20170903.A10
DATE: APRIL 2018

GI-001

File Path: J:\DWG\P\20170903\A10\MEP\Electrical\20170903A10_COV01.dwg, Layout: GI-001, Plotted: Tuesday, July 03, 2018, User: sirons Plotter: DWG TO PDF.PC3 CTB File: FO.STB

ABBREVIATIONS:

Ø	PHASE
A	AMPERE
ATS	AUTOMATIC TRANSFER SWITCH
BLDG	BUILDING
BMS	BUILDING MANAGEMENT SYSTEM
C	CONDUIT
DISC	DISCONNECT SWITCH
D,R&R	DISCONNECT, REMOVE AND DISPOSE OF
DWG	DRAWING
EMT	ELECTRICAL METALLIC TUBING
FCO	FUSED CUTOUT
GFI	GROUND-FAULT INTERRUPTING
GND	GROUND
KW	KILOWATT
LBE	LOADBREAK
MCB	MAIN CIRCUIT BREAKER
NEC	NATIONAL ELECTRICAL CODE
OC	ON CENTER
PVC	POLYVINYL CHLORIDE
RECPT	RECEPTACLE
R&D	REMOVE AND DISPOSE
R&R	REMOVE AND REPLACE
REL	RELOCATE
RS	RIGID STEEL
RECEPT.	UNKNOWN
V	VOLTS
WP	WEATHERPROOF (NEMA 4X)
XFMR	TRANSFORMER

LEGEND

FCO (3)	FUSED CUTOUT (3) NUMBER INDICATES NUMBER OF POLES
50 E	HIGH VOLTAGE SWITCH AND FUSE AS INDICATED
	TRANSFORMER – SIZED AS INDICATED
	DISCONNECT SWITCH – SIZED AS INDICATED
	PANELBOARD – SIZED AS INDICATED
	CIRCUIT BREAKER SIZED AS INDICATED
	LOADBREAK ELBOW (LBE)
	LOAD INTERUPTING SWITCH
	CABLE TERMINATION
G	GENERATOR
P	UNDERGROUND PRIMARY CONDUIT
S	UNDERGROUND SECONDARY CONDUITS
E	EXISTING UNDERGROUND PRIMARY

GENERAL NOTES

1. ALL ELECTRICAL WORK SHALL BE INSTALLED IN ACCORDANCE WITH THE LATEST EDITION OF THE NATIONAL AND RHODE ISLAND ELECTRICAL CODES AND OTHER STATE OF RHODE ISLAND REQUIREMENTS AND THE NATIONAL ELECTRICAL SAFETY CODE C2.
2. FOR CLARITY PURPOSES EQUIPMENT NOT AFFECTED BY THIS PROJECT HAS NOT BEEN SHOWN. CONTRACTOR SHALL WORK WITHIN CONSTRAINTS OF EXISTING CONDITIONS.
3. ADDITIONAL JUNCTION / PULL BOXES SHALL BE FURNISHED AND INSTALLED AS REQUIRED.
4. ALL CONDUITS SHALL CONTAIN A GREEN SAFETY GROUND WIRE. BOND ALL PANELS, CABINETS, ENCLOSURES, CONDUITS, ETC., AS REQUIRED.
5. PROVIDE CONDUIT SLEEVES FILLED WITH AN APPROVED FIRE-RESISTANT MATERIAL WHERE FIRE-RATED WALLS ARE PENETRATED. PROVIDE WATERTIGHT CONDUIT SLEEVES WHERE EXTERIOR WALLS ARE PENETRATED EITHER ENTERING OR LEAVING A BUILDING.
6. ALL CUTTING, PATCHING AND FIRESTOPPING RELATED TO ELECTRICAL WORK SHALL BE THE RESPONSIBILITY OF THE ELECTRICAL CONTRACTOR.
7. ALL WIRING EXTENDED FROM SPLICE BOXES TO PANELBOARDS SHALL BE TERMINATED ON TERMINAL STRIPS IN SPLICE BOXES. PROVIDE CIRCUIT BRANCH CIRCUIT IDENTIFICATION WITHIN THE SPLICE BOX.
8. BRANCH CIRCUIT WIRING TO BE MODIFIED OR EXTENDED MAY NOT BE SHOWN BUT SHALL BE PROVIDED AS REQUIRED. MINIMUM WIRING SHALL BE 3/4"C-2#12, 1#12 GROUND. NO MORE THAN THREE PHASES MAY BE COMBINED IN A SINGLE HOMERUN AND EACH PHASE SHALL BE PROVIDED WITH AN INDIVIDUAL NEUTRAL.
9. ALL SPLICE BOXES WITH BRANCH CIRCUIT WIRING CONNECTED WITH WIRE NUTS SHALL BE PROVIDED WITH A NEW TERMINAL STRIP ENCLOSURE WITH ALL TERMINATIONS IDENTIFIED BY CIRCUIT DESIGNATION. WIRING WITHIN WIREWAYS FROM SPLICE BOX TO PANELBOARDS MAY EXCEED MAXIMUM FILL ALLOWED BY CODE CONTRACTOR SHALL VERIFY ACTUAL FILL AND PROVIDE ADDITIONAL WIREWAY AS INDICATED OR REQUIRED.
10. ALL NEW 5KV CABLES SHALL BE OKOGUARD – OKOSEAL TYPE MV1 105 350 MCM COPPER WITH 133% INSULATION.

DEMOLITION NOTES

1. DEMOLITION OF EXISTING ELECTRICAL SYSTEM SHALL BE PERFORMED IN A PHASED SYSTEM OF DECOMMISSIONING. THE ENTIRE NEW SYSTEM SHALL BE TESTED, APPROVED AND OPERATIONAL BEFORE CUT OVER OF THE NEW SYSTEM TO EXISTING EQUIPMENT THAT REMAINS.
2. EXISTING ELECTRICAL EQUIPMENT INDICATED ON PLANS HAS BEEN DERIVED FROM THE BEST AVAILABLE EXISTING DRAWINGS AND MUST BE FIELD VERIFIED PRIOR TO CONSTRUCTION AS REQUIRED. ANY EQUIPMENT THAT IS NOT IDENTIFIED AND CONFLICTS WITH CONSTRUCTION SHALL NOT BE DISCONNECTED AND SHALL BE BROUGHT TO THE ATTENTION OF THE OWNER/ENGINEER FOR DISPOSITION.
3. WHERE WIRING IS TO BE REMOVED, RELOCATED OR RECONNECTED, THE CONTRACTOR SHALL TAKE PRECAUTIONS AND ASSUME THAT THE CIRCUIT MAY BE ACTIVE. CONTRACTOR SHALL TEST, VERIFY AND SECURE ALL CIRCUITS BEFORE REMOVAL. UNKNOWN WIRING SHALL BE IDENTIFIED. ANY WIRING TO REMAIN SHALL BE VERIFIED BY THE CONTRACTOR, TAGGED AND IDENTIFIED AS REQUIRED.
4. EXISTING ELECTRICAL EQUIPMENT AND DEVICES TO BE REMOVED SHOWN SHALL BE REMOVED COMPLETELY INCLUDING ALL CONDUIT, WIRING AND ASSOCIATED APPURTENANCES BACK TO EXISTING SOURCE WHERE THE EXISTING SOURCE SHALL BE LABELED AS SPARE.
5. EXISTING CONDUITS TO BE REMOVED WHICH ARE EMBEDDED IN A CONCRETE SLAB SHALL HAVE THE WIRING REMOVED AND THE CONDUIT CUT FLUSH WITH CONCRETE AND SEALED IN AN APPROVED MANNER.
6. EXISTING ELECTRICAL EQUIPMENT AND WIRING TO REMAIN SHOWN SHALL BE PROTECTED FROM DAMAGE AS REQUIRED DURING THE CONSTRUCTION PERIOD AND LEFT IN GOOD WORKING ORDER AT COMPLETION. ANY EQUIPMENT DAMAGED SHALL BE REPLACED BY THE CONTRACTOR AT NO EXPENSE TO THE OWNER.
7. OWNER AND CODE REQUIRED SYSTEMS THAT ARE REQUIRED TO REMAIN ACTIVE DURING CONSTRUCTION SHALL BE TEMPORARILY WIRED AS REQUIRED TO REMAIN ACTIVE THROUGHOUT THE CONSTRUCTION PERIOD UNTIL NEW SYSTEMS ARE INSTALLED, TESTED AND ACCEPTED.
8. IN CONDITIONS WHERE IN THE OPINION OF THE CONTRACTOR IT IS NOT CLEAR WHETHER EXISTING ELECTRICAL EQUIPMENT IS TO BE REMOVED OR REMAIN, IT SHOULD BE BROUGHT TO THE ATTENTION OF THE ENGINEER FOR REVIEW AND FINAL DECISION.
9. ANY DISRUPTION OF ANY ELECTRICAL SERVICE NECESSITATED BY THE ELECTRICAL RENOVATION SHALL BE COORDINATED WITH THE OWNER IN ORDER FOR PROPER NOTICE TO BE GIVEN PRIOR TO THE DISCONNECTION OF ANY SERVICE. ADD SHUTDOWNS SHALL BE PERFPRMED OFF HOURS.
10. EXISTING ELECTRICAL EQUIPMENT REMOVED SHALL BE BROKEN DOWN INTO MANAGEABLE LENGTHS FOR STORAGE, HANDLING AND DISPOSAL.
11. EXISTING ELECTRICAL EQUIPMENT REMOVED SHALL BE PROPERLY DISPOSED OF BY CONTRACTOR. NO ITEMS SHALL BE TURNED OVER TO STATE.
12. ELECTRICAL RENOVATION WORK SHALL BE ACCOMPLISHED IN CONFORMANCE WITH THE REQUIREMENTS OF THE NATIONAL ELECTRICAL CODE.

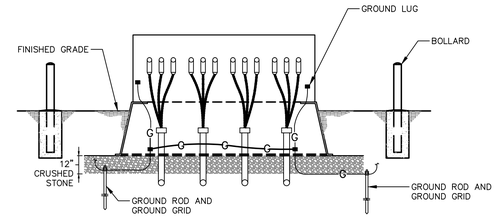

FRONT VIEW

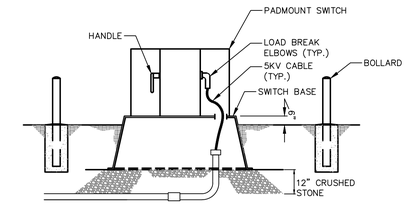

SIDE VIEW

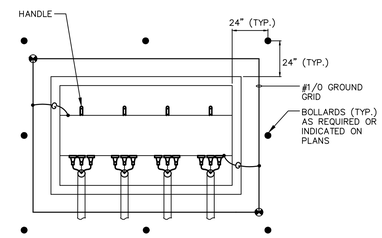

PLAN VIEW

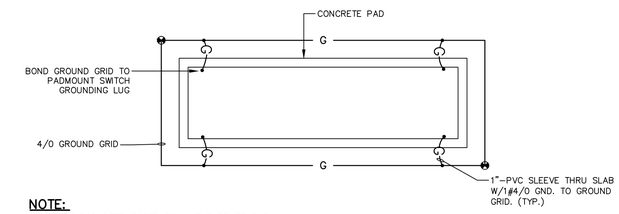

NOTE:
CONCRETE PAD SIZED BASED ON UNIT SUPPLIED PAD SHALL EXTEND 12" BEYOND SWITCH BASE FOOTPRINT.

(A) TYPICAL PADMOUNT SWITCH #4 & GROUNDING DETAIL
SCALE: N.T.S.

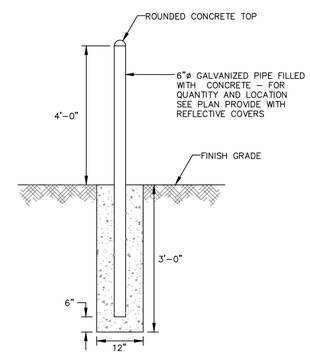

(B) BOLLARD DETAIL
SCALE: N.T.S.

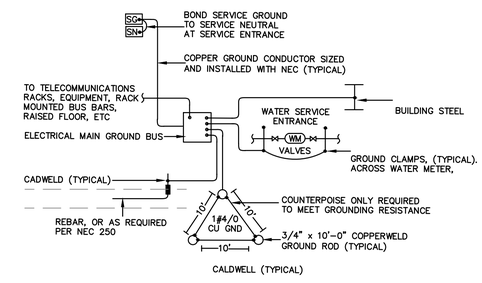

(C) TYPICAL SERVICE GROUNDING DETAIL
SCALE: N.T.S.

ISSUED FOR BID 07/09/2018

No.	DATE	DESCRIPTION	DESIGNER	REVIEWER
4.	7/9/2018	ISSUED FOR BID	CW	KS
3.	4/5/2018	ISSUED FOR PERMIT	CW	KS
2.	1/18/2018	ISSUED FOR BID	CW	KS
1.	11/7/2018	ISSUED FOR PERMIT	CW	KS

SEAL

SCALE:
HORZ.:
VERT.:
DATUM:
HORZ.:
VERT.:
0
GRAPHIC SCALE

FUSS & O'NEILL
317 IRON HORSE WAY, SUITE 204
PROVIDENCE, RI 02908
401.861.3070
www.fando.com

RHODES ISLAND DEPARTMENT OF ADMINISTRATION

NOTES, LEGEND, AND DETAILS

HARRINGTON HALL & STEDMEN GOVERNMENT CENTER

CRANSTON & WAKEFIELD RHODE ISLAND

PROJ. No.: 20170903.A10
DATE: APRIL 2018

00-E-1

File Path: J:\DWG\P2017\0903\A10\MEP\Electrical\20170903A10_ELE01.dwg Layout: 00-E-1 Plotted: Tue, July 03, 2018 - 11:49 AM User: sirons
Plotter: DWG TO PDF.PC3 CTB File: FO.STB
MS VIEW:
LAYER STATE:

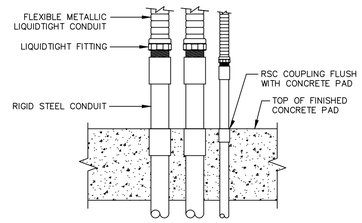

INSERT 'A'

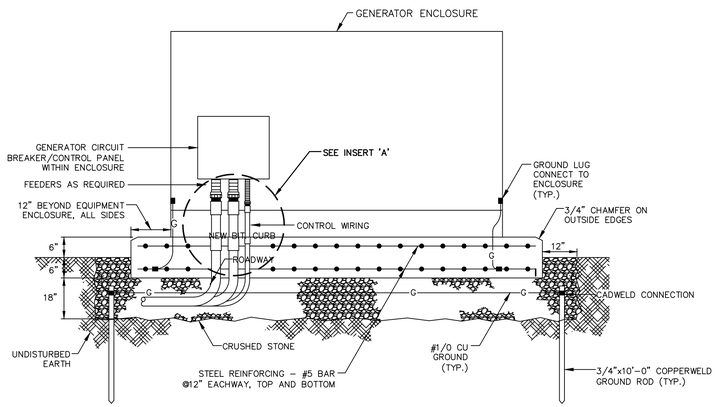

A GENERATOR PAD DETAIL

SCALE: N.T.S.

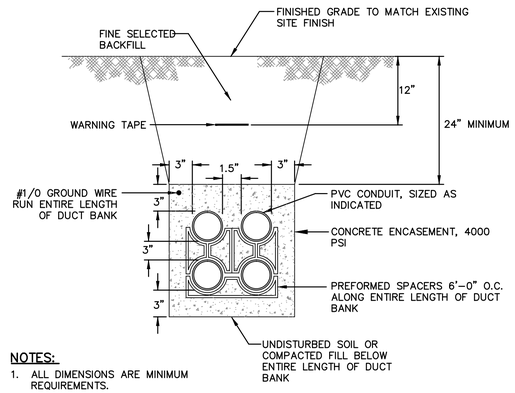

NOTES:

1. ALL DIMENSIONS ARE MINIMUM REQUIREMENTS.
2. CONCRETE ENCASEMENT FOR PRIMARY ONLY.

B TYPICAL DUCTBANK SECTION

SCALE: N.T.S.

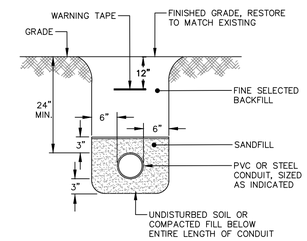

NOTES:

ALL DIMENSIONS ARE MINIMUM REQUIREMENTS.

C TYPICAL SINGLE CONDUIT IN TRENCH DETAIL

SCALE: N.T.S.

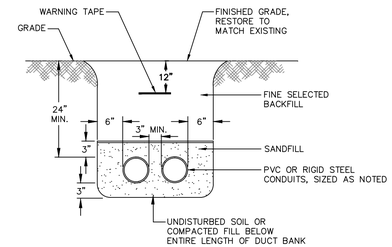

NOTES:

ALL DIMENSIONS ARE MINIMUM REQUIREMENTS.

D TYPICAL MULTIPLE CONDUITS IN TRENCH DETAIL

SCALE: N.T.S.

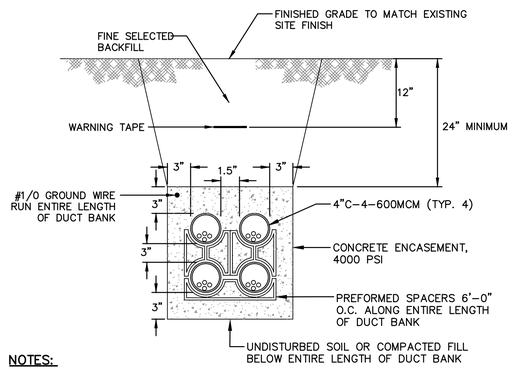

NOTES:

1. ALL DIMENSIONS ARE MINIMUM REQUIREMENTS.
2. CONCRETE ENCASEMENT FOR PRIMARY ONLY.

E DUCTBANK SECTION

SCALE: N.T.S.

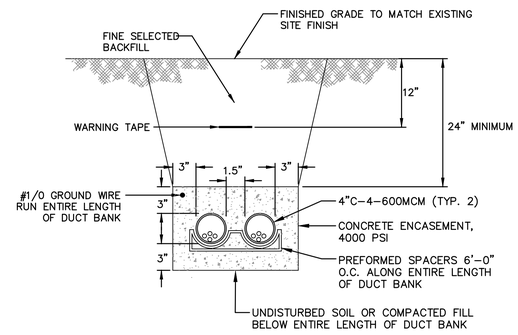

NOTES:

1. ALL DIMENSIONS ARE MINIMUM REQUIREMENTS.
2. CONCRETE ENCASEMENT FOR PRIMARY ONLY.

F DUCTBANK SECTION

SCALE: N.T.S.

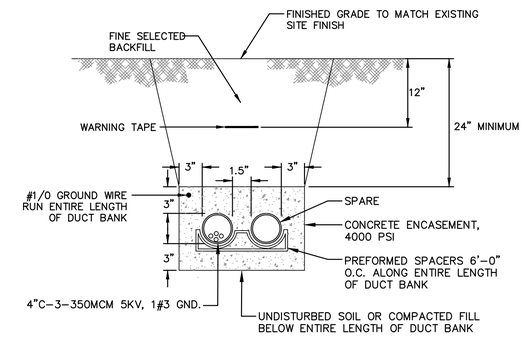

NOTES:

1. ALL DIMENSIONS ARE MINIMUM REQUIREMENTS.
2. CONCRETE ENCASEMENT FOR PRIMARY ONLY.

G DUCTBANK SECTION

SCALE: N.T.S.

ISSUED FOR BID 07/09/2018

No.	DATE	DESCRIPTION	DESIGNER	REVIEWER
4.	7/9/2018	ISSUED FOR BID	CW	KS
3.	4/5/2018	ISSUED FOR PERMIT	CW	KS
2.	1/18/2018	ISSUED FOR BID	CW	KS
1.	11/7/2018	ISSUED FOR PERMIT	CW	KS

SEAL

SCALE:
HORZ.:
VERT.:
DATUM:
HORZ.:
VERT.:
0
GRAPHIC SCALE

FUSS & O'NEILL
317 IRON HORSE WAY, SUITE 204
PROVIDENCE, RI 02908
401.861.3070
www.fando.com

RHODES ISLAND DEPARTMENT OF ADMINISTRATION

ELECTRICAL DETAILS

HARRINGTON HALL & STEDMEN GOVERNMENT CENTER

CRANSTON & WAKEFIELD RHODE ISLAND

PROJ. No.: 20170903.A10
DATE: APRIL 2018

00-E-2

File Path: J:\DWG\P2017\0903\A10\MEP\Electrical\20170903A10_ELE01.dwg Layout: 00-E-2 Plotted: Tue, July 03, 2018 - 11:49 AM User: srons
Plotter: DWG TO PDF.PC3 CTB File: FO.STB
LAYER STATE:
MS VIEW:

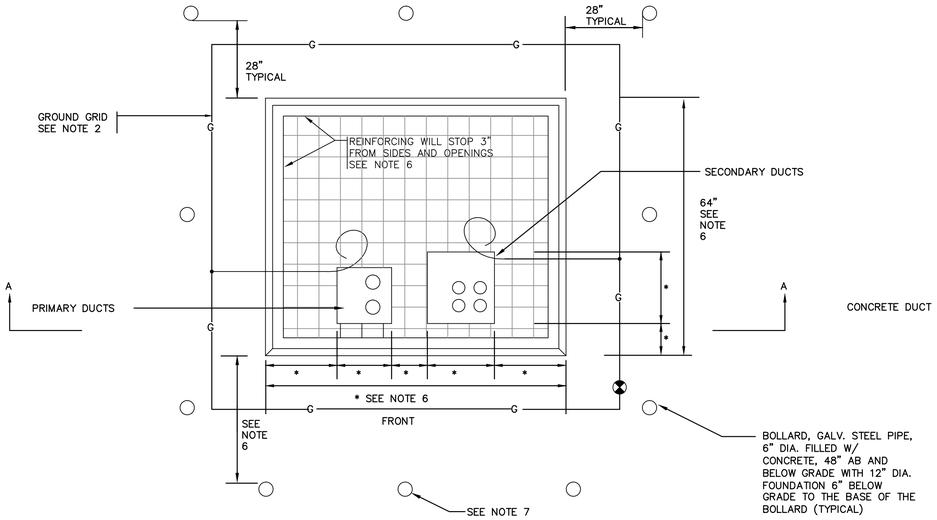

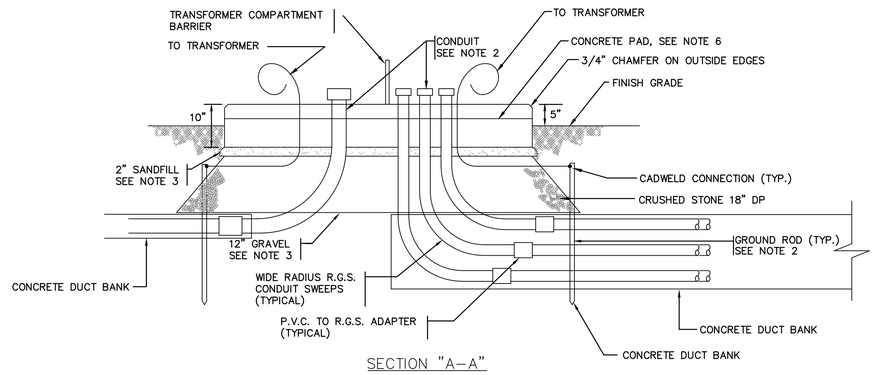

SECTION "A–A"

TRANSFORMER PAD NOTES

1. CONDUIT – INSTALL AS SHOWN BEFORE SLAB IS POURED. USE 36" RADIUS BENDS, WITH COUPLINGS, NIPPLES AND GROUNDING TYPE. BUSHINGS AS REQUIRED. TERMINATE AS SHOWN.
2. GROUND GRID – INSTALL AS SHOWN. INSTALL #1/0, 7 STRANDED BARE COPPER WIRE LOOP 1'–0" BELOW GRADE. BOND ALL EXPOSED METALLIC CONDUIT, GROUND TRANSFORMER AT (2) OPPOSITE POINTS IN THE CABLE CONDUIT OPENING. INSTALL COPPER CLAD STEEL 3/4"x10'–0" GROUND RODS. ALL CONNECTIONS BELOW GRADE SHALL BE MADE BY EXOTHERMIC WELDS.
3. GRAVEL AND SAND – GRAVEL SHALL BE COMPACTED AND THE SAND SHALL BE WETTED JUST BEFORE POURING THE CONCRETE.
4. CONCRETE SLAB – INSTALL CONCRETE AS SPECIFIED. ALL EXPOSED EDGES SHALL HAVE A 3/4" CHAMFER.
5. REINFORCING – TO BE #4 GRADE 60 REBARS AND SHALL CONFORM TO THE LATEST STANDARDS OF ASTM STD. A–615. REINFORCING RODS SHALL BE LOCATED IN THE CENTER OF THE SLAB, WITH A MINIMUM OF 3" CLEARANCE FROM THE FACE OF CONCRETE. NO SCALE
6. EXACT SIZE OF PAD TO BE PER TRANSFORMER MANUFACTURER REQUIREMENTS.
7. LOCATE BOLLARDS TO ALLOW OPENING OF DOORS.
8. EXTEND PAD DIMENSIONS 4'–0" TO ACCOMMODATE MANUAL TRANSFER SWITCH FOR SIMPSON AND BARRY.

* DENOTES SEE NOTE 6

(A) TRANSFORMER PAD DETAIL
SCALE: N.T.S.

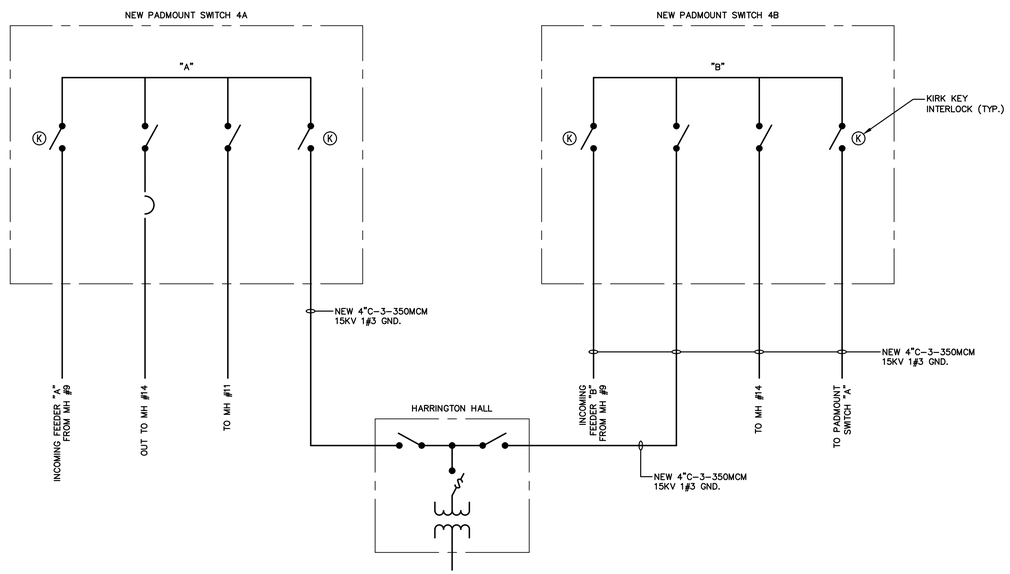

(B) ELEVATION NEW PADMOUNT SWITCH 4A
SCALE: N.T.S.

(C) ELEVATION NEW PADMOUNT SWITCH 4B
SCALE: N.T.S.

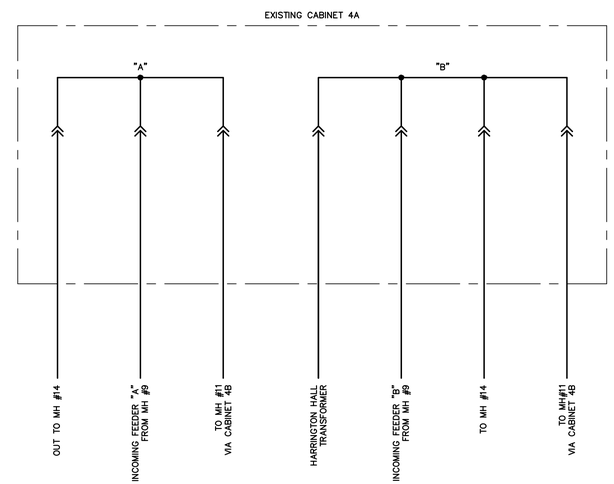

(D) ELEVATION EXISTING CABINET 4A
SCALE: N.T.S.

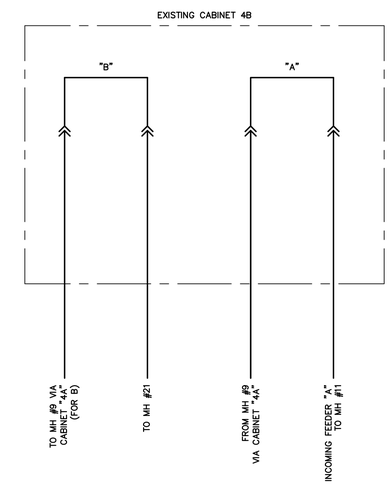

(E) ELEVATION EXISTING CABINET 4B
SCALE: N.T.S.

ISSUED FOR BID 07/09/2018

No.	DATE	DESCRIPTION	DESIGNER	REVIEWER
4.	7/9/2018	ISSUED FOR BID	CW	KS
3.	4/5/2018	ISSUED FOR PERMIT	CW	KS
2.	1/18/2018	ISSUED FOR BID	CW	KS
1.	11/7/2018	ISSUED FOR PERMIT	CW	KS

SEAL

SCALE:
HORZ.:
VERT.:
DATUM:
HORZ.:
VERT.:
0
GRAPHIC SCALE

FUSS & O'NEILL
317 IRON HORSE WAY, SUITE 204
PROVIDENCE, RI 02908
401.861.3070
www.fando.com

RHODES ISLAND DEPARTMENT OF ADMINISTRATION

ELECTRICAL DETAILS

HARRINGTON HALL & STEDMEN GOVERNMENT CENTER

CRANSTON & WAKEFIELD RHODE ISLAND

PROJ. No.: 20170903.A10
DATE: APRIL 2018

00-E-3

File Path: J:\DWG\P20170903\A10\MEP\Electrical\20170903A10_ELE01.dwg Layout: 00-E-3 Plotted: Tue, July 03, 2018 - 11:49 AM User: sirons
Plotter: DWG TO PDF.PC3 CTB File: FO.STB
LAYER STATE:
MS VIEW:

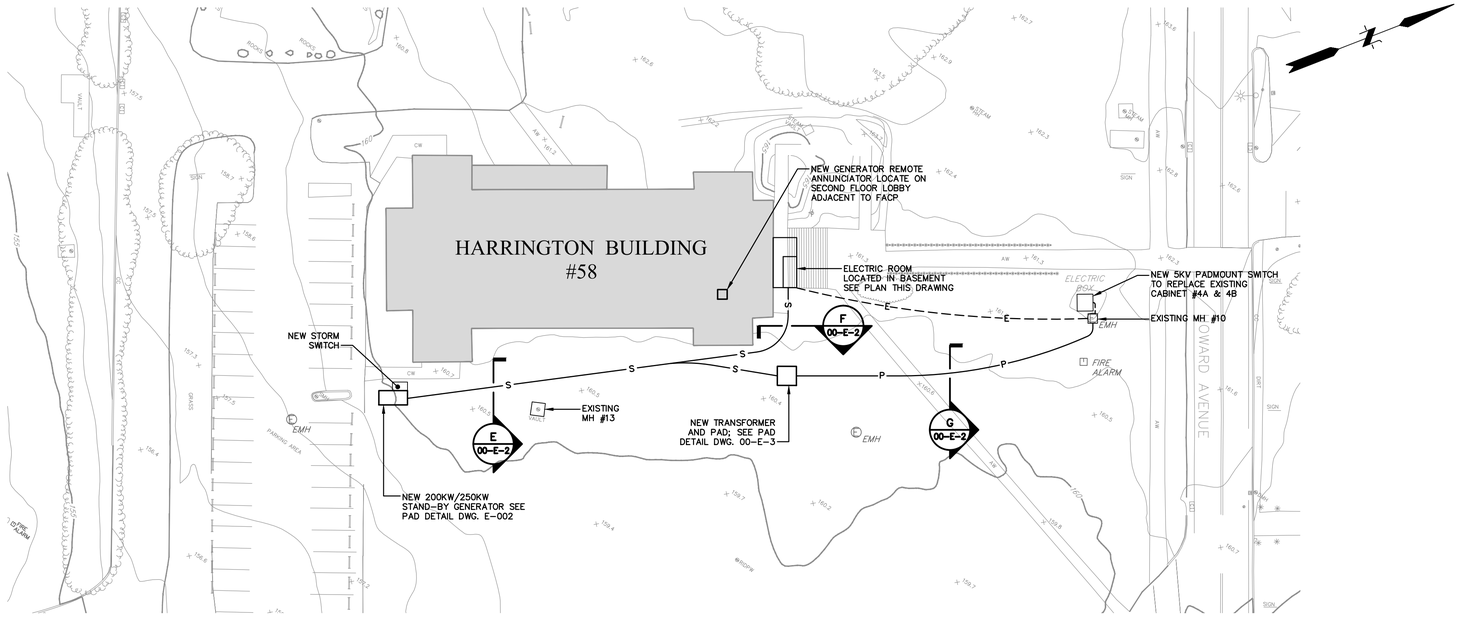

ELECTRICAL SITE PLAN

SCALE: 1"= 30'

MDP SCHEDULE

PANELBOARD SCHEDULE

PANEL: MDP					M.L.O.:		800		
LOCATION: Electric Rm.					MAIN BREAKER		-		
VOLTS:	208Y/120				MAIN BUS:		800		
PHASE:	3				A.I.C.:		22,000		
WIRE:	4				MOUNTING:		SURFACE		
SOLID NEUTRAL:					ENCLOSURE:		NEMA 1		
POLE PANEL:	36								
	CIRCUIT BREAKER					CIRCUIT BREAKER			
CIRCUIT DESCRIPTION	No.	TRIP	POLE	AMPS	ø	AMPS	POLE	TRIP	No.	CIRCUIT DESCRIPTION
Panel LP1	1	100	3		A		3	100	2	Panel LP2
	3	-	-		B		-	-	4	-
	5	-	-		C		-	-	6	-
Unknown Load (PP2)	7	100	3		A		3	60	8	Unknown Load (PP3)
	9	-	-		B		-	-	10	-
	11	-	-		C		-	-	12	
Panel PP1	13	150	3		A		3	200	14	Panel KP
	15	-	-		B		-	-	16	
	17	-	-		C		-	-	18	
ACCU - 1	19	175	3		A		3	250	20	Panel PPM
	21	-	-		B		-	-	22	
	23	-	-		C		-	-	24	
Spare	25	100	3		A		3	175	26	CU-2
	27	-	-		B		-	-	28	
	29	-	-		C		-	-	30	
Space	31		3		A		3		32	Space
	33		-		B		-		34	
	35		-		C		-		36	
	37				A				38	
	39				B				40	
	41				C				42	
TOTAL AMPS	**A**	0.00	**B**	0.00	**C**	0.00				

FEEDERS SCHEDULE

TYPE	WIRING
3P-60A	1"C-4#6, 1#10 GND.
3P-100A	1-1/4"C-4#3, 1#8 GND.
3P-150A	2"C-4#1/0, 1#6 GND.
3P-175	2"C-4#2/0, 1#6 GND.
3P-200	2"C-4#3/0, 1#6 GND.
3P-250	2-1/2"C-4-250 MCM, 1#4 GND.

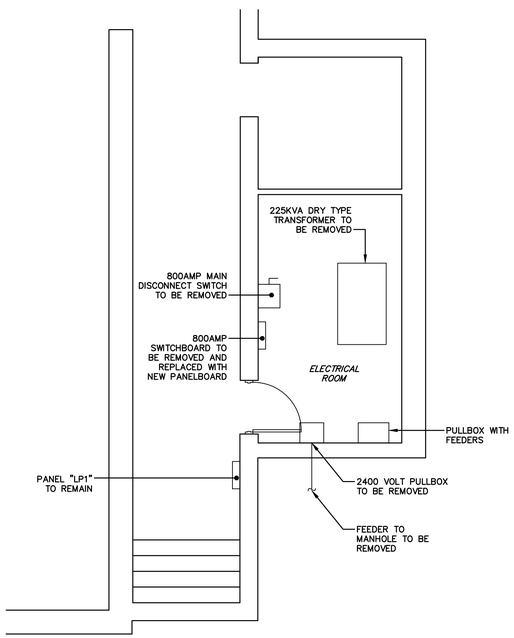

EXISTING/DEMOLITION ELECTRIC ROOM PLAN

SCALE: 1/4"= 1'-0"±

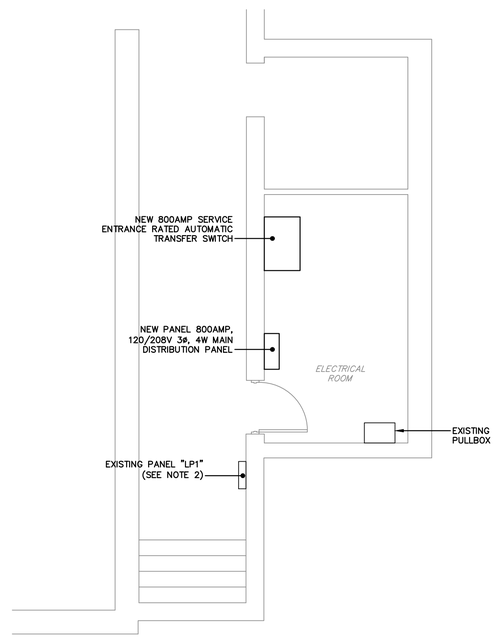

NEW ELECTRIC ROOM PLAN

SCALE: 1/4"= 1'-0"±

NOTE:

1. FOR NOTES, LEGEND, ABBREVIATIONS AND DETAILS SEE DRAWINGS 00-E-1, 00-E-2 AND 00-E-3.
2. PROVIDE (2)-1P-30AMP CIRCUIT BREAKERS FOR GENERATOR HEATER AND CHARGER.

ISSUED FOR BID 07/09/2018

No.	DATE	DESCRIPTION	DESIGNER	REVIEWER
4.	7/9/2018	ISSUED FOR BID	CW	KS
3.	4/5/2018	ISSUED FOR PERMIT	CW	KS
2.	1/18/2018	ISSUED FOR BID	CW	KS
1.	11/7/2018	ISSUED FOR PERMIT	CW	KS

SEAL

SCALE: HORZ.: 1"=30' VERT.:
DATUM: HORZ.: VERT.:
30 10 0 30
GRAPHIC SCALE

FUSS & O'NEILL
317 IRON HORSE WAY, SUITE 204
PROVIDENCE, RI 02908
401.861.3070
www.fando.com

RHODES ISLAND DEPARTMENT OF ADMINISTRATION
HARRINGTON BUILDING #58
ELECTRICAL SITE PLAN AND ELECTRIC ROOM PLANS
HARRINGTON HALL & STEDMEN GOVERNMENT CENTER
CRANSTON & WAKEFIELD RHODE ISLAND

PROJ. No.: 20170903.A10
DATE: APRIL 2018

58-E-1

File Path: J:\DWG\P20170903A10\MEP\Electrical\20170903A10_UTL01_58_HARRINGTON.dwg Layout: 58-E-1 Plotted: Tue, July 03, 2018 - 11:50 AM User: sirons
Plotter: DWG TO PDF.PC3 CTB File: FO.STB
LAYER STATE:
MS VIEW:

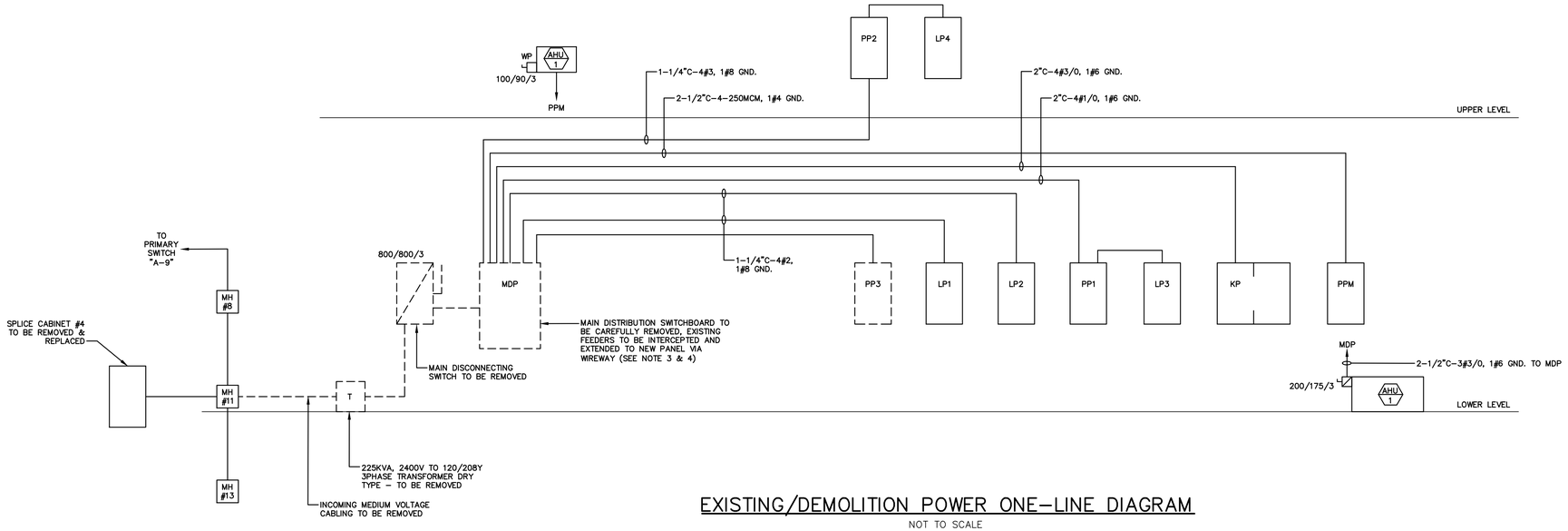

EXISTING/DEMOLITION POWER ONE-LINE DIAGRAM

NOT TO SCALE

NOTES:

1. FOR NOTES, LEGEND, ABBREVIATIONS AND DETAILS SEE DRAWINGS 00-E-1, 00-E-2 AND 00-E-3.
2. PROVIDE #3/0 BARE SOFTDRAWN COPPER TO 3/4"ø x 10'-0" GROUND ROD AND STREET SIDE OF WATER METER. SEE GROUNDING DETAIL.
3. ELECTRICAL CONTRACTOR SHALL VERIFY EXISTING PANEL CIRCUIT BREAKER SIZES PRIOR TO SUBMITTING PANEL SHOP DRAWING.
4. ELECTRICAL CONTRACTOR SHALL VERIFY OUTGOING FEEDER SIZES. INTERCEPT AND EXTEND EXISTING FEEDERS VIA WIREWAY TO NEW PANEL.
5. CONTRACTOR SHALL PROVIDE NEW 5 WAY SPLICE UTILIZING 600AMP ELASTIMOLD ELBOWS AND TEES.
6. PROVIDE SHARK METER ENCSHK200-120-60-10-V2-D2-INP100S IN NEMA 1 ENCLOSURE. PROVIDE PT'S AND CT'S AS REQUIRED ON LOAD SIDE OF MAIN BREAKER.
7. NEW 5KV SPLICE.
8. PROVIDE MATCHING PLUGS HUBBELL 16 SERIES COLOR CODED ALONG WITH 20' OF 600 MVM CABLE EACH.

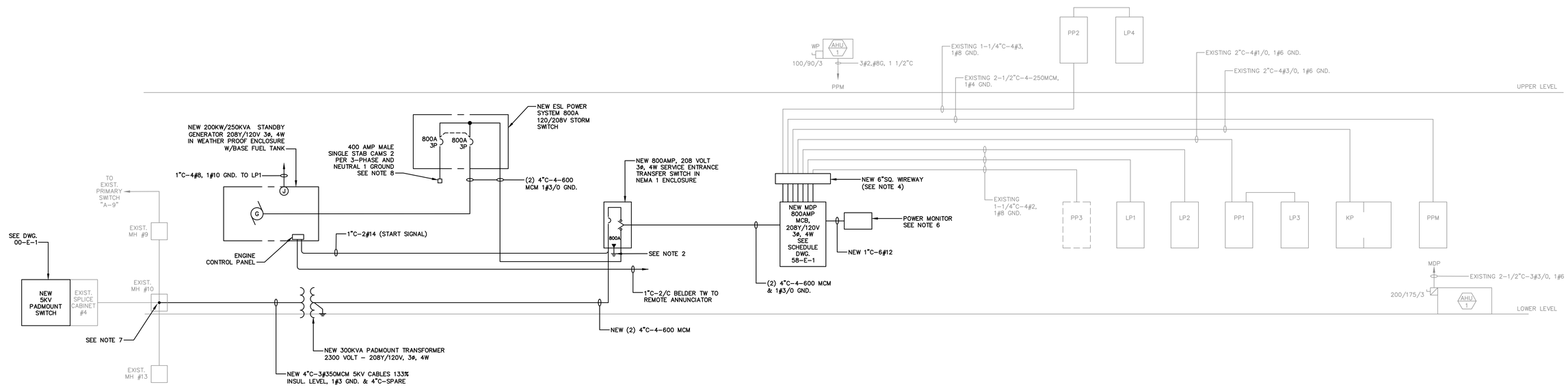

NEW POWER ONE-LINE DIAGRAM

NOT TO SCALE

ISSUED FOR BID 07/09/2018

No.	DATE	DESCRIPTION	DESIGNER	REVIEWER
4.	7/9/2018	ISSUED FOR BID	CW	KS
3.	4/5/2018	ISSUED FOR PERMIT	CW	KS
2.	1/18/2018	ISSUED FOR BID	CW	KS
1.	11/7/2018	ISSUED FOR PERMIT	CW	KS

SEAL

SCALE:
HORZ.: 1"=300'
VERT.:
DATUM:
HORZ.:
VERT.:
300 150 0 300
GRAPHIC SCALE

FUSS & O'NEILL
317 IRON HORSE WAY, SUITE 204
PROVIDENCE, RI 02908
401.861.3070
www.fando.com

RHODES ISLAND DEPARTMENT OF ADMINISTRATION
HARRINGTON BUILDING #58
ONE-LINE DIAGRAMS
HARRINGTON HALL & STEDMEN GOVERNMENT CENTER
CRANSTON & WAKEFIELD RHODE ISLAND

PROJ. No.: 20170903.A10
DATE: APRIL 2018
58-E-2

File Path: J:\DWG\P\20170903\A10\MEP\Electrical\20170903A10_UTL01_58_HARRINGTON.dwg Layout: 58-E-2 Plotted: Tue, July 03, 2018 - 11:50 AM User: sirons
Plotter: DWG TO PDF.PC3 CTB File: FO.STB
MS VIEW:
LAYER STATE:

ELECTRICAL SITE PLAN

SCALE: 1"= 30'

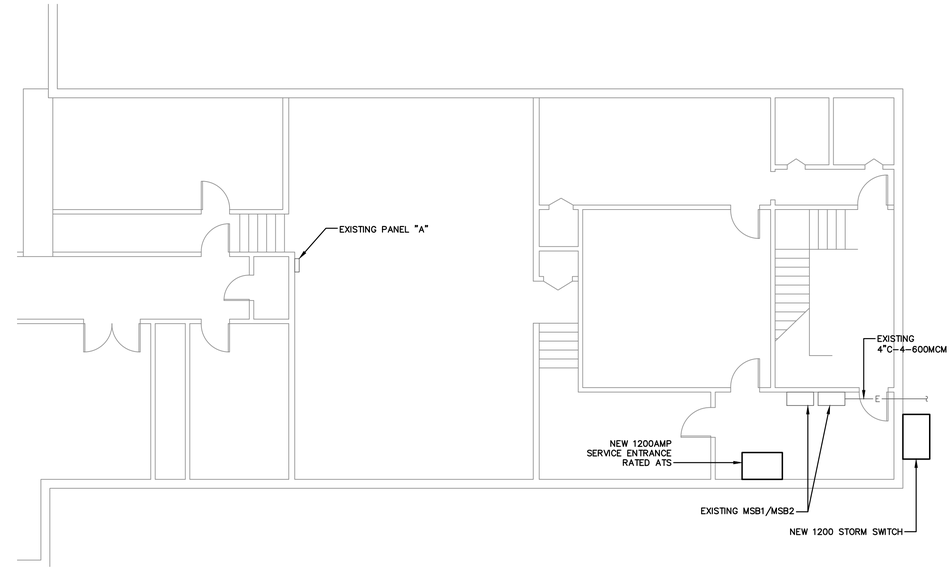

ELECTRICAL ROOM FLOOR PLAN

SCALE: 1/8"= 1'-0"

NOTE:

1. FOR NOTES, LEGEND, ABBREVIATIONS AND DETAILS SEE DRAWINGS 00-E-1, 00-E-2 AND 00-E-3.

ISSUED FOR BID 07/09/2018

No.	DATE	DESCRIPTION	DESIGNER	REVIEWER
4.	7/9/2018	ISSUED FOR BID	CW	KS
3.	4/5/2018	ISSUED FOR PERMIT	CW	KS
2.	1/18/2018	ISSUED FOR BID	CW	KS
1.	11/7/2018	ISSUED FOR PERMIT	CW	KS

SEAL

SCALE:
HORZ.: 1"=30'
VERT.:
DATUM:
HORZ.:
VERT.:
30 15 0 30
GRAPHIC SCALE

FUSS & O'NEILL
317 IRON HORSE WAY, SUITE 204
PROVIDENCE, RI 02908
401.861.3070
www.fando.com

RHODES ISLAND DEPARTMENT OF ADMINISTRATION
STEDMAN BUILDING
ELECTRICAL SITE PLAN AND ELECTRICAL ROOM PLAN
HARRINGTON HALL & STEDMEN GOVERNMENT CENTER
CRANSTON & WAKEFIELD RHODE ISLAND

PROJ. No.: 20170903.A10
DATE: APRIL 2018

ST-E-1

File Path: J:\DWG\P20170903A10\MEP\Electrical\20170903A10_UTL02_ST_STEDMAN.dwg Layout: ST-E-1 Plotted: Tue, July 03, 2018 - 11:51 AM User: sirons
Plotter: DWG TO PDF.PC3 CTB File: FO.STB
LAYER STATE:
MS VIEW:

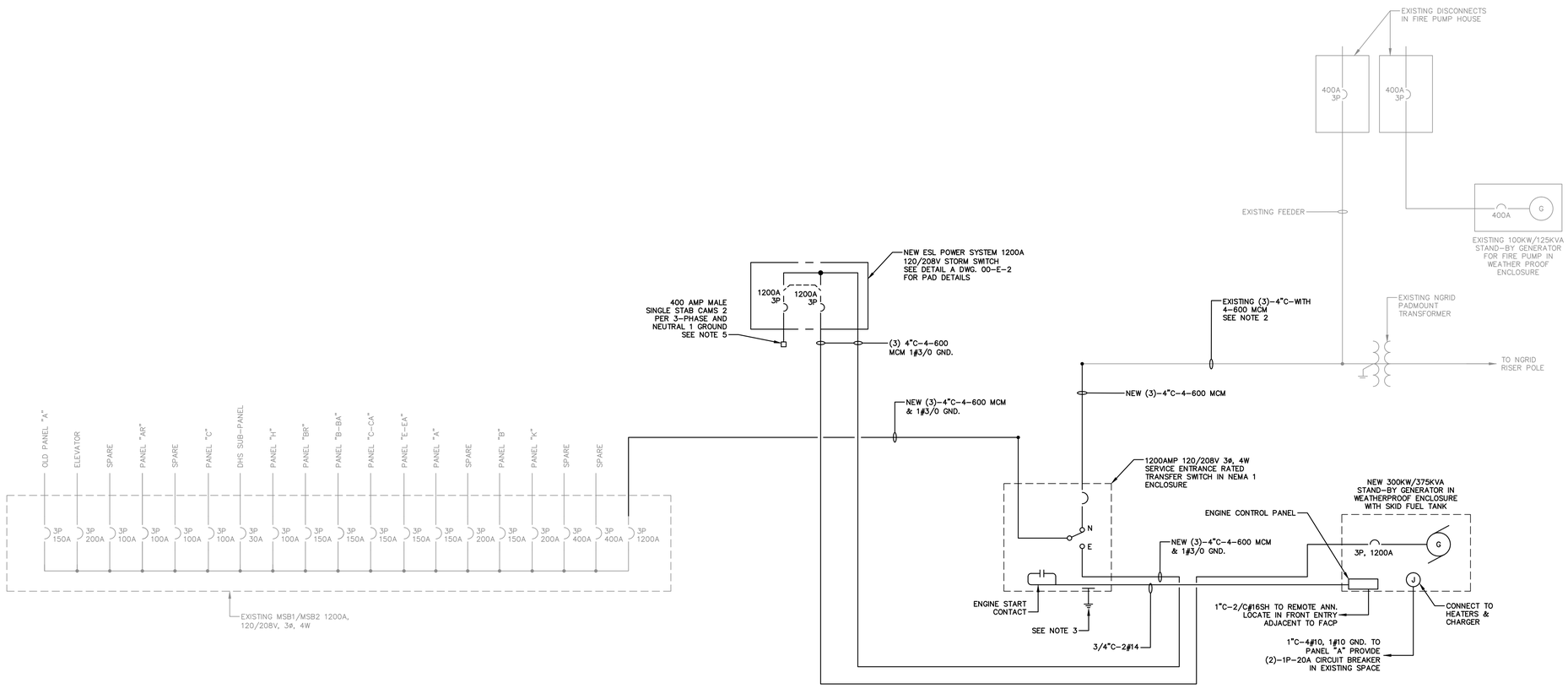

PROPOSED ONE-LINE DIAGRAM

NOT TO SCALE

NOTE:

1. FOR NOTES, LEGEND, ABBREVIATIONS AND DETAILS SEE DRAWINGS 00-E-1, 00-E-2 AND 00-E-3.
2. INTERCEPT EXISTING SECONDARY SERVICE, REMOVE WIRING COMPLETE TO EXISTING TRANSFORMER, EXTEND SERVICE ENTRANCE CONDUITS TO NEW ATS AND PROVIDE NEW RACEWAY TO EXISTING MSB1. INSTALL NEW WIRING AS INDICATED AND CONNECT.
3. #3/0 SERVICE ENTRANCE GROUND CONNECT TO 3/4"ø x 10'-0" GROUND ROD, BUILDING STEEL AND STREET SIDE OF WATER METER. DISCONNECT AND REMOVE EXISTING SERVICE ENTRANCE GROUND.
4. COORDINATE SHUTDOWNS WITH NGRID AND PAY ALL ASSOCIATED COSTS.
5. PROVIDE MATING PLUGS HUBBELL 16 SERVES COLOR CODED ALONG WITH 20' OF 600 MCM CABLES FOR EACH.

ISSUED FOR BID 07/09/2018

No.	DATE	DESCRIPTION	DESIGNER	REVIEWER
4.	7/9/2018	ISSUED FOR BID	CW	KS
3.	4/5/2018	ISSUED FOR PERMIT	CW	KS
2.	1/18/2018	ISSUED FOR BID	CW	KS
1.	11/7/2018	ISSUED FOR PERMIT	CW	KS

SEAL

SCALE: HORZ.: AS NOTED VERT.:
DATUM: HORZ.: VERT.:
1 0 1
GRAPHIC SCALE

FUSS & O'NEILL
317 IRON HORSE WAY, SUITE 204
PROVIDENCE, RI 02908
401.861.3070
www.fando.com

RHODES ISLAND DEPARTMENT OF ADMINISTRATION
STEDMAN BUILDING
ONE-LINE DIAGRAMS
HARRINGTON HALL & STEDMEN GOVERNMENT CENTER
CRANSTON & WAKEFIELD RHODE ISLAND

PROJ. No.: 20170903.A10
DATE: APRIL 2018
ST-E-2

File Path: J:\DWG\P\20170903\A10\MEP\Electrical\20170903A10_UTL02_ST_STEDMAN.dwg Layout: ST-E-2 Plotted: Tue, July 03, 2018 - 11:51 AM User: srons
Plotter: DWG TO PDF.PC3 CTB File: FO.STB
MS VIEW:
LAYER STATE: