BUILDING 6 - RHODE ISLAND COLLEGE

MOUNT PLEASANT AVENUE · PROVIDENCE · RHODE ISLAND

FIRE ALARM SYSTEM REPLACEMENT

APRIL 2018

PREPARED FOR

RHODE ISLAND COLLEGE
PHYSICAL PLANT BUILDING
600 MOUNT PLEASANT AVENUE
PROVIDENCE, RI 02908

PREPARED BY

FUSS & O'NEILL
317 IRON HORSE WAY, SUITE 204
PROVIDENCE, RI 02908
401.861.3070
www.fando.com

SHEET INDEX

SHEET No.	SHEET TITLE
GI-001	COVER SHEET
E-001	GENERAL NOTES, LEGEND, AND DIAGRAMS
E-101	DEMOLITION ELECTRICAL PLAN - BASEMENT
E-102	DEMOLITION ELECTRICAL PLAN - FIRST FLOOR
E-103	NEW WORK ELECTRICAL PLAN - BASEMENT
E-104	NEW WORK ELECTRICAL PLAN - FIRST FLOOR

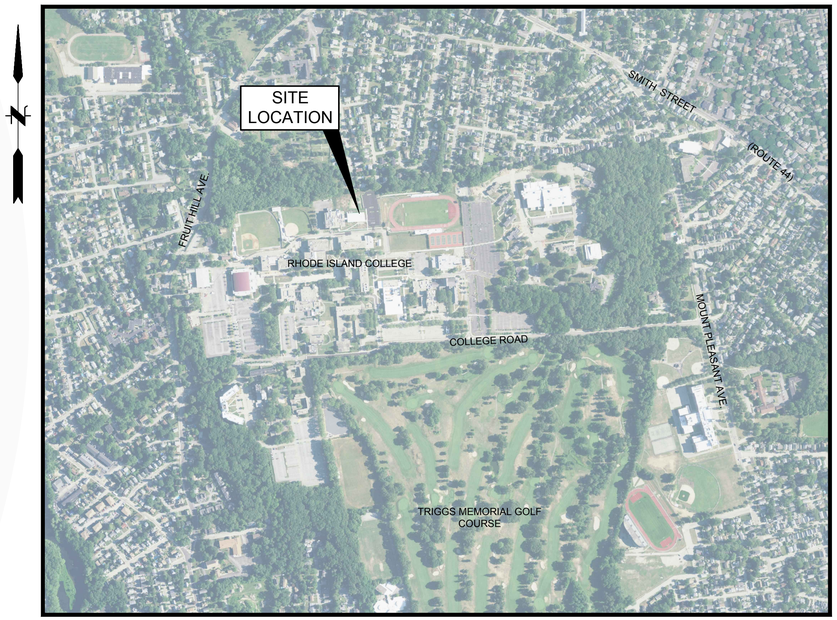

LOCATION MAP
SCALE: 1" = 600'

ISSUED FOR PERMIT 4-4-2018

PROJ. No.: 20160941.A20
DATE: APRIL 2018

GI-001

File Path: J:\DWG\P2016\09411\A20\MEP\Electrical\20160941A20_COV01.dwg, Layout: GI-001, Plotted: Tuesday, September 18, 2018, User: sirons Plotter: DWG TO PDF.PC3 CTB File: FO.STB

FIRE ALARM SYSTEM

F	MANUAL PULL STATION MOUNTED LOCAL 48" AFF
F	AUDIO/VISUAL ALARM MOUNTED 80" AFF.
F CLG	AUDIO/VISUAL ALARM CEILING MOUNTED
F	VISUAL ONLY UNIT MOUNTED 80" AFF.
SD	PHOTOELECTRIC SMOKE DETECTOR: "I" DENOTES IONIZATION SMOKE DETECTOR
HD 190°	135° FIXED TEMPERATURE HEAT DETECTOR. "190°" INDICATES 190°F FIXED TEMPERATURE
TS	SPRINKLER TAMPER SWITCH FURNISHED AND INSTALLED BY THE FIRE PROTECTION SUBCONTRACTOR, WIRED BY THE ELECTRICAL SUBCONTRACTOR
SD	DUCT MOUNTED SMOKE DETECTOR WITH SAMPLING TUBE
RTS	REMOTE TEST STATION FOR DUCT SMOKE DETECTOR WITH NAMEPLATE LABELED ACCORDINGLY
RAI	REMOTE ALARM INDICATOR
FACP	FIRE ALARM CONTROL PANEL
FAA	FIRE ALARM REMOTE ANNUNCIATOR
CM	ADDRESSABLE CONTROL MODULE
MM	ADDRESSABLE MONITOR MODULE
IM	ZONE ISOLATION MODULE
	EXTERIOR FIRE ALARM BEACON
K	KNOX BOX
GYP	GYPBOARD
SAT	SUSPENDED ACOUSTICAL TILE

LEGEND

* MOUNTING HEIGHTS SHALL BE AS INDICATED UNLESS SHOWN OTHERWISE ON ELECTRICAL DRAWINGS OR ARCHITECTURAL ELEVATIONS
* ALL SYMBOLS MAY NOT BE SHOWN ON PLANS

RACEWAYS AND WIRING

P4–1,3,5	SINGLE PHASE HOMERUNS TO PANELBOARD. "P4" DENOTES PANEL, "1,3,5" DENOTES CIRCUIT NUMBERS, [(3) 20A, 1P CIRCUITS] NUMBER OF SLASH MARKS DENOTES NUMBER OF #12AWG CONDUCTORS IN MINIMUM 3/4"C. NO SLASH MARKS INDICATE 2#12 & 1#12G–3/4"C UNLESS INDICATED OTHERWISE.
P4–2 20/3	MULTI–POLE HOMERUN TO PANELBOARD. "P4" DENOTES PANEL, "2" DENOTES CIRCUIT NUMBER, 20 AMP 3 POLE C/B. NUMBER OF SLASH MARKS DENOTES NUMBER OF #12AWG CONDUCTORS IN MINIMUM 3/4"C.
	NOTES: 1. GREEN GROUND CONDUCTOR NOT INDICATED BUT SHALL BE INCLUDED IN EACH RACEWAY. SIZE SHALL BE #12AWG UNLESS INDICATED OTHERWISE.
E	2#10,#10G EMERGENCY ONLY WIRING

LIGHTING FIXTURES

	CEILING MOUNTED ILLUMINATED EXIT SIGN, ARROWS AS INDICATED ON DRAWINGS MULE MXBRL/SD PKUX1
	WALL MOUNTED ILLUMINATED EXIT SIGN – SHADING INDICATES FACE PLATE(S) MULE MXBRUSD
EB	EMERGENCY BATTERY UNIT MULE SQ80LED–W–SD–REM
	REMOTE EMERGENCY ONLY LIGHT HEADS – SINGLE OR DOUBLE AS SHOWN MULE RLED–2–SD–WP–3.6V
WP	WEATHER PROOF EMERGENCY ONLY LIGHT FIXTURE MULE RLED1–SD–WP–3.6V

MISCELLANEOUS

J	JUNCTION BOX WITH FLEXIBLE CONNECTION TO EQUIPMENT
EF	EXHAUST FAN
CP	CONTROL PANEL
PB	PULL BOX – SIZED PER NEC FOR CONDUITS ENTERING AND LEAVING

ABBREVIATIONS

AFF	ABOVE FINISHED FLOOR
AWG	AMERICAN WIRE GAUGE
C	CONDUIT
C/B	CIRCUIT BREAKER
CAT	CATALOG
CLG	CEILING MOUNTED
CKT	CIRCUIT
CU	COPPER
DWG	DRAWING
E	WIRED ON EMERGENCY CIRCUIT
EC	ELECTRICAL CONTRACTOR
EM	EMERGENCY
ETD	EXISTING TO BE DEMOLISHED
ETR	EXISTING TO REMAIN
ETRL	EXISTING TO BE RELOCATED
ETRP	EXISTING TO BE REPLACED
G	GROUND
MCB	MAIN CIRCUIT BREAKER
MCC	MOTOR CONTROL CENTER
MLO	MAIN LUGS ONLY
NEC	NATIONAL ELECTRICAL CODE
NTS	NOT TO SCALE
ø	PHASE
P	POLE
RL	NEW LOCATION OF RELOCATED DEVICE
SM	SURFACE MOUNT
UNO	UNLESS NOTED OTHERWISE
V	VOLT
VIF	VERIFY IN FIELD
W	WATT

GENERAL NOTES

1. ALL ELECTRICAL WORK SHALL BE INSTALLED IN ACCORDANCE WITH THE LATEST EDITION OF THE NATIONAL AND RHODE ISLAND ELECTRICAL CODES AND OTHER STATE OF RHODE ISLAND REQUIREMENTS AND THE NATIONAL ELECTRICAL SAFETY CODE C2.
2. ADDITIONAL JUNCTION / PULL BOXES SHALL BE FURNISHED AND INSTALLED AS REQUIRED.
3. ALL CONDUITS SHALL CONTAIN A GREEN SAFETY GROUND WIRE. BOND ALL PANELS, CABINETS, ENCLOSURES, CONDUITS, ETC., AS REQUIRED.
4. PROVIDE CONDUIT SLEEVES FILLED WITH AN APPROVED FIRE–RESISTANT MATERIAL WHERE FIRE–RATED WALLS ARE PENETRATED. PROVIDE WATERTIGHT CONDUIT SLEEVES WHERE EXTERIOR WALLS ARE PENETRATED EITHER ENTERING OR LEAVING A BUILDING.
5. ALL CUTTING, PATCHING AND FIRESTOPPING RELATED TO ELECTRICAL WORK SHALL BE THE RESPONSIBILITY OF THE ELECTRICAL CONTRACTOR.
6. ALL WIRING EXTENDED FROM SPLICE BOXES TO PANELBOARDS SHALL BE TERMINATED ON TERMINAL STRIPS IN SPLICE BOXES. PROVIDE CIRCUIT BRANCH CIRCUIT IDENTIFICATION WITHIN THE SPLICE BOX.
7. BRANCH CIRCUIT WIRING TO BE MODIFIED OR EXTENDED MAY NOT BE SHOWN BUT SHALL BE PROVIDED AS REQUIRED. MINIMUM WIRING SHALL BE 3/4"C–2#12, 1#12 GROUND. NO MORE THAN THREE PHASES MAY BE COMBINED IN A SINGLE HOMERUN AND EACH PHASE SHALL BE PROVIDED WITH AN INDIVIDUAL NEUTRAL.
8. FIRE ALARM SYSTEM SHALL BE PER RI FIRE SAFETY CODE.
9. REPLACE EXISTING 2'x2' CEILING TILES AFFECTED BY DEMOLITION. NEW TILES SHALL BE EXACT MATCH TO EXISTING.

DEMOLITION NOTES

1. EXISTING ELECTRICAL EQUIPMENT INDICATED ON PLANS MUST BE FIELD VERIFIED PRIOR TO CONSTRUCTION AS REQUIRED. ANY EQUIPMENT THAT IS NOT IDENTIFIED AND CONFLICTS WITH CONSTRUCTION SHALL NOT BE DISCONNECTED AND SHALL BE BROUGHT TO THE ATTENTION OF THE OWNER/ENGINEER FOR DISPOSITION.
2. WHERE WIRING IS TO BE REMOVED, RELOCATED OR RECONNECTED, THE CONTRACTOR SHALL TAKE PRECAUTIONS AND ASSUME THAT THE CIRCUIT MAY BE ACTIVE. CONTRACTOR SHALL TEST, VERIFY AND SECURE ALL CIRCUITS BEFORE REMOVAL. UNKNOWN WIRING SHALL BE IDENTIFIED. ANY WIRING TO REMAIN SHALL BE VERIFIED BY THE CONTRACTOR, TAGGED AND IDENTIFIED AS REQUIRED.
3. EXISTING ELECTRICAL EQUIPMENT AND DEVICES TO BE REMOVED SHOWN SHALL BE REMOVED COMPLETELY INCLUDING ALL CONDUIT, WIRING AND ASSOCIATED APPURTENANCES BACK TO EXISTING SOURCE WHERE THE EXISTING SOURCE SHALL BE LABELED AS SPARE.
4. EXISTING CONDUITS TO BE REMOVED WHICH ARE EMBEDDED IN A CONCRETE SLAB SHALL HAVE THE WIRING REMOVED AND THE CONDUIT CUT FLUSH WITH CONCRETE AND SEALED IN AN APPROVED MANNER.
5. EXISTING ELECTRICAL EQUIPMENT AND WIRING TO REMAIN SHOWN SHALL BE PROTECTED FROM DAMAGE AS REQUIRED DURING THE CONSTRUCTION PERIOD AND LEFT IN GOOD WORKING ORDER AT COMPLETION. ANY EQUIPMENT DAMAGED SHALL BE REPLACED BY THE CONTRACTOR AT NO EXPENSE TO THE OWNER.
6. OWNER AND CODE REQUIRED SYSTEMS THAT ARE REQUIRED TO REMAIN ACTIVE DURING CONSTRUCTION SHALL BE TEMPORARILY WIRED AS REQUIRED TO REMAIN ACTIVE THROUGHOUT THE CONSTRUCTION PERIOD UNTIL NEW SYSTEMS ARE INSTALLED, TESTED AND ACCEPTED.
7. IN CONDITIONS WHERE IN THE OPINION OF THE CONTRACTOR IT IS NOT CLEAR WHETHER EXISTING ELECTRICAL EQUIPMENT IS TO BE REMOVED OR REMAIN, IT SHOULD BE BROUGHT TO THE ATTENTION OF THE ENGINEER FOR REVIEW AND FINAL DECISION.
8. ANY DISRUPTION OF ANY ELECTRICAL SERVICE OR FIRE ALARM NECESSITATED BY THE ELECTRICAL RENOVATION SHALL BE COORDINATED WITH THE OWNER IN ORDER FOR PROPER NOTICE TO BE GIVEN PRIOR TO THE DISCONNECTION OF ANY SERVICE.
9. EXISTING ELECTRICAL EQUIPMENT REMOVED SHALL BE BROKEN DOWN INTO MANAGEABLE LENGTHS FOR STORAGE, HANDLING AND DISPOSAL.
10. EXISTING ELECTRICAL EQUIPMENT REMOVED SHALL BE PROPERLY DISPOSED OF BY CONTRACTOR NO ITEMS SHALL BE TURNED OVER TO STATE.
11. ELECTRICAL RENOVATION WORK SHALL BE ACCOMPLISHED IN CONFORMANCE WITH THE REQUIREMENTS OF THE NATIONAL ELECTRICAL CODE.

FIRE ALARM RISER NOTES

1. REFER TO FLOOR PLANS FOR EXACT QUANTITIES AND LOCATIONS OF ALL DEVICES.
2. ALL WIRING SHALL BE CLASS "A" AND PER MANUFACTURER'S RECOMMENDATIONS
3. ALL FIRE ALARM WORK SHALL BE IN ACCORDANCE WITH THE LATEST EDITIONS OF NFPA, STATE, AND LOCAL BUILDING CODES AND THE AMERICANS WITH DISABILITIES ACT (ADA).
4. ALL HORN STROBE UNITS SHALL BE 4–WIRE TYPE TO ALLOW STROBES TO REMAIN FLASHING WHILE HORNS ARE SILENCED.
5. THE EXISTING SYSTEM IS TO REMAIN OPERATIONAL THROUGHOUT THE CONSTRUCTION PERIOD UNTIL THE NEW SYSTEM HAS BEEN INSTALLED, TESTED, AND ACCEPTED.
6. PROVIDE NEW APPLIANCE BOOSTER PANELS AS NEEDED.
7. PROVIDE (1) ISOLATION MODULE PER EVERY 25 DEVICES, MINIMUM (1) PER FLOOR.

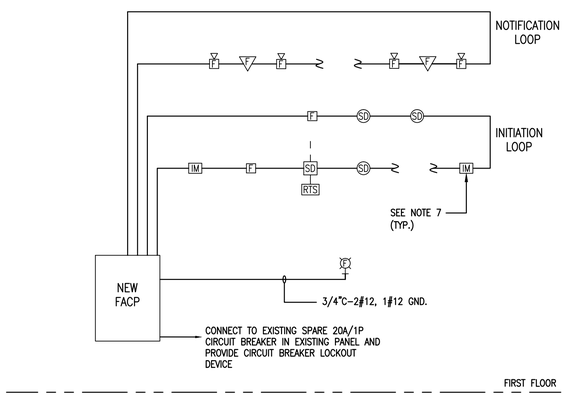

1 TYPICAL FIRE ALARM SYSTEM SINGLE–LINE DIAGRAM
NO SCALE

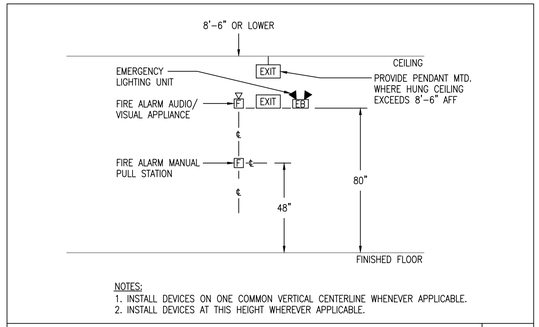

NOTES:
1. INSTALL DEVICES ON ONE COMMON VERTICAL CENTERLINE WHENEVER APPLICABLE.
2. INSTALL DEVICES AT THIS HEIGHT WHEREVER APPLICABLE.

DETAIL OF TYPICAL DEVICE MOUNTING HEIGHTS | NTS

ISSUED FOR BID 09/18/2018

No.	DATE	DESCRIPTION	DESIGNER	REVIEWER
2.	9/18/2018	ISSUED FOR BID	CW	KS
1.	4/4/2018	ISSUED FOR PERMIT	CW	KS

SEAL

SEAL

SCALE: HORZ.: NOT TO SCALE VERT.:
DATUM: HORZ.: VERT.:
1 0 1
GRAPHIC SCALE

FUSS & O'NEILL
317 IRON HORSE WAY, SUITE 204
PROVIDENCE, RI 02908
401.861.3070
www.fando.com

RHODE ISLAND COLLEGE

GENERAL NOTES, LEGEND, AND DIAGRAMS

BUILDING 6

MOUNT PLEASANT PROVIDENCE, RHODE ISLAND

PROJ. No.: 20160941.A20
DATE: APRIL 2018

E-001

File Path: J:\DWG\P20160941\A20\MEP\Electrical\20160941A20_ELE01.dwg Layout: E-001 Plotted: Tue, September 18, 2018 - 11:00 AM User: srons
Plotter: DWG TO PDF.PC3 CTB File: FO.STB
LAYER STATE:
MS VIEW:

DEMOLITION KEYED NOTES:

1. DISCONNECT AND REMOVE ALL EXISTING FIRE ALARM SYSTEM DEVICES, INCLUDING CONDUIT AND WIRING RACK TO EXISTING FACP LOCATED ON THE FIRST FLOOR.
2. DISCONNECT AND REMOVE EXISTING REMOTE EMERGENCY HEAD. REMOVE CONDUIT AND WIRING BACK TO EXISTING EMERGENCY BATTERY CABINET LOCATED IN BASEMENT BOILER ROOM.
3. DISCONNECT AND REMOVE EXISTING BATTERY CABINETS INCLUDING CONDUIT AND WIRING BACK TO PANEL AND LOCATED IN BOILER ROOM.
4. DISCONNECT AND REMOVE EXISTING EXIT LIGHTS INCLUDING CONDUIT AND WIRING BACK TO BATTERY CABINET AND TO 120 VOLT SUPPLY.

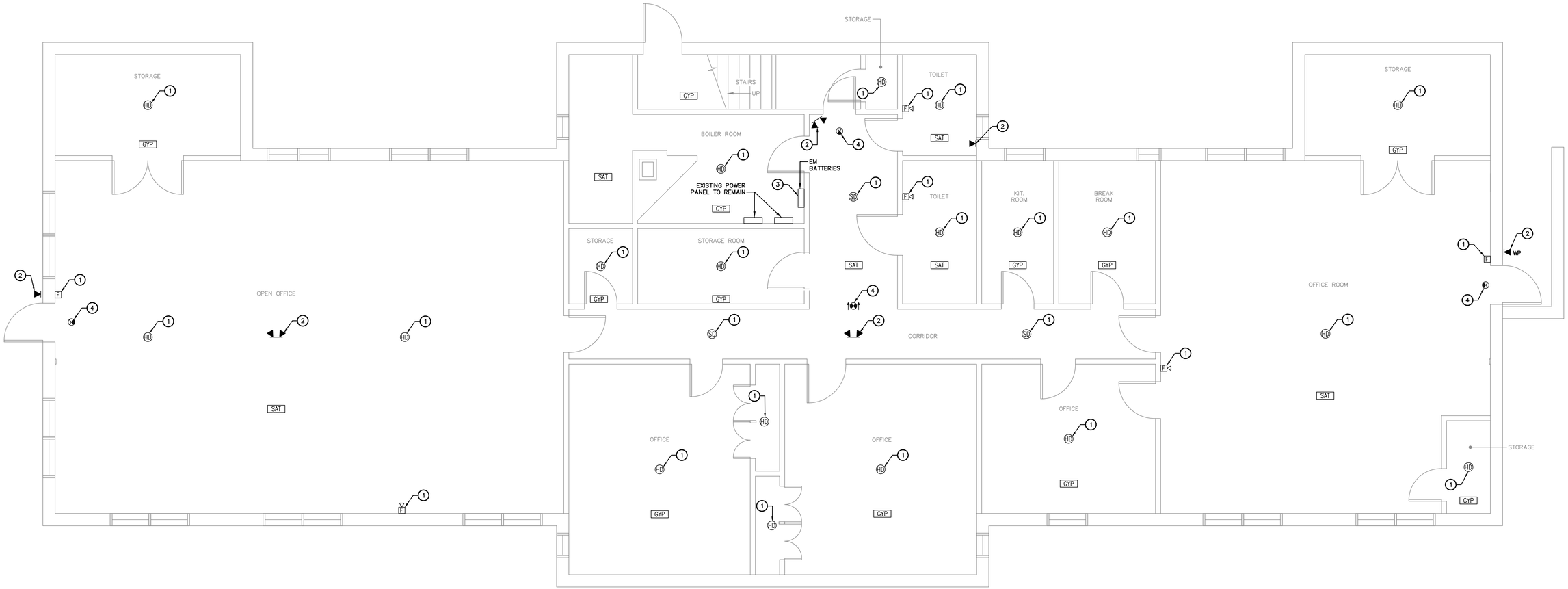

1 DEMOLITION PLAN – BASEMENT
1/4" = 1'-0"

ISSUED FOR BID 09/18/2018

No.	DATE	DESCRIPTION	DESIGNER	REVIEWER
2.	9/18/2018	ISSUED FOR BID	CW	KS
1.	4/4/2018	ISSUED FOR PERMIT	CW	KS

SEAL

SEAL

SCALE:
HORZ.: 1/4" = 1'-0"
VERT.:
DATUM:
HORZ.:
VERT.:
1/4 0 1/4
GRAPHIC SCALE

FUSS & O'NEILL
317 IRON HORSE WAY, SUITE 204
PROVIDENCE, RI 02908
401.861.3070
www.fando.com

RHODE ISLAND COLLEGE

DEMOLITION ELECTRICAL PLAN - BASEMENT

BUILDING 6

MOUNT PLEASANT PROVIDENCE, RHODE ISLAND

PROJ. No.: 20160941.A20
DATE: APRIL 2018

E-101

File Path: J:\DWG\P2016\0941\A20\MEP\Electrical\20160941A20_ELE01.dwg Layout: E-101 Plotted: Tue, September 18, 2018 - 11:00 AM User: sirons
Plotter: DWG TO PDF.PC3 CTB File: FO.STB
MS VIEW:
LAYER STATE:

DEMOLITION KEYED NOTES:

1. DISCONNECT AND REMOVE ALL EXISTING FIRE ALARM SYSTEM DEVICES, INCLUDING CONDUIT AND WIRING BACK TO EXISTING FACP LOCATED ON THE FIRST FLOOR.
2. DISCONNECT AND REMOVE EXISTING REMOTE EMERGENCY HEAD. REMOVE CONDUIT AND WIRING BACK TO EXISTING EMERGENCY BATTERY CABINET LOCATED IN BASEMENT BOILER ROOM.
3. DISCONNECT AND REMOVE EXISTING BATTERY CABINETS INCLUDING CONDUIT AND WIRING BACK TO PANEL AND LOCATED IN BOILER ROOM.
4. DISCONNECT AND REMOVE EXISTING EXIT LIGHTS INCLUDING CONDUIT AND WIRING BACK TO BATTERY CABINET AND TO 120 VOLT SUPPLY.
5. DISCONNECT AND REMOVE EXISTING FIRE ALARM CONTROL PANEL.

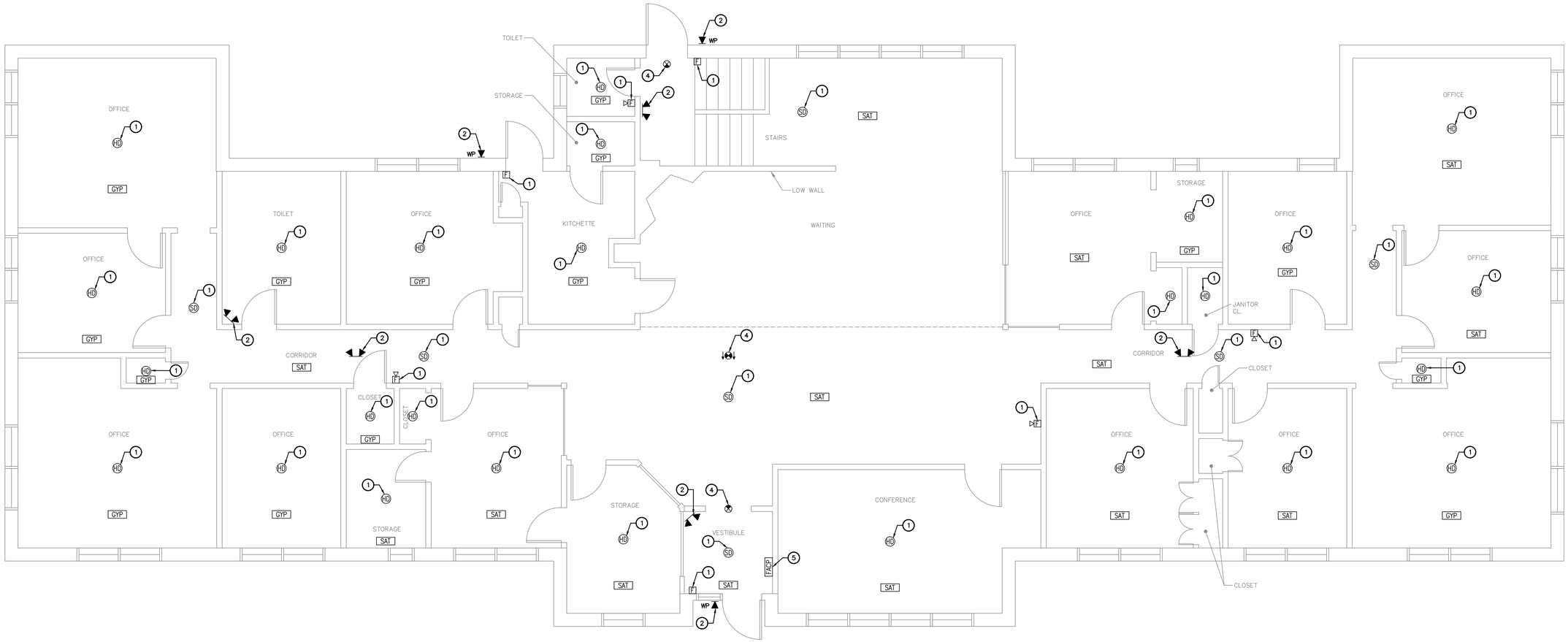

1 DEMOLITION PLAN – FIRST FLOOR
1/4" = 1'-0"

ISSUED FOR BID 09/18/2018

File Path: J:\DWG\P2016\0941\A20\MEP\Electrical\20160941A20_ELE01.dwg Layout: E-102 Plotted: Tue, September 18, 2018 - 11:00 AM User: sirons
Plotter: DWG TO PDF.PC3 CTB File: FO.STB
MS VIEW: LAYER STATE:

No.	DATE	DESCRIPTION	DESIGNER	REVIEWER
2.	9/18/2018	ISSUED FOR BID	CW	KS
1.	4/4/2018	ISSUED FOR PERMIT	CW	KS

SEAL

SEAL

SCALE:
HORZ.: 1/4" = 1'-0"
VERT.:
DATUM:
HORZ.:
VERT.:
1/4 0 1/4
GRAPHIC SCALE

FUSS & O'NEILL
317 IRON HORSE WAY, SUITE 204
PROVIDENCE, RI 02908
401.861.3070
www.fando.com

RHODE ISLAND COLLEGE

DEMILITION ELECTRICAL PLAN - FIRST FLOOR

BUILDING 6

MOUNT PLEASANT PROVIDENCE, RHODE ISLAND

PROJ. No.: 20160941.A20
DATE: APRIL 2018

E-102

NEW WORK KEYED NOTES:

1. CONNECT NEW EXIT LIGHTS TO EXISTING AREA LIGHTING CIRCUIT WITH 2#12, 1#12G, 3/4"C.
2. CONNECT NEW EMERGENCY BATTERY UNIT TO EXISTING AREA LIGHTING CIRCUIT WITH 2#12, 1#12G, 3/4"C. CONNECT NEW EXTERIOR REMOTE HEAD TO NEW BATTERY UNIT WITH 2/C#12 WITH GROUND.

1 NEW WORK PLAN – BASEMENT
1/4" = 1'-0"

ISSUED FOR BID 09/18/2018

No.	DATE	DESCRIPTION	DESIGNER	REVIEWER
2.	9/18/2018	ISSUED FOR BID	CW	KS
1.	4/4/2018	ISSUED FOR PERMIT	CW	KS

SEAL

SEAL

SCALE:
HORZ.: 1/4" = 1'-0"
VERT.:
DATUM:
HORZ.:
VERT.:
1/4 0 1/4
GRAPHIC SCALE

FUSS & O'NEILL
317 IRON HORSE WAY, SUITE 204
PROVIDENCE, RI 02908
401.861.3070
www.fando.com

RHODE ISLAND COLLEGE

NEW WORK ELECTRICAL PLAN - BASEMENT

BUILDING 6

MOUNT PLEASANT PROVIDENCE, RHODE ISLAND

PROJ. No.: 20160941.A20
DATE: APRIL 2018

E-103

File Path: J:\DWG\P20160941\A20\MEP\Electrical\20160941A20_ELE01.dwg Layout: E-103 Plotted: Tue, September 18, 2018 - 11:00 AM User: srons
Plotter: DWG TO PDF.PC3 CTB File: FO.STB
LAYER STATE:
MS VIEW:

NEW WORK KEYED NOTES:

1. CONNECT NEW EXIT LIGHTS TO EXISTING AREA LIGHTING CIRCUIT WITH 2#12, 1#12G, 3/4"C.
2. CONNECT NEW EMERGENCY BATTERY UNIT TO EXISTING AREA LIGHTING CIRCUIT WITH 2#12, 1#12G, 3/4"C. CONNECT NEW EXTERIOR REMOTE HEAD TO NEW BATTERY UNIT WITH 2/C#12 WITH GROUND.

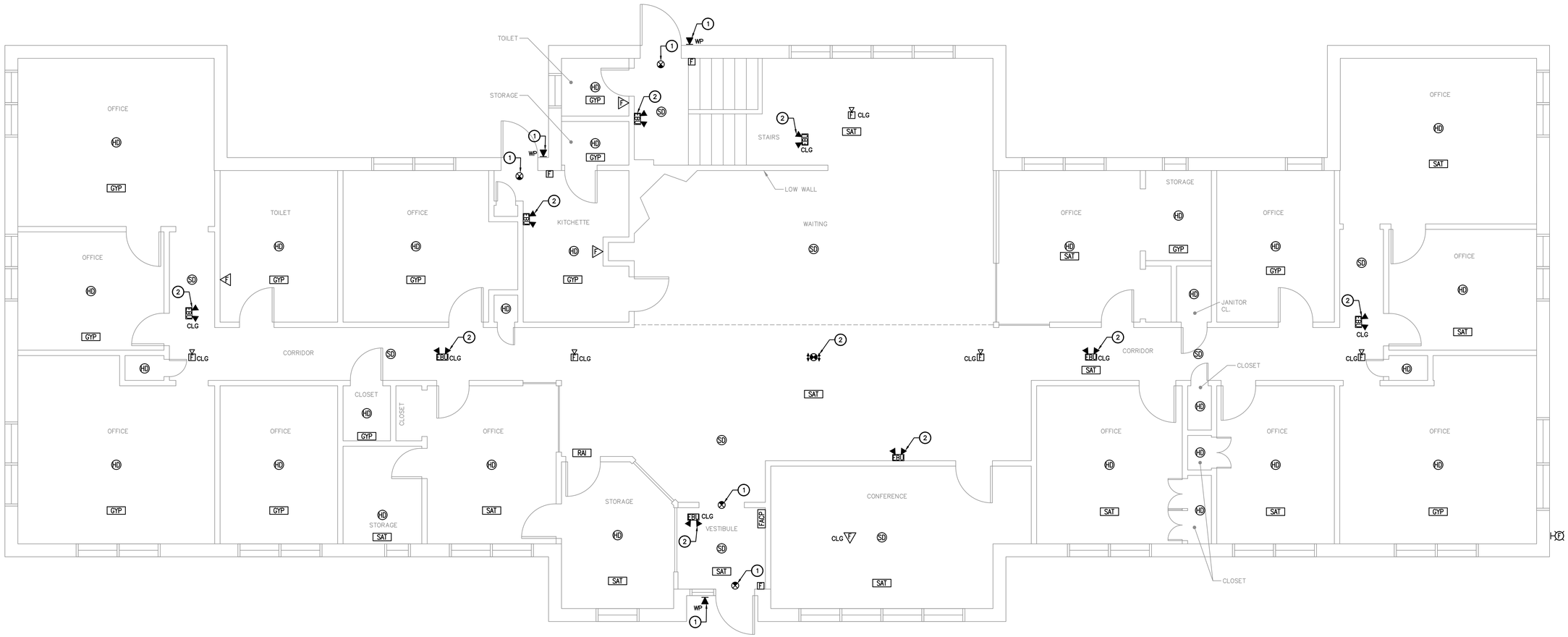

1 NEW WORK PLAN – FIRST FLOOR
1/4" = 1'-0"

ISSUED FOR BID 09/18/2018

No.	DATE	DESCRIPTION	DESIGNER	REVIEWER
2.	9/18/2018	ISSUED FOR BID	CW	KS
1.	4/4/2018	ISSUED FOR PERMIT	CW	KS

SEAL

SEAL

SCALE:
HORZ.: 1/4" = 1'-0"
VERT.:
DATUM:
HORZ.:
VERT.:
1/4 0 1/4
GRAPHIC SCALE

FUSS & O'NEILL
317 IRON HORSE WAY, SUITE 204
PROVIDENCE, RI 02908
401.861.3070
www.fando.com

RHODE ISLAND COLLEGE

NEW WORK ELECTRICAL PLAN - FIRST FLOOR

BUILDING 6

MOUNT PLEASANT PROVIDENCE, RHODE ISLAND

PROJ. No.: 20160941.A20
DATE: APRIL 2018

E-104

File Path: J:\DWG\P2016\09411\A20\MEP\Electrical\20160941A20_ELE01.dwg Layout: E-104 Plotted: Tue, September 18, 2018 - 11:00 AM User: sirons
Plotter: DWG TO PDF.PC3 CTB File: FO.STB
LAYER STATE:
MS VIEW: