RHODE ISLAND DEPT. OF MOTOR VEHICLES

600 NEW LONDON AVENUE · CRANSTON · RHODE ISLAND

MAIN OFFICE FOYER HVAC UPGRADES

FEBRUARY 23, 2018

PREPARED FOR

RHODE ISLAND DEPARTMENT OF ADMINISTRATION
1 CAPITOL HILL
PROVIDENCE, RHODE ISLAND 02908

PREPARED BY

FUSS & O'NEILL
317 IRON HORSE WAY, SUITE 204
PROVIDENCE, RI 02908
401.861.3070
www.fando.com

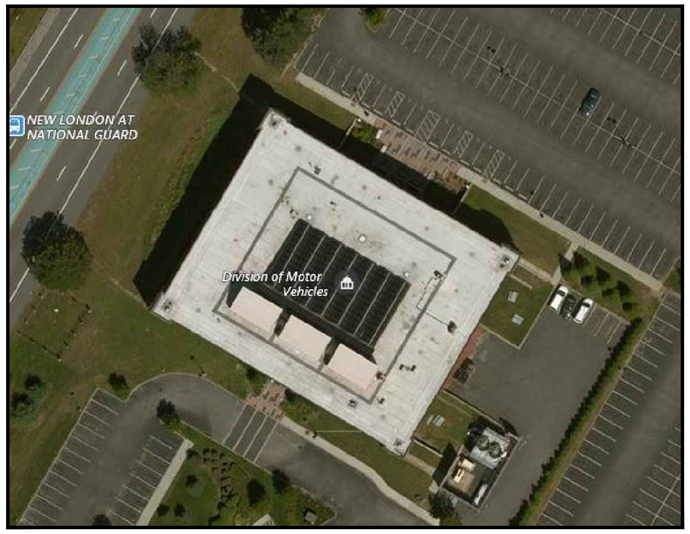

LOCATION MAP
SCALE: 1" = 40'

SHEET INDEX

SHEET No.	SHEET TITLE
G0.1	COVER SHEET
A1.0	ARCHITECTURAL DEMO PLAN
A1.1	ARCHITECTURAL NEW WORK PLAN
A2.0	ARCHITECTURAL VESTIBULE SECTION
A3.0	ARCHITECTURAL EXTERIOR DETAILS
A3.1	ARCHITECTURAL EXTERIOR DETAILS
A5.0	ARCHITECTURAL HVAC COORDINATION
M0.1	MECHANICAL NOTES & LEGENDS
M1.1	MECHANICAL DEMOLITION - FIRST FLOOR
M2.1	MECHANICAL NEW WORK - FIRST FLOOR
M2.2	MECHANICAL NEW WORK - FIRST FLOOR RCP
M4.1	MECHANICAL NEW WORK - ENGLARGED MECHANICAL ROOM
M6.1	MECHANICAL DETAILS & SCHEDULES
E1.1	ELECTRICAL DEMOLITION - FIRST FLOOR
E1.2	ELECTRICAL NEW WORK - FIRST FLOOR
S1.0	SCREEN WALL POST FOOTING

BID DOCUMENTS

PROJ. No.: 20150385.A10
DATE: FEBRUARY 23, 2018

G0.1

File Path: J:\DWG\P2015\0385\A10\MEP\Mechanical\20150385A10_G0001_COVER.dwg, Layout: COVER SHEET - 30X42, Plotted: Monday, February 26, 2018, User: jgemmell Plotter: DWG TO PDF.PC3 CTB File: FO.STB

DEMOLITION KEYNOTES AND LEGEND

EXISTING TO REMAIN — (E) EXISTING TO REMAIN

DEMOLISH/REMOVE — (D) DEMOLISH/REMOVE COMPLETELY

D00 DEMOLITION KEYNOTE

GENERAL DEMOLITION NOTES:

1. SELECTIVELY DEMOLISH ALL ELEMENTS INDICATED AND AS REQUIRED TO ACCOMMODATE NEW WORK SEE M/P/E/FS DRAWINGS FOR ADDITIONAL DEMOLITION INFORMATION.
2. REMOVAL OF HAZARDOUS MATERIALS IS INCLUDED IN CONTRACT. THE OWNER SHALL BE RESPONSIBLE FOR IDENTIFYING ALL SUCH MATERIAL PRIOR TO START OF OPERATIONS. CONTRACTOR SHALL FILE ANY REQUIRED ABATEMENT REPORTS AND PERFORM ALL WORK IN COMPLIANCE WITH APPLICABLE REGULATIONS INCLUDING LEAD-SAFE PROCEDURES RECOMMENDED BY THE EPA AND ASSUME THAT ALL PAINTED SURFACES MAY CONTAIN LEAD UNLESS DEMONSTRATED OTHERWISE. TESTING REPORTS BY OWNER SHALL BE MADE AVAILABLE.
3. THE FOLLOWING SHALL BE REMOVED TYPICALLY THROUGHOUT PROJECT AREA WHETHER SPECIFICALY NOTED OR NOT, UNLESS NOTED OTHERWISE:

   A. EXISTING AUTOMATIC BI-FOLD DOORS LOCATED IN AREA INDICATED ON PLAN.

   B. REMOVE ALL OBSOLETE ELECTRICAL, MECHANICAL, AND PLUMBING FIXTURES, RECEPTACLES, SWITCHES, CONDUIT, JUNCTION BOXES, FITTINGS, AND HANGARS INCLUDING INTERIOR AND EXTERIOR LIGHTING, WIRING, CONDUIT, DEVICES, AND PIPING UNLESS ABLE TO BE REASONABLY INCORPORATED IN NEW WORK. RETAIN BRANCH WIRING AND ROUGH PLUMBING IF RE-USABLE. TERMINATE ABANDONED ELECTRICAL, MECHANICAL, AND PLUMBING SERVICE UTILITIES IN PERMANENT FASHION UNLESS RE-USED. REMOVE ROUGH PLUMBING FROM BATHROOMS NOT BEING RECONSTRUCTED AND PATCH FLOOR AND WALL OPENINGS WITH RATED ASSEMBLIES.

DEMO NOTES:

D.01 REMOVE AUTOMATIC BI-PARTING DOOR AND ALL ASSOCIATED ANCHORS. PREPARE OPENING FOR NEW DOOR FRAME

D.02 REMOVE EXISTING CEILING MOUNTED HVAC UNIT.

E.03 PROTECT EXISTING VESTIBULE STOREFRONT.

E.04 PROTECT EXISTING COPPER DOWNSPOUT & TRENCH DRAIN.

E.05 PROTECT EXISTING LIGHT BOLLARD.

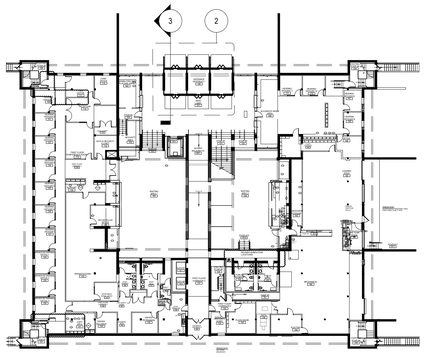

01 **DMV FIRST FLOOR** 1/32"=1'-0"
KEY PLAN

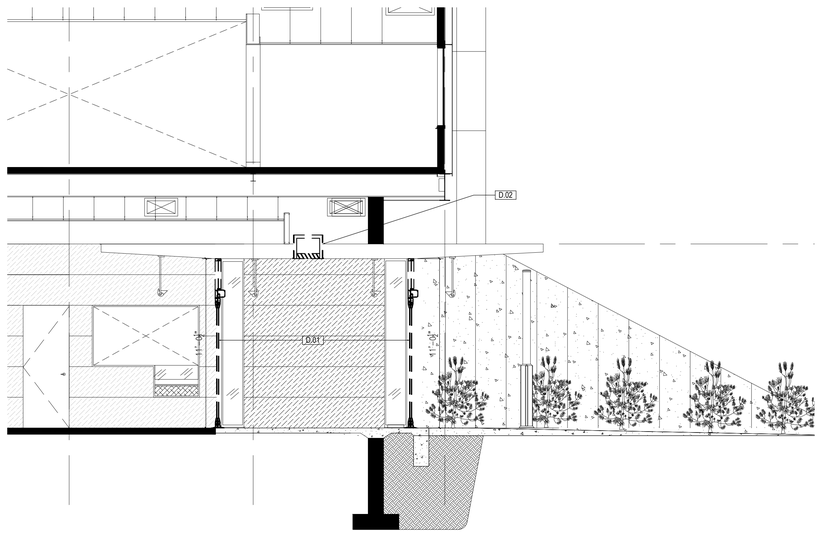

03 **DMV FIRST FLOOR** 1/4"=1'-0"
SECTION

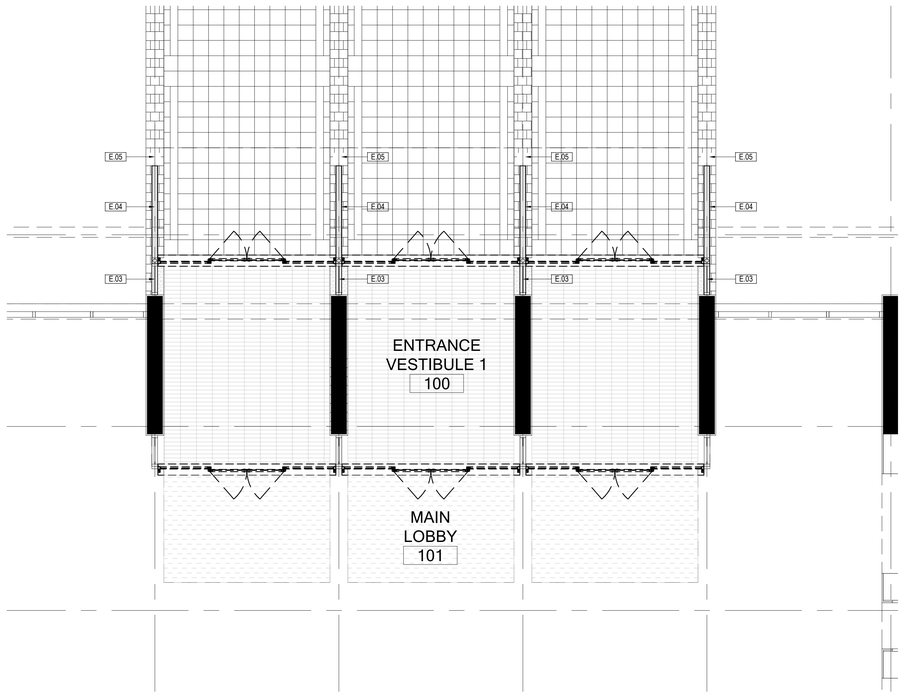

02 **DMV FIRST FLOOR** 1/4"=1'-0"
DEMO PLAN

File Path: P:\1540 RI DMV\1540\Sheets\A1.0 DEMO PLAN.dwg Layout: A1.0 DEMO PLAN 30X42 Plotted: Thu, February 15, 2018 - 3:06 PM User: kbamrick
Plotter: AUTOCAD PDF (HIGH QUALITY PRINT).PC3 CTB File: WKA 2008.CTB
LAYER STATE:
MS VIEW:

No.	DATE	DESCRIPTION	DESIGNER	REVIEWER
1.			XX/XX	XX

SEAL

SEAL

SCALE:
HORZ.: AS NOTED
VERT.:
DATUM:
HORZ.:
VERT.:
?? ?? 0 ??
GRAPHIC SCALE

FUSS & O'NEILL
317 IRON HORSE WAY, SUITE 204
PROVIDENCE, RI 02908
401.861.3070
www.fando.com

RHODE ISLAND DEPARTMENT OF ADMINISTRATION

MAIN FOYER HVAC UPGRADES
VESTIBULE BI-PART DOOR DEMOLITION PLAN

RHODE ISLAND DEPARTMENT OF MOTOR VEHICLES MAIN OFFICE

CRANSTON RHODE ISLAND

PROJ. No.: 20150385.A10
DATE: 02/15/2018

A1.0

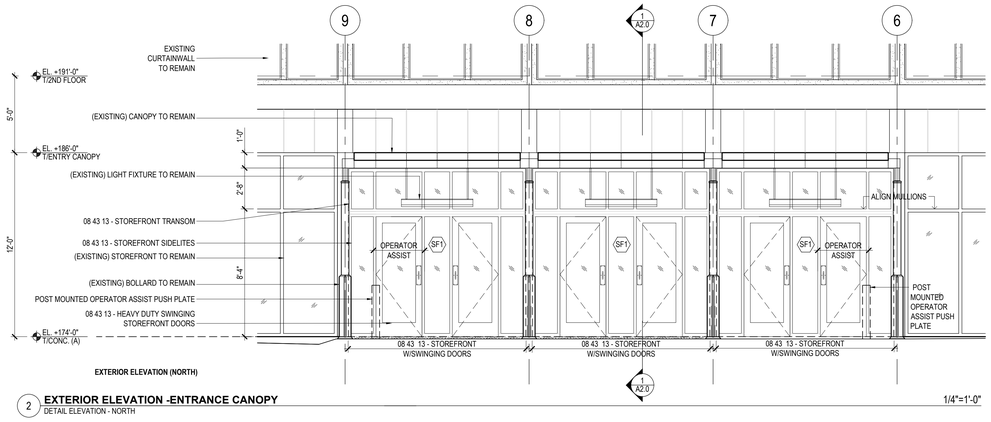

2 **EXTERIOR ELEVATION -ENTRANCE CANOPY**
DETAIL ELEVATION - NORTH

1/4"=1'-0"

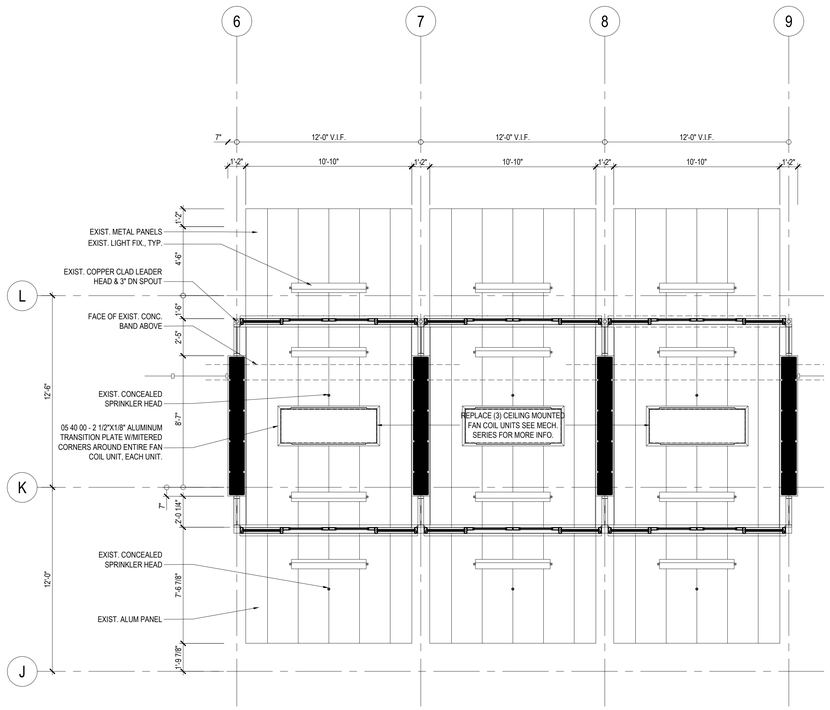

REFLECTED CEILING PLAN DETAIL - ENTRANCE VESTIBULE

1/4"=1'-0"

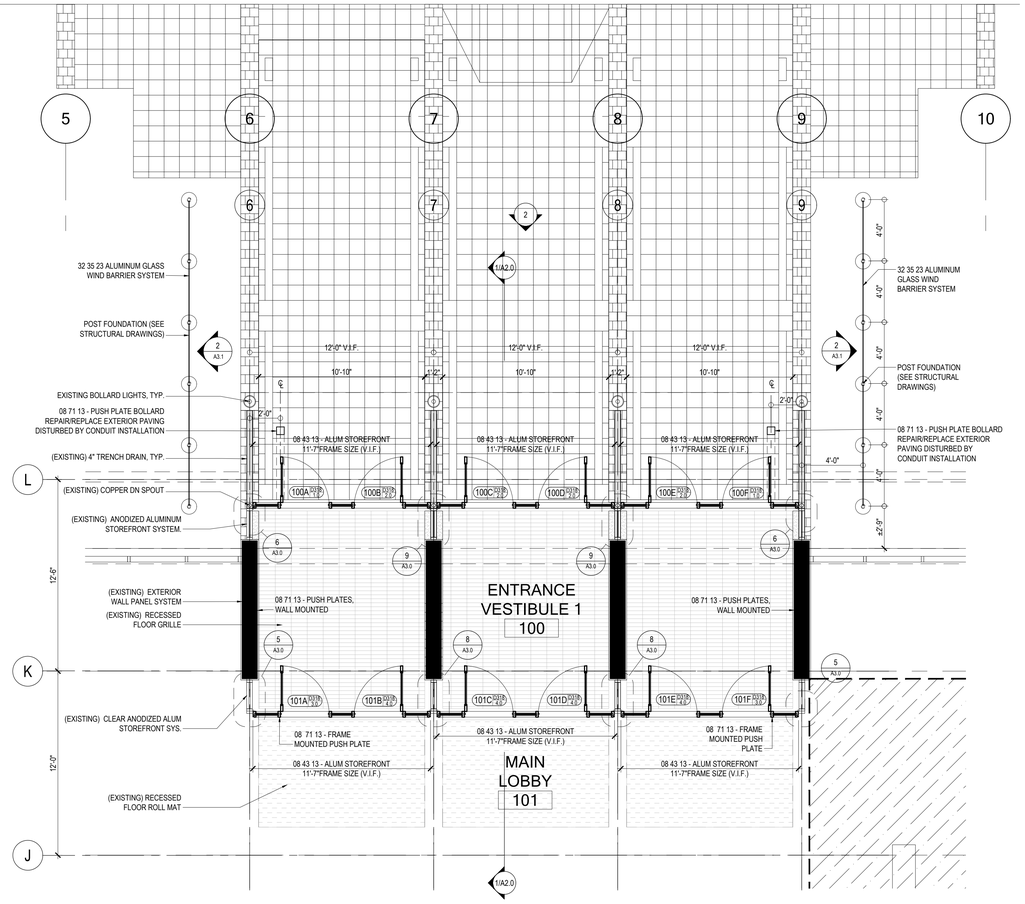

PLAN DETAIL - ENTRANCE VESTIBULE

1/4"=1'-0"

File Path: P:\1540 RI DMV\1540\Sheets\A1.1 NEW WORK PLAN.dwg Layout: A1.1 NEW WORK PLAN 30X42 Plotted: Thu, February 15, 2018 - 3:07 PM User: kbarnick
Plotter: AUTOCAD PDF (HIGH QUALITY PRINT).PC3 CTB File: WAA 2008.CTB
LAYER STATE:
MS VIEW:

No.	DATE	DESCRIPTION	DESIGNER	REVIEWER
1.			XX/XX	XX

SEAL

SEAL

SCALE:
HORZ.: AS NOTED
VERT.:
DATUM:
HORZ.:
VERT.:
?? ?? 0 ??
GRAPHIC SCALE

FUSS & O'NEILL
317 IRON HORSE WAY, SUITE 204
PROVIDENCE, RI 02908
401.861.3070
www.fando.com

RHODE ISLAND DEPARTMENT OF ADMINISTRATION
MAIN FOYER HVAC UPGRADES
VESTIBULE ENTRY DOORS - NEW WORK PLAN
RHODE ISLAND DEPARTMENT OF MOTOR VEHICLES MAIN OFFICE
CRANSTON
RHODE ISLAND

PROJ. No.: 20150385.A10
DATE: 02/15/2018

A1.1

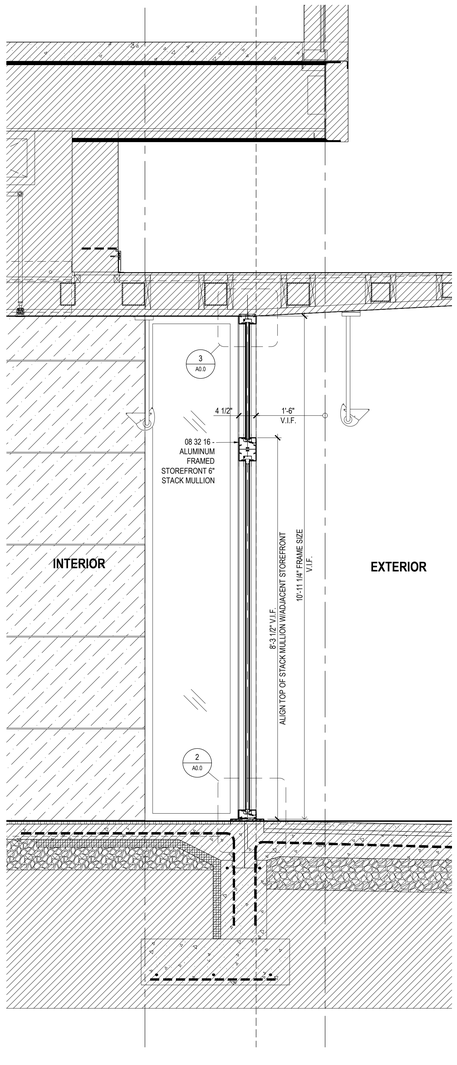

1 **VESTIBULE THRU EXTERIOR STOREFRONT** 3/4"=1'-0"
SECTION DETAIL

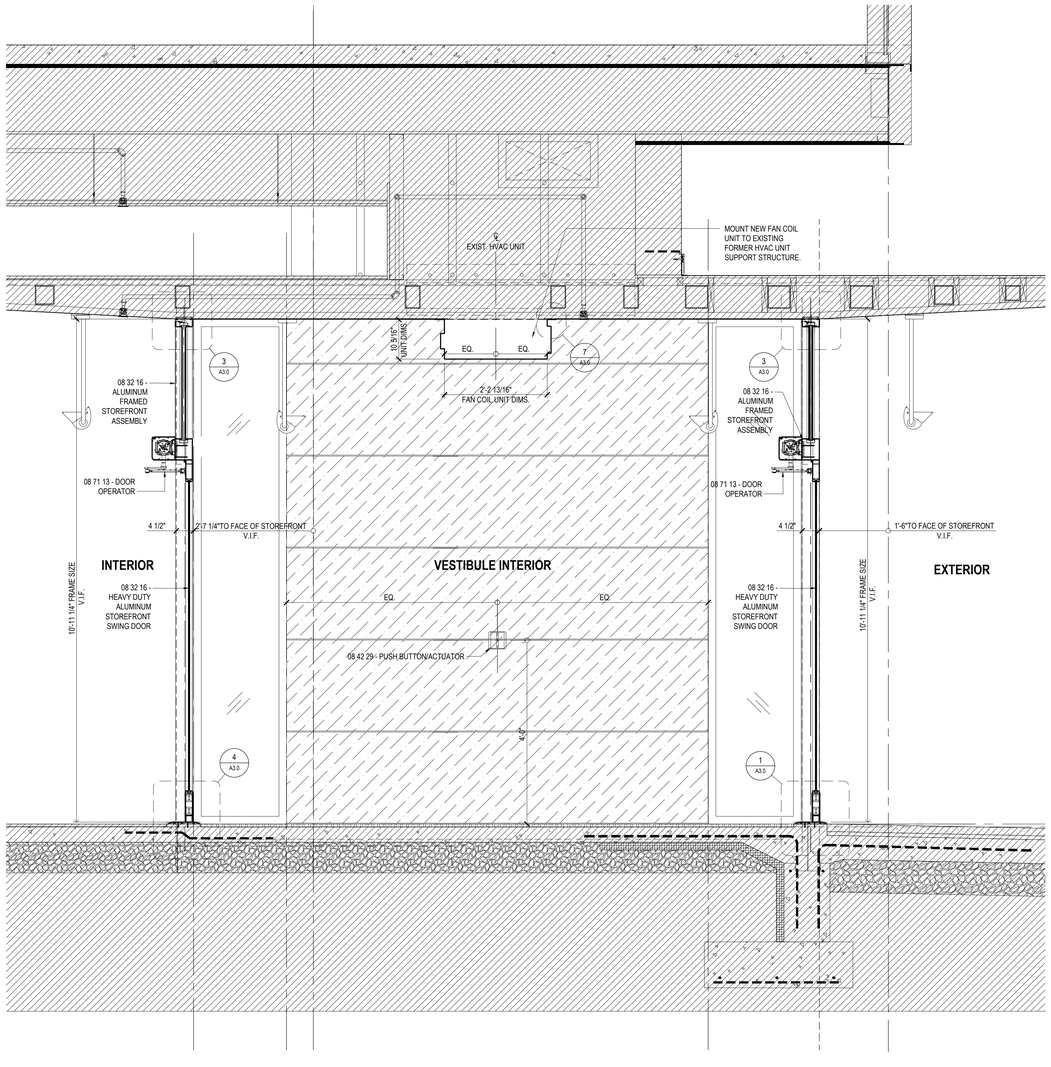

1 **VESTIBULE THRU SWING DOORS** 3/4"=1'-0"
SECTION DETAIL

File Path: P:\1540 RI DMV\1540\Sheets\A2.0 DETAIL SECTION.dwg Layout: A2.0 VESTIBULE SECTION 30X42 Plotted: Thu, February 15, 2018 - 3:08 PM User: kbamrick
MS VIEW: LAYER STATE: Plotter: AUTOCAD PDF (HIGH QUALITY PRINT).PC3 CTB File: WKA 2008.CTB

No.	DATE	DESCRIPTION	DESIGNER	REVIEWER
1.			XX/XX	XX

SEAL

SEAL

SCALE:
HORZ.: AS NOTED
VERT.:
DATUM:
HORZ.:
VERT.:
?? ?? 0 ??
GRAPHIC SCALE

FUSS & O'NEILL
317 IRON HORSE WAY, SUITE 204
PROVIDENCE, RI 02908
401.861.3070
www.fando.com

RHODE ISLAND DEPARTMENT OF ADMINISTRATION
MAIN FOYER HVAC UPGRADES
VESTIBULE ENTRY DOORS - NEW WORK PLAN
RHODE ISLAND DEPARTMENT OF MOTOR VEHICLES MAIN OFFICE
CRANSTON RHODE ISLAND

PROJ. No.: 20150385.A10
DATE: 02/15/2018

A2.0

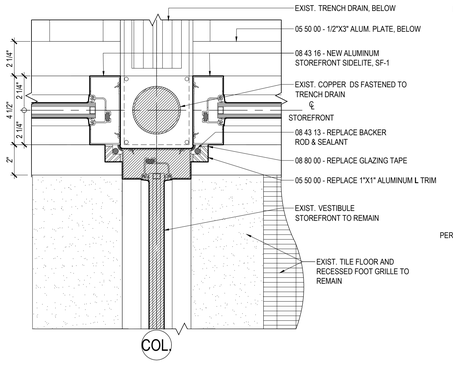

9 **PERPENDCULAR GLAZING AT EXTERIOR STOREFRONT** 3"=1'-0"
PLAN DETAIL

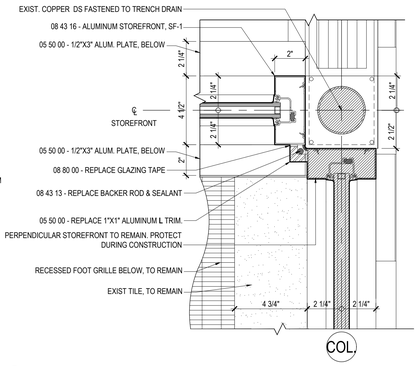

6 **EXTERIOR STOREFRONT CORNER** 3"=1'-0"
PLAN DETAIL

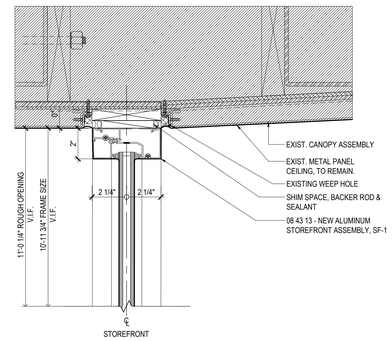

3 **STOREFRONT HEAD @ CANOPY (INT. SIM.)** 3"=1'-0"
SECTION DETAIL

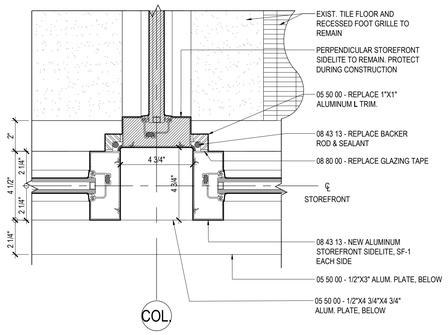

8 **PERPENDCULAR GLAZING AT EXTERIOR STOREFRONT** 3"=1'-0"
PLAN DETAIL

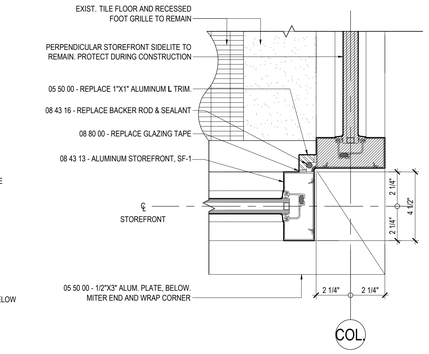

5 **EXTERIOR STOREFRONT CORNER** 3"=1'-0"
PLAN DETAIL

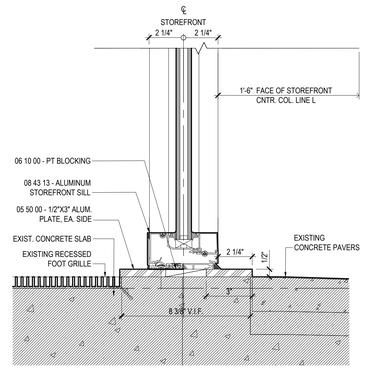

2 **EXTERIOR STOREFRONT SILL (INT. SIM.)** 3"=1'-0"
SECTION DETAIL

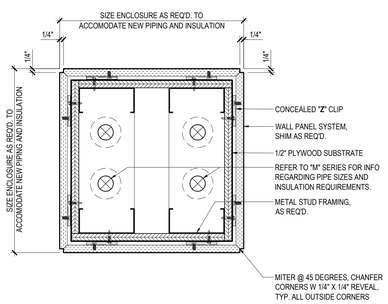

10 **PLAN DETAIL** 3"=1'-0"
TYP. PHENOLIC RESIN CLAD VERTICAL PIPE ENCLOSURE

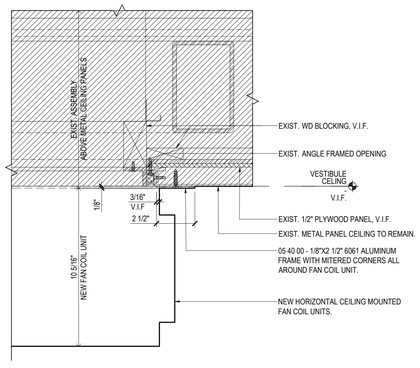

7 **ALUMINUM COLLAR AT FAN COIL UNIT** 3"=1'-0"
SECTION DETAIL

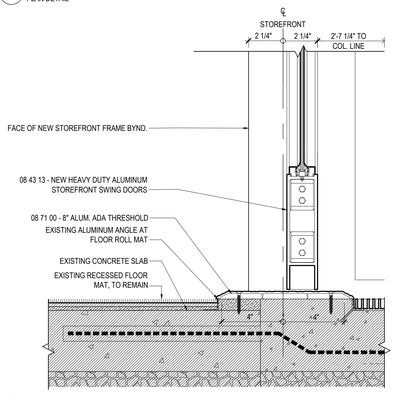

4 **INTERIOR STOREFRONT SWING DOOR BOTTOM** 3"=1'-0"
SECTION DETAIL

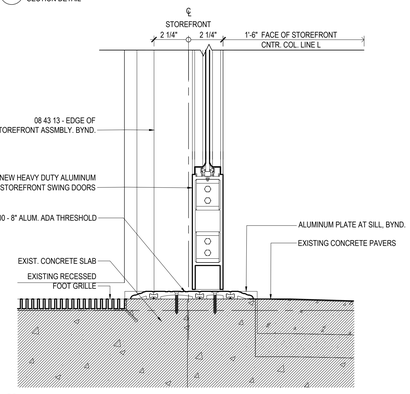

1 **EXTERIOR STOREFRONT SWING DOOR BOTTOM** 3"=1'-0"
SECTION DETAIL

File Path: P:\1540 RI DMV\1540\Sheets\A3.0 EXTERIOR DETAILS.dwg Layout: A3.0 EXTERIOR DETAILS 30X42 Plotted: Thu, February 15, 2018 - 3:08 PM User: kbamrick
Plotter: AUTOCAD PDF (HIGH QUALITY PRINT).PC3 CTB File: WKA 2008.CTB
MS VIEW: LAYER STATE:

No.	DATE	DESCRIPTION	DESIGNER	REVIEWER
1.			XX/XX	XX

SEAL

SEAL
ALBERT GARCIA
No. 3547
REGISTERED ARCHITECT

SCALE:
HORZ.: AS NOTED
VERT.:
DATUM:
HORZ.:
VERT.:
?? ?? 0 ??
GRAPHIC SCALE

FUSS & O'NEILL
317 IRON HORSE WAY, SUITE 204
PROVIDENCE, RI 02908
401.861.3070
www.fando.com

RHODE ISLAND DEPARTMENT OF ADMINISTRATION
MAIN FOYER HVAC UPGRADES
VESTIBULE ENTRY DOORS - NEW WORK PLAN
RHODE ISLAND DEPARTMENT OF MOTOR VEHICLES MAIN OFFICE
CRANSTON RHODE ISLAND

PROJ. No.: 20150385.A10
DATE: 02/15/2018
A3.0

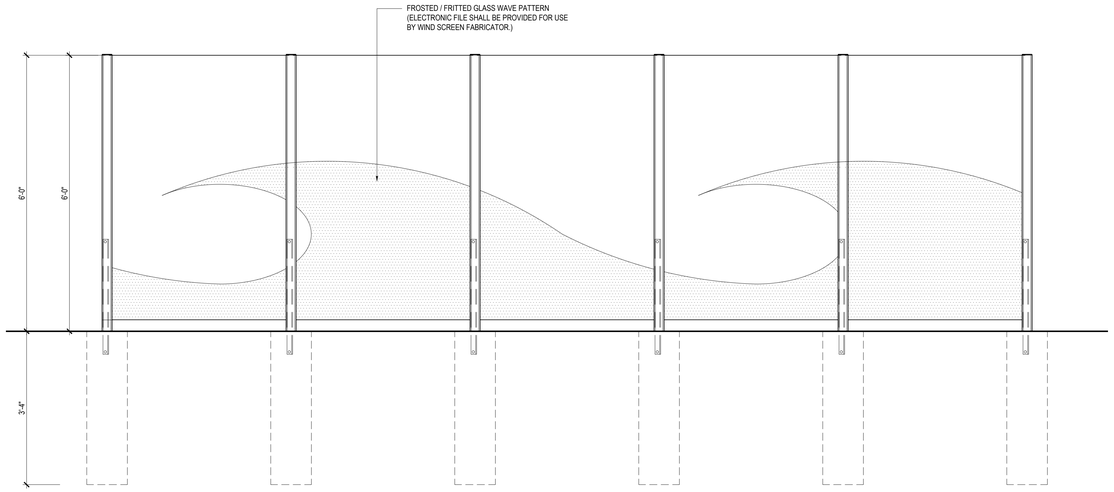

01 **DETAIL ELEVATION** 3/4"=1'-0"
GLASS WIND SCREEN

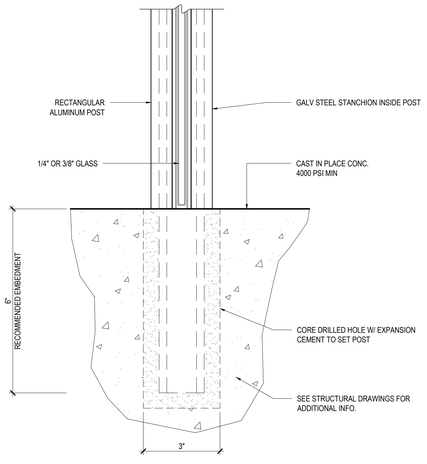

3 **SECTION DETAIL** 6"=1'-0"
POST SLEEVE BASE

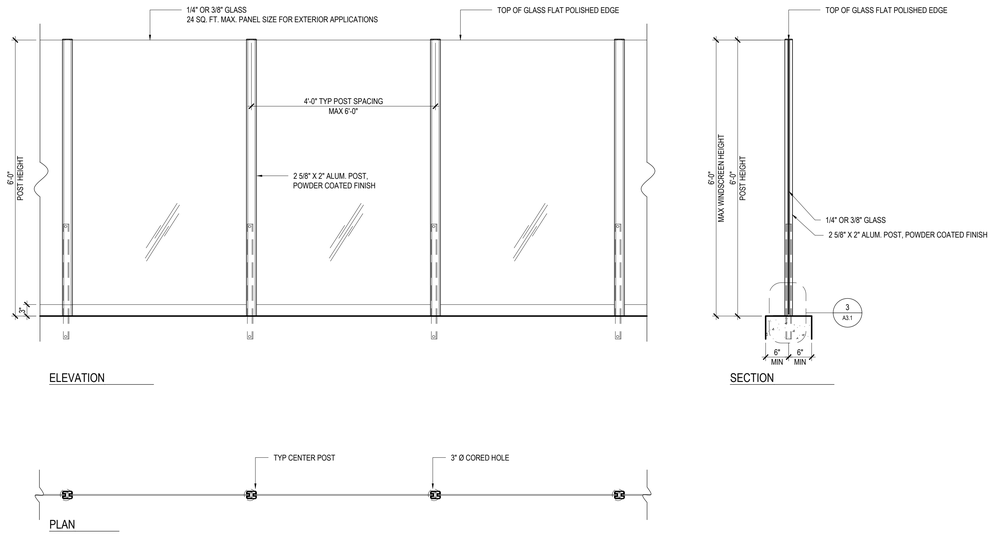

01 **PLAN, ELEVATION, & SECTION DETAILS** 3/4"=1'-0"
GLASS WIND SCREEN

File Path: P:\1540 RI DMV\1540\Sheets\A3.1 EXTERIOR DETAILS.dwg Layout: A3.1 EXTERIOR DETAILS 30X42 Plotted: Thu, February 15, 2018 - 3:09 PM User: kbarrick
Plotter: AUTOCAD PDF (HIGH QUALITY PRINT).PC3 CTB File: WKA 2008.CTB
MS VIEW:
LAYER STATE:

No.	DATE	DESCRIPTION	DESIGNER	REVIEWER
1.			XX/XX	XX

SEAL

SEAL
ALBERT WANCHO
No. 3547
REGISTERED
ARCHITECT

SCALE:
HORZ.: AS NOTED
VERT.:
DATUM:
HORZ.:
VERT.:
?? ?? 0 ??
GRAPHIC SCALE

FUSS & O'NEILL
317 IRON HORSE WAY, SUITE 204
PROVIDENCE, RI 02908
401.861.3070
www.fando.com

RHODE ISLAND DEPARTMENT OF ADMINISTRATION
MAIN FOYER HVAC UPGRADES
VESTIBULE ENTRY DOORS - NEW WORK PLAN
RHODE ISLAND DEPARTMENT OF MOTOR VEHICLES MAIN OFFICE
CRANSTON RHODE ISLAND

PROJ. No.: 20150385.A10
DATE: 02/15/2018
A3.1

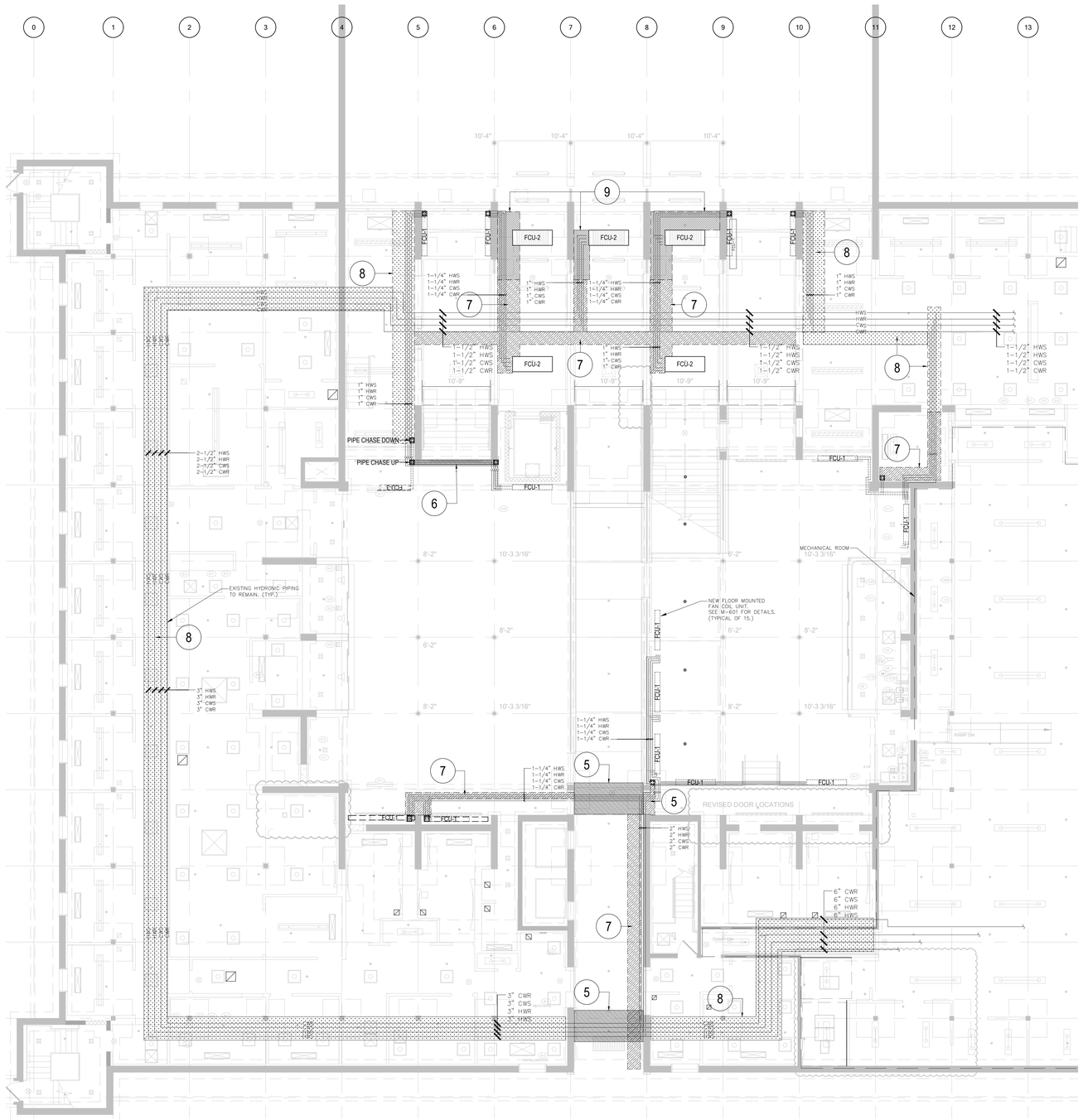

HVAC COORDINATION REFLECTED CEILING PLAN 1/8"-1'0"

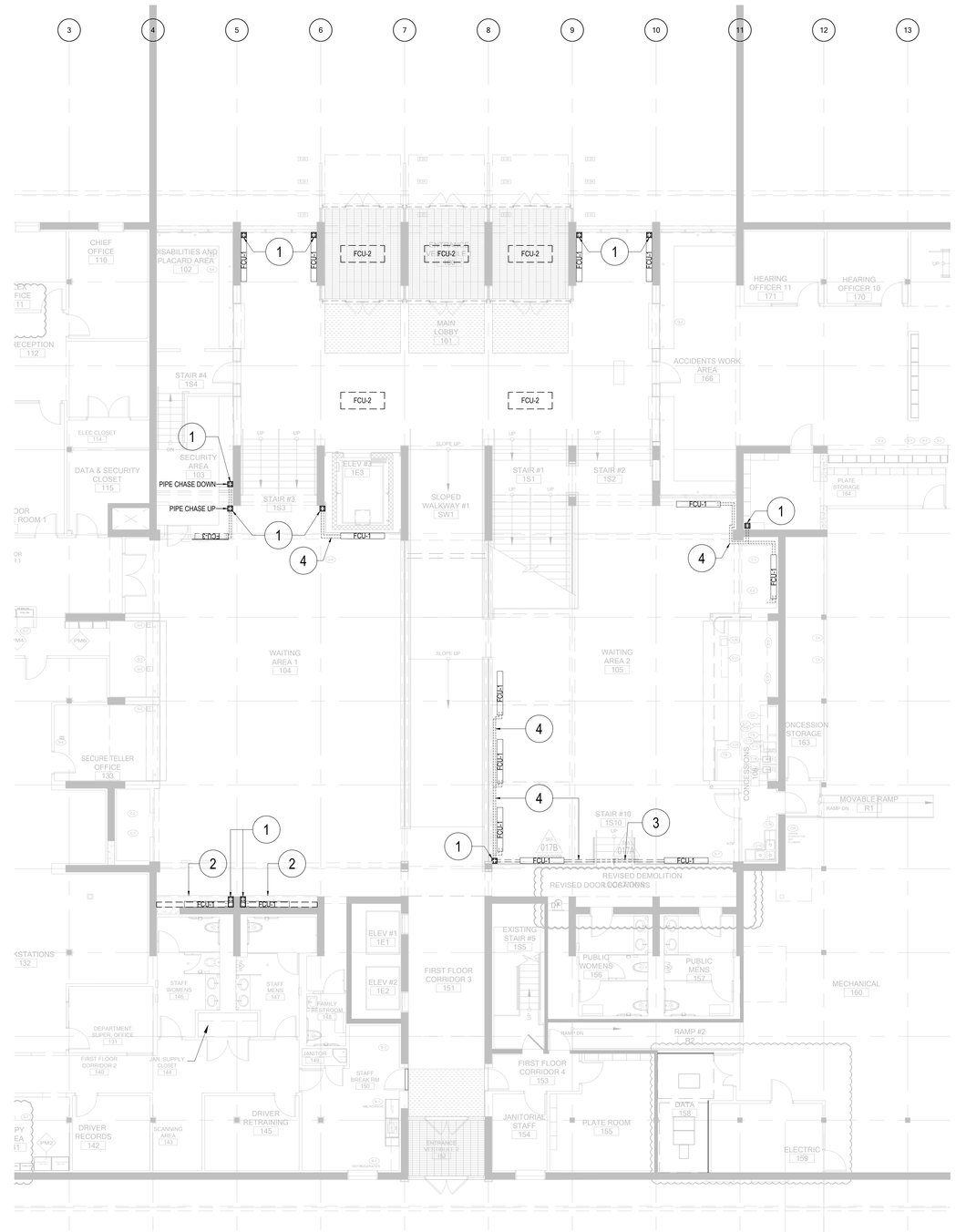

HVAC COORDINATION PLAN 1/8"-1'0"

1. INSTALL NEW PHENOLIC RESIN CLAD VERTICAL PIPE ENCLOSURE. SIZE ENCLOSURE AS REQUIRED TO ACCOMMODATE NEW PIPING AND INSULATION. SEE DETAIL 10/SHEET A3.0
2. REMOVE EXISTING BENCH SEATING. PATCH EXISTING TILE FLOOR AS REQUIRED TO MATCH EXISTING FLOOR TILE.
3. CORE AND PATCH EXISTING SIDE WALL AS REQUIRED. HYDRONIC PIPING SHALL BE ROUTED UNDER STAIR ASSEMBLY.
4. EXPOSED HYDRONIC PIPING. PROVIDE INSULATION AND METAL CLAD INSULATION JACKET AT ALL LOCATIONS OF EXPOSED PIPE.
5. INSTALL NEW HARD CEILING AND SOFFIT IN THIS AREA. REINSTALL LIGHTING, LIFE SAFETY DEVICE, AND EXIT SIGN.
6. INSTALL NEW PHENOLIC RESIN CLAD HORIZONTAL PIPE ENCLOSURE.
7. CUTTING AND PATCHING OF HARD CEILING REQUIRED IN THIS AREA.
8. AREA OF SELECTIVE DEMOLITION AND/OR REMOVAL OF EXISTING ACOUSTIC CEILING PANELS, CEILING SUSPENSION GRIDS, LIGHTING, AND SPRINKLER HEADS AS REQUIRED TO COMPLETE NEW HYDRONIC PIPING WORK. RESTORE AREA OF DISTURBED CEILING TO ORIGINAL CONDITION.
9. REPAIR/REPLACE EXISTING METAL PANEL CEILING DAMAGED BY NEW WORK IN AREAS INDICATED.

No.	DATE	DESCRIPTION	DESIGNER	REVIEWER
1.			XX/XX	XX

SEAL

SEAL

SCALE:
HORZ.: AS NOTED
VERT.:
DATUM:
HORZ.:
VERT.:
?? ?? 0 ??
GRAPHIC SCALE

FUSS & O'NEILL
317 IRON HORSE WAY, SUITE 204
PROVIDENCE, RI 02908
401.861.3070
www.fando.com

RHODE ISLAND DEPARTMENT OF ADMINISTRATION

MAIN FOYER HVAC UPGRADES
VESTIBULE ENTRY DOORS - NEW WORK PLAN

RHODE ISLAND DEPARTMENT OF MOTOR VEHICLES MAIN OFFICE

CRANSTON RHODE ISLAND

PROJ. No.: 20150385.A10
DATE: 02/15/2018

A5.0

File Path: P:\1540 RI DMV\1540\Sheets\A5.0 HVAC COORDINATION PLAN.dwg Layout: HVAC COORDINATION PLAN Plotted: Thu, February 15, 2018 - 3:11 PM User: kbarnick
MS VIEW: LAYER STATE: Plotter: AUTOCAD PDF (HIGH QUALITY PRINT).PC3 CTB File: WKA 2008.CTB

GENERAL NOTES

1. THE WORD "PROVIDE" SHALL MEAN "FURNISH AND INSTALL".

2. ALL CONTRACTORS SHALL OBTAIN AND REVIEW ALL CONTRACT DOCUMENTS INCLUDING PLANS AND SPECIFICATIONS OF ALL TRADES BEFORE SUBMITTING BID. REFER TO SPECIFICATION AND PLANS, INCLUDING ALL EQUIPMENT SCHEDULES FOR MECHANICAL AND ELECTRICAL ENGINEERING.

3. THE INFORMATION SHOWN ON THE DRAWINGS IS DIAGRAMMATIC, INDICATING THE GENERAL ARRANGEMENT OF SYSTEMS AND WORK INCLUDED IN THIS CONTRACT. THE CONTRACTOR SHALL COORDINATE LOCATIONS OF EQUIPMENT, AND THEIR ASSOCIATED ACCESS AREAS, WITH ALL TRADES BEFORE STARTING CONSTRUCTION. ANY MODIFICATIONS TO THE EQUIPMENT LAYOUT REQUIRED BY INSTALLATION BY ANY CONTRACTOR SHALL BE PERFORMED AT NO ADDITIONAL COST TO THE OWNER.

4. CONTRACTOR SHALL NOTIFY ENGINEER OF ALL CONFLICTS BETWEEN DRAWINGS AND SPECIFICATIONS, OR BETWEEN CONSTRUCTION DOCUMENTS AND FIELD CONDITIONS. FOR EACH CONFLICT, CONTRACTOR SHALL CARRY THE MORE EXPENSIVE OR LARGER QUANTITY OPTION.

5. SUBMISSION OF PROPOSAL DIRECTLY OR INDIRECTLY IN CONNECTION WITH THIS WORK SHALL IMPLY THAT THE BIDDER HAS EXAMINED THE JOB SITE UNDER WHICH HE WILL BE OBLIGATED TO OPERATE SHOULD HE BE AWARDED THE WORK UNDER THIS CONTRACT. NO EXTRA CHARGE WILL BE ALLOWED FOR FAILURE OF ANY BIDDER TO EXAMINE THE SITE PRIOR TO BID.

6. CONTRACTOR SHALL VERIFY ALL DIMENSIONS AND EXISTING EQUIPMENT LOCATIONS IN THE FIELD, AND SHALL ADVISE THE ENGINEER AND THE OWNER OF ANY DISCREPANCIES BEFORE PERFORMING THE WORK.

7. ALL WORK SHALL CONFORM TO ALL APPLICABLE CURRENT BUILDING CODES, RULES, REGULATIONS AND ORDINANCES, INCLUDING THE ONES WRITTEN BY:

   7.1. REGULATORY AUTHORITIES HAVING JURISDICTION.
   7.2. OWNER'S INSURANCE CARRIER.

8. CONTRACTOR SHALL SECURE ALL PERMITS AND APPLICATIONS AND PAY ALL FEES PERTAINING TO THE CONTRACT.

9. ALL EQUIPMENT SHALL BE LOCATED IN ACCESSIBLE LOCATIONS WITH CODE OR MANUFACTURER-REQUIRED ACCESS SPACES. IF EQUIPMENT IS INSTALLED IN AN INACCESSIBLE LOCATION THE CONTRACTOR SHALL PROVIDE REQUIRED FIRE-RATED ACCESS DOORS, COORDINATED WITH THE ARCHITECT OR ENGINEER.

10. ALL EQUIPMENT SHALL BE INSTALLED IN STRICT COMPLIANCE WITH THE MANUFACTURER'S WRITTEN INSTRUCTIONS. THE CONTRACTOR SHALL PROVIDE ALL HANGERS AND SUPPORTS REQUIRED FOR A COMPLETE INSTALLATION.

11. EACH CONTRACTOR SHALL COORDINATE THE LOCATION OF THEIR WORK WITH ALL OTHER TRADES BEFORE STARTING CONSTRUCTION. ANY MODIFICATIONS TO THE SYSTEM LAYOUT REQUIRED FOR INSTALLATION SHALL BE PERFORMED AT NO ADDITIONAL COST TO THE OWNER.

12. CONTRACTOR TO RESTORE ANY EXISTING SYSTEMS, DEVICES, FINISHES, ETC., THAT ARE DAMAGED OR ALTERED DUE TO THE NEW WORK, TO ACCEPTABLE CONDITION AS DETERMINED BY THE OWNER AND ENGINEER.

13. CONTRACTOR SHALL BE RESPONSIBLE FOR WORKMEN'S IDENTIFICATION AND BADGING, SITE SAFETY AND FIRE PROTECTION, CONTRACTOR'S LIABILITY INSURANCE, BARRICADES, WARNING SIGNS, TRASH REMOVAL, CUTTING AND PATCHING.

14. CONTRACTOR SHALL SCHEDULE ALL SHUTDOWNS THAT AFFECT UTILITIES AND PORTIONS OF THE BUILDING THAT MUST REMAIN IN OPERATION WITH THE OWNER.

15. CONTRACTOR SHALL COORDINATE ALL WORK WITH THE OWNER AND ALL OTHER CONTRACTORS.

16. CONTRACTOR SHALL BE RESPONSIBLE FOR ALL RIGGING, HANDLING AND PROTECTION OF MATERIALS.

17. CONTRACTOR SHALL PROVIDE LABOR TO RECEIVE, UNLOAD, STORE, PROTECT AND TRANSFER TO POINT OF INSTALLATION, OWNER FURNISHED ITEMS.

18. CONTRACTORS SHALL PROVIDE SLEEVES AND SEALS FOR ALL PIPING OR CONDUIT THAT PENETRATES WALLS OR FLOOR SLABS.

19. WHERE CONDUIT, CABLES, DUCTWORK OR PIPING PASSES THROUGH FIRE RATED FLOORS OR WALLS, THE SLEEVES SHALL BE COMPLETELY SEALED WITH A LISTED FIRE STOP MATERIAL THAT MEETS ALL OF THE REQUIREMENTS OF THE STATE AND LOCAL BUILDING CODES AND THE LOCAL AUTHORITIES HAVING JURISDICTION. THIS MATERIAL SHALL BE INSTALLED IN ACCORDANCE WITH THE REQUIREMENTS OF THE MANUFACTURER TO MAINTAIN THE FIRE RATING OF THE PENETRATED WALL OR FLOOR. THE FIRE-STOP INSTALLING CONTRACTOR SHALL BE CERTIFIED BY THE FIRE-STOPPING SYSTEM MANUFACTURER.

20. CONTRACTOR SHALL SUBMIT SIZE AND LOCATION OF ALL WALL AND FLOOR CORINGS TO STRUCTURAL ENGINEER FOR REVIEW BEFORE INSTALLATION. CONTRACTOR SHALL REPAIR ANY DAMAGE DUE TO CORINGS INSTALLED, AT NO COST TO OWNER. THE DAMAGE REPAIRING SHALL ALSO BE REVIEWED AND APPROVED BY THE STRUCTURAL ENGINEER.

21. CONTRACTOR SHALL SUBMIT SIZE AND LOCATION OF ANY PROPOSED STRUCTURAL MEMBER PENETRATIONS TO THE STRUCTURAL ENGINEER FOR REVIEW AND DETAILING BEFORE INSTALLATION. CONTRACTOR SHALL REPAIR ANY DAMAGE DUE TO PENETRATIONS INSTALLED, AT NO COST TO OWNER. THE DAMAGE REPAIRING SHALL ALSO BE REVIEWED AND APPROVED BY THE STRUCTURAL ENGINEER.

22. CONTRACTOR AND SUBCONTRACTORS SHALL COLLECTIVELY PREPARE TRADE COORDINATION DRAWINGS IN SUFFICIENT DETAIL TO PREVENT TRADE CONFLICTS IN AREAS OF CONGESTED WORK. THE TRADE COORDINATION DRAWINGS SHALL BE BASED ON SHOP DRAWINGS PREPARED BY ALL MEP TRADES INCLUDING SPRINKLER CONTRACTOR.

23. CONTRACTOR SHALL SUBMIT (3) SETS OF SHOP DRAWINGS, SUBMITTALS, AND EQUIPMENT CUT SHEET INFORMATION TO THE ENGINEER FOR REVIEW PRIOR TO STARTING ANY WORK.

24. UPON COMPLETION OF CONSTRUCTION CONTRACTOR SHALL SUPPLY THE ENGINEER WITH (1) COMPLETE SET OF ELECTRONIC AS-BUILT DOCUMENTS AND (4) COMPLETE COPIES OF OPERATIONS AND MAINTENANCE MANUALS, ALL AT CONTRACTOR'S EXPENSE.

25. ALL PIPING AND DUCTWORK LAYOUTS ARE SHOWN IN APPROXIMATE LOCATIONS. THE CONTRACTOR SHALL INSTALL ALL REQUIRED OFFSETS AND TRANSITIONS TO PREVENT INTERFERENCE WITH FIELD CONDITIONS AND TO COORDINATE WITH OTHER TRADES AT NO COST TO THE OWNER.

26. ALL REQUIRED OPENINGS THROUGH WALLS, FLOORS, AND CEILINGS SHALL BE COORDINATED BY THE CONTRACTOR USING ENGINEER AND ARCHITECT REVIEWED & APPROVED EQUIPMENT SHOP DRAWINGS.

27. PROVIDE A BALANCING VALVE FOR EACH HYDRONIC PIECE OF EQUIPMENT.

28. THE HVAC CONTROL SYSTEM SHALL BE A COMPLETE SYSTEM. EACH HVAC ZONE SHALL BE AT A MINIMUM THERMOSTATICALLY CONTROLLED BY A SENSOR, THERMOSTAT, OR CONTROLLER WHETHER OR NOT ONE IS SHOWN ON THE DRAWINGS.

29. ALL HVAC SYSTEMS SHALL BE TESTED AND BALANCED BY A CERTIFIED (NEBB OR TABB) SUB-CONTRACTOR THAT THE CONTRACTOR CARRIES IN HIS/HER BID PRICE.

30. NO PIPING SHALL BE INSTALLED OVER ELECTRICAL PANELS, TRANSFORMERS, OR ELEVATOR MACHINE ROOM EQUIPMENT. CONTRACTOR SHALL COORDINATE PIPING WITH ELECTRICAL EQUIPMENT IN FIELD AS PART OF COORDINATION DRAWINGS.

31. HYDROSTATIC TESTING SHALL BE PERFORMED ON ALL EQUIPMENT AND PIPING THAT IS SUBJECTED TO PRESSURES ABOVE AMBIENT. THE MECHANICAL CONTRACTOR SHALL DEVELOP A TEST SEQUENCE AND PHASES BASED UPON THE SYSTEM DESIGN, THE SYSTEM COMPONENTS THAT REQUIRE TESTING, AND THE CONSTRUCTION SEQUENCE OF THOSE COMPONENTS. THE CONTRACTOR SHALL PROVIDE THIS TEST SEQUENCE TO THE OWNER AND ENGINEER FOR REVIEW. THE CONTRACTOR SHALL GIVE THE ENGINEER AND OWNER 48 HOURS NOTICE BEFORE PERFORMING ANY SYSTEM COMPONENT PRESSURE TEST. THE CONTRACTOR SHALL NOT USE A COMPRESSIBLE FLUID, SUCH AS COMPRESSED AIR, FOR THE HYDROSTATIC TESTS. THE CONTRACTOR SHALL PROVIDE DOCUMENTATION TO THE ENGINEER AND OWNER THAT THE PRESSURE TEST EQUIPMENT, INCLUDING PRESSURE SENSORS AND GAGES, HAS BEEN CALIBRATED BEFORE USE. THE CONTRACTOR SHALL ISOLATE ALL EQUIPMENT AND PIPING THAT IS NOT UNDERGOING TESTING USING FLANGES OR CAPS, NOT SHUTOFF VALVES. REFER TO SPECIFICATIONS FOR HYDROSTATIC PRESSURE TEST DETAILS FOR A GIVEN SYSTEM COMPONENT.

RENOVATION

THIS PROJECT IS A RENOVATION OF AN EXISTING FACILITY.

BEFORE SUBMITTING HIS BID THE CONTRACTOR SHALL VISIT THE SITE AND BECOME THOROUGHLY FAMILIAR WITH THE EXISTING CONDITIONS UNDER WHICH THE PROJECT IS TO BE COMPLETED.

THE CONTRACTOR SHALL BE HELD RESPONSIBLE FOR ANY ASSUMPTIONS, OMISSIONS OR ERRORS MADE AS A RESULT OF FAILURE TO BECOME FULLY FAMILIAR WITH THE EXISTING CONDITIONS.

IT IS NOT THE INTENT OF THESE DRAWINGS TO SHOW EVERY PIECE OF EQUIPMENT, PIPING OR CONDUIT TO BE REMOVED. EQUIPMENT NOT BEING REUSED SHALL BE REMOVED INCLUDING ALL ASSOCIATED HANGERS, SUPPORTS, PIPES, DUCTS, CONDUITS, WIRES AND CONTROLS BACK TO THE POINT OF ORIGIN.

NO EQUIPMENT, PIPING, OR CONDUIT SHALL BE ABANDONED IN PLACE, UNLESS SPECIFICALLY NOTED.

PROPERLY DISPOSE OF ALL DEMOLISHED EQUIPMENT IN COMPLIANCE WITH CODES AND REGULATIONS.

RELOCATE EXISTING EQUIPMENT, PIPING, WIRING AND RELATED SYSTEMS AS REQUIRED FOR CONSTRUCTION. ALL EXISTING SYSTEMS TO BE FULLY OPERATIONAL, INCLUDING RECONNECTION TO SERVICES AND UPGRADED SYSTEMS. ALL RELOCATED EQUIPMENT SHALL BE PROTECTED DURING CONSTRUCTION.

PROVIDE TEMPORARY CONNECTIONS AND SYSTEM MODIFICATIONS AS REQUIRED FOR CONSTRUCTION.

INCLUDE ALL WORK REQUIRED TO ALLOW PHASED CONSTRUCTION WHERE NECESSARY. COORDINATE WITH GENERAL CONTRACTOR/CONSTRUCTION MANAGER FOR PHASING REQUIREMENTS.

REBALANCE EXISTING AIR AND WATER SYSTEMS ASSOCIATED WITH RENOVATIONS, INCLUDING ALL RENOVATED AREAS AND ALL AREAS AFFECTED BY SYSTEM MODIFICATIONS.

ALL EXISTING EQUIPMENT, FIXTURES AND DEVICES TO BE REMOVED SHALL BE FIELD VERIFIED FOR EXACT QUANTITY.

BID DOCUMENTS

No.	DATE	DESCRIPTION	DESIGNER	REVIEWER
1.				

SEAL
DAVID R. JACKSON
No. 8991
REGISTERED PROFESSIONAL ENGINEER MECHANICAL

SEAL

SCALE: HORZ.: NTS VERT.:
DATUM: HORZ.: VERT.:
0
GRAPHIC SCALE

FUSS & O'NEILL
317 IRON HORSE WAY, SUITE 204
PROVIDENCE, RI 02908
401.861.3070
www.fando.com

RHODE ISLAND DEPARTMENT OF ADMINISTRATION

MECHANICAL NOTES & LEGENDS

RHODE ISLAND DEPARTMENT OF MOTOR VEHICLES MAIN OFFICE

CRANSTON RHODE ISLAND

PROJ. No.: 20150385.A10
DATE: 02/23/2018

M0.1

File Path: J:\DWG\P2015\20385A10\MEP\Mechanical\20150385A10_M001_GENERAL NOTES.dwg Layout: M0.1 Plotted: Wed, February 21, 2018 - 5:07 PM User: jgemmell
MS VIEW: LAYER STATE: Plotter: DWG TO PDF.PC3 CTB File: FO.STB

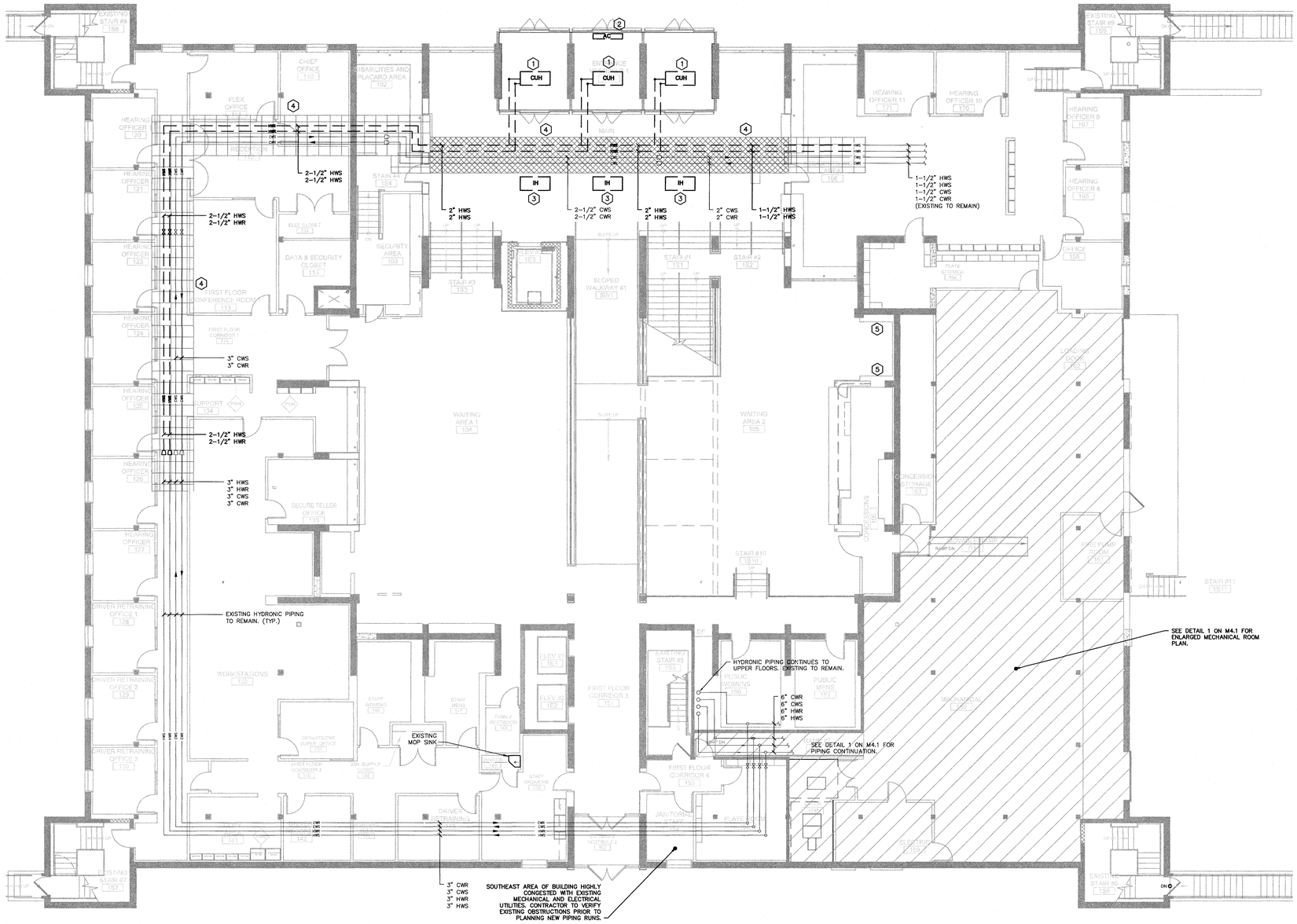

A1 MECHANICAL DEMOLITION – 1ST FLOOR
SCALE: 1/8"=1'

DEMOLITION & REPAIR KEY NOTES

1	DISCONNECT, REMOVE, AND DISPOSE OF CABINET UNIT HEATER.
2	DISCONNECT, REMOVE AIR CURTAIN AND DISPOSE AT OWNER'S DIRECTION.
3	DISCONNECT, REMOVE INFRARED HEATERS AND DISPOSE AT OWNER'S DIRECTION.
4	DISCONNECT, REMOVE, AND DISPOSE OF HEATING HOT WATER SUPPLY AND RETURN PIPING.
5	RELOCATE EXISTING MERCHANDISERS AT OWNER'S DIRECTION

MAP REFERENCE

THE DRAWING BACKGROUND IS A COMPILATION OF "FIRST FLOOR DUCTWORK PLAN" AND "FIRST FLOOR PIPING PLAN" BY DELTA MECHANICAL CONTRACTORS, LLC, DATED AUGUST 2010, RECEIVED ELECTRONICALLY BY FUSS & O'NEILL IN JUNE 2016, AND LIMITED FIELD WORK PERFORMED BY FUSS & O'NEILL, INC. IN FEBRUARY 2018.

MECHANICAL ABBREVIATIONS

AC	AIR CURTAIN
CP	CONDENSATE PUMP
CR	CONDENSATE RETURN
CUH	CABINET UNIT HEATER
CWR	COLD WATER RETURN
CWS	COLD WATER SUPPLY
FCU	FAN COIL UNIT
HWR	HOT WATER RETURN
HWS	HOT WATER SUPPLY
IH	INFRARED HEATER

LINETYPE LEGEND

————	EXISTING TO REMAIN
— — — —	DEMOLITION

CEILING TYPE LEGEND

	ACOUSTIC CEILING TILE
	GYPSUM WALL BOARD

BID DOCUMENTS

No.	DATE	DESCRIPTION	DESIGNER	REVIEWER
1.				

SEAL
DAVID R. JACKSON
REGISTERED PROFESSIONAL ENGINEER MECHANICAL

SEAL

SCALE:
HORZ.: 1/8"=1'
VERT.:
DATUM:
HORZ.:
VERT.:
8 4 0 8
GRAPHIC SCALE

FUSS & O'NEILL
317 IRON HORSE WAY, SUITE 204
PROVIDENCE, RI 02908
401.861.3070
www.fando.com

RHODE ISLAND DEPARTMENT OF ADMINISTRATION
MAIN FOYER HVAC UPGRADES
MECHANICAL DEMOLITION - FIRST FLOOR
RHODE ISLAND DEPARTMENT OF MOTOR VEHICLES MAIN OFFICE
CRANSTON RHODE ISLAND

PROJ. No.: 20150385.A10
DATE: 02/23/2018
MD1.1

File Path: J:\DWG\P2015\0385\A10\MEP\Mechanical\20150385A10_M101_FLOOR PLAN.dwg Layout: MD1.1 Plotted: Wed, February 21, 2018 - 5:14 PM User: jpemnell
MS VIEW: LAYER STATE: Plotter: DWG TO PDF.PC3 CTB File: FO.STB

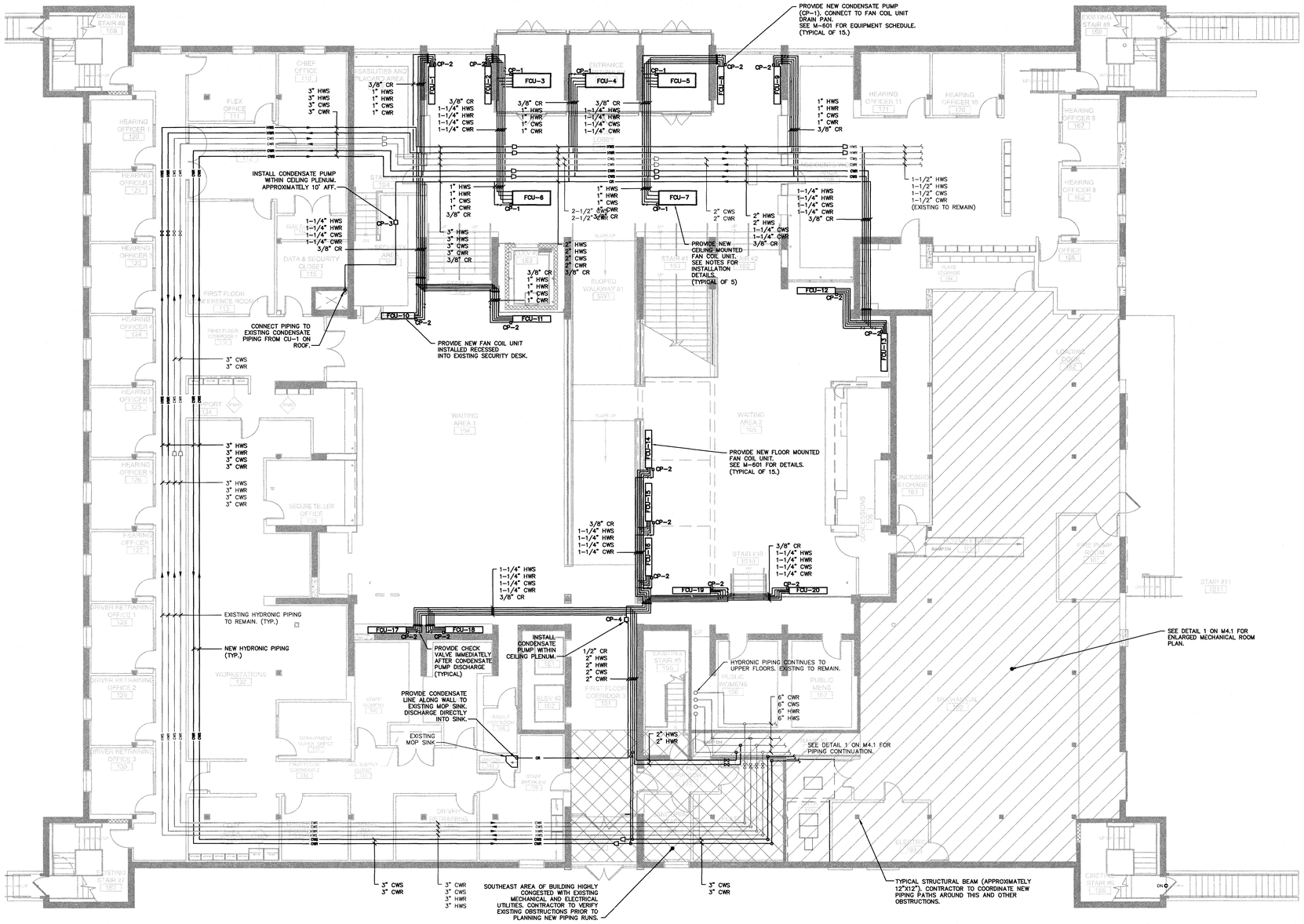

A1 MECHANICAL NEW WORK – 1ST FLOOR
SCALE: 1/8"=1'

NEW WORK NOTES

1. CEILING MOUNTED UNITS (FCU-3 TO FCU-7): PROVIDE A MINIMUM OF FOUR (4) 1/2" DIAMETER HILTI KWIK BOLT 3 (OR EQUAL) EXPANSION ANCHORS PER UNIT. ANCHORS SHALL BE INSTALLED IN UN-CRACKED CONCRETE, CENTERED IN THE LOWER DECK FLUTES AND HAVE A MINIMUM EFFECTIVE EMBEDMENT OF 2-INCHES. ANCHORS SHALL BE INSTALLED AS RECOMMENDED BY MANUFACTURER. CONTRACTOR SHALL PROVIDE SHOP DRAWINGS TO THE ENGINEER PRIOR TO INSTALLATION.

MAP REFERENCE

THE DRAWING BACKGROUND IS A COMPILATION OF "FIRST FLOOR DUCTWORK PLAN" AND "FIRST FLOOR PIPING PLAN" BY DELTA MECHANICAL CONTRACTORS, LLC, DATED AUGUST 2010, RECEIVED ELECTRONICALLY BY FUSS & O'NEILL IN JUNE 2016, AND LIMITED FIELD WORK PERFORMED BY FUSS & O'NEILL, INC. IN FEBRUARY 2018.

MECHANICAL ABBREVIATIONS

AC	AIR CURTAIN
CP	CONDENSATE PUMP
CR	CONDENSATE RETURN
CUH	CABINET UNIT HEATER
CWR	COLD WATER RETURN
CWS	COLD WATER SUPPLY
FCU	FAN COIL UNIT
HWR	HOT WATER RETURN
HWS	HOT WATER SUPPLY
IH	INFRARED HEATER

LINETYPE LEGEND

EXISTING TO REMAIN

NEW WORK

BID DOCUMENTS

No.	DATE	DESCRIPTION	DESIGNER	REVIEWER
1.				

SEAL
DAVID R. JACKSON
No. 8901
REGISTERED PROFESSIONAL ENGINEER MECHANICAL

SEAL

SCALE:
HORZ.: 1/8"=1'
VERT.:
DATUM:
HORZ.:
VERT.:
8 4 0 8
GRAPHIC SCALE

FUSS & O'NEILL
317 IRON HORSE WAY, SUITE 204
PROVIDENCE, RI 02908
401.861.3070
www.fando.com

RHODE ISLAND DEPARTMENT OF ADMINISTRATION
MAIN FOYER HVAC UPGRADES
MECHANICAL NEW WORK - FIRST FLOOR
RHODE ISLAND DEPARTMENT OF MOTOR VEHICLES MAIN OFFICE
CRANSTON RHODE ISLAND

PROJ. No.: 20150385.A10
DATE: 02/23/2018
M2.1

File Path: J:\DWG\P2015\0385\A10\MEP\Mechanical\20150385A10_M101_FLOOR PLAN.dwg Layout: M1.1 Plotted: Wed, February 21, 2018 - 5:14 PM User: jgemmell
MS VIEW: LAYER STATE: Plotter: DWG TO PDF.PC3 CTB File: FO.STB

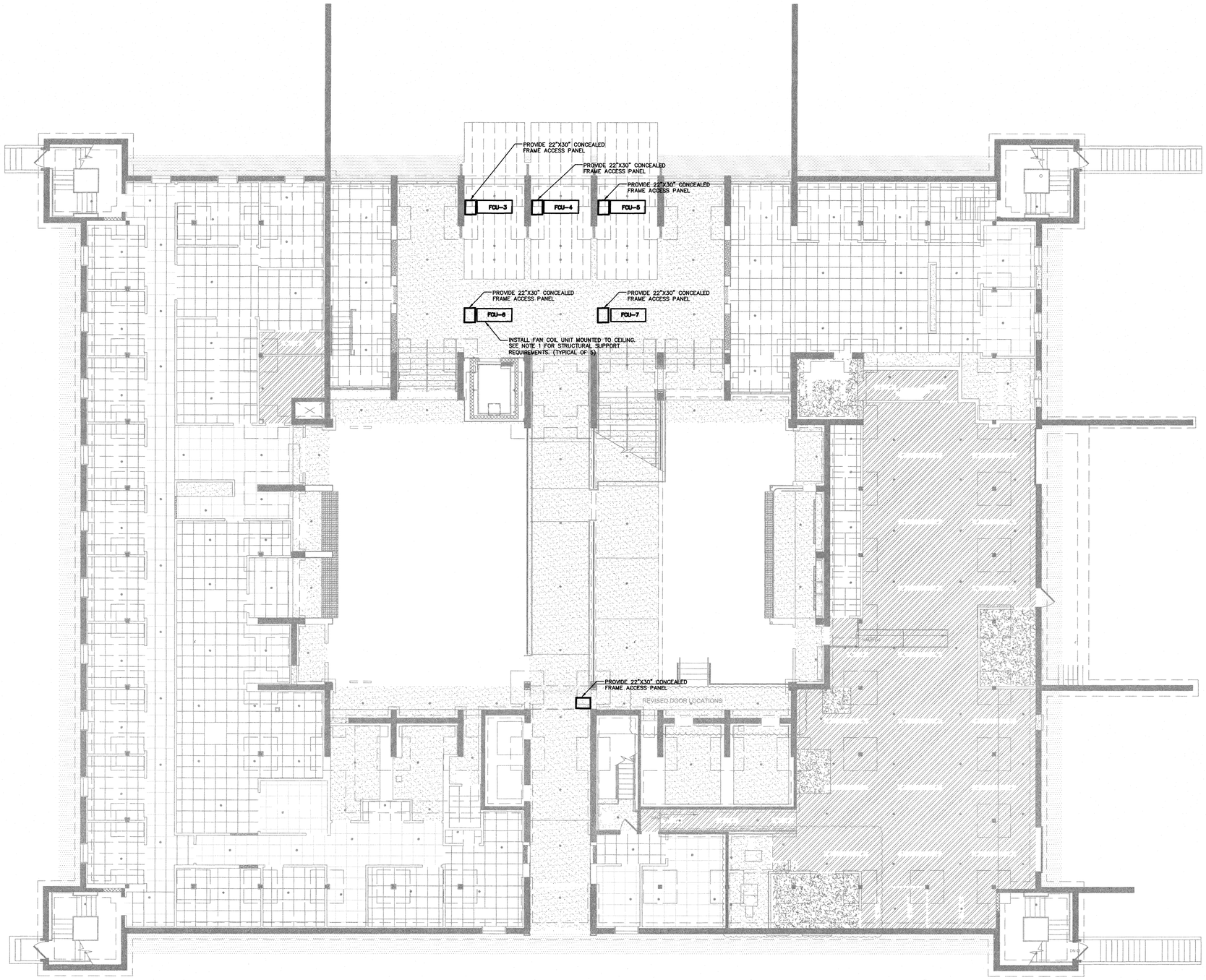

A1 MECHANICAL NEW WORK – 1ST FLOOR REFLECTED CEILING PLAN
SCALE: 1/8"=1'

NOTES

1. CEILING MOUNTED UNITS (FCU-3 TO FCU-7): PROVIDE A MINIMUM OF FOUR (4) 1/2" DIAMETER HILTI KWIK BOLT 3 (OR EQUAL) EXPANSION ANCHORS PER UNIT. ANCHORS SHALL BE INSTALLED IN UN-CRACKED CONCRETE, CENTERED IN THE LOWER DECK FLUTES AND HAVE A MINIMUM EFFECTIVE EMBEDMENT OF 2-INCHES. ANCHORS SHALL BE INSTALLED AS RECOMMENEDED BY MANUFACTURER. CONTRACTOR SHALL PROVIDE SHOP DRAWINGS TO THE ENGINEER PRIOR TO INSTALLATION.
2. SEE ARCHITECTURAL DRAWINGS FOR CEILING REPAIR NOTES AND DETAILS.

MAP REFERENCE

THE DRAWING BACKGROUND IS A COMPILATION OF "FIRST FLOOR DUCTWORK PLAN" AND "FIRST FLOOR PIPING PLAN" BY DELTA MECHANICAL CONTRACTORS, LLC, DATED AUGUST 2010, RECEIVED ELECTRONICALLY BY FUSS & O'NEILL IN JUNE 2016, AND LIMITED FIELD WORK PERFORMED BY FUSS & O'NEILL, INC. IN FEBRUARY 2018.

EXISTING CEILING TYPE LEGEND

	ACOUSTIC CEILING TILE (ACT)
	PAINT EXISTING EXPOSED METAL DECKING
	GWB CEILING (MOISTURE RESISTANT GWB IN TOILET ROOMS, JANITOR CLOSETS & CONCESSIONS, TYP. UON.)
	EXISTING EXTERIOR STUCCO PLASTER REMAINS
	1 HOUR RATED HORIZONTAL SHAFT ASSEMBLY U.O.N.
	LIGHT SOFFIT SYSTEM
	SOLID SURFACE SOFFIT
	NEW WALL PANEL SYSTEM
	METAL PANEL SYSTEM

MECHANICAL ABBREVIATIONS

AC	AIR CURTAIN
CUH	CABINET UNIT HEATER
CWR	COLD WATER RETURN
CWS	COLD WATER SUPPLY
FCU	FAN COIL UNIT
HWR	HOT WATER RETURN
HWS	HOT WATER SUPPLY
IH	INFRARED HEATER

LINETYPE LEGEND

	EXISTING TO REMAIN
	NEW WORK

BID DOCUMENTS

No.	DATE	DESCRIPTION	DESIGNER	REVIEWER
1.				

SEAL
DAVID R. JACKSON
No. 9861
REGISTERED PROFESSIONAL ENGINEER MECHANICAL

SEAL

SCALE:
HORZ.: 1/8"=1'
VERT.:
DATUM:
HORZ.:
VERT.:
8 4 0 8
GRAPHIC SCALE

FUSS & O'NEILL
317 IRON HORSE WAY, SUITE 204
PROVIDENCE, RI 02908
401.861.3070
www.fando.com

RHODE ISLAND DEPARTMENT OF ADMINISTRATION
MAIN FOYER HVAC UPGRADES
MECHANICAL NEW WORK - FIRST FLOOR REFLECTED CEILING PLAN
RHODE ISLAND DEPARTMENT OF MOTOR VEHICLES MAIN OFFICE
CRANSTON RHODE ISLAND

PROJ. No.: 20150385.A10
DATE: 02/23/2018

M2.2

File Path: J:\DWG\F2015\0385\A10\MEP\Mechanical\20150385A10_M102_REFLECTED CEILING PLAN.dwg Layout: M1-2 Plotted: Wed, February 21, 2018 - 5:07 PM User: jgemmell
MS VIEW:
LAYER STATE:
Plotter: DWG TO PDF.PC3 CTB File: FO.STB

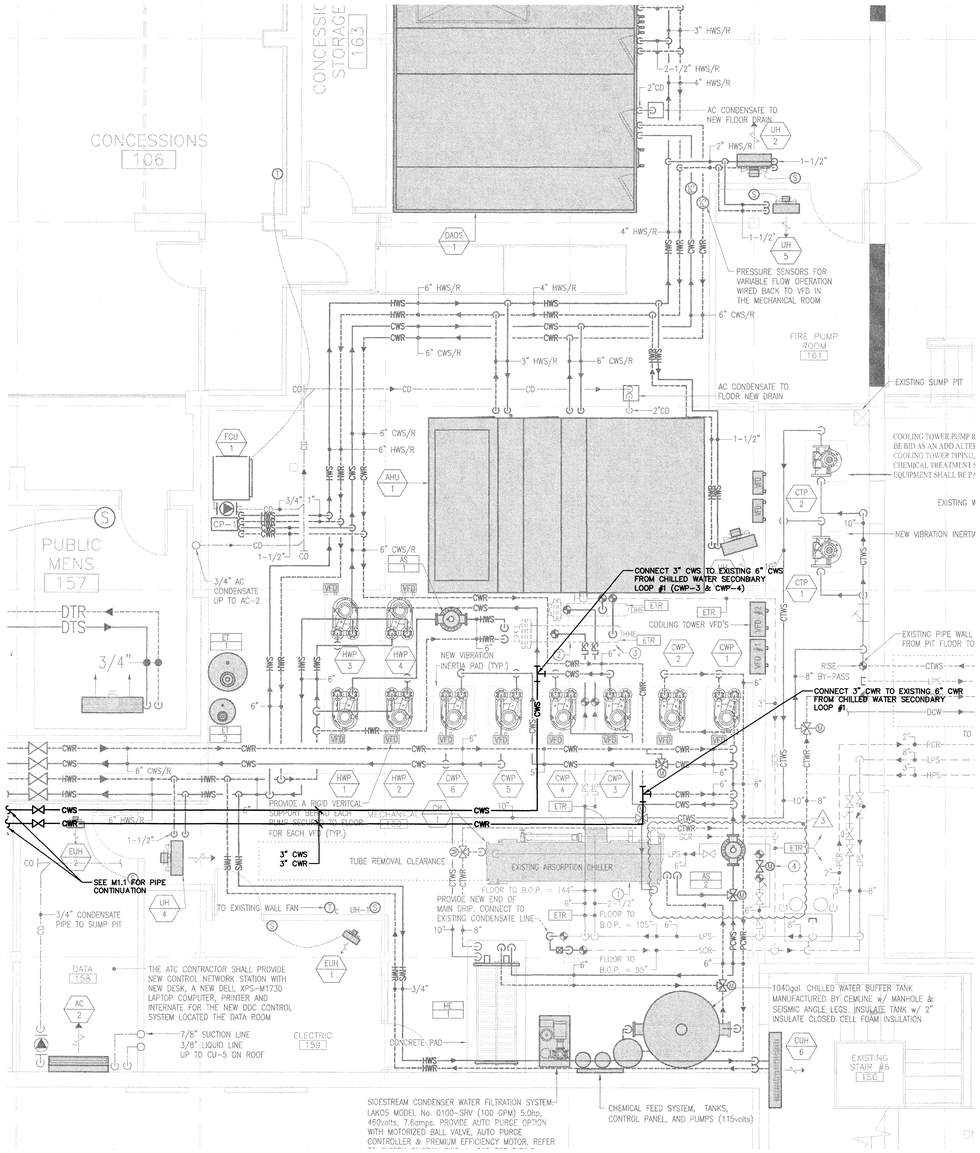

1 MECHANICAL NEW WORK – ENLARGED MECHANICAL ROOM PLAN VIEW

SCALE: 1/2"=1'

NOTES

1. CEILING MOUNTED UNITS (FCU-3 TO FCU-7): PROVIDE A MINIMUM OF FOUR (4) 1/2" DIAMETER HILTI KWIK BOLT 3 (OR EQUAL) EXPANSION ANCHORS PER UNIT. ANCHORS SHALL BE INSTALLED IN UN-CRACKED CONCRETE, CENTERED IN THE LOWER DECK FLUTES AND HAVE A MINIMUM EFFECTIVE EMBEDMENT OF 2-INCHES. ANCHORS SHALL BE INSTALLED AS RECOMMENEDED BY MANUFACTURER. CONTRACTOR SHALL PROVIDE SHOP DRAWINGS TO THE ENGINEER PRIOR TO INSTALLATION.

MAP REFERENCE

THE DRAWING BACKGROUND FROM M-204 BY DELTA MECHANICAL CONTRACTORS, LLC, DATED AUGUST 2010, RECEIVED ELECTRONICALLY BY FUSS & O'NEILL IN JUNE 2016, AND LIMITED FIELD WORK PERFORMED BY FUSS & O'NEILL, INC. IN AUGUST 2016.

MECHANICAL ABBREVIATIONS

AC	AIR CURTAIN
CP	CONDENSATE PUMP
CR	CONDENSATE RETURN
CUH	CABINET UNIT HEATER
CWR	COLD WATER RETURN
CWS	COLD WATER SUPPLY
FCU	FAN COIL UNIT
HWR	HOT WATER RETURN
HWS	HOT WATER SUPPLY
IH	INFRARED HEATER

LINETYPE LEGEND

	EXISTING TO REMAIN
	NEW WORK

BID DOCUMENTS

No.	DATE	DESCRIPTION	DESIGNER	REVIEWER
1.				

SEAL
DAVID R. JACKSON
No. 8891
REGISTERED PROFESSIONAL ENGINEER MECHANICAL

SEAL

SCALE: HORZ.: 1/2"=1' VERT.:
DATUM: HORZ.: VERT.:
8 4 0 8
GRAPHIC SCALE

FUSS & O'NEILL
317 IRON HORSE WAY, SUITE 204
PROVIDENCE, RI 02908
401.861.3070
www.fando.com

RHODE ISLAND DEPARTMENT OF ADMINISTRATION
MAIN FOYER HVAC UPGRADES
MECHANICAL NEW WORK - FIRST FLOOR
RHODE ISLAND DEPARTMENT OF MOTOR VEHICLES MAIN OFFICE

CRANSTON RHODE ISLAND

PROJ. No.: 20150385.A10
DATE: 02/23/2018

M4.1

File Path: J:\DWG\P2015\0385\A10\MEP\Mechanical\20150385A10_M401_Enlarged View.dwg Layout: M4.1 Plotted: Wed, February 21, 2018 - 5:14 PM User: jgemmell
Plotter: DWG TO PDF.PC3 CTB File: FO.STB
MS VIEW:
LAYER STATE:

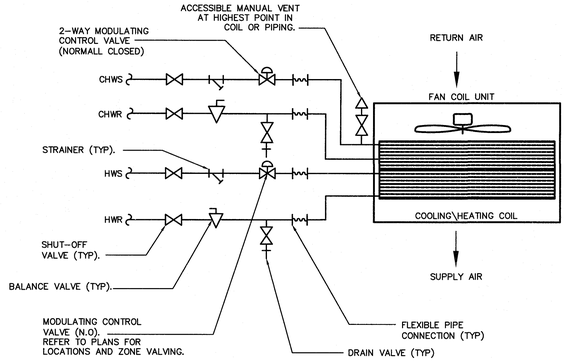

1 TYPICAL FCU PIPING DETAIL

SCALE: N.T.S.

TYPICAL FAN COIL DDC POINTS LIST (EACH UNIT)

SYMBOL	DESCRIPTION	TYPE*	REMARKS
T $_S$	SPACE TEMPERATURE	AI	
S/S $_1$	START / STOP FAN COIL UNIT (FAN)	DO	FCU MFGR. TO PROVIDE RELAY
C.V. $_1$	MODULATING FAN COIL UNIT HEATING CONTROL VALVE	AO	NORMALLY OPEN
C.V. $_2$	MODULATING FAN COIL UNIT COOLING CONTROL VALVE	AO	NORMALLY CLOSED
F.S. $_1$	CONDENSATE DRAIN OVERFLOW SWITCH	DI	ALARM FCU MFGR. TO PROVIDE SWITCH

NOTES:
1. CONTROL DEVICES ARE NOT NECESSARILY LOCATED CLOSE TO THE EQUIPMENT. REFER TO PLAN VIEW FOR LOCATION OF CONTROL DEVICES.
2. REFER TO SPECIFICATIONS FOR ADDITIONAL REQUIREMENTS.

* DI = DIGITAL INPUT
DO = DIGITAL OUTPUT
AI = ANALOG INPUT
AO = ANALOG OUTPUT

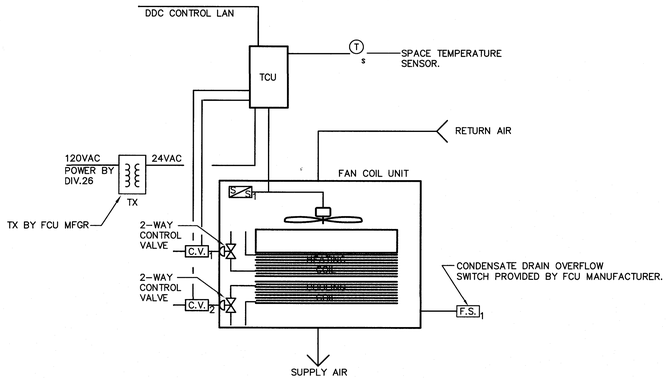

2 FAN COIL UNIT W/ 2-WAY VALVE CONTROL SCHEMATIC

SCALE: N.T.S.

FAN COIL UNIT SCHEDULE

(BASED ON TRANE)

TYPE	MODEL	TYPE	TOTAL CFM	ESP	COOLING COIL DATA *								HEATING COIL DATA *							FAN & MOTOR DATA				
					TOTAL MBH	SENS. MBH	GPM	EWT °F	LWT °F	EAT – db/wb °F	WPD FT H_2O	ROWS	MBH	EWT °F	LWT °F	EAT °F	ROWS	GPM	WPD FT H O	FANS	MOTOR POWER (W)	MCA	HP	V/ø
FCU–1	FCBB1201	4–PIPE	921	0.00	24.45	18.05	5.0	45°	55°	80/67°	9.80	1	46.6	150°	120°	55	1	4.2	6.4	3	160	–	0.22	115/1
FCU–2	FCBB1201	4–PIPE	921	0.00	24.45	18.05	5.0	45°	55°	80/67°	9.80	1	46.6	150°	120°	55	1	4.2	6.4	3	160	–	0.22	115/1
FCU–3	FCDB1201	4–PIPE	1,330	0.20	30.90	23.78	6.4	45°	55°	80/67°	15.49	1	59.5	150°	120°	55	1	5.3	10.1	3	314	–	0.22	115/1
FCU–4	FCDB1201	4–PIPE	1,330	0.20	30.90	23.78	6.4	45°	55°	80/67°	15.49	1	59.5	150°	120°	55	1	5.3	10.1	3	314	–	0.22	115/1
FCU–5	FCDB1201	4–PIPE	1,330	0.20	30.90	23.78	6.4	45°	55°	80/67°	15.49	1	59.5	150°	120°	55	1	5.3	10.1	3	314	–	0.22	115/1
FCU–6	FCDB1201	4–PIPE	1,330	0.20	30.90	23.78	6.4	45°	55°	80/67°	15.49	1	59.5	150°	120°	68°	1	5.3	10.1	3	314	–	0.22	115/1
FCU–7	FCDB1201	4–PIPE	1,330	0.20	30.90	23.78	6.4	45°	55°	80/67°	15.49	1	59.5	150°	120°	68°	1	5.3	10.1	3	314	–	0.22	115/1
FCU–8	FCBB1201	4–PIPE	921	0.00	24.45	18.05	5.0	45°	55°	80/67°	9.80	1	46.6	150°	120°	68°	1	4.2	6.4	3	160	–	0.22	115/1
FCU–9	FCBB1201	4–PIPE	921	0.00	24.45	18.05	5.0	45°	55°	80/67°	9.80	1	46.6	150°	120°	68°	1	4.2	6.4	3	160	–	0.22	115/1
FCU–10	FCHB0801	4–PIPE	870	0.20	17.89	14.74	3.8	45°	55°	80/67°	4.93	1	38.1	150°	120°	68°	1	3.4	3.8	2	298	–	0.22	115/1
FCU–11	FCBB1201	4–PIPE	921	0.00	24.45	18.05	5.0	45°	55°	80/67°	9.80	1	46.6	150°	120°	68°	1	4.2	6.4	3	160	–	0.22	115/1
FCU–12	FCBB1201	4–PIPE	921	0.00	24.45	18.05	5.0	45°	55°	80/67°	9.80	1	46.6	150°	120°	68°	1	4.2	6.4	3	160	–	0.22	115/1
FCU–13	FCBB1201	4–PIPE	921	0.00	24.45	18.05	5.0	45°	55°	80/67°	9.80	1	46.6	150°	120°	68°	1	4.2	6.4	3	160	–	0.22	115/1
FCU–14	FCBB1201	4–PIPE	921	0.00	24.45	18.05	5.0	45°	55°	80/67°	9.80	1	46.6	150°	120°	68°	1	4.2	6.4	3	160	–	0.22	115/1
FCU–15	FCBB1201	4–PIPE	921	0.00	24.45	18.05	5.0	45°	55°	80/67°	9.80	1	46.6	150°	120°	68°	1	4.2	6.4	3	160	–	0.22	115/1
FCU–16	FCBB1201	4–PIPE	921	0.00	24.45	18.05	5.0	45°	55°	80/67°	9.80	1	46.6	150°	120°	68°	1	4.2	6.4	3	160	–	0.22	115/1
FCU–17	FCBB1201	4–PIPE	921	0.00	24.45	18.05	5.0	45°	55°	80/67°	9.80	1	46.6	150°	120°	68°	1	4.2	6.4	3	160	–	0.22	115/1
FCU–18	FCBB1201	4–PIPE	921	0.00	24.45	18.05	5.0	45°	55°	80/67°	9.80	1	46.6	150°	120°	68°	1	4.2	6.4	3	160	–	0.22	115/1
FCU–19	FCBB1201	4–PIPE	921	0.00	24.45	18.05	5.0	45°	55°	80/67°	9.80	1	46.6	150°	120°	68°	1	4.2	6.4	3	160	–	0.22	115/1
FCU–20	FCBB1201	4–PIPE	921	0.00	24.45	18.05	5.0	45°	55°	80/67°	9.80	1	46.6	150°	120°	68°	1	4.2	6.4	3	160	–	0.22	115/1

NOTES:
1.POWER WIRING AND RACEWAY BY DIVISION 26.
2.PROVIDE MOTORS IN ACCORDANCE WITH SPECIFICATION SECTION 23 05 13.
3.INSTALLING CONTRACTOR TO PROVIDE VIBRATIONALLY ISOLATED SUPPORTS AND SEISMIC RESTRAINTS IN ACCORDANCE WITH SPECIFICATION SECTION 23 05 48 AND DETAILS.
4.PROVIDE THE FOLLOWING FACTORY INSTALLED OPTIONS:
A) HIGH STATIC ECM FOR FCU–3 THROUGH FCU–7 AND FCU–10; FREE DISCHARGE ECM FOR FCU–1, FCU–2, FCU–8, FCU–9, AND FCU–11 THROUGH FCU–19
B) STAINLESS STEEL MAIN DRAIN PAN
C) NON FUSED DISCONNECT
D) 1" MERV 8 FILTER
E) 2–WAY, 2–POSITION CONTROL VALVES
F) DELUX BALL VALVE SUPPLY AND RETURN PIPING PACKAGE WITH AUTO CIRCUIT SETTER
G) CONDENSATE FLOAT SWITCH
H) RELAY
I) TRANSFORMER
J) THREE SPEED FAN SWITCH
K) CONTROL ACCESS PANEL (AS APPLICABLE)
L) AUXILIARY DRAIN PAN
5.REFER TO SPECIFICATION 23 82 19 FOR ADDITIONAL REQUIREMENTS.

* RATINGS BASED ON:
100% WATER

CONDENSATE PUMP SCHEDULE

(BASED ON LITTLE GIANT)

TAG	CAT NO.	RECEIVER CAPACITY GAL	(EACH PUMP) GPH @ FT HEAD	MOTOR DATA	
				VOLTS/PHASE	AMPS
CP–1	EC–1	0.03	1.2 @ 20	115/1	0.24
CP–2	EC–400	0.03	0.7 @ 20	115/1	0.24
CP–3	VCL–14ULS	1.0	50 @ 12	115/1	1.0
CP–4	VCMA–15ULS	0.5	10 @ 13	115/1	1.0

NOTES:
1. WIRING AND RACEWAY PROVIDED BY ELECTRICAL CONTRACTOR.

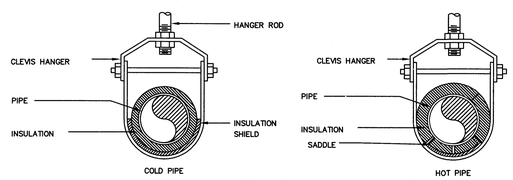

3 CLEVIS HANGER DETAIL

SCALE: N.T.S.

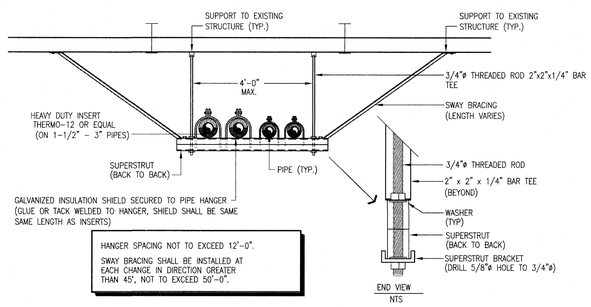

4 SINGLE HANGER DETAIL

SCALE: N.T.S.

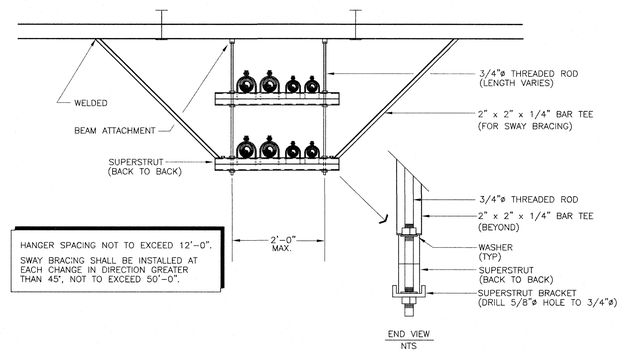

5 DOUBLE HANGER DETAIL

SCALE: N.T.S.

BID DOCUMENTS

No.	DATE	DESCRIPTION	DESIGNER	REVIEWER
1.				

SEAL
DAVID R. JACKSON
No. 6894
REGISTERED PROFESSIONAL ENGINEER MECHANICAL

SEAL

SCALE:
HORZ.: N.T.S.
VERT.:
DATUM:
HORZ.:
VERT.:
0
GRAPHIC SCALE

FUSS & O'NEILL
317 IRON HORSE WAY, SUITE 204
PROVIDENCE, RI 02908
401.861.3070
www.fando.com

RHODE ISLAND DEPARTMENT OF ADMINISTRATION
MAIN FOYER HVAC UPGRADES
MECHANICAL DETAILS AND SCHEDULES
RHODE ISLAND DEPARTMENT OF MOTOR VEHICLES MAIN OFFICE

CRANSTON RHODE ISLAND

PROJ. No.: 20150385.A10
DATE: 02/23/2018

M6.1

File Path: J:\DWG\P2015\0385\A10\MEP\Mechanical\20150385A10_M601_EQPMT SCHEDULE.dwg Layout: M6.1 Plotted: Wed, February 21, 2018 - 5:14 PM User: jgammell
Plotter: BWNET:CPP\FF-RICOH\STB File: FO.STB
LAYER STATE:
MS VIEW:

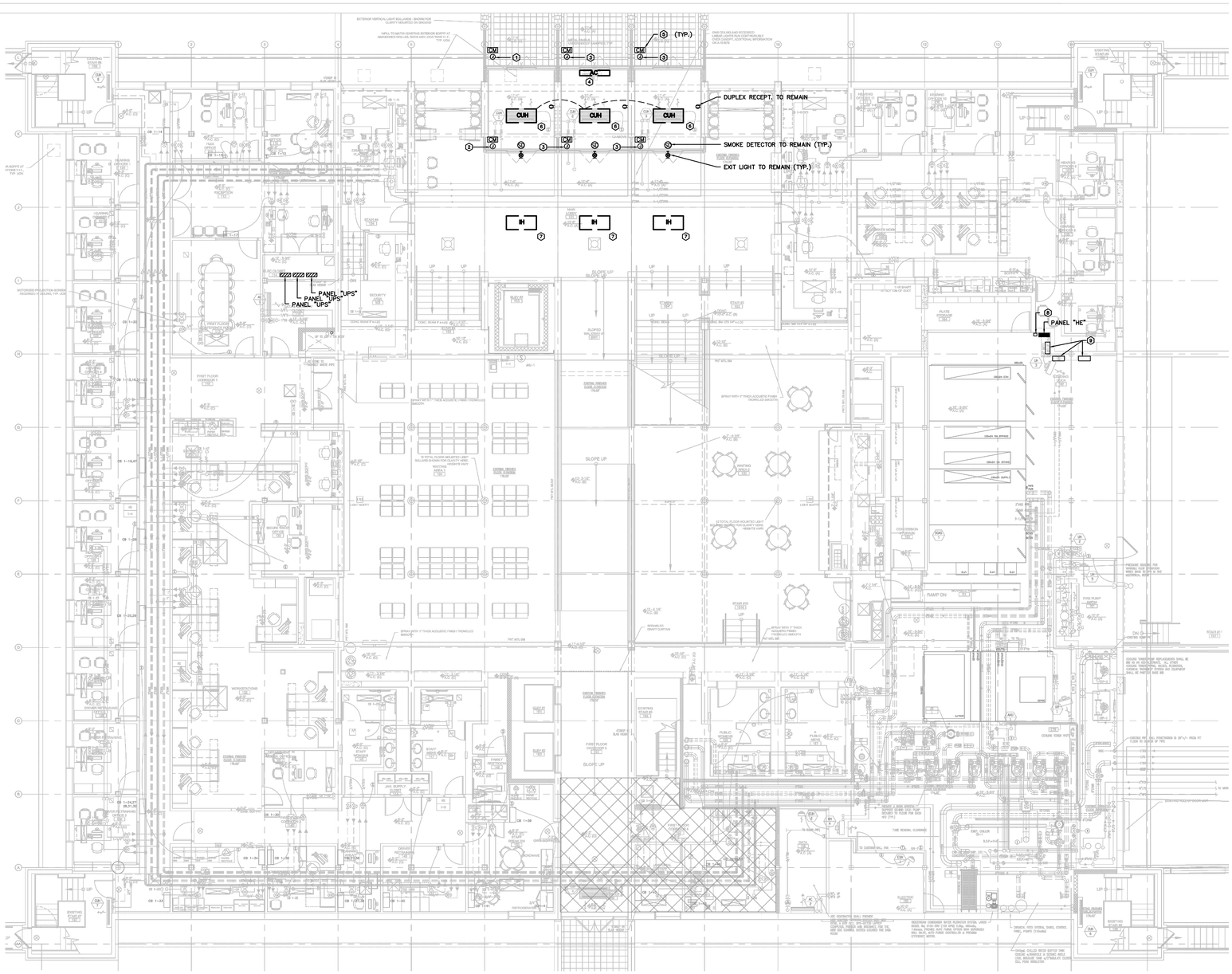

1 ELECTRICAL DEMOLITION – 1ST FLOOR
SCALE: 1/8"=1'

MAP REFERENCE

THE DRAWING BACKGROUND IS A COMPILATION OF "FIRST FLOOR DUCTWORK PLAN" AND "FIRST FLOOR PIPING PLAN" BY DELTA MECHANICAL CONTRACTORS, LLC, DATED AUGUST 2010, RECEIVED ELECTRONICALLY BY FUSS & O'NEILL IN JUNE 2016, AND LIMITED FIELD WORK PERFORMED BY FUSS & O'NEILL, INC. IN AUGUST 2016.

DEMOLITION KEY NOTES

1	JUNCTION BOX WITH POWER SUPPY FOR EXTERIOR DOOR OPERATORS FROM PANEL 'LC" CIRCUIT # 7. DISCONNECT AND REMOVE POWER WIRING TO DOORS BUT MAINTAIN CIRCUIT FOR EXTENSION TO NEW EXTERIOR POWER DOOR "L" OPERATOR.
2	JUNCTION BOX WITH POWER SUPPY FOR INTERIOR DOOR OPERATORS FROM PANEL 'LC" CIRCUIT # 39. DISCONNECT AND REMOVE POWER TO DOORS BUT MAINTAIN CIRCUIT FOR EXTENSION TO NEW INTERIOR POWER DOOR "F" OPERATOR.
3	DISCONNECT AND REMOVE POWER WIRING TO DOOR OPERATOR TO NEAREST JUNCTION BOX.
4	DISCONNECT AND REMOVE POWER WIRING (2/C # 10) TO AIR CURTAIN FROM PANEL 'LC" CIRCUIT # 33.
5	DISCONNECT AND REMOVE FIRE ALARM CONTROL MODULE FOR DOOR OPERATOR CONTROL. REMOVE EXISTING WIRING, MAINTAIN CONTINUOUS LOOP WIRING.
6	DISCONNECT AND REMOVE POWER WIRING TO FAN COILS MAINTAINING EXISTING CIRCUIT LC # 30 FOR CONNECTION TO NEW FAN COIL UNITS.
7	DISCONNECT AND REMOVE EXISTING POWER WIRING TO INFARED HEATERS FROM PANEL 'HE" VIA CONTROL PANELS.
8	DISCONNECT AND REMOVE EXISTING CONTROL SWITCHES FOR THE THREE INFARED HEATERS AND SINGLE SWITCH FOR VESTIBULE CABINET HEATERS.
9	DISCONNECT AND REMOVE INFARED HEATER CONTROL CABINETS (3).

BID DOCUMENTS

No.	DATE	DESCRIPTION	DESIGNER	REVIEWER
1.				

SEAL

SEAL
KEVIN M. SULLIVAN
No. 8948
REGISTERED
PROFESSIONAL ENGINEER
ELECTRICAL

SCALE:
HORZ.: 3/16"=1'-0"
VERT.:
DATUM:
HORZ.:
VERT.:
3/16 0 3/16
GRAPHIC SCALE

FUSS & O'NEILL
317 IRON HORSE WAY, SUITE 204
PROVIDENCE, RI 02908
401.861.3070
www.fando.com

RHODE ISLAND DEPARTMENT OF ADMINISTRATION
MAIN FOYER HVAC UPGRADES
ELECTRICAL DEMOLITION - FIRST FLOOR
RHODE ISLAND DEPARTMENT OF MOTOR VEHICLES MAIN OFFICE
CRANSTON RHODE ISLAND

PROJ. No.: 20150385.A10
DATE: 02/23/2018

E1.1

File Path: J:\DWG\P2015\0385\A10\MEP\Electrical\20150385A10_ELE01.dwg Layout: E-101 Plotted: Mon, February 26, 2018 - 11:56 AM User: sirons
MS VIEW: LAYER STATE: Plotter: NONE CTB File: FO.STB

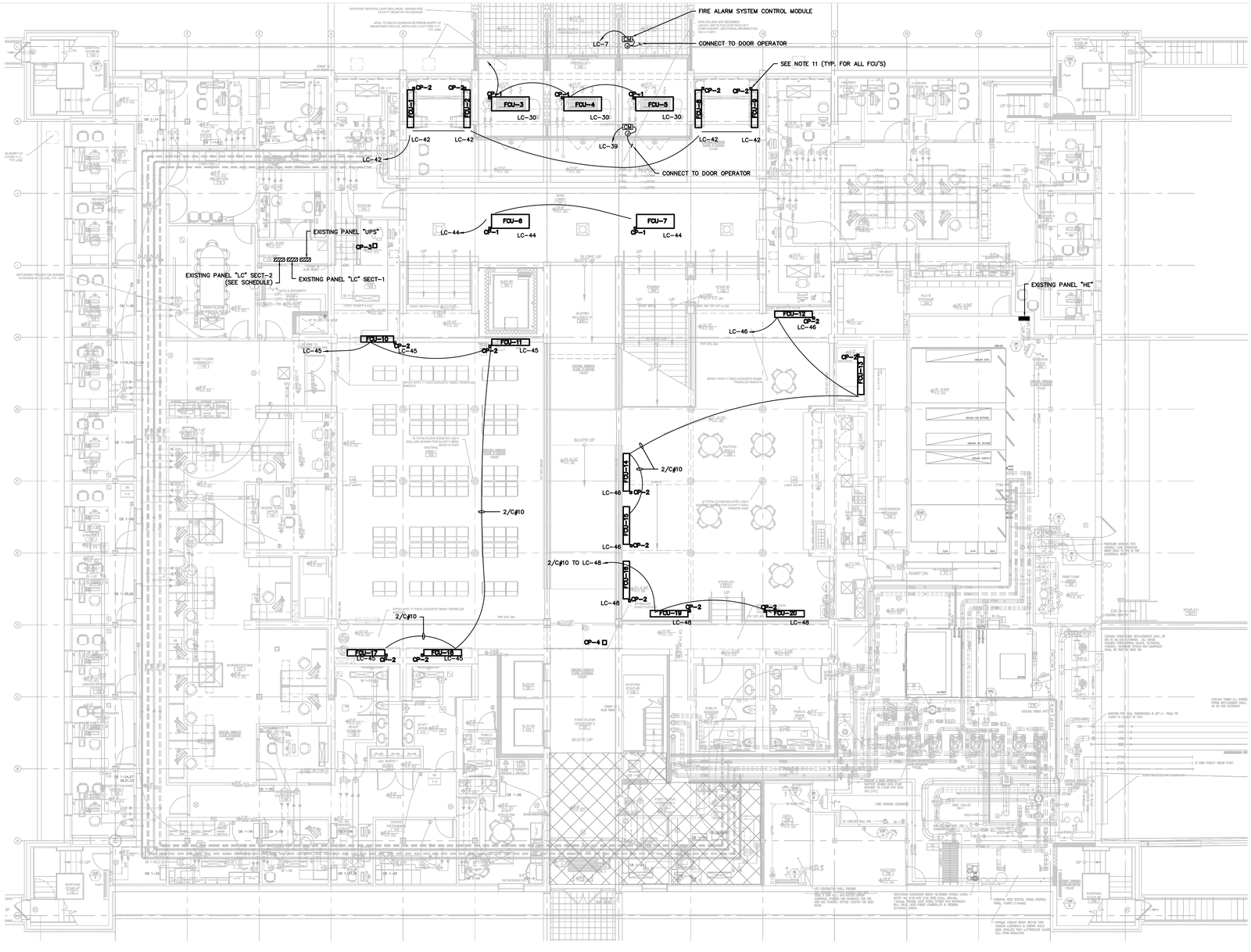

1 ELECTRICAL NEW WORK – 1ST FLOOR

SCALE: 1/8"=1'

LEGEND

▨	PANELBOARD 480/277 VOLT, THREE PHASE, FOUR WIRE.
▬	PANELBOARD 208/120 VOLT, THREE PHASE, FOUR WIRE.
FCU-1	FAN COIL UNIT DESIGNATED AS FCU-1, 2 OR 3 SUBSCRIPT "LC-**" DENOTES PANEL AND CIRCUIT NUMBER TO CONNECT TO.
ⓙ	JUNCTION BOX
FCM	FIRE ALARM SYSTEM ADDRESSABLE CONTROL MODULE
⌒	WIRING RUN CONCEALED ABOVE CEILING OR IN WALL ANY WIRING RUN EXPOSED SHALL BE RUN IN WIREMOLD RACEWAY COLOR AS SELECTED BY OWNER.
⌒	HOME RUN TO PANELBOARD 2/C # 12 TYPE MC CABLE RUN CONCEALED IN CEILING OR WALL UNLESS NOTED OTHERWISE.

GENERAL NOTES

1. ALL ELECTRICAL WORK SHALL BE INSTALLED IN STRICT ACCORDANCE WITH THE LATEST EDITION OF THE NATIONAL AND RHODE ISLAND ELECTRICAL CODES AND OTHER STATE OF RHODE ISLAND REQUIREMENTS.
2. FOR CLARITY PURPOSES EQUIPMENT NOT AFFECTED BY THIS PROJECT HAS NOT BEEN SHOWN. CONTRACTOR SHALL WORK WITHIN CONSTRAINTS OF EXISTING CONDITIONS. CONTRACTOR IS ENCOURAGED TO VISIT THE SITE BEFORE BIDDING, POST PREBID CONFERENCE TO FAMILIARIZE THEMSELVES WITH FIELD CONDITIONS.
3. ADDITIONAL JUNCTION / PULL BOXES SHALL BE FURNISHED AND INSTALLED AS REQUIRED.
4. ALL CONDUITS SHALL CONTAIN A GREEN SAFETY GROUND WIRE. BOND ALL PANELS, CABINETS, ENCLOSURES, CONDUITS, ETC., AS REQUIRED.
5. PROVIDE CONDUIT SLEEVES FILLED WITH AN APPROVED FIRE-RESISTANT MATERIAL WHERE FIRE-RATED WALLS ARE PENETRATED. APPROVED WATERTIGHT CONDUIT SLEEVES SHALL BE INSTALLED WHERE WALLS ARE PENETRATED EITHER ENTERING OR LEAVING A BUILDING. USE EPDM FLEXICRAFT, LINK SEAL OR EQUAL.
6. WHERE CONDUITS ARE NOT IDENTIFIED, THEY SHALL BE MINIMUM 3/4" WITH 2#12, 1#12 GROUND OR OTHERWISE SIZED TO ACCOMMODATE CABLE FILL BASED ON NEC.
7. FOR EXACT LOCATIONS OF MECHANICAL EQUIPMENT, REFER TO MECHANICAL DRAWINGS. THE CONTRACTOR SHALL COORDINATE ALL WORK WITH ALL TRADES INVOLVED IN THIS PROJECT.
8. ALL CUTTING, PATCHING AND FIRESTOPPING RELATED TO ELECTRICAL WORK SHALL BE THE RESPONSIBILITY OF THE ELECTRICAL CONTRACTOR USING LABOR SKILLED IN THE TASK/WORK SCOPE.
9. ALL WIRING EXTENDED FROM SPLICE BOXES TO PANELBOARDS SHALL BE TERMINATED ON TERMINAL STRIPS IN SPLICE BOXES. PROVIDE CIRCUIT BRANCH CIRCUIT IDENTIFICATION WITHIN THE SPLICE BOX, UTILIZING LAMINATED LABEL MARKERS. *NO SHARPIE MARKERS SHALL BE USED FOR LABELING.
10. BRANCH CIRCUIT WIRING TO BE MODIFIED OR EXTENDED MAY NOT BE SHOWN BUT SHALL BE PROVIDED AS REQUIRED. MINIMUM WIRING SHALL BE 3/4"C-2#12, 1#12 GROUND. NO MORE THAN THREE PHASES MAY BE COMBINED IN A SINGLE HOMERUN AND EACH PHASE SHALL BE PROVIDED WITH AN INDIVIDUAL NEUTRAL.
11. EACH FAN COIL UNIT WILL HAVE ASSOCIATED CONDENSATE PUMP. SINGLE 20 AMP 120V RECEPTACLE FOR EACH AND CONNECT TO POWER SUPPLY.

MAP REFERENCE

THE DRAWING BACKGROUND IS A COMPILATION OF "FIRST FLOOR DUCTWORK PLAN" AND "FIRST FLOOR PIPING PLAN" BY DELTA MECHANICAL CONTRACTORS, LLC, DATED AUGUST 2010, RECEIVED ELECTRONICALLY BY FUSS & O'NEILL IN JUNE 2016, AND LIMITED FIELD WORK PERFORMED BY FUSS & O'NEILL, INC. IN AUGUST 2016.

BID DOCUMENTS

File Path: J:\DWG\P2015\0385A10\MEP\Electrical\20150385A10_ELE01.dwg Layout: E-102 Plotted: Mon February 26, 2018 - 11:56 AM User: sirons
MS VIEW: LAYER STATE: Plotter: NONE CTB File: FO.STB

No.	DATE	DESCRIPTION	DESIGNER	REVIEWER
1.				

SEAL

SEAL KEVIN M. SULLIVAN No. 8948 REGISTERED PROFESSIONAL ENGINEER ELECTRICAL

SCALE:
HORZ.: 3/16"=1'-0"
VERT.:
DATUM:
HORZ.:
VERT.:
3/16 0 3/16
GRAPHIC SCALE

FUSS & O'NEILL
317 IRON HORSE WAY, SUITE 204
PROVIDENCE, RI 02908
401.861.3070
www.fando.com

RHODE ISLAND DEPARTMENT OF ADMINISTRATION
MAIN FOYER HVAC UPGRADES
ELECTRICAL NEW WORK - FIRST FLOOR
RHODE ISLAND DEPARTMENT OF MOTOR VEHICLES MAIN OFFICE

CRANSTON RHODE ISLAND

PROJ. No.: 20150385.A10
DATE: 02/23/2018

E1.2

GENERAL NOTES:

THE WORK SHOWN ON THESE DRAWINGS HAS BEEN DESIGNED IN ACCORDANCE WITH THE STRUCTURAL REQUIREMENTS FOR RI STATE BUILDING CODE INCLUDING THE 2012 INTERNATIONAL BUILDING CODE, EXCEPT AS AMENDED, ALTERED OR DELETED BY THE ADDITIONAL PROVISIONS IN THE RHODE ISLAND STATE SUPPLEMENT.

1. THE STRUCTURAL COMPONENTS HAVE BEEN DESIGNED FOR THE FOLLOWING LOADS:

WIND: BASIC WIND SPEED (3-SECOND GUST), V = 134 MPH
BUILDING RISK CATEGORY = II
WIND IMPORTANCE FACTOR, Iw= 1.00
WIND EXPOSURE CATEGORY = B
FORCE COEFFICIENT, C_F = 2.7
OTHER STRUCTURE DESIGN WIND PRESSURE = 40.4 PSF

2. ALL STRUCTURAL WORK SHOWN OR SPECIFIED ON THESE DRAWINGS IS SUBJECT TO REVIEW BY THE STRUCTURAL ENGINEER OF RECORD. ASPECTS OF THE WORK FOUND NOT IN CONFORMANCE WITH THE STRUCTURAL DOCUMENTS SHALL BE CORRECTED AS DIRECTED BY THE ENGINEER.

3. THE CONTRACTOR SHALL SUBMIT SHOP DRAWINGS OF REINFORCING STEEL, AND STRUCTURAL STEEL FOR REVIEW BEFORE PROCEEDING WITH WORK. THE CONTRACTOR SHALL CHECK ALL DIMENSIONS AND ACCEPT FULL RESPONSIBILITY FOR DIMENSIONAL CORRECTNESS. SHOP DRAWINGS SHALL BEAR THE REVIEW AND APPROVAL STAMP OF THE CONTRACTOR, IN ACCORDANCE WITH THE GENERAL CONDITIONS.

CONCRETE NOTES:

1. ALL CONCRETE WORK SHALL CONFORM TO ACI 301 "SPECIFICATIONS FOR STRUCTURAL CONCRETE FOR BUILDINGS".

2. CONCRETE FOR WALLS, PIERS, AND FOOTINGS SHALL BE NORMAL WEIGHT CONCRETE AND SHALL DEVELOP A COMPRESSIVE STRENGTH OF 3,000 PSI IN 28 DAYS, UNLESS OTHERWISE NOTED. CONCRETE SHALL HAVE A MAXIMUM AGGREGATE SIZE OF ¾ INCH, A MINIMUM CEMENT CONTENT OF 560 LBS/CU YD., AND A MAXIMUM SLUMP OF 4 INCHES.

3. ALL REINFORCING STEEL SHALL CONFORM TO ASTM A615 GRADE 60 AND BE DETAILED IN ACCORDANCE WITH ACI 315 "MANUAL OF STANDARD PRACTICE FOR DETAILING REINFORCED CONCRETE STRUCTURES".

4. REBARS SHALL HAVE A MINIMUM CONCRETE COVER AS FOLLOWS:
   CONCRETE DEPOSITED AGAINST GROUND.....3 IN.
   CONCRETE EXPOSED TO WEATHER OR IN CONTACT WITH GROUND:
   FOR BARS #5 AND LARGER.....2 IN.
   FOR BARS SMALLER THAN #5.....1½ IN.
   CONCRETE NOT EXPOSED TO THE WEATHER OR THE GROUND:
   SLABS AND WALLS.....¾ IN.

5. ALL REINFORCING BARS SHALL BE CONTINUOUS AND LAPPED A MINIMUM OF 48 BAR DIAMETERS AT ALL SPLICES, CORNERS, AND INTERSECTIONS UNLESS NOTED OTHERWISE.

6. ALL REINFORCEMENT SHALL BE SECURELY TIED IN ITS PROPOSED LOCATION PRIOR TO AND DURING PLACEMENT OF CONCRETE USING APPROVED CHAIRS, SPACERS AND TIE WIRE AS REQUIRED. NO BARS SHALL BE CUT OR OMITTED IN THE FIELD WITHOUT THE APPROVAL OF THE ENGINEER.

7. ALL EXPOSED EDGES OF CONCRETE SHALL HAVE A ¾ INCH CHAMFER UNLESS NOTED OTHERWISE.

8. ALL CONCRETE EXPOSED TO THE WEATHER SHALL BE AIR-ENTRAINED FOR SEVERE EXPOSURE IN ACCORDANCE WITH ACI 318.

9. SIZES AND LOCATIONS OF ALL REQUIRED EMBEDDED ITEMS FOR ALL TRADES SUCH AS ANCHOR BOLTS, PIPING SLEEVES, HOLDOWN ANCHORS, ETC., SHALL BE COORDINATED BY THE CONTRACTOR WITH OTHER TRADES.

FOUNDATION NOTES:

1. THE FOUNDATIONS HAVE BEEN DESIGNED TO REST ON INORGANIC, UNDISTURBED SOIL OR COMPACTED STRUCTURAL FILL PLACED ON INORGANIC, UNDISTURBED SOIL HAVING A PRESUMPTIVE LOAD BEARING VALUE OF 2,000 PSF EXPECTED TO BE FOUND AT THE SPECIFIED BOTTOM OF FOOTING ELEVATION.

2. ALL BEARING MATERIAL SHALL BE INSPECTED BY A QUALIFIED TECHNICIAN PRIOR TO CONCRETE PLACEMENT. A QUALIFIED TECHNICIAN SHALL BE THE SOLE JUDGE AS TO THE SUITABILITY OF THE BEARING MATERIAL. FOOTING ELEVATIONS SHALL BE ADJUSTED AS REQUIRED.

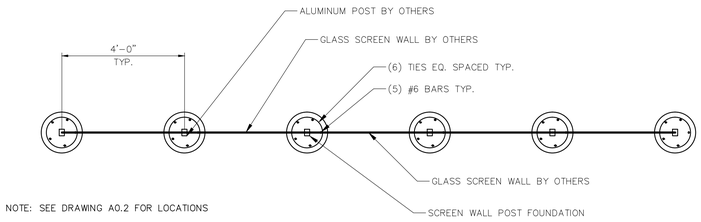

NOTE: SEE DRAWING A0.2 FOR LOCATIONS

1 SCREENWALL PLAN (2 REQUIRED)
SCALE: 1/2"=1'-0"

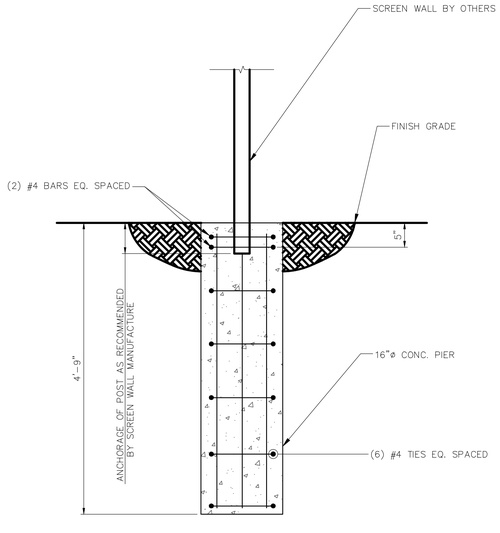

2 POST FOUNDATION SECTION
SCALE: 1"=1'-0"

BID DOCUMENTS

No.	DATE	DESCRIPTION	DESIGNER	REVIEWER
1				

SEAL

SEAL

STUART HENRY HARRIS
No. 9488
PROFESSIONAL ENGINEER
CIVIL

SCALE:
HORZ.: AS SHOWN
VERT.:
DATUM:
HORZ.:
VERT.:
0
GRAPHIC SCALE

FUSS & O'NEILL
317 IRON HORSE WAY, SUITE 204
PROVIDENCE, RI 02908
401.861.3070
www.fando.com

RHODE ISLAND DEPARTMENT OF ADMINISTRATION

SCREEN WALL POST FOOTING

RHODE ISLAND DEPARTMENT OF MOTOR VEHICLES MAIN OFFICE

CRANSTON RHODE ISLAND

PROJ. No.: 20150385.A10
DATE: 02/23/2018

S1.0

File Path: \\private\dfs\CadPro\DWG\P2015\0385\A10\Structural\Plan\20150385.A10 S.1.dwg Layout: 30X42-L Plotted: Fri, February 23, 2018 - 2:25 PM User: koconnor
MS VIEW: LAYER STATE: Plotter: DWG TO PDF.PC3 CTB File: FO.STB