HVAC Upgrade Design for RI DMV Main Office Foyer

Project# 20150385.A10

Project Manual

Volume 1 of 1

Rhode Island Department of Administration

Cranston, Rhode Island

February 23, 2018

Bid Documents Submission

FUSS & O'NEILL

317 Iron Horse Way, Suite 204
Providence, RI 02908

List of Drawings

Drawings #	Drawing Name
G0.1	Cover Sheet
A0.2	Architectural Partial Site Plan
A1.0	Architectural Demo Plan
A1.1	Architectural New Work Plan
A2.0	Architectural Vestibule Section
A3.0	Architectural Exterior Details
A3.1	Architectural Exterior Details
M0.1	Mechanical Notes & Legends
M1.1	Mechanical Demolition – First Floor
M2.1	Mechanical New Work – First Floor
M2.2	Reflected Ceiling Plan – First Floor
M6.1	Mechanical Details & Schedules
E1.1	Electrical Demolition – First Floor
E1.2	Electrical Demolition – First Floor
S1.1	Screen Wall Post Footing

THIS PAGE IS INTENTIONALLY LEFT BLANK

(FOR DUPLEX PRINTING PURPOSES)

Table of Contents

Division 01 General Requirements

017321 Cutting and Patching

Division 05 Metals

055000 Metal Fabrications

Division 06 Wood, Plastics, Composites

061000 Rough Carpentry

Division 07 Thermal and Moisture Protection

079005 Joint Sealers

Division 08 Openings

084313 Aluminum-Framed Storefronts
087100 Door Hardware
087113 Automatic Door Operators
088000 Glazing

Division 23 HVAC

230510 Selective Demolition HVAC
230516 Expansion Fittings and Loops for HVAC Piping
230517 Sleeves and Sleeve Seals for HVAC Piping
230519 Meters and Gauges for HVAC
230523 General Duty Valves for HVAC Piping
230529 Hangers and Supports for HVAC Piping and Equipment
230548 Vibration & Seismic Controls for HVAC
230553 Identification for HVAC Piping and Equipment
230593 Testing, Adjusting, and Balancing for HVAC
230719 HVAC Piping Insulation
230923 Direct-Digital Controls for HVAC
230993 Sequence of Operations for HVAC Controls
232113 Hydronic Piping
232116 Hydronic Specialties
238219 Fan Coil Units

Division 32 Exterior Improvements

321413 Precast Concrete Unit Paving
323523 Aluminum and Glass Barrier Systems

PART 1 GENERAL

1.01 SECTION INCLUDES

A. Examination, preparation, and general installation procedures.

B. Requirements for alterations work, including selective demolition, except removal, disposal, and/or remediation of hazardous materials and toxic substances.

C. Cutting and patching.

1.02 DEFINITIONS:

A. Cutting: Removal of in-place construction necessary to permit installation for performance of other work.

B. Patching: Fitting and repair work required to restore surfaces to original conditions after installation of other work.

1.03 SUBMITTALS

A. See Section 01 3000 - Administrative Requirements, for submittal procedures.

B. Cutting and Patching Proposal: Submit a proposal to the Owner's Representative describing procedures well in advance of the time cutting and patching will be performed to determine if the Owner and/or Architect/Engineer requires approval of these procedures before proceeding. Request approval to proceed. Include the following information, as applicable, in the proposal:

1. Describe the extent of cutting and patching required. Show how it will be performed and indicate why it cannot be avoided.
2. Describe anticipated results in terms of changes to existing construction. Include changes to structural elements and operating components as well as changes in the building's appearance and other significant visual elements.
3. Describe affects to integrity of weather exposed or moisture resistant element.
4. Describe affects to efficiency, maintenance, or safety of any operational element.
5. List products to be used and firms or entities that will perform Work.
6. Indicate dates when cutting and patching will be performed.
7. Utilities: List utilities that cutting and patching procedures will disturb or affect. List utilities that will be relocated and those that will be temporarily out of service. Indicate how long service will be disrupted.
8. Where cutting and patching involves adding reinforcement to structural elements, submit details and engineering calculations sealed by an Engineer registered in the State of Rhode Island showing integration of reinforcement with the original structure.
9. Approval by the Owner's Representative to proceed with cutting and patching does not waive the Architect/Engineer of Record's rights to later require complete removal and replacement of unsatisfactory Work.

1.04 QUALITY ASSURANCE

A. **REQUIREMENTS FOR STRUCTURAL WORK**: Do not cut and patch structural elements in a manner that would change their load carrying capacity or load-deflection ratio.

1. Obtain approval from the architect/Engineer of the cutting and patching proposal before cutting and patching the following Structural Elements:
   a. Foundation Construction.
   b. Bearing and Retaining Walls.
   c. Structural Concrete.
   d. Structural Steel.
   e. Lintels.

f. Structural Decking.
g. Miscellaneous Structural Metals.
h. Exterior Curtain-Wall Construction.
i. Equipment Supports.
j. Piping, Ductwork, Vessels, and Equipment.

B. **OPERATIONAL LIMITATIONS:** Do not cut and patch operating elements of related components in a manner that would result in reducing their capacity to perform as intended. Do not cut and patch operating elements or related components in a manner that would result in increased maintenance or decreased operational life or safety.
1. Obtain Architect/Engineer's approval of the cutting and patching proposal before cutting and patching the following elements or saftey related systems:
a. Primary Operational Systems and Equipment.
b. Air or Smoke Barriers.
c. Water, Moisture, or Vapor Barriers.
d. Membranes or Flashings.
e. Fire Protection Systems.
f. Noise and Vibration Control Elements and Systems.
g. Control Systems.
h. Communications Systems.
i. Electrical Wiring Systems.

C. **VISUAL REQUIREMENTS**: Do not cut and patch construction exposed on the exterior, or occupied spaces in a manner that would, in the architects opinion, reduce the building's aesthetic qualities. Do not cut and patch construction in a manner that would result in visual evidence of cutting and patching. Remove and replace construction cut and patched in a visually unsatisfactory manner.

1.05 WARRANTY

A. **EXISTING WARRANTIES**: Replace, patch, and repair material and surfaces cut or damaged by methods, and with materials in such a manner as not to void any warranties required or existing.

PART 2 PRODUCTS

2.01 MATERIALS

A. Use materials identical to in-place materials. For exposed surfaces, use materials that visually match existing adjacent surfaces to the fullest extent possible if identical materials are unavailable or cannot be used. Use materials whose installed performance will be equal or surpass that of existing materials.

B. Type and Quality of Existing Products: Dertermine by inspecting and testing products where necesary, referring to existing work as a standard.

C. Product Substitution: For any proposed change in materials, submit request for substitution described in Section 01 60 00 - Product Requirements.

PART 3 EXECUTION

3.01 EXAMINATION

A. Examine surfaces to be cut and patched and conditions under which cutting and patching is to be performed before cutting. If unsafe or unsatisfactory conditions are encountered, notify the Owner’s Representative and Architect, before proceeding with corrective action.

B. Openings and chases may not be shown on the Drawings. It is the responsibility of the Contractor to examine the Architectural, Electrical, Heating, Cooling, Ventilating and Plumbing Drawings and to provide chases, channels or openings where needed.

1. After installing Work into openings, channels and/or chases, the Contractor shall close same. If finishes are to be restored, the new Work shall match the original and shall be done by the trade customarily responsible for the particular kind of Work.

C. The Constractor shall verify dimensions for built-in Work and/or Work adjoining that of other trades before ordering any material or doing any Work. Discrepancies shall be submitted to the Owner's Representative before proceeding with the Work.

3.02 PREPARATION

A. Provide temporary support of Work to be cut.

B. Protect in-place construction during cutting and patching to prevent damage.

C. Clean substrate surfaces prior to applying next material or substance.

D. Seal cracks or openings of substrate prior to applying next material or substance.

E. Apply manufacturer required or recommended substrate prinmer, sealer, or conditioner prior to applying new material or substace in contact or bond.

F. Avoid interference with use of adjoining areas or interruption of free passage to adjoining areas.

G. Avoid cutting existing pipe, conduit, or ductwork serving the building but scheduled to be removed or relocated until provisions have been made to bypass them.

3.03 PERFORMANCE

A. General: Employ skilled workmen to perform cutting and patching. Proceed with cutting and patching at the earliest feasible time and complete without delay.
   1. Cut existing construction to provide for installation of other components or performance of other construction activities and the subsequent fitting and patching required to restore surfaces to their original condition.
   2. Do perform cutting and patching to integrate elements of Work. Provide penetrations of existing surfaces. Provide samples for testing. Seal penetrations through floors, walls, ceilings and roofs, as applicable; restore or preserve fire-rated and smoke-barrier construction. Construction and finishes shall match original Work.
   3. Whenever possible, execute the work by methods that avoid cutting or patching.

B. Cutting: Cut existing construction using methods least likely to damage elements retained or adjoining construction. Where possible, review proposed procedures with the original Installer; comply with the original Installer's recommendations.
   1. In general, where cutting, use hand or small power tools designed for sawing or grinding, not hammering and chopping. Cut holes and slots as small as possible, neatly to size required, and with minimum disturbance of adjacent surfaces. Temporarily cover openings when not in use.
   2. To avoid marring existing finished surfaces, cut or drill from the exposed or finished side into concealed surfaces.
   3. Cut through concrete and masonry using a cutting machine, such as a Carborundum saw or a diamond-core drill.
   4. Where services are required to be removed, relocated, or abandoned, by-pass utility services, such as pipe or conduit, before cutting. Cut-off pipe or conduit in walls or partitions to be removed. Cap, valve, or plug and seal the remaining portion of pipe or conduit to prevent entrance of moisture or other foreign matter after by-passing and cutting.

C. Patching: Patch with durable seams that are as invisible as possible. Comply with specified tolerances.
   1. Where feasible, inspect and test patched areas to demonstrate integrity of the installation.
   2. Restore exposed finishes of patched areas and extend finish restoration into retained adjoining construction in a manner that will eliminate evidence of patching and refinishing.

3. Where removing walls or partitions extends one finished area into another, patch and repair floor and wall surfaces in the new space. Provide an even surface of uniform color and appearance. Remove existing floor and wall coverings and replace with new materials, if necessary, to achieve uniform color and appearance.
   a. Where patching occurs in a smooth painted surface, extend final paint coat over entire unbroken surface containing the patch after the area has received primer and second coat.
4. Patch, repair, or re-hang existing ceilings as necessary to provide an even-plane surface of uniform appearance.

3.04 PROGRESS CLEANING

A. Maintain areas free of waste materials, debris, and rubbish. Maintain site in a clean and orderly condition.

B. Remove debris and rubbish from pipe chases, plenums, attics, crawl spaces, and other closed of remote spaces, prior to enclosing the space.

C. Broom and vacuum clean interior areas prior to start of surface finishing, and continue cleaning to eliminate dust.

D. Collect and remove waste materials, debris, and trash/rubbish from site periodically and dispose off-site; do not burn or bury.

3.05 PROTECTION OF INSTALLED WORK

A. Protect installed work from damage by construction operations.

B. Provide special protection where specified in individual specification sections.

C. Provide temporary and removable protection for installed products. Control activity in immediate work area to prevent damage.

D. Provide protective coverings at walls, projections, jambs, sills, and soffits of openings.

E. Protect finished floors stairs, and other surfaces from traffic, dirt, wear, damage, or movement of heavy objects, by protecting with durable sheet materials.

F. Prohibit traffic or storage upon waterproofed or roofed surfaces. If traffic or activity is necessary, obtain recommendations for protection from waterproofing or roofing material manufacturer.

G. Remove protective coverings whrn no longer neede; reuse or recycle plastic coverings if possible.

3.06 CLEANING

A. Clean areas and spaces where cutting and patching are performed. Completely remove paint, mortar, oils, putty or similar items. Thouroghly clean piping, conduit, and similar features before applying paint or other finishing materials.

B. Use cleaning materials that are nonhazardous.

C. Clean site; sweep paved areas, rake clean landscaped surfaces.

D. Remove waste, surplus materials, trash/rubbish, and construction facilities from the site; dispose of in legal manner; do not burn of bury.

END OF SECTION

PART 1 GENERAL

1.01 SECTION INCLUDES

A. Shop fabricated aluminum items.

1.02 REFERENCE STANDARDS

A. AAMA 2604 - Voluntary Specification, Performance Requirements and Test Procedures for High Performance Organic Coatings on Aluminum Extrusions and Panels; 2013.

B. AAMA 2605 - Voluntary Specification, Performance Requirements and Test Procedures for Superior Performing Organic Coatings on Aluminum Extrusions and Panels; 2013.

C. ASTM B209 - Standard Specification for Aluminum and Aluminum-Alloy Sheet and Plate; 2014.

D. ASTM B211M - Standard Specification for Aluminum and Aluminum-Alloy Rolled or Cold-Finished Bar, Rod, and Wire (Metric); 2012.

E. ASTM B221 - Standard Specification for Aluminum and Aluminum-Alloy Extruded Bars, Rods, Wire, Profiles, and Tubes; 2014.

1.03 SUBMITTALS

A. See Section 01 3000 - Administrative Requirements, for submittal procedures.

B. Shop Drawings: Indicate profiles, sizes, connection attachments, reinforcing, anchorage, size and type of fasteners, and accessories. Include erection drawings, elevations, and details where applicable.

PART 2 PRODUCTS

2.01 MATERIALS - ALUMINUM

A. Extruded Aluminum: ASTM B221 (ASTM B221M), 6063 alloy, T6 temper.

B. Aluminum-Alloy Bars: ASTM B211 (ASTM B211M), 6061 alloy, T6 temper.

2.02 FABRICATION

A. Fit and shop assemble items in largest practical sections, for delivery to site.

B. Fabricate items with joints tightly fitted and secured.

C. Grind exposed joints flush and smooth with adjacent finish surface. Make exposed joints butt tight, flush, and hairline. Ease exposed edges to small uniform radius.

D. Supply components required for anchorage of fabrications. Fabricate anchors and related components of same material and finish as fabrication, except where specifically noted otherwise.

2.03 FINISHES - ALUMINUM

A. Exterior Aluminum Surfaces: superior performance organic coating.

B. Interior Aluminum Surfaces: high performance organic coating.

C. High Performance Organic Coating System: AAMA 2604 multiple coat, thermally cured fluoropolymer system; color as scheduled.

D. Superior Performance Organic Coating System: AAMA 2605 multiple coat, thermally cured polyvinylidene fluoride system; color as selected from manufacturer's standard colors. including Standard Solid and Metallic Colors colors for 3-Coat System (Primer, Color & Clear Coat).

2.04 FABRICATION TOLERANCES

A. Squareness: 1/8 inch (3 mm) maximum difference in diagonal measurements.

B. Maximum Offset Between Faces: 1/16 inch (1.5 mm).

C. Maximum Misalignment of Adjacent Members: 1/16 inch (1.5 mm).

D. Maximum Bow: 1/8 inch (3 mm) in 48 inches (1.2 m).

E. Maximum Deviation From Plane: 1/16 inch (1.5 mm) in 48 inches (1.2 m).

PART 3 EXECUTION

3.01 INSTALLATION

A. Install items plumb and level, accurately fitted, free from distortion or defects.

B. Obtain approval prior to site cutting or making adjustments not scheduled.

3.02 TOLERANCES

A. Maximum Variation From Plumb: 1/4 inch (6 mm) per story, non-cumulative.

B. Maximum Offset From True Alignment: 1/4 inch (6 mm).

C. Maximum Out-of-Position: 1/4 inch (6 mm).

END OF SECTION

PART 1 GENERAL

1.01 SECTION INCLUDES

A. Rough opening framing for doors, windows, and roof openings.

B. Concealed wood blocking, nailers, and supports.

1.02 REFERENCE STANDARDS

A. AWC (WFCM) - Wood Frame Construction Manual for One- and Two-Family Dwellings; 2015.

B. AFPA (WFCM) - Wood Frame Construction Manual for One- and Two-Family Dwellings; 2012.

C. PS 20 - American Softwood Lumber Standard; 2010.

PART 2 PRODUCTS

2.01 GENERAL REQUIREMENTS

A. Dimension Lumber: Comply with PS 20 and requirements of specified grading agencies.
   1. If no species is specified, provide any species graded by the agency specified; if no grading agency is specified, provide lumber graded by any grading agency meeting the specified requirements.
   2. Grading Agency: Any grading agency whose rules are approved by the Board of Review, American Lumber Standard Committee (www.alsc.org) and who provides grading service for the species and grade specified; provide lumber stamped with grade mark unless otherwise indicated.

B. Lumber fabricated from old growth timber is not permitted.

2.02 DIMENSION LUMBER FOR CONCEALED APPLICATIONS

A. Sizes: Nominal sizes as indicated on drawings, S4S.

B. Moisture Content: S-dry or MC19.

C. Miscellaneous Framing, Blocking, Nailers, Grounds, and Furring:
   1. Lumber: S4S, No. 2 or Standard Grade.
   2. Boards: Standard or No. 3.

PART 3 EXECUTION

3.01 INSTALLATION - GENERAL

A. Select material sizes to minimize waste.

B. Reuse scrap to the greatest extent possible; clearly separate scrap for use on site as accessory components, including: shims, bracing, and blocking.

3.02 FRAMING INSTALLATION

A. Set structural members level, plumb, and true to line. Discard pieces with defects that would lower required strength or result in unacceptable appearance of exposed members.

B. Make provisions for temporary construction loads, and provide temporary bracing sufficient to maintain structure in true alignment and safe condition until completion of erection and installation of permanent bracing.

C. Install structural members full length without splices unless otherwise specifically detailed.

D. Comply with member sizes, spacing, and configurations indicated, and fastener size and spacing indicated, but not less than required by applicable codes, AWC (WFCM) Wood Frame Construction Manual, and _____.

E. Construct double joist headers at floor and ceiling openings and under wall stud partitions that are parallel to floor joists; use metal joist hangers unless otherwise detailed.

F. Frame wall openings with two or more studs at each jamb; support headers on cripple studs.

3.03 BLOCKING, NAILERS, AND SUPPORTS

A. Provide framing and blocking members as indicated or as required to support finishes, fixtures, specialty items, and trim.

END OF SECTION

PART 1 GENERAL

1.01 SECTION INCLUDES

A. Sealants and joint backing.

1.02 RELATED REQUIREMENTS

A. Section 08 8000 - Glazing: Glazing sealants and accessories.

1.03 REFERENCE STANDARDS

A. ASTM C834 - Standard Specification for Latex Sealants; 2014.

B. ASTM C920 - Standard Specification for Elastomeric Joint Sealants; 2014.

C. ASTM C1193 - Standard Guide for Use of Joint Sealants; 2013.

1.04 ADMINISTRATIVE REQUIREMENTS

A. Coordinate the work with other sections referencing this section.

1.05 SUBMITTALS

A. See Section 01 3000 - Administrative Requirements, for submittal procedures.

B. Product Data: Provide data indicating sealant chemical characteristics.

C. Samples: Submit two samples illustrating sealant colors for selection.

1.06 QUALITY ASSURANCE

A. Manufacturer Qualifications: Company specializing in manufacturing the Products specified in this section with minimum three years documented experience.

B. Applicator Qualifications: Company specializing in performing the work of this section with minimum 5 years experience.

1.07 FIELD CONDITIONS

A. Maintain temperature and humidity recommended by the sealant manufacturer during and after installation.

1.08 WARRANTY

A. See Section 01 7800 - Closeout Submittals, for additional warranty requirements.

B. Correct defective work within a five year period after Date of Substantial Completion.

C. Warranty: Include coverage for installed sealants and accessories which fail to achieve airtight seal, exhibit loss of adhesion or cohesion, or do not cure.

PART 2 PRODUCTS

2.01 MANUFACTURERS

A. Gunnable and Pourable Sealants:
   1. Dow Corning Corporation: www.dowcorning.com.
   2. Pecora Corporation: www.pecora.com.
   3. Tremco Global Sealants: www.tremcosealants.com.

2.02 SEALANTS

A. Type 1 - General Purpose Exterior Sealant: Polyurethane; ASTM C920, Grade NS, Class 25 minimum; Uses M, G, and A; single component.
   1. Color: To be selected by Architect from manufacturer's standard range.
   2. Polyurethane Products:
      a. Pecora Corporation; DynaTrol I-XL General Purpose One Part Polyurethane Sealant: www.pecora.com.
      b. BASF Construction Chemicals-Building Systems; Sonolastic NP1: www.buildingsystems.basf.com.
      c. Tremco; Dymonic..

B. Type 2 - General Purpose Interior Sealant: Acrylic emulsion latex; ASTM C834, Type OP, Grade NF single component, paintable.
   1. Color: To be selected by Architect from manufacturer's standard range.
   2. Products:
      a. Pecora Corporation; AC-20 + Silicone Acrylic Latex Caulking Compound: www.pecora.com.
      b. Sherwin-Williams Company; 850A Acrylic Latex Caulk: www.sherwin-williams.com.
      c. Tremco Global Sealants; Temflex 834: www.tremcosealants.com.
      d. Substitutions: See Section 01 6000 - Product Requirements.

C. Type 3 - Silicone Sealant: ASTM C920, Grade NS, Class 25 minimum; Uses NT, A, G, M, O; single component, solvent curing, non-sagging, non-staining, fungus resistant, non-bleeding.
   1. Color: To be selected by Architect from manufacturer's standard range.
   2. Products:
      a. Pecora Corporation; 890NST Ultra Low Modulus Architectural Silicone Sealant - Class 100: www.pecora.com.

2.03 ACCESSORIES

A. Primer: Non-staining type, recommended by sealant manufacturer to suit application.

B. Joint Backing: Round foam rod compatible with sealant; ASTM D 1667, closed cell PVC; oversized 30 to 50 percent larger than joint width.

C. Bond Breaker: Pressure sensitive tape recommended by sealant manufacturer to suit application.

PART 3 EXECUTION

3.01 EXAMINATION

A. Verify that substrate surfaces are ready to receive work.

B. Verify that joint backing and release tapes are compatible with sealant.

3.02 PREPARATION

A. Remove loose materials and foreign matter that could impair adhesion of sealant.

B. Clean and prime joints in accordance with manufacturer's instructions.

C. Perform preparation in accordance with manufacturer's instructions and ASTM C1193.

D. Protect elements surrounding the work of this section from damage or disfigurement.

3.03 INSTALLATION

A. Perform work in accordance with sealant manufacturer's requirements for preparation of surfaces and material installation instructions.

B. Perform installation in accordance with ASTM C1193.

C. Measure joint dimensions and size joint backers to achieve width-to-depth ratio, neck dimension, and surface bond area as recommended by manufacturer, except where specific dimensions are indicated.

D. Install bond breaker where joint backing is not used.

E. Install sealant free of air pockets, foreign embedded matter, ridges, and sags.

F. Apply sealant within recommended application temperature ranges. Consult manufacturer when sealant cannot be applied within these temperature ranges.

G. Tool joints concave.

3.04 CLEANING

A. Clean adjacent soiled surfaces.

3.05 PROTECTION

A. Protect sealants until cured.

END OF SECTION

THIS PAGE IS INTENTIONALLY LEFT BLANK

(FOR DUPLEX PRINTING PURPOSES)

PART 1 GENERAL

1.01 SECTION INCLUDES

A. Aluminum-framed storefront, with vision glass.

B. Infill panels of metal and glass.

C. Aluminum doors and frames.

D. Weatherstripping.

1.02 RELATED REQUIREMENTS

A. Section 07 9200 - Joint Sealants: Sealing joints between frames and adjacent construction.

B. Section 08 7100 - Door Hardware: Hardware items other than specified in this section.

C. Section 087113 - Automatic Door Operators

D. Section 08 8000 - Glazing: Glass and glazing accessories.

1.03 REFERENCE STANDARDS

A. AAMA CW-10 - Care and Handling of Architectural Aluminum From Shop to Site; 2015.

B. AAMA 609 & 610 - Cleaning and Maintenance Guide for Architecturally Finished Aluminum (Combined Document); 2015.

C. AAMA 2605 - Voluntary Specification, Performance Requirements and Test Procedures for Superior Performing Organic Coatings on Aluminum Extrusions and Panels; 2013.

D. ASTM B221 - Standard Specification for Aluminum and Aluminum-Alloy Extruded Bars, Rods, Wire, Profiles, and Tubes; 2014.

E. ASTM B221M - Standard Specification for Aluminum and Aluminum-Alloy Extruded Bars, Rods, Wire, Profiles, and Tubes [Metric]; 2013.

F. ASTM E283 - Standard Test Method for Determining the Rate of Air Leakage Through Exterior Windows, Curtain Walls, and Doors Under Specified Pressure Differences Across the Specimen; 2004 (Reapproved 2012).

G. ASTM E330/E330M - Standard Test Method for Structural Performance of Exterior Windows, Doors, Skylights and Curtain Walls by Uniform Static Air Pressure Difference; 2014.

H. ASTM E331 - Standard Test Method for Water Penetration of Exterior Windows, Skylights, Doors, and Curtain Walls by Uniform Static Air Pressure Difference; 2000 (Reapproved 2009).

1.04 ADMINISTRATIVE REQUIREMENTS

A. Coordinate with installation of other components that comprise the exterior enclosure.

B. Preinstallation Meeting: Conduct a preinstallation meeting one week before starting work of this section; require attendance by all affected installers.

1.05 SUBMITTALS

A. See Section 01 3000 - Administrative Requirements, for submittal procedures.

B. Product Data: Provide component dimensions, describe components within assembly, anchorage and fasteners, glass and infill, internal drainage details and _____.

C. Shop Drawings: Indicate system dimensions, framed opening requirements and tolerances, affected related Work, expansion and contraction joint location and details, and field welding required.

D. Samples: Submit two samples 12x12 inches (____x____ mm) in size illustrating finished aluminum surface, glass, glazing materials.

E. Manufacturer's Certificate: Certify that the products supplied meet or exceed the specified requirements.

F. Design Data: Provide framing member structural and physical characteristics, engineering calculations, and dimensional limitations.

G. Hardware Schedule: Complete itemization of each item of hardware to be provided for each door, cross-referenced to door identification numbers in Contract Documents.

H. Report of field testing for water leakage.

I. Warranty: Submit manufacturer warranty and ensure forms have been completed in Owner's name and registered with manufacturer.

1.06 QUALITY ASSURANCE

A. Designer Qualifications: Design structural support framing components under direct supervision of a Professional Structural Engineer experienced in design of this Work and licensed in the State in which the Project is located.

B. Manufacturer Qualifications: Company specializing in performing work of type specified and with at least three years of documented experience.

C. Installer Qualifications: Company specializing in performing work of type specified and with at least three years of documented experience.

1.07 DELIVERY, STORAGE, AND HANDLING

A. Handle products of this section in accordance with AAMA CW-10.

B. Protect finished aluminum surfaces with wrapping. Do not use adhesive papers or sprayed coatings that bond to aluminum when exposed to sunlight or weather.

1.08 FIELD CONDITIONS

A. Do not install sealants when ambient temperature is less than 40 degrees F (5 degrees C). Maintain this minimum temperature during and 48 hours after installation.

1.09 WARRANTY

A. See Section 01 7800 - Closeout Submittals, for additional warranty requirements.

B. Correct defective Work within a five year period after Date of Substantial Completion.

C. Provide five year manufacturer warranty against failure of glass seal on insulating glass units, including interpane dusting or misting. Include provision for replacement of failed units.

D. Provide five year manufacturer warranty against excessive degradation of exterior finish. Include provision for replacement of units with excessive fading, chalking, or flaking.

PART 2 PRODUCTS

2.01 BASIS OF DESIGN -- FRAMING FOR INSULATING GLAZING

A. Center-Set Style, Thermally-Broken:
   1. Basis of Design: EFCO Corporation; Series 403, Thermal Storefront Framing: www.efcocorp.com/sle.

2.02 BASIS OF DESIGN -- SWINGING DOORS

A. Medium Stile, Insulating Glazing, Thermally-Broken:
   1. Basis of Design: EFCO Corporation; Series D318 Durastile Heavy Duty: www.efcocorp.com/sle.

2.03 STOREFRONT

A. Aluminum-Framed Storefront: Factory fabricated, factory finished aluminum framing members with infill, and related flashings, anchorage and attachment devices.
   1. Glazing Rabbet: For 1 inch (25 mm) insulating glazing.
   2. Finish: Superior performing organic coatings.
      a. Factory finish all surfaces that will be exposed in completed assemblies.
      b. Touch-up surfaces cut during fabrication so that no natural aluminum is visible in completed assemblies, including joint edges.
   3. Finish Color: _____.
   4. Fabrication: Joints and corners flush, hairline, and weatherproof, accurately fitted and secured; prepared to receive anchors and hardware; fasteners and attachments concealed from view; reinforced as required for imposed loads.
   5. Construction: Eliminate noises caused by wind and thermal movement, prevent vibration harmonics, and prevent "stack effect" in internal spaces.
   6. System Internal Drainage: Drain to the exterior by means of a weep drainage network any water entering joints, condensation occurring in glazing channel, and migrating moisture occurring within system.
   7. Expansion/Contraction: Provide for expansion and contraction within system components caused by cycling temperature range of 170 degrees F (95 degrees C) over a 12 hour period without causing detrimental effect to system components, anchorages, and other building elements.
   8. Movement: Allow for movement between storefront and adjacent construction, without damage to components or deterioration of seals.
   9. Perimeter Clearance: Minimize space between framing members and adjacent construction while allowing expected movement.

B. Performance Requirements:
   1. Wind Loads: Design and size components to withstand the specified load requirements without damage or permanent set, when tested in accordance with ASTM E330/E330M, using loads 1.5 times the design wind loads and 10 second duration of maximum load.
      a. Member Deflection: Limit member deflection to flexure limit of glass in any direction, with full recovery of glazing materials.
   2. Water Penetration Resistance: No uncontrolled water on interior face, when tested in accordance with ASTM E331 at pressure differential of 8 psf (390 Pa).
   3. Air Leakage: Maximum of 0.06 cu ft/min sq ft (0.3 L/sec sq m) of wall area, when tested in accordance with ASTM E283 at 6.27 psf (300 Pa) pressure differential across assembly.

2.04 COMPONENTS

A. Aluminum Framing Members: Tubular aluminum sections, thermally broken with interior section insulated from exterior, drainage holes and internal weep drainage system.
   1. Glazing Stops: Flush.
   2. Cross-Section: As indicated on drawings.

B. Glazing: As specified in Section 08 8000.

C. Swing Doors: See Basis of Design Info.
   1. Glazing Stops: Square.
   2. Finish: Same as storefront.

2.05 MATERIALS

A. Extruded Aluminum: ASTM B221 (ASTM B221M).

B. Fasteners: Stainless steel.

C. Glazing Gaskets: Type to suit application to achieve weather, moisture, and air infiltration requirements.

2.06 FINISHES

A. Superior Performing Organic Coatings: AAMA 2605 multiple coat, thermally cured polyvinylidene fluoride (PVDF) system.
   1. Polyvinylidene fluoride (PVDF) multi-coat thermoplastic fluoropolymer coating system, including minimum 70 percent PVDF color topcoat and minimum total dry film thickness of 0.9 mil (0.023 mm); color and gloss as indicated on drawings.
      a. Manufacturers:
         1) PPG Metal Coatings; Duranar: www.ppgideascapes.com.
         2) Sherwin-Williams Company; SHER-NAR 5000: oem.sherwin-williams.com/sle.
      b. Color: As selected by Architect, from Manufacturers color for 3-Coat System (Primer, Color & Clear Coat) including Standard Solid and Metallic Colors. (PPG Duranar XL or similar.)

2.07 HARDWARE

A. For each door, include weatherstripping, sill sweep strip, and threshold.

B. Other Door Hardware: As specified in Section 08 7100.

C. Perimeter Seal.

D. Sill Sweep Strips: Resilient seal type, retracting, of neoprene; provide on all doors.

E. Door Bottom.

F. Threshold: Extruded aluminum, one piece per door opening, ribbed surface; provide on all doors.

G. Hinges: Continuous Hinge.

H. Automatic Door Operators and Actuators: As specified in Section 087113

PART 3 EXECUTION

3.01 EXAMINATION

A. Verify dimensions, tolerances, and method of attachment with other work.

B. Verify that wall openings and adjoining air and vapor seal materials are ready to receive work of this section.

3.02 INSTALLATION

A. Install wall system in accordance with manufacturer's instructions.

B. Attach to structure to permit sufficient adjustment to accommodate construction tolerances and other irregularities.

C. Provide alignment attachments and shims to permanently fasten system to building structure.

D. Align assembly plumb and level, free of warp or twist. Maintain assembly dimensional tolerances, aligning with adjacent work.

E. Provide thermal isolation where components penetrate or disrupt building insulation.

F. Install sill flashings. Turn up ends and edges; seal to adjacent work to form water tight dam.

G. Where fasteners penetrate sill flashings, make watertight by seating and sealing fastener heads to sill flashing.

H. Pack fibrous insulation in shim spaces at perimeter of assembly to maintain continuity of thermal barrier.

I. Set thresholds in bed of sealant and secure.

J. Touch-up minor damage to factory applied finish; replace components that cannot be satisfactorily repaired.

3.03 TOLERANCES

A. Maximum Variation from Plumb: 0.06 inches every 3 ft (1.5 mm/m) non-cumulative or 1/16 inches per 10 ft (1.5 mm/3 m), whichever is less.

B. Maximum Misalignment of Two Adjoining Members Abutting in Plane: 1/32 inch (0.8 mm).

3.04 ADJUSTING

A. Adjust operating hardware and sash for smooth operation.

3.05 CLEANING

A. Remove protective material from pre-finished aluminum surfaces.

B. Wash down surfaces with a solution of mild detergent in warm water, applied with soft, clean wiping cloths. Take care to remove dirt from corners. Wipe surfaces clean.

C. Upon completion of installation, thoroughly clean aluminum surfaces in accordance with AAMA 609 & 610.

3.06 PROTECTION

A. Protect installed products from damage until Date of Substantial Completion.

END OF SECTION

THIS PAGE IS INTENTIONALLY LEFT BLANK

(FOR DUPLEX PRINTING PURPOSES)

PART 1 GENERAL

1.01 RELATED DOCUMENTS

A. Drawings and general provisions of the Contract, including General and Supplementary Conditions and Division 1 Specification Sections, apply to this Section.

1.02 SUMMARY

A. This Section includes commercial door hardware for the following:
   1. Swinging doors.

B. Door hardware includes, but is not necessarily limited to, the following:
   1. Mechanical door hardware.
   2. Electromechanical door hardware, power supplies, back-ups and surge protection.
   3. Automatic operators.
   4. Cylinders specified for doors in other sections.

C. Related Sections:
   1. Division 06 Section “Rough Carpentry”.
   2. Division 08 Section “Door Hardware Schedule”.
   3. Division 08 Section “Aluminum-Framed Entrances and Storefronts”.
   4. Division 28 Section “Access Control”.

D. Codes and References: Comply with the version year adopted by the Authority Having Jurisdiction.
   1. ANSI A117.1 - Accessible and Usable Buildings and Facilities.
   2. ANSI/SDI A250.13 - Testing and Rating of Severe Windstorm Resistant Components for Swing Door Assemblies.
   3. ICC/IBC - International Building Code.
   4. NFPA 70 - National Electrical Code.
   5. NFPA 80 - Fire Doors and Windows.
   6. NFPA 101 - Life Safety Code.
   7. NFPA 105 - Installation of Smoke Door Assemblies.
   8. UL/ULC and CSA C22.2 – Standards for Automatic Door Operators Used on Fire and Smoke Barrier Doors and Systems of Doors.
   9. State Building Codes, Local Amendments.

E. Standards: All hardware specified herein shall comply with the following industry standards:
   1. ANSI/BHMA Certified Product Standards - A156 Series
   2. UL10C – Positive Pressure Fire Tests of Door Assemblies

1.03 SUBMITTALS

A. Product Data: Manufacturer's product data sheets including installation details, material descriptions, dimensions of individual components and profiles, operational descriptions and finishes.

B. Door Hardware Schedule: Prepared by or under the supervision of supplier, detailing fabrication and assembly of door hardware, as well as procedures and diagrams. Coordinate the final Door Hardware Schedule with doors, frames, and related work to ensure proper size, thickness, hand, function, and finish of door hardware.
   1. Format: Comply with scheduling sequence and vertical format in DHI's "Sequence and Format for the Hardware Schedule."
   2. Organization: Organize the Door Hardware Schedule into door hardware sets indicating complete designations of every item required for each door or opening. Organize door hardware sets in

same order as in the Door Hardware Sets at the end of Part 3. Submittals that do not follow the same format and order as the Door Hardware Sets will be rejected and subject to resubmission.

3. Content: Include the following information:
   a. Type, style, function, size, label, hand, and finish of each door hardware item.
   b. Manufacturer of each item.
   c. Fastenings and other pertinent information.
   d. Location of door hardware set, cross-referenced to Drawings, both on floor plans and in door and frame schedule.
   e. Explanation of abbreviations, symbols, and codes contained in schedule.
   f. Mounting locations for door hardware.
   g. Door and frame sizes and materials.
4. Submittal Sequence: Submit the final Door Hardware Schedule at earliest possible date, particularly where approval of the Door Hardware Schedule must precede fabrication of other work that is critical in the Project construction schedule. Include Product Data, Samples, Shop Drawings of other work affected by door hardware, and other information essential to the coordinated review of the Door Hardware Schedule.

C. Shop Drawings: Details of electrified access control hardware indicating the following:
   1. Wiring Diagrams: Upon receipt of approved schedules, submit detailed system wiring diagrams for power, signaling, monitoring, communication, and control of the access control system electrified hardware. Differentiate between manufacturer-installed and field-installed wiring. Include the following:
      a. Elevation diagram of each unique access controlled opening showing location and interconnection of major system components with respect to their placement in the respective door openings.
      b. Complete (risers, point-to-point) access control system block wiring diagrams.
   2. Electrical Coordination: Coordinate with related Division 26 Electrical Sections the voltages and wiring details required at electrically controlled and operated hardware openings.

D. Proof of Certification: Provide copy of manufacturer(s) official certification or accreditation document indicating proof of status as a qualified and authorized provider of the primary Integrated Wiegand Access Control Products.

E. Keying Schedule: Prepared under the supervision of the Owner, separate schedule detailing final keying instructions for locksets and cylinders in writing. Include keying system explanation, door numbers, key set symbols, hardware set numbers and special instructions. Owner to approve submitted keying schedule prior to the ordering of permanent cylinders.

F. Operating and Maintenance Manuals: Provide manufacturers operating and maintenance manuals for each item comprising the complete door hardware installation in quantity as required in Division 01, Closeout Submittals. The manual to include the name, address, and contact information of the manufacturers providing the hardware and their nearest service representatives. The final copies delivered after completion of the installation test to include "as built" modifications made during installation, checkout, and acceptance.

G. Warranties and Maintenance: Special warranties and maintenance agreements specified in this Section.

1.04 DELIVERY, STORAGE, AND HANDLING

A. Inventory door hardware on receipt and provide secure lock-up and shelving for door hardware delivered to Project site. Do not store electronic access control hardware, software or accessories at Project site without prior authorization.

B. Tag each item or package separately with identification related to the final Door Hardware Schedule, and include basic installation instructions with each item or package.

C. Deliver, as applicable, permanent keys, cylinders, cores, access control credentials, software and related accessories directly to Owner via registered mail or overnight package service. Instructions for delivery to the Owner shall be established at the "Keying Conference".

1.05 COORDINATION

A. Templates: Obtain and distribute to the parties involved templates for doors, frames, and other work specified to be factory prepared for installing standard and electrified hardware. Check Shop Drawings of other work to confirm that adequate provisions are made for locating and installing hardware to comply with indicated requirements.

B. Door Hardware and Electrical Connections: Coordinate the layout and installation of scheduled electrified door hardware and related access control equipment with required connections to source power junction boxes, low voltage power supplies, detection and monitoring hardware, and fire and detection alarm systems.

C. Door and Frame Preparation: Related Division 08 Sections (Steel, Aluminum and Wood) doors and corresponding frames are to be prepared, reinforced and pre-wired (if applicable) to receive the installation of the specified electrified, monitoring, signaling and access control system hardware without additional in-field modifications.

1.06 WARRANTY

A. General Warranty: Reference Division 01, General Requirements. Special warranties specified in this Article shall not deprive Owner of other rights Owner may have under other provisions of the Contract Documents and shall be in addition to, and run concurrent with, other warranties made by Contractor under requirements of the Contract Documents.

B. Warranty Period: Written warranty, executed by manufacturer(s), agreeing to repair or replace components of standard and electrified door hardware that fails in materials or workmanship within specified warranty period after final acceptance by the Owner. Failures include, but are not limited to, the following:
   1. Structural failures including excessive deflection, cracking, or breakage.
   2. Faulty operation of the hardware.
   3. Deterioration of metals, metal finishes, and other materials beyond normal weathering.
   4. Electrical component defects and failures within the systems operation.

C. Standard Warranty Period: One year from date of Substantial Completion, unless otherwise indicated.

D. Special Warranty Periods:
   1. Ten years for mortise locks and latches.
   2. Five years for exit hardware.
   3. Twenty five years for manual surface door closers.
   4. Ten years for heavy duty floor closers.
   5. Two years for shallow depth floor closers.
   6. Two years for electromechanical door hardware.

1.07 MAINTENANCE SERVICE

A. Maintenance Tools and Instructions: Furnish a complete set of specialized tools and maintenance instructions as needed for Owner's continued adjustment, maintenance, and removal and replacement of door hardware.

B. Continuing Service: Beginning at Substantial Completion, and running concurrent with the specified warranty period, provide continuous (6) months full maintenance including repair and replacement of worn or defective components, lubrication, cleaning, and adjusting as required for proper door opening operation. Provide parts and supplies as used in the manufacture and installation of original products.

PART 2 PRODUCTS

2.01 SCHEDULED DOOR HARDWARE

A. General: Provide door hardware for each door to comply with requirements in Door Hardware Sets and each referenced section that products are to be supplied under.
   1. Designations: Requirements for quantity, item, size, finish or color, grade, function, and other distinctive qualities of each type of door hardware are indicated in the Door Hardware Sets at the end of Part 3. Products are identified by using door hardware designations, as follows:
      a. Named Manufacturer's Products: Product designation and manufacturer are listed for each door hardware type required for the purpose of establishing requirements. Manufacturers' names are abbreviated in the Door Hardware Schedule.
   2. Products furnished, but not installed, under this Section include the following. Coordinating, purchasing, delivering, and scheduling remain requirements of this Section.
      a. Permanent cylinders, cores, and keys to be installed by Owner.

B. Substitutions: Requests for substitution and product approval for inclusive mechanical and electromechanical door hardware in compliance with the specifications must be submitted in writing and in accordance with the procedures and time frames outlined in Division 01, Substitution Procedures. Approval of requests is at the discretion of the architect, owner, and their designated consultants.

2.02 POWER TRANSFER DEVICES

A. Electrified Quick Connect Transfer Hinges: Provide electrified transfer hinges with Molex™ standardized plug connectors and sufficient number of concealed wires (up to 12) to accommodate the electrified functions specified in the Door Hardware Sets. Connectors plug directly to through-door wiring harnesses for connection to electric locking devices and power supplies. Wire nut connections are not acceptable.
   1. Acceptable Manufacturers:
      a. Hager Companies (HA) - ETW-QC (# wires) Option.
      b. McKinney Products (MK) - QC (# wires) Option.

B. Electric Door Hardware Cords: Provide electric transfer wiring harnesses with standardized plug connectors to accommodate up to twelve (12) wires. Connectors plug directly to through-door wiring harnesses for connection to electric locking devices and power supplies. Provide sufficient number of concealed wires to accommodate electric function of specified hardware. Provide a connector for through-door electronic locking devices and from hinge to junction box above the opening. Wire nut connections are not acceptable. Determine the length required for each electrified hardware component for the door type, size and construction, minimum of two per electrified opening.
   1. Acceptable Manufacturers:
      a. McKinney Products (MK) – QC-C Series.
         Provide one each of the following tools as part of the base bid contract:
         1) McKinney Products (MK) - Electrical Connecting Kit: QC-R001.
         2) McKinney Products (MK) - Connector Hand Tool: QC-R003.

2.03 DOOR OPERATING TRIM

A. Flush Bolts and Surface Bolts: ANSI/BHMA A156.3 and A156.16, Grade 1, certified automatic, self-latching, and manual flush bolts and surface bolts. Manual flush bolts to be furnished with top rod of sufficient length to allow bolt location approximately six feet from the floor. Furnish dust proof strikes for bottom bolts. Surface bolts to be minimum 8” in length and U.L. listed for labeled fire doors and U.L. listed for windstorm components where applicable. Provide related accessories (mounting brackets, strikes, coordinators, etc.) as required for appropriate installation and operation.

1. Acceptable Manufacturers:
   a. Ives (IV).
   b. Rockwood Manufacturing (RO).

B. Door Push Plates and Pulls: ANS/BHMA A156.6 certified door pushes and pulls of type and design specified below or in the Hardware Sets. Coordinate and provide proper width and height as required where conflicting hardware dictates.
   1. Push/Pull Plates: Minimum .050 inch thick, size as indicated in hardware sets, with square corners and beveled edges, secured with exposed screws unless otherwise indicated.
   2. Door Pull and Push Bar Design: Size, shape, and material as indicated in the hardware sets. Minimum clearance of 2 1/2-inches from face of door unless otherwise indicated.
   3. Offset Pull Design: Size, shape, and material as indicated in the hardware sets. Minimum clearance of 2 1/2-inches from face of door and offset of 90 degrees unless otherwise indicated.
   4. Fasteners: Provide manufacturer's designated fastener type as indicated in Hardware Sets.
      a. Acceptable Manufacturers:
         1) Rockwood Manufacturing (RO).

2.04 CYLINDERS AND KEYING

A. General: Cylinder manufacturer to have minimum (10) years experience designing secured master key systems and have on record a published security keying system policy.

B. Source Limitations: Obtain each type of keyed cylinder and keys from the same source manufacturer as locksets and exit devices, unless otherwise indicated.
   1. Acceptable Manufacturers:
      a. Per Owner/Facility Standard

C. Cylinders: Original manufacturer cylinders complying with the following:
   1. Mortise Type: Threaded cylinders with rings and straight- or clover-type cam.
   2. Rim Type: Cylinders with back plate, flat-type vertical or horizontal tailpiece, and raised trim ring.
   3. Bored-Lock Type: Cylinders with tailpieces to suit locks.
   4. Mortise and rim cylinder collars to be solid and recessed to allow the cylinder face to be flush and be free spinning with matching finishes.
   5. Keyway: Manufacturer’s Standard.Match Facility Standard. Match Facility Restricted Keyway.

D. Permanent Cores: Manufacturer's standard; finish face to match lockset; complying with the following:
   1. Removable Cores: Core insert, removable by use of a special key, and for use with only the core manufacturer's cylinder and door hardware. Provide removable core (small or large format) as specified in Hardware Sets.

E. Patented Cylinders: ANSI/BHMA A156.5, Grade 1, certified patented cylinders employing a utility patented and restricted keyway requiring the use of a patented key. Cylinders are to be protected from unauthorized manufacture and distribution by manufacturer’s United States patents. Cylinders are to be factory keyed with owner having the ability for on-site original key cutting.
   1. Acceptable Manufacturers:
      a. Per Owner/Facility Standard

F. Patented Cylinders: ANSI/BHMA A156.5, Grade 1, certified cylinders employing a utility patented and restricted keyway requiring the use of patented controlled keys. Provide bump resistant, fixed core cylinders as standard with solid recessed cylinder collars. Cylinders are to be factory keyed where permanent keying records will be established and maintained.
   1. Provide a 6 pin multi-level master key system comprised of patented controlled keys and security and high security cylinders operated by one (1) key of the highest level. Geographical exclusivity to be provided for all security and high security cylinders and UL437 certification where specified.

a. Level 1 Cylinders: Provide utility patented controlled keyway cylinders that are furnished with patented keys available only from authorized distribution.
b. Level 2 Cylinders: Provide utility patented controlled keyway and side bar locking incorporating unique angled bottom pins for geographical exclusivity. Cylinders constructed to provide protection against bumping and picking.
c. Level 3 Cylinders: Provide utility patented controlled keyway and side bar locking incorporating unique angled bottom pins for geographical exclusivity. Cylinders to be UL437 certified and constructed to provide protection against bumping, picking, and drilling.
d. Refer to hardware sets for specified levels.

2. Acceptable Manufacturer:
   a. Per Owner/Facility Standard

G. Keying System: Each type of lock and cylinders to be factory keyed. Conduct specified "Keying Conference" to define and document keying system instructions and requirements. Furnish factory cut, nickel-silver large bow permanently inscribed with a visual key control number as directed by Owner. Incorporate decisions made in keying conference, and as follows:
1. Master Key System: Cylinders are operated by a change key and a master key.
2. Grand Master Key System: Cylinders are operated by a change key, a master key, and a grand master key.
3. Great-Grand Master Key System: Cylinders are operated by a change key, a master key, a grand master key, and a great-grand master key.
4. Existing System: Master key or grand master key locks to Owner's existing system.

H. Key Quantity: Provide the following minimum number of keys:
1. Top Master Key: One (1)
2. Change Keys per Cylinder: Two (2)
3. Master Keys (per Master Key Group): Two (2)
4. Grand Master Keys (per Grand Master Key Group): Two (2)
5. Construction Keys (where required): Ten (10)
6. Construction Control Keys (where required): Two (2)
7. Permanent Control Keys (where required): Two (2)

I. Construction Keying: Provide construction master keyed cylinders or temporary keyed construction cores where specified. Provide construction master keys in quantity as required by project Contractor. Replace construction cores with permanent cores. Furnish permanent cores for installation as directed under specified "Keying Conference".

J. Key Control Cabinet: Provide a key control system including envelopes, labels, and tags with self-locking key clips, receipt forms, 3-way visible card index, temporary markers, permanent markers, and standard metal cabinet. Key control cabinet shall have expansion capacity of 150% of the number of locks required for the project.
1. Acceptable Manufacturers:
   a. Lund Equipment (LU).
   b. MMF Industries (MM).
   c. Telkee (TK).

K. Key Control Software: Provide one network version of "Key Wizard" branded key management software package that includes one year of technical support and upgrades to software at no charge. Provide factory key system formatted for importing into “Key Wizard” software.

2.05 CONVENTIONAL EXIT DEVICES

A. General Requirements: All exit devices specified herein shall meet or exceed the following criteria:

1. At doors not requiring a fire rating, provide devices complying with NFPA 101 and listed and labeled for "Panic Hardware" according to UL305. Provide proper fasteners as required by manufacturer including sex nuts and bolts at openings specified in the Hardware Sets.
2. Where exit devices are required on fire rated doors, provide devices complying with NFPA 80 and with UL labeling indicating "Fire Exit Hardware". Provide devices with the proper fasteners for installation as tested and listed by UL. Consult manufacturer's catalog and template book for specific requirements.
    a. Fire Exit Removable Mullions: Provide keyed removable mullions for use with fire exit devices complying with NFPA 80 that are listed and labeled by a testing and inspecting agency acceptable to authorities having jurisdiction, for fire and panic protection, based on testing according to UL 305 and NFPA 252. Mullions to be used only with exit devices for which they have been tested.
3. Except on fire rated doors, provide exit devices with hex key dogging device to hold the pushbar and latch in a retracted position. Provide optional keyed cylinder dogging on devices where specified in Hardware Sets.
4. Flush End Caps: Provide heavy weight impact resistant flush end caps made of architectural metal in the same finish as the devices as in the Hardware Sets. Plastic end caps will not be acceptable.
5. Lever Operating Trim: Where exit devices require lever trim, furnish manufacturer's heavy duty trim with cold forged escutcheons, beveled edges, and four threaded studs for thru-bolts.
    a. Lock Trim Design: As indicated in Hardware Sets, provide finishes and designs to match that of the specified locksets. Provided free-wheeling type trim where indicated.
    b. Where function of exit device requires a cylinder, provide an interchangeable core type keyed cylinder (Rim or Mortise) as specified in Hardware Sets.
6. Vertical Rod Exit Devices: Provide and install interior surface and concealed vertical rod exit devices as Less Bottom Rod (LBR) unless otherwise indicated.
7. Narrow Stile Applications: At doors constructed with narrow stiles, or as specified in Hardware Sets, provide devices designed for maximum 2" wide stiles.
8. Dummy Push Bar: Nonfunctioning push bar matching functional push bar.
9. Rail Sizing: Provide exit device rails factory sized for proper door width application.
10. Through Bolt Installation: For exit devices and trim as indicated in Door Hardware Sets.
11. Hurricane and Tornado Resistance Compliance: Conventional exit devices and tube steel removable mullions to be U.L. listed for windstorm components where applicable. Provide the appropriate hurricane or tornado resistant products that have been independent third party tested, certified, and labeled to meet state and local windstorm building codes applicable to project.

B. Conventional Push Rail Exit Devices (Heavy Duty): ANSI/BHMA A156.3, Grade 1 certified panic and fire exit hardware devices furnished in the functions specified in the Hardware Sets. Mounting rails to be formed from smooth stainless steel, brass or bronze architectural materials no less than 0.072" thick, with push rails a minimum of 0.062" thickness. Painted or aluminum metal rails are not acceptable. Exit device latch to be investment cast stainless steel, pullman type, with deadlock feature.
    1. Acceptable Manufacturers:
        a. Corbin Russwin (CR) – ED4000 Series.
        b. Sargent Manufacturing (SA) – AD8500 Series

2.06 ELECTROMECHANICAL CONVENTIONAL EXIT DEVICES

A. Electrified Conventional Push Rail Devices (Heavy Duty): Subject to same compliance standards and requirements as mechanical exit devices, electrified devices to be of type and design as specified below.
    1. Acceptable Manufacturers:
        a. Corbin Russwin (CR) – ED4000 Series.
        b. Sargent Manufacturing (SA) – AD8500 Series

B. Electrified Options: As indicated in hardware sets, provide electrified exit device options including: electric latch retraction (must be motorized type that fully retracts the touchpad/push bar), electric dogging, outside door trim control, exit alarm, delayed egress, latchbolt monitoring, lock/unlock status monitoring, touchbar monitoring and request-to-exit signaling. Unless otherwise indicated, provide electrified exit devices standard as fail secure.

2.07 DOOR CLOSERS

A. All door closers specified herein shall meet or exceed the following criteria:
   1. General: Door closers to be from one manufacturer, matching in design and style, with the same type door preparations and templates regardless of application or spring size. Closers to be non-handed with full sized covers including installation and adjusting information on inside of cover.
   2. Standards: Closers to comply with UL-10C and UBC 7-2 for Positive Pressure Fire Test and be U.L. listed for use of fire rated doors.
   3. Cycle Testing: Provide closers which have surpassed 10 million cycles in a test witnessed and verified by UL.
   4. Size of Units: Comply with manufacturer's written recommendations for sizing of door closers depending on size of door, exposure to weather, and anticipated frequency of use. Where closers are indicated for doors required to be accessible to the physically handicapped, provide units complying with ANSI ICC/A117.1.
   5. Closer Arms: Provide heavy duty, forged steel closer arms unless otherwise indicated in Hardware Sets.
      a. Where closers are indicated to have mechanical dead-stop, provide heavy duty arms and brackets with an integral positive stop.
      b. Where closers are indicated to have mechanical hold open, provide heavy duty units with an additional built-in mechanical holder assembly designed to hold open against normal wind and traffic conditions. Holder to be manually selectable to on-off position.
      c. Where closers are indicated to have a cushion-type stop, provide heavy duty arms and brackets with spring stop mechanism to cushion door when opened to maximum degree.
      d. Closers shall not be installed on exterior or corridor side of doors; where possible install closers on door for optimum aesthetics. Provide drop plates or other accessories as required for proper mounting.
   6. Closer Covers: Provide metal closer covers finished to match other hardware on the project.
   7. Closer Covers: Provide PVC free closer covers with a painted finish to match other hardware on the project.
   8. Closer Accessories: Provide door closer accessories including custom templates, special mounting brackets, spacers and drop plates, and through-bolt or security type fasteners as specified in the door Hardware Sets.

B. Door Closers, Surface Mounted (Heavy Duty): ANSI/BHMA A156.4, Grade 1 surface mounted, heavy duty door closers with complete spring power adjustment, sizes 1 thru 6; and fully operational adjustable according to door size, frequency of use, and opening force. Closers to be rack and pinion type, one piece cast iron or aluminum alloy body construction, with adjustable backcheck and separate non-critical valves for closing sweep and latch speed control. Provide non-handed units standard.
   1. Acceptable Manufacturers:
      a. Corbin Russwin (CR) - DC5000 Series.
      b. Norton Door Controls (NO) - 2800ST Series.
      c. Sargent Manufacturing (SA) - 422 Series.

2.08 AUTOMATIC DOOR OPERATORS (REFER TO SPECIFICATION SECTION 087113)

2.09 ARCHITECTURAL TRIM

A. Door Protective Trim
   1. General: Door protective trim units to be of type and design as specified below or in the Hardware Sets.
   2. Size: Fabricate protection plates (kick, armor, or mop) not more than 2" less than door width (LDW) on stop side of single doors and 1" LDW on stop side of pairs of doors, and not more than 1" less than door width on pull side. Coordinate and provide proper width and height as required where conflicting hardware dictates. Height to be as specified in the Hardware Sets.
   3. Metal Protection Plates: ANSI/BHMA A156.6 certified metal protection plates (kick, armor, or mop), beveled on four edges (B4E), fabricated from the following.
      a. Stainless Steel: 050-inch thick, with countersunk screw holes (CSK).
   4. Fasteners: Provide manufacturer's designated fastener type as specified in the Hardware Sets.
   5. Metal Door Edging: Door protection edging fabricated from a minimum .050-inch thick metal sheet, formed into an angle or "U" cap shapes, surface or mortised mounted onto edge of door. Provide appropriate leg overlap to account for protection plates as required. Height to be as specified in the Hardware Sets.
   6. Acceptable Manufacturers:
      a. Ives (IV).
      b. Rockwood Manufacturing (RO).

2.10 DOOR STOPS AND HOLDERS

A. General: Door stops and holders to be of type and design as specified below or in the Hardware Sets.

B. Door Stops and Bumpers: ANSI/BHMA A156.16, Grade 1 certified door stops and wall bumpers. Provide wall bumpers, either convex or concave types with anchorage as indicated, unless floor or other types of door stops are specified in Hardware Sets. Do not mount floor stops where they will impede traffic. Where floor or wall bumpers are not appropriate, provide overhead type stops and holders.
   1. Acceptable Manufacturers:
      a. Ives (IV).
      b. Rockwood Manufacturing (RO).

C. Overhead Door Stops and Holders: ANSI/BHMA A156.6, Grade 1 certified overhead stops and holders to be surface or concealed types as indicated in Hardware Sets. Track, slide, arm and jamb bracket to be constructed of extruded bronze and shock absorber spring of heavy tempered steel. Provide non-handed design with mounting brackets as required for proper operation and function.
   1. Acceptable Manufacturers:
      a. Rixson Door Controls (RF).
      b. Sargent Manufacturing (SA).

2.11 ARCHITECTURAL SEALS

A. General: Thresholds, weatherstripping, and gasket seals to be of type and design as specified below or in the Hardware Sets. Provide continuous weatherstrip gasketing on exterior doors and provide smoke, light, or sound gasketing on interior doors where indicated. At exterior applications provide non-corrosive fasteners and elsewhere where indicated.

B. Smoke Labeled Gasketing: Assemblies complying with NFPA 105 that are listed and labeled by a testing and inspecting agency acceptable to authorities having jurisdiction, for smoke control ratings indicated, based on testing according to UL 1784.
   1. Provide smoke labeled perimeter gasketing at all smoke labeled openings.

C. Fire Labeled Gasketing: Assemblies complying with NFPA 80 that are listed and labeled by a testing and inspecting agency acceptable to authorities having jurisdiction, for fire ratings indicated, based on testing according to UL-10C.
   1. Provide intumescent seals as indicated to meet UL10C Standard for Positive Pressure Fire Tests of Door Assemblies, and UBC 7-2, Fire Tests of Door Assemblies.

D. Sound-Rated Gasketing: Assemblies that are listed and labeled by a testing and inspecting agency, for sound ratings indicated, based on testing according to ASTM E 1408.

E. Replaceable Seal Strips: Provide only those units where resilient or flexible seal strips are easily replaceable and readily available from stocks maintained by manufacturer.

F. Acceptable Manufacturers:
   1. Pemko Manufacturing (PE).
   2. Reese Enterprises, Inc. (RS).

2.12 FABRICATION

A. Fasteners: Provide door hardware manufactured to comply with published templates generally prepared for machine, wood, and sheet metal screws. Provide screws according to manufacturers recognized installation standards for application intended.

2.13 FINISHES

A. Standard: Designations used in the Hardware Sets and elsewhere indicate hardware finishes complying with ANSI/BHMA A156.18, including coordination with traditional U.S. finishes indicated by certain manufacturers for their products.

B. Provide quality of finish, including thickness of plating or coating (if any), composition, hardness, and other qualities complying with manufacturer's standards, but in no case less than specified by referenced standards for the applicable units of hardware.

C. Protect mechanical finishes on exposed surfaces from damage by applying a strippable, temporary protective covering before shipping.

D. Antimicrobial Finishes: Where specified, finishes on locksets, latchsets, exit devices and push/pull trim to incorporate an FDA recognized. Silver Ion, antimicrobial coating (MicroShield™) listed for use on equipment as a suppressant to the growth and spread of a broad range of bacteria, algae, fungus, mold and mildew.

PART 3 EXECUTION

3.01 EXAMINATION

A. Examine scheduled openings, with Installer present, for compliance with requirements for installation tolerances, labeled fire door assembly construction, wall and floor construction, and other conditions affecting performance.

B. Notify architect of any discrepancies or conflicts between the door schedule, door types, drawings and scheduled hardware. Proceed only after such discrepancies or conflicts have been resolved in writing.

3.02 INSTALLATION

A. Install each item of mechanical and electromechanical hardware and access control equipment to comply with manufacturer's written instructions and according to specifications.
   1. Installers are to be trained and certified by the manufacturer on the proper installation and adjustment of fire, life safety, and security products including: hanging devices; locking devices; closing devices; and seals.

B. Mounting Heights: Mount door hardware units at heights indicated in following applicable publications, unless specifically indicated or required to comply with governing regulations:
   1. Where indicated to comply with accessibility requirements, comply with ANSI A117.1 "Accessibility Guidelines for Buildings and Facilities."

C. Power Operator products and accessories are required to be installed through current members of the manufacturer's "Power Operator Preferred Installer" program.

D. Thresholds: Set thresholds for exterior and acoustical doors in full bed of sealant complying with requirements specified in Division 7 Section "Joint Sealants."

E. Storage: Provide a secure lock up for hardware delivered to the project but not yet installed. Control the handling and installation of hardware items so that the completion of the work will not be delayed by hardware losses before and after installation.

3.03 FIELD QUALITY CONTROL

A. Field Inspection: Supplier will perform a final inspection of installed door hardware and state in report whether work complies with or deviates from requirements, including whether door hardware is properly installed, operating and adjusted.

3.04 ADJUSTING

A. Initial Adjustment: Adjust and check each operating item of door hardware and each door to ensure proper operation or function of every unit. Replace units that cannot be adjusted to operate as intended. Adjust door control devices to compensate for final operation of heating and ventilating equipment and to comply with referenced accessibility requirements.

3.05 CLEANING AND PROTECTION

A. Protect all hardware stored on construction site in a covered and dry place. Protect exposed hardware installed on doors during the construction phase. Install any and all hardware at the latest possible time frame.

B. Clean adjacent surfaces soiled by door hardware installation.

C. Clean operating items as necessary to restore proper finish. and provide final protection and maintain conditions that ensure door hardware is without damage or deterioration at time of owner occupancy.

3.06 DEMONSTRATION

A. Instruct Owner's maintenance personnel to adjust, operate, and maintain mechanical and electromechanical door hardware.

3.07 DOOR HARDWARE SCHEDULE

A. The hardware sets represent the design intent and direction of the owner and architect. They are a guideline only and should not be considered a detailed hardware schedule. Discrepancies, conflicting hardware and missing items should be brought to the attention of the architect with corrections made prior to the bidding process. Omitted items not included in a hardware set should be scheduled with the appropriate additional hardware required for proper application and functionality.

B. Manufacturer’s Abbreviations:
   1. BE - Besam
   2. RO - Rockwood
   3. SA – Sargent
   4. SU - Securitron

C. Hardware Sets:

1. The following hardware sets are to be used as a basis of design only, and should be coordinated with project requirements, including but not limited to owner's facility standards, existing conditions, door and frame types, building access control system, life safety requirements, and wall ratings.

HW Set 1.0

Door: 100A, 100F

(1)	Continuous Hinge	by Door Manufacturer		
(1)	Power Transfer	CELP-10	US32D	SA
(1)	Electric Exit Device	19 43 55 56 AD8504 (no trim)	US26D	SA
(1)	Core	per Owner Standard		
(1)	Pull Plate	102 x 70B	US26D	RO
(1)	Auto Operator	SW200i-OHC	ALUM	BE
(2)	ADA Push-button Actuator (mullion-mounted)			BE
(1)	Overhead Stop	690 (concealed)	US26D	SA
(1)	Perimeter Seals	by Door Manufacturer		
(1)	Door Bottom	by Door Manufacturer		
(1)	Threshold	by Door Manufacturer		
(1)	Card Reader (mullion)	by Security Vendor		
(1)	Door Position Switch	by Security Vendor		

NOTE: Coordinate Automatic Operator (specification section 087113) with header and field conditions.

HW Set 2.0

Door: 100B, 100C, 100D, 100E

Continuous Hinge by Door Manufacturer

(1)	Exit Device (keyed)	19 43 AD8504(no trim)	US26D	SA
(1)	Pull Plate	102 x 70B	US26D	RO
(1)	Core	per Owner Standard		
(1)	Door Closer	422-PCTB	US26D	SA
(1)	Overhead Stop	690(concealed)	US26D	SA
(1)	Perimeter Seals	by Door Manufacturer		
(1)	Door Bottom	by Door Manufacturer		
(1)	Threshold	by Door Manufacturer		
(1)	Door Position Switch	by Security Vendor		

HW Set 3.0

Door: 101A, 101F

Continuous Hinge	by Door Manufacturer		
Pull Plate	102 x 70B	US26D	RO
Push Plate	70B	US26D	RO
Auto Operator	SW200i-OHC	ALUM	BE
ADA Push-button Actuator (mullion-mounted)			BE
Overhead Stop	690 (concealed)	US26D	SA
Perimeter Seals	by Door Manufacturer		
Door Bottom	by Door Manufacturer		

NOTE: Coordinate Automatic Operator (specification section 087113) with header and field conditions.

HW Set 4.0
Door: 101B, 101C, 101D, 101E

Continuous Hinge	by Door Manufacturer		
Pull Plate	102 x 70B	US26D	RO
Push Plate	70B	US26D	RO
Door Closer	422-PCTB	US26D	SA
Overhead Stop	690 (concealed)	US26D	SA
Perimeter Seals	by Door Manufacturer		
Door Bottom	by Door Manufacturer		

END OF SECTION

THIS PAGE IS INTENTIONALLY LEFT BLANK

(FOR DUPLEX PRINTING PURPOSES)

PART 1 GENERAL

1.01 RELATED DOCUMENTS

A. Drawings and general provisions of the Contract, including General and Supplementary Conditions and Division 1 Specification Sections, apply to this Section.

1.02 SUMMARY

A. This section includes the following types of automatic door operators:
   1. Low-energy door operators for swinging doors.

B. Related Sections:
   1. Division 7 Sections for caulking to the extent not specified in this section.
   2. Division 8 Section “Aluminum-Framed Entrances and Storefronts” for entrances furnished separately in Division 8 Section.
   3. Division 8 Section “Door Hardware” for hardware to the extent not specified in this Section.
   4. Division 26 and 28 Sections for electrical connections including conduit and wiring for automatic entrance door operators and access control devices.

1.03 REFERENCES

A. References: Comply with the version year adopted by the Authority Having Jurisdiction.
   1. ANSI A117.1 - Accessible and Usable Buildings and Facilities.
   2. ICC/IBC - International Building Code.
   3. CUL – Approved for use in Canada.
   4. NFPA 70 - National Electrical Code.
   5. NFPA 80 - Fire Doors and Windows.
   6. NFPA 101 - Life Safety Code.
   7. NFPA 105 - Installation of Smoke Door Assemblies.

B. American National Standards Institute (ANSI) / Builders Hardware Manufacturers Association (BHMA).
   1. ANSI/BHMA A156.19 Standards for Power Assist and Low Energy Power Operated Doors.

C. Underwriters Laboratories (UL).
   1. UL Listed R-9469 Fire Door Operator with Automatic Closer.
   2. UL10C – Positive Pressure Fire Tests of Door Assemblies.
   3. UL 325 - Standard for Safety for Door, Drapery, Gate, Louver, and Window Operators and Systems.
   4. UL991 Listed - Tests for Safety-Related Controls Employing Solid-State Device.
   5. UL244A – Solid – State Controls for Appliances.
   6. UL1998 – Software in Programmable Components.
   7. UL1310 – Class 2 Power Units.

D. American Association of Automatic Door Manufacturers (AAADM).

E. American Society for Testing and Materials (ASTM).
   1. ASTM B221 Standard Specification for Aluminum and Aluminum Alloy Extruded Bars, Rods, Wire, Profiles and Tubes.
   2. ASTM B209 Standard Specification for Aluminum and Aluminum Alloy Sheet and Plate.

F. American Architectural Manufacturers Association (AAMA).
   1. AAMA 611 Voluntary Specification for Anodized Architectural Aluminum.

G. National Association of Architectural Metal Manufacturers (NAAMM).
   1. Metal Finishes Manual for Architectural Metal Products.

H. International Code Council (ICC).
   1. IBC: International Building Code Building Code.
   2. CBC: California Building Code.

1.04 DEFINITIONS

A. Activation Device: Device that, when actuated, sends an electrical signal to the door operator to activate the operation of the door.
   1. Knowing act: Consciously initiating the powered opening of a low energy door using acceptable methods including wall mounted switches such as push plates and controlled access devices such as keypads, card readers and key switches.
   2. Safety Device: A device that detects the presence of an object or person within a zone where contact could occur and provides a signal to stop the movement of the door.
   3. AAADM: American Association of Automatic Door Manufacturers.

1.05 PERFORMANCE REQUIREMENTS

A. General: Provide automatic door operators that have been designed and fabricated to comply with specified performance requirements, as demonstrated by testing manufacturer's corresponding standard systems.

B. Automatic door equipment accommodates medium to heavy pedestrian traffic and have the following minimum performance characteristics:
   1. Up to 700 pound (317.5 kg) weight of doors, 48 inches (1219 mm) maximum door width per operator.
   2. Operator capable of operating within temperature ranges of -31° F to 160° F (-35° C to 71° C).
   3. Opening Force requirements: Doors shall open with a manual force, not to exceed 30lbf (133N) to set the door in motion and 15 lbf to fully open the door applied at 1" (25 mm) from the latch edge of the door. The force required to prevent a stopped door from opening or closing shall not exceed 15 lbf (67 N) measured 1" (25 mm) from the latch edge of the door at any point during opening or closing.
   4. Break Away Device: Swinging automatic entrances shall require no more than 50 lbf (222 N) applied 1" (25 mm) from the latch edge of the door. When the door(s) is opened in the breakout mode, powered operated components excluding spring power shall not operate the doors.
   5. Closing Time:
      a. Doors shall be field adjustable to close from 90 degrees to 10 degrees in 3 seconds or longer as applicable per ANSI/BHMA A156.19 standards.
      b. Doors shall be field adjusted to close from 10 degrees to fully closed in not less than 1.5 seconds.

1.06 SUBMITTALS

A. Comply with Division 01 - Submittal Procedures.

B. Product Data: Manufacturer's product sheets including installation details, material descriptions, dimensions of individual components and profiles, fabrication, operational descriptions and finishes.

C. Shop Drawings: Submit manufacturer's shop drawings, including elevations, sections and details, indicating dimensions, materials, operator, motion/presence sensor control device, anchors, hardware, finish, options and accessories.
   1. Indicate required clearances, and location and size of each field connection.
   2. Indicate locations and elevations of entrances showing activation and safety devices.
   3. Wiring Diagrams: For power, signal, and activation / safety device wiring.

D. Samples: Submit manufacturer's samples of aluminum finish.

E. Manufacturers Field Reports: Submit manufacturer's field reports from AAADM certified technician of inspection and approval of doors for compliance with ANSI/BHMA A156.19 after completion of installation.

F. Operating and Maintenance Manuals: Provide manufacturers operating and maintenance manuals for each item comprising the complete door opening installation in quantity as required in Division 01, Closeout Submittals. The manual to include the name, address, and contact information of the manufacturers providing the hardware and their nearest service representatives. The final copies delivered after completion of the installation test to include spare parts list.

G. Warranties and Maintenance: Special warranties and maintenance agreements specified in this Section.

1.07 QUALITY ASSURANCE

A. Manufacturers Qualifications: Engage qualified manufacturers with a minimum 10 years of documented experience in manufacturing of doors and equipment of similar to that indicated for this Project and that have a proven record of successful in-service performance.
   1. A manufacturer with company certificate issued by AAADM.

B. Installer Qualifications: Installers, trained by the primary product manufacturers, with a minimum 5 years documented experience installing and maintenance of units similar in material, design, and extent to that indicated for this Project and whose work has resulted in construction with a record of successful in-service performance.

C. Certified Inspector Qualifications: Certified by AAADM.

D. Source Limitations for Automatic Operators: Obtain each type of door operator and sensor components specified in this Section from a single source, same manufacturer unless otherwise indicated.

E. Certifications: Operators shall be certified by the manufacturer to meet performance design criteria in accordance with the following standards.
   1. ANSI/BHMA A156.19 American National Standard for Power Assist and Low Energy Operated Doors.
   2. NFPA 101 - Life Safety Code.
   3. UL 325 - Standard for Door, Drapery, Gate, Louver, and Window Operators and Systems.
   4. UL Listed R-9469 Fire Door Operator with Automatic Closer.

F. Emergency Exit door requirements: Comply with requirements of authorities having jurisdiction for automatic entrance doors serving as a required means of egress.

1.08 COORDINATION

A. Coordinate door operators with doors, frames and related work to ensure proper size, thickness, hand, function and finish. Coordinate hardware for automatic entrances with hardware required for rest of the project.

B. Electrical System Roughing-in: Coordinate layout and installation of power door operators with connections to power supplies and access control system as applicable.

1.09 WARRANTY

A. General Warranty: Reference Division 01, General Requirements. Special warranties specified in this Article shall not deprive Owner of other rights Owner may have under other provisions of the Contract Documents and shall be in addition to, and run concurrent with, other warranties made by Contractor under requirements of the Contract Documents.

B. Automatic Door Operators shall be free of defects in material and workmanship for a period of one (1) year from the date of substantial completion.

C. During the warranty period a factory-trained technician shall perform service and affect repairs. An inspection shall be performed after each adjustment or repair.

D. During the warranty period all warranty work, including but not limited to emergency service, shall be performed during normal business hours.

E. Manufacturer shall have in place a dispatch procedure that shall be available 24 hours a Day, 7 Days a week for emergency call back service.

PART 2 PRODUCTS

2.01 MANUFACTURER

A. Manufacturer: ASSA ABLOY Entrance Systems, 1900 Airport Road, Monroe, NC 28110.

B. Substitutions: Requests for substitution and product approval in compliance with the specifications must be submitted in writing and in accordance with the procedures outlined in Division 1, Section, "Substitution Procedures". Approval of requests is at the discretion of the architect, owner, and their designated consultants.

2.02 AUTOMATIC SWING DOOR OPERATOR

A. Model: Besam SW200i low energy automatic door operator (Basis of Design):
   1. Configuration: Operator to control single swinging doors as indicated on the drawings and specified below:
   2. Automatic Operator: Electro-mechanical, non-handed operator, powered by 24 volt, 1/4 hp motor. Operator shall be adjustable to compensate for different manual push forces as required.
      a. Automatic operator shall be capable of operating and controlling up to a 700 pound (317.5 kg) door, 48 inches (1219 mm) in width.
      b. Surface Mounted Operator:
         1) Surface Mounted Housing: Continuous for full width of door.
         2) Connecting Hardware: Surface mounted operators to have a steel arm from the operator, mounted to the top face of the swing door.
         3) UL Listed R-9469 Fire Door Operator with Automatic Closer (surface mounted operator).
      c. Operator can be field upgraded to a full energy operator by the addition of the required safety sensors, and guard rails to comply with ANSI/BHMA A156.10 American National Standard for Power Operated Pedestrian Doors.
      d. Electrical Characteristics: Maximum power consumption is 300 watts (2.5 amps at 120 VAC), 50/60hz, built-in thermal overload protection.
      e. Battery Convenience Mode: Operator to maintain continuous operation by battery power during power failure. Battery is continuously monitored and provides a warning signal if the battery is not working properly.
   3. Door Operation:
      a. Opening Cycle The adjustable speed operator mechanically powers the drive shaft and the torque control maintains constant speed throughout the opening cycle regardless of stack pressures or wind speed. Operator shall allow manual door operation with operational forces as indicated to fully open the door applied at 1" (25 mm) from the latch edge of the door.
         1) Manual push force shall be adjustable from 5 lbf to 15 lbf maximum.
      b. Hold Open: The operator shall stop and hold the door open at the selected door opening angle for an adjustable period of time (1.5 seconds to 30 seconds).
      c. Closing Cycle: Spring close with speed controlled power assist.
         1) Upon loss of power, dynamic braking will control the door insuring controlled closing.

2) Selectable Torque Control: Automatically adjusts torque without changing the closing speed of the operator.
   (a) When the torque control is activated, the closing speed shall remain constant regardless of stack pressures or wind speed.
   (b) Torque Cancellation: The torque control is deactivated whenever there is a signal received from door mounted sensors.
   (c) The torque control is disabled during manual use of the door.

d. Wind Force Dampening: The operator electromechanically counteracts wind forces, slowing down the door movement to safely open or close the door.

e. Stack Pressure Compensation: Operator shall counteract positive stack pressures, negative stack pressures, and sudden changes of stack pressures. The operator never allows the door to open or close faster than the speed control settings, regardless of pressures.

f. Obstruction Control: The operator will stop and reverse the door movement.

g. Electric Lock Management:
   1) Internal module for electrified locking integration.
   2) Electric Lock Output: Selectable 12 VDC, maximum 1200 mA / 24 VDC, maximum 600 mA.
   3) Lock monitoring prevents operator(s) from opening door(s) until release of electrified lock.
   4) Operator pulls door closed before opening, automatically unjamming electric latch hardware.
   5) Sequenced operation between operators for pairs of doors allowing lock release and astragal coordination.

h. Lock Retry Circuit: If attempt to fully close the door is unsuccessful, the operator will automatically reverse open 10 degrees and reclose in an attempt to successfully close the door.

i. Selectable Alarm Reset: The operator can be field set so that after receiving an alarm signal, the operator will not accept any activation impulses and will operate only as a manual door closer until manually reset.

j. Electronic Controls: Solid state integrated circuit controls the operation and switching of the swing power operator. The electronic control provides low voltage power supply for all means of actuation. The controls include time delay (1 to 30 seconds) for normal cycle.

k. Control Switch: Automatic door operators shall be equipped with the following type of multi-position function switch:
   1) [3 position rocker switch mounted on end cap (On-Auto-Hold).]

2.03 ACTIVATION AND SAFETY DEVICES

A. General: Provide activation and safety devices in accordance with ANSI/BHMA standards, for condition of exposure and for long-term, maintenance-free operation under normal traffic load for type of occupancy indicated. Coordinate activation and safety devices with door operation and door operator mechanisms.

B. Knowing Act Activation Device:
   1. Push Plate: Jamb mounted, hard wired, 1-1/2 inch x 4-3/4 inch, stainless steel push plate switches engraved with "Push to Open" with a blue handicap logo.

C. Manual Operation:
   1. Operator shall allow manual door operation (without power assist) with operational forces adjustable from 5 lbf to 15 lbf maximum.

2.04 ALUMINUM FINISHES

A. Comply with NAAMM's "Metal Finishes Manual for Architectural and Metal Products" for recommendations for applying and designating finishes.

B. Automatic Operator Enclosure:
   1. Painted Finish:
      a. Kynar finish,3 coat, to match storefront assembly.

PART 3 EXECUTION

3.01 EXAMINATION

A. Examine doors and frames, with Installer present, for compliance with requirements for installation tolerances, wall and floor construction, and other conditions affecting performance.

B. Examine roughing-in for electrical source power to verify actual locations of wiring connections.

C. Proceed only after such discrepancies or conflicts have been resolved.

3.02 INSTALLATION

A. Do not install damaged components. Fit joints to produce hairline joints free of burrs and distortion. Rigidly secure non-movement joints.

B. Operators: Install automatic operators plumb and true in alignment with established lines and grades without warp or rack of framing members and doors. Anchor securely in place.
   1. Install surface mounted hardware using concealed fasteners to greatest extent possible.
   2. Set headers, carrier assemblies, tracks, operating brackets and guides level and true to location with anchorage for permanent support.

C. Door Operators: Connect door operators to electrical power distribution system [including smoke evacuation system and/or fire detection system] as specified in Division 26 Sections.

D. Sealants: Comply with requirements specified in division 7 Section “Joint Sealants” to seal between the operator housing and the adjacent wall surface.

E. Signage: Apply signage on both sides of each door and sidelite as required by ANSI/BHMA A156.19 and manufacturers installation instructions.

3.03 FIELD QUALITY CONTROL

A. Manufacturers Field Services:
   1. Manufacturer’s representative shall provide technical assistance and guidance for installation of doors.
   2. Before placing doors into operation, AAADM certified technician shall inspect and approve doors for compliance with ANSI/BHMA A156.19. Certified technician shall be approved by manufacturer.

3.04 ADJUSTING

A. Adjust door operators, controls and hardware for smooth and safe operation and for weather tight closure. Adjust doors in compliance with ANSI/BHMA A156.19.

3.05 CLEANING AND PROTECTION

A. Clean adjacent surfaces soiled by automatic operator installation.

B. Clean metal surfaces promptly after installation. Remove excess sealants, compounds, dirt and other substances. Repair damages finish to match original finish.

3.06 DEMONSTRATION

A. Engage a factory-authorized representative to train Owner's maintenance personnel to adjust, operate, and maintain safe operation of the door.

END OF SECTION

THIS PAGE IS INTENTIONALLY LEFT BLANK

(FOR DUPLEX PRINTING PURPOSES)

PART 2 PRODUCTS

1.01 PERFORMANCE REQUIREMENTS - EXTERIOR GLAZING ASSEMBLIES

A. Provide type and thickness of exterior glazing assemblies to support assembly dead loads, and to withstand live loads caused by positive and negative wind pressure acting normal to plane of glass.
   1. Comply with ASTM E1300 for design load resistance of glass type, thickness, dimensions, and maximum lateral deflection of supported glass.
   2. Provide glass edge support system sufficiently stiff to limit the lateral deflection of supported glass edges to less than 1/175 of their lengths under specified design load.
   3. Glass thicknesses listed are minimum.

B. Vapor Retarder and Air Barrier Seals: Provide completed assemblies that maintain continuity of building enclosure vapor retarder and air barrier.
   1. In conjunction with vapor retarder and joint sealer materials described in other sections.

C. Thermal and Optical Performance: Provide glass products with performance properties as indicated. Performance properties are in accordance with manufacturer's published data as determined with the following procedures and/or test methods:
   1. Center of Glass U-Value: Comply with NFRC 100 using Lawrence Berkeley National Laboratory (LBNL) WINDOW 6.3 computer program.
   2. Center of Glass Solar Heat Gain Coefficient (SHGC): Comply with NFRC 200 using Lawrence Berkeley National Laboratory (LBNL) WINDOW 6.3 computer program.
   3. Solar Optical Properties: Comply with NFRC 300 test method.

1.02 GLASS MATERIALS

A. Float Glass: Provide float glass based glazing unless noted otherwise.
   1. Annealed Type: ASTM C1036, Type I - Transparent Flat, Class 1 - Clear, Quality-Q3.
   2. Heat-Strengthened and Fully Tempered Types: ASTM C1048, Kind HS and FT.
   3. Tinted Type: ASTM C1036, Class 2 - Tinted, Quality-Q3, color and performance characteristics as indicated.
   4. Thicknesses: As indicated; provide greater thickness as required for exterior glazing wind load design.

1.03 INSULATING GLASS UNITS

A. Insulating Glass Units: Types as indicated.
   1. Durability: Certified by an independent testing agency to comply with ASTM E2190.
   2. Coated Glass: Comply with requirements of ASTM C1376 for pyrolytic (hard-coat) or magnetic sputter vapor deposition (soft-coat) type coatings on flat glass; coated vision glass, Kind CV; coated overhead glass, Kind CO; or coated spandrel glass, Kind CS.
   3. Spacer Color: Black.
   4. Edge Seal:
   5. Color: Black.
   6. Purge interpane space with dry air, hermetically sealed.

END OF SECTION

THIS PAGE IS INTENTIONALLY LEFT BLANK

(FOR DUPLEX PRINTING PURPOSES)

PART 1 - GENERAL

1.1 WORK INCLUDED

A. Selective removal and disposal of existing HVAC equipment, ductwork, piping and controls as shown or otherwise indicated on the drawings.

B. Retain portions of the HVAC system for reuse as shown or otherwise indicated on the drawings.

C. Coordinate removals with existing conditions, new work, work from other divisions and the owner.

D. The Contractor shall be responsible for removal, and unless otherwise indicated, the disposal of Mercury prior to demolition or general renovation, from all areas where renovation or demolition operations will disturb the material. Typically Mercury is found in wall-mounted thermostats, thermometers of wall mounted thermostats, and in mercoid switches, manometers, etc. for various HVAC equipment and devices.

E. The Contractor shall be responsible for coordinating the activities of all trades to prevent the above mentioned materials from being disposed of as general waste. All costs associated with separating the above mentioned hazardous materials, including fines for illegal transport or disposal, are the responsibility of the Contractor.

F. Draining of liquid charged systems including hydronic hot/chilled water systems and removal of oils and heat transfer fluids/liquids that are potentially hazardous from site.

G. Refrigerant recovery and removal from site as part of all refrigeration equipment disposals. (All equipment and devices containing refrigerants).

1.2 PROJECT CONDITIONS

A. Heating, cooling & ventilation shall be maintained in all occupied areas of building during construction.

B. Contractor shall coordinate any and all disruption of HVAC service with the owner in writing 2 weeks prior to dismantling, disconnecting or shutdown of any portion of the existing HVAC system.

C. Contractor shall maintain operation of the heating system throughout the entire heating season - October 1 through April 30. Do not remove existing heating system if new system will not be operational at beginning of heating season.

1.3 QUALITY ASSURANCES

A. Only the best of workmanship in accordance with present standards and generally accepted construction practices will be acceptable. Any work which the workmanship is judged by the Engineer to be below the present standards or generally accepted construction practices shall be replaced with properly done work at the Contractor's expense.

1.4 SITE CONDITIONS

A. The Drawings shall be taken in a sense as diagrammatic. Locations of mechanical and electrical equipment are not intended to show every offset and fitting, nor every obstruction difficulty that may be encountered.

B. It is the responsibility of the Contractor to inspect all work areas for mercury sources, and to notify all workmen of the importance of proper handling of materials containing mercury.

C. It is the responsibility of the Contractor to inspect and identify any and all liquids requiring drainage and to understand where and how liquids may be drained.

1.5 PROJECT CONTROL

A. The Contractor shall ensure no debris from demolition or construction remains at the close of each workday and that work areas adjacent to the work area are maintained in a safe and useable condition.

B. The Contractor shall ensure that no hazardous materials are stored on site. All drums and containers used as required by these specifications shall be removed from site at the close of each workday and areas adjacent to the work area are maintained in a safe and useable condition.

1.6 SEQUENCING AND SCHEDULING

A. All piping to be completely drained prior to commencing demolition.

B. All power to equipment being removed shall be disconnected by electrical contractor prior to commencing demolition.

C. Schedule and coordinate demolition with new construction to minimize frequency and duration of work in occupied areas.

D. Schedule and coordinate removal of hazardous materials and refrigerants to ensure demolition work is executed smoothly without frequent interruptions and to minimize frequency and duration of work in occupied areas.

E. Coordinate demolition work with the owner and building occupants to minimize disruption to building occupants.

PART 2 - PRODUCTS

2.1 MATERIALS

A. Provide all necessary materials and equipment, labor and training to perform the work of this section.

2.2 WASTE CONTAINERS

A. Waste containers shall meet EPA and local standards.

2.3 EQUIPMENT

A. Provide all tools and equipment necessary to perform the work of this section.

PART 3 - EXECUTION

3.1 EXAMINATION

A. Verify field conditions prior to commencing work. Report discrepancies to Engineer before disturbing existing installation.

B. Beginning of demolition means installer accepts existing conditions.

C. Premature or excessive demolition or failure to retain components of the existing systems shall result in the Contractor providing replacement at no additional cost to Owner.

D. Failure to complete new HVAC system in time for onset of heating season means Contractor shall reinstall existing system in part or totally, as required, to maintain comfort level in the building. The Contractor shall perform demolition in a manner which preserves to the greatest possible extent the facility to re-establish the heating system, until the operation of the new system is a certainty for the subsequent heating season.

3.2 MERCURY

A. Mercury may be found in wall mounted thermostats, thermometers of wall mounted thermostats or in mercoid switches, manometers, etc. for HVAC equipment. Inspect all work areas for the presence of mercury sources. Remove (intact) all equipment that contains mercury without exposing the mercury to atmosphere.

B. Place all mercury containing materials in EPA approved drums with locking tops for recycling or disposal. Pad the drums to prevent the spillage of mercury. Provide drums, EPA labels and delivery services to an EPA approved recycling facility or landfill for all steel drums that contain mercury.

C. If mercury is spilled from its enclosure onto furnishings, floors or any open area of the building, the Contractor shall hire a professional toxic spill company to come and properly remove the mercury. All costs related to a mercury spill are the responsibility of the Contractor.

3.3 DRAINING OF HYDRONIC SYSTEMS

A. Drain hydronic systems to sanitary only after inspecting drain water for undue amounts of sludge, oil or other contaminants that could be considered hazardous or toxic.

B. Hydronic systems may not be drained to storm sewer systems, storm drains, ponds, streams or to grade.

C. Any potentially hazardous liquids such as oil or chemicals either found inside equipment or distribution systems shall be drained into EPA approved drums with locking tops for recycling or disposal. Cover the drums to prevent spillage. Provide drums, EPA labels and delivery services to an EPA approved recycling facility or landfill.

3.4 REFRIGERANT REMOVAL/RECOVERY

A. All equipment that contains refrigerant shall be disposed of in accordance with federal, state and local requirements. The refrigerant shall be removed from the system prior to its disposal of the equipment.

B. The refrigerant shall be recovered using approved recovery methods and refrigerant shall be stored in approved recovery cylinders and removed from site. Refrigeration circuit shall be evacuated to 2mm Hg.

C. Any open or broken refrigerant connection shall be pinched or plugged in such fashion that oil cannot be released.

D. Refrigerant & equipment shall be disposed of property and in compliance with EPA guidelines.

E. Recovery of refrigerant includes residual refrigerant of used refrigerant cylinders.

F. Free venting of any refrigerant, CFC or HCFC from equipment and or cylinders is prohibited.

G. It is the responsibility of the Contractor and subcontractors to follow these specifications and obey the current laws set forth in the Federal Clean Air Act.

3.5 PREPARATION

A. Drain piping as described above.

B. Disconnect electrical power as described above.

3.6 REMOVAL

A. Remove and dispose of existing mechanical materials and equipment as shown in Drawings subject to the limitations described elsewhere in the Contract Documents.

B. Coordinate demolition of existing equipment with all other subcontractors to avoid any conflicts which may affect safety, cost to the owner, or schedule.

3.7 CLEANING AND REPAIR

A. Clean and repair existing materials and equipment which remain or are to be reused and are being addressed by the modifications indicated on the Contract Documents.

END OF SECTION 230510

PART 1 - GENERAL

1.1 RELATED DOCUMENTS

A. Drawings and general provisions of the Contract, including General and Supplementary Conditions and Division 01 Specification Sections, apply to this Section.

1.2 SUMMARY

A. Section Includes:
   1. Flexible-hose packless expansion joints.
   2. Metal-bellows packless expansion joints.
   3. Rubber packless expansion joints.
   4. Grooved-joint expansion joints.
   5. Pipe loops and swing connections.
   6. Alignment guides and anchors.

1.3 PERFORMANCE REQUIREMENTS

A. Compatibility: Products shall be suitable for piping service fluids, materials, working pressures, and temperatures.

B. Capability: Products to absorb 200 percent of maximum axial movement between anchors.

1.4 SUBMITTALS

A. Product Data: For each type of product indicated.

B. Delegated drawing showing locations of expansion fittings.

C. Delegated Submittal: For each anchor and alignment guide indicated to comply with performance requirements and design criteria, including analysis data signed and sealed by the qualified professional engineer responsible for their preparation.

   1. Design Calculations: Calculate requirements for thermal expansion of piping systems and for selecting and designing expansion joints, loops, and swing connections.
   2. Anchor Details: Detail fabrication of each anchor indicated. Show dimensions and methods of assembly and attachment to building structure.
   3. Alignment Guide Details: Detail field assembly and attachment to building structure.
   4. Schedule: Indicate type, manufacturer's number, size, material, pressure rating, end connections, and location for each expansion joint.

1.5 QUALITY ASSURANCE

A. Welding Qualifications: Qualify procedures and personnel according to the following:

1. AWS D1.1/D1.1M, "Structural Welding Code - Steel."
2. ASME Boiler and Pressure Vessel Code: Section IX.

PART 2 - PRODUCTS

2.1 PACKLESS EXPANSION JOINTS

A. Flexible-Hose Packless Expansion Joints:
1. Basis-of-Design Product: Subject to compliance with requirements, provide [product indicated on Drawings] or comparable product by one of the following:

a. Flex-Hose Co., Inc.
b. Flexicraft Industries.
c. Mason Industries, Inc.
d. Metraflex Company (The).
e. Unisource Manufacturing, Inc.

2. Description: Manufactured assembly with inlet and outlet elbow fittings and two flexible-metal-hose legs joined by long-radius, 180-degree return bend or center section of flexible hose.
3. Flexible Hose: Corrugated-metal inner hoses and braided outer sheaths.
4. Expansion Joints for Copper Tubing NPS 2 and Smaller: Copper-alloy fittings with solder-joint or brazed end connections.

a. Bronze hoses and double-braid bronze sheaths with 700 psig at 70 deg F and 500 psig at 450 deg F ratings.

5. Expansion Joints for Copper Tubing NPS 2-1/2 to NPS 4: Copper-alloy fittings with threaded or brazed end connections.

a. Stainless-steel hoses and double-braid, stainless-steel sheaths with 420 psig at 70 deg F and 315 psig at 450 deg F ratings.

6. Expansion Joints for Steel Piping NPS 2 and Smaller: Carbon-steel fittings with threaded end connections.
a. Stainless-steel hoses and double-braid, stainless-steel sheaths with 700 psig at 70 deg F and 515 psig at 600 deg F ratings.

7. Expansion Joints for Steel Piping NPS 2-1/2 to NPS 6: Carbon-steel fittings with flanged end connections.
    a. Stainless-steel hoses and double-braid, stainless-steel sheaths with 275 psig at 70 deg F and 200 psig at 600 deg F ratings.

B. Metal-Bellows Packless Expansion Joints:
1. Basis-of-Design Product: Subject to compliance with requirements, provide product indicated on drawings or comparable product by one of the following:

    a. Flex-Hose Co., Inc.
    b. Flexicraft Industries.
    c. Mason Industries, Inc.
    d. Metraflex Company (The).
    e. Unisource Manufacturing, Inc.

2. Standards: ASTM F 1120 and EJMA's "Standards of the Expansion Joint Manufacturers Association, Inc."
3. Type: Circular, corrugated bellows with external tie rods.
4. Minimum Pressure Rating: 175 psig unless otherwise indicated.
5. Configuration: Single joint, single joint with base, and double joint with base class(es) unless otherwise indicated.
6. Expansion Joints for Copper Tubing: Multi-ply phosphor-bronze bellows, copper pipe ends, and brass shrouds.

    a. End Connections for Copper Tubing NPS 2 and Smaller: Solder joint or threaded.
    b. End Connections for Copper Tubing NPS 2-1/2 to NPS 4: Solder joint, brazed, or threaded.
    c. End Connections for Copper Tubing NPS 5 and Larger: Flanged.

C. Rubber Packless Expansion Joints:
1. Basis-of-Design Product: Subject to compliance with requirements, provide product indicated on Drawings or comparable product by one of the following:

    a. Amber/Booth Company, Inc.
    b. Flex-Hose Co., Inc.
    c. Flex-Weld, Inc.
    d. Flexicraft Industries.
    e. Garlock Sealing Technologies.
    f. General Rubber Corporation.
    g. Mason Industries, Inc; Mercer Rubber Co.
    h. Metraflex Company (The).
    i. Proco Products, Inc.
    j. Red Valve Company, Inc.
    k. Tozen Corporation.
    l. Unaflex.

m. Unisource Manufacturing, Inc.

2. Standards: ASTM F 1123 and FSA's "Technical Handbook: Non-Metallic Expansion Joints and Flexible Pipe Connectors."
3. Material: Fabric-reinforced rubber complying with FSA-NMEJ-703.
4. Arch Type: Single arches with external control rods.
5. Spherical Type: Single spheres with external control rods.
6. Minimum Pressure Rating for NPS 1-1/2 to NPS 4: 150 psig at 220 deg F.
7. Material for Water: EPDM.
8. End Connections: Full-faced, integral steel flanges with steel retaining rings.

2.2 GROOVED-JOINT EXPANSION JOINTS

A. Basis-of-Design Product: Subject to compliance with requirements, provide product indicated on Drawings or comparable product by one of the following:

1. Anvil International, Inc.
2. Shurjoint Piping Products.
3. Victaulic Company. Indicate on Drawings the number of couplings or amount of expansion required.

B. Description: Factory-assembled expansion joint made of several grooved-end pipe nipples, couplings, and grooved joints.

C. Standard: AWWA C606, for grooved joints.

D. Nipples: Galvanized, ASTM A 53/A 53M, Schedule 40, Type E or S, steel pipe with grooved ends.

E. Couplings: Five, flexible type for steel-pipe dimensions. Include ferrous housing sections, EPDM gasket suitable for cold and hot water, and bolts and nuts.

2.3 ALIGNMENT GUIDES AND ANCHORS

A. Alignment Guides:
1. Basis-of-Design Product: Subject to compliance with requirements, provide product indicated on Drawings or comparable product by one of the following:

a. Adsco Manufacturing LLC.
b. Advanced Thermal Systems, Inc.
c. Flex-Hose Co., Inc.
d. Flex-Weld, Inc.
e. Flexicraft Industries.
f. Hyspan Precision Products, Inc.

g. Metraflex Company (The).
h. Senior Flexonics Pathway.
i. U.S. Bellows, Inc.
j. Unisource Manufacturing, Inc.

2. Description: Steel, factory-fabricated alignment guide, with bolted two-section outer cylinder and base for attaching to structure; with two-section guiding spider for bolting to pipe.

B. Anchor Materials:

1. Steel Shapes and Plates: ASTM A 36/A 36M.
2. Bolts and Nuts: ASME B18.10 or ASTM A 183, steel hex head.
3. Washers: ASTM F 844, steel, plain, flat washers.
4. Mechanical Fasteners: Insert-wedge-type stud with expansion plug anchor for use in hardened portland cement concrete, with tension and shear capacities appropriate for application.

a. Stud: Threaded, zinc-coated carbon steel.
b. Expansion Plug: Zinc-coated steel.
c. Washer and Nut: Zinc-coated steel.

5. Chemical Fasteners: Insert-type-stud, bonding-system anchor for use with hardened portland cement concrete, with tension and shear capacities appropriate for application.

a. Bonding Material: ASTM C 881/C 881M, Type IV, Grade 3, two-component epoxy resin suitable for surface temperature of hardened concrete where fastener is to be installed.
b. Stud: ASTM A 307, zinc-coated carbon steel with continuous thread on stud unless otherwise indicated.
c. Washer and Nut: Zinc-coated steel.

PART 3 - EXECUTION

3.1 EXPANSION-JOINT INSTALLATION

A. Install expansion joints of sizes matching sizes of piping in which they are installed.

B. Install metal-bellows expansion joints according to EJMA's "Standards of the Expansion Joint Manufacturers Association, Inc."

C. Install rubber packless expansion joints according to FSA-NMEJ-702.

D. Install grooved-joint expansion joints to grooved-end steel piping

3.2 PIPE LOOP AND SWING CONNECTION INSTALLATION

A. Connect risers and branch connections to mains with at least five pipe fittings including tee in main.

B. Connect risers and branch connections to terminal units with at least four pipe fittings including tee in riser.

C. Connect mains and branch connections to terminal units with at least four pipe fittings including tee in main.

3.3 ALIGNMENT-GUIDE AND ANCHOR INSTALLATION

A. Install alignment guides to guide expansion and to avoid end-loading and torsional stress.

B. Install one guide(s) on each side of pipe expansion fittings and loops. Install guides nearest to expansion joint not more than four pipe diameters from expansion joint.

C. Attach guides to pipe and secure guides to building structure.

D. Install anchors at locations to prevent stresses from exceeding those permitted by ASME B31.9 and to prevent transfer of loading and stresses to connected equipment.

E. Anchor Attachments:

1. Anchor Attachment to Black-Steel Pipe: Attach by welding. Comply with ASME B31.9 and ASME Boiler and Pressure Vessel Code: Section IX, "Welding and Brazing Qualifications."
2. Anchor Attachment to Galvanized-Steel Pipe: attach with pipe hangers. Use MSS SP-69, Type 42, riser clamp welded to anchor.
3. Anchor Attachment to Copper Tubing: Attach with pipe hangers. Use MSS SP-69, Type 24, U-bolts bolted to anchor.

F. Fabricate and install steel anchors by welding steel shapes, plates, and bars. Comply with ASME B31.9 and AWS D1.1/D1.1M.

1. Anchor Attachment to Steel Structural Members: Attach by welding.
2. Anchor Attachment to Concrete Structural Members: Attach by fasteners. Follow fastener manufacturer's written instructions.

G. Use grout to form flat bearing surfaces for guides and anchors attached to concrete.

END OF SECTION 230516

PART 1 - GENERAL

1.1 RELATED DOCUMENTS

A. Drawings and general provisions of the Contract, including General and Supplementary Conditions and Division 01 Specification Sections, apply to this Section.

1.2 SUMMARY

A. Section Includes:

1. Sleeves.
2. Sleeve-seal systems.
3. Sleeve-seal fittings.
4. Grout.

1.3 SUBMITTALS

A. Product Data: For each type of product indicated.

PART 2 - PRODUCTS

2.1 SLEEVES

A. Cast-Iron Wall Pipes: Cast or fabricated of cast or ductile iron and equivalent to ductile-iron pressure pipe, with plain ends and integral waterstop unless otherwise indicated.

B. Galvanized-Steel Wall Pipes: ASTM A 53/A 53M, Schedule 40, with plain ends and welded steel collar; hot-dip galvanized.

C. Galvanized-Steel-Pipe Sleeves: ASTM A 53/A 53M, Type E, Grade B, Schedule 40, hot-dip galvanized with plain ends.

D. PVC-Pipe Sleeves: ASTM D 1785, Schedule 40.

E. Galvanized-Steel-Sheet Sleeves: 0.0239-inch minimum thickness; round tube closed with welded longitudinal joint.

F. Molded-PE or -PP Sleeves: Removable, tapered-cup shaped, and smooth outer surface with nailing flange for attaching to wooden forms.

G. Molded-PVC Sleeves: With nailing flange for attaching to wooden forms.

2.2 SLEEVE-SEAL SYSTEMS

A. Basis-of-Design Product: Subject to compliance with requirements, provide product indicated on Drawings or comparable product by one of the following:

1. Advance Products & Systems, Inc.
2. CALPICO, Inc.
3. Metraflex Company (The).
4. Pipeline Seal and Insulator, Inc.
5. Proco Products, Inc.

B. Description: Modular sealing-element unit, designed for field assembly, for filling annular space between piping and sleeve.

1. Sealing Elements: EPDM-rubber interlocking links shaped to fit surface of pipe. Include type and number required for pipe material and size of pipe.
2. Pressure Plates: Carbon steel.
3. Connecting Bolts and Nuts: Carbon steel, with corrosion-resistant coating, of length required to secure pressure plates to sealing elements.

2.3 SLEEVE-SEAL FITTINGS

A. Basis-of-Design Product: Subject to compliance with requirements, provide product indicated on Drawings or comparable product by one of the following:

1. Presealed Systems.

B. Description: Manufactured plastic, sleeve-type, waterstop assembly made for imbedding in concrete slab or wall. Unit has plastic or rubber waterstop collar with center opening to match piping OD.

2.4 GROUT

A. Standard: ASTM C 1107/C 1107M, Grade B, post-hardening and volume-adjusting, dry, hydraulic-cement grout.

B. Characteristics: Nonshrink; recommended for interior and exterior applications.

C. Design Mix: 5000-psi , 28-day compressive strength.

D. Packaging: Premixed and factory packaged.

PART 3 - EXECUTION

3.1 SLEEVE INSTALLATION

A. Install sleeves for piping passing through penetrations in floors, partitions, roofs, and walls.

B. For sleeves that will have sleeve-seal system installed, select sleeves of size large enough to provide 1-inch annular clear space between piping and concrete slabs and walls.

1. Sleeves are not required for core-drilled holes.

C. Install sleeves in concrete floors, concrete roof slabs, and concrete walls as new slabs and walls are constructed.

1. Permanent sleeves are not required for holes in slabs formed by molded-PE or -PP sleeves.
2. Cut sleeves to length for mounting flush with both surfaces.

a. Exception: Extend sleeves installed in floors of mechanical equipment areas or other wet areas 2 inches above finished floor level.

3. Using grout, seal the space outside of sleeves in slabs and walls without sleeve-seal system.

D. Install sleeves for pipes passing through interior partitions.

1. Cut sleeves to length for mounting flush with both surfaces.
2. Install sleeves that are large enough to provide 1/4-inch annular clear space between sleeve and pipe or pipe insulation.
3. Seal annular space between sleeve and piping or piping insulation; use joint sealants appropriate for size, depth, and location of joint. Comply with requirements for sealants specified in Section 079200 "Joint Sealants."

E. Fire-Barrier Penetrations: Maintain indicated fire rating of walls, partitions, ceilings, and floors at pipe penetrations. Seal pipe penetrations with firestop materials. Comply with requirements for firestopping specified in Section 078413 "Penetration Firestopping."

3.2 SLEEVE-SEAL-SYSTEM INSTALLATION

A. Install sleeve-seal systems in sleeves in exterior concrete walls and slabs-on-grade at service piping entries into building.

B. Select type, size, and number of sealing elements required for piping material and size and for sleeve ID or hole size. Position piping in center of sleeve. Center piping in penetration, assemble sleeve-seal system components, and install in annular space between piping and sleeve. Tighten bolts against pressure plates that cause sealing elements to expand and make a watertight seal.

3.3 SLEEVE-SEAL-FITTING INSTALLATION

A. Install sleeve-seal fittings in new walls and slabs as they are constructed.

B. Assemble fitting components of length to be flush with both surfaces of concrete slabs and walls. Position waterstop flange to be centered in concrete slab or wall.

C. Secure nailing flanges to concrete forms.

D. Using grout, seal the space around outside of sleeve-seal fittings.

3.4 SLEEVE AND SLEEVE-SEAL SCHEDULE

A. Use sleeves and sleeve seals for the following piping-penetration applications:

1. Exterior Concrete Walls above Grade:

a. Piping Smaller Than NPS 6: Galvanized-steel-pipe sleeves, HDPE sleeves, or Sleeve-seal fittings.
b. Piping NPS 6 and Larger: Galvanized-steel-pipe or HDPE sleeves.

2. Exterior Concrete Walls below Grade:

a. Piping Smaller Than NPS 6: Galvanized-steel-pipe sleeves or HDPE sleeves with sleeve-seal system.

1) Select sleeve size to allow for 1-inch annular clear space between piping and sleeve for installing sleeve-seal system.

b. Piping NPS 6 and Larger: Galvanized-steel-pipe sleeves or HDPE sleeves with sleeve-seal system.

1) Select sleeve size to allow for 1-inch annular clear space between piping and sleeve for installing sleeve-seal system.

3. Concrete Slabs-on-Grade:

a. Piping Smaller Than NPS 6: Galvanized-steel-pipe sleeves or HDPE sleeves with sleeve-seal system.

1) Select sleeve size to allow for 1-inch annular clear space between piping and sleeve for installing sleeve-seal system.

b. Piping NPS 6 and Larger: Galvanized-steel-pipe sleeves or HDPE sleeves with sleeve-seal system.

1) Select sleeve size to allow for 1-inch annular clear space between piping and sleeve for installing sleeve-seal system.

4. Concrete Slabs above Grade:

a. Piping Smaller Than NPS 6: Galvanized-steel-pipe sleeves, HDPE sleeves, or Sleeve-seal fittings.
b. Piping NPS 6 and Larger: Galvanized-steel-pipe or HDPE sleeves.

5. Interior Partitions:

a. Piping Smaller Than NPS 6: Galvanized-steel-pipe sleeves, HDPE sleeves, or Sleeve-seal fittings.
b. Piping NPS 6 and Larger: Galvanized-steel-pipe or HDPE sleeves.

END OF SECTION 230517

THIS PAGE IS INTENTIONALLY LEFT BLANK

(FOR DUPLEX PRINTING PURPOSES)

PART 1 - GENERAL

1.1 RELATED DOCUMENTS

A. Drawings and general provisions of the Contract apply to this Section.

1.2 SUMMARY

A. Section Includes:
   1. Thermometers.
   2. Gages.
   3. Test plugs.

B. Related Sections:
   1. Division 23 Section 232113 "Hydronic Piping".

1.3 DEFINITIONS

A. CR: Chlorosulfonated polyethylene synthetic rubber.

B. EPDM: Ethylene-propylene-diene terpolymer rubber.

1.4 SUBMITTALS

A. Product Data: For each type of product indicated; include performance curves.

B. Shop Drawings: Schedule for thermometers and gages, indicating manufacturer's number, scale range, location and application for each.

C. Product Certificates: For each type of thermometer and gage, signed by product manufacturer.

D. Pressure gauges shall be calibrated in units of pounds per square inch (psi).

E. Thermometers shall be calibrated in units of degrees of Fahrenheit.

PART 2 - PRODUCTS

2.1 MANUFACTURERS

A. Subject to compliance with requirements, provide products by one of the following:
   1. Ashcroft
   2. Palmer - Wahl Instruments Inc.
   3. Trerice, H. O. Co.
   4. Weiss Instruments, Inc.
   5. Weksler Instruments Operating Unit; Dresser Industries; Instrument Div.

2.2 METAL-CASE, LIQUID-IN-GLASS THERMOMETERS

A. Case: Chrome-plated brass, 9 inches long.

B. Tube: Red or blue reading, organic-liquid filled, with magnifying lens.

C. Tube Background: Satin-faced, non-reflective aluminum with permanently etched scale markings.

D. Window: Glass.

E. Connector: Adjustable type, 180 degrees in vertical plane, 360 degrees in horizontal plane, with locking device.

F. Stem: Copper-plated steel, aluminum, or brass for thermos well installation and of length to suit installation.

G. Accuracy: Plus or minus 1 percent of range or plus or minus 1 scale division to maximum of 1.5 percent of range.

2.3 THERMOWELLS

A. Description: Pressure-tight, socket-type metal fitting made for insertion into piping and of type, diameter, and length required to hold thermometer.

2.4 PRESSURE GAGES – LIQUID FILLED

A. Direct-Mounting, Dial-Type Pressure Gages: Indicating-dial type complying with ASME B40.100.
   1. Case: Liquid-filled type, drawn steel or cast aluminum 6-inch diameter.

2. Pressure-Element Assembly: Bourdon tube, unless otherwise indicated.
3. Pressure Connection: Brass, NPS 1/4, bottom-outlet type unless back-outlet type is indicated.
4. Movement: Mechanical, with link to pressure element and connection to pointer.
5. Dial: Satin-faced, non-reflective aluminum with permanently etched scale markings.
6. Pointer: Red metal.
7. Window: Glass.
8. Ring: Stainless steel.
9. Accuracy: Grade A, plus or minus 1 percent of middle half scale.
10. Vacuum-Pressure Range: 30-in. Hg of vacuum to 15 psig of pressure.
11. Range for Fluids under Pressure: Two times operating pressure.

B. Pressure-Gage Fittings:
1. Valves: NPS 1/4 brass or stainless-steel needle type.
2. Syphons: NPS 1/4 coil of brass tubing with threaded ends.
3. Snubbers: ASME B40.5, NPS 1/4 brass bushing with corrosion-resistant, porous-metal disc of material suitable for system fluid and working pressure.

2.5 TEST PLUGS

A. Description: Corrosion-resistant brass or stainless-steel body with core inserts and gasketed and threaded cap, with extended stem for units to be installed in insulated piping.

B. Minimum Pressure and Temperature Rating: 500 psig at 200 deg F.

C. Core Inserts: One or two self-sealing rubber valves.
1. Insert material for air, water, oil, or gas service at 20 to 200 deg F shall be CR.
2. Insert material for air or water service at minus 30 to plus 275 deg F shall be EPDM.
3. Retain paragraph below if required.

PART 3 - EXECUTION

3.1 APPLICATIONS

A. Install liquid-in-glass thermometers and pressure gauges in piping as shown on the drawings.

B. Provide the following temperature ranges for thermometers:
1. Heating Hot Water: 30 to 240 deg F, with 2-degree scale divisions.
2. Chilled Water: 0 to 100 deg F, with 2-degree scale divisions.

C. Provide the following ranges for pressure gauges:
1. Operating pressure shall be mid-span reading, 2 psi scale divisions.

3.2 INSTALLATIONS

A. Install pressure gages where shown or otherwise indicated by the contract documents.

B. Install thermometers where shown or otherwise indicated by the contract documents Install direct-mounting thermometers and adjust vertical and tilted positions.

C. Install thermowells with socket extending one-third of diameter of pipe and in vertical position in piping tees where thermometers are indicated.

D. Install direct-mounting pressure gages in piping tees with pressure gage located on pipe at most readable position.

E. Install needle-valve and snubber fitting in piping for each pressure gage for fluids (except steam).

F. Install test plugs in tees in piping.

3.3 CONNECTIONS

A. Install gages adjacent to machines and equipment to allow service and maintenance for meters, gages, machines, and equipment.

3.4 ADJUSTING

A. Adjust faces of gages to proper angle for best visibility.

END OF SECTION 230519

PART 1 - GENERAL

1.1 RELATED DOCUMENTS

A. Drawings and general provisions of the Contract, including General and Supplementary Conditions and Division 01 Specification Sections, apply to this Section.

1.2 SUMMARY

A. Section Includes:
   1. Bronze ball valves.
   2. Bronze swing check valves.
   3. Bronze butterfly valves.

B. Related Sections:
   1. Section 230553 "Identification for HVAC Piping and Equipment" for valve tags and schedules.

1.3 DEFINITIONS

A. CWP: Cold working pressure.

B. EPDM: Ethylene propylene copolymer rubber.

C. NBR: Acrylonitrile-butadiene, Buna-N, or nitrile rubber.

D. NRS: Nonrising stem.

E. OS&Y: Outside screw and yoke.

F. RS: Rising stem.

G. SWP: Steam working pressure.

1.4 ACTION SUBMITTALS

A. Product Data: For each type of valve indicated.

1.5 QUALITY ASSURANCE

A. Source Limitations for Valves: Obtain each type of valve from single source from single manufacturer.

B. ASME Compliance:
   1. ASME B16.10 and ASME B16.34 for ferrous valve dimensions and design criteria.
   2. ASME B31.1 for power piping valves.
   3. ASME B31.9 for building services piping valves.

1.6 DELIVERY, STORAGE, AND HANDLING

A. Prepare valves for shipping as follows:
   1. Protect internal parts against rust and corrosion.
   2. Protect threads, flange faces, grooves, and weld ends.
   3. Set angle, gate, and globe valves closed to prevent rattling.
   4. Set ball and plug valves open to minimize exposure of functional surfaces.
   5. Set butterfly valves closed or slightly open.
   6. Block check valves in either closed or open position.

B. Use the following precautions during storage:
   1. Maintain valve end protection.
   2. Store valves indoors and maintain at higher than ambient dew point temperature. If outdoor storage is necessary, store valves off the ground in watertight enclosures.

C. Use sling to handle large valves; rig sling to avoid damage to exposed parts. Do not use handwheels or stems as lifting or rigging points.

PART 2 - PRODUCTS

2.1 GENERAL REQUIREMENTS FOR VALVES

A. Refer to HVAC valve schedule articles for applications of valves.

B. Valve Pressure and Temperature Ratings: Not less than indicated and as required for system pressures and temperatures.

C. Valve Sizes: Same as upstream piping unless otherwise indicated.

D. Valve Actuator Types:
   1. Gear Actuator: For quarter-turn valves NPS 8 and larger.
   2. Handwheel: For valves other than quarter-turn types.
   3. Handlever: For quarter-turn valves NPS 6 and smaller, except plug valves.
   4. Wrench: For plug valves with square heads. Furnish Owner with 1 wrench for every 10 plug valves, for each size square plug-valve head.
   5. Chainwheel: Device for attachment to valve handwheel, stem, or other actuator; of size and with chain for mounting height, as indicated in the "Valve Installation" Article.

E. Valves in Insulated Piping: With 2-inch (50-mm) stem extensions and the following features:

1. Gate Valves: With rising stem.
2. Ball Valves: With extended operating handle of non-thermal-conductive material, and protective sleeve that allows operation of valve without breaking the vapor seal or disturbing insulation.
3. Butterfly Valves: With extended neck.

F. Valve-End Connections:
1. Flanged: With flanges according to ASME B16.1 for iron valves.
2. Grooved: With grooves according to AWWA C606.
3. Solder Joint: With sockets according to ASME B16.18.
4. Threaded: With threads according to ASME B1.20.1.

G. Valve Bypass and Drain Connections: MSS SP-45.

H. Two-Piece, Full-Port, Bronze Ball Valves with Stainless-Steel Trim:

1. Manufacturers: Subject to compliance with requirements, provide products by one of the following:

a. Conbraco Industries, Inc.; Apollo Valves.
b. Milwaukee Valve Company.
c. NIBCO INC.

2. Description:

a. Standard: MSS SP-110.
b. SWP Rating: 150 psig (1035 kPa).
c. CWP Rating: 600 psig (4140 kPa).
d. Body Design: Two piece.
e. Body Material: Bronze.
f. Ends: Threaded.
g. Seats: PTFE or TFE.
h. Stem: Stainless steel.
i. Ball: Stainless steel, vented.
j. Port: Full.

2.2 BRONZE SWING CHECK VALVES

A. Class 150, Bronze Swing Check Valves with Bronze Disc:

1. Manufacturers: Subject to compliance with requirements, provide products by one of the following:
a. Crane Co.; Crane Valve Group; Jenkins Valves.
b. Milwaukee Valve Company.
c. NIBCO INC.

2. Description:

   a. Standard: MSS SP-80, Type 3.
   b. CWP Rating: 300 psig (2070 kPa).
   c. Body Design: Horizontal flow.
   d. Body Material: ASTM B 62, bronze.
   e. Ends: Threaded.
   f. Disc: Bronze.

PART 3 - EXECUTION

3.1 EXAMINATION

A. Examine valve interior for cleanliness, freedom from foreign matter, and corrosion. Remove special packing materials, such as blocks, used to prevent disc movement during shipping and handling.

B. Operate valves in positions from fully open to fully closed. Examine guides and seats made accessible by such operations.

C. Examine threads on valve and mating pipe for form and cleanliness.

D. Examine mating flange faces for conditions that might cause leakage. Check bolting for proper size, length, and material. Verify that gasket is of proper size, that its material composition is suitable for service, and that it is free from defects and damage.

E. Do not attempt to repair defective valves; replace with new valves.

3.2 VALVE INSTALLATION

A. Install valves with unions or flanges at each piece of equipment arranged to allow service, maintenance, and equipment removal without system shutdown.

B. Locate valves for easy access and provide separate support where necessary.

C. Install valves in horizontal piping with stem at or above center of pipe.

D. Install valves in position to allow full stem movement.

E. Install check valves for proper direction of flow and as follows:

   1. Swing Check Valves: In horizontal position with hinge pin level.

3.3 ADJUSTING

A. Adjust or replace valve packing after piping systems have been tested and put into service but before final adjusting and balancing. Replace valves if persistent leaking occurs.

END OF SECTION 230523

THIS PAGE IS INTENTIONALLY LEFT BLANK

(FOR DUPLEX PRINTING PURPOSES)

SECTION 230529

A. GENERAL

1.2 RELATED DOCUMENTS

A. Drawings and general provisions of the Contract, including General and Supplementary Conditions and Division 1 Specification Sections, apply to this Section.

1.3 SUMMARY

A. This Section includes the following hangers and supports for HVAC system piping and equipment:
   1. Pipe hangers and supports.
   2. Thermal Hanger Shield Inserts.
   3. Metal framing systems.
   4. Fastener systems.
   5. Pipe positioning systems.
   6. Equipment supports.
   7. Pipe Sleeves.
   8. Mechanical Sleeve Seals.
   9. Escutcheons Plates.
   10. Grout.
   11. Housekeeping Pads & Concrete Bases.

B. Related Sections include the following:
   1. Section 232113 – Hydronic Piping
   2. Section 232114 – Hydronic Specialties

1.4 DEFINITIONS

A. MSS: Manufacturers Standardization Society for The Valve and Fittings Industry Inc.

B. Terminology: As defined in MSS SP-90, "Guidelines on Terminology for Pipe Hangers and Supports."

1.5 PERFORMANCE REQUIREMENTS

A. Design supports for multiple pipes, including pipe stands, capable of supporting combined weight of supported systems, system contents, and test water.

B. Design equipment supports capable of supporting combined operating weight of supported equipment and connected systems and components.

C. Design seismic-restraint hangers and supports for piping and equipment and obtain approval from authorities having jurisdiction.

1.6 SUBMITTALS

A. Product Data: For the following:
   1. Steel pipe hangers and supports.
   2. Fiberglass pipe hangers.
   3. Thermal-hanger shield inserts.
   4. Powder-actuated fastener systems.

B. Shop Drawings: Show fabrication and installation details.
   1. Trapeze pipe hangers. Include Product Data for components.
   2. Metal framing systems. Include Product Data for components.
   3. Fiberglass strut systems. Include Product Data for components.
   4. Pipe stands. Include Product Data for components.
   5. Equipment supports.

C. Welding certificates.

1.7 QUALITY ASSURANCE

A. Welding: Qualify procedures and personnel according to AWS D1.4, "Structural Welding Code--Reinforcing Steel."

B. Welding: Qualify procedures and personnel according to the following:
   1. AWS D1.1, "Structural Welding Code--Steel."
   2. AWS D1.2, "Structural Welding Code--Aluminum."
   3. AWS D1.3, "Structural Welding Code--Sheet Steel."
   4. AWS D1.4, "Structural Welding Code--Reinforcing Steel."

PART 2 - PRODUCTS

2.1 MANUFACTURERS

A. Subject to compliance with requirements, provide products by one of the manufacturers specified.
   1. AAA Technology & Specialties Co., Inc.
   2. Bergen-Power Pipe Supports.
   3. B-Line Systems, Inc.; a division of Cooper Industries.
   4. Carpenter & Paterson, Inc.
   5. Empire Industries, Inc.
   6. ERICO/Michigan Hanger Co.

7. Globe Pipe Hanger Products, Inc.
8. Grinnell Corp.
9. GS Metals Corp.
10. National Pipe Hanger Corporation.
11. PHD Manufacturing, Inc.
12. PHS Industries, Inc.
13. Piping Technology & Products, Inc.
14. Tolco Inc.

2.2 STEEL PIPE HANGERS AND SUPPORTS

A. Description: MSS SP-58, Types 1 through 58, factory-fabricated components. Refer to Part 3 "Hanger and Support Applications" Article for where to use specific hanger and support types.

B. Galvanized, Metallic Coatings: Pregalvanized or hot dipped.

C. Nonmetallic Coatings: Plastic coating, jacket, or liner.

D. Padded Hangers: Hanger with fiberglass or other pipe insulation pad or cushion for support of bearing surface of piping.

2.3 TRAPEZE PIPE HANGERS

A. Description: MSS SP-69, Type 59, shop- or field-fabricated pipe-support assembly made from structural-steel shapes with MSS SP-58 hanger rods, nuts, saddles, and U-bolts.

2.4 METAL FRAMING SYSTEMS

A. Description: MFMA-3, shop- or field-fabricated pipe-support assembly made of steel channels and other components.

B. Manufacturers:
1. B-Line Systems, Inc.; a division of Cooper Industries.
2. ERICO/Michigan Hanger Co.; ERISTRUT Div.
3. GS Metals Corp.
4. Power-Strut Div.; Tyco International, Ltd.
5. Thomas & Betts Corporation.
6. Tolco Inc.
7. Unistrut Corp.; Tyco International, Ltd.

C. Coatings: Manufacturer's standard finish, unless bare metal surfaces are indicated.

D. Nonmetallic Coatings: Plastic coating, jacket, or liner.

2.5 THERMAL-HANGER SHIELD INSERTS

A. Description: 100-psig-minimum, compressive-strength insulation insert encased in sheet metal shield.

B. Manufacturers:
   1. Carpenter & Paterson, Inc.
   2. ERICO/Michigan Hanger Co.
   3. PHS Industries, Inc.
   4. Pipe Shields, Inc.
   5. Rilco Manufacturing Company, Inc.
   6. Value Engineered Products, Inc.

C. Insulation-Insert Material for Cold Piping: Water-repellent treated, ASTM C 533, Type I calcium silicate or ASTM C 552, Type II cellular glass.

D. Insulation-Insert Material for Hot Piping: Water-repellent treated, ASTM C 533, Type I calcium silicate or ASTM C 552, Type II cellular glass.

E. For Trapeze or Clamped Systems: Insert and shield shall cover entire circumference of pipe.

F. For Clevis or Band Hangers: Insert and shield shall cover lower 180 degrees of pipe.

G. Insert Length: Extend 2 inches beyond sheet metal shield for piping operating below ambient air temperature.

2.6 FASTENER SYSTEMS

A. Powder-Actuated Fasteners: Threaded-steel stud, for use in hardened portland cement concrete with pull-out, tension, and shear capacities appropriate for supported loads and building materials where used.
   1. Manufacturers:
      a. Hilti, Inc.
      b. ITW Ramset/Red Head.
      c. Masterset Fastening Systems, Inc.
      d. MKT Fastening, LLC.
      e. Powers Fasteners.

B. Mechanical-Expansion Anchors: Insert-wedge-type zinc-coated steel, for use in hardened portland cement concrete with pull-out, tension, and shear capacities appropriate for supported loads and building materials where used.
   1. Manufacturers:
      a. B-Line Systems, Inc.; a division of Cooper Industries.
      b. Empire Industries, Inc.
      c. Hilti, Inc.
      d. ITW Ramset/Red Head.

e. MKT Fastening, LLC.
f. Powers Fasteners.

2.7 PIPE STAND FABRICATION

A. Pipe Stands, General: Shop or field-fabricated assemblies made of manufactured corrosion-resistant components to support roof-mounted piping.
1. Manufacturers:
a. ERICO/Michigan Hanger Co.
b. MIRO Industries.

B. Low-Type, Single-Pipe Stand: One-piece stainless-steel base unit with plastic roller, for roof installation without membrane penetration.
1. Manufacturers:
a. MIRO Industries.

C. High-Type, Single-Pipe Stand: Assembly of base, vertical and horizontal members, and pipe support, for roof installation without membrane penetration.
1. Manufacturers:
a. ERICO/Michigan Hanger Co.
b. MIRO Industries.
c. Portable Pipe Hangers.

2. Base: Stainless steel.
3. Vertical Members: Two or more cadmium-plated-steel or stainless-steel, continuous-thread rods.
4. Horizontal Member: Cadmium-plated-steel or stainless-steel rod with plastic or stainless-steel, roller-type pipe support.

2.8 EQUIPMENT SUPPORTS

A. Description: Welded, shop- or field-fabricated equipment support made from structural-steel shapes.

2.9 MISCELLANEOUS MATERIALS

A. Structural Steel: ASTM A 36/A 36M, steel plates, shapes, and bars; black and galvanized.

B. Grout: ASTM C 1107, factory-mixed and -packaged, dry, hydraulic-cement, nonshrink and nonmetallic grout; suitable for interior and exterior applications.
1. Properties: Nonstaining, noncorrosive, and nongaseous.
2. Design Mix: 5000-psi, 28-day compressive strength.

C. High Density Insulation Inserts for Insulated Hot Piping 2-1/2 inches and Larger: Calcium silicate or perlite high density pipe insulation, 180 degree segment, 12 inch minimum length, insert thickness same as insulation thickness, on bottom half of pipe. Provide minimum 18 gage galvanized steel shield, 120 degree segment, 12 inch minimum length, between insulation covering and support.

D. High Density Insulation Inserts for Insulated Cold Piping 2-1/2 Inches and Larger: Cellular glass or high density foam pipe insulation, 1890 degree segment, 12 inch minimum length, insert thickness same as insulation thickness, on bottom half of pipe. Insert shall be on inside of vapor barrier. Provide minimum 28 gage galvanized steel shield, 120 degree segment, 12 inch minimum length, between insulation covering and support.

E. Shields for Vertical Copper Pipe Risers: Annealed sheet copper.

F. Steel Hanger Rods: Threaded both ends, threaded one end, or continuous threaded.

2.10 FLASHING

A. Metal Flashing: 26 gage galvanized steel.

B. Lead Flashing: 5 lb/sq ft sheet lead for waterproofing; one lb/sq ft sheet lead for soundproofing.

C. Flexible Flashing: 47 mil thick sheet butyl compatible with roofing.

D. Caps: Steel, 22 gage minimum; 16 gage at fire resistant elements.

2.11 SLEEVES

A. Sleeves for Pipes Through Non-fire Rated Walls or Floors: 18 gage galvanized steel, grouted in place.

B. Sleeves for Pipes Through Fire Rated and Fire Resistive Floors and Walls: Schedule 40, galvanized steel pipe, grouted in place in masonry, firestopped in other types of construction.

2.12 EQUIPMENT BASES AND SUPPORTS

A. Provide concrete housekeeping pads for equipment as indicated on the Drawings. Housekeeping pads shall be 4 inches thick (min), 3,000 psi concrete sized, reinforced and doweled to the floor as required by seismic requirements.

B. Concrete Bases: Anchor equipment to concrete base according to equipment manufacturer's written instructions and according to seismic codes at Project.

1. Construct concrete bases of dimensions indicated, but not less than 6 inches larger in both directions than supported unit.

2. Install dowel rods to connect concrete base to concrete floor. Unless otherwise indicated, install dowel rods on 18-inch centers around the full perimeter of the base.
3. Install epoxy-coated anchor bolts for supported equipment that extend through concrete base, and anchor into structural concrete floor.
4. Place and secure anchorage devices. Use supported equipment manufacturer's setting drawings, templates, diagrams, instructions, and directions furnished with items to be embedded.
5. Install anchor bolts to elevations required for proper attachment to supported equipment.
6. Install anchor bolts according to anchor-bolt manufacturer's written instructions.
7. Use 5000-psi, 28-day compressive-strength concrete.

2.13 MECHANICAL SLEEVE SEALS

A. Description: Modular sealing element unit, designed for field assembly, to fill annular space between pipe and sleeve.
   1. Sealing Elements: EPDM interlocking links shaped to fit surface of pipe. Include type and number required for pipe material and size of pipe.
   2. Pressure Plates: Stainless steel. Include two for each sealing element.
   3. Connecting Bolts and Nuts: Stainless steel of length required to secure pressure plates to sealing elements. Include one for each sealing element.

PART 3 - EXECUTION

3.1 PIPE HANGERS AND SUPPORTS

A. Support horizontal piping as follows (minimum):

Pipe Size	Max. Hanger Spacing	Hanger Diameter
1/2" to 1-1/4"	6' - 0"	3/8"
1-1/2" to 2"	8' - 0"	3/8"
2-1/2" to 3"	9' - 0"	1/2"
4" to 6"	10' - 0"	5/8"
8" to 12"	12' - 0"	7/8"

B. Install hangers to provide minimum 1/2 inch space between finished covering and adjacent work.

C. Place a hanger within 12 inches of each horizontal elbow.

D. Use hangers with 1-1/2 inch minimum vertical adjustment.

E. Support horizontal cast iron pipe adjacent to each hub, with 5 feet maximum spacing between hangers.

F. Support vertical piping at every other floor. Support vertical cast iron pipe at each floor at hub.

G. Where several pipes can be installed in parallel and at same elevation, provide multiple or trapeze hangers.

H. Support riser piping independently of connected horizontal piping.

I. Provide seismic support for pipe hangers in accordance with Section 15240.

3.2 HANGER AND SUPPORT APPLICATIONS

A. Additional hanger and support requirements are specified in Sections specifying specific piping systems and equipment.

B. Comply with MSS SP-69 for pipe hanger selections and applications that are not specified in piping system Sections.

C. Use hangers and supports with galvanized, metallic coatings for piping and equipment that will not have field-applied finish.

D. Use nonmetallic coatings on attachments for electrolytic protection where attachments are in direct contact with copper tubing.

E. Use padded hangers for piping that is subject to scratching.

F. Horizontal-Piping Hangers and Supports: Unless otherwise indicated and except as specified in piping system Sections, install the following types:
   1. Adjustable, Steel Clevis Hangers (MSS Type 1): For suspension of non-insulated or insulated stationary pipes, NPS 1/2 to NPS 30.
   2. Yoke-Type Pipe Clamps (MSS Type 2): For suspension of 120 to 450 deg F pipes, NPS 4 to NPS 16, requiring up to 4 inches of insulation.
   3. Carbon- or Alloy-Steel, Double-Bolt Pipe Clamps (MSS Type 3): For suspension of pipes, NPS 3/4 to NPS 24, requiring clamp flexibility and up to 4 inches of insulation.
   4. Steel Pipe Clamps (MSS Type 4): For suspension of cold and hot pipes, NPS 1/2 to NPS 24, if little or no insulation is required.
   5. Adjustable, Swivel Split- or Solid-Ring Hangers (MSS Type 6): For suspension of non-insulated stationary pipes, NPS 3/4 to NPS 8.
   6. Adjustable, Pipe Saddle Supports (MSS Type 38): For stanchion-type support for pipes, NPS 2-1/2 to NPS 36, if vertical adjustment is required, with steel pipe base stanchion support and cast-iron floor flange.

7. Adjustable Roller Hangers (MSS Type 43): For suspension of pipes, NPS 2-1/2 to NPS 20, from single rod if horizontal movement caused by expansion and contraction might occur.

G. Vertical-Piping Clamps: Unless otherwise indicated and except as specified in piping system Sections, install the following types:
1. Extension Pipe or Riser Clamps (MSS Type 8): For support of pipe risers, NPS 3/4 to NPS 20.
2. Carbon- or Alloy-Steel Riser Clamps (MSS Type 42): For support of pipe risers, NPS 3/4 to NPS 20, if longer ends are required for riser clamps.

H. Hanger-Rod Attachments: Unless otherwise indicated and except as specified in piping system Sections, install the following types:
1. Steel Turnbuckles (MSS Type 13): For adjustment up to 6 inches for heavy loads.
2. Steel Clevises (MSS Type 14): For 120 to 450 deg F piping installations.
3. Swivel Turnbuckles (MSS Type 15): For use with MSS Type 11, split pipe rings.
4. Malleable-Iron Sockets (MSS Type 16): For attaching hanger rods to various types of building attachments.
5. Steel Weldless Eye Nuts (MSS Type 17): For 120 to 450 deg F piping installations.

I. Building Attachments: Unless otherwise indicated and except as specified in piping system Sections, install the following types:
1. Steel or Malleable Concrete Inserts (MSS Type 18): For upper attachment to suspend pipe hangers from concrete ceiling.
2. Top-Beam C-Clamps (MSS Type 19): For use under roof installations with bar-joist construction to attach to top flange of structural shape.
3. Side-Beam or Channel Clamps (MSS Type 20): For attaching to bottom flange of beams, channels, or angles.
4. Center-Beam Clamps (MSS Type 21): For attaching to center of bottom flange of beams.
5. Welded Beam Attachments (MSS Type 22): For attaching to bottom of beams if loads are considerable and rod sizes are large.
6. C-Clamps (MSS Type 23): For structural shapes.
7. Top-Beam Clamps (MSS Type 25): For top of beams if hanger rod is required tangent to flange edge.
8. Side-Beam Clamps (MSS Type 27): For bottom of steel I-beams.
9. Steel-Beam Clamps with Eye Nuts (MSS Type 28): For attaching to bottom of steel I-beams for heavy loads.
10. Linked-Steel Clamps with Eye Nuts (MSS Type 29): For attaching to bottom of steel I-beams for heavy loads, with link extensions.
11. Malleable Beam Clamps with Extension Pieces (MSS Type 30): For attaching to structural steel.
12. Welded-Steel Brackets: For support of pipes from below, or for suspending from above by using clip and rod. Use one of the following for indicated loads:
    a. Light (MSS Type 31): 750 lb.
    b. Medium (MSS Type 32): 1500 lb.
    c. Heavy (MSS Type 33): 3000 lb.

13. Side-Beam Brackets (MSS Type 34): For sides of steel or wooden beams.
14. Plate Lugs (MSS Type 57): For attaching to steel beams if flexibility at beam is required.
15. Horizontal Travelers (MSS Type 58): For supporting piping systems subject to linear horizontal movement where headroom is limited.

J. Saddles and Shields: Unless otherwise indicated and except as specified in piping system Sections, install the following types:
1. Steel Pipe-Covering Protection Saddles (MSS Type 39): To fill interior voids with insulation that matches adjoining insulation.
2. Protection Shields (MSS Type 40): Of length recommended in writing by manufacturer to prevent crushing insulation.
3. Thermal-Hanger Shield Inserts: For supporting insulated pipe.

K. Spring Hangers and Supports: Unless otherwise indicated and except as specified in piping system Sections, install the following types:
1. Restraint-Control Devices (MSS Type 47): At discharge of pumps.
2. Spring Cushions (MSS Type 48): For light loads if vertical movement does not exceed 1-1/4 inches.
3. Spring-Cushion Roll Hangers (MSS Type 49): For equipping Type 41 roll hanger with springs.
4. Spring Sway Braces (MSS Type 50): To retard sway, shock, vibration, or thermal expansion in piping systems.

L. Comply with MSS SP-69 for trapeze pipe hanger selections and applications that are not specified in piping system Sections.

M. Comply with MFMA-102 for metal framing system selections and applications that are not specified in piping system Sections.

N. Use powder-actuated fasteners instead of building attachments where required in concrete construction.

3.3 HANGER AND SUPPORT INSTALLATION

A. Steel Pipe Hanger Installation: Comply with MSS SP-69 and MSS SP-89. Install hangers, supports, clamps, and attachments as required to properly support piping from building structure.

B. Trapeze Pipe Hanger Installation: Comply with MSS SP-69 and MSS SP-89. Arrange for grouping of parallel runs of horizontal piping and support together on field-fabricated trapeze pipe hangers.
1. Pipes of Various Sizes: Support together and space trapezes for smallest pipe size or install intermediate supports for smaller diameter pipes as specified above for individual pipe hangers.

2. Field fabricate from ASTM A 36/A 36M, steel shapes selected for loads being supported. Weld steel according to AWS D1.1.

C. Metal Framing System Installation: Arrange for grouping of parallel runs of piping and support together on field-assembled metal framing systems.

D. Thermal-Hanger Shield Installation: Install in pipe hanger or shield for insulated piping.

E. Fastener System Installation:
1. Install powder-actuated fasteners for use in lightweight concrete or concrete slabs less than 4 inches thick in concrete after concrete is placed and completely cured. Use operators that are licensed by powder-actuated tool manufacturer. Install fasteners according to powder-actuated tool manufacturer's operating manual.
2. Install mechanical-expansion anchors in concrete after concrete is placed and completely cured. Install fasteners according to manufacturer's written instructions.

F. Install hangers and supports complete with necessary inserts, bolts, rods, nuts, washers, and other accessories.

G. Equipment Support Installation: Fabricate from welded-structural-steel shapes.

H. Install hangers and supports to allow controlled thermal and seismic movement of piping systems, to permit freedom of movement between pipe anchors, and to facilitate action of expansion joints, expansion loops, expansion bends, and similar units.

I. Install lateral bracing with pipe hangers and supports to prevent swaying.

J. Install building attachments within concrete slabs or attach to structural steel. Install additional attachments at concentrated loads, including valves, flanges, and strainers, NPS 2-1/2 and larger and at changes in direction of piping. Install concrete inserts before concrete is placed; fasten inserts to forms and install reinforcing bars through openings at top of inserts.

K. Load Distribution: Install hangers and supports so piping live and dead loads and stresses from movement will not be transmitted to connected equipment.

L. Pipe Slopes: Install hangers and supports to provide indicated pipe slopes and so maximum pipe deflections allowed by ASME B31.1 (for power piping) and ASME B31.9 (for building services piping) are not exceeded.

M. Insulated Piping: Comply with the following:
1. Attach clamps and spacers to piping.
   a. Piping Operating above Ambient Air Temperature: Clamp may project through insulation.
   b. Piping Operating below Ambient Air Temperature: Use thermal-hanger shield insert with clamp sized to match OD of insert.
   c. Do not exceed pipe stress limits according to ASME B31.1 for power piping and ASME B31.9 for building services piping.

2. Install MSS SP-58, Type 39, protection saddles if insulation without vapor barrier is indicated. Fill interior voids with insulation that matches adjoining insulation.
   a. Option: Thermal-hanger shield inserts may be used. Include steel weight-distribution plate for pipe NPS 4 and larger if pipe is installed on rollers.
3. Install MSS SP-58, Type 40, protective shields on cold piping with vapor barrier. Shields shall span an arc of 180 degrees.
   a. Option: Thermal-hanger shield inserts may be used. Include steel weight-distribution plate for pipe NPS 4 and larger if pipe is installed on rollers.
4. Shield Dimensions for Pipe: Not less than the following:
5. NPS 1/4 to NPS 3-1/2: 12 inches long and 0.048 inch thick.
   a. NPS 4: 12 inches long and 0.06 inch thick.
   b. NPS 5 and NPS 6: 18 inches long and 0.06 inch thick.
6. Insert Material: Length at least as long as protective shield.
7. Thermal-Hanger Shields: Install with insulation same thickness as piping insulation.

3.4 EQUIPMENT SUPPORTS

A. Fabricate structural-steel stands to suspend equipment from structure overhead or to support equipment above floor.

B. Grouting: Place grout under supports for equipment and make smooth bearing surface.

C. Provide lateral bracing, to prevent swaying, for equipment supports.

3.5 METAL FABRICATIONS

A. Cut, drill, and fit miscellaneous metal fabrications for trapeze pipe hangers and equipment supports.

B. Fit exposed connections together to form hairline joints. Field weld connections that cannot be shop welded because of shipping size limitations.

C. Field Welding: Comply with AWS D1.1 procedures for shielded metal arc welding, appearance and quality of welds, and methods used in correcting welding work, and with the following:
   1. Use materials and methods that minimize distortion and develop strength and corrosion resistance of base metals.
   2. Obtain fusion without undercut or overlap.
   3. Remove welding flux immediately.
   4. Finish welds at exposed connections so no roughness shows after finishing and contours of welded surfaces match adjacent contours.

3.6 SLEEVES

A. In new concrete walls and floors, set sleeves in position in formwork. Provide reinforcing around sleeves. In existing floors and walls, grout sleeve into oversized hole.

B. Extend sleeves through floors one inch above finished floor level.

C. Where piping or ductwork penetrates a fire rated floor, ceiling, or wall, close off space between pipe or duct and adjacent work with firestopping in accordance with manufacturer's instructions. Provide close fitting metal collar or escutcheon covers at both sides of penetration.

D. Install stainless steel escutcheons at finished surfaces.

3.7 ERECTION OF SUPPORTS AND ANCHORAGES

A. Cut, fit, and place miscellaneous metal supports accurately in location, alignment, and elevation to support and anchor materials and equipment.

B. Field Welding: Comply with AWS D1.1.

C. Cut, fit, and place wood grounds, nailers, blocking, and anchorages to support, and anchor HVAC materials and equipment.

D. Select fastener sizes that will not penetrate members if opposite side will be exposed to view or will receive finish materials. Tighten connections between members. Install fasteners without splitting wood members.

E. Attach to substrates as required to support applied loads.

3.8 GROUTING

A. Mix and install grout for equipment base bearing surfaces, pump and other equipment base plates, and anchors.

B. Clean surfaces that will come into contact with grout.

C. Provide forms as required for placement of grout.

D. Avoid air entrapment during placement of grout.

E. Place grout, completely filling equipment bases.

F. Place grout on concrete bases and provide smooth bearing surface for equipment.

G. Place grout around anchors.

H. Cure placed grout.

3.9 ADJUSTING

A. Hanger Adjustments: Adjust hangers to distribute loads equally on attachments and to achieve indicated slope of pipe.

B. Trim excess length of continuous-thread hanger and support rods to 1-1/2 inches.

3.10 PAINTING

A. Touch Up: Clean field welds and abraded areas of shop paint. Paint exposed areas immediately after erecting hangers and supports. Use same materials as used for shop painting. Comply with SSPC-PA 1 requirements for touching up field-painted surfaces.
   1. Apply paint by spray to provide minimum dry film thickness of 2.0 mils.

B. Touch Up: Cleaning and touchup painting of field welds, bolted connections, and abraded areas of shop paint on miscellaneous metals.

C. Galvanized Surfaces: Clean welds, bolted connections, and abraded areas and apply galvanizing-repair paint to comply with ASTM A 780.

END OF SECTION 230529

PART 1 - GENERAL

1.1 DESCRIPTION

A. Intent

1. All mechanical equipment, piping and ductwork as noted on the equipment schedule or in the Specification shall be mounted on vibration isolators to prevent the transmission of vibration and mechanically transmitted sound to the building structure. Vibration isolators shall be selected in accordance with the weight distribution so as to produce reasonably uniform deflections.
2. All isolators and isolation materials shall be of the same manufacturer and shall be certified by the manufacturer.
3. It is the intent of the seismic portion of this Specification to keep all mechanical building system components in place during a seismic event.
4. All such systems must be installed in strict accordance with seismic codes, component manufacturer's and building construction standards. Whenever a conflict occurs between the manufacturer's or construction standards, the most stringent shall apply.
5. This Specification is considered to be minimum requirements for seismic consideration and is not intended as a substitute for legislated, more stringent, national, state or local construction requirements (i.e. California Title 24, California OSHPD, Canadian Building Codes, or other requirements).
6. Any variance or non-compliance with these Specification requirements shall be corrected by the Contractor in an approved manner.
7. Seismic restraints shall be designed in accordance with seismic force levels as detailed in Table 1.06-1.

B. The work in this Section includes, but is not limited to the following:

1. Vibration isolation for piping, ductwork and equipment.
2. Equipment isolation bases.
3. Flexible piping connections.
4. Seismic restraints for isolated equipment.
5. Seismic restraints for non-isolated equipment.
6. Certification of seismic restraint designs and installation supervision.
7. Certification of seismic attachment of housekeeping pads.
8. All mechanical systems. Equipment buried underground is excluded but entry of services through the foundation wall is included. Equipment referred to below is typical. (Equipment not listed is still included in this Specification

AC Units	Comp Room Units	Pumps
Air Distrib Boxes	Condensers	Rooftop Units
Air Handling Units	Condensing Units	Tanks (All types)

Air Separators	Cooling Towers	Unit Heaters
Boilers	Ductwork	Var Freq Drives
Cabinet Heaters	Fans	Water Heaters
Chillers	Heat Exchangers	
Compressors	Piping	

C. Definitions

1. Life Safety Systems: All systems involved with fire protection including sprinkler piping, fire pumps, jockey pumps, fire pump control panels, service water supply piping, water tanks, fire dampers and smoke exhaust systems.

   a. All medical and life support systems.
   b. Fresh air relief systems on emergency control sequence including air handlers, conduit, duct, dampers, etc.

2. Positive Attachment: A positive attachment is defined as a cast-in anchor, a drill-in wedge anchor, a double sided beam clamp loaded perpendicular to a beam, or a welded or bolted connection to structure. Single sided "C" type beam clamps for support rods of overhead piping, ductwork, fire protection, or any other equipment are not acceptable on this Project as seismic anchor points.

3. Transverse Bracing: Restraint(s) applied to limit motion perpendicular to the centerline of the pipe or duct.

4. Longitudinal Bracing: Restraint(s) applied to limit motion parallel to the centerline of the pipe, or duct.

1.2 SUBMITTAL

A. The manufacturer of vibration isolation and seismic restraints shall provide submittals for products as follows:

1. Descriptive Data:

   a. Catalog cuts or data sheets on vibration isolators and specific restraints detailing compliance with the Specification.
   b. Detailed schedules of flexible and rigidly mounted equipment, showing vibration isolators and seismic restraints by referencing numbered descriptive Drawings.

2. Shop Drawings:

   a. Submit fabrication details for equipment bases including dimensions, structural member sizes and support point locations.
   b. Provide all details of suspension and support for ceiling hung equipment.

c. Where walls, floors, slabs or supplementary steel work are used for seismic restraint locations, details of acceptable attachment methods for ducts, and pipe must be included and approved before the condition is accepted for installation. Restraint manufacturers' submittals must include spacing, static loads and seismic loads at all attachment and support points.
d. Provide specific details of seismic restraints and anchors; include number, size and locations for each piece of equipment.
e. Submittals for all directional seismic snubbers shall include the load deflection curves up to 1/2" deflection in the x, y and z planes.

3. Seismic Certification and Analysis:

a. Seismic restraint calculations must be provided for all connections of equipment to the structure. Calculations must be stamped by a registered professional engineer with at least five years of seismic design experience, licensed in the state of the job location.
b. All restraining devices shall have a preapproval number from California OSHPD or some other recognized government agency showing maximum restraint ratings. Preapprovals based on independent testing are preferred to preapprovals based on calculations. Where preapproved devices are not available, submittals based on independent testing are preferred. Calculations (including the combining of tensile and shear loadings) to support seismic restraint designs must be stamped by a registered professional engineer with at least five years of seismic design experience and licensed in the state of the job location. Testing and calculations must include both shear and tensile loads as well as one test or analysis at 45 degrees to the weakest mode.
c. Analysis must indicate calculated dead loads, static seismic loads and capacity of materials utilized for connections to equipment and structure. Analysis must detail anchoring methods, bolt diameter, embedment and/or welded length. All seismic restraint devices shall be designed to accept, without failure, the forces detailed in Table 1.06-1 acting through the equipment center of gravity. Overturning moments may exceed forces at ground level.

1.3 PERFORMANCE REQUIREMENTS

A. Delegated Design: Design trapeze pipe hangers and equipment supports, including comprehensive engineering analysis by a qualified professional engineer, using performance requirements and design criteria indicated.

B. Structural Performance: Hangers and supports for HVAC piping and equipment shall withstand the effects of gravity loads and stresses within limits and under conditions indicated according to ASCE/SEI 7.

C. Design supports for multiple pipes, including pipe stands, capable of supporting combined weight of supported systems, systems contents, and test water.

D. Design equipment supports capable of supporting combined operating weight of supported equipment and connected systems and components.

E. Design seismic-restraint hangers and supports for piping and equipment.

1.4 CODE AND STANDARDS REQUIREMENTS

A. Typical Applicable codes and Standards

1. International Building Code (IBC) (Correct edition adopted by CT)
2. Connecticut State Building Code

1.5 MANUFACTURER'S RESPONSIBILITY

A. Manufacturer of vibration isolation and seismic control equipment shall have the following responsibilities:

1. Determine vibration isolation and seismic restraint sizes and locations.
2. Provide vibration isolation and seismic restraints as scheduled or specified.
3. Provide calculations and materials if required for restraint of unisolated equipment.
4. Provide installation instructions, Drawings and trained field supervision to insure proper installation and performance.
5. Provide field survey of the installation and submit letter to Engineer stating that the seismic and vibration isolation equipment has been installed in accordance with the manufacturer's instructions.

1.6 RELATED WORK

A. Housekeeping Pads

1. Housekeeping pad reinforcement and monolithic pad attachment to the structure details and design shall be prepared by the restraint vendor if not already indicated on the Drawings.
2. Housekeeping pads shall be coordinated with restraint vendor and sized to provide a minimum edge distance of ten (10) bolt diameters all around the outermost anchor bolt to allow development of full drill-in wedge anchor ratings. If cast-in anchors are to be used, the housekeeping pads shall be sized to accommodate the ACI requirements for bolt coverage and embedment.

B. Supplementary Support Steel

1. Contractor shall supply supplementary support steel for all equipment, piping, ductwork, etc. including roof mounted equipment, as required or specified.

C. Attachments

1. Contractor shall supply restraint attachment plates cast into housekeeping pads, concrete inserts, double sided beam clamps, etc. in accordance with the requirements of the vibration vendor's calculations.

1.7 SEISMIC FORCE LEVELS

A. Seismic analysis shall be in accordance with the International Building Code.

PART 2 - PRODUCTS

2.1 INTENT

A. All vibration isolators and seismic restraints described in this Section shall be the product of a single manufacturer. Mason Industry's products are the basis of these Specifications; products of other manufacturers are acceptable provided their systems strictly comply with the Specification and have the approval of the Engineer. Submittals and certification sheets shall be in accordance with Part 1.02 of this specification.

B. For the purposes of this Project, failure is defined as the discontinuance of any attachment point between equipment or structure, vertical permanent deformation greater than 1/8 inch and/or horizontal permanent deformation greater than 1/4 inch.

2.2 PRODUCT DESCRIPTIONS

A. Vibration Isolator and Seismic Restraint Types
The numbers of the following paragraphs correlate to the graphic representations at the end of this Article.

1. Two layers of 3/4-inch thick neoprene pad consisting of 2-inch square waffle modules separated horizontally by a 16 gage galvanized shim. Load distribution plates shall be used as required. Pads shall be Type Super "W" as manufactured by Mason Industries, Inc.
2. Not Used
3. Sheet metal panels shall be bolted to the walls or supporting structure by assemblies consisting of a neoprene bushing cushioned between 2 steel sleeves. The outer sleeve prevents the sheet metal from cutting into the neoprene. Enlarge panel holes as required. Neoprene elements pass over the bushing to cushion the back panel horizontally. A steel disc covers the inside neoprene element and the inner steel sleeve is elongated to act as a stop so tightening the anchor bolts does not interfere with panel isolation in 3 planes. Bushing assemblies can be applied to the ends of steel cross members where applicable. All neoprene shall be bridge-bearing quality. Bushing assemblies shall be type PB as manufactured by Mason Industries, Inc.

4. A one piece molded bridge bearing neoprene washer/bushing. The bushing shall surround the anchor bolt and have a flat washer face to avoid metal-to-metal contact. Neoprene bushings shall be type HG as manufactured by Mason Industries, Inc.
5. Not Used
6. Not Used
7. Not Used
8. Not Used
9. Not Used
10. Hangers shall consist of rigid steel frames containing minimum 1-¼ inch thick neoprene elements at the top and a steel spring with general characteristics as in Type 5 seated in a steel washer reinforced neoprene cup on the bottom. The neoprene element and the cup shall have neoprene bushings. Projecting through the steel box. To maintain stability the boxes shall not be articulated as clevis hangers nor the neoprene element stacked on top of the spring. Spring diameters and hanger box lower hole sizes shall be large enough to permit the hanger rod to swing through a 30 degree arc from side to side before contacting the rod bushing and short circuiting the spring. Submittals shall include a hanger Drawing showing the 30 degree capability. Hangers shall be type 30N as manufactured by Mason Industries, Inc.
11. Precompressed hangers shall be as specified in Paragraph 2.3 A.10., but they shall also be locked at the rated deflection by means of a resilient seismic upstop to keep the piping or equipment at a fixed elevation during installation. The hangers shall be designed with a release mechanism to free the spring after the installation is complete and the hanger is subjected to its full load. Deflection shall be clearly indicated by means of a scale. Submittals shall include a Drawing of the hanger showing the 30 degree capability. Hangers shall be type PC30N as manufactured by Mason Industries, Inc.

    a. Types 12 - 14 apply to trapeze as well as clevis hanger locations. At trapeze anchor locations piping must be shackled to the trapeze. Types apply to hanging equipment as well.
12. Seismic Cable Restraints shall consist of galvanized steel aircraft cables sized to resist seismic loads with a minimum safety factor of 2 and arranged to provide all-directional restraint. Cable end connections shall be steel assemblies that swivel to final installation angle and utilize two clamping bolts to provide proper cable engagement. Cables must not be allowed to bend across sharp edges. Cable assemblies shall have an Anchorage Preapproval "R" Number from OSHPD in the State of California verifying the maximum certified load ratings. Cable assemblies shall be Type SCB at the ceiling and at the clevis bolt, SCBH between the hanger rod nut and the clevis or SCBV if clamped to a beam all as manufactured by Mason Industries, Inc.
13. Seismic solid braces shall consist of steel angles or channels to resist seismic loads with a minimum safety factor of 2 and arranged to provide all directional restraint. Seismic solid brace end connectors shall be steel assemblies that swivel to the final installation angle and utilize two through bolts to provide proper attachment. Seismic solid brace assembly shall have anchorage preapproval "R" number from OSHPD in the state of California verifying the maximum certified load ratings. Solid seismic brace assemblies shall be type SSB as manufactured by Mason Industries, Inc.

14. Steel angles, sized to prevent buckling, shall be clamped to pipe or equipment rods utilizing a minimum of three ductile iron clamps at each restraint location when required. Welding of support rods is not acceptable. Rod clamp assemblies shall have an Anchorage Preapproval "R" Number from OSHPD in the State of California. Rod clamp assemblies shall be Type SRC as manufactured by Mason Industries, Inc.
15. Pipe clevis cross bolt braces are required in all restraint locations. They shall be special purpose preformed channels deep enough to be held in place by bolts passing over the cross bolt. Clevis cross braces shall have an Anchorage Preapproval "R" Number from OSHPD in the State of California. Clevis cross brace shall be type CCB as manufactured by Mason Industries, Inc.
16. All-directional seismic snubbers shall consist of interlocking steel members restrained by a one-piece molded neoprene bushing of bridge bearing neoprene. Bushing shall be replaceable and a minimum of 1/4 inch thick. Rated loadings shall not exceed 1000 psi. A minimum air gap of 1/8 inch shall be incorporated in the snubber design in all directions before contact is made between the rigid and resilient surfaces. Snubber end caps shall be removable to allow inspection of internal clearances. Neoprene bushings shall be rotated to insure no short circuits exist before systems are activated. Snubbers shall have an Anchorage Preapproval "R" Number from OSHPD in the State of California verifying the maximum certified horizontal and vertical load ratings. Snubber shall be Type Z-1225 as manufactured by Mason Industries, Inc.
17. Not Used
18. Stud wedge anchors shall be manufactured from full diameter wire, not from undersized wire that is "rolled up" to create the thread. The stud anchor shall also have a safety shoulder which fully supports the wedge ring under load. The stud anchors shall have an evaluation report number from the I.C.B.O Evaluation Service, Inc. verifying its allowable loads. Drill-in stud wedge anchors shall be type SAS as manufactured by Mason Industries, Inc.
19. Female wedge anchors are preferred in floor locations so isolators or equipment can be slid into place after the anchors are installed. Anchors shall be manufactured from full diameter wire, and shall have a safety shoulder to fully support the wedge ring under load. Female wedge anchors shall have an evaluation report number from the I.C.B.O Evaluation Service, Inc. verifying to its allowable loads. Drill-in female wedge anchors shall be type SAB as manufactured by Mason Industries, Inc.
20. Not Used
21. Not Used
22. Curb mounted rooftop equipment shall be mounted on spring isolation curbs. The lower member shall consist of a sheet metal Z Section containing adjustable and removable steel springs that support the upper floating Section. The upper frame must provide continuous support for the equipment and must be captive so as to resiliently resist wind and seismic forces. All directional neoprene snubber bushings shall be a minimum of 1/4-inch thick. Steel springs shall be laterally stable and rest on 1/4-inch thick neoprene acoustical pads. Minimum spring deflection shall be 3 inches. Hardware must be cadmium or zinc electroplated and the springs similarly plated or provided with an approved rust resistant finish. The curbs waterproofing shall consist of a continuous galvanized flexible counter flashing nailed over the lower curbs waterproofing and joined at the corners by EPDM bellows. All spring locations shall have access ports with

removable waterproof covers. Lower curbs shall have provision for 2 inches of insulation. The roof curbs shall be built to seismically contain the rooftop unit. The unit must be solidly fastened to the top floating rail, and the lower Z Section anchored to the roof structure. Curb shall have anchorage preapproval "R" from OSHPD in the state of California attesting to the maximum certified horizontal and vertical load ratings. The floating member of the roof curb shall have perimeter angle and cross members to support two layers of 5/8-inch waterproof sheetrock laid on with staggered joints. Sheetrock must surround ducts to provide a continuous sound break. This acoustical barrier shall be caulked to minimize sound transmission. Where the mechanical arrangement makes attachment to the floating member unfeasible, the barrier shall be attached at the highest practical elevation of the fixed curb with provision for 1-inch thick closed cell neoprene flexible seals around the ductwork. A 4-inch layer of 1.5 density fiberglass shall cover the entire solid roof surface under the unit. Ductwork shall be coated with a damping compound such as Mason Industries MDC-10. Curb shall be type RSC-dB as manufactured by Mason Industries, Inc.

23. Not Used
24. Flexible stainless steel hose shall have stainless steel braid and carbon steel fittings. Sizes 3 inches and larger shall be flanged. Smaller sizes shall have male nipples. Minimum lengths shall be as tabulated:

    a. Flanged Male Nipples

3 x 14	10 x 26	1/2 x 9	1-1/2 x 13
4 x 15	12 x 28	3/4 x 10	2 x 14
5 x 19	14 x 30	1 x 11	2-1/2 x 18
6 x 20	16 x 32	1-1/4 x 12	8 x 22

    b. Hoses shall be installed on the equipment side of the shut-off valves horizontally and parallel to the equipment shafts wherever possible. Hoses shall be type BSS as manufactured by Mason Industries, Inc.

25. Not Used
26. Not Used
27. Not Used
28. The horizontal thrust restraint shall consist of a spring element in series with a neoprene molded cup as described in Type 5 with the same deflection as specified for the mountings or hangers. The spring element shall be designed so it can be preset for thrust at the factory and adjusted in the field to allow for a maximum of 1/4-inch movement at start and stop. The assembly shall be furnished with 1 rod and angle brackets for attachment to both the equipment and the duct work or the equipment and the structure. Horizontal restraints shall be attached at the centerline of thrust and symmetrical on either side of the unit. Horizontal thrust restraints shall be type WBI/WBD as manufactured by Mason Industries, Inc.
29. Housekeeping pad anchors shall consist of a ductile iron casting that is tapered and hexagonal, smaller at its base than its top. The upper portion shall have holes for rebar to pass through. The anchor shall be continuously threaded from top to bottom for the attachment of soleplates. Housekeeping pad anchors shall be attached to the structural

slab using a stud wedge anchor. Housekeeping pad anchors shall be type HPA and stud wedge anchor shall be type SAS both as manufactured by Mason Industries, Inc.

VIBRATION ISOLATION AND SEISMIC RESTRAINT TYPES

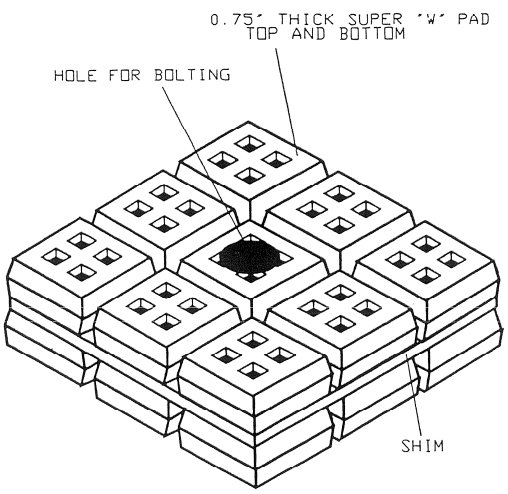

LAYERED SUPER "W" PADS
WITH STEEL SHIM
TYPE 1

NOT USED

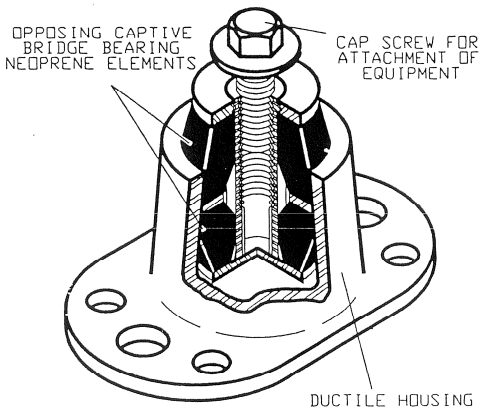

RESTRAINED BR MOUNT
OSHPD PRE-APPROVAL NO. 0201
TYPE 2

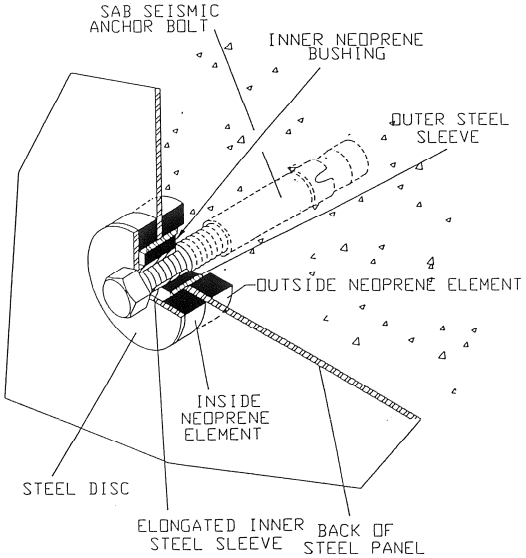

PB BUSHING
TYPE 3

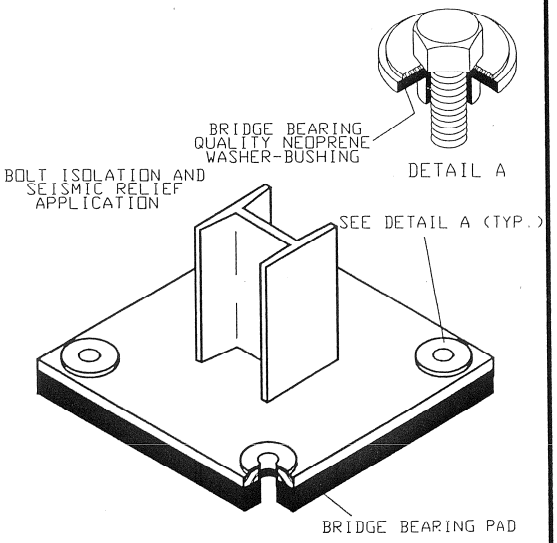

THIS VIEW SHOWN WITHOUT BOLTS
AND STEEL WASHERS FOR CLARITY

HG NEOPRENE BUSHING
TYPE 4

VIBRATION ISOLATION AND SEISIC RESTRAINT TYPES

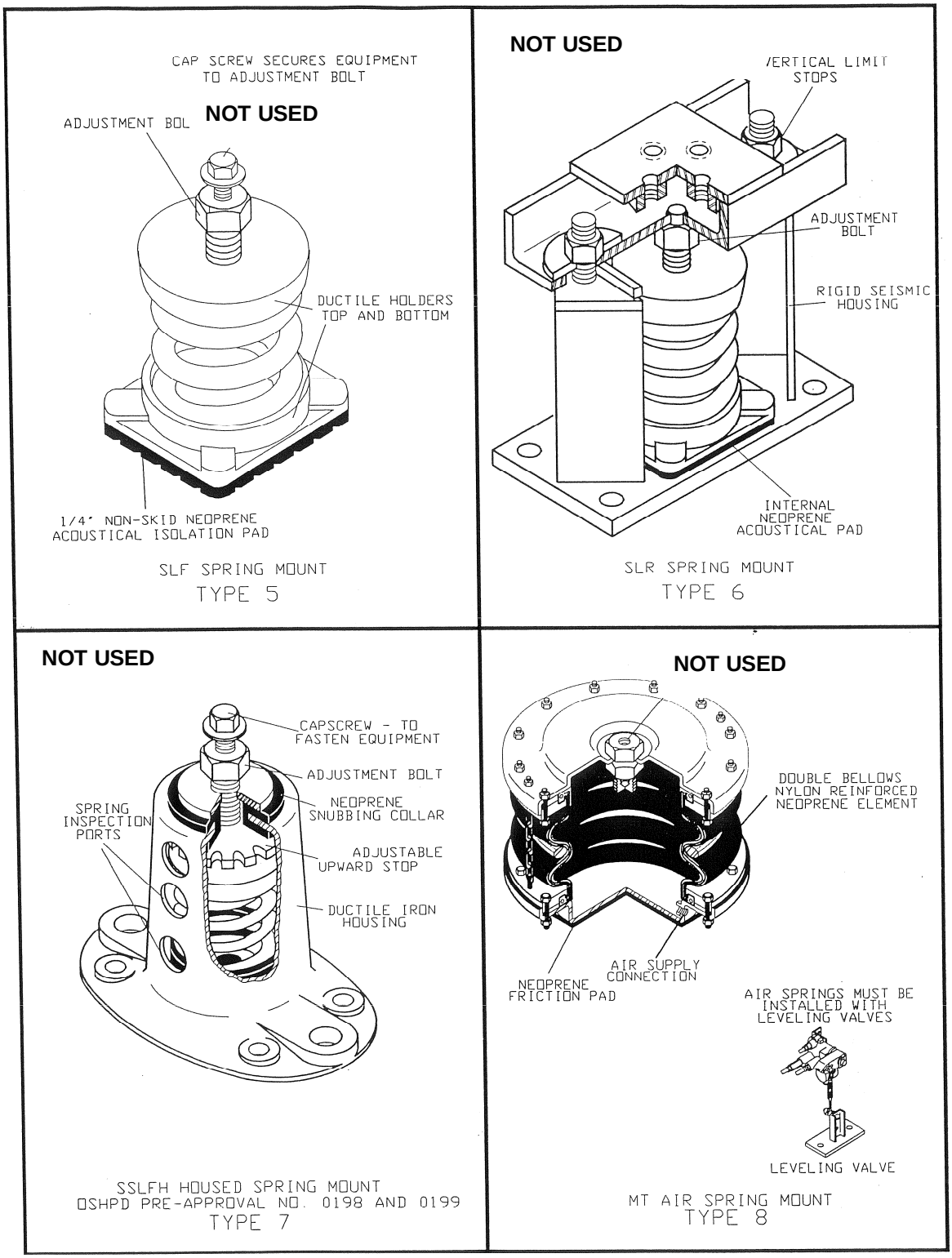

VIBRATION ISOLATION AND SEISMIC RESTRAINT TYPES

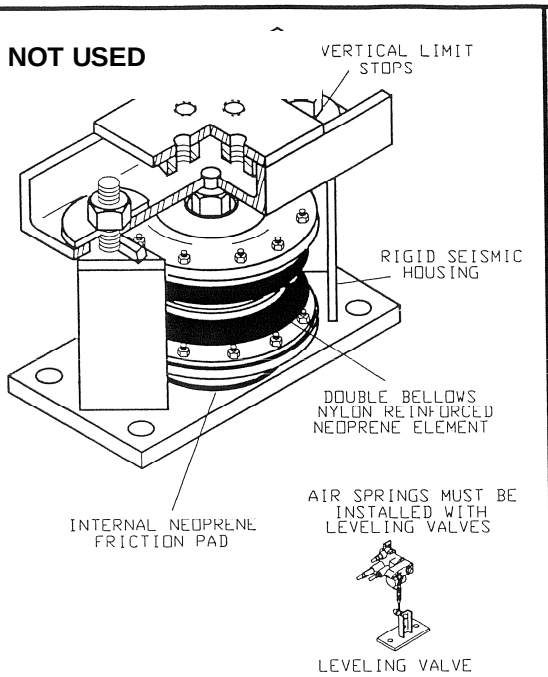

SLR AIR SPRING MOUNT
TYPE 9

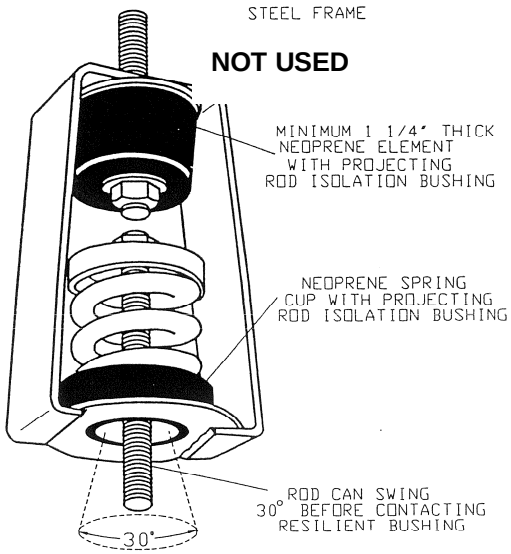

30N SPRING AND NEOPRENE HANGER
TYPE 10

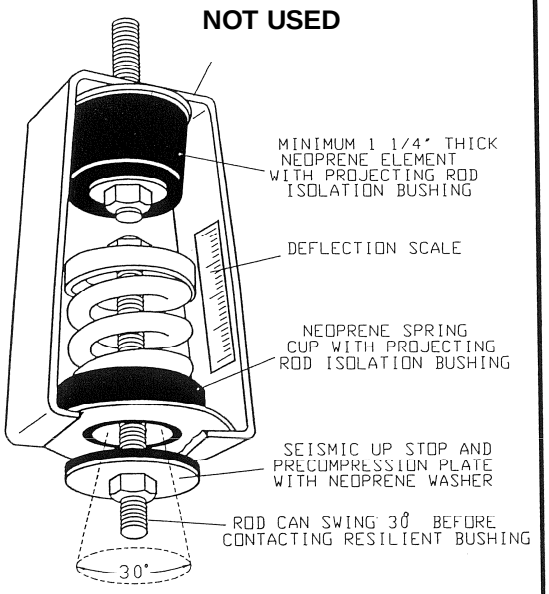

PC30N PRECOMPRESSED
SPRING AND NEOPRENE HANGER
TYPE 11

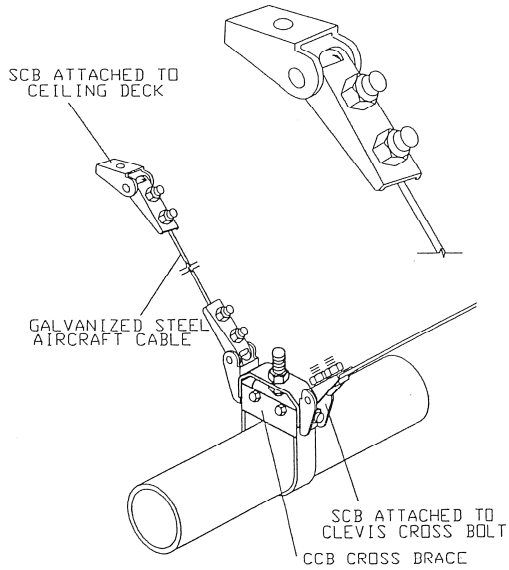

SCB, SCBH, AND SCBV CABLE RESTRAINTS
OSPD PRE-APPROVAL NO. 0202
TYPE 12

VIBRATION ISOLATION AND SEISIC RESTRAINT TYPES

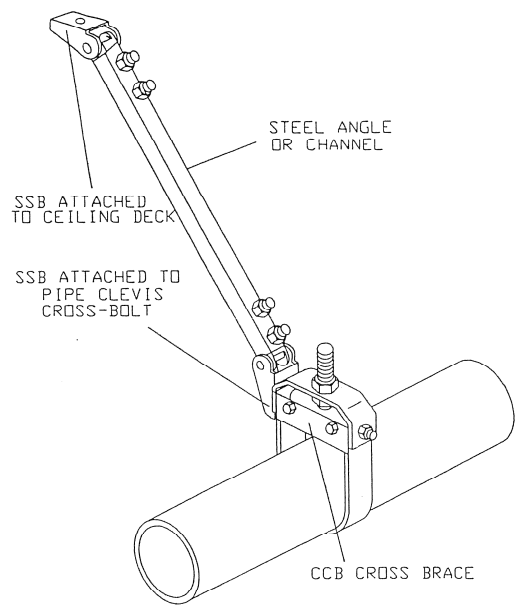

SEISMIC SOLID BRACE
OSHPD PRE-APPROVAL NO. 0202

TYPE 13

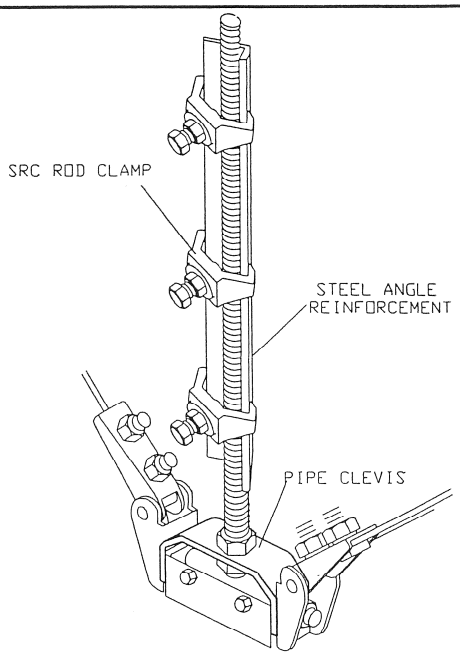

SRC SEISMIC ROD CLAMPS
OSHPD PRE-APPROVAL NO. 0203

TYPE 14

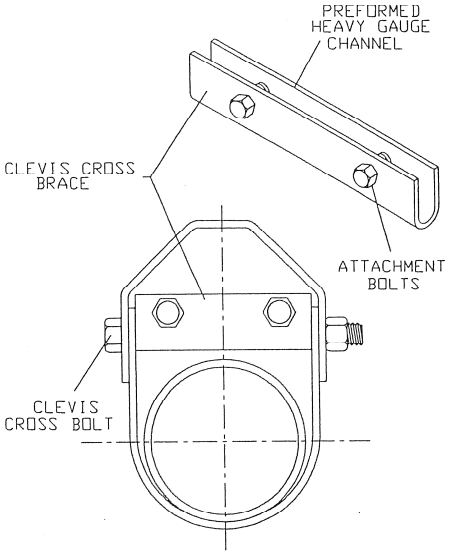

CCB CLEVIS CROSS BRACE
OSHPD PRE-APPROVAL NO. 0203 PENDING

TYPE 15

NOT USED

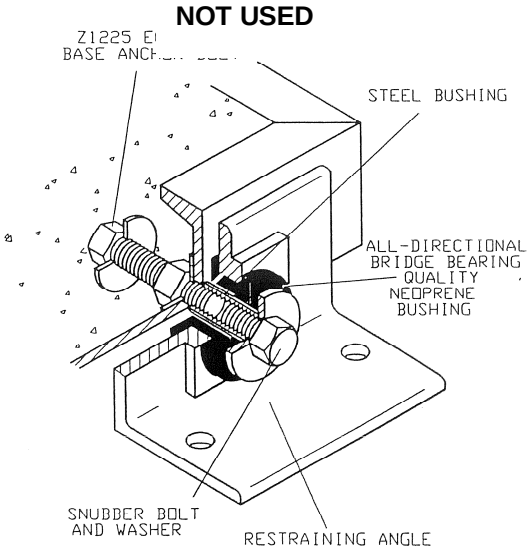

Z1225 ALL DIRECTIONAL SEISMIC SNUBBER
OSHPD PRE-APPROVAL NO. 0196

TYPE 16

VIBRATION ISOLATION AND SEISMIC RESTRAINT TYPES

NOT USED

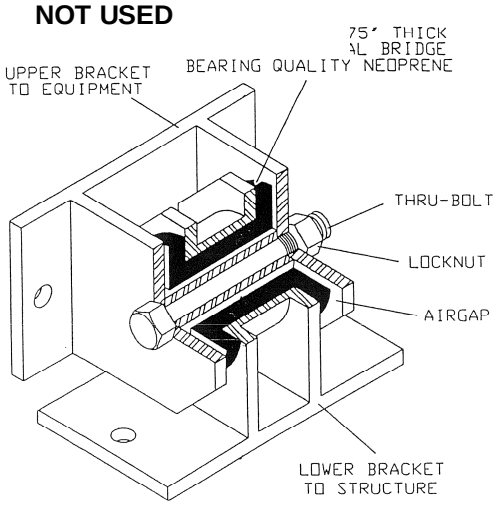

Z1011 ALL DIRECTIONAL SEISMIC SNUBBER
OSHPD PRE-APPROVAL NO. 0197 PENDING

TYPE 17

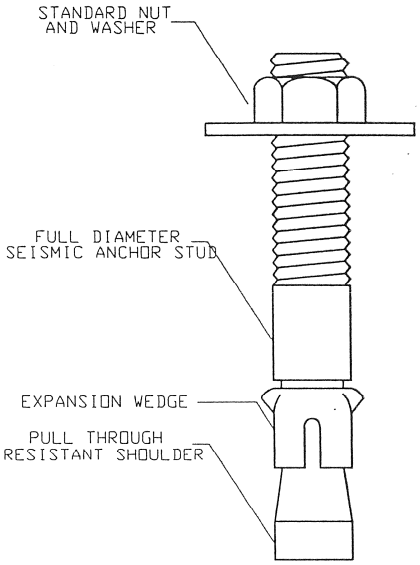

SAS SEISMIC ANCHOR STUD
ICBO APPROVAL REPORT NO. 1821

TYPE 18

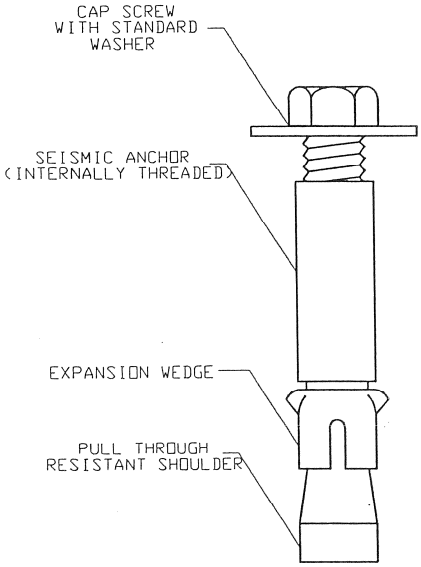

SAB SEISMIC ANCHOR BOLT
ICBO APPROVAL REPORT NO. 5063

TYPE 19

NOT USED

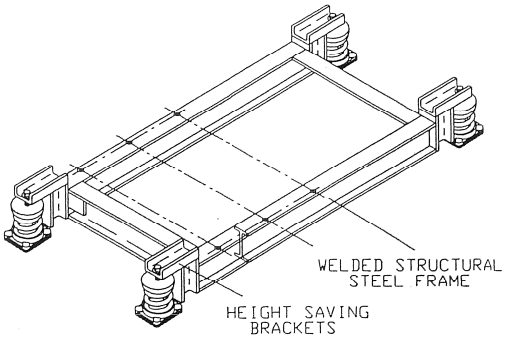

WF WIDE FLANGE STEEL BASE

TYPE 20

VIBRATION ISOLATION AND SEISMIC RESTRAINT TYPES

NOT USED

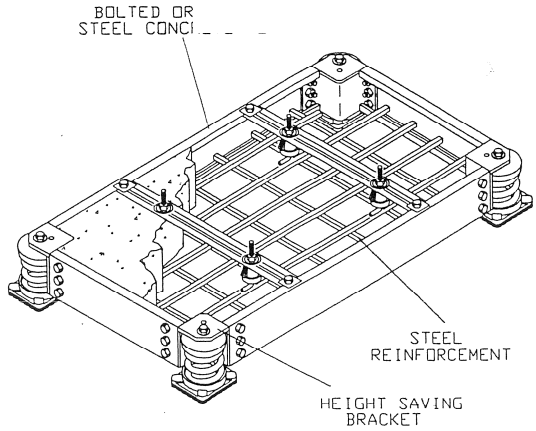

BMK CONCRETE FORM BASE
TYPE 21

NOT USED

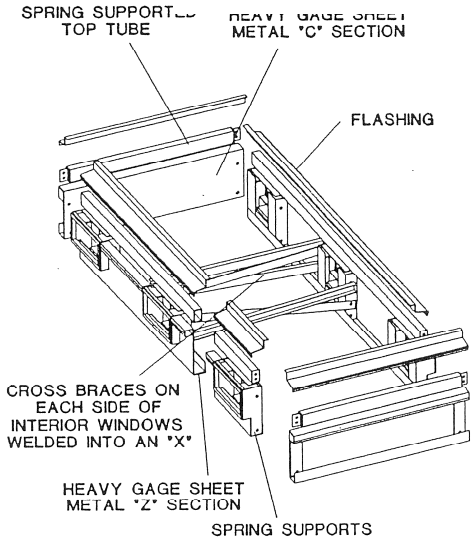

RSC SEISMIC ROOFTOP CURB
SPECIFICATION 22

NOT USED

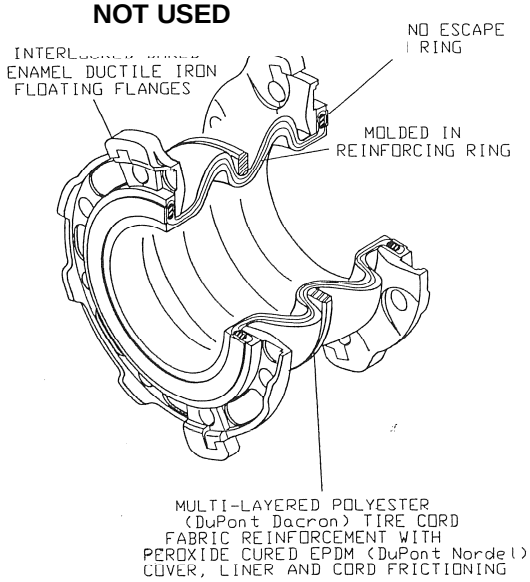

SFDEJ MOLDED EXPANSION JOINT
TYPE 23

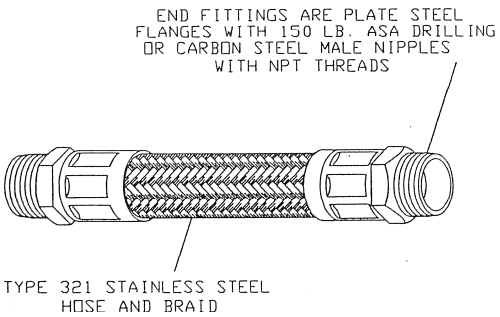

BSS STAINLESS STEEL HOSE
TYPE 24

VIBRATION ISOLATION AND SEISMIC RESTRAINT TYPES

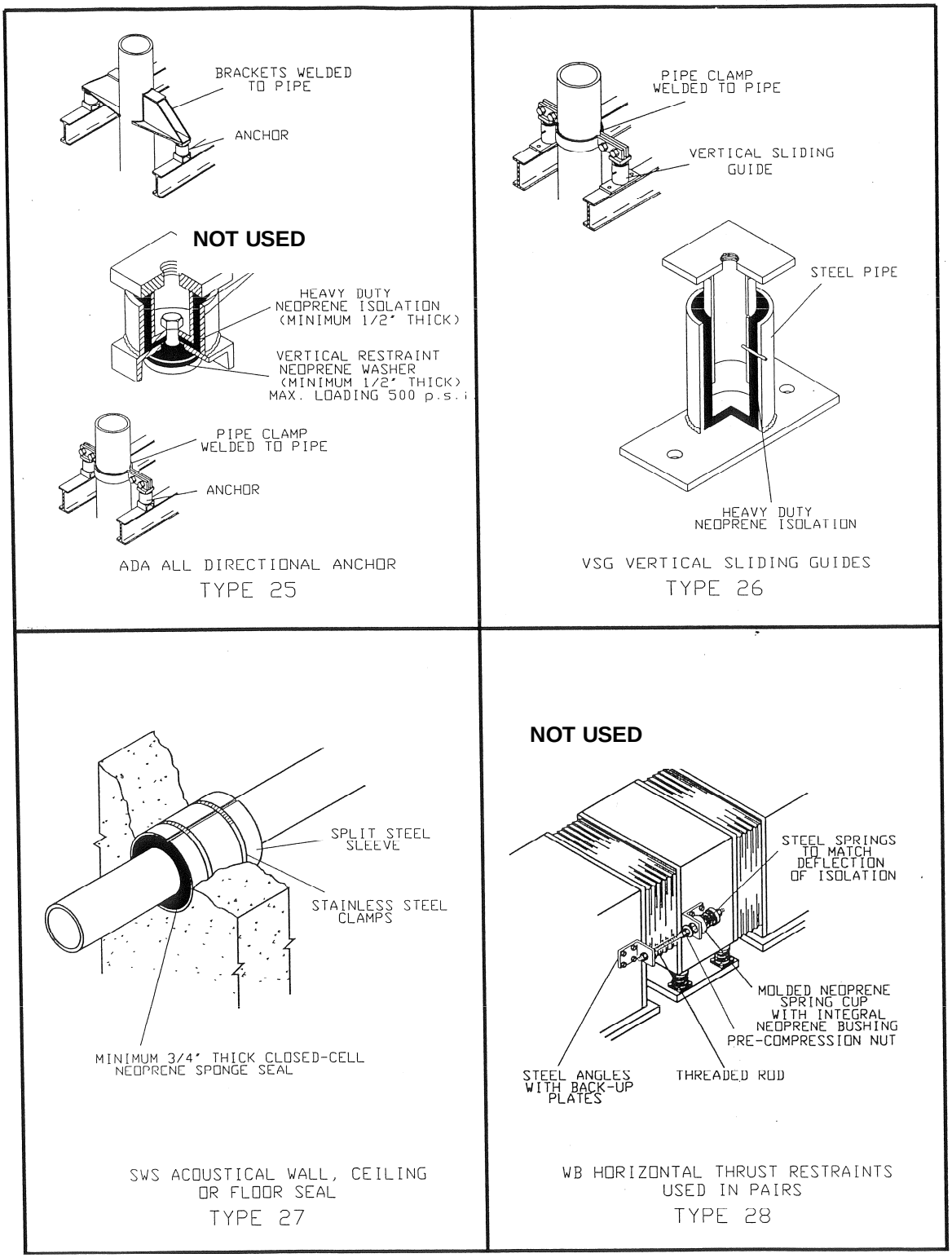

PART 3 - EXECUTION

3.1 GENERAL

A. All vibration isolators and seismic restraint systems shall be installed in strict accordance with the manufacturers written instructions and all certified submittal data.

B. Installation of vibration isolators and seismic restraints shall not cause any change of position of equipment, piping or ductwork resulting in stresses or misalignment.

C. No rigid connections between equipment and the building structure shall be made that degrades the noise and vibration control system herein specified.

D. The Contractor shall not install any equipment, piping, or duct which makes rigid connections with the building unless isolation is not specified. "Building" includes, but is not limited to, slabs, beams, columns, studs and walls.

E. Coordinate with Work of other Sections to avoid rigid contact with the building.

F. Any conflicts with Work of other Sections which will result in rigid contact with equipment or piping due to inadequate space or other unforeseen conditions shall be brought to the Architect's/Engineer's attention prior to installation. Corrective work necessitated by conflicts after installation shall be at the Contractor's expense.

G. Bring to the Architect's/Engineer's attention any discrepancies between the Types and the field conditions or changes required due to specific equipment selection, prior to installation. Corrective work necessitated by discrepancies after installation shall be at the Contractor's expense.

H. Correct, at no additional cost, all installations which are deemed defective in workmanship and materials at the Contractor's expense.

I. Overstressing of the building structure shall not occur because of overhead support of equipment. Contractor shall submit loads to the Engineer for approval. Generally, bracing may occur from:

1. Flanges of structural beams.
2. Upper truss cords in bar joist construction.
3. Cast in place inserts or wedge type drill-in concrete anchors.

J. Type 12 cable restraints shall be installed slightly slack to avoid short circuiting the isolated suspended equipment, or piping.

K. Type 12 cable assemblies are installed taut on non-isolated systems. Type 13 seismic solid braces may be used in place of cables on rigidly attached systems only.

L. At locations where Type 12 or 13 restraints are located, the support rods must be braced when necessary to accept compressive loads with Type 14 braces.

M. At all locations where Type 12 or 13 restraints are attached to pipe clevises, the clevis cross bolt shall be reinforced with Type 15 braces.

N. Drill-in concrete anchors for ceiling and wall installation shall be Type 18, and Type 19 female wedge type for floor mounted equipment.

O. Vibration isolation manufacturer shall furnish integral structural steel bases as required. Independent steel rails are not permitted on this Project.

P. Hand built elastomeric expansion joints may be used when pipe sizes exceed 24 inches or specified movements exceed Type 23 capabilities.

Q. Where piping passes through walls, floors or ceilings the vibration isolation manufacturer shall provide Type 27 wall seals.

R. Air handling equipment and centrifugal fans shall be protected against excessive displacement which results from high air thrust in relation to the equipment weight. Horizontal thrust restraint shall be Type 28 (see selection guide).

S. Locate isolation hangers as near to the overhead support structure as possible.

3.2 SEISMIC RESTRAINTS

A. Vibration Isolation of Piping

1. Horizontal pipe isolation: The first three pipe hangers in the main lines near the mechanical equipment shall be as described in Type 11. Type 11 hangers shall also be used in all transverse braced isolated locations. Brace hanger rods with Type 14 SRC clamps. Horizontal runs in all other locations throughout the building shall be isolated by hangers as described in Type 10. Floor supported piping shall rest on isolators as described in Type 6. Heat exchangers and expansion tanks are considered part of the piping run. The first three isolators from the isolated equipment will have the same static deflection as specified for the mountings under the connected equipment. If piping is connected to equipment located in basements and hangs from ceilings under occupied spaces the first three hangers shall have 0.75-inch deflection for pipe sizes up to and including 3 inches, 1-1/2 inches deflection for pipe sizes up to and including 6 inches, and 2-1/2 inches deflection thereafter. Hangers shall be located as close to the overhead structure as practical. Where piping connects to mechanical equipment install Type 23 expansion joints or Type 24 stainless hoses.

B. Seismic Restraint of Piping

1. Seismically restrain all piping listed as a, b or c below. Use Type 12 cables if isolated. Type 12 or 13 restraints may be used on unisolated piping.

a. Fuel oil piping, gas piping, medical gas piping, and compressed air piping that is 1 inch I.D. or larger.
b. Piping located in boiler rooms, mechanical equipment rooms, and refrigeration equipment rooms that is 1-1/4 inches I.D. and larger.
c. All other piping 2-1/2 inches diameter and larger.

2. Transverse piping restraints shall be at 40 feet maximum spacing for all pipe sizes, except where lesser spacing is required to limit anchorage loads.
3. Longitudinal restraints shall be at 80 feet maximum spacing for all pipe sizes, except where lesser spacing is required to limit anchorage loads.
4. Where thermal expansion is a consideration, guides and anchors may be used as transverse and longitudinal restraints provided they have a capacity equal to or greater than the restraint loads in addition to the loads induced by expansion or Contraction.
5. For fuel oil and all gas piping, transverse restraints shall be at 20 feet maximum and longitudinal restraints at 40 feet maximum spacing.
6. Transverse restraint for one pipe Section may also act as a longitudinal restraint for a pipe Section of the same size connected perpendicular to it if the restraint is installed within 24 inches of the elbow or TEE or combined stresses are within allowable limits at longer distances.
7. Use hold-down clamps to attach pipe to all trapeze members before applying restraints in a manner similar to clevis supports.
8. Branch lines will not be allowed as a restraint for main lines.
9. Cast iron pipe of all types, glass pipe and any other pipes with a four band shield and clamp assembly shall be braced by means of Type 10 hangers of Type 5 floor isolators. Spring deflection shall be a minimum of 0.75 inches.

C. Seismic Restraint of Ductwork

1. Seismically restrain all duct work with Type 12 or 13 restraints as listed below:

a. Restrain rectangular ducts with cross Sectional area of 6 sq.ft. or larger.
b. Restrain round ducts with diameters of 28 inches or larger.
c. Restrain flat oval ducts the same as rectangular ducts of the same nominal size.

2. Transverse restraints shall occur at 30 foot intervals or at both ends of the duct run if less than the specified interval. Transverse restraints shall be installed at each duct turn and at each end of a duct run.
3. Longitudinal restraints shall occur at 60 foot intervals with at least one restraint per duct run. Transverse restraints for one duct Section may also act as a longitudinal restraint for a duct Section connected perpendicular to it if the restraints are installed within 4 feet of the intersection of the ducts and if the restraints are sized for the larger duct. Duct joints shall conform to SMACNA duct construction standards.
4. The ductwork must be reinforced at the restraint locations. Reinforcement shall consist of an additional angle on top of the ductwork that is attached to the support hanger rods. Ductwork is to be attached to both upper angle and lower trapeze.

5. A group of ducts may be combined in a larger frame so that the combined weights and dimensions of the ducts are less than or equal to the maximum weight and dimensions of the duct for which bracing details are selected.
6. Walls, including gypsum board non bearing partitions, which have ducts running through them may replace a typical transverse brace. Provide channel framing around ducts and solid blocking between the duct and frame.

D. All mechanical equipment shall be vibration isolated and seismically restrained as per the schedules on the Drawings.

3.3 SEISMIC RESTRAINT EXCLUSIONS

A. Piping
1. All clevis or trapeze supported piping suspended from hanger rods where the point of attachment is less than the 12 inches in length from the structure to the structural connection of the clevis or trapeze.

B. Ductwork

1. Rectangular, square or oval ducts less than 6 sq.ft. in cross Sectional area.
2. Round duct less than 28 inches in diameter.
3. Duct supported by hanger rods where the point of attachment is less than 12 inches in length from the structure to the structural connection of the ductwork. Suspended Equipment

END OF SECTION

PART 1 - GENERAL

1.1 RELATED DOCUMENTS

A. Drawings and general provisions of the Contract, including General and Supplementary Conditions and Division 01 Specification Sections, apply to this Section.

1.2 SUMMARY

A. Section Includes:

1. Equipment labels.
2. Warning signs and labels.
3. Pipe labels.
4. Stencils.
5. Valve tags.
6. Warning tags.

1.3 REFERENCES

A. American Society of Mechanical Engineers:
1. ASME A13.1 – Scheme for the Identification of Piping Systems.

1.4 SUBMITTALS

A. Product Data: For each type of product indicated.

B. Samples: For color, letter style, and graphic representation required for each identification material and device.

C. Equipment Label Schedule: Include a listing of all equipment to be labeled with the proposed content for each label.

D. Valve numbering scheme.

E. Valve Schedules: For each piping system to include in maintenance manuals.

1.5 COORDINATION

A. Coordinate installation of identifying devices with completion of covering and painting of surfaces where devices are to be applied.

B. Coordinate installation of identifying devices with locations of access panels and doors.

C. Install identifying devices before installing acoustical ceilings and similar concealment.

PART 2 - PRODUCTS

2.1 EQUIPMENT LABELS

A. Metal Labels for Equipment:
   1. Material and Thickness: Brass, 0.032-inch or Stainless steel, 0.025-inch minimum thickness, and having predrilled or stamped holes for attachment hardware.
   2. Minimum Label Size: Length and width vary for required label content, but not less than 2-1/2 by 3/4 inch.
   3. Minimum Letter Size: 1/4 inch for name of units if viewing distance is less than 24 inches, 1/2 inch for viewing distances up to 72 inches, and proportionally larger lettering for greater viewing distances. Include secondary lettering two-thirds to three-fourths the size of principal lettering.
   4. Fasteners: Stainless-steel self-tapping screws.
   5. Adhesive: Contact-type permanent adhesive, compatible with label and with substrate.

B. Plastic Labels for All Equipment:

   1. Material and Thickness: Multilayer, multicolor, plastic labels for mechanical engraving, 1/16 inch thick, and having predrilled holes for attachment hardware.
   2. Letter Color: White.
   3. Background Color: Black.
   4. Maximum Temperature: Able to withstand temperatures up to 160 deg F .
   5. Minimum Label Size: Length and width vary for required label content, but not less than 2-1/2 by 3/4 inch.
   6. Minimum Letter Size: 1/4 inch for name of units if viewing distance is less than 24 inches, 1/2 inch for viewing distances up to 72 inches, and proportionately larger lettering for greater viewing distances. Include secondary lettering two-thirds to three-fourths the size of principal lettering.
   7. Fasteners: Stainless-steel rivets or self-tapping screws.
   8. Adhesive: Contact-type permanent adhesive, compatible with label and with substrate.

C. Label Content: Include equipment's drawing designation or unique equipment number as scheduled on the drawings, capacity (airflow or water flow), external operating pressure (in W.C or FT W.C), electrical power (HP), and electrical voltage (Volts & Phase).

D. Equipment Label Schedule: For each item of equipment to be labeled, on 8-1/2-by-11-inch bond paper. Tabulate equipment identification number and identify Drawing numbers where equipment is indicated (plans, details, and schedules), plus the Specification Section number

and title where equipment is specified. Equipment schedule shall be included in operation and maintenance data.

2.2 WARNING SIGNS AND LABELS

A. Material and Thickness: Multilayer, multicolor, plastic labels for mechanical engraving, 1/8 inch thick, and having predrilled holes for attachment hardware.

B. Letter Color: Red.

C. Background Color: White.

D. Maximum Temperature: Able to withstand temperatures up to 160 deg F.

E. Minimum Label Size: Length and width vary for required label content, but not less than 2-1/2 by 3/4 inch.

F. Minimum Letter Size: 1/4 inch for name of units if viewing distance is less than 24 inches, 1/2 inch for viewing distances up to 72 inches, and proportionately larger lettering for greater viewing distances. Include secondary lettering two-thirds to three-fourths the size of principal lettering.

G. Fasteners: Stainless-steel rivets or self-tapping screws.

H. Adhesive: Contact-type permanent adhesive, compatible with label and with substrate.

I. Label Content: Include caution and warning information, plus emergency notification instructions.

2.3 PIPE LABELS

A. General Requirements for Manufactured Pipe Labels: Preprinted, color-coded, with lettering indicating service, and showing flow direction.

B. Pretensioned Pipe Labels: Precoiled, semi-rigid plastic formed to cover full circumference of pipe and to attach to pipe without fasteners or adhesive.

C. Self-Adhesive Pipe Labels: Printed plastic with contact-type, permanent-adhesive backing.

D. Pipe Label Contents: Include identification of piping service using same designations or abbreviations as used on Drawings, pipe size, and an arrow indicating flow direction.

1. Flow-Direction Arrows: Integral with piping system service lettering to accommodate both directions, or as separate unit on each pipe label to indicate flow direction.
2. Lettering Size: At least 1-1/2 inches high.

2.4 VALVE TAGS

A. Valve Tags: Stamped or engraved with 1/4-inch letters for piping system abbreviation and 1/2-inch numbers.

1. Tag Material: Anodized aluminum, 0.032-inch minimum thickness, and having predrilled or stamped holes for attachment hardware.
2. Fasteners: Brass beaded chain with S-hook.

B. Valve Schedules: For each piping system, on 8-1/2-by-11-inch bond paper. Tabulate valve number, piping system, system abbreviation (as shown on valve tag), location of valve (room or space), normal-operating position (open, closed, or modulating), and variations for identification. Mark valves for emergency shutoff and similar special uses.

1. Valve-tag schedule shall be included in operation and maintenance data.

2.5 WARNING TAGS

A. Warning Tags: Preprinted or partially preprinted, accident-prevention tags, of plasticized card stock with matte finish suitable for writing.

1. Size: 3 by 5-1/4 inches.
2. Fasteners: Brass grommet and wire.
3. Nomenclature: Large-size primary caption such as "DANGER," "CAUTION," or "DO NOT OPERATE."
4. Color: Yellow background with black lettering.

PART 3 - EXECUTION

3.1 PREPARATION

A. Clean piping and equipment surfaces of substances that could impair bond of identification devices, including dirt, oil, grease, release agents, and incompatible primers, paints, and encapsulants.

3.2 EQUIPMENT LABEL INSTALLATION

A. Install or permanently fasten labels on each major item of mechanical equipment.

B. Locate equipment labels where accessible and visible.

3.3 PIPE LABEL INSTALLATION

A. Piping Color-Coding: Painting of piping is specified in Division 09.

B. Do not provide pipe or duct labels where pipes and ducts are painted to coordinate with the finished ecstatic value of a space. Coordinate with the architect.

C. Locate pipe labels where piping is exposed or above accessible ceilings in finished spaces; machine rooms; accessible maintenance spaces such as shafts, tunnels, and plenums; and exterior exposed locations as follows:

1. Near each valve and control device.
2. Near each branch connection, excluding short takeoffs for fixtures and terminal units. Where flow pattern is not obvious, mark each pipe at branch.
3. Near penetrations through walls, floors, ceilings, and inaccessible enclosures.
4. At access doors, manholes, and similar access points that permit view of concealed piping.
5. Near major equipment items and other points of origination and termination.
6. Spaced at maximum intervals of 25 feet along each run. Reduce intervals to 10 feet in areas of congested piping and equipment.
7. On piping above removable acoustical ceilings. Omit intermediately spaced labels.

D. Pipe Label Color Schedule:

1. Chilled-Water Piping:
   a. Background Color: Blue.
   b. Letter Color: Black.

2. Condenser-Water Piping:
   a. Background Color: Green.
   b. Letter Color: Black.

3. Heating Water Piping:
   a. Background Color: Red.
   b. Letter Color: Black.

4. Refrigerant Piping:
   a. Background Color: White.
   b. Letter Color: Black.

3.4 VALVE-TAG INSTALLATION

A. Install tags on valves and control devices in piping systems, except check valves; valves within factory-fabricated equipment units; shutoff valves; faucets; convenience and lawn-watering hose connections; and HVAC terminal devices and similar roughing-in connections of end-use fixtures and units. List tagged valves in a valve schedule.

B. Valve-Tag Application Schedule: Tag valves according to size, shape, and color scheme and with captions similar to those indicated in the following subparagraphs:

1. Valve-Tag Size and Shape:
   a. Chilled Water: 1-1/2 inches round.
   b. Condenser Water: 1-1/2 inches round.
   c. Refrigerant: 1-1/2 inches triangle.
   d. Hot Water: 1-1/2 inches round.
   e. Gas: 1-1/2 inches square.

2. Valve-Tag and letter color shall match pipe label colors.

3.5 WARNING-TAG INSTALLATION

A. Write required message on, and attach warning tags to, equipment and other items where required.

END OF SECTION 230553

SECTION 23 05 93 - TESTING, ADJUSTING, AND BALANCING FOR HVAC

PART 1 - GENERAL

1.1 RELATED DOCUMENTS

A. Drawings and general provisions of the Contract, including General and Supplementary Conditions and Division 01 Specification Sections, apply to this Section.

1.2 SUMMARY

A. Section Includes:
   1. Balancing of new hydronic piping systems.
   2. Balancing and verification of existing hydronic piping systems (e.g. Air Handling Units).

1.3 DEFINITIONS

A. AABC: Associated Air Balance Council.

B. NEBB: National Environmental Balancing Bureau.

C. TAB: Testing, adjusting, and balancing.

D. TABB: Testing, Adjusting, and Balancing Bureau.

E. TAB Specialist: An entity engaged to perform TAB Work.

1.4 SUBMITTALS

A. Qualification Data: Within 15 days of Contractor's Notice to Proceed, submit documentation that the TAB contractor and this Project's TAB team members meet the qualifications specified in "Quality Assurance" Article.

B. Contract Documents Examination Report: Within 15 days of Contractor's Notice to Proceed, submit the Contract Documents review report as specified in Part 3.

C. Strategies and Procedures Plan: Within 30 days of Contractor's Notice to Proceed, submit TAB strategies and step-by-step procedures as specified in "Preparation" Article.

D. Certified TAB reports.

E. Retain first paragraph below for verification purposes unless standard report forms from AABC, NEBB, or TABB are acceptable.

F. Sample report forms.

G. Instrument calibration reports, to include the following:
   1. Instrument type and make.
   2. Serial number.
   3. Application.
   4. Dates of use.
   5. Dates of calibration.

1.5 QUALITY ASSURANCE

A. TAB Contractor Qualifications: Engage a TAB entity certified by NEBB or TABB.

B. TAB Conference: Meet with Engineer approval of the TAB strategies and procedures plan to develop a mutual understanding of the details. Require the participation of the TAB field supervisor and technicians. Provide seven days' advance notice of scheduled meeting time and location.
   1. Agenda Items:
      a. The Contract Documents examination report.
      b. The TAB plan.
      c. Coordination and cooperation of trades and subcontractors.
      d. Coordination of documentation and communication flow.

C. Certify TAB field data reports and perform the following:
   1. Review field data reports to validate accuracy of data and to prepare certified TAB reports.
   2. Certify that the TAB team complied with the approved TAB plan and the procedures specified and referenced in this Specification.

D. TAB Report Forms: Use standard TAB contractor's forms approved by Engineer.

E. Instrumentation Type, Quantity, Accuracy, and Calibration: As described in ASHRAE 111, Section 5, "Instrumentation."

F. ASHRAE/IESNA Compliance: Applicable requirements in ASHRAE/IESNA 90.1, Section 6.7.2.3 - "System Balancing."

1.6 PROJECT CONDITIONS

A. Full Owner Occupancy: Owner will occupy the site and existing building during entire TAB period. Cooperate with Owner during TAB operations to minimize conflicts with Owner's operations.

B. Partial Owner Occupancy: Owner may occupy completed areas of building before Substantial Completion. Cooperate with Owner during TAB operations to minimize conflicts with Owner's operations.

1.7 COORDINATION

A. Notice: Provide seven days' advance notice for each test. Include scheduled test dates and times.

B. Perform TAB after leakage and pressure tests on air and water distribution systems have been satisfactorily completed.

PART 2 - PRODUCTS (Not Applicable)

PART 3 - EXECUTION

3.1 TAB SPECIALISTS

A. Subject to compliance with requirements, engage one of the following:
   1. Arden Engineering Constructors
   2. R.K. Baker & Associates
   3. Votta Associates, Inc.

3.2 EXAMINATION

A. Examine the Contract Documents to become familiar with Project requirements and to discover conditions in systems' designs that may preclude proper TAB of systems and equipment.

B. Examine systems for installed balancing devices, such as thermometer wells, flow-control devices, and balancing valves and fittings. Verify that locations of these balancing devices are accessible.

C. Examine the approved submittals for HVAC systems and equipment.

D. Examine design data including HVAC system descriptions, statements of design assumptions for environmental conditions and systems' output, and statements of philosophies and assumptions about HVAC system and equipment controls.

E. Examine equipment performance data including pump curves.

1. Relate performance data to Project conditions and requirements, including system effects that can create undesired or unpredicted conditions that cause reduced capacities in all or part of a system.
2. Calculate system-effect factors to reduce performance ratings of HVAC equipment when installed under conditions different from the conditions used to rate equipment performance. Compare results with the design data and installed conditions.

F. Examine system and equipment installations and verify that field quality-control testing, cleaning, and adjusting specified in individual Sections have been performed.

G. Examine test reports specified in individual system and equipment Sections.

H. Examine HVAC equipment and filters and verify that bearings are greased, belts are aligned and tight, and equipment with functioning controls is ready for operation.

I. Examine strainers. Verify that startup screens are replaced by permanent screens with indicated perforations.

J. Examine three-way valves for proper installation for their intended function of diverting or mixing fluid flows.

K. Examine operating safety interlocks and controls on HVAC equipment.

L. Report deficiencies discovered before and during performance of TAB procedures. Observe and record system reactions to changes in conditions. Record default set points if different from indicated values.

3.3 PREPARATION

A. Prepare a TAB plan that includes strategies and step-by-step procedures.

B. Complete system-readiness checks and prepare reports. Verify the following:
1. Permanent electrical-power wiring is complete.
2. Hydronic systems are filled, clean, and free of air.
3. Automatic temperature-control systems are operational.
4. Equipment access doors are securely closed.
5. Isolating and balancing valves are open and control valves are operational.

3.4 GENERAL PROCEDURES FOR TESTING AND BALANCING

A. Perform testing and balancing procedures on each system according to the procedures contained in AABC's "National Standards for Total System Balance", ASHRAE 111, NEBB's "Procedural Standards for Testing, Adjusting, and Balancing of Environmental Systems", SMACNA's "HVAC Systems - Testing, Adjusting, and Balancing" and in this Section.

B. Mark equipment and balancing devices, including valve position indicators and similar controls and devices, with paint or other suitable, permanent identification material to show final settings.

C. Take and report testing and balancing measurements in inch-pound (IP) units.

3.5 WATER SYSTEM PROCEDURE

A. Adjust water systems to provide required or design quantities.

B. Use calibrated Venturi tubes, orifices, or other metered fittings and pressure gages to determine flow rates for system balance. Where flow metering devices are not installed, base flow balance on temperature difference across various heat transfer elements in the system.

C. Effect system balance with automatic control valves fully open to heat transfer elements.

D. Effect adjustment of water distribution systems by means of balancing cocks, valves, and fittings. Do not use service or shut-off valves for balancing unless indexed for balance point.

E. Where available pump capacity is less than total flow requirements or individual system parts, full flow in one part may be simulated by temporary restriction of flow to other parts.

3.6 TOLERANCES

A. Set HVAC system's air flow rates and water flow rates within the following tolerances:
   1. Heating-Water Flow Rate: Plus or minus 10 percent.
   2. Cooling-Water Flow Rate: Plus or minus 10 percent.

3.7 FINAL REPORT

A. General: Prepare a certified written report; tabulate and divide the report into separate sections for tested systems and balanced systems.
   1. Include a certification sheet at the front of the report's binder, signed and sealed by the certified testing and balancing engineer.
   2. Include a list of instruments used for procedures, along with proof of calibration.

B. Final Report Contents: In addition to certified field-report data, include the following:
   1. Pump curves.
   2. Manufacturers' test data.
   3. Field test reports prepared by system and equipment installers.
   4. Other information relative to equipment performance; do not include Shop Drawings and product data.

C. General Report Data: In addition to form titles and entries, include the following data:

1. Title page.
2. Name and address of the TAB contractor.
3. Project name.
4. Project location.
5. Architect's name and address.
6. Engineer's name and address.
7. Contractor's name and address.
8. Report date.
9. Signature of TAB supervisor who certifies the report.
10. Table of Contents with the total number of pages defined for each section of the report. Number each page in the report.
11. Summary of contents including the following:
    a. Indicated versus final performance.
    b. Notable characteristics of systems.
    c. Description of system operation sequence if it varies from the Contract Documents.
12. Nomenclature sheets for each item of equipment.
13. Data for terminal units, including manufacturer's name, type, size, and fittings.
14. Notes to explain why certain final data in the body of reports vary from indicated values.
15. Test conditions for fans and pump performance forms including the following:
    a. Settings for outdoor-, return-, and exhaust-air dampers.
    b. Conditions of filters.
    c. Cooling coil, wet- and dry-bulb conditions.
    d. Face and bypass damper settings at coils.
    e. Fan drive settings including settings and percentage of maximum pitch diameter.
    f. Inlet vane settings for variable-air-volume systems.
    g. Settings for supply-air, static-pressure controller.
    h. Other system operating conditions that affect performance.

D. System Diagrams: Include schematic layouts of hydronic distribution systems. Present each system with single-line diagram and include the following:
1. Water and steam flow rates.
2. Pipe and valve sizes and locations.
3. Terminal units.
4. Balancing stations.
5. Position of balancing devices. Net positive suction head is important for pumps in open circuits and for pumps handling fluids at elevated temperatures.

E. Instrument Calibration Reports:
1. Report Data:
    a. Instrument type and make.
    b. Serial number.
    c. Application.
    d. Dates of use.
    e. Dates of calibration.

3.8 INSPECTIONS

A. Initial Inspection:
   1. After testing and balancing are complete, operate each system and randomly check measurements to verify that the system is operating according to the final test and balance readings documented in the final report.
   2. Check the following for each system:
      a. Measure water flow of at least 25 percent of terminals.
      b. Measure room temperature at each thermostat/temperature sensor. Compare the reading to the set point.
      c. Verify that balancing devices are marked with final balance position.
      d. Note deviations from the Contract Documents in the final report.

B. Final Inspection:
   1. After initial inspection is complete and documentation by random checks verifies that testing and balancing are complete and accurately documented in the final report, request that a final inspection be made by Engineer.
   2. The TAB contractor's test and balance engineer shall conduct the inspection in the presence of Engineer.
   3. Engineer shall randomly select measurements, documented in the final report, to be rechecked. Rechecking shall be limited to either 10 percent of the total measurements recorded or the extent of measurements that can be accomplished in a normal 8-hour business day.
   4. If rechecks yield measurements that differ from the measurements documented in the final report by more than the tolerances allowed, the measurements shall be noted as "FAILED."
   5. If the number of "FAILED" measurements is greater than 10 percent of the total measurements checked during the final inspection, the testing and balancing shall be considered incomplete and shall be rejected.

C. TAB Work will be considered defective if it does not pass final inspections. If TAB Work fails, proceed as follows:
   1. Recheck all measurements and make adjustments. Revise the final report and balancing device settings to include all changes; resubmit the final report and request a second final inspection.
   2. If the second final inspection also fails, Owner may contract the services of another TAB contractor to complete TAB Work according to the Contract Documents and deduct the cost of the services from the original TAB contractor's final payment.

D. Prepare test and inspection reports.

3.9 ADDITIONAL TESTS

A. Within 90 days of completing TAB, perform additional TAB to verify that balanced conditions are being maintained throughout and to correct unusual conditions.

B. Seasonal Periods: If initial TAB procedures were not performed during near-peak summer and winter conditions, perform additional TAB during near-peak summer and winter conditions.

END OF SECTION

PART 1 - GENERAL

1.1 WORK INCLUDED

A. Provide insulation for the following systems:
   1. Heating hot water supply and return piping.
   2. Chilled water supply and return piping.

1.2 SUBMITTALS

A. Product data and installation instructions on all materials shall be submitted to Engineer for approval. The Contractor shall indicate in his submittal material thickness, where each material shall be used, and method of application.

1.3 DELIVERY, STORAGE AND HANDLING

A. Store insulation with factory shipping packaging in a dry location protected from the outdoor elements including extreme heat and cold.

B. Protect insulation from damage during transit, delivery, storage and during entire construction period.

C. Installing contractor is responsible for any and all damage to insulation.

D. Do not deliver insulating materials until interior building work is suitably complete and ready to accept the materials without compromising any storage or protection requirements of this specification and the manufacturers warrantee.

PART 2 - PRODUCTS

2.1 ACCEPTABLE MANUFACTURERS
   1. Manville/Schuller
   2. CertainTeed/Manson
   3. Owens/Corning
   4. Knauf

2.2 MATERIALS

A. Pipe Insulation

1. Insulation for hot and cold water piping shall equal to Manville "Micro-Lok AP" molded all-purpose fiberglass pipe insulation.
2. Insulation thickness shall be:

Fluid Type	Pipe Size (in.)	Insulation Thickness
Hot Water	½" – 1-½"	1"
	2" +	2"
Chilled Water	½- 1-½"	1"
	2" +	1-½"
Condensate Piping	½" – 4"	½"

NOTE: Thickness is based on insulation conductivity of 0.27 BTU/in/H.ft.2.
If insulation conductivity is greater, adjust thickness to meet heat loss requirements.

B. Interior insulation jacket shall be equal to Manville ASJ.

C. Provide weatherproof aluminum jacket for all exterior piping exposed to the elements.

D. Valve and Fitting Insulation: Equal to Manville molded fiberglass insulation with Zeston 2000 series 25/50 Class A covers.

E. Tank and Heat Exchanger Insulation: Equal to Manville Pipe and Tank insulation, (flexible board type insulation) 2" thick, with all purpose jacket. The fiber orientation of the insulation shall be perpendicular to the board surface.

F. All insulation and covering systems shall have Fire Hazard Classification not exceeding 25 Flame Spread, 50 Fuel Contribution, and 50 Smoke Developed when tested under ASTM E84 and UL723.

PART 3 - EXECUTION

3.1 INSTALLATION

A. Pipe, Valve, and Fitting Insulation
1. Insulate all piping, fittings, valves, and trim.
2. Install all insulation according to manufacturer's instructions. All butt joints are to be tight and sealed with ASJ butt laps. Secure longitudinal seams with outward clinch staples or a suitable lap adhesive. Provide stenciled pipe labels and flow direction arrows on all insulated piping.

3. Fasten throats of fitting covers with stainless steel serrated tacks. Use of steel staples to fasten covers is not acceptable. Seal seams and all overlaps of fitting covers to insulation jacket with PVC tape. Seal all exposed fiberglass with lagging mastic, including pipe hanger gaps, ends and valve protrusions.
4. Completed work shall be smooth and straight. Fitting covers shall fit tight to pipe insulation with no gaps or fishmouths in throat seams or joints. Completed insulation work judged aesthetically unacceptable by the Engineer shall be corrected by the contractor at no cost to Owner.
5. Provide saddles to protect insulation at all pipe hangers. Do not penetrate insulation vapor barrier at hangers.
6. Do not insulate plastic air conditioning condensate piping.

B. Tank and Heat Exchanger Insulation
1. Install according to manufacturer's instructions. All lap seams shall be stapled with outward cinch staples on 4" centers. All longitudinal and circumferential joints shall be sealed with a 3" wide strip of pressure sensitive tape. No exposed surfaces of insulation are allowed.

END OF SECTION

THIS PAGE IS INTENTIONALLY LEFT BLANK

(FOR DUPLEX PRINTING PURPOSES)

SECTION 23 09 23 – DIRECT DIGITAL CONTROLS FOR HVAC

PART 1 - GENERAL

1.1 SUMMARY

A. This Section includes control equipment and installation for HVAC systems and components, including control components for terminal heating and cooling units not supplied with factory-furnished controls.

B. See "Sequences of Operation" for requirements that relate to this Section.

C. The BAS control system shall be extension of the existing Siemens Apogee BAS and all controllers and software shall match existing or be latest version of existing.

D. Siemens Contact Person – Gerber Santos, Phone: 401-209-5967, Email: gerber.santos@siemens.com, Address: 40 Sharpe Drive, Cranston, RI 02920.

1.2 RELATED DOCUMENTS

A. Drawings and Specification Sections of the Contract, including General and Supplementary Conditions, apply to this Section.
   1. Section 23 05 93 – Testing, Adjusting, and Balancing for HVAC
   2. Section 23 09 93 – Sequence of Operations for HVAC Controls

1.3 DEFINITIONS

A. DDC: Direct digital controls

B. IP: Internet Protocol

C. I/O: Input/Output

D. LAN: Local area network.

E. TCP: Transfer Control Protocol

F. Scope Terminology
   1. Provide = Furnish equipment, engineer, program and install
   2. Furnish = Furnish equipment, engineer and program
   3. Mount = securely fasten or pipe
   4. Install = mount and wire

5. Wire = wire only

1.4 SYSTEM DESCRIPTION

A. The Building Automation System (BAS) contractor shall furnish and install a networked system of HVAC controls. The contractor shall incorporating direct digital control (DDC) for central plant equipment, building ventilation equipment, supplemental heating and cooling equipment, and terminal units.

B. Provide networking to new DDC equipment using communication standards. The system shall not be limited to only standard protocols, but shall also be able to integrate to a wide variety of third-party devices and applications via drivers and gateways.

C. Provide standalone controls where called for on the drawings or sequences.

1.5 WORK INCLUDED

A. The installation of the control system shall be performed under the direct supervision of the controls manufacturer with the shop drawings, flow diagrams, bill of materials, component designation, or identification number and sequence of operation all bearing the name of the manufacturer.

B. Furnish a complete distributed direct digital control system in accordance with this specification section. This includes all system controllers, logic controllers, and all input/output devices. Items of work included are as follows:
   1. Provide a submittal that meets the requirements below for approval.
   2. Coordinate installation schedule with the mechanical contractor and general contractor.
   3. Provide installation of all panels and devices unless otherwise stated.
   4. Provide power for panels and control devices.
   5. Provide all low voltage control wiring for the DDC system.
   6. Provide miscellaneous control wiring for HVAC and related systems regardless of voltage.
   7. Provide engineering and technician labor to program and commission software for each system and operator interface. Submit commissioning reports for approval.
   8. Participate in commissioning for all equipment that is integrated into the BAS (Refer to Commissioning sections of the equipment or systems in other parts of this specification.)
   9. Provide testing, demonstration and training as specified below.

1.6 SYSTEM PERFORMANCE

A. Comply with the following performance requirements:

1. Graphic Display: Display graphic with minimum 20 dynamic points with current data within 5 seconds.
2. Graphic Refresh: Update graphic with minimum 20 dynamic points with current data within 5 seconds.
3. Object Command: Reaction time of less than 5 seconds between operator command of a binary object and device reaction.
4. Object Scan: Transmit change of state and change of analog values to control units or workstation within 5 seconds.
5. Alarm Response Time: Annunciate alarm at workstation within 2 seconds. Multiple workstations must receive alarms within five seconds of each other.
6. Program Execution Frequency: Programmable controllers shall execute DDC PI control loops, and scan and update process values and outputs at least once per second.
7. Reporting Accuracy and Stability of Control: Report values and maintain measured variables within tolerances as follows:
   a. Water Temperature: Plus or minus 1 deg F.
   b. Water Flow: Plus or minus 5 percent of full scale.
   c. Water Pressure: Plus or minus 2 percent of full scale.
   d. Space Temperature: Plus or minus 1 deg F.
   e. Ducted Air Temperature: Plus or minus 1 deg F.
   f. Outside Air Temperature: Plus or minus 2 deg F.
   g. Dew Point Temperature: Plus or minus 3 deg F.
   h. Temperature Differential: Plus or minus 0.25 deg F.
   i. Relative Humidity: Plus or minus 2 percent.
   j. Airflow (Pressurized Spaces): Plus or minus 3 percent of full scale.
   k. Airflow (Measuring Stations): Plus or minus 5 percent of full scale.
   l. Airflow (Terminal): Plus or minus 10 percent of full scale.
   m. Air Pressure (Space): Plus or minus 0.01-inch wg.
   n. Air Pressure (Ducts): Plus or minus 0.1-inch wg.
   o. Carbon Monoxide: Plus or minus 5 percent of reading.
   p. Carbon Dioxide: Plus or minus 50 ppm.
   q. Electrical: Plus or minus 5 percent of reading.

1.7 AUTOMATIC TEMPERATURE CONTROLS

A. Automatic Temperature Controls shall be as specified [herein] [in Section 23 09 23 BUILDING AUTOMATION SYSTEM, which is hereby made a part of this specification section.]

B. All bidders must be building automation Contractors in the business of installing direct digital control building automation systems for a minimum of 3 years. Bidder must have an office within 50 miles of the job site staffed with factory-trained engineers capable of trouble shooting and maintaining all systems for the project. All bidders must be authorized distributors or branch offices of the manufacturers specified.

C. All bidders must have a trained staff of application engineers, who have been certified by the manufacturer in the configuration, programming and service of the automation system. The

Installer shall have successfully completed the Control Systems Manufacturer's classes on the control system he is to install. The Installer shall present for review the certification of completed training, including the hours of instruction and course outlines upon request. All systems design and programming shall be done by the bidder's staff and not subcontracted to a third party.

D. Acceptable Vendors: The below listed vendors are acceptable providing they meet the requirements of these specifications The BAS shall be by:

1. Siemens APOGEE as installed by the Siemens Industry, Inc. factory branch office.

E. The above list of manufacturers applies to Webserver, controllers, software, custom application programming language, Building Network Controllers, Custom Application Controllers, and Application Specific Controllers. All other products specified herein (e.g., sensors, valves, dampers, and actuators) need not be manufactured by the above manufacturers.

F. Scope of Work

1. Except as otherwise noted, the control system shall consist of all Building Network Controllers, Custom Application Controllers, Application Specific Controllers, Webserver, routers, software, sensors, transducers, relays, control valves, control dampers, valve and damper operators, control panels, and other accessory equipment to fully provide all required control functions. Provide a complete system of electrical interlock wiring to fill the intent of the specification and provide for a complete and operable system. Except as otherwise specified, provide operators for equipment such as dampers if the equipment manufacturer does not provide these. Coordinate requirements with the various Contractors.
2. Provide all required software (including any required licensing) and hardware to interface with the existing front end operator's workstation and alarm printer, including displaying of all points, alarms, occupied/unoccupied scheduling adjustments, graphics, etc.. This scope includes hiring the manufacturer of the existing control system front end to provide these operator workstation upgrades, unless this project's control contractor is licensed and qualified to do this work.
3. The BAS Contractor shall review and study all HVAC drawings and all mechanical and electrical specifications to familiarize him with all equipment and sequences. BAS Contractor shall provide all the required quantities and types of devices necessary to completely perform all sequences, whether or not such devices are explicitly shown on the drawings or specified. If any devices are not specified they shall be of the same high quality of specified components.
4. The BAS Contractor shall hire licensed electricians and shall provide all required interlock wiring and wiring of all control devices including sensors, control valves and damper actuators, control panels, etc.) Scope of wiring includes the provision of additional required power wiring beyond what is shown on the electrical drawings. Any additional wiring required from electric panels shall be coordinated with the Division 26

electrical Contractor and paid for by the BAS Contractor. All wiring shall comply with the requirements of the electrical section of these specifications.

5. When the BAS system is fully installed and operational, the BAS Contractor and representatives of the Owner will review and check out the system and train the Owner's personnel. At that time, the BAS Contractor shall demonstrate the operation of the system and prove that it complies with the intent of the drawings and specifications. The BAS Contractor shall carry hours of additional on-site programming to allow for field modifications that may be needed to optimize the various systems to fully conform to the requirements of these specifications and work with the actual operating conditions as installed.
6. The building is to be commissioned and Contractor shall provide all labor required to fully test and demonstrate that all systems operate as designed.
7. The Contractor shall furnish and install a complete building automation system including all necessary hardware and all operating and applications software necessary to perform the control sequences of operation as called for in this specification. At a minimum, provide controls for the following:
    a. Graphics, reports, trending, alarms and occupancy (occupied, unoccupied and warm-up/cool-down) schedules as appropriate for all equipment, including tie-in of existing operator's workstation.
    b. Interface with controls provided by equipment manufacturers.
    c. Air handling units.
    d. Filters
    e. Power and control wiring to all DDC devices, equipment interlocks, control valves and dampers, BAS panels, etc.
    f. All other equipment scheduled or shown on drawings
    g. Proposed O&M Manual Table of Contents.
    h. O&M Manuals
    i. Proposed acceptance testing plan, test forms, reports and narratives.
    j. All completed acceptance testing documentation and report of successful completion of the required 30 day performance test. This is a separate submission prior to job completion.
    k. Subcontractor Project Completion Certificate for the control system. See "Project Closeout" for requirements. This is a separate submission prior to job completion.
8. Provide services and manpower necessary for testing of system in coordination with the HVAC Contractor, Balancing Contractor and Owner's representative and in accordance with the acceptance testing plan and functional performance test narratives.
9. All work performed under this section of the specifications shall comply with all codes, laws and governing bodies. If the drawings and/or specifications are in conflict with governing codes, the Contractor shall submit a proposal with appropriate modifications to the project to meet code restrictions. If this specification and associated drawings exceed governing code requirements, the specification will govern. The Contractor shall obtain and pay for all necessary construction permits and licenses.

G. System Description

1. The Building Automation System (BAS) shall consist of an extension of the existing Siemens system. The system shall have a Webserver based microcomputer controllers of modular design providing distributed processing capability, and allowing future expansion of both input/output points and processing/control functions. The intent is for the BAS to seamlessly connect devices throughout the building, regardless of sub-system type to the existing system. Gateways shall not be used unless there is no other solution for systems integration.
2. For this project the system shall consist of the following components:
   a. Building Automation Sever and Webserver: System shall be an extension of the existing Siemens system.
   b. Ethernet-based Building Network Control Units (BNCU): The BAS Contractor shall furnish Ethernet-based Building Network Controllers as described in Part 2 of the specifications. These controllers shall connect directly to the existing system over the customer provided Ethernet, provide communication to all Custom Application Controllers, Application Specific Controllers, Input/Output Modules, and serve as a communication link to equipment furnished by others (if applicable).
   c. Custom Application Controllers (CAC):
      1) Provide the necessary quantity and types of Custom Application Controllers to meet the requirements of the project for control of the designated mechanical equipment. All controllers shall be seamlessly integrated utilizing the same network and the same programming language.
      2) Each controller shall be completely programmable and provide functionality based on I/O configuration rather than application. For example, the Custom Application Controllers shall have the ability to provide local lighting control.
      3) Each CAC shall operate completely standalone, containing all of the I/O (including 15% spare points of each type) and programs to control its associated equipment.
   d. Application Specific Controllers (ASC):
      1) Provide the necessary quantity and types of Application Specific Controllers to meet the requirements of the project for control of the designated equipment. All controllers shall be seamlessly integrated utilizing the same network and the same programming language.
      2) Each ASC shall be capable of executing the required sequences of operation and provide the I/O point capacity and types as indicated on the drawings.
      3) Each ASC shall operate completely standalone, containing all of the I/O and programs to control its associated equipment.
   e. Portable Service Tool: Provide one portable service tool (or portable computer if required) for monitoring and testing of the BNCUs, CACs, and ASCs. The portable service tool will be for use by the Balancing Contractor. The portable service tool shall be returned to the BAS Subcontractor upon completion of the project.

H. Work by Others

1. The BAS Contractor shall cooperate with other Contractors performing work on this project necessary to achieve a complete and neat installation. To that end, each Contractor shall consult the drawings and specifications for all trades to determine the nature and extent of others' work.
2. The BAS Contractor shall furnish all control dampers (not furnished by equipment manufacturers), control valves, sensor wells, flow meters and other similar equipment for installation by the Mechanical Contractor.
3. The BAS Contractor shall provide field supervision to the designated Contractor for the installation of the following:
   a. Control dampers and valves.
   b. Blank-off plates for dampers that are smaller than duct size.
   c. Air and water flow monitoring stations.
   d. Sheet metal baffle plates to eliminate stratification.
   e. Location of all sensor wells and tappings in all piping and duct systems.
4. The Electrical Contractor shall provide:
   a. All power wiring to HVAC equipment and motors, heat trace, and to junction boxes (for control power) in mechanical rooms, where shown on the electrical drawings. Where available, all control power shall be on the standby generator.
   b. Furnish smoke detectors and wire to the building fire alarm system. HVAC Contractor to mount devices. BAS Contractor to hardwire to fan shut down and BAS alarm.

I. Code Compliance
1. Provide BAS components and ancillary equipment, which are UL-916 listed and labeled.
2. All equipment or wiring used in conditioned air streams, spaces or return air plenums shall comply with NFPA 90A Flame/Smoke/Fuel contribution rating of 25/50/0 and all applicable building codes or requirements.
3. All wiring shall conform to the National Electrical Code and the Division 26 specifications – whichever is more stringent.
4. All smoke dampers shall be rated in accordance with UL 555S.
5. Comply with FCC rules, Part 15 regarding Class A radiation for computing devices and low power communication equipment operating in commercial environments.
6. Comply with FCC, Part 68 rules for telephone modems and data sets.
7. Components used for both HVAC and Smoke Management Systems shall be UL-864 listed and labeled. Components used for smoke control shall be supervised and listed for fire alarm service per NFPA. All such control panels shall be located in building life safety electric rooms, coordinate exact locations with the electrical Contractor.

J. Submittals
1. All shop drawings shall be prepared in both hard copy and electronic form (in a standard format such as AutoCAD 2000 or newer, or Visio Professional). In addition to the drawings, the Contractor shall furnish a CD containing the identical information. Drawings shall be B size or larger. See Submittals Paragraph for additional requirements. Upon request, RDK Engineers will provide via email the CADD fsystem

loor plan drawings for use by the BAS Contractor. The drawings are diagrammatic and final floor plans and equipment locations are the responsibility of the BAS Contractor.

2. Shop drawings shall include a riser diagram and floor plans depicting locations of all controllers, routers, hubs, etc. with associated network architecture and wiring. Also included shall be individual schematics of each mechanical system showing all connected points with reference to their associated controller. "Typicals" will be allowed where appropriate. Wiring diagrams detailing interconnecting devices such as fan and pump starters, freezestats, smoke detectors, relays, etc., shall be provided for each system. Written narratives for all sequences shall be included. Any deviations from the original design shall be highlighted. A "Bill of Materials" list shall be provided for each system indicating part numbers, descriptions, manufacturer, and quantities of each component utilized.
3. Submittal data shall contain manufacturer's data sheets on all hardware and software products required by the specification and sequences. Valve, damper, and airflow station schedules shall indicate size, type, configuration, capacity, maximum pressure rating, pressure drop, maximum differential pressure shut-off capabilities, and name and location of all equipment served.
4. Software submittals shall contain narrative descriptions of sequences of operation, program listings, point lists, and a complete description of the graphics, reports, trends, alarms and configuration to be furnished with the Webserver software. Provide complete information on user programming (commands, sequences, etc.). Information shall be bound or in a three ring binder with an index and tabs.
5. Submit electronic copies of submittal data and shop drawings to the Engineer for review prior to ordering or fabrication of the equipment. The Contractor shall check all documents for accuracy prior to submitting.
6. The Engineer will make corrections, if required, and return to the Contractor. The Contractor shall then resubmit with the corrected or additional data. This procedure shall be repeated until all corrections are made to the satisfaction of the Engineer and the submittals are fully approved.
7. No work may begin on any segment of the project until submittals have been successfully reviewed for conformity with the design intent of the project.
8. Identification labels and tags, including database for equipment, valves, panels, and devices (Division 23 & 26).
9. Proposed O&M table of contents.
10. O&M Manuals
11. Start-up and acceptance plan, narratives, test forms, and report containing all completed forms, tests, and report of the required successful completion of the 30 day performance test.
12. Subcontractor's Project Completion Certificate.

K. System Startup and Acceptance Testing

1. Each point in the system shall be tested for both hardware and software functionality. In addition, each mechanical and electrical system under control of the BAS shall be tested against the appropriate sequence of operation. Successful completion of the system test shall constitute the beginning of the warranty period. A written report shall

be submitted (with copy to the Owner's Representative) indicating that the installed system functions in accordance with the plans and specifications.

2. The BAS Contractor shall submit their acceptance testing plan, pre-functional performance test forms and narratives, and functional performance test forms and narratives. Unless a commissioning agent has been contracted the responsibility to facilitate the commissioning process, the BAS Contractor shall be responsible for coordinating the attendees needed to demonstrate the sequence of operation performance to the Owner. The controls system will not be accepted without the prior acceptance of the submitted documents noted herein.
3. The BAS Contractor shall test and set in operating condition all equipment and systems. For major equipment such as chillers, boilers, and air handling units, this shall be done in the presence of the equipment manufacturer's representatives, as applicable, and the Owner and Architect's representatives. Coordinate with all required attendees.
4. The BAS Contractor shall provide all manpower and engineering services required to assist the HVAC Contractor and Balancing Contractor in testing, adjusting, and balancing all systems in the building. The BAS Contractor shall have a trained technician available on request during the balancing of the systems. The BAS Contractor shall coordinate all requirements to provide a complete air balance with the Balancing Contractor and shall include all labor and materials in his contract.

L. Training

1. The BAS Contractor shall provide on-site and classroom to the Owner's representative and maintenance personnel using the BAS acceptance testing documents.
2. On-site training shall include a minimum of 16 hours of hands-on instruction geared toward the operation and maintenance of the systems. Prior to training, the necessary lesson plans, training documents, handouts, etc. shall be provided with the curriculum outline, which shall include as a minimum:
   a. System Overview.
   b. Existing Webserver usage, programming, graphics, alarms, notifications, etc.
   c. System Software and Operation.
   d. System Access.
   e. Software features overview.
   f. Changing set points and other attributes.
   g. Scheduling.
   h. Editing programmed variables.
   i. Displaying and editing color graphics.
   j. Running reports and trending.
   k. Application programming.
   l. Operational sequences including start-up, shutdown, adjusting and balancing.
   m. Equipment maintenance.

M. Warranty

1. The BAS Contractor shall warrant the entire system (parts and labor) for 12 months after successful system acceptance testing is accepted by Owner's Representative. Beneficial use by the Owner may be an alternative method to begin the warrantee period

(providing there is a minimum of 12 months left after successful system acceptance testing and system acceptance by Owner's Representative). During the warranty period, the BAS Contractor shall be responsible for all software and hardware upgrades and revisions during normal workday schedule, and within 48 hours of notification if solution cannot be resolved via the remote or web-site connection, to provide and maintain complete and workable building control systems.

2. Updates to the manufacturer's software shall be provided at no charge during the warranty period.

N. System Architecture

1. The Building Automation System (BAS) shall consist of Building Network Control Units (BNCU) and associated Input/Output Unit Modules (I/O, as applicable), Custom Application Controllers (CAC), Application Specific Controllers (ASC), and existing building automation server and webserver. The BAS shall provide control, alarm detection, scheduling, reporting and information management for the entire facility. The BAS shall have the capability to accommodate integration of and to other building sub-systems (fire alarm, security, card access, lighting, etc.) as indicated on the drawings and detailed in the specifications.
2. Level 1 Network Description (BAS Network):
   a. Level 1, the main backbone of the system, shall be an BACnet IP Ethernet (ISO/IEC 8802-3) LAN/WAN. Building Network Control Units and shall connect directly to the owner provided network without the need for Gateway devices. The connection to the owners network shall allow the new controllers to seamlessly interface and report to the existing building automation server and webserver.
3. Level 2 Network Description (Field Bus Level)
   a. Level 2 of the system shall consist of one or more field buses managed by the Building Network Control Units. The Level-2 field buses may consist of one or more of the following types:
      1) Master-Slave/Token Passing (ANSI/ASHRAE Standard 135-2010, BACnet): Field bus utilizes RS-485 signaling. Both Custom Application Controllers and Application Specific Controllers may reside on this network bus (minimum of 60 devices).
      2) Peer to Peer daisychain BACnet IP over Ethernet.

O. BAS Configuration (extension of existing Siemens system)

1. The BAS shall be capable of being segmented, through software, into multiple local area networks (LANs) distributed over a wide area network (WAN), sharing a single Webserver (10/100 megabits/sec Ethernet). This enables Webservers to manage a single LAN (or building), and/or the entire system with all devices being assured of being updated by and sharing the most current database.
2. All BNCUs and Webserver shall reside directly on the Owner's Ethernet TCP/IP LAN/WAN with no required gateways. Furthermore, the BNCU's, Webserver shall be capable of using standard, commercially available, "off-the-shelf" Ethernet infrastructure components such as routers, switches and hubs. With this design the Owner may utilize the investment of an existing or new enterprise network or

structured cabling system. This also allows the option of the maintenance of the LAN/WAN to be performed by the Owner's Information Systems department as all devices shall utilize standard TCP/IP components.

P. Support for Open Systems Protocols
1. The BAS design shall include solutions for the integration of the following "open systems" protocols: ANSI/ASHRAE 135-2010 BACnet, Modbus, OPC Client/Server, and digital data communication to third party microprocessors such as any equipment manufacturer's controllers and variable frequency drives (VFDs).
a. BACnet: The BAS shall, as a minimum, support the BACnet Interoperable Building Blocks (BIBBS) for Read (Initiate) and Write (Execute) Services as defined in the Data Sharing BIBBS as follows:

DS-RP-A, B
DS-RPM-A, B
DS-WP-A, B
DS-WPM-A, B

2. The system shall also provide the ability to program custom ASCII communication drivers, residing in the BNCU, for communication to third party systems and devices. These drivers shall provide real time monitoring and control of the third party systems.

Q. Controller Standby Power Requirements
1. For every controller, regardless of type, that controls any smoke control life safety systems and all systems shown on their sequences as on standby power, provide an uninterruptible power supply (UPS) system capable of operating the controller and all associated I/O modules, routers, repeaters, etc. for at least 20 minutes.
2. Wire all these devices with standby (not normal) power. Coordinate locations with electrical Contractor.

R. Webserver Functionality
1. The BAS system shall reside on the owner Ethernet TCP/IP Internet and shall be setup as a seamless interface to the existing BAS server and Webserver. The Webserver function is built into the BAS sever software. All user entered information (web pages, security, etc.) shall be stored in non-volatile memory. System operational information and clock functions shall be battery-backed or backed up automatically to another device for a minimum of 72 hours.

S. Building Network Control Units (BNCU)
1. General: Provide Level 1 Building Network Control Units to provide the performance specified in Part 1 of this Section. Each of these panels shall meet the following requirements.
a. The Building Automation System shall be composed of one or more independent, stand-alone, microprocessor based BNCUs to manage the both global and local strategies required by this project.

b. The BNCUs shall have sufficient memory to support its operating system, database, a minimum of 3 days of buffer (for trending data), and programming requirements with 50% spare capacity.
c. The BNCUs shall provide communications ports for connection of the Portable Computer and Portable Operators Terminal.
d. The operating system of the BNCUs shall manage the input and output communications signals to allow distributed controllers to share real and virtual point information and allow central monitoring and alarms.
e. All BNCUs shall have battery-backed real time clocks.
f. Data shall be shared between all BNCUs.
g. Each BNCU shall continually check the status of its processor and memory circuits. If an abnormal operation is detected, the controller shall:
1) Assume a predetermined failure mode.
2) Generate an alarm notification.

2. Communications: Each Building Network Control Unit shall reside on the same Level 1 inter-network as the Webserver. The network shall be on ISO 8802-3 (Ethernet) and support the Internet Protocol (IP). This network shall be provided by the owner as defined by the Owner's IT department. Each BNCU shall also perform routing to a network of Level 2 Custom Application and Application Specific Controllers.
3. Environment: Controller hardware shall be suitable for the anticipated ambient conditions. Controllers used in conditioned ambient shall be mounted in an enclosure, and shall be rated for operation at 32 F to 120 F.
4. Serviceability: Provide diagnostic LEDs for power, communications, and processor. All wiring connections shall be made to field removable, modular terminal strips or to a termination card connected by a ribbon cable.
5. Memory: The Controllers shall maintain all BIOS and programming information in the event of a power loss for at least 72 hours.
6. Immunity to Power and Noise: Controllers shall be able to operate at 90% to 110% of nominal voltage rating and shall perform an orderly shut-down below 80% nominal voltage. The Controllers shall contain surge protection and not require any external AC power signal conditioning.

T. Application Specific Controllers (ASC)
1. General: Provide Level 2 ASCs as required for this project. ASCs are microprocessor-based DDC controllers dedicated to control a specific piece of equipment. They shall be fully user programmable, initially set up to provide the specified sequences. Applications are limited to small HVAC equipment such as VAV and CV terminal units (including fan powered), Fan Coil Units, etc.
a. Each ASC shall be capable of stand-alone operation and shall continue to provide control functions without being connected to the network.
1) VAV and CV terminal unit controllers shall include damper actuators with minimum torque of 35 in-lb, with override for manual positioning during start-up and servicing. Velocity sensors shall have an accuracy of +/- 3% of full range.

b. Each ASC shall contain sufficient I/O capacity (at least 1 spare point of each type), memory (at least 50% spare), and programming flexibility to control the target system and allow for future changes in programs remotely through the front end.
   1) The ASCs shall provide communications ports for connection of the Portable Computer and/or Portable Operators Terminal.

2. Environment: The hardware shall be suitable for the anticipated ambient conditions.
   a. Controllers used outdoors and/or in wet ambient shall be mounted within NEMA 4 type waterproof enclosures, and shall be rated for operation at -30 F to 150 F.
   b. Controllers used in conditioned ambients shall be mounted in NEMA 1 type rated enclosures. Controllers located where they will not be disturbed by building activity (such as above ceiling grid), may be provided with plenum-rated enclosures and non-enclosed wiring connections for plenum cabling. Exception: Use NEMA 1 enclosures and provide conduit for all wiring for systems that control any outdoor air dampers, or connect to the fire management or smoke control systems. All ambient controllers shall be rated for operation at 23 F to 120 F.
3. Serviceability: Provide diagnostic LEDs for power and communications. All wiring connections shall be clearly labeled and made to be field removable.
4. Memory: ASCs shall maintain all BIOS and programming information in the event of a power loss for at least 90 days.
5. Immunity to Power and Noise: Controller shall be able to operate at 90% to 110% of nominal voltage rating and shall perform an orderly shutdown below 80%.
6. Transformer: Power supply for the ASCs must be rated at minimum of 125% of ASC power consumption, and shall be fused or current limiting type with all wiring by the BAS Subcontractor.

U. Communications
1. This project shall comprise of an Ethernet network for communications between Building Network Control Units and the existing BAS server and Webserver.
2. The owner shall provide all communication media, connectors, repeaters, hubs, and routers necessary for the controls system inter-network.
3. Remote operator interface via Webserver shall allow for communication with any and all controllers on this network.
4. Communications services over the inter-network shall result in operator interface and value passing that is transparent to the inter-network architecture as follows:
   a. Connection of an operator interface device to any one controller on the inter-network will allow the operator to interface with all other controllers as if that interface were directly connected to the other controllers. Data, status information, reports, system software, custom programs, etc., for all controllers shall be available for viewing and editing from any one controller on the inter-network.
   b. All database values (i.e., points, software variable, custom program variables) of any one controller shall be readable by any other controller on the inter-network. This value passing shall be automatically performed by a controller when a reference to a point name not located in that controller is entered into the

controller's database. An operator/installer shall not be required to set up any communications services to perform inter-network value passing.

5. The time clocks in all controllers shall be automatically synchronized daily and automatically corrected for daylight savings time and leap years.

V. Input/Output Interface (I/O)

1. Hard-wired inputs and outputs may tie into the system through Building or Application Specific Controllers.
2. All input points and output points shall be protected such that shorting of the point to itself, another point, or ground will cause no damage to the controller. All input and output points shall be protected from voltage up to 24V of any duration, such that contact with this voltage will cause no damage to the controller. Provide a minimum of 15% spare I/O points of each type for BNCUs.
3. Binary (digital) inputs shall allow the monitoring of on/off signals from remote devices. The binary inputs shall provide a wetting current of at least 12 ma to be compatible with commonly available control devices.
4. Pulse accumulation input points. This type of point shall conform to all the requirements of Binary Input points, and also accept up to 2 pulses per second for pulse accumulation, and shall be protected against effects of contact bounce and noise.
5. Analog inputs shall allow the monitoring of low voltage (0-10 Vdc), current (4-20 ma), or resistance signals (thermistor, RTD). Analog inputs shall be compatible with, and field configurable to commonly available sensing devices.
6. Binary (digital) outputs shall provide for on/off operation, or a pulsed low voltage signal for pulse width modulation control. Binary outputs on custom and building controllers shall have 3-position (on/off/auto) override switches and status lights. Outputs shall be selectable for either normally open or normally closed operation. The position of the override switches shall be monitored and any point in override shall be highlighted as such in all graphics.
7. Analog outputs shall provide a modulating signal for the control of end devices. Outputs shall provide either a 0-10 Vdc or a 4-20 ma signal as required to provide proper control of the output device. Analog outputs on building or custom controllers shall have status lights, a 2-position (auto/manual) switch, and manually adjustable potentiometer for manual override. The position of the override switches shall be monitored and any point in override shall be highlighted as such in all graphics.

W. Portable Service Tool

1. Provide portable proprietary (or laptop) service tool to communicate directly to all controllers. If a laptop is required, the laptop software shall enable users to monitor both instantaneous and historical point data, modify control parameters, and enable/disable any point or program in any controller on the network. Provide all required hardware/software. The service tool (or laptop) shall be used by the balancing Contractor and then turned over to the Owner.
2. The laptop or service tool shall be able to connect to any Ethernet controller or standalone controller via a dedicated service port. From this single connection, the user shall be able to communicate with any other controller on the LAN.

3. The laptop or service tool shall limit operator access by passwords. The service tool must support, at a minimum, the following password-protected user types: Administrator, Modify Parameters, View Only.
4. The laptop or service tool software shall include built-in menus for viewing points by controller, enabling, disabling and viewing programs, configuring controllers, and communicating to other controllers on the network.

X. System Software – Extension of existing System
1. General Description: The software architecture must be object-oriented in design, a true 32-bit application suite utilizing Microsoft's OLE, COM, DCOM and ODBC technologies. These technologies make it easy to fully utilize the power of the operating system to share, among applications (and therefore to the users of those applications), the wealth of data available from the BAS. The functions shall include monitoring and programming of all DDC controllers. Monitoring consists of alarming, reporting, graphic displays, long term data storage, automatic data collection, and operator-initiated control actions such as schedule and set point adjustments. Programming of controllers shall be capable of being done either off-line or on-line. All information shall be available in graphic or text displays. Graphic displays shall feature visual effects to enhance the presentation of the data, to alert operators of problems, and to facilitate location of information throughout the DDC system. All operator functions shall be selectable through a mouse.
2. System Database: The files server database engine must be Microsoft SQL Server, or another ODBC-compliant, relational database program. This ODBC (Open Database Connectivity)-compliant database engine allows for an Owner to utilize "their" choice of database and due to its "open" architecture, allows an Owner to write custom applications and/or reports which communicate directly with the database avoiding data transfer routines to update other applications. The system database shall contain all point configurations and programs in each of the controllers that have been assigned to the network. In addition, the database will contain all files including color graphic, alarm reports, text reports, historical data logs, schedules, and polling records.
3. User Interface: The BAS software shall allow the creation of a custom, browser-style interface linked to the user that has logged into the software. This interface shall support the creation of "hot-spots" that the user may link to view/edit any object in the system or run any object editor or configuration tool contained in the software. Furthermore, this interface must be able to be configured to become a user's "PC Desktop" – with all the links that a user needs to run other applications. This, along with the Windows user security capabilities, will enable a system administrator to setup workstation accounts that not only limit the capabilities of the user within the BAS software but may also limit what a user can do on the PC and/or LAN/WAN.
4. User Security: The software shall be designed so that each user of the software can have a unique username and password. This username/password combination shall be linked to a set of capabilities within the software, set by and editable only by, a system administrator. The sets of capabilities shall range from View only, Acknowledge alarms, Enable/disable and change values, Program, and Administer. The system shall allow the above capabilities to be applied independently to each and every class of object in the

system. The system must allow a minimum of 250 users to be configured per workstation. There shall be an inactivity timer adjustable in software that automatically logs off the current operator after the timer has expired.

5. Configuration Interface: The software shall use a familiar Windows ExplorerÔ-style interface for an operator or programmer to view and/or edit any object (controller, point, alarm, report, schedule, etc.) in the entire system. In addition, this interface shall present a "network map" of all controllers and their associated points, programs, graphics, alarms, and reports in an easy to understand structure. All object names shall be alphanumeric and use Windows long filename conventions. Object names shall not be required to be unique throughout the system. This allows consistency in point naming. For example, each ASC can have an input called Space Temperature and a set point called CFM Setpoint. The ASC name shall be unique such as VAV for LAB101. Systems requiring unique object names throughout the system will not be acceptable.
    a. The configuration interface shall include support for template objects. These template objects shall be used as building blocks for the creation of the BAS database. The types of template objects supported shall include all data point types (input, output, string variables, set points, etc.), alarm algorithms, alarm notification objects, reports, graphics displays, schedules, and programs. Groups of template object types shall be able to be set up as template subsystems and systems. The template system shall prompt for data entry if necessary. The template system shall maintain a link to all "child" objects created by each template. If a user wishes to make a change to a template object, the software shall ask the user if he/she wants to update all of child objects with the change. This template system shall facilitate configuration and programming consistency and afford the user a fast and simple method to make global changes to the BAS.
6. Color Graphic Displays: The system shall allow for the creation of user defined, color graphic displays for the viewing of mechanical systems and building schematics. These graphics shall contain point information from the database including any attributes associated with the point (engineering units, etc.). In addition operators shall be able to command equipment or change set points from a graphic through the use of the mouse. Requirements of the color graphic subsystem include:
    a. SVGA, bit-mapped displays. The user shall have the ability to import AutoCAD generated picture files as background displays. As a minimum graphics shall include: all mechanical equipment including each individual air handling unit, fan, chiller, pump, boiler, heat exchanger, etc.; systems of equipment including chilled water system (chillers, pumps, heat exchangers, control valves, etc.), condenser water system (towers, pumps, chillers, heat exchangers, control valves, etc.); hot water system (boilers, heat exchangers, pumps, control valves, etc.); air handling systems (AHUs, ERUs, RTUs, associated fans, control dampers, etc.); clean rooms (all controls); animal rooms (all controls), etc.; floor plans showing equipment locations and visual indication of any rooms in alarm, with point and click selection of any room's system.
    b. A built-in library of objects such as dampers, fans, pumps, buttons, knobs, gauges, ad graphs which can be "dropped" on a graphic through the use of a software configuration "wizard". Objects shall be set up so that it is easy to visually see the

state of the object (such as fan on or off). These objects shall enable operators to interact with the graphic displays in a manner that mimics their mechanical equivalents found on field installed control panels. Using the mouse, operators shall be able to adjust set points, start or stop equipment, modify PID loop parameters, or change schedules.

c. Status changes or alarm conditions must be able to be highlighted by objects changing screen location, size, color, text, blinking or changing from one display to another.

d. Graphic panel objects shall be able to be configured with multiple "tabbed" pages allowing an operator to quickly view individual graphics of equipment, which make up a subsystem or system.

e. Ability to link graphic displays through user defined objects, alarm testing, or the result of a mathematical expression. Operators must be able to change from one graphic to another by selecting an object with a mouse - no menus will be required.

7. On-Line Help and Training: Provide a context sensitive, on line help system to assist the operator in operation and editing of the system. On-line help shall be available for all applications and shall provide the relevant data for that particular screen. Additional help information shall be available through the use of hypertext. Provide an interactive tutorial CD, which will act as on-line training/help for the systems operator.

8. Automatic Monitoring: The software shall allow for the automatic collection of data and reports from any controller through either a hardwire or modem communication link. The frequency of data collection shall be completely user-configurable.

9. Alarm Management: The software shall be capable of accepting alarms directly from controllers, or generating alarms based on evaluation of data in controllers and comparing to limits or conditional equations configured through the software. Any alarm (regardless of its origination) will be integrated into the overall alarm management system and will appear in all standard alarm reports, be available for operator acknowledgment, and have the option for displaying graphics, or reports.

a. Alarm management features shall include:

1) A minimum of 20 alarm notification levels. Each notification level will establish a unique set of parameters for controlling alarm display, acknowledgment, keyboard annunciation, alarm printout and record keeping.

2) Automatic logging in the database of the alarm message, point name, point value, connected controller, timestamp, username and time of acknowledgement, username and time of alarm silence (soft acknowledgement)

3) Automatic printing of the alarm information or alarm report to an alarm printer or report printer.

4) Playing an audible beep or audio (wav) file on alarm initiation or return to normal.

5) Sending an email, alphanumeric page, or phone call (by text to speech technology) to anyone listed in an email account address list on either the initial occurrence of an alarm and/or if the alarm is repeated because an operator has not acknowledged the alarm within a user-configurable timeframe. The ability to utilize email, phone and alphanumeric paging of alarms shall be a

standard feature of the software integrated with the operating system's mail application interface (MAPI).

b. Individual alarms shall be able to be re-routed to a user or users at user-specified times and dates. For example, a critical high temp alarm can be configured to be routed to a Facilities Dept. user during normal working hours (7am-6pm, Mon-Fri) and to a Central Alarming user at all other times.

c. An active alarm viewer shall be included which can be customized for each user or user type to hide or display any alarm attributes.

d. The font type and color, and background color for each alarm notification level as seen in the active alarm viewer shall be customizable to allow easy identification of certain alarm types or alarm states.

e. The active alarm viewer can be configured such that an operator must type in text in an alarm entry and/or pick from a drop-down list of user actions for certain alarms. This ensures accountability (audit trail) for the response to critical alarms.

10. Custom Report Generation: The software shall contain a built-in custom report generator, featuring word processing tools for the creation of custom reports. These custom reports shall be able to be set up to automatically run or be generated on demand. Each user shall be able to associate reports with any word processing or spreadsheet program loaded on the machine. When the report is displayed, it will automatically spawn the associated report editor such as MS WordÔ, WordPerfectÔ, MS ExcelÔ, or Lotus 123Ô.

a. Reports can be of any length and contain any point attributes from any controller on the network.

b. The report generator shall have access to the user programming language in order to perform mathematical calculations inside the body of the report, control the display output of the report, or prompt the user for additional information needed by the report.

c. It shall be possible to run other executable programs whenever a report is initiated.

d. Report Generator activity can be tied to the alarm management system, so that any of the configured reports can be displayed in response to an alarm condition.

e. Standard Reports: The following standard system reports shall be provided for this project. These reports shall be readily customized to the project by the Owner.

1) Points in each controller.
2) Points in alarm
3) Disabled points
4) Overridden points
5) Operator activity report
6) Alarm history log.
7) Program listing by controller with status.
8) Network status of each controller.
9) ASHRAE Guideline 22-2008 Report: Provide a daily report that shows the operating condition of each chiller as required by ASHRAE Guideline 22.

11. Spreadsheet-style reports: The software shall allow the simple configuration of row/column (spreadsheet-style) reports on any class of object in the system. These reports shall be user-configurable and shall be able to extract live (controller) data and/or data from the database. The user shall be able to set up each report to display in any text font, color and background color. In addition the report shall be able to be configured to filter data, sort data and highlight data which meets user-defined criteria.
12. Dynamic Graphical Charting: The operator shall be able to select system values to be charted in real time. A minimum of three values at one time can be selected for each chart. The type of chart (bar, line, 3-D, etc.) shall be user selectable.
13. HTML Reporting: The above reports shall be able to be run to an HTML template file. This feature will create an HTML "results" file in the directory of the HTML template. This directory can be shared with other computer users, which will allow those users with access to the directory to "point" their web browser at the file and view the report.
14. Clock Synchronization: The real time clocks in all building control panels shall be synchronized on command of an operator. The system shall also be able to automatically synchronize all system clocks; daily from any operator designated device in the system. The system shall automatically adjust for daylight savings and standard time if applicable and for leap years.
15. Scheduling
    a. It shall be possible to configure and download schedules for any of the controllers on the network.
    b. Time of day schedules shall be in a calendar style and shall be programmable for a minimum of one year in advance. Each standard day of the week and user-defined day types shall be able to be associated with a color so that when the schedule is viewed it is very easy, at-a-glance, to determine the schedule for a particular day even from the yearly view. To change the schedule for a particular day, a user shall simply click on the day and then click on the day type.
    c. Each schedule will appear on the screen viewable as the entire year, monthly, week and day. A simple mouse click shall allow switching between views. It shall also be possible to scroll from one month to the next and view or alter any of the schedule times.
    d. Schedules will be assigned to specific controllers and stored in their local RAM memory. Any changes made at the workstation will be automatically updated to the corresponding schedule in the controller.
16. Programmer's Environment: The programmer's environment will include access to a superset of the same programming language supported in the controllers. Here the programmer will be able to configure application software off-line (if desired) for custom program development, write global control programs, system reports, wide area networking data collection routines, and custom alarm management software. On the same screen as the program editor, the programming environment shall include dockable debug and watch bars for program debugging and viewing updated values and point attributes during programming. In addition a wizard tool shall be available for loading programs from a library file in the program editor.
17. Saving/Reloading: The software shall have an application to save and restore field controller memory files. This application shall not be limited to saving and reloading an

entire controller – it must also be able to save/reload individual objects in the controller. This allows off-line debugging of control programs, for example, and then reloading of just the modified information.

18. Data Logging (Trends and Histories): The software shall have the capability to easily configure groups of data points with trend and history logs and display the trend log data. A group of data points shall be created by drag-and-drop method of the points into a folder. The trend and history log data shall be displayed through a simply menu selection. This data shall be able to be saved to file and/or printed. The operator shall be able to define a custom trend and history log for any data in the system. This definition shall include interval, start-time, and stop-time. As a minimum, any point may be recorded at user selected intervals of 1, 5, 15, 30, and 60 minutes as well as once a shift (8 hours), once a day, once a week, once a month, or for change of value. Trend and history data shall be capable of being selected as either instantaneous at the time of recording or averaged between time intervals. All trends and histories shall start based on the hour. Each trend and history shall accommodate up to a minimum of 64 system objects. The system operator with proper password shall be able to determine how many samples are stored. Trend and history data shall be sampled and stored on the Building Controller and be archived on the hard disk monthly. BAS shall archive histories for a minimum of 18 months and shall prompt operator each January to archive each calendar year's data on a CD. Trend and history data shall be able to be viewed and printed from the operator interface software. Trends and histories shall be viewable in a text-based format and graphically. They shall also be storable in a tab delimited ASCII format for use by other industry standard word processing and spreadsheet packages. BAS Contractor shall provide setup of custom histories as required for the listed reports.
19. Audit Trail: The software shall automatically log and timestamp every operation that a user performs from logging on and off to changing a point value, modifying a program, enabling/disabling an object, viewing a graphic display, running a report, modifying a schedule, etc.
20. Custom Application Programming: Provide the tools to create, modify, and debug custom application programming. The operator shall be able to create, edit, and download custom programs at the same time that all other system applications are operating. The system shall be fully operable while custom routines are edited, compiled, and downloaded. The programming language shall have the following features:
    a. The language shall be English language oriented and be based on the syntax of programming languages such as BASIC. It shall allow for free form or fill in the blank programming. Alternatively, the programming language can be graphically-based using function blocks as long as blocks are available that directly provide the functions listed below, and that custom or compound function blocks can be created.
    b. A full screen character editor/programming environment shall be provided. The editor shall be cursor/mouse-driven and allow the user to insert, add, modify, and delete code from the custom programming. It shall also incorporate word processing features such as cut/paste and find/replace.

c. The programming language shall allow independently executing program modules to be developed. Each module shall be able to independently enable and disable other modules.
d. The editor/programming environment shall have a debugging/simulation capability that allows the user to step through the program and to observe any intermediate values and or results. The debugger shall also provide error messages for syntax and execution errors.
e. The programming language shall support conditional statements (IF/THEN/ELSE/ELSE-IF) using compound Boolean (AND, OR, and NOT) and/or relations (EQUAL, LESS THAN, GREATER THAN, NOT EQUAL) comparisons.
f. The programming language shall support floating point arithmetic using the following operators: +, -, /, x, square root, and xy. The following mathematical functions shall also be provided: natural log, log, absolute value, and minimum/maximum value from a list of values.
g. The programming language shall have pre-defined variables that represent clock time, day of the week, and date. Variables that provide interval timing shall also be available. The language shall allow for computations using these values.
h. The programming language shall have ability to pre-defined variables representing the status and results of the System Software, and shall be able to enable, disable, and change the values of objects in the system.

21. Demand Limiting: The demand limiting program shall monitor building power consumption from signals generated by a pulse generator (provided by others) mounted at the building power meter, or from a watt transducer or current transformer attached to the building feeder lines. The demand limiting program shall be based on a predictive sliding window algorithm. The sliding window duration and sampling interval shall be set equal to that of the local Electrical Utility. Control system shall be capable of demand limiting by resetting HVAC system set-points to reduce load while maintaining Indoor Air Quality (humidity, CO2) and comfort control in the space. Input capability shall also be provided for an end-of-billing period indication.
22. Maintenance Management: The system shall monitor equipment status and generate maintenance messages based upon user designated run time, starts, and/or calendar date limits.
23. PID Control: A PID (proportional-integral-derivative) algorithm with direct or reverse action and anti-wind-up shall be supplied. The algorithm shall calculate a time-varying analog value used to position an output or stage a series of outputs. The controlled variable, set point, and PID gains shall be user-selectable with an option for auto-tuning. The set point shall optionally be chosen to be a reset schedule.
24. Staggered Start: This application shall prevent all controlled equipment from simultaneously restarting after a power outage. The order in which equipment (or groups of equipment) is started, along with the time delay between starts shall be user-selectable.
25. System Calculations: Provide software to allow instantaneous power (e.g. KW), flow rates (e.g. GPM) to be accumulated and converted to energy usage data. Provide an algorithm that calculates a sliding-window KW demand value. Provide an algorithm that

calculates energy usage and weather data (heating and cooling degree days). These items shall all be available for daily, previous day, monthly and the previous month.

26. Anti-Short Cycling: All binary (digital) output points shall be protected from short cycling. This feature shall allow minimum on-time and off-time to be selected.

Y. DDC Sensors and Point Hardware

1. Temperature Sensors

a. All temperature devices shall use precision thermistors or RTDs accurate to +/- 1 degree F over a range of –30 to 230 degrees F. Space temperature sensors shall be accurate to +/- 0.5 degrees F over a range of 32 to 122 degrees F. Outdoor air temperature sensors shall be accurate to +/- 0.7 degrees F over a range of -20 to 120 degrees F.

b. Standard space sensors shall be available in an off white enclosure for mounting on a standard electrical box. Temperature sensor may be combined with humidity or carbon dioxide sensor in one housing providing it meets the specifications listed above.

c. Where manual overrides are required in the sequences for off-hours occupancy, space temperature sensor housings shall feature both an optional means for adjusting the space temperature set point, as well as a push button for selecting after hours operation.

d. Space sensors shall incorporate either an LED or LCD display for viewing the space temperature, set point and other operator selectable parameters. The sensors shall include built in buttons that allow local temperature set point adjustment. Displays shall be capable of being blanked out for no local readings where specifically requested by the Owner.

e. Duct temperature sensors shall incorporate a thermistor bead or RTD embedded at the tip of a stainless steel tube. Probe style duct sensors are useable in air handling applications where the AHU or duct area is less than 12 square feet. Tube shall be long enough so that the sensor is at least 1/3 of the way into the air stream.

f. Averaging sensors shall be employed in AHU's or ducts that are 12 square feet and larger. The averaging sensor tube must contain at least one thermistor or RTD for every 3 square feet of AHU or duct area. Sensors shall be accurate to +/- 0.5 F over their normal operating temperature range +/- a 20- degree margin. Example, for a heating/cooling air-handling unit that normally varies between 55 and 100 degrees F, the sensor shall have the stated accuracy over a range of 35 to 120 degrees F.

g. Immersion sensors employed for measurement of temperature in all chilled, condenser, glycol and hot water applications as well as steam and refrigerant applications shall incorporate a precision thermistor or RTD type sensor. Chilled water sensors shall be accurate to +/- 0.5 degrees F over their normal operating temperature range +/- a 20-degree margin. Condenser and hot water sensors shall be accurate to +/- 0.5 degrees F over their normal operating temperature range +/- a 20-degree margin. Example, for a hot water system that normally varies between 90 and 200 degrees F, the sensor shall have the stated accuracy

over a range of 70 to 220 degrees F. Thermal wells shall be brass or stainless steel for non-corrosive fluids below 250 degrees F and 300 series stainless steel for all other applications.

h. Where BTU measurement is called for, the associated temperature sensors shall be matched and calibrated so they differ by no more than 0.2°F.

i. Outside Air Temperature Sensors: Utilize precision thermistor or RTD-type units. Sensors shall be designed to withstand the environmental conditions to which they will be exposed. Sensor enclosure shall allow for adequate air flow over the sensing element. Housing shall be NEMA-3R construction as a minimum.

2. Electric Thermostats

a. Provide low temperature thermostats (freezestats) as indicated on drawings. Low reading freezestats shall register alarm and be wired to shut down the associated fan system when temperature along any 1' of element falls below set point. Manual reset shall be required. Provide 1' of element for every square foot of coil face area. Minimum adjustable range shall be 34 to 46 degrees F with an initial set point of 38 degrees F, unless listed otherwise on the drawings.

b. Provide low voltage thermostats for control of single zone heating or air conditioning equipment as specified in the sequence of operation. Electric thermostats shall include a display of the current space temperature as well as a mechanism for adjusting the set point locally. Electric thermostats that control both heating and cooling shall be 7-day programmable with a minimum 5-degree dead band between the heating and cooling set points.

3. Humidity Sensors

a. Humidity sensors shall be analog type with proportional output using thin film polymer accurate to +/- 4% [2%] at full scale for space, supply, return or exhaust duct applications. Outdoor air humidity sensors (all, whether located outdoors or in outdoor air ducts) shall be accurate to +/- 5% or [3%] over a minimum range of -20 to 120 degrees F. Suppliers shall be able to demonstrate that accuracy is NIST traceable. Acceptable manufacturers include Siemens, Vaisala, E&E Electronik, General Eastern or Staefa.

4. Pressure Sensors

a. Air pressure measurements in ranges up to 0 to 10" water column will be accurate to +/- 1% of range using a solid-state sensing element. Select the smallest range applicable to the use of the sensor. Sensors shall be bi-directional for room pressure monitoring. Acceptable manufacturers include Ashcroft Inc., Modus Instruments, Setra and Mamac.

b. Differential pressure measurements of liquids or steam shall be accurate to +/- 0.5% of range. Housings shall be NEMA 4 rated.

c. Provide wind baffles for outdoor pressure sensor locations and indoor locations where there can be turbulence.

5. Current Devices: Current devices shall be used to monitor fans, pumps, motors and electrical loads. Current devices shall be available in solid and split core models, and offer either a digital (switch for on-off status of constant speed equipment) or an analog (sensor for status of VFD driven equipment) signal to the automation system. Current

switches shall be capable of differentiating between free-wheeling (belt breakage) and normal motor load. Acceptable manufacturers are Veris, Siemens, or approved equal.

a. Supply, Return and Exhaust Air

1) Provide either thermal dispersion velocity meters using bio-medical grade self-heated glass encapsulated thermistor sensors with thermistor temperature sensors or anodized aluminum pitot airflow traverse probes.
2) The flow stations shall operate over a range of 400 to 4000 feet/min with and accuracy of ± 3% of reading. Installed accuracy shall be percent of reading and demonstrated at both maximum and minimum airflow rates for each measurement location.
3) The output signal shall be field selectable and linear with field adjustable scales and shall include 0-5VDC, 0-10VDC, 4-20mA, BACnet, or LonTalk.
4) Furnish Ebtron GTA116-Pc, Air Monitor DPT 2500-plus or approved equal.

Z. Contractor Responsibilities

1. General: Installation of the building automation system shall be performed by this Contractor or his Subcontractor(s). However, all installation shall be under the personal supervision of the Contractor. The Contractor shall certify all work as proper and complete. Under no circumstances shall the design, scheduling, coordination, programming, training, and warranty requirements for the project be delegated to a Subcontractor.
2. Access to Site: Unless notified otherwise, entrance to building is restricted. No one will be permitted to enter the building unless their names have been cleared with the Owner or the Owner's Representative.
3. Code Compliance: All wiring shall be installed in accordance with the more stringent of all applicable electrical codes, equipment manufacturer's recommendations, and wiring specifications in Division 26.
4. Cleanup: At the completion of the work, all equipment pertinent to this contract shall be checked and thoroughly cleaned, and all other areas shall be cleaned around equipment provided under this contract. Clean the exposed surfaces of tubing, hangers, and other exposed metal of grease, plaster, or other foreign materials.

AA. Wiring, Conduit and Cable

1. All wire will be copper and meet the minimum wire size and insulation class listed below:

Wire Class	Wire Size	Isolation Class
Power	12 Gauge	600 Volt
Class One	14 Gauge Std.	600 Volt
Class Two	18 Gauge Std.	300 Volt
Class Three	18 Gauge Std.	300 volt
Communications	Per Mfr.	Per Mfr.

2. Class Two and Three wiring and communications wiring may be run in the same conduit.

3. Where different wiring classes terminate within the same enclosure, maintain clearances and install barriers per the National Electric Code.
4. Where wiring is required to be installed in conduit, galvanized EMT shall be used indoors unless indicated otherwise on the Drawings or as required by Division 26 specifications. Conduit shall be minimum 1/2 inch. Set screw fittings are acceptable for dry interior locations. EMT with compression fittings shall be used for interior damp locations. All exterior conduit shall be GRSC with threaded fittings. Provide conduit seal-off fitting where exterior conduits enter the building or between areas of high temperature/moisture differential.
5. Flexible metallic conduit (max. 3 feet) shall be used for connections to motors, actuators, controllers, and sensors mounted on vibration producing equipment. Liquid-tight flexible conduit shall be use in exterior locations and interior locations subject to moisture.
6. Junction boxes shall be provided at all cable splices, equipment termination, and transitions from EMT to flexible conduit. Interior dry location J-boxes shall be galvanized pressed steel, nominal four-inch square with blank cover. Exterior and damp location JH-boxes shall be cast alloy FS boxes with threaded hubs and gasketed covers.
7. Where the space above the ceiling is a supply or return air plenum, the wiring shall be plenum rated. Teflon wiring can be run without conduit above suspended ceilings. EXCEPTION: Any wire run in suspended ceilings that is used to control outside air dampers or to connect the system to the fire management or smoke control systems shall be in conduit.
8. Coaxial cable shall conform to RG62 or RG59 rating. Provide plenum rated coaxial cable when running in return air plenums.
9. Ethernet 10/100 Base –T network wiring shall be equivalent to Owner's premise wiring or, as a minimum, Category 5e or 6 cabling up to 300' maximum run.
10. Fiber optic cable shall be used for runs over 300' and shall be the following size: 50/125.
11. Only glass fiber is acceptable, no plastic.
12. Fiber optic cable shall only be installed and terminated by an experienced Contractor. The BAS Contractor shall submit to the Engineer the name of the intended Contractor of the fiber optic cable with his submittal documents. Provide all fiber optic transceivers for all fiber cabling runs. Provide all power required at each fiber optic transceiver.
13. Provide all networking electronics required for separate IP based BAS system network.

BB. Hardware Installation
1. Installation Practices for Wiring
   a. All controllers are to be mounted vertically and per the manufacturer's installation documentation.
   b. The 120VAC power wiring to each Ethernet or Webserver controller shall be a dedicated run, with a separate breaker. Each run shall include a separate hot, neutral and ground wire. The ground wire shall terminate at the breaker panel ground. This circuit shall not feed any other circuit or device.
   c. A true earth ground must be available in the building. Do not use a corroded or galvanized pipe, or structural steel.

d. Wires shall be attached to the building proper at regular intervals such that wiring does not droop. Wires shall not to be affixed to or supported by pipes, conduit, ducts, etc.
e. Conduit in finished areas, shall be concealed in ceiling cavity spaces, plenums, furred spaces and wall construction. Exception; metallic surface raceway may be used in finished areas on masonry walls. All surface raceway in finished areas must be color matched to the existing finish within the limitations of standard manufactured colors.
f. Conduit, in non-finished areas where possible, shall be concealed in ceiling cavity spaces, plenums, furred spaces, and wall construction. Exposed conduit will run parallel to or at right angles to the building structure.
g. Wires shall be kept a minimum of three (3) inches from all piping.
h. Where sensor wires leave the conduit system, they are to be protected by a plastic insert.
i. Wire shall not be allowed to run across telephone equipment areas.

2. Installation Practices for Field Devices
   a. Well-mounted sensors shall include thermal conducting compound within the well to insure good heat transfer to the sensor.
   b. Actuators shall be firmly mounted to give positive movement and linkage shall be adjusted to give smooth continuous movement throughout 100 percent of the stroke.
   c. Relay outputs shall include transient suppression across all coils. Suppression devices shall limit transients to 150% of the rated coil voltage.
   d. Water line mounted sensors shall be removable without shutting down the system in which they are installed.
   e. For duct static pressure sensors, the high pressure port shall be connected to a metal static pressure probe inserted into the duct pointing upstream. The low pressure port shall be left open to the plenum area at the point that the high pressure port is tapped into the ductwork.
   f. For building static pressure sensors, the high pressure port shall be inserted into the space via a metal tube. Pipe the low pressure port to the outside of the building with a shield to prevent distortion of reading due to wind.
3. Enclosures
   a. For all I/O requiring field interface devices, these devices where practical shall be mounted in field interface panels (FIP). The Contractor shall provide an enclosure, which protects the device(s) from dust, moisture, conceals integral wiring and moving parts.
   b. FIPs shall contain power supplies for sensors, interface relays and contactors, and safety circuits.
   c. FIP enclosures shall be of steel construction with baked enamel finish, NEMA 1 rated with hinged doors and keyed locks. The enclosures shall be sized for twenty percent spare mounting space. All locks will be keyed identically.
   d. All wiring to and from the FIP shall be to labeled screw type terminals. Analog or communications wiring may use the FIP as a raceway without terminating. The use of wire nuts within the FIP is prohibited.

e. All outside mounted enclosures shall meet the NEMA-4 rating.
f. The wiring within all enclosures shall be run in plastic track. Wiring within controllers shall be wrapped and secured.

4. Identification
   a. Identify all control wires with labeling tape or sleeves using words, letters, and/or numbers that can be exactly cross-referenced with as-built drawings.
   b. All I/O field devices inside field interface panels (FIP) shall be clearly labeled.
   c. Junction box covers shall be marked to indicate that they are a part of the BAS system.
   d. All enclosures (including controllers), all I/O field devices (except space sensors), all control valves and actuators, all routers and other field devices that are not mounted within FIP's shall be identified as follows:
      1) Identification shall be with bakelite nameplates. The lettering shall be in white against a black or blue background, be keyed to the as built drawings, and indicate that the device is a control device.
5. Location
   a. The location of sensors shall be per mechanical and architectural drawings. Coordinate with installing Contractor to provide appropriate straight upstream and/or downstream runs for accurate readings of mixed temperatures or flows.
   b. Space humidity, carbon dioxide or temperature sensors shall be mounted away from machinery generating heat, direct light and diffuser air streams.
   c. Outdoor air temperature sensors shall be mounted on the north building face directly in the outside air. Install outdoor temperature and humidity sensors with solar radiation/precipitation shields to minimize the effects of heat radiated from the building or sunlight and from rain.
   d. Field enclosures shall be located immediately adjacent to the controller panel(s) to which it is being interfaced.
   e. Control panels used for smoke control shall be located in building life safety electric rooms, coordinate exact locations with the electrical Contractor.

CC. Software Installation
1. General
   a. The Contractor shall provide all labor necessary to install, initialize, start-up and debug all system software as described in this section. This includes any operating system software or other third party software necessary for successful operation of the system.
   b. The Contractor shall cooperate with the balancing Contractor and set-up Global Override Commands as required to expedite balancing of air handling and pumping systems. Overrides (to open VAV boxes to desired flow or to open valves) shall be set-up for each system by floor and/or wing so that the total amount of flow can easily be set to equal the desired flow of the central equipment.
2. Database Configuration: The Contractor shall provide all labor to configure those portions of the database that are required by all systems and their respective sequence of operation.

3. Color Graphics: Unless otherwise directed by the Owner, the Contractor shall provide color graphic displays for each system and floor plan. Due to limitations on monitor size, some systems may need to be divided into multiple graphics. Provide hot links to all associated graphics for easy switching. For each system or floor plan, the display shall contain the associated points identified in the sequence and submitted point list and allow for set point changes. Color shall be used to highlight conditions that are out of range or in alarm.
4. Reports: The Contractor shall configure a report for each system as well as overall energy usage and demand reports. As built software documentation shall include the following as a minimum:
   a. Descriptive point lists.
   b. Application program listing.
   c. Application programs with comments.
   d. Printouts of all reports.
   e. Alarm list.
   f. Printouts of all graphics.

DD. System Startup and Acceptance Testing
1. Cooperate and coordinate with all trade Contractors in the start-up of all BAS controlled and monitored equipment, as well as during the testing, balancing, and acceptance of the systems. Work with the balancing Contractor to verify readings from the BAS agree with field measurements (such as VAV box flows) and that final set points for items such as differential pressure sensors (for VFD control) are not too high or too low for all downstream components to reach design flow.
2. Point to Point Checkout: Each I/O device (both field mounted and located in field interface panels and firefighters override panels (FOP)) shall be inspected and verified for proper installation and functionality (such as fan status and valve positioning). A pre-functional performance test checkout sheet itemizing each device shall be filled out, dated and approved by the Project Manager and submitted (with copy to the Owner's Representative).
3. Controller and Webserver Checkout: A field checkout of all controllers and the Webserver, modem, etc. shall be conducted to verify proper operation of both hardware and software. A pre-functional performance test checkout sheet itemizing each device and a description of the associated tests shall be prepared and submitted (with copy to the Owner's Representative) before the completion of the project.
4. System Acceptance Testing
   a. All application software shall be verified and compared against the specified sequences of operation in both normal and failure modes. Control loops shall be exercised by inducing a set point shift of at least 10% and observing whether the system successfully returns the process variable to set point. Record all test results and attach to the Functional Performance Test Results Sheets and submit (with copy to Owner's Representative).
   b. Test each alarm in the system and validate that the system generates the appropriate alarm message, that the message appears at all prescribed destinations [existing operator's workstation,] Webserver, Webserver users, or

printers, and that any other related actions occur as defined (i.e. graphic panels are invoked, reports are generated, etc.). Submit Functional Performance Test Results Sheets (with copy to the Owner's Representative).

c. Perform an operational test of each unique graphic display and report to verify that the item exists, that the appearance and content are correct, that the control systems readings (flows, temperatures, etc,) match field readings, and that any special features work as intended. Submit Functional Performance Test Results Sheets (with copy to the Owner's Representative).

d. Perform an operational test of each third party interface that has been included as part of the automation system. Verify that all points are properly polled, that alarms have been configured, and that any associated graphics and reports have been completed. If the interface involves a file transfer over Ethernet, test any logic that controls the transmission of the file, and verify the content of the specified information. Submit Functional Performance Test Results Sheets (with copy to the Owner's Representative).

e. Perform an operational test of the Webserver by testing all graphics and systems (including alarm acknowledgement) from remote locations. Submit Functional Performance Test Results Sheets (with copy to the Owner's Representative).

f. After the above tests have been completed and the system has demonstrated to function as specified, a 30-day performance test period shall begin. If all systems perform as specified throughout the test period, requiring only routine maintenance, submit Functional Performance Test Results Sheets for each system (with copy to the Owner's Representative) and the BAS system shall be accepted. If any system fails during the test, and cannot be fully corrected within 8-hours, the Owner may request that the performance test be repeated and delay acceptance until all systems pass.

EE. Sequences of Operation: Sequences of operation shall be as shown on drawings. If any items are not shown, include BAS manufacturer's best standard sequences.

FF. Final Documentation: Upon completion of work and prior to request for Certificate of Occupancy, Contractor shall issue a certificate stating that work has been installed generally consistent with construction documents and tested per the specifications. All submittals, test reports, as-builts and O&M manuals are to be provided for engineer's review, prior to request for engineer's completion certificates. In addition, and also prior to request for completion certificates, all punch list items must be completed to the satisfaction of the engineer. The Contractor must verify that all sequences of operations and controls have been incorporated and all systems and equipment are working per the sequences of operations. A blank Contractor's certificate form can be furnished by RDK Engineers upon request.

END OF SECTION 23 09 23

THIS PAGE IS INTENTIONALLY LEFT BLANK

(FOR DUPLEX PRINTING PURPOSES)

PART 1 - GENERAL

1.1 SUMMARY

A. This Section includes control sequences for HVAC systems, subsystems, and equipment.

1.2 DEFINITIONS

A. DDC: Direct digital control.

1.3 TERMINAL UNIT OPERATING SEQUENCE

A. Four-Pipe, Hydronic Fan-Coil Unit:

1. Occupied Time Schedule:

   a. Input Device: DDC system time schedule.
   b. Output Device: Binary output.
   c. Action: Start and stop fan, and enable control.

2. Room Temperature:

   a. Input Device: Electronic temperature sensor.
   b. Output Device: Electronic control-valve operators.
   c. Action: Modulate multiport control valves to maintain temperature.

3. Display:

   a. DDC system graphic.
   b. DDC system occupied/unoccupied mode.
   c. Room temperature indication.
   d. Room temperature set point.
   e. Control-valve position – heating and cooling.
   f. Fan status.

PART 2 - PRODUCTS (Not Applicable)

PART 3 - EXECUTION (Not Applicable)

END OF SECTION 230993

THIS PAGE IS INTENTIONALLY LEFT BLANK

(FOR DUPLEX PRINTING PURPOSES)

PART 1 - GENERAL

1.1 WORK INCLUDED

A. Aboveground Hydronic Pipe and Pipe Fittings
   1. Chilled water supply and return
   2. Heating hot water supply and return
   3. Equipment drains

B. Valves

1.2 RELATED WORK

A. Section 23 05 48- Vibration Isolation and Seismic Restraints

B. Section 23 07 00 – HVAC Piping Insulation

C. Section 23 21 14 - Hydronic Specialties

1.3 REFERENCES

A. ANSI/ASME Section 9 - Welding and Brazing Qualifications

B. ANSI/ASME B16.3 - Malleable Iron Threaded Fittings Classes 150 and 300

C. ANSI/ASME B16.29 - Wrought Copper Fittings

D. ANSI/AWS D1.1 - Structural Welding Code

E. ASTM A53 - Pipe, Steel, Black and Hot-Dipped Zinc Coated Welded and Seamless, for Ordinary Uses.

F. ASTM A120 - Pipe, Steel, Black and Hot-Dipped Zinc Coated (Galvanized), Welded and Seamless, for Ordinary Uses.

G. ASTM A234 - Pipe Fittings of Wrought Carbon Steel and Alloy Steel for Moderate and Elevated Temperatures.

H. ASTM B88 - Seamless Copper Water Tube

I. ASTM D1785, D2467 - PVC Pipe and Fittings

1.4 QUALITY ASSURANCE

A. All pipe shall be manufactured in the United States of America.

B. Valves: Manufacturer's name and pressure rating marked on valve body.

C. Welding Materials and Procedures: Conform to ANSI/ASME Section 9.

D. Welders Certification: In accordance with ANSI/ASME Section 9.

1.5 SUBMITTALS

A. Product Data:

1. Include data on pipe materials, pipe fittings, valves, and accessories.
2. Provide manufacturers catalogue information.
3. Indicate valve data and ratings.
4. Show grooved joint couplings, fittings, valves, and specialties on drawings and product submittals, specifically identified with the manufacturer's style or series designation.

B. Manufacturer's Installation Instructions: Indicate hanging and support methods, joining procedures.

C. Project Record Documents: Record actual location of valves.

D. Maintenance Data: Include installation instructions, spare parts lists, exploded assembly views.

PART 2 - PRODUCTS

2.1 ABOVEGROUND CHILLED WATER AND HEATING HOT WATER PIPING

A. COPPER PIPE (Pipe Sizes 2 Inches and Smaller)
1. Type M pipe: Shall not be used.
2. Type L pipe shall conform to ASTM B-88, bear manufacturer's name and ASTM or ANSI grade on each length.
3. Type K pipe: Shall conform to ASTM B75 and shall bear manufacturer's name on each length.
4. Fittings: ASTM B16.22 wrought copper.
5. Joints: ASTM B32, lead-free solder, grade 95TA.

B. STEEL PIPE (Pipe Sizes Larger than 2 Inches)
1. ASTM A53 or A120, Schedule 40, black, plain end.
2. Fittings: ANSI/ASTM B16.3, malleable iron Class 150, or ASTM A234, forged steel Class 125.
3. Joints: Screwed, or ANSI/AWS D1.1, welded.
4. Mechanical Pipe Coupling System
   a. Grooved pipe with mechanical couplings may be used with schedule 40 black steel pipe in systems where circulating water does not exceed 200° F. Do not use in anti-freeze-protected water or in steam systems.

b. Grooved pipe coupling system shall be manufactured by Victaulic or approved equal.

c. Couplings shall be self centering and shall engage and lock in place the grooved or shouldered ends of pipe and pipe fittings in a positive watertight couplings. Couplings shall be designed to permit some angular pipe deflection, contraction, and expansion. Coupling clamp shall be ductile iron conforming to ASTM A536, Grade 65-45-12. Gasket shall be molded rubber conforming to ASTM D2000, the "line call-out" number shall be suitable for a water temperature of 230° F. Coupling nuts and bolts shall be steel conforming to ASTM A183. Fittings shall be grooved malleable iron conforming to ASTM A47, Grade 32510 or ductile iron conforming to ASTM A536, Grade 65-45-12 or malleable iron conforming to ASTM A47, Grade 32510. Mechanical couplings and fittings shall be of the same manufacturer. Before assembling couplings, coat pipe ends and outsides of gaskets with lubricant approved by the coupling manufacturer to facilitate installation.

2.2 EQUIPMENT DRAIN PIPING

A. Equipment condensate drain piping shall be Schedule 40 PVC conforming to ASTM D-2665, D-3034, F-679 and F-769 or insulated copper DWV pipe conforming to ASTM B306. Use of PVC condensate piping above suspended ceilings being used as air plenums shall be prohibited.

2.3 JOINING MATERIALS

A. Refer to individual specification sections for special joining materials not listed below.

B. Pipe Threads: ASME B1.20.1 for factory-threaded pipe and pipe fittings.

C. Pipe-Flange Gasket Materials: Suitable for chemical and thermal conditions of piping system contents.

1. ASME B16.21, nonmetallic, flat, asbestos-free, 1/8-inch maximum thickness unless thickness or specific material is indicated.
   a. Full-Face Type: For flat-face, Class 125, cast-iron and cast-bronze flanges.
   b. Narrow-Face Type: For raised-face, Class 250, cast-iron and steel flanges.
2. AWWA C110, rubber, flat face, 1/8 inch thick, unless otherwise indicated; and full-face or ring type, unless otherwise indicated.

D. Flange Bolts and Nuts: ASME B18.2.1, carbon steel, unless otherwise indicated.

E. Plastic, Pipe-Flange Gasket, Bolts, and Nuts: Type and material recommended by piping system manufacturer, unless otherwise indicated.

F. Solder Filler Metals: ASTM B 32, lead-free alloys. Include water-flushable flux according to ASTM B 813.

G. Brazing Filler Metals: AWS A5.8, BCuP Series, copper-phosphorus alloys for general-duty brazing, unless otherwise indicated; and AWS A5.8, BAg1, silver alloy for refrigerant piping, unless otherwise indicated.

H. Welding Filler Metals: Comply with AWS D10.12 for welding materials appropriate for wall thickness and chemical analysis of steel pipe being welded.

I. Solvent Cements for Joining Plastic Piping:
   1. CPVC Piping: ASTM F 493.
   2. PVC Piping: ASTM D 2564. Include primer according to ASTM F 656.

2.4 TRANSITION FITTINGS

A. Plastic-to-Metal Transition Fittings: CPVC and PVC one-piece fitting with manufacturer's Schedule 80 equivalent dimensions; one end with threaded brass insert, and one solvent-cement-joint end.

B. Plastic-to-Metal Transition Adaptors: One-piece fitting with manufacturer's SDR 11 equivalent dimensions; one end with threaded brass insert, and one solvent-cement-joint end.

C. Plastic-to-Metal Transition Unions: MSS SP-107, CPVC and PVC four-part union. Include brass end, solvent-cement-joint end, rubber O-ring, and union nut.

2.5 DIELECTRIC FITTINGS

A. Description: Combination fitting of copper alloy and ferrous materials with threaded, solder-joint, plain, or weld-neck end connections that match piping system materials.

B. Insulating Material: Suitable for system fluid, pressure, and temperature.

C. Dielectric Unions: Factory-fabricated, union assembly, for 250-psig minimum working pressure at 180 deg F.

D. Dielectric Flanges: Factory-fabricated, companion-flange assembly, for 150- or 300-psig minimum working pressure as required to suit system pressures.

E. Dielectric-Flange Kits: Companion-flange assembly for field assembly. Include flanges, full-face- or ring-type neoprene or phenolic gasket, phenolic or polyethylene bolt sleeves, phenolic washers, and steel backing washers. Separate companion flanges and steel bolts and nuts shall have 150- or 300-psig minimum working pressure where required to suit system pressures.

F. Dielectric Couplings: Galvanized-steel coupling with inert and noncorrosive, thermoplastic lining; threaded ends; and 300-psig minimum working pressure at 225 deg F

G. Dielectric Nipples: Electroplated steel nipple with inert and noncorrosive, thermoplastic lining; plain, threaded, or grooved ends; and 300-psig minimum working pressure at 225 deg F.

2.6 FLANGES, UNIONS, AND COUPLINGS FOR STEEL PIPE

A. Pipe Size 2 Inches and Under: 150 psig malleable iron unions for threaded piping.

B. Pipe Size Over 2 Inches: 150 psig forged steel slip-on flanges.

C. Dielectric Connections: 2 Inch and Below - Union with galvanized or plate steel threaded end, copper solder end, or any other dissimilar pipe materials, water impervious isolation barrier. Over 2 Inch - Dielectric isolation flange.

2.7 ACCEPTABLE MANUFACTURERS – VALVES

A. Milwaukee

B. Stockham

C. Nibco

2.8 GATE VALVES

A. Up to 2 Inches: Bronze body, bronze trim, union bonnet, rising stem, handwheel, inside screw, solid wedge or disc, threaded ends. Minimum safe working pressure rating shall be 125 psig. Equal to Milwaukee 1151.

B. Over 2 Inches: Iron body, bronze trim, rising stem, handwheel, OS&Y, solid wedge, flanged ends. Minimum safe working pressure rating shall be 125 psig. Equal to Milwaukee F-2885-M.

2.9 GLOBE VALVES

A. 2 Inch and Smaller: 150 LB Bronze body and trim, union bonnet, rising stem and handwheel, renewable Buna-N disc, threaded or sweat ends, gland packed, packable under pressure. Equal to Milwaukee 590S (threaded) or 1590S (sweat).

B. 2-1/2 Inch and Greater: 125 LB Iron body, bronze trim, replaceable bronze disc, bolted bonnet, gland packed, flanged ends. Equal to Milwaukee F2981.

2.10 BALL VALVES

A. Up to 2 Inches: Bronze one piece body, stainless steel ball and shaft, teflon seats and stuffing box ring, lever handle, solder or threaded ends. Class 125, minimum safe working pressure rating shall be 125 psig. Equal to Milwaukee BA-100-S (threaded) or BA-150-S (sweat).

2.11 SWING CHECK VALVES

A. Up to 2 Inches: Bronze or iron body, 45 degree swing disc, screwed ends. Minimum gage working pressure rating shall be 125 psig. Equal to Milwaukee fig 508.

B. Over 2 Inches: Iron body, bronze trim, 45 degree swing disc, renewable disc and seat, flanged ends. Minimum safe working pressure rating shall be 125 psig. Equal to Milwaukee F-2974-M.

2.12 DRAIN VALVES

A. Equal to Milwaukee fig. BA-150-H (sweat) or Milwaukee fig. BA-100-H (threaded) with 3/4-inch hose connection.

2.13 BUTTERFLY VALVES

A. 200 PSI Iron body, stainless steel disc, minus 30 degrees F to 275 degrees F EPT replaceable liner, wafer or lug mounting. 10-Position locking lever handle 3" and under, worm gear drive for sizes greater than 3 inches. Equal to Milwaukee "M" series.

PART 3 - EXECUTION

3.1 INSTALLATION

A. Pipe drawings are diagrammatic and indicate general location and connections. Piping may have to be offset, lowered, or raised as required or directed at site. This does not relieve this Division from responsibility for proper erection of systems of piping in every respect.

B. All piping shall be run concealed throughout finished spaces either in furred spaces, shafts, chases, basements, under floor slabs or above ceilings. Piping buried below grade or below concrete slabs shall be run in PVC electrical conduit.

C. Joints
1. Joints above grade in copper pipe shall be soldered with 95/5 tin-antimony solder using non-corrosive flux. Joints in type K copper below grade shall not be permitted.
2. Joints in steel pipe of all sizes may be made by welding or by flanges. Screwed joints may be made in steel pipe less than 4 inches in diameter. Screwed Joints shall be made with Teflon tape, Teflon liquid or other approved non-hardening joint compound applied to male threads only.
3. Cut piping accurately for fabrication to measurements established at site and work into place without springing or forcing.
4. Remove burr and cutting slag from pipes.
5. Make changes in direction with proper fittings.
6. Do not use reducing bushings, street elbows, or close nipples.

D. Arrange piping not to interfere with removal of other equipment, ducts, or devices, or block access to doors, windows, or access openings. Provide accessible, ground joint unions in piping at connections to equipment.

E. Make provision for expansion and contraction of piping systems without placing undue strain on pipes, fittings, valves, and equipment. Piping shall be properly pitched and drain valves provided at low points to ensure ability to completely drain system. Manual air vents shall be

provided at high points of piping to allow complete air purging. These details are to be provided whether or not they are shown on the Drawings.

F. Provide standard steel or wrought iron sleeves wherever pipes pass through masonry walls or partitions. Provide sleeves at all locations where pipes pass through partitions or floors. Sleeves shall be sized two sizes over pipe size to facilitate proper firestopping.

G. Make offsets, transitions, and changes in direction of pipes, ducts, and electrical raceways as required to maintain proper head room and pitch of sloping lines whether or not indicated on Drawings. Furnish and install traps, air vents, sanitary vents, pull boxes, etc., as required to affect these offsets, transitions, and changes in direction.

H. Provide clearance for installation of insulation and access to valves and fittings.

I. Provide access where valves and fittings are not exposed. Coordinate size and location of access doors with surface finish to insure neat, clean appearance.

J. Install valves with stems upright or horizontal, not inverted.

K. Labeling: Label piping in accordance with specification section 23 05 53.

3.2 APPLICATION

A. Install dielectric unions or flanges where joining dissimilar materials.

B. Install unions downstream of valves and at equipment or apparatus connections.

C. Install brass male adapters each side of valves in copper piped system. Sweat solder adapters to pipe.

D. Install gate valves for shut-off and to isolate equipment, part of systems, or vertical risers. Ball valves may be used in sizes 1-1/4 inches and smaller.

E. Install ball, globe, or butterfly valves for throttling, bypass, or manual flow control services.

F. Provide 3/4 inch gate drain valves at main shut-off valves, low points of piping, bases of vertical risers, at equipment, and as otherwise indicated.

G. Use butterfly valves in chilled water systems (but not hot water or glycol) interchangeably with gate and globe valves in pipe sizes 2-1/2 inch and larger. Do not use butterfly valve to terminate piping dead ends unless a blank-off plate is also provided.

3.3 PIPING SYSTEMS - COMMON REQUIREMENTS

A. Install piping according to the following requirements and Division 23 Sections specifying piping systems.

B. Drawing plans, schematics, and diagrams indicate general location and arrangement of piping systems. Indicated locations and arrangements were used to size pipe and calculate friction loss, expansion, pump sizing, and other design considerations. Install piping as indicated unless deviations to layout are approved on Coordination Drawings.

C. Install piping in concealed locations, unless otherwise indicated and except in equipment rooms and service areas.

D. Install piping indicated to be exposed and piping in equipment rooms and service areas at right angles or parallel to building walls. Diagonal runs are prohibited unless specifically indicated otherwise.

E. Install piping above accessible ceilings to allow sufficient space for ceiling panel removal.

F. Install piping to permit valve servicing.

G. Install piping at indicated slopes.

H. Install piping free of sags and bends.

I. Install fittings for changes in direction and branch connections.

J. Install piping to allow application of insulation.

K. Select system components with pressure rating equal to or greater than system operating pressure.

L. Install escutcheons for penetrations of walls, ceilings, and floors according to the following:
   1. New Piping:
      a. Finished Space:
         1) Bare Piping with Fitting or Sleeve Protruding from Wall: One-piece, deep-pattern type with polished chrome-plated finish.
         2) Insulated Piping: One-piece, stamped-steel type with spring clips with polished chrome-plated finish.
      b. Unfinished Space:
         1) Bare Piping at Wall and Floor Penetrations in Finished Spaces: One-piece, cast-brass type with rough brass finish.
         2) Insulated Piping: One-piece, stamped-steel type with spring clips with polished rough brass finish.

M. Sleeves are not required for core-drilled holes.

N. Permanent sleeves are not required for holes formed by removable PE sleeves.

O. Install sleeves for pipes passing through concrete and masonry walls and concrete floor and roof slabs.

P. Install sleeves for pipes passing through concrete and masonry walls, gypsum-board partitions, and concrete floor and roof slabs.
   1. Cut sleeves to length for mounting flush with both surfaces.
      a. Exception: Extend sleeves installed in floors of mechanical equipment areas or other wet areas 2 inches above finished floor level. Extend cast-iron sleeve fittings below floor slab as required to secure clamping ring if ring is specified.
   2. Install sleeves in new walls and slabs as new walls and slabs are constructed.
   3. Install sleeves that are large enough to provide 1/4-inch annular clear space between sleeve and pipe or pipe insulation. Use the following sleeve materials:
      a. Steel Pipe Sleeves: For pipes smaller than NPS 6.
      b. Steel Sheet Sleeves: For pipes NPS 6 and larger, penetrating gypsum-board partitions.
      c. Stack Sleeve Fittings: For pipes penetrating floors with membrane waterproofing. Secure flashing between clamping flanges. Install section of cast-iron soil pipe to extend sleeve to 2 inches above finished floor level. Refer to Division 07 Section "Sheet Metal Flashing and Trim" for flashing.
         1) Seal space outside of sleeve fittings with grout.
   4. Except for underground wall penetrations, seal annular space between sleeve and pipe or pipe insulation, using joint sealants appropriate for size, depth, and location of joint. Refer to Division 07 Section "Joint Sealants" for materials and installation.

Q. Fire-Barrier Penetrations: Maintain indicated fire rating of walls, partitions, ceilings, and floors at pipe penetrations. Seal pipe penetrations with firestop materials. Refer to Division 07 Section "Penetration Firestopping" for materials.

R. Verify final equipment locations for roughing-in.

S. Refer to equipment specifications in other Sections of these Specifications for roughing-in requirements.

3.4 PIPING JOINT CONSTRUCTION

A. Join pipe and fittings according to the following requirements and Division 23 Sections specifying piping systems.

B. Ream ends of pipes and tubes and remove burrs. Bevel plain ends of steel pipe.

C. Remove scale, slag, dirt, and debris from inside and outside of pipe and fittings before assembly.

D. Soldered Joints: Apply ASTM B 813, water-flushable flux, unless otherwise indicated, to tube end. Construct joints according to ASTM B 828 or CDA's "Copper Tube Handbook," using lead-free solder alloy complying with ASTM B 32.

E. Brazed Joints: Construct joints according to AWS's "Brazing Handbook," "Pipe and Tube" Chapter, using copper-phosphorus brazing filler metal complying with AWS A5.8.

F. Threaded Joints: Thread pipe with tapered pipe threads according to ASME B1.20.1. Cut threads full and clean using sharp dies. Ream threaded pipe ends to remove burrs and restore full ID. Join pipe fittings and valves as follows:
   1. Apply appropriate tape or thread compound to external pipe threads unless dry seal threading is specified.
   2. Damaged Threads: Do not use pipe or pipe fittings with threads that are corroded or damaged. Do not use pipe sections that have cracked or open welds.

G. Welded Joints: Construct joints according to AWS D10.12, using qualified processes and welding operators according to Part 1 "Quality Assurance" Article.

H. Flanged Joints: Select appropriate gasket material, size, type, and thickness for service application. Install gasket concentrically positioned. Use suitable lubricants on bolt threads.

I. Plastic Piping Solvent-Cement Joints: Clean and dry joining surfaces. Join pipe and fittings according to the following:
   1. Comply with ASTM F 402 for safe-handling practice of cleaners, primers, and solvent cements.
   2. CPVC Piping: Join according to ASTM D 2846/D 2846M Appendix.
   3. PVC Pressure Piping: Join schedule number ASTM D 1785, PVC pipe and PVC socket fittings according to ASTM D 2672. Join other-than-schedule-number PVC pipe and socket fittings according to ASTM D 2855.
   4. PVC Nonpressure Piping: Join according to ASTM D 2855.

J. Plastic Pressure Piping Gasketed Joints: Join according to ASTM D 3139.

K. Plastic Nonpressure Piping Gasketed Joints: Join according to ASTM D 3212.

L. PE Piping Heat-Fusion Joints: Clean and dry joining surfaces by wiping with clean cloth or paper towels. Join according to ASTM D 2657.
   1. Plain-End Pipe and Fittings: Use butt fusion.
   2. Plain-End Pipe and Socket Fittings: Use socket fusion.

M. Fiberglass Bonded Joints: Prepare pipe ends and fittings, apply adhesive, and join according to pipe manufacturer's written instructions.

3.5 PIPING CONNECTIONS

A. Make connections according to the following, unless otherwise indicated:
   1. Install unions, in piping NPS 2 and smaller, adjacent to each valve and at final connection to each piece of equipment.
   2. Install flanges, in piping NPS 2-1/2 and larger, adjacent to flanged valves and at final connection to each piece of equipment.
   3. Install dielectric coupling, nipple, unions, or flanges to connect piping materials of dissimilar metals.

3.6 FIELD QUALITY CONTROL

A. All piping systems shall be hydrostatically tested to 3 times operating pressure or as required by the authority having jurisdiction (AHJ) and proven leak free prior to insulating. Leaking pipe, joints, or fittings shall be removed, replaced and retested. System components and equipment subject to damage from pressure testing shall be isolated by valves or removed prior to leak testing.

3.7 CLEANING

A. All control valves shall be locked into a wide open position and all strainer baskets, with the exception of the air separator strainer, shall be removed during cleaning and flushing. Remove and clean air separator strainer after final flushing.

B. Flush all piping with cold water to remove chips and scale, repeating this step until no trace of contamination is found.

C. Next fill all piping with a 2 percent solution of trisodium phosphate and water, and bring to a temperature of 200 degrees F. To determine quantity of trisodium phosphate to be provided, Contractor shall determine volume of system by filling system through a meter (provided by Contractor).

D. Circulate hot water through all piping and heating elements for 2 hours, then completely drain while still hot. Repeat this step until no sign of oil or sediment is found.

E. Charge system with water and inhibitor solution. Coordinate with owners water treatment contractor.

END OF SECTION 232113

THIS PAGE IS INTENTIONALLY LEFT BLANK

(FOR DUPLEX PRINTING PURPOSES)

PART 1 - GENERAL

1.1 WORK INCLUDED

A. Expansion tanks.

B. Air vents.

C. Air separators.

D. Strainers.

E. Combination pump discharge valves (triple duty valves).

F. Relief valves.

G. Balance valves.

H. Pump suction fittings.

I. Filter Feeder

1.2 RELATED WORK

A. Section 23 21 13 - Hydronic Piping.

1.3 REFERENCES

A. ANSI/ASME - Boilers and Pressure Vessels Code.

1.4 REGULATORY REQUIREMENTS

A. Conform to ANSI/ASME Boilers and Pressure Vessels Code Section 8D for manufacture of tanks.

1.5 QUALITY ASSURANCE

A. Manufacturer: For each product specified, provide components by same manufacturer throughout.

1.6 SUBMITTALS

A. Product data.

B. Include component sizes, rough-in requirements, service sizes, and finishes. Include product description, model, and dimensions.

C. Submit operation and maintenance data.

D. Include installation instruction, assembly views, lubrication instructions, and replacement parts list.

PART 2 - PRODUCTS

2.1 ACCEPTABLE MANUFACTURERS - HYDRONIC SPECIALTIES

A. Bell and Gossett

B. Taco

C. Armstrong

2.2 DIAPHRAGM-TYPE COMPRESSION TANKS

A. Construction: Welded steel, tested and stamped in accordance with Section 8D of ANSI/ASME Code; supplied with National Board Form U-1, rated for working pressure of 125 psig, with flexible EPDM diaphragm sealed into tank, and steel legs or saddles.

B. Accessories: Pressure gage and air-charging fitting, tank drain; precharge to 12 psig.

2.3 AIR VENTS

A. Manual Type: Short vertical sections of 2 inch (50 mm) diameter pipe to form air chamber, with 1/8 inch (3 mm) brass needle valve at top of chamber.

B. Float Type: Brass or semi-steel body, copper float, stainless steel valve and valve seat; suitable for system operating temperature and pressure; with isolating valve.

2.4 AIR SEPARATORS

A. Combination Air Separators/Strainers: Steel, tested and stamped in accordance with Section 8D of ANSI/ASME Code, for 125 psig operating pressure, with stainless steel integral strainer with 3/16 inch perforations, tangential inlet and outlet connections, and internal stainless steel air collector tube.

2.5 STRAINERS

A. Size 2 inch (50 mm) and Under: Screwed brass or iron body for 175 psig working pressure, Y pattern with 1/32 inch stainless steel perforated screen.

B. Size 2-1/2 inches to 4-inch: Flanged iron body for 175 psig working pressure, Y pattern with 3/64 inch stainless steel perforated screen.

C. Size 5 inches and Larger: Flanged iron body for 175 psig working pressure, basket pattern with 1/8-inch stainless steel perforated screen.

D. Equip all strainers with 1/2-inch ball valve and hose bib for blowdown.

2.6 COMBINATION PUMP DISCHARGE VALVES (TRIPPLE DUTY VALVES)

A. Valves: Straight or angle pattern, flanged cast-iron valve body with bolt-on bonnet for 175 psig operating pressure, non-slam check valve with spring-loaded bronze disc and seat, stainless steel stem, and calibrated adjustment permitting flow regulation.

2.7 RELIEF VALVES

A. Bronze body, teflon seat, stainless steel stem and springs, automatic, direct pressure actuated, capacities ASME certified and labeled. Provide capacity as schedules, indicated or corresponding to the required relief valve capacity of the equipment served.

2.8 BALANCE VALVES (4 Inches and Smaller)

A. Calibrated, balance valve with precision machined orifice, readout valves equipped with integral check valves and gasketed caps, calibrated nameplate and indicating pointer.

2.9 BALANCE VALVES (greater than 4")

A. Balancing valves, where indicated in piping larger than 4 inches, shall consist of a combination of a butterfly valve for throttling and an orifice type flow meter. Where means of throttling already exists, such as combination valves at pump outlets, omit the butterfly valve.

B. Cast iron, wafer type, orifice insert flow meter for 250 psig working pressure, with read-out valves equipped with integral check valves with gasketed caps.

C. Portable meter consisting of case containing one, 3 percent accuracy pressure gage with 0 to 60 feet pressure range two, 3 percent accuracy pressure gages with 0-135 inches and 0-60 feet pressure ranges for 125 psig maximum working pressure, color coded hoses for low and high pressure connections, and connectors suitable for connection to read-out valves.

2.10 PUMP SUCTION FITTINGS

A. Fitting: Angle pattern, cast-iron body, threaded for 2 inch and smaller, flanged for 2-1/2 inch and larger, rated for 175 psig working pressure, with inlet vanes, cylinder strainer with 3/16 inch diameter openings, disposable fine mesh strainer to fit over cylinder strainer, and permanent magnet located in flow stream and removable for cleaning.

B. Accessories: Adjustable foot support, blowdown tapping in bottom, gage tapping in side.

PART 3 - EXECUTION

3.1 INSTALLATION AND APPLICATION

A. Install specialties in accordance with manufacturer's instructions to permit intended performance.

B. Support tanks inside building from building structure in accordance with manufacturer's instructions.

C. Where large air quantities can accumulate, provide enlarged air collection standpipes.

D. Provide manual air vents at system high points and as indicated.

E. For automatic air vents, provide vent tubing to glycol tank. Automatic air vents shall not be used above ceilings or other concealed locations.

F. Provide air separator on suction side of system circulation pump and connect to expansion tank.

G. Provide valved drain and hose connection on strainer blow down connection.

H. Provide combination pump discharge valve on discharge side of pumps.

I. Provide balancing valves on water outlet from terminal heating units.

J. Provide relief valves on pressure tanks, low pressure side of reducing valves, heat exchangers, and expansion tanks.

K. Select system relief valve capacity so that it is greater than make-up pressure reducing valve capacity. Select equipment relief valve capacity not to exceed rating of connected equipment.

L. Where one line vents several relief valves, make cross sectional area equal to sum of individual vent areas.

M. Provide pump suction fitting on suction side of base mounted centrifugal pumps. Remove temporary strainers after cleaning systems.

N. Support pump suction fittings with floor mounted pipe and flange supports.

END OF SECTION 23 21 14

PART 1 - GENERAL

1.1 RELATED DOCUMENTS

A. Drawings and general provisions of the Contract, including General and Supplementary Conditions and Division 01 Specification Sections, apply to this Section.

1.2 SUMMARY

A. Section Includes:

1. Ductless fan coil units and accessories.

1.3 SUBMITTALS

A. Product Data: For each type of product.

1. Include rated capacities, operating characteristics, and furnished specialties and accessories.

B. Shop Drawings:

1. Include details of equipment assemblies. Indicate dimensions, weights, loads, required clearances, method of field assembly, components, and location and size of each field connection.
2. Include diagrams for power, signal, and control wiring.

1.4 INFORMATIONAL SUBMITTALS

A. Coordination Drawings: Floor plans, reflected ceiling plans, and other details, drawn to scale, on which the following items are shown and coordinated with each other, based on input from installers of the items involved:

1. Suspended ceiling components.
2. Structural members to which fan coil units will be attached.
3. Method of attaching hangers to building structure.
4. Size and location of initial access modules for acoustical tile.
5. Items penetrating finished ceiling, including the following:

a. Lighting fixtures.
b. Air outlets and inlets.
c. Sprinklers.
d. Access panels.

6. Perimeter moldings.

B. Field quality-control reports.

C. Sample Warranty: For special warranty.

1.5 CLOSEOUT SUBMITTALS

A. Operation and Maintenance Data: For fan coil units to include in emergency, operation, and maintenance manuals.

1. Maintenance schedules and repair part lists for motors, coils, integral controls, and filters.

1.6 MAINTENANCE MATERIAL SUBMITTALS

A. Furnish extra materials that match products installed and that are packaged with protective covering for storage and identified with labels describing contents.

1. Fan Coil Unit Filters: Furnish two spare filters for each filter installed.
2. Fan Belts: Furnish two spare fan belts for each unit installed.

1.7 QUALITY ASSURANCE

A. Comply with NFPA 70.

B. ASHRAE Compliance: Applicable requirements in ASHRAE 62.1, Section 5 - "Systems and Equipment" and Section 7 - "Construction and Startup."

C. ASHRAE/IES 90.1 Compliance: Applicable requirements in ASHRAE/IES 90.1, Section 6 - "Heating, Ventilating, and Air-Conditioning."

1.8 COORDINATION

A. Coordinate layout and installation of fan coil units and suspension system components with other construction that penetrates or is supported by ceilings, including light fixtures, HVAC equipment, fire-suppression-system components, and partition assemblies.

1.9 WARRANTY

A. Special Warranty: Manufacturer agrees to repair or replace components of condensing units that fail in materials or workmanship within specified warranty period.

1. Failures include, but are not limited to, the following:

a. Compressor failure.
b. Condenser coil leak.

2. Warranty Period: Five years from date of Substantial Completion.
3. Warranty Period (Compressor Only): Five years from date of Substantial Completion.

PART 2 - PRODUCTS

2.1 SYSTEM DESCRIPTION

A. Electrical Components, Devices, and Accessories: Listed and labeled as defined in NFPA 70, by a qualified testing agency, and marked for intended location and application.

B. Factory-packaged and -tested units rated according to AHRI 440, ASHRAE 33, and UL 1995.

2.2 DUCTLESS FAN COIL UNITS

A. Manufacturers: Subject to compliance with requirements, provide products by the following:
1. Trane Inc.

B. Basis-of-Design Product: Subject to compliance with requirements, provide product indicated on Drawings or comparable product by one of the following:

1. Trane Inc.

C. Fan Coil Unit Configurations: split.

1. Number of Heating Coils: Two with four-pipe system.
2. Number of Cooling Coils: Two with two-pipe system.

D. Coil Section Insulation: 1/2-inch-thick, coated glass fiber complying with ASTM C 1071 and attached with adhesive complying with ASTM C 916.

1. Surface-Burning Characteristics: Insulation and adhesive shall have a combined maximum flame-spread index of 25 and smoke-developed index of 50 when tested according to ASTM E 84 by a qualified testing agency.

2. Airstream Surfaces: Surfaces in contact with the airstream shall comply with requirements in ASHRAE 62.1.

E. Coil Section Insulation: Insulate coil section according to Section 230616 "HVAC Equipment Insulation."

1. Surface-Burning Characteristics: Insulation and adhesive shall have a combined maximum flame-spread index of 25 and smoke-developed index of 50 when tested according to ASTM E 84 by a qualified testing agency.
2. Airstream Surfaces: Surfaces in contact with the airstream shall comply with requirements in ASHRAE 62.1.

F. Main and Auxiliary Drain Pans: Stainless steel. Fabricate pans and drain connections to comply with ASHRAE 62.1. Drain pans shall be removable.

G. Chassis: Galvanized steel where exposed to moisture, with baked-enamel finish and removable access panel. Floor-mounting units shall have leveling screws.

H. Cabinet: Steel with baked-enamel finish in manufacturer's standard paint color as selected by Architect.

1. Vertical Unit Front Panels: Removable, steel, with steel discharge grille and channel-formed edges, cam fasteners, and insulation on back of panel.
2. Horizontal Unit Bottom Panels: Fastened to unit with cam fasteners and hinge and attached with safety chain; with integral stampes discharge grilles.
3. Stack Unit Discharge and Return Grille: Aluminum double-deflection discharge grille, and louvered- or panel-type return grille; color as selected by Architect from manufacturer's standard colors. Return grille shall provide maintenance access to fan coil unit.
4. Steel recessing flanges for recessing fan coil units into ceiling or wall.

I. Outdoor-Air Wall Box: Minimum 0.1265-inch-thick, aluminum, rain-resistant louver and box with integral eliminators and bird screen.

1. Louver Configuration: Horizontal, rain-resistant louver.
2. Louver Material: Aluminum.
3. Bird Screen: 1/2-inch mesh screen on interior side of louver.
4. Decorative Grille: On outside of intake.
5. Finish: Anodized aluminum, color as selected by Architect from manufacturer's standard colors.

J. Outdoor-Air Damper: Galvanized-steel blades with edge and end seals and nylon bearings; with electronic, modulating actuators.

K. Filters: Minimum arrestance and a minimum efficiency reporting value (MERV) according to ASHRAE 52.2 and all addendums.

1. MERV Rating: 8 when tested according to ASHRAE 52.2.
2. Washable Foam: 70 percent arrestance and MERV 3.
3. Glass Fiber Treated with Adhesive: 80 percent arrestance and MERV 5.
4. Pleated Cotton-Polyester Media: 90 percent arrestance and MERV 7.

L. Hydronic Coils: Copper tube, with mechanically bonded aluminum fins spaced no closer than 0.1 inch , rated for a minimum working pressure of 200 psig and a maximum entering-water temperature of 220 deg F. Include manual air vent and drain valve.

M. Indoor Refrigerant Coils: Copper tube, with mechanically bonded aluminum fins spaced no closer than 0.1 inch and brazed joints at fittings. Comply with AHRI 210/240, and leak test to minimum 450 psig for a minimum 300-psig working pressure. Include thermal expansion valve.

N. Steam Coils: Copper distributing tube, with mechanically bonded aluminum fins spaced no closer than 0.1 inch, rated for a minimum working pressure of 75 psig.

O. Electric-Resistance Heating Coils: Nickel-chromium heating wire, free of expansion noise and hum, mounted in ceramic inserts in a galvanized-steel housing; with fuses in terminal box for overcurrent protection and limit controls for high-temperature protection. Terminate elements in stainless-steel machine-staked terminals secured with stainless-steel hardware.

P. Fan and Motor Board: Removable.

1. Fan: Forward curved, double width, centrifugal; directly connected to motor. Thermoplastic or painted-steel wheels, and aluminum, painted-steel, or galvanized-steel fan scrolls.
2. Motor: Permanently lubricated, multispeed; resiliently mounted on motor board. Comply with requirements in Section 230513 "Common Motor Requirements for HVAC Equipment."
3. Wiring Termination: Connect motor to chassis wiring with plug connection.

Q. Factory, Hydronic Piping Package: ASTM B 88, Type L copper tube with wrought-copper fittings and brazed joints. Label piping to indicate service, inlet, and outlet.

1. Two-way, modulating control valve for dual-temperature coil.
2. Two-way, modulating control valve for chilled-water coil.
3. Two-way, modulating control valve for hot-water heating coil.
4. Two-way, modulating control valve for hot-water reheat coil.
5. Hose Kits: Minimum 400-psig working pressure and operating temperatures from 33 to 211 deg F. Tag hose kits to equipment designations.

    a. Length: 36 inches.
    b. Minimum Diameter: Equal to fan coil unit connection size.

6. Two-Piece Ball Valves: Bronze body with full-port, chrome-plated bronze ball; PTFE or TFE seats; and 600-psig minimum CWP rating and blowout-proof stem.

7. Calibrated-Orifice Balancing Valves: Bronze body, ball type; 125-psig working pressure, 250 deg F maximum operating temperature; with calibrated orifice or venturi, connections for portable differential pressure meter with integral seals, threaded ends, and a memory stop to retain set position.
8. Automatic Flow-Control Valve: Brass or ferrous-metal body; 300-psig working pressure at 250 deg F; with removable, corrosion-resistant, tamperproof, self-cleaning piston spring; factory set to maintain constant indicated flow with plus or minus 10 percent over differential pressure range of 2 to 80 psig.
9. Y-Pattern Hydronic Strainers: Cast-iron body (ASTM A 126, Class B); 125-psig working pressure; with threaded connections, bolted cover, perforated stainless-steel basket, and bottom drain connection. Include minimum NPS 1/2 hose-end, full-port, ball-type blowdown valve in drain connection.
10. Wrought-Copper Unions: ASME B16.22.
11. Risers: ASTM B 88, Type L copper pipe with hose and ball valve for system flushing.

R. Control devices and operational sequences are specified in Section 230900 "Instrumentation and Control for HVAC" and Section 230993 "Sequence of Operations for HVAC Controls."

S. Basic Unit Controls:

1. Control voltage transformer.
2. Wall-mounting thermostat with the following features:

    a. Heat-cool-off switch.
    b. Fan on-auto switch.
    c. Fan-speed switch.
    d. Automatic changeover.
    e. Adjustable deadband.
    f. Exposed set point.
    g. Exposed indication.
    h. Degree F indication.

3. Wall-mounting humidistat.

    a. Exposed set point.
    b. Exposed indication.

4. Wall-mounting temperature sensor.
5. Unoccupied-period-override push button.
6. Data entry and access port.

    a. Input data includes room temperature, and humidity set points and occupied and unoccupied periods.
    b. Output data includes room temperature and humidity, supply-air temperature, entering-water temperature, operating mode, and status.

T. DDC Terminal Controller:

1. Scheduled Operation: Occupied and unoccupied periods on seven-day clock with a minimum of four programmable periods per day.
2. Unoccupied-Period-Override Operation: Two hours.
3. Unit Supply-Air Fan Operation:

   a. Occupied Periods: Fan runs continuously.
   b. Unoccupied Periods: Fan cycles to maintain room setback temperature.

4. Hydronic-Cooling-Coil Operation:

   a. Occupied Periods: Modulate control valve to maintain room temperature.
   b. Unoccupied Periods: Close control valve.

5. Refrigerant-Coil Operation:

   a. Occupied Periods: Start compressor to maintain room temperature or humidistat set point.
   b. Unoccupied Periods: Stop compressor cooling and cycle compressor for heating to maintain setback temperature.

6. [Supplemental]Heating-Coil Operation:

   a. Occupied Periods: Open control valve to provide heating if room temperature falls below thermostat set point.
   b. Unoccupied Periods: Start fan and open control valve if room temperature falls below setback temperature.
   c. Switch refrigerant-reversing valve to operate supplemental coil for heating when outdoor temperature is below 25 deg F.

7. Dual-Temperature Hydronic-Coil Operation:

   a. Occupied Periods: When chilled water is available, open control valve if room temperature exceeds thermostat set point. When hot water is available, open control valve if temperature falls below thermostat set point.
   b. Unoccupied Periods: When chilled water is available, close control valve. When hot water is available, open control valve if room temperature falls below thermostat setback temperature.

8. Reheat-Coil Operation:

   a. Humidity Control for Occupied Periods:

      1) Humidistat opens control valve to provide heating. As space temperature rises above set point, cooling-coil valve opens to maintain room temperature.

b. Humidity Control for Unoccupied Periods: Close control valve.
c. Occupied Periods:

1) Heating Operations: Open control valve to provide heating if room temperature falls below thermostat set point.
2) Humidity-Control Operations: Humidistat opens control valve to provide heating. As space temperature rises above set point, cooling-coil valve opens to maintain room temperature.

d. Unoccupied Periods: Start fan and open control valve if room temperature falls below setback temperature. Humidity control is not available.

9. Outdoor-Air Damper Operation:

a. Occupied Periods: Open damper to fixed position for 25 percent outdoor air.
b. Unoccupied periods: Close damper.

10. Outdoor-Air Damper Operation:

a. Occupied Periods:

1) Outdoor-Air Temperature below Room Temperature: If room temperature is above thermostat set point, modulate outdoor-air damper to maintain room temperature (outdoor-air economizer). If room temperature is below thermostat set point, position damper to fixed minimum position.
2) Outdoor-Air Temperature above Room Temperature: Position damper to fixed minimum position for 25 percent outdoor air.

b. Unoccupied Periods: Close damper.

11. Outdoor-Air Damper Operation (Enthalpy Based):

a. Occupied Periods:

1) Outdoor-Air Enthalpy below Room Enthalpy: If room temperature is above room-temperature set point, modulate outdoor-air damper to maintain room temperature (outdoor-air economizer). If room temperature is below set point, position damper to fixed minimum position for 25 percent outdoor air.
2) Outdoor-Air Enthalpy above Room Enthalpy: Position damper to fixed minimum position for 25 percent outdoor air.

b. Unoccupied Periods: Close outdoor-air damper and open return-air damper.

12. Controller shall have volatile-memory backup.

U. Building Automation System (BAS) Interface Requirements:

1. Interface relay for scheduled operation.
2. Interface relay to provide indication of fault at the central workstation.
3. Provide BACnet interface for central BAS workstation for the following functions:

    a. Adjust set points.
    b. Fan coil unit start, stop, and operating status.
    c. Data inquiry, including outdoor-air damper position, supply- and room-air temperature and humidity.
    d. Occupied and unoccupied schedules.

V. Electrical Connection: Factory wire motors and controls for a single electrical connection.

W. Capacities and Characteristics:

1. Vertical Cabinet

    a. Fan:

        i. Airflow: 921 cfm
        ii. External Static Pressure: 0.00 inches wg.
        iii. Fan Speed: 1080.
        iv. Motor Speed: 1080.
        v. Motor Horsepower: 0.22.
        vi. Drive: Direct.

    b. Cooling Capacity:

        i. Total: 24,450 Btu/h.
        ii. Sensible: 18,050 Btu/h.
        iii. Entering-Air Dry-Bulb Temperature: 80 deg F.
        iv. Entering-Air Wet-Bulb Temperature: 67 deg F.

    c. Chilled-Water Coil:

        i. Water Flow: 5.0 gpm
        ii. Water-Side Pressure Loss: 9.80 ft wg.
        iii. Entering-Water Temperature: 45 deg F.

    d. Heating Capacity:

        i. Output: 46,600 Btu/h.
        ii. Entering-Air Temperature: 55 deg F
        iii. Air-Temperature Rise: 30 deg F.

    e. Hot-Water Heating Coil:

        i. Water Flow: 4.2 gpm.

ii. Water-Side Pressure Loss: 6.4 ft wg.
iii. Entering-Water Temperature: 150 deg F.

f. Electrical Characteristics for Single-Point Connection:

i. Voltage/Phase/Hertz: 208/1/60.

2. Horizontal Cabinet

a. Fan:

i. Airflow: 1,330 cfm
ii. External Static Pressure: 0.20 inches wg.
iii. Fan Speed: 1450.
iv. Motor Speed: 1450.
v. Motor Horsepower: 0.22.
vi. Drive: Direct.

b. Cooling Capacity:

i. Total: 30,900 Btu/h.
ii. Sensible: 23,780 Btu/h.
iii. Entering-Air Dry-Bulb Temperature: 80 deg F.
iv. Entering-Air Wet-Bulb Temperature: 67 deg F.

c. Chilled-Water Coil:

i. Water Flow: 5.0 gpm
ii. Water-Side Pressure Loss: 15.49 ft wg.
iii. Entering-Water Temperature: 45 deg F.

d. Heating Capacity:

i. Output: 59,500 Btu/h.
ii. Entering-Air Temperature: 55 deg F
iii. Air-Temperature Rise: 30 deg F.

e. Hot-Water Heating Coil:

i. Water Flow: 5.3 gpm.
ii. Water-Side Pressure Loss: 10.1 ft wg.
iii. Entering-Water Temperature: 150 deg F.

f. Electrical Characteristics for Single-Point Connection:

i. Voltage/Phase/Hertz: 208/1/60.

3. Vertical Recessed

    a. Fan:

        i. Airflow: 870 cfm
        ii. External Static Pressure: 0.20 inches wg.
        iii. Fan Speed: 1450.
        iv. Motor Speed: 1450.
        v. Motor Horsepower: 0.22.
        vi. Drive: Direct.

    b. Cooling Capacity:

        i. Total: 17,890 Btu/h.
        ii. Sensible: 14,740 Btu/h.
        iii. Entering-Air Dry-Bulb Temperature: 80 deg F.
        iv. Entering-Air Wet-Bulb Temperature: 67 deg F.

    c. Chilled-Water Coil:

        i. Water Flow: 3.80 gpm
        ii. Water-Side Pressure Loss: 4.93 ft wg.
        iii. Entering-Water Temperature: 45 deg F.

    d. Heating Capacity:

        i. Output: 38,100 Btu/h.
        ii. Entering-Air Temperature: 55 deg F
        iii. Air-Temperature Rise: 30 deg F.

    e. Hot-Water Heating Coil:

        i. Water Flow: 3.4 gpm.
        ii. Water-Side Pressure Loss: 3.8 ft wg.
        iii. Entering-Water Temperature: 150 deg F.

    f. Electrical Characteristics for Single-Point Connection:

        i. Voltage/Phase/Hertz: 208/1/60.

PART 3 - EXECUTION

3.1 EXAMINATION

A. Examine areas, with Installer present, to receive fan coil units for compliance with requirements for installation tolerances and other conditions affecting performance of the Work.

B. Examine roughing-in for piping and electrical connections to verify actual locations before fan coil unit installation.

C. Proceed with installation only after unsatisfactory conditions have been corrected.

3.2 INSTALLATION

A. Install fan coil units level and plumb.

B. Install fan coil units to comply with NFPA 90A.

C. Suspend fan coil units from structure with elastomeric hangers. Vibration isolators are specified in Section 230548 "Vibration and Seismic Controls for HVAC Piping and Equipment."

D. Verify locations of thermostats, humidistats, and other exposed control sensors with Drawings and room details before installation. Install devices 60 inches (1525 mm) above finished floor.

E. Install new filters in each fan coil unit within two weeks after Substantial Completion.

3.3 CONNECTIONS

A. Piping installation requirements are specified in other Sections. Drawings indicate general arrangement of piping, fittings, and specialties. Specific connection requirements are as follows:

1. Install piping adjacent to machine to allow service and maintenance.
2. Connect piping to fan coil unit factory hydronic piping package. Install piping package if shipped loose.
3. Connect condensate drain to indirect waste.

    a. Install condensate trap of adequate depth to seal against fan pressure. Install cleanouts in piping at changes of direction.

B. Ground equipment according to Section 260526 "Grounding and Bonding for Electrical Systems."

C. Connect wiring according to Section 260519 "Low-Voltage Electrical Power Conductors and Cables."

3.4 FIELD QUALITY CONTROL

A. Testing Agency: Engage a qualified testing agency to perform tests and inspections.

B. Manufacturer's Field Service: Engage a factory-authorized service representative to test and inspect components, assemblies, and equipment installations, including connections.

C. Perform the following tests and inspections with the assistance of a factory-authorized service representative:

1. Operational Test: After electrical circuitry has been energized, start units to confirm proper motor rotation and unit operation.
2. Operate electric heating elements through each stage to verify proper operation and electrical connections.
3. Test and adjust controls and safety devices. Replace damaged and malfunctioning controls and equipment.

D. Remove and replace malfunctioning units and retest as specified above.

E. Prepare test and inspection reports.

3.5 ADJUSTING

A. Adjust initial temperature and humidity set points.

B. Occupancy Adjustments: When requested within 12 months of date of Substantial Completion, provide on-site assistance in adjusting system to suit actual occupied conditions. Provide up to two visits to Project during other-than-normal occupancy hours for this purpose.

3.6 DEMONSTRATION

A. Engage a factory-authorized service representative to train Owner's maintenance personnel to adjust, operate, and maintain fan coil units.

END OF SECTION 238219

THIS PAGE IS INTENTIONALLY LEFT BLANK

(FOR DUPLEX PRINTING PURPOSES)

PART 1 GENERAL

1.01 SECTION INCLUDES

A. Interlocking concrete paver units .

B. Sand setting bed.

C. Sand joint filler.

1.02 REFERENCE STANDARDS

A. ASTM C33/C33M - Standard Specification for Concrete Aggregates; 2016.

B. ASTM C936/C936M - Standard Specification for Solid Concrete Interlocking Paving Units; 2013.

PART 2 PRODUCTS

2.01 MATERIALS

A. Interlocking Concrete Pavers: Hydraulically pressed concrete, configured for interlocking with adjacent units and complying with ASTM C936/C936M.
   1. Compressive Strength: 8000 psi (55 MPa) average, with minimum of 7200 psi (50 MPa).
   2. Thickness: 2-3/8 inches (60 mm).
   3. Style: Rectangular.
   4. Color: Natural.

B. Sand for Setting Bed: Clean washed natural sand or crushed stone complying with gradation requirements of ASTM C33/C33M for fine aggregates.

C. Sand for Joints: Fine washed sand with 100 percent passing No. 16 (1.18 mm) sieve and not more than 10 percent passing No. 200 (0.075 mm) sieve.

END OF SECTION

THIS PAGE IS INTENTIONALLY LEFT BLANK

(FOR DUPLEX PRINTING PURPOSES)

PART 1 – GENERAL

1.01 THIS SECTION INCLUDES THE FOLLOWING:

A. Aluminum Windscreen Systems.

1.02 PERFORMANCE REQUIREMENTS

A. General: In engineering windscreens to withstand structural loads indicated, determine allowable design working stresses of materials based on the following:
   1. Aluminum: AA 30, "Specification for Aluminum Structures."
   2. Cold-Formed Structural Steel: AISI SG-673, Part I, "Specification for the Design of Cold-Formed Steel Structural Members."
   3. For fully tempered glass in glass-supported handrails and railings, use a safety factor of 3 applied to the applicable modulus of rapture listed in "Mechanical Properties" in AAMA Aluminum Curtain Wall Series No. 12, "Structural Properties of Glass."

B. Structural Performance of Windscreens. Provide windscreens capable of withstanding the following structural loads without exceeding allowable design working stress of materials for windscreens, anchors, and connections:
   1. Top of Windscreen: Capable of withstanding the following loads applied as indicated:
      a. Concentrated load of 200 lb point load applied at any point and in any direction.
      b. Uniform load of 25 psf on glass panel. per linear foot applied horizontally and concurrently with uniform load of 50 lb on 1sf
      c. Concentrated and uniform loads above need not be assumed to act concurrently.
   2. Infill area of Windscreens: Capable of withstanding a horizontal concentrated load of 50 lb. applied to 1 sq. ft. at any point in system, including panels, intermediate rails, balusters, or other elements composing infill area.
      a. Load above need not be assumed to act concurrently with loads on top rails in determining stress on windscreen.

C. Thermal Movements: Provide windscreens that allow for thermal movements resulting form the following maximum change (range) in ambient and surface temperatures by preventing buckling, opening of joints, over stressing of components, failure of connections, and other detrimental effects. Base engineering calculation on surface temperatures of materials due to both solar heat gain and nighttime-sky heat loss.
   1. Temperature Change (Range): 120 deg F (67 deg C), ambient; 180 deg F

D. Control of Corrosion: Prevent galvanic action and other forms of corrosion by insulating metals and other materials from direct contact with incompatible materials.

1.03 SUBMITTALS

A. Product Data: For manufacturers product lines of windscreens assembled from standard components.
   1. Include Product Data for grout, anchoring cement, and paint products.

B. Shop Drawings: Show fabrication and installation of windscreens. Include plans, elevations, sections, details, and attachments to other work.

C. Samples for Initial Selection: Manufacturer's color charts showing the full range of colors available for products with factory-applied color finishes.

D. Samples for Initial selection: Short sections of railing or flat sheet metal Samples showing available mechanical finishes.

E. Samples for Verification: For each type of exposed finish required, prepared on components indicated below and of same thickness and metal indicated for the Work. If finishes involve normal color and texture variations, include sample sets showing the full range of variations expected.
   1. 6-inch-(150-mm-) long sections of each different linear railing member, including posts, bottom rails and stanchions, .
   2. Fittings, brackets, and clips.
   3. Assembled Samples of windscreens, made from full-size components, including post, bottom rail, and infill. Show method of finishing members at intersections. Samples need not be full height.

F. Qualification Data: For firms and persons specified in "Quality Assurance" Article to demonstrate their capabilities and experience. Include lists of completed projects with project names and addresses, names and addresses of architects and owners, and other information specified.

G. Product Test Reports: Indicating products comply with requirements, based on comprehensive testing of current products.

1.04 QUALITY ASSURANCE

A. Source Limitations: Obtain each type of railing through one source form a single manufacturer.

1.05 STORAGE

A. Store handrails and railings in a dry, well-ventilated, weather tight place.

1.06 PROJECT CONDITIONS

A. Field Measurements: Verify handrail and railing dimensions by field measurements before fabrication and indicate measurements on Shop Drawings. Coordinate fabrication schedule with construction progress to avoid delaying the work.
   1. Established Dimensions: Where field measurements cannot be made without delaying the work, establish dimensions and proceed with fabricating handrails and railings without field measurements. Coordinate construction to ensure that actual dimensions correspond to established dimensions.

1.07 COORDINATION

A. Coordinate installation of anchorage for windscreens. Furnish Setting Drawings, templates, and directions for installing anchorages, including sleeves, concrete inserts, anchor bolts, and items with integral anchors, that are to be embedded in concrete or masonry. Deliver such items to project site in time for installation.

PART 2 – PRODUCTS

2.01 MANUFACTURERS

A. Available Manufacturers: Subject to compliance with requirements, manufacturers offering products that may be incorporated into the Work include the following:
   1. Aluminum Windscreen Systems:
      a. C.R. Laurence Co., Inc.

2.02 METALS

A. General: Provide metal free from pitting, seam marks, roller marks, stains, discolorations, and other imperfections where exposed to view on finished units.

B. Aluminum: Alloy and temper recommended by aluminum producer and finisher for type of use and finish indicated, and with not less than strength and durability properties of alloy and temper designated below for each aluminum form required.

1. Extruded Bar and Tube: ASTM B 221 (ASTM B 221M), alloy 6063-T5/T52.
2. Extruded Structural Pipe and Tube: ASTM B 429, alloy 6063-T6.
3. Drawn Seamless Tube: ASTM B 210 (ASTM B 210M), alloy 6063-T832.
4. Plate and Sheet: ASTM B 209 (ASTM B 209M), alloy 6061-T6.
5. Die and Hand Forgings: ASTM B 247 (ASTM B 247M), alloy 6061-T6.
6. Castings: ASTM B 26/B 26M, alloy A356-T6.

C. Brackets, Flanges, and Anchors: Cast or formed metal of same type of material and finish as supported rails, unless otherwise indicated.
   1. Provide cast brackets with flange tapped for concealed anchorage to threaded hanger bolt.
   2. Provide formed or cast brackets with predrilled hole for exposed bolt anchorage.
   3. Provide formed steel brackets with predrilled hole for bolted anchorage and with snap-on cover that matches windscreen finish and conceals bracket base and bolt head.
   4. Provide brackets with interlocking pieces that conceal anchorage. Locate screws on bottom of bracket.

2.03 GLASS PRODUCTS AND GLAZING MATERIALS

A. Tempered Glass: ASTM C 1048, Kind FT (fully tempered), Condition A (uncoated), Type 1 (transparent glass, flat). Quality q3 (glazing select). Provide products complying with requirements indicated below for class, thickness, and manufacturing process that have been tested for surface and edge compression according to ASTM C 1048 and for impact strength according to 16 CFR, Part 1201 for Category II materials.
   1. Clear glass: Class I (clear).
   2. Thickness: ¼" unless otherwise noted.
   3. Manufacturing Process: Manufacture fully tempered glass as follows:
      a. By vertical (tong-held) or horizontal (roller-hearth) process, at manufacturers option, except provide horizontal process tongless and free of tong marks.
   4. Subject to compliance with requirements, provide safety glass permanently marked with certification label of Safety Glazing Certification Council or another certification agency, acceptable to authorities having jurisdiction.

B. Glazing Cement and Accessories: Provide glazing cement and related accessories recommended, or supplied by railing manufacturer for bonding glass to metal subrails.

2.04 FASTENERS

A. Fasteners for Anchoring Handrails and Railings to other Construction: Select fasteners of type, grade and class required to produce connections suitable for anchoring handrails and railings to other types of construction indicated and capable of withstanding design loads.

B. Fasteners for Interconnecting Handrail and Railing Components: Use fasteners fabricated from same basic metal as fastened metal, unless other wise indicated. Do not use metal that are corrosive or incompatible with material joined.
   1. Provide concealed fasteners for interconnecting windscreen components and for attaching them to other Work, unless exposed fasteners are unavoidable or are standard fastening method for handrail and railing indicated.
   2. Provide Phillips flat-head machine screws for exposed fasteners, unless otherwise indicated.

C. Cast-in-Place and Post installed Anchors: Anchors of type indicated below, fabricated from corrosion-resistant materials with capability to sustain, without failure, a load equal to six times the load imposed when installed in concrete, as determined by testing per ASTM E 488 conducted by qualified independent testing agency.

2.05 GROUT AND ANCHORING CEMENT

A. Nonshrink, Nonmetallic Grout: Premixed, factory-packaged, nonstaining, noncorrosive, nongaseous grout complying with ASTM C 1107. Provide grout specifically recommended by manufacturer for interior and exterior applications.

B. Interior Anchoring Cement: Factory-packaged, nonshrink, nonstaining, hydraulic-controlled expansion cement formulation for missing with water at Project site to create pourable anchoring, patching, and grouting compound. Use for interior applications only.

2.06 FABRICATION

A. Assemble windscreens in shop to greatest extent possible to minimize field splicing and assembly. Disassemble units only as necessary for shipping and handling limitations. Clearly mark units for reassembly and coordinated installation. Use connections that maintain structural value of joined pieces.

B. Form changes in direction of windscreen members as follows:
   1. As detailed.

C. Cut, reinforce, drill, and tap components, as indicated, to receive finish hardware, screws, and similar items.

D. Close exposed ends of railing members with prefabricated end fittings.

2.07 GLAZING PANEL FABRICATION

A. Glass Panels: Cut tempered glass to final size and shape before heat treatment; provide for proper edge clearance and bit on glass. Provide thickness indicated, but not less than that required to support structural loads.

B. Straight Panels: provide tempered glass panels for straight sections.

2.08 FINISHES, GENERAL

A. Comply with NAAMM's "Metal Finishes Manual for Architectural and Metal Products" for recommendations for applying and designating finishes.

B. Appearance of Finished Work: Variations in appearance of abutting or adjacent pieces are acceptable if they are within one-half of the range of approved Samples. Noticeable variations in same piece are not acceptable. Variations in appearance of other components are acceptable if they are within the range of approved Samples and are assembled or installed to minimize contrast.

2.09 ALUMINUM FINISHES

A. Finish designations prefixed by AA comply with the system established by the Aluminum Association for designating aluminum finishes.

B. High Performance Organic Coating Finish: AA-C12C42RIx (Chemical Finish: cleaned with inhibited chemicals, Chemical Finish: acid chromate-fluoride-phosphate conversion coating; Powder Coating: as specified below). Prepare, pretreat, and apply coating to exposed metal surfaces to comply with manufacturer's written instructions.

C. POLYESTER POWDER COATING, 3 MIL. AVERAGE FILM THICKNESS COMPLYING WITH AAMA 2604-98.
   1. Color and Gloss: As selected by Architect from manufacturer's full range of choices for color and gloss, including custom colors. Selections might include up to four different selections for color.

PART 3 – EXECUTION

3.01 EXAMINATION

A. Examine substrates, where reinforced to receive anchors, to verify that locations of concealed reinforcements have been clearly marked for Installer. Locate reinforcements and mark locations if not already done.

3.02 INSTALLATION, GENERAL

A. Fit exposed connections together to form tight, hairline joints.

B. Cutting, Fitting, and Placement: Perform Cutting, drilling, and fitting required for installing windscreens. Set windscreens accurately in location, alignment, and elevation, measured from established lines and levels and free from rack.

1. Do not weld, cut, or abrade surfaces of railing components that have been coated or finished after fabrication and that are intended for field connection by mechanical or other means without further cutting or fitting.
2. Align windscreens so variations from level for horizontal members and from parallel with rake of steps and ramps for sloping members do not exceed ¼ inch in 12 feet (5 mm in 3 m).

C. Corrosion Protection: Coat concealed surfaces of aluminum and copper alloys that will be in contact with grout, concrete, masonry, wood, or dissimilar metals, with a heavy coat of bituminous paint.

D. Adjust windscreens before anchoring to ensure alignment at abutting joints. Space posts at interval indicated, but not less than that required by structural loads.

3.03 WINDSCREEN CONNECTIONS

A. Nonwelded Connections: Use mechanical joints for permanently connecting railing components. Use wood blocks and padding to prevent damage to railing members and fittings.

3.04 INSTALLING GLASS PANELS

A. Glass, Windscreens: Install assembly to comply with railing manufacturer's written instructions. Attach base channel to building structure, then insert and connect factory-fabricated and assembled glass panels.

3.05 CLEANING

A. Touchup Painting: Immediately after erection, clean field welds, bolted connections, and abraded areas of shop paint, and paint exposed areas with same material.

3.06 PROTECTION

A. Protect finishes of windscreens from damage during construction period with temporary protective coverings approved by railing manufacturer. Remove protective coverings at the time of Substantial Completion.

B. Restore finishes damaged during installation and construction period so no evidence remains of correction work. Return items that cannot be refinished in field to shop; make required alterations and refinish entire unit, or provide new units.

END OF SECTION

THIS PAGE IS INTENTIONALLY LEFT BLANK

(FOR DUPLEX PRINTING PURPOSES)