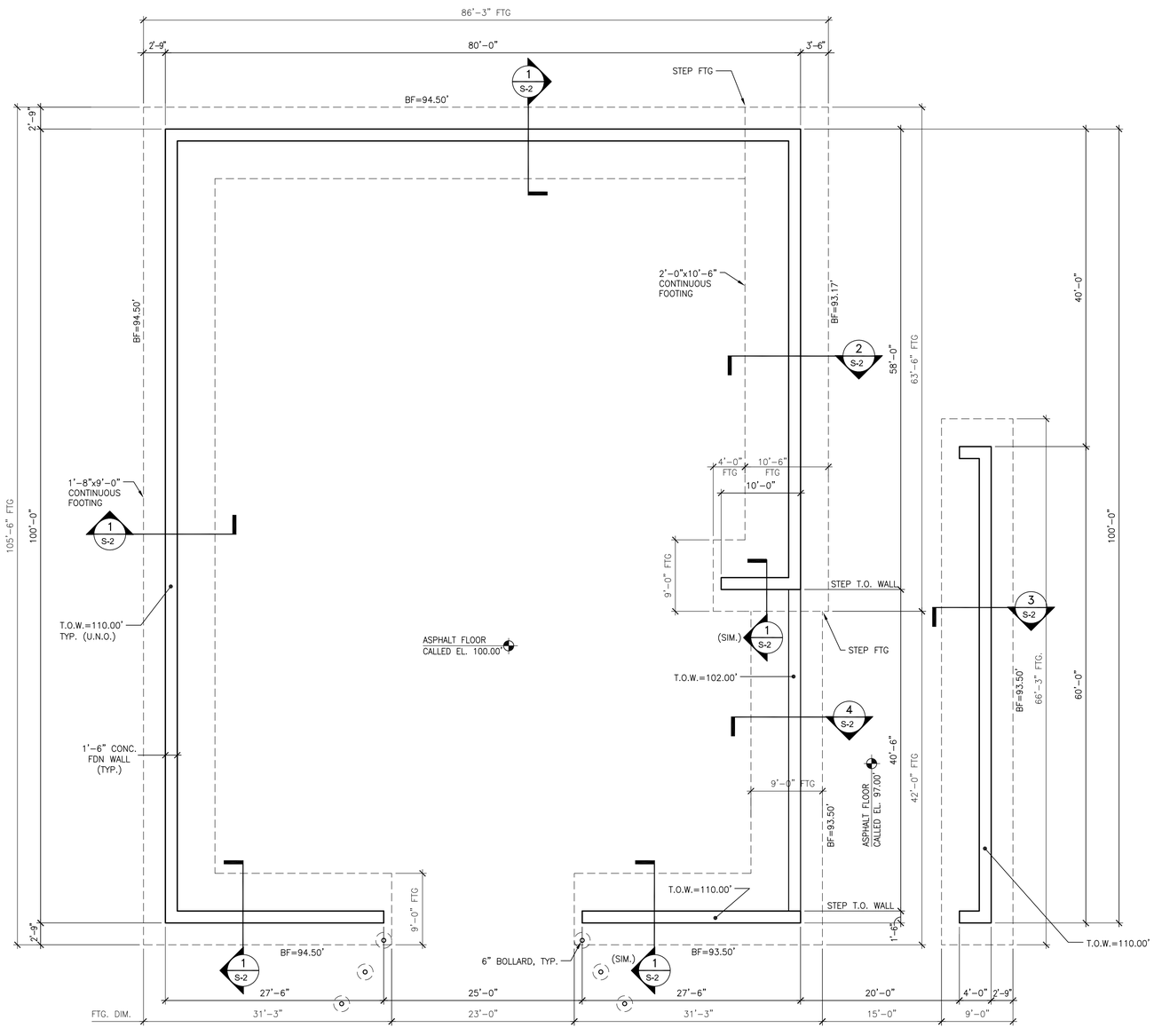

FOUNDATION PLAN

SCALE: 1/8"=1'-0"

FOUNDATION NOTES:

1. ALL SOIL CONTAINING ORGANIC OR UNSUITABLE BEARING MATERIAL SHALL BE CLEARED FROM THE BUILDING FOOTPRINT.
2. ALL SOIL SUPPORTED FOOTINGS AND SLABS SHALL BE FOUNDED UPON COMPACTED NATURAL SUBGRADE OR COMPACTED BANK RUN GRAVEL FILL WITH A SAFE BEARING CAPACITY OF NOT LESS THAN 4000 PSF (ASSUMED). COORDINATE SITE SPECIFIC SUBGRADE PREPARATION REQUIREMENTS WITH GEOTECHNICAL REPORT.
3. ROCK SHALL BE EXCAVATED A MINIMUM OF 12" BELOW BOTTOM OF FOOTING ELEVATION AND COVERED WITH A LAYER OF COMPACTED GRAVEL.
4. A MODIFIED PROCTOR TEST SHALL BE PERFORMED BY A SOILS TESTING LAB ON EACH TYPE OF SOIL TO BE COMPACTED.
5. SOIL SHALL BE COMPACTED TO NOT LESS THAN 95% OF MAXIMUM DRY DENSITY PER ASTM D1557 IN LIFTS NOT TO EXCEED 6" LOOSE DEPTH.
6. FIELD DENSITY TESTS SHALL BE PERFORMED BY AN INDEPENDENT SOILS TESTING LAB TO VERIFY COMPACTION. A COPY OF ALL TEST REPORTS SHALL BE FILED WITH THE ENGINEER.
7. BACKFILL SYMMETRICALLY AGAINST ALL FOUNDATION WALLS IN INCREMENTS NOT TO EXCEED 2 FEET MAXIMUM DIFFERENTIAL.
8. SEE PLUMBING AND ELECTRICAL DRAWINGS FOR UNDER FLOOR SYSTEMS AND SPECIAL GRANULAR FILL MATERIAL REQUIREMENTS.
9. NO FOOTINGS OR SLABS SHALL BE POURED INTO OR AGAINST SUBGRADE CONTAINING FREE WATER OR ICE.

CONCRETE NOTES:

1. ALL CONCRETE SHALL HAVE A COMPRESSIVE STRENGTH OF NOT LESS THAN 4000 PSI AT 28 DAYS.
2. ALL CONCRETE WALLS, FOOTINGS AND CONCRETE EXPOSED TO THE WEATHER SHALL CONTAIN AN APPROVED AIR ENTRAINING ADMIXTURE. AIR CONTENT SHALL BE 5% TO 9%.
3. ALL CONCRETE SHALL CONTAIN AN APPROVED WATER-REDUCING ADMIXTURE.
4. A SET OF FOUR (4) CONCRETE TESTS CYLINDERS SHALL BE TAKEN BY AN INDEPENDENT CONCRETE TESTING LAB ON EACH DAY WHEN CONCRETE PLACEMENT EXCEEDS 5 CUBIC YARDS. ONE CYLINDER SHALL BE BROKEN AT 7 DAYS, TWO AT 28 DAYS, AND ONE AT 56 DAYS. A COPY OF ALL TEST REPORTS SHALL BE FILED WITH THE ARCHITECT.
5. NO CALCIUM CHLORIDE SHALL BE USED IN ANY CONCRETE.
6. A MIX DESIGN SHALL BE SUBMITTED FOR APPROVAL FOR EACH TYPE OF CONCRETE.
7. ALL REINFORCING BARS SHALL BE ASTM A-767 GRADE 60, EPOXY COATED.
8. SHOP DRAWINGS SHOWING REINFORCING DETAILS, INCLUDING STEEL SIZES, SPACING AND PLACEMENT, SHALL BE SUBMITTED BY THE CONTRACTOR FOR APPROVAL PRIOR TO FABRICATION.
9. ALL REINFORCING BAR SPLICES SHALL CONFORM TO REQUIREMENTS OF ACI 318, BUT IN NO CASE SHALL THEY BE LESS THAN 2'-0"
10. DOWELS SHALL MATCH SIZE AND SPACING OF MAIN REINFORCING.
11. CONSTRUCTION JOINTS IN ALL WALLS SHALL BE NOT FURTHER APART THAN 60 FEET IN ANY DIRECTION. SEE PLAN FOR LOCATION OF SLAB CONSTRUCTION AND/OR SHRINKAGE JOINTS.
12. INTERIOR CONCRETE SURFACES, INCLUDING THE TOP OF WALLS, SHALL BE TREATED WITH A CORROSION INHIBITOR SUCH AS "SURTREAT" OR EQUAL IN ACCORDANCE WITH THE MANUFACTURES REQUIREMENTS AND APPLICATION PROCEDURES.

This drawing is copyrighted and is subject to copyright protection as an "architectural work" under 17 U. S. C. Sec. 101 et seq. The protection includes but is not limited to the overall form as well as the arrangement and composition of spaces, materials, color and elements in the design. Under such protection, unauthorized use of this drawing may result in the cessation of construction or buildings being seized and/or monetary compensation being awarded to The Robinson Green Beretta Corporation (RGB).

Any reproduction, possession, or use of this drawing or any part thereof without the express written permission of RGB, is prohibited. Violators will be prosecuted to the full extent of the law.

© RGB 2018

Certification

THOMAS P. GRAFE
No. 4735
REGISTERED PROFESSIONAL ENGINEER

Drawn by MJD

Checked by JRM

Revised on

Consultants

C.A. PRETZER ASSOCIATES INC.
STRUCTURAL ENGINEERS
50 Freeway Drive
Cranston, RI 02930
TEL. 401-785-2690 FAX: 401-461-9360
DESIGN, CONSULTATION, INVESTIGATION

50 Holden Street
Providence, Rhode Island 02908

Phone: (401) 272-1730
Fax: (401) 273-7156

E-mail: rgbinfo@rgb.net
www.rgb.net

RGB
Architecture · Engineering · Interior Design

Project

STATE OF RHODE ISLAND

DEPARTMENT OF TRANSPORTATION

PORTSMOUTH SALT SHED

BOYD'S LANE
PORTSMOUTH, RI 02971

Drawing Status

ISSUED FOR CONSTRUCTION

Issued On APRIL 30, 2018

Sheet Contents

Foundation Plan and General Notes

Project Number. 6390

Drawing No.

S-1

Sheet of

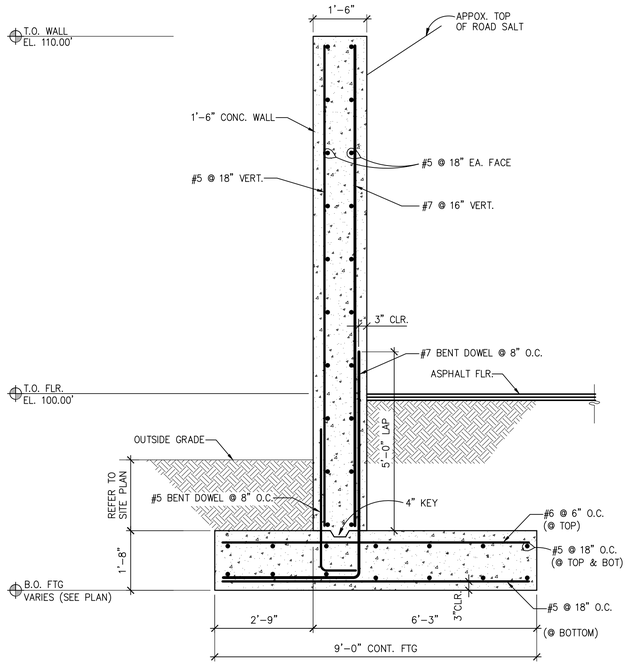

1 S-2 FND WALL SECTION
SCALE: 1/2"=1'-0"

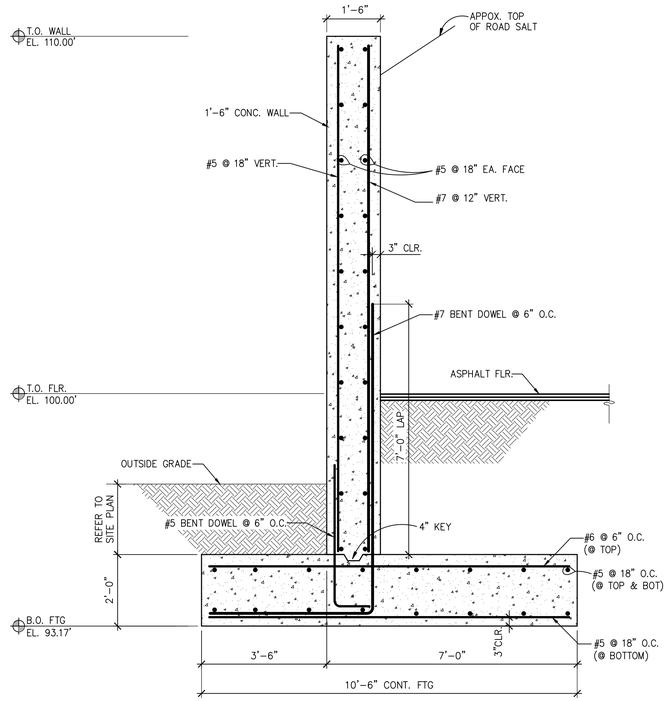

2 S-2 FDN WALL SECTION
SCALE: 1/2"=1'-0"

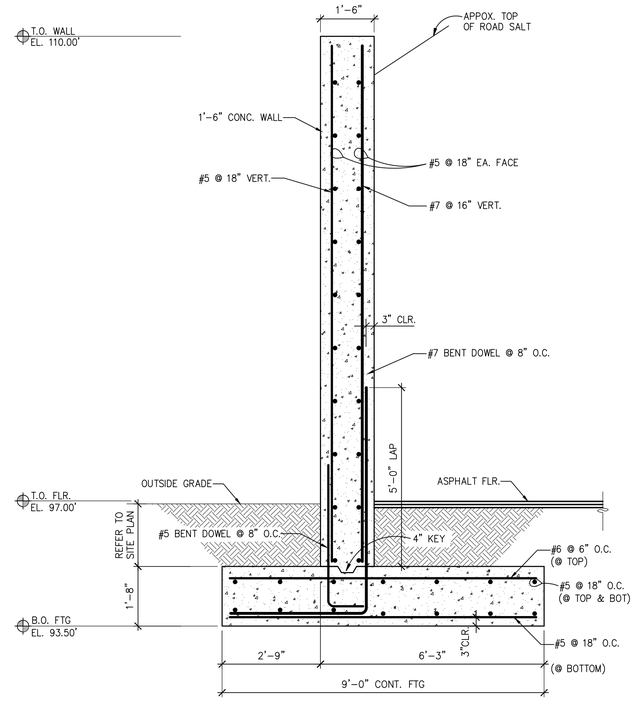

3 S-2 FND WALL SECTION
SCALE: 1/2"=1'-0"

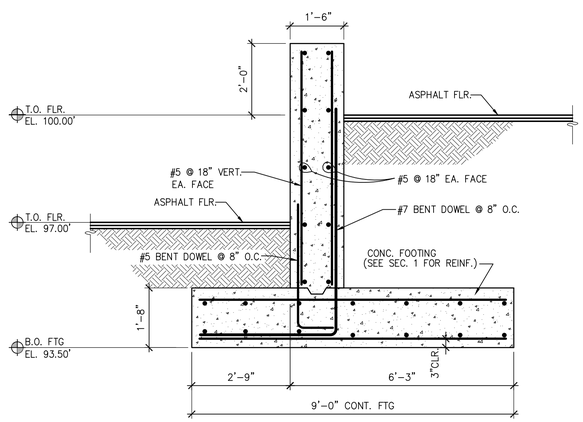

4 S-2 FND WALL SECTION
SCALE: 1/2"=1'-0"

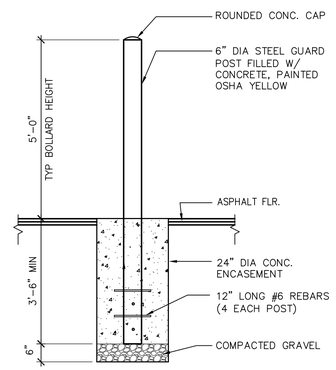

5 S-2 BOLLARD DETAIL
SCALE: 1/2"=1'-0"

This drawing is copyrighted and is subject to copyright protection as an "architectural work" under 17 U. S. C. Sec. 101 et seq. The protection includes but is not limited to the overall form as well as the arrangement and composition of spaces, materials, color and elements in the design. Under such protection, unauthorized use of this drawing may result in the cessation of construction or buildings being seized and/or monetary compensation being awarded to The Robinson Green Beretta Corporation (RGB).

Any reproduction, possession, or use of this drawing or any part thereof without the express written permission of RGB, is prohibited. Violators will be prosecuted to the full extent of the law.

© RGB 2018

Certification

THOMAS P. GRAFE
No. 4735
REGISTERED PROFESSIONAL ENGINEER

Drawn by MJD
Checked by JRM

Revised on

Consultants

C.A. PRETZER ASSOCIATES INC.
STRUCTURAL ENGINEERS
50 Freeway Drive
Cranston, RI 02930
TEL. 401-785-2690 FAX: 401-461-9360
DESIGN, CONSULTATION, INVESTIGATION

50 Holden Street
Providence, Rhode Island 02908

Phone: (401) 272-1730
Fax: (401) 273-7156

E-mail: rgbinfo@rgb.net
www.rgb.net

RGB
Architecture · Engineering · Interior Design

Project

STATE OF RHODE ISLAND

DEPARTMENT OF TRANSPORTATION

PORTSMOUTH SALT SHED

BOYD'S LANE
PORTSMOUTH, RI 02971

Drawing Status

ISSUED FOR CONSTRUCTION

Issued On APRIL 30, 2018

Sheet Contents

Sections and Details

Project Number. 6390

Drawing No.

S-2

Sheet of