FORT ADAMS STATE PARK

NEWPORT · RHODE ISLAND

RHODE ISLAND D.E.M.

FACILITY ELECTRICAL UPGRADES

PREPARED FOR

RHODE ISLAND DEPARTMENT OF ENVIRONMENTAL MANAGEMENT
DIVISION OF PLANNING & DEVELOPMENT
235 PROMENADE STREET
PROVIDENCE, RI 02908

PREPARED BY

FUSS & O'NEILL
317 IRON HORSE WAY, SUITE 204
PROVIDENCE, RI 02908
401.861.3070
www.fando.com

SHEET INDEX

SHEET No.	SHEET TITLE
GI-001	COVER SHEET
E-001	GENERAL NOTES AND LEGEND
E-002	MISCELLANEOUS DETAILS - SHEET 1
E-003	MISCELLANEOUS DETAILS - SHEET 2
ES-100	OVERALL SITE PLAN
ES-101	MAIN ENTRANCE ELECTRICAL SITE PLAN - DEMOLITION
ES-102	MAIN ENTRANCE ELECTRICAL SITE PLAN - NEW WORK
ES-103	WALKWAY LIGHTING AND ELECTRICAL UPGRADES
ES-104	PIER AND PEDESTAL ELECTRICAL UPGRADES
ES-105	MUSEUM ELECTRICAL SITE PLANS AND DETAILS
ES-106	NORTH PIER PARKING LOT - WEST END - ELECTRICAL SITE PLANS
ES-107	FORT ELECTRIC SITE PLAN AND DETAILS

LOCATION MAP
SCALE: 1" = 800'

N

BID DOCUMENTS 06/09/2017

PROJ. No.: 20160726.A10
DATE: APRIL 2017

GI-001

File Path: J:\DWG\P2016\0726\A10\MEP\Electrical\20160726.A10_COV01.dwg, Layout: GI-001, Plotted: Friday, June 09, 2017, User: tdion Plotter: DWG TO PDF.PC3 CTB File: FO.STB

LEGEND

E	EXISTING UNDERGROUND ELECTRICAL WIRING
E	NEW UNDERGROUND ELECTRICAL WIRING
T	EXISTING TELECOMMUNICATIONS MANHOLE
E	EXISTING ELECTRICAL MANHOLE
MH	NEW ELECTRIC MANHOLE – SEE DETAIL ON DWG ES-105
	EXISTING BOLLARD LIGHT
	EXISTING SITE LIGHT
HH	NEW HANDHOLE
T	NEW TRANSFORMER – SIZED AS INDICATED
	DISCONNECT SWITCH – SIZED AS INDICATED
	PANELBOARD – SIZED AS INDICATED
100A	CIRCUIT BREAKER SIZED AS INDICATED
	GROUND ROD

ABBREVIATIONS:

Ø	PHASE
A	AMPERE
BLDG	BUILDING
C	CONDUIT
CB	CIRCUIT BREAKER
DISC	DISCONNECT SWITCH
DWG	DRAWING
GFI	GROUND-FAULT INTERRUPTING
GND	GROUND
HOA	HANDS-OFF-AUTO
KW	KILOWATT
KVA	KILOVOLTAMP
MCB	MAIN CIRCUIT BREAKER
NEC	NATIONAL ELECTRICAL CODE
NGRID	NATIONAL GRID
OC	ON CENTER
PVC	POLYVINYL CHLORIDE
RECPT	RECEPTACLE
R&D	REMOVE AND DISPOSE
R&R	REMOVE AND REPLACE
REL	RELOCATE
RS	RIGID STEEL
UG	UNDERGROUND
UNK.	UNKNOWN
V	VOLTS
WP	WEATHERPROOF (NEMA 4X)
XFMR	TRANSFORMER

GENERAL NOTES

1. ALL ELECTRICAL WORK SHALL BE INSTALLED IN ACCORDANCE WITH THE LATEST EDITION OF THE NATIONAL AND RHODE ISLAND ELECTRICAL CODES AND OTHER STATE OF RHODE ISLAND REQUIREMENTS, THE NATIONAL ELECTRICAL SAFETY CODE C2, AND NATIONAL GRID CONSTRUCTION STANDARDS.
2. EXISTING ELECTRICAL EQUIPMENT INDICATED ON PLANS HAS BEEN DERIVED FROM THE BEST AVAILABLE EXISTING DRAWINGS AND MUST BE FIELD VERIFIED PRIOR TO CONSTRUCTION AS REQUIRED. ANY EQUIPMENT THAT IS NOT IDENTIFIED AND CONFLICTS WITH CONSTRUCTION SHALL NOT BE DISCONNECTED AND SHALL BE BROUGHT TO THE ATTENTION OF THE OWNER / ENGINEER FOR DISPOSITION.
3. FOR CLARITY PURPOSES EQUIPMENT NOT AFFECTED BY THIS PROJECT HAS NOT BEEN SHOWN. CONTRACTOR SHALL WORK WITHIN CONSTRAINTS OF EXISTING CONDITIONS.
4. ADDITIONAL JUNCTION / PULL BOXES SHALL BE FURNISHED AND INSTALLED AS REQUIRED.
5. ALL CONDUITS SHALL CONTAIN A GREEN SAFETY GROUND WIRE. BOND ALL PANELS, CABINETS, ENCLOSURES, CONDUITS, ETC., AS REQUIRED.
6. ALL CUTTING, PATCHING AND FIRESTOPPING RELATED TO ELECTRICAL WORK SHALL BE THE RESPONSIBILITY OF THE ELECTRICAL CONTRACTOR.
7. PANELBOARD SCHEDULES INDICATED ARE FOR REFERENCE PURPOSES ONLY AND WERE TAKEN FROM CIRCUIT DIRECTORIES AND INFORMATION INDICATED ON THE PANELBOARDS. THE CONTRACTOR SHALL VERIFY ALL CIRCUITS PRIOR TO ORDERING EQUIPMENT; AND CIRCUIT DISCONNECTION AND RECONNECTION ON THE NEW PANELBOARDS. PROVIDE UPDATED TYPEWRITTEN CIRCUIT DIRECTORIES FOR EACH MODIFIED AND NEW PANELBOARD.
8. EXISTING PIER SUBSTATIONS AND PIER PEDESTALS WERE MANUFACTURED BY EATON MARINA POWER AND LIGHTING, ALL NEW COMPONENTS OR MODIFICATIONS SHALL BE PROVIDED IN ACCORDANCE WITH THE MANUFACTURER'S RECOMMENDATION.

DEMOLITION NOTES

1. WHERE WIRING IS TO BE REMOVED, RELOCATED OR RECONNECTED, THE CONTRACTOR SHALL TAKE PRECAUTIONS AND ASSUME THAT THE CIRCUIT MAY BE ACTIVE. CONTRACTOR SHALL TEST, VERIFY AND SECURE ALL CIRCUITS BEFORE REMOVAL. UNKNOWN WIRING SHALL BE IDENTIFIED. ANY WIRING TO REMAIN SHALL BE VERIFIED BY THE CONTRACTOR, TAGGED AND IDENTIFIED AS REQUIRED.
2. EXISTING ELECTRICAL EQUIPMENT AND DEVICES TO BE REMOVED SHOWN SHALL BE REMOVED COMPLETELY INCLUDING ALL CONDUIT, WIRING AND ASSOCIATED APPURTENANCES BACK TO EXISTING SOURCE WHERE THE EXISTING SOURCE SHALL BE LABELED AS SPARE.
3. EXISTING CONDUITS TO BE REMOVED WHICH ARE EMBEDDED IN A CONCRETE SLAB SHALL HAVE THE WIRING REMOVED AND THE CONDUIT CUT FLUSH WITH CONCRETE AND SEALED IN AN APPROVED MANNER.
4. EXISTING ELECTRICAL EQUIPMENT AND WIRING TO REMAIN SHOWN SHALL BE PROTECTED FROM DAMAGE AS REQUIRED DURING THE CONSTRUCTION PERIOD AND LEFT IN GOOD WORKING ORDER AT COMPLETION. ANY EQUIPMENT DAMAGED SHALL BE REPLACED BY THE CONTRACTOR AT NO EXPENSE TO THE OWNER.
5. OWNER AND CODE REQUIRED SYSTEMS THAT ARE REQUIRED TO REMAIN ACTIVE DURING CONSTRUCTION SHALL BE TEMPORARILY WIRED AS REQUIRED TO REMAIN ACTIVE THROUGHOUT THE CONSTRUCTION PERIOD UNTIL NEW SYSTEMS ARE INSTALLED, TESTED AND ACCEPTED.
6. IN CONDITIONS WHERE IN THE OPINION OF THE CONTRACTOR IT IS NOT CLEAR WHETHER EXISTING ELECTRICAL EQUIPMENT IS TO BE REMOVED OR REMAIN, IT SHOULD BE BROUGHT TO THE ATTENTION OF THE ENGINEER FOR REVIEW AND FINAL DECISION.
7. ANY DISRUPTION OF ANY ELECTRICAL SERVICE NECESSITATED BY THE ELECTRICAL RENOVATION SHALL BE COORDINATED WITH THE OWNER IN ORDER FOR PROPER NOTICE TO BE GIVEN PRIOR TO THE DISCONNECTION OF ANY SERVICE.
8. EXISTING ELECTRICAL EQUIPMENT REMOVED SHALL BE BROKEN DOWN INTO MANAGEABLE LENGTHS FOR STORAGE, HANDLING AND DISPOSAL.
9. EXISTING ELECTRICAL EQUIPMENT REMOVED OF MATERIAL VALUE SHALL BE TURNED OVER TO THE OWNER FOR HIS FINAL DISPOSITION.
10. ELECTRICAL RENOVATION WORK SHALL BE ACCOMPLISHED IN CONFORMANCE WITH THE REQUIREMENTS OF THE NATIONAL ELECTRICAL CODE.

SITE UTILITY NOTES

1. ALL EXCAVATION, BACKFILL AND FOUNDATIONS SHALL BE BY THE ELECTRICAL CONTRACTOR.
2. INSTALL A COMPLETE GROUND SYSTEM IN ACCORDANCE WITH CODE, AND AS INDICATED
3. ALL EMPTY UNDERGROUND CONDUITS SHALL HAVE NYLON HEAVY DUTY PULL-WIRES TO FACILITATE THE FUTURE PULLING OF CABLES. EMPTY CONDUITS SHALL BE SEALED WATERTIGHT TO PREVENT FOREIGN MATERIAL AND WATER.
4. DUCT BANKS SHALL BE PROVIDED WITH A 6" WIDE METALIZED CONTINUOUS WARNING TAPE INSTALLED 12" ABOVE DUCTBANK..
5. USE THE ACCEPTABLE METHOD OF PAVEMENT SAW-CUTTING OF THE EXISTING PAVEMENT FOR UTILITY TRENCHING. CAREFULLY SAW TWO PARALLEL 3/8 INCH WIDE BY 1 INCH DEEP CUTS FOR THE WIDTH OF THE REQUIRED UTILITY TRENCH INTO THE EXISTING PAVEMENT SURFACE ENSURING THE LEAST AMOUNT OF DISTURBANCE TO ADJACENT PAVED AREAS ALONG THE OUTER EDGES OF THE TRENCH-LINE.
6. LEGALLY DISPOSE OF ALL EXCAVATED ASPHALT BITUMINOUS PAVEMENT MATERIAL AND UNUSED EXCAVATED MATERIAL OFF-SITE AT AN APPROVED LANDFILL OR RECYCLING FACILITY.
7. UPON COMPLETION OF THE SUBSURFACE EXCAVATION TRENCHING AND UTILITY INSTALLATION, BACKFILL THE TRENCH USING SAME EXCAVATED GRAVEL MATERIAL TO A COMPACTION COMPARABLE TO PRE-EXCAVATED CONDITIONS ACCEPTABLE TO THE ENGINEER.
8. REPLACE IN KIND BOTH THE DEPTH AND MATERIAL TYPE AND GRADATION OF HOT MIX ASPHALT TO MATCH THAT OF THE EXCAVATED PAVEMENT MATERIAL. ASPHALT PATCHING OF THE TRENCH SHALL BE PERFORMED AT ONE TIME AND PLACED TO BE FLUSH WITH THE ADJOINING PAVEMENT EDGES ON GRADE AND ELEVATION. SURFACE SHALL BE ROLLED TO ACHIEVE MAXIMUM COMPACTION TO PROHIBIT SETTLEMENT OF THE NEW TRENCH PATCHING.
9. REFER TO SPECIFICATIONS FOR TRAFFIC PROTECTION AND STORAGE OF EQUIPMENT OR MATERIAL.
10. ITEMS INDICATED TO BE "REMOVED" SHALL BE REMOVED AND PROPERLY DISPOSED OF.
11. ALL SPARE CONDUITS AND DUCTS SHALL BE SEALED WATERTIGHT WHERE STUBBED INTO MANHOLES OF EQUIPMENT.
12. SITE UTILITY PLANS PLANS HAS BEEN DERIVED FROM THE BEST AVAILABLE EXISTING DRAWINGS AND MUST BE FIELD VERIFIED PRIOR TO CONSTRUCTION. THE CONTRACTOR SHALL ENGAGE AND CONTRACT WITH A SITE UTILITY LOCATION CONTRACTOR TO FIELD LOCATE AND MARK ALL UTILITIES ALONG DUCTBANK ROUTING AND EQUIPMENT INSTALLATION LOCATIONS UTILIZING GROUND PENETRATING RADAR.
ANY EQUIPMENT THAT IS NOT IDENTIFIED AND CONFLICTS WITH CONSTRUCTION SHALL NOT BE DISCONNECTED AND SHALL BE BROUGHT TO THE ATTENTION OF THE OWNER / ENGINEER FOR DISPOSITION.
13. COORDINATE ELECTRICAL WORK REQUIRED WITH NATIONAL GRID (NGRID). ALL CONSTRUCTION SHALL CONFORM TO NGRID SPECIFICATIONS FOR ELECTRICAL INSTALLATIONS AND ANY SUPPLEMENTS.

BID DOCUMENTS 06/09/2017

S1

No.	DATE	DESCRIPTION	DESIGNER	REVIEWER
1.				

SEAL

SEAL

SCALE:
HORZ.: 1" = 60'
VERT.:
DATUM:
HORZ.:
VERT.:
0
GRAPHIC SCALE

FUSS & O'NEILL
317 IRON HORSE WAY, SUITE 204
PROVIDENCE, RI 02908
401.861.3070
www.fando.com

FORT ADAMS STATE PARK

GENERAL NOTES AND LEGEND

RIDEM FACILITY ELECTRICAL UPGRADES

NEWPORT RHODE ISLAND

PROJ. No.: 20160726.A10
DATE: APRIL 2017

E-001

File Path: J:\DWG\P\20160726A10\MEP\Electrical\20160726.A10_ELE01.dwg Layout: E-001 Plotted: Fri, June 09, 2017 - 9:18 AM User: tdion
Plotter: DWG TO PDF.PC3 CTB File: FO.STB
LAYER STATE:
MS VIEW:

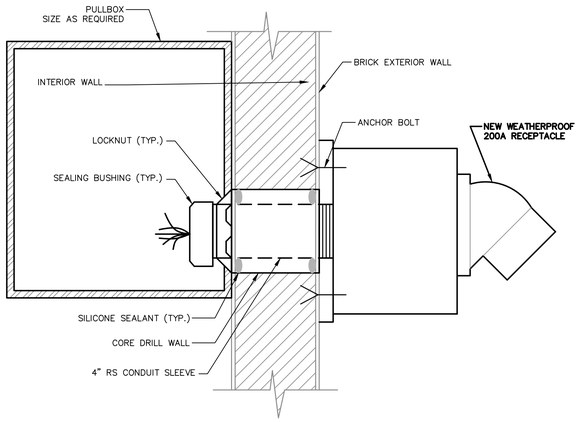

3 WALL PENETRATION DETAIL

SCALE: NOT TO SCALE

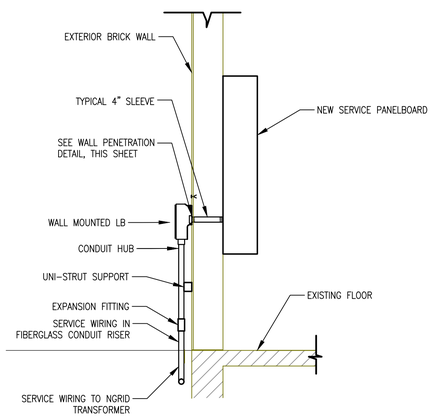

4 SERVICE ENTRANCE DETAIL

SCALE: NOT TO SCALE

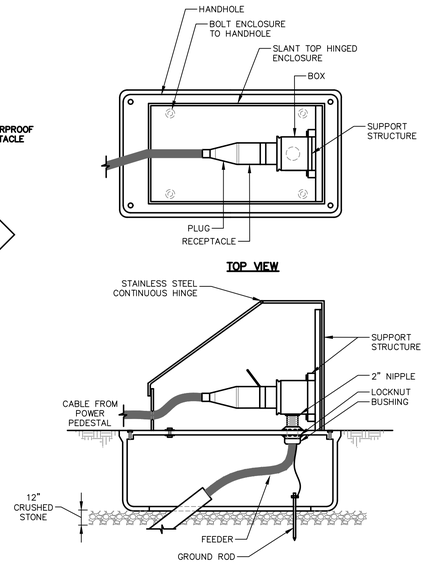

5 NEW POWER PEDESTAL DETAIL

NOT TO SCALE

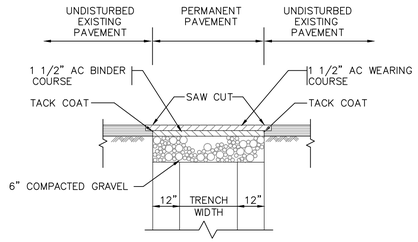

TYPICAL PAVEMENT RESTORATION DETAIL

SCALE: NOT TO SCALE

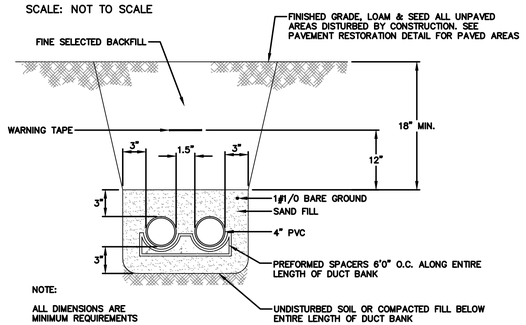

PE E-002 TYPICAL TRENCH DETAIL

NOT TO SCALE

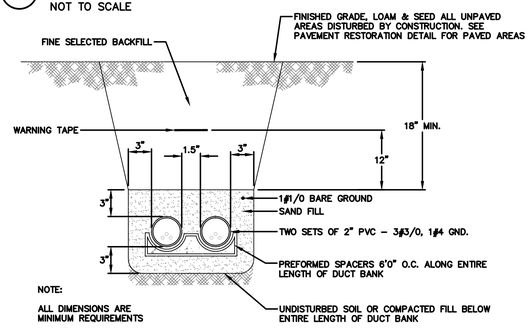

A E-002 TYPICAL TRENCH DETAIL

NOT TO SCALE

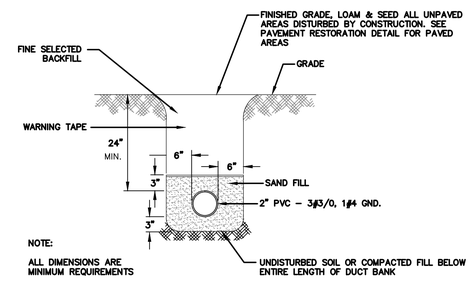

B E-002 TYPICAL TRENCH DETAIL

NOT TO SCALE

UTILITY COMPANY TRANSFORMER PAD NOTES:

1. ALL TRANSFORMER PAD WORK SHALL BE APPROVED BY THE NATIONAL GRID.
2. CONDUIT – INSTALL AS SHOWN BEFORE SLAB IS POURED. USE 36" RADIUS BENDS, WITH COUPLINGS, NIPPLES AND GROUNDING TYPE BUSHINGS AS REQUIRED. TERMINATE AS SHOWN.
3. GROUND GRID – INSTALL AS SHOWN. INSTALL #1/0, 7-STRAND BARE COPPER WIRE LOOP 1'-0" BELOW GRADE BOND ALL EXPOSED METALLIC CONDUIT AND LEAVE 3'-0" OF SLACK WIRE ABOVE PAD FOR GROUNDING TRANSFORMER AT (2) OPPOSITE POINTS IN THE CABLE CONDUIT OPENING. INSTALL COPPER CLAD STEEL 3/4"C10'-0" GROUND ROD.
4. CRUSHED STONE – SHALL BE COMPACTED AND WETTED JUST BEFORE POURING THE CONCRETE
5. CONCRETE PAD – INSTALL CONCRETE AS SPECIFIED. ALL EXPOSED EDGES SHALL HAVE A 3/4" CHAMFER. PAD SHALL BE A MINIMUM OF 12" THICK EXACT SIZE OF PAD TO BE VERIFIED WITH SUPPLIED TRANSFORMER DIMENSIONS BEFORE PROCEEDING WITH WORK.
6. REINFORCING SHALL BE #4 GRADE 60 REBARS, 12" O.C. EACH WAY, CONFORMING TO THE LATEST STANDARDS OF ASTM STD. A-615. REINFORCING SHALL BE LOCATED AT THE BOTTOM OF THE SLAB, WITH A MINIMUM OF 3" CLEARANCE FROM THE FACE OF CONCRETE.
7. SLOPE PAD 1% TO EDGE DRAINAGE
8. PROVIDE BOLLARDS AS REQUIRED TO NGRID STANDARDS AS DETAILED THIS SHEET.

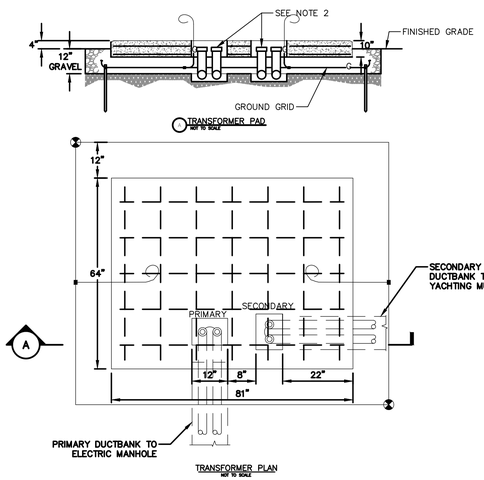

TP E-002 UTILITY COMPANY TRANSFORMER PAD DETAIL (TYPICAL)

SCALE: NOT TO SCALE

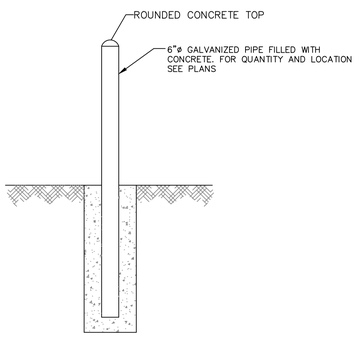

BL E-002 BOLLARD DETAIL – TYPICAL

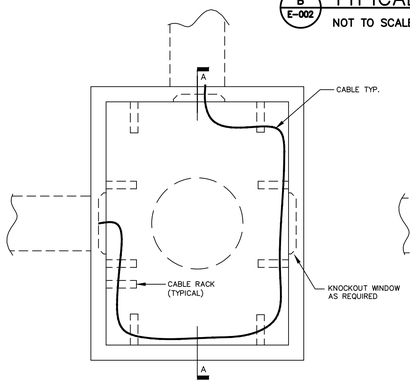

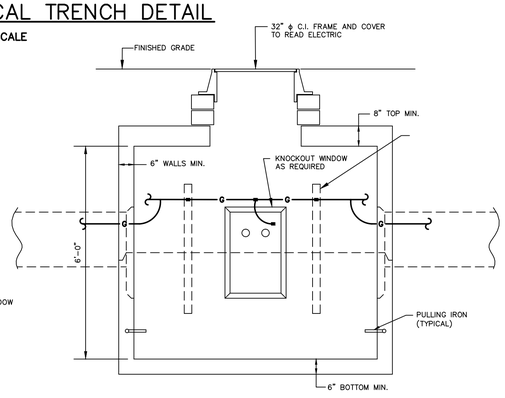

MH E-002 TYPICAL MANHOLE DETAIL–STANDARD TYPE 4'x6'x6'H

SCALE: N.T.S

NOTES:

1. FOR GENERAL NOTES AND LEGENDS SEE SHEET E-001.

BID DOCUMENTS 06/09/2017

No.	DATE	DESCRIPTION	DESIGNER	REVIEWER
1.				

SEAL

SEAL

SCALE:
HORZ.: 1" = 60'
VERT.:
DATUM:
HORZ.:
VERT.:
0
GRAPHIC SCALE

FUSS & O'NEILL
317 IRON HORSE WAY, SUITE 204
PROVIDENCE, RI 02908
401.861.3070
www.fando.com

FORT ADAMS STATE PARK

MISCELLANEOUS DETAILS - SHEET 1

RIDEM FACILITY ELECTRICAL UPGRADES

NEWPORT RHODE ISLAND

PROJ. No.: 20160726.A10
DATE: APRIL 2017

E-002

File Path: J:\DWG\P\20160726A10\MEP\Electrical\20160726.A10_ELE01.dwg Layout: E-002 Plotted: Fri, June 09, 2017 - 9:18 AM User: tdion
Plotter: DWG TO PDF.PC3 CTB File: FO.STB
LAYER STATE:
MS VIEW:

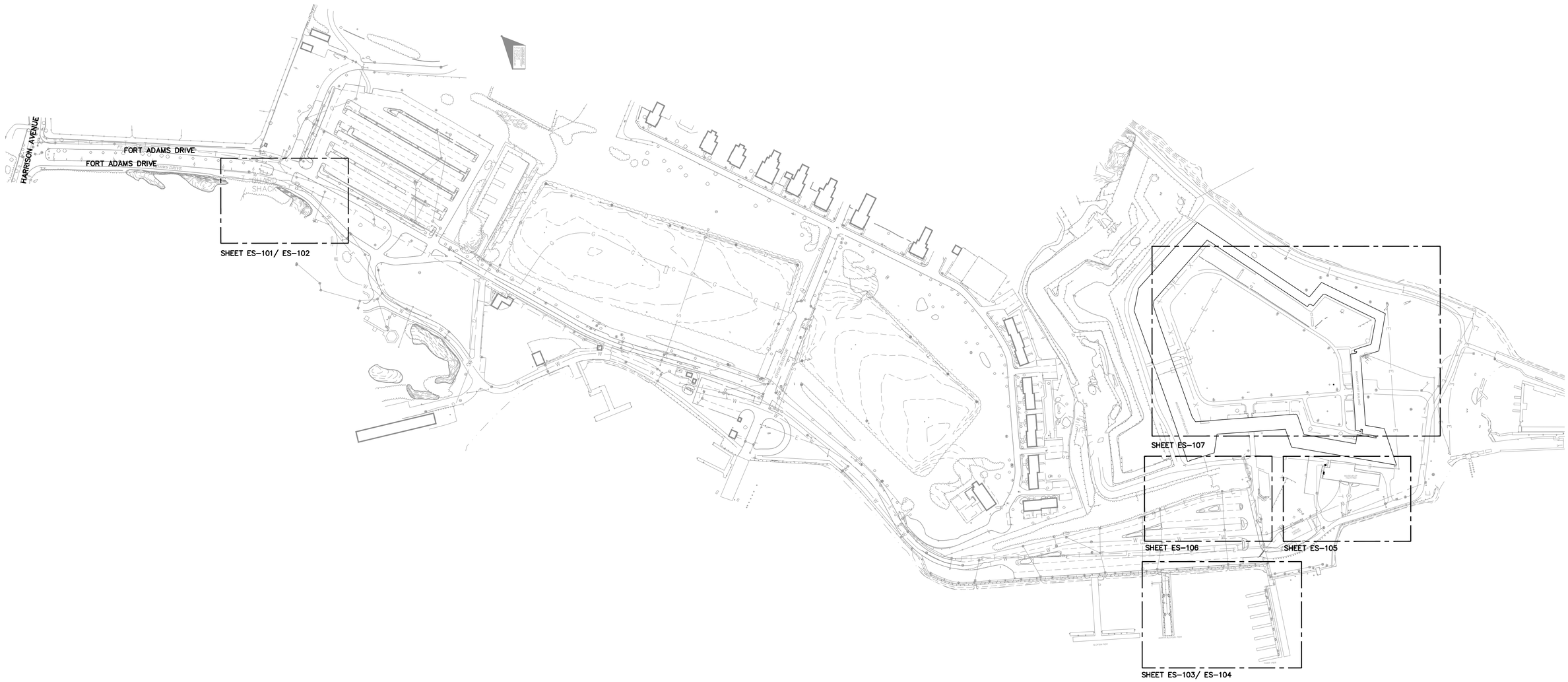

NOTES:

1. FOR GENERAL NOTES AND LEGENDS SEE SHEET E-001.

BID DOCUMENTS 06/09/2017

S1

No.	DATE	DESCRIPTION	DESIGNER	REVIEWER
1.				

SEAL

SEAL

SCALE:
HORZ.: 1" = 60'
VERT.:
DATUM:
HORZ.:
VERT.:
0
GRAPHIC SCALE

FUSS & O'NEILL
317 IRON HORSE WAY, SUITE 204
PROVIDENCE, RI 02908
401.861.3070
www.fando.com

FORT ADAMS STATE PARK

OVERALL SITE PLAN

RIDEM FACILITY ELECTRICAL UPGRADES

NEWPORT RHODE ISLAND

PROJ. No.: 20160726.A10
DATE: APRIL 2017

ES-100

File Path: J:\DWG\P2016\0726A10\MEP\Electrical\20160726.A10_ELE01.dwg Layout: ES-100 Plotted: Fri, June 09, 2017 - 9:18 AM User: tdion
Plotter: DWG TO PDF.PC3 CTB File: FO.STB
MS VIEW:
LAYER STATE:

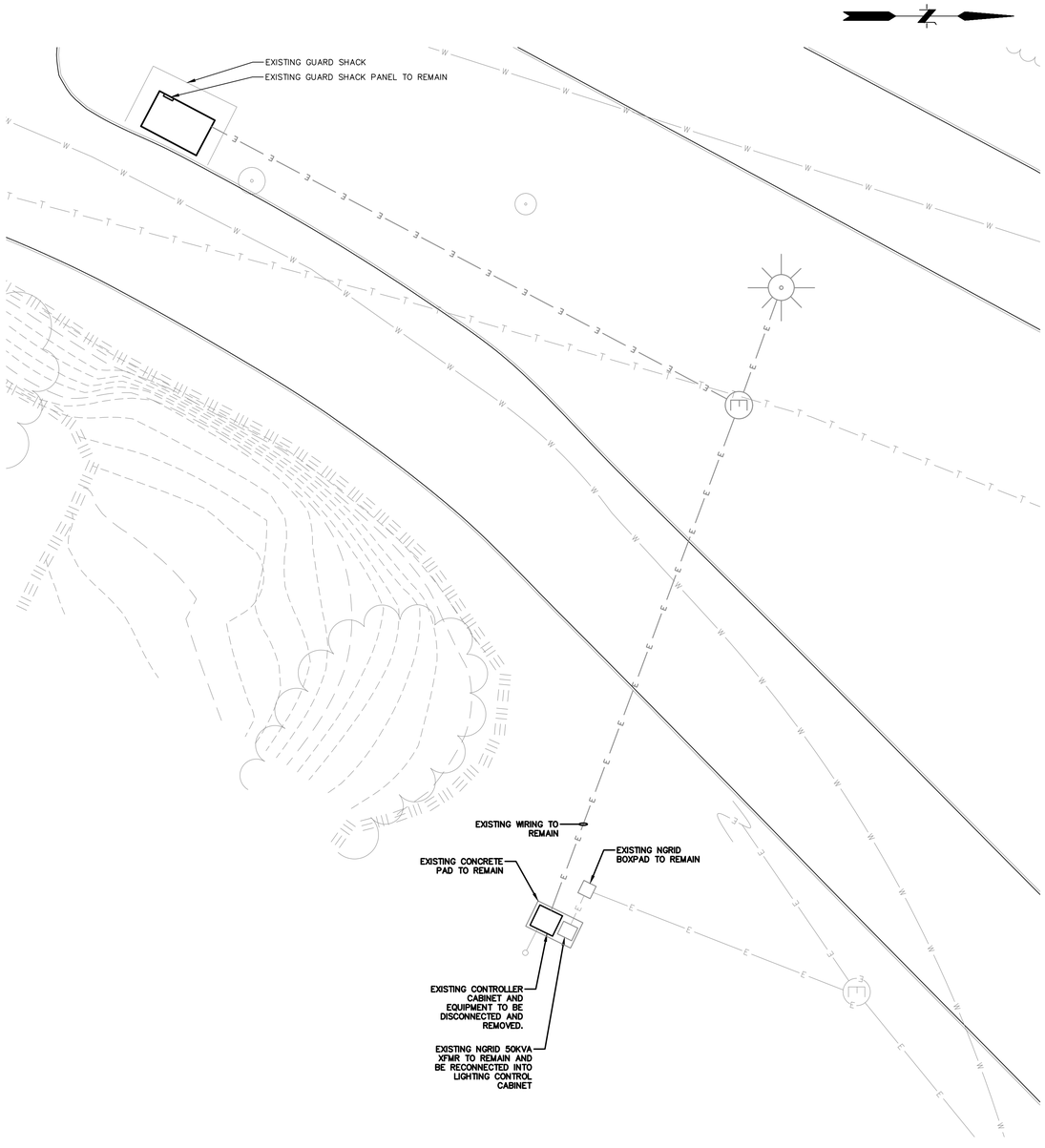

1 ES-101 MAIN ENTRANCE SITE PLAN – DEMOLITION

SCALE: 1"=10'-0"

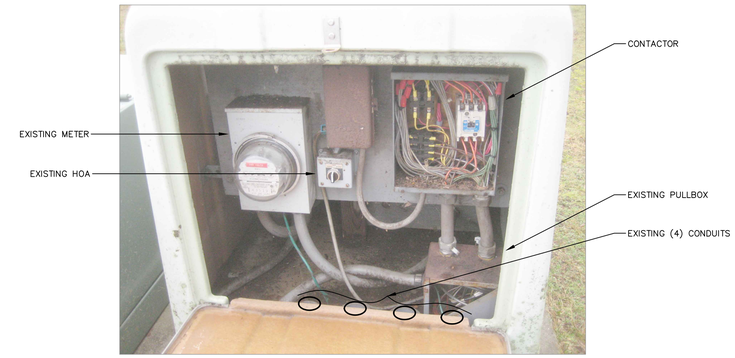

EXISTING CONTROLLER ELEVATION (WEST SIDE)

SCALE: NOT TO SCALE

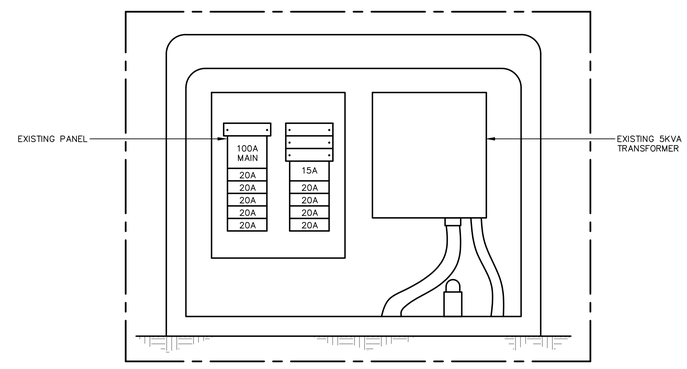

EXISTING CONTROLLER ELEVATION (EAST SIDE)

SCALE: NOT TO SCALE

NOTES:

1. FOR GENERAL NOTES AND LEGENDS SEE SHEET E-001.

BID DOCUMENTS 06/09/2017

No.	DATE	DESCRIPTION	DESIGNER	REVIEWER
1.				

SEAL

SEAL

SCALE: HORZ.: 1" = 60' VERT.:
DATUM: HORZ.: VERT.:
0 GRAPHIC SCALE

FUSS & O'NEILL
317 IRON HORSE WAY, SUITE 204
PROVIDENCE, RI 02908
401.861.3070
www.fando.com

FORT ADAMS STATE PARK
MAIN ENTRANCE
ELECTRICAL SITE PLAN - DEMOLITION
RIDEM FACILITY ELECTRICAL UPGRADES
NEWPORT RHODE ISLAND

PROJ. No.: 20160726.A10
DATE: APRIL 2017

ES-101

File Path: J:\DWG\P2016\0726\A10\MEP\Electrical\20160726.A10_ELE01.dwg Layout: ES-101 Plotted: Fri, June 09, 2017 - 9:18 AM User: tdion
Plotter: DWG TO PDF.PC3 CTB File: FO.STB
MS VIEW: LAYER STATE:

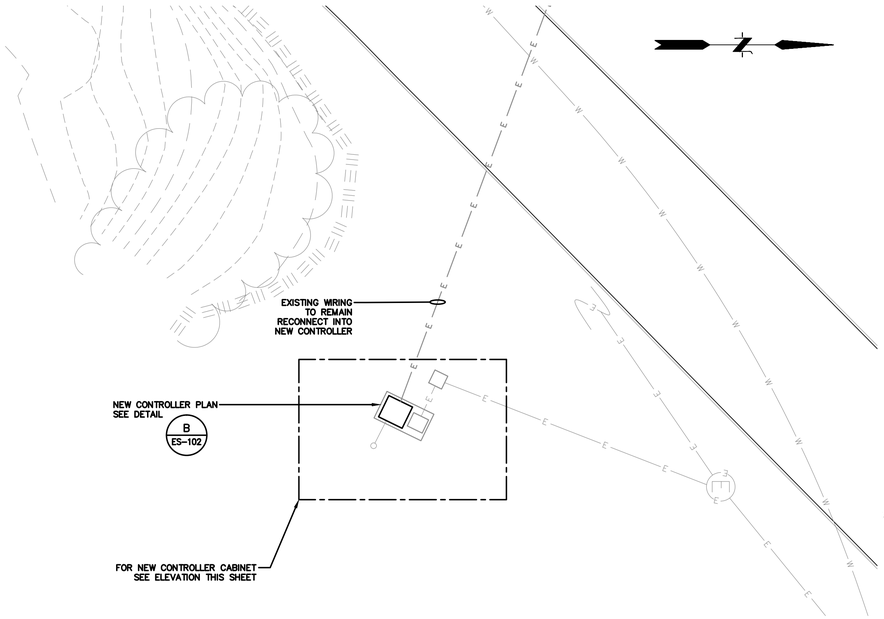

1 ES-102 ENLARGED ELECTRICAL SITE PLAN

SCALE: 1"=10'-0"

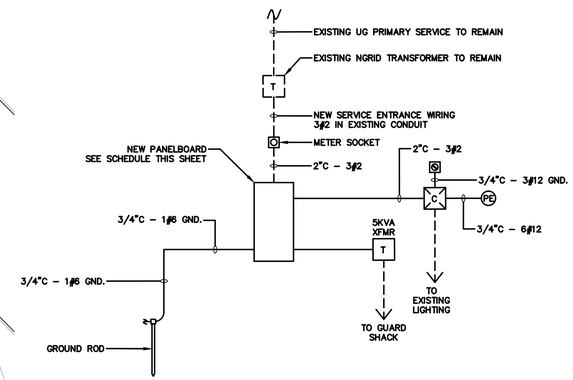

POWER DISTRIBUTION – SINGLE LINE DIAGRAM

SCALE: NOT TO SCALE

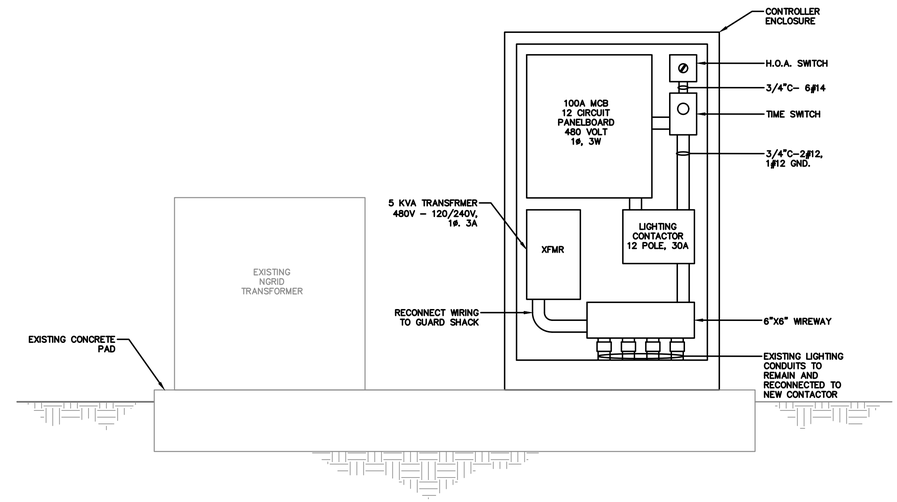

FRONT VIEW

NEW PANELBOARD SCHEDULE										
PANEL:	Parking Lighting Controller				M.L.O.:					
LOCATION:	Lighting Controller Cabinet				MAIN BREAKER:		100			
VOLTS:	480/240				MAIN BUS:		100			
PHASE:	SINGLE				A.I.C.:		14 KA			
WIRE:	3				MOUNTING:		SURFACE			
SOLID NEUTRAL										
POLE PANEL:	16									
	CRKT. BRKR.						CRKT. BRKR.			
CIRCUIT DESCRIPTION	No.	TRIP	POLE	AMPS	ø	AMPS	POLE	TRIP	No.	CIRCUIT DESCRIPTION
Parking Lot Lighting	1	20	1	0.00	L1	0.00	2	15	2	Guard Shack XFMR
Parking Lot Lighting	3	20	1	0.00	L2	0.00	-	-	4	-
Parking Lot Lighting	5	20	1	0.00	L1	0.00	1	20	6	Parking Lot Lighting
Parking Lot Lighting	7	20	1	0.00	L2	0.00	1	20	8	Parking Lot Lighting
Parking Lot Lighting	9	20	1	0.00	L1	0.00	1	20	10	Parking Lot Lighting
Parking Lot Lighting	11	20	1	0.00	L2	0.00	1	20	12	Parking Lot Lighting
Spare	13	20	1	0.00	L1	0.00	1	20	14	Spare
Spare	15	20	1	0.00	L2	0.00	1	20	16	Spare
TOTAL AMPS			L1	0.00	L2	0.00				

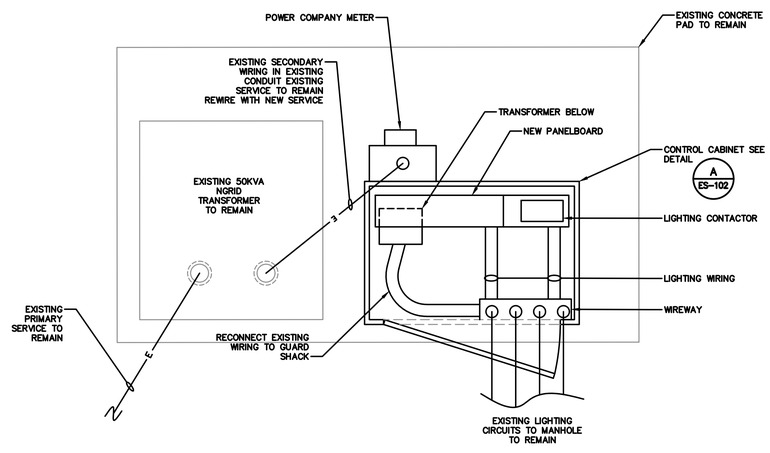

A ES-102 NEW CONTROLLER PLAN

SCALE: NOT TO SCALE

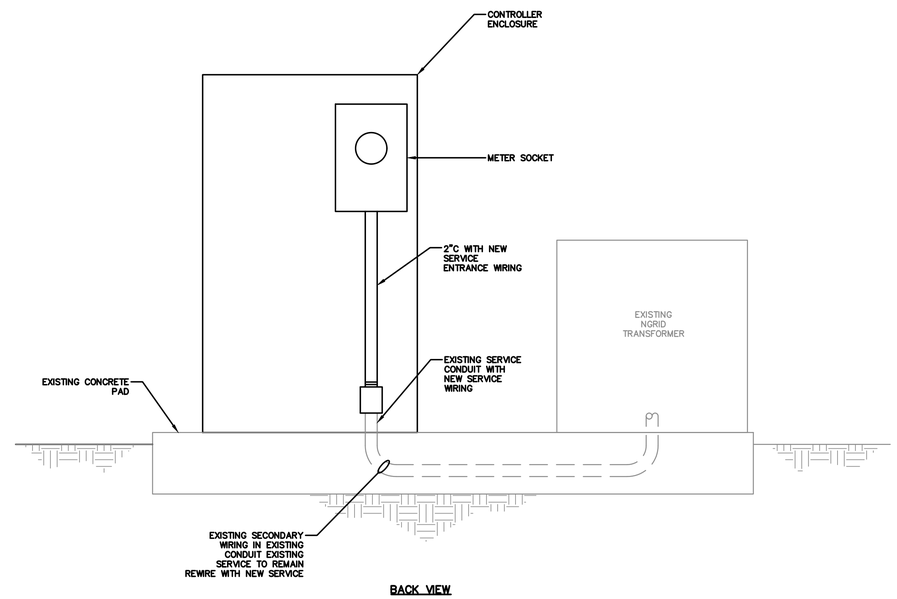

BACK VIEW

B ES-102 NEW CONTROLLER CABINET ELEVATION

SCALE: NOT TO SCALE

NOTES:

1. FOR GENERAL NOTES AND LEGENDS SEE SHEET E–001.

BID DOCUMENTS 06/09/2017

No.	DATE	DESCRIPTION	DESIGNER	REVIEWER
1.				

SEAL

SEAL

SCALE:
HORZ.: 1" = 60'
VERT.:
DATUM:
HORZ.:
VERT.:
0
GRAPHIC SCALE

FUSS & O'NEILL
317 IRON HORSE WAY, SUITE 204
PROVIDENCE, RI 02908
401.861.3070
www.fando.com

FORT ADAMS STATE PARK

MAIN ENTRANCE ELECTRICAL SITE PLAN - NEW WORK

RIDEM FACILITY ELECTRICAL UPGRADES

NEWPORT RHODE ISLAND

PROJ. No.: 20160726.A10
DATE: APRIL 2017

ES-102

File Path: J:\DWG\P20160726A10\MEP\Electrical\20160726.A10_ELE01.dwg Layout: ES-102 Plotted: Fri, June 09, 2017 - 9:18 AM User: tdion
Plotter: DWG TO PDF.PC3 CTB File: FO.STB
LAYER STATE:
MS VIEW:

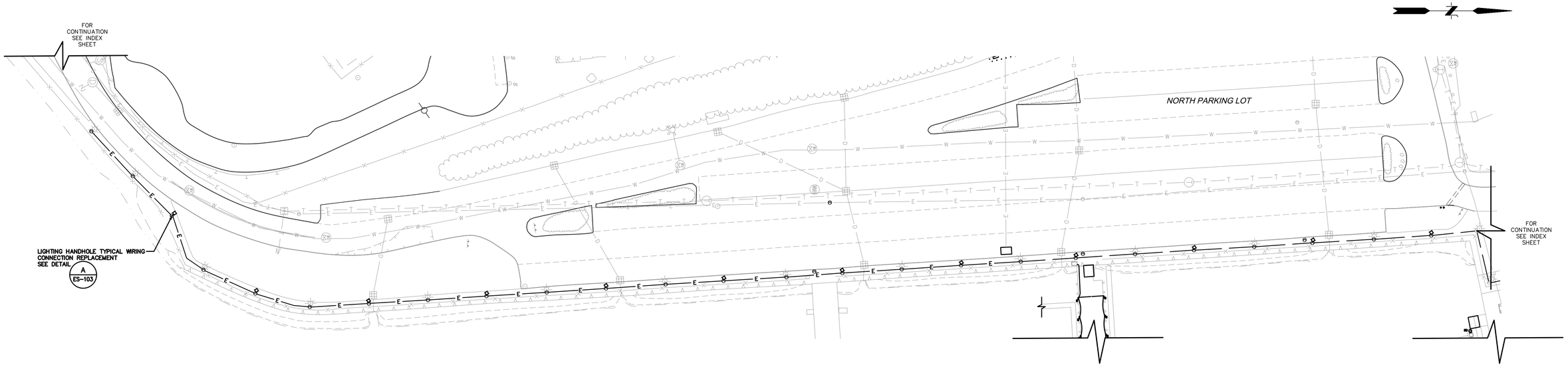

1 ES-103 ELECTRICAL SITE PLAN – PIER WALKWAY

SCALE: 1"=40'-0"

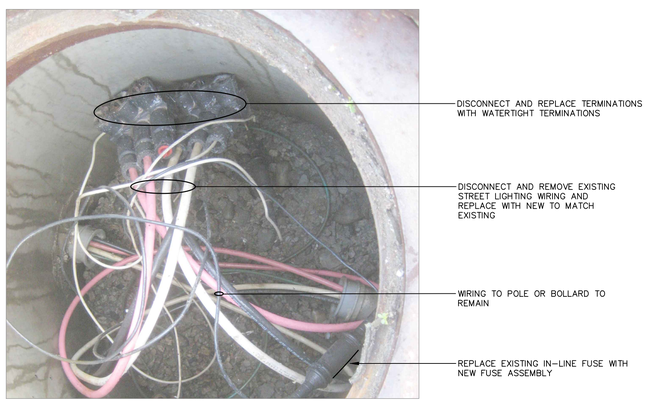

A ES-103 TYPICAL LIGHTING WIRING CONNECTION REPLACEMENT DETAIL (TYP. 32)

SCALE: NOT TO SCALE

NOTES:

1. FOR GENERAL NOTES AND LEGENDS SEE SHEET E-001.

BID DOCUMENTS 06/09/2017

No.	DATE	DESCRIPTION	DESIGNER	REVIEWER
1.				

SEAL

SEAL

SCALE:
HORZ.: 1" = 60'
VERT.:
DATUM:
HORZ.:
VERT.:
0
GRAPHIC SCALE

FUSS & O'NEILL
317 IRON HORSE WAY, SUITE 204
PROVIDENCE, RI 02908
401.861.3070
www.fando.com

FORT ADAMS STATE PARK

WALKWAY LIGHTING AND ELECTRICAL UPGRADES

RIDEM FACILITY ELECTRICAL UPGRADES

NEWPORT RHODE ISLAND

PROJ. No.: 20160726.A10
DATE: APRIL 2017

ES-103

File Path: J:\DWG\P\20160726A10\MEP\Electrical\20160726.A10_ELE01.dwg Layout: ES-103 Plotted: Fri, June 09, 2017 - 9:18 AM User: tdion
Plotter: DWG TO PDF.PC3 CTB File: FO.STB
MS VIEW:
LAYER STATE:

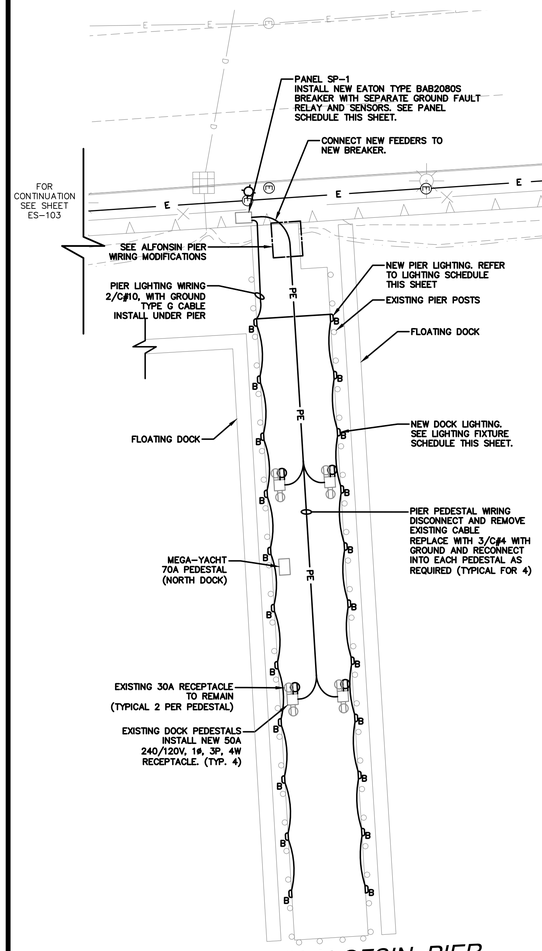

NORTH ALOFSIN PIER

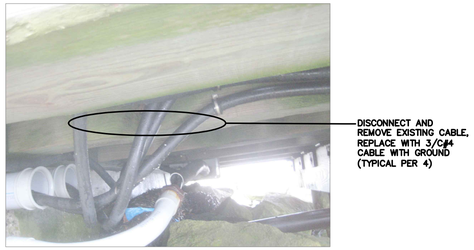

ALFONSIN PIER WIRING MODIFICATIONS

NOT TO SCALE

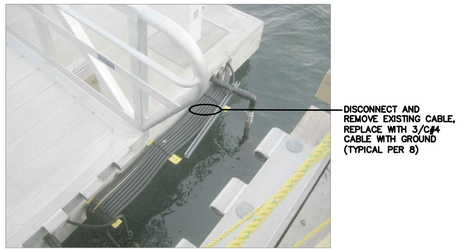

FIXED PIER WIRING MODIFICATIONS

NOT TO SCALE

1 ES-104 ELECTRICAL SITE PLAN – WALKWAY AND PIERS

SCALE: 1"=20'-0"

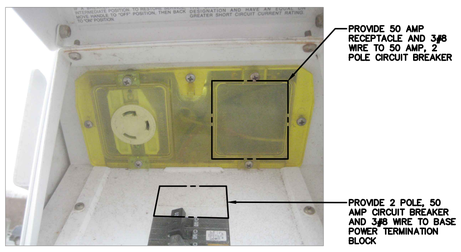

TYPICAL PIER PEDESTAL MODIFICATION

NOT TO SCALE

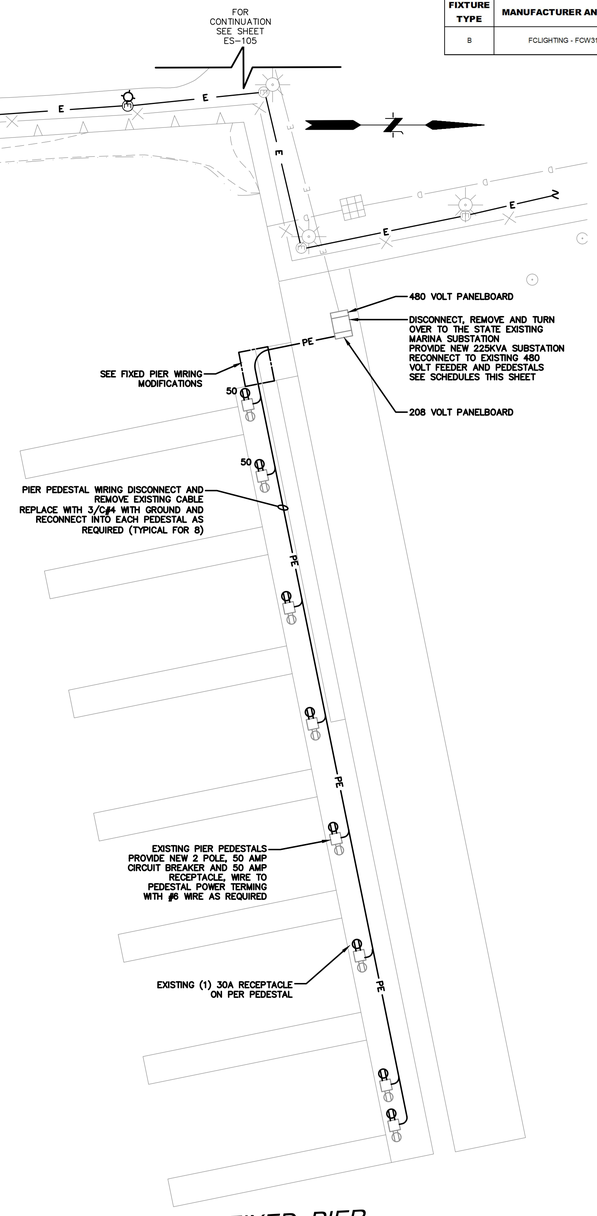

FIXED PIER

LIGHTING FIXTURE SCHEDULE

FIXTURE TYPE	MANUFACTURER AND CATALOG NUMBER	INPUT WATTS	VOLTS	LAMPS NUMBER	LAMPS LAMP	LAMPS LUMENS	MOUNTING	REMARKS
B	FCLIGHTING - FCW3162-120V-4K-2400-BZ-F	25	120	1	LED	2400	WALL MOUNTED	INSTALL ON PIER BETWEEN PIER POSTS

MODIFIED PANELBOARD SCHEDULE

PANEL:	SP-1				
LOCATION:	North Pier		MAIN BREAKER:	400	
VOLTS:	208Y/120		MAIN BUS:	400	
PHASE:	3		A.I.C.:		
WIRE:	4		MOUNTING:	Surface	
SOLID NEUTRAL			MANUFACTURER:	Eaton PRL1A	
POLE PANEL:	18				

	CRKT. BRKR.						CRKT. BRKR.			
CIRCUIT DESCRIPTION	No.	TRIP	POLE	AMPS	ø	AMPS	POLE	TRIP	No.	CIRCUIT DESCRIPTION
Spare	1	50	2		A	80	2	100	2	Pedestal 3
-	3	-	-		B	80	-	-	4	-
Spare	5	50	2		C	80	2	100	6	Pedestal 1
-	7	-	-		A	80	-	-	8	-
Space for Ground Sensor	9	-	1		B	80	2	100	10	Pedestal 4
Space for Ground Sensor	11	-	1		C	80	-	-	12	-
Space for Ground Sensor	13	-	1		A	80	2	100	14	Pedestal 2
Space for Ground Sensor	15	-	1		B	80	-	-	16	-
Space	17	-	1		C	6	1	20	18	New Pier Lighting
TOTAL AMPS	A	240	B	240	C	166				

NEW SUBSTATION 480 VOLT DISTRIBUTION PANEL

PANEL:	Fixed Pier Substation	VOLTS:	480Y/277	
LOCATION:	Fixed Pier	PHASE:	3	400 AMP MAIN BUS
MOUNTING:	Within Substation	WIRE:	4	35,000 AMP A.I.C. @ 480 VOLTS

ITEM	CIRCUIT BREAKER POLE	FRAME	TRIP	SYMMETRICAL AMP RATING	EQUIPMENT SERVED	CONNECTED LOAD (AMPS)
1	3		300		208 Volt Transformer	270.75
2	3		70		Mega Yacht	54.15
3	3		70		Mega Yacht	54.15
4						
5						
6						
7						
8						
9						
10						
11						
12						
13						
14						
15						
16						
17						
18						
					TOTAL:	379.05

NEW SUBSTATION 208 VOLT PANELBOARD SCHEDULE

PANEL:	SPF				
LOCATION:	Fixed Pier		MAIN BREAKER:	600	
VOLTS:	208Y/120		MAIN BUS:	600	
PHASE:	3		A.I.C.:	65,000	
WIRE:	4		MOUNTING:	Within Substation	
SOLID NEUTRAL			MANUFACTURER:	Eaton	
POLE PANEL:	18				

	CRKT. BRKR.						CRKT. BRKR.			
CIRCUIT DESCRIPTION	No.	TRIP	POLE	AMPS	ø	AMPS	POLE	TRIP	No.	CIRCUIT DESCRIPTION
Space	1	-	1		A	1	1	20	2	Spare
Space	3	-	1		B	6	1	20	4	Pier Lights
GF Monitor	5	20	1	5	C	5	1	20	6	Beacon
Spare	7	20	1		A	16	2	25	8	Pump Out
Spare	9	20	1		B	16	-	-	10	-
Pedestal 1	11	80	2	80	C	80	2	80	12	Pedestal 2
-	13	-	-	80	A	80	-	-	14	-
Pedestal 3	15	80	2	80	B	80	2	80	16	Pedestal 4
-	17	-	-	80	C	80	-	-	18	-
Pedestal 5	19	80	2	80	A	80	2	80	20	Pedestal 6
-	21	-	-	80	B	80	-	-	22	-
Pedestal 7	23	80	2	80	C	80	2	80	24	Pedestal 8
-	25	-	-	80	A	80	-	-	26	-
TOTAL AMPS	A	577.00	B	342.00	C	490.00				

NOTES:

1. FOR GENERAL NOTES AND LEGENDS SEE SHEET E-001.

BID DOCUMENTS 06/09/2017

No.	DATE	DESCRIPTION	DESIGNER	REVIEWER
1.				

SEAL

SEAL

SCALE: HORZ.: 1" = 60' VERT.:
DATUM: HORZ.: VERT.:
GRAPHIC SCALE

FUSS & O'NEILL
317 IRON HORSE WAY, SUITE 204
PROVIDENCE, RI 02908
401.861.3070
www.fando.com

FORT ADAMS STATE PARK

PIER AND PEDESTAL ELECTRICAL UPGRADES

RIDEM FACILITY ELECTRICAL UPGRADES

NEWPORT RHODE ISLAND

PROJ. No.: 20160726.A10
DATE: APRIL 2017

ES-104

File Path: J:\DWG\P20160726\A10\MEP\Electrical\20160726.A10_ELE01.dwg Layout: ES-104 Plotted: Fri, June 09, 2017 - 9:18 AM User: tdion
Plotter: DWG TO PDF.PC3 CTB File: FO.STB
LAYER STATE:
MS VIEW:

1 ES-105 ELECTRICAL SITE PLAN – MUSEUM OF YACHTING
SCALE: 1"=20'-0"

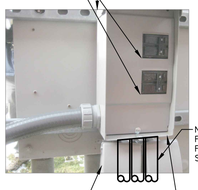

1 FOOD TRUCK POWER DETAIL
NOT TO SCALE

DISTRIBUTION PANELBOARD SCHEDULE NEMA 4X

PANEL:	MDP	VOLTS:	208Y/120	600 AMP MAIN BREAKER	
LOCATION:	Museum of Yachting	PHASE:	3	600 AMP MAIN BUS	
MOUNTING:	Surface	WIRE:	4	65,000 AMP A.I.C. @ 240 VOLTS	

ITEM	CIRCUIT BREAKER			SYMMETRICAL	EQUIPMENT SERVED	CONNECTED LOAD (AMPS)	
	POLE	FRAME	TRIP	AMP RATING			
1	2	225	200	65,000	Existing Panelboard	125.00	(Estimated)
2	3	225	225	65,000	Power Pedestal	200.00	
3	3	225	225	65,000	Spare		
4	3	225	225	65,000	Spare		
5	3	225	-	-	Prepared Space		
6	3	225	-	-	Prepared Space		
7	3	100	-	-	Prepared Space		
8	3	100	-	-	Prepared Space		
9							
10							
11							
12							
13							
14							
15							
16							
17							
18							
					TOTAL:	325.00	

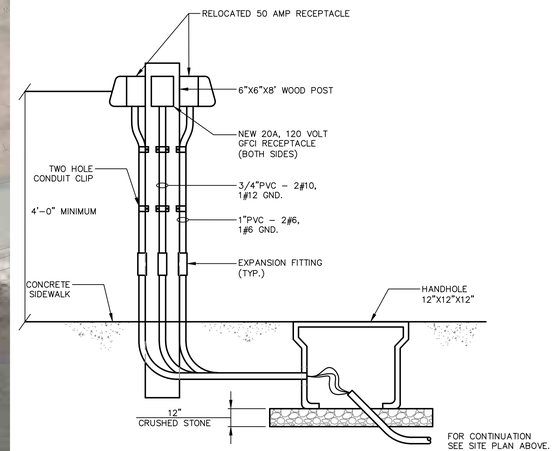

2 FOOD TRUCK PEDESTAL DETAIL
NOT TO SCALE

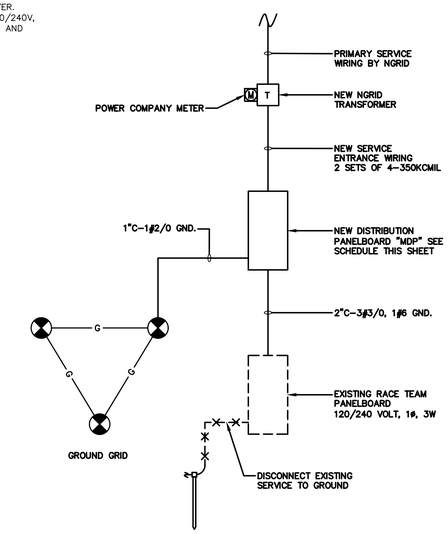

MUSEUM OF YACHTING DISTRIBUTION SYSTEM – SINGLE LINE
SCALE: NOT TO SCALE

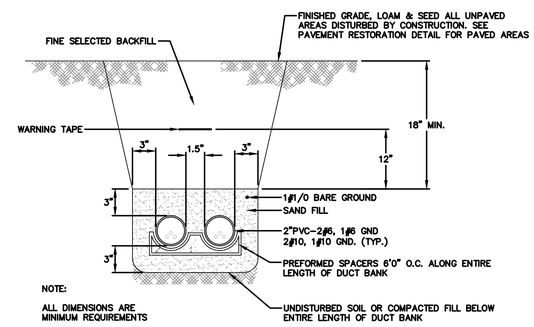

FT E-002 FOOD TRUCK TRENCH DETAIL
NOT TO SCALE

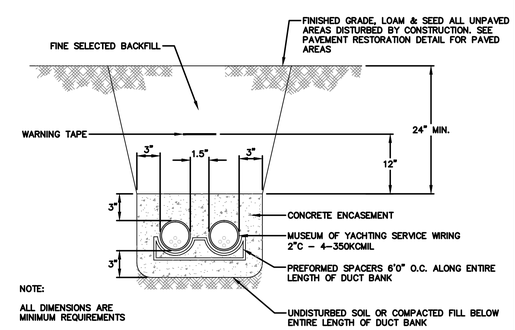

SE E-002 DUCTBANK SECTION
SCALE: NOT TO SCALE

NOTES:

1. FOR GENERAL NOTES AND LEGENDS SEE SHEET E-001.

BID DOCUMENTS 06/09/2017

No.	DATE	DESCRIPTION	DESIGNER	REVIEWER
1.				

SEAL

SEAL

SCALE: HORZ.: 1" = 60' VERT.:
DATUM: HORZ.: VERT.:
GRAPHIC SCALE

FUSS & O'NEILL
317 IRON HORSE WAY, SUITE 204
PROVIDENCE, RI 02908
401.861.3070
www.fando.com

FORT ADAMS STATE PARK
MUSEUM ELECTRICAL SITE PLANS AND DETAILS
RIDEM FACILITY ELECTRICAL UPGRADES
NEWPORT RHODE ISLAND

PROJ. No.: 20160726.A10
DATE: APRIL 2017
ES-105

File Path: J:\DWG\P20160726A10\MEP\Electrical\20160726.A10_ELE01.dwg Layout: ES-105 Plotted: Fri, June 09, 2017 - 9:18 AM User: tdion
Plotter: DWG TO PDF.PC3 CTB File: FO.STB
MS VIEW: LAYER STATE:

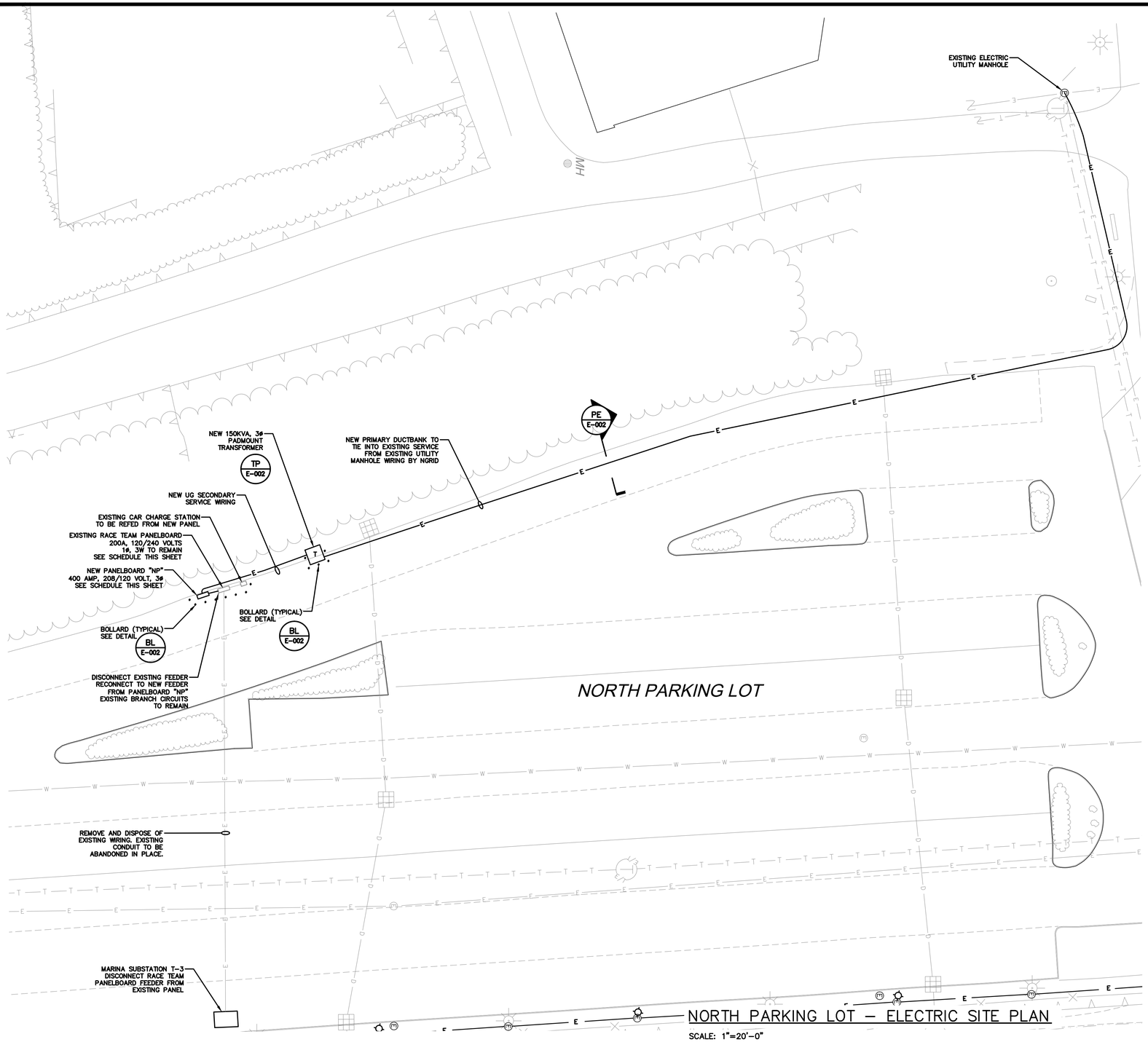

NORTH PARKING LOT – ELECTRIC SITE PLAN

SCALE: 1"=20'-0"

EXISTING PANELBOARD SCHEDULE

PANEL:	Race Team				M.L.O.:		200			
LOCATION:	North Parking Lot				MAIN BREAKER:		200			
VOLTS:	120/240				MAIN BUS:		10,000			
PHASE:	1				A.I.C.:		Surface			
WIRE:	3				MOUNTING:		NEMA 4 X			
SOLID NEUTRAL										
POLE PANEL:	12									
	CRKT. BRKR.						CRKT. BRKR.			
CIRCUIT DESCRIPTION	No.	TRIP	POLE	AMPS	ø	AMPS	POLE	TRIP	No.	CIRCUIT DESCRIPTION
Receptacle 1	1	30	1	24	L1	24	1	30	2	Receptacle 2
Receptacle 3	3	30	1	24	L2	24	2	50	4	Receptacle 4
Receptacle 5	5	30	1	24	L1	24	-	-	6	Receptacle 6
Receptacle 7	7	30	1	24	L2	24	1	30	8	Receptacle 8
EV Charger	9	40	2	30	L1	30	2	40	10	EV Charger
-	11	-	-	30	L2	30	-	-	12	-
TOTAL AMPS			**L1**	156.00	**L2**	156.00				

PANELBOARD SCHEDULE

PANEL	NP				M.L.O.					
LOCATION	North Parking Lot				MAIN BREAKER		##			
VOLTS	208Y120				MAIN BUS		##			
PHASE	3				A.I.C.		##			
WIRE	4				MOUNTING		Surface			
SOLID NEUTRAL					ENCLOSURE		NEMA 4 X			
POLE PANEL:	42									
	CIRCUIT BREAKER					CIRCUIT BREAKER				
CIRCUIT DESCRIPTION	No.	TRIP	POLE	AMPS	ø	AMPS	POLE	TRIP	No.	CIRCUIT DESCRIPTION
Race Team Panel	1	200	2	156.00	A		2	30	2	Spare
-	3	-	-	156.00	B		-	-	4	-
Spare	5	30	2		C		2	30	6	Spare
-	7	-	-		A		-	-	8	-
Spare	9	30	2		B		2	30	10	Spare
-	11	-	-		C		-	-	12	-
Spare	13	30	2		A		2	30	14	Spare
-	15	-	-		B		-	-	16	-
Space	17	-	1		C		1	-	18	Space
Space	19	-	1		A		1	-	20	Space
Space	21	-	1		B		1	-	22	Space
Space	23	-	1		C		1	-	24	Space
Space	25	-	1		A		1	-	26	Space
Space	27	-	1		B		1	-	28	Space
Space	29	-	1		C		1	-	30	Space
TOTAL AMPS	**A**	156.00	**B**	156.00	**C**	0.00				

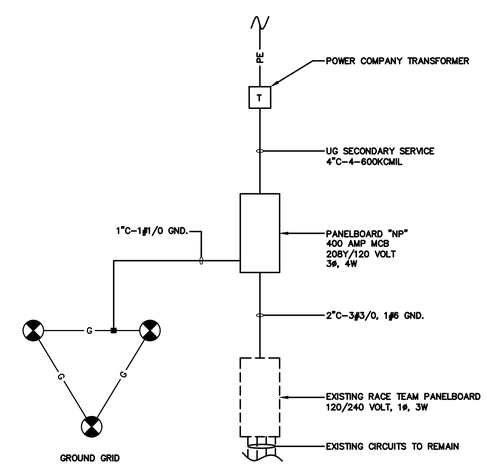

NORTH PARKING LOT
DISTRIBUTION – SINGLE LINE DIAGRAM

SCALE: NOT TO SCALE

NOTES:

1. FOR GENERAL NOTES AND LEGENDS SEE SHEET E-001.

BID DOCUMENTS 06/09/2017

No.	DATE	DESCRIPTION	DESIGNER	REVIEWER
1.				

SEAL

SEAL

SCALE:
HORZ.: 1" = 60'
VERT.:
DATUM:
HORZ.:
VERT.:
0
GRAPHIC SCALE

FUSS & O'NEILL
317 IRON HORSE WAY, SUITE 204
PROVIDENCE, RI 02908
401.861.3070
www.fando.com

FORT ADAMS STATE PARK

NORTH PARKING LOT - WEST END - ELECTRICAL SITE PLAN

RIDEM FACILITY ELECTRICAL UPGRADES

NEWPORT RHODE ISLAND

PROJ. No.: 20160726.A10
DATE: APRIL 2017

ES-106

File Path: J:\DWG\P2016\0726A10\MEP\Electrical\20160726.A10_ELE01.dwg Layout: ES-106 Plotted: Fri, June 09, 2017 - 9:19 AM User: tdion
Plotter: DWG TO PDF.PC3 CTB File: FO.STB
MS VIEW:
LAYER STATE:

DISTRIBUTION PANELBOARD SCHEDULE

NEMA 4X

PANEL: NW	**VOLTS:** 208Y/120	**600 AMP MAIN BREAKER**	
LOCATION: North Fort Wall	**PHASE:** 3	**600 AMP MAIN BUS**	
MOUNTING: Surface	**WIRE:** 4	**65,000 AMPS A.I.C. @ 240 VOLTS**	

ITEM	CIRCUIT BREAKER			SYMMETRICAL AMP RATING	EQUIPMENT SERVED	CONNECTED LOAD (AMPS)
	POLE	FRAME	TRIP			
1	3		200		Panel P1	30.00
2	3		400		Panel P2	100.00
3	3		200		Power Pedestal NW	160.00
4	3		200		Power Pedestal NE	160.00
5	3		-		Prepared Space	
6	3		-		Prepared Space	
7	3		-		Prepared Space	
8	3		-		Prepared Space	
9						
10						
11						
12						
13						
14						
15						
16						
17						
18						
					TOTAL:	450.00

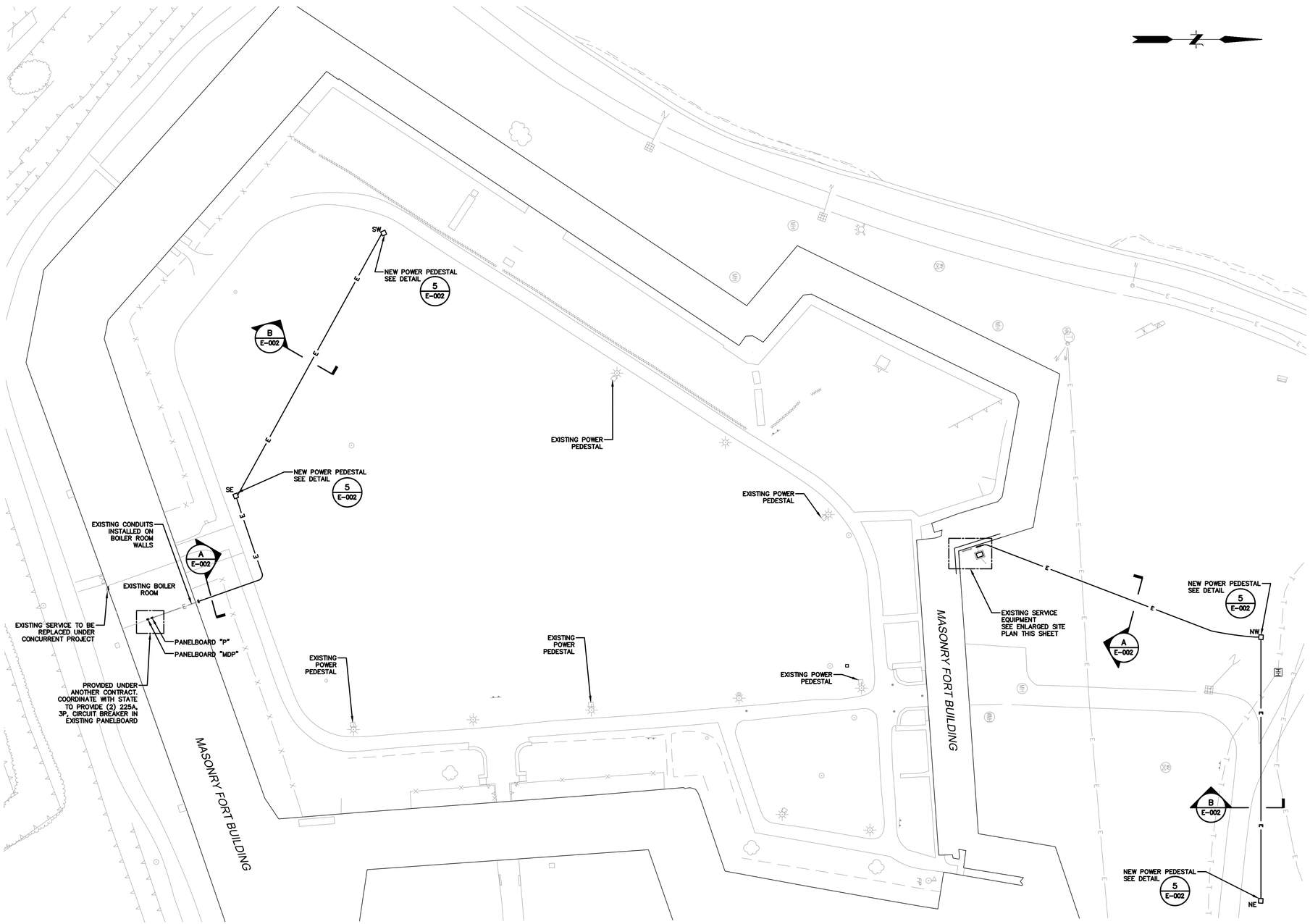

1 ES-107 PARADE GROUNDS ELECTRIC SITE PLAN

SCALE: 1"=40'-0"

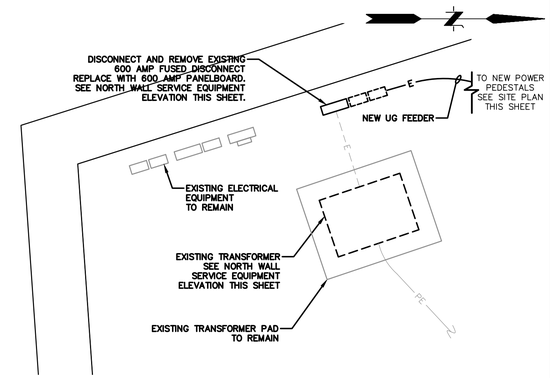

ENLARGED SITE PLAN – NEW WORK

SCALE: 1/4"=1'-0"

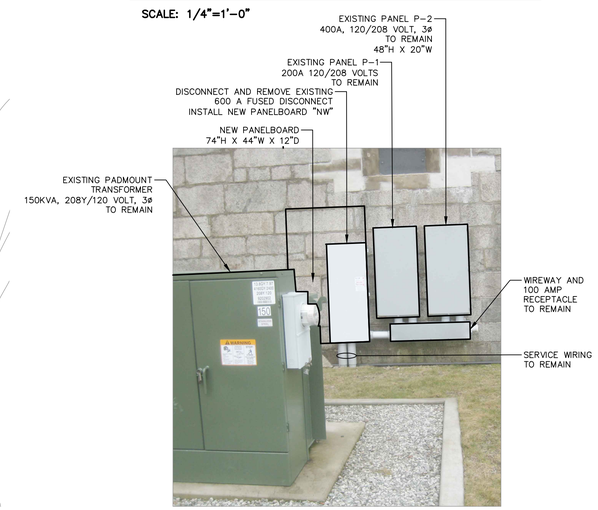

NORTH WALL SERVICE EQUIPMENT

SCALE: NOT TO SCALE

NOTES:

1. FOR GENERAL NOTES AND LEGENDS SEE SHEET E-001.

BID DOCUMENTS 06/09/2017

No.	DATE	DESCRIPTION	DESIGNER	REVIEWER
1.				

SEAL

SEAL

SCALE:
HORZ.: 1" = 60'
VERT.:
DATUM:
HORZ.:
VERT.:
0
GRAPHIC SCALE

FUSS & O'NEILL
317 IRON HORSE WAY, SUITE 204
PROVIDENCE, RI 02908
401.861.3070
www.fando.com

FORT ADAMS STATE PARK

FORT ELECTRICAL SITE PLAN AND DETAILS

RIDEM FACILITY ELECTRICAL UPGRADES

NEWPORT RHODE ISLAND

PROJ. No.: 20160726.A10
DATE: APRIL 2017

ES-107

File Path: J:\DWG\P2016\0726A10\MEP\Electrical\20160726.A10_ELE01.dwg Layout: ES-107 Plotted: Fri, June 09, 2017 - 9:19 AM User: tdion
Plotter: DWG TO PDF.PC3 CTB File: FO.STB
MS VIEW:
LAYER STATE: