WALPAR, LLC
BIRMINGHAM, AL

Subject:	Box-Truss Single Pole Design	**Sheet**	F1B	**of**	15
	Design Format	**By**	RRW	**Date**	4/5/13
Job No:	C1425	**Chk'd By**	BBC	**Date**	4/5/13

PROJECT

State: Rhode Island
Fed. Proj: ------
State Proj: Sakonnet River Bridge
County: Portsmouth / Tiverton
Route: Route 24

Wind Velocity (MPH) 130

Ice Load Area YES

Reference:

"Standard Specifications for Structural Supports for Highway Signs, Luminaires and Traffic Signals", as published by the American Association of State Highway and Transportation Officials, dated 2009. (Includes all Interim Revisions through 2010)

Index:

F1T		Cover Sheet
F2T		Material Specifications
F3T	- F7T	Truss Design format
F8T		Upright Post Design format
F9T	- F10T	Anchor Bolt and Base Plate design format
F11T		Truss Connection to Upright Post design format
F12T		Deflection and Camber format
F13T	- F14T	Member Selection format
F15T		Truss Splice Design format (if required)

Work these sheets with Design Information Sheets **BT1** Thru **BT2**

Work these sheets with Computer Printout Sheets **P1B** Thru **P10B**

A REVISE BT1, BT2, P1B to P10B FOR ADDITIONAL EQUIPMENT ADDED TO GANTRY RRW 4-15-13

BARBARA B. CLEMENTS
4/10/13
No. 8186
REGISTERED
PROFESSIONAL ENGINEER
STRUCTURAL

Material Specifications:

Casting	Aluminum Alloy	356-F & 356-T6
Hardware	Primary	ASTM A325
	Secondary	ASTM A307
Wide Flange Sections & Plates		ASTM A572 (50 ksi)
Angles		ASTM A36
Anchor Bolts		AASHTO M314-90, Gr. 55
Anchor Nuts		ASTM A563, Gr. DH or A194, Gr. 2H
Galvanizing	Hardware	ASTM A153
	Structural	ASTM A123
Welding		AWS Specifications D1.1, Latest Revision
Chords	Steel Pipe	API-5L-X52 (52 ksi Min. Yield)
Posts	Steel Pipe	API-5L-X52 (52 ksi Min. Yield)
Struts & Diagonals	Steel Pipe	A500, Gr. B (Modified to 52 ksi Min. Yield)

BARBARA B. CLEMENTS
No. 8186
REGISTERED
PROFESSIONAL ENGINEER
STRUCTURAL

Wind Load

$P = 0.00256\,(K_z)(1.14)(V^2)(I_r)(C_d)$ (Eq. 3-1, page 3-5)
(P min. = 25 psf, for Group III only)

Where
V = Wind velocity (MPH)
C_d = Wind drag coefficient from Table 3-6, pg. 3-16, 3-17 & 3-18
K_z = Coefficient of height from Table 3-5, pg. 3-12

Wind on Sign (C_d = see Table 3-6)

P_s = wind on sign in PSF
$W_p = (D_i)(B_i)(P_s)$
D_i = Sign Height (ft)
B_i = Sign Length (ft)

Wind on Truss ($C_d = 1.2$)

P_t = Wind on truss in PSF
A_t = Exposed area of truss per foot

$$= 2(\text{chord OD}) + 1.414(\text{vert. diag. OD}) + \frac{\sum(\text{vert. strut OD})(\text{vert. strutlgth})}{\text{trusslength}}$$

$W_h = (A_t)(B_i)(P_t)$ B_i = Exposed truss length (ft.)

Support reactions due to wind

$$Rh_L = \frac{1}{L}\left[\sum_{i=1}^{n}(WH_i)(a_i)\right]$$

(L = Span length: a_i = distance to centroid of section "i")

$$Rh_R = \frac{1}{L}\left[\sum_{i=1}^{n}(WH_i)(L - a_i)\right]$$

$Rh_{max.}$ = Greater of Rh_L or Rh_R

Point of zero shear

From right support $Am_h = Rh_R - \sum_{i=1}^{m} WH_i \le 0$

Moment due to wind

$$M_h = Rh_L(L - Am_h) - \sum_{i=m+1}^{n} WH_i(a_i - Am_h)$$

BARBARA B. CLEMENTS
No. 8186
REGISTERED
PROFESSIONAL ENGINEER
STRUCTURAL

Dead Load

Kv_i = 0 when struts are not used
Kv_i = 1 when struts are used
Estimated weight of signs and hangers = 7 psf
Estimated weight of walkway if required = 30 plf

W_d = Weight per foot of truss

$$= 4(\text{chordwgt}) + 2(\text{vert. diaglgth})(\text{vert.diagwgt}) + 2(\text{hor. diaglgth})(\text{hort.diagwgt}) \ldots + \frac{\sum(\text{hor.strutwgt})(\text{hor. strutlgth}) + (\text{vert. strutwgt})(\text{vert. strutlgth})}{\text{trusslength}}$$

DL_i = Dead load acting at section "I"

$$= (W_d)(b_i)+7(b_i)(d_i)(K_i)+30(b_i)(Kw_i)$$

where,
Kw_i = 0 where walkway not required
Kw_i = 1 where walkway required
K_i = 0 where walkway not required
K_i = 1 where walkway required

Support reactions due to dead load

$$Rd_L = \frac{1}{L}\left[\sum_{i=1}^{n}(DL_i)(a_i)\right]$$

(L=Span length: a_i=distance to centroid of section "i")

$$Rd_R = \frac{1}{L}\left[\sum_{i=1}^{n}(DL_i)(L-a_i)\right]$$

$Rd_{max.}$ = Greater of Rd_L or Rd_R

Point of zero shear

From right support $Am_d = Rd_R - \sum_{i=1}^{m} DL_i \le 0$

Moment due to dead load

$$M_d = Rd_L(L - Am_d) - \sum_{i=m+1}^{n} DL_i(a_i - Am_d)$$

BARBARA B. CLEMENTS
No. 8186
REGISTERED
PROFESSIONAL ENGINEER
STRUCTURAL

Ice Load

Kw_i = 1 if walkway is included, else Kw_i = 0
3 PSF applied to one face of sign and around surface of structural members. (See Fig 3-1 for areas)
Assume ice on walkway = 21 lbs per lineal foot

Wi_i = Ice load per foot of truss

$$= 3(b_i)\left[(d_i)(k_i) + \left(\frac{4\pi(\text{chord OD}) + 2\pi(\text{vert. diag. OD})(1.414) + 2\pi(\text{vert. diag. OD})(1.414)\ldots + \pi\sum(\text{hor.strut OD})(\text{hor. strutlgth}) + (\text{vert. strut OD})(\text{vert. strutlgth})}{\text{trusslength}}\right) + 7(Kw_i)\right]$$

Support reactions due to ice load

$$Ri_L = \frac{1}{L}\left[\sum_{i=1}^{n}(Wi_i)(a_i)\right]$$

(L = Span length: a_i = distance to centroid of section "i")

$$Ri_R = \frac{1}{L}\left[\sum_{i=1}^{n}(Wi_i)(L - a_i)\right]$$

$Ri_{max.}$ = Greater of Ri_L or Ri_R

Point of zero shear

From right support $Am_i = Ri_R - \sum_{i=1}^{m} Wi_i \leq 0$

Moment due to ice load

$$M_i = Ri_L(L - Am_i) - \sum_{i=m+1}^{n} Wi_i(a_i - Am_i)$$

BARBARA B. CLEMENTS
No. 8186
REGISTERED
PROFESSIONAL ENGINEER
STRUCTURAL

Group I (DL)

Chord Load (If $Kv_i = 0$, $L = 2U$; if $Kv_i = 1$, $L = U$) (U = truss depth: L = panel length)

$$Pc_I = \frac{Md}{2U}$$

Diagonals (vertical) L=1.414U

$$Pv_I = 1.414\left(\frac{Rd_{max}}{2}\right)$$

Struts (vertical) L=U

$$Ps_I = \frac{Rd_{max.}}{2}$$

Group II (DL + W)

Chord Load (If $Kv_i = 0$, $L = 2U$; if $Kv_i = 1$, $L = U$)

$$Pc_{II} = \frac{Md}{2U} + \frac{Mh}{2Y}$$ Y=truss width

Moment on front chord due to wind on sign near mid-span

$$Mc_{II} = \frac{(.0052V^2)}{4}(A)(L)$$

A = sign area applied to one chord

$$A = \frac{(\text{max. hgr. spc.})(\text{max. sign ht.})}{2}$$

L = 2U (no struts)
L = U (struts at each panel)

Diagonals (vertical) L=1.414U

$$Pv_{II} = Pv_I$$

Diagonals (horizontal) $L = \sqrt{U^2 + Y^2}$

$$Pi_{II} = \frac{Rh_{max.}(L)}{2Y}$$

Struts (vertical) L=U

$$Ps_{II} = Kv_i\,(Ps_I)$$

Struts (horizontal) L=Y

$$Psh_{II} = Kv_i\left[\frac{(Rh_{max.})}{2}\right]$$

BARBARA B. CLEMENTS
No. 8186
REGISTERED
PROFESSIONAL ENGINEER
STRUCTURAL

Group III (DL + W/2 + IL)

Chord Load (If $Kv_i = 0$, $L = 2U$; if $Kv_i = 1$, $L = U$)

$$Pc_{III} = \frac{Md + Mi}{2U} + \frac{.5\,Mh}{2Y}$$

Moment on front chord due to wind on sign near mid-span

$$Mc_{III} = .5\ Mc_{II}$$

Diagonals (vertical) L=1.414U

$$Pv_{III} = 1.414\frac{\left[Rd_{max.} + Ri_{max.}\right]}{2}$$

Diagonals (horizontal) $L = \sqrt{U^2 + Y^2}$

$$Pi_{III} = \frac{(.5)(Rh_{max.})(L)}{2Y}$$

Struts (vertical) L=U

$$Ps_{III} = Kv_i\left(\frac{Rd_{max.} + Ri_{max.}}{2}\right)$$

Struts (horizontal) L=Y

$$Psh_{III} = Kv_i\frac{(Rh_{max.})}{4}$$

Determine:

Chords	- using Pc_I, Pc_{II}, Mc_{II}, Pc_{III}, Mc_{III}
Vertical diagonals	- using Pv_I, Pv_{II}, Pv_{III}
Inclined diagonals	- using Pi_{II}, Pi_{III}
Vertical struts	- using Ps_I, Ps_{II}, Ps_{III}
Inclined struts	- using Psh_{II}, Psh_{III}

BARBARA B. CLEMENTS
No. 8186
REGISTERED
PROFESSIONAL ENGINEER
STRUCTURAL

Post Design Group I not critical, check Group II & III

For single post uprights, load combination 1, AASHTO Article 1.2.5(D)(4), will always be critical since the resultant moment will be greater.
C_d for single member per Table 1.2.5C, pg.15

W_v = Wind on post $= (\frac{\text{Post O.D.}}{12})(H)(0.00256)(K_z)(1.14)(V^2)(I_r)(C_d)$

R_v = Weight of post = (H)(post wgt.) + Base Pl. + Conn. Pl.

Group II - Combination 1 (DL+W)

P_{II} = total dead load = $Rd_{max.} + R_v$
V_{II} = shear = $Rh_{max.} + W_v$

Mnc_{II} = Moment (normal component) = $(Rh_{max.})(H) + (W_v)(\frac{H}{2})$

Mtc_{II} = Moment (transverse component) = $0.2\left[\frac{\sum WH_i}{2}(H) + W_v\left(\frac{H}{2}\right)\right]$

Mr_{II} = resultant moment = $\sqrt{Mnc_{II}^2 + Mtc_{II}^2}$

Group III - Combination 1 (DL+W/2+IL)

P_{III} = total dead load = $P_{II} + Ri_{MAX.} + 3\pi(H)(\frac{\text{Post O.D.}}{12})$

V_{III} = shear = $\frac{1}{2}V_{II}$
Mnc_{III} = Moment (normal component) = $\frac{1}{2}\,Mnc_{II}$

Mtc_{III} = Moment (transverse component) = $0.2\left[\frac{0.5\sum WH_i}{2}(H) + (0.5)W_v\left(\frac{H}{2}\right)\right]$

Mr_{III} = resultant moment = $\sqrt{Mnc_{III}^2 + Mtc_{III}^2}$

BARBARA B. CLEMENTS
No. 8186
REGISTERED
PROFESSIONAL ENGINEER
STRUCTURAL

Determine: Post - using Mr, P, & V for each group as applicable.

NOTE: k = 2.0 & unbraced length $\ell = H - \frac{U}{2}$ -

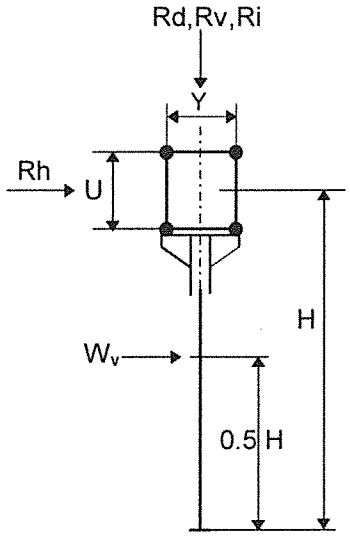

Anchor Bolt Design

Use loadings from Group II, Comb. 2 (Max. by inspection). See sheet F2T for material specifications.

Total shear per anchor bolt

Worst case if normal and transverse shear loads are combined.

$$V_{AB} = \sqrt{(Vnc)^2 + (Vtc)^2}$$

Where $Vnc = \dfrac{\text{normal shear}}{\text{no. of bolts}}$

$Vtc = .2Vnc$

Total axial load per anchor bolt

$$P_{AB} = \frac{Mr\,(\text{bolt circle radius})}{\text{moment of inertia of bolt group}} - \frac{\text{Dead Load}}{\text{no. of bolts}}$$

$Mr = Mr_{II}$ or Mr_{III} , whichever is greater

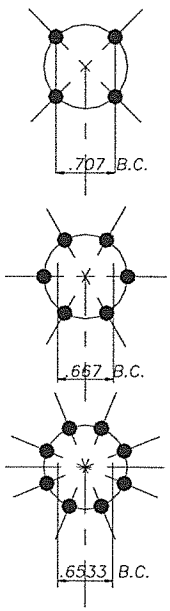

BOLT GROUP CENTROIDS

Allowable Stresses

$F_v = .3F_y(j)$ $\quad Ft = .5F_y(j)$ $\quad$ (Eq. 5-22 & 5-21)

Determine anchor thread diameter

$A_t = \dfrac{P_{AB}}{F_t}$ $\quad A_t$ = Actual tensile stress area required per bolt

A_{tt} = Tensile stress area for trial size bolt ($A_{tt}>A_t$)

Check for combined loading

$(f_v)^2+(kf_t)^2 \le (F_v)^2$ $\quad k = \dfrac{F_v}{F_t}$ $\quad fv = \dfrac{V_{AB}}{A_{tt}}$ $\quad ft = \dfrac{P_{AB}}{A_{tt}}$

Anchor bolt embedment length

Embedment length to be the greater of the development length of for a non-contact lap splice if the anchor bolt is within 6" of the vertical reinforcement of the pedestal or cylinder or 20 anchor bolt diameters. Alternately the bolts should meet requirements of Appendix D of ACI-318-08.

All anchors bolts will have a nut at the bottom and be 55 ksi bolts unless otherwise specified. If hooked anchor bolts are required. Hooked anchors will be 55 ksi anchor bolts only and hook length specified below.

1¼" dia. to 2" dia. use 6" hook
2¼" dia. use 6¾" hook
2½" dia. use 7½" hook

BARBARA B. CLEMENTS
No. 8186
REGISTERED
PROFESSIONAL ENGINEER
STRUCTURAL

Base Plate Design

Use ASTM A572, Gr. 50 Plate (F_y=50,000 PSI)

Assume point of contraflexure midway between bolt and toe of weld.

$$e = \frac{\text{B.C.–POST DIA.–2*.313}}{4}$$

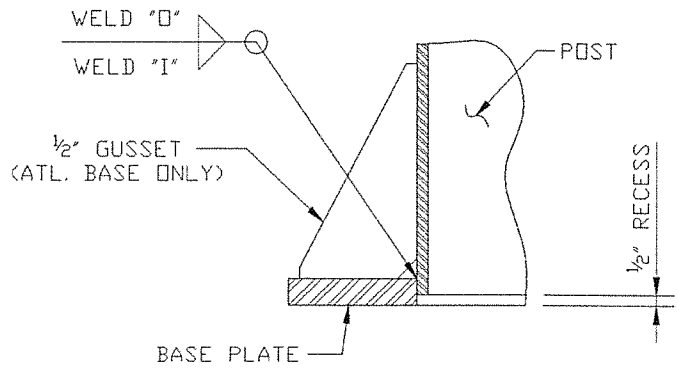

TYPICAL SECTION THRU BASE

Allowable Stresses

Plate: $Fb = .75F_y(j)$ (Eq. 5-8)

Weld: $Fv = 21.6(j)$ AWS-94 Table 8.1 page 177 - Ft_w=72 ksi

Determine Plate Thickness

$M = (P_{AB})(e)$

$S = \frac{M}{F_b}$

$t = \sqrt{6S}$

Determine Weld

Design for moment (Mr_{II} or Mr_{III}) + dead load (DL) + horiz. shear (V_{II} or V_{III})

$$f_v = \frac{Mr_{II} \text{ or } Mr_{III}}{.6366(.5)\pi(\text{pipe O.D.})^2} + \frac{DL}{\pi(\text{pipe O.D.})} \qquad f_h = \frac{V_{II} \text{ or } V_{III}}{\pi[\text{pipe O.D.}]}$$

$$f_r = \sqrt{f_v^2 + f_h^2}$$

Strength of weld I; I = (pipe thk.-.0625)(.707)(F_v)(j)

Size of weld O; $O = \frac{(f_r - I)}{(.707)(F_v)(j)}$ use $\frac{5}{16}$" min. weld

BARBARA B. CLEMENTS
No. 8186
REGISTERED
PROFESSIONAL ENGINEER
STRUCTURAL

Alternate Base Plate

If base plate required from above exceeds 2½" in thickness, use 1½" base plate with stiffeners extended beyond critical bending section. Use weld on stiffeners in addition to weld I and weld O to develop base connection.

Truss Connection to Post

Check Group II and Group III loadings and use maximum.

Use ½" plates for all seats and stiffeners. O.K. by inspection.

Weld design

Plates "A" & "B" to post -

Weld Fv = 21600 psi (AWS-94 Table 8.1 page 177 - Ft_w = 72000 psi min.)

Fillet weld size required for plate "A" (Weld each side)

Vertical load due to wind, $P = \dfrac{Rh_{max.}(U)}{2Y}$

Fillet size = $\dfrac{P + \dfrac{Rd_{max.}}{2}}{2(C)(.707)(Fv)}$ Use ¼" min. fillet

Fillet weld size required for plate "B" (Weld each side)

Use ¼" min. fillet. O.K. by inspection.

BARBARA B. CLEMENTS
No. 8186
REGISTERED
PROFESSIONAL ENGINEER
STRUCTURAL

U-Bolts at chords

Allowable shear stress for A307 bolts, Fv = 11000 psi (AASHTO Table 10.32.3A)

Area of U-bolt required for tension, $At = \dfrac{P - \dfrac{Rd_{max.}}{2}}{4(Fv)(j)}$, $f_t = \dfrac{P - \dfrac{Rd_{max.}}{2}}{4(At)}$

Area of U-bolt required for shear, $Av = \dfrac{Rh_{max.}}{8(Fv)(j)}$, $f_v = \dfrac{Rh_{max.}}{8(At)}$ $k = \dfrac{Fv}{Ft}$

Check for combined stresses

$Fv^2 \geq (f_v)^2 + (kf_t)^2$

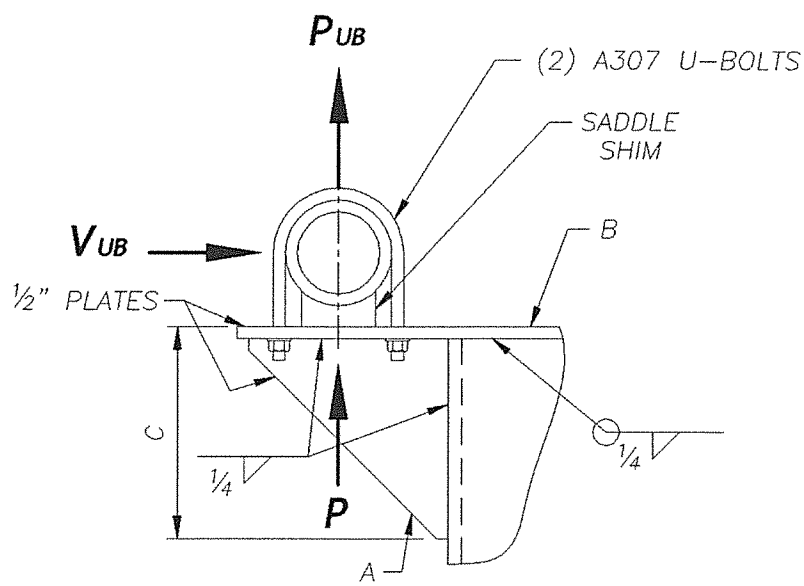

Dead Load Deflection and Camber

Nomenclature

S = span
A = chord area
I_o = chord moment of inertia
U = truss depth
I = truss moment of inertia
C = camber

E = modulus of elasticity
Wd_i = load at any point
A_i = distance to load point
D = depth of deepest sign
ΔDL = truss dead load deflection

Truss deflection due to dead load

$$\Delta DL = \frac{1728\left[\sum_{i=1}^{M} WD_i\, A_i\,(3S^2 - 4A_i^2) + \sum_{i=M+1}^{N} WD_i\,(S - A_i)\{3L^2 - 4(S - A_i)^2\}\right]}{48EI}$$

Truss moment of inertia

$$I = 4(I_o) + 4(A)\left(\frac{U}{2}\right)^2$$

Limit for dead load deflection

$$\Delta DL_{max.} = \frac{D^2}{400}$$, where D = sign depth

Camber Used

$$C_u = \frac{L - 50'}{5'}(0.25) + 1'' ;\ 1''\ \text{min.}$$

Permanent camber remaining

$$C_p = C_u - \Delta DL$$

BARBARA B. CLEMENTS
No. 8186
REGISTERED
PROFESSIONAL ENGINEER
STRUCTURAL

Member selection - Steel pipe

Increase in allowable unit stresses from Table 3-1.

j = 1.33 for Group II and Group III
j = 1.0 for Group I
k = 1.0 (k = 2.0 for post in single pole structures)

Allowable unit stresses

Bending:

compact - $Fb = .66\ Fy\ (j)$; if $\left[\frac{Fy}{E}\left(\frac{R}{t}\right)\right] \le 0.063$

non-compact - $Fb = \left[0.39 + 0.017\frac{E}{Fy}\left(\frac{t}{R}\right)\right](Fy)(j)$; if $0.063 < \frac{Fy}{E}\left(\frac{R}{t}\right) < 0.13$

non-compact - $Fb = \left[0.39 + 0.017\frac{E}{Fy}\left(\frac{t}{R}\right)\right](Fy)(j)$; if $0.13 < \frac{Fy}{E}\left(\frac{R}{t}\right)$

Shear: (Section 5.11.1 - Round)

$Fv = 0.33\ Fy\ (j)$; when $\left(\frac{Fy}{E}\right)\left(\frac{R}{t}\right)^{\frac{3}{2}} < 0.44$

$Fv = 0.145\ E\left(\frac{t}{R}\right)^{\frac{3}{2}}$; when $\left(\frac{Fy}{E}\right)\left(\frac{R}{t}\right)^{\frac{3}{2}} > 0.44$

Axial compression: (Section 5.10)

$$Fa = \left[\frac{0.52\pi^2 E}{\left(kl/r\right)^2}\right](j)\ ;\ \text{if } \frac{kl}{r} > C_c \quad , \text{where } Cc = \sqrt{\frac{2\pi^2\ E}{Fy}}$$

$$Fa = \left\{\frac{\left[1 - \frac{\left(kl/r\right)^2}{2C_c^2}\right]Fy}{\frac{5}{3} + \frac{3\left(kl/r\right)}{8C_c} - \frac{\left(kl/r\right)^3}{8C_c^3}}\right\}(j)\ ;\ \text{if } \frac{kl}{r} < C_c$$

Actual stresses

$fa = \frac{P}{A}$ A = area of trial member

$fb = \frac{M}{S}$ S = section modulus of trial member

$fv = \frac{V}{A}$

BARBARA B. CLEMENTS
No. 8186
REGISTERED
PROFESSIONAL ENGINEER
STRUCTURAL

Member selection - Steel pipe (cont.)

Check for combined stresses

For intermediate points of trusses and uprights CSR ≤ 1.0 (Eq. 5-18)

$$CSR = \frac{fa}{Fa} + \frac{fb}{\left(1 - \frac{fa}{F_e'}\right)Fb} + \left(\frac{fv}{Fv}\right)^2 \quad \text{, where } F_e' = \frac{12\pi^2 E}{23\left(kl/r\right)^2}$$

For end points of trusses and base of uprights CSR ≤ 1.0 (Eq. 5-17)

$$CSR = \frac{fa}{0.6Fy} + \frac{fb}{Fb} + \left(\frac{fv}{Fv}\right)^2$$

BARBARA B. CLEMENTS
No. 8186
REGISTERED
PROFESSIONAL ENGINEER
STRUCTURAL

Truss Splice Design

Design for the average of the maximum chord load and the strength of the member but not less than 75% of the strength of the member. (AASHTO 10.18.1)

Assume point of contraflexure midway between the bolt and toe of weld.

Use A572, Gr. 50 plate (Fy = 50000 psi)
Use ¼" min. outside weld
Use A325 bolts (Ft = 38000 psi) (AASHTO Table 10.32.3B)
Bolt circle = O.D. + 3"(±)

Loads

$$P_{TOT} = \frac{\text{Max. chord "Pc"} + (A)(Ft)}{2} \text{ or } (.75)(A)(Ft)\text{, whichever is greater}$$

$$P = \frac{P_{TOT}}{\pi(O.D.)} \text{ kips / lin. in. of circum.} \qquad e = \frac{B.C. - \left(O.D. + \frac{1}{2}\right)}{4}$$

M = Pe kips/lin. in. of circum.

Allowable Stresses

Plate - Fb = .75(Fy)(j)
Weld - Fv = 21.6 (j)
Pipe - Ft = .66(Fy)(j)

Determine bolts

$f_t = Ft(A_t)(j)$; A_t = tensile stress area

$$\text{No. req'd} = \frac{P_{TOT}}{f_t}$$

Determine plate thickness

$$S = \frac{M}{Fb} \text{ in.}^3\text{/lin. in. of circum.}$$

$$t = \sqrt{\frac{6s}{b}} \quad b = 1\text{" of circum.}$$

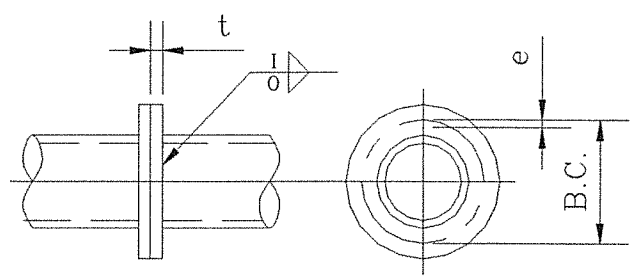

Determine weld

Iv = value of weld $I = \pi(O.D.)(\text{pipe thk.})(.707)(Fv)$

$$\text{Size of weld } O = \frac{P_{TOT} - Iv}{\pi(O.D.)(.707)(Fv)} \text{ ; ¼" min.}$$

BARBARA B. CLEMENTS
No. 8186
REGISTERED
PROFESSIONAL ENGINEER
STRUCTURAL

Walpar, LLC

A

Subject: Box Truss Design Information Sheet: 2 of 2

Job No: C1425 By: RRW Date 4/15/13

Chk'd By: BBC Date 4/15/13

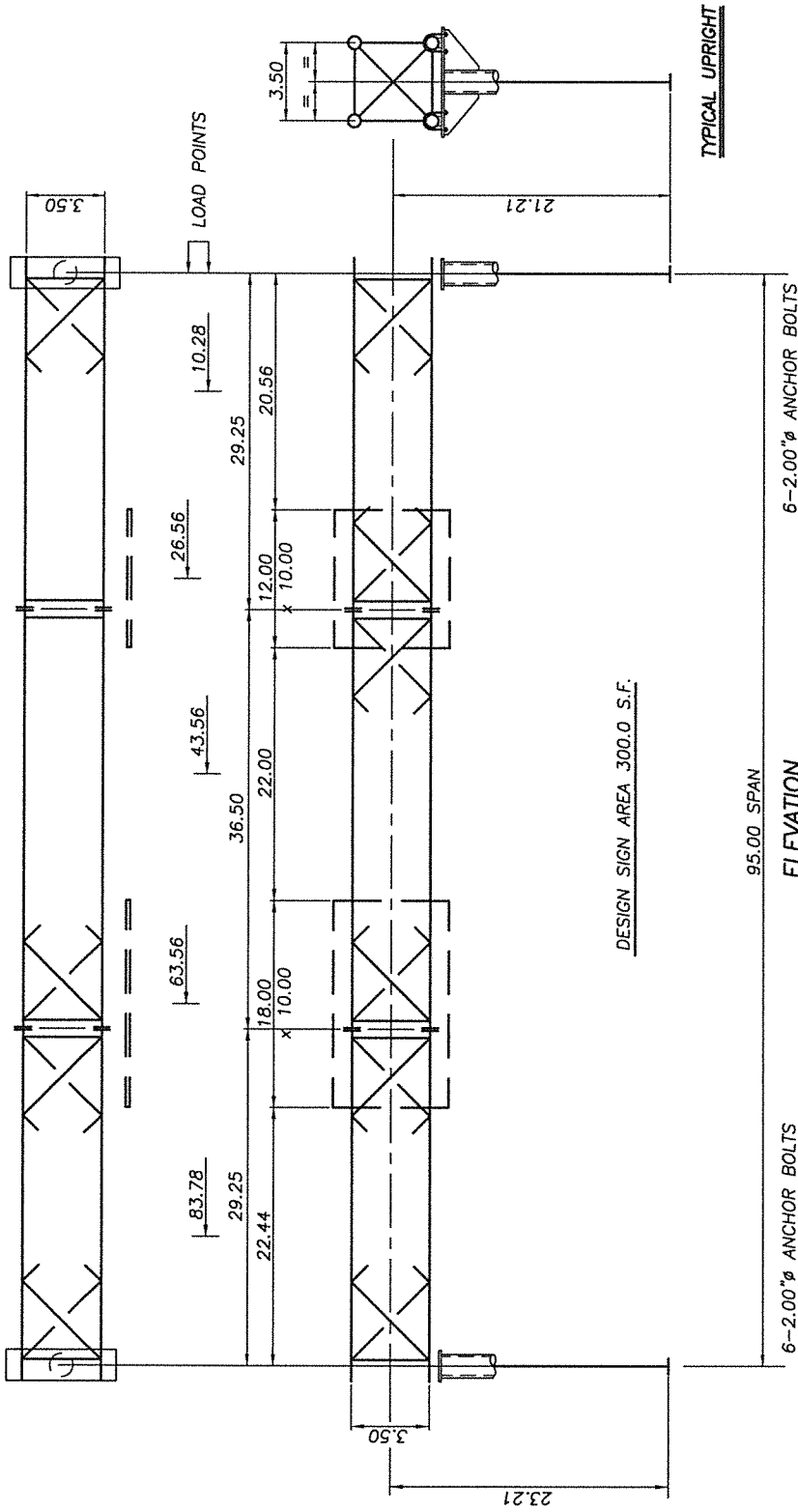

ELEVATION

STR NO: GANTRY 1B
STA NO: SOUTH

UPRIGHTS: LEFT POST 20.000 x 0.250
RIGHT POST 20.000 x 0.250

TRUSS: CHORDS 4.500 x 0.219
VERT DIAGONALS 1.315 x 0.133
HORIZ DIAGONALS 1.660 x 0.140
STRUTS 1.315 x 0.133
INT DIAGONALS 1.315 x 0.133

BARBARA B. CLEMENTS
4/19/13
No. 8186
REGISTERED PROFESSIONAL ENGINEER STRUCTURAL

Walpar, LLC

A

Subject: Box Truss Design Information Sheet: 1 of 2

Job No: C1425 By: RRW Date 4/15/13

Chk'd By: BBC Date 4/15/13

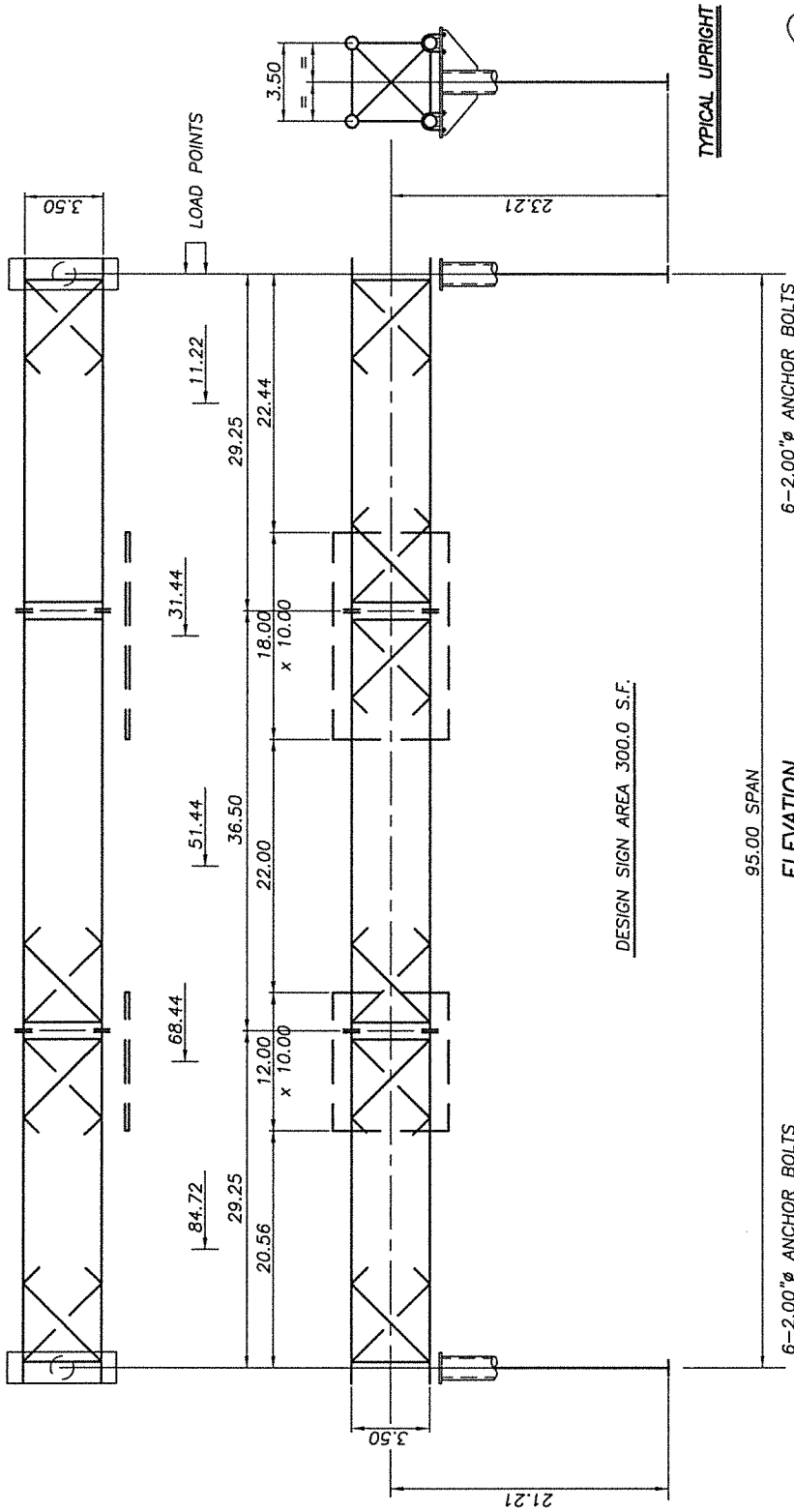

ELEVATION

STR NO: GANTRY 1A
STA NO: NORTH

UPRIGHTS: LEFT POST 20.000 x 0.250
RIGHT POST 20.000 x 0.250

TRUSS: CHORDS 4.500 x 0.219
VERT DIAGONALS 1.315 x 0.133
HORIZ DIAGONALS 1.660 x 0.140
STRUTS 1.315 x 0.133
INT DIAGONALS 1.315 x 0.133

BARBARA B. CLEMENTS
4/18/13
No. 8186
REGISTERED
PROFESSIONAL ENGINEER
STRUCTURAL

BOX TRUSS SINGLE POLE STRUCTURE DESIGN

REF SHEET NO :	BT1	OF	2		
JOB NO :	C1425	STATE CODE :	RI	SPECIFICATION :	2009
WIND VELOCITY(MPH) :	130	ICE LOAD <Y OR N> :	Y	FATIGUE CATEGORY (I, II, III) :	I
VIB AND FAT <Y/N> :	Y	MAX HANGER SPACING :	5.00		

STRUCTURE NO :	GANTRY 1A	PANEL LGTH (FT) :	3.5000	MIN TRUSS WIDTH :	2.38		
STATION NO :	NORTH	END LGTH (FT) :	29.7500	NO OF SECTIONS :	3		
SPAN (FT) :	95.00	MID LGTH (FT) :	36.5000	WL Truss (psf) :	55.63		
MAX SECTION (FT) :	41.50	Wind Hgt. Over-ride (FT) :		Truss Area for WL (ft^2) :	1.10		
TRUSS DEPTH (FT) :	3.50	Kz :	0.94				
TRUSS WIDTH (FT) :	3.50	WL Signs (psf) :	46.36	Truss Area for TIG (ft^2) :	1.18	Str Wgt :	7891
LEFT UPRIGHT HGT :	21.2083	NWGL Signs (psf) :	5.2	NWGL on Truss (psf) :	6.24	Det Hgt :	
RIGHT UPRIGHT HGT :	23.2083	NWGL Walkway (psf) :	6.24	TIGL on Truss (psf) :	22.56	Det Hgt :	

SIGN INFORMATION	LENGTH	HEIGHT	LOCATION	UNIT WT	DEPTH	Z ECC	Cd	AREA	Y ECC
TRUSS AREA 1	22.44		11.22						
SIGN 1	18.00	10.00	31.44	11.70		1	1.18	180.0	5.00
TRUSS AREA 2	22.00		51.44						
SIGN 2	12.00	10.00	68.44	16.50		1	1.13	120.0	5.00
TRUSS AREA 3	20.56		84.72						
SIGN 3									
TRUSS AREA 4									
SIGN 4									
TRUSS AREA 5									
SIGN 5									
TRUSS AREA 6									
SIGN 6									
TRUSS AREA 7									
SIGN 7									
TRUSS AREA 8									
SIGN 8									
TRUSS AREA 9									
SIGN 9									
TRUSS AREA 10									
SIGN 10									
TRUSS AREA 11									
								300.0	

W'WAY INFORMATION	LENGTH	LOCATION	WIDTH	UNIT WT	ECC
WALKWAY 1					
WALKWAY 2					
WALKWAY 3					
WALKWAY 4					
WALKWAY 5					
WALKWAY 6					

BARBARA B. CLEMENTS
4/18/13
No. 8186
REGISTERED
PROFESSIONAL ENGINEER
STRUCTURAL

A
P1B
THRU
P10B

7551188A9
ADDENDUM NO. 9
February 22, 2017

Walpar (c) 2003

BOX TRUSS SINGLE POLE STRUCTURE DESIGN

JOB NO : C1425 STRUCTURE NO : GANTRY 1A STATION NO : NORTH

LANE INFORMATION (Vib & Fat. Calcs)

EDGE OF TRAVEL LANE - RT (FT) :	7.25
EDGE OF TRAVEL LANES - LT (FT) :	7.25
WIDTH OF TRAVEL LANES (FT):	80.50
CTR. OF P_{TG} (FT):	31.44
EXTENT OF P_{TG} (FT):	12.00

SERVICEABILITY REQUIREMENTS

DEFLECTION & CAMBER

TRUSS DL+IL DEFLECTION (IN) :	1.80
LIMIT FOR DEFLECTION (IN) :	7.60
CAMBER USED (IN) :	3.25
PERMANENT CAMBER (IN) :	1.92

MATERIAL INFORMATION

	DP NO:	UBL	SIZE	YIELD	CSR (COMB. 1) GROUP II	CSR (COMB. 1) GROUP III	CSR (COMB. 2) GROUP II	CSR (COMB. 2) GROUP III
TRUSS CHORDS	16	7.00	4.500 x 0.219	52	0.8795	0.6306		
VERTICAL DIAGONALS	2	4.95	1.315 x 0.133	52	0.7201	0.8852		
VERTICAL STRUTS	2	3.13	1.315 x 0.133	52	0.2183	0.2683		
HORIZONTAL DIAGONALS	3	4.95	1.660 x 0.140	52	0.6658	0.3662		
HORIZONTAL STRUTS	2	3.13	1.315 x 0.133	52	0.4499	0.2306		
LEFT UPRIGHTS	61	19.46	20.000 x 0.250	52	0.8158	0.4193	0.5397	0.2818
RIGHT UPRIGHTS	61	21.46	20.000 x 0.250	52	0.9355	0.4799	0.6156	0.3197

	YIELD	DIA	LENGTH	EMB'MNT	QTY	PULLOUT (LBS)	Bolt circle (in)	CSR	A.B. OVERRIDE
LEFT ANCHOR BOLTS :	55	2	4.25	3.50	6	66522	26.00	0.5303	6-2
RIGHT ANCHOR BOLTS :	55	2	4.25	3.50	6	76551	26.00	0.7021	

	THK	WELD
LEFT BASE PLATE :	2	0.3125
RIGHT BASE PLATE :	2	0.3125

U-BOLT DIA. AT UPRIGHTS (in) : 0.500

	FLANGE PLATE THK	FLANGE PLATE WELD	FLANGE BOLT DIAMETER	NUMBER OF BOLTS	MAXIMUM DESIGN LOAD AT SPLICE	SPLICE MOMENT (in-lbf/in)	BOLT CIRCLE DIAMETER (in)	
CHORD SPLICE :	0.75	0.25	0.875	4	80115	3542	7.50	7/8

	DISTANCE BASE TO SPLICE	FLANGE BOLT DIAMETER	NUMBER OF BOLTS	FLANGE PLATE THK	FLANGE PLATE WELD	SPLICE MOMENT (ft-lbf)	MAXIMUM DESIGN SPLICE BOLT LOAD	BOLT CIRCLE (in)
LEFT POST SPLICE :								
RIGHT POST SPLICE :								

BARBARA B. CLEMENTS

No. 8186

REGISTERED
PROFESSIONAL ENGINEER
STRUCTURAL

A

P2B

7551188A9
ADDENDUM NO. 9
February 22, 2017

BOX TRUSS SINGLE POLE STRUCTURE DESIGN

JOB NO : C1425 STRUCTURE NO : GANTRY 1A STATION NO : NORTH

TRUSS LOAD SUMMARY

LOADS	DEAD SIGN	DEAD TRUSS	WIND SIGN	WIND TRUSS	ICE SIGN	ICE TRUSS	TORQUE (H) DL	TORQUE (H) IL	NWG
TRUSS AREA 1		1165		1368		475			153
SIGN 1	2106	934	9814		540	381	602	154	1217
TRUSS AREA 2		1142		1342		466			150
SIGN 2	1980	623	6309		360	254	566	103	811
TRUSS AREA 3		1067		1254		435			141
SIGN 3									
TRUSS AREA 4									
SIGN 4									
TRUSS AREA 5									
SIGN 5									
TRUSS AREA 6									
SIGN 6									
TRUSS AREA 7									
SIGN 7									
TRUSS AREA 8									
SIGN 8									
TRUSS AREA 9									
SIGN 9									
TRUSS AREA 10									
SIGN 10									
TRUSS AREA 11									
WALKWAY 1									
WALKWAY 2									
WALKWAY 3									
WALKWAY 4									
WALKWAY 5									
WALKWAY 6									
LEFT UPR REACTIONS	4589		9799		1444		199	51	1212
RIGHT UPR REACTIONS	4428		10288		1468		403	103	1261
MAX MOMENTS AT CHORDS	118158		288449		37298				35627
ZERO SHEAR POINT	44.74		38.80		43.81				38.81

NUMBER OF LOADS : 5

No OF WW LOADS :

	TRUSS WGT PER L/F	TRUSS WGT TOTAL
DEAD LOAD	51.91	4931
ICE LOAD	21.17	2011

TRUSS MOMENT OF INERTIA 5217

BARBARA B. CLEMENTS
No. 8186
REGISTERED
PROFESSIONAL ENGINEER
STRUCTURAL

7551188A9
ADDENDUM NO. 9
February 22, 2017

A

P3B

Walpar (c) 2003

BOX TRUSS SINGLE POLE STRUCTURE DESIGN

JOB NO : C1425 STRUCTURE NO : GANTRY 1A STATION NO : NORTH

TRUCK INDUCED GUST LOADING

	APPROX. LOCATION	P_{TG} (UPLIFT)	P_{TG} Torque	P_{TG} Loc.
TRUSS CHORDS :		319		31.44
TG SIGN 1 :	SIGN 1 (PARTIAL)			31.44
TG SIGN 2 :				
TG WALKWAY 1 :				
TG WALKWAY 2 :				
TG WALKWAY 3 :				
LEFT UPR REACTIONS		105		
RIGHT UPR REACTIONS		213		
MAX MOMENT AT CHORDS		6282		
ZERO SHEAR POINT		33.47		

POST LOADS	DEAD	WIND	ICE	NWG	LAT. STIFF. RATIO
LEFT UPRIGHT	1427	677	306		0.57
RIGHT UPRIGHT	1533	746	337		0.43

COMBINATIONS

TRUSS LOADS	DL	DL+WL	DL+WL/2+IL	NWG	TIG
CHORDS (PC)	18047	59254	44236	5090	897
VERTICAL DIAGONALS (PV)	3530	3530	4339		151
HORIZONTAL DIAGONALS (PH)	1651	7275	4001	446	
VERTICAL STRUTS (PS)	2496	2496	3068		53
HORIZONTAL STRUTS (PSH)	292	5144	2636	315	
TRUSS MOMENTS					
CHORDS (XMC)	901	2910	1876		
UPRIGHT LOADS					
AXIAL					
LEFT - COMB. 1	6016	6016	7765		105
LEFT - COMB. 2	6016	6016	7765		
RIGHT - COMB. 1	5961	5961	7766		213
RIGHT - COMB. 2	5961	5961	7766		
SHEAR					
LEFT - COMB. 1		10679	5340	1212	
LEFT - COMB. 2		7015	3507	1212	
RIGHT - COMB. 1		11229	5615	1261	
RIGHT - COMB. 2		7321	3661	1261	
UPRIGHT MOMENTS					
LEFT - COMB. 1	697	219454	110254	25707	
LEFT - COMB. 2	697	144602	72617	25707	
RIGHT - COMB. 1	697	252021	126537	29255	
RIGHT - COMB. 2	697	164787	82710	29255	

BARBARA B. CLEMENTS
No. 8186
REGISTERED
PROFESSIONAL ENGINEER
STRUCTURAL

A

P4B

7551188A9
ADDENDUM NO. 9
February 22, 2017

Walpar (c) 2003

BOX TRUSS SINGLE POLE STRUCTURE DESIGN

JOB NO : C1425 STRUCTURE NO : GANTRY 1A STATION NO : NORTH

VIBRATION AND FATUGUE STRESSES

TRUSS	ALLOWABLE	ACTUAL
CHORDS	2610	1730
VERTICAL DIAGONALS	1160	305
HORIZONTAL DIAGONALS	1160	667
VERTICAL STRUTS	1160	107
HORIZONTAL STRUTS	1160	638
UPR BASE - LT	2610	7
UPR BASE - RT	2610	14

FOOTING INPUT

UPRIGHT	Rd	Rv	Rh	Wv	H1	H2	PL	PW
LEFT	4.59	1.43	9.83	0.68	21.21	9.73	3.50	3.50
RIGHT	4.43	1.53	10.35	0.75	23.21	10.73	3.50	3.50

BARBARA B. CLEMENTS
No. 8186
REGISTERED
PROFESSIONAL ENGINEER
STRUCTURAL

A

P5B

7551188A9
ADDENDUM NO. 9
February 22, 2017

Walpar (c) 2003

BOX TRUSS SINGLE POLE STRUCTURE DESIGN

REF SHEET NO :	BT2	OF	2		
JOB NO :	C1425	STATE CODE :	RI	SPECIFICATION :	2009
WIND VELOCITY(MPH) :	130	ICE LOAD <Y OR N> :	Y	FATIGUE CATEGORY (I, II, III) :	I
VIB AND FAT <Y/N> :	Y	MAX HANGER SPACING :	5.00		

STRUCTURE NO :	GANTRY 1B	PANEL LGTH (FT) :	3.5000	MIN TRUSS WIDTH :	2.38		
STATION NO :	SOUTH	END LGTH (FT) :	29.7500	NO OF SECTIONS :	3		
SPAN (FT) :	95.00	MID LGTH (FT) :	36.5000	WL Truss (psf) :	55.63		
MAX SECTION (FT) :	41.50	Wind Hgt. Over-ride (FT) :		Truss Area for WL (ft^2) :	1.10		
TRUSS DEPTH (FT) :	3.50	Kz :	0.94				
TRUSS WIDTH (FT) :	3.50	WL Signs (psf) :	46.36	Truss Area for TIG (ft^2) :	1.18	Str Wgt :	7891
LEFT UPRIGHT HGT :	23.2083	NWGL Signs (psf) :	5.2	NWGL on Truss (psf) :	6.24	Det Hgt :	
RIGHT UPRIGHT HGT :	21.2083	NWGL Walkway (psf) :	6.24	TIGL on Truss (psf) :	22.56	Det Hgt :	

SIGN INFORMATION	LENGTH	HEIGHT	LOCATION	UNIT WT	DEPTH	Z ECC	Cd	AREA	Y ECC
TRUSS AREA 1	20.56		10.28						
SIGN 1	12.00	10.00	26.56	11.40		1	1.13	120.0	5.00
TRUSS AREA 2	22.00		43.56						
SIGN 2	18.00	10.00	63.56	17.50		1	1.18	180.0	5.00
TRUSS AREA 3	22.44		83.78						
SIGN 3									
TRUSS AREA 4									
SIGN 4									
TRUSS AREA 5									
SIGN 5									
TRUSS AREA 6									
SIGN 6									
TRUSS AREA 7									
SIGN 7									
TRUSS AREA 8									
SIGN 8									
TRUSS AREA 9									
SIGN 9									
TRUSS AREA 10									
SIGN 10									
TRUSS AREA 11									
								300.0	

W'WAY INFORMATION	LENGTH	LOCATION	WIDTH	UNIT WT	ECC
WALKWAY 1					
WALKWAY 2					
WALKWAY 3					
WALKWAY 4					
WALKWAY 5					
WALKWAY 6					

BARBARA B. CLEMENTS

No. 8186

REGISTERED
PROFESSIONAL ENGINEER
STRUCTURAL

A

P6B

7551188A9
ADDENDUM NO. 9
February 22, 2017

Walpar (c) 2003

BOX TRUSS SINGLE POLE STRUCTURE DESIGN

JOB NO : C1425 STRUCTURE NO : GANTRY 1B STATION NO : SOUTH

LANE INFORMATION (Vib & Fat. Calcs)

EDGE OF TRAVEL LANE - RT (FT) :	7.25
EDGE OF TRAVEL LANES - LT (FT) :	7.25
WIDTH OF TRAVEL LANES (FT):	80.50
CTR. OF P_{TG} (FT):	26.56
EXTENT OF P_{TG} (FT):	12.00

SERVICEABILITY REQUIREMENTS

DEFLECTION & CAMBER

TRUSS DL+IL DEFLECTION (IN) :	1.90
LIMIT FOR DEFLECTION (IN) :	7.60
CAMBER USED (IN) :	3.25
PERMANENT CAMBER (IN) :	1.87

MATERIAL INFORMATION

	DP NO:	UBL	SIZE	YIELD	CSR (COMB. 1) GROUP II	CSR (COMB. 1) GROUP III	CSR (COMB. 2) GROUP II	CSR (COMB. 2) GROUP III
TRUSS CHORDS	16	7.00	4.500 x 0.219	52	0.9015	0.6531		
VERTICAL DIAGONALS	2	4.95	1.315 x 0.133	52	0.8084	0.9427		
VERTICAL STRUTS	2	3.13	1.315 x 0.133	52	0.2451	0.2858		
HORIZONTAL DIAGONALS	3	4.95	1.660 x 0.140	52	0.6658	0.3662		
HORIZONTAL STRUTS	2	3.13	1.315 x 0.133	52	0.4499	0.2306		
LEFT UPRIGHTS	61	21.46	20.000 x 0.250	52	0.9374	0.4817	0.6155	0.3213
RIGHT UPRIGHTS	61	19.46	20.000 x 0.250	52	0.8163	0.4197	0.5414	0.2819

	YIELD	DIA	LENGTH	EMB'MNT	QTY	PULLOUT (LBS)	Bolt circle (in)	CSR	A.B. OVERRIDE
LEFT ANCHOR BOLTS :	55	2	4.25	3.50	6	76520	26.00	0.7015	
RIGHT ANCHOR BOLTS :	55	2	4.25	3.50	6	66594	26.00	0.5315	6-2

	THK	WELD
LEFT BASE PLATE :	2	0.3125
RIGHT BASE PLATE :	2	0.3125

U-BOLT DIA. AT UPRIGHTS (in) : 0.500

	FLANGE PLATE THK	FLANGE PLATE WELD	FLANGE BOLT DIAMETER	NUMBER OF BOLTS	MAXIMUM DESIGN LOAD AT SPLICE	SPLICE MOMENT (in-lbf/in)	BOLT CIRCLE DIAMETER (in)	
CHORD SPLICE :	0.75	0.25	0.875	4	81008	3581	7.50	7/8

	DISTANCE BASE TO SPLICE	FLANGE BOLT DIAMETER	NUMBER OF BOLTS	FLANGE PLATE THK	FLANGE PLATE WELD	SPLICE MOMENT (ft-lbf)	MAXIMUM DESIGN SPLICE BOLT LOAD	BOLT CIRCLE (in)
LEFT POST SPLICE :								
RIGHT POST SPLICE :								

BARBARA B. CLEMENTS

No. 8186

REGISTERED
PROFESSIONAL ENGINEER
STRUCTURAL

A

P7B

7551188A9
ADDENDUM NO. 9
February 22, 2017

Walpar (c) 2003

BOX TRUSS SINGLE POLE STRUCTURE DESIGN

JOB NO : C1425 STRUCTURE NO : GANTRY 1B STATION NO : SOUTH

TRUSS LOAD SUMMARY

LOADS	DEAD SIGN	DEAD TRUSS	WIND SIGN	WIND TRUSS	ICE SIGN	ICE TRUSS	TORQUE (H) DL	TORQUE (H) IL	NWG
TRUSS AREA 1		1067		1254		435			141
SIGN 1	1368	623	6309		360	254	391	103	811
TRUSS AREA 2		1142		1342		466			150
SIGN 2	3150	934	9814		540	381	900	154	1217
TRUSS AREA 3		1165		1368		475			153
SIGN 3									
TRUSS AREA 4									
SIGN 4									
TRUSS AREA 5									
SIGN 5									
TRUSS AREA 6									
SIGN 6									
TRUSS AREA 7									
SIGN 7									
TRUSS AREA 8									
SIGN 8									
TRUSS AREA 9									
SIGN 9									
TRUSS AREA 10									
SIGN 10									
TRUSS AREA 11									
WALKWAY 1									
WALKWAY 2									
WALKWAY 3									
WALKWAY 4									
WALKWAY 5									
WALKWAY 6									
LEFT UPR REACTIONS	4956		10288		1468		252	43	1261
RIGHT UPR REACTIONS	4494		9799		1444		648	111	1212
MAX MOMENTS AT CHORDS	129798		288449		37298				35627
ZERO SHEAR POINT	55.86		56.20		51.19				56.19

NUMBER OF LOADS : 5

No OF WW LOADS :

	TRUSS WGT PER L/F	TRUSS WGT TOTAL
DEAD LOAD	51.91	4931
ICE LOAD	21.17	2011

TRUSS MOMENT OF INERTIA 5217

BARBARA B. CLEMENTS
No. 8186
REGISTERED PROFESSIONAL ENGINEER
STRUCTURAL

A

P8B

ADDENDUM NO. 9
February 22, 2017
7551188A9

Walpar (c) 2003

BOX TRUSS SINGLE POLE STRUCTURE DESIGN

JOB NO : C1425 STRUCTURE NO : GANTRY 1B STATION NO : SOUTH

TRUCK INDUCED GUST LOADING

	APPROX. LOCATION	P_{TG} (UPLIFT)	P_{TG} Torque	P_{TG} Loc.
TRUSS CHORDS :		319		26.56
TG SIGN 1 :	SIGN 1 (PARTIAL)			26.56
TG SIGN 2 :				
TG WALKWAY 1 :				
TG WALKWAY 2 :				
TG WALKWAY 3 :				
LEFT UPR REACTIONS		89		
RIGHT UPR REACTIONS		230		
MAX MOMENT AT CHORDS		5715		
ZERO SHEAR POINT		29.21		

POST LOADS	DEAD	WIND	ICE	NWG	LAT. STIFF. RATIO
LEFT UPRIGHT	1533	746	337		0.43
RIGHT UPRIGHT	1427	677	306		0.57

COMBINATIONS

TRUSS LOADS	DL	DL+WL	DL+WL/2+IL	NWG	TIG
CHORDS (PC)	19833	61040	46022	5090	816
VERTICAL DIAGONALS (PV)	3963	3963	4621		162
HORIZONTAL DIAGONALS (PH)	1826	7275	4001	446	
VERTICAL STRUTS (PS)	2802	2802	3267		45
HORIZONTAL STRUTS (PSH)	323	5144	2636	315	
TRUSS MOMENTS					
CHORDS (XMC)	952	2947	1918		
UPRIGHT LOADS					
AXIAL					
LEFT - COMB. 1	6488	6488	8293		89
LEFT - COMB. 2	6488	6488	8293		
RIGHT - COMB. 1	5921	5921	7670		230
RIGHT - COMB. 2	5921	5921	7670		
SHEAR					
LEFT - COMB. 1		11229	5615	1261	
LEFT - COMB. 2		7321	3661	1261	
RIGHT - COMB. 1		10679	5340	1212	
RIGHT - COMB. 2		7015	3507	1212	
UPRIGHT MOMENTS					
LEFT - COMB. 1	881	252204	126694	29255	
LEFT - COMB. 2	881	164897	82803	29255	
RIGHT - COMB. 1	881	219638	110411	25707	
RIGHT - COMB. 2	881	144713	72711	25707	

BARBARA B. CLEMENTS
No. 8186
REGISTERED
PROFESSIONAL ENGINEER
STRUCTURAL

7551188A9
ADDENDUM NO. 9
February 22, 2017

A

P9B

Walpar (c) 2003

BOX TRUSS SINGLE POLE STRUCTURE DESIGN

JOB NO : C1425 STRUCTURE NO : GANTRY 1B STATION NO : SOUTH

VIBRATION AND FATUGUE STRESSES

TRUSS	ALLOWABLE	ACTUAL
CHORDS	2610	1730
VERTICAL DIAGONALS	1160	329
HORIZONTAL DIAGONALS	1160	667
VERTICAL STRUTS	1160	90
HORIZONTAL STRUTS	1160	638
UPR BASE - LT	2610	6
UPR BASE - RT	2610	15

FOOTING INPUT

UPRIGHT	Rd	Rv	Rh	Wv	H1	H2	PL	PW
LEFT	4.96	1.53	10.33	0.75	23.21	10.73	3.50	3.50
RIGHT	4.49	1.43	9.91	0.68	21.21	9.73	3.50	3.50

BARBARA B. CLEMENTS
No. 8186
REGISTERED
PROFESSIONAL ENGINEER
STRUCTURAL

A

P10B

7551188A9
ADDENDUM NO. 9
February 22, 2017

Walpar (c) 2003

WALPAR, LLC BIRMINGHAM, AL	Subject: Footing Design Design Format	Sheet FD1 of 15 By RRW Date 4/5/13
	Job No: C1425	Chk'd By BBC Date 4/5/13

PROJECT

State: Rhode Island
Fed. Proj: ------
State Proj: Sakonnet River Bridge
County: Portsmouth / Tiverton
Route: Route 24

Wind Velocity (MPH) 130

Design Assumptions:

1. Maximum soil bearing pressure for spread footings 2.0 KSF.
2. Maximum soil bearing pressure for cylindrical footings 2.0 KSF.
3. Wind gust factors are included in loadings (30%).
4. Allowables increased by 33% for Group II loadings.
5. Concrete f 'c = 3000 PSI.
6. Reinforcing steel to be ASTM - A615, Grade 60, Fy = 60 KSI.
7. Design cylindrical footings as piles with lateral loads. Overturning moments and lateral soil forces are critical. Therefore, use plastic hinge approach for soil resistance and maximum moment in piles (Rutledge, Seiler, Broms method).

Work these sheets with Cylindrical Footing computer printout sheets SCF1 thru SCF4

A REVISED SCF1 to SCF4 FOR ADDITIONAL EQUIPMENT ADDED TO GANTRY - RRW 4/15/13

BARBARA B. CLEMENTS
4/10/13
No. 8186
REGISTERED
PROFESSIONAL ENGINEER
STRUCTURAL

WALPAR, LLC
BIRMINGHAM, AL

Subject: Spread Footing
Design Format

Sheet FD2 of 15
By BBC Chk'd By CC

CALCULATION OF FOOTING CORNER STRESSES

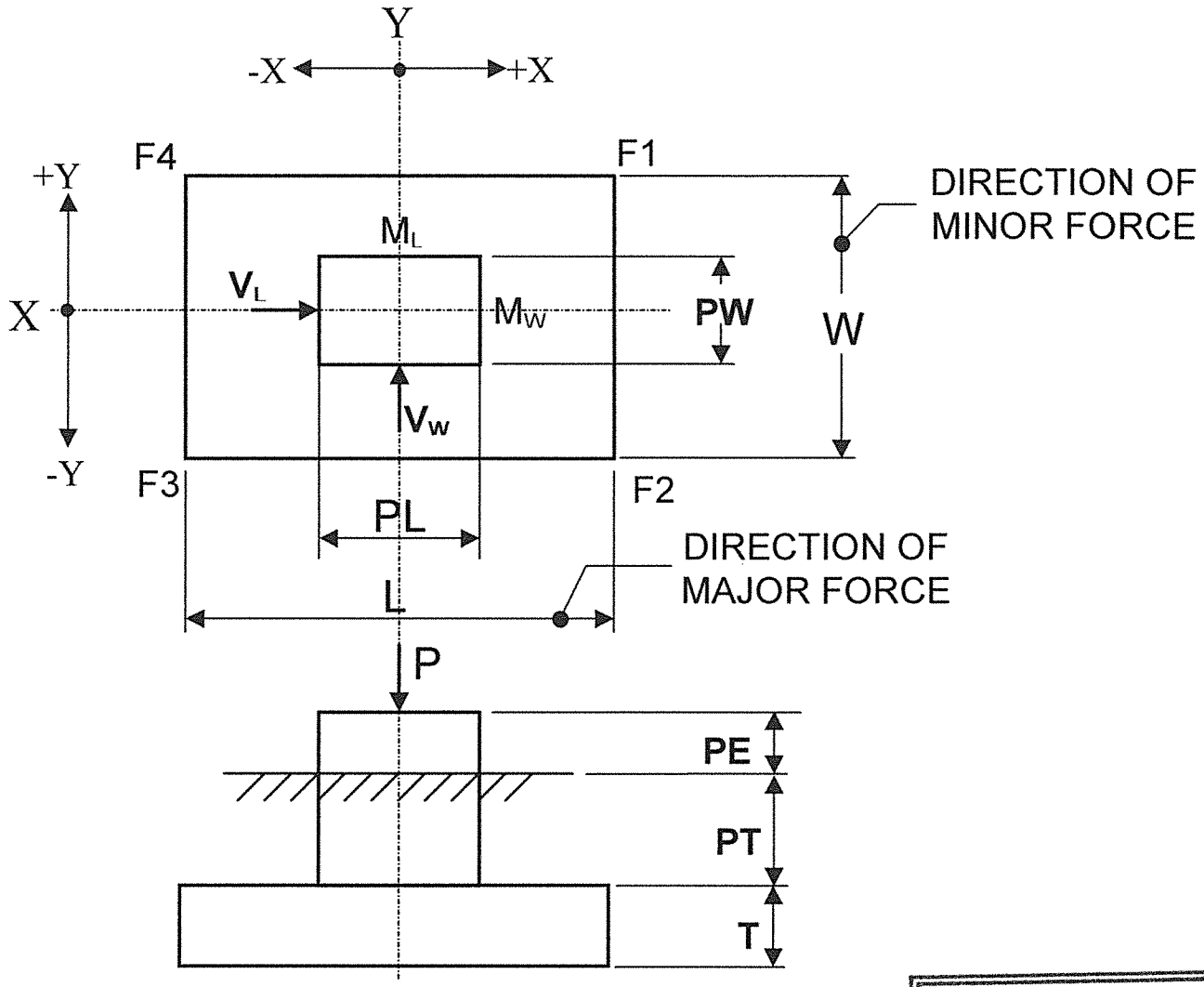

FOOTING SIZE

Wc = WEIGHT OF CONCRETE = 150 #/CU. FOOT ASSUMED

Ws = WEIGHT OF SOIL

INPUT VALUES ARE AT TOP OF PEDESTAL

BARBARA B. CLEMENTS
No. 8186
REGISTERED
PROFESSIONAL ENGINEER
STRUCTURAL

Uncracked Section (No Tension)

$$F_i = \frac{P_t}{A} \pm \frac{Mx(y)}{Ix} \pm \frac{My(x)}{Iy}$$

P_s = weight of soil above pad
P_c = weight of concrete
P = weight of structure

Axial load at bottom of footing, $P_t = P+P_c+P_s$

Moments at bottom of footing

$Mx = Mw + Vw(T+PT+PE)$
$My = ML + VL(T+PT+PE)$

Footing corner stresses

$$F1 = \frac{P_t}{A} + \frac{Mx(y)}{Ix} + \frac{My(x)}{Iy}$$

$$F2 = \frac{P_t}{A} - \frac{Mx(y)}{Ix} + \frac{My(x)}{Iy}$$

$$F3 = \frac{P_t}{A} - \frac{Mx(y)}{Ix} - \frac{My(x)}{Iy}$$

$$F4 = \frac{P_t}{A} + \frac{Mx(y)}{Ix} - \frac{My(x)}{Iy}$$

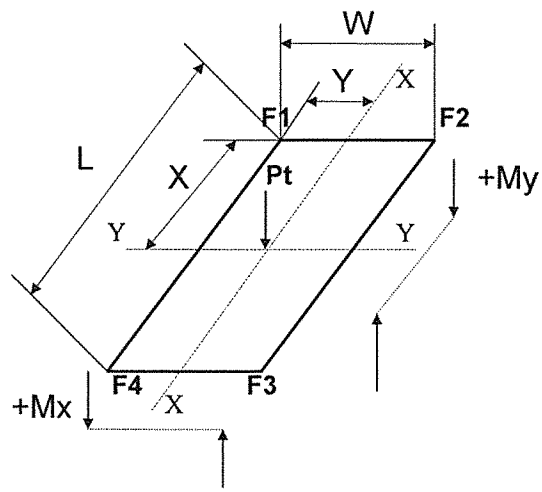

DESIGN MODEL AT BOTTOM OF FOOTING

Note: If F3 is negative (in tension), cracked section must be calculated

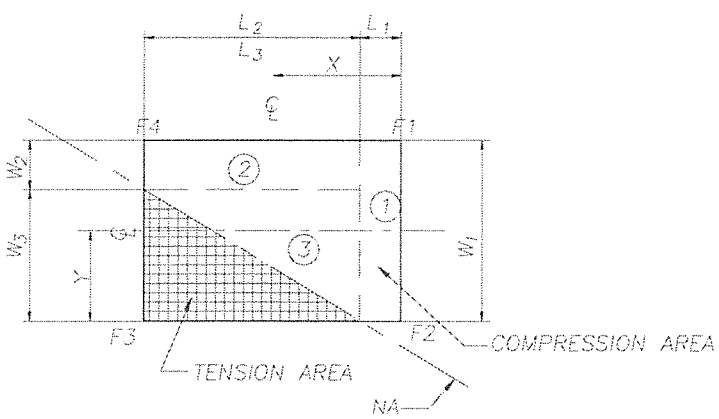

STRESS DIAGRAM - F3 NEGATIVE
Cracked Section - Case 1

Stresses are calculated at bottom of footing.

General Flexure Formula

$$F_i = \frac{P_t}{A} \pm \left[\frac{Mxc - Myc\left(\frac{Ixcyc}{Iyc}\right)}{Ixc - \frac{(Ixcyc)^2}{Iyc}}\right] Y' \pm \left[\frac{Myc - Mxc\left(\frac{Ixcyc}{Ixc}\right)}{Iyc - \frac{(Ixcyc)^2}{Ixc}}\right] X'$$

BARBARA B. CLEMENTS
No. 8186
REGISTERED
PROFESSIONAL ENGINEER
STRUCTURAL

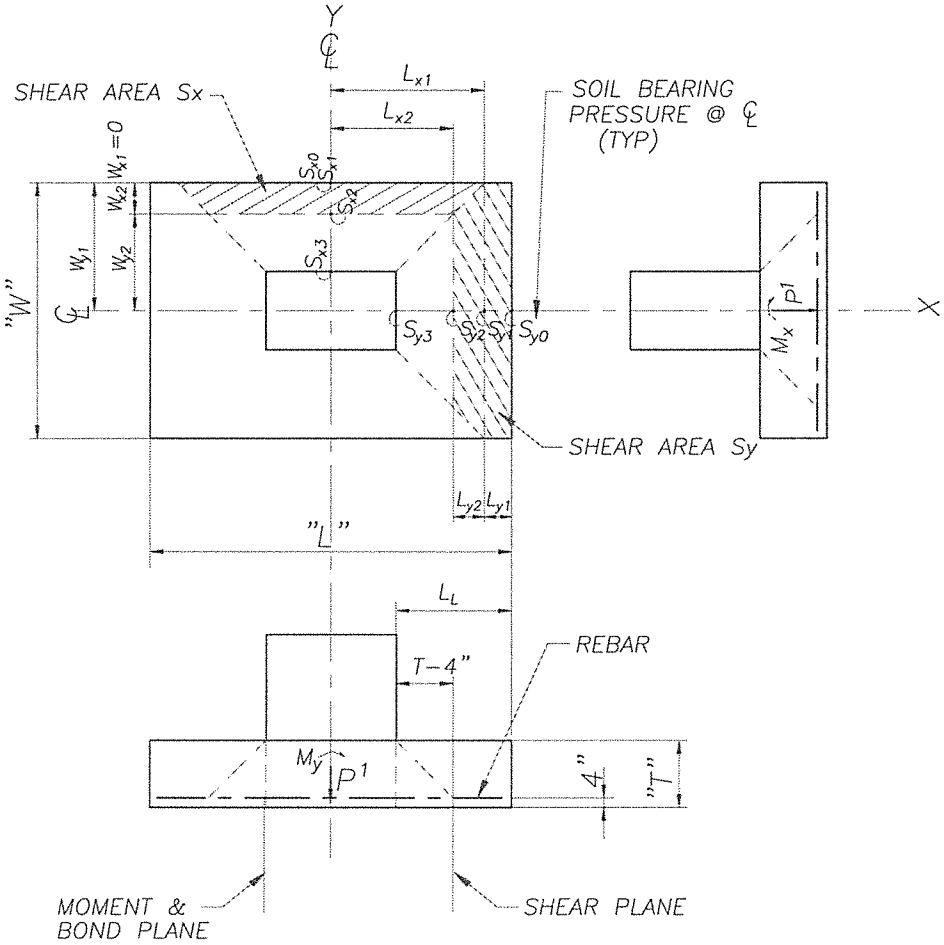

FOOTING MOMENT AND SHEAR MODEL

Uniform weight of concrete and soil, Pcs = (T)(Wc)+(PT)(Ws)

BARBARA B. CLEMENTS
No. 8186
REGISTERED
PROFESSIONAL ENGINEER
STRUCTURAL

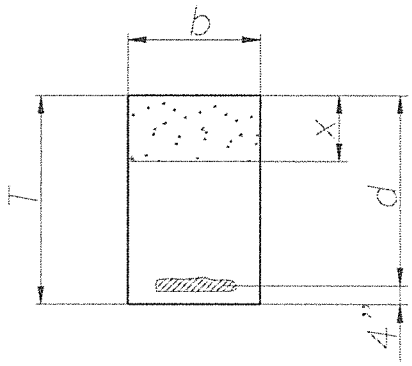

Use ASTM A615, Gr. 60 rebar

Fy = 60 ksi f'c = varies (psi)

Fs = 24 ksi $n = \dfrac{E}{57000\sqrt{f'c}}$

Increase allowable stresses 133%.

Trial:

Balance areas so that $x = \frac{3}{8}d$

Ms = Myy or Mxx

$$Ast = \frac{12(Ms)}{\left(d - \frac{x}{3}\right)(Fs)(1.33)} \qquad ld_m = \frac{(0.04)(Ab)(Fy)}{\sqrt{f'c}}$$

Check concrete stresses

Allowable stresses:

$$f_{cr} = (0.4)(f'c)(1.33)$$

$$v_{cr} = \left(0.95\sqrt{f'c}\right)(1.33)$$

$$p = \frac{Ast}{bd} \qquad k = \sqrt{2np - (np)^2} - np$$

$$j = 1 - \frac{k}{3}$$

Actual stresses:

$$f_{ca} = \frac{12(Ms)}{(b)(k)(j)(d)^2(0.5)}$$

$$v_{ca} = \frac{Vs}{(b)(j)(d)}$$

Vs = DTSy or DTSx

Check development length (Bond)

$$ld_r = \frac{Mt}{(2)(Vs)} + la \qquad (la = 0)$$

Mt = (Ast)(Fy)(0.85)(d)
ld_a = LL-3" or WW-3"

Recheck As

$$As_r = \frac{(12)(Ms)}{(j)(d)(Fs)(1.33)}$$

BARBARA B. CLEMENTS
No. 8186
REGISTERED
PROFESSIONAL ENGINEER
STRUCTURAL

DESIGN OF PEDESTAL WITH BI-AXIAL BENDING

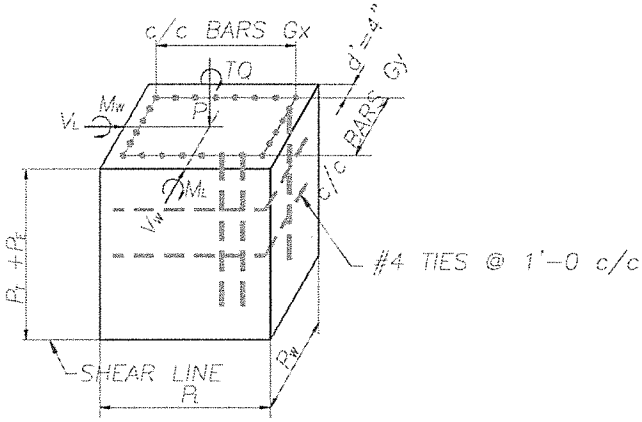

d'=3"(cover)
+½ (#4 Tie)
+½ (½ of #8 bar) assumed

4"

Min. Reinforcement (1%)

Asm = (0.01)(PL)(PW)(144) sq. in.

DESIGN MODEL

Moments at base

My = ML + VL(PT+PE)
Mx = Mw + Vw(PT+PE)

Shear at base (acting on rebar only)

$$V_1 = \sqrt{VL^2 + VW^2}$$

$$V_2 = \frac{TQ}{Gx} + \frac{TQ}{Gy}$$

$$V_t = V_1 + V_2$$

Trial reinforcing (Assume #8 bar - 0.79 sq. in.)

$$Qty = \frac{Asm}{0.79}$$

Combined stress ratio

$$CSR = \left(\frac{fv}{Fv}\right)^2 + \frac{fa}{Fa} + \frac{fbx}{Fbx} + \frac{fby}{Fby} \le 10$$

Allowable stress (increase by 33%)

Fv = (0.33)(Fy)(1.33) = 26334 psi
Fa = (0.4)(f'c)(1.33)
Fbx = Fby = (0.4)(f'c)(1.33)

BARBARA B. CLEMENTS
No. 8186
REGISTERED
PROFESSIONAL ENGINEER
STRUCTURAL

Actual Stress

$$fv = \frac{Vt}{Ast} \qquad fa = \frac{P}{Ag} \qquad fbx = \frac{(Mx)(Cx)}{Ix} \qquad fby = \frac{(My)(Cy)}{Iy}$$

Ast = area of reinforcement used
Ag = gross area of pedestal

$$Cx = \frac{PL}{2} \qquad Cy = \frac{PW}{2}$$

$$Ix = \frac{(PW)(PL)^3}{12} + \frac{(2n)(Ast)(Gx)^2}{6}$$

$$Iy = \frac{(PL)(PW)^3}{12} + \frac{(2n)(Ast)(Gy)^2}{6}$$

Since the pedestal is almost in pure bending (P load is negligible), the following stress ratio must be used.

$$CSM = \frac{Mx}{Mo_x} + \frac{My}{Mo_y} \leq 10$$

$$Mo_x = (.40)(As)(Fy)(1.33)(PW\text{-}2d')$$

$$Mo_y = (.40)(As)(Fy)(1.33)(PL\text{-}2d')$$

$$As = \text{tension steel} = \frac{Ast}{4}$$

Review CSR and CSM and adjust rebar size if required.

BARBARA B. CLEMENTS
No. 8186
REGISTERED
PROFESSIONAL ENGINEER
STRUCTURAL

Check torque (Cantilever structures only)

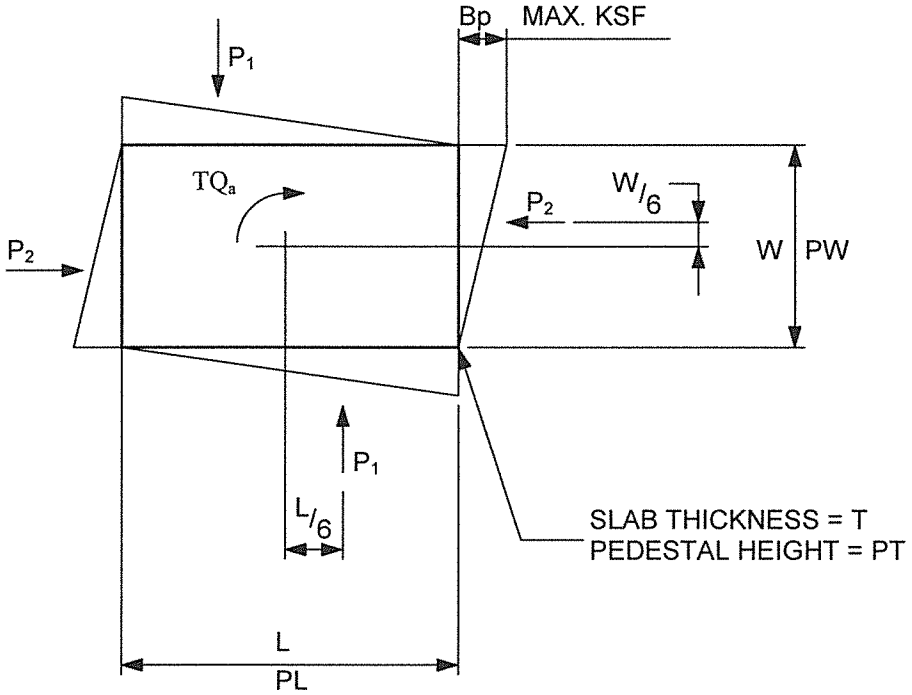

Bp = Maximum soil bearing pressure

$P_1 = (0.5)(Bp)(L)(T)$

$P_2 = (0.5)(Bp)(W)(T)$

Maximum torque allowable for footing size

$$TQ_m = (2)(P_1)\left(\frac{L}{6}\right) + (2)(P_2)\left(\frac{W}{6}\right)$$

Calculate torque allowable on pedestal same as above.

TQ_a = actual torque from structure printout

If $TQ_a > TQ_m$ increase footing size or thickness

BARBARA B. CLEMENTS
No. 8186
REGISTERED
PROFESSIONAL ENGINEER
STRUCTURAL

NOTE: Loads in kips, dimensions in feet

$M_{DL} = (DLS)(L_1)+(DLT)(L_2)+(tc)(H_1+H_3)$

$M_{WL} = (WH+WP)(H_1+H_3)+(WV)(H_2+H_3)$

$P_{WL} = WH+WP+WV$

$$\text{Eff. H} = \frac{M_{WL}}{P_{WL}}$$

Use eff. H to determine eff. P_{DL}

$$\text{Eff. } P_{DL} = \frac{M_{DL}}{\text{Eff. H}}$$

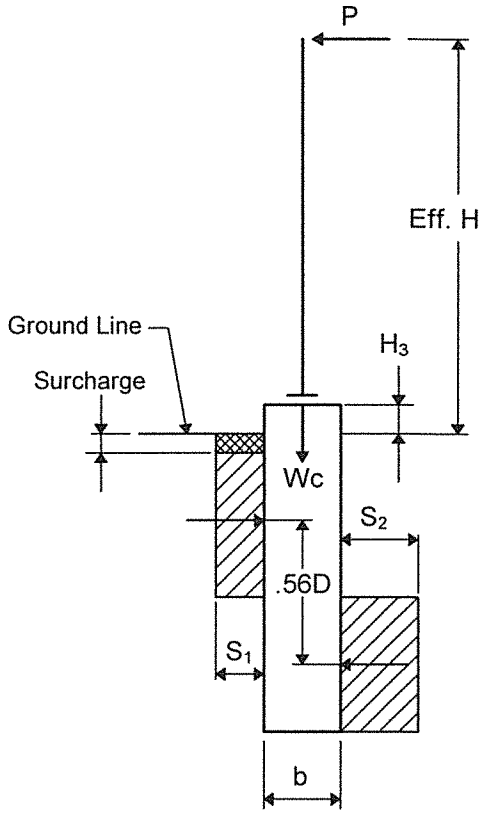

RESULTANT

$$P = \sqrt{(P_{DL})^2 + (P_{WL})^2}$$

$$D = \frac{2.37P + \sqrt{5.617P^2 + 10.56(S_1 b * P * H)}}{2S_1 b}$$

REINFORCING

MR = P(Eff. H)

Fy = Rebar yield (KSI)
Ab = Area of single bar (in^2)
As = Req'd area of reinforcement ($in.^2$)
D_1 = Diameter of rebar cage (in.)
J = 1.33 for Group II only

$$As = \frac{12(MR)}{0.12(Fy)(D_1)(J)} \geq 1\%\text{Cyl.area}$$

$$\text{No. of bars req'd} = \frac{As}{Ab}$$

$$\text{Spacing} = \frac{\pi\ D_1}{\text{No. of bars}}$$

Use #4 hoops @ 1'-0(±) $^{c}/_{c}$

BARBARA B. CLEMENTS
No. 8186
REGISTERED
PROFESSIONAL ENGINEER
STRUCTURAL

TORSION WINGS

$$P = \frac{\text{Torque}}{d_1}$$

$$H = \frac{2P}{fS_1}$$

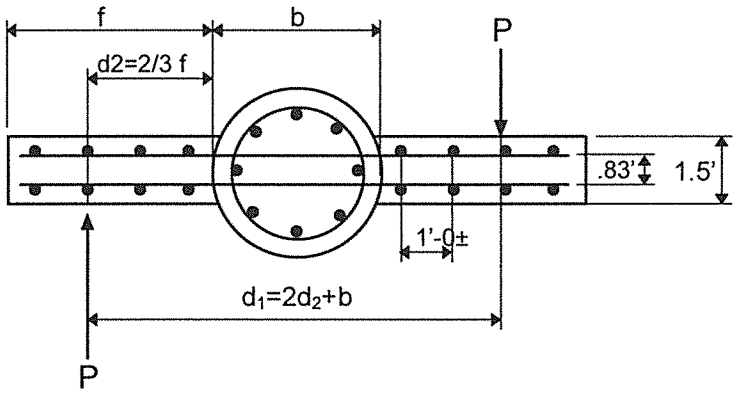

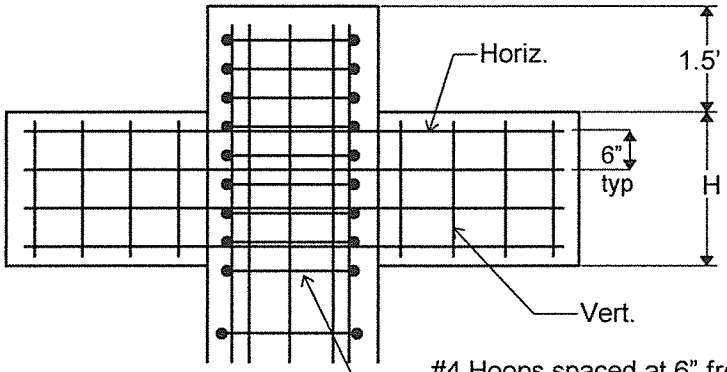

#4 Hoops spaced at 6" from top of cylinder to bottom of wings and 1'-0 spacing from bottom of wings to bottom of cylinder.

Reinforcing

$$MR = (P)(d_2)$$

$$As = \frac{12\,(MR)}{(24)(0.86)(d_3)(J)}$$

$$\text{No. of horizontal bars required} = \frac{As}{Ab}$$

Horizontal bars at 6" c/c each side.

#4 vertical bars at 1'-0(±) c/c each side.

BARBARA B. CLEMENTS
No. 8186
REGISTERED
PROFESSIONAL ENGINEER
STRUCTURAL

NOTE: Loads in kips, dimensions in feet

$M_{TL} = (tc)(H_1+H_3)$

$M_{WL} = (RH)(H_1+H_3)+(WV)(H_2+H_3)$

$P_{WL} = RH + WV$

$$\text{Eff. H} = \frac{M_{WL}}{P_{WL}}$$

Use Eff. H to determine Eff. P_{TL}

$$\text{Eff. } P_{TL} = \frac{M_{TL}}{\text{Eff. H}}$$

RESULTANT

$$P = \sqrt{(P_{TL})^2 + (P_{WL})^2}$$

$$D = \frac{2.37P + \sqrt{5.617P^2 + 10.56(S_1 b * P * H)}}{2S_1 b}$$

REINFORCING

MR = P(Eff. H)

Fy = Rebar yield (KSI)
Ab = Area of single bar (in^2)
As = Req'd area of reinforcement ($in.^2$)
D_1 = Diameter of rebar cage (in.)
J = 1.33 for Group II only

$$As = \frac{12(MR)}{0.12(Fy)(D_1)(J)} \geq 1\%\text{Cyl.area}$$

$$\text{No. of bars req'd} = \frac{As}{Ab}$$

$$\text{Spacing} = \frac{\pi\ D_1}{\text{No. of bars}}$$

Use #4 hoops @ 1'-0(±) $^c/_c$

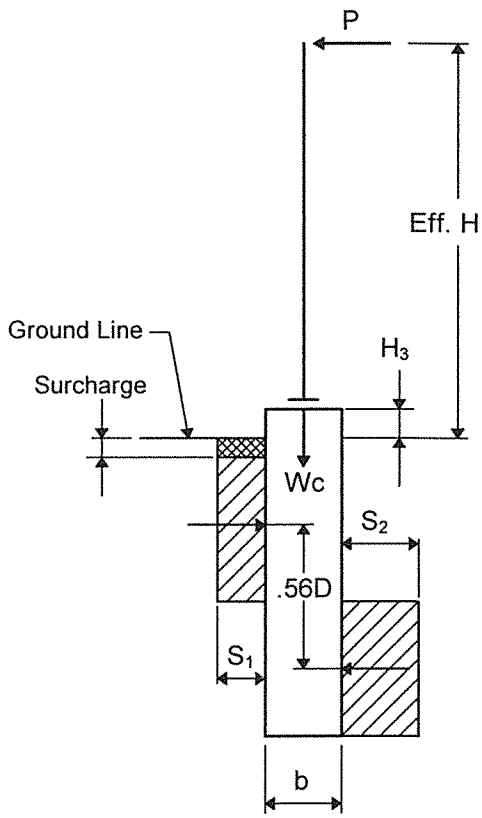

BARBARA B. CLEMENTS
No. 8186
REGISTERED
PROFESSIONAL ENGINEER
STRUCTURAL

WALPAR, LLC
BIRMINGHAM, AL

Subject:	Double Pole Overhead Footing Design	Sheet	FD12	of	15
		By	BBC	Chk'd By	CC

NOTE: Loads in kips, dimensions in feet

$M_{TL} = (Tc)(H_1+H_3)$ $\qquad$ $Mr = \sqrt{M_{WL}^2 + M_{TL}^2}$

$M_{WL} = (Rh)(H_1+H_3)+(Wv)(H_2+H_3)$

$P_{WL} = Rh + Wv$

$$\text{Eff. H} = \frac{M_{WL}}{P_{WL}}$$

Use eff. H to determine effective P_{TL}.

$$P_{TL} = \frac{M_{TL}}{\text{Eff. H}}$$

$$P = \sqrt{(P_{TL})^2 + (P_{WL})^2}$$

$$D = \frac{2.37P + \sqrt{5.617P^2 + 10.56(S_1 b * P * H)}}{2S_1 b}$$

$$\text{Wt. of concrete, } Wc = \frac{b^2}{4} * \pi * (D + H_3) * .15$$

Effective O.T. Moment = Mr - (Wc + .5DL)(C)

Determine effective P based on effective O.T. Moment and research by Ohio (see FD1).

$$\text{Eff. P} = 0.75\left(\frac{\text{Eff.O.T.Mom.}}{\text{Eff.H}}\right)$$

Recalculate required depth D based on Eff. P and Eff. H.

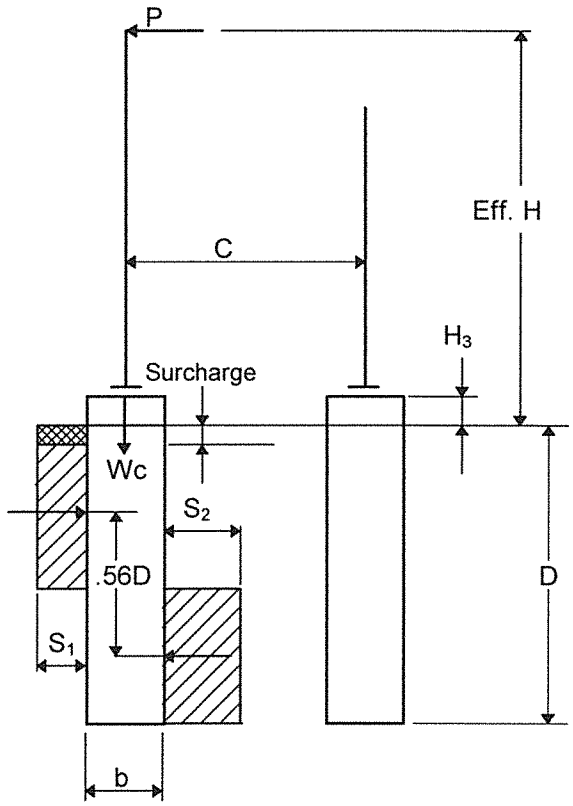

REINFORCING

MR = (Eff. P)(Eff. H)

Fy = Rebar yield (KSI)
Ab = Area of single bar (in^2)
As = Req'd area of reinforcement ($in.^2$)
D_1 = Diameter of rebar cage (in.)
J = 1.33 for Group II only

$$As = \frac{12(MR)}{0.12(Fy)(D_1)(J)} \geq 1\%\text{Cyl.area}$$

$$\text{No. of bars req'd} = \frac{As}{Ab}$$

$$\text{Spacing} = \frac{\pi\ D_1}{\text{No. of bars}}$$

Use #4 hoops @ 1'-0(±) $^c/_c$

BARBARA B. CLEMENTS
No. 8186
REGISTERED
PROFESSIONAL ENGINEER
STRUCTURAL

WALPAR, LLC
BIRMINGHAM, AL

Subject:	Footing Design	**Sheet**	FD13	**of**	15
	Notes	**By**	BBC	**Chk'd By**	CC

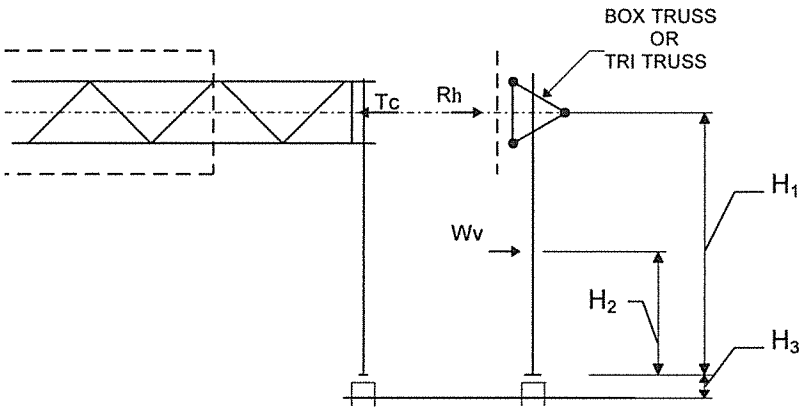

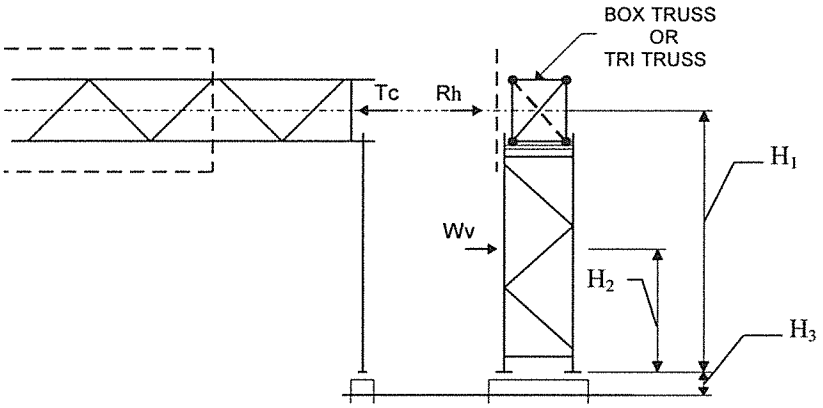

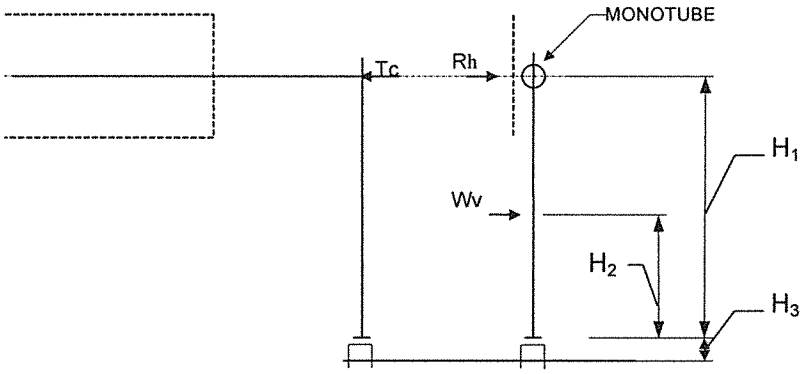

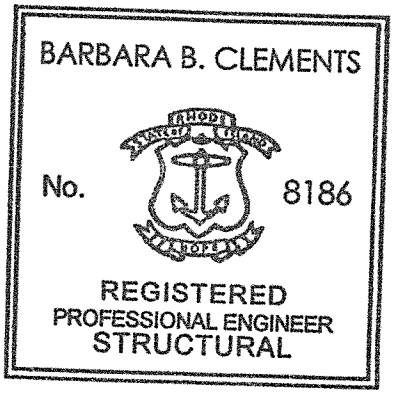

Tc = Transverse component of wind = 0.2(Rh + Wv)
Rh = Wind on sign and truss

Wv = Wind on upright
DL = Dead load = (Rd + Rv)

NOTE: Loads in kips & dimensions in feet

WALPAR, LLC
BIRMINGHAM, AL

Subject:	Cantilever Footing	**Sheet**	FD14	**of**	15
	Design Information	**By**	BBC	**Chk'd By**	CC

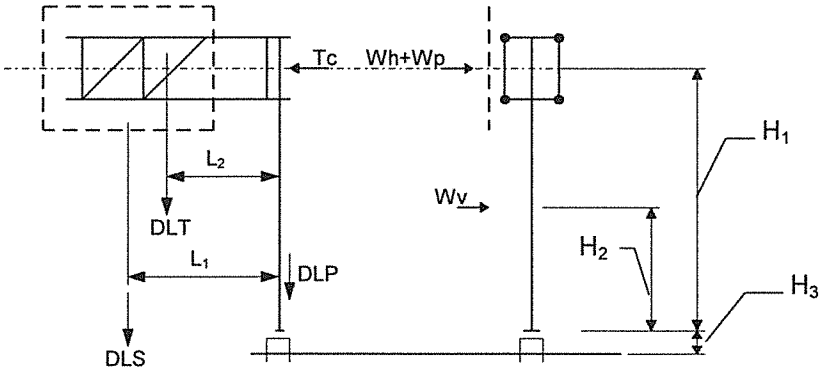

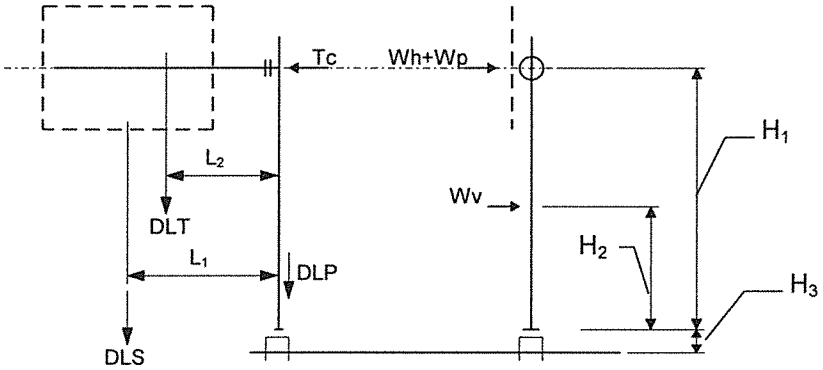

DLS = Weight of sign
DLT = Weight of truss
DLP = Weight of upright

Wh = Wind on truss
Wp = Wind on sign
Wv = Wind on upright

Tc = 0.2 (Wh+Wp+Wv)

BARBARA B. CLEMENTS
No. 8186
REGISTERED
PROFESSIONAL ENGINEER
STRUCTURAL

WALPAR, LLC
BIRMINGHAM, AL

Subject:	Butterfly Footing	**Sheet** FD15	**of** 15
	Design Information	**By** BBC	**Chk'd By** CC

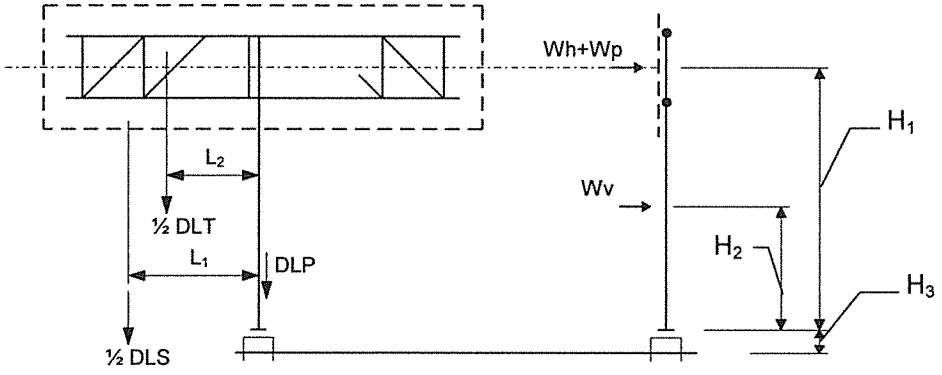

DLS = Weight of sign
DLT = Weight of truss
DLP = Weight of upright

Wh = Wind on truss
Wp = Wind on sign
Wv = Wind on upright

NOTE: Loads in kips & dimensions in feet

BARBARA B. CLEMENTS
No. 8186
REGISTERED
PROFESSIONAL ENGINEER
STRUCTURAL

SINGLE POLE CYLINDRICAL FOOTING - Left Upright

4/15/2013

JOB NO: C1425 SHEET NO: SCF1

STRUCTURE: GANTRY 1A STATION NO : NORTH

THRU SCF4

CONC. fc' (PSI):	3000
REBAR fy (PSI):	60000
SOIL B.P. (PSF):	2000
CONC. WGT. (PCF):	150

SPAN (FT):	95.00	tc (KIPS):	2.10
RD (KIPS):	4.59	DL (KIPS):	6.02
RV (KIPS):	1.43	MWL (FT-K):	229.11
RH (KIPS):	9.83	MTL (FT-K):	47.38
WV (KIPS):	0.68	MR (FT-K):	233.96
H1 (FT):	21.21	PWL (KIPS):	10.51
H2 (FT):	9.73	PTL (KIPS):	2.17
H3 (FT):	1.33	PRL (KIPS):	10.73
CYL. DIA. (FT):	3.50	EFF. H (FT):	21.80
Override Cyl. Dia. (ft)		CALC. DEPTH (FT):	11.38
		CYL. EMBEDMENT (FT):	13.67
		TOT. CYL. DEPTH (FT):	15.00

CYLINDER REINFORCEMENT

Fy (PSI):	60000	MR (FT-K):	233.96
J (GROUP 2):	1.4	D1 (IN):	34.00
MAX. BAR SIZE:	8	As (SQ-IN):	8.62
EDGE CLEARANCE (in):	3	1% CYL. AREA (SQ-IN):	13.85
		BAR SIZE :	8
		Ab (SQ-IN):	0.79
		BAR SPCG. (IN):	5.93
MAX. BOLT CIRCLE (in):	31.00	BAR QTY :	18
(for max. 2" anchor bolt)		HOOP QTY :	16

USE 42 IN. DIA. x 15'-0 CYLINDER

FOOTING QUANTITIES

REINF. (LBS) :	803
CONC. (CU YD) :	5.35

Barbara B. Clements 4/18/13

BARBARA B. CLEMENTS
No. 8186
REGISTERED
PROFESSIONAL ENGINEER
STRUCTURAL

SINGLE POLE CYLINDRICAL FOOTING - Right Upright

4/15/2013

JOB NO: C1425 SHEET NO: SCF2
STRUCTURE: GANTRY 1A STATION NO : NORTH

CONC. fc' (PSI):	3000
REBAR fy (PSI):	60000
SOIL B.P. (PSF):	2000
CONC. WGT. (PCF):	150

SPAN (FT):	95.00	tc (KIPS):	2.22
RD (KIPS):	4.43	DL (KIPS):	5.96
RV (KIPS):	1.53	MWL (FT-K):	262.98
RH (KIPS):	10.35	MTL (FT-K):	54.46
WV (KIPS):	0.75	MR (FT-K):	268.56
H1 (FT):	23.21	PWL (KIPS):	11.09
H2 (FT):	10.73	PTL (KIPS):	2.30
H3 (FT):	1.33	PRL (KIPS):	11.33
CYL. DIA. (FT):	3.50	EFF. H (FT):	23.70
Override Cyl. Dia. (ft)		CALC. DEPTH (FT):	12.16
		CYL. EMBEDMENT (FT):	14.67
		TOT. CYL. DEPTH (FT):	16.00

CYLINDER REINFORCEMENT

Fy (PSI):	60000	MR (FT-K):	268.56
J (GROUP 2):	1.4	D1 (IN):	34.00
MAX. BAR SIZE:	8	As (SQ-IN):	9.90
EDGE CLEARANCE (in):	3	1% CYL. AREA (SQ-IN):	13.85
		BAR SIZE :	8
		Ab (SQ-IN):	0.79
		BAR SPCG. (IN):	5.93
MAX. BOLT CIRCLE (in):	31.00	BAR QTY :	18
(for max. 2" anchor bolt)		HOOP QTY :	17

USE 42 IN. DIA. x 16'-0 CYLINDER

FOOTING QUANTITIES

REINF. (LBS) :	857
CONC. (CU YD) :	5.70

BARBARA B. CLEMENTS
No. 8186
REGISTERED
PROFESSIONAL ENGINEER
STRUCTURAL

SINGLE POLE CYLINDRICAL FOOTING - Left Upright

4/15/2013

JOB NO: C1425 SHEET NO: SCF3
STRUCTURE: GANTRY 1B STATION NO : SOUTH

CONC. fc' (PSI):	3000
REBAR fy (PSI):	60000
SOIL B.P. (PSF):	2000
CONC. WGT. (PCF):	150

SPAN (FT):	95.00	tc (KIPS):	2.21
RD (KIPS):	4.96	DL (KIPS):	6.49
RV (KIPS):	1.53	MWL (FT-K):	262.42
RH (KIPS):	10.33	MTL (FT-K):	54.35
WV (KIPS):	0.75	MR (FT-K):	267.99
H1 (FT):	23.21	PWL (KIPS):	11.07
H2 (FT):	10.73	PTL (KIPS):	2.29
H3 (FT):	1.33	PRL (KIPS):	11.31
CYL. DIA. (FT):	3.50	EFF. H (FT):	23.70
Override Cyl. Dia. (ft)		CALC. DEPTH (FT):	12.15
		CYL. EMBEDMENT (FT):	14.67
		TOT. CYL. DEPTH (FT):	16.00

CYLINDER REINFORCEMENT

Fy (PSI):	60000	MR (FT-K):	267.99
J (GROUP 2):	1.4	D1 (IN):	34.00
MAX. BAR SIZE:	8	As (SQ-IN):	9.88
EDGE CLEARANCE (in):	3	1% CYL. AREA (SQ-IN):	13.85
		BAR SIZE :	8
		Ab (SQ-IN):	0.79
		BAR SPCG. (IN):	5.93
MAX. BOLT CIRCLE (in):	31.00	BAR QTY :	18
(for max. 2" anchor bolt)		HOOP QTY :	17

USE 42 IN. DIA. x 16'-0 CYLINDER

FOOTING QUANTITIES

REINF. (LBS) :	857
CONC. (CU YD) :	5.70

BARBARA B. CLEMENTS
No. 8186
REGISTERED
PROFESSIONAL ENGINEER
STRUCTURAL

A
4/15/2013

SINGLE POLE CYLINDRICAL FOOTING - Right Upright

JOB NO: C1425 SHEET NO: SCF4
STRUCTURE: GANTRY 1B STATION NO : SOUTH

CONC. fc' (PSI):	3000
REBAR fy (PSI):	60000
SOIL B.P. (PSF):	2000
CONC. WGT. (PCF):	150

SPAN (FT):	95.00	tc (KIPS):	2.12
RD (KIPS):	4.49	DL (KIPS):	5.92
RV (KIPS):	1.43	MWL (FT-K):	230.78
RH (KIPS):	9.91	MTL (FT-K):	47.71
WV (KIPS):	0.68	MR (FT-K):	235.66
H1 (FT):	21.21	PWL (KIPS):	10.58
H2 (FT):	9.73	PTL (KIPS):	2.19
H3 (FT):	1.33	PRL (KIPS):	10.81
CYL. DIA. (FT):	3.50	EFF. H (FT):	21.81
Override Cyl. Dia. (ft)		CALC. DEPTH (FT):	11.43
		CYL. EMBEDMENT (FT):	13.67
		TOT. CYL. DEPTH (FT):	15.00

CYLINDER REINFORCEMENT

Fy (PSI):	60000	MR (FT-K):	235.66
J (GROUP 2):	1.4	D1 (IN):	34.00
MAX. BAR SIZE:	8	As (SQ-IN):	8.69
EDGE CLEARANCE (in):	3	1% CYL. AREA (SQ-IN):	13.85
		BAR SIZE :	8
		Ab (SQ-IN):	0.79
		BAR SPCG. (IN):	5.93
MAX. BOLT CIRCLE (in):	31.00	BAR QTY :	18
(for max. 2" anchor bolt)		HOOP QTY :	16

USE 42 IN. DIA. x 15'-0 CYLINDER

FOOTING QUANTITIES

REINF. (LBS) :	803
CONC. (CU YD) :	5.35

BARBARA B. CLEMENTS
No. 8186
REGISTERED
PROFESSIONAL ENGINEER
STRUCTURAL