C1425–D1

STRUCTURE	STATION	SPAN	CHORDS	VERTICAL DIAGONAL	HORIZ. DIAGONAL	STRUTS	CAMBER	ANCHOR BOLTS LT QTY & SIZE	ANCHOR BOLTS EMBED	ANCHOR BOLTS RT QTY & SIZE	ANCHOR BOLTS EMBED	LEFT UPRIGHT	RIGHT UPRIGHT	"A"	"B"	"C"	"D"	"E"	"F"	"G" LEFT	"G" RIGHT	"H" LEFT	"H" RIGHT	"K"	"M"	"N"	NO. OF SECTIONS	DESIGN SIGN AREA (ft²)
GANTRY 1A	NORTH	95'–0	4.500 x .219	1.315 x .133	1.660 x .140	1.315 x .133	3¼	6–2"ø	3'–6	6–2"ø	3'–6	20.000 x .250	20.000 x .250	21'–2½	23'–2½	3'–6	3'–6	1'–9	½	5/16	5/16	2	2	¼	¾	4–⅞"ø	3	300.0
GANTRY 1B	SOUTH	95'–0	4.500 x .219	1.315 x .133	1.660 x .140	1.315 x .133	3¼	6–2"ø	3'–6	6–2"ø	3'–6	20.000 x .250	20.000 x .250	23'–2½	21'–2½	3'–6	3'–6	1'–9	½	5/16	5/16	2	2	¼	¾	4–⅞"ø	3	300.0

NOTE: ALL PIPE SIZES ARE OUTSIDE DIAMETER.

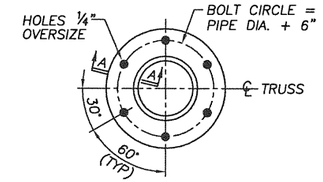

BASE PLATE
(6 ANCHORS)

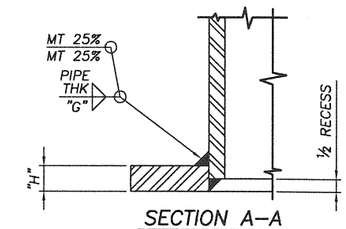

SECTION A–A

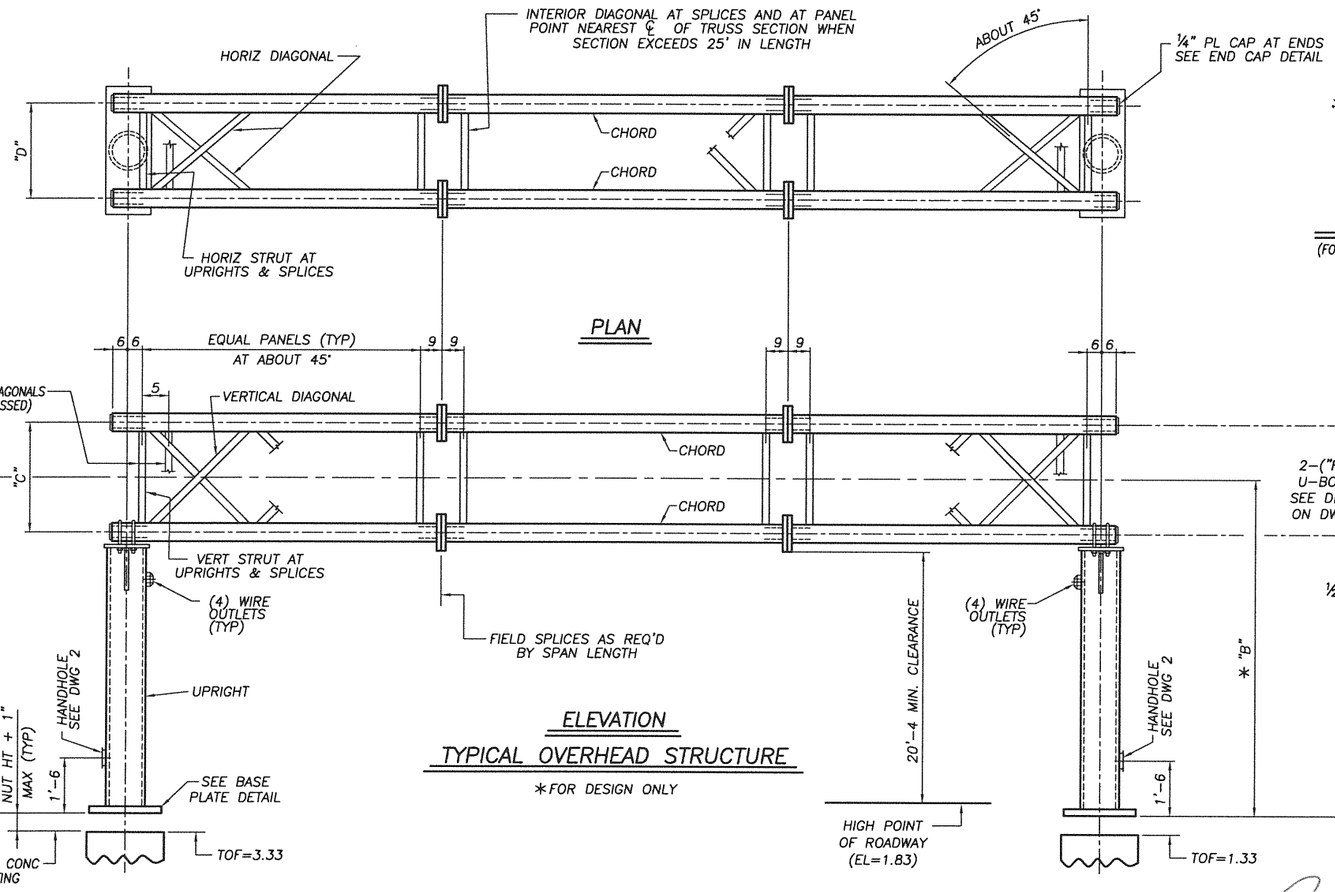

ELEVATION
TYPICAL OVERHEAD STRUCTURE
*FOR DESIGN ONLY

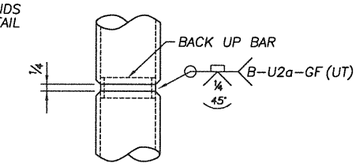

OPTIONAL SPLICE
(FOR WALL THK 5/16 OR GREATER ONLY)

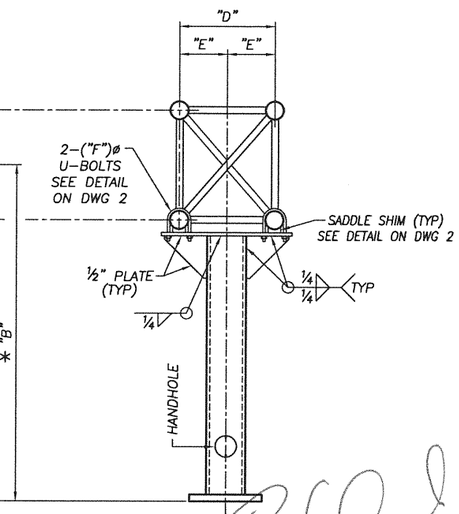

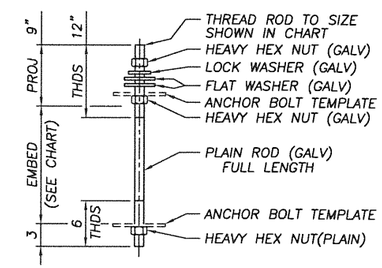

ANCHOR DETAIL

MATERIAL SPECIFICATIONS

- PIPE – SHALL MEET THE FOLLOWING SPECIFICATIONS WITH THE PROPERTIES (52 KSI MIN YIELD, 60 KSI MIN ULTIMATE TENSILE AND MIN ELONGATION EQUAL TO 20% IN 2 IN). API–5L–X52, API–5L–X60, ASTM A500 GR B/C, API–5L–X42 MOD, ASTM A252 GR 3 OR ASTM A53 GR B (YIELD STRENGTH SHALL NOT EXCEED 82 KSI).
- PLATES – ASTM A572, GR 50
- ANGLES – STEEL ASTM A36
- HARDWARE – PRIMARY–ASTM A325
  – SECONDARY–ASTM A307
- GALVANIZING – STRUCTURAL–ASTM A123
  – HARDWARE–ASTM A153
- ANCHOR BOLTS – STEEL, AASHTO M314–90, GRADE 55
  – WASHERS – ASTM F436 & ANSI B18.21.1
  – NUTS – ASTM A563, GR DH OR A194, GR 2H
- WELDING – AWS SPEC D1.1 – LATEST REV.

NOTE: FOR SIGN HANGER, WALK OR LIGHT SUPPORT INFORMATION SEE ERECTION DWG'S

AASHTO 5th Edition Spec's

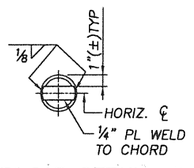

END CAP DETAIL

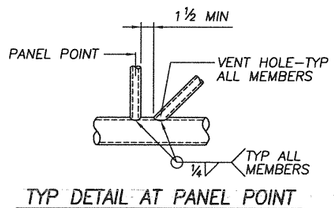

TYP DETAIL AT PANEL POINT

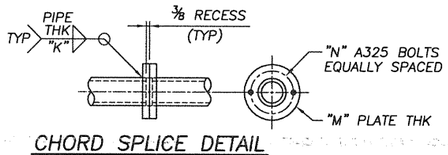

CHORD SPLICE DETAIL

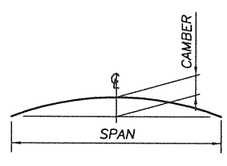

CAMBER DIAGRAM

BARBARA B. CLEMENTS
4/18/13
No. 8186
REGISTERED PROFESSIONAL ENGINEER STRUCTURAL

NO:	REVISIONS	DATE	MADE	CHECKED
A	FOR APPROVAL	4/15/13	RRW	BBC

Walpar, LLC
POST OFFICE BOX 28650
BIRMINGHAM ALABAMA 35228
4200 JEFFERSON AVENUE
BIRMINGHAM ALABAMA 35221
PHONE (205)–925–4990
FAX (205) 925–7273

A

STATE:	Rhode Island
FED PROJ:	------
ST PROJ:	Sakonnet River Bridge
COUNTY:	Portsmouth / Tiverton
ROUTE:	Route 24
SUBJECT:	OVERHEAD SIGN SUPPORT DESIGN
	WALPAR STD BOX TRUSS DESIGN
FOR:	Site, LLC
DRAWN BY:	RRW DATE: 4/5/13
CHECKED BY:	BBC DATE: 4/8/13
RELEASE FOR CONSTRUCTION:	☑ DWG NO: C1425–D1

BT–SP–D

NAME: E:\acad\Djobs\R\1425\142501.dwg DATE: APR 18, 2013 TIME: 1:51 PM BarbaraC

C1425–D2

STRUCTURE	STATION	SPAN	"A"	"B"	BARS "C" (±)c/c	HOOPS "D" (±)c/c	CONC/FTG (cu yds)	REINF/FTG (lbs)	"H"
GANTRY 1A(L)	NORTH	95'–0	15'–0	3'–6	18 – #8 @ 5 15/16	16 – #4 @ 1'–0	5.35	803	1'–4
GANTRY 1A(R)	NORTH	95'–0	16'–0	3'–6	18 – #8 @ 5 15/16	17 – #4 @ 1'–0	5.70	857	1'–4
GANTRY 1B(L)	SOUTH	95'–0	16'–0	3'–6	18 – #8 @ 5 15/16	17 – #4 @ 1'–0	5.70	857	1'–4
GANTRY 1B(R)	SOUTH	95'–0	15'–0	3'–6	18 – #8 @ 5 15/16	16 – #4 @ 1'–0	5.35	803	1'–4

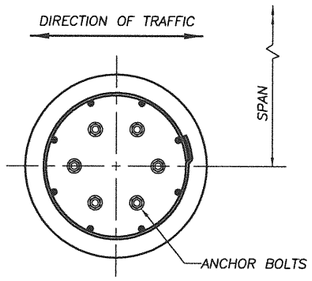

PLAN

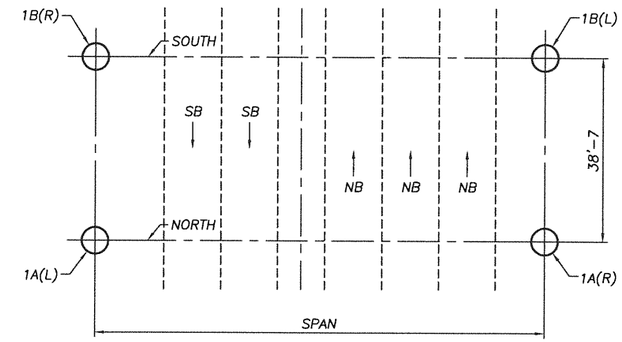

PLAN

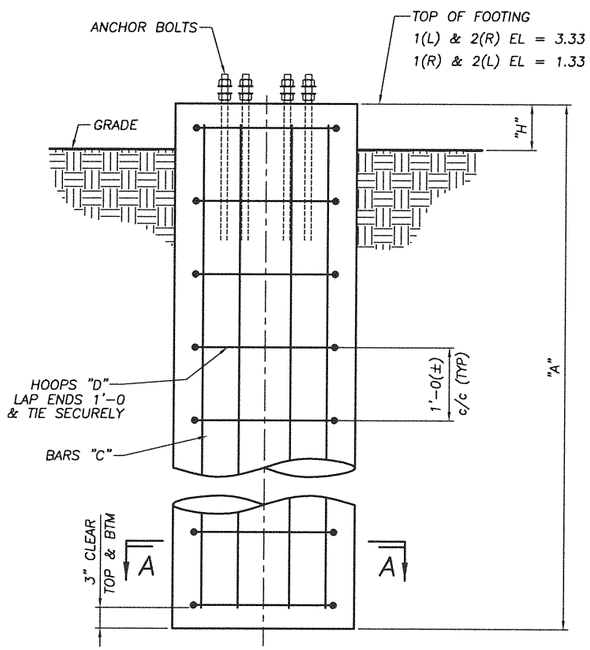

ELEVATION

SINGLE POLE OVERHEAD FOOTING

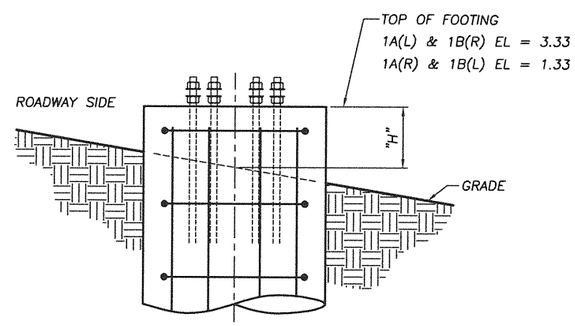

SIDE VIEW ELEVATION

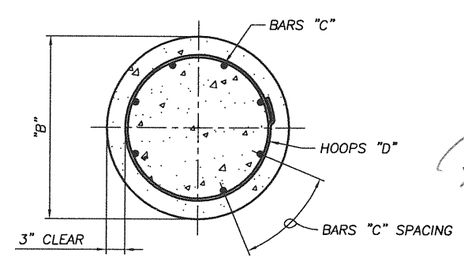

SECTION A–A

GENERAL NOTES

1. CONCRETE TO BE CLASS "A" AND f'c=3000 PSI
2. REINFORCING TO BE ASTM – A615, GRADE 60, DEFORMED, Fy = 60 KSI., fs = 24 KSI.
3. REINFORCING TO BE TIED SUFFICIENTLY TO RETAIN ITS PROPER SHAPE DURING PLACEMENT.
4. REINFORCING TO BE HOOKED OR BENT PER ACI CODE.
5. CONTRACTOR TO PROVIDE CONDUIT IN FOOTING AS NECESSARY FOR ELECTRICAL SERVICE.
6. SEE STRUCTURE ERECTION DRAWINGS FOR FOOTING ELEVATIONS & ANCHOR BOLT MARKS, QUANTITIES, & SPACING.
7. CONTRACTOR SHALL BACK FILL AS NECESSARY TO COVER FOUNDATION.

Barbara B. Clements 4/18/13

BARBARA B. CLEMENTS
No. 8186
REGISTERED
PROFESSIONAL ENGINEER
STRUCTURAL

AASHTO 5th Edition Spec's

Walpar, LLC

POST OFFICE BOX 28650
BIRMINGHAM ALABAMA 35228
4200 JEFFERSON AVENUE
BIRMINGHAM ALABAMA 35221
PHONE (205)–925–4990
FAX (205) 925–7273

A

STATE:	Rhode Island
FED PROJ:	------
ST PROJ:	Sakonnet River Bridge
COUNTY:	Portsmouth / Tiverton
ROUTE:	Route 24
SUBJECT:	OVERHEAD SIGN SUPPORT CYLINDRICAL FOOTING DESIGN
FOR:	Site, LLC
DRAWN BY:	RRW DATE: 4/5/13
CHECKED BY:	BBC DATE: 4/8/13
RELEASE FOR CONSTRUCTION:	☑ DWG NO: C1425–D2

NO:	REVISIONS	DATE	MADE	CHECKED
A	FOR APPROVAL	4/15/13	RRW	BBC

SPCF–D

NAME: E:\acad\Djoba\RI\1425\142502.dwg DATE: APR 18, 2013 TIME: 1:52 PM BarbaraC

7551188A9
ADDENDUM NO. 9
February 22, 2017

SHIPPING LIST		C1425–E1
QTY	MARK	DESCRIPTION
12	1A1	ANCHOR BOLTS
1	4T1	BOX TRUSS 4.4' x 4.4' x 29.8'
1	5T1	BOX TRUSS 4.4' x 4.4' x 36.6'
1	4T2	BOX TRUSS 4.4' x 4.4' x 29.8'
1	3C1	UPRIGHT 4.2' x 2.6' x 19.3'
1	3C2	UPRIGHT 4.2' x 2.6' x 21.3'
2	2W1	COVER PLATE ASSEMBLY
4	B2	1/4" x 3/4" Hex Hd c/s (STAINLESS STL)
32	B28	7/8" x 2 3/4" HHB w/HN/FW (A325 GALV)
4	S4	SADDLE SHIMS #350
8	U4	1/2" U-Bolts w/(2 ea) HN/LW/FW (A307 GALV)
4	1P1	ANCHOR BOLT TEMPLATE

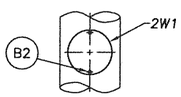

HANDHOLE DETAIL

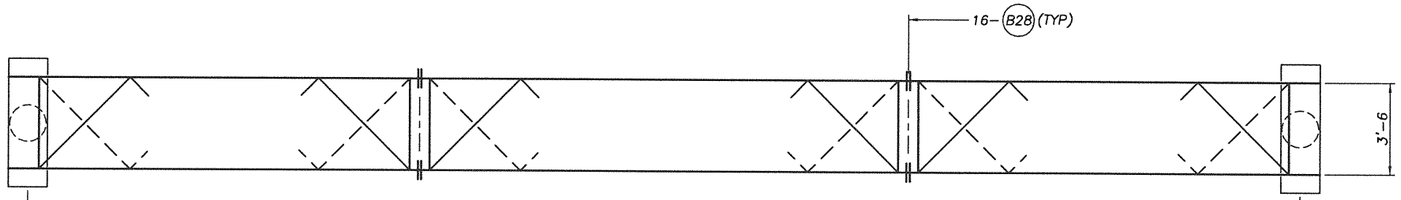

NOTE:
FOR GANTRY EQUIPMENT ERECTION
SEE DRAWING C1425–E1A

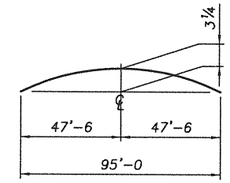

CAMBER DIAGRAM
(PERMANENT CAMBER = 1 15/16)

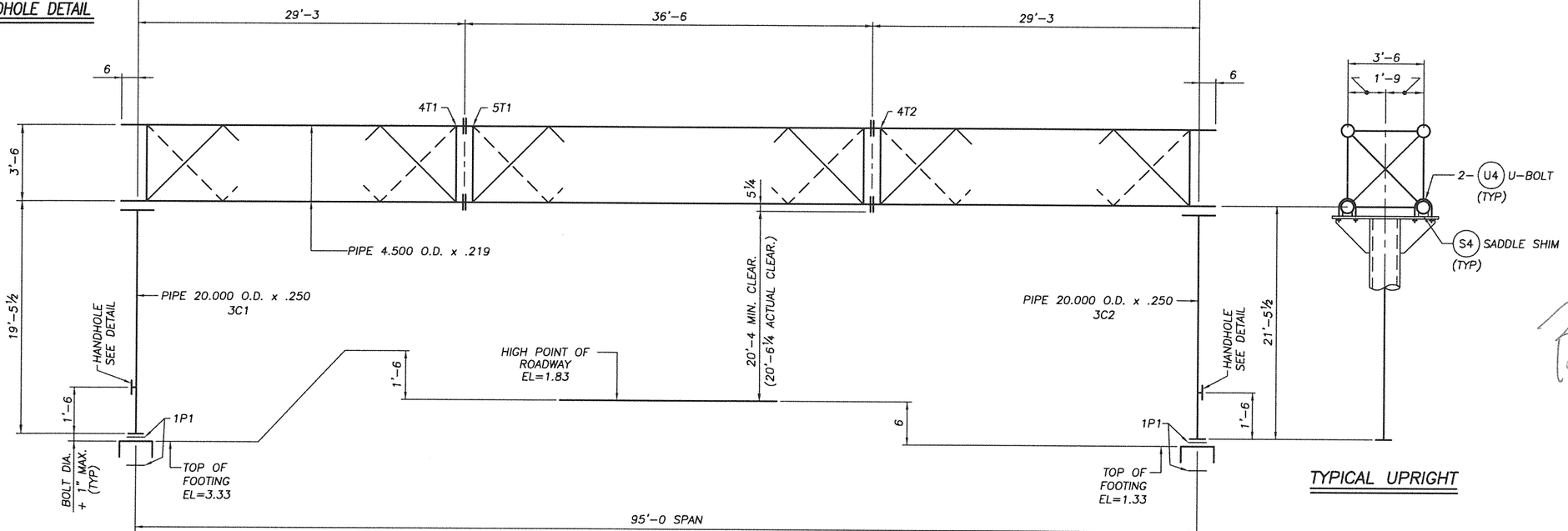

ELEVATION

STR NO: GANTRY 1A
STA NO: NORTH
(LOOKING IN DIRECTION OF TRAFFIC)

NOTE: STRUCTURE SHALL NOT BE ERECTED WITHOUT SIGNS OR A SUITABLE VIBRATION DAMPER

TYPICAL UPRIGHT

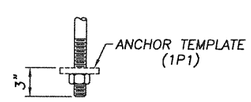

ANCHOR DETAIL
(TYPICAL)

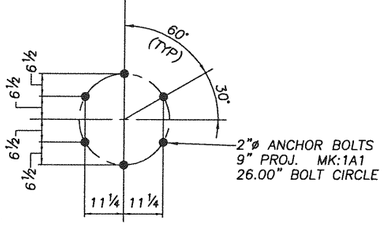

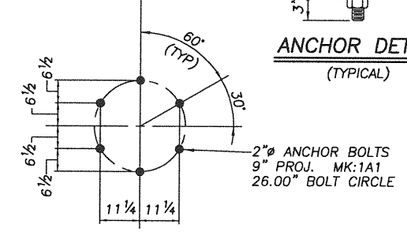

ANCHOR BOLT PLAN

CONTRACTOR ERECTION NOTES:

1. PRETENSION ALL ANCHOR NUTS BY TIGHTENING TO 1/6 TURN BEYOND THE SNUG TIGHT POSITION.
2. MAXIMUM CLEARANCE BETWEEN THE BOTTOM OF THE ANCHOR BOLT LEVELING NUTS AND THE TOP OF THE CONCRETE IS CRITICAL AND SHALL NOT EXCEED THE AMOUNT SPECIFIED ON THIS DRAWING.

BARBARA B. CLEMENTS
4/18/13
No. 8186
STATE OF RHODE ISLAND
REGISTERED
PROFESSIONAL ENGINEER
STRUCTURAL

AASHTO 5th Edition Spec's

Walpar, LLC
POST OFFICE BOX 28650
BIRMINGHAM ALABAMA 35228
4200 JEFFERSON AVENUE
BIRMINGHAM ALABAMA 35221
PHONE (205)–925–4990
FAX (205) 925–7273

STATE:	Rhode Island
FED PROJ:	------
ST PROJ:	Sakonnet River Bridge
COUNTY:	Portsmouth / Tiverton
ROUTE:	Route 24
SUBJECT:	OVERHEAD BOX TRUSS STRUCTURE ERECTION DRAWING
FOR:	Site, LLC
DRAWN BY:	JLS DATE: 4/9/13
CHECKED BY:	RRW DATE: 4/9/13
RELEASE FOR CONSTRUCTION:	☑ DWG NO: C1425–E1

NO:	REVISIONS	DATE	MADE	CHECKED
A	APPROVAL CHANGES	4/18/13	JLS	RRW

BT–E

NAME: E:\pcad\JobsNprg\1425\1425–E1.dwg DATE: APR 18, 2013 TIME: 12:47 PM RobertW

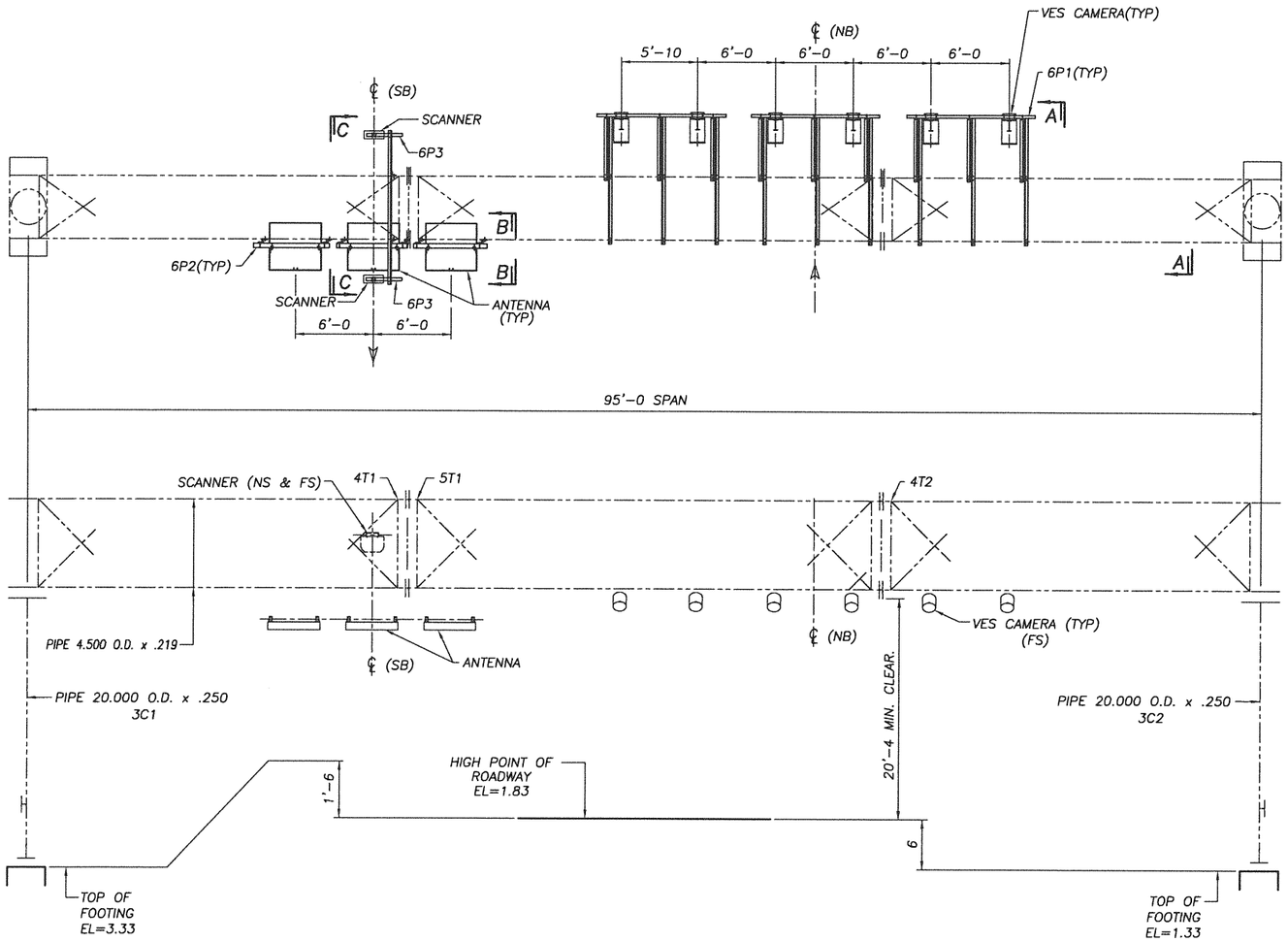

ELEVATION

STR NO: GANTRY 1A
STA NO: NORTH
(LOOKING IN NORTH DIRECTION)

NOTE: STRUCTURE SHALL NOT BE ERECTED WITHOUT SIGNS OR A SUITABLE VIBRATION DAMPER

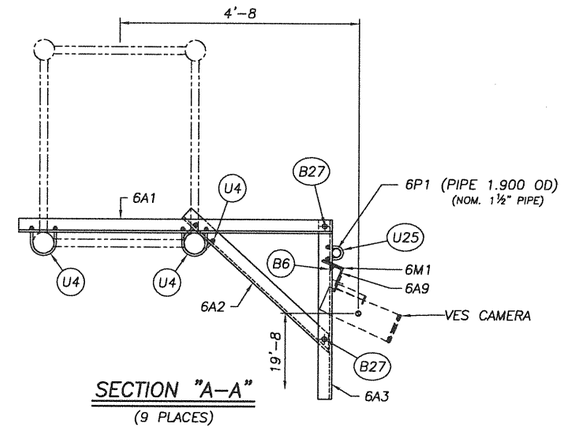

SECTION "A-A"

(9 PLACES)

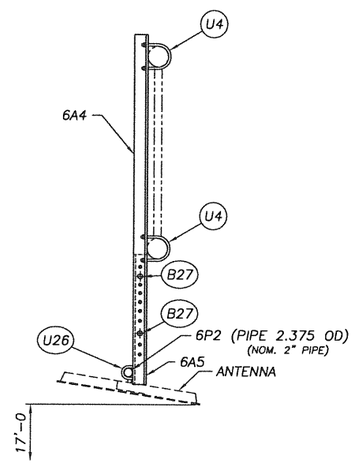

SECTION "B-B"

(6 PLACES)

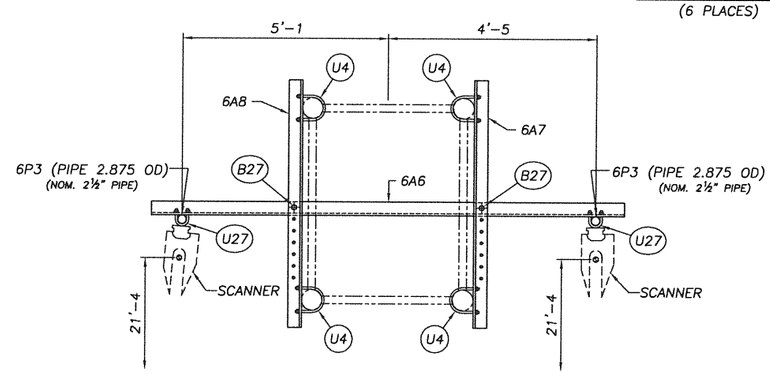

SECTION "C-C"

SHIPPING LIST		C1425-E1A
QTY	MARK	DESCRIPTION
9	6A1	SUPPORT ANGLES
9	6A2	SUPPORT ANGLES
9	6A3	SUPPORT ANGLES
6	6A4	SUPPORT ANGLES
6	6A5	SUPPORT ANGLES
1	6A6	SUPPORT ANGLES
1	6A7	SUPPORT ANGLES
1	6A8	SUPPORT ANGLES
6	6A9	CAMERA ANGLES
6	6M1	CAMERA PLATE
3	6P1	CAMERA SUPPORT
3	6P2	ANTENNA SUPPORT
2	6P3	SCANNER SUPPORTS
6	B6	1/2" x 1 1/2" HHB w/HN/FW (A325 GALV)
32	B27	5/8" x 1 3/4" HHB w/HN/FW (A325 GALV)
43	U4	1/2" U-Bolts w/(2 ea) HN/LW/FW (A307 GALV)
9	U25	3/8" U-Bolts w/(2 ea) HN/LW/FW (A307 GALV)
6	U26	3/8" U-Bolts w/(2 ea) HN/LW/FW (A307 GALV)
2	U27	3/8" U-Bolts w/(2 ea) HN/LW/FW (A307 GALV)

NOTE: ALL MOUNTING HARDWARE FOR CAMERA'S, SCANNER'S, AND ANTENNA'S BY OTHERS.

Barbara B. Clements 4/18/13

BARBARA B. CLEMENTS
No. 8186
REGISTERED
PROFESSIONAL ENGINEER
STRUCTURAL

AASHTO 5th Edition Spec's

Walpar, LLC
POST OFFICE BOX 28650
BIRMINGHAM ALABAMA 35228
4200 JEFFERSON AVENUE
BIRMINGHAM ALABAMA 35221
PHONE (205)-925-4990
FAX (205) 925-7273

STATE:	Rhode Island
FED PROJ:	-------
ST PROJ:	Sakonnet River Bridge
COUNTY:	Portsmouth / Tiverton
ROUTE:	Route 24
SUBJECT:	OVERHEAD BOX TRUSS STRUCTURE ERECTION DRAWING
FOR:	Site, LLC
DRAWN BY: JLS	DATE: 4/9/13
CHECKED BY: RRW	DATE: 4/9/13
RELEASE FOR CONSTRUCTION: ✓	DWG NO: C1425-E1A

NO:	REVISIONS	DATE	MADE	CHECKED
A	APPROVAL CHANGES	4/18/13	JLS	RRW

BT-E

NAME: E:\acad\JobsNPrg\1425\1425-E1A.dwg DATE: APR 18, 2013 TIME: 12:49 PM RobertW

7551188A9
ADDENDUM NO. 9
February 22, 2017

SHIPPING LIST		C1425–E2
QTY	MARK	DESCRIPTION
12	1A1	ANCHOR BOLTS
1	4T3	BOX TRUSS 4.4' x 4.4' x 29.8'
1	5T2	BOX TRUSS 4.4' x 4.4' x 36.6'
1	4T4	BOX TRUSS 4.4' x 4.4' x 29.8'
1	3C3	UPRIGHT 4.2' x 2.6' x 21.3'
1	3C4	UPRIGHT 4.2' x 2.6' x 19.3'
2	2W1	COVER PLATE ASSEMBLY
4	B2	1/4" x 3/4" Hex Hd c/s (STAINLESS STL)
32	B28	7/8" x 2 3/4" HHB w/HN/FW (A325 GALV)
4	S4	SADDLE SHIMS #350
8	U4	1/2" U-Bolts w/(2 ea) HN/LW/FW (A307 GALV)
4	1P1	ANCHOR BOLT TEMPLATE

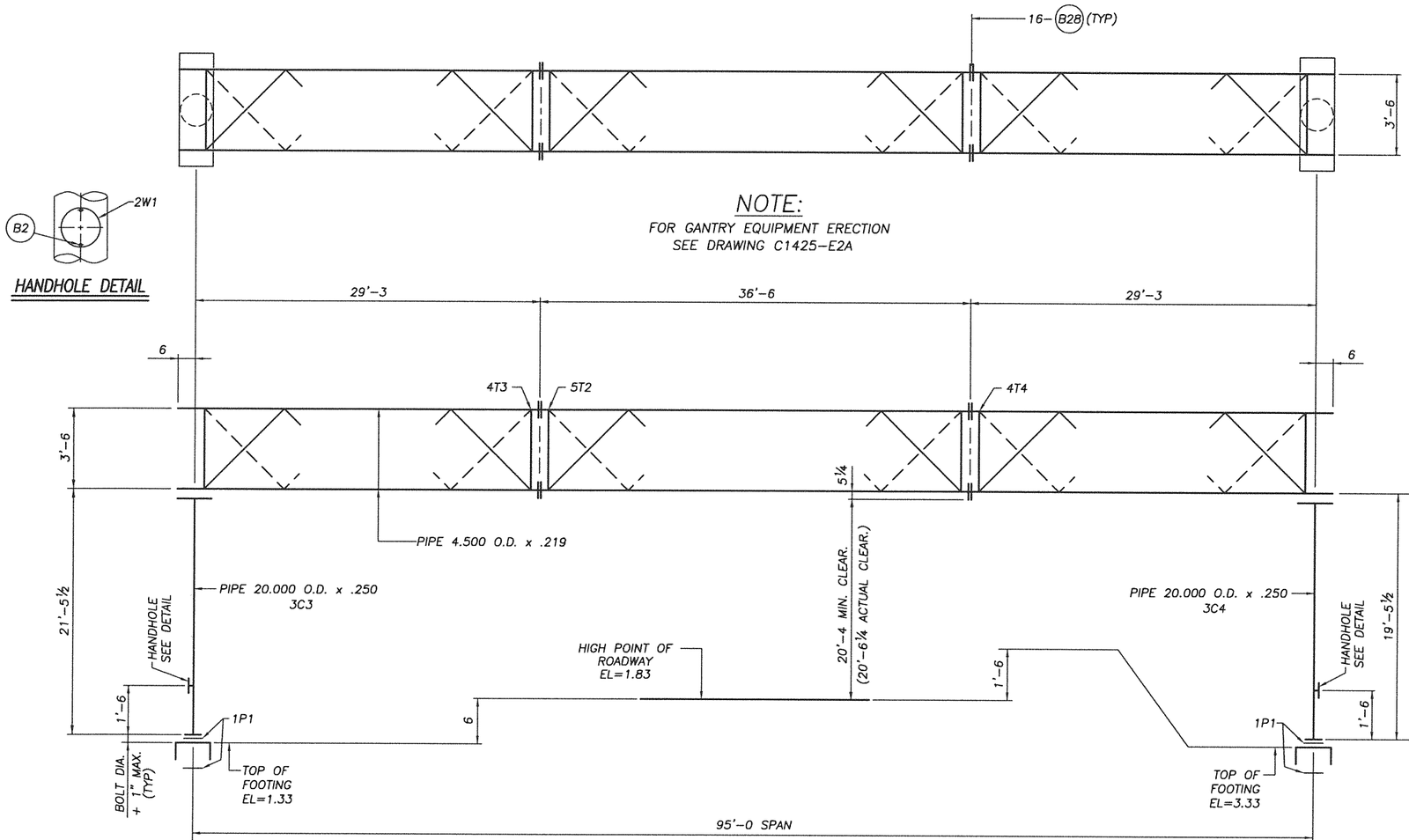

ELEVATION

STR NO: GANTRY 1B
STA NO: SOUTH
(LOOKING IN DIRECTION OF TRAFFIC)

NOTE: STRUCTURE SHALL NOT BE ERECTED WITHOUT SIGNS OR A SUITABLE VIBRATION DAMPER

HANDHOLE DETAIL

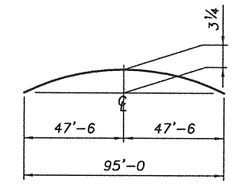

CAMBER DIAGRAM
(PERMANENT CAMBER = 1⅞)

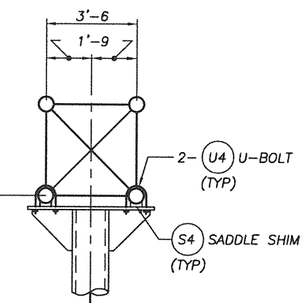

TYPICAL UPRIGHT

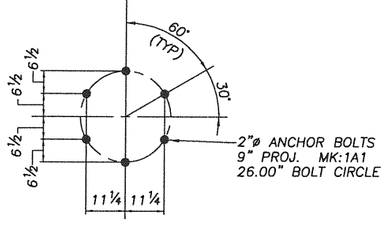

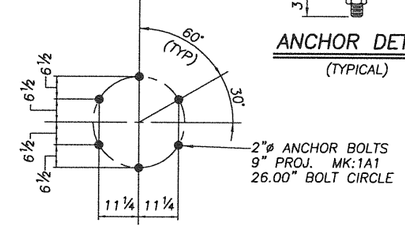

ANCHOR BOLT PLAN

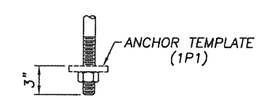

ANCHOR DETAIL
(TYPICAL)

CONTRACTOR ERECTION NOTES:

1. PRETENSION ALL ANCHOR NUTS BY TIGHTENING TO 1/6 TURN BEYOND THE SNUG TIGHT POSITION.
2. MAXIMUM CLEARANCE BETWEEN THE BOTTOM OF THE ANCHOR BOLT LEVELING NUTS AND THE TOP OF THE CONCRETE IS CRITICAL AND SHALL NOT EXCEED THE AMOUNT SPECIFIED ON THIS DRAWING.

BARBARA B. CLEMENTS
4/18/13
No. 8186
REGISTERED
PROFESSIONAL ENGINEER
STRUCTURAL

AASHTO 5th Edition Spec's

NO:	REVISIONS	DATE	MADE	CHECKED
A	APPROVAL CHANGES	4/18/13	JLS	RRW

Walpar, LLC
POST OFFICE BOX 28650
BIRMINGHAM ALABAMA 35228
4200 JEFFERSON AVENUE
BIRMINGHAM ALABAMA 35221
PHONE (205)–925–4990
FAX (205) 925–7273

BT–E

STATE: Rhode Island
FED PROJ: ------
ST PROJ: Sakonnet River Bridge
COUNTY: Portsmouth / Tiverton
ROUTE: Route 24

SUBJECT: OVERHEAD BOX TRUSS STRUCTURE
ERECTION DRAWING
FOR: Site, LLC

DRAWN BY: JLS DATE: 4/9/13
CHECKED BY: RRW DATE: 4/9/13
RELEASE FOR CONSTRUCTION: ☑ DWG NO: C1425–E2

NAME: E:\acad\JobsNPrg\1425\1425–E2.dwg DATE: APR 18, 2013 TIME: 12:48 PM RobertW

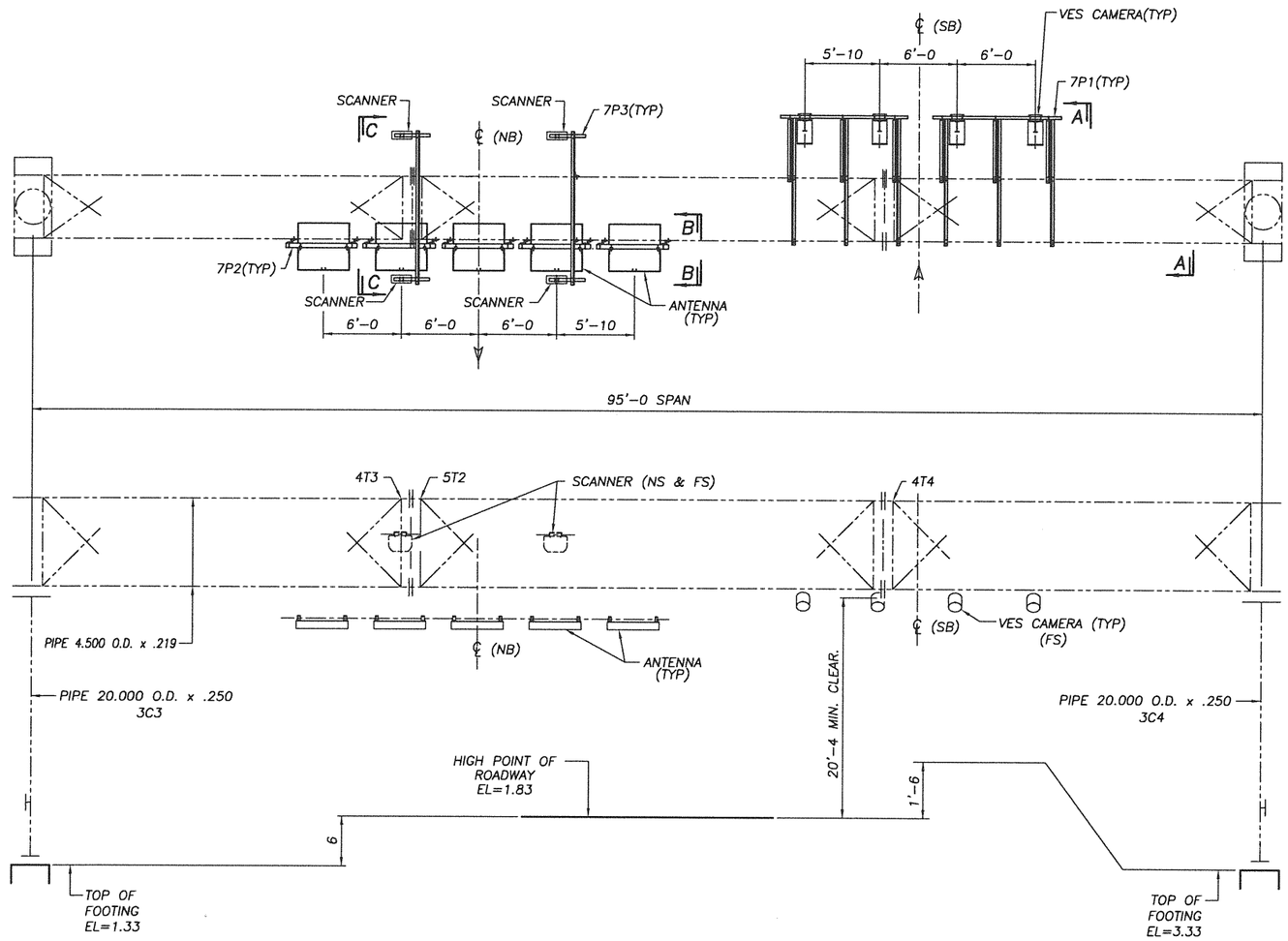

ELEVATION

STR NO: GANTRY 1B
STA NO: SOUTH
(LOOKING IN NORTH DIRECTION)

NOTE: STRUCTURE SHALL NOT BE ERECTED WITHOUT SIGNS OR A SUITABLE VIBRATION DAMPER

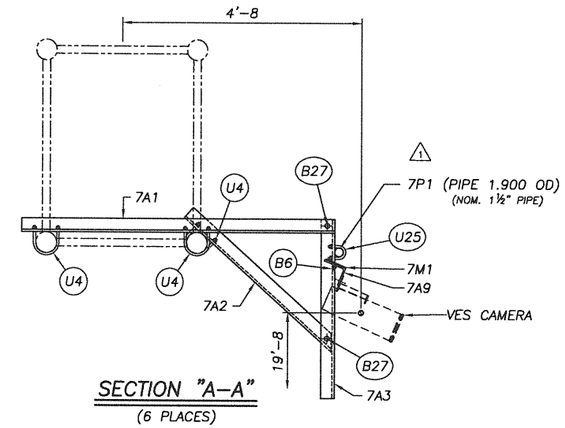

SECTION "A-A"

(6 PLACES)

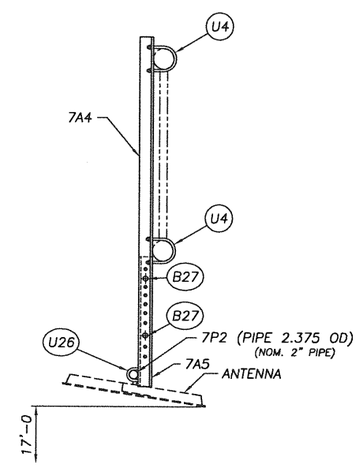

SECTION "B-B"

(10 PLACES)

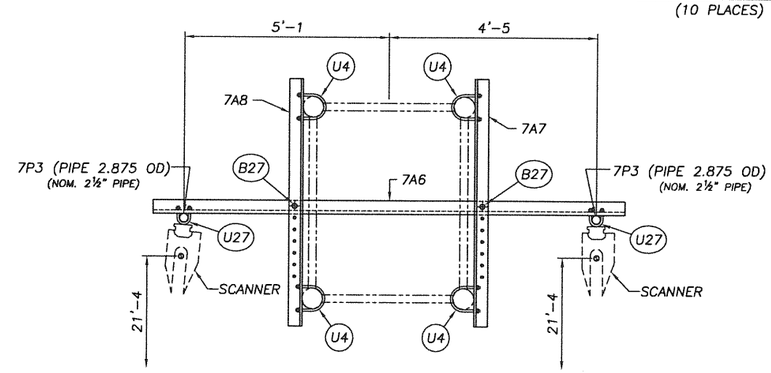

SECTION "C-C"

(2 PLACES)

SHIPPING LIST		C1425-E2A
QTY	MARK	DESCRIPTION
6	7A1	SUPPORT ANGLES
6	7A2	SUPPORT ANGLES
6	7A3	SUPPORT ANGLES
10	7A4	SUPPORT ANGLES
10	7A5	SUPPORT ANGLES
2	7A6	SUPPORT ANGLES
2	7A7	SUPPORT ANGLES
2	7A8	SUPPORT ANGLES
4	7A9	CAMERA ANGLES
4	7M1	CAMERA PLATE
2	7P1	CAMERA SUPPORT
5	7P2	ANTENNA SUPPORT
4	7P3	SCANNER SUPPORTS
4	B6	1/2" x 1 1/2" HHB w/HN/FW (A325 GALV)
36	B27	5/8" x 1 3/4" HHB w/HN/FW (A325 GALV)
46	U4	1/2" U-Bolts w/(2 ea) HN/LW/FW (A307 GALV)
6	U25	3/8" U-Bolts w/(2 ea) HN/LW/FW (A307 GALV)
10	U26	3/8" U-Bolts w/(2 ea) HN/LW/FW (A307 GALV)
4	U27	3/8" U-Bolts w/(2 ea) HN/LW/FW (A307 GALV)

NOTE: ALL MOUNTING HARDWARE FOR CAMERA'S, SCANNER'S, AND ANTENNA'S BY OTHERS.

Barbara B. Clements 4/23/13

BARBARA B. CLEMENTS
No. 8186
REGISTERED
PROFESSIONAL ENGINEER
STRUCTURAL

AASHTO 5th Edition Spec's

Walpar, LLC
POST OFFICE BOX 28650
BIRMINGHAM ALABAMA 35228
4200 JEFFERSON AVENUE
BIRMINGHAM ALABAMA 35221
PHONE (205)-925-4990
FAX (205) 925-7273

STATE: Rhode Island
FED PROJ: ------
ST PROJ: Sakonnet River Bridge
COUNTY: Portsmouth / Tiverton
ROUTE: Route 24
SUBJECT: OVERHEAD BOX TRUSS STRUCTURE ERECTION DRAWING
FOR: Site, LLC
DRAWN BY: JLS DATE: 4/9/13
CHECKED BY: RRW DATE: 4/9/13
RELEASE FOR CONSTRUCTION: ☑ DWG NO: C1425-E2A

NO:	REVISIONS	DATE	MADE	CHECKED
1	CORRECT MARK NUMBER	4/23/13	RRW	MWD
A	APPROVAL CHANGES	4/18/13	JLS	RRW

BT-E

NAME: E:\acad\JobsNPrg\1425\1425-E2A.dwg DATE: APR 23, 2013 TIME: 9:43 AM MichaelD

7551188A9
ADDENDUM NO. 9
February 22, 2017

C1425–1

PARTS PER CONT	PART MARK NO	NO. OF PIECES REQ'D	SECTION SYM	DESCRIPTION OF MATERIAL	LENGTH FEET	LENGTH INCHES	PARTS FOR ONE UNIT
	–	–		ANCHOR BOLT TEMPLATES			
	1P1	8	PL	1/4 x 30 DIA	–	–	

SHIPPING LIST		
QTY	MARK	DESCRIPTION
24	1A1	ANCHOR BOLTS
8	1P1	ANCHOR BOLT TEMPLATES

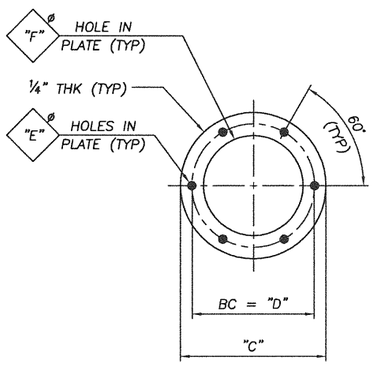

TYPE II ANCHOR TEMPLATE

(SEE CHART FOR INFORMATION)

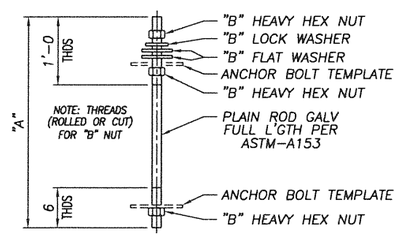

TYPE "G"

HDWE
GALV PER A153

~ ANCHOR BOLTS ~

(SEE CHART FOR MARKS)

MARK	QTY	"A"	"B"ø	(TPI)	TYPE
1A1	24	4'–6	2	4½	"G"

MAT'L SPECS

MAT'L	"G"
RODS	AASHTO M314–90 GRADE 55
NUTS	ASTM A563,GR.DH OR ASTM A194,GR.2H
WASHERS	ASTM F436 & ANSI–B18.21.1

ANCHOR TEMPLATE CHART

MARK	QTY	TYPE	"C"	"D"	"E"	"F"
1P1	8	II	2'–6	2'–2	2⅛	1'–10

BARBARA B. CLEMENTS
No. 8186
REGISTERED PROFESSIONAL ENGINEER STRUCTURAL
4/10/13

NOTE: SHOP SHIP FROM THIS DRAWING

ANCHOR BOLT TEMPLATE MATERIAL SPECS

ALL MAT'L – ASTM A572, GR 50
DO NOT GALVANIZE TEMPLATES

REF DWG: E1–E2

AASHTO 5th Edition Spec's

Walpar, LLC
POST OFFICE BOX 28650
BIRMINGHAM ALABAMA 35228
4200 JEFFERSON AVENUE
BIRMINGHAM ALABAMA 35221
PHONE (205)–925–4990
FAX (205) 925–7273

0

STATE: Rhode Island
FED PROJ: ------
ST PROJ: Sakonnet River Bridge
COUNTY: Portsmouth / Tiverton
ROUTE: Route 24

SUBJECT: SIGN STRUCTURE
ANCHOR BOLT & TEMPLATE DETAILS
FOR: Site, LLC

DRAWN BY: JLS DATE: 4/9/13
CHECKED BY: RRW DATE: 4/9/13
RELEASE FOR CONSTRUCTION: ☑ DWG NO: C1425–1

NO:	REVISIONS	DATE	MADE	CHECKED
0	FOR APPROVAL	4/9/13	JLS	RRW

ANC_TEMPLATE

NAME: F:\acad\JobsNPrg\1425\1425–1.dwg DATE: APR 09, 2013 TIME: 5:07 PM RobertW

C1425–2

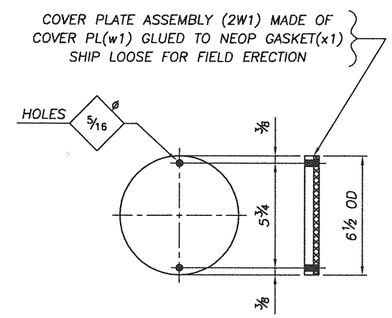

4 ~ COVER PLATE ASSEMBLY ~ 2W1

PART MARK NO	NO OF PIECES REQ'D	SECTION SYM	DESCRIPTION OF MATERIAL	LENGTH FEET	LENGTH INCHES	PARTS FOR ONE UNIT
2W1	4	–	COVER PLATE ASSEMBLY			
w1	4	PL	1/4 x 6 1/2 DIA. (A572) (GALV A123)	–	–	1
x1	4	OP	1/8 x 6 1/2 DIA. (NEOP GASKET)	–	–	1

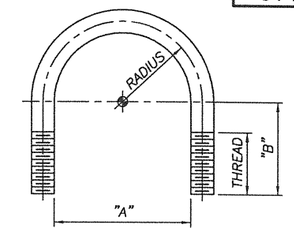

~ U–BOLTS ~

MARK	QTY	DIA	"A"	"B"	RADIUS	THDS	MATERIAL
U4	105	1/2	4 5/8	4 1/4	2 9/16	2	A307 GALV
U25	15	3/8	2 1/8	2 1/4	1 1/4	2	A307 GALV
U26	16	3/8	2 1/2	2 1/2	1 7/16	2	A307 GALV
U27	6	3/8	3	2 3/4	1 11/16	2	A307 GALV

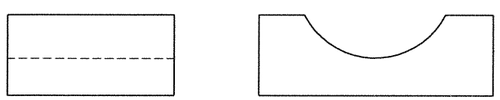

~ SADDLE SHIM DETAIL ~

(ALUM 356–T6)

MARK	QTY	PART No	REMARKS
S4	8	350	FOR 4 1/2

Barbara B. Clements 4/18/13

BARBARA B. CLEMENTS
No. 8186
REGISTERED
PROFESSIONAL ENGINEER
STRUCTURAL

AASHTO 5th Edition Spec's

REF DWGS: E1 THRU E2A
MAT'L SPECS: AS NOTED

Walpar, LLC

POST OFFICE BOX 28650
BIRMINGHAM ALABAMA 35228
4200 JEFFERSON AVENUE
BIRMINGHAM ALABAMA 35221
PHONE (205)–925–4990
FAX (205) 925–7273

STATE: Rhode Island
FED PROJ: ------
ST PROJ: Sakonnet River Bridge
COUNTY: Portsmouth / Tiverton
ROUTE: Route 24

SUBJECT: SIGN STRUCTURES
MISC DETAILS
FOR: Site, LLC

DRAWN BY: JLS DATE: 4/9/13
CHECKED BY: RRW DATE: 4/9/13
RELEASE FOR CONSTRUCTION: ☑ DWG NO: C1425–2

NO:	REVISIONS	DATE	MADE	CHECKED
A	APPROVAL CHANGES	4/18/13	JLS	RRW

DWG–2

NAME: E:\acad\JobsNPrg\1425\1425–2.dwg DATE: APR 18, 2013 TIME: 11:38 AM RobertW

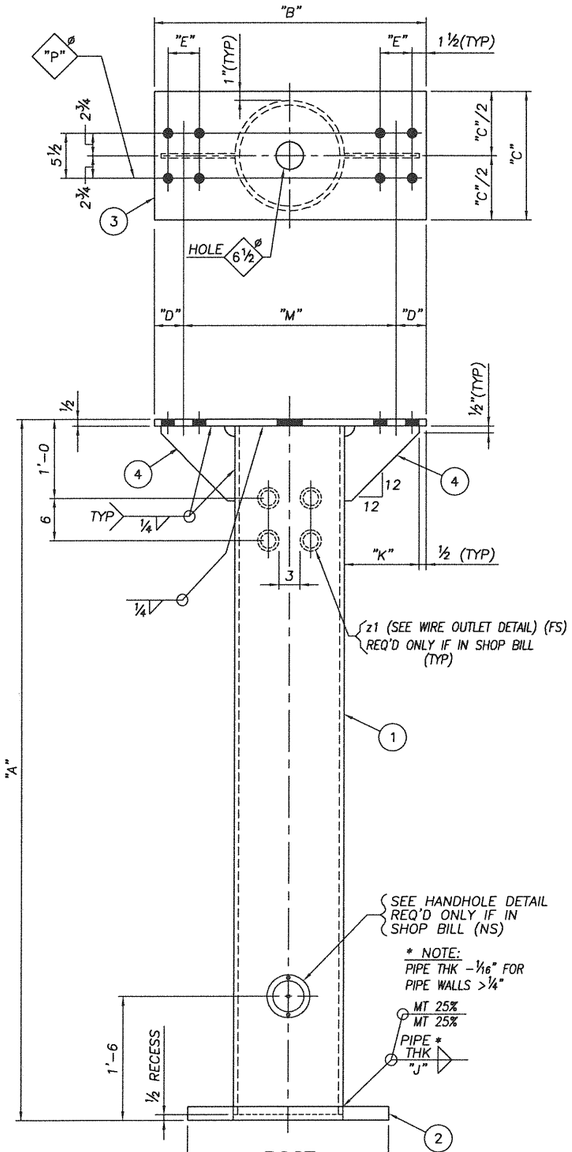

POST

MARK	QTY	"A"	"B"	"C"	"D"	"E"	"F"	"G" QTY	"G" DIA	"H"	"J"	"K"	"M"	"N"	"P"
3C1	1	19'-2¾	4'-2⅛	1'-10	4 1/16	5⅛	2'-2	6	2¼	1'-8 1/16	5/16	1'-2 9/16	3'-6	2½	1 1/16
3C2	1	21'-2¾	4'-2⅛	1'-10	4 1/16	5⅛	2'-2	6	2¼	1'-8 1/16	5/16	1'-2 9/16	3'-6	2½	1 1/16
3C3	1	21'-2¾	4'-2⅛	1'-10	4 1/16	5⅛	2'-2	6	2¼	1'-8 1/16	5/16	1'-2 9/16	3'-6	2½	1 1/16
3C4	1	19'-2¾	4'-2⅛	1'-10	4 1/16	5⅛	2'-2	6	2¼	1'-8 1/16	5/16	1'-2 9/16	3'-6	2½	1 1/16

MARK	(1)	(2)	(3)	(4)
3C1	a	b	d	f
3C2	aa	b	d	f
3C3	aa	b	d	f
3C4	a	b	d	f

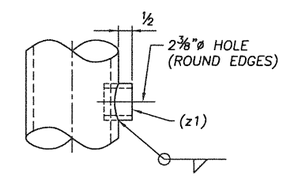

WIRE OUTLET DETAIL

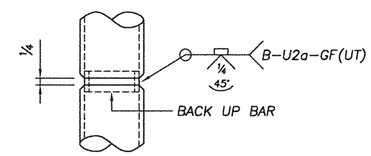

OPTIONAL SPLICE

(FOR WALL THK 5/16" OR GREATER ONLY)

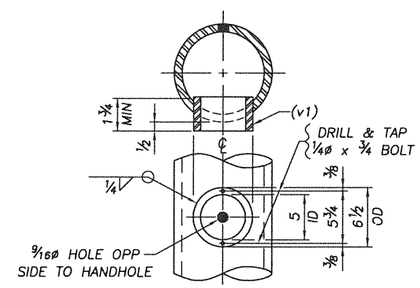

HANDHOLE DETAIL

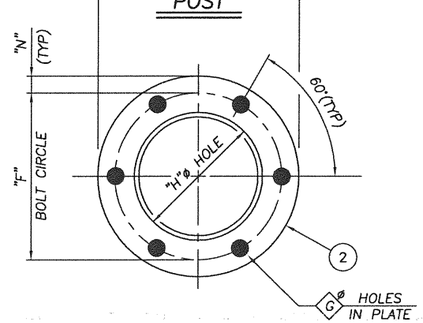

BASE PLATE

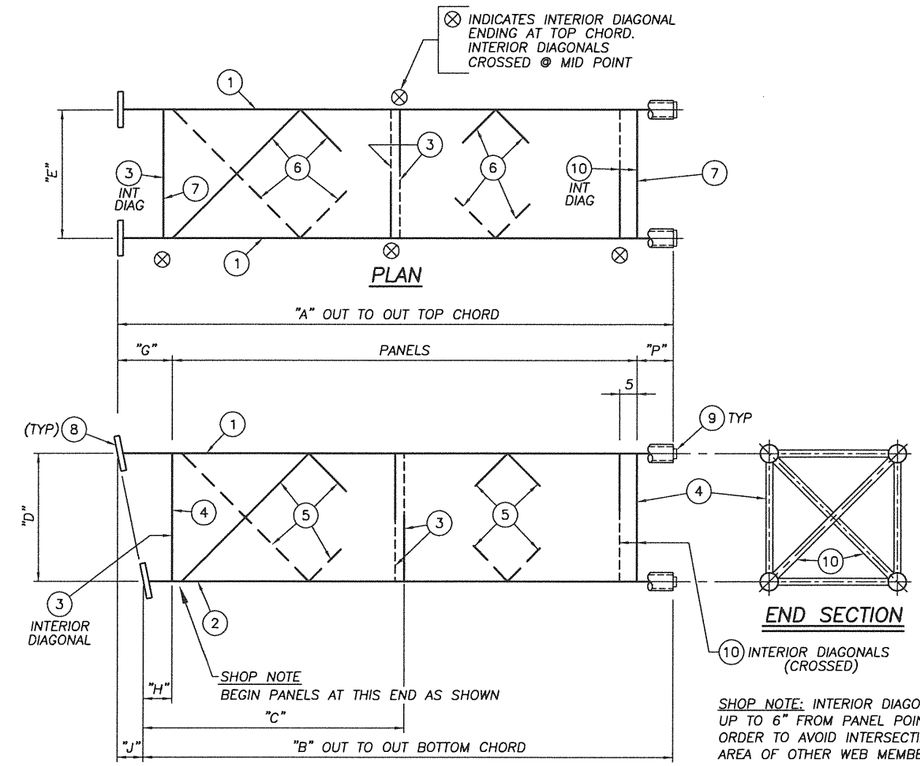

ELEVATION
TRUSS

MARK	QTY	VIEW	"A"	"B"	"C"	PANELS	"D"	"E"		"G"	"H"
4T1	1	OPHAND	29'-9 1/8	29'-8 15/16	14'-9	8 @ 3'-6 (±) = 28'-0	3'-6	3'-6		9 1/8	8 15/16
4T2	1	SHOWN	29'-9 1/8	29'-8 15/16	14'-9	8 @ 3'-6 (±) = 28'-0	3'-6	3'-6		9 1/8	8 15/16
4T3	1	OPHAND	29'-9 1/8	29'-8 15/16	14'-9	8 @ 3'-6 (±) = 28'-0	3'-6	3'-6		9 1/8	8 15/16
4T4	1	SHOWN	29'-9 1/8	29'-8 15/16	14'-9	8 @ 3'-6 (±) = 28'-0	3'-6	3'-6		9 1/8	8 15/16

MARK	"J"	"K"	"L"	"M"	"N"	"P"	"R"	1	2	3	4	5	6	7	8	9	10		SHIM	SWEEP
4T1	3/16	7 1/2	1/4	4	1	1'-0	2 1/2	a	b	n	d	f	h	d	m	s	t		1/16	5/16
4T2	3/16	7 1/2	1/4	4	1	1'-0	2 1/2	a	b	n	d	f	h	d	m	s	t		1/16	5/16
4T3	3/16	7 1/2	1/4	4	1	1'-0	2 1/2	a	b	n	d	f	h	d	m	s	t		1/16	5/16
4T4	3/16	7 1/2	1/4	4	1	1'-0	2 1/2	a	b	n	d	f	h	d	m	s	t		1/16	5/16

SHOP NOTE: INTERIOR DIAGONALS MAY BE OFFSET UP TO 6" FROM PANEL POINTS ON TRUSS IN ORDER TO AVOID INTERSECTING WELDS IN THE AREA OF OTHER WEB MEMBERS.

DO NOT OFFSET MEMBERS SO AS TO INTERFERE WITH BOLTED CONNECTIONS AT FIELD SPLICES.

VENT HOLE SIZES	
WEB MEMBER (O.D.)	HOLE DIA. ± 1/4"
< 3.500	3/4
3.500	1 3/4
4.000	2
4.500	2 1/4
5.563	2 3/4
6.625	3 1/4

PARTS PER CONT	PART MARK NO	NO. OF PIECES REQ'D	SECTION SYM	DESCRIPTION OF MATERIAL	LENGTH FEET	LENGTH INCHES	PARTS FOR ONE UNIT	
				C1425-4				
	4T1	1		BOX TRUSS				
	a	2	PIPE	4.500 x .219	29	8 3/4		
	b	2	PIPE	4.500 x .219	29	8 9/16		
	d	8	PIPE	1.315 x .133	3	1 1/2		
	f	16	PIPE	1.315 x .133	4	5 3/16		
	h	16	PIPE	1.660 x .140	4	5 3/16		
	n	3	PIPE	1.315 x .133	4	6 7/8		
	t	2	PIPE	1.660 x .140	4	7 1/8		
	m	4	PL	3/4 x 10 1/2 DIA.	–	–		
	s	4	PL	1/4 x 2 1/2	0	4 1/4		
	4T2	1		BOX TRUSS				
	a	2	PIPE	4.500 x .219	29	8 3/4		
	b	2	PIPE	4.500 x .219	29	8 9/16		
	d	8	PIPE	1.315 x .133	3	1 1/2		
	f	16	PIPE	1.315 x .133	4	5 3/16		
	h	16	PIPE	1.660 x .140	4	5 3/16		
	n	3	PIPE	1.315 x .133	4	6 7/8		
	t	2	PIPE	1.660 x .140	4	7 1/8		
	m	4	PL	3/4 x 10 1/2 DIA.	–	–		
	s	4	PL	1/4 x 2 1/2	0	4 1/4		
	4T3	1		BOX TRUSS				
	a	2	PIPE	4.500 x .219	29	8 3/4		
	b	2	PIPE	4.500 x .219	29	8 9/16		
	d	8	PIPE	1.315 x .133	3	1 1/2		
	f	16	PIPE	1.315 x .133	4	5 3/16		
	h	16	PIPE	1.660 x .140	4	5 3/16		
	n	3	PIPE	1.315 x .133	4	6 7/8		
	t	2	PIPE	1.660 x .140	4	7 1/8		
	m	4	PL	3/4 x 10 1/2 DIA.	–	–		
	s	4	PL	1/4 x 2 1/2	0	4 1/4		
	4T4	1		BOX TRUSS				
	a	2	PIPE	4.500 x .219	29	8 3/4		
	b	2	PIPE	4.500 x .219	29	8 9/16		
	d	8	PIPE	1.315 x .133	3	1 1/2		
	f	16	PIPE	1.315 x .133	4	5 3/16		
	h	16	PIPE	1.660 x .140	4	5 3/16		
	n	3	PIPE	1.315 x .133	4	6 7/8		
	t	2	PIPE	1.660 x .140	4	7 1/8		
	m	4	PL	3/4 x 10 1/2 DIA.	–	–		
	s	4	PL	1/4 x 2 1/2	0	4 1/4		

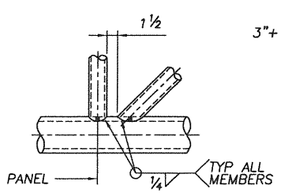

JOINT DETAIL

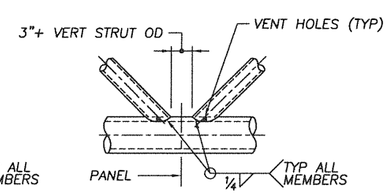

JOINT DETAIL

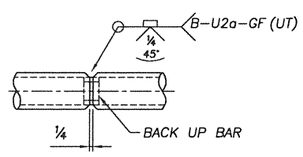

OPTIONAL CHORD SPLICE
(FOR WALL THK 5/16" OR GREATER ONLY)

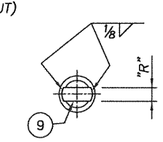

END CAP DETAIL

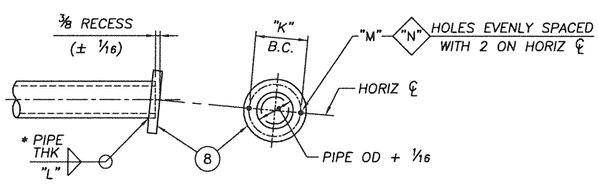

* NOTE: PIPE THK -1/16" FOR PIPE WALLS > 1/4"

FLANGE DETAIL

MATERIAL SPEC'S

- CHORDS & WEB MEMBERS – STEEL PIPE SHALL MEET THE FOLLOWING SPECIFICATIONS WITH THE PROPERTIES (52 KSI MIN. YIELD, 60 KSI MIN. ULTIMATE TENSILE AND MIN. ELONGATION EQUAL TO 20% IN 2 IN.). API-5L-X52, API-5L-X42, API-5L-X60, ASTM A252 GR. 3, ASTM A500 GR. B/C, OR ASTM A53 GR. B, (YIELD STRENGTH SHALL NOT EXCEED 82 KSI).
- PLATES – ASTM A572, GR. 50
- GALV. – ASTM A123
- WELD – AWS SPEC. D1.1 – LATEST REV.
- ALL PIPE SIZES ARE OUTSIDE DIAMETER

BARBARA B. CLEMENTS
4/18/13
No. 8186
REGISTERED
PROFESSIONAL ENGINEER
STRUCTURAL

REF DWG: E1-E2

AASHTO 5th Edition Spec's

Walpar, LLC
POST OFFICE BOX 28650
BIRMINGHAM ALABAMA 35228
4200 JEFFERSON AVENUE
BIRMINGHAM ALABAMA 35221
PHONE (205)-925-4990
FAX (205) 925-7273

STATE: Rhode Island
FED PROJ: ------
ST PROJ: Sakonnet River Bridge
COUNTY: Portsmouth / Tiverton
ROUTE: Route 24

SUBJECT: OVERHEAD SIGN SUPPORT
DETAIL OF TRUSS
FOR: Site, LLC

DRAWN BY: JLS DATE: 4/8/13
CHECKED BY: RRW DATE: 4/9/13
RELEASE FOR CONSTRUCTION: ✓ DWG NO: C1425-4

NO:	REVISIONS	DATE	MADE	CHECKED
A	APPROVAL CHANGES	4/18/13	JLS	RRW

BTESDET

NAME: E:\acad\JobsNProg\1425\1425-4.dwg DATE: APR 18, 2013 TIME: 11:39 AM Robertf

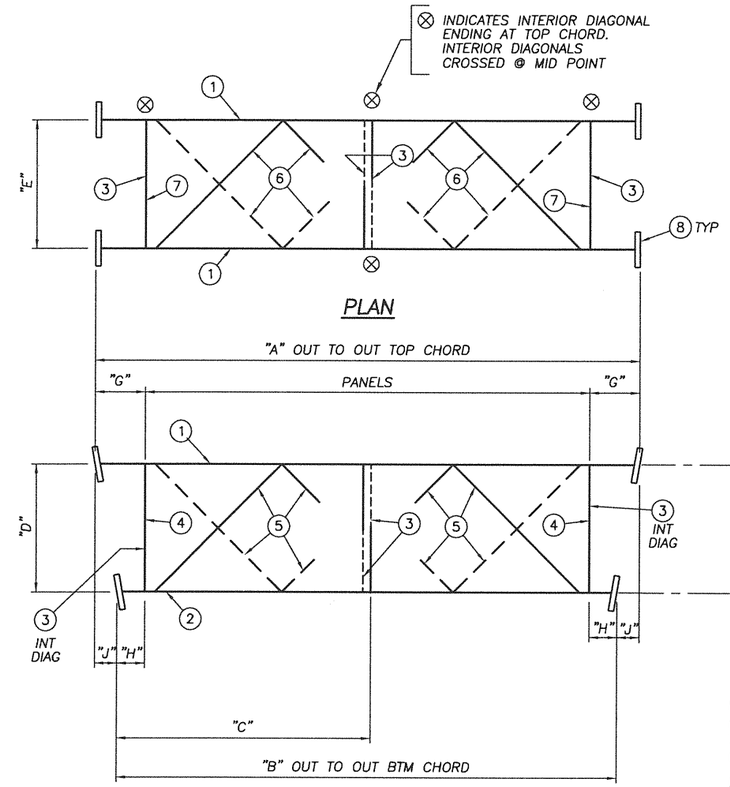

TRUSS

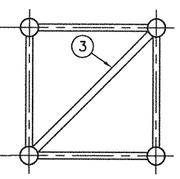

END SECTION

MARK	QTY		"A"	"B"	"C"	PANELS	"D"	"E"		"G"	"H"
5T1	1		36'–6 3/16	36'–5 13/16	18'–3	10 @ 3'–6 (±) = 35'–0	3'–6	3'–6		9 1/8	8 15/16
5T2	1		36'–6 3/16	36'–5 13/16	18'–3	10 @ 3'–6 (±) = 35'–0	3'–6	3'–6		9 1/8	8 15/16

MARK	"J"	"K"	"L"	"M"	"N"			1	2	3	4	5	6	7	8				SHIM	SWEEP
5T1	3/16	7 1/2	1/4	4	1			a	b	n	d	f	h	d	m				1/16	1/2
5T2	3/16	7 1/2	1/4	4	1			a	b	n	d	f	h	d	m				1/16	1/2

C1425–5

PARTS PER CONT	PART MARK NO	NO OF PIECES REQ'D	SECTION SYM	DESCRIPTION OF MATERIAL	LENGTH FEET	LENGTH INCHES	PARTS FOR ONE UNIT	
	5T1	1		BOX TRUSS				
	a	2	PIPE	4.500 x .219	36	5 7/16		
	b	2	PIPE	4.500 x .219	36	5 1/16		
	d	8	PIPE	1.315 x .133	3	1 1/2		
	f	20	PIPE	1.315 x .133	4	5 3/16		
	h	20	PIPE	1.660 x .140	4	5 3/16		
	n	4	PIPE	1.315 x .133	4	6 7/8		
	m	8	PL	3/4 x 10 1/2 DIA.	–	–		
	5T2	1		BOX TRUSS				
	a	2	PIPE	4.500 x .219	36	5 7/16		
	b	2	PIPE	4.500 x .219	36	5 1/16		
	d	8	PIPE	1.315 x .133	3	1 1/2		
	f	20	PIPE	1.315 x .133	4	5 3/16		
	h	20	PIPE	1.660 x .140	4	5 3/16		
	n	4	PIPE	1.315 x .133	4	6 7/8		
	m	8	PL	3/4 x 10 1/2 DIA.	–	–		

SHOP NOTE:

INTERIOR DIAGONALS MAY BE OFFSET UP TO 6" FROM PANEL POINTS ON TRUSS IN ORDER TO AVOID INTERSECTING WELDS IN THE AREA OF OTHER WEB MEMBERS.

DO NOT OFFSET MEMBERS SO AS TO INTERFERE WITH BOLTED CONNECTIONS AT FIELD SPLICES.

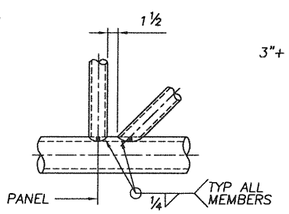

JOINT DETAIL

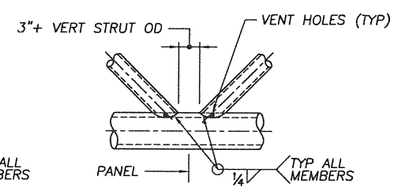

JOINT DETAIL

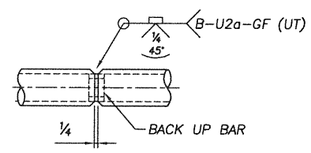

OPTIONAL CHORD SPLICE

(FOR WALL THK 5/16" OR GREATER ONLY)

VENT HOLE SIZES	
WEB MEMBER OD	HOLE DIA. ± 1/4"
< 3.500	3/4
3.500	1 3/4
4.000	2
4.500	2 1/4
5.563	2 3/4
6.625	3 1/4

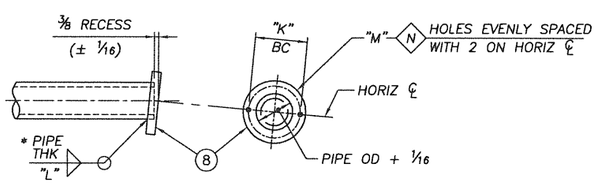

*NOTE: PIPE THK –1/16" FOR PIPE WALLS > 1/4"

FLANGE DETAIL

MATERIAL SPEC'S.

- CHORDS & WEB MEMBERS – STEEL PIPE SHALL MEET THE FOLLOWING SPECIFICATIONS WITH THE PROPERTIES (52 KSI MIN. YIELD, 60 KSI MIN. ULTIMATE TENSILE AND MIN. ELONGATION EQUAL TO 20% IN 2 IN.). API–5L–X52, API–5L–X42, API–5L–X60, ASTM A252 GR. 3, ASTM A500 GR. B/C, OR ASTM A53 GR. B, (YIELD STRENGTH SHALL NOT EXCEED 82 KSI).
- PLATES – ASTM A572, GR. 50
- GALV. – ASTM A123
- WELD – AWS SPEC. D1.1 – LATEST REV.
- ALL PIPE SIZES ARE OUTSIDE DIAMETER

Barbara B. Clements 4/18/13

BARBARA B. CLEMENTS
No. 8186
REGISTERED
PROFESSIONAL ENGINEER
STRUCTURAL

NO:	REVISIONS	DATE	MADE	CHECKED
A	APPROVAL CHANGES	4/18/13	JLS	RRW

REF DWG: E1–E2

AASHTO 5th Edition Spec's

Walpar, LLC

POST OFFICE BOX 28650
BIRMINGHAM ALABAMA 35228
4200 JEFFERSON AVENUE
BIRMINGHAM ALABAMA 35221
PHONE (205)–925–4990
FAX (205) 925–7273

A

STATE: Rhode Island
FED PROJ: ------
ST PROJ: Sakonnet River Bridge
COUNTY: Portsmouth / Tiverton
ROUTE: Route 24

SUBJECT: OVERHEAD SIGN SUPPORT
DETAIL OF TRUSS
FOR: Site, LLC

DRAWN BY: JLS DATE: 4/8/13
CHECKED BY: RRW DATE: 4/9/13
RELEASE FOR CONSTRUCTION: ☑ DWG NO: C1425–5

BTCSDET 5

NAME: E:\acad\JobsNPrg\1425\1425–5.dwg DATE: APR 18, 2013 TIME: 11:40 AM RobertW

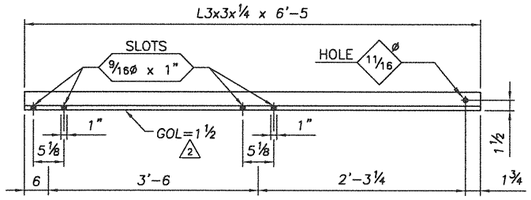

9 ~ SUPPORT ANGLES ~ 6A1

(CAMERA)

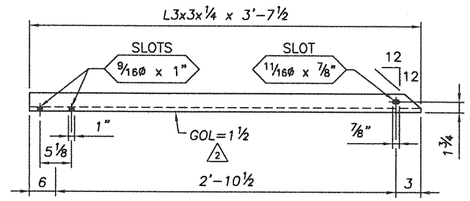

9 ~ SUPPORT ANGLES ~ 6A2

(CAMERA)

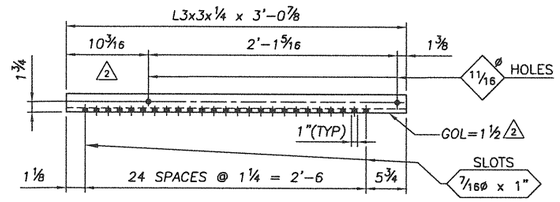

9 ~ SUPPORT ANGLES ~ 6A3

(CAMERA)

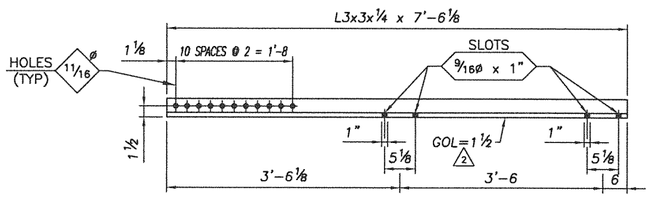

6 ~ SUPPORT ANGLES ~ 6A4

(ANTENNA)

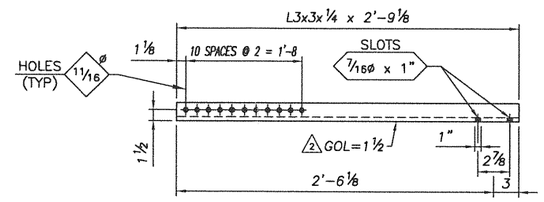

6 ~ SUPPORT ANGLES ~ 6A5

(ANTENNA)

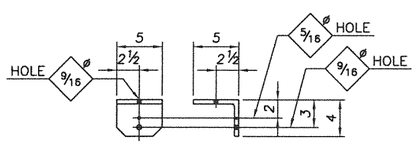

6 ~ CAMERA ANGLES ~ 6A9

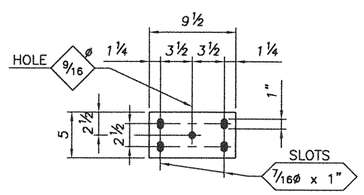

6 ~ CAMERA PLATES ~ 6M1

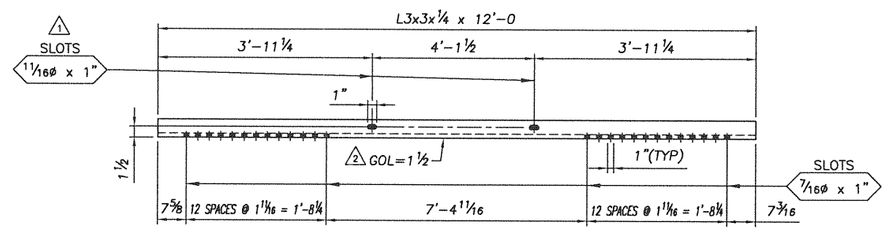

1 ~ SUPPORT ANGLES ~ 6A6

(SCANNER)

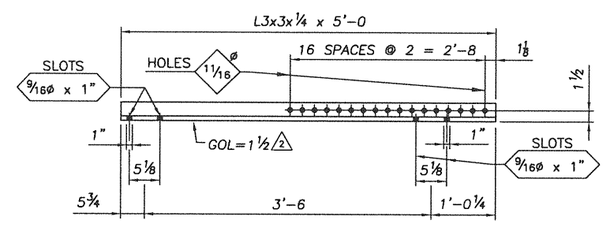

1 ~ SUPPORT ANGLES ~ 6A7(AS SHOWN)

1 ~ SUPPORT ANGLES ~ 6A8(OPP HAND)

(SCANNER)

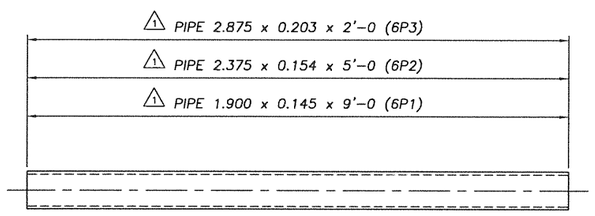

3 ~ CAMERA SUPPORT ~ 6P1

3 ~ ANTENNA SUPPORT ~ 6P2

2 ~ SCANNER SUPPORT ~ 6P3

MATERIAL SPEC'S

- STEEL PIPE SHALL MEET THE FOLLOWING SPECIFICATIONS WITH THE PROPERTIES (52 KSI MIN YIELD, 60 KSI MIN ULTIMATE TENSILE AND MIN ELONGATION EQUAL TO 20% IN 2 IN). API-5L-X52, API-5L-X42, API-5L-X60, ASTM A252 GR 3, ASTM A500 GR B/C OR ASTM A53 GR B (YIELD STRENGTH SHALL NOT EXCEED 82 KSI).
- PLATES – ASTM A572, GR. 50
- GALV – ASTM A123
- ANGLES – ASTM A36
- ALL PIPE SIZES ARE OUTSIDE DIAMETER

C1425-6

PARTS PER CONT	PART MARK NO	NO OF PIECES REQ'D	SECTION SYM	DESCRIPTION OF MATERIAL	LENGTH FEET	LENGTH INCHES	PARTS FOR ONE UNIT
	6A1	9		SUPPORT ANGLES			
	a	9	L	3 x 3 x ¼	6	5	
	6A2	9		SUPPORT ANGLES			
	aa	9	L	3 x 3 x ¼	3	7½	
	6A3	9		SUPPORT ANGLES			
	ba	9	L	3 x 3 x ¼	3	0⅞	
	6A4	6		SUPPORT ANGLES			
	da	6	L	3 x 3 x ¼	7	6⅛	
	6A5	6		SUPPORT ANGLES			
	fa	6	L	3 x 3 x ¼	2	9⅛	
	6A6	1		SUPPORT ANGLES			
	ga	1	L	3 x 3 x ¼	12	0	
	6A7	1		SUPPORT ANGLES			
	ha	1	L	3 x 3 x ¼	5	0	
	6A8	1		SUPPORT ANGLES			
	ka	1	L	3 x 3 x ¼	5	0	
	6A9	6		CAMERA ANGLES			
	ma	6	L	6 x 4 x 5/16	0	5	
	6M1	6		CAMERA PLATES			
	b	6	PL	¼ x 5	0	9½	
	6P1	3		CAMERA SUPPORT			
	d	3	PIPE	1.900 x .145	9	0	
	6P2	3		ANTENNA SUPPORT			
1	ad	3	PIPE	2.375 x .154	5	0	
	6P3	2		SCANNER SUPPORTS			
1	bd	2	PIPE	2.875 x .203	2	0	

BARBARA B. CLEMENTS
No. 8186
REGISTERED
PROFESSIONAL ENGINEER
STRUCTURAL

Barbara B. Clements 4/25/13

NO:	REVISIONS	DATE	MADE	CHECKED
2	REVISED GOL WAS STD 1¾ & DIM ON A3	4/25/13	RRW	MWD
1	REVISED HOLES & CHGD PIPE SIZES PER CUSTOMER	4/23/13	RRW	MWD
A	APPROVAL CHANGES	4/1813	JLS	RRW

REF DWG: E1A

AASHTO 5th Edition Spec's

Walpar, LLC
POST OFFICE BOX 28650
BIRMINGHAM ALABAMA 35228
4200 JEFFERSON AVENUE
BIRMINGHAM ALABAMA 35221
PHONE (205)-925-4990
FAX (205) 925-7273

2

STATE: Rhode Island
FED PROJ: ------
ST PROJ: Sakonnet River Bridge
COUNTY: Portsmouth / Tiverton
ROUTE: Route 24

SUBJECT: OVERHEAD SIGN SUPPORT
DETAILS OF SUPPORTS
FOR: Site, LLC

DRAWN BY: JLS DATE: 4/8/13
CHECKED BY: RRW DATE: 4/9/13
RELEASE FOR CONSTRUCTION: ☑ DWG NO: C1425-6

NAME: E:\acad\JobsNPrg\1425\1425-6.dwg DATE: APR 25, 2013 TIME: 9:20 AM MichaelD

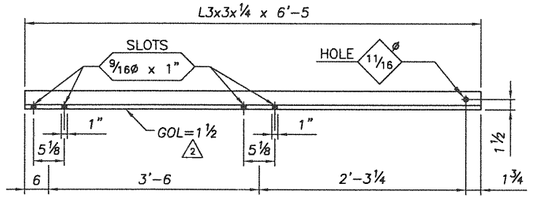

6 ~ SUPPORT ANGLES ~ 7A1
(CAMERA)

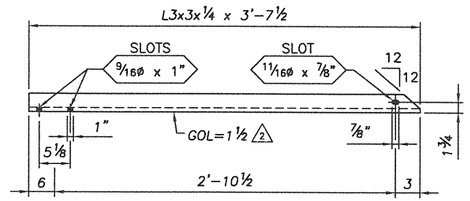

6 ~ SUPPORT ANGLES ~ 7A2
(CAMERA)

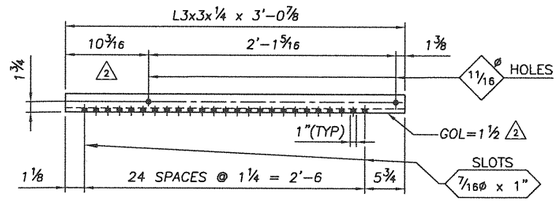

6 ~ SUPPORT ANGLES ~ 7A3
(CAMERA)

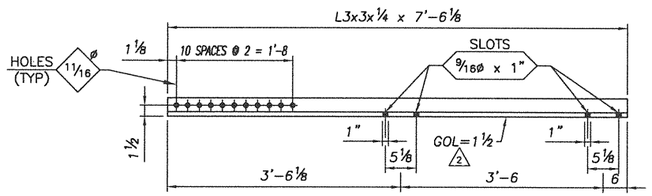

10 ~ SUPPORT ANGLES ~ 7A4
(ANTENNA)

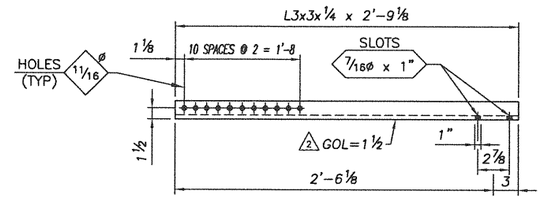

10 ~ SUPPORT ANGLES ~ 7A5
(ANTENNA)

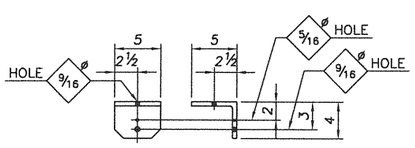

4 ~ CAMERA ANGLES ~ 7A9

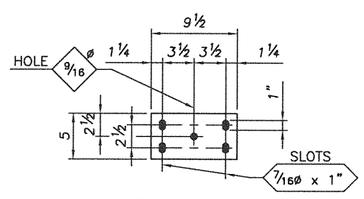

4 ~ CAMERA PLATES ~ 7M1

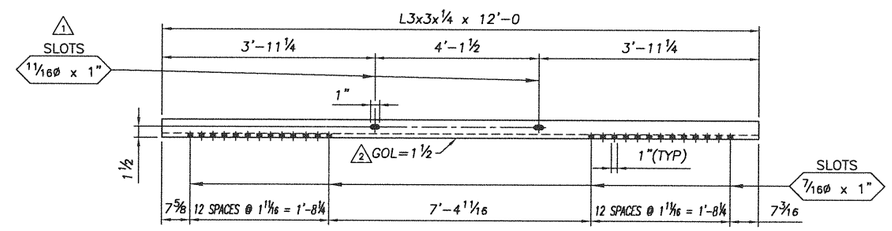

2 ~ SUPPORT ANGLES ~ 7A6
(SCANNER)

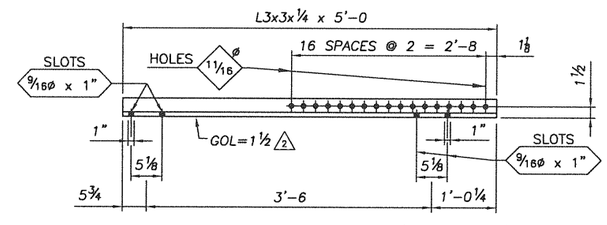

2 ~ SUPPORT ANGLES ~ 7A7(AS SHOWN)
2 ~ SUPPORT ANGLES ~ 7A8(OPP HAND)
(SCANNER)

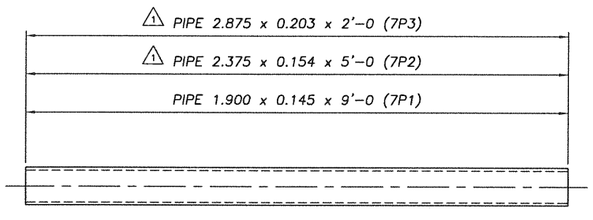

2 ~ CAMERA SUPPORT ~ 7P1
5 ~ ANTENNA SUPPORT ~ 7P2
4 ~ SCANNER SUPPORT ~ 7P3

MATERIAL SPEC'S

- STEEL PIPE SHALL MEET THE FOLLOWING SPECIFICATIONS WITH THE PROPERTIES (52 KSI MIN YIELD, 60 KSI MIN ULTIMATE TENSILE AND MIN ELONGATION EQUAL TO 20% IN 2 IN). API-5L-X52, API-5L-X42, API-5L-X60, ASTM A252 GR 3, ASTM A500 GR B/C OR ASTM A53 GR B (YIELD STRENGTH SHALL NOT EXCEED 82 KSI).
- PLATES – ASTM A572, GR. 50
- GALV – ASTM A123
- ANGLES – ASTM A36
- ALL PIPE SIZES ARE OUTSIDE DIAMETER

C1425-7

PARTS PER CONT	PART MARK NO	NO OF PIECES REQ'D	SECTION SYM	DESCRIPTION OF MATERIAL	LENGTH FEET	LENGTH INCHES	PARTS FOR ONE UNIT	
	7A1	6		SUPPORT ANGLES				
	a	6	L	3 x 3 x ¼	6	5		
	7A2	6		SUPPORT ANGLES				
	aa	6	L	3 x 3 x ¼	3	7½		
	7A3	6		SUPPORT ANGLES				
	ba	6	L	3 x 3 x ¼	3	0⅞		
	7A4	10		SUPPORT ANGLES				
	da	10	L	3 x 3 x ¼	7	6⅛		
	7A5	10		SUPPORT ANGLES				
	fa	10	L	3 x 3 x ¼	2	9⅛		
	7A6	2		SUPPORT ANGLES				
	ga	2	L	3 x 3 x ¼	12	0		
	7A7	2		SUPPORT ANGLES				
	ha	2	L	3 x 3 x ¼	5	0		
	7A8	2		SUPPORT ANGLES				
	ka	2	L	3 x 3 x ¼	5	0		
	7A9	4		CAMERA ANGLES				
	ma	4	L	6 x 4 x 5/16	0	5		
	7M1	4		CAMERA PLATES				
	b	4	PL	¼ x 5	0	9½		
	7P1	2		CAMERA SUPPORT				
	d	2	PIPE	1.900 x .145	9	0		
	7P2	5		ANTENNA SUPPORT				
2	od	5	PIPE	2.375 x .154	5	0		
	7P3	4		SCANNER SUPPORTS				
2	bd	4	PIPE	2.875 x .203	2	0		

BARBARA B. CLEMENTS
4/25/13
No. 8186
REGISTERED
PROFESSIONAL ENGINEER
STRUCTURAL

NO:	REVISIONS	DATE	MADE	CHECKED
2	REVISED GOL WAS STD 1¾ & DIM ON A3	4/25/13	RRW	MWD
1	REVISED HOLES & CHGD PIPE SIZES PER CUSTOMER	4/23/13	RRW	MWD
A	APPROVAL CHANGES	4/18/13	JLS	RRW

REF DWG: E2A

AASHTO 5th Edition Spec's

Walpar, LLC
POST OFFICE BOX 28650
BIRMINGHAM ALABAMA 35228
4200 JEFFERSON AVENUE
BIRMINGHAM ALABAMA 35221
PHONE (205)-925-4990
FAX (205) 925-7273

STATE: Rhode Island
FED PROJ: ------
ST PROJ: Sakonnet River Bridge
COUNTY: Portsmouth / Tiverton
ROUTE: Route 24
SUBJECT: OVERHEAD SIGN SUPPORT
DETAILS OF SUPPORTS
FOR: Site, LLC
DRAWN BY: JLS DATE: 4/8/13
CHECKED BY: RRW DATE: 4/9/13
RELEASE FOR CONSTRUCTION: ☑ DWG NO: C1425-7

NAME: E:\acad\JobsNPrg\1425\1425-7.dwg DATE: APR 25, 2013 TIME: 9:23 AM MichaelD