November 4, 2016

STATE OF RHODE ISLAND AND PROVIDENCE PLANTATION
DEPARTMENT OF ADMINISTRATION

DIVISION OF PURCHASES BID NO. 7550972

RHODE ISLAND DEPARTMENT OF TRANSPORTATION

RHODE ISLAND CONTRACT NO.2016-CB-056

FEDERAL-AID PROJECT NO. FAP Nos: BRO-0273(007)

Slatersville Stone Arch Bridge No 273 (70C)

Church Street to North Smithfield Library and North Main Street.

CITY/TOWN OF North Smithfield

COUNTY OF PROVIDENCE

NOTICE TO PROSPECTIVE BIDDERS

ADDENDUM NO. 2 Prospective bidders and all concerned are hereby notified of the following changes in the Plans, Specifications, Proposal and Distribution of Quantities for this contract. These changes shall be incorporated in the Plans, Specifications, Proposal and Distribution of Quantities, and shall become an integral part of the Contract Documents.

A. Other Item Changes

01. 201.0301 - CUTTING AND DISPOSING ISOLATED TREES AND STUMPS (4"- 24")

    Quest Item added. Quantity Updated To "5.00".

02. 201.0433 - REMOVE AND DISPOSE BOLLARD

    Quest Item added. Quantity Updated To "5.00".

03. 201.9915 - REMOVE, RELOCATE AND RESET VARIOUS PARK STRUCTURES

    Quest Item Added. Quantity Updated To "1.00".

04. 601.9901 - LIGHTWEIGHT CONCRETE

    Quest Item Added. Quantity Updated To "350.00".

05. 808.0320 - CONCRETE SUBSTRUCTURE CLASS XX 3/4"

    Quantity Updated To "290.00".

06. 808.0508 - CONCRETE SUBSTRUCTURE CLASS XX 3/4" APPROACH SLABS

    Quantity Updated To "15.00".

07. 813.0100 - DAMPPROOFING

    Quest Item added. Quantity Updated To "52.00".

08. 813.0300 - COLD APPLIED LIQUID MEMBRANE

Quantity Updated To "670.00".

09. 908.0100 - FLAGSTONE-BLUE STONE TREADS

Quest Item added. Quantity Updated To "60.00".

10. 911.0101 - STONE MASONRY STEPS STANDARD 10.4.0

Quantity Updated To "8.00".

11. 911.9902 - REMOVE AND REBUILD STONE MASONRY SPANDREL WALLS

Unit of Measure Updated To "CY". Quantity Updated To "450.00".

12. 928.9901 - TRUCK MOUNTED ATTENUATOR (TMA) WITH TRUCK MOUNTED FLASHING ARROW BOARD (TMFAB)

Quest Item Added. Quantity Updated To "640.00".

13. L06.9905 - HAMAMELIS VIRGINIANA / WITCH HAZEL, 2' TO 3' B&B

Quest Item Added. Specialty Item Specialty Flag Added. Quantity Updated To "1.00".

B. Plans

01. Typical Sections 1

Remove Plan Sheet 6 in its entirety and replace with Plan Sheet 6(R-1) attached to this Addendum No. 2. Curbing callouts have been revised to specify granite curbing instead of concrete curbing.

02. Typical Sections 2

Remove Plan Sheet 7 in its entirety and replace with Plan Sheet 7(R-1) attached to this Addendum No. 2. Curbing callouts have been revised to specify granite curbing instead of concrete curbing.

03. Drainage & Utility Plan 1

Remove Plan Sheet 11 in its entirety and replace with Plan Sheet 11(R-1) attached to this Addendum No. 2. Locations of the proposed 2” steel gas vents have been revised.

04. Drainage & Utility Plan 2

Remove Plan Sheet 12 in its entirety and replace with Plan Sheet 12(R-1) attached to this Addendum No. 2. A reference callout to “See Gas Note 6” has been added near Main Street Station 13+55, Right.

05. Bridge General Notes 1

Remove Plan Sheet 39 in its entirety and replace with Plan Sheet 39(R-1) attached to this Addendum No. 2. “Materials” - Concrete Strengths notes have been revised.

06. Bridge General Plan and Elevation

Remove Plan Sheet 43 in its entirety and replace with Plan Sheet 43(R-1) attached to this Addendum No. 2. “5 Equal Contraction Joint Spaces” dimension note has been deleted from Bridge General Plan detail.

07. Precast Slab Layout and Details

Remove Plan Sheet 49 in its entirety and replace with Plan Sheet 49(R-1) attached to this Addendum No. 2. Precast Slab Placement Detail at Ends of Arch has been revised.

08. Moment Slab Details 1

Remove Plan Sheet 51 in its entirety and replace with Plan Sheet 51(R-1) attached to this Addendum No. 2. Cold Applied Liquid Membrane has been added to Moment Slab 5 – Section A Detail.

09. Typical Bridge Cross Sections 1

Remove Plan Sheet 53 in its entirety and replace with Plan Sheet 53(R-1) attached to this Addendum No. 2. Note #4 has been revised.

10. Greene Street Construction Plan – Sketch 1

Insert Greene Street Construction Plan Detail to Plan Sheet 38 shown on Sketch No. 1 attached to this Addendum No. 2. Granite step reconstruction detail has been revised.

C. Specifications - Contract Specific

1. Index

Remove page CS-ii in its entirety and replace with page CS-ii(R-1) attached to this Addendum No. 2. Appendix D – “RIDEM Permit” has been added.

2. Appendix D

Insert Appendix D – "RIDEM Permit" attached to this Addendum No. 2.

D. Specifications - Job Specific

01. Index

Remove pages JS-i and JS-iii in their entirety and replace with pages JS-i(R-1) and JS-iii(R-1) attached to this Addendum No. 2. Items 201.9915 and 912.9902 have been added.

02. Item 201.9915

Insert page JS-25a attached to this Addendum No. 2. Item 201.9915 – “Remove, Relocate and Reset Various Park Structures” has been added to the project.

03. Item 802.9902

Remove pages JS-55 and JS-59 in their entirety and replace with pages JS-55(R-1) and JS-59(R-1) attached to this Addendum No. 2. The Qualifications, Construction Methods and Construction Requirements sections have been revised.

04. Item 807.9901

Remove pages JS-67, JS-68, JS-69, JS-70 and JS-71 in their entirety and replace with pages JS-67(R-1), JS-68(R-1), JS-69(R-1), JS-70(R-1) and JS-71(R-1) attached to this Addendum No. 2. The Description, Materials, Construction Methods, Qualifications, Method of Measurement and Basis of Payment sections have been revised.

05. Item 808.9901

Remove pages JS-72, JS-73, JS-74 and JS-75 in their entirety and replace with pages JS-72(R-1), JS-73(R-1), JS-74(R-1) and JS-75(R-1) attached to this Addendum No. 2. The Materials, Submittals, Construction Methods and Basis of Payment sections have been revised.

06. Item 809.9901

Remove pages JS-76, JS-77, JS-78, JS-79 and JS-80 in their entirety and replace with pages JS-76(R-1), JS-77(R-1), JS-78(R-1), JS-79(R-1) and JS-80(R-1) attached to this Addendum No. 2. The Description, Materials and Construction Methods sections have been revised.

07. Item 820.9901

Remove page JS-84 in its entirety and replace with page JS-84(R-1) attached to this Addendum No. 2. The Method of Measurement section has been revised.

08. Items 831.9901 and 831.9902

Remove page JS-86 in its entirety and replace with page JS-86(R-1) attached to this Addendum No. 2. The Description and Materials sections have been revised.

09. Item 911.9901

Remove pages JS-89, JS-90, JS-91 and JS-92 in their entirety and replace with pages JS-89(R-1), JS-90(R-1), JS-91(R-1) and JS-92(R-1) attached to this Addendum No. 2. The Description, Materials, Construction Methods and Basis of Payment sections have been revised.

10. Item 911.9902

Remove pages JS-93, JS-94, JS-95, JS-96 and JS-97 in their entirety and replace with pages JS-93(R-1), JS-94(R-1), JS-95(R-1), JS-96(R-1) and JS-97(R-1) attached to this Addendum No. 2. The Description, Materials, Construction Methods, Method of Measurement and Basis of Payment sections have been revised.

11. Item 911.9903

Remove pages JS-98, JS-99, JS-100, JS-101 and JS-102 in their entirety and replace with pages JS-98(R-1), JS-99(R-1), JS-100(R-1), JS-101(R-1) and JS-102(R-1) attached to this Addendum No. 2. The Description, Materials, Construction Methods and Basis of Payment sections have been revised.

12. Item 912.9901

Remove page JS-104 in its entirety and replace with page JS-104(R-1) attached to this Addendum No. 2. The Description and Basis of Payment sections have been revised.

13. Item 912.9902

Insert page JS-104a attached to this Addendum No. 2. Item 912.9902 – “Granite Step” has been added to the project.

14. Item 938.1000

Remove page JS-110 in its entirety and replace with page JS-110(R-1) attached to this Addendum No. 2. The Base Prices have been revised per latest RIDOT adjustments.

E. Distribution of Quantities

1. Index

   Remove pages Index: 2, Index: 3 and Index: 4 in their entirety and replace with pages Index: 2(R-1), Index: 3(R-1) and Index: 4(R-1) attached to this Addendum No. 2.

2. Items 808.0320 and 808.0508

   Remove page 24 in its entirety and replace with page 24(R-1) attached to this Addendum No. 2. The quantities for Items 808.0320 and 808.0508 have been revised

3. Item 813.0300

   Remove page 28 in its entirety and replace with page 28(R-1) attached to this Addendum No. 2. The quantity for Item 813.0300 has been revised.

4. Item 911.0101

   Remove page 38 in its entirety and replace with page 38(R-1) attached to this Addendum No. 2. The quantity for Item 911.0101 has been revised.

5. Item 911.9902

   Remove page 39 in its entirety and replace with page 39(R-1) attached to this Addendum No. 2. The quantity and unit of measure for Item 911.9902 have been revised.

6. Items 201.0301, 201.0433, 201.9915, 601.9901, 813.0100, 908.0100, 928.9901 and L06.9905

   Remove page 54 in its entirety and replace with page 54(R-1) attached to this Addendum No. 2. Insert pages 55 and 56 attached to this Addendum No. 2. Items 201.0301, 201.0433, 201.9915, 601.9901, 813.0100, 908.0100, 928.9901 and L06.9905 have been added to the project.

11.4.2016

RI Department of Transportation

Administrator, Division of Project Management

FED. ROAD DIV. NO.	STATE	FEDERAL AID PROJECT NO.	FISCAL YEAR	SHEET NO.	TOTAL SHEETS
1	RI	BRO-BCDR(009)	2016	6(R-1)	99

ADDENDUM NO. 2

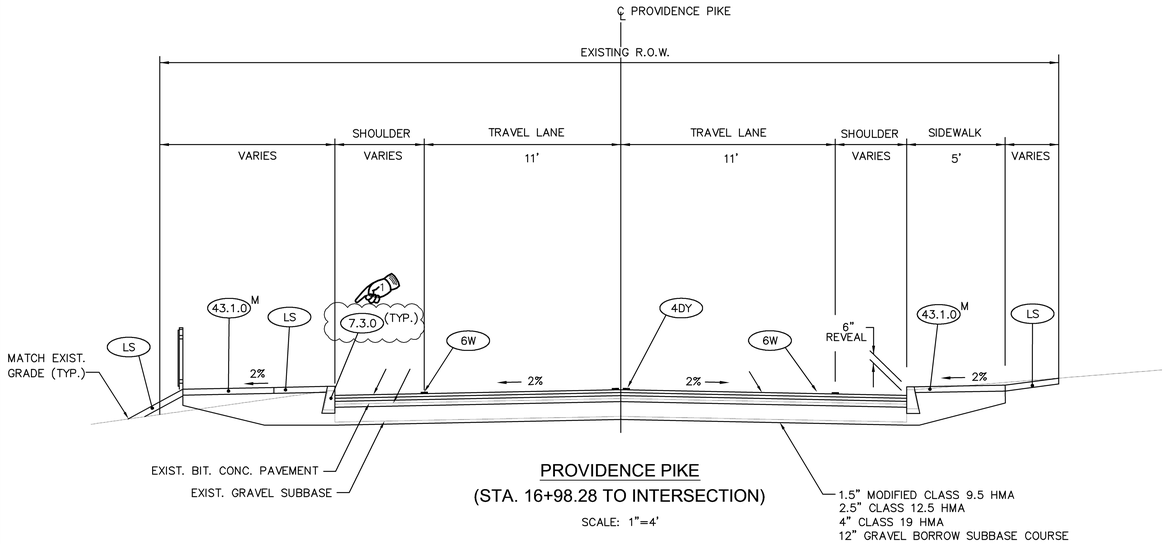

PROVIDENCE PIKE
(STA. 16+98.28 TO INTERSECTION)

SCALE: 1"=4'

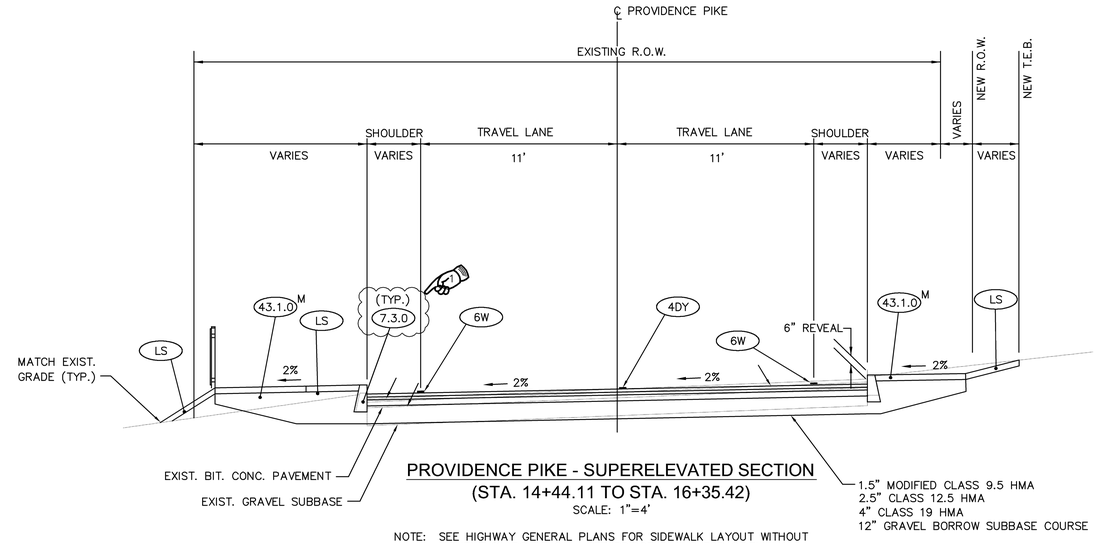

PROVIDENCE PIKE - SUPERELEVATED SECTION
(STA. 14+44.11 TO STA. 16+35.42)

SCALE: 1"=4'

NOTE: SEE HIGHWAY GENERAL PLANS FOR SIDEWALK LAYOUT WITHOUT MOMENT SLABS BELOW. SEE BRIDGE PLANS FOR SIDEWALK LAYOUT WITH MOMENT SLABS BELOW. SEE BRIDGE PLANS FOR SECTIONS ACROSS BRIDGE.

PROVIDENCE PIKE SUPERELEVATION RATE/TRANSITION TABLE			
BEGIN TRANSITION	FULL SUPERELEVATION	END TRANSITION	SUPERELEVATION RATE
STA. 11+40.18	STA. 12+06.85 TO STA. 12+63.39	STA. 13+30.06	2%
STA. 13+81.25	STA. 14+44.11 TO STA. 16+35.42	STA. 16+98.28	2%

	START	END
MOMENT SLAB #1	STA 11+58, RT	STA 12+75, RT (@ BRIDGE)
MOMENT SLAB #2	STA 12+40, LT	STA 12+81, LT (@ BRIDGE)
MOMENT SLAB #3	STA 14+39, RT (@ BRIDGE)	STA 14+49, RT
MOMENT SLAB #4	STA 14+62, RT	STA 15+31, RT
MOMENT SLAB #5	STA 14+40 (@ BRIDGE)	STA 15+26
MOMENT SLAB #6	STA 15+49, LT	STA 17+40, LT

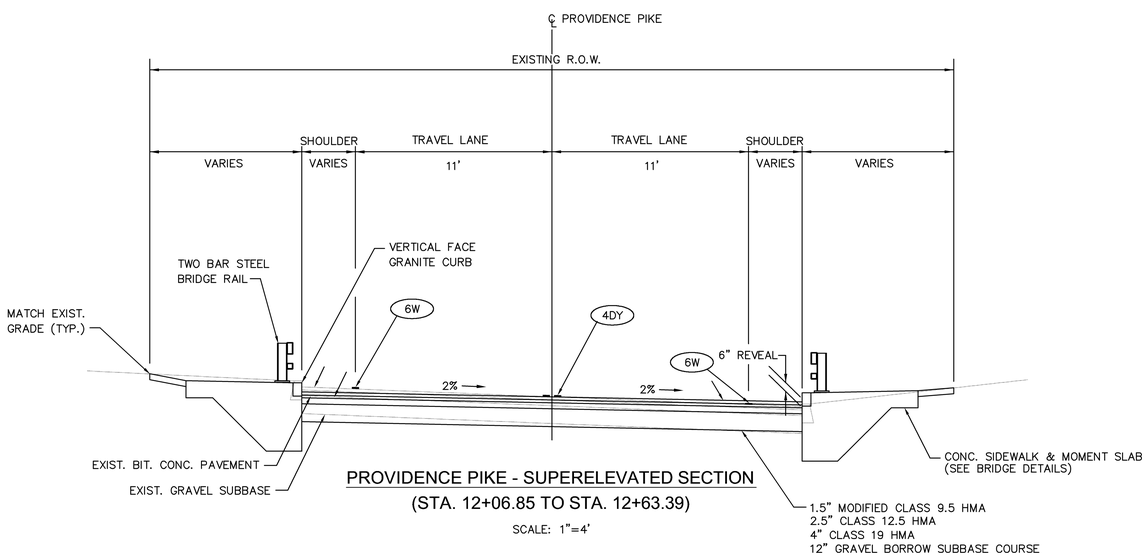

PROVIDENCE PIKE - SUPERELEVATED SECTION
(STA. 12+06.85 TO STA. 12+63.39)

SCALE: 1"=4'

PAVEMENT NOTES:

1. USE 1.5" CLASS 9.5 HMA OVER VARYING DEPTH CLASS 12.5 HMA OVER 12" GRAVEL BORROW OVER APPROACH SLABS AT ENDS OF PRECAST CONCRETE SLABS.

2. FOR SECTIONS THROUGH PRECAST SLAB LIMITS, SEE BRIDGE PLANS.

REVISIONS		
NO.	DATE	BY
1	10-14-16	MWC

RHODE ISLAND
DEPARTMENT OF TRANSPORTATION

SLATERSVILLE STONE ARCH BRIDGE #273 - RI ROUTE 5 OVER BRANCH RIVER
NORTH SMITHFIELD, RHODE ISLAND

TYPICAL SECTIONS 1

GAROFALO
GAROFALO & ASSOCIATES, INC.
85 CORLISS STREET \ P.O. BOX 6145
PROVIDENCE, RHODE ISLAND 02940

CHECKED BY: M.W.C. DATE: 9/15/16 SCALE: 1"=4'

L:\1960-00 SLATERSVILLE BR 273\dwg\01-Current\Highway drawings\0118A_V1_006_TYPSEC01.dwg

FED. ROAD DIV. NO.	STATE	FEDERAL AID PROJECT NO.	FISCAL YEAR	SHEET NO.	TOTAL SHEETS
1	RI	BRO-BCDR(009)	2016	7(R-1)	99

ADDENDUM NO. 2

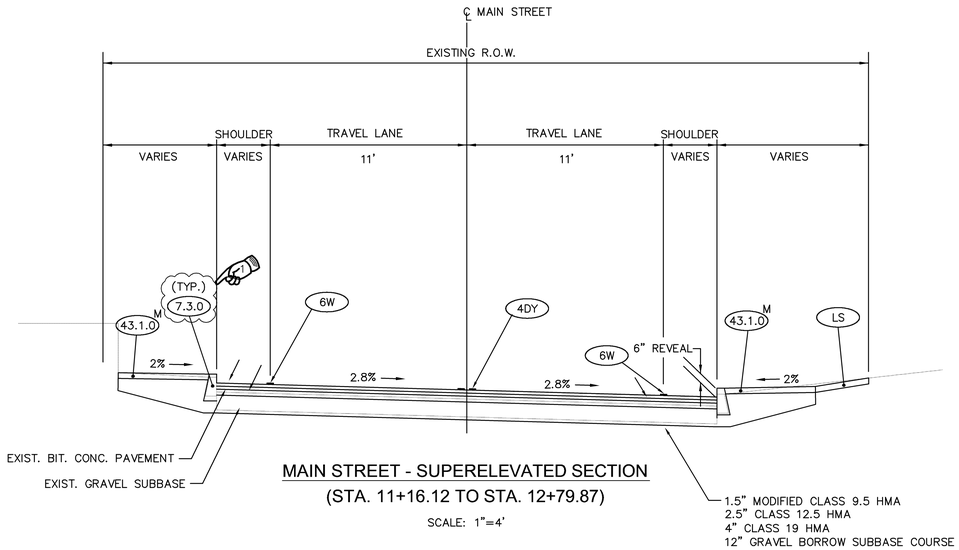

MAIN STREET - SUPERELEVATED SECTION
(STA. 11+16.12 TO STA. 12+79.87)
SCALE: 1"=4'

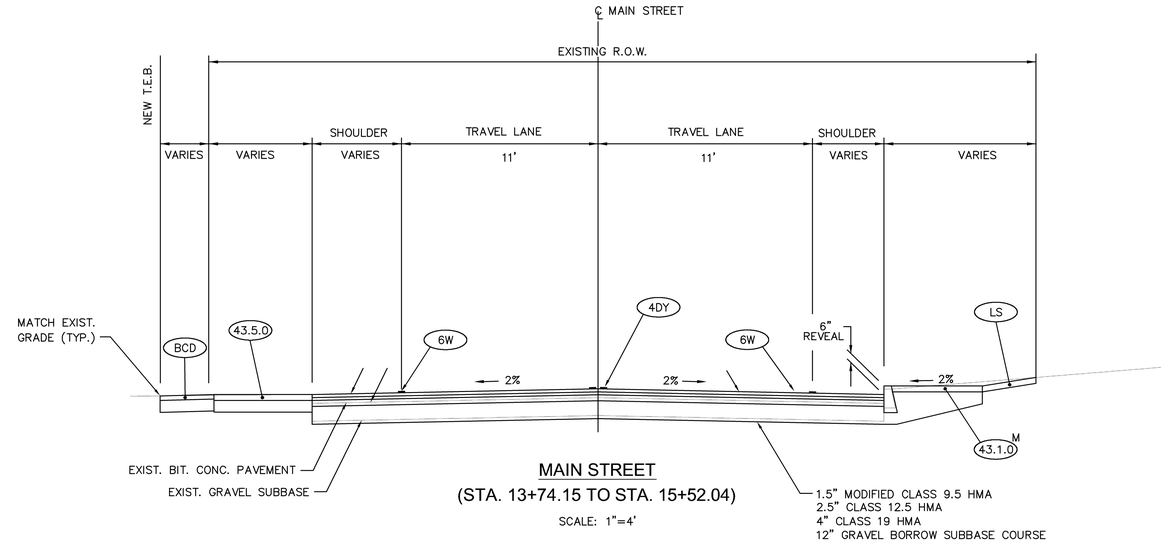

MAIN STREET
(STA. 13+74.15 TO STA. 15+52.04)
SCALE: 1"=4'

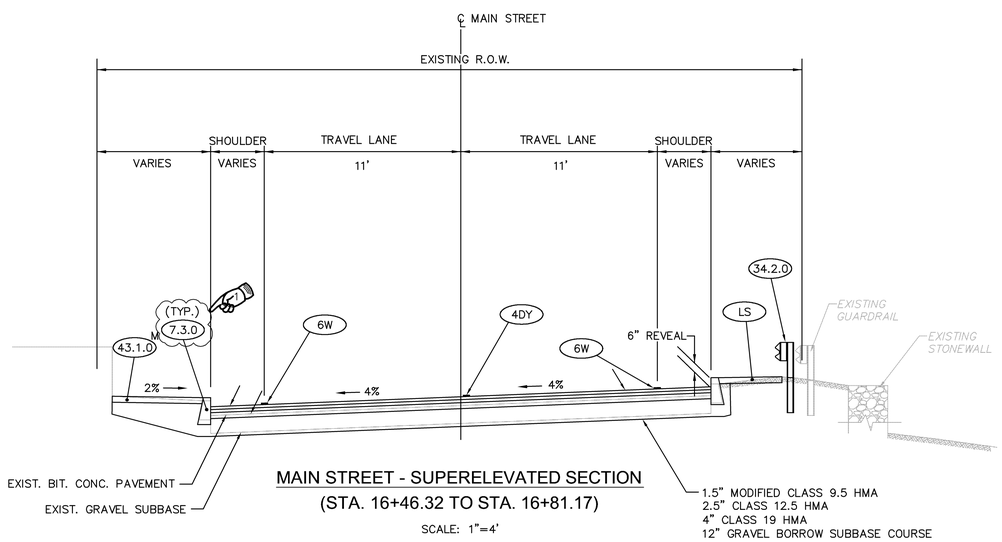

MAIN STREET - SUPERELEVATED SECTION
(STA. 16+46.32 TO STA. 16+81.17)
SCALE: 1"=4'

MAIN STREET SUPERELEVATION RATE/TRANSITION TABLE

BEGIN TRANSITION	FULL SUPERELEVATION	END TRANSITION	SUPERELEVATION RATE
STA. 10+21.84	STA. 11+16.12 TO STA. 12+79.87	STA. 13+74.15	2.8%
STA. 15+52.04	STA. 16+46.32 TO STA. 16+81.17	STA. 17+75.45	4%

REVISIONS		
NO.	DATE	BY
1	10-14-16	MWC

RHODE ISLAND
DEPARTMENT OF TRANSPORTATION

SLATERSVILLE STONE ARCH BRIDGE #273 - RI ROUTE 5 OVER BRANCH RIVER
NORTH SMITHFIELD, RHODE ISLAND

TYPICAL SECTIONS 2

GAROFALO
GAROFALO & ASSOCIATES, INC.
85 CORLISS STREET \ P.O. BOX 6145
PROVIDENCE, RHODE ISLAND 02940

CHECKED BY: M.W.C. DATE: 9/15/16 SCALE: 1"=4'

L:\1960-00 SLATERSVILLE BR 273\dwg\01-Current\Highway drawings\0118A_V1_007_TYPSEC02.dwg

0118A_V1_007_TYPSEC02 (ADDENDUM NO. 2)

FED. ROAD DIV. NO.	STATE	FEDERAL AID PROJECT NO.	FISCAL YEAR	SHEET NO.	TOTAL SHEETS
1	RI	BRO-BCDR(009)	2016	11(R-1)	99

ADDENDUM NO. 2

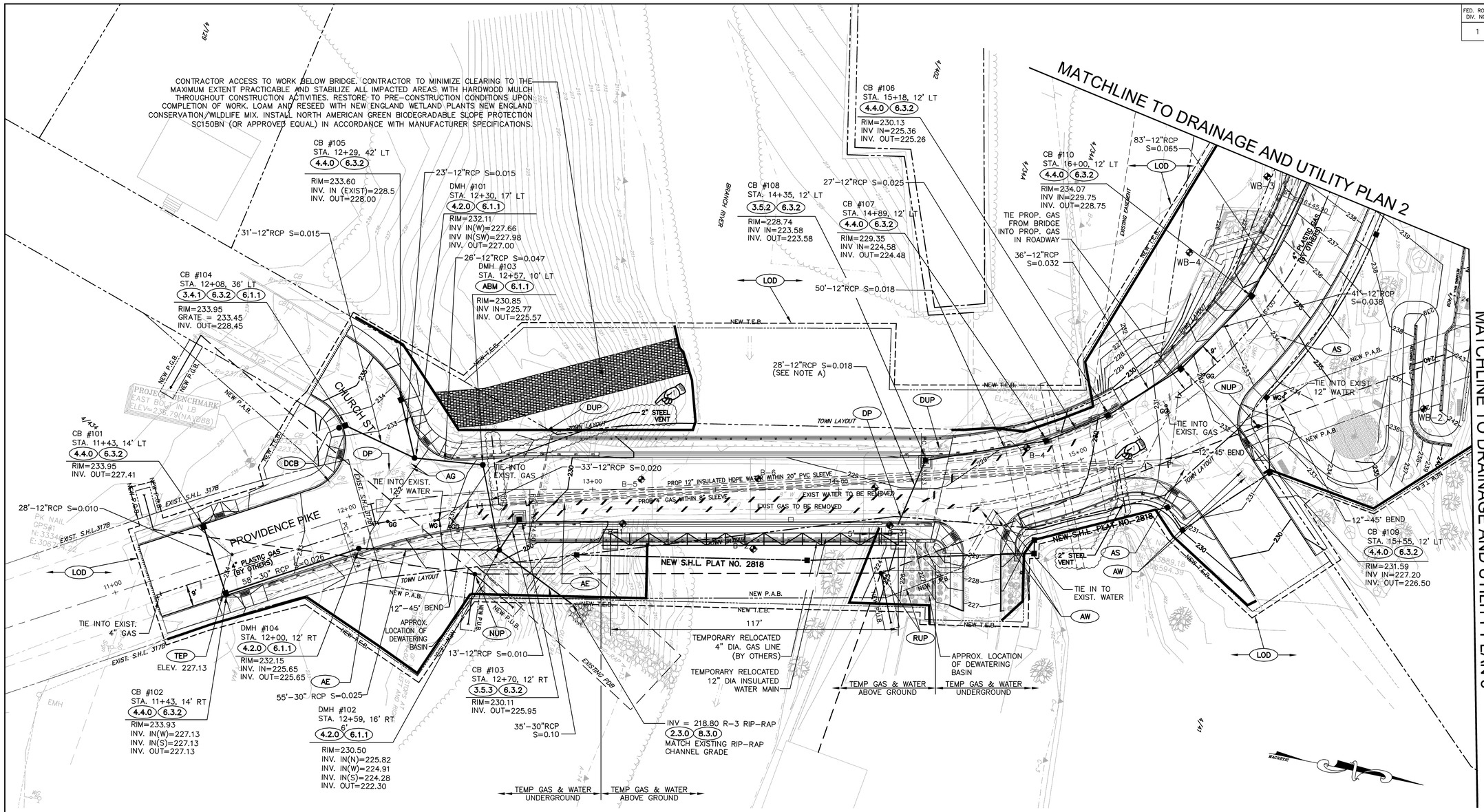

NATIONAL GRID GAS NOTES:

1. SLEEVE FOR THE GAS MAIN ACROSS THE BRIDGE TO CONSIST OF 8" COATED STEEL AND TO BE SUPPLIED BY NATIONAL GRID AND INSTALLED BY THE BRIDGE CONTRACTOR.
2. NATIONAL GRID SHALL SUPPLY ALL THE MATERIALS FOR THE GAS MAIN INSTALL.
3. THE REPLACEMENT GAS MAIN ACROSS THE BRIDGE (WITHIN THE SLEEVE) AND WITHIN PROVIDENCE PIKE AND MAIN STREET AND ACROSS TEMP. BRIDGE, TO BE INSTALLED BY NATIONAL GRID CONTRACTOR.
4. ALL LIVE GAS TIE-INS AND CUT-OFFS, 2" STEEL VENTS, ACTIVATIONS AND ABANDONMENT TO BE DONE BY NATIONAL GRID CREW.
5. THE PROPOSED DRAIN LINE BETWEEN DMH #102 AND DMH #103 ON PROVIDENCE PIKE AT STATION 12+60 CANNOT BE INSTALLED UNTIL THE NEW GAS MAIN IS INSTALLED AND THE OLD GAS MAIN IS PURGED AND ABANDONED IN PLACE.
6. THE REPLACEMENT OF THE GAS MAIN SECTION PASSING OVER THE EXISTING BOX CULVERT ON MAIN STREET AT STATION 13+60 WILL REQUIRE ONLY HAND DIGGING. STEEL PLATES WILL ALSO NEED TO BE PLACED OVER THE GAS MAIN FOR PROTECTION IN ACCORDANCE WITH NATIONAL GRID DWG. NO. CNST-6030, UNTIL THE NEW MAIN IS INSTALLED AND THE OLD MAIN ABANDONED OR UNTIL ADEQUATE COVER (MIN 24") IS RESTORED. NATIONAL GRID SHALL BE CONTACTED TO OVERSEE THIS WORK.
7. ALL GAS VALVE BOXES SHALL BE ADJUSTED TO THE NEW ROAD/SIDEWALK SURFACE. VALVE BOXES, IF REQUIRED FOR REPLACEMENT, CAN BE OBTAINED AT NATIONAL GRID'S PROVIDENCE LOCATION, 477 DEXTER STREET, PROVIDENCE, RI OR LINCOLN LOCATION, 642 GEORGE WASHINGTON HIGHWAY (QUANTITIES 5 OR LESS). GAS VALVE BOXES NEED TO BE ACCESSIBLE AT ALL TIMES TO BE OPERATED BY NATIONAL GRID IN THE EVENT OF AN EMERGENCY.
8. ALL CATHODIC PROTECTION BOXES (BOXES THAT CONTAIN WIRES THAT GO DOWN TO THE GAS MAIN) SHALL BE ADJUSTED TO THE NEW ROAD/SIDEWALK SURFACE. CARE SHALL BE EXERCISED WHEN ADJUSTING SO AS NOT TO DAMAGE THE WIRES. IF THE WIRES ARE DAMAGED OR IF ASSISTANCE IS NEEDED, CONTACT NATIONAL GRID CORROSION ENGINEER TO VISIT THE SITE. CONTACT ASAD AKINFOLARIN AT 401-215-5678 OR RON VINCENT AT 617-438-5192. NEW BOXES, IF REQUIRED, CAN BE OBTAINED AT NATIONAL GRID'S PROVIDENCE LOCATION, 477 DEXTER STREET, PROVIDENCE, RI OR LINCOLN LOCATION, 642 GEORGE WASHINGTON HIGHWAY (QUANTITIES 5 OR LESS). CONTRACTOR SHALL FOLLOW THE GUIDELINES LISTED IN NATIONAL GRID'S "GUIDELINES FOR WORKING AROUND CORROSION CONTROL SYSTEM COMPONENTS".
9. DUE TO SYSTEM RELIABILITY AND CONCERNS, IT IS NATIONAL GRID'S PRACTICE TO RESTRICT ALL CONSTRUCTION ON OR NEAR GAS FACILITIES BETWEEN NOVEMBER 15TH AND APRIL 15TH. ALL SCHEDULED WORK SHOULD BE COMPLETED BETWEEN APRIL 15TH AND NOVEMBER 15TH. AS GAS USAGE PEAKS DURING THE MONTHS OF DECEMBER TO MARCH DRIVEN BY HEATING NEEDS, NATIONAL GRID'S PRIORITY IS TO PROVIDE THEIR CUSTOMERS WITH SAFE AND RELIABLE SERVICE. ANY WORK ON OR NEAR THE GAS FACILITY WILL EXPOSE THEIR CUSTOMERS TO UNNECESSARY RISK. EXCEPTIONS WILL BE CONSIDERED ON A CASE BY CASE BASIS. APPROVALS FROM GAS CONTROL, OPERATIONAL ENGINEERING AND PROJECT ENGINEERING WILL BE REQUIRED FOR THESE CASES..
10. THE EXISTING GAS MAIN SHALL BE ABANDONED IN-PLACE AS SHOWN ON THE PLAN ABOVE, EXCEPT FOR THE SECTION BETWEEN STATIONS 12+60 AND 15+30 ON PROVIDENCE PIKE. THIS SECTION SHALL BE REMOVED AND DISPOSED OF IN ACCORDANCE WITH ALL NATIONAL GRID REGULATIONS. THIS WORK SHALL BE PAID FOR UNDER ITEM 201.9905.
11. BRIDGE CONTRACTOR IS RESPONSIBLE FOR PRE-DRILLING THE HOLES INTO THE UTILITY BRIDGE FOR THE GAS DOUBLE ROLLER SUPPORTS MOUNTING.
12. NATIONAL GRID CREW WILL ACTIVATE THE TEMP GAS MAIN AND CUT & ABANDON THE GAS MAIN CROSSING THE OLD BRIDGE TO ALLOW FOR THE REBUILD. NATIONAL GRID WILL TEST THE ABANDONED GAS MAIN FOR PCB CONTAMINATION.

NOTE A:
REBUILD EXISTING DRAINAGE TROUGH AT OUTFALL OF PIPE. NEW TROUGH TO BE BUILT TO ACCEPT FLOW FROM NEW PIPE AND CONNECT TO NEW PIPE THROUGH WALL. SEE SHEET 66. COST TO BE INCIDENTAL TO COST OF RCP PIPE.

GAROFALO & ASSOCIATES, INC.
85 CORLISS STREET \ P.O. BOX 6145
PROVIDENCE, RHODE ISLAND 02940

REVISIONS		
NO.	DATE	BY
1	10-14-16	MWC

RHODE ISLAND
DEPARTMENT OF TRANSPORTATION

SLATERSVILLE STONE ARCH BRIDGE #273 - RI ROUTE 5 OVER BRANCH RIVER
NORTH SMITHFIELD, RHODE ISLAND

DRAINAGE & UTILITY PLAN 1

CHECKED BY: M.W.C. DATE: 9/15/16 SCALE: 1"=20'

L:\1960-00 SLATERSVILLE BR 273\dwg\01-Current\Highway drawings\0118A_V1_011_D&U01.dwg

FED. ROAD DIV. NO.	STATE	FEDERAL AID PROJECT NO.	FISCAL YEAR	SHEET NO.	TOTAL SHEETS
1	RI	BRO-BCDR(009)	2016	12(R-1)	99

ADDENDUM NO. 2

NATIONAL GRID GAS NOTES:

1. SLEEVE FOR THE GAS MAIN ACROSS THE BRIDGE TO CONSIST OF 8" COATED STEEL AND TO BE SUPPLIED BY NATIONAL GRID AND INSTALLED BY THE BRIDGE CONTRACTOR.
2. NATIONAL GRID SHALL SUPPLY ALL THE MATERIALS FOR THE GAS MAIN INSTALL.
3. THE REPLACEMENT GAS MAIN ACROSS THE BRIDGE (WITHIN THE SLEEVE) AND WITHIN PROVIDENCE PIKE AND MAIN STREET TO BE INSTALLED BY NATIONAL GRID CONTRACTOR.
4. ALL LIVE GAS TIE-INS, CUT-OFFS, ACTIVATIONS AND ABANDONMENT TO BE DONE BY NATIONAL GRID CREW.
5. THE PROPOSED DRAIN LINE BETWEEN DMH #102 AND DMH #103 ON PROVIDENCE PIKE AT STATION 12+60 CANNOT BE INSTALLED UNTIL THE NEW GAS MAIN IS INSTALLED AND THE OLD GAS MAIN IS PURGED AND ABANDONED IN PLACE.
6. THE REPLACEMENT OF THE GAS MAIN SECTION PASSING OVER THE EXISTING BOX CULVERT ON MAIN STREET AT STATION 13+60 WILL REQUIRE ONLY HAND DIGGING. STEEL PLATES WILL ALSO NEED TO BE PLACED OVER THE GAS MAIN FOR PROTECTION IN ACCORDANCE WITH NATIONAL GRID DWG. NO. CNST-6030, UNTIL THE NEW MAIN IS INSTALLED AND THE OLD MAIN ABANDONED OR UNTIL ADEQUATE COVER (MIN 24") IS RESTORED. NATIONAL GRID SHALL BE CONTACTED TO OVERSEE THIS WORK.
7. ALL GAS VALVE BOXES SHALL BE ADJUSTED TO THE NEW ROAD/SIDEWALK SURFACE. VALVE BOXES, IF REQUIRED FOR REPLACEMENT, CAN BE OBTAINED AT NATIONAL GRID'S PROVIDENCE LOCATION, 477 DEXTER STREET, PROVIDENCE, RI OR LINCOLN LOCATION, 642 GEORGE WASHINGTON HIGHWAY (QUANTITIES 5 OR LESS). GAS VALVE BOXES NEED TO BE ACCESSIBLE AT ALL TIMES TO BE OPERATED BY NATIONAL GRID IN THE EVENT OF AN EMERGENCY.
8. ALL CATHODIC PROTECTION BOXES (BOXES THAT CONTAIN WIRES THAT GO DOWN TO THE GAS MAIN) SHALL BE ADJUSTED TO THE NEW ROAD/SIDEWALK SURFACE. CARE SHALL BE EXERCISED WHEN ADJUSTING SO AS NOT TO DAMAGE THE WIRES. IF THE WIRES ARE DAMAGED OR IF ASSISTANCE IS NEEDED, CONTACT NATIONAL GRID CORROSION ENGINEER TO VISIT THE SITE. CONTACT ASAD AKINOLARIN AT 401-215-5678 OR RON VINCENT AT 617-438-5192. NEW BOXES, IF REQUIRED, CAN BE OBTAINED AT NATIONAL GRID'S PROVIDENCE LOCATION, 477 DEXTER STREET, PROVIDENCE, RI OR LINCOLN LOCATION, 642 GEORGE WASHINGTON HIGHWAY (QUANTITIES 5 OR LESS). CONTRACTOR SHALL FOLLOW THE GUIDELINES LISTED IN NATIONAL GRID'S "GUIDELINES FOR WORKING AROUND CORROSION CONTROL SYSTEM COMPONENTS".
9. DUE TO SYSTEM RELIABILITY AND CONCERNS, IT IS NATIONAL GRID'S PRACTICE TO RESTRICT ALL CONSTRUCTION ON OR NEAR GAS FACILITIES BETWEEN NOVEMBER 15TH AND APRIL 15TH. ALL SCHEDULED WORK SHOULD BE COMPLETED BETWEEN APRIL 15TH AND NOVEMBER 15TH. AS GAS USAGE PEAKS DURING THE MONTHS OF DECEMBER TO MARCH DRIVEN BY HEATING NEEDS, NATIONAL GRID'S PRIORITY IS TO PROVIDE THEIR CUSTOMERS WITH SAFE AND RELIABLE SERVICE. ANY WORK ON OR NEAR THE GAS FACILITY WILL EXPOSE THEIR CUSTOMERS TO UNNECESSARY RISK. EXCEPTIONS WILL BE CONSIDERED ON A CASE BY CASE BASIS. APPROVALS FROM GAS CONTROL, OPERATIONAL ENGINEERING AND PROJECT ENGINEERING WILL BE REQUIRED FOR THESE CASES..
10. THE EXISTING GAS MAIN SHALL BE ABANDONED IN-PLACE AS SHOWN ON THE PLAN ABOVE, EXCEPT FOR THE SECTION BETWEEN STATIONS 12+60 AND 15+30 ON PROVIDENCE PIKE. THIS SECTION SHALL BE REMOVED AND DISPOSED OF IN ACCORDANCE WITH ALL NATIONAL GRID REGULATIONS. THIS WORK SHALL BE PAID FOR UNDER ITEM 201.9905.
11. BRIDGE CONTRACTOR IS RESPONSIBLE FOR PRE-DRILLING THE HOLES INTO THE UTILITY BRIDGE FOR THE GAS DOUBLE ROLLER SUPPORTS MOUNTING.
12. NATIONAL GRID CREW WILL ACTIVATE THE TEMP GAS MAIN AND CUT & ABANDON THE GAS MAIN CROSSING THE OLD BRIDGE TO ALLOW FOR THE REBUILD. NATIONAL GRID WILL TEST THE ABANDONED GAS MAIN FOR PCB CONTAMINATION.

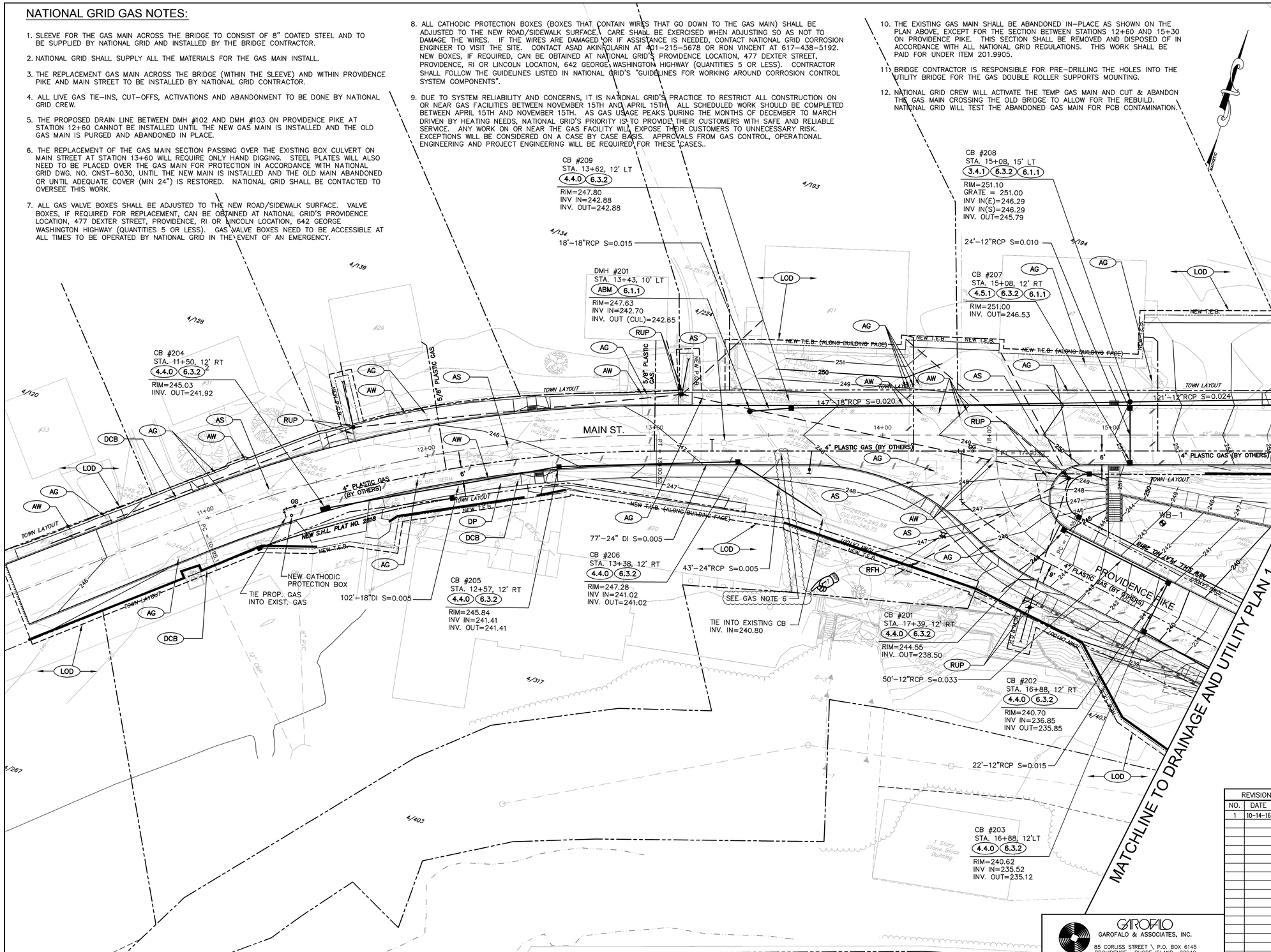

REVISIONS		
NO.	DATE	BY
1	10-14-16	MWC

RHODE ISLAND
DEPARTMENT OF TRANSPORTATION

SLATERSVILLE STONE ARCH BRIDGE #273 - RI ROUTE 5 OVER BRANCH RIVER
NORTH SMITHFIELD, RHODE ISLAND

DRAINAGE & UTILITY PLAN 2

GAROFALO & ASSOCIATES, INC.
85 CORLISS STREET \ P.O. BOX 6145
PROVIDENCE, RHODE ISLAND 02940

CHECKED BY: M.W.C. DATE: 9/15/16 SCALE: 1"=20'

0118A_V1_012_D&U02 (ADDENDUM NO. 2)

L:\1960-00 SLATERSVILLE BR 273\dwg\01-Current\Highway drawings\0118A_V1_011_D&U01.dwg

GENERAL NOTES

1. ALL CONSTRUCTION INDICATED ON THESE PLANS SHALL BE IN ACCORDANCE WITH:
   - THE 2013 EDITION OF AND SUPPLEMENTS THRU 2015 TO THE RHODE ISLAND DEPARTMENT OF TRANSPORTATION STANDARD SPECIFICATIONS FOR ROAD AND BRIDGE CONSTRUCTION (RI STANDARD SPECIFICATIONS).
   - THE 2012 AMERICAN ASSOCIATION OF STATE HIGHWAY AND TRANSPORTATION OFFICIALS (AASHTO) LRFD BRIDGE CONSTRUCTION SPECIFICATIONS, 7TH EDITION, INCLUDING THE LATEST INTERIM REVISIONS.
   - THE SPECIFICATIONS ACCOMPANYING THESE PLANS.
2. DIMENSIONS, STATIONS, AND ELEVATIONS ARE SHOWN TO THE NEAREST ONE-HUNDREDTH OF A FOOT OR ONE-EIGHTH OF AN INCH, EXCEPT STRUCTURAL STEEL DIMENSIONS WHICH ARE TO THE NEAREST ONE-SIXTEENTH OF AN INCH.
3. ALL ELEVATIONS ARE REFERENCED TO THE NORTH AMERICAN VERTICAL DATUM OF 1988 (NAVD 88).
4. COORDINATES USED ON THESE PLANS ARE BASED ON THE STATEWIDE COORDINATE SYSTEM, THE NORTH AMERICAN DATUM OF 1983 (NAD 83).
5. TOPOGRAPHIC CONDITIONS WERE OBTAINED FROM FIELD SURVEY BY GAROFALO ASSOCIATES PERFORMED IN SEPTEMBER 2013. ACCURACY OF VERTICAL TOPOGRAPHY IS WITHIN 0.10 OF A FOOT.
6. FOR BENCH MARKS AND TIES SEE HIGHWAY LOCATION PLANS.
7. ANGLES ARE SHOWN TO THE NEAREST SECOND.
8. ALL PRECAST SLABS, MOMENT SLABS, AND FOOTINGS SHALL BE APPROVED BY THE ENGINEER AS TO DIMENSIONS, ELEVATIONS, AND SUITABILITY OF FOUNDATION MATERIAL BEFORE THE PLACING OF PRECAST SLABS OR CAST IN PLACE CONCRETE.
9. THE EXISTING UTILITIES SHOWN ON THE PLANS ARE APPROXIMATE AND WERE LOCATED USING THE BEST AVAILABLE INFORMATION. NO BUILDING SERVICE CONNECTIONS (ELECTRIC, TELEPHONE, GAS, WATER, SANITARY AND OTHERS) ARE SHOWN. THE CONTRACTOR IS TO ASSUME THAT SERVICES TO ALL BUILDINGS ARE PRESENT.
10. BOTH FEDERAL AND STATE LAW (RI. GENERAL LAW 39-1.2) REQUIRE NOTIFICATION OF APPROPRIATE UTILITY COMPANIES BEFORE DIGGING, TRENCHING, BLASTING, DEMOLISHING, BORING, BACK FILLING, GRADING, LANDSCAPING, OR OTHER EARTH MOVING OPERATIONS. IT IS THE CONTRACTOR'S RESPONSIBILITY TO NOTIFY ALL UTILITY COMPANIES (INCLUDING THROUGH THE □DIG SAFE□ PROGRAM) TO ENSURE THAT ALL UTILITIES, BOTH UNDERGROUND AND OVERHEAD, HAVE BEEN MARKED BEFORE COMMENCEMENT OF SUCH WORK. THE CONTRACTOR SHOULD UNDERSTAND THAT NOT ALL UTILITIES SUBSCRIBE TO THE □DIG SAFE□ PROGRAM. ANY DAMAGE TO EXISTING UTILITIES MARKED IN THE FIELD, OR AS A RESULT OF FAILING TO CONTACT THE APPROPRIATE UTILITY COMPANIES, SHALL BE REPAIRED OR REPLACED (AS DEEMED APPROPRIATE BY THE STATE AND/OR THE IMPACTED UTILITY COMPANY) AT NO ADDITIONAL COST OF THE STATE.
11. NO INFORMATION WAS AVAILABLE REGARDING THE EXISTING ARCH GEOMETRY. THE LOCATION OF THE EXISTING ARCH ELEMENTS AS SHOWN ON THE PLANS IS APPROXIMATE.
12. CONTRACTORS METHOD OF CONSTRUCTION AND THE REBUILDING OF THE NORTHEAST AND NORTHWEST CHANNEL WALL, RETAINING WALLS AND THE SPANDREL WALLS BELOW THE PRECAST SLABS SHALL BE IN ACCORDANCE WITH THE SPECIAL PROVISION CODES 911.9901, 911.9902, AND 911.9903 AND BE SUBMITTED FOR REVIEW AND APPROVAL BY A CULTURAL RESOURCE MONITOR PAID FOR BY RIDOT.

DESIGN DATA (FOR SUPERSTRUCTURE AND MOMENT SLABS ONLY. THE EXISTING ARCH FOUNDATION WAS NOT EVALUATED)

1. DESIGN SPECIFICATIONS
   - SUPERSTRUCTURE SHALL CONSIST OF THE FOLLOWING:

     PRECAST SLABS
     PARAPETS
     TWO BAR BRIDGE RAILING
     PEDESTRIAN RAILING

   - THE AASHTO LRFD BRIDGE DESIGN SPECIFICATIONS, 2012, 7TH EDITION INCLUDING ALL INTERIM REVISIONS TO DATE.
   - THE RHODE ISLAND LRFD BRIDGE DESIGN MANUAL 2007 EDITION INCLUDING ALL REVISIONS TO DATE.
   - ALL OTHER APPLICABLE DESIGN SPECIFICATIONS ARE REFERENCED IN SECTION 1 OF THE RHODE ISLAND LRFD BRIDGE DESIGN MANUAL DATED 2007.
   - THE 2010 EDITION AND SUPPLEMENTS TO THE RHODE ISLAND DEPARTMENT OF TRANSPORTATION STANDARD SPECIFICATIONS FOR ROAD AND BRIDGE CONSTRUCTION (RI STANDARD SPECIFICATIONS).
   - IN CASE OF CONFLICT, THE RHODE ISLAND LRFD BRIDGE DESIGN MANUAL SHALL GOVERN.
2. LOAD MODIFIERS

   THE LOAD MODIFIERS FOR THIS PROJECT ARE AS FOLLOWS:

   - THE LOAD MODIFIER FOR DUCTILITY SHALL BE TAKEN AS 1.0 FOR ALL LIMIT STATES.
   - THE LOAD MODIFIER FOR REDUNDANCY SHALL BE TAKEN AS 1.0 FOR ALL LIMIT STATES.
   - THE LOAD MODIFIER FOR OPERATIONAL IMPORTANCE SHALL BE TAKEN AS 1.05 FOR STRENGTH LIMIT STATES AND 1.0 FOR ALL OTHER LIMIT STATES.
3. LOAD FACTORS

   ALL LOAD FACTORS SHALL BE IN ACCORDANCE WITH THE AASHTO LRFD BRIDGE DESIGN SPECIFICATIONS, EXCEPT AS MODIFIED IN THE RHODE ISLAND LRFD BRIDGE DESIGN MANUAL (SPECIFIED BELOW).

   - THE LOAD FACTOR FOR TEMPERATURE GRADIENT SHALL BE TAKEN AS 0.0 AT STRENGTH AND EXTREME EVENT LIMIT STATES, 1.0 AT SERVICE LIMIT STATE WHEN LIVE LOAD IS NOT CONSIDERED, AND 0.50 AT SERVICE LIMIT STATE WHEN LIVE LOAD IS CONSIDERED.
   - THE LOAD FACTOR FOR LIVE LOAD FOR THE EXTREME EVENT I SHALL BE TAKEN AS ZERO.
   - THE LOAD FACTOR FOR DEAD LOAD FOR THE EXTREME EVENT I AND EXTREME EVENT II SHALL BE TAKEN AS 1.0
   - THE LOAD FACTOR FOR SETTLEMENT FOR ALL LIMIT STATES SHALL BE TAKEN AS 1.0
4. LIVE LOADS
   - THE DESIGN VEHICULAR LIVE LOAD SHALL BE THE HL-93 DESIGNATION ADJUSTED FOR DYNAMIC LOAD ALLOWANCE AND MULTIPLE PRESENCE FACTOR.
   - THE DESIGN PEDESTRIAN LIVE LOAD SHALL BE 75 PSF.
5. TRAFFIC DATA

   AADT (2014) ..... 7,885 VPD
   AADT (2024) ..... 8,710 VPD
   D 52/48
   K 8%
   T 1.41%
   DDHV ..... 328 VPH
   DHV ..... 631 VPD
   DESIGN SPEED ..... 25 MPH
6. HYDRAULIC AND SCOUR DATA
   - SEE HYDRAULIC REPORT BY WRIGHT-PIERCE DATED JUNE 2, 2015.

     HYDRAULIC DESIGN DATA

     DRAINAGE AREA: .....89.6 SQUARE MILES
     DESIGN FLOOD DISCHARGE: .....7038 CUBIC FEET PER SECOND
     DESIGN FLOOD FREQUENCY: .....100 YEARS
     DESIGN FLOOD VELOCITY: .....9.77 FEET PER SECOND
     DESIGN FLOOD ELEVATION: .....217.89 FEET, NAVD

   - NO SCOUR ANALYSIS WAS DONE.
7. SEISMIC DESIGN DATA
   - THIS BRIDGE HAS BEEN CLASSIFIED AS □NON-CRITICAL□.
   - THE SITE HAS BEEN CLASSIFIED AS SITE CLASS D.
   - NO SEISMIC ANALYSIS REQUIRED.
8. WIND LOADING DESIGN DATA

   THE WIND LOADING DESIGN SHALL BE IN ACCORDANCE WITH THE AASHTO LRFD BRIDGE DESIGN SPECIFICATIONS, THE RHODE ISLAND LRFD BRIDGE DESIGN MANUAL, AND AS MODIFIED HEREIN.

   - EXCEPT DURING CONSTRUCTION, THE DESIGN WIND PRESSURE IS BASED ON A DESIGN WIND SPEED OF 110 MPH.
   - THE DESIGN WIND PRESSURES DURING CONSTRUCTION SHALL BE AS SPECIFIED UNDER THE NOTES TITLED □GENERAL NOTES REGARDING TEMPORARY CONSTRUCTION CONDITIONS□.
9. FOUNDATION DESIGN DATA

   SPREAD FOOTINGS:

   THE FACTORED BEARING RESISTANCE FOR THE VARIOUS TYPES OF BEARING MATERIAL ARE AS FOLLOWS:

		FACTORED BEARING DESISTANCE (KSF)	
LOCATION	TYPE OF BEARING MATERIAL	STRENGTH LIMIT STATES	EXTREME LIMIT STATES

MATERIALS

REINFORCING STEEL: (INCLUDING DRILL AND GROUT BARS, METAL TIES AND ANCHORAGES, BUT NOT INCLUDING THE REINFORCING IN FOOTINGS)

- AASHTO DESIGNATION M 31, GRADE 60 (GALVANIZED)
- GALVANIZED COATING – AASHTO M232

REINFORCING STEEL: (FOOTINGS)

- AASHTO DESIGNATION M 31, GRADE 60

CONCRETE STRENGTHS:

- CLASS HP 3/4" f'c=5,000 PSI

  PRECAST SLAB, PARAPETS, TWO BAR AND PEDESTRIAN RAIL BASE, END POST, CHANNEL WALL CONCRETE CAP

- CLASS XX 3/4" f'c=4,000 PSI

  APPROACH SLABS, CONCRETE PEDESTALS, MOMENT SLABS, (EXCEPT MOMENT SLAB 6)

- CLASS LW 3/4" f'c=4,000 PSI

  CONCRETE FILL OVER ARCH

- CLASS XX 3/8" f'c=4,000 PSI

  BRIDGE SIDEWALKS AND SIDEWALKS ON MOMENT SLABS, MOMENT SLAB 6

  CONCRETE ADDITIVE SHALL BE L.M. SCOFIELDS INTEGRAL CHROMIX ADMIXTURE, COLOR NO. 1266 "COOL GRAY"

  AGGREGATE TO BE TAN/BROWN IN COLOR

FOUNDATIONS

GEOTECHNICAL SOIL BORINGS WERE PERFORMED BY GEI CONSULTANTS.

GAROFALO & ASSOCIATES, INC.
P.O. BOX 6145, 85 CORLISS STREET
PROVIDENCE, RI 02940

REVISIONS		
NO.	DATE	BY
1	11-3-16	MWC

RHODE ISLAND
DEPARTMENT OF TRANSPORTATION

SLATERSVILLE STONE ARCH BR. #273
RI ROUTE 5 OVER BRANCH RIVER
NORTH SMITHFIELD RHODE ISLAND

BRIDGE GENERAL NOTES I

CHECKED BY _____ DATE 9/15/16 SCALE N.T.S.

FED. ROAD DIV. NO.	STATE	FEDERAL AID PROJECT NO.	FISCAL YEAR	SHEET NO.	TOTAL SHEETS
1	R.I.	BRO–BCDR(009)	2016	43(R–1)	99

ADDENDUM NO. 2

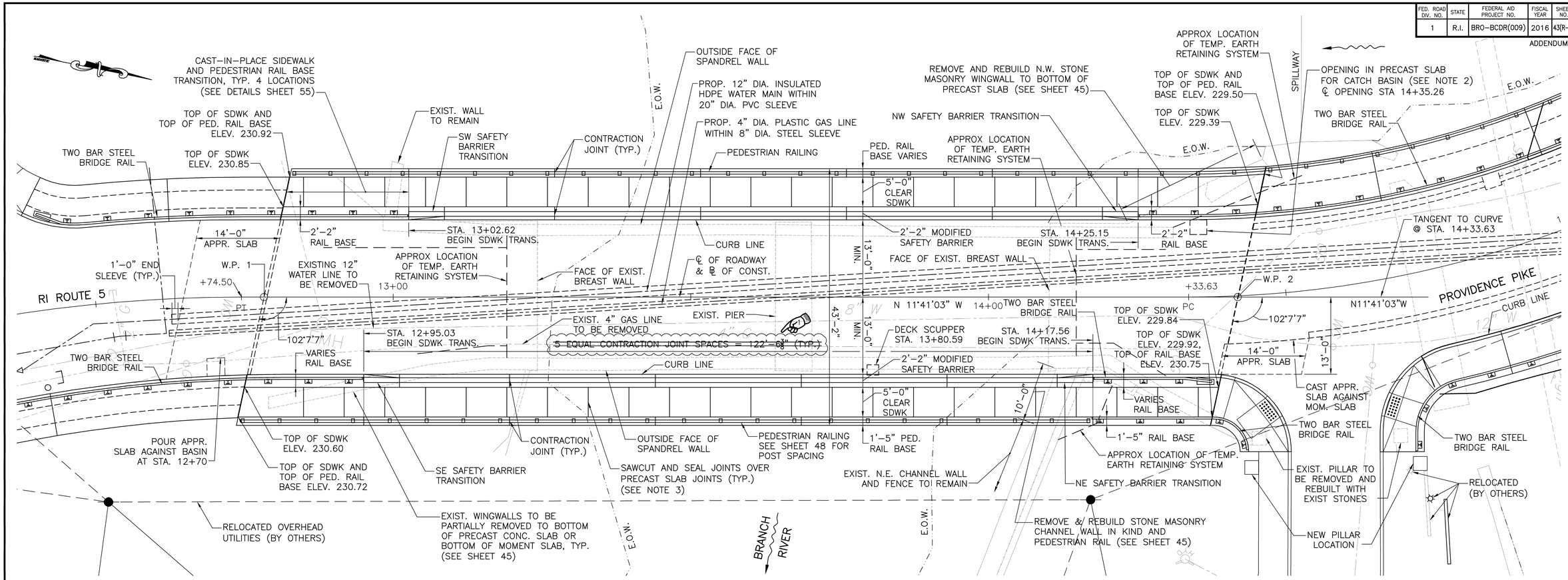

BRIDGE GENERAL PLAN

SCALE: $\frac{1}{8}$" = 1'–0"

WP	STA	OFFSET	NORTH	EAST
1	12+78.29	–	333661.4939	306636.2566
2	14+41.89	0.19' RT	333821.7060	306603.1242

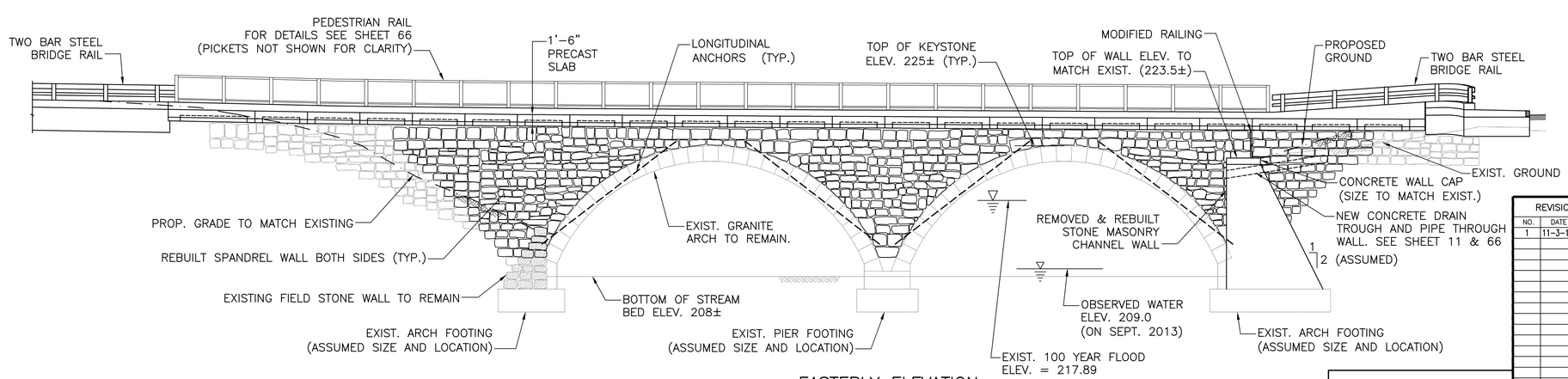

EASTERLY ELEVATION

SCALE: $\frac{1}{8}$" = 1'–0"

NOTES:

1. FOR CURVE DATA AT FACE OF CURB SEE SHEET 25.
2. AFTER CATCH BASIN IS INSTALLED PLACE CLASS HP F'c = 5000 PSI CONCRETE BETWEEN CATCH BASIN AND PRECAST SLAB.
3. FOR LOCATION OF PRECAST SLAB JOINTS SEE "BOTTOM OF PRECAST SLAB ELEVATIONS AT CENTERLINE OF JOINTS" TABLE ON SHEET 49.

GAROFALO & ASSOCIATES, INC.
P.O. BOX 6145, 85 CORLISS STREET
PROVIDENCE, RI 02940

REVISIONS		
NO.	DATE	BY
1	11–3–16	MWC

RHODE ISLAND
DEPARTMENT OF TRANSPORTATION

SLATERSVILLE STONE ARCH BR. #273
RI ROUTE 5 OVER BRANCH RIVER

NORTH SMITHFIELD RHODE ISLAND

BRIDGE GENERAL PLAN AND ELEVATION

CHECKED BY _____ DATE 9/15/16 SCALE AS NOTED

FED. ROAD DIV. NO.	STATE	FEDERAL AID PROJECT NO.	FISCAL YEAR	SHEET NO.	TOTAL SHEETS
1	R.I.	BRO-BCDR(009)	2016	49(R-1)	99

ADDENDUM NO. 2

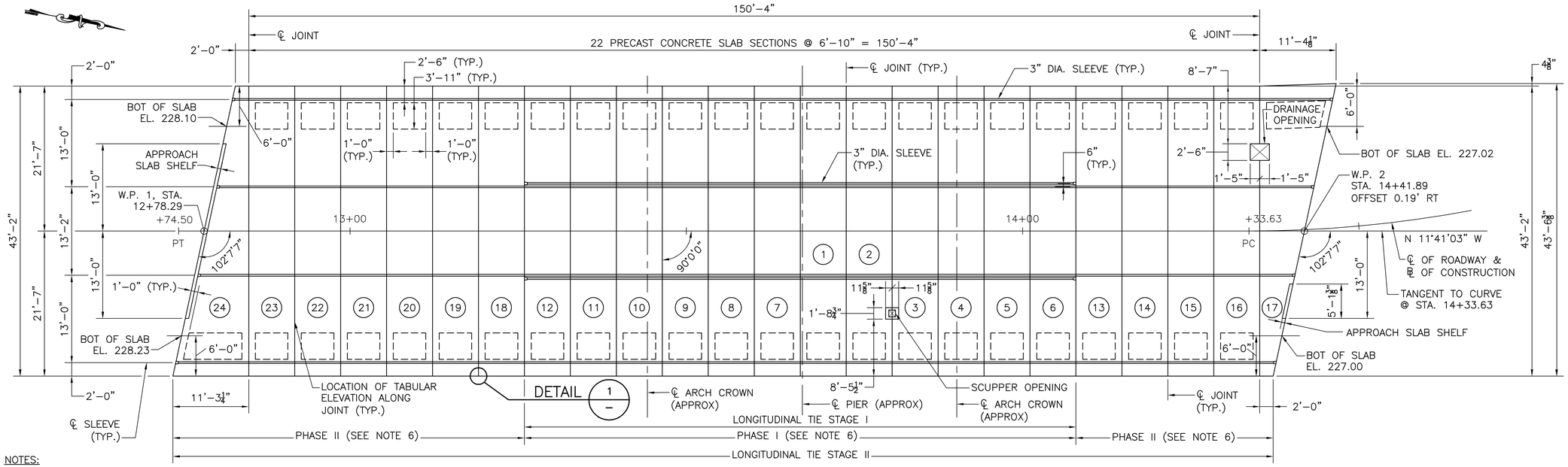

PRECAST SLAB & PLACEMENT SEQUENCE

SCALE: 1/8" = 1'-0"

BOTTOM OF PRECAST SLAB ELEVATIONS AT ℄ OF JOINT	
STA	ELEV.
12+84.93	228.04
12+91.76	227.93
12+98.59	227.83
13+05.43	227.74
13+12.26	227.66
13+19.09	227.60
13+25.93	227.54
13+32.76	227.50
13+39.59	227.46
13+46.43	227.43
13+53.26	227.39
13+60.09	227.35
13+66.93	227.32
13+73.76	227.28
13+80.59	227.24
13+87.43	227.21
13+94.26	227.17
14+01.09	227.13
14+07.93	227.10
14+14.76	227.06
14+21.59	227.02
14+28.43	227.00
14+35.26	226.99

NOTES:

1. THE FABRICATOR SHALL FURNISH ACCESS HANDHOLES AS REQUIRED FOR LONGITUDINAL TIE INSTALLATION.
2. WHEN PLACING THE PRECAST PANELS, THE LOADS FROM THE CRANE SHALL STAY BEHIND THE FACE OF THE BREAST WALL OF THE EXISTING ARCH.
3. NO LOADS SHALL BE PLACED ON THE PRECAST PANELS UNTIL AFTER ALL LONGITUDINAL TIES HAVE BEEN FULLY TENSIONED.
4. SLAB SECTIONS 1–12 TO BE PLACED AND TENSIONED PRIOR TO PLACEMENT OF SLAB SECTIONS 13–24 AND PLACEMENT OF CONCRETE SLAB ON GRADE UNDER SECTIONS 14–24.
5. GROUT UNDER ALL SLAB SECTIONS TO BE PLACED IN A CONTINUOUS OPERATION.
6. THE CONSTRUCTION OF PRECAST SLABS, INCLUDING PEDESTALS AND CONCRETE SLAB ON GRADE SHALL BE DONE IN PHASES, DUE TO LOCATION OF CRANE FOR PLACEMENT OF PRECAST SLABS.
7. WHEN GROUTING JOINTS BETWEEN PANELS 1 THRU 12 IN LONGITUDINAL TIE STAGE I, CARE SHALL BE TAKEN TO PREVENT GROUT FROM ENTERING SLEEVES FOR STAGE II LONGITUDINAL TIES.

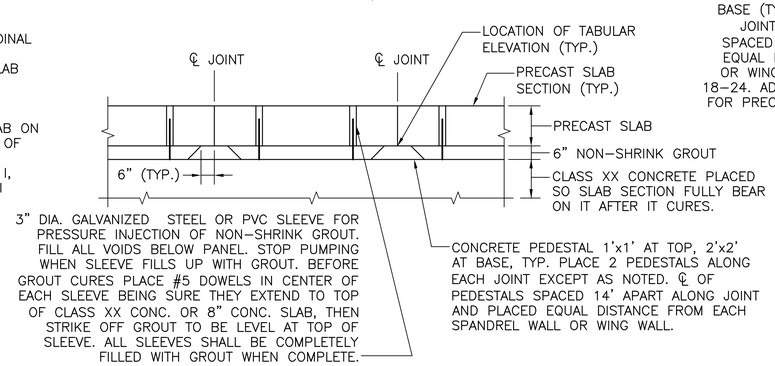

TYPICAL PRECAST SLAB PLACEMENT DETAIL OVER ARCH

SCALE: 3/8" = 1'-0"

CONCRETE PEDESTAL 1'x1' AT TOP, 2'x2' AT BASE (TYP). PLACE 2 PEDESTALS ALONG EACH JOINT EXCEPT AS NOTED. ℄ OF PEDESTALS SPACED 14' APART ALONG JOINT AND PLACED EQUAL DISTANCE FROM EACH SPANDREL WALL OR WING WALL, FOR PRECAST SLABS 1–12 & 18–24. ADJUST WESTERLY CONCRETE PEDESTALS FOR PRECAST SLABS 13–17 TOWARD SPANDREL WALL TO CLEAR UTILITY SLEEVE.

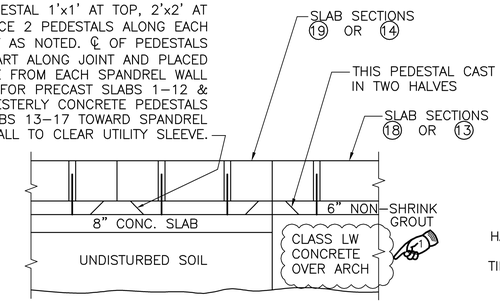

PRECAST SLAB PLACEMENT DETAIL AT ENDS OF ARCH

SCALE: 3/8" = 1'-0"

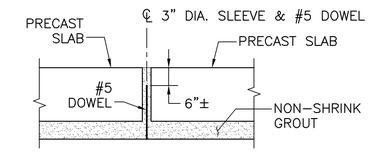

DOWEL/SLEEVE DETAIL

NOT TO SCALE

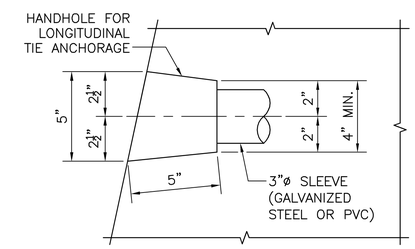

RECESS FOR LONGITUDINAL TIE ANCHORAGE DETAIL

NOT TO SCALE

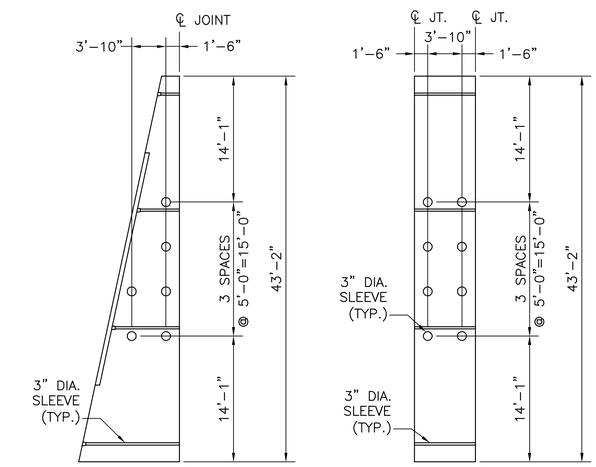

TYPICAL PRECAST SLAB END SECTION

(SECTION 24 SHOWN, SECTION 17 SIMILAR)

TYPICAL PRECAST SLAB INTERIOR SECTION

TYPICAL PRECAST SLAB DETAIL

SCALE: 1/8" = 1'-0"

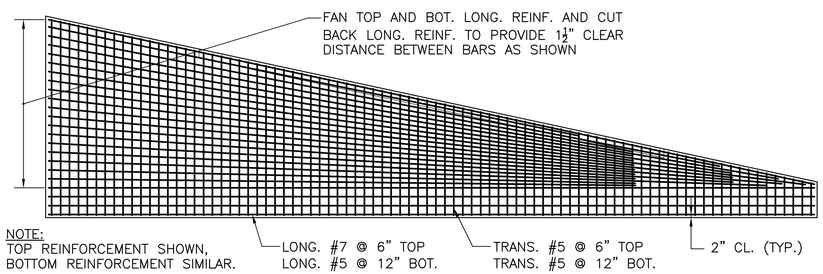

NOTE:
TOP REINFORCEMENT SHOWN, BOTTOM REINFORCEMENT SIMILAR.

REINFORCEMENT FANNING AT ACUTE CORNERS

SCALE: 1/4" = 1'-0"

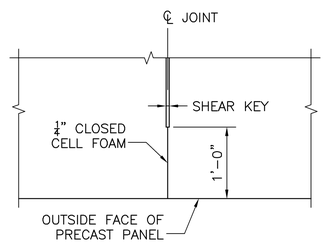

DETAIL 1 –

NOT TO SCALE

REVISIONS		
NO.	DATE	BY
1	10-14-16	MWC

GAROFALO & ASSOCIATES, INC.
P.O. BOX 6145, 85 CORLISS STREET
PROVIDENCE, RI 02940

RHODE ISLAND
DEPARTMENT OF TRANSPORTATION

SLATERSVILLE STONE ARCH BR. #273
RI ROUTE 5 OVER BRANCH RIVER

NORTH SMITHFIELD RHODE ISLAND

PRECAST SLAB LAYOUT AND DETAILS

CHECKED BY _____ DATE 9/15/16 SCALE AS NOTED

0118A_V1_049_PCSLAB001 (ADDENDUM NO. 2)

FED. ROAD DIV. NO.	STATE	FEDERAL AID PROJECT NO.	FISCAL YEAR	SHEET NO.	TOTAL SHEETS
1	R.I.	BRO-BCDR(009)	2016	51(R-1)	99

ADDENDUM NO. 2

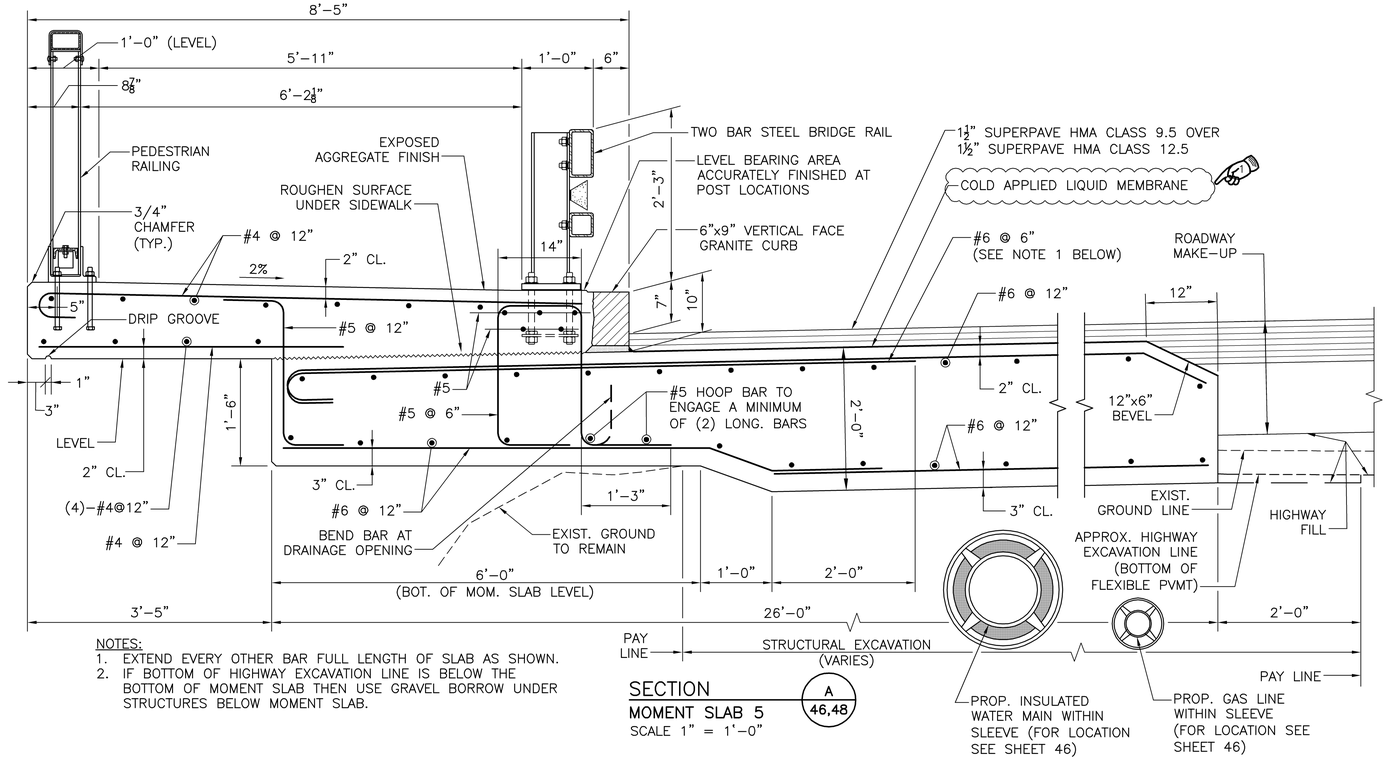

NOTES:
1. EXTEND EVERY OTHER BAR FULL LENGTH OF SLAB AS SHOWN.
2. IF BOTTOM OF HIGHWAY EXCAVATION LINE IS BELOW THE BOTTOM OF MOMENT SLAB THEN USE GRAVEL BORROW UNDER STRUCTURES BELOW MOMENT SLAB.

SECTION A 46,48
MOMENT SLAB 5
SCALE 1" = 1'-0"

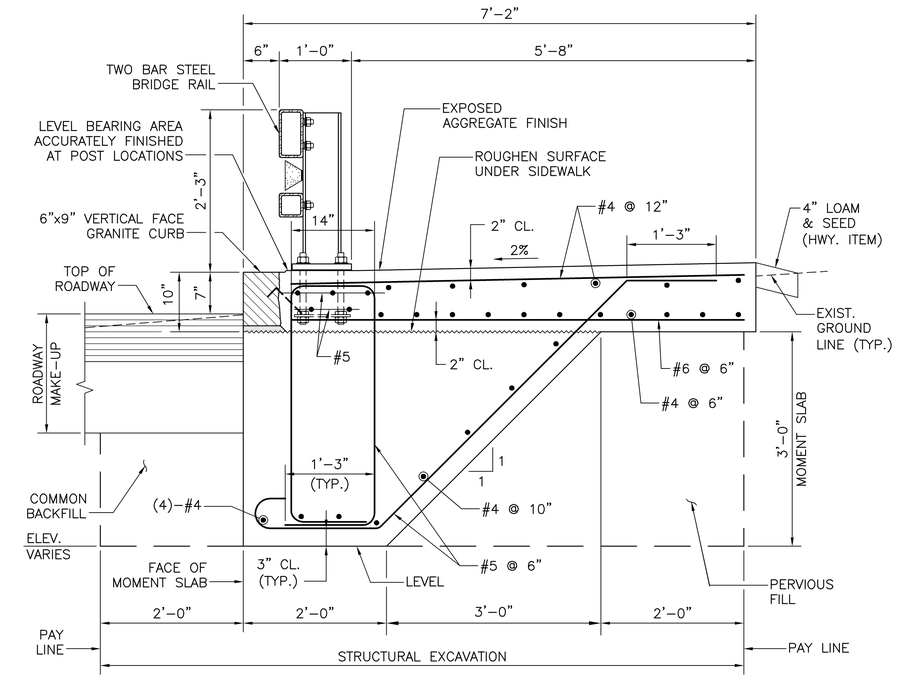

SECTION B 46,48
MOMENT SLAB 1 & 2
SCALE 1" = 1'-0"

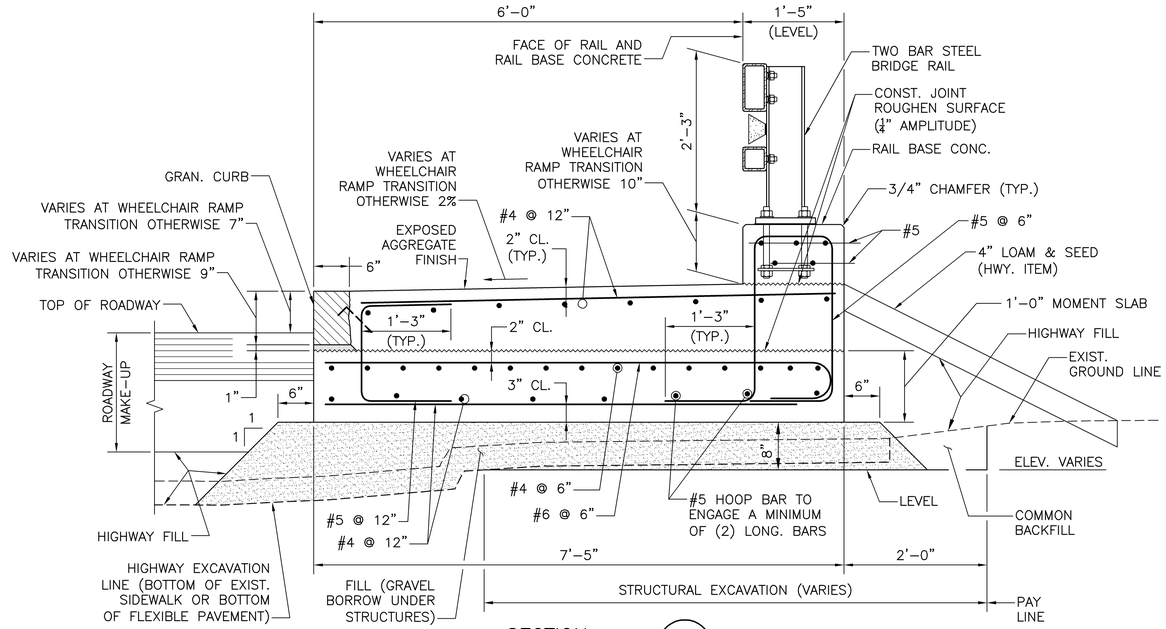

SECTION C 46,48
MOMENT SLAB 4
SCALE 1" = 1'-0"

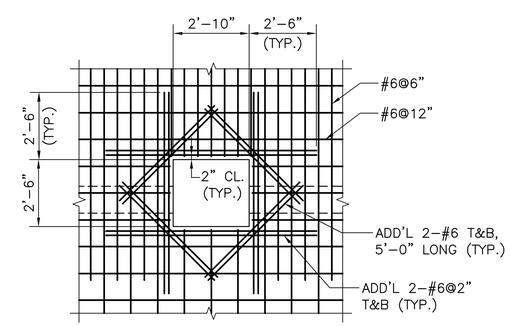

NOTE:
ONLY TOP REINFORCEMENT SHOWN FOR CLARITY.

MOMENT SLAB 5 REINFORCEMENT AT DRAINAGE OPENING
(STA 14+89 & STA 15+18)
NOT TO SCALE

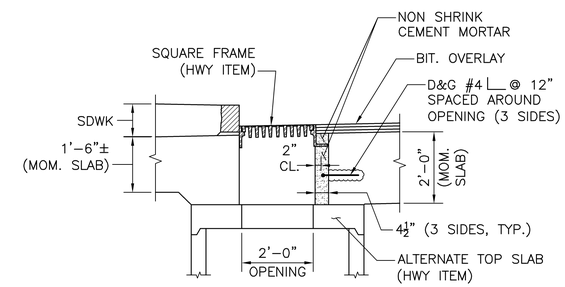

TOP OF CATCH BASIN DETAIL AT MOMENT SLAB 5
(STA 14+89 & STA 15+18)
SCALE 1/2" = 1'-0"

NOTE:

FOR BOTTOM OF MOMENT SLAB ELEVATIONS SEE MOMENT SLAB PLAN SHEETS.

GAROFALO & ASSOCIATES, INC.
P.O. BOX 6145, 85 CORLISS STREET
PROVIDENCE, RI 02940

REVISIONS		
NO.	DATE	BY
1	10-14-16	MWC

RHODE ISLAND
DEPARTMENT OF TRANSPORTATION

SLATERSVILLE STONE ARCH BR. #273
RI ROUTE 5 OVER BRANCH RIVER
NORTH SMITHFIELD RHODE ISLAND

MOMENT SLAB DETAILS I

CHECKED BY _____ DATE 9/15/16 SCALE AS NOTED

0118A_V1_051_MOMSLAB001 (ADDENDUM NO. 2)

FED. ROAD DIV. NO.	STATE	FEDERAL AID PROJECT NO.	FISCAL YEAR	SHEET NO.	TOTAL SHEETS
1	R.I.	BRO-BCDR(009)	2016	53(R-1)	99

ADDENDUM NO. 2

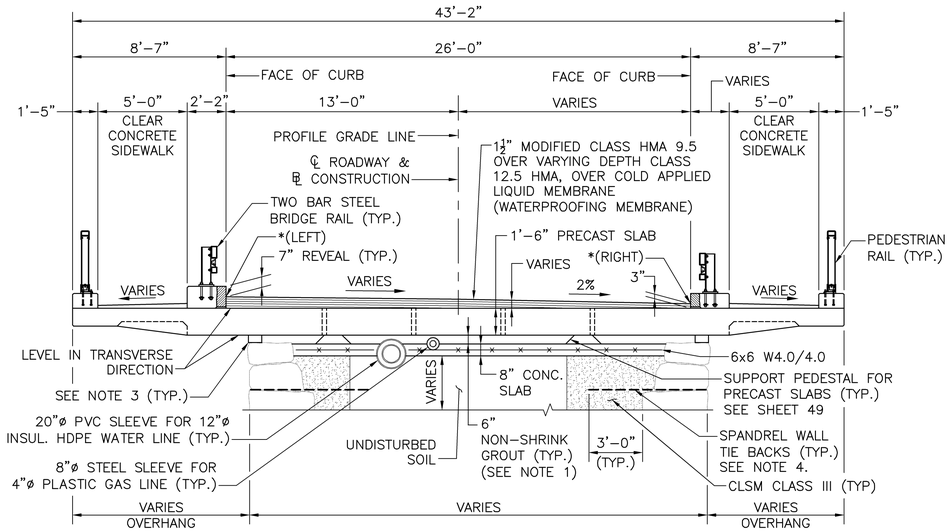

NOTE: TWO BAR STEEL BRIDGE RAIL SHOWN, MODIFIED SAFETY BARRIER ALSO USED. SEE BRIDGE GENERAL PLAN AND APPROACH SIDEWALK PLAN FOR LIMITS OF STEEL BRIDGE RAIL AND MODIFIED SAFETY BARRIER.

PROPOSED CROSS SECTION LOOKING UP-STATION STA 12+78.29 TO 12+96.72 (SUPER ELEVATION TRANSITION)

SCALE: ¼" = 1'-0"

* TOP OF FINISH PAVEMENT ELEVATIONS AT FACE OF CURB OVER PRECAST SLABS		
STA	ELEVATION	
	LEFT	RIGHT
12+75.48	–	229.97
12+80	–	229.89
12+81.08	230.25	–
12+90	230.02	229.71
13+00	229.79	229.56
13+10	229.59	229.43
13+20	229.42	229.34
13+30.06	229.27	229.27
13+40	229.21	229.21
13+50	229.16	229.16
13+60	229.10	229.10
13+70	229.05	229.05
13+80	229.00	229.00
13+81.25	228.99	228.99
13+90	228.94	229.01
14+00	228.89	229.04
14+10	228.83	229.07
14+20	228.78	229.10
14+30	228.74	229.15
14+38.72	–	229.22
14+40	228.75	–
14+45.64	228.77	–

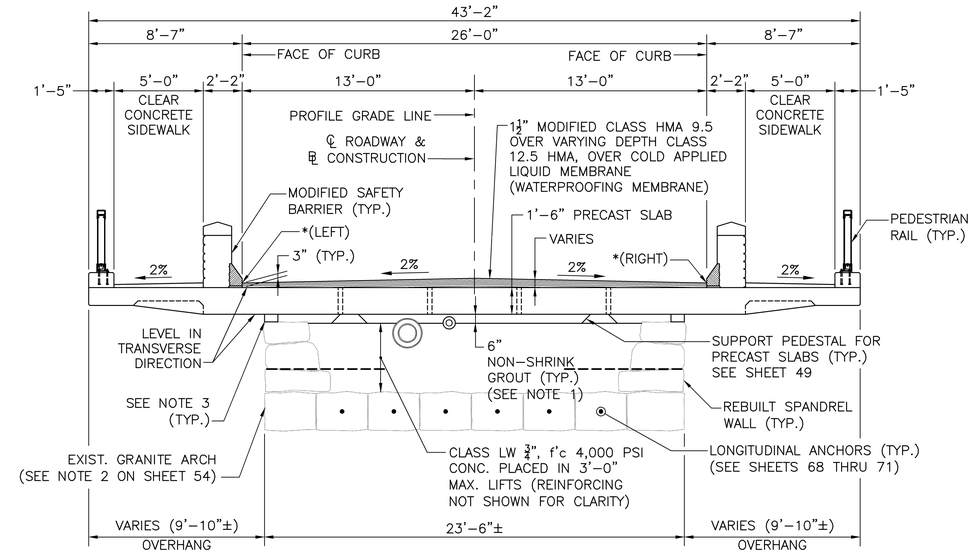

PROPOSED CROSS SECTION LOOKING UP-STATION STA 13+30.06 TO STA 13+81.25 (NORMAL CROWN)

SCALE: ¼" = 1'-0"

NOTES:

1. NON-SHRINK GROUT SHALL BE PUMPED THROUGH THE SLEEVES FOR THE PURPOSE OF FILLING THE VOIDS BELOW PRECAST SLABS. PUMPING SHALL CONTINUE UNTIL GROUT IS NOTICED COMING OUT OF ADJACENT SLEEVES.
2. REINFORCEMENT STEEL AND 3" DIA. SLEEVES NOT SHOWN FOR CLARITY. SEE PRECAST SLAB DETAILS.
3. BUILD SPANDREL WALL TO JUST BELOW BOTTOM OF CONCRETE SLAB ELEVATION. PLACE 3 INCH WIDTH OF COMPRESSIBLE FILLER ALONG OUTER EDGE AND ON TOP OF REBUILT SPANDREL WALL TO CONTAIN AND SEAL THE GROUT WHEN IT IS PLACED. PLACE GROUT SO IT FILLS REMAINING SPACE BETWEEN BOTTOM OF SLAB AND TOP OF SPANDREL WALL.
4. SPANDREL WALL TIE BACKS SHALL BE SPACED AT 3'-0" O.C. VERTICALLY AND HORIZONTALLY. USE Z SHAPE #3 BARS WITH 6" LEGS
5. SEE NOTES ON NEXT SHEET.

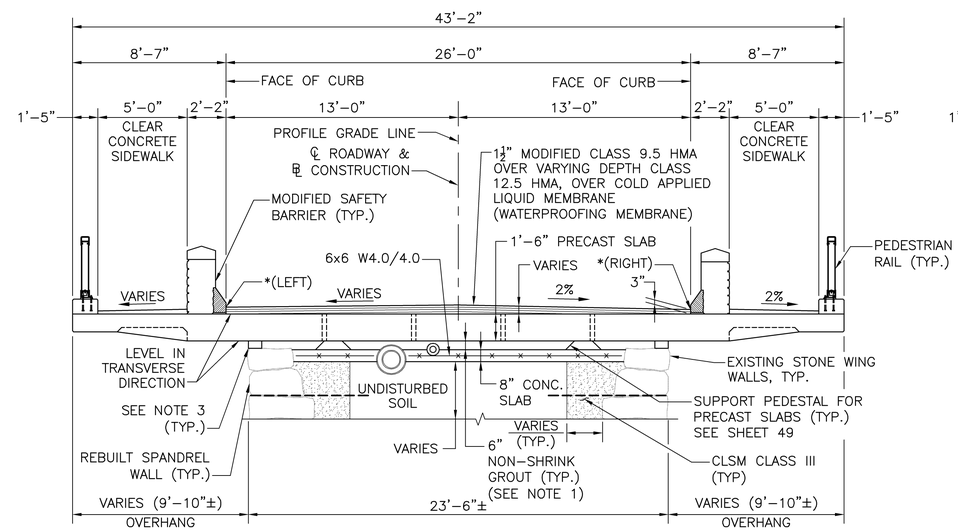

NOTE: MODIFIED SAFETY BARRIER SHOWN, TWO BAR STEEL BRIDGE RAIL ALSO USED. SEE BRIDGE GENERAL PLAN AND APPROACH SIDEWALK PLAN FOR LIMITS OF STEEL BRIDGE RAIL AND MODIFIED SAFETY BARRIER.

PROPOSED CROSS SECTION LOOKING UP-STATION STA 12+96.72 TO 13+19.09 (SUPER ELEVATION TRANSITION)

SCALE: ¼" = 1'-0"

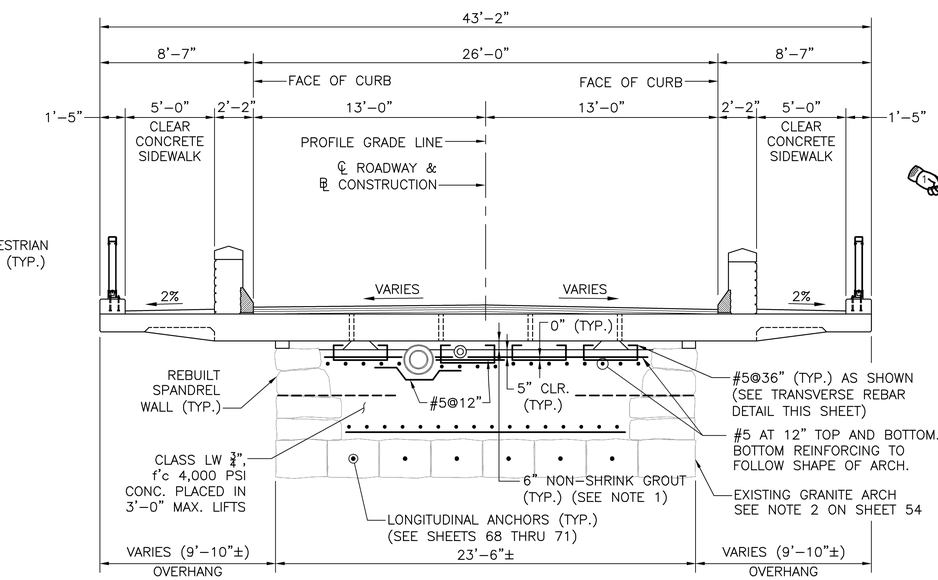

NOTE: MODIFIED SAFETY BARRIER SHOWN, TWO BAR STEEL BRIDGE RAIL ALSO USED. SEE BRIDGE GENERAL PLAN AND APPROACH SIDEWALK PLAN FOR LIMITS OF STEEL BRIDGE RAIL AND MODIFIED SAFETY BARRIER.

CONCRETE REINFORCING DETAIL OVER ARCH STA 13+19.09 TO 14+14.76

SCALE: ¼" = 1'-0"

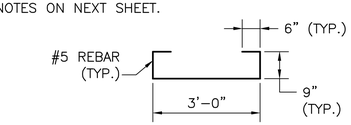

TRANSVERSE REBAR DETAIL

NOT TO SCALE

REVISIONS		
NO.	DATE	BY
1	11-4-16	MWC

RHODE ISLAND DEPARTMENT OF TRANSPORTATION

SLATERSVILLE STONE ARCH BR. #273
RI ROUTE 5 OVER BRANCH RIVER
NORTH SMITHFIELD RHODE ISLAND

TYPICAL BRIDGE CROSS SECTIONS I

CHECKED BY _____ DATE 9/15/16 SCALE AS NOTED

GAROFALO & ASSOCIATES, INC.
P.O. BOX 6145, 85 CORLISS STREET
PROVIDENCE, RI 02940

0118A_V1_053_BTYPICAL001 (ADDENDUM NO. 2)

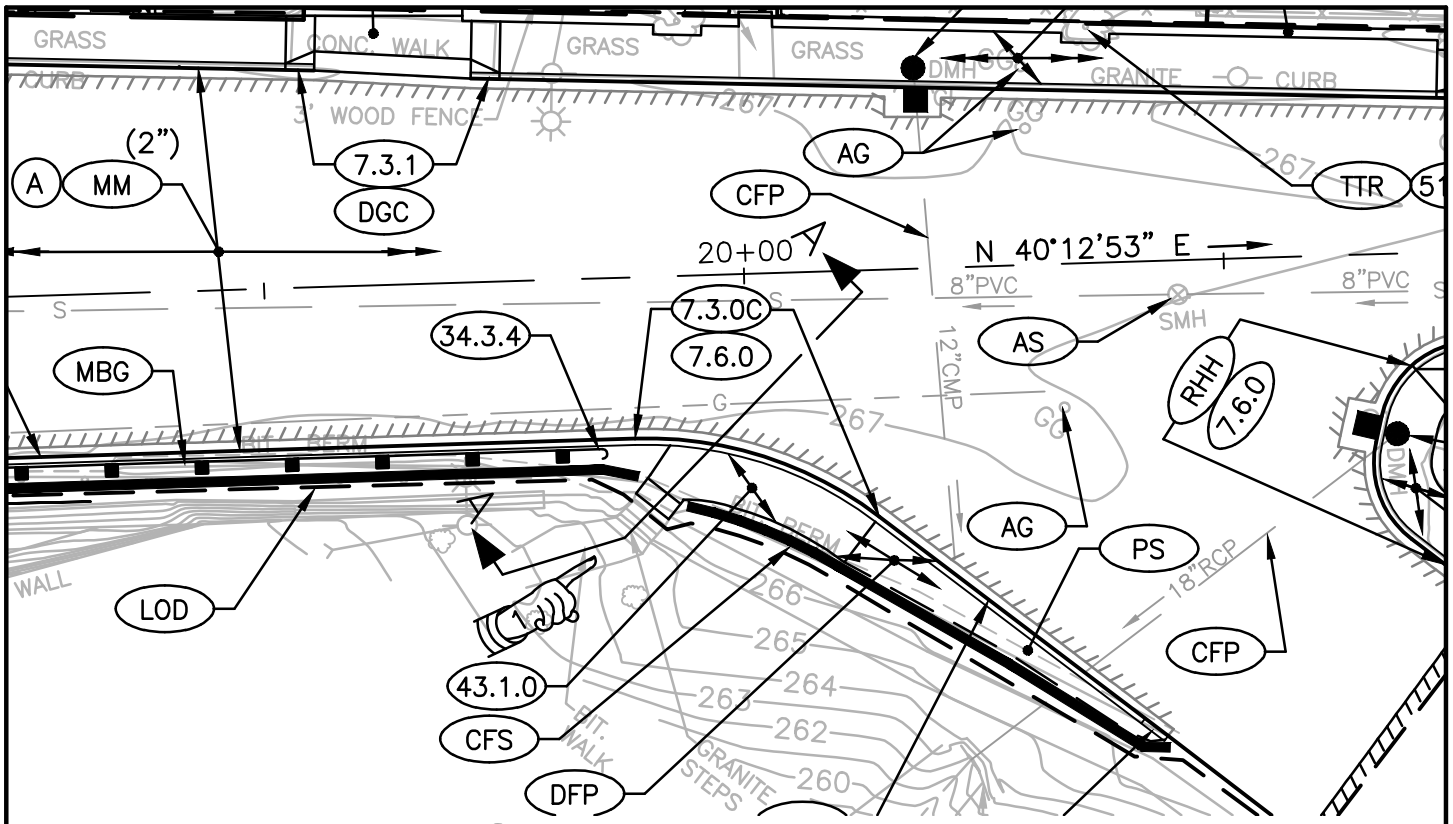

GENERAL PLAN

SCALE: 1" = 20'

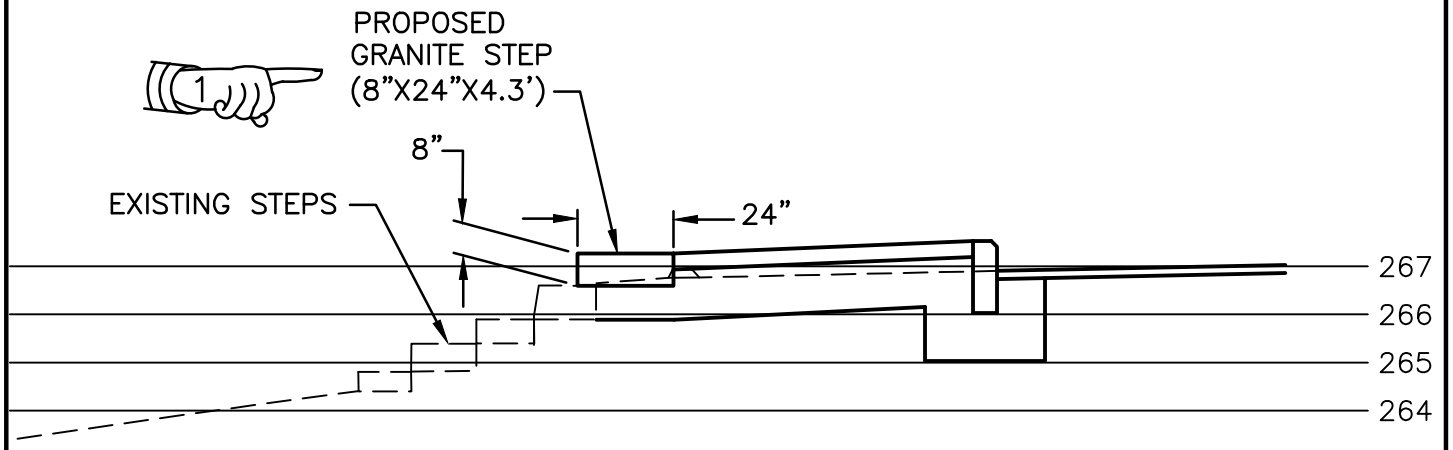

SECTION A-A

SCALE: 1" = 4'

Gordon R. Archibald, Inc. Civil and Environmental Engineers Pawtucket, Rhode Island	TITLE OF SKETCH SLATERSVILLE STONE ARCH BRIDGE #273 RI RTE 5 OVER BRANCH RIVER GREENE STREET CONSTRUCTION PLAN	R.I. CONTRACT NO. 2016-CB-056 SKETCH NO. 1
DATE: 10-18-2016	ADDENDUM NUMBER 2	REVISION TO VOL. 1 OF 1 SHEET NO. 38

F:\FILES\CAD\1388\CONT 5 PLANS\GREENE AT SCHOOL-green contract\0102H_V1_038_GEN004_ADD02.dwg, 10/18/2016 9:02:34 AM, USER53, 1:1

22	Covering Existing Signs	CS-10
23	Environmental Permits	CS-11
24	Night Work Operations	CS-11
25	Right-of-Way and Access Requirements	CS-11
26	Requests for Information	CS-11
27	Inspection Access	CS-13
28	Guidelines for Working around Corrosion Control System Components	CS-13
29	Guidelines for Support of Gas Pipes	CS-14
30	Guidelines for Backfill and Compaction around Gas Pipes	CS-15
31	Guidelines for Working around Gas Utilities	CS-16

Appendix A - Earthwork Summary

Appendix B - Transportation Management Plan (TMP)

Appendix C – Structure Disposition List

Appendix D – RIDEM Permit

APPENDIX D
RIDEM PERMIT

RHODE ISLAND
DEPARTMENT OF ENVIRONMENTAL MANAGEMENT
235 Promenade Street, Providence, RI 02908-5767 TDD 401-222-4462

November 1, 2016

Rhode Island Department of Transportation
Joseph Baker, P.E., Manager, Division of Project Management
Two Capitol Hill
Providence, RI 02903

Insignificant Alteration – Permit

RE: Application No. 16-0231 in reference to the property and proposed project located:

At the Slatersville Stone Arch Bridge No. 273 over the Branch River on Providence Pike (RI Route 5), approximately 200 feet southeast of its intersection with Main Street and approximately 100 feet north of its intersection with Church Street, near Utility Pole No. 2 and within nearby portions of Providence Pike, Main Street and Greene Street, North Smithfield, RI.

Dear Mr. Baker:

Kindly be advised that the Department of Environmental Management's ("DEM") Freshwater Wetlands Program ("Program") has completed its review of your **Request for Preliminary Determination** application. This review included a site inspection of the above referenced property ("subject property") and an evaluation of the proposed rehabilitation and improvements to the Slatersville Stone Arch Bridge and associated roadway improvements with offsite stormwater mitigation and associated site alterations as illustrated and detailed on site plans submitted with your application. These site plans were received by the DEM on September 6, 2016.

Our observations of the subject property, review of the site plans and evaluation of the proposed project reveals that alterations of freshwater wetlands are proposed. However, pursuant to Rule 9.00 of the Rules and Regulations Governing the Administration and Enforcement of the Fresh Water Wetlands Act (Rules), this project may be permitted as an **insignificant alteration** to freshwater wetlands under the following terms and conditions:

Terms and Conditions for Application No: 16-0231 RIPDES No.: RIR101472

1. This letter is the DEM's permit for this project under the R.I. Fresh Water Wetlands Act, Rhode Island General Laws (RIGL) Section 2-1-18 et seq. This application review has also included review related to the RIPDES "General Permit for Storm Water Discharge Associated with Construction Activity."

2. This permit is specifically limited to the project, site alterations and limits of disturbance as detailed on the site plans submitted with your application and received by the DEM on September 6, 2016. A copy of the site plans stamped approved by the DEM is enclosed. Changes or revisions to the project that would alter freshwater wetlands are not authorized without a permit from the DEM.

3. Where the terms and conditions of the permit conflict with the approved site plans, these terms and conditions shall be deemed to supersede the site plans.

4. You must notify this Program in writing immediately prior to the commencement of site alterations and upon completion of the project.

5. A copy of the stamped approved site plans and a copy of this permit must be kept at the site at all times during site preparation, construction, and final stabilization. Copies of this permit and the stamped approved plans must be made available for review by any DEM representative upon request.

6. The effective date of this permit is the date this letter was issued. This permit expires four years from the date of issue unless renewed pursuant to the Rules.

7. Any material utilized in this project must be clean and free of matter that could pollute any freshwater wetland.

8. Prior to commencement of site alterations, you shall erect or post a sign resistant to the weather and at least twelve (12) inches wide and eighteen (18) inches long, which boldly identifies the initials "DEM" and the application number of this permit. This sign must be maintained at the site in a conspicuous location until such time that the project is complete.

9. Temporary erosion and sediment controls detailed or described on the approved site plans shall be properly installed at the site prior to or commensurate with site alterations. Such controls shall be properly maintained, replaced, supplemented, or modified as necessary throughout the life of this project to minimize soil erosion and to prevent sediment from being deposited in any wetlands not subject to disturbance under this permit.

10. Upon permanent stabilization of all disturbed soils, temporary erosion and/or sediment controls consisting of straw bales and/or silt fence must be removed.

11. You are responsible for the proper operation, maintenance and stability of any mitigative features, facilities, and systems of treatment and control that are installed or used in compliance with this permit to prevent harm to adjacent wetlands.

12. You are obligated to install, utilize and follow all best management practices detailed or described on the approved site plans in the construction of the project to minimize or prevent adverse impacts to any adjacent freshwater wetlands and the functions and values provided by such wetlands.

13. All construction activities involving installation or removal of the sand bag coffer dams within watercourses must be limited to the low flow period (i.e., the period from July 1 to October 31 of any calendar year). Work can be permitted within the river channel beyond the low flow period provided work is conducted within, and protected by, the coffer dams.

14. An environmental consultant, experienced in site assessments and measures necessary to protect sensitive aquatic environments or sensitive ecosystems, must be employed prior to the commencement of site alterations to monitor this project and to ensure compliance with the terms and conditions of this permit. This Program must be notified in writing of the consultant chosen to comply with this condition and must receive monthly written progress reports from the consultant regarding compliance with this permit until such time that the project is complete.

15. You must provide written certification from a registered land surveyor or registered professional engineer that the stormwater drainage system including any and all basins, piping systems, catch basins, culverts, swales and any other stormwater management control features have been constructed/installed in accordance with the site plans approved by this permit. This written certification must be submitted to this Program within twenty (20) days of its request or upon completion of the project.

16. This Program has made specific revisions to the approved site plans. These revisions are clearly marked in red on the approved plans. Specifically, a number of sheets were removed from the overall site plan set that contain details that either are not necessary for review by the Freshwater Wetlands Program and/or are better suited to be reviewed as part of the supporting documentation in the file (e.g. various cross sections) based on the volume of material submitted. Sheet Nos. 6-7, 32-37, 68-71 and 82-99 as listed under the Index on Sheet 1 have been removed, crossed off the Index and placed in the file as supporting documentation. The site plan set has been renumbered accordingly (1-38 of 38).

17. The long term operation and maintenance (O & M) Plan shall be strictly followed. The long term O & M Plan shall be that entitled "Stormwater Management System Operation and Maintenance Plan prepared for: Replacement of Slatersville Stone Arch Bridge No. 273 (Providence Pike to North Main Street) North Smithfield, Rhode Island; Prepared for: Rhode Island Department of Transportation, 2 Capitol Hill, Providence, RI 02903, ($0) 222-2023", dated Revised May 2016, Prepared by: Garofalo & Associates, Inc., 85 Corliss Street, Providence, RI 02940.

Additionally, the Program has reviewed this project in accordance with the standards of the RIPDES General Permit for Storm Water Discharge Associated with Construction Activity ("CGP"). Construction Activities which disturb one (1) or more acres of land and where storm water runoff is directed, via a point source, into a separate storm sewer system or into the waters of the State, are required to seek coverage under the Rhode Island Pollutant Discharge Elimination System (RIPDES) storm water permit. Our review has determined that the project has been designed to meet the requirements of the 2013 GP. This determination therefore includes your final authorization to discharge storm water associated with construction activity under the CGP. For future references and inquiry, your permit authorization number is RIPDES No. **RIR 101472**.

Both the owner and the contractor retained to undertake the construction activity are required to comply with all terms and conditions of the CGP. This includes maintaining the Soil Erosion and Sediment Control (SESC) Plan, performing the required inspections and maintenance of the selected Best Management Practices (BMPs), and retaining inspection records. Further information on the requirements of the CGP is available at:

http://www.dem.ri.gov/pubs/regs/regs/water/ripdesca.pdf .

Please be aware that the RIDEM's Rules and Regulations Governing the Establishment of Various Fees require that RIPDES CGP permit holders to pay an Annual Fee of $100.00. An invoice will be sent to the owner on record in May/June of each year if the construction was still active as of December 31st of the previous year. The owner will be responsible for the Annual Fee until the construction activity has been completed, the site has been properly stabilized, and a completed Notice of Termination (NOT) has been received by the RIPDES Program. A copy of the NOT can be found attached to the CGP on the web page referenced above.

This Permit also constitutes your authorization from the U.S. Army Corps of Engineers ("Corps") under Section 404 of the Clean Water Act for the work proposed. Your project qualifies as a Category (2) activity under the Rhode Island General Permit (General Permit No. NAE-2011-2402), (RI GP). You

can view this permit at http://www.nae.usace.army.mil/Regulatory/SGP/RI_PGP.pdf. **You are, therefore, not required to file a separate application with the Corps.**

Please note that the General Conditions within the RI GP apply to all activities authorized under the RI GP. Please review them carefully to thoroughly familiarize yourself with their contents. You may wish to discuss all permit conditions with your contractor to ensure that the work can be accomplished in a manner which conforms to all requirements.

You are required to comply with the terms and conditions of this permit and to carry out this project in compliance with the Rules at all times. Failure to do so may result in an enforcement action by this Department and/or subject you to the enforcement provisions of the Corps' regulations.

In permitting the proposed alterations, the DEM assumes no responsibility for damages resulting from faulty design or construction.

Kindly be advised that this permit is not equivalent to a verification of the type or extent of freshwater wetlands on site. Should you wish to have the types and extent of freshwater wetlands verified, you may submit the appropriate application in accordance with Rule 8.03.

This permit does not remove your obligation to obtain any local, state, or federal approvals or permits required by ordinance or law and does not relieve you from any duties owed to adjacent landowners with specific reference to any changes in drainage.

Please contact me at (telephone: 401-222-6820 x 7408) should you have any questions regarding this letter.

Sincerely,

Nancy L. Freeman

Nancy L. Freeman, Senior Environmental Scientist
Office of Water Resources
Freshwater Wetlands Program
NLF/nlf

Enclosure: Approved site plans

ec: Nicholas Pisani, P.E., RIDEM
Traci Pena, RIPDES Program
Michael J. Elliott, U.S. Army Corps of Engineers
Steven Garofalo, P.E., President, Garofalo & Associates, Inc.
Scott P. Rabideau, Principal, Natural Resource Services, Inc.
Gregory McVeigh, P.E., Wright Pierce, Inc.
James McGinn, RIDOT

xc: Raymond J, Pendergast, Jr., Director of Public Works, North Smithfield
Kerry Anderson, Building Official, North Smithfield

INDEX

105.02 PLANS & SHOP DRAWINGS JS-1

108.1000 PROSECUTION AND PROGRESS JS-3

109 MEASUREMENT AND PAYMENT JS-4

201.9901 REMOVE AND SALVAGE TEMPORARY TRAFFIC SIGNAL, SIGNS AND BARRIERS JS-5

201.9902 INSPECTION AND TESTING FOR ASBESTOS CONTAINING MATERIALS JS-6

201.9903 REMOVE AND DISPOSAL OF ASBESTOS CONTAINING MATERIALS JS-8

201.9904 REMOVE AND RESET ELECTRICAL BOXES JS-12

201.9905 REMOVAL AND DISPOSAL OF GAS PIPE JS-13

201.9906 MONITORING/HANDLING AND STOCKPILING OF CONTAMINATED SOILS JS-14

201.9907 LICENSED SITE PROFESSIONAL (LSP) SERVICES JS-15

201.9908 MISCELLANEOUS SOIL TESTING JS-16

201.9909 DISPOSAL OF UNREGULATED SOIL JS-17

201.9910 DISPOSAL OF REGULATED SOIL - IN-STATE FACILITY JS-17

201.9911 DISPOSAL OF REGULATED SOIL - OUT-OF-STATE FACILITY JS-17

201.9912 DISPOSAL OF HAZARDOUS WASTE JS-17

201.9913 HEALTH & SAFETY PLAN ..... JS 24

201.9914 IMPLEMENTATION OF HEALTH & SAFETY PLAN ..... JS 25

201.9915 REMOVE, RELOCATE AND RESET VARIOUS PARK STRUCTURES ..... JS 25a

203.9901 STRUCTURAL EXCAVATION EARTH JS-26

206.9901 INLET SEDIMENT CONTROL DEVICE JS-27

207.9901 SANDBAG DIKE JS-29

831.9902 MODIFIED RAILING JS-86

906.9901 WHEELCHAIR RAMP TRANSITION CURB OVER MOMENT SLAB JS-87

907.1000 DUST CONTROL JS-88

911.9901 REMOVE AND RESET WET STONE MASONRY RETAINING WALLS STANDARD 10.10 ..... JS-89

911.9902 REMOVE AND REBUILD STONE MASONRY SPANDREL WALLS JS-93

911.9903 REMOVE AND REBUILD STONE MASONRY NE CHANNEL WALL AND NW WINGWALL JS-98

911.9904 RESET STONE CAP JS-103

911.9905 STONE CAP TRANSITION JS-103

912.9901 SUPPLEMENTARY STONES FOR WALLS JS-104

912.9902 GRANITE STEP JS-104a

928 TRUCK MOUNTED ATTENUATOR (TMA) WITH TRUCK MOUNTED FLASHING ARROW BOARD (TMFAB) JS-105

937.1000 MAINTENANCE AND MOVEMENT OF TRAFFIC PROTECTIVE DEVICES JS-109

938.1000 PRICE ADJUSTMENTS JS-110

943.0200 ON-THE-JOB TRAINING JS-111

L.01.9901 BIORETENTION SOIL MIX JS-115

L.02.1000 SEEDING JS-116

L.02.9901 CONSERVATION WILDLIFE SEED MIX JS-117

L.06.1000 PLANTING JS-119

T.12.9901 PORTABLE TRAFFIC CONTROL SIGNAL SYSTEM JS-120

201.9915

REMOVE, RELOCATE AND RESET VARIOUS PARK STRUCTURES

DESCRIPTION: This work shall consist of the removal, temporary relocation and resetting of various structures within the Carroll Park area between Providence Pike and Main Street. The various structures included in this item are: (SD-33) Stone Bench, (SD-35) Wood Bench, (SD-36) Stone Bench, (SD-46) Stone Bench and (SD-47) Boulder. The SD designation corresponds to the listing of each item in the Structure Disposition List (General Provisions - Contract Specific: Appendix C).

MATERIALS: N/A.

CONSTRUCTION METHOD: The Contractor shall remove each of the structures listed in this item and temporarily relocate it to an area outside of the immediate limit of work for that particular construction phase. The structure shall be protected from damage as may occur due to surrounding work. Once work has been completed in the original location of each structure, it shall then be replaced in its original general location and position. Any damage to any of the listed structures that occurs during this work (or the temporary relocation) shall be repaired or replaced by the contractor at no additional cost to the State.

METHOD OF MEASUREMENT: Remove, Relocate and Reset Various Park Structures shall be measured on a lump sum basis.

BASIS OF PAYMENT: The accepted quantity of Remove, Relocate and Reset Various Park Structures will be paid for at the contract unit price per "LUMP SUM" as listed in the Proposal. The price so stated constitutes full and complete compensation for all labor, materials and equipment required to remove each structure from its existing location and relocate it to a temporary on-site storage area (including protection of each structure from damage); temporary storage of each structure on-site; relocation of each structure to its original general location and position; and for all incidentals required to finish the work, complete and accepted by the Engineer.

802.9902

ARCH STRENGTHENING

DESCRIPTION: This work shall consist of furnishing, and installing the "Archtec System" and "Seistec System" to repair and strengthen the masonry arched bridge in accordance with this special provision. THE ARCH STRENGTHENING FOR THE ENTIRE BRIDGE WILL BE PERFORMED BEFORE ALL OTHER CONTRACT WORK ON THE BRIDGE CAN BE PERFORMED. The CINTEC Company shall locate all anchor rod locations and be responsible for the accuracy of the anchor installation.

THE CONTRACTOR SHALL NOTE THAT THE "ARCHTEC/SEISTEC SYSTEMS" – A COMPLETE TURN-KEY DIAGNOSTIC, MANUFACTURE AND INSTALLATION SYSTEM DESIGNED TO STRENGTHEN, REPAIR AND STABILZE ALL RELATED MASONRY ARCH FAILURE MECHANISMS IS A PROPRIETARY SYSTEM DESIGNED AND INSTALLED BY CINTEC AMERICA INC.

GENERAL

The retrofit strengthening system is designed to support the dead load which includes the stone arch, fill material above arch and roadway and all construction loads supported from the existing arch. Archtec Systems is designed for a service life of 100 years, based on consideration of the potential long-term effects of corrosion, seepage, stray currents, and other potential deleterious environmental factors on each of the material components comprising the masonry arch. The work shall consist of installing longitudinal anchors.

QUALIFICATIONS

The work shall be performed and technically supported under the supervision of an Engineer with at least 5 years' experience in the design and construction of permanent grouted anchored strengthening system. The use of a consultant or manufacturer's representative by the Contractor will meet this qualification. Further, the Contractor's foreman and drill operator shall have at least 3 years' experience installing grouted anchored systems. The Archtec System contractor shall submit proof of experience on a least 5 permanent grout anchored masonry strengthening systems successfully completed within the past 5 years.

The Contractor will not start work on any masonry element for which working drawings are required until the Engineer has approved such drawings. Approval of the Contractor's working drawings shall not relieve with Contractor of any of his/her responsibility under the contract for the successful completion of the work.

If the grouting of any anchor is suspended for more than 30 minutes or the quality of the grout placement results in an anchor that does not satisfy the requirements of this Specification, then the grouted anchor shall be removed from the hole, prepared for reuse, the hole cleaned out in accordance with the manufacturer's requirements and an anchor re-inserted with fresh grout at no additional cost.

RECORDS

The Contractor shall provide the Engineer with the following records:

As-built drawings showing the location of the anchors, and total anchor length, (i.e. anchor length + unbounded length) which shall be submitted one (1) month after completion of the anchor installation.

Steel and grout certifications and mill reports prior to incorporating these materials in the work.

CONSTRUCTION REQUIREMENTS

Weak Substrate Allowance:
Where weak substrate prevents adequate bonding of the grout, upon approval of the Engineer, the Contractor may relocate the anchor or undercut the anchor hole. The Contractor shall be required to verify that the design requirements are still satisfied and that adjustments are reflected on the as-built drawings.

Drill Hole Repairs:
In the event that a core is inadvertently drilled through the finished face of an element, create a repair of the entry hole as detailed below, generally the procedure shall be:

- Cut a new masonry element from the retained corresponding core.
- Install new masonry element using compatible non-polymer mortar or masonry "Dutchman" techniques.
- Ensure that the grain, texture and color and profile of the repair are esthetically compatible with the host masonry.
- Protect and cure drill holes repairs for a minimum of 72-hours after installation.

Masonry Repairs:
All masonry repairs including re-facing, patching, pointing, rebuilding, parge coat removal, wall grouting and imbedded vegetation control shall be performed under the Secretary of the Interior's Guidelines and Standards for Historic Preservation.

807.9901

REPOINTING MASONRY

DESCRIPTION:
The work under this section will consist of repointing, along with adding smaller chinking stones as required along the underside of both arch barrels and spandrel walls that were not removed under 911.9902 "Remove and Rebuild Stone Masonry Spandrel Wall. The work under this section shall be in accordance with Section 807, Masonry Construction and Section 939, Stone Walls in Historic, Scenic and Rural Areas of the Rhode Island Standard Specifications for Road and Bridge Construction, with all amendments in accordance with these specifications and as required by the Engineer. The Contactor is made aware of the construction restrictions for 807.9901 "Repointing Masonry" which shall be in accordance with Sheet 95 titled Contractor Access Plan. These restrictions only apply to work within the river including but not limited to scaffolding and equipment.

The Contractor shall have in place the proper Temporary Protective Shielding before starting this work. The Temporary Protective Shielding will be paid for under 803.0500 Temporary Deck Underside and Side Protective Shielding. The Contractor shall remove all unused material and clean his work area including the area within the limits of the sand bag dike to the satisfaction of the Engineer before removing 207.9901 Sand Bag Dike.

Historic Significance:

The Contractor shall be aware that the Slatersville Stone Arch Bridge No. 273 is a historically significant, double-span, stone arch bridge that is individually listed in the National Register of Historic Places and is a contributing property of the Slatersville Historic District. The bridge's stone arch, abutments, piers and spandrel walls are character-defining elements and must be properly rehabilitated and preserved. Grit- blasting, including sand-blasting, or harsh chemical cleaners shall at no time be used on the bridge's stonework or mortar.
Any cleaning process that might negatively affect the appearance of the stone is explicitly prohibited.

MATERIALS:
The materials for this work shall be approved by the Engineer in consultation with the RIDOT Historic Preservation Specialist. Materials and their use shall be in accordance with Section 807 and Subsection M.04.03.5 of the Rhode Island Standard Specifications for Road and Bridge Construction except as noted and as specified herein. The mortar to be used shall blend with the finish, color and composition of the existing mortar between the stones and approved by RIDOT.

CONSTRUCTION METHODS:

Inspection and Sample Area:

Prior to the start of mortar repointing, the Engineer shall inspect the bridge with the Contractor to determine the extent of repointing necessary. The Engineer also shall determine whether the existing mortar joints have been tooled, or to what extent the existing mortar joints have been raked or recessed from the stone faces. The Contractor will then prepare a sample area on the bridge, where acceptable to the Engineer and RIDOT Historic Preservation Specialist, showing joint preparation and repointing methods. The Engineer and RIDOT Historic Preservation Specialist shall review the sample area for workmanship (including tooling) to ensure that the joints are completely filled and that the texture and color of the new mortar matches the existing. The Engineer shall give the Contractor notice to proceed with the remaining repointing work only after approval of the sample.

Repointing:

Repointing shall only be performed where there is evidence of deterioration, such as disintegrating mortar, cracks in the mortar joints, gaps between the mortar joints and stone, loose stones, or damp surfaces. Sound mortar joints shall remain intact. The Contractor shall take care to minimize the loss of existing (sound) mortar and to avoid damaging the surrounding stone blocks. Loose mortar shall be removed using hand tools only. No power saws, power drills/hammers, or other power tools shall be used to remove existing mortar.

1. Use of grit blasting or high-pressure water stream (above 100 psi) is prohibited for use in removing existing mortar.

2. Any open joints that measure greater than 2” in width with a surface area greater than 8 square inches shall be filled with a chinking stone packed with mortar. Chinking stones shall be of the same color, texture and type as the adjacent stones and of appropriate shape and size to allow for a tight fit within the joint.

3. Remove all deteriorated and loose mortar to a minimum depth of 2 to 2 ½ times the width of the joint to ensure an adequate bond. Removal to a greater depth may be required to reach sound mortar.

4. Clean mortar joints using hand tools such as a trowel, hand chisel, and hammer or a small pneumatic chisel; the use of power saws and grinders shall not be used. Cleaning of interior joint surfaces shall consist of wire brushing by hand followed by a hose stream of water under normal pressure (100 psi or less) or low-pressured compressed air. Cleaning of exterior surfaces by wire brush or any type of grit-blasting is prohibited. Remove mortar cleanly, leaving square cuts at the rear of the joint, if possible.

5. Rake out loose material using a natural bristle or nylon brush or low pressure compressed air (40-60 psi). Low pressure water (maximum pressure 100 psi) may also be used, although care should be taken not to scour additional bedding mortar out of the joints.

6. Repoint only when the ambient temperature is between 41 and 86 degrees F, and is expected to remain above 41 degrees for at least 72 hours following repointing; the stone should be free of frost.

7. Repoint using a mortar that is compatible with the historic mortar and which matches the historic mortar in color, texture, width and finish.

8. Before placing the repointing mortar, dampen masonry surfaces and joints with a spray bottle to control suction and evaporation. Joints should be damp, but with no standing water present (saturated, surface dry).

9. Place new mortar and rake joints so that the depth of new mortar in the joints matches the depth of existing mortar measured from the face of the stone if the existing mortar has been tooled, then the new mortar shall also be tooled to match. Mortar shall be compacted in successive layers, with each layer permitted to reach thumb-print hardness before the next layers are applied.

10. Hand pointing is the preferred method; a pressure gun may be used by experienced operators. The operator shall provide written documentation of his experience/proficiency and proposed procedure to the Engineer for approval.

11. Finish point the remaining 1 ½ inches:

    Finish pointing should be done by hand, using a pointing tool. For the outer ¾ inches, install mortar in ¼ in lifts, compacting, each layer. Permit each layer to reach thumbprint hardness before the next layer is applied.

    Upon completion, the new pointing should match the historic finish and tooling; the finish shall match the stone faceline or be slightly concave, to channel water out of the wall and to avoid water pooling.

12. Immediately after repointing, clean excess mortar from adjacent masonry, taking care not to damage newly pointed joints. Use only natural bristle or nylon brushes and wood or plastic tools to remove excess mortar.

13. After mortar has begun hardening tamp back with a stiff brush to further compact the material.

14. Protect the finished work from direct sun and rain until the face has cured and hardened.

15. After mortar has been allowed to cure for 7 to 14 days, clean exposed masonry surfaces using stiff nylon or natural bristle brushes and clean water sprayed at low pressure (maximum pressure 400 psi).

Final Cleaning:
Allow mortar to harden fully for seven days after completion of repointing work. If excess mortar remains around the joints then it shall be removed with diluted mortar joint cleaner. Mortar joint cleaner shall be one of the following products recommended for use on historic stone masonry: SureKlean 600 Detergent by ProSoCo, Inc., South Plainfield, NJ; Hydro-Clean HT-400 Super Concentrate Excess Mortar Remover by Hydrochemical Techniques, Inc., Hartford, CT; or Florok 700 Masonry Detergent Cleaner by Chargar Corporation, Hamden, CT. Contractor shall ensure that all excess mortar has been removed from the surfaces of adjacent stones. Any mortar remaining on the face of the stonework at the project's completion that is due to the Contractor's method of construction or negligence shall be removed at the Contractor's expense according to appropriate methods approved by the Engineer. Grit-blasting, including sand-blasting, shall not be used to clean the stone masonry of the bridge at any time.

Field Quality Control:

Visual inspections for defects shall continue throughout application.

Final Review

The Engineer and the RIDOT Historic Preservation Specialist shall review the pointed area(s). Irregularities or other items that do not meet the requirements of this specification and the Plans shall be addressed/repaired at this time, at no additional cost to RIDOT.

QUALIFICATIONS

The work shall be accomplished by stone masons with demonstrated proficiency in historic stone masonry construction/restoration practices. Documentation in the form of professional certifications and the locations (with photographs) of at least three (3) successfully completed stone masonry projects of similar type and scale must be presented to the Engineer no less than 30 days prior to the start of work. This documentation must be approved by the Engineer in consultation with the RIDOT Historic Preservation Specialist in order for the masonry contractor to be permitted to perform the work. The approved mason(s) are to complete the entire work item for which the approval was given.

METHOD OF MEASUREMENT

Repointing Masonry will be measured by the number of linear feet of stone masonry joint repointed in accordance with these specifications and/or as directed by the Engineer, complete and accepted.

BASIS OF PAYMENT

Repointing Masonry will be paid for at the contract unit price per linear foot as listed in the Proposal and shall include full compensation for the satisfactory repointing of the masonry, Contractor's method to access the underside of arch, and for furnishing all labor, tools, equipment and any other incidentals necessary to complete the work. Payment for water control necessary for performing the work will be paid for under 207.9901, Sand Bag Dike and payment for protective shielding will be paid for under 803.0500 Temporary Deck Underside and Side Protective Shielding.

808.9901

CONCRETE ARCHITECTUAL TREATMENT, FORM LINER FINISH

DESCRIPTION

This work shall conform to the relevant provisions of Section 809 of the Rhode Island Standard Specifications for Road and Bridge Construction, except as amended herein. This work consists of finishing the exterior faces of the cast-in-place concrete parapets/barriers with textured and colored formed concrete surfaces using simulated stone masonry molds/concrete form liners and color stain system designed to duplicate closely the appearance of the natural stone currently existing on the bridge.

MATERIALS

Simulated Masonry Molds: The molds/liners shall be reusable and made to the manufacturer's specifications and easily attachable to forms. Molds/form liners shall be removable without causing damage to or deformation of surface or underlying concrete. The wall pattern shall be selected by the Engineer in consultation with the RIDOT Historic Preservation Specialist from samples supplied by the manufacturer.

Release Agent: Compatible with simulated stone masonry molds/form liners and with color stain system to be applied to surface. The release agent shall not discolor the concrete.

Form Ties: Shall be made of either metal with corrosion protection or fiberglass. Using metal ties, which result in a portion of the tie permanently embedded in the concrete, shall be designed to separate at least one inch back from finished surface, leaving only a neat hole that can be plugged with patching material. Contractor shall submit the type of form ties to the Engineer for approval prior to use in this work.

Mortar Joints: Joints shall be colored to simulate real mortar.

Color Stain: Special stain mix as provided by manufacturer, shall achieve color variations present in the natural stone being simulated for this project, as required by the Engineer. The stain shall create a surface finish that is breathable (allowing water vapor transmission), and that resists deterioration from water, acid, alkali, fungi, sunlight or weathering. Stain mix shall be water-borne, low V.O.C. material, less than 24 oz/gal. The stain shall be resistant to freeze/ thaw conditions with testing or performance history submitted to the Engineer for approval.

SUBMITTALS

Sample Panel: The General Contractor is required to submit multiple 24" x 24" samples of the possible simulated stone masonry finishes. The samples are to demonstrate possibilities of patterns available to achieve the finish required for this project. The Engineer, in consultation with the RIDOT Historic Preservation Specialist, shall review the various samples and approve a sample panel to be used for the mock up.

Shop Drawings: A Plan, elevation and details shall show the overall pattern, joint locations, form tie locations and end, edge and other special conditions.

Samples: Form ties, sample and description, showing method of separation when forms are removed.

Manufacturer: The Manufacturer of simulated stone masonry molds/form liners and custom coloring system shall have five years of experience making stone masonry molds and color stains to create formed concrete surfaces to match natural stone shapes, surface textures, and colors. The manufacturer qualifications shall be submitted for review and approval by the engineer.

Pre-Installation Meeting: The Contractor shall schedule a conference with the Engineer and manufacturer representative to assure understanding of simulated stone masonry, molds use, color application, requirements for construction of mockup, and to coordinate the work, at least two weeks before the work begins. The mockup shall be approved by the Engineer.

Formed Concrete Construction: The installer shall have five years of experience pouring vertically formed architectural concrete with proof of documentation submitted to the Engineer for approval. The installer shall be trained in the manufacturer's special techniques in order to achieve realistic surfaces.

Color Stain System Application: The Color Stain System shall be applied by the manufacturer's approved contractor/technician.

CONSTRUCTION METHODS

General: The design and pattern of the completed colored and formed concrete surface shall match the natural material as closely as possible to the satisfaction of the Engineer. Patterning of simulated stone masonry shall appear natural and non-repeating to the satisfaction of the Engineer. Seam lines or match lines caused from two or more molds/form liners coming together will not be apparent when viewing final wall. Final coloration of cast stone concrete surface shall accurately simulate the appearance of the existing stone including the multiple colors, shades, flecking, and veining that is apparent in the real stone. Note that a sample and mockup are required. Upon approval by the Engineer and RIDOT Historic Preservation Specialist, the mockup shall serve as the quality standard for the project.

Environmental Requirements: Apply color stain when ambient temperatures is between 50 and 100 degrees F. Consult manufacturer if conditions differ from this requirements.

Mockup: The Contractor shall build a mockup of the approved sample panel on site ninety days before work starts, using the same materials, methods and work force that will be used for the project. The Engineer will determine the specific requirements and location.

1. Size: 50 sq. ft., or larger, if needed to adequately illustrate the pattern and texture selected.

2. Include an area to demonstrate wall mold butt joint and if appropriate, continuation of pattern through expansion joint.

3. After concrete work on mockup is completed and cured for a minimum of 28 days, and after surface is determined to be acceptable for coloring, apply color stain system.

4. After coloring is determined to be acceptable by the Engineer, construction of the project may proceed, using mockup as quality standard.

Simulated Stone Masonry Molds Preparation: Clean and make free of buildup prior to each use. Inspect for blemishes or tears. Repair if needed following manufacturer's recommendations.

Simulated Stone Masonry Molds Attachments: Place stone molds with less than ¼ inch separation between them. Attach molds to form securely following manufacturer's recommendations.

Form Release Agent: Apply by following the manufacturer's recommendations. Form stripping and related construction shall avoid creating defects in finished surface.

If the pattern selected has molds connecting through the middle of the stones, carefully remove the seam line created by abutting molds. Match the texture and shape of the surrounding stone, avoiding visible seams or mold marks.

Place form ties at thinnest points of molds. Neatly patch the remaining hole after disengaging the protruding portion of the tie so that it will not be visible after coloring the concrete surface.

Where an expansion or paraffin joint must occur at a point other than at mortar of rustication joints, such as at the face of concrete texture, which is to have the appearance of stone, consult manufacturer for proper treatment of expansion material.

All Simulated Stone surfaces that are to be stained shall have cured for at least 30 days prior to staining.

Clean surface prior to application of stain materials to assure that surface is free of latency, dirt, dust, grease, efflorescence, paint, or other foreign material, following manufacturer's instructions for surface preparation. Do not sandblast. If damage occurs, the Contractor shall stop cleaning immediately and notify the Engineer with a corrective action plan for the approval of the Engineer. Preferred method to remove latency is pressure washing with water. Completed surface shall be free of blemishes, discoloration, surface voids, and form marks.

Where exposed soil or pavement is adjacent which may spatter dirt or soil from rainfall, or where surface may be subject to over spray from other processes, provide temporary cover of completed work.

METHOD OF MEASUREMENT

"Concrete Architectural Treatment, Form Liner Finish" will be measured by the number of square feet of exposed surface actually placed in accordance with the Plans and/or as directed by the Engineer.

BASIS OF PAYMENT

The accepted quantity of "Concrete Architectural Treatment, Form Liner Finish" will be paid for at the contract unit price per square foot as listed in the Proposal. The price so stated constitutes full and complete compensation for all labor, materials, tools and equipment necessary, including anchors, mortar, erection, samples, patching, color stain system, disposal of mock wall, and all other incidentals required to finish the work, complete and accepted by the Engineer.

809.9901

MODIFIED INTEGRALLY COLORED/EXPOSED AGGREGATE FINISH PORTLAND CEMENT CONCRETE SIDEWALK STD. 43.10M

DESCRIPTION

Work under these items shall consist of constructing Integrally Colored/Exposed Aggregate Finish Portland Cement Concrete Sidewalks excluding driveway aprons in accordance with Sections 601 and 905 of the Rhode Island Standard Specifications for Road and Bridge Construction and the Rhode Island Standard Details except as modified under this specification. All work shall conform to the lines and grades shown on the plans and/or as directed by the Engineer. The concrete shall be of the class, color and surface texture specified in the plans and specifications and as approved by the Engineer. The contractor shall remove a depth of mortar from the surfaces of the proposed sidewalks in order to expose the aggregates and present a uniform texture (approximately 1/8 inch relief) as specified herein.

MATERIALS

COLOR AGENT: The coloring agent for integrally colored concrete shall meet the requirements of ASTM C979 and be approved by the Engineer. The amount of coloring agent to be used in the Concrete mix shall be in accordance with the manufacturer's recommendation to attain a final hydrated concrete color that matches L.M. Scofield's, Integral Chromix Admixture, Cool Grey #1266 for Ready Mix Concrete, or approved equal.

CONCRETE TOP SURFACE RETARDER: The top surface retarder shall be Grace TOP-Cast as manufactured by the Grace Corporation or approved equal. Selection of retardant grade, application of the surface retardant shall be compatible with the coloring system and method of exposing the aggregate shall be as recommended by the manufacturer.

CURING COMPOUND, PENETRATIING SURFACE SEALERS, AND JOINT SEALANTS: Curing compound shall be as recommended by the color manufacturer. It shall be clear and not affect the skid resistance of the surface.

Combined curing compound and penetrating surface sealer systems are available from concrete color manufactures. Usage shall in accordance with the manufacturer's recommendations and approved by the Engineer.

The surface penetrating sealer shall meet the requirements of section M.12.03 except as specified in this specification.

The curing compound, surface penetrating sealers, and join sealant materials shall be from a single source manufacturer. The joint sealant shall match the color of the final, hydrated color of the integrally colored concrete produced in accordance with this section. The color shall be approved by the Engineer in consultation with the RIDOT Historic Preservation Specialist.

FORMS: Set forms, rigidly braced and secured, to specified grades and lines, as shown on the plans. Install sufficient quantity of forms to allow continuous progress of work and so that forms can remain in place at least 24 hours after concrete placement.

CONCRETE: The Portland cement concrete shall be Class XX, 3/8" f'c= 4000 PSI in accordance with Section 601 of the RIDOT Standard Specifications for Road and Bridge Construction and all revisions and as modified herein.

Coarse aggregate shall be 3/8 nominal size gradation conforming to sections 601 and M.02.03 of the Rhode Island Standard Specifications except as modified herein. Aggregate used in the concrete mix shall be screened washed gravel. The aggregate shall have warm tan-brown tones. Material shall be supplied by a RIDOT approved source.

Fine aggregate shall be of a color similar to that of the coarse aggregate.

The proportioning of ingredients for the integrally colored concrete shall be approved by the Engineer as specified herein. The concrete may be modified by either chemical admixtures, mineral admixtures or both as required to obtain the specified concrete characteristics. All admixtures and coloring agents must be compatible in their use.

Integrally Colored/Exposed Aggregate Concrete Mix Design and Approval Process. Proportioning and testing of the concrete components and mixture shall be accomplished by using the methods outlined in Section 601.

The following information shall be included in the laboratory test data report:

1. Coloring agent
2. Curing Compound
3. Top Surface Concrete Retarder
4. Aggregate Exposure Procedure

CONSTRUCTION METHODS:

Construction of integrally colored/exposed aggregate Portland cement concrete sidewalks shall be in accordance with the RIDOT Standard Specifications, Sections 601 and 905 with the following additions:

EXPERIENCE OF PERSONNEL: The installation, coloring, finishing, and related activities are operations requiring a thorough knowledge of the properties of concrete, the characteristics of the coloring process, and experience with these methods. Only skilled and experienced artisans shall be employed in this work item. Specifically, the placement crew chief shall remain the same person from installation and approval for the samples(s) through the entire project.

The Contractor shall provide conclusive proof that he is qualified to perform the work, and has previously produced such specialty concrete pavement as specified and can comply with the provisions specified herein and shown on the plans. Proof shall consist of at least three high quality installations similar to that specified herein. Evidence that the contractor is qualified shall be submitted within thirty (30) days after the Notice to Proceed is received, and it shall be the responsibility of the prime bidder to ensure that the subcontractor he intends to use of this work be prequalified in accordance with this paragraph.

Prior to performing the concrete field trial runs, the Contractor shall submit to the Engineer the proposed mix design(s) and one concrete prototype (1'x1'x4"min.) for each concrete classification, color and texture, and aggregate exposure as specified in the project plans. The prototype shall be submitted to the Engineer sufficiently in advance to allow for review and approval for color, texture, and aggregate exposure of the concrete by the RIDOT Historic Preservation Specialist.

Trial Run. After the concrete mix design and concrete prototype provided by the Contractor have been reviewed and approved by the Engineer and no exception taken, the Contractor shall conduct a trial run prior to production, in accordance with the requirements listed in Section 601, using the submitted mix design's component materials and proportions including the amount of admixtures, color additives, finishing and curing techniques which will be necessary to provide concrete of the specified plasticity, workability, air content, compressive strength, color, texture, aggregate exposure and any other specified concrete property.

Field Sample. During the trial run, the Contractor shall construct a field sample, no less than 16 square feet (4'min x 4'min x 4"min) in size, using the submitted mix. This sample shall not be part of the permanent pavement area.

The sample shall be reviewed and approved by the Engineer in consultation with the RIDOT Historic Preservation Specialist for color, texture, and aggregate exposure. Additional samples shall be required in the event that the first or subsequent samples are rejected.

Sidewalk Joints: Sidewalk joints over precast panels shall be saw cut at locations that align with the joints in the panels. Sidewalk joints in areas other than precast panels and moment slabs shall be tooled.

Sawed Joints: shall be created by sawing grooves in the surfaces of the sidewalk to the dimensions and at the spacing and lines shown on the Plans with an approved concrete saw. After each joint is sawed, the saw cut and adjacent concrete surface shall be thoroughly cleaned. If curing blankets are used they shall be removed from the pavement only at the location(s) where a joint is to be sawed and only a sufficient width to allow the cut to be made. As soon as the cut has been made curing material shall be replaced. In no case shall either the top or edges of concrete be left unprotected for more than one-half hour. Sawing of the joints shall commence as soon as the concrete has hardened sufficiently to permit sawing without raveling, usually 4 to 24 hours. All joints shall be sawed before uncontrolled shrinkage cracking takes place. If necessary, the sawing operations shall be carried on during the day and night, regardless of weather conditions. The sawing of any joint shall be omitted if a crack occurs at or near the joint location prior to the time of sawing. Sawing shall be discontinued when a crack develops ahead of the saw. In general, all joints should be sawed in sequence.

Sealing Joints: Sawed Joints shall be filled with joint sealing material before the sidewalk is opened to pedestrian traffic, and as soon after completion of the curing period as is feasible. Just prior to sealing, each joint shall be thoroughly cleaned of all foreign material, including membrane curing compound and the joint faces shall be cleaned and surface dry when the seal is applied. Material for seal applied hot shall be stirred during heating so that localized overheating does not occur. The sealing material shall be applied to each joint opening to conform to the details shown on the Plans or as directed by the Engineer. The pouring shall be done in such a manner that the material will not be spilled on the exposed surfaces of the concrete. Any excess material on the surface shall be removed.

CONCRETE PLACEMENT: Concrete that has set beyond the point recommended by the surface retarder manufacturer's recommendations shall be removed and disposed of by the Contractor and replaced in accordance with the plans, these specifications and/or as directed by the Engineer. Concrete removed, disposed of and replaced shall be at the Contractor's expense. Sandblasting to expose the aggregate is prohibited. Do not place concrete until the subbase and forms have been checked for line and grade and manholes and other structures are set at the required elevation and alignment. Concrete is to be placed around structures at the time the surrounding sidewalk/driveway concrete is placed. Moisten subbase to provide uniform dampened conditions at time concrete is placed.

Deposit and spread concrete in a continuous operation between transverse joints, as far as possible. If interrupted for more than 1 hour, place a construction joint.

Joint fillers and joint sealants shall be installed in accordance with manufacturer's recommendation.

PRIMARY CONCRETE FINISHING: After strike-off and consolidating concrete, smooth surface by screeding and floating. Use hand methods only where mechanical floating is not possible. Adjust floating to compact surface and produce uniform texture.

After floating, test surface for trueness with a 10' straightedge, distribute concrete as required to remove surface irregularities, and refloat repaired areas to provide a continuous smooth finish. Finished surfaces should conform to tolerances required in Section 501 or the RIDOT Standards Specifications for Road and Bridge Construction.

SPECIAL CONCRETE FINISHING: After floating, the entire surface shall be finished as follows:

1. Fresh concrete shall be carefully and continuously monitored and tested during partial setting up so that proper consistency is achieved. Air temperature, humidity, wind conditions, and other factors affecting setting rate shall be considered.
2. At all edges of principal obstructions, smooth and finish the colored concrete with a metal edging tool, having a smooth three (3) inch plate width and a one-half (1/2) inch radius. A principal obstruction shall be, for example, a light or signal standards, catch basin, manhole, or planting area, but shall not be a water gate, fire hydrant, sign post, or similar incidental obstruction.
3. The method employed to achieve the desired concrete surface aggregate exposure shall be by applying the specified chemical retardant to the surface of the concrete. The amount of retardant applied will be sufficient to remove 1/8-inch in depth of mortar in order to expose the coarse aggregate and provide an overall surface with a rough texture. Hose off and scrub with stiff bristle broom as per manufacturer's written instructions. Depth of etch to be ¼" below plane of aggregate crowns.

REPAIRS AND PROTECTIONS: Repair or replace broken or defective concrete as required by the Engineer.

Protect concrete from damage and maintain pavement free of stains and other damage until accepted by the Engineer.

Sweep concrete pavement and wash free of stains, discolorations, dirt and other foreign material just prior to final inspection.

METHOD OF MEASUREMENT:

"Modified Integrally Colored/Exposed Aggregate Finish Portland Cement Concrete Sidewalk Std. 43.10M" shall be measured by the number of cubic yards installed and accepted in accordance with the plans, and/or as directed by the Engineer.

The Contractor shall submit documentation from a Professional Structural Engineer registered in Rhode Island showing there is no adverse effect.

CONSTRUCTION METHOD: All construction methods for cleaning the structure shall conform to the appropriate section of the Rhode Island Standard Specifications for Road and Bridge Construction, 2013 Edition, including the latest corrections and addenda and these Specifications. The Contractor shall contain and collect debris and water used in the cleaning and prevent it from entering the river.

METHOD OF MEASUREMENT: "High Pressure Water Cleaning of Bridge Structure" will be measured by the square foot.

BASIS OF PAYMENT: "High Pressure Water Cleaning of Bridge" will be paid for at the square foot contract price as listed in the Proposal. The price so stated constitutes full and complete compensation for all labor, equipment and other incidentals required to finish the work, complete and accepted by the Engineer including the containment and collection of debris and water from entering the river.

831.9901

PEDESTRIAN RAILING

831.9902

MODIFIED RAILING

DESCRIPTION: This work shall consist of the complete fabrication and installation of the Painted Steel Pedestrian Rail along the bridge, on the retaining wall along the walkway in Carrol Park (including the handicap hand rail) and the modified railing mounted to the northeast channel wall below the precast slabs as indicated on the Plans, in accordance with these Specifications or as directed by the Engineer.

MATERIALS: The materials shall conform with the RIDOT Standard Specifications and as shown on the plans.

CONSTRUCTION METHOD: Installation of the Pedestrian Rail and Modified Railing shall be in accordance with the manufacturer's instructions and all applicable requirements of RIDOT Standard Specifications for Road and Bridge Construction 2013 Edition.

METHOD OF MEASUREMENT: The Pedestrian Railing and Modified Railing shall be measured by the number of linear feet of pedestrian rail actually installed in accordance with the Plans and/or as directed by the Engineer.

BASIS OF PAYMENT: The accepted quantity of Pedestrian Railing and Modified Railing will be paid for at the contract unit price per "LINEAR FOOT" as listed in the Proposal. The price so stated constitutes full and complete compensation for all labor, materials and equipment required for complete installation of the handrail including posts, railings, handrails, endcaps, base plates, anchor bolts, powder coating, welding, connecting hardware and for all incidentals required to finish the work, complete and accepted by the Engineer.

911.9901

REMOVE AND RESET WET STONE MASONRY RETAINING WALLS STANDARD 10.10

DESCRIPTION:

The work under this item shall be carried out in accordance with Section 807, Structural Stone Masonry as it relates to stone masonry construction, Section 939, Stone Walls in Historic, Scenic and Rural Areas and as described in this Special Provision as indicated on the Plans and/or as directed by the Engineer.

The work under this item will consist of the removal, rebuilding, stockpiling and cleaning stones of a portion of an existing stone retaining wall adjacent to the buried foundation wall of the Historic Northern Mill # 2 building, to the limits shown on the plans all in accordance with Section 807 and Section 939 of the Rhode Island Standard Specifications for Road and Bridge Construction and as required in these specifications. The rebuilt retaining wall is to be constructed utilizing stones removed and stockpiled from the existing wall. The existing stones removed from the existing retaining wall shall first be used to construct the fascia stones of the new wall, the remaining stones can be used for the hidden stones along the back of wall. If additional stones are required for the hidden stones along the back of wall then they shall be paid for under 912.9901 Supplementary Stones for walls.

The stone retaining wall is a character-defining element that must be properly rehabilitated and preserved. Micro-abrasive blasting, including sand-blasting, or harsh chemical cleaners shall at no time be used on the bridge's stonework or mortar. Detergents and paint strippers formulated for use on granite masonry shall be used, in conjunction with stiff natural-bristle or nylon-bristle brushing and/or hose stream of water under normal pressure (100 psi or less).

The cleaning material shall consist of potable, clean water free of contaminants. Where water has high iron or other metal content, the Contractor shall pre-treat with complexing agents before use to reduce risk of staining. Stone masonry cleaner shall be one of the following products recommended for use on historic stone masonry: Restoration Cleaner Detergent by ProSoCo, Inc., South Plainfield, NJ; Hydro-Clean HT-626 Brick, Granite, Sandstone & Terra Cotta Cleaner by Hydrochemical Techniques, Inc., Hartford, CT; or Florok HD 900 Restoration Cleaner by Chargar Corporation, Hamden, CT.

Historic Significance: The Contractor shall be aware that the retaining wall to be rebuilt is within the Slatersville Historic District, which is listed in the National Historic Register of Historic Places. The removing and rebuilding of this retaining wall will be monitored by a Cultural Resource Monitor (CRM) hired by RIDOT.

Monitoring: All of the work performed under this item will be monitored by a Cultural Resources Monitor (CRM). **The CRM must be on site when any work under this item is taking place.** Therefore, it is the Contractor's responsibility to coordinate with the CRM with regard to scheduling the work. The CRM needs to be aware of the Contractor/masonry contractor's work schedules for the month and week. The Contractor is to ensure that the CRM knows in advance when work requiring monitoring will be performed during the ensuing week.

The Contractor shall inform the Engineer and the CRM not later than 12:00 pm each Friday of the work schedule for the following week. The Contractor shall notify the Engineer and the CRM of cancellations of work no less than 24 hours in advance. No work can be performed under this item without the CRM present except with written permission from the Engineer. Work performed in the absence of the CRM will be subject to rejection, removal and replacement at no additional expense to the State.

MATERIALS:
The materials for this work shall be approved by the Engineer in consultation with the RIDOT Historic Preservation Specialist and in accordance with Section 807 of the Rhode Island Standard Specifications for Road and Bridge Construction except as noted and as specified herein.

Stones: Stones shall be stones from the existing walls and approved supplemental stones that match the existing stones with regard to shape, color, texture, geological composition and size distribution.

Mortar: The mortar shall conform to Subsection M.04.03.5 and shall blend with the texture and color of the existing mortar between the stones, or as directed by the Engineer.

CONSTRUCTION METHODS:
The intent of this specification is to ensure that the rebuilt portions of retaining walls duplicate the appearance of the adjoining walls with respect to coursing, stone type, joint width and distribution of stones by size.

The stone masonry will be constructed to the lines and grades indicated on the plans and in accordance with the appropriate sections of Section 807 of the Standard Specifications. All work shall be completed by masons experienced in restoring/constructing similar large masonry structures. The intent of this work is to restore the existing stone retaining wall to its original appearance by repairing the damaged portion of wall within the limits shown on the plans.

Contractor Qualifications: The work shall be accomplished by stonemasons with demonstrated proficiency in historic stone masonry construction/restoration practices. Documentation in the form of professional certifications and the locations (with photographs) of a least three (3) successfully completed stone masonry projects of similar type and scale must be presented to the Engineer no less than 30 days prior to the start of work. This documentation must be approved by the Engineer in consultation with the RIDOT Historic Preservation Specialist in order for the masonry contractor to be permitted to perform the work. The approved mason(s) are to complete the entire work item for which the approval was given.

Documentation: As it is the intent of this work to restore the masonry wall to its original appearance, the Contractor shall document the existing wall using photographs, measurements and other appropriate means before any dismantling commences. No less than four (4) copies of the documentation shall be produced, with one set given to the Engineer, two (2) sets to the RIDOT Historic Preservation Specialist and the fourth set retained by the masonry contractor to use as a guide during the reconstruction. At least one picture shall be enlarged and printed for use in identifying the locations of each of the stones that will be removed and reset. Individual stones are to be discretely marked before being removed from the wall and labeled on the enlarged photograph to record each stone's location in the wall. Only the significant (large) stones need to be recorded individually as determined by the Engineer. The documentation must be approved by the Engineer and the RIDOT Historic Preservation Specialist.

Handling Stones: Care shall be taken during the handling of the stones to avoid cracking, chipping, scratching or otherwise damaging or defacing them. The stones are to be lifted using approved straps and temporarily stored in a manner and location approved by the Engineer. Should it become necessary to transport the stones, they are to be loaded, transported and unloaded in a manner that will not cause any damage to the stones. The contractor's proposed methods and equipment must be approved in advance by the Engineer.

Cutting: Should some stones necessary to replace missing stones require cutting, the masonry contractor's method of cutting the stones shall be submitted to the Engineer for approval prior to initiating the cutting operations. The contractor shall cut the stones without excessive damage to the stones. Fractures, defaced or damaged stones shall not be used.

Sample Wall: The Contractor will not be required to construct a sample wall section. Instead, the Engineer and RIDOT's Historic Preservation Specialist will witness the construction of the initial portion of wall until it can be determined that the reconstructed masonry matches the original. For this reason, the Contractor will notify the Engineer 5 days prior commencing the work. The Contractor must produce acceptable masonry before being permitted to continue with the work.

Reconstruction: The masonry shall be constructed in accordance with the applicable subsections of Section 807 as it relates to "Split Face Masonry" to reproduce the original wall (with regard to its finished appearance). Care shall be taken to ensure that the originally exposed faces of stones are properly oriented. Chinking will be permitted in the face, but should be used only to the extent necessary to produce masonry that matches the appearance of the original wall. Care shall be taken to plan the work such that the stone/chinking distribution and overall appearance matches the extant/original masonry. The Engineer in consultation with the RIDOT Historic Preservation Specialist will determine the acceptability of the work based upon review of the documentation.

Weather Limitations: The work shall not be performed when the ambient air temperature is below 40º F, when the stones contain frost or when the temperature is expected to drop below 40º F within 36 hours of completion of the day's work, except with the written permission of the Engineer and subject to such conditions as may be required. Such permission shall not release the Contractor from the obligation to build a satisfactory structure. All work damaged by the weather shall be removed and replaced at no expense to the State. In hot or dry weather, the masonry shall be satisfactory protected from the sun and kept moist for a period of three days.

Cleaning Exposed Faces: The face of the masonry is to be left in a clean condition, free of mortar/concrete stains and any other material that may detract from the appearance of the work. The Contractor will employ a method of cleaning the face on the masonry that will not cause damage to the work. The Contractor shall submit his proposed method of cleaning to the Engineer for approval.

METHOD OF MEASUREMENT:

"Remove and Reset Wet Stone Masonry Retaining Walls Standard 10.1.0" will be measured for payment by the cubic yard of rebuilt wall.

BASIS OF PAYMENT:

"Remove and Reset Wet Stone Masonry Retaining Walls Standard 10.1.0, will be paid for at the contract unit price bid per cubic yard, complete in place and accepted. This payment shall constitute full compensation for all labor, tools, removal of stones, stockpiling and transporting of stones on or off site, resetting of stones, providing weep holes through the walls, materials, cement mortar, equipment, splitting, cutting, trimming, cleaning and wetting of stones, documentation, coordination with CRM and other incidentals necessary to properly complete the work to the satisfaction of the Engineer. If additional stones are needed to complete the work then they shall be paid for under 912.9901 "Supplementary Stones for Walls". Excavation and backfill will be paid for under the appropriate bid item(s).

911.9902

REMOVE AND REBUILD STONE MASONRY SPANDREL WALLS

DESCRIPTION:

The work under this item shall be carried out in accordance with Section 807, Structural Stone Masonry as it relates to stone masonry construction, Section 939, Stone Walls in Historic, Scenic and Rural Areas and as described in this Special Provision as indicated on the Plans and/or as directed by the Engineer. The Contactor is made aware of the construction restrictions for 911.9902 "Remove and Rebuild Stone Masonry Spandrel Walls" which shall be in accordance with Sheet 75 titled Contractor Access Plan. These restrictions only apply to work within the river including but not limited to scaffolding and equipment.

The work under this item will consist of the removal, stockpiling, cleaning and rebuilding of the existing stone masonry spandrel walls, portions of approach stone masonry wingwalls, including the stone masonry walls above the approach wingwalls at all four corners and two stone masonry pillars located at the entrance to the residential complex to the lines and grades shown on the contract drawings. All of these structures are contributing elements of the Slatersville Historic District. The work under this item shall also include the removal and stockpiling of the existing stone masonry bridge parapet stones, including the existing parapet cap stones for reuse in other areas of the project. No heavy equipment will be allowed into the river for the removal or rebuilding of the spandrel walls and wingwalls. The spandrel walls and wingwall stones shall be removed and reset with equipment used from the roadway level. The work under this section shall be in accordance with Section 807 of the Rhode Island Standard Specifications for Road and Bridge Construction in accordance with these specifications and as required by the Engineer. The rebuilt spandrel walls are to be constructed utilizing stones removed and stockpiled from the existing spandrel walls and bridge parapets. This work shall include all work platforms and scaffolding supported from the river bed necessary to complete the work. This work shall include handling, cleaning, cutting if necessary, chink stones, compressible filler, stone tie backs and placement of the stones previously removed and stockpiled. The existing stones removed from the existing spandrel walls and parapet shall first be used to construct the fascias of the rebuilt spandrel walls, the remaining stones can be used for the hidden stones along the back of the spandrel wall. The rebuilt portions of the spandrel wall, including any necessary chink stones shall duplicate the appearance of the existing spandrel wall with respect to coursing, joint width, color and distribution of stones by size. It shall be the Contractor's responsibility to maintain the stability of the spandrel walls and arch structures at all times during the execution of this work and that no damage including shifting of arch stones or spandrel wall stones shall occur to any part of the structures.

The bridge's spandrel walls are character-defining elements that must be properly rehabilitated and preserved. Micro-abrasive blasting, including sand-blasting, or harsh chemical cleaners shall at no time be used on the bridge's stonework or mortar. Detergents and paint strippers formulated for use on granite masonry shall be used, in conjunction with stiff natural-bristle or nylon-bristle brushing and/or hose stream of water under normal pressure (100 psi or less).The cleaning material shall consist of potable, clean water free of contaminants. Where water has high iron or other metal content the Contractor shall pre-treat with complexing agents before use to reduce risk of staining. Stone masonry cleaner shall be one of the following products recommended for use on historic stone masonry: Restoration Cleaner Detergent by ProSoCo, Inc., South Plainfield, NJ;

Hydro-Clean HT-626 Brick, Granite, Sandstone & Terra Cotta Cleaner by Hydrochemical Techniques, Inc., Hartford, CT; or Florok HD 900 Restoration Cleaner by Chargar Corporation, Hamden, CT.

The Contractor shall make adequate provisions, including the erection of a temporary protective shielding, for the protection of personnel due to the Contractors operations, and to prevent any debris from falling into the river below. The Contractor shall have in place the proper Temporary Protective Shielding before starting this work. The Temporary Protective Shielding will be paid for under 803.0500 Temporary Deck Underside and Side Protective Shielding. The Contractor shall remove all unused material and clean his work area to the satisfaction of the Engineer.

Monitoring: All of the work performed under this item will be monitored by a Cultural Resource Monitor (CRM) paid for by RIDOT. **The CRM must be on site when any work under this item is taking place.** Therefore, it is the Contractor's responsibility to coordinate with the CRM with regard to scheduling the work. The CRM needs to be aware of the Contractor/masonry contractor's work schedules for the month and week. The Contractor is to ensure that the CRM knows in advance when work requiring monitoring will be performed during the ensuing week. The Contractor shall inform the Engineer and the CRM not later than 12:00 pm each Friday of the work schedule for the following week. The Contractor shall notify the Engineer and the CRM of cancellations of work no less than 24 hours in advance. No work can be performed under this item without the CRM present except with written permission from the Engineer. Work performed in the absence of the CRM will be subject to rejection, removal and replacement at no additional expense to the State.

MATERIALS:

Stones: Stones shall be stones from the original walls and approved supplemental stones that match the original stones with regard to shape, color, texture, geological composition and size distribution. Stones used in previous repairs to the parapets or walls may not be deemed appropriate by the RIDOT Historic Preservation Specialist for reuse in the re-built walls. Supplemental stones are to be approved by the Engineer in consultation with the RIDOT HPS.

Tie Backs: AASHTO M31 Grade 60, Galvanized per AASHTO M232.

Mortar: The mortar shall conform to Subsection M.04.03.5 and shall blend with the texture and color of the existing mortar between the stones or as directed by the Engineer.

Construction Methods: The intent of this specification is to ensure that the rebuilt stone masonry duplicates the appearance of the original, intact masonry with respect to coursing, stone type, stone placement, joint width and distribution of stones by size.

The stone masonry will be constructed to the lines and grades indicated on the plans and in accordance with the appropriate sections of Section 807 of the Standard Specifications. All work shall be completed by masons experienced in restoring/constructing similar large masonry structures. The intent of this work is to restore the existing stone masonry spandrel/retaining walls and pillars to their original appearance.

Contractor Qualifications: The work shall be accomplished by stonemasons with demonstrated proficiency in historic stone masonry construction/restoration practices. Documentation in the form of professional certifications and the locations (with photographs) of a least three (3) successfully completed stone masonry projects of similar type and scale must be presented to the Engineer no less than 30 days prior to the start of work. This documentation must be approved by the Engineer in consultation with the RIDOT HPS in order for the masonry contractor to be permitted to perform the work. The approved mason(s) are to complete the entire work item for which the approval was given.

Documentation: As it is the intent of this work to restore the masonry to its original appearance, the Contractor shall document the existing structures using photographs, measurements and other appropriate means before any dismantling commences. No less than four (4) copies of the documentation shall be produced, with one set given to the Engineer, two (2) sets to the RIDOT HPS and the fourth set retained by the masonry contractor to use as a guide during the reconstruction. At least one picture shall be enlarged and printed for use in identifying the locations of each of the stones that will be removed and reset. Individual stones are to be discretely marked before being removed and labeled on the enlarged photograph to record each stone's location in the structure. Only the significant (large) stones need to be recorded individually as determined by the Engineer. The documentation must be approved by the Engineer and the RIDOT HPS.

Handling Stones: Care shall be taken during the handling of the stones to avoid cracking, chipping, scratching or otherwise damaging or defacing them. The stones are to be lifted using approved straps and temporarily stored in a manner and location approved by the Engineer. Should it become necessary to transport the stones, they are to be loaded, transported and unloaded in a manner that will not cause any damage to the stones. The contractor's proposed methods and equipment must be approved in advance by the Engineer.

Cutting: Should it be necessary to cut stones in order to replace missing stones, the masonry contractor's method of cutting the stones shall be submitted to the Engineer for approval prior to initiating the cutting operations. The contractor shall cut the stones without excessive damage to the stones. Fractures, defaced or damaged stones shall not be used.

Sample Wall: The Contractor will not be required to construct a sample section. Instead, the Engineer and RIDOT HPS will witness the construction of the initial portion of masonry until it can be determined that the reconstructed masonry matches the original. For this reason, the Contractor will notify the Engineer 5 days prior commencing the work. The Contractor must produce acceptable masonry before being permitted to continue with the work.

Reconstruction: The masonry shall be constructed in accordance with the applicable subsections of Section 807 as it relates to "Split Face Masonry" to reproduce the original masonry (with regard to its finished appearance). Care shall be taken to ensure that the originally exposed faces of stones are property oriented. Chinking will be permitted in the face, but should be used only to the extent necessary to produce masonry that matches the appearance of the original wall/structure. Care shall be taken to plan the work such that the stone/chinking distribution and overall appearance matches the extant/original masonry. The Engineer in consultation with the RIDOT HPS will determine the acceptability of the work based upon review of the documentation and comparison with the existing masonry.

Weather Limitations: The work shall not be performed when the ambient air temperature is below 40º F, when the stones contain frost or when the temperature is expected to drop below 40º F within 36 hours of completion of the day's work, except with the written permission of the Engineer and subject to such conditions as may be required. Such permission shall not release the Contractor from the obligation to build a satisfactory structure. All work damaged by the weather shall be removed and replaced at no expense to the State. In hot or dry weather, the masonry shall be satisfactory protected from the sun and kept moist for a period of three days.

Cleaning Exposed Faces: The face of the masonry is to be left in a clean condition, free of mortar/concrete stains and any other material that may detract from the appearance of the work. The Contractor will employ a method of cleaning the face on the masonry that will not cause damage to the work. The Contractor shall submit his proposed method of cleaning to the Engineer for approval.

Historic Significance:

The Contractor shall be aware that the Slatersville Stone Arch Bridge No. 273 is a historically significant, double-span, stone arch bridge and that it is individually listed in the National Register of Historic Places and it, along with the stone walls and pillars are contributing resources of the Slatersville Historic District. The bridge's stone arch, abutments, piers and spandrel walls are character-defining elements that must be properly rehabilitated and preserved.

METHOD OF MEASUREMENT:

"Remove and Rebuild Stone Masonry Spandrel Wall" will be measured for payment by the cubic yard of rebuilt spandrel wall.

BASIS OF PAYMENT:

"Remove and Rebuild Stone Masonry Spandrel Wall", will be paid for at the contract unit price bid per cubic yard, complete in place and accepted by the Engineer. This payment shall constitute full compensation for all labor, equipment, tools, work platforms and staging, documentation, coordination with CRM, removal, stockpiling and transporting on or off site, resetting of stones, preformed polyethylene foam joint filler, materials, cement mortar, equipment, splitting, cutting, trimming, cleaning and wetting of stones, protection of masonry and other incidentals necessary to properly complete the work to the lines and grades as shown on the contract drawings and to the satisfaction of the Engineer. If additional stones are needed to complete the work then they shall be paid for under 912.9901 "Supplementary Stones for Walls". Excavation and backfill and protective shielding will be paid for under the appropriate bid item(s).

911.9903

REMOVE AND REBUILD STONE MASONRY N.E. CHANNEL WALL AND N.W. WINGWALL

DESCRIPTION:

The work under this item shall be carried out in accordance with Section 807, Structural Stone Masonry as it relates to stone masonry construction, Section 939, Stone Walls in Historic, Scenic and Rural Areas and as described in this Special Provision as indicated on the Plans and/or as directed by the Engineer. The Contactor is made aware of the construction restrictions for 911.9903 "Remove and Rebuild Stone Masonry N.E. Channel Wall and N.W. Wingwall" which shall be in accordance with Sheet 75 titled Contractor Access Plan. These restrictions only apply to work within the river including but not limited to scaffolding and equipment.

The work shall also consist of the removal, stockpiling, cleaning and rebuilding of a portion of the existing stone masonry northeast channel retaining wall and the northwest wingwall that are part of the Slatersville Stone Arch Bridge No. 273 to the lines and grades as shown on the contract drawings. The work shall also include the concrete cap along the northeast channel retaining wall as shown on the drawings. The work under this section shall be in accordance with Sections 601, 807 and 905 of the Rhode Island Standard Specifications for Road and Bridge Construction in accordance with these specifications and as required by the Engineer. The rebuilt walls are to be constructed utilizing stones removed and stockpiled from the existing walls and bridge parapets and properly backfilled using pervious material. This work shall include handling, cleaning, cutting if necessary, chink stones, compressible filler, and placement of the stones previously removed and stockpiled. The existing stones removed from the walls shall first be used to construct the fascia stones of the rebuilt walls, the remaining stones can be used for the hidden stones along the back of the walls. The rebuilt portions of the walls, including any necessary chink stones shall duplicate the appearance of the existing walls that remain with respect to coursing, joint width, color and distribution of stones by size. It shall be the Contractor's responsibility to maintain the stability of the adjacent walls and arch structures at all times during the execution of this work and that no damage including shifting of arch stones or adjacent wall stones shall occur to any part of the structures. The northeast channel wall shall be rebuilt in kind as a dry-laid stone masonry wall matching the existing abutting adjacent wall as mentioned above including the overall geometry.

The bridge's walls including the northeast channel wall and the northwest wingwall are character-defining elements that must be properly rehabilitated and preserved. Micro-abrasive blasting, including sand-blasting, or harsh chemical cleaners shall at no time be used on the bridge's stonework or mortar. Detergents and paint strippers formulated for use on granite masonry shall be used, in conjunction with stiff natural-bristle or nylon-bristle brushing and/or hose stream of water under normal pressure (100 psi or less).

The cleaning material shall consist of potable, clean water free of contaminants. Where water has high iron or other metal content, pre-treat with complexing agents before use to reduce risk of staining. Stone masonry cleaner shall be one of the following products recommended for use on historic stone masonry: Restoration Cleaner Detergent by ProSoCo, Inc., South Plainfield, NJ;

Hydro-Clean HT-626 Brick, Granite, Sandstone & Terra Cotta Cleaner by Hydrochemical Techniques, Inc., Hartford, CT; or Florok HD 900 Restoration Cleaner by Chargar Corporation, Hamden, CT.

The Contractor shall make adequate provisions, including the erection of a temporary protective shielding, for the protection of personnel due to the Contractors operations, and to prevent any debris from falling into the river below. The Contractor shall have in place the proper Temporary Protective Shielding before starting this work. The Temporary Protective Shielding will be paid for under 803.0500 Temporary Deck Underside and Side Protective Shielding. The Contractor shall remove all unused material and clean his work area to the satisfaction of the Engineer.

Monitoring: All of the work performed under this item will be monitored by a RIDOT appointed Cultural Resources Monitor (CRM). **The CRM must be on site when any work under this item is taking place.** Therefore, it is the Contractor's responsibility to coordinate with the CRM with regard to scheduling the work. The CRM needs to be aware of the Contractor/masonry contractor's work schedules for the month and week. The Contractor is to ensure that the CRM knows in advance when work requiring monitoring will be performed during the ensuing week. The Contractor shall inform the Engineer and the CRM not later than 12:00 pm each Friday of the work schedule for the following week. The Contractor shall notify the Engineer and the CRM of cancellations of work no less than 24 hours in advance. No work can be performed under this item without the CRM present except with written permission from the Engineer. Work performed in the absence of the CRM will be subject to rejection, removal and replacement at no additional expense to the State.

MATERIALS:
The materials for this work shall be approved by the Engineer in consultation with the RIDOT Historic Preservation Specialist and in accordance with Section 807 of the Rhode Island Standard Specifications for Road and Bridge Construction except as noted and as specified herein.

Stones: Stones shall be stones from the original walls and approved supplemental stones that match the original stones with regard to shape, color, texture, geological composition and size distribution. Stones used in previous repairs to the walls may not be deemed suitable for re-use in the rebuilt walls.

Mortar: The mortar shall conform to Subsection M.04.03.5 and shall blend with the texture and color of the existing mortar between the stones or as directed by the Engineer.

Construction Methods: The intent of this specification is to ensure that the rebuilt portions of retaining walls duplicate the appearance of the intact portions of the adjoining walls with respect to coursing, stone type, joint width and distribution of stones by size.

The stone masonry will be constructed to the lines and grades indicated on the plans and in accordance with the appropriate sections of Section 807 of the Standard Specifications. All work shall be completed by masons experienced in restoring/constructing similar large masonry structures. The intent of this work is to restore the existing stone retaining wall to its original appearance by repairing the damaged portion of wall within the limits shown on the plans.

Contractor Qualifications: The work shall be accomplished by stonemasons with demonstrated proficiency in historic stone masonry construction/restoration practices. Documentation in the form of professional certifications and the locations (with photographs) of a least three (3) successfully completed stone masonry projects of similar type and scale must be presented to the Engineer no less than 30 days prior to the start of work. This documentation must be approved by the Engineer in consultation with the RIDOT Historic Preservation Specialist (RIDOT HPS) in order for the masonry contractor to be permitted to perform the work. The approved mason(s) are to complete the entire work item for which the approval was given.

Documentation: As it is the intent of this work to restore the masonry wall to its original appearance, the Contractor shall document the existing wall using photographs, measurements and other appropriate means before any dismantling commences. No less than four (4) copies of the documentation shall be produced, with one set given to the Engineer, two (2) sets to the RIDOT HPS and the fourth set retained by the masonry contractor to use as a guide during the reconstruction. At least one picture shall be enlarged and printed for use in identifying the locations of each of the stones that will be removed and reset. Individual stones are to be discretely marked before being removed from the wall and labeled on the enlarged photograph to record each stone's location in the wall. Only the significant (large) stones need to be recorded individually. The documentation must be approved by the Engineer and the RIDOT HPS.

Handling Stones: Care shall be taken during the handling of the stones to avoid cracking, chipping, scratching or otherwise damaging or defacing them. The stones are to be lifted using approved straps and temporarily stored in a manner and location approved by the Engineer. Should it become necessary to transport the stones, they are to be loaded, transported and unloaded in a manner that will not cause any damage to the stones. The contractor's proposed methods and equipment must be approved in advance by the Engineer.

Cutting: Should some stones necessary to replace missing stones require cutting, the masonry contractor's method of cutting the stones shall be submitted to the Engineer for approval prior to initiating the cutting operations. The contractor shall cut the stones without excessive damage to the stones. Fractures, defaced or damaged stones shall not be used.

Sample Wall: The Contractor will not be required to construct a sample wall section. Instead, the Engineer and the RIDOT HPS will witness the construction of the initial portion of wall until it can be determined that the reconstructed masonry matches the original. For this reason, the Contractor will notify the Engineer 5 days prior commencing the work. The Contractor must produce acceptable masonry before being permitted to continue with the work.

Reconstruction: The masonry shall be constructed in accordance with the applicable subsections of Section 807 as it relates to "Split Face Masonry" to reproduce the original wall (with regard to its finished appearance). Care shall be taken to ensure that the originally exposed faces of stones are properly oriented. Chinking will be permitted in the face, but should be used only to the extent necessary to produce masonry that matches the appearance of the original wall. Care shall be taken to plan the work such that the stone/chinking distribution and overall appearance matches the extant/original masonry. The Engineer in consultation with the RIDOT HPS will determine the acceptability of the work based upon review of the documentation and comparison with the existing wall.

Weather Limitations: The work shall not be performed when the ambient air temperature is below 40º F, when the stones contain frost or when the temperature is expected to drop below 40º F within 36 hours of completion of the day's work, except with the written permission of the Engineer and subject to such conditions as may be required. Such permission shall not release the Contractor from the obligation to build a satisfactory structure. All work damaged by the weather shall be removed and replaced at no expense to the State. In hot or dry weather, the masonry shall be satisfactory protected from the sun and kept moist for a period of three days.

Cleaning Exposed Faces: The face of the masonry is to be left in a clean condition, free of mortar/concrete stains and any other material that may detract from the appearance of the work. The Contractor will employ a method of cleaning the face on the masonry that will not cause damage to the work. The Contractor shall submit his proposed method of cleaning to the Engineer for approval.

Historic Significance:

The Contractor shall be aware that the subject stone masonry walls are historically significant as contributing structures of the Slatersville Historic District that must be properly rehabilitated and preserved.

METHOD OF MEASUREMENT:

"Remove and Rebuild Stone Masonry N.E. Channel Wall and N.W. Wingwall" will be measured for payment by the cubic yard of rebuilt wall.

BASIS OF PAYMENT:

"Remove and Rebuild Stone Masonry N.E. Channel Wall and N.W. Wingwall", will be paid for at the contract unit price bid per cubic yard, complete in place and accepted by the Engineer. This payment shall constitute full compensation for all labor, tools, materials, documentation, coordination with CRM, removal, stockpiling and transportation on or off site, resetting of stones, cement mortar, reinforcement, drill and grout dowels and concrete for the concrete cap stone, equipment, splitting, cutting, trimming, cleaning and wetting of stones and other incidentals necessary to properly complete the work to the lines and grades as shown on the contract drawings and to the satisfaction of the Engineer.

If additional stones are needed to complete the work then they shall be paid for under 912.9901 "Supplementary Stones for Walls". Excavation and backfill will be paid for under the appropriate bid item(s).

912.9901

SUPPLEMENTARY STONES FOR WALLS

DESCRIPTION: This work shall consist of the Contractor furnishing, delivering and installing supplemental stones for use in the construction of the spandrel walls and retaining walls as necessary. Stones that will be visible after the wall is constructed shall closely match the size distribution, shape, color, texture and geologic composition of the other surrounding stones in the wall. The stones shall be approved by the Engineer in consultation with the RIDOT Historic Preservation Specialist.

METHOD OF MEASUREMENT

"Supplementary Stones for Walls" will be measured for payment by the ton.

BASIS OF PAYMENT

"Supplementary Stones for Walls" will be paid for at the contract unit price bid per ton, complete in place and accepted. This payment shall constitute full compensation for all labor, materials, tools, equipment, stockpiling, transportation, splitting, cutting, trimming, cleaning and wetting of stones and other incidentals necessary to properly complete the work to the satisfaction of the Engineer.

912.9902

GRANITE STEP

DESCRIPTION: Work covered under this item shall consist of furnishing and installing granite steps as indicated on the Plans.

MATERIALS: The stone for the step shall meet the applicable requirements of Section 912.02 of the Standard Specifications. The granite step shall be a single unit measuring 8" high x 24" deep x 52" wide. The granite shall have a smooth surface finish on the face and top. The color of the stone shall closely match the color of the adjacent step.

CONSTRUCTION METHODS: The granite step shall be place on 12 inches of well compacted gravel borrow subbase.

METHOD OF MEASUREMENT: "GRANITE STEP" will be measured by the number of EACH such units actually installed in accordance with the Plans and/or as directed by the Engineer.

BASIS OF PAYMENT: "GRANITE STEP" will be paid for at the contract unit price per EACH as listed in the Proposal. The price so-stated constitutes full and complete compensation for all materials, labor and equipment, and all other incidentals required to finish the work, complete, in place, and accepted by the Engineer.

938.1000

PRICE ADJUSTMENTS

DESCRIPTION:

a. **Liquid Asphalt Cement.** * The base price of Liquid Asphalt Cement as required to implement **Subsection 938.03.1** of the Rhode Island Department of Transportation Standard Specifications for Road and Bridge Construction, 2013 Edition is **$345.00** per ton as of October 17, 2016.

   * In the case of modified asphalt binder, this price adjustment provision shall only apply to the neat liquid asphalt component. This provision shall not apply to the modifier component, manufacture, storage, transportation or other associated costs.

b. **Diesel Fuel.** The base price of Diesel Fuel as required to implement **Subsection 938.03.2** of the Rhode Island Department of Transportation Standard Specifications for Road and Bridge Construction, 2013 Edition is **$1.6378** per gallon as of October 17, 2016.

Table of Contents - Distribution of Quantities

Project Name - Slatersville Stone Arch Bridge No 273 (70C)
Estimate Name - Addendum No. 2
R.I. Contract No. - 2016-CB-056
FAP Nos: BRO-0273(007)

ItemCode	Description	Page
701.9902	FURNISH AND INSTALL 12 INCH DIAMETER HDPE WATER PIPE	16
701.9903	20" DIAMETER PVC SLEEVE	16
701.9904	8" DIAMETER STEEL SLEEVE INSTALLATION	16
702.0510	HEAVY-DUTY SQUARE FRAME AND ROUND COVER STANDARD 6.1.1	16
702.0513	FRAME AND GRATE STANDARD 6.3.1	17
702.0517	FRAME AND GRATE, STANDARD 6.3.2	18
702.0541	GRANITE INLET STONE 38'' STANDARD 7.3.6	18
702.0605	PRECAST CATCH BASIN 4' DIAMETER STANDARD 4.4.0	19
702.0630	PRECAST MANHOLE 4' DIAMETER STANDARD 4.2.0	19
702.0705	CATCH BASIN W/GUTTER INLET STANDARD 3.4.1	20
702.0713	PRECAST CONCRETE DROP INLET WITH APRON STONE STANDARD 4.5.1	20
702.0725	SOLID BLOCK SHALLOW DOUBLE GRATE CATCH BASIN STANDARD 3.5.2	20
705.1300	RECONSTRUCT CB TYPE 'D' TO CATCH BASIN WITH GUTTER INLET	20
707.0955	ADJUST ELECTRICAL MANHOLE TO GRADE	21
707.1000	ADJUST SANITARY MANHOLE	21
707.1200	ADJUST CATCH BASIN TO MANHOLE	21
708.9040	CLEANING AND FLUSHING PIPE ALL SIZES	21
708.9041	CLEANING CATCH BASINS ALL TYPES AND SIZES	21
713.8269	ADJUST WATER GATE BOXES TO GRADE	22
713.8300	ADJUST GAS GATE BOXES TO GRADE	22
714.8263	REMOVE AND RELOCATE POST TYPE HYDRANT	22
802.9901	TEMPORARY UTILITY BRIDGE	23
802.9902	ARCH STRENGTHENING	23
803.0500	TEMPORARY DECK UNDERSIDE AND SIDE PROTECTIVE SHIELDING	23
803.9901	PARTIAL REMOVAL AND DISPOSAL OF EXISTING CONCRETE MASONRY	23
803.9902	REMOVAL AND DISPOSAL OF EXISTING TIMBER SIDEWALK	23
805.9901	TEMPORARY EARTH RETAINING SYSTEMS	23
807.9901	REPOINTING MASONRY	24
808.0320	**CONCRETE SUBSTRUCTURE CLASS XX 3/4''**	**24**
808.0322	CONCRETE SUBSTRUCTURE CLASS HP 3/4'' END POSTS	24
808.0501	CONCRETE SUBSTRUCTURE CLASS XX 3/4" FOOTINGS	24
808.0508	**CONCRETE SUBSTRUCTURE CLASS XX 3/4'' APPROACH SLABS**	**24**
808.1200	CONCRETE SUPERSTRUCTURE CLASS HP 3/4''	24
808.1503	CONCRETE SUPERSTRUCTURE CLASS HP 3/4'' PARAPETS	25
808.1642	PREFORMED POLYETHYLENE FOAM JOINT FILLER 1''	25
808.1675	POLYURETHANE ELASTOMERIC JOINT SEALANT	25
808.1810	CONCRETE SURFACE FINISHING RUBBED REGULAR	25
808.9901	CONCRETE ARCHITECTUAL TREATMENT, FORM LINER FINISH	25
809.9901	MODIFIED INTEGRALLY COLORED/EXPOSED AGGREGATE FINISH PORTLAND CEMENT CONCRETE SIDEWALK STD. 43.1.0M	25
809.9902	PRECAST CONCRETE SOLID SLABS 18" X 82" FURNISH, FABRICATE & ERECT	27
810.0210	GALVANIZED BAR REINFORCEMENT GRADE 60	27
810.0702	WELDED WIRE FABRIC (GALVANIZED)	27
813.0300	**COLD APPLIED LIQUID MEMBRANE**	**28**
819.0800	DRILL AND GROUT REINFORCING DOWELS	28
820.0110	CONCRETE SURFACE TREATMENT (PROTECTIVE COATING)	28
820.9901	HIGH PRESSURE WATER CLEANING OF BRIDGE STRUCTURES	28
830.0220	STEEL BRIDGE RAIL 2 BAR CRASH TESTED	28
830.9901	BALDWIN 4 BAR ORNAMENTAL RAIL (MODIFIED)	28
831.9901	PEDESTRIAN RAILING	29
831.9902	MODIFIED RAILING	29
833.0400	GRANITE IDENTIFICATION TABLETS	29
834.0131	VERTICAL FACE GRANITE CURB STRAIGHT 7'' REVEAL	29

Table of Contents - Distribution of Quantities

Project Name - Slatersville Stone Arch Bridge No 273 (70C)
Estimate Name - Addendum No. 2
R.I. Contract No. - 2016-CB-056
FAP Nos: BRO-0273(007)

ItemCode	Description	Page
834.0132	VERTICAL FACE GRANITE CURB CURVED 7'' REVEAL	29
834.0222	SLOPE FACE GRANITE CURB STRAIGHT TRANSITION	30
834.9901	VERTICAL FACE GRANITE CURB STRAIGHT - 6" WIDE X VARYING DEPTH	30
834.9902	SLOPED FACE GRANITE CURB STRAIGHT - 10" WIDE X VARYING DEPTH	30
834.9903	GRANITE WHEELCHAIR RAMP CURB	30
835.0210	DECK SCUPPERS SINGLE COMPLETE WITH DOWNSPOUT	30
901.0151	TERMINAL END SECTION SINGLE FACE STANDARD 34.3.2	30
901.0190	GUARDRAIL STEEL BEAM ANCHORAGE APPROACH SECTION STANDARDS 34.3.1 AND 34.3.3	31
901.0191	GUARDRAIL STEEL BEAM ANCHORAGE TRAILING END SECTION STANDARD 34.3.4	31
901.0193	GUARDRAIL STEEL BEAM SINGLE FACE STANDARD 34.2.0	31
901.0901	REMOVE AND RESET GUARDRAIL ALL TYPES	31
905.0110	PORTLAND CEMENT SIDEWALK MONOLITHIC STANDARD 43.1.0	32
905.0115	PORTLAND CEMENT CONCRETE DRIVEWAY STANDARD 43.5.0	33
906.0110	GRANITE CURB, QUARRY SPLIT STRAIGHT, STANDARD 7.3.0	33
906.0111	GRANITE CURB, QUARRY SPLIT CIRCULAR, STANDARD 7.3.0	35
906.0118	6' GRANITE TRANSITION CURB, QUARRY SPLIT SPECIAL TRANSITION STANDARD 7.3.2	35
906.0119	3' GRANITE TRANSITION CURB STANDARD 7.3.1	36
906.0120	GRANITE WHEELCHAIR RAMP CURB STANDARDS 7.3.3, 43.3.0 AND 43.3.1	36
906.0130	GRANITE RAMP STONE STRAIGHT STANDARD 7.3.9	37
906.0700	REMOVE, HANDLE, HAUL TRIM RESET CURB EDGING, STRAIGHT, CIRCULAR ALL TYPES	37
906.9901	GRANITE WHEELCHAIR RAMP CURB	37
907.0100	WATER FOR DUST CONTROL	38
907.0200	CALCIUM CHLORIDE FOR DUST CONTROL (PROJECT WIDE)	38
911.0100	WET STONE MASONRY RETAINING WALL STANDARD 10.1.0	38
911.0101	**STONE MASONRY STEPS STANDARD 10.4.0**	**38**
911.9901	REMOVE AND RESET WET STONE MASONRY RETAINING WALLS STANDARD 10.1.0	38
911.9902	**REMOVE AND REBUILD STONE MASONRY SPANDREL WALLS**	**39**
911.9903	REMOVE AND REBUILD STONE MASONRY N.E. CHANNEL WALL AND N.W. WINGWALL	39
911.9904	RESET STONE CAP	39
911.9905	STONE CAP TRANSITION	39
912.9901	SUPPLEMENTARY STONE FOR WALLS	39
914.5010	FLAGPERSONS	39
914.5020	FLAGPERSONS - OVERTIME	39
920.0045	DUMPED STONE RIPRAP R-6, R-7, R-8	40
920.0200	FILTER FABRIC FOR RIP-RAP	40
922.0100	TEMPORARY CONSTRUCTION SIGNS STANDARD 29.1.0 AND 27.1.1	40
923.0105	DRUM BARRICADE STANDARD 26.2.0	41
923.0125	PLASTIC PIPE TYPE III BARRICADE STANDARD 26.3.1	41
923.0200	FLUORESCENT TRAFFIC CONES STANDARD 26.1.0	41
925.0112	PORTABLE CHANGEABLE MESSAGE SIGN	41
926.0120	ANCHORED PRECAST CONCRETE BARRIER FOR TEMPORARY TRAFFIC CONTROL	41
926.0121	UNANCHORED PRECAST CONCRETE BARRIER FOR TEMPORARY TRAFFIC CONTROL STANDARD 40.5.0	42
929.0110	FIELD OFFICE	42
931.0110	CLEANING AND SWEEPING PAVEMENT	42
932.0100	CUTTING AND MATCHING ASPHALT	42

Table of Contents - Distribution of Quantities

Project Name - Slatersville Stone Arch Bridge No 273 (70C)
Estimate Name - Addendum No. 2
R.I. Contract No. - 2016-CB-056
FAP Nos: BRO-0273(007)

ItemCode	Description	Page
932.0200	FULL-DEPTH SAWCUT OF BITUMINOUS PAVEMENT	43
932.0220	FULL DEPTH SAWCUT OF BITUMINOUS SIDEWALK/DRIVEWAY	43
932.0230	FULL DEPTH SAWCUT OF PORTLAND CEMENT CONCRETE SIDEWALK/DRIVEWAY	44
935.0400	REMOVING BITUMINOUS PAVEMENT BY MICRO MILLING	44
936.0100	MOBILIZATION AND DEMOBILIZATION	44
937.0200	MAINTENANCE AND MOVEMENT TRAFFIC PROTECTION	45
942.0200	DETECTABLE WARNING PANEL STANDARD 48.1.0	45
943.0200	TRAINEE MAN-HOURS	45
L01.0102	LOAM BORROW 4 INCHES DEEP	45
L01.0104	PLANTABLE SOIL 4 INCHES DEEP	46
L01.9901	BIORETENTION SOIL MIX	46
L02.0102	RESIDENTIAL SEEDING (TYPE 2)	46
L02.9901	CONSERVATION/WILDLIFE SEED MIX	47
L05.0505	EROSION CONTROL BLANKET	47
L06.9901	ULMUS PARVIFOLIA / CHINESE ELM, 3" CAL	47
L06.9902	ILEX VERTICILLATA NANA "RED SPRITE" / RED SPRITE WINTERBERRY, 5 GALLON	47
L06.9903	JUNIPERUS VIRGINIANA "GREY OWL" / EASTERN REDCEDAR, 24" TO 30" B&B	47
L06.9904	HYDRANGEA MARCOPHYLLA "NIKKO BLUE" / NIKKO BLUE HYDRANGEA, 5 GALLON	47
L10.0101	MECHANICAL TREE AND SHRUB ROOT PRUNING	48
L11.0102	TREE PLANT PROTECTION DEVICE STANDARD 51.1.0	48
T12.9901	PORTABLE TRAFFIC CONTROL SIGNAL SYSTEM	48
T15.0100	DIRECTIONAL REGULATORY AND WARNING SIGNS	48
T15.1000	STREET SIGN ASSEMBLY STD. 24.6.1	49
T20.0006	6 INCH WHITE FAST - DRYING WATERBORNE PAVEMENT MARKING PAINT	49
T20.0012	12 INCH WHITE FAST - DRYING WATERBORNE PAVEMENT MARKING PAINT	50
T20.0104	4 INCH YELLOW FAST - DRYING WATERBORNE PAVEMENT MARKING PAINT	51
T20.1106	6 INCH TEMPORARY WATERBORNE PAINT PAVEMENT MARKINGS WHITE	52
T20.1112	12 INCH TEMPORARY WATERBORNE PAINT PAVEMENT MARKINGS WHITE	52
T20.1204	4 INCH TEMPORARY WATERBORNE PAINT PAVEMENT MARKINGS YELLOW	53
T20.2006	6 INCH EPOXY RESIN PAVEMENT MARKINGS WHITE	53
T20.2012	12 INCH EPOXY RESIN PAVEMENT MARKINGS WHITE	53
T20.2014	4 INCH EPOXY RESIN PAVEMENT MARKINGS YELLOW	54
201.0301	**CUTTING AND DISPOSING ISOLATED TREES AND STUMPS (4"- 24")**	**54**
201.0433	**REMOVE AND DISPOSE BOLLARD**	**55**
201.9915	**REMOVE, RELOCATE AND RESET VARIOUS PARK STRUCTURES**	**55**
601.9901	**LIGHTWEIGHT CONCRETE**	**55**
813.0100	**DAMPPROOFING**	**55**
908.0100	**FLAGSTONE-BLUE STONE TREADS**	**55**
928.9901	**TRUCK MOUNTED ATTENUATOR (TMA) WITH TRUCK MOUNTED FLASHING ARROW BOARD (TMFAB)**	**56**
L06.9905	**HAMAMELIS VIRGINIANA / WITCH HAZEL, 2' TO 3' B&B**	**56**

Distribution of Quantities

Project Name - Slatersville Stone Arch Bridge No 273 (70C)
Estimate Name - Addendum No. 2
R.I. Contract No. - 2016-CB-056
FAP Nos: BRO-0273(007)

Item No.	Item Code	Description	UM	Qty.	Pay Code	Seq. No.
081	**807.9901**	**REPOINTING MASONRY**	**LF**			
		PROJECT WIDE				
		PROJECT WIDE		1,850.00	0014	01
		Item 807.9901 Total:		**1,850.00**		
082	**808.0320**	**CONCRETE SUBSTRUCTURE CLASS XX 3/4''**	**CY**			
		PROVIDENCE PIKE				
		BRIDGE 273		290.00	0014	01
		Item 808.0320 Total:		**290.00**		
083	**808.0322**	**CONCRETE SUBSTRUCTURE CLASS HP 3/4'' END POSTS**	**CY**			
		PROJECT WIDE				
		PROJECT WIDE		2.00	0014	01
		Item 808.0322 Total:		**2.00**		
084	**808.0501**	**CONCRETE SUBSTRUCTURE CLASS XX 3/4" FOOTINGS**	**CY**			
		PROVIDENCE PIKE				
		BRIDGE 273		48.00	0014	01
		Item 808.0501 Total:		**48.00**		
085	**808.0508**	**CONCRETE SUBSTRUCTURE CLASS XX 3/4'' APPROACH SLABS**	**CY**			
		PROVIDENCE PIKE				
		BRIDGE 273		15.00	0014	01
		Item 808.0508 Total:		**15.00**		
086	**808.1200**	**CONCRETE SUPERSTRUCTURE CLASS HP 3/4''**	**CY**			
		PROVIDENCE PIKE				
		BRIDGE 273		26.00	0014	01

Distribution of Quantities

Project Name - Slatersville Stone Arch Bridge No 273 (70C)
Estimate Name - Addendum No. 2
R.I. Contract No. - 2016-CB-056
FAP Nos: BRO-0273(007)

Item No.	Item Code	Description	UM	Qty.	Pay Code	Seq. No.
095	**810.0702 Cont.**	BRIDGE 273		1,850.00	0014	01
		Item 810.0702 Total:		**1,850.00**		
096	**813.0300**	**COLD APPLIED LIQUID MEMBRANE**	**SY**			
		PROVIDENCE PIKE				
		BRIDGE 273		670.00	0014	01
		Item 813.0300 Total:		**670.00**		
097	**819.0800**	**DRILL AND GROUT REINFORCING DOWELS**	**EACH**			
		PROVIDENCE PIKE				
		BRIDGE 273		244.00	0014	01
		Item 819.0800 Total:		**244.00**		
098	**820.0110**	**CONCRETE SURFACE TREATMENT (PROTECTIVE COATING)**	**SF**			
		PROVIDENCE PIKE				
		BRIDGE 273		6,750.00	0014	01
		Item 820.0110 Total:		**6,750.00**		
099	**820.9901**	**HIGH PRESSURE WATER CLEANING OF BRIDGE STRUCTURES**	**SF**			
		PROVIDENCE PIKE				
		BRIDGE 273		3,150.00	0014	01
		Item 820.9901 Total:		**3,150.00**		
100	**830.0220**	**STEEL BRIDGE RAIL 2 BAR CRASH TESTED**	**LF**			
		PROVIDENCE PIKE				
		BRIDGE 273		433.00	0014	01
		Item 830.0220 Total:		**433.00**		
101	**830.9901**	**BALDWIN 4 BAR ORNAMENTAL RAIL (MODIFIED)**	**LF**			

Distribution of Quantities

Project Name - Slatersville Stone Arch Bridge No 273 (70C)
Estimate Name - Addendum No. 2
R.I. Contract No. - 2016-CB-056
FAP Nos: BRO-0273(007)

Item No.	Item Code	Description	UM	Qty.	Pay Code	Seq. No.
126	906.9901 Cont.	BRIDGE 273		3.00	0014	01
		Item 906.9901 Total:		**3.00**		
127	907.0100	**WATER FOR DUST CONTROL**	**MGAL**			
		PROVIDENCE PIKE				
		PROJECT SITE		528.00	0014	01
		Item 907.0100 Total:		**528.00**		
128	907.0200	**CALCIUM CHLORIDE FOR DUST CONTROL (PROJECT WIDE)**	**TON**			
		PROVIDENCE PIKE				
		PROJECT SITE		264.00	0014	01
		Item 907.0200 Total:		**264.00**		
129	911.0100	**WET STONE MASONRY RETAINING WALL STANDARD 10.1.0**	**CY**			
		MAIN STREET				
		16+98, 23' LT TO 17+10, 37' LT		12.00	0014	01
		PARK AREA				
		PROJECT WIDE		189.00	0014	01
		Item 911.0100 Total:		**201.00**		
130	911.0101	**STONE MASONRY STEPS STANDARD 10.4.0**	**CY**			
		PARK AREA				
		PROJECT WIDE		8.00	0014	01
		Item 911.0101 Total:		**8.00**		
131	911.9901	**REMOVE AND RESET WET STONE MASONRY RETAINING WALLS STANDARD 10.1.0**	**CY**			
		PROVIDENCE PIKE				
		BRIDGE 273		90.00	0014	01
		Item 911.9901 Total:		**90.00**		

Distribution of Quantities

Project Name - Slatersville Stone Arch Bridge No 273 (70C)
Estimate Name - Addendum No. 2
R.I. Contract No. - 2016-CB-056
FAP Nos: BRO-0273(007)

Item No.	Item Code	Description	UM	Qty.	Pay Code	Seq. No.
132	**911.9902**	**REMOVE AND REBUILD STONE MASONRY SPANDREL WALLS**	**CY**			
		PROVIDENCE PIKE				
		BRIDGE 273		450.00	0014	01
		Item 911.9902 Total:		**450.00**		
133	**911.9903**	**REMOVE AND REBUILD STONE MASONRY N.E. CHANNEL WALL AND N.W. WINGWALL**	**CY**			
		PROJECT WIDE				
		PROJECT WIDE		37.00	0014	01
		Item 911.9903 Total:		**37.00**		
134	**911.9904**	**RESET STONE CAP**	**LF**			
		PROVIDENCE PIKE				
		BRIDGE 273		221.00	0014	01
		Item 911.9904 Total:		**221.00**		
135	**911.9905**	**STONE CAP TRANSITION**	**LF**			
		PROVIDENCE PIKE				
		BRIDGE 273		24.00	0014	01
		Item 911.9905 Total:		**24.00**		
136	**912.9901**	**SUPPLEMENTARY STONE FOR WALLS**	**TON**			
		PROVIDENCE PIKE				
		BRIDGE 273		20.00	0014	01
		Item 912.9901 Total:		**20.00**		
137	**914.5010**	**FLAGPERSONS**	**MHRS**			
		PROVIDENCE PIKE				
		PROJECT SITE		8,320.00	0014	01
		Item 914.5010 Total:		**8,320.00**		
138	**914.5020**	**FLAGPERSONS - OVERTIME**	**MHRS**			

Distribution of Quantities

Project Name - Slatersville Stone Arch Bridge No 273 (70C)
Estimate Name - Addendum No. 2
R.I. Contract No. - 2016-CB-056
FAP Nos: BRO-0273(007)

Item No.	Item Code	Description	UM	Qty.	Pay Code	Seq. No.
S181	**T20.2012 Cont.**	GREENE ST.				
		20+80 (X-WALK)		80.00	0014	01
		SCHOOL ST (STOP BAR)		16.00	0014	01
		MAIN STREET				
		12+48, 13' LT TO 12+48, 13' RT		72.00	0014	01
		15+01, 13' LT TO 15+01, 13' RT		72.00	0014	01
		17+11, 58'LT TO 17+26, 59'LT		16.00	0014	01
		17+15, 40' LT TO 17+49, 42' LT		96.00	0014	01
		PROVIDENCE PIKE				
		12+05, 25' LT TO 12+34, 22' LT		80.00	0014	01
		12+07, 32'LT TO 12+19, 31'LT		14.00	0014	01
		14+46, 19' RT TO 14+63, 21' RT		56.00	0014	01
		15+28, 27' RT TO 15+56, 28' RT		80.00	0014	01
		15+43, 35'RT OT 15+55, 36'RT		15.00	0014	01
		17+67, CL TO 17+66, 20'RT		21.00	0014	01
		Item T20.2012 Total:		**618.00**		
S182	**T20.2014**	**4 INCH EPOXY RESIN PAVEMENT MARKINGS YELLOW**	**LF**			
		GREENE ST.				
		18+25 - 19+80		312.00	0014	01
		20+90		18.00	0014	01
		PROVIDENCE PIKE AND MAIN STREET				
		FROM T20.2014		2,696.00	0014	01
		Item T20.2014 Total:		**3,026.00**		
183	**201.0301**	**CUTTING AND DISPOSING ISOLATED**	**EACH**			

Distribution of Quantities

Project Name - Slatersville Stone Arch Bridge No 273 (70C)
Estimate Name - Addendum No. 2
R.I. Contract No. - 2016-CB-056
FAP Nos: BRO-0273(007)

Item No.	Item Code	Description	UM	Qty.	Pay Code	Seq. No.
183	**201.0301 Cont.**	**TREES AND STUMPS (4"- 24")**				
		PROVIDENCE PIKE				
		15+95, LT (SD-51)		1.00	0014	01
		16+25, LT (SD-52)		2.00	0014	01
		16+96, LT (SD-42)		1.00	0014	01
		17+28, LT (SD-43)		1.00	0014	01
		Item 201.0301 Total:		**5.00**		
184	**201.0433**	**REMOVE AND DISPOSE BOLLARD**	**EACH**			
		MAIN STREET				
		14+85, RT (SD-30)		3.00	0014	01
		PROVIDENCE PIKE				
		15+22, LT (SD-13)		1.00	0014	01
		15+50, LT (SD-14)		1.00	0014	01
		Item 201.0433 Total:		**5.00**		
185	**201.9915**	**REMOVE, RELOCATE AND RESET VARIOUS PARK STRUCTURES**	**LS**			
		PROVIDENCE PIKE				
		CARROLL PARK AREA		1.00	0014	01
		Item 201.9915 Total:		**1.00**		
186	**601.9901**	**LIGHTWEIGHT CONCRETE**	**CY**			
		PROVIDENCE PIKE				
		BRIDGE 273		350.00	0014	01
		Item 601.9901 Total:		**350.00**		
187	**813.0100**	**DAMPPROOFING**	**SY**			
		PROVIDENCE PIKE				
		BRIDGE 273		52.00	0014	01
		Item 813.0100 Total:		**52.00**		
188	**908.0100**	**FLAGSTONE-BLUE STONE TREADS**	**SF**			

Distribution of Quantities

Project Name - Slatersville Stone Arch Bridge No 273 (70C)
Estimate Name - Addendum No. 2
R.I. Contract No. - 2016-CB-056
FAP Nos: BRO-0273(007)

Item No.	Item Code	Description	UM	Qty.	Pay Code	Seq. No.
188	**908.0100 Cont.**	PARK AREA				
		STEPS		60.00	0014	01
		Item 908.0100 Total:		**60.00**		
189	**928.9901**	**TRUCK MOUNTED ATTENUATOR (TMA) WITH TRUCK MOUNTED FLASHING ARROW BOARD (TMFAB)**	**HRS**			
		PROVIDENCE PIKE				
		PROJECT WIDE		640.00	0014	01
		Item 928.9901 Total:		**640.00**		
S190	**L06.9905**	**HAMAMELIS VIRGINIANA / WITCH HAZEL, 2' TO 3' B&B**	**EACH**			
		PROVIDENCE PIKE				
		15+95, RT (SD-49)		1.00	0014	01
		Item L06.9905 Total:		**1.00**		