State of Rhode Island
Department of Administration / Division of Purchases
One Capitol Hill, Providence, Rhode Island 02908-5855
Tel: (401) 574-8100 Fax: (401) 574-8387

ADDENDUM # 2

9/14/16

Solicitation #7550802

Title: Door Replacement Project – Community College of Rhode Island

Submission Deadline: 9/27/16 @ 1:30 pm

Per the issuance of ADDENDUM #2 the following are noted:

Addendum #2 (Attached)

No further questions will be entertained.

Interested Parties should monitor this website on a regular basis, for any additional information that may be posted.

Gary P. Mosca
Chief Buyer

SECTION 00 9111
ADDENDUM 2

PART 1 - GENERAL

This Addendum forms a part of the Contract Documents and modifies the Bidding Documents dated **May 2nd, 2016**. Acknowledge receipt of this Addendum in the space provided in the Bid Form. Failure to do so may disqualify the Bidder.

This Addendum consists of **7** pages plus the following:

1. Bid Form.
2. Pre-Bid Sign-In Sheet.
3. Pre-Bid Meeting Minutes, dated August 24, 2016.
4. Specification Table of Contents dated 9/12/16
5. Specification Section 07 9005 – Joint Sealers, dated 9/9/16.
6. SKA-1, regarding Door Details - masonry frame, dated 09/09/16.
7. SKA-2, regarding Door Ground Floor Door 0260 , dated 09/12/16.
8. CCRI Observatory Furniture Project Manual dated January 12, 2016
9. CCRI Observatory Furniture Construction Documents dated January 12, 2016

1.01 CHANGES TO PROJECT MANUAL

1. Revise Table of Contents

2. Add Section 07 9005 – Joint Sealers, dated 9/9/16.

3. Revise Section 01 1000 Summary of Work, Section 1.1 Description of Work

   l. Install 4 doors and frames, as scheduled and in this Addendum, in the Knight Campus field house.

4. Add to Section 01 1000 Summary of Work, Section 1.1 Description of Work

   m. Remove Knight Stockpile of 80 existing doors to be disposed of offsite. Assume asbestos containing cores.

5. Add to Section 01 1000 Summary of Work, Section 1.1 Description of work

   n. Bidders to include reference list of prior projects of this magnitude completed within the past 4 years, with contact names and phone numbers.

6. Add to Section 01 1000 Summary of Work, Section 1.9 Allowances

   C. Allowance # 3: Include a $20,000 allowance for Additional Hollow Metal Frames and Doors.

7. Add to Section 01 1000 Summary of Work, Section 1.9 Allowances

   D. Allowance # 4: Include a $25,000 allowance to Reconnect Unknown Electrical Wiring

8. Revised Bid Form.

1.02 CHANGES TO DRAWINGS

1. Drawing A6.0: Add Doors in room Field House:

   Room 8210 Doors 77: Type A-1 6'-0" x 7'-0" HM New Galv. Frame, Pair Hardware Set 78. Grout solid, see SK-1 for details.

   HEADING # 78 (EXTERIOR PAIR WITH STOREROOM LOCKSET X FLUSH BOLTS X CLOSER AT ACTIVE LEAF)

   PROVIDE EACH PR DOOR(S) WITH THE FOLLOWING:

QTY	DESCRIPTION	CATALOG NUMBER	FINISH	MFR
6 EA	HINGE	5BB1 SERIES AS SPECIFIED	652	IVE
2 EA	MANUAL FLUSH BOLT	FB458	626	IVE
1 EA	DUST PROOF STRIKE	DP1/DP2 AS REQUIRED	626	IVE
1 EA	STOREROOM LOCK	T581 DANE	626	FAL
1 EA	SURFACE CLOSER	SC71 RW/PA	689	FAL
2 EA	KICK PLATE	8400 8" X 1" LDW	630	IVE
1 SET	SEALS	188S	BLK	ZER
1 EA	GASKETING	488S-BK	S-BK	ZER

   Door 78: Type B-4 3'-0" x 7'-2" HM New Galv. Frame, PTD Hardware Set 52. Grout solid, see SK-1 for details.

   Door 38: Type B-4 3'-0" x 6'-8" HM New Galv. Frame, PTD Hardware Set 52. Grout solid, see SK-1 for details.

2. Drawing A6.0: Add Kitchen Door next to kitchen lift. Room 0088 Door 0088B 2'-8" x 7'-2" Wood Hardware Set 06

3. Drawing A1.0: Door 0260 is located in exterior wall and requires new frame. Grout solid, see SK-2 for details.

1.03 QUESTIONS AND ANSWERS

1. Where on campus grounds can storage containers be placed?

   Answer: Locate storage down the hill on the gravel near the maintenance garage.

2. Wayfinding Signage plans were not included with our bid package.

   Answer: Contractor is to mount stair door signage provided by Owner. Refer to attached Wayfinding Stair door drawings for application of signage to stair doors. Drawings by Surface Matter Design include plans on pages 6 through 11 locating type A1 door signage. Also enclosed is a typical elevation on page 13. Work includes installation of type A1 signs only.

3. There was a statement made at the pre bid that we were to carry all of the power wiring needed to replace all doors wired to the electrical system. With no electrical plans it is impossible to figure. How many doors have power wiring that will need to be disconnect and reconnected?

> **Answer: Provide all power required for electric strikes, keypads, magnetic lock, security contact or automatic door operators Indicated on drawings. Reuse existing circuits where available. Provide new power design-build by GC these items are listed on drawings. Carry an allowance of $25,000 for electrical work to items not indicated on the drawings.**

4. Can you explain what this means in the question below? *In the spec section 01 1000 1.1 B, t. it says "Contractor must come to terms with all vendors prior to submitting their bid." Please clarify what the requirements are. Will bidding contractors be required to submit a list of vendors to be used?*

> **Answer: Contract negotiations with vendors must be completed prior to submitting the bid. Delays in signing contracts with vendors will create delays in the project completion date. Provide a list of vendors with your bid. Verify that Schneider will be carried, as well as others such as CCRI warranty vendors. Identification of vendors on this list will indicate that the bidder accepts the terms of the subcontractor's contract.**

5. In the summary of work 1.4 can you explain what this paragraph means What Portion?

> **Answer: Summary of Work Item 1.4 notes that a portion of the electronic hardware will be furnished and installed by a contractor working directly with CCRI. This contractor is Schneider Electric. The quantity of electronic hardware is: 535 AD-400 locks and 12 AD-200 locks including installation and accessories. Contact Stephen DePaula at Schneider Electric, 978-494-9566 for information.**

6. It's noted all wood doors that we are to remove and replace with new are presumed to obtain asbestos materials. How do we treat the remaining wood doors that are having new hardware? Is it considered a hazardous problem if we attach any new hardware or need to modify the existing door?

> **Answer: Wood doors to remain were installed after the year 2000 and do not contain hazardous material.**

7. Can we assume that if we are putting in a new HM door we would be taking out a HM door, and if we put in a new Wood door we are taking out a Wood door? Then we would only abate the Wood doors.

Answer: Yes, wood doors replace wood doors. Metal doors replace metal. One exception is Mechanical Room 232B will be changed from wood to metal.

8. I have not completely finished going through the Door Schedules and comparing it to the Hardware Sets, but here are examples of problems that I have found on the Ground Floor Schedule only.

a. Door 0096…EXG door and frame with Hardware Set 06
Hardware set is for new door in existing frame
Answer: New Wood Door

b. Door 0098…EXG door and frame with Hardware Set 09
Hardware set is for new door in existing frame
Answer: New Wood Door

c. Door 0110… New door and EX frame with Hardware Set 25
Hardware set is for existing door and hardware to remain
Answer: Existing Door to remain – paint.

d. Door 0113…New door and EX frame with Hardware Set 22
Hardware set is for existing door with classroom lock
Answer: Existing Door to remain – paint; Hardware 25.

e. Door 0116A…EXG door and frame with Hardware Set 57
Hardware set is for new door and existing frame
Answer: Existing Door to remain – paint; Hardware 25.

f. Door 0116B…New door and frame with Hardware Set 52
Hardware set is for new door in existing frame
Answer: Hardware set to read new frame.

g. Door 0138…EX door and frame with Hardware Set 56
Hardware set is for new door in existing frame
Answer: New Metal Doors, paint.

h. Door 0260…New door and frame with Hardware Set 52
Hardware set is for new door in existing frame
Answer: Hardware set to read new frame.

i. Door 0284…New door and EX frame with Hardware Set 22
Hardware set is for existing door with classroom lock
Answer: Existing Door to remain.

j. Door 0526…New door and EX frame with Hardware Set 22
Hardware set is for existing door with classroom lock
Answer: Existing Metal Doors to remain, paint. Furnish trim plate for door to cover existing door prep. Other existing hardware to remain.

k. Door A17…New door and EX frame with Hardware Set 25
Hardware set is for existing door and hardware to remain
Answer: Hardware set to read 52 for New Door and New frame.

9. There seems to be conflicting information on the schedule and the descriptions in the specification for the hardware sets. With today being the last day of questions and I have not finish my takeoff, what path should we follow for the remaining floors should there be any conflicts?

   Answer: Clarifications are as listed above for the ground floor. If additional conflicts are found follow the schedule on the drawings.

10. Below are door schedule / hardware sets that appear to be incorrect.
    Ex. = existing door, New = new door per schedule.
    a. Ex. 0096 – set 06, Ex. 0098 – set 09,
       Answer: See answer to questions 8 a & b.
    b. New 0113 – set 22

       Answer: See answer to question 8 d.
    c. Ex. 0116A – set 57,

       Answer: See answer to question 8 e.
    d. Ex. 0138 – set 56,

       Answer: See answer to question 8 g.
    e. New 0525 – set 22,

       Answer: No door 0525, for Door 0526 See answer to question 8 j.
    f. Ex. 1040A – set 46, Ex. 1040B – set 46, Ex. 1132A – set 46, Ex. 1128 – set 46, Ex. 1130 – set 46, Ex. 1132A set 46,

       Answer: Doors are existing to remain, hardware set to read new or existing doors. Magnetic hold open to be reattached on door 1132A.
    g. New 1154 – set 25,

       Answer: Hardware Set to read new or existing doors.

h. New 1156A – set 25, New 1158 – set 25,

Answer: Existing Doors to remain

i. Ex. 1234 – set 06, Ex. 1546 – set 06, Ex. 1548 – set 06.

Answer: Hardware Set to read new or existing doors.

11. Are we to assume that existing power to the electric hardware is already present on existing door frame? If there is not is there a plan to bring power to existing frame.

Answer: It should be assumed that existing electric hardware has existing power present. Existing circuits may be reused. GC to provide electrical work as required to reinstall hardware including Automatic Door Opener Hardware/Low Energy Door Operators and connections to fire alarm system. All intrusion alarm contacts must be removed from old doors and re-installed on new doors. Vendor responsible for maintaining the integrity of the intrusion alarm system. Doors to receive new power circuits include Sixth Floor Classrooms and select doors noted on the Door schedule for Door Operators, as indicated on drawings. Refer to hardware schedule for new ADA operator locations. Utilize the Owner's Fire Alarm (Delta Mechanical) and Sprinkler Maintenance (Calson Corp.) vendors when systems need to be deactivated to perform work. See answer to question 3 above for additional information.

12. What is the spec existing concealed closer on the aluminum storefront that is to be replaced in kind?
Answer: Closer does not need to be concealed. Delete replace in kind. Refer to Specification Sections 08 7100 and 08 7110 Power Door Operators/Low Energy Operators.

13. Is a licensed electrician required to connect the low voltage to door hardware.

Answer: Yes

14. Is there provision for repairing existing frames after installation of new hardware?

Answer: Refer to hardware sets for patching existing holes in hollow metal frames after hardware has been installed using Don-Jo or equal. Paint to match.

15. Is Vendor responsible for removing and reinstalling alarm pads/devices on existing doors?

Answer: Yes, refer to the answer to question 3 and 10.

16. How to we handle the painting of the hollow metal doors and frames? We are to have all doors fully functional at the end of each shift. What happens if door and/or frame is not dry to be able to close and lock door? Please advise.

Answer: All frames are to be pre-painted off site. Vendor is responsible to touch up frames in the field as required.

1.04 SUBSTITUTION REQUESTS

1. The following products were submitted for consideration as approved equals to Special-Lite, SL-15 wide stile monumental doors as specified in Section 08120 Stile and Rail Doors: Commercial Door Systems, R500 Wide Style Doors and Tubelite, Standard Entrances.

Answer: Special-Lite Doors are currently installed at the Knight Campus and are preferred in order to have a single storefront door manufacturer for ease of maintenance. Commercial Door Systems, R500 Wide Style Doors appears to meet the specifications are approved as equal. Tubelite Standard Doors are made from a different alloy than the specified door and are not considered an equal.

1.05 ADDITIONAL INFORMATION

1. SKA-1, regarding Door Details - masonry frame, dated 09/09/16. Applies to exterior doors with new frames as noted in the schedule and this Addendum.

END OF SECTION

Solicitation #:_____

Solicitation Title: _____

BID FORM

To: The Department of Administration, Division of Purchases
One Capitol Hill, Providence, RI 02908

Project: CCRI Knight Campus Door Replacement
Community College of Rhode Island
Knight Campus

Bidder:

_____
Legal name of entity

_____
Address

_____
Contact name Contact email

_____
Contact telephone Contact fax

1. BASE BID PRICE

The Bidder submits this bid proposal to perform all of the work (including labor and materials) as described in the solicitation for this Base Bid Price, (including the costs for all Allowances, Bonds, and Addenda):

$ _____

(Base Bid Price *in figures* printed electronically, typed, or handwritten legibly in ink)

_____

(Base Bid Price *in words* electronically, typed, or handwritten legibly in ink)

Solicitation #:_____

Solicitation Title: _____

- **ALLOWANCES**

The Base Bid Price ***includes*** the costs for the following Allowances:

1. Furnishing and installing additional hardware: Add $50,000.00
2. Repairs to Unknown Concealed Conditions: Add $40,000.00
3. Furnish and install additional Hollow Metal Frames & Doors Add $20,000.00
4. Reconnect Unknown Electrical Wiring Add $25,000.00

Total Allowances: **$135,000.00**

- **BONDS**

The Base Bid Price ***includes*** the costs for all Bid and Payment and Performance Bonds required by the solicitation.

- **ADDENDA**

The Bidder has examined the entire solicitation (including the following Addenda), and the Base Bid Price ***includes*** the costs of any modifications required by the Addenda.

All Addenda must be acknowledged.

Addendum No. ____, dated _____
Addendum No. ____, dated _____
Addendum No. ____, dated _____
Addendum No. ____, dated _____
Addendum No. ____, dated _____

2. ALTERNATES *(Additions to Base Bid Price)*

The Bidder offers to: (i) perform the work described in these Alternates as selected by the State in the order of priority specified below, based on the availability of funds and the best interest of the State; and (ii) increase the Base Bid Price by the amount set forth below for each Alternate selected.

Solicitation #:_____

Solicitation Title: _____

Alternate No. 1: Observatory Millwork

Add_____($_____)

3. UNIT PRICES

The Bidder submits these predetermined Unit Prices as the Basis for any change orders approved in advance by the State. These Unit Prices include ***all*** costs, including labor, materials, services, regulatory compliance, overhead, and profit.

N/A

4. CONTRACT TIME

The Bidder offers to perform the work in accordance with the timeline specified below:

- Start of Submittals.....14 calendar days after receipt of CCRI PO
- Start of Onsite Construction ..... After Submittal Approval
- Substantial Completion 5/8/2017
- Final Completion 6/15/2017

- Work Prohibited.....Graduation Week 2017

5. LIQUIDATED DAMAGES

The successful bidder awarded a contract pursuant to this solicitation shall be liable for and pay the State, as liquidated damages and not as a penalty, the following amount for ***each*** calendar day of delay beyond the date for substantial completion, as determined in the sole discretion of the State:

One Thousand Dollars ($1,000) per day.

BID FORM SIGNATURE(S)

This bid proposal is irrevocable for 60 days from the bid proposal submission deadline.

If the Bidder is determined to be the successful bidder pursuant to this solicitation, the bidder will promptly: (i) comply with each of the requirements of the Tentative Letter of Award; and (ii) commence and diligently pursue the work upon issuance and receipt of the purchase order from the State and authorization from the user agency.

Solicitation #:_____

Solicitation Title: _____

The person signing below certifies that he or she has been duly authorized to execute and submit this bid proposal on behalf of the Bidder.

BIDDER _____

Date: _____

_____
Name of Bidder

_____
Signature in ink

_____
Printed name and title of person signing on behalf of Bidder

_____
Bidder's Contractor Registration Number

State of Rhode Island
Division of Purchases
One Capitol Hill
Providence, RI 02908

"MANDATORY" PRE-BID CONFERENCE SIGN IN SHEET

Mandatory Pre-bid Conference: Any vendor who intends to submit a bid proposal in response to this solicitation must have its representative attend this mandatory prebid conference, sign, and complete all required information on this Sign-In Sheet. Failure to comply with this requirement will result in the rejection of any bid proposal.

BID NUMBER:	7550802
BID TITLE:	Door Replacement Project - CCRI
PRE-BID DATE AND TIME:	8/24/16 @ 10:30 am

Purchasing Representative:	Gary P. Mosca
Mandatory Pre-bid START TIME:	10:30 AM
Mandatory Pre-bid END TIME:	10:50 AM

	COMPANY NAME	COMPANY REPRESENTATIVE	SIGNATURE	ADDRESS	CONTACT E-MAIL	CONTACT PHONE NUMBER AND FAX NUMBER	PROPOSAL SUBMITTED (For Purchasing Use Only)
1	State of RI	Gary P. Mosca	Gary P. Mosca	One Capitol Hill Prov. RI	gary.mosca@purchasing.ri.gov	401-574-8124	
2	Freeport General Cont, Inc.	Kenny Bostic	[illegible]	8 Remington St No Prov RI 02904	Freeport General Contracting@gmail.com	401-722-0456 Cell 439-7720	
3	Mill City Construction Inc	Stephen P. Caron	Stephen P. Caron	7010 Great Road Lincoln RI 02865	scarong@millcity.com	401-766-3100	
4	Schneider Electric	David Rotondo	[illegible]	800 Federal St, Andover, MA	david.rotondo@schneider-electric.com	401-523-6161	
5	Schneider	Stephen DeFeda	[illegible]	800 Federal St Andover MA	Stephen.DeFeda@schneider-electric.com	978-494-8566	
6	Frankling Construction	Peter Rosiello	[illegible]	P.O Box 69 Warwick RI 02887	Prosiello@frankingcon.com	401-641-7572	
7	MARON CONSTRUCTION	WILLIAM HUNTER	[illegible]	180 BUTTONHOLE DRIVE	wchunter88@gmail.com	401-272-4930	
8	Heroica Construction	Ryan Sears	[illegible]	631 Douglas Ave	rsears@student.fitchburgstate.edu	508-505-7136	
9	TRAC BUILDERS INC	ALEX BRADLEY	[illegible]	28 WILLETT ST PROVIDENCE, RI	Estimating@TRACBUILDERS.com	401-943-3800	
10	AHLBORG CONST	JIM PLANTE	[illegible]	21 COLLEGE HILL RD WARWICK RI	JPLANTE@AHLBORG.com	401-681-9997	
11	Bentley	Paul Tierney	[illegible]	250 Scituate Ave RD Nkngitm RI	P.tierney@BentleyBuildersLLC.com	401-490-1861	
12	CCRI	Tracy Ryder	[illegible]				
13	CCRI	Bill Ferland	[illegible]				
14	E.W. BURMAN	BEN PESATURO	Ben Pesaturo	33 VERMONT AVE WARWICK, RI	estimating@ewburman.com	401-738-5400 401-737-2650	
15	DELTA MECHANICAL	RYAN BENSON	[illegible]	44 WELCLARK ST WARWICK, RI	rbenson@deltamechllc.com	401-737-3500 401-739-7376	

** VENDOR: PLEASE SUBMIT A BUSINESS CARD IF AVAILABLE**

State of Rhode Island
Division of Purchases
One Capitol Hill
Providence, RI 02908

"MANDATORY" PRE-BID CONFERENCE SIGN IN SHEET

Mandatory Pre-bid Conference: Any vendor who intends to submit a bid proposal in response to this solicitation must have its representative attend this mandatory prebid conference, sign, and complete all required information on this Sign-In Sheet. Failure to comply with this requirement will result in the rejection of any bid proposal.

BID NUMBER:	7550802
BID TITLE:	Door Replacement Project - CCRI
PRE-BID DATE AND TIME:	8/24/16 @ 10:30 am

Purchasing Representative:
Gary P. Mosca
Mandatory Pre-bid START TIME:
10:30 AM
Mandatory Pre-bid END TIME:

	COMPANY NAME	COMPANY REPRESENTATIVE	SIGNATURE	ADDRESS	CONTACT E-MAIL	CONTACT PHONE NUMBER AND FAX NUMBER	PROPOSAL SUBMITTED (For Purchasing Use Only)
1	NADEAU CORP	ERNEST NADEAU		721 WALNUT ATTLEBORO	EN@NADEAUCORP.COM	508-399-6776 508-399-7270	
2	CCRI	David Snow					
3	IRON CONSTRUCTION GROUP	ED POIRIER		875 Centerville Rd Warwick RI	ESTIMATING@ICGRI.COM	401-481-8890 401-490-3145	
4	CCRI	MARK Libutti					
5	BTGA	NATE GUTSBURG		150 CHESTNUT ST	NATEG@BREWSTERTHORNTON.COM		
6							
7							
8							
9							
10							
11							
12							
13							
14							
15							

** VENDOR: PLEASE SUBMIT A BUSINESS CARD IF AVAILABLE**

BREWSTER THORNTON GROUP ARCHITECTS, LLP 401.861.1600
150 Chestnut Street, Providence, RI 02903 fax 401.861.5588

COMMUNITY COLLEGE OF RHODE ISLAND
1508K Door Hardware Knight Campus

Date:	August 24th, 2016
Prepared by:	Nate Ginsburg
Distribution:	Addendum

A pre-bid meeting was held to review the Knight Campus Door Hardware renovations with interested parties. The following comments were noted:

GENERAL

1. Overview: Vendor to supply all labor, materials, and equipment required to remove and replace doors, door hardware, and select door frames at the CCRI Knight Campus in Warwick, RI. Work will be performed in accordance with the Contract Documents, including the specifications and drawings listed in the Project Manual.
2. Documents are available on the State Purchasing website.
3. Questions to be directed to Gary Mosca no later than Thursday August 31, 2016, at 5:00 pm.
4. Bid are due September 27, 2016 by 1:30 pm. Bids Due at State Purchasing, 2nd floor One Capitol Hill

SCOPE OF WORK

a. Remove and replace all wood doors at the older portion of building, all floors. The old portion of the building is generally defined as atrium to the east side, including the round building. The new portion of the building is generally defined as the west wing.
b. Remove and replace aluminum doors at the older portion of the building including first and second floor and doors located at the Library and Bookstore. A temporary secured (plywood) enclosure will be required for the storefronts replaced. Only one set of doors at a time is permitted to be removed and replaced 100%; this job is best scheduled for work on a Sunday Third Shift.
c. Remove and replace metal doors (typically exterior) at the older portion of building. Remove and replace metal frames as designated in the door schedule. Factory prime, field paint all new metal doors and frames. Paint color to match existing.
d. Remove and replace metal doors to the roof. Factory prime, field paint all new metal doors and frames.
e. Existing interior door frames will remain, unless noted otherwise.
f. Work includes all door hardware, both manual and electronic, with ADA compliant vision panels, louvers, etc. Power will be required to door operators and some electronic devices. Electrical work is to be included whether indicated on the drawings on not. All electrical not indicated is intended to be design build by the GC.
g. All new doors are intended to match existing doors in material, size and style, except aluminum doors are to have taller stiles and rails as indicated on the drawings and all round porthole style windows will be replaced with accessible code compliant vision lite. GC to coordinate with Owner/Architect if any doors indicated on the drawings/specification vary from the existing conditions.
h. GC is responsible for all related coordination including hardware and electronic coordination. All coordinated elements of owner provided equipment are to be complete. All aspects are to be in proper working order, in conjunction with all electronic hardware, security monitoring devices, etc.
i. Install owner furnished signage on new doors (see plans). Include removal of stair door signage in stairwells; patch and paint walls, matching existing color at removed signs.
j. Install one door, as scheduled, in the Knight Campus field house. – Addendum will be issued for the field house with an additional 6-8 doors

Door Hardware

k. New doors will typically use electronic, networked wireless locksets.

l. Some hardware has been pre-purchased by the Owner. The GC is responsible for installing owner provided hardware. Quantity to be provided in an addendum to this bid. GC responsible for purchasing and installing hardware not already provided by Owner.

OWNER REQUIRED SUBCONTRACTORS

Electronic Hardware and associated installation and integration with doors,
Direct Vendor: Schneider Electric

m. Vendor to contract with Schneider Electric for the procurement of AD 400 locks/PIMs and their installation.

General Requirements

a. All work to be performed during **third shift: 10:30PM to 6:30 AM.**
c. Vendor is responsible for obtaining and paying for any required Local and State licenses, Permits and inspections.
d. Contractor to include all Bond costs in their Bid.
e.. Before starting work, all Contractor workers and Subs are required to obtain and submit a current BCI and State-approved picture ID. CCRI College Police reserves the right to deny Campus access to any worker based on information provided on the submitted BCI.
i. There will be mandatory bi-weekly progress meetings onsite with four week look a-head schedules to be furnished to the Architect and College.

j. All logistics of door installation must be reviewed and approved by the College prior to the start of work, in the form of a submittal. For safety and security, the College will require only doors that can be completely installed and secured by end of the shift may be initiated for preparation and hanging at the start of work shift. The GC will coordinate with Schneider to determine the number of doors that can be worked on per day.
n. The elevator may not be used to transport doors.
o. The building will be securable at all times. The GC is responsible for coordinating with CCRI Facilities Department and Campus Security throughout construction, to ensure a safe environment for students, staff, faculty and administration.
p. No materials or equipment is to be left at the loading dock. All deliveries to arrive at the loading dock.
q. Deliveries of the doors to be coordinated with the college and to occur at convenient times with the college.
r. The Awarded bidder is to submit the names and resumes of the onsite supervisors for review and acceptance to work on campus by the College team. The College reserves the right to reject any proposed onsite supervisors.
s. The College is not responsible for security of materials, tools, etc.
t. There will be a location on the ground floor to store approximately 60 new doors to be installed. At no time is this quantity to be increased.
u. Contractor must come to terms with all vendors prior to submitting their bid.
v. All doors and hardware must be fully operational at the end of the shift.

1.2 ALTERNATES

A. None.

CONTRACTOR'S USE OF SITE AND PREMISES

A. Owner intends to fully occupy the facility during the period of construction.

B. Construction Operations: Limited to areas within the building as agreed with the College. Coordinate with Owner to insure delivery and completion per the schedule. Include all costs of this coordination, including all premium time wages that may be required to meet these requirements, in the Base bid.
C. Provide access to and from site as required by law and by Owner:
   1. Building Entrance and Emergency Exits During Construction: Keep the main entrance of the building open throughout the project. Allow all exits required by code to remain open during construction period; provide temporary exit signs if exit routes are temporarily altered.
   2. Do not obstruct roadways, sidewalks, or other public ways without permission from the Owner.
E. Protect all existing surfaces from damages. Any damages to the existing surfaces requiring replacement and or repair will be at this vendor's expense.
F. At all times and at the completion of the Project, construction areas are to be kept in a clean, safe and acceptable condition on a daily basis.
G. Vendor is responsible for removing all project debris off site daily including all costs associated with waste containers and proper disposal of waste. The College will provide an exterior location for the temporary placement of a waste container.
H. Vendor is to have all equipment necessary to perform the installation and service including, tools, staging, lift truck, etc. No CCRI equipment or tools will be available.
I. All doors to be fully functional and lockable at the end of the shift for use. Lockable means functioning AD400 locks.
J. Any work that affects the fire suppression and fire alarm systems is to be done by the College contracted maintenance company's with all costs included in the base bid.

ITEMS PROVIDED BY OWNER INSTALLED BY CONTRACTOR

1. A portion of the electronic hardware will be furnished and installed by a contractor working directly for CCRI. This contractor must verify exact amounts and specified locations as part of this contract.

HAZARDOUS MATERIALS

1. All wood doors are presumed to obtain asbestos material and are to be disposed of properly at a proper facility.

ALLOWANCES

1. Allowance #1: Include a $50,000 allowance to furnish and install additional door hardware.
2. Allowance #2: Include a $40,000 allowance for unknown concealed conditions to be corrected.
3. See updated Bid Form issued with Addendum 2.

SCHEDULE

1. Submittals are to begin within 14 days of PO
2. Onsite Construction begins after Submittal Approval
3. Substantial Completion by May 8, 2017 with Final Completion June 15, 2017.
4. The Owner intends to fully occupy the building. 3rd shift work is required.
5. Work is prohibited during the week of graduation 2017

END OF MEETING

If any of the above is inconsistent with your understanding, or this meeting memo fails to document any items discussed, please contact our office immediately.

SECTION 00 0110
TABLE OF CONTENTS

PROCUREMENT AND CONTRACTING REQUIREMENTS

DIVISION 00 -- PROCUREMENT AND CONTRACTING REQUIREMENTS

A. 00 0110 - Table of Contents
B. 00 0115 – Drawing List
C. 00 3000 – Bid Bond
D. 00 3001 – A310 Bid Bond
E. 00 5000 – Contracting Forms
F. 00 5200 – Agreement Form
G. 00 5201 – A101 Standard form of Agreement Between Owner and Contractor
H. 00 7200 – General Conditions
I. 00 7201 – A201 General Conditions of the Contract for Construction
J. 00 8500 – Prevailing Wage

PART 1 – PROJECT SPECIFICATIONS

DIVISION 01 -- GENERAL REQUIREMENTS

A. 01 1000 – Summary of Work
B. 01 2000 – Price & Payment
C. 01 3000 – Administrative Procedures
D. 01 3300 – Submittal Procedures
E. 01 4000 – Quality Requirements
F. 01 6000 – Product Requirements
G. 01 7800 – Closeout Submittals

DIVISION 02 -- EXISTING CONDITIONS

A. 02 4100 – Demolition

DIVISION 07 – THERMAL AND MOISTURE PROTECTION

A. 07 9005 - Joint Sealers

DIVISION 08 -- OPENINGS

A. 08 1113 – Hollow Metal Doors and Frames
B. 08 1200 – Monumental Stile and Rail Doors
C. 08 1416 – Flush Wood Doors
D. 08 7100 – Door Hardware
E. 08 7110 – Low Energy Operators
F. 08 8000 – Glazing

DIVISION 09 – FINISHES

A. 09 9000 – Painting & Coating

END OF SECTION

SECTION 07 9005
JOINT SEALERS

PART 1 GENERAL

1.01 SECTION INCLUDES

A. Sealants and joint backing.

1.02 RELATED REQUIREMENTS

A. Section 07 8400 - Firestopping: Firestopping sealants.

B. Section 09 2116 - Gypsum Board Assemblies: Acoustic sealant.

1.03 REFERENCE STANDARDS

A. ASTM C834 - Standard Specification for Latex Sealants; 2010.

B. ASTM C919 - Standard Practice for Use of Sealants in Acoustical Applications; 2012.

C. ASTM C920 - Standard Specification for Elastomeric Joint Sealants; 2014.

D. ASTM C1193 - Standard Guide for Use of Joint Sealants; 2013.

E. SCAQMD 1168 - South Coast Air Quality Management District Rule No.1168; current edition; www.aqmd.gov.

1.04 ADMINISTRATIVE REQUIREMENTS

A. Coordinate the work with other sections referencing this section.

1.05 SUBMITTALS

A. See Section 01 3000 - Administrative Requirements, for submittal procedures.

B. Product Data: Provide data indicating sealant chemical characteristics, performance criteria, substrate preparation, limitations, and color availability.

1.06 QUALITY ASSURANCE

A. Manufacturer Qualifications: Company specializing in manufacturing the Products specified in this section with minimum three years documented experience.

B. Applicator Qualifications: Company specializing in performing the work of this section with minimum three years documented experience and approved by manufacturer.

1.07 FIELD CONDITIONS

A. Maintain temperature and humidity recommended by the sealant manufacturer during and after installation.

1.08 WARRANTY

A. See Section 01 7800 - Closeout Submittals, for additional warranty requirements.

B. Correct defective work within a five year period after Date of Substantial Completion.

C. Warranty: Include coverage for installed sealants and accessories which fail to achieve airtight seal, exhibit loss of adhesion or cohesion, or do not cure.

PART 2 PRODUCTS

2.01 MANUFACTURERS

A. Gunnable and Pourable Sealants:
   1. BASF Construction Chemicals-Building Systems: www.buildingsystems.basf.com.
   2. Bostik Inc: www.bostik-us.com.
   3. Dow Corning Corporation: www.dowcorning.com.

4. Hilti, Inc: www.us.hilti.com.
5. Pecora Corporation: www.pecora.com.
6. Tremco Global Sealants: www.tremcosealants.com.
7. Sherwin-Williams Company: www.sherwin-williams.com.
8. W.R. Meadows, Inc: www.wrmeadows.com.

B. Preformed Compressible Foam Sealers:
1. EMSEAL Joint Systems, Ltd: www.emseal.com.
2. Sandell Manufacturing Company, Inc: www.sandellmfg.com.
3. Dayton Superior Corporation: www.daytonsuperior.com.
4. Tremco Global Sealants: www.tremcosealants.com.

2.02 SEALANTS

A. Sealants and Primers - General: Provide only products having lower volatile organic compound (VOC) content than required by South Coast Air Quality Management District Rule No.1168.

B. General Purpose Exterior Sealant: Polyurethane; ASTM C920, Grade NS, Class 25, Uses M, G, and A; single component.
1. Color: Match adjacent finished surfaces.
2. Applications: Use for:
a. Control, expansion, and soft joints in masonry.
b. Joints between concrete and other materials.
c. Joints between metal frames and other materials.
d. Other exterior joints for which no other sealant is indicated.
3. Polyurethane Products:
a. Pecora Corporation; DynaTrol I-XL General Purpose One Part Polyurethane Sealant: www.pecora.com.
b. Sherwin-Williams Company; Stampede-1/-TX Polyurethane Sealant: www.sherwin-williams.com.
c. Sherwin-Williams Company; Stampede 1H Hybrid Sealant: www.sherwin-williams.com.
d. Sherwin-Williams Company; Stampede 2NS Polyurethane Sealant: www.sherwin-williams.com.
e. Substitutions: See Section 01 6000 - Product Requirements.

C. General Purpose Interior Sealant: Acrylic emulsion latex; ASTM C834, Type OP, Grade NF single component, paintable.
1. Color: Match adjacent finished surfaces.
2. Applications: Use for:
a. Interior wall and ceiling control joints.
b. Joints between door and window frames and wall surfaces.
c. Other interior joints for which no other type of sealant is indicated.
3. Products:
a. Pecora Corporation; AC-20 + Silicone Acrylic Latex Caulking Compound: www.pecora.com.
b. Sherwin-Williams Company; 850A Acrylic Latex Caulk: www.sherwin-williams.com.
c. Sherwin-Williams Company; 950A Siliconized Acrylic Latex Caulk: www.sherwin-williams.com.
d. Substitutions: See Section 01 6000 - Product Requirements.

D. Acoustical Sealant for interior Locations:
1. Applications: Use for concealed locations only:
a. Sealant bead between top stud runner and structure and between bottom stud track and floor.
2. Products:
a. Pecora Corporation; AIS-919 Acoustical and Insulation Latex Sealant: www.pecora.com.

b. Pecora Corporation; AC-20 FTR Acoustical and Insulation Sealant: www.pecora.com.
c. Hilti, Inc.; CP 506 Smoke and Acoustical Sealant: www.us.hilti.com.
d. Substitutions: See Section 01 6000 - Product Requirements.

2.03 ACCESSORIES

A. Primer: Non-staining type, recommended by sealant manufacturer to suit application.

B. Joint Cleaner: Non-corrosive and non-staining type, recommended by sealant manufacturer; compatible with joint forming materials.

C. Joint Backing: Round foam rod compatible with sealant; ASTM D 1667, closed cell PVC; oversized 30 to 50 percent larger than joint width.

D. Bond Breaker: Pressure sensitive tape recommended by sealant manufacturer to suit application.

PART 3 EXECUTION

3.01 EXAMINATION

A. Verify that substrate surfaces are ready to receive work.

B. Verify that joint backing and release tapes are compatible with sealant.

3.02 PREPARATION

A. Remove loose materials and foreign matter that could impair adhesion of sealant.

B. Clean and prime joints in accordance with manufacturer's instructions.

C. Perform preparation in accordance with manufacturer's instructions and ASTM C1193.

D. Protect elements surrounding the work of this section from damage or disfigurement.

3.03 INSTALLATION

A. Perform work in accordance with sealant manufacturer's requirements for preparation of surfaces and material installation instructions.

B. Perform installation in accordance with ASTM C1193.

C. Perform acoustical sealant application work in accordance with ASTM C919.

D. Install bond breaker where joint backing is not used.

E. Install sealant free of air pockets, foreign embedded matter, ridges, and sags.

F. Apply sealant within recommended application temperature ranges. Consult manufacturer when sealant cannot be applied within these temperature ranges.

G. Tool joints concave.

3.04 CLEANING

A. Clean adjacent soiled surfaces.

3.05 PROTECTION

A. Protect sealants until cured.

END OF SECTION

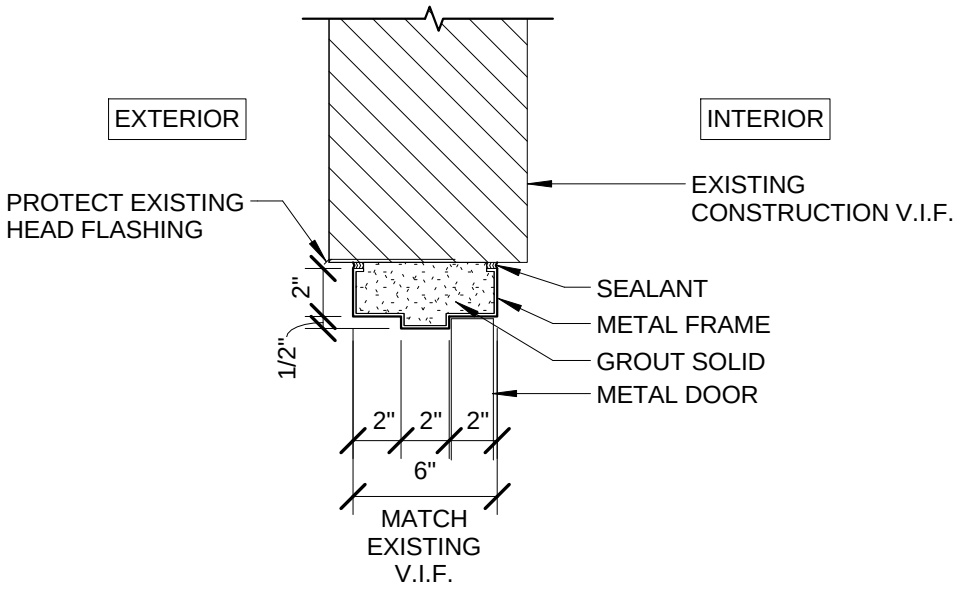

1 / SK-1 MASONRY HEAD 1

Scale: 1 1/2" = 1'-0"

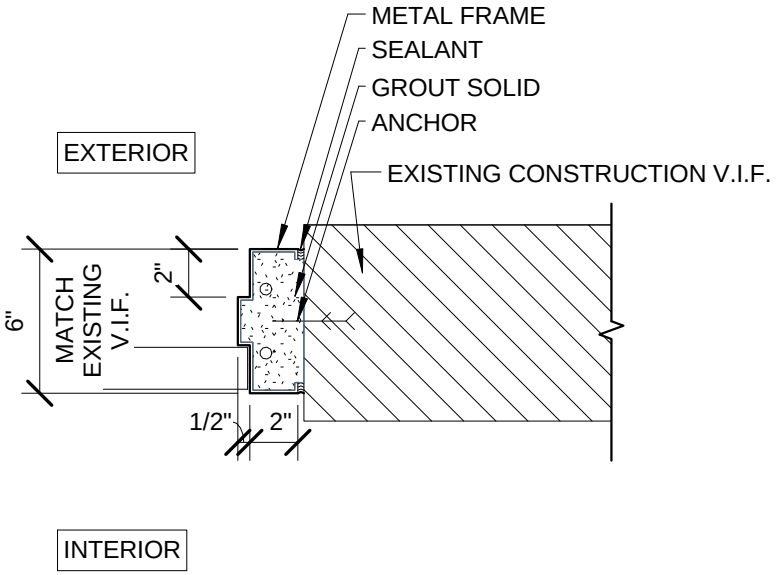

2 / SK-1 MASONRY JAMB 2

Scale: 1 1/2" = 1'-0"

BREWSTER THORNTON GROUP ARCHITECTS LLP
150 Chestnut Street
Providence, RI
02903
Tel: 401.861.1600
Fax: 401.861.5588

DOOR DETAILS - EXTERIOR FRAME

DATE:09/09/16

SCALE: 1 1/2" = 1'-0"

DOOR REPLACEMENT

400 East Avenue, Warwick, RI

SK-1

1508K

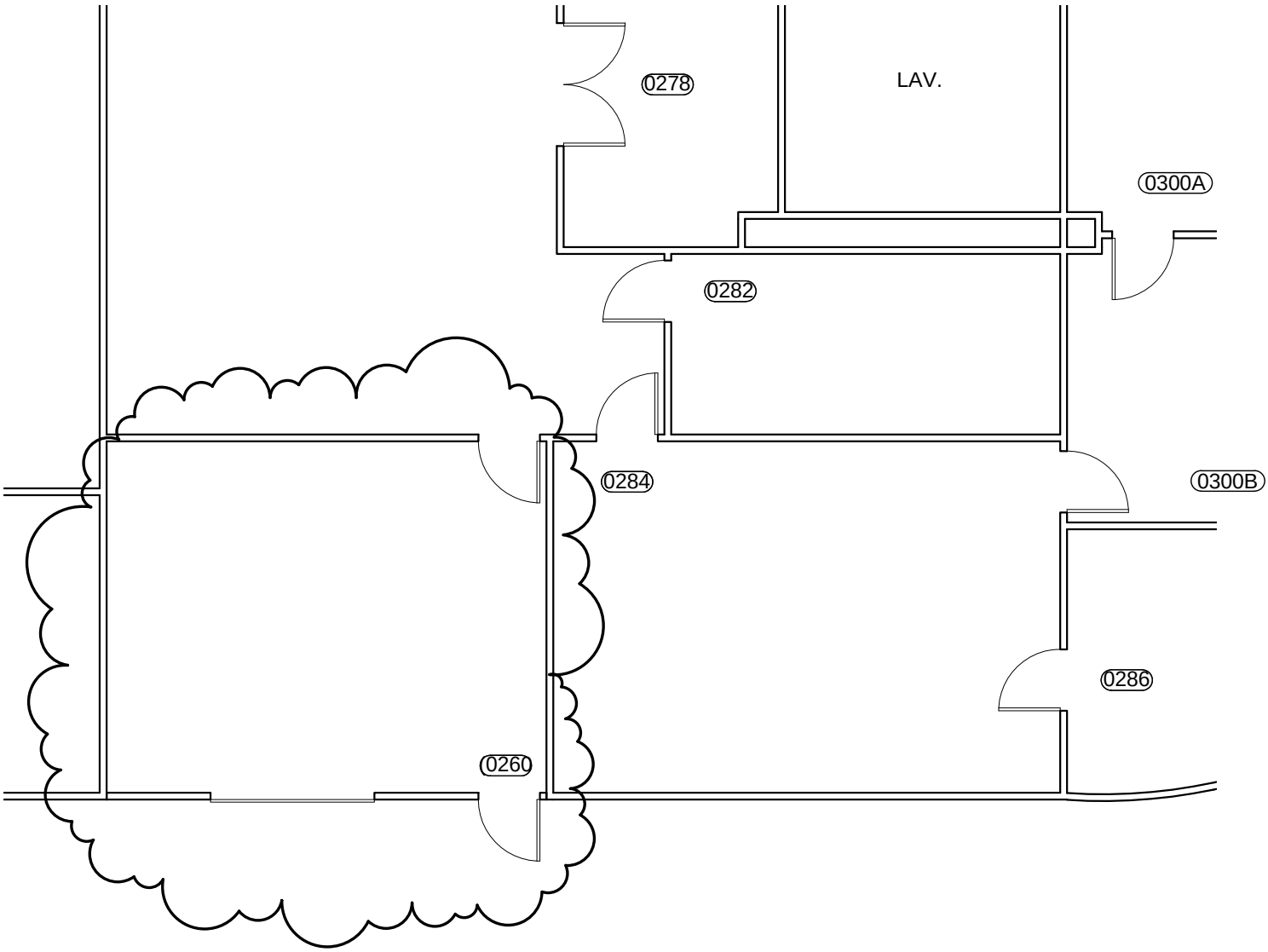

1
SK-2

A1.0 GROUND FLOOR PLAN

Scale: 1/8" = 1'-0"

BREWSTER THORNTON GROUP ARCHITECTS LLP
150 Chestnut Street
Providence, RI
02903
Tel: 401.861.1600
Fax: 401.861.5588

GROUND FLOOR PLAN

DATE:09/12/16

SCALE: 1/8" = 1'-0"

DOOR REPLACEMENT

400 EAST AVENUE, WARWICK, RI

SK-2

1508K

BREWSTER THORNTON GROUP ARCHITECTS LLP

PROJECT MANUAL

CCRI Observatory Furniture

Community College of Rhode Island
Knight Campus

January 12, 2016

BTGA Job
#1508E

150 Chestnut Street, Providence, RI 02903 • 401.861.1600 • Fax: 401.861.5588
mail@brewsterthornton.com • http://www.brewsterthornton.com

SECTION 00 0110

TABLE OF CONTENTS

PROCUREMENT AND CONTRACTING REQUIREMENTS

DIVISION 00 -- PROCUREMENT AND CONTRACTING REQUIREMENTS

A. 00 0110 - Table of Contents
B. 00 0115 – Drawing List
C. 00 3000 – Bid Bond
D. 00 3001 – A310 Bid Bond
E. 00 5201 – A101 Standard form of Agreement Between Owner and Contractor
F. 00 7201 – A201 General Conditions of the Contract for Construction

PART 1 – PROJECT SPECIFICATIONS

DIVISION 01 -- GENERAL REQUIREMENTS

A. 01 1000 – Summary of Work
B. 01 2000 – Price & Payment
C. 01 3000 – Administrative Procedures
D. 01 3300 – Submittal Procedures
E. 01 4000 – Quality Requirements
F. 01 6000 – Product Requirements
G. 01 7800 – Closeout Submittals

DIVISION 02 -- EXISTING CONDITIONS

A. 02 4100 - Demolition

DIVISION 06 -- WOOD, PLASTIC AND COMPOSITES

A. 06 4100 Architectural Wood Casework

DIVISION 12 -- FURNISHINGS

A. 12 3671 Countertops

END OF SECTION

SECTION 00 0115
LIST OF DRAWINGS

DWG #:	TITLE:	DATE:
CVR	COVER SHEET	01/12/16
A1.1	EXISTING AND PROPOSED FLOOR PLANS	01/12/16
A6.1	CONTROL DESK ELEVATIONS AND SECTIONS	01/12/16
A6.2	WORK STATION ELEVATION AND SECTION	01/12/16
A6.3	BENCH ENLARGED PLAN, ELEVATION AND SECTION	01/12/16

END OF SECTION

DOCUMENT 00 3000
BID BOND

SEE AIA DOCUMENT A310-2010, ATTACHED FOLLOWING THIS PAGE.

END OF DOCUMENT

AIA® Document A310™ – 2010

Bid Bond

CONTRACTOR:
(Name, legal status and address)
« »« »
« »

SURETY:
(Name, legal status and principal place of business)
« »« »
« »

OWNER:
(Name, legal status and address)
The State of Rhode Island, acting by and through the Department of Administration
Division of Purchases, on behalf of the User agency
One Capitol Hill, Second Floor
Providence, Rhode Island 02908

BOND AMOUNT: $ « »

PROJECT:
(Name, location or address, and Project number, if any)
Observatory Millwork
Community College of Rhode Island
Knight Campus

The Contractor and Surety are bound to the Owner in the amount set forth above, for the payment of which the Contractor and Surety bind themselves, their heirs, executors, administrators, successors and assigns, jointly and severally, as provided herein. The conditions of this Bond are such that if the Owner accepts the bid of the Contractor within the time specified in the bid documents, or within such time period as may be agreed to by the Owner and Contractor, and the Contractor either (1) enters into a contract with the Owner in accordance with the terms of such bid, and gives such bond or bonds as may be specified in the bidding or Contract Documents, with a surety admitted in the jurisdiction of the Project and otherwise acceptable to the Owner, for the faithful performance of such Contract and for the prompt payment of labor and material furnished in the prosecution thereof; or (2) pays to the Owner the difference, not to exceed the amount of this Bond, between the amount specified in said bid and such larger amount for which the Owner may in good faith contract with another party to perform the work covered by said bid, then this obligation shall be null and void, otherwise to remain in full force and effect. The Surety hereby waives any notice of an agreement between the Owner and Contractor to extend the time in which the Owner may accept the bid. Waiver of notice by the Surety shall not apply to any extension exceeding sixty (60) days in the aggregate beyond the time for acceptance of bids specified in the bid documents, and the Owner and Contractor shall obtain the Surety's consent for an extension beyond sixty (60) days.

If this Bond is issued in connection with a subcontractor's bid to a Contractor, the term Contractor in this Bond shall be deemed to be Subcontractor and the term Owner shall be deemed to be Contractor.

When this Bond has been furnished to comply with a statutory or other legal requirement in the location of the Project, any provision in this Bond conflicting with said statutory or legal requirement shall be deemed deleted herefrom and provisions conforming to such statutory or other legal requirement shall be deemed incorporated herein. When so furnished, the intent is that this Bond shall be construed as a statutory bond and not as a common law bond.

ADDITIONS AND DELETIONS: The author of this document has added information needed for its completion. The author may also have revised the text of the original AIA standard form. An *Additions and Deletions Report* that notes added information as well as revisions to the standard form text is available from the author and should be reviewed.

This document has important legal consequences. Consultation with an attorney is encouraged with respect to its completion or modification.

Any singular reference to Contractor, Surety, Owner or other party shall be considered plural where applicable.

ELECTRONIC COPYING of any portion of this AIA® Document to another electronic file is prohibited and constitutes a violation of copyright laws as set forth in the footer of this document.

AIA Document A310™ – 2010. Copyright © 1963, 1970 and 2010 by The American Institute of Architects. **All rights reserved. WARNING: This AIA® Document is protected by U.S. Copyright Law and International Treaties. Unauthorized reproduction or distribution of this AIA® Document, or any portion of it, may result in severe civil and criminal penalties, and will be prosecuted to the maximum extent possible under the law.** This draft was produced by AIA software at 09:02:49 on 09/24/2013 under Order No.2911054832_1 which expires on 12/30/2013, and is not for resale.
User Notes: (1884050248)

Signed and sealed this « » day of « » , « »

	« »
	(Contractor as Principal) *(Seal)*
	« »
(Witness)	*(Title)*
	« »
	(Surety) *(Seal)*
	« »
(Witness)	*(Title)*

AIA Document A310™ – 2010. Copyright © 1963, 1970 and 2010 by The American Institute of Architects. **All rights reserved. WARNING: This AIA® Document is protected by U.S. Copyright Law and International Treaties. Unauthorized reproduction or distribution of this AIA® Document, or any portion of it, may result in severe civil and criminal penalties, and will be prosecuted to the maximum extent possible under the law.** This draft was produced by AIA software at 09:02:49 on 09/24/2013 under Order No.2911054832_1 which expires on 12/30/2013, and is not for resale.
User Notes: (1884050248)

SECTION 00 5200
AGREEMENT FORM

PART 1 – GENERAL

1.1 The Agreement Form to be utilized on this project is AIA Document A101-2007 as amended, a copy of which follows this page.

END OF DOCUMENT

AIA® Document A101™ – 2007

Standard Form of Agreement Between Owner and Contractor *where the basis of payment is a Stipulated Sum*

AGREEMENT *made as of _____. (Date of issuance of Owner's Purchase Order)*
(Paragraph deleted)
BETWEEN the Owner:

The State of Rhode Island, acting by and through the Department of Administration
Division of Purchases, on behalf of the User Agency
One Capitol Hill, Second Floor
Providence, Rhode Island 02908-5855
(401) 574-8100 (telephone)
(401) 574-8387 (facsimile)
www.purchasing.ri.gov

and the Contractor:
(Name, legal status, address, telephone and facsimile numbers, and web address)

for the following Project: *(Name, location, and detailed description)*

The User Agency:
(Name of user agency, address, telephone and facsimile numbers, and web address)

CCRI Community College
400 East Ave
Warwick, RI 02886

The Design Agent:
(Name, legal status, address, telephone and facsimile numbers, and web address)

Brewster Thornton Group Architects
150 Chestnut Street
Providence, RI 02903

The Owner and Contractor agree as follows.

ADDITIONS AND DELETIONS:
The author of this document has added information needed for its completion. The author may also have revised the text of the original AIA standard form. An *Additions and Deletions Report* that notes added information as well as revisions to the standard form text is available from the author and should be reviewed. A vertical line in the left margin of this document indicates where the author has added necessary information and where the author has added to or deleted from the original AIA text.

This document has important legal consequences. Consultation with an attorney is encouraged with respect to its completion or modification.

AIA Document A201™–2007, General Conditions of the Contract for Construction, is adopted in this document by reference. Do not use with other general conditions unless this document is modified.

AIA Document A101™ – 2007. Copyright © 1915, 1918, 1925, 1937, 1951, 1958, 1961, 1963, 1967, 1974, 1977, 1987, 1991, 1997 and 2007 by The American Institute of Architects**. All rights reserved. WARNING: This AIA® Document is protected by U.S. Copyright Law and International Treaties. Unauthorized reproduction or distribution of this AIA® Document, or any portion of it, may result in severe civil and criminal penalties, and will be prosecuted to the maximum extent possible under the law.** This document was produced by AIA software at 17:45:42 on 05/14/2015 under Order No.7624003807_1 which expires on 12/30/2015, and is not for resale.
User Notes: (1634687302)

TABLE OF ARTICLES

1 THE CONTRACT DOCUMENTS

2 THE WORK OF THIS CONTRACT

3 DATE OF COMMENCEMENT AND SUBSTANTIAL COMPLETION

4 CONTRACT SUM

5 PAYMENTS

6 DISPUTE RESOLUTION

7 TERMINATION OR SUSPENSION

8 MISCELLANEOUS PROVISIONS

9 ENUMERATION OF CONTRACT DOCUMENTS

10 INSURANCE AND BONDS

11 BENEFITS OF AGREEMENT

ARTICLE 1 THE CONTRACT DOCUMENTS

The Contract Documents consist of this Agreement, Conditions of the Contract (General Conditions, Supplementary ,if any, and other Conditions), Drawings, Specifications, Addenda issued prior to execution of this Agreement, other documents listed in this Agreement and Modifications issued after execution of this Agreement, all of which form the Contract, and are as fully a part of the Contract as if attached to this Agreement or repeated herein. The Contract represents the entire and integrated agreement between the parties hereto and supersedes prior negotiations, representations or agreements, either written or oral. An enumeration of the Contract Documents, other than a Modification, appears in Article 9.

ARTICLE 2 THE WORK OF THIS CONTRACT

The Contractor shall fully execute the Work described in the Contract Documents, except as specifically indicated in the Contract Documents to be the responsibility of others. No part of the Work shall be performed by Subcontractors without the Owner's prior written consent.

ARTICLE 3 DATE OF COMMENCEMENT AND SUBSTANTIAL COMPLETION

§ 3.1 The date of commencement of the Work
(Paragraphs deleted)
will be stipulated by the User Agency. The Contractor shall be authorized to commence the Work *only* upon the issuance of the Purchase Order by the Owner *and* an authorization from the User Agency.

§ 3.2 The Contract Time shall be measured from the date of commencement.

§ 3.3 The Contractor shall achieve Substantial Completion of the entire Work not later than ( ) days from the date of commencement, or as follows:
(Insert number of calendar days. Alternatively, a calendar date may be used when coordinated with the date of commencement. If appropriate, insert requirements for earlier Substantial Completion of certain portions of the Work.)

AIA Document A101™ – 2007. Copyright © 1915, 1918, 1925, 1937, 1951, 1958, 1961, 1963, 1967, 1974, 1977, 1987, 1991, 1997 and 2007 by The American Institute of Architects**. All rights reserved. WARNING: This AIA® Document is protected by U.S. Copyright Law and International Treaties. Unauthorized reproduction or distribution of this AIA® Document, or any portion of it, may result in severe civil and criminal penalties, and will be prosecuted to the maximum extent possible under the law.** This document was produced by AIA software at 17:45:42 on 05/14/2015 under Order No.7624003807_1 which expires on 12/30/2015, and is not for resale.
User Notes: (1634687302)

Portion of Work	Substantial Completion Date

, subject to adjustments of this Contract Time as provided in the Contract Documents.
(Paragraphs deleted)
§ 3.4 The Contractor and the Contractor's surety shall be liable for and shall pay the Owner the sums stipulated herein as liquidated damages, and not as penalty, for each calendar day of delay until the Work is substantially complete: _____($____) Dollars.

§ 3.5 The Owner shall not be liable to the Contractor or any Subcontractor for claims or damages of any nature caused by or arising out of any delays. The sole remedy against the Owner for delays shall be the allowance of additional time for completion of the Work.

ARTICLE 4 CONTRACT SUM

§ 4.1 The Owner shall pay the Contractor the Contract Sum in current funds for the Contractor's performance of the Contract. The Contract Sum shall be Dollars ($), subject to additions and deductions as provided in the Contract Documents.

§ 4.2 The Contract Sum is based upon the following alternates, if any, which are described in the Contract Documents and are hereby accepted by the Owner:
(State the numbers or other identification of accepted alternates

§ 4.3 Unit
(Paragraphs deleted)
prices are specified in the Bid Form.
§ 4.4 Allowances
(Paragraphs deleted)
are specified in the Bid Form.

ARTICLE 5 PAYMENTS

§ 5.1 PROGRESS PAYMENTS

§ 5.1.1 Based upon Applications for Payment submitted to the Design Agent by the Contractor and Certificates for Payment issued by the Design Agent and approved by the Owner in writing, the Owner shall make progress payments on account of the Contract Sum to the Contractor as provided below and elsewhere in the Contract Documents, and in accordance with the provisions of "Prompt Payment by Department of Administration," R.I. Gen. Laws §§ 42-11.1-1 et seq..

§ 5.1.2 The period covered by each Application for Payment shall be one calendar month ending on the last day of the month.

§ 5.1.3 The Owner shall make payment of the certified amount to the Contractor not later than the 30th working day following written approval by the Owner.

§ 5.1.4 Each Application for Payment shall be based on the most recent schedule of values submitted by the Contractor in accordance with the Contract Documents. The schedule of values shall allocate the entire Contract Sum among the various portions of the Work. The schedule of values shall be prepared in such form and supported by such data to substantiate its accuracy as the Design Agent and Owner may require.

§ 5.1.5 Applications for Payment shall show the percentage of completion of each portion of the Work as of the end of the period covered by the Application for Payment.

§ 5.1.6 Subject to other provisions of the Contract Documents, the amount of each progress payment shall be computed as follows:

AIA Document A101™ – 2007. Copyright © 1915, 1918, 1925, 1937, 1951, 1958, 1961, 1963, 1967, 1974, 1977, 1987, 1991, 1997 and 2007 by The American Institute of Architects. **All rights reserved. WARNING: This AIA® Document is protected by U.S. Copyright Law and International Treaties. Unauthorized reproduction or distribution of this AIA® Document, or any portion of it, may result in severe civil and criminal penalties, and will be prosecuted to the maximum extent possible under the law.** This document was produced by AIA software at 17:45:42 on 05/14/2015 under Order No.7624003807_1 which expires on 12/30/2015, and is not for resale.
User Notes: (1634687302)

.1 Take that portion of the Contract Sum properly allocable to completed Work as determined by multiplying the percentage completion of each portion of the Work by the share of the Contract Sum allocated to that portion of the Work in the schedule of values, less retainage of five percent (5 %). Pending final determination of cost to the Owner of changes in the Work, amounts not in dispute shall be included as provided in Section 7.3.9 of AIA Document A201™–2007, General Conditions of the Contract for Construction;

.2 Add that portion of the Contract Sum properly allocable to materials and equipment delivered and suitably stored at the site for subsequent incorporation in the completed construction (or, if approved in advance by the Owner, suitably stored off the site at a location agreed upon in writing), less retainage of five percent (5 %);

.3 Subtract the aggregate of previous payments made by the Owner; and

.4 Subtract amounts, if any, for which the Design Agent has withheld or nullified a Certificate for Payment as provided in Section 9.5 of AIA Document A201–2007.

§ 5.1.7 The progress payment amount determined in accordance with Section 5.1.6 shall be further modified under the following circumstances:

.1 Add, upon Substantial Completion of the Work, a sum sufficient to increase the total payments to the full amount of the Contract Sum, less such amounts as the Design Agent shall determine for incomplete Work, retainage applicable to such work and unsettled claims; and

.2 Add, if final completion of the Work is thereafter materially delayed through no fault of the Contractor, any additional amounts payable in accordance with Section 9.10.3 of AIA Document A201–2007.

§ 5.1.8
(Paragraphs deleted)
Intentionally omitted.

§ 5.1.9 Except with the Owner's prior written approval, the Contractor shall not make advance payments to suppliers for materials or equipment which have not been delivered and stored at the site.

§ 5.2 FINAL PAYMENT

§ 5.2.1 Final payment, constituting the entire unpaid balance of the Contract Sum, shall be made by the Owner to the Contractor when

.1 the Contractor has fully performed the Contract except for the Contractor's responsibility to correct Work as provided in Section 12.2.2 of AIA Document A201–2007, and to satisfy other requirements, if any, which extend beyond final payment;

.2 a final Certificate for Payment has been issued by the Design Agent and approved in writing by the Owner; and

.3 .the Contractor has submitted its final waiver of lien and final waivers of lien from all of its Subcontractors and suppliers in a form acceptable to the Owner; and

.4 the Contractor has submitted to the Owner all close-out documents, including without limitation, all as-built plans, warranties, manuals, and other materials set forth in the Contract Documents.

§ 5.2.2 The Owner's final payment to the Contractor shall be made no later than 30 working days after the issuance of the Design Agent's final Certificate for Payment and written approval by the Owner, and in accordance with the provisions of "Prompt Payment by Department of Administration," R.I. Gen. Laws §§ 42-11.1-1 et seq..
.

§ 5.3 OWNER'S RIGHTS

§ 5.3.1 The Owner shall have the right to deduct from any payments due to the Contractor the amount of any unpaid obligations owed to the State of Rhode Island by the Contractor, including without limitation, any and all unpaid taxes, and to pay the amount of such deductions to the Controller of the State of Rhode Island.

§ 5.3.2 The Owner shall have the right to deduct from any payments due to the Contractor the amount of any claim against the Contractor arising out of this Agreement or on account of any other reason.

AIA Document A101™ – 2007. Copyright © 1915, 1918, 1925, 1937, 1951, 1958, 1961, 1963, 1967, 1974, 1977, 1987, 1991, 1997 and 2007 by The American Institute of Architects. **All rights reserved. WARNING: This AIA® Document is protected by U.S. Copyright Law and International Treaties. Unauthorized reproduction or distribution of this AIA® Document, or any portion of it, may result in severe civil and criminal penalties, and will be prosecuted to the maximum extent possible under the law.** This document was produced by AIA software at 17:45:42 on 05/14/2015 under Order No.7624003807_1 which expires on 12/30/2015, and is not for resale.
User Notes: (1634687302)

ARTICLE 6 DISPUTE RESOLUTION

§ 6.1 INITIAL DECISION MAKER

§ 6.1.1 The Purchasing Agent appointed pursuant to the provisions of the "State Purchases Act," R.I. Gen. Laws §§ 37-2-1 et seq., will serve as Initial Decision Maker in accordance with the provisions of the State Purchases Act, State of Rhode Island Procurement Regulations, and Section 15.2 of AIA Document A201–2007.
§ 6.1.2 For any Claim (as defined in Section 15.1.1 of AIA Document A201-2007) not resolved by the procedures set forth in § 6.1.1, the parties shall use their best efforts to resolve such Claim by mediation in Providence, Rhode Island. Any party may apply in writing to the Presiding Justice of the Providence County Superior Court, with a copy to the other parties, with a request for the court to appoint a mediator, and the costs of the mediator shall be borne equally by all of the parties. In the event that the parties are unable to resolve any and all Claims through mediation, then any party may pursue the legal remedies provided in § 6.2

§ 6.2 BINDING DISPUTE RESOLUTION

For any Claim not resolved by the Initial Decision Maker procedures set forth in § 6.1.1or the mediation procedures pursuant to § 6.1.2, the method of binding dispute resolution shall be
(Paragraphs deleted)
determined in accordance with the provisions of the State Purchases Act, R.I. Gen. Laws §§ 37-2-1 et seq., the "Public Works Arbitration Act," R.I. Gen. Laws §§ 37-16-1 et seq., the "Administrative Procedures Act," R.I. Gen. Laws §§ 45-35-1 et seq., and the State of Rhode Island Procurement Regulations.

ARTICLE 7 TERMINATION OR SUSPENSION

§ 7.1 The Contract may be terminated by the Owner or the Contractor as provided in Article 14 of AIA Document A201–2007. The Contract may also be terminated by the Owner: (i) in the event of the unavailability of appropriated funds; (ii) in the absence of a determination of continued need; or (iii) as otherwise provided in the State of Rhode Island Procurement Regulations General Conditions of Purchase or other applicable law.

§ 7.2 The Work may be suspended by the Owner as provided in the State of Rhode Island Procurement Regulations General Conditions of Purchase and/or Article 14 of AIA Document A201–2007.

ARTICLE 8 MISCELLANEOUS PROVISIONS

§ 8.1 Where reference is made in this Agreement to a provision of AIA Document A201–2007 or another Contract Document, the reference refers to that provision as amended or supplemented by other provisions of the Contract Documents.

§ 8.2
(Paragraphs deleted)
.No interest shall be due or payable on account of any payment due or unpaid except in accordance with the provisions of "Prompt Payment by Department of Administration," R.I. Gen. Laws §§ 42-11.1-1 et seq.

§ 8.3 State of Rhode Island Representatives.

§ 8.3.1 The Owner's representative:
(Name, title, address, and other information for the preferred methods of contact)

AIA Document A101™ – 2007. Copyright © 1915, 1918, 1925, 1937, 1951, 1958, 1961, 1963, 1967, 1974, 1977, 1987, 1991, 1997 and 2007 by The American Institute of Architects**. All rights reserved. WARNING: This AIA® Document is protected by U.S. Copyright Law and International Treaties. Unauthorized reproduction or distribution of this AIA® Document, or any portion of it, may result in severe civil and criminal penalties, and will be prosecuted to the maximum extent possible under the law.** This document was produced by AIA software at 17:45:42 on 05/14/2015 under Order No.7624003807_1 which expires on 12/30/2015, and is not for resale.
User Notes: (1634687302)

§ 8.3.2 The User Agency's representative:
(Name, title, address, and other information for the preferred methods of contact)

§ 8.4 The Contractor's representative.
(Name, title, address, and other information for the preferred methods of contact)

§ 8.5 The Design Agent's representative.
(Name, title, address, and other information for the preferred methods of contact)

§ 8.6 Neither the Owner's, nor the Contractor's, nor the Design Agent's representative shall be changed without ten days written notice to the other parties.

§ 8.7 Other provisions.

§8.6.1 The Contractor represents and warrants to the Owner, in addition to any other representations and warranties of the Contractor elsewhere in the Contract Documents:

.1 The Contractor and its Subcontractors are each financially solvent, able to pay their debts as they mature, and possessed of sufficient working capital to perform their obligations under the Contract Documents.

.2 The Contractor and its Subcontractors are each able to furnish the materials, equipment, and labor required to complete the Project as required under the Contract Documents.

.3 The Contractor has visited the site of the Project, familiarized itself with the local and special conditions under which the Work is to be performed, and correlated its observations with the requirements of the Contract Documents.

.4 The Contractor possesses the requisite level of experience and expertise in the business administration, construction, and superintendence of projects of the size, complexity, and nature of the Project, and it will perform the Work with the care, skill, and diligence of such a contractor.

§8.6.2 The representations and warranties of the Contractor in the Contract Documents will survive the execution and delivery of this Agreement, any termination of the Agreement, and the final completion of the Work.

§8.6.3 Any Change Orders or other Modifications must be approved in writing by the Owner.

AIA Document A101™ – 2007. Copyright © 1915, 1918, 1925, 1937, 1951, 1958, 1961, 1963, 1967, 1974, 1977, 1987, 1991, 1997 and 2007 by The American Institute of Architects**. All rights reserved. WARNING: This AIA® Document is protected by U.S. Copyright Law and International Treaties. Unauthorized reproduction or distribution of this AIA® Document, or any portion of it, may result in severe civil and criminal penalties, and will be prosecuted to the maximum extent possible under the law.** This document was produced by AIA software at 17:45:42 on 05/14/2015 under Order No.7624003807_1 which expires on 12/30/2015, and is not for resale.
User Notes: (1634687302)

§8.6.4 The Owner is the State of Rhode Island, acting by and through its Department of Administration Division of Purchases, and therefore, pursuant to the provisions of R.I. Gen. Laws § 34-28-31, mechanics liens may not be placed against the Project.

ARTICLE 9 ENUMERATION OF CONTRACT DOCUMENTS

§ 9.1 The Contract Documents, except for Modifications issued after execution of this Agreement, are enumerated in the sections below.

§ 9.1.1 The Agreement is this executed AIA Document A101–2007, Standard Form of Agreement Between Owner and Contractor.

§ 9.1.2 The General Conditions are AIA Document A201–2007, General Conditions of the Contract for Construction.

§ 9.1.3 The Supplementary and other Conditions of the Contract:
(Row deleted)

Document

State of Rhode Island
Procurement
Regulations

§ 9.1.4 The Specifications:
(Paragraphs deleted)
The Specifications are included in the Solicitation and are available on the Division of Purchases website at www.purchasing.ri.gov.

§ 9.1.5 The Drawings:
(Paragraphs deleted)
The Drawings are included in the Solicitation and are available on the Division of Purchases website at www.purchasing.ri.gov.

§ 9.1.6 The
(Paragraphs deleted)
Addenda issued pursuant to the Solicitation are available on the Division of Purchases website at www.purchasing.ri.gov

§ 9.1.7 Additional documents, if any, forming part of the Contract Documents:

.1
(Paragraphs deleted)
The Solicitation issued by the Owner, including without limitation, the Invitation to Bid, the Instructions to Bidders, the Specifications and Drawings, any Addenda, and the Bid Checklist (with applicable forms)

.2 The Bid Proposal, including without limitation, the Bid Form and the Bidder Certification Cover Form

3. The Purchase Order issued by the Owner.

§ 9.1.8 This Agreement and the Contract Documents are subject to, and governed by, the laws of the State of

AIA Document A101™ – 2007. Copyright © 1915, 1918, 1925, 1937, 1951, 1958, 1961, 1963, 1967, 1974, 1977, 1987, 1991, 1997 and 2007 by The American Institute of Architects. **All rights reserved. WARNING: This AIA® Document is protected by U.S. Copyright Law and International Treaties. Unauthorized reproduction or distribution of this AIA® Document, or any portion of it, may result in severe civil and criminal penalties, and will be prosecuted to the maximum extent possible under the law.** This document was produced by AIA software at 17:45:42 on 05/14/2015 under Order No.7624003807_1 which expires on 12/30/2015, and is not for resale.
User Notes: (1634687302)

Rhode Island, including all procurement statutes and regulations (available at www.purchasing.ri.gov), and applicable federal and local law, all of which are incorporated into this Agreement by this reference.

§ 9.1.9 In the event of any conflict between the State of Rhode Island Procurement Regulations or any provision of the Rhode Island General Laws and the Supplementary and other Conditions of the Contract or other Contract Documents, the State of Rhode Island Procurement Regulations and the Rhode Island General Laws will control.

ARTICLE 10 INSURANCE AND BONDS

The Contractor shall purchase and maintain insurance and provide bonds as set forth in the Solicitation and Article 11 of AIA Document A201–2007.

ARTICLE 11 BENEFITS OF AGREEMENT

§ 11.1 Third-party Beneficiary. The User Agency is a disclosed third-party beneficiary of this Agreement and shall have all of the rights and benefits to which such a party is entitled hereunder.

(Table deleted)

§ 11.2 Assignment. This Agreement shall be binding on the Contractor and its successors and assigns; provided, however, that the Contractor may not assign its rights nor delegate its responsibilities under this Agreement without the Owner's prior written consent.

This Agreement is dated as of the day and year first written above; provided, however, that this Agreement shall not become a binding contract until the Owner has issued a Purchase Order pursuant to § 3.1. The person signing for the Contractor below represents that he or she has been duly authorized to execute this Agreement on behalf of the Contractor.

THE STATE OF RHODE ISLAND, acting
by and through its Department of Administration
Division of Purchases

OWNER *(Signature)*	**CONTRACTOR** *(Signature)*
(Printed name and title)	*(Printed name and title)*

AIA Document A101™ – 2007. Copyright © 1915, 1918, 1925, 1937, 1951, 1958, 1961, 1963, 1967, 1974, 1977, 1987, 1991, 1997 and 2007 by The American Institute of Architects**. All rights reserved. WARNING: This AIA® Document is protected by U.S. Copyright Law and International Treaties. Unauthorized reproduction or distribution of this AIA® Document, or any portion of it, may result in severe civil and criminal penalties, and will be prosecuted to the maximum extent possible under the law.** This document was produced by AIA software at 17:45:42 on 05/14/2015 under Order No.7624003807_1 which expires on 12/30/2015, and is not for resale.
User Notes: (1634687302)

SECTION 00 7200
GENERAL CONDITIONS

PART 1 GENERAL

1.1 The General Conditions to be utilized on this project are AIA Document A201-2007 as amended, a copy of which follows this page.

END OF SECTION

Document A201™ – 2007

General Conditions of the Contract for Construction

for the following PROJECT:
(Name, location, and detailed description)

ADDITIONS AND DELETIONS:
The author of this document has added information needed for its completion. The author may also have revised the text of the original AIA standard form. An *Additions and Deletions Report* that notes added information as well as revisions to the standard form text is available from the author and should be reviewed. A vertical line in the left margin of this document indicates where the author has added necessary information and where the author has added to or deleted from the original AIA text.

This document has important legal consequences. Consultation with an attorney is encouraged with respect to its completion or modification.

THE OWNER:

The State of Rhode Island, acting by and through the Department of Administration
Division of Purchases, on behalf of the User Agency
One Capitol Hill, Second Floor
Providence, Rhode Island 02908-5855
(401) 574-8100 (telephone)
(401 574-8387 (facsimile)
www.purchasing.ri.gov

THE USER AGENCY
(Name, legal status, address, telephone and facsimile numbers, and web address)
Community College of Rhode Island
400 East Ave
Warwick, RI 02886

THE ARCHITECT:
(Name, legal status, address, telephone and facsimile numbers, and web address)
Brewster Thornton Group Architects
150 Chestnut Street
Providence, RI 02903

TABLE OF ARTICLES

1 GENERAL PROVISIONS

2 OWNER

3 CONTRACTOR

4 ARCHITECT

5 SUBCONTRACTORS

6 CONSTRUCTION BY OWNER OR BY SEPARATE CONTRACTORS

7 CHANGES IN THE WORK

8 TIME

9 PAYMENTS AND COMPLETION

10 PROTECTION OF PERSONS AND PROPERTY

Init.
/

AIA Document A201™ – 2007. Copyright © 1911, 1915, 1918, 1925, 1937, 1951, 1958, 1961, 1963, 1966, 1970, 1976, 1987, 1997 and 2007 by The American Institute of Architects. **All rights reserved. WARNING: This AIA® Document is protected by U.S. Copyright Law and International Treaties. Unauthorized reproduction or distribution of this AIA® Document, or any portion of it, may result in severe civil and criminal penalties, and will be prosecuted to the maximum extent possible under the law.** This document was produced by AIA software at 17:53:56 on 05/14/2015 under Order No.7624003807_1 which expires on 12/30/2015, and is not for resale.
User Notes: (1514492495)

11 INSURANCE AND BONDS

12 UNCOVERING AND CORRECTION OF WORK

13 MISCELLANEOUS PROVISIONS

14 TERMINATION OR SUSPENSION OF THE CONTRACT

15 CLAIMS AND DISPUTES

AIA Document A201™ – 2007. Copyright © 1911, 1915, 1918, 1925, 1937, 1951, 1958, 1961, 1963, 1966, 1970, 1976, 1987, 1997 and 2007 by The American Institute of Architects**. All rights reserved. WARNING: This AIA® Document is protected by U.S. Copyright Law and International Treaties. Unauthorized reproduction or distribution of this AIA® Document, or any portion of it, may result in severe civil and criminal penalties, and will be prosecuted to the maximum extent possible under the law.** This document was produced by AIA software at 17:53:56 on 05/14/2015 under Order No.7624003807_1 which expires on 12/30/2015, and is not for resale.
User Notes: (1514492495)

(Paragraphs deleted)

ARTICLE 1 GENERAL PROVISIONS

§ 1.1 BASIC DEFINITIONS

§ 1.1.1 THE CONTRACT DOCUMENTS

The Contract Documents are enumerated in the Agreement between the Owner and Contractor (the Agreement) and consist of the Agreement (and the documents enumerated therein), Conditions of the Contract (General, Supplementary, if any, and other Conditions), Drawings, Specifications, Addenda issued prior to execution of the Contract, other documents listed in the Agreement and Modifications issued after execution of the Contract. A Modification is (1) a written amendment to the Contract signed by both parties, (2) a Change Order, (3) a Construction Change Directive or (4) a written order for a minor change in the Work issued by the Design Agent.

§ 1.1.2 THE CONTRACT

The Contract Documents form the Contract for Construction. The Contract represents the entire and integrated agreement between the parties hereto and supersedes prior negotiations, representations or agreements, either written or oral. The Contract may be amended or modified only by a Modification. The Contract Documents shall not be construed to create a contractual relationship of any kind (1) between the Contractor and the Design Agent or the Design Agent's consultants, (2) between the Owner and a Subcontractor or a Sub-subcontractor, (3) between the Owner and the Design Agent or the Design Agent's consultants or (4) between any persons or entities other than the Owner and the Contractor. The Design Agent shall, however, be entitled to performance and enforcement of obligations under the Contract intended to facilitate performance of the Design Agent's duties.

§ 1.1.3 THE WORK

The term "Work" means the construction and services required by the Contract Documents, whether completed or partially completed, and includes all other labor, materials, equipment, and services provided or to be provided by the Contractor to fulfill all of the Contractor's obligations. The Work may constitute the whole or a part of the Project.

§ 1.1.4 THE PROJECT

The Project is the total construction of which the Work performed under the Contract Documents may be the whole or a part and which may include construction by the Owner and by separate contractors.

§ 1.1.5 THE DRAWINGS

The Drawings are the graphic and pictorial portions of the Contract Documents showing the design, location, and dimensions of the Work, generally including plans, elevations, sections, details, schedules, and diagrams.

§ 1.1.6 THE SPECIFICATIONS

The Specifications are that portion of the Contract Documents consisting of the written requirements for materials, equipment, systems, standards, and workmanship for the Work, and performance of related services.

§ 1.1.7 INSTRUMENTS OF SERVICE

Instruments of Service are representations, in any medium of expression now known or later developed, of the tangible and intangible creative work performed by the Design Agent and the Design Agent's consultants under their respective professional services agreements. Instruments of Service may include, without limitation, studies, surveys, models, sketches, drawings, specifications, and other similar materials.

§ 1.1.8 INITIAL DECISION MAKER

The Initial Decision Maker is the person identified in the Agreement to render initial decisions on Claims in accordance with Section 15.2 and certify termination of the Agreement under Section 14.2.2.

§ 1.2 CORRELATION AND INTENT OF THE CONTRACT DOCUMENTS

§ 1.2.1 The intent of the Contract Documents is to include all items and services necessary for the proper execution and completion of the Work by the Contractor. The Contract Documents are complementary, and what is required by one shall be as binding as if required by all; the Contractor shall perform all Work reasonably inferable from the Contract Documents as being necessary to produce the indicated results.

AIA Document A201™ – 2007. Copyright © 1911, 1915, 1918, 1925, 1937, 1951, 1958, 1961, 1963, 1966, 1970, 1976, 1987, 1997 and 2007 by The American Institute of Architects. **All rights reserved. WARNING: This AIA® Document is protected by U.S. Copyright Law and International Treaties. Unauthorized reproduction or distribution of this AIA® Document, or any portion of it, may result in severe civil and criminal penalties, and will be prosecuted to the maximum extent possible under the law.** This document was produced by AIA software at 17:53:56 on 05/14/2015 under Order No.7624003807_1 which expires on 12/30/2015, and is not for resale.
User Notes: (1514492495)

§ 1.2.2 Organization of the Specifications into divisions, sections, and articles, and arrangement of Drawings shall not control the Contractor in dividing the Work among Subcontractors or in establishing the extent of Work to be performed by any trade.

§ 1.2.3 Unless otherwise stated in the Contract Documents, words that have well-known technical or construction industry meanings are used in the Contract Documents in accordance with such recognized meanings.

§ 1.2.4 In the event of any conflicts or discrepancies among the Contract Documents, the provisions of the Contract Documents will be interpreted in the following order of priority:

1. Modifications (if any).
2. The Purchase Order.
3. The Agreement.
4. The Solicitation., including any Addenda, and the Specifications and Drawings
5. The Supplementary Conditions (if any).
6. The General Conditions.
7. The Bid Proposal.

§ 1.2.5 In the event of any conflicts or discrepancies between the Contract Documents and the State of Rhode Island Procurement Regulations or any provision of the Rhode Island General Laws, the State of Rhode Island Procurement Regulations and the Rhode Island General Laws will control.

§ 1.2.6 In the event of any inconsistency between the Drawings and Specifications, the better quality or greater quantity of Work shall be provided.

§ 1.2.7 The Owner will be the final decision maker for any and all interpretations.

§ 1.3 CAPITALIZATION

Terms capitalized in these General Conditions include those that are (1) specifically defined, (2) the titles of numbered articles or (3) the titles of other documents published by the American Institute of Architects.

§ 1.4 INTERPRETATION

In the interest of brevity the Contract Documents frequently omit modifying words such as "all" and "any" and articles such as "the" and "an," but the fact that a modifier or an article is absent from one statement and appears in another is not intended to affect the interpretation of either statement.

§ 1.5 OWNERSHIP AND USE OF DRAWINGS, SPECIFICATIONS AND OTHER INSTRUMENTS OF SERVICE

§ 1.5.1 The Owner and the User Agency shall have a perpetual license to utilize the Drawings, Specifications, and other documents, including electronic or digital documents, prepared by the Design Agent and the Design Agent's consultants, for the execution of the Project and shall have and retain all rights to use them and reproduce them for the production and maintenance of the Work described therein. The Contractor, Subcontractors, Sub-subcontractors, and material or equipment suppliers shall not own or claim a copyright in the Instruments of Service. Submittal or distribution to meet official regulatory requirements or for other purposes in connection with this Project is not to be construed as publication in derogation of the Design Agent's or Design Agent's consultants' reserved rights.

§ 1.5.2 The Contractor, Subcontractors, Sub-subcontractors and material or equipment suppliers are authorized to use and reproduce the Instruments of Service provided to them solely and exclusively for execution of the Work. All copies made under this authorization shall bear the copyright notice, if any, shown on the Instruments of Service. The Contractor, Subcontractors, Sub-subcontractors, and material or equipment suppliers may not use the Instruments of Service on other projects or for additions to this Project outside the scope of the Work without the specific written consent of the Owner, Design Agent and the Design Agent's consultants.

§ 1.6 TRANSMISSION OF DATA IN DIGITAL FORM

If the parties intend to transmit Instruments of Service or any other information or documentation in digital form, they shall endeavor to establish necessary protocols governing such transmissions, unless otherwise already provided in the Agreement or the Contract Documents.

AIA Document A201™ – 2007. Copyright © 1911, 1915, 1918, 1925, 1937, 1951, 1958, 1961, 1963, 1966, 1970, 1976, 1987, 1997 and 2007 by The American Institute of Architects**. All rights reserved. WARNING: This AIA® Document is protected by U.S. Copyright Law and International Treaties. Unauthorized reproduction or distribution of this AIA® Document, or any portion of it, may result in severe civil and criminal penalties, and will be prosecuted to the maximum extent possible under the law.** This document was produced by AIA software at 17:53:56 on 05/14/2015 under Order No.7624003807_1 which expires on 12/30/2015, and is not for resale.
User Notes: (1514492495)

ARTICLE 2 OWNER

§ 2.1 GENERAL

§ 2.1.1 The Owner is the entity identified as such in the Agreement and is referred to throughout the Contract Documents as if singular in number. The Owner shall designate in writing a representative who shall have express authority to bind the Owner with respect to all matters requiring the Owner's approval or authorization. Except as otherwise provided in Section 4.2.1, the Design Agent does not have such authority. The term "Owner" means the Owner or the Owner's authorized representative.

§ 2.1.2 Intentionally omitted.

§ 2.2 INFORMATION AND SERVICES REQUIRED OF THE OWNER

§ 2.2.1 Intentionally omitted.

§ 2.2.2 The Contractor shall secure and pay for permits and fees, necessary approvals, easements, assessments and charges required for construction, use or occupancy of permanent structures or for permanent changes in existing facilities.

§ 2.2.3 If required for the Work in the discretion of the Owner, the Owner shall furnish surveys describing physical characteristics, legal limitations and utility locations for the site of the Project, and a legal description of the site. The Contractor shall be entitled to rely on the accuracy of any information furnished by the Owner but shall exercise proper precautions relating to the safe performance of the Work.

§ 2.2.4 The Owner shall furnish information or services required of the Owner by the Contract Documents with reasonable promptness. The Owner shall also furnish any other information or services under the Owner's control and relevant to the Contractor's performance of the Work with reasonable promptness after receiving the Contractor's written request for such information or services.

§ 2.2.5 Intentionally Omitted

§ 2.3 OWNER'S RIGHT TO STOP THE WORK

If the Contractor fails to correct Work that is not in accordance with the requirements of the Contract Documents as required by Section 12.2 or repeatedly fails to carry out Work in accordance with the Contract Documents, the Owner may issue a written order to the Contractor to stop the Work, or any portion thereof, until the cause for such order has been eliminated; however, the right of the Owner to stop the Work shall not give rise to a duty on the part of the Owner to exercise this right for the benefit of the Contractor or any other person or entity, except to the extent required by Section 6.1.3.

§ 2.4 OWNER'S RIGHT TO CARRY OUT THE WORK

If the Contractor defaults or neglects to carry out the Work in accordance with the Contract Documents and fails within a ten-day period after receipt of written notice from the Owner to commence and continue correction of such default or neglect with diligence and promptness, the Owner may, without prejudice to other remedies the Owner may have, correct such deficiencies. In such case an appropriate Change Order shall be issued deducting from payments then or thereafter due the Contractor the reasonable cost of correcting such deficiencies, including Owner's expenses and compensation for the Design Agent's additional services made necessary by such default, neglect or failure. Such action by the Owner and amounts charged to the Contractor are both subject to prior approval of the Design Agent. If payments then or thereafter due the Contractor are not sufficient to cover such amounts, the Contractor shall pay the difference to the Owner.

ARTICLE 3 CONTRACTOR

§ 3.1 GENERAL

§ 3.1.1 The Contractor is the person or entity identified as such in the Agreement and is referred to throughout the Contract Documents as if singular in number. The Contractor shall be lawfully licensed, if required in the jurisdiction where the Project is located. The Contractor shall designate in writing a representative who shall have express authority to bind the Contractor with respect to all matters under this Contract. The term "Contractor" means the Contractor or the Contractor's authorized representative.

§ 3.1.2 The Contractor shall perform the Work in accordance with the Contract Documents.

AIA Document A201™ – 2007. Copyright © 1911, 1915, 1918, 1925, 1937, 1951, 1958, 1961, 1963, 1966, 1970, 1976, 1987, 1997 and 2007 by The American Institute of Architects. **All rights reserved. WARNING: This AIA® Document is protected by U.S. Copyright Law and International Treaties. Unauthorized reproduction or distribution of this AIA® Document, or any portion of it, may result in severe civil and criminal penalties, and will be prosecuted to the maximum extent possible under the law.** This document was produced by AIA software at 17:53:56 on 05/14/2015 under Order No.7624003807_1 which expires on 12/30/2015, and is not for resale.
User Notes: (1514492495)

§ 3.1.3 The Contractor shall not be relieved of obligations to perform the Work in accordance with the Contract Documents either by activities or duties of the Design Agent in the Design Agent's administration of the Contract, or by tests, inspections or approvals required or performed by persons or entities other than the Contractor.

§ 3.2 REVIEW OF CONTRACT DOCUMENTS AND FIELD CONDITIONS BY CONTRACTOR

§ 3.2.1 Execution of the Contract by the Contractor is a representation that the Contractor has visited the site, become generally familiar with local conditions under which the Work is to be performed and correlated personal observations with requirements of the Contract Documents.

§ 3.2.2 Because the Contract Documents are complementary, the Contractor shall, before starting each portion of the Work, carefully study and compare the various Contract Documents relative to that portion of the Work, as well as the information furnished by the Owner pursuant to Section 2.2.3, shall take field measurements of any existing conditions related to that portion of the Work, and shall observe any conditions at the site affecting it. These obligations are for the purpose of facilitating coordination and construction by the Contractor and are not for the purpose of discovering errors, omissions, or inconsistencies in the Contract Documents; however, the Contractor shall promptly report to the Design Agent any errors, inconsistencies or omissions discovered by or made known to the Contractor or additional Drawings, Specifications, or instructions required to define the Work in greater detail to permit the proper progress of the Work as a request for information in such form as the Design Agent may require. It is recognized that the Contractor's review is made in the Contractor's capacity as a contractor and not as a licensed design professional, unless otherwise specifically provided in the Contract Documents.

§ 3.2.3 The Contractor is not required to ascertain that the Contract Documents are in accordance with applicable laws, statutes, ordinances, codes, rules and regulations, or lawful orders of public authorities, but the Contractor shall promptly report to the Design Agent and the Owner any nonconformity discovered by or made known to the Contractor as a request for information in such form as the Design Agent or Owner may require.

§ 3.2.3.1 Omissions from the Drawings and Specifications of items obviously needed to perform the Work properly, such as attachments, bolts, hangers, and other fastening devices, shall not relieve the Contractor from the obligation to furnish and install such items.

§ 3.2.4 If the Contractor believes that additional cost or time is involved because of clarifications or instructions the Design Agent issues in response to the Contractor's notices or requests for information pursuant to Sections 3.2.2 or 3.2.3, the Contractor shall make Claims as provided in Article 15. If the Contractor fails to perform the obligations of Sections 3.2.2 or 3.2.3 or 3.2.3.1, the Contractor shall pay such costs and damages to the Owner as would have been avoided if the Contractor had performed such obligations. If the Contractor performs those obligations, the Contractor shall not be liable to the Owner or Design Agent for damages resulting from errors, inconsistencies or omissions in the Contract Documents, for differences between field measurements or conditions and the Contract Documents, or for nonconformities of the Contract Documents to applicable laws, statutes, ordinances, codes, rules and regulations, and lawful orders of public authorities.

§ 3.2.4.1 The Contractor shall not make any changes without prior written authorization from the Design Agent and the Owner.

§ 3.2.5 The Owner is entitled to reimbursement from the Contractor for amounts paid to the Design Agent for evaluating and responding to the Contractor's requests for information that are not prepared in accordance with the Contract Documents or where the requested information is available to the Contractor from a careful study and comparison of the Contract Documents, field conditions, other Owner-provided information, Contractor-prepared coordination drawings, or prior Project correspondence or documentation.

§ 3.3 SUPERVISION AND CONSTRUCTION PROCEDURES

§ 3.3.1 The Contractor shall supervise and direct the Work, using the Contractor's best skill and attention. The Contractor shall be solely responsible for, and have control over, construction means, methods, techniques, sequences and procedures and for coordinating all portions of the Work under the Contract, unless the Contract Documents give other specific instructions concerning these matters. If the Contract Documents give specific instructions concerning construction means, methods, techniques, sequences or procedures, the Contractor shall evaluate the jobsite safety thereof and, except as stated below, shall be fully and solely responsible for the jobsite

AIA Document A201™ – 2007. Copyright © 1911, 1915, 1918, 1925, 1937, 1951, 1958, 1961, 1963, 1966, 1970, 1976, 1987, 1997 and 2007 by The American Institute of Architects. **All rights reserved. WARNING: This AIA® Document is protected by U.S. Copyright Law and International Treaties. Unauthorized reproduction or distribution of this AIA® Document, or any portion of it, may result in severe civil and criminal penalties, and will be prosecuted to the maximum extent possible under the law.** This document was produced by AIA software at 17:53:56 on 05/14/2015 under Order No.7624003807_1 which expires on 12/30/2015, and is not for resale.
User Notes: (1514492495)

safety of such means, methods, techniques, sequences or procedures. If the Contractor determines that such means, methods, techniques, sequences or procedures may not be safe, the Contractor shall give timely written notice to the Owner and Design Agent and shall not proceed with that portion of the Work without further written instructions from the Design Agent. If the Contractor is then instructed to proceed with the required means, methods, techniques, sequences or procedures without acceptance of changes proposed by the Contractor, the Owner shall be solely responsible for any loss or damage arising solely from those Owner-required means, methods, techniques, sequences or procedures.

§ 3.3.2 The Contractor shall be responsible to the Owner for acts and omissions of the Contractor's employees, Subcontractors and their agents and employees, and other persons or entities performing portions of the Work for, or on behalf of, the Contractor or any of its Subcontractors.

§ 3.3.3 The Contractor shall be responsible for inspection of portions of Work already performed to determine that such portions are in proper condition to receive subsequent Work.

§ 3.4 LABOR AND MATERIALS

§ 3.4.1 Unless otherwise provided in the Contract Documents, the Contractor shall provide and pay for labor, materials, equipment, tools, construction equipment and machinery, water, heat, utilities, transportation, and other facilities and services necessary for proper execution and completion of the Work, whether temporary or permanent and whether or not incorporated or to be incorporated in the Work. Whenever the Contractor has an obligation to provide labor and materials under this Agreement, the Contractor, at a minimum, shall provide the labor for, and furnish and install and place in operation all items, including without limitation, all proper connections.

§ 3.4.2 Except in the case of minor changes in the Work authorized by the Design Agent in accordance with Sections 3.12.8 or 7.4, the Contractor may make substitutions only with the consent of the Owner, after evaluation by the Design Agent and in accordance with a Change Order or Construction Change Directive.

§ 3.4.3 The Contractor shall enforce strict discipline and good order among the Contractor's employees and other persons carrying out the Work. The Contractor shall not permit employment of unfit persons or persons not properly skilled in tasks assigned to them.

§ 3.5 WARRANTY

The Contractor warrants to the Owner and Design Agent that materials and equipment furnished under the Contract will be of first quality, prime manufacture, and new unless the Contract Documents require or permit otherwise. The Contractor further warrants that the Work will conform to the requirements of the Contract Documents and will be free from defects, except for those inherent in the quality of the Work the Contract Documents require or permit. Work, materials, or equipment not conforming to these requirements, including substitutions not properly authorized, may be considered defective and, unless a longer period is required elsewhere in the Contract Documents, will be repaired and/or replaced, at the option of the Owner, for a period of one year following Final Completion of the Work. The Contractor's warranty excludes remedy for damage or defect caused by abuse, alterations to the Work not executed by the Contractor or its Subcontractors, improper or insufficient maintenance, improper operation, or normal wear and tear and normal usage. If required by the Design Agent, the Contractor shall furnish satisfactory evidence as to the kind and quality of materials and equipment.

§ 3.6 TAXES

§ 3.6.1 The Contractor shall pay sales, consumer, use and similar taxes for the Work provided by the Contractor that are legally enacted when bids are received or negotiations concluded, whether or not yet effective or merely scheduled to go into effect.

§ 3.6.2 The State of Rhode Island is exempt from payment of any federal or state excise, transportation, or sales tax. The Rhode Island Department of Administration Division of Purchases will furnish Exemption Certificates upon request.

§ 3.6.3 Pursuant to R.I. Gen. Laws § 44-1-6, the Owner shall withhold payment from the Contractor if the Contractor does not maintain a regular place of business in Rhode Island in the amount of three (3%) percent of the Contract Sum until thirty (30) days after Final Completion and compliance by the Contractor with the requirements of such section.

AIA Document A201™ – 2007. Copyright © 1911, 1915, 1918, 1925, 1937, 1951, 1958, 1961, 1963, 1966, 1970, 1976, 1987, 1997 and 2007 by The American Institute of Architects. **All rights reserved. WARNING: This AIA® Document is protected by U.S. Copyright Law and International Treaties. Unauthorized reproduction or distribution of this AIA® Document, or any portion of it, may result in severe civil and criminal penalties, and will be prosecuted to the maximum extent possible under the law.** This document was produced by AIA software at 17:53:56 on 05/14/2015 under Order No.7624003807_1 which expires on 12/30/2015, and is not for resale.
User Notes: (1514492495)

§ 3.7 PERMITS, FEES, NOTICES AND COMPLIANCE WITH LAWS

§ 3.7.1 Unless otherwise provided in the Contract Documents, the Contractor shall secure and pay for the building permit as well as for other permits, fees, licenses, and inspections required by the Rhode Island State Building Code necessary for proper execution and completion of the Work that are customarily secured after execution of the Contract and legally required at the time bids are received or negotiations concluded. The Contractor shall be responsible for obtaining the Certificate of Occupancy from the appropriate governmental authorities.

§ 3.7.2 The Contractor shall comply with and give notices required by applicable laws, statutes, ordinances, codes, rules and regulations, and lawful orders of public authorities applicable to performance of the Work.

§ 3.7.3 The Contractor shall promptly notify the Design Agent and the Owner if the Contractor becomes aware that the Contract Documents are not in accordance with applicable laws, statutes, ordinances, codes, rules and regulations, or lawful orders of public authorities. If the Contractor performs Work knowing it to be contrary to applicable laws, statutes, ordinances, codes, rules and regulations, or lawful orders of public authorities, the Contractor shall assume appropriate responsibility for such Work and shall bear the costs attributable to correction.

§ 3.7.4 Concealed or Unknown Conditions. If the Contractor encounters conditions at the site that are (1) subsurface or otherwise concealed physical conditions that differ materially from those indicated in the Contract Documents or (2) unknown physical conditions of an unusual nature, that differ materially from those ordinarily found to exist and generally recognized as inherent in construction activities of the character provided for in the Contract Documents, the Contractor shall promptly provide notice to the Owner and the Design Agent before conditions are disturbed and in no event later than 21 days after first observance of the conditions. The Design Agent will promptly investigate such conditions and, if the Design Agent determines that they differ materially and cause an increase or decrease in the Contractor's cost of, or time required for, performance of any part of the Work, will recommend an equitable adjustment in the Contract Sum or Contract Time, or both. If the Design Agent determines that the conditions at the site are not materially different from those indicated in the Contract Documents and that no change in the terms of the Contract is justified, the Design Agent shall promptly notify the Owner and Contractor in writing, stating the reasons. If either party disputes the Design Agent's determination or recommendation, that party may proceed as provided in Article 15.

§ 3.7.5 If, in the course of the Work, the Contractor encounters human remains or recognizes the existence of burial markers, archaeological sites or wetlands not indicated in the Contract Documents, the Contractor shall immediately suspend any operations that would affect them and shall notify the Owner and Design Agent. Upon receipt of such notice, the Owner shall promptly take any action necessary to obtain governmental authorization required to resume the operations. The Contractor shall continue to suspend such operations until otherwise instructed by the Owner but shall continue with all other operations that do not affect those remains or features. Requests for adjustments in the Contract Sum and Contract Time arising from the existence of such remains or features may be made as provided in Article 15.

§ 3.8 ALLOWANCES

§ 3.8.1 The Contractor shall include in the Contract Sum all allowances stated in the Contract Documents. Items covered by allowances shall be supplied for such amounts and by such persons or entities as the Owner may direct, but the Contractor shall not be required to employ persons or entities to whom the Contractor has reasonable objection.

§ 3.8.2 Unless otherwise provided in the Contract Documents,

- **.1** Allowances shall cover the cost to the Contractor of materials and equipment delivered at the site and all required taxes, less applicable trade discounts;
- **.2** Contractor's costs for unloading and handling at the site, labor, installation costs, overhead, profit and other expenses contemplated for stated allowance amounts shall be included in the Contract Sum but not in the allowances; and
- **.3** Whenever costs are more than or less than allowances, the Contract Sum shall be adjusted accordingly by Change Order. The amount of the Change Order shall reflect (1) the difference between actual costs and the allowances under Section 3.8.2.1 and (2) changes in Contractor's costs under Section 3.8.2.2.

AIA Document A201™ – 2007. Copyright © 1911, 1915, 1918, 1925, 1937, 1951, 1958, 1961, 1963, 1966, 1970, 1976, 1987, 1997 and 2007 by The American Institute of Architects. **All rights reserved. WARNING: This AIA® Document is protected by U.S. Copyright Law and International Treaties. Unauthorized reproduction or distribution of this AIA® Document, or any portion of it, may result in severe civil and criminal penalties, and will be prosecuted to the maximum extent possible under the law.** This document was produced by AIA software at 17:53:56 on 05/14/2015 under Order No.7624003807_1 which expires on 12/30/2015, and is not for resale.
User Notes: (1514492495)

§ 3.8.3 Materials and equipment under an allowance shall be selected by the Owner with reasonable promptness.

§ 3.9 SUPERINTENDENT

§ 3.9.1 The Contractor shall employ a competent superintendent and necessary assistants who shall be in attendance at the Project site during performance of the Work. The superintendent shall represent the Contractor, and communications given to the superintendent shall be as binding as if given to the Contractor.

§ 3.9.2 The Contractor, as soon as practicable after award of the Contract, shall furnish in writing to the Owner through the Design Agent the name and qualifications of a proposed superintendent. The Design Agent may reply within 14 days to the Contractor in writing stating (1) whether the Owner or the Design Agent has reasonable objection to the proposed superintendent or (2) that the Design Agent requires additional time to review. Failure of the Design Agent to reply within the 14 day period shall constitute notice of no reasonable objection.

§ 3.9.3 The Contractor shall not employ a proposed superintendent to whom the Owner or Design Agent has made reasonable and timely objection. The Contractor shall not change the superintendent without the Owner's consent, which shall not unreasonably be withheld or delayed.

§ 3.10 CONTRACTOR'S CONSTRUCTION SCHEDULES

§ 3.10.1 The Contractor, within 20 days after the issuance of the Purchase Order, shall prepare and submit for the Owner's and Design Agent's information a Contractor's construction schedule for the Work. The schedule shall not exceed time limits current under the Contract Documents, shall be revised at appropriate intervals, not less frequently than monthly, as required by the conditions of the Work and Project, shall be related to the entire Project to the extent required by the Contract Documents, and shall provide for expeditious and practicable execution of the Work. The Contractor shall certify on the initial schedule and all revised schedules that they comply with the Contract Documents.

§ 3.10.2 The Contractor shall prepare a submittal schedule, within 20 days after the issuance of the Purchase Order, and thereafter as necessary to maintain a current submittal schedule, and shall submit the schedule(s) for the Design Agent's approval. The Design Agent's approval shall not unreasonably be delayed or withheld. The submittal schedule shall (1) be coordinated with the Contractor's construction schedule, and (2) allow the Design Agent reasonable time to review submittals. If the Contractor fails to submit a submittal schedule, the Contractor shall not be entitled to any increase in Contract Sum or extension of Contract Time based on the time required for review of submittals.

§ 3.10.3 The Contractor shall perform the Work in general accordance with the most recent schedules submitted to the Owner and Design Agent.

§ 3.11 DOCUMENTS AND SAMPLES AT THE SITE

The Contractor shall maintain at the site for the Owner one copy of the Drawings, Specifications, Addenda, Change Orders and other Modifications, in good order and marked currently to indicate field changes and selections made during construction, and one copy of approved Shop Drawings, Product Data, Samples and similar required submittals. These shall be available to the Design Agent and shall be delivered to the Design Agent for submittal to the Owner upon completion of the Work as a record of the Work as constructed.

§ 3.12 SHOP DRAWINGS, PRODUCT DATA AND SAMPLES

§ 3.12.1 Shop Drawings are drawings, diagrams, schedules and other data specially prepared for the Work by the Contractor or a Subcontractor, Sub-subcontractor, manufacturer, supplier or distributor to illustrate some portion of the Work.

§ 3.12.2 Product Data are illustrations, standard schedules, performance charts, instructions, brochures, diagrams and other information furnished by the Contractor to illustrate materials or equipment for some portion of the Work.

§ 3.12.3 Samples are physical examples that illustrate materials, equipment or workmanship and establish standards by which the Work will be judged.

§ 3.12.4 Shop Drawings, Product Data, Samples and similar submittals are not Contract Documents. Their purpose is to demonstrate the way by which the Contractor proposes to conform to the information given and the design

AIA Document A201™ – 2007. Copyright © 1911, 1915, 1918, 1925, 1937, 1951, 1958, 1961, 1963, 1966, 1970, 1976, 1987, 1997 and 2007 by The American Institute of Architects. **All rights reserved. WARNING: This AIA® Document is protected by U.S. Copyright Law and International Treaties. Unauthorized reproduction or distribution of this AIA® Document, or any portion of it, may result in severe civil and criminal penalties, and will be prosecuted to the maximum extent possible under the law.** This document was produced by AIA software at 17:53:56 on 05/14/2015 under Order No.7624003807_1 which expires on 12/30/2015, and is not for resale.
User Notes: (1514492495)

concept expressed in the Contract Documents for those portions of the Work for which the Contract Documents require submittals. Review by the Design Agent is subject to the limitations of Section 4.2.7. Informational submittals upon which the Design Agent is not expected to take responsive action may be so identified in the Contract Documents. Submittals that are not required by the Contract Documents may be returned by the Design Agent without action.

§ 3.12.5 The Contractor shall review for compliance with the Contract Documents, approve and submit to the Design Agent Shop Drawings, Product Data, Samples and similar submittals required by the Contract Documents in accordance with the submittal schedule approved by the Design Agent or, in the absence of an approved submittal schedule, with reasonable promptness and in such sequence as to cause no delay in the Work or in the activities of the Owner or of separate contractors.

§ 3.12.6 By submitting Shop Drawings, Product Data, Samples and similar submittals, the Contractor represents to the Owner and Design Agent that the Contractor has (1) reviewed and approved them, (2) determined and verified materials, field measurements and field construction criteria related thereto, or will do so and (3) checked and coordinated the information contained within such submittals with the requirements of the Work and of the Contract Documents.

§ 3.12.7 The Contractor shall perform no portion of the Work for which the Contract Documents require submittal and review of Shop Drawings, Product Data, Samples or similar submittals until the respective submittal has been approved by the Design Agent.

§ 3.12.8 The Work shall be in accordance with approved submittals except that the Contractor shall not be relieved of responsibility for deviations from requirements of the Contract Documents by the Design Agent's approval of Shop Drawings, Product Data, Samples or similar submittals unless the Contractor has specifically informed the Design Agent in writing of such deviation at the time of submittal and (1) the Design Agent has given written approval to the specific deviation as a minor change in the Work, or (2) a Change Order or Construction Change Directive has been issued authorizing the deviation. The Contractor shall not be relieved of responsibility for errors or omissions in Shop Drawings, Product Data, Samples or similar submittals by the Design Agent's approval thereof.

§ 3.12.9 The Contractor shall direct specific attention, in writing or on resubmitted Shop Drawings, Product Data, Samples or similar submittals, to revisions other than those requested by the Design Agent on previous submittals. In the absence of such written notice, the Design Agent's approval of a resubmission shall not apply to such revisions.

§ 3.12.10 The Contractor shall not be required to provide professional services that constitute the practice of architecture or engineering unless such services are specifically required by the Contract Documents for a portion of the Work or unless the Contractor needs to provide such services in order to carry out the Contractor's responsibilities for construction means, methods, techniques, sequences and procedures. The Contractor shall not be required to provide professional services in violation of applicable law. If professional design services or certifications by a design professional related to systems, materials or equipment are specifically required of the Contractor by the Contract Documents, the Owner and the Design Agent will specify all performance and design criteria that such services must satisfy. The Contractor shall cause such services or certifications to be provided by a properly licensed design professional, whose signature and seal shall appear on all drawings, calculations, specifications, certifications, Shop Drawings and other submittals prepared by such professional. Shop Drawings and other submittals related to the Work designed or certified by such professional, if prepared by others, shall bear such professional's written approval when submitted to the Design Agent. The Owner and the Design Agent shall be entitled to rely upon the adequacy, accuracy and completeness of the services, certifications and approvals performed or provided by such design professionals, provided the Owner and Design Agent have specified to the Contractor all performance and design criteria that such services must satisfy. Pursuant to this Section 3.12.10, the Design Agent will review, approve or take other appropriate action on submittals only for the limited purpose of checking for conformance with information given and the design concept expressed in the Contract Documents. The Contractor shall not be responsible for the adequacy of the performance and design criteria specified in the Contract Documents.

AIA Document A201™ – 2007. Copyright © 1911, 1915, 1918, 1925, 1937, 1951, 1958, 1961, 1963, 1966, 1970, 1976, 1987, 1997 and 2007 by The American Institute of Architects**. All rights reserved. WARNING: This AIA® Document is protected by U.S. Copyright Law and International Treaties. Unauthorized reproduction or distribution of this AIA® Document, or any portion of it, may result in severe civil and criminal penalties, and will be prosecuted to the maximum extent possible under the law.** This document was produced by AIA software at 17:53:56 on 05/14/2015 under Order No.7624003807_1 which expires on 12/30/2015, and is not for resale.
User Notes: (1514492495)

§ 3.12.11 The Owner shall be entitled to reimbursement from the Contractor for amounts paid to the Design Agent for evaluation of resubmittals.

§ 3.13 USE OF SITE

The Contractor shall confine operations at the site to areas permitted by applicable laws, statutes, ordinances, codes, rules and regulations, lawful orders of public authorities, and any restrictions imposed by the User Agency or the Owner, and the Contract Documents and shall not unreasonably encumber the site with materials or equipment.

§ 3.14 CUTTING AND PATCHING

§ 3.14.1 The Contractor shall be responsible for cutting, fitting or patching required to complete the Work or to make its parts fit together properly. All areas requiring cutting, fitting and patching shall be restored to the condition existing prior to the cutting, fitting and patching, unless otherwise required by the Contract Documents.

§ 3.14.2 The Contractor shall not damage or endanger a portion of the Work or fully or partially completed construction of the Owner or separate contractors by cutting, patching or otherwise altering such construction, or by excavation. The Contractor shall not cut or otherwise alter such construction by the Owner or a separate contractor except with written consent of the Owner and of such separate contractor; such consent shall not be unreasonably withheld. The Contractor shall not unreasonably withhold from the Owner or a separate contractor the Contractor's consent to cutting or otherwise altering the Work.

§ 3.15 CLEANING UP

§ 3.15.1 The Contractor shall keep the premises and surrounding area free from accumulation of waste materials or rubbish caused by operations under the Contract. At completion of the Work, the Contractor shall remove waste materials, rubbish, the Contractor's tools, construction equipment, machinery and surplus materials from and about the Project.

§ 3.15.2 If the Contractor fails to clean up as provided in the Contract Documents, the Owner may do so and Owner shall be entitled to reimbursement from the Contractor.

§ 3.16 ACCESS TO WORK

The Contractor shall provide the Owner and Design Agent access to the Work in preparation and progress wherever located.

§ 3.17 ROYALTIES, PATENTS AND COPYRIGHTS

The Contractor shall pay all royalties and license fees. The Contractor shall defend suits or claims for infringement of copyrights and patent rights and shall hold the Owner and Design Agent harmless from loss on account thereof, but shall not be responsible for such defense or loss when a particular design, process or product of a particular manufacturer or manufacturers is required by the Contract Documents, or where the copyright violations are contained in Drawings, Specifications or other documents prepared by the Owner or Design Agent. However, if the Contractor has reason to believe that the required design, process or product is an infringement of a copyright or a patent, the Contractor shall be responsible for such loss unless such information is promptly furnished to the Design Agent and the Owner.

§ 3.18 INDEMNIFICATION

§ 3.18.1 To the fullest extent permitted by law the Contractor shall indemnify and hold harmless the Owner, the State of Rhode Island,, and each executive, legislative, judicial, regulatory, or administrative body of the state, or any political subdivision thereof, including without limitation, any department, division, agency, commission, board, office, bureau, committee, authority, educational institution, school, water, or fire district, or other agency of Rhode Island state or local government that exercises governmental functions, any other governmental authority, and any quasi-public corporation and/or body corporate and politic, their elected or appointed officials, members, employees, and agents , Design Agent, Design Agent's consultants, and agents and employees of any of them from and against claims, damages, losses and expenses, including but not limited to attorneys' fees and costs of arbitration and/or litigation, arising out of or resulting from performance of the Work, and/or the obligations of the Contractor under the Contract Documents, but only to the extent caused by the acts or omissions of the Contractor, a Subcontractor, anyone directly or indirectly employed by them or anyone for whose acts they may be liable, regardless of whether or not such claim, damage, loss or expense is caused in part by a party indemnified hereunder. Such obligation shall not be construed to negate, abridge, or reduce other rights or obligations of indemnity that would otherwise exist as to a party or person described in this Section 3.18.

AIA Document A201™ – 2007. Copyright © 1911, 1915, 1918, 1925, 1937, 1951, 1958, 1961, 1963, 1966, 1970, 1976, 1987, 1997 and 2007 by The American Institute of Architects**. All rights reserved. WARNING: This AIA® Document is protected by U.S. Copyright Law and International Treaties. Unauthorized reproduction or distribution of this AIA® Document, or any portion of it, may result in severe civil and criminal penalties, and will be prosecuted to the maximum extent possible under the law.** This document was produced by AIA software at 17:53:56 on 05/14/2015 under Order No.7624003807_1 which expires on 12/30/2015, and is not for resale.

User Notes: (1514492495)

§ 3.18.2 In claims against any person or entity indemnified under this Section 3.18 by an employee of the Contractor, a Subcontractor, anyone directly or indirectly employed by them or anyone for whose acts they may be liable, the indemnification obligation under Section 3.18.1 shall not be limited by a limitation on amount or type of damages, compensation or benefits payable by or for the Contractor or a Subcontractor under workers' compensation acts, disability benefit acts or other employee benefit acts.

ARTICLE 4 DESIGN AGENT

§ 4.1 GENERAL

§ 4.1.1 The Design Agent is the person lawfully licensed to practice his or her profession in the State of Rhode Island or an entity lawfully practicing its profession in the State of Rhode Island and identified in the Contract Documents as the Design Agent. The term "Design Agent" means the Design Agent or the Design Agent's authorized representative. .

§ 4.1.2 Duties, responsibilities and limitations of authority of the Design Agent as set forth in the Contract Documents shall not be restricted, modified or extended without written consent of the Owner, Contractor and Design Agent. Consent shall not be unreasonably withheld.

§ 4.1.3 If the employment of the Design Agent is terminated, the Owner shall employ a successor design agent as to whom the Contractor has no reasonable objection and whose status under the Contract Documents shall be that of the Design Agent.

§ 4.2 ADMINISTRATION OF THE CONTRACT

§ 4.2.1 The Design Agent will provide administration of the Contract as described in the Contract Documents and will be an Owner's representative during construction through the date the Design Agent issues the final Certificate for Payment and continuing until the expiration of the warranty period in § 3.5. The Design Agent will have authority to act on behalf of the Owner only to the extent provided in the Contract Documents.

§ 4.2.2 The Design Agent will visit the site at intervals appropriate to the stage of construction, or as otherwise agreed with the Owner, to become generally familiar with the progress and quality of the portion of the Work completed, and to determine in general if the Work observed is being performed in a manner indicating that the Work, when fully completed, will be in accordance with the Contract Documents. However, the Design Agent will not be required to make exhaustive or continuous on-site inspections to check the quality or quantity of the Work. The Design Agent will not have control over, charge of, or responsibility for, the construction means, methods, techniques, sequences or procedures, or for the safety precautions and programs in connection with the Work, since these are solely the Contractor's rights and responsibilities under the Contract Documents, except as provided in Section 3.3.1.

§ 4.2.2.1 The Owner is entitled to reimbursement from the Contractor for amounts paid to the Design Agent for site visits made necessary by the fault of the Contractor or by defects and deficiencies in the Work.

§ 4.2.3 On the basis of the site visits, the Design Agent will keep the Owner reasonably informed about the progress and quality of the portion of the Work completed, and report to the Owner (1) known deviations from the Contract Documents and from the most recent construction schedule submitted by the Contractor, and (2) defects and deficiencies observed in the Work. The Design Agent will not be responsible for the Contractor's failure to perform the Work in accordance with the requirements of the Contract Documents. The Design Agent will not have control over or charge of and will not be responsible for acts or omissions of the Contractor, Subcontractors, or their agents or employees, or any other persons or entities performing portions of the Work.

§ 4.2.4 COMMUNICATIONS FACILITATING CONTRACT ADMINISTRATION

Except as otherwise provided in the Contract Documents or when direct communications have been specially authorized, the Owner and Contractor shall endeavor to communicate with each other through the Design Agent about matters arising out of or relating to the Contract. Communications by and with the Design Agent's consultants shall be through the Design Agent. Communications by and with Subcontractors and material suppliers shall be through the Contractor. Communications by and with separate contractors shall be through the Owner.

AIA Document A201™ – 2007. Copyright © 1911, 1915, 1918, 1925, 1937, 1951, 1958, 1961, 1963, 1966, 1970, 1976, 1987, 1997 and 2007 by The American Institute of Architects. **All rights reserved. WARNING: This AIA® Document is protected by U.S. Copyright Law and International Treaties. Unauthorized reproduction or distribution of this AIA® Document, or any portion of it, may result in severe civil and criminal penalties, and will be prosecuted to the maximum extent possible under the law.** This document was produced by AIA software at 17:53:56 on 05/14/2015 under Order No.7624003807_1 which expires on 12/30/2015, and is not for resale.
User Notes: (1514492495)

§ 4.2.5 Based on the Design Agent's evaluations of the Contractor's Applications for Payment, the Design Agent will review and certify the amounts due the Contractor and will issue Certificates for Payment in such amounts.

§ 4.2.6 The Design Agent has authority to reject Work that does not conform to the Contract Documents. Whenever the Design Agent considers it necessary or advisable, the Design Agent will have authority to require inspection or testing of the Work in accordance with Sections 13.5.2 and 13.5.3, whether or not such Work is fabricated, installed or completed. However, neither this authority of the Design Agent nor a decision made in good faith either to exercise or not to exercise such authority shall give rise to a duty or responsibility of the Design Agent to the Contractor, Subcontractors, material and equipment suppliers, their agents or employees, or other persons or entities performing portions of the Work.

§ 4.2.7 The Design Agent will review and approve, or take other appropriate action upon, the Contractor's submittals such as Shop Drawings, Product Data and Samples, but only for the limited purpose of checking for conformance with information given and the design concept expressed in the Contract Documents. The Design Agent's action will be taken in accordance with the submittal schedule approved by the Design Agent or, in the absence of an approved submittal schedule, with reasonable promptness while allowing sufficient time in the Design Agent's professional judgment to permit adequate review. Review of such submittals is not conducted for the purpose of determining the accuracy and completeness of other details such as dimensions and quantities, or for substantiating instructions for installation or performance of equipment or systems, all of which remain the responsibility of the Contractor as required by the Contract Documents. The Design Agent's review of the Contractor's submittals shall not relieve the Contractor of the obligations under Sections 3.3, 3.5 and 3.12. The Design Agent's review shall not constitute approval of safety precautions or, unless otherwise specifically stated by the Design Agent, of any construction means, methods, techniques, sequences or procedures. The Design Agent's approval of a specific item shall not indicate approval of an assembly of which the item is a component.

§ 4.2.8 The Design Agent will prepare Change Orders and Construction Change Directives, and may authorize minor changes in the Work as provided in Section 7.4. The Design Agent will investigate and make determinations and recommendations regarding concealed and unknown conditions as provided in Section 3.7.4.

§ 4.2.9 The Design Agent will conduct inspections to determine the date or dates of Substantial Completion and the date of final completion; issue Certificates of Substantial Completion pursuant to Section 9.8; receive and forward to the Owner, for the Owner's review and records, written warranties and related documents required by the Contract and assembled by the Contractor pursuant to Section 9.10; and issue a final Certificate for Paymentpursuant to Section 9.10.

§ 4.2.10 If the Owner and Design Agent agree, the Design Agent will provide one or more project representatives to assist in carrying out the Design Agent's responsibilities at the site. The duties, responsibilities and limitations of authority of such project representatives shall be as set forth in an exhibit to be incorporated in the Contract Documents.

§ 4.2.11 The Design Agent will interpret and decide matters concerning performance under, and requirements of, the Contract Documents on written request of either the Owner or Contractor. The Design Agent's response to such requests will be made in writing within any time limits agreed upon or otherwise with reasonable promptness.

§ 4.2.12 Interpretations and decisions of the Design Agent will be consistent with the intent of, and reasonably inferable from, the Contract Documents and will be in writing or in the form of drawings. When making such interpretations and decisions, the Design Agent will endeavor to secure faithful performance by both Owner and Contractor, will not show partiality to either and will not be liable for results of interpretations or decisions rendered in good faith.

§ 4.2.13 The Design Agent's decisions on matters relating to aesthetic effect will be final if consistent with the intent expressed in the Contract Documents.

§ 4.2.14 The Design Agent will review and respond to requests for information about the Contract Documents. The Design Agent's response to such requests will be made in writing within any time limits agreed upon or otherwise with reasonable promptness. If appropriate, the Design Agent will prepare and issue supplemental Drawings and Specifications in response to the requests for information.

AIA Document A201™ – 2007. Copyright © 1911, 1915, 1918, 1925, 1937, 1951, 1958, 1961, 1963, 1966, 1970, 1976, 1987, 1997 and 2007 by The American Institute of Architects**. All rights reserved. WARNING: This AIA® Document is protected by U.S. Copyright Law and International Treaties. Unauthorized reproduction or distribution of this AIA® Document, or any portion of it, may result in severe civil and criminal penalties, and will be prosecuted to the maximum extent possible under the law.** This document was produced by AIA software at 17:53:56 on 05/14/2015 under Order No.7624003807_1 which expires on 12/30/2015, and is not for resale.
User Notes: (1514492495)

ARTICLE 5 SUBCONTRACTORS

§ 5.1 DEFINITIONS

§ 5.1.1 A Subcontractor is a person or entity who has a direct contract with the Contractor to perform a portion of the Work at the site. The term "Subcontractor" is referred to throughout the Contract Documents as if singular in number and means a Subcontractor or an authorized representative of the Subcontractor. The term "Subcontractor" does not include a separate contractor or subcontractors of a separate contractor.

§ 5.1.2 A Sub-subcontractor is a person or entity who has a direct or indirect contract with a Subcontractor to perform a portion of the Work at the site. The term "Sub-subcontractor" is referred to throughout the Contract Documents as if singular in number and means a Sub-subcontractor or an authorized representative of the Sub-subcontractor.

§ 5.2 AWARD OF SUBCONTRACTS AND OTHER CONTRACTS FOR PORTIONS OF THE WORK

§ 5.2.1 Unless otherwise stated in the Contract Documents or the bidding requirements, the Contractor, as soon as practicable after award of the Contract, shall furnish in writing to the Owner through the Design Agent the names of persons or entities (including those who are to furnish materials or equipment fabricated to a special design) proposed for each principal portion of the Work. The Design Agent may reply within 14 days to the Contractor in writing stating (1) whether the Owner or the Design Agent has reasonable objection to any such proposed person or entity or (2) that the Design Agent requires additional time for review.Design Agent

§ 5.2.2 The Contractor shall not contract with a proposed person or entity to whom the Owner or Design Agent has made reasonable and timely objection. The Contractor shall not be required to contract with anyone to whom the Contractor has made reasonable objection.

§ 5.2.3 If the Owner or Design Agent has reasonable objection to a person or entity proposed by the Contractor, the Contractor shall propose another to whom the Owner or Design Agent has no reasonable objection. If the proposed but rejected Subcontractor was reasonably capable of performing the Work, the Contract Sum and Contract Time shall be increased or decreased by the difference, if any, occasioned by such change, and an appropriate Change Order shall be issued before commencement of the substitute Subcontractor's Work. However, no increase in the Contract Sum or Contract Time shall be allowed for such change unless the Contractor has acted promptly and responsively in submitting names as required.

§ 5.2.4 The Contractor shall not substitute a Subcontractor, person or entity previously selected if the Owner or Design Agent makes reasonable objection to such substitution.

§ 5.2.5 MANUFACTURERS AND FABRICATORS

§ 5.2.5.1 Not later than 10 days after the date of commencement of the Work, the Contractor shall furnish in writing to the Owner through the Design Agent the names of the manufacturers or fabricators for certain products, equipment, and systems identified in the Specifications and, where applicable, the name of the installing Subcontractor. The Design Agent may reply within 14 days to the Contractor in writing, stating: (i) whether the Owner or the Design Agent has reasonable objection to any such proposed person manufacturer or fabricator; or (ii) whether the Design Agent requires additional time to review.

§ 5.2.5.2 The Contractor shall not contract with a proposed manufacturer, fabricator, or Subcontractor to whom the Owner or Design Agent has made reasonable and timely objection. The Contractor shall not be required to contract with anyone to whom the Contractor has made reasonable objection.

§ 5.2.5.3 If the Owner or Design Agent has an objection to a manufacturer, fabricator, or Subcontractor proposed by the Contractor, the Contractor shall propose another to whom the Owner or Design Agent has no objection.

§ 5.2.5.4 The Contractor shall not substitute a manufacturer, fabricator, or Subcontractor previously selected if the Owner or Design Agent makes reasonable objection to such substitution.

AIA Document A201™ – 2007. Copyright © 1911, 1915, 1918, 1925, 1937, 1951, 1958, 1961, 1963, 1966, 1970, 1976, 1987, 1997 and 2007 by The American Institute of Architects. **All rights reserved. WARNING: This AIA® Document is protected by U.S. Copyright Law and International Treaties. Unauthorized reproduction or distribution of this AIA® Document, or any portion of it, may result in severe civil and criminal penalties, and will be prosecuted to the maximum extent possible under the law.** This document was produced by AIA software at 17:53:56 on 05/14/2015 under Order No.7624003807_1 which expires on 12/30/2015, and is not for resale.
User Notes: (1514492495)

§ 5.3 SUBCONTRACTUAL RELATIONS

By appropriate written agreement, the Contractor shall require each Subcontractor, to the extent of the Work to be performed by the Subcontractor, to be bound to the Contractor by terms of the Contract Documents, and to assume toward the Contractor all the obligations and responsibilities, including the responsibility for safety of the Subcontractor's Work, which the Contractor, by these Documents, assumes toward the Owner and Design Agent. Upon the request of the User Agency and/or the Owner, the Contractor shall provide the User Agency and /or the Owner with copies of each subcontract agreement. Each subcontract agreement shall preserve and protect the rights of the Owner and Design Agent under the Contract Documents with respect to the Work to be performed by the Subcontractor so that subcontracting thereof will not prejudice such rights, and shall allow to the Subcontractor, unless specifically provided otherwise in the subcontract agreement, the benefit of all rights, remedies and redress against the Contractor that the Contractor, by the Contract Documents, has against the Owner. Where appropriate, the Contractor shall require each Subcontractor to enter into similar agreements with Sub-subcontractors. The Contractor shall make available to each proposed Subcontractor, prior to the execution of the subcontract agreement, copies of the Contract Documents to which the Subcontractor will be bound, and, upon written request of the Subcontractor, identify to the Subcontractor terms and conditions of the proposed subcontract agreement that may be at variance with the Contract Documents. Subcontractors will similarly make copies of applicable portions of such documents available to their respective proposed Sub-subcontractors.

§ 5.4 CONTINGENT ASSIGNMENT OF SUBCONTRACTS

§ 5.4.1 Each subcontract agreement for a portion of the Work is assigned by the Contractor to the Owner, provided that

.1 assignment is effective only after termination of the Contract by the Owner for cause pursuant to Section 14.2 and only for those subcontract agreements that the Owner accepts by notifying the Subcontractor and Contractor in writing; and

.2 assignment is subject to the prior rights of the surety, if any, obligated under bond relating to the Contract.

(Paragraph deleted)

§ 5.4.2 Upon such assignment, if the Work has been suspended for more than 30 days, the Subcontractor's compensation shall be equitably adjusted for increases in cost resulting from the suspension.

§ 5.4.3 Upon such assignment to the Owner under this Section 5.4, the Owner may further assign the subcontract to a successor contractor or other entity.

ARTICLE 6 CONSTRUCTION BY OWNER OR BY SEPARATE CONTRACTORS

§ 6.1 OWNER'S RIGHT TO PERFORM CONSTRUCTION AND TO AWARD SEPARATE CONTRACTS

§ 6.1.1 The Owner reserves the right to perform construction or operations related to the Project with the Owner's own forces, and to award separate contracts in connection with other portions of the Project or other construction or operations on the site under Conditions of the Contract identical or substantially similar to these including those portions related to insurance and waiver of subrogation.

§ 6.1.2 When separate contracts are awarded for different portions of the Project or other construction or operations on the site, the term "Contractor" in the Contract Documents in each case shall mean the Contractor who executes each separate Owner-Contractor Agreement.

§ 6.1.3 The Owner shall provide for coordination of the activities of the Owner's own forces and of each separate contractor with the Work of the Contractor, who shall cooperate with them. The Contractor shall participate with other separate contractors and the Owner in reviewing their construction schedules. The Contractor shall make any revisions to the construction schedule deemed necessary after a joint review and mutual agreement. The construction schedules shall then constitute the schedules to be used by the Contractor, separate contractors and the Owner until subsequently revised.

§ 6.1.4 Unless otherwise provided in the Contract Documents, when the Owner performs construction or operations related to the Project with the Owner's own forces, the Owner shall be deemed to be subject to the same obligations and to have the same rights that apply to the Contractor under the Conditions of the Contract, including, without excluding others, those stated in Article 3, this Article 6 and Articles 10, 11 and 12.

AIA Document A201™ – 2007. Copyright © 1911, 1915, 1918, 1925, 1937, 1951, 1958, 1961, 1963, 1966, 1970, 1976, 1987, 1997 and 2007 by The American Institute of Architects. **All rights reserved. WARNING: This AIA® Document is protected by U.S. Copyright Law and International Treaties. Unauthorized reproduction or distribution of this AIA® Document, or any portion of it, may result in severe civil and criminal penalties, and will be prosecuted to the maximum extent possible under the law.** This document was produced by AIA software at 17:53:56 on 05/14/2015 under Order No.7624003807_1 which expires on 12/30/2015, and is not for resale.
User Notes: (1514492495)

§ 6.2 MUTUAL RESPONSIBILITY

§ 6.2.1 The Contractor shall afford the Owner and separate contractors reasonable opportunity for introduction and storage of their materials and equipment and performance of their activities, and shall connect and coordinate the Contractor's construction and operations with theirs as required by the Contract Documents.

§ 6.2.2 If part of the Contractor's Work depends for proper execution or results upon construction or operations by the Owner or a separate contractor, the Contractor shall, prior to proceeding with that portion of the Work, promptly report to the Design Agent apparent discrepancies or defects in such other construction that would render it unsuitable for such proper execution and results. Failure of the Contractor so to report shall constitute an acknowledgment that the Owner's or separate contractor's completed or partially completed construction is fit and proper to receive the Contractor's Work, except as to defects not then reasonably discoverable.

§ 6.2.3 The Contractor shall reimburse the Owner for costs the Owner incurs that are payable to a separate contractor because of the Contractor's delays, improperly timed activities or defective construction. The Owner shall be responsible to the Contractor for costs the Contractor incurs because of a separate contractor's delays, improperly timed activities, damage to the Work or defective construction.

§ 6.2.4 The Contractor shall promptly remedy damage the Contractor wrongfully causes to completed or partially completed construction or to property of the Owner or separate contractors as provided in Section 10.2.5.

§ 6.2.5 The Owner and each separate contractor shall have the same responsibilities for cutting and patching as are described for the Contractor in Section 3.14.

§ 6.3 OWNER'S RIGHT TO CLEAN UP

If a dispute arises among the Contractor, separate contractors and the Owner as to the responsibility under their respective contracts for maintaining the premises and surrounding area free from waste materials and rubbish, the Owner may clean up and the Design Agent will allocate the cost among those responsible.

ARTICLE 7 CHANGES IN THE WORK

§ 7.1 GENERAL

§ 7.1.1 Changes in the Work may be accomplished after execution of the Contract, and without invalidating the Contract, by Change Order, Construction Change Directive or order for a minor change in the Work, subject to the limitations stated in this Article 7 and elsewhere in the Contract Documents.

§ 7.1.2 A Change Order shall be based upon agreement among the Owner, Contractor and Design Agent; a Construction Change Directive requires agreement by the Owner and Design Agent and may or may not be agreed to by the Contractor; an order for a minor change in the Work may be issued by the Design Agent alone.

§ 7.1.3 Changes in the Work shall be performed under applicable provisions of the Contract Documents, and the Contractor shall proceed promptly, unless otherwise provided in the Change Order, Construction Change Directive or order for a minor change in the Work.

§ 7.2 CHANGE ORDERS

§ 7.2.1 A Change Order is a written instrument prepared by the Design Agent and signed by the Owner, Contractor and Design Agent stating their agreement upon all of the following:

.1 The change in the Work;
.2 The amount of the adjustment, if any, in the Contract Sum; and
.3 The extent of the adjustment, if any, in the Contract Time.

§ 7.2.2 Subsequent to the approval of a Change Order as provided in § 7.1.2, whether such Change Order changes the Contract Sum or Contract Time or both, no additional claim related to such Change Order will be considered by the Owner. Any change, once incorporated into a Change Order, is all inclusive, and includes all factors that could have been considered at the time of the Change Order such as Project impact or schedule "ripple" effect..

§ 7.3 CONSTRUCTION CHANGE DIRECTIVES

§ 7.3.1 A Construction Change Directive is a written order prepared by the Design Agent and signed by the Owner and Design Agent, directing a change in the Work prior to agreement on adjustment, if any, in the Contract Sum or

AIA Document A201™ – 2007. Copyright © 1911, 1915, 1918, 1925, 1937, 1951, 1958, 1961, 1963, 1966, 1970, 1976, 1987, 1997 and 2007 by The American Institute of Architects. **All rights reserved. WARNING: This AIA® Document is protected by U.S. Copyright Law and International Treaties. Unauthorized reproduction or distribution of this AIA® Document, or any portion of it, may result in severe civil and criminal penalties, and will be prosecuted to the maximum extent possible under the law.** This document was produced by AIA software at 17:53:56 on 05/14/2015 under Order No.7624003807_1 which expires on 12/30/2015, and is not for resale.
User Notes: (1514492495)

Contract Time, or both. The Owner may by Construction Change Directive, without invalidating the Contract, order changes in the Work within the general scope of the Contract consisting of additions, deletions or other revisions, the Contract Sum and Contract Time being adjusted accordingly.

§ 7.3.2 A Construction Change Directive shall be used in the absence of total agreement on the terms of a Change Order.

§ 7.3.3 If the Construction Change Directive provides for an adjustment to the Contract Sum, the adjustment shall be based on one of the following methods:

.1 Mutual acceptance of a lump sum properly itemized and supported by sufficient substantiating data to permit evaluation;
.2 Unit prices stated in the Contract Documents or subsequently agreed upon;
.3 Cost to be determined in a manner agreed upon by the parties and a mutually acceptable fixed or percentage fee; or
.4 As provided in Section 7.3.7.

§ 7.3.4 Intentionally omitted.

§ 7.3.5 Upon receipt of a Construction Change Directive, the Contractor shall promptly proceed with the change in the Work involved and advise the Design Agent of the Contractor's agreement or disagreement with the method, if any, provided in the Construction Change Directive for determining the proposed adjustment in the Contract Sum or Contract Time.

§ 7.3.6 A Construction Change Directive signed by the Contractor indicates the Contractor's agreement therewith, including adjustment in Contract Sum and Contract Time or the method for determining them. Such agreement shall be effective immediately and shall be recorded as a Change Order.

§ 7.3.7 If the Contractor does not respond promptly or disagrees with the method for adjustment in the Contract Sum, the Design Agent shall determine the method and the adjustment on the basis of reasonable expenditures and savings of those performing the Work attributable to the change, including, in case of an increase in the Contract Sum, an amount for overhead and profit as set forth in the Agreement, or if no such amount is set forth in the Agreement, a reasonable amount. In such case, and also under Section 7.3.3.3, the Contractor shall keep and present, in such form as the Design Agent may prescribe, an itemized accounting together with appropriate supporting data. Unless otherwise provided in the Contract Documents, costs for the purposes of this Section 7.3.7 shall be limited to the following:

.1 Costs of labor, including social security, old age and unemployment insurance, fringe benefits required by agreement or custom, and workers' compensation insurance;
.2 Costs of materials, supplies and equipment, including cost of delivery;
.3 Rental costs of machinery and equipment;
.4 Costs of premiums for all bonds and insurance, permit fees related to the Work.

(Paragraph deleted)

.

§ 7.3.8 The amount of credit to be allowed by the Contractor to the Owner for a deletion or change that results in a net decrease in the Contract Sum shall be actual net cost as confirmed by the Design Agent. When both additions and credits covering related Work or substitutions are involved in a change, the allowance for overhead and profit shall be figured on the basis of net increase, if any, with respect to that change.

§ 7.3.9 Pending final determination of the total cost of a Construction Change Directive to the Owner, the Contractor may request payment for Work completed under the Construction Change Directive in Applications for Payment. The Design Agent will make an interim determination for purposes of monthly certification for payment for those costs and certify for payment the amount that the Design Agent determines, in the Design Agent's professional judgment, to be reasonably justified. The Design Agent's interim determination of cost shall adjust the Contract Sum on the same basis as a Change Order, subject to the right of either party to disagree and assert a Claim in accordance with Article 15.

§ 7.3.10 When the Owner and Contractor agree with a determination made by the Design Agent concerning the adjustments in the Contract Sum and Contract Time, or otherwise reach agreement upon the adjustments, such

AIA Document A201™ – 2007. Copyright © 1911, 1915, 1918, 1925, 1937, 1951, 1958, 1961, 1963, 1966, 1970, 1976, 1987, 1997 and 2007 by The American Institute of Architects. **All rights reserved. WARNING: This AIA® Document is protected by U.S. Copyright Law and International Treaties. Unauthorized reproduction or distribution of this AIA® Document, or any portion of it, may result in severe civil and criminal penalties, and will be prosecuted to the maximum extent possible under the law.** This document was produced by AIA software at 17:53:56 on 05/14/2015 under Order No.7624003807_1 which expires on 12/30/2015, and is not for resale.
User Notes: (1514492495)

agreement shall be effective immediately and the Design Agent will prepare a Change Order. Change Orders may be issued for all or any part of a Construction Change Directive.

§ 7.4 MINOR CHANGES IN THE WORK

The Design Agent has authority to order minor changes in the Work not involving adjustment in the Contract Sum or extension of the Contract Time and not inconsistent with the intent of the Contract Documents. Such changes will be effected by written order signed by the Design Agent and shall be binding on the Owner and Contractor.

ARTICLE 8 TIME

§ 8.1 DEFINITIONS

§ 8.1.1 Unless otherwise provided, Contract Time is the period of time, including authorized adjustments, allotted in the Contract Documents for Substantial Completion of the Work.

§ 8.1.2 The date of commencement of the Work is the date established pursuant to § 3.1 of the Agreement.
.

§ 8.1.3 The date of Substantial Completion is the date certified by the Design Agent in accordance with Section 9.8.

§ 8.1.4 The term "day" as used in the Contract Documents shall mean working day, excluding weekends and legal holidays.

§ 8.2 PROGRESS AND COMPLETION

§ 8.2.1 Time limits stated in the Contract Documents are of the essence of the Contract. By executing the Agreement the Contractor confirms that the Contract Time is a reasonable period for performing the Work.

§ 8.2.2 The Contractor shall not except by agreement or instruction of the Owner in writing, prematurely commence operations on the site or elsewhere prior to the effective date of insurance required by Article 11 to be furnished by the Contractor and Owner. The date of commencement of the Work shall not be changed by the effective date of such insurance.

§ 8.2.3 The Contractor shall proceed expeditiously with adequate forces and shall achieve Substantial Completion within the Contract Time.

§ 8.3 DELAYS AND EXTENSIONS OF TIME

§ 8.3.1 If the Contractor is delayed at any time in the commencement or progress of the Work by an act or neglect of the Owner or Design Agent, or of an employee of either, or of a separate contractor employed by the Owner; or by changes ordered in the Work; or by labor disputes, fire, unusual delay in deliveries, unavoidable casualties or other causes beyond the Contractor's control,, then the Contract Time shall be extended by Change Order for such reasonable time as the Design Agent may determine.

§ 8.3.2 Claims relating to time shall be made in accordance with applicable provisions of Article 15.

§ 8.3.3 This Section 8.3 does not preclude recovery of damages for delay by either party under other provisions of the Contract Documents.

ARTICLE 9 PAYMENTS AND COMPLETION

§ 9.1 CONTRACT SUM

The Contract Sum is stated in the Agreement and, including authorized adjustments, is the total amount payable by the Owner to the Contractor for performance of the Work under the Contract Documents.

§ 9.2 SCHEDULE OF VALUES

Within 20 days of the issuance of the Purchase Order, and promptly if revision is necessary from time to time as a result of a Change Order,, the Contractor shall submit to the Design Agent and the Owner, before the first Application for Payment, a schedule of values allocating the entire Contract Sum to the various portions of the Work and prepared in such form and supported by such data to substantiate its accuracy as the Design Agent and Owner may require. This schedule, if and when approved by the Design Agent and the Owner in writing, shall be used as a basis for reviewing the Contractor's Applications for Payment.

AIA Document A201™ – 2007. Copyright © 1911, 1915, 1918, 1925, 1937, 1951, 1958, 1961, 1963, 1966, 1970, 1976, 1987, 1997 and 2007 by The American Institute of Architects. **All rights reserved. WARNING: This AIA® Document is protected by U.S. Copyright Law and International Treaties. Unauthorized reproduction or distribution of this AIA® Document, or any portion of it, may result in severe civil and criminal penalties, and will be prosecuted to the maximum extent possible under the law.** This document was produced by AIA software at 17:53:56 on 05/14/2015 under Order No.7624003807_1 which expires on 12/30/2015, and is not for resale.
User Notes: (1514492495)

§ 9.3 APPLICATIONS FOR PAYMENT

§ 9.3.1 At least 10 days before the date established for each progress payment, the Contractor shall submit to the Design Agent and the Owner for approval an itemized Application for Payment prepared in accordance with the schedule of values for completed portions of the Work. Such application shall be notarized, if required, and supported by such data substantiating the Contractor's right to payment as the Owner or Design Agent may require, such as copies of requisitions from Subcontractors and material suppliers, and shall reflect retainage if provided for in the Contract Documents.

§ 9.3.1.1 All Applications for Payment for Change Orders must be accompanied by a Notice of Change in Purchase Order issued by the Owner, and if directed by the Owner, by the User Agency.

§ 9.3.1.2 Applications for Payment shall not include requests for payment for portions of the Work for which the Contractor does not intend to pay a Subcontractor or material supplier, unless such Work has been performed by others whom the Contractor intends to pay.

§ 9.3.1.3 The form of Application for Payment shall be AIA Document G702, Application and Certification for Payment, supported by AIA Document G702A, Continuation Sheet.

§ 9.3.1.4 Until final payment, the Owner shall pay ninety-five (95%) percent of the amount due the Contract on account of progress payments.

§ 9.3.2 Unless otherwise provided in the Contract Documents, payments shall be made on account of materials and equipment delivered and suitably stored at the site for subsequent incorporation in the Work. If approved in advance by the Owner, payment may similarly be made for materials and equipment suitably stored off the site at a location agreed upon in writing. Payment for materials and equipment stored on or off the site shall be conditioned upon compliance by the Contractor with procedures satisfactory to the Owner to establish the Owner's title to such materials and equipment or otherwise protect the Owner's interest, and shall include the costs of applicable insurance, storage and transportation to the site for such materials and equipment stored off the site.

§ 9.3.3 The Contractor warrants that title to all Work covered by an Application for Payment will pass to the Owner no later than the time of payment. The Contractor further warrants that upon submittal of an Application for Payment all Work for which Certificates for Payment have been previously issued and payments received from the Owner shall be free and clear of liens, claims, security interests or encumbrances in favor of the Contractor, Subcontractors, material suppliers, or other persons or entities making a claim by reason of having provided labor, materials and equipment relating to the Work. The Contractor shall immediately satisfy any lien, claim, or encumbrance against the site where the Project is located and indemnify the Owner from and against all resulting costs and expenses, including without limitation, attorneys' fees

§ 9.4 CERTIFICATES FOR PAYMENT

§ 9.4.1 The Design Agent will, within 7 days after receipt of the Contractor's Application for Payment, either issue to the Owner a Certificate for Payment, with a copy to the Contractor, for such amount as the Design Agent determines is properly due, or notify the Contractor and Owner in writing of the Design Agent's reasons for withholding certification in whole or in part as provided in Section 9.5.1.

§ 9.4.2 The issuance of a Certificate for Payment will constitute a representation by the Design Agent to the Owner, based on the Design Agent's evaluation of the Work and the data comprising the Application for Payment, that, to the best of the Design Agent's knowledge, information and belief, the Work has progressed to the point indicated and that the quality of the Work is in accordance with the Contract Documents. The foregoing representations are subject to an evaluation of the Work for conformance with the Contract Documents upon Substantial Completion, to results of subsequent tests and inspections, to correction of minor deviations from the Contract Documents prior to completion and to specific qualifications expressed by the Design Agent. The issuance of a Certificate for Payment will further constitute a representation that the Contractor is entitled to payment in the amount certified. However, the issuance of a Certificate for Payment will not be a representation that the Design Agent has (1) made exhaustive or continuous on-site inspections to check the quality or quantity of the Work, (2) reviewed construction means, methods, techniques, sequences or procedures, (3) reviewed copies of requisitions received from Subcontractors and material suppliers and other data requested by the Owner to substantiate the Contractor's right to payment, or (4)

AIA Document A201™ – 2007. Copyright © 1911, 1915, 1918, 1925, 1937, 1951, 1958, 1961, 1963, 1966, 1970, 1976, 1987, 1997 and 2007 by The American Institute of Architects. **All rights reserved. WARNING: This AIA® Document is protected by U.S. Copyright Law and International Treaties. Unauthorized reproduction or distribution of this AIA® Document, or any portion of it, may result in severe civil and criminal penalties, and will be prosecuted to the maximum extent possible under the law.** This document was produced by AIA software at 17:53:56 on 05/14/2015 under Order No.7624003807_1 which expires on 12/30/2015, and is not for resale.
User Notes: (1514492495)

made examination to ascertain how or for what purpose the Contractor has used money previously paid on account of the Contract Sum.

§ 9.4.3 The Contractor must submit all product literature, and material and color samples with each Application for Payment, or as otherwise required by the Owner.

§ 9.5 DECISIONS TO WITHHOLD CERTIFICATION

§ 9.5.1 The Design Agent will withhold a Certificate for Payment in whole or in part, to the extent reasonably necessary to protect the Owner, if in the Design Agent's opinion the representations to the Owner required by Section 9.4.2 cannot be made. If the Design Agent is unable to certify payment in the amount of the Application, the Design Agent will notify the Contractor and Owner as provided in Section 9.4.1. If the Contractor and Design Agent cannot agree on a revised amount, the Design Agent will promptly issue a Certificate for Payment for the amount for which the Design Agent is able to make such representations to the Owner. The Design Agent may also withhold a Certificate for Payment or, because of subsequently discovered evidence, may nullify the whole or a part of a Certificate for Payment previously issued, to such extent as may be necessary in the Design Agent's opinion to protect the Owner from loss for which the Contractor is responsible, including loss resulting from acts and omissions described in Section 3.3.2, because of:

.1 defective Work not remedied;

.2 third-party claims filed or reasonable evidence indicating probable filing of such claims unless security acceptable to the Owner is provided by the Contractor;

.3 failure of the Contractor to make payments properly to Subcontractors or for labor, materials, or equipment;

.4 reasonable evidence that the Work cannot be completed for the unpaid balance of the Contract Sum;

.5 damage to the Owner or a separate contractor;

.6 reasonable evidence that the Work will not be completed within the Contract Time, and that the unpaid balance would not be adequate to cover actual or liquidated damages for the anticipated delay;

.7 failure to carry out the Work in accordance with the Contract Documents; or.

.8 any other failure to comply with the obligations of the Contractor under the Contract Documents.

§ 9.5.2 When the above reasons for withholding certification are removed, certification will be made for amounts previously withheld.

§ 9.5.3 If the Design Agent withholds certification for payment under Section 9.5.1.3, the Owner may, at its sole option, issue joint checks to the Contractor and to any Subcontractor or material or equipment suppliers to whom the Contractor failed to make payment for Work properly performed or material or equipment suitably delivered. If the Owner makes payments by joint check, the Owner shall notify the Design Agent and the Design Agent will reflect such payment on the next Certificate for Payment .

§ 9.6 PROGRESS PAYMENTS

§ 9.6.1 After the Design Agent has issued a Certificate for Payment and the Owner has approved the Certificate for Payment in writing, the Owner shall make payment in the manner and within the time provided in the Contract Documents, and shall so notify the Design Agent.

§ 9.6.2 The Contractor shall pay each Subcontractor no later than 7 days after receipt of payment from the Owner the amount to which the Subcontractor is entitled, reflecting percentages actually retained from payments to the Contractor on account of the Subcontractor's portion of the Work. The Contractor shall, by appropriate agreement with each Subcontractor, require each Subcontractor to make payments to Sub-subcontractors in a similar manner.

§ 9.6.3 The Design Agent will, on request, furnish to a Subcontractor, if practicable, information regarding percentages of completion or amounts applied for by the Contractor and action taken thereon by the Design Agent and Owner on account of portions of the Work done by such Subcontractor.

§ 9.6.4 The Owner has the right to request written evidence from the Contractor that the Contractor has properly paid Subcontractors and material and equipment suppliers amounts paid by the Owner to the Contractor for subcontracted Work. If the Contractor fails to furnish such evidence within seven days, the Owner shall have the right to contact Subcontractors to ascertain whether they have been properly paid. The Owner shall have the right to withhold payment(s) to the Contractor in the event that any Subcontractors or material and equipment suppliers have

AIA Document A201™ – 2007. Copyright © 1911, 1915, 1918, 1925, 1937, 1951, 1958, 1961, 1963, 1966, 1970, 1976, 1987, 1997 and 2007 by The American Institute of Architects. **All rights reserved. WARNING: This AIA® Document is protected by U.S. Copyright Law and International Treaties. Unauthorized reproduction or distribution of this AIA® Document, or any portion of it, may result in severe civil and criminal penalties, and will be prosecuted to the maximum extent possible under the law.** This document was produced by AIA software at 17:53:56 on 05/14/2015 under Order No.7624003807_1 which expires on 12/30/2015, and is not for resale.
User Notes: (1514492495)

not been properly paid. Neither the Owner nor Design Agent shall have an obligation to pay or to see to the payment of money to a Subcontractor, except as may otherwise be required by law.

§ 9.6.5 Contractor payments to material and equipment suppliers shall be treated in a manner similar to that provided in Sections 9.6.2, 9.6.3 and 9.6.4.

§ 9.6.6 A Certificate for Payment, a progress payment, or partial or entire use or occupancy of the Project by the Owner shall not constitute acceptance of Work not in accordance with the Contract Documents.

§ 9.6.7 Unless the Contractor provides the Owner with a payment bond in the full penal sum of the Contract Sum, payments received by the Contractor for Work properly performed by Subcontractors and suppliers shall be held by the Contractor for those Subcontractors or suppliers who performed Work or furnished materials, or both, under contract with the Contractor for which payment was made by the Owner. Nothing contained herein shall require money to be placed in a separate account and not commingled with money of the Contractor, shall create any fiduciary liability or tort liability on the part of the Contractor for breach of trust or shall entitle any person or entity to an award of punitive damages against the Contractor for breach of the requirements of this provision.

§ 9.7 FAILURE OF PAYMENT

If the Design Agent does not issue a Certificate for Payment, through no fault of the Contractor, within 7 days after receipt of the Contractor's Application for Payment, or if the Owner does not pay the Contractor within 7 days after the date established in the Contract Documents the amount certified by the Design Agent or awarded by binding dispute resolution, then the Contractor may, upon 7 additional days' written notice to the Owner and Design Agent, make a claim for payment as provided under the provisions of "Prompt Payment by Department of Administration," R.I. Gen. Laws §§ 42-11.1-1 et seq.

.

§ 9.8 SUBSTANTIAL COMPLETION

§ 9.8.1 Substantial Completion is the stage in the progress of the Work when the Work or designated portion thereof is sufficiently complete in accordance with the Contract Documents so that the Owner can occupy or utilize the Work for its intended use.

§ 9.8.2 When the Contractor considers that the Work, or a portion thereof which the Owner agrees to accept separately, is substantially complete, the Contractor shall prepare and submit to the Design Agent a comprehensive list of items to be completed or corrected prior to final payment. Failure to include an item on such list does not alter the responsibility of the Contractor to complete all Work in accordance with the Contract Documents.

§ 9.8.3 Upon receipt of the Contractor's list, the Design Agent will make an inspection to determine whether the Work or designated portion thereof is substantially complete. If the Design Agent's inspection discloses any item, whether or not included on the Contractor's list, which is not sufficiently complete in accordance with the Contract Documents so that the Owner can occupy or utilize the Work or designated portion thereof for its intended use, the Contractor shall, before issuance of the Certificate of Substantial Completion, complete or correct such item upon notification by the Design Agent. In such case, the Contractor shall then submit a request for another inspection by the Design Agent to determine Substantial Completion. The Design Agent will perform no more than two (2) inspections to determine whether the Work or a designated portion thereof has attained Substantial Completion in accordance with the Contract Documents. The Owner is entitled to reimbursement from the Contractor for amounts paid to the Design Agent for any additional inspections.

§ 9.8.4 When the Work or designated portion thereof is substantially complete, the Design Agent will prepare a Certificate of Substantial Completion that shall establish the date of Substantial Completion, shall establish responsibilities of the Owner and Contractor for security, maintenance, heat, utilities, damage to the Work and insurance, and shall fix the time within which the Contractor shall finish all items on the list accompanying the Certificate. Warranties required by the Contract Documents shall commence on the date of Substantial Completion of the Work or designated portion thereof unless otherwise provided in the Certificate of Substantial Completion.

§ 9.8.5 The Certificate of Substantial Completion shall be submitted to the Owner and Contractor for their written acceptance of responsibilities assigned to them in such Certificate. Upon such acceptance and consent of surety, if any, the Owner shall make payment of retainage applying to such Work or designated portion thereof. Such payment shall be adjusted for Work that is incomplete or not in accordance with the requirements of the Contract Documents.

AIA Document A201™ – 2007. Copyright © 1911, 1915, 1918, 1925, 1937, 1951, 1958, 1961, 1963, 1966, 1970, 1976, 1987, 1997 and 2007 by The American Institute of Architects. **All rights reserved. WARNING: This AIA® Document is protected by U.S. Copyright Law and International Treaties. Unauthorized reproduction or distribution of this AIA® Document, or any portion of it, may result in severe civil and criminal penalties, and will be prosecuted to the maximum extent possible under the law.** This document was produced by AIA software at 17:53:56 on 05/14/2015 under Order No.7624003807_1 which expires on 12/30/2015, and is not for resale.
User Notes: (1514492495)

§ 9.9 PARTIAL OCCUPANCY OR USE

§ 9.9.1 The Owner may occupy or use any completed or partially completed portion of the Work at any stage when such portion is designated by separate agreement with the Contractor, provided such occupancy or use is consented to by the insurer as required under Section 11.3.1.5 and authorized by public authorities having jurisdiction over the Project. Such partial occupancy or use may commence whether or not the portion is substantially complete, provided the Owner and Contractor have accepted in writing the responsibilities assigned to each of them for payments, retainage, if any, security, maintenance, heat, utilities, damage to the Work and insurance, and have agreed in writing concerning the period for correction of the Work and commencement of warranties required by the Contract Documents. When the Contractor considers a portion substantially complete, the Contractor shall prepare and submit a list to the Design Agent as provided under Section 9.8.2. Consent of the Contractor to partial occupancy or use shall not be unreasonably withheld. The stage of the progress of the Work shall be determined by written agreement between the Owner and Contractor or, if no agreement is reached, by decision of the Design Agent.

§ 9.9.2 Immediately prior to such partial occupancy or use, the Owner, Contractor and Design Agent shall jointly inspect the area to be occupied or portion of the Work to be used in order to determine and record the condition of the Work.

§ 9.9.3 Unless otherwise agreed upon, partial occupancy or use of a portion or portions of the Work shall not constitute acceptance of Work not complying with the requirements of the Contract Documents.

§ 9.10 FINAL COMPLETION AND FINAL PAYMENT

§ 9.10.1 Upon receipt of the Contractor's written notice that the Work is ready for final inspection and acceptance and upon receipt of a final Application for Payment, the Design Agent will promptly make such inspection and, when the Design Agent finds the Work acceptable under the Contract Documents and the Contract fully performed, the Design Agent will promptly issue a final Certificate for Payment stating that to the best of the Design Agent's knowledge, information and belief, and on the basis of the Design Agent's on-site visits and inspections, the Work has been completed in accordance with terms and conditions of the Contract Documents and that the entire balance found to be due the Contractor and noted in the final Certificate is due and payable. The Design Agent's final Certificate for Payment will constitute a further representation that conditions listed in Section 9.10.2 as precedent to the Contractor's being entitled to final payment have been fulfilled. The Design Agent will perform no more than two (2) inspections to determine whether the Work or a designated portion thereof has attained Final Completion in accordance with the Contract Documents. The Owner is entitled to reimbursement from the Contractor for amounts paid to the Design Agent for any additional inspections.

§ 9.10.2 Neither final payment nor any remaining retained percentage shall become due until the Contractor submits to the Design Agent (1) an affidavit that payrolls, bills for materials and equipment, and other indebtedness connected with the Work for which the Owner or the Owner's property might be responsible or encumbered (less amounts withheld by Owner) have been paid or otherwise satisfied, (2) a certificate evidencing that insurance required by the Contract Documents to remain in force after final payment is currently in effect and will not be canceled or allowed to expire until at least 30 days' prior written notice has been given to the Owner, (3) a written statement that the Contractor knows of no substantial reason that the insurance will not be renewable to cover the period required by the Contract Documents, (4) consent of surety, if any, to final payment and (5), if required by the Owner, other data establishing payment or satisfaction of obligations, such as receipts, releases and waivers of liens, claims, security interests or encumbrances arising out of the Contract, to the extent and in such form as may be designated by the Owner. If a Subcontractor refuses to furnish a release or waiver required by the Owner, the Contractor may furnish a bond satisfactory to the Owner to indemnify the Owner against such lien. If such lien remains unsatisfied after payments are made, the Contractor shall refund to the Owner all money that the Owner may be compelled to pay in discharging such lien, including all costs and reasonable attorneys' fees.

§ 9.10.3 If, after Substantial Completion of the Work, final completion thereof is materially delayed through no fault of the Contractor or by issuance of Change Orders affecting final completion, and the Design Agent so confirms, the Owner shall, upon application by the Contractor and certification by the Design Agent, and without terminating the Contract, make payment of the balance due for that portion of the Work fully completed and accepted. If the remaining balance for Work not fully completed or corrected is less than retainage stipulated in the Contract Documents, and if bonds have been furnished, the written consent of surety to payment of the balance due for that

AIA Document A201™ – 2007. Copyright © 1911, 1915, 1918, 1925, 1937, 1951, 1958, 1961, 1963, 1966, 1970, 1976, 1987, 1997 and 2007 by The American Institute of Architects. **All rights reserved. WARNING: This AIA® Document is protected by U.S. Copyright Law and International Treaties. Unauthorized reproduction or distribution of this AIA® Document, or any portion of it, may result in severe civil and criminal penalties, and will be prosecuted to the maximum extent possible under the law.** This document was produced by AIA software at 17:53:56 on 05/14/2015 under Order No.7624003807_1 which expires on 12/30/2015, and is not for resale.
User Notes: (1514492495)

portion of the Work fully completed and accepted shall be submitted by the Contractor to the Design Agent prior to certification of such payment. Such payment shall be made under terms and conditions governing final payment, except that it shall not constitute a waiver of claims.

§ 9.10.4 The making of final payment shall constitute a waiver of Claims by the Owner except those arising from

- **.1** liens, Claims, security interests or encumbrances arising out of the Contract and unsettled;
- **.2** failure of the Work to comply with the requirements of the Contract Documents;
- **.3** terms of special warranties required by the Contract Documents; or
- **.4** claims permitted under the State of Rhode Island Department of Administration Division of Purchases General Conditions of Purchase.

§ 9.10.5 Acceptance of final payment by the Contractor, a Subcontractor or material supplier shall constitute a waiver of claims by that payee except those previously made in writing and identified by that payee as unsettled at the time of final Application for Payment.

§ 9.11 The Contractor and the Contractor's surety shall be liable for and shall pay the Owner as liquidated damages the sums specified in the Solicitation and Bid Form.

ARTICLE 10 PROTECTION OF PERSONS AND PROPERTY

§ 10.1 SAFETY PRECAUTIONS AND PROGRAMS

The Contractor shall be responsible for initiating, maintaining and supervising all safety precautions and programs in connection with the performance of the Contract.

§ 10.2 SAFETY OF PERSONS AND PROPERTY

§ 10.2.1 The Contractor shall take reasonable precautions for safety of, and shall provide reasonable protection to prevent damage, injury or loss to

- **.1** employees on the Work and other persons who may be affected thereby;
- **.2** the Work and materials and equipment to be incorporated therein, whether in storage on or off the site, under care, custody or control of the Contractor or the Contractor's Subcontractors or Sub-subcontractors; and
- **.3** other property at the site or adjacent thereto, such as trees, shrubs, lawns, walks, pavements, roadways, structures and utilities not designated for removal, relocation or replacement in the course of construction.

§ 10.2.2 The Contractor shall comply with and give notices required by applicable laws, statutes, ordinances, codes, rules and regulations, and lawful orders of public authorities bearing on safety of persons or property or their protection from damage, injury or loss.

§ 10.2.3 The Contractor shall erect and maintain, as required by existing conditions and performance of the Contract, reasonable safeguards for safety and protection, including posting danger signs and other warnings against hazards, promulgating safety regulations and notifying owners and users of adjacent sites and utilities.

§ 10.2.4 When use or storage of explosives or other hazardous materials or equipment or unusual methods are necessary for execution of the Work, the Contractor shall exercise utmost care and carry on such activities under supervision of properly qualified personnel and in consultation with the appropriate governmental authorities..

§ 10.2.4.1 When use or storage of explosives, or other hazardous materials, substances or equipment, or unusual methods are necessary for execution of the Work, the Contractor shall give the User Agency and the Owner reasonable advance notice.

§ 10.2.4.2 If the Contract Documents require the Contractor to handle materials or substances that under certain circumstances may be designated as hazardous, the Contractor shall handle such materials in an appropriate manner.

§ 10.2.5 The Contractor shall promptly remedy damage and loss (other than damage or loss insured under property insurance required by the Contract Documents) to property referred to in Sections 10.2.1.2 and 10.2.1.3 caused in whole or in part by the Contractor, a Subcontractor, a Sub-subcontractor, or anyone directly or indirectly employed by any of them, or by anyone for whose acts they may be liable and for which the Contractor is responsible under

AIA Document A201™ – 2007. Copyright © 1911, 1915, 1918, 1925, 1937, 1951, 1958, 1961, 1963, 1966, 1970, 1976, 1987, 1997 and 2007 by The American Institute of Architects. **All rights reserved. WARNING: This AIA® Document is protected by U.S. Copyright Law and International Treaties. Unauthorized reproduction or distribution of this AIA® Document, or any portion of it, may result in severe civil and criminal penalties, and will be prosecuted to the maximum extent possible under the law.** This document was produced by AIA software at 17:53:56 on 05/14/2015 under Order No.7624003807_1 which expires on 12/30/2015, and is not for resale.
User Notes: (1514492495)

Sections 10.2.1.2 and 10.2.1.3, except damage or loss attributable to acts or omissions of the Owner or Design Agent or anyone directly or indirectly employed by either of them, or by anyone for whose acts either of them may be liable, and not attributable to the fault or negligence of the Contractor. The foregoing obligations of the Contractor are in addition to the Contractor's obligations under Section 3.18.

§ 10.2.6 The Contractor shall designate a responsible member of the Contractor's organization at the site whose duty shall be the prevention of accidents. This person shall be the Contractor's superintendent unless otherwise designated by the Contractor in writing to the Owner and Design Agent.

§ 10.2.7 The Contractor shall not permit any part of the construction or site to be loaded so as to cause damage or create an unsafe condition.

§ 10.2.8 INJURY OR DAMAGE TO PERSON OR PROPERTY

If either party suffers injury or damage to person or property because of an act or omission of the other party, or of others for whose acts such party is legally responsible, written notice of such injury or damage, whether or not insured, shall be given to the other party within a reasonable time not exceeding 21 days after discovery. The notice shall provide sufficient detail to enable the other party to investigate the matter.

§ 10.3 HAZARDOUS MATERIALS

§ 10.3.1 The Contractor is responsible for compliance with any requirements included in the Contract Documents regarding hazardous materials. If the Contractor encounters a hazardous material or substance not addressed in the Contract Documents and if reasonable precautions will be inadequate to prevent foreseeable bodily injury or death to persons resulting from a material or substance, including but not limited to asbestos or polychlorinated biphenyl (PCB), encountered on the site by the Contractor, the Contractor shall, upon recognizing the condition, immediately stop Work in the affected area and report the condition to the Owner and Design Agent in writing.

§ 10.3.2 Upon receipt of the Contractor's written notice, the Owner shall obtain the services of a licensed laboratory to verify the presence or absence of the material or substance reported by the Contractor and, in the event such material or substance is found to be present, to cause it to be rendered harmless. Unless otherwise required by the Contract Documents, the Owner shall furnish in writing to the Contractor and Design Agent the names and qualifications of persons or entities who are to perform tests verifying the presence or absence of such material or substance or who are to perform the task of removal or safe containment of such material or substance. The Contractor and the Design Agent will promptly reply to the Owner in writing stating whether or not either has reasonable objection to the persons or entities proposed by the Owner. If either the Contractor or Design Agent has an objection to a person or entity proposed by the Owner, the Owner shall propose another to whom the Contractor and the Design Agent have no reasonable objection. When the material or substance has been rendered harmless, Work in the affected area shall resume upon written agreement of the Owner and Contractor. By Change Order, the Contract Time shall be extended appropriately and the Contract Sum shall be increased in the amount of the Contractor's reasonable additional costs of shut-down, delay and start-up.

§ 10.3.3 To the extent permitted by the provisions of R.I. Gen. Laws §§ 9-31-1 ***et seq.***, the Owner shall indemnify and hold harmless the Contractor, Subcontractors, Design Agent, Design Agent's consultants and agents and employees of any of them from and against claims, damages, losses and expenses, including but not limited to attorneys' fees, arising out of or resulting from performance of the Work in the affected area if in fact the material or substance presents the risk of bodily injury or death as described in Section 10.3.1 and has not been rendered harmless, provided that such claim, damage, loss or expense is attributable to bodily injury, sickness, disease or death, or to injury to or destruction of tangible property (other than the Work itself), except to the extent that such damage, loss or expense is due to the fault or negligence of the party seeking indemnity.

§ 10.3.4 The Owner shall not be responsible under this Section 10.3 for materials or substances the Contractor brings to the site unless such materials or substances are required by the Contract Documents. The Owner shall be responsible for materials or substances required by the Contract Documents, except to the extent of the Contractor's fault or negligence in the use and handling of such materials or substances.

§ 10.3.5 The Contractor shall indemnify the Owner for the cost and expense the Owner incurs (1) for remediation of a material or substance the Contractor brings to the site and negligently handles, or (2) where the Contractor fails to perform its obligations under Section 10.3.1, except to the extent that the cost and expense are due to the Owner's fault or negligence.

AIA Document A201™ – 2007. Copyright © 1911, 1915, 1918, 1925, 1937, 1951, 1958, 1961, 1963, 1966, 1970, 1976, 1987, 1997 and 2007 by The American Institute of Architects. **All rights reserved. WARNING: This AIA® Document is protected by U.S. Copyright Law and International Treaties. Unauthorized reproduction or distribution of this AIA® Document, or any portion of it, may result in severe civil and criminal penalties, and will be prosecuted to the maximum extent possible under the law.** This document was produced by AIA software at 17:53:56 on 05/14/2015 under Order No.7624003807_1 which expires on 12/30/2015, and is not for resale.
User Notes: (1514492495)

§ 10.3.6 Intentionally omitted.

§ 10.4 EMERGENCIES

In an emergency affecting safety of persons or property, the Contractor shall act, at the Contractor's discretion, to prevent threatened damage, injury or loss. Additional compensation or extension of time claimed by the Contractor on account of an emergency shall be determined as provided in Article 15 and Article 7.

ARTICLE 11 INSURANCE AND BONDS

§ 11.1 CONTRACTOR'S LIABILITY INSURANCE

§ 11.1.1 The Contractor shall purchase from and maintain in a company or companies lawfully authorized to do business in the jurisdiction in which the Project is located such insurance as is specified in the Solicitation and as will protect the Contractor from claims set forth below which may arise out of or result from the Contractor's operations and completed operations under the Contract and for which the Contractor may be legally liable, whether such operations be by the Contractor or by a Subcontractor or by anyone directly or indirectly employed by any of them, or by anyone for whose acts any of them may be liable:

- **.1** Claims under workers' compensation, disability benefit and other similar employee benefit acts that are applicable to the Work to be performed;
- **.2** Claims for damages because of bodily injury, occupational sickness or disease, or death of the Contractor's employees;
- **.3** Claims for damages because of bodily injury, sickness or disease, or death of any person other than the Contractor's employees;
- **.4** Claims for damages insured by usual personal injury liability coverage;
- **.5** Claims for damages, other than to the Work itself, because of injury to or destruction of tangible property, including loss of use resulting therefrom;
- **.6** Claims for damages because of bodily injury, death of a person or property damage arising out of ownership, maintenance or use of a motor vehicle;
- **.7** Claims for bodily injury or property damage arising out of completed operations; and
- **.8** Claims involving contractual liability insurance applicable to the Contractor's obligations under Section 3.18.

§ 11.1.1.2 The Contractor's liability insurance shall include all major coverages and be on a comprehensive general liability basis.

§ 11.1.2 The insurance required by Section 11.1.1 shall be written for not less than limits of liability specified in the Contract Documents or required by law, whichever coverage is greater. Coverages, whether written on an occurrence or claims-made basis, shall be maintained without interruption from the date of commencement of the Work until the date of final payment and termination of any coverage required to be maintained after final payment, and, with respect to the Contractor's completed operations coverage, until the expiration of the period for correction of Work or for such other period for maintenance of completed operations coverage as specified in the Contract Documents.

§ 11.1.3 Certificates of insurance as specified in the Solicitation and as otherwise acceptable to the Owner shall be filed with the Owner and the User Agency prior to commencement of the Work and thereafter upon renewal or replacement of each required policy of insurance. These certificates and the insurance policies required by this Section 11.1 shall contain a provision that coverages afforded under the policies will not be canceled or allowed to expire until at least 30 days' prior written notice has been given to the Owner and the User Agency. An additional certificate evidencing continuation of liability coverage, including coverage for completed operations, shall be submitted with the final Application for Payment as required by Section 9.10.2 and thereafter upon renewal or replacement of such coverage until the expiration of the time required by Section 11.1.2. Information concerning reduction of coverage on account of revised limits or claims paid under the General Aggregate, or both, shall be furnished by the Contractor with reasonable promptness.

§ 11.1.4 The Contractor shall cause the commercial liability coverage required by the Contract Documents to include (1) the Owner, the User Agency, and their elected and appointed officials, members, employees, and agents, the Design Agent and the Design Agent's consultants as additional insureds for claims caused in whole or in part by the Contractor's acts or omissions during the Contractor's operations; and (2) the Owner, the User Agency, and their

AIA Document A201™ – 2007. Copyright © 1911, 1915, 1918, 1925, 1937, 1951, 1958, 1961, 1963, 1966, 1970, 1976, 1987, 1997 and 2007 by The American Institute of Architects. **All rights reserved. WARNING: This AIA® Document is protected by U.S. Copyright Law and International Treaties. Unauthorized reproduction or distribution of this AIA® Document, or any portion of it, may result in severe civil and criminal penalties, and will be prosecuted to the maximum extent possible under the law.** This document was produced by AIA software at 17:53:56 on 05/14/2015 under Order No.7624003807_1 which expires on 12/30/2015, and is not for resale.
User Notes: (1514492495)

elected and appointed officials, members, employees, and agents, as additional insureds for claims caused in whole or in part by the Contractor's acts or omissions during the Contractor's completed operations.

§ 11.1.5 The Contractor shall be responsible for the prompt payment to the Owner of any deductible amounts under any insurance policies required under the Contract Documents for claims made pursuant to such policies.

§ 11.2 OWNER'S LIABILITY INSURANCE The Contractor shall furnish the Owner and the User Agency, through the Design Agent, an insurance certificate providing Owner's Protective Liability extended to include the interests of the Design Agent, and to protect the Owner, User Agency, and Design Agent from any liability which might be incurred against any of them as a result of any operation of the Contractor or Subcontractors or their employees or anyone for whom either the Contractor or Subcontractors are responsible. Such insurance shall be written for the same limits as the Contractor's comprehensive general liability insurance and shall include the same coverage.

§ 11.3 PROPERTY INSURANCE

§ 11.3.1 The Contractor shall purchase and maintain, in a company or companies lawfully authorized to do business in the jurisdiction in which the Project is located, property insurance written on a builder's risk "all-risk" or equivalent policy form in the amount of the initial Contract Sum, plus value of subsequent Contract Modifications and cost of materials supplied or installed by others, comprising total value for the entire Project at the site on a replacement cost basis without optional deductibles. Such property insurance shall be maintained, unless otherwise provided in the Contract Documents or otherwise agreed in writing by all persons and entities who are beneficiaries of such insurance, until final payment has been made as provided in Section 9.10 or until no person or entity other than the Owner has an insurable interest in the property required by this Section 11.3 to be covered, whichever is later. This insurance shall include interests of the Owner, the User Agency, the Contractor, Subcontractors and Sub-subcontractors in the Project. If the Owner and/or the User Agency incur any damages by failure of the Contractor to maintain such insurance, then the Contractor shall bear all reasonable cost resulting from such failure.

§ 11.3.1.1 Property insurance shall be on an "all-risk" or equivalent policy form and shall include, without limitation, insurance against the perils of fire (with extended coverage) and physical loss or damage including, without duplication of coverage, theft, vandalism, malicious mischief, collapse, earthquake, flood, windstorm, falsework, testing and startup, temporary buildings and debris removal including demolition occasioned by enforcement of any applicable legal requirements, and shall cover reasonable compensation for Design Agent's and Contractor's services and expenses required as a result of such insured loss.

§ 11.3.1.2 Intentionally omitted.

§ 11.3.1.3 If the property insurance requires deductibles, the Owner shall pay costs not covered because of such deductibles.

§ 11.3.1.4 This property insurance shall cover portions of the Work stored off the site, and also portions of the Work in transit.

§ 11.3.1.5 Partial occupancy or use in accordance with Section 9.9 shall not commence until the insurance company or companies providing property insurance have consented to such partial occupancy or use by endorsement or otherwise. The Contractor shall take reasonable steps to obtain consent of the insurance company or companies and shall, without mutual written consent, take no action with respect to partial occupancy or use that would cause cancellation, lapse or reduction of insurance.

§ 11.3.2 Intentionally omitted.

(Paragraphs deleted)

§ 11.3.3Intentionally omitted.

.

§ 11.3.4 Intentionally omitted.

AIA Document A201™ – 2007. Copyright © 1911, 1915, 1918, 1925, 1937, 1951, 1958, 1961, 1963, 1966, 1970, 1976, 1987, 1997 and 2007 by The American Institute of Architects**. All rights reserved. WARNING: This AIA® Document is protected by U.S. Copyright Law and International Treaties. Unauthorized reproduction or distribution of this AIA® Document, or any portion of it, may result in severe civil and criminal penalties, and will be prosecuted to the maximum extent possible under the law.** This document was produced by AIA software at 17:53:56 on 05/14/2015 under Order No.7624003807_1 which expires on 12/30/2015, and is not for resale.
User Notes: (1514492495)

§ 11.3.5 If during the Project construction period the Owner insures properties, real or personal or both, at or adjacent to the site by property insurance under policies separate from those insuring the Project, or if after final payment property insurance is to be provided on the completed Project through a policy or policies other than those insuring the Project during the construction period, the Owner shall waive all rights in accordance with the terms of Section 11.3.7 for damages caused by fire or other causes of loss covered by this separate property insurance. All separate policies shall provide this waiver of subrogation by endorsement or otherwise.

§ 11.3.6 Before an exposure to loss may occur, the Contractor shall file with the Owner a copy of each policy that includes insurance coverages required by this Section 11.3. Each policy shall contain all generally applicable conditions, definitions, exclusions and endorsements related to this Project. Each policy shall contain a provision that the policy will not be canceled or allowed to expire, and that its limits will not be reduced, until at least 30 days' prior written notice has been given to the Owner and the User Agency.

§ 11.3.7 WAIVERS OF SUBROGATION

The Contractor waives all rights against the Owner and the User Agency and any of their subcontractors, sub-subcontractors, agents and employees, and (2) the Architect, Architect's consultants, separate contractors described in Article 6, if any, and any of their subcontractors, sub-subcontractors, agents and employees, for damages caused by fire or other causes of loss to the extent covered by property insurance obtained pursuant to this Section 11.3 or other property insurance applicable to the Work, except such rights as they have to proceeds of such insurance held by the Owner as fiduciary. The Owner or Contractor, as appropriate, shall require of the Architect, Architect's consultants, separate contractors described in Article 6, if any, and the subcontractors, sub-subcontractors, agents and employees of any of them, by appropriate agreements, written where legally required for validity, similar waivers each in favor of other parties enumerated herein. The policies shall provide such waivers of subrogation by endorsement or otherwise. A waiver of subrogation shall be effective as to a person or entity even though that person or entity would otherwise have a duty of indemnification, contractual or otherwise, did not pay the insurance premium directly or indirectly, and whether or not the person or entity had an insurable interest in the property damaged. **§ 11.3.8** A loss insured under this property insurance shall be adjusted by the Contractor as fiduciary and made payable to the Owner as fiduciary for the insureds, as their interests may appear, subject to requirements of any applicable mortgagee clause and of Section 11.3.10. The Contractor shall pay Subcontractors their just shares of insurance proceeds received by the Contractor, and by appropriate agreements, written where legally required for validity, shall require Subcontractors to make payments to their Sub-subcontractors in similar manner.

§ 11.3.9 If required in writing by a party in interest, the Owner as fiduciary shall, upon occurrence of an insured loss, give bond for proper performance of the Contractor's duties. The cost of required bonds shall be charged against proceeds received as fiduciary. The Contractor shall deposit in a separate account proceeds so received, which the Contractor shall distribute in accordance with such agreement as the parties in interest may reach, or as determined in accordance with the method of binding dispute resolution selected in the Agreement between the Owner and Contractor. If after such loss no other special agreement is made and unless the Owner terminates the Contract for convenience, replacement of damaged property shall be performed by the Contractor after notification of a Change in the Work in accordance with Article 7.

§ 11.3.10 The Contractor as fiduciary shall have power to adjust and settle a loss with insurers unless one of the parties in interest shall object in writing within five days after occurrence of loss to the Contractor's exercise of this power; if such objection is made, the dispute shall be resolved in the manner selected by the Owner and Contractor as the method of binding dispute resolution in the Agreement. If the Owner and Contractor have selected arbitration as the method of binding dispute resolution, the Contractor as fiduciary shall make settlement with insurers or, in the case of a dispute over distribution of insurance proceeds, in accordance with the directions of the arbitrators.

§ 11.4 PERFORMANCE BOND AND PAYMENT BOND

§ 11.4.1 The Contractor shall furnish bonds covering faithful performance of the Contract and payment of obligations arising thereunder as stipulated in the Solicitation.

§ 11.4.2 Upon the request of any person or entity appearing to be a potential beneficiary of bonds covering payment of obligations arising under the Contract, the Contractor shall promptly furnish a copy of the bonds or shall authorize a copy to be furnished.

AIA Document A201™ – 2007. Copyright © 1911, 1915, 1918, 1925, 1937, 1951, 1958, 1961, 1963, 1966, 1970, 1976, 1987, 1997 and 2007 by The American Institute of Architects. **All rights reserved. WARNING: This AIA® Document is protected by U.S. Copyright Law and International Treaties. Unauthorized reproduction or distribution of this AIA® Document, or any portion of it, may result in severe civil and criminal penalties, and will be prosecuted to the maximum extent possible under the law.** This document was produced by AIA software at 17:53:56 on 05/14/2015 under Order No.7624003807_1 which expires on 12/30/2015, and is not for resale.
User Notes: (1514492495)

ARTICLE 12 UNCOVERING AND CORRECTION OF WORK

§ 12.1 UNCOVERING OF WORK

§ 12.1.1 If a portion of the Work is covered contrary to the Design Agent's request or to requirements specifically expressed in the Contract Documents, it must, if requested in writing by the Design Agent, be uncovered for the Design Agent's examination and be replaced at the Contractor's expense without change in the Contract Time.

§ 12.1.2 If a portion of the Work has been covered that the Design Agent has not specifically requested to examine prior to its being covered, the Design Agent may request to see such Work and it shall be uncovered by the Contractor. If such Work is in accordance with the Contract Documents, costs of uncovering and replacement shall, by appropriate Change Order, be at the Owner's expense. If such Work is not in accordance with the Contract Documents, such costs and the cost of correction shall be at the Contractor's expense unless the condition was caused by the Owner or a separate contractor in which event the Owner shall be responsible for payment of such costs.

§ 12.2 CORRECTION OF WORK

§ 12.2.1 BEFORE OR AFTER SUBSTANTIAL COMPLETION

The Contractor shall promptly correct Work rejected by the Design Agent or failing to conform to the requirements of the Contract Documents, whether discovered before or after Substantial Completion and whether or not fabricated, installed or completed. Costs of correcting such rejected Work, including additional testing and inspections, the cost of uncovering and replacement, and compensation for the Design Agent's services and expenses made necessary thereby, shall be at the Contractor's expense.

§ 12.2.2 AFTER SUBSTANTIAL COMPLETION

§ 12.2.2.1 In addition to the Contractor's obligations under Section 3.5, if, within one year after the date of Substantial Completion of the Work or designated portion thereof or after the date for commencement of warranties established under Section 9.9.1, or by terms of an applicable special warranty required by the Contract Documents, any of the Work is found to be not in accordance with the requirements of the Contract Documents, the Contractor shall correct it promptly after receipt of written notice from the Owner to do so unless the Owner has previously given the Contractor a written acceptance of such condition. The Owner shall give such notice promptly after discovery of the condition. During the one-year period for correction of Work, if the Owner fails to notify the Contractor and give the Contractor an opportunity to make the correction, the Owner waives the rights to require correction by the Contractor and to make a claim for breach of warranty. If the Contractor fails to correct nonconforming Work within a reasonable time during that period after receipt of notice from the Owner or Design Agent, the Owner may correct it in accordance with Section 2.4.

§ 12.2.2.2 The one-year period for correction of Work shall be extended with respect to portions of Work first performed after Substantial Completion by the period of time between Substantial Completion and the actual completion of that portion of the Work.

§ 12.2.2.3 The one-year period for correction of Work shall be extended by corrective Work performed by the Contractor pursuant to this Section 12.2.

§ 12.2.2.4 Upon request by the Owner and prior to the expiration of one year from the date of Substantial Completion, the Design Agent will conduct and the Contractor shall attend a meeting with the Owner to review the facility operations and performance.

§ 12.2.3 The Contractor shall remove from the site portions of the Work that are not in accordance with the requirements of the Contract Documents and are neither corrected by the Contractor nor accepted by the Owner.

§ 12.2.4 The Contractor shall bear the cost of correcting destroyed or damaged construction, whether completed or partially completed, of the Owner or separate contractors caused by the Contractor's correction or removal of Work that is not in accordance with the requirements of the Contract Documents.

§ 12.2.5 Nothing contained in this Section 12.2 shall be construed to establish a period of limitation with respect to other obligations the Contractor has under the Contract Documents. Establishment of the one-year period for correction of Work as described in Section 12.2.2 relates only to the specific obligation of the Contractor to correct the Work, and has no relationship to the time within which the obligation to comply with the Contract Documents

AIA Document A201™ – 2007. Copyright © 1911, 1915, 1918, 1925, 1937, 1951, 1958, 1961, 1963, 1966, 1970, 1976, 1987, 1997 and 2007 by The American Institute of Architects. **All rights reserved. WARNING: This AIA® Document is protected by U.S. Copyright Law and International Treaties. Unauthorized reproduction or distribution of this AIA® Document, or any portion of it, may result in severe civil and criminal penalties, and will be prosecuted to the maximum extent possible under the law.** This document was produced by AIA software at 17:53:56 on 05/14/2015 under Order No.7624003807_1 which expires on 12/30/2015, and is not for resale.
User Notes: (1514492495)

may be sought to be enforced, nor to the time within which proceedings may be commenced to establish the Contractor's liability with respect to the Contractor's obligations other than specifically to correct the Work.

§ 12.3 ACCEPTANCE OF NONCONFORMING WORK

If the Owner prefers to accept Work that is not in accordance with the requirements of the Contract Documents, the Owner may do so instead of requiring its removal and correction, in which case the Contract Sum will be reduced as appropriate and equitable. Such adjustment shall be effected whether or not final payment has been made.

ARTICLE 13 MISCELLANEOUS PROVISIONS

§ 13.1 GOVERNING LAW

The Contract shall be governed by the law of the State of Rhode Island

§ 13.2 SUCCESSORS AND ASSIGNS

§ 13.2.1 The Owner and Contractor respectively bind themselves, their successors, assigns and legal representatives to covenants, agreements and obligations contained in the Contract Documents. Except as provided in Section 13.2.2, neither party to the Contract shall assign the Contract as a whole without written consent of the other. If either party attempts to make such an assignment without such consent, that party shall nevertheless remain legally responsible for all obligations under the Contract.

§ 13.2.2 The Owner may, without consent of the Contractor, assign the Contract to any executive, legislative, judicial, regulatory, or administrative body of the state, or any political subdivision thereof, including without limitation, any department, division, agency, commission, board, office, bureau, authority, school, water, or fire district, or other agency of Rhode Island state or local government that exercises governmental functions, any other governmental authority, and any quasi-public corporation and/or body corporate and politic. The Contractor shall execute all consents reasonably required to facilitate such assignment.

§ 13.3 WRITTEN NOTICE

Written notice shall be deemed to have been duly served if delivered in person to the individual, to a member of the firm or entity, or to an officer of the corporation for which it was intended; or if delivered at, or sent by registered or certified mail or by courier service providing proof of delivery to, the last business address known to the party giving notice, or when received, if manually delivered or transmitted by electronic mail or facsimile to the last such address known to the party giving notice.

§ 13.4 RIGHTS AND REMEDIES

§ 13.4.1 Duties and obligations imposed by the Contract Documents and rights and remedies available thereunder shall be in addition to and not a limitation of duties, obligations, rights and remedies otherwise imposed or available by law.

§ 13.4.2 No action or failure to act by the Owner, Design Agent or Contractor shall constitute a waiver of a right or duty afforded them under the Contract, nor shall such action or failure to act constitute approval of or acquiescence in a breach there under, except as may be specifically agreed in writing.

§ 13.5 TESTS AND INSPECTIONS

§ 13.5.1 Tests, inspections and approvals of portions of the Work shall be made as required by the Contract Documents and by applicable laws, statutes, ordinances, codes, rules and regulations or lawful orders of public authorities. Unless otherwise provided, the Contractor shall make arrangements for such tests, inspections and approvals with an independent testing laboratory or entity acceptable to the Owner, or with the appropriate public authority, and shall bear all related costs of tests, inspections and approvals. The Contractor shall give the Design Agent timely notice of when and where tests and inspections are to be made so that the Design Agent may be present for such procedures. The Owner shall bear costs of (1) tests, inspections or approvals that do not become requirements until after bids are received or negotiations concluded, and (2) tests, inspections or approvals where building codes or applicable laws or regulations prohibit the Owner from delegating their cost to the Contractor.

§ 13.5.2 If the Design Agent, Owner or public authorities having jurisdiction determine that portions of the Work require additional testing, inspection or approval not included under Section 13.5.1, the Design Agent will, upon written authorization from the Owner, instruct the Contractor to make arrangements for such additional testing, inspection or approval by an entity acceptable to the Owner, and the Contractor shall give timely notice to the

AIA Document A201™ – 2007. Copyright © 1911, 1915, 1918, 1925, 1937, 1951, 1958, 1961, 1963, 1966, 1970, 1976, 1987, 1997 and 2007 by The American Institute of Architects. **All rights reserved. WARNING: This AIA® Document is protected by U.S. Copyright Law and International Treaties. Unauthorized reproduction or distribution of this AIA® Document, or any portion of it, may result in severe civil and criminal penalties, and will be prosecuted to the maximum extent possible under the law.** This document was produced by AIA software at 17:53:56 on 05/14/2015 under Order No.7624003807_1 which expires on 12/30/2015, and is not for resale.
User Notes: (1514492495)

Design Agent of when and where tests and inspections are to be made so that the Design Agent may be present for such procedures. Such costs, except as provided in Section 13.5.3, shall be at the Owner's expense.

§ 13.5.3 If such procedures for testing, inspection or approval under Sections 13.5.1 and 13.5.2 reveal failure of the portions of the Work to comply with requirements established by the Contract Documents, all costs made necessary by such failure including those of repeated procedures and compensation for the Design Agent's services and expenses shall be at the Contractor's expense.

§ 13.5.4 Required certificates of testing, inspection or approval shall, unless otherwise required by the Contract Documents, be secured by the Contractor and promptly delivered to the Design Agent.

§ 13.5.5 If the Design Agent is to observe tests, inspections or approvals required by the Contract Documents, the Design Agent will do so promptly and, where practicable, at the normal place of testing.

§ 13.5.6 Tests or inspections conducted pursuant to the Contract Documents shall be made promptly to avoid unreasonable delay in the Work.

§ 13.6 INTEREST

No interest shall be due or payable on account of any payment due or unpaid under the Contract Documents except in accordance with the provisions of "Prompt Payment by Department of Administration," R.I. Gen. Laws §§ 42-11.1-1 ***et seq.***

§ 13.7 TIME LIMITS ON CLAIMS

The Owner and Contractor shall commence all claims and causes of action, whether in contract, tort, breach of warranty or otherwise, against the other arising out of or related to the Contract in accordance with the requirements of the final dispute resolution method selected in the Agreement within the time period specified by applicable law, but in any case not more than 10 years after the date of Substantial Completion of the Work. The Owner and Contractor waive all claims and causes of action not commenced in accordance with this Section 13.7.

ARTICLE 14 TERMINATION OR SUSPENSION OF THE CONTRACT

§ 14.1 TERMINATION BY THE CONTRACTOR

§ 14.1.1 The Contractor may terminate the Contract if the Work is stopped for a period of 30 consecutive days through no act or fault of the Contractor or a Subcontractor, Sub-subcontractor or their agents or employees or any other persons or entities performing portions of the Work under direct or indirect contract with the Contractor, for any of the following reasons:

.1 Issuance of an order of a court or other public authority having jurisdiction that requires all Work to be stopped;

.2 An act of government, such as a declaration of national emergency that requires all Work to be stopped; or

.3 Because the Design Agent has not issued a Certificate for Payment and has not notified the Contractor of the reason for withholding certification as provided in Section 9.4.1

.

(Paragraph deleted)

§ 14.1.Intentionally omitted.

§ 14.1.3 If one of the reasons described in Section 14.1.1 exists, the Contractor may, upon seven days' written notice to the Owner and Design Agent, terminate the Contract and recover from the Owner payment for Work executed.

§ 14.1.4 If the Work is stopped for a period of 60 consecutive days through no act or fault of the Contractor or a Subcontractor or their agents or employees or any other persons performing portions of the Work under contract with the Contractor because the Owner has repeatedly failed to fulfill the Owner's obligations under the Contract Documents with respect to matters important to the progress of the Work, the Contractor may, upon seven additional days' written notice to the Owner and the Design Agent, terminate the Contract and recover from the Owner as provided in Section 14.1.3.

AIA Document A201™ – 2007. Copyright © 1911, 1915, 1918, 1925, 1937, 1951, 1958, 1961, 1963, 1966, 1970, 1976, 1987, 1997 and 2007 by The American Institute of Architects. **All rights reserved. WARNING: This AIA® Document is protected by U.S. Copyright Law and International Treaties. Unauthorized reproduction or distribution of this AIA® Document, or any portion of it, may result in severe civil and criminal penalties, and will be prosecuted to the maximum extent possible under the law.** This document was produced by AIA software at 17:53:56 on 05/14/2015 under Order No.7624003807_1 which expires on 12/30/2015, and is not for resale.
User Notes: (1514492495)

§ 14.2 TERMINATION BY THE OWNER FOR CAUSE

§ 14.2.1 The Owner may terminate the Contract if the Contractor

- **.1** refuses or fails to supply enough properly skilled workers or proper materials;
- **.2** fails to make payment to Subcontractors for materials or labor in accordance with the respective agreements between the Contractor and the Subcontractors;
- **.3** disregards or fails to comply with applicable laws, statutes, ordinances, codes, rules and regulations, or lawful orders of a public authority; or
- **.4** otherwise is guilty of a breach of or fails to comply with a provision of the Contract Documents.

§ 14.2.2 When any of the above reasons exist, the Owner, upon certification by the Initial Decision Maker that sufficient cause exists to justify such action, may without prejudice to any other rights or remedies of the Owner and after giving the Contractor and the Contractor's surety, if any, seven days' written notice, terminate employment of the Contractor and may, subject to any prior rights of the surety:

- **.1** Exclude the Contractor from the site and take possession of all materials, equipment, tools, and construction equipment and machinery thereon owned by the Contractor;
- **.2** Accept assignment of subcontracts pursuant to Section 5.4; and
- **.3** Finish the Work by whatever reasonable method the Owner may deem expedient. Upon written request of the Contractor, the Owner shall furnish to the Contractor a detailed accounting of the costs incurred by the Owner in finishing the Work.

§ 14.2.3 When the Owner terminates the Contract for one of the reasons stated in Section 14.2.1, the Contractor shall not be entitled to receive further payment until the Work is finished.

§ 14.2.4 If the unpaid balance of the Contract Sum exceeds costs of finishing the Work, including compensation for the Design Agent's services and expenses made necessary thereby, and other damages incurred by the Owner and not expressly waived, such excess shall be paid to the Contractor. If such costs and damages exceed the unpaid balance, the Contractor shall pay the difference to the Owner. The amount to be paid to the Contractor or Owner, as the case may be, shall be certified by the Initial Decision Maker, upon application, and this obligation for payment shall survive termination of the Contract.

§ 14.3 SUSPENSION BY THE OWNER FOR CONVENIENCE

§ 14.3.1 The Owner may, without cause, order the Contractor in writing to suspend, delay or interrupt the Work in whole or in part for such period of time as the Owner may determine.

§ 14.3.2 Intentionally omitted. The Owner shall not be liable to the Contractor or any Subcontractor for claims or damages of any nature caused by or arising out of any delays. The sole remedy against the Owner for delays shall be the allowance of additional time for completion of the Work.

§ 14.4 TERMINATION BY THE OWNER FOR CONVENIENCE

§ 14.4.1 The Owner may, at any time, terminate the Contract for the Owner's convenience and without cause.

§ 14.4.2 Upon receipt of written notice from the Owner of such termination for the Owner's convenience, the Contractor shall

- **.1** cease operations as directed by the Owner in the notice;
- **.2** take actions necessary, or that the Owner may direct, for the protection and preservation of the Work; and
- **.3** except for Work directed to be performed prior to the effective date of termination stated in the notice, terminate all existing subcontracts and purchase orders and enter into no further subcontracts and purchase orders.

§ 14.4.3 In case of such termination for the Owner's convenience, the Contractor shall be entitled to receive payment for Work executed, and costs incurred by reason of such termination.

AIA Document A201™ – 2007. Copyright © 1911, 1915, 1918, 1925, 1937, 1951, 1958, 1961, 1963, 1966, 1970, 1976, 1987, 1997 and 2007 by The American Institute of Architects. **All rights reserved. WARNING: This AIA® Document is protected by U.S. Copyright Law and International Treaties. Unauthorized reproduction or distribution of this AIA® Document, or any portion of it, may result in severe civil and criminal penalties, and will be prosecuted to the maximum extent possible under the law.** This document was produced by AIA software at 17:53:56 on 05/14/2015 under Order No.7624003807_1 which expires on 12/30/2015, and is not for resale.
User Notes: (1514492495)

ARTICLE 15 CLAIMS AND DISPUTES

§ 15.1 CLAIMS

§ 15.1.1 DEFINITION

A Claim is a demand or assertion by one of the parties seeking, as a matter of right, payment of money, or other relief with respect to the terms of the Contract. The term "Claim" also includes other disputes and matters in question between the Owner and Contractor arising out of or relating to the Contract. The responsibility to substantiate Claims shall rest with the party making the Claim.

§ 15.1.2 NOTICE OF CLAIMS

Claims by either the Owner or Contractor must be initiated by written notice to the other party and to the Initial Decision Maker with a copy sent to the Design Agent. Claims by either party must be initiated within 21 days after occurrence of the event giving rise to such Claim or within 21 days after the claimant first recognizes the condition giving rise to the Claim, whichever is later.

§ 15.1.3 CONTINUING CONTRACT PERFORMANCE

Pending final resolution of a Claim, except as otherwise agreed in writing or as provided in Section 9.7 and Article 14, the Contractor shall proceed diligently with performance of the Contract and the Owner shall continue to make payments in accordance with the Contract Documents. The Design Agent will prepare Change Orders and issue Certificates for Payment in accordance with the decisions of the Initial Decision Maker.

§ 15.1.4 CLAIMS FOR ADDITIONAL COST

If the Contractor wishes to make a Claim for an increase in the Contract Sum, written notice as provided herein shall be given before proceeding to execute the Work. Prior notice is not required for Claims relating to an emergency endangering life or property arising under Section 10.4.

§ 15.1.5 CLAIMS FOR ADDITIONAL TIME

§ 15.1.5.1 If the Contractor wishes to make a Claim for an increase in the Contract Time, written notice as provided herein shall be given. The Contractor's Claim shall include an estimate of cost and of probable effect of delay on progress of the Work. In the case of a continuing delay, only one Claim is necessary.

§ 15.1.5.2 If adverse weather conditions are the basis for a Claim for additional time, such Claim shall be documented by data substantiating that weather conditions were abnormal for the period of time, could not have been reasonably anticipated and had an adverse effect on the scheduled construction.

§ 15.1.5.3 Claims for increase in the Contract Time shall set forth in detail the circumstances that form the basis for the Claim, the date upon which each cause of delay began to affect the progress of the Work, the date upon which each cause of delay ceased to affect the progress of the Work and the number of days' increase in the Contract Time claimed as a consequence of each such cause of delay. The Contractor shall provide such supporting documentation as the Owner may require including, where appropriate, a revised construction schedule indicating all the activities affected by the circumstances forming the basis of the Claim.

§ 15.1.5.4 The Contractor shall not be entitled to a separate increase in the Contract Time for each one of the number of causes of delay which may have concurrent or interrelated effects on the progress of the Work, or for concurrent delays due to the fault of the Contractor.

§ 15.1.6 CLAIMS FOR CONSEQUENTIAL DAMAGES

The Contractor waives Claims against the Owner for consequential damages arising out of or relating to this Contract. This waiver includes

(Paragraphs deleted)

damages incurred by the Contractor for principal office expenses including the compensation of personnel stationed there, for losses of financing, business and reputation, and for loss of profit except anticipated profit arising directly from the Work. This wiver is applicable, without limitation, to all consequential damages due to the Owner's termination in accordance with Article 14. Nothing contained in this Section 15.1.6 shall be deemed to preclude an award of liquidated damages, when applicable, in accordance with the requirements of the Contract Documents.

AIA Document A201™ – 2007. Copyright © 1911, 1915, 1918, 1925, 1937, 1951, 1958, 1961, 1963, 1966, 1970, 1976, 1987, 1997 and 2007 by The American Institute of Architects**. All rights reserved. WARNING: This AIA® Document is protected by U.S. Copyright Law and International Treaties. Unauthorized reproduction or distribution of this AIA® Document, or any portion of it, may result in severe civil and criminal penalties, and will be prosecuted to the maximum extent possible under the law.** This document was produced by AIA software at 17:53:56 on 05/14/2015 under Order No.7624003807_1 which expires on 12/30/2015, and is not for resale.

User Notes: (1514492495)

§ 15.2 INITIAL DECISION

§ 15.2.1 Claims shall be referred to the Initial Decision Maker for initial decision. The Purchasing Agent appointed pursuant to the provisions of the "State Purchases Act," R.I. Gen. Laws § 37-2-1 et seq., will serve as the Initial Decision Maker in accordance with the provisions of the State Purchases Act, State of Rhode Island Procurement Regulations, and this Section 15.2.An initial decision shall be required as a condition precedent to mediation and binding dispute resolution of any Claim arising prior to the date final payment is due, unless 30 days have passed after the Claim has been referred to the Initial Decision Maker with no decision having been rendered.

§ 15.2.2 The Initial Decision Maker will review Claims and within ten days of the receipt of a Claim take one or more of the following actions: (1) request additional supporting data from the claimant or a response with supporting data from the other party, (2) reject the Claim in whole or in part, (3) approve the Claim, (4) suggest a compromise, or (5) advise the parties that the Initial Decision Maker is unable to resolve the Claim if the Initial Decision Maker lacks sufficient information to evaluate the merits of the Claim or if the Initial Decision Maker concludes that, in the Initial Decision Maker's sole discretion, it would be inappropriate for the Initial Decision Maker to resolve the Claim.

§ 15.2.3 In evaluating Claims, the Initial Decision Maker may, but shall not be obligated to, consult with or seek information from either party or from persons with special knowledge or expertise who may assist the Initial Decision Maker in rendering a decision. The Initial Decision Maker may request the Owner to authorize retention of such persons at the Owner's expense.

§ 15.2.4 If the Initial Decision Maker requests a party to provide a response to a Claim or to furnish additional supporting data, such party shall respond, within ten days after receipt of such request, and shall either (1) provide a response on the requested supporting data, (2) advise the Initial Decision Maker when the response or supporting data will be furnished or (3) advise the Initial Decision Maker that no supporting data will be furnished. Upon receipt of the response or supporting data, if any, the Initial Decision Maker will either reject or approve the Claim in whole or in part.

§ 15.2.5 The Initial Decision Maker will render an initial decision approving or rejecting the Claim, or indicating that the Initial Decision Maker is unable to resolve the Claim. This initial decision shall (1) be in writing; (2) state the reasons therefor; and (3) notify the parties and the Design Agent of any change in the Contract Sum or Contract Time or both. The initial decision shall be final and binding on the parties but subject to mediation and, if the parties fail to resolve their dispute through mediation, to binding dispute resolution.

§ 15.2.6 Either party may apply for mediation of an initial decision at any time, subject to the terms of Section 15.2.6.1.

§ 15.2.6.1 Either party may, within 30 days from the date of an initial decision, apply in writing to the Presiding Justice of the Providence County Superior Court, with a copy to the other parties, with a request for the court to appoint a mediator, and the costs of the mediator shall be borne equally by all of the parties.

§ 15.2.7 In the event of a Claim against the Contractor, the Owner may, but is not obligated to, notify the surety, if any, of the nature and amount of the Claim. If the Claim relates to a possibility of a Contractor's default, the Owner may, but is not obligated to, notify the surety and request the surety's assistance in resolving the controversy.

§ 15.2.8 Intentionally omitted.

§ 15.3 MEDIATION

§ 15.3.1 Claims, disputes, or other matters in controversy arising out of or related to the Contract except those waived as provided for in Sections 9.10.4, 9.10.5, and 15.1.6 shall be subject to mediation as a condition precedent to binding dispute resolution.

§ 15.3.2 The parties shall endeavor to resolve their Claims by mediation which shall be administered by the Presiding Justice of the Providence County Superior Court. A request for mediation shall be made in writing, delivered to the other party to the Contract, and filed with the court. The request may be made concurrently with the filing of binding dispute resolution proceedings but, in such event, mediation shall proceed in advance of binding dispute resolution proceedings, which shall be stayed pending mediation for a period of 60 days from the date of filing, unless stayed for a longer period by agreement of the parties or court order. If an arbitration is stayed pursuant

AIA Document A201™ – 2007. Copyright © 1911, 1915, 1918, 1925, 1937, 1951, 1958, 1961, 1963, 1966, 1970, 1976, 1987, 1997 and 2007 by The American Institute of Architects. **All rights reserved. WARNING: This AIA® Document is protected by U.S. Copyright Law and International Treaties. Unauthorized reproduction or distribution of this AIA® Document, or any portion of it, may result in severe civil and criminal penalties, and will be prosecuted to the maximum extent possible under the law.** This document was produced by AIA software at 17:53:56 on 05/14/2015 under Order No.7624003807_1 which expires on 12/30/2015, and is not for resale.
User Notes: (1514492495)

to this Section 15.3.2, the parties may nonetheless proceed to the selection of the arbitrator(s) and agree upon a schedule for later proceedings.

§ 15.3.3 The parties shall share the mediator's fee and any filing fees equally. The mediation shall be held in the place where the Project is located, unless another location is mutually agreed upon. Agreements reached in mediation shall be enforceable as settlement agreements in any court having jurisdiction thereof.

§ 15.4 Intentionally Omitted.
(Paragraphs deleted)
§ 15.4.4 CONSOLIDATION OR JOINDER
§ 15.4.4.1 Either party, at its sole discretion, may consolidate an arbitration conducted under this Agreement with any other arbitration to which it is a party provided that (1) the arbitration agreement governing the other arbitration permits consolidation, (2) the arbitrations to be consolidated substantially involve common questions of law or fact, and (3) the arbitrations employ materially similar procedural rules and methods for selecting arbitrator(s).

§ 15.4.4.2 Either party, at its sole discretion, may include by joinder persons or entities substantially involved in a common question of law or fact whose presence is required if complete relief is to be accorded in arbitration, provided that the party sought to be joined consents in writing to such joinder. Consent to arbitration involving an additional person or entity shall not constitute consent to arbitration of any claim, dispute or other matter in question not described in the written consent.

§ 15.4.4.3 The Owner and Contractor grant to any person or entity made a party to an arbitration conducted under this Section 15.4, whether by joinder or consolidation, the same rights of joinder and consolidation as the Owner and Contractor under this Agreement.

§ 16 COMPLIANCE WITH APPLICABLE LAW

The Contractor and its Subcontractors shall comply with all applicable federal, state, and local laws.

AIA Document A201™ – 2007. Copyright © 1911, 1915, 1918, 1925, 1937, 1951, 1958, 1961, 1963, 1966, 1970, 1976, 1987, 1997 and 2007 by The American Institute of Architects**. All rights reserved. WARNING: This AIA® Document is protected by U.S. Copyright Law and International Treaties. Unauthorized reproduction or distribution of this AIA® Document, or any portion of it, may result in severe civil and criminal penalties, and will be prosecuted to the maximum extent possible under the law.** This document was produced by AIA software at 17:53:56 on 05/14/2015 under Order No.7624003807_1 which expires on 12/30/2015, and is not for resale.
User Notes: (1514492495)

SECTION 01 1000
SUMMARY OF WORK

PART 1 - GENERAL

1.1 DESCRIPTION OF WORK

A. Overview: Vendor to supply all labor, materials and equipment required to perform improvements to the CCRI Warwick Campus, Jacoby Observatory in accordance with the CCRI Observatory Furniture Contract Documents, including the specifications and/or drawings listed in the Project Manual. Work shall include, but is not limited to, the following repairs:

1. Millwork:
   a. Fabricate and install new custom Observatory furniture.
      i. Control Desk
      ii. Work Station
      iii. Bench Seating
2. Associated work:
   a. Demolition as required to complete new work.
   b. Install floor grommets and run control wiring below floor platform.

B. General Requirements:

1. Contractor shall perform the Work of the Contract under a stipulated sum Contract with the Owner in accordance with the Conditions of Contract.
2. Vendor is responsible for obtaining and paying for any required Local and State licenses, Permits and inspections.
3. Contractor to include all Bond costs in their Bid.
4. All onsite workers are to be OSHA 10 certified. Copies of this certification along with driver licenses are required on the first day of work.
5. All completed work must be inspected and approved by the College and the Architect.
6. Vendor and/or its subcontractors are to be licensed as required by RI Department of Labor.

1.2 ALTERNATES

A. None.
   1. N/A.

1.3 CONTRACTOR'S USE OF SITE AND PREMISES

A. Owner intends to fully occupy the facility during the period of construction.

B. Construction Operations: Limited to areas within the building as agreed with the College. Coordinate with Owner to insure delivery and completion per the schedule. Include all costs of this coordination, including all premium time wages that may be required to meet these requirements, in the Base bid.

C. Provide access to and from site as required by law and by Owner:

1. Building Entrance and Emergency Exits during Construction: Keep the main entrance of the building open throughout the project. Allow all exits required by code to remain open during

construction period; provide temporary exit signs if exit routes are temporarily altered.

2. Do not obstruct roadways, sidewalks, or other public ways without permission from the Owner.

D. Utility Outages and Shutdown:

1. Do not disrupt or shut down life safety systems, including but not limited to fire alarm system, without 7 days' notice to Owner and authorities having jurisdiction.
2. Prevent accidental disruption of utility services to other facilities. Any and all shutdowns to occur during third shift.
3. Do not disrupt building control wiring or fire alarm wiring passing through the area of work.

E. Protect all existing surfaces from damages. Any damages to the existing surfaces requiring replacement and or repair will be at this vendor's expense.

F. At all times and at the completion of the Project, construction areas are to be kept in a clean, safe and acceptable condition on a daily basis.

G. Vendor is responsible for removing all project debris off site daily including all costs associated with waste containers and proper disposal of waste. The College will provide an exterior location for the temporary placement of a waste container.

H. Vendor is to have all equipment necessary to perform the installation and service including, tools, staging, lift truck, etc. No CCRI equipment or tools will be available.

I. Provide locking security barriers sufficient to prevent access to the building. Provide dust protection to the building interior to ensure existing surfaces are unaffected by the work.

J. Vendor is responsible for protecting existing equipment from damage.

K. No onsite project directory or contractor sign allowed.

L. Vendor to bring material directly to site. No deliveries are allowed at the College loading dock.

1.4 ITEMS PROVIDED BY OWNER INSTALLED BY CONTRACTOR

A. None.

1.5 WORK BY OWNER

A. Items noted NIC (Not in Contract) will be supplied and installed by Owner before Substantial Completion. Some items include:

1. Owner will remove stored materials prior to the start of construction.

1.6 OWNER REQUIRED SUBCONTRACTORS

A. None

1.7 ITEMS TO BE SALVAGED

A. None

1.8 HAZARDOUS MATERIALS

A. No hazardous materials were discovered in the preconstruction investigation.

PART 2 PRODUCTS - NOT USED

PART 3 EXECUTION - NOT USED

END OF SECTION

SECTION 01 2000
PRICE AND PAYMENT PROCEDURES

PART 1 - GENERAL

1.1 SECTION INCLUDES

A. Schedule of values.

B. Applications for payment.

C. Warranty Inspection Retainage.

D. Sales Tax Exemption.

E. Change procedures.

F. Defect assessment.

G. Alternates

H. Unit Prices

1.2 SCHEDULE OF VALUES

A. Submit a printed schedule on AIA Form G703 - Application and Certificate for Payment Continuation Sheet

1.3 APPLICATIONS FOR PAYMENT

A. Submit each application on an original copyrighted AIA Form G702 - Application and Certificate for Payment and AIA G703 - Continuation Sheet, accompanied by three copies.
   1. Individually sign and notarize, and emboss with notary's official seal, the original and each of the three copies.
   2. Applications not including original copyrighted AIA G702, and G703 Forms, will be rejected, and returned for resubmittal.
   3. Applications not properly signed and notarized will be rejected, and returned for re-submittal.

B. Content and Format: Utilize Schedule of Values for listing items in Application for Payment.

C. Provide one copy of the updated construction schedule with each Application for Payment submission.
   1. Provide a statement signed by the Contractor's firm principal certifying that there are no unidentified outstanding claims for delay.

D. Include with each monthly Application for Payment, following the first application, one copy of the Certified Monthly Payroll Record for the previous month's pay period.

E. Payment Period: Submit at intervals stipulated in the Agreement.

F. Submit with transmittal letter as specified for Submittals in Section 01 33 00.

G. Beginning with the second Application for Payment, Contractor's right to payment must be substantiated by documenting, on a copy of the Waiver of Lien Form included in Document 00 61 40 - Waiver of Lien Form in this Project Manual, that payment monies due, less retainage not exceeding ten percent, have been paid in full to subcontractor and suppliers for work, materials, or rental of equipment billed for under specific line item numbers in the immediately preceding application.

H. Substantiating Data: When the Architect requires substantiating information, submit data justifying dollar amounts in question. Include the following with the Application for Payment:
   1. Record Documents as specified in Section 01780, for review by the Owner which will be returned to the Contractor.
   2. Affidavits attesting to off-site stored products.
   3. Construction progress schedules, revised and current as specified in Section 01 30 00.

1.4 SALES TAX EXEMPTION

A. Owner is exempt from sales tax on products permanently incorporated in Work of the Project.
   1. Obtain sales tax exemption certificate number from Owner.
   2. Place exemption certificate number on invoice for materials incorporated in the Work of the Project.
   3. Furnish copies of invoices to Owner.
   4. Upon completion of Work, file a notarized statement with Owner that all purchases made under exemption certificate were entitled to be exempt.
   5. Pay legally assessed penalties for improper use of exemption certificate number.

1.5 CHANGE PROCEDURES

A. Submittals: Submit name of the individual authorized to receive change documents, and be responsible for informing others in Contractor's employ or Subcontractors of changes to the Work.

B. The Architect will advise of minor changes in the Work not involving an adjustment to Contract Sum or Contract Time by issuing supplemental instructions on AIA Form G710

C. The Architect may issue a Proposal Request which includes a detailed description of a proposed change with supplementary or revised Drawings and specifications, a change in Contract Time for executing the change with a stipulation of any overtime work required and the period of time during which the requested price will be considered valid. Contractor will prepare and submit an estimate within 15 days.

D. The Contractor may propose changes by submitting a request for change to the Architect, describing the proposed change and its full effect on the Work. Include a statement describing the reason for the change, and the effect on the Contract Sum and Contract Time with full documentation, and a statement describing the effect on Work by separate or other Contractors. Document any requested substitutions in accordance with Section 01 60 00.

E. Stipulated Sum Change Order: Based on Proposal Request, and Contractor's fixed price quotation, or Contractor's request for a Change Order as approved by Architect.

F. Unit Price Change Order: For contract unit prices and quantities, the Change Order will be executed on a fixed unit price basis. For unit costs or quantities of units of work which are not pre-determined, execute the Work under a Construction Change Directive. Changes in the Contract Sum or Contract Time will be computed as specified for a Time and Material Change Order.

G. Construction Change Directive: Architect may issue a directive, on AIA Form G713 Construction Change Directive signed by the Owner, instructing the Contractor to proceed with a change in the Work, for subsequent inclusion in a Change Order. Document will describe changes in the Work, and designate method of determining any change in the Contract Sum or Contract Time. Promptly execute the change.

H. Time and Material Change Order: Submit an itemized account and supporting data after completion of the change, within the time limits indicated in the Conditions of the Contract. The Architect will determine the change allowable in the Contract Sum and Contract Time as provided in the Contract Documents.

I. Maintain detailed records of work done on a Time and Material basis. Provide full information required for an evaluation of the proposed changes, and to substantiate costs for the changes in the Work.

J. Document each quotation for a change in cost or time with sufficient data to allow an evaluation of the quotation. Provide detailed breakdown of costs and estimates for labor and materials including a detailed breakdown for subcontractor's or vendor's Work. Include copies of written quotations from subcontractors or vendors.

K. Change Order Forms: AIA G701 Change Order.

L. Execution of Change Orders: The Architect will issue Change Orders for signatures of the parties as provided in the Conditions of the Contract.

M. Correlation of Contractor Submittals:
   1. Promptly revise the Schedule of Values and the Application for Payment forms to record each authorized Change Order as a separate line item and adjust the Contract Sum.
   2. Promptly revise progress schedules to reflect any change in the Contract Time, revise sub-schedules to adjust times for any other items of work affected by the change, and resubmit.

3. Promptly enter changes in the Project Record Documents.

1.6 DEFECT ASSESSMENT

A. Replace the Work, or portions of the Work, not conforming to specified requirements.

B. If, in the opinion of the Architect, it is not practical to remove and replace the Work, the Architect will direct an appropriate remedy or adjust payment.

C. The defective Work may remain, but the unit sum will be adjusted to a new sum at the discretion of the Architect.

D. The defective Work will be partially repaired to the instructions of the Architect, and the unit sum will be adjusted to a new sum at the discretion of the Architect.

E. The individual Specification Sections may modify these options or may identify a specific formula or percentage sum reduction.

F. The authority of the Architect to assess the defect and identify a payment adjustment, is final.

G. Non-Payment For Rejected Products: Payment will not be made for rejected products for any of the following:
1. Products wasted or disposed of in a manner that is not acceptable.
2. Products determined as unacceptable before or after placement.
3. Products not completely unloaded from the transporting vehicle.
4. Products placed beyond the lines and levels of the required Work.
5. Products remaining on hand after completion of the Work.
6. Loading, hauling, and disposing of rejected products.

1.7 ALTERNATES

A. Alternates quoted on Bid Forms will be reviewed and accepted or rejected in numerical order at the Owner's option. Accepted Alternates will be identified in the Purchase Order. Coordinate related work and modify surrounding work as required.

B. Refer to Section 01 1000 Summary of Work for a description of Alternates.

1.8 UNIT PRICES

A. Unit prices as included on the Bid Form will be used to adjust the quantities of work to be compensated in the Contract based on actual field conditions. Impacted scope must be viewed by the Owner or Architect and documented photographically to allow accurate quantity estimates.

END OF SECTION

SECTION 01 3000
ADMINISTRATIVE PROCEDURES

PART 1 - GENERAL

1.1 SECTION INCLUDES

A. Site Administration

B. Coordination and project conditions.

C. Preconstruction meeting.

D. Site mobilization meeting.

E. Preinstallation meeting.

1.2 SITE ADMINISTRATION

A. Maintain a daily attendance log to include the names of all project employees and guests to the site. The log sheet, or sheets, must clearly indicate the Project Name, and the name of the General Contractor. Each line in the log should allow for the name of that employee, the employee's job title (use terminology used by prevailing wage job title), and the name of that employee's employer. Each quest signing the log should indicate a brief description of the reason for the visit, the quest's employer or organization.

1.3 COORDINATION AND PROJECT CONDITIONS

A. Coordinate the scheduling, submittals, and the Work of the various Sections of the Project Manual to ensure an efficient and orderly sequence of the installation of interdependent construction elements.

B. Verify that the utility requirements and characteristics of the operating equipment are compatible with the building utilities. Coordinate the Work of the various Sections having interdependent responsibilities for installing, connecting to, and placing in service, such equipment.

C. Coordinate the space requirements, supports, and installation of the mechanical and electrical Work, which are indicated diagrammatically on the Drawings. Follow the routing shown for the pipes, ducts, and conduit, as closely as practicable; place runs parallel with the lines of the building. Utilize spaces efficiently to maximize accessibility for other installations, for maintenance, and for repairs.

D. Coordinate the completion and clean up of the Work of the separate Sections in preparation for Substantial Completion.

1.4 PRECONSTRUCTION MEETING

A. The Architect will schedule a meeting after a Purchase Order is issued to the Contractor by the CCRI Department of Purchasing.

B. Attendance Required: Owner, Architect, and Contractor.

C. Agenda:
1. Distribution of the Contract Documents.
2. Submission of a list of Subcontractors, a list of products, schedule of values, and a progress schedule.
3. Designation of the personnel representing the parties in the Contract, and the Architect.
4. The procedures and processing of the field decisions, submittals, substitutions, applications for payments, proposal requests, Change Orders, and Contract closeout procedures.
5. Scheduling.
6. Record the minutes and distribute copies within two days after the meeting to the participants, with two copies to the Architect, the Owner, the participants, and those affected by the decisions made.

1.5 SITE MOBILIZATION MEETING

A. The Architect will schedule a meeting at the Project site prior to the Contractor's occupancy.
1. Attendance Required: The Owner, Architect, Special Consultants, and, Contractor, the Contractor's Superintendent, and major Subcontractors.
2. Agenda:
a. Use of the premises by the Owner and the Contractor.

b. The Owner's requirements [and [partial] occupancy].
c. Security and housekeeping procedures.
d. Schedules.
e. Application for payment procedures.

3. Record the minutes and distribute the copies within two days after the meeting to the participants, with two copies to the Architect, Owner, participants, and those affected by the decisions made.

1.6 PREINSTALLATION MEETING

A. When required in the individual specification Sections, convene a preinstallation meeting at the site prior to commencing the Work of the Section.

B. Require attendance of the parties directly affecting, or affected by, the Work of the specific Section.

C. Notify the Architect four days in advance of the meeting date.

D. Prepare an agenda and preside at the meeting:
1. Review the conditions of installation, preparation and installation procedures.
2. Review coordination with the related work.
3. Record the minutes and distribute the copies within two days after the meeting to the participants, with two copies to the Architect, Owner, participants, and those affected by the decisions made.

END OF SECTION

SECTION 01 3300
SUBMITTAL PROCEDURES

PART 1 - GENERAL

1.1 SECTION INCLUDES

A. Construction progress schedules.

B. Proposed products list.

C. Product data.

D. Shop drawings.

E. Samples.

F. Design data.

G. Test reports.

H. Certificates.

I. Manufacturer's instructions.

J. Manufacturer's field reports.

1.2 CONSTRUCTION PROGRESS SCHEDULES

A. Submit preliminary outline Schedules within 5 days after the date of receipt of a Purchase Order from CCRI Department of Purchasing for coordination with the Owner's requirements. After a review, submit detailed schedules within 5 days modified to accommodate the revisions recommended by the Architect.

B. Show a complete sequence of construction by activity, identifying the Work of separate stages and other logically grouped activities. Indicate the early and late start, the early and late finish, float dates, and the duration.

1.3 PRODUCT DATA

A. Product Data: Submit to the Architect for review for the limited purpose of checking for conformance with the information given and the design concept expressed in the Contract Documents. Provide copies and distribute in accordance with the SUBMITTAL PROCEDURES article and for the record documents purposes described in Section 01 78 00.

B. Submit the number of copies which the Contractor requires, plus two copies the Architect will retain.

C. Mark each copy to identify the applicable products, models, options, and other data. Supplement the manufacturers' standard data to provide the information specific to this Project.

D. Indicate the product utility and electrical characteristics, the utility connection requirements, and the location of utility outlets for service for functional equipment and appliances.

E. After a review distribute in accordance with the Submittal Procedures article above and provide copies for record documents described in Section 01 78 00.

1.4 SHOP DRAWINGS

A. Shop Drawings: Submit to the Architect for review for the limited purpose of checking for conformance with the information given and the design concept expressed in the Contract Documents. Produce copies and distribute in accordance with the SUBMITTAL PROCEDURES article and for the record documents purposes described in Section 01 7800.

B. Indicate the special utility and electrical characteristics, the utility connection requirements, and the location of utility outlets for service for functional equipment and appliances.

C. Submit in the form of four opaque reproductions.

1.5 SAMPLES

A. Samples: Submit to the Architect for review for the limited purpose of checking for conformance with the information given and the design concept expressed in the Contract Documents. Produce duplicates and distribute in accordance with the SUBMITTAL PROCEDURES article and for the record documents purposes described in Section 01 78 00.
   1. Submit samples to illustrate the functional and aesthetic characteristics of the product, with integral parts and attachment devices. Coordinate the sample submittals for interfacing Work.
   2. Include an identification on each sample, with the full Project information.
   3. Submit the number of samples specified in the individual specification Sections; the Architect will retain one sample.
   4. Reviewed samples, which may be used in the Work, are indicated in the individual specification Sections.
   5. Samples will not be used for testing purposes unless they are specifically stated to be in the specification Section.

1.6 DESIGN DATA

A. Submit for the Architect's knowledge as contract administrator, or for the Owner.

B. Submit for information for the limited purpose of assessing conformance with the information given and the design concept expressed in the Contract Documents.

1.7 TEST REPORTS

A. Submit simultaneously to both the Owner and Architect.

B. Submit test reports for information for the limited purpose of assessing conformance with the information given and the design concept expressed in the Contract Documents.

1.8 CERTIFICATES

A. When specified in the individual specification Sections, submit certification by the manufacturer, installation/application subcontractor, or the Contractor to the Architect, in the quantities specified for the Product Data.
   1. Indicate that the material or product conforms to or exceeds the specified requirements. Submit supporting reference data, affidavits, and certifications as appropriate.
   2. Certificates may be recent or previous test results on the material or product, but must be acceptable to the Architect.

1.9 MANUFACTURER'S INSTRUCTIONS

A. When specified in the individual specification Sections, submit printed instructions for delivery, storage, assembly, installation, start-up, adjusting, and finishing, to the Architect for delivery to the Owner in the quantities specified for Product Data.

B. Indicate the special procedures, and the perimeter conditions requiring special attention, and the special environmental criteria required for application or installation.

1.10 MANUFACTURER'S FIELD REPORTS

A. Submit reports for the Architect's benefit as contract administrator or for the Owner.

B. Submit the report in duplicate within 30 days of observation to the Architect for information.

C. Submit for information for the limited purpose of assessing conformance with the information given and the design concept expressed in the Contract Documents.

END OF SECTION

SECTION 01 4000
QUALITY REQUIREMENTS

PART 1 - GENERAL

1.1 SECTION INCLUDES

A. Quality control and control of installation.

B. Verification of Credentials and Licenses.

C. Tolerances

D. References

1.2 QUALITY CONTROL AND CONTROL OF INSTALLATION

A. Monitor a quality control over suppliers, manufacturers, products, services, site conditions, and workmanship, to produce Work of the specified quality.

B. Comply with the manufacturers' instructions, including each step in sequence.

C. When the manufacturers' instructions conflict with the Contract Documents, request a clarification from the Architect before proceeding.

D. Comply with the specified standards as a minimum quality for the Work except where more stringent tolerances, codes, or specified requirements indicate higher standards or more precise workmanship.

E. Perform the Work by persons qualified to produce the required and specified quality.

F. Verify that field measurements are as indicated on the Shop Drawings or as instructed by the manufacturer.

G. Secure products in place with positive anchorage devices designed and sized to withstand stresses, vibration, physical distortion, or disfigurement.

1.3 VERIFICATION OF CREDENTIALS AND LICENSES

A. The Owner has implemented a project management oversight process and is applying it to current construction projects at CCRI.

B. An element of this oversight process is the verification that persons employed on the project site have appropriate and current credentials and licenses in their possession, at the project site, for the work they are performing.

C. Those persons without the appropriate credentials and licenses will be subject to dismissal from the project site.

1.4 TOLERANCES

A. Monitor the fabrication and installation tolerance control of products to produce acceptable Work. Do not permit tolerances to accumulate.

B. Comply with the manufacturers' tolerances. When the manufacturers' tolerances conflict with the Contract Documents, request a clarification from the Architect before proceeding.

C. Adjust products to appropriate dimensions; position before securing products in place.

1.5 REFERENCES

A. For products or workmanship specified by association, trade, or other consensus standards, comply with requirements of the standard, except when more rigid requirements are specified or are required by applicable codes.

B. Conform to reference standard by the date of issue current on the date of the Contract Documents, except

where a specific date is established by code.

C. Obtain copies of the standards where required by the product specification Sections.

D. When the specified reference standards conflict with the Contract Documents, request a clarification from the Architect before proceeding.

E. Neither the contractual relationships, duties, or responsibilities of the parties in the Contract, nor those of the Architect, shall be altered from the Contract Documents by mention or inference otherwise in reference documents.

END OF SECTION

SECTION 01 6000
PRODUCT REQUIREMENTS

PART 1 GENERAL

1.1 SECTION INCLUDES

A. Transportation, handling, storage and protection.

B. Product option requirements.

C. Substitution limitations and procedures.

1.2 SUBMITTALS

A. Product Data Submittals: Submit manufacturer's standard published data. Mark each copy to identify applicable products, models, options, and other data. Supplement manufacturers' standard data to provide information specific to this Project.

B. Shop Drawing Submittals: Prepared specifically for this Project; indicate utility and electrical characteristics, utility connection requirements, and location of utility outlets for service for functional equipment and appliances.

C. Sample Submittals: Illustrate functional and aesthetic characteristics of the product, with integral parts and attachment devices. Coordinate sample submittals for interfacing work.
1. For selection from standard finishes, submit samples of the full range of the manufacturer's standard colors, textures, and patterns.

PART 2 PRODUCTS

2.1 NEW PRODUCTS

A. Provide new products unless specifically required or permitted by the Contract Documents.

B. Do not use products having any of the following characteristics:

C. Sustainably Harvested Wood:
1. Definition: Wood-based materials include but are not limited to structural framing, dimension lumber, flooring, wood doors, finishes, and furnishings that are permanently installed in the project. Wood and wood-based products not permanently installed in the project are not included in the definition.
2. Specific Wood-Based Fabrications: Fabricate of sustainably harvested wood when so specified elsewhere.
3. Certification: Provide wood certified or labeled by an organization accredited by one of the following:
a. The Forest Stewardship Council, The Principles for Natural Forest Management; for Canada visit http://www.fsccanada.org, for the USA visit http://www.fscus.org.

2.2 PRODUCT OPTIONS

A. Products Specified by Reference Standards or by Description Only: Use any product meeting those standards or description.

B. Products Specified by Naming One or More Manufacturers: Use a product of one of the manufacturers named and meeting specifications, no options or substitutions allowed.

PART 3 EXECUTION

3.1 TRANSPORTATION AND HANDLING

A. Coordinate schedule of product delivery to designated prepared areas in order to minimize site storage time and potential damage to stored materials.

B. Transport and handle products in accordance with manufacturer's instructions.

C. Transport materials in covered trucks to prevent contamination of product and littering of surrounding areas.

D. Promptly inspect shipments to ensure that products comply with requirements, quantities are correct, and products are undamaged.

E. Provide equipment and personnel to handle products by methods to prevent soiling, disfigurement, or damage.

F. Arrange for the return of packing materials, such as wood pallets, where economically feasible.

3.2 STORAGE AND PROTECTION

A. Designate receiving/storage areas for incoming products so that they are delivered according to installation schedule and placed convenient to work area in order to minimize waste due to excessive materials handling and misapplication.

B. Store and protect products in accordance with manufacturers' instructions.

C. Store with seals and labels intact and legible.

D. Store sensitive products in weather tight, climate controlled, enclosures in an environment favorable to product.

E. For exterior storage of fabricated products, place on sloped supports above ground.

F. Cover products subject to deterioration with impervious sheet covering. Provide ventilation to prevent condensation and degradation of products.

G. Prevent contact with material that may cause corrosion, discoloration, or staining.

H. Provide equipment and personnel to store products by methods to prevent soiling, disfigurement, or damage.

I. Arrange storage of products to permit access for inspection. Periodically inspect to verify products are undamaged and are maintained in acceptable condition.

END OF SECTION

SECTION 01 7800
CLOSEOUT SUBMITTALS

PART 1 GENERAL

1.1 SECTION INCLUDES

A. Project Record Documents.

B. Operation and Maintenance Data.

C. Warranties and bonds.

1.2 RELATED REQUIREMENTS

A. Section 01 30 00 - Administrative Requirements: Submittals procedures, shop drawings, product data, and samples.

B. Individual Product Sections: Specific requirements for operation and maintenance data.

C. Individual Product Sections: Warranties required for specific products or Work.

1.3 SUBMITTALS

A. Project Record Documents: Submit documents to Architect with claim for final Application for Payment.
1. Submit (2) electronic copies and (3) print copy of all documents.

B. Operation and Maintenance Data:
1. Submit two copies of preliminary draft or proposed formats and outlines of contents before start of Work. Architect will review draft and return one copy with comments.
2. For equipment, or component parts of equipment put into service during construction and operated by Owner, submit completed documents within ten days after acceptance.
3. Submit one copy of completed documents 15 days prior to final inspection. This copy will be reviewed and returned after final inspection, with Architect comments. Revise content of all document sets as required prior to final submission.
4. Submit two sets of revised final documents in final form within 10 days after final inspection.

C. Warranties and Bonds:
1. For equipment or component parts of equipment put into service during construction with Owner's permission, submit documents within 10 days after acceptance.
2. Make other submittals within 10 days after Date of Substantial Completion, prior to final Application for Payment.
3. For items of Work for which acceptance is delayed beyond Date of Substantial Completion, submit within 10 days after acceptance, listing the date of acceptance as the beginning of the warranty period.

PART 2 PRODUCTS - NOT USED

PART 3 EXECUTION

3.1 PROJECT RECORD DOCUMENTS

A. Maintain on site one set of the following record documents; record actual revisions to the Work:
1. Drawings.
2. Specifications.
3. Addenda.
4. Change Orders and other modifications to the Contract.

B. Ensure entries are complete and accurate, enabling future reference by Owner.

C. Store record documents separate from documents used for construction.

D. Record information concurrent with construction progress.

E. Specifications: Legibly mark and record at each product section description of actual products installed, including the following:
   1. Changes made by Addenda and modifications.

F. Record Drawings: Legibly mark each item to record actual construction including:
   1. Field changes of dimension and detail.
   2. Details not on original Contract drawings.

3.2 MAINTENANCE DATA

A. For Each Product or System: List names, addresses and telephone numbers of Subcontractors and suppliers, including local source of supplies and replacement parts.

B. Product Data: Mark each sheet to clearly identify specific products and component parts, and data applicable to installation. Delete inapplicable information.

3.3 MAINTENANCE MANUALS

A. Prepare data in the form of an owner's manual.

B. Binder: Commercial quality, 8-1/2 by 11 inch three D side ring binders with durable plastic covers; 2 inch maximum ring size.

C. Contents: Prepare a Table of Contents for each volume, with each product or system description identified, in three parts as follows:
   1. Part 1: Directory, listing names, addresses, and telephone numbers of Architect, Contractor, Subcontractors, and major equipment suppliers.
   2. Part 2: Maintenance instructions, arranged by system and subdivided by specification section. For each category, identify names, addresses, and telephone numbers of Subcontractors and suppliers. Identify the following:
      a. Maintenance instructions for special finishes, including recommended cleaning methods and materials, and special precautions identifying detrimental agents.
   3. Part 3: Project documents and certificates, including the following:
      a. Shop drawings and product data.
      b. Photocopies of warranties and bonds.

3.4 WARRANTIES AND BONDS

A. Warranty period shall commence at date of substantial completion.

B. Obtain warranties and bonds, executed in duplicate by responsible Subcontractors, suppliers, and manufacturers, within 10 days after completion of the applicable item of work. Except for items put into use with Owner's permission, leave date of beginning of time of warranty until the Date of Substantial completion is determined.

C. Verify that documents are in proper form, contain full information, and are notarized.

D. Co-execute submittals when required.

E. Retain warranties and bonds until time specified for submittal.

F. Include originals of each in operation and maintenance manuals, indexed separately on Table of Contents.

END OF SECTION

SECTION 02 4100
DEMOLITION

PART 1 GENERAL

1.01 SECTION INCLUDES

A. Selective demolition of building elements for alteration purposes.

B. Abandonment and removal of existing utilities.

1.02 RELATED REQUIREMENTS

A. Section 01 1000 - Summary: Limitations on Contractor's use of site and premises.

B. Section 01 1000 - Summary: Sequencing and staging requirements.

C. Section 01 1000 - Summary: Description of items to be salvaged or removed for re-use by Contractor.

D. Section 01 6000 - Product Requirements: Handling and storage of items removed for salvage and relocation.

E. Section 01 7000 - Execution and Closeout Requirements: Project conditions; protection of bench marks, survey control points, and existing construction to remain; reinstallation of removed products; temporary bracing and shoring.

1.03 REFERENCE STANDARDS

A. 29 CFR 1926 - U.S. Occupational Safety and Health Standards; current edition.

B. NFPA 241 - Standard for Safeguarding Construction, Alteration, and Demolition Operations; 2013.

1.04 SUBMITTALS

A. See Section 01 3000 - Administrative Requirements, for submittal procedures.

B. Utilization Plan Plan: Showing:
   1. Location of dust protection.
   2. Areas for temporary construction and field offices.
   3. Areas for temporary placement of removed materials.

C. Project Record Documents: Accurately record actual locations of capped and active utilities and subsurface construction.

PART 3 EXECUTION

2.01 SCOPE

A. Remove portions of existing building as required for installation of new work and/or as shown on the Contract Documents.

B. Remove other items indicated, for salvage, relocation, and recycling.

2.02 GENERAL PROCEDURES AND PROJECT CONDITIONS

A. Comply with other requirements specified in Section 01 7000.

B. Comply with applicable codes and regulations for demolition operations and safety of adjacent structures and the public.
   1. Obtain required permits.
   2. Take precautions to prevent catastrophic or uncontrolled collapse of structures to be removed; do not allow worker or public access within range of potential collapse of unstable structures.
   3. Provide, erect, and maintain temporary barriers and security devices.
   4. Use physical barriers to prevent access to areas that could be hazardous to workers or the public.
   5. Conduct operations to minimize effects on and interference with adjacent structures and occupants.
   6. Do not close or obstruct roadways or sidewalks without permit.
   7. Conduct operations to minimize obstruction of public and private entrances and exits; do not obstruct required exits at any time; protect persons using entrances and exits from removal operations.

C. Do not begin removal until receipt of notification to proceed from Owner.

D. Do not begin removal until built elements to be salvaged or relocated have been removed.

E. Do not begin removal until vegetation to be relocated has been removed and specified measures have been taken to protect vegetation to remain.

F. Protect existing structures and other elements that are not to be removed.
   1. Provide bracing and shoring.
   2. Prevent movement or settlement of adjacent structures.
   3. Stop work immediately if adjacent structures appear to be in danger.

G. Minimize production of dust due to demolition operations; do not use water if that will result in ice, flooding, sedimentation of public waterways or storm sewers, or other pollution.

H. If hazardous materials are discovered during removal operations, stop work and notify Architect and Owner; hazardous materials include regulated asbestos containing materials, lead, PCB's, and mercury.

I. Perform demolition in a manner that maximizes salvage and recycling of materials.
   1. Dismantle existing construction and separate materials.
   2. Set aside reusable, recyclable, and salvageable materials; store and deliver to collection point or point of reuse.

J. Partial Removal of Paving and Curbs: Neatly saw cut at right angle to surface.

2.03 SELECTIVE DEMOLITION FOR ALTERATIONS

A. Drawings showing existing construction and utilities are based on casual field observation and existing record documents only.
   1. Verify that construction and utility arrangements are as shown.
   2. Report discrepancies to Architect before disturbing existing installation.
   3. Beginning of demolition work constitutes acceptance of existing conditions that would be apparent upon examination prior to starting demolition.

B. Separate areas in which demolition is being conducted from other areas that are still occupied.
   1. Provide, erect, and maintain temporary dustproof barriers as required to protect adjacent surfaces.

C. Remove existing work as indicated and as required to accomplish new work.
   1. Remove items indicated on drawings.

D. Protect existing work to remain.
   1. Prevent movement of structure; provide shoring and bracing if necessary.
   2. Perform cutting to accomplish removals neatly and as specified for cutting new work.
   3. Repair adjacent construction and finishes damaged during removal work.
   4. Patch as specified for patching new work.

2.04 DEBRIS AND WASTE REMOVAL

A. Remove debris, junk, and trash from site.

B. Leave site in clean condition, ready for subsequent work.

C. Clean up spillage and wind-blown debris from public and private lands.

END OF SECTION

SECTION 06 4100
ARCHITECTURAL WOOD CASEWORK

PART 1 GENERAL

1.01 SECTION INCLUDES

A. Specially fabricated cabinet units.

B. Cabinet hardware.

1.02 RELATED REQUIREMENTS

A. Section 06 1000 - Rough Carpentry: Support framing, grounds, and concealed blocking.

B. Section 12 3671 – Paper Composite Countertops

1.03 REFERENCE STANDARDS

A. AWI (QCP) - Quality Certification Program, www.awiqcp.org; current edition at www.awiqcp.org.

B. AWI/AWMAC/WI (AWS) - Architectural Woodwork Standards; 2014.

C. BHMA A156.9 - American National Standard for Cabinet Hardware; Builders Hardware Manufacturers Association; 2010 (ANSI/BHMA A156.9).

D. NEMA LD 3 - High-Pressure Decorative Laminates; National Electrical Manufacturers Association; 2005.

E. PS 1 - Structural Plywood; 2009.

1.04 SUBMITTALS

A. See Section 01 3000 - Administrative Requirements, for submittal procedures.

B. Shop Drawings: Indicate materials, component profiles, fastening methods, jointing details, and accessories.
   1. Minimum Scale of Detail Drawings: 1-1/2 inch to 1 foot.
   2. Provide the information required by AWI/AWMAC/WI (AWS).

C. Product Data: Provide data for hardware accessories.

D. Samples: Submit actual samples of architectural cabinet construction, minimum 12 inches square, illustrating proposed cabinet, countertop, and shelf unit substrate and finish.

1.05 QUALITY ASSURANCE

A. Fabricator Qualifications: Company specializing in fabricating the products specified in this section with minimum five years of documented experience.
   1. Company with at least one project in the past 5 years with value of woodwork within 20 percent of cost of woodwork for this Project.

1.06 DELIVERY, STORAGE, AND HANDLING

A. Protect units from moisture damage.

1.07 FIELD CONDITIONS

A. During and after installation of custom cabinets, maintain temperature and humidity conditions in building spaces at same levels planned for occupancy.

PART 2 PRODUCTS

2.01 CABINETS

A. Quality Grade: Unless otherwise indicated provide products of quality specified by AWI//AWMAC/WI (AWS) for Economy Grade.

B. Cabinets at Observatory:
   1. Finish - Exposed Exterior Surfaces: Decorative laminate.
   2. Countertop/Bench top and back – Refer to Section 12 3671
   3. Door and Drawer Front Edge Profiles: Square edge.
   4. Casework Construction Type: Frameless.
   5. Cabinet Style: Flush overlay.
   6. Cabinet Doors and Drawer Fronts: Flush style.
   7. Joining: exposed joints to be Lock Shoulder or Splined Miter.

2.02 COMPACT LAMINATES

A. Manufacturers
   1. Basis of Design: Wilsonart LLC; www.wilsonart.com
      a. Product: Compact
   2. The Diller Corporation, Formica; www.formica.com
   3. Lamin-Art, Inc.; www.laminart.com
   4. Substitutions: See Section 01 6000 - Product Requirements.

B. Wilsonart Classic Grade: Self-supporting homogenous panels finished with melamine surface. Impact-resistant design.
   1. Thickness: 0.75 inch supports, 0.50 inch doors, drawer fronts and shelving.
   2. Laminate Conformance Standard: NEMA LD 3, Grade CGS.
   3. Finish: Linearity - 18.
   4. Color and Pattern: 7949K, Asian Night.
   5. Fire Rating: Class A
   6. Edges: Sand edges to a smooth uniform finish.

2.04 ACCESSORIES

A. Adhesive: Type recommended by fabricator to suit application.

C. Fasteners: Size and type to suit application. No exposed fasteners.

D. Bolts, Nuts, Washers, Lags, Pins, and Screws: Of size and type to suit application; galvanized or chrome-plated finish in concealed locations and stainless steel or chrome-plated finish in exposed locations.

E. Concealed Joint Fasteners: Threaded steel.

2.05 HARDWARE

A. Hardware: BHMA A156.9, types as recommended by fabricator for quality grade specified.

B. Adjustable Shelf Supports: Standard side-mounted system using recessed metal shelf standards or multiple holes for pin supports and coordinated self rests, polished chrome finish, for nominal 1 inch spacing adjustments.

C. Drawer and Door Pulls: "U" shaped wire pull, steel with chrome finish, 4 inch centers.

D. Cabinet Locks: Keyed cylinder, two keys per lock, master keyed, steel with chrome finish. Provide locks on all doors and drawers.

E. Cabinet catches: Magnetic.

F. Drawer Slides:
   1. Type: Full extension.
   2. Static Load Capacity: Commercial grade.

3. Mounting: Bottom mounted.
4. Stops: Integral type.
5. Features: Provide self closing/stay closed type.
6. Manufacturer:
   a. Accuride International, Inc: www.accuride.com.
   b. Grass America Inc: www.grassusa.com.
   c. Hettich America, LP: www.hettichamerica.com.
   d. Knape & Vogt Manufacturing Company: www.knapeandvogt.com.

G. Hinges: European style concealed self-closing type, steel with polished finish.
1. Manufacturer:
   a. Grass America Inc; www.grassusa.com.
   b. Hardware Resources; www.hardwareresources.com.
   c. Hettich America, LP; Sensys: www.hettichamerica.com.
   e. Substitutions: See Section 01 6000 - Product Requirements.

2.06 TACKBOARD

A. Manufacturer: Forbo Flooring Systems, www.forboflooringna.com.
   1. Product: Bulletin Board

B. Color: 2204W.

C. Adhesive: Forbo L 910W.

D. Site Conditions: Minimum of 68 deg. F for a minimum of seven days prior to, during, and seven days after the installation

2.07 FABRICATION

A. Assembly: Shop assemble cabinets for delivery to site in units easily handled and to permit passage through building openings.

B. Edging: Fit shelves, doors, and exposed edges with specified edging. Do not use more than one piece for any single length.

C. Fitting: When necessary to cut and fit on site, provide materials with ample allowance for cutting. Provide matching trim for scribing and site cutting.

D. Plastic Laminate: Apply plastic laminate finish in full uninterrupted sheets consistent with manufactured sizes. Fit corners and joints hairline; secure with concealed fasteners. Slightly bevel arises. Locate counter butt joints minimum 2 feet from sink cut-outs.
   1. Apply laminate backing sheet to reverse side of plastic laminate finished surfaces.
   2. Cap exposed plastic laminate finish edges with material of same finish and pattern.

E. Provide cutouts for plumbing fixtures. Verify locations of cutouts from on-site dimensions. Prime paint cut edges.

PART 3 EXECUTION

3.01 EXAMINATION

A. Verify adequacy of backing and support framing.

B. Verify location and sizes of utility rough-in associated with work of this section.

3.02 INSTALLATION

A. Set and secure custom cabinets in place, assuring that they are rigid, plumb, and level.

B. Use fixture attachments in concealed locations for wall mounted components.

C. Use concealed joint fasteners to align and secure adjoining cabinet units.

D. Carefully scribe casework abutting other components, with maximum gaps of 1/32 inch. Do not use additional overlay trim for this purpose.

E. Secure cabinets to floor using appropriate angles and anchorages.

F. Countersink anchorage devices at exposed locations. Conceal with solid wood plugs of species to match surrounding wood; finish flush with surrounding surfaces.

3.03 ADJUSTING

A. Adjust installed work.

B. Adjust moving or operating parts to function smoothly and correctly.

3.04 CLEANING

A. Clean casework, counters, shelves, hardware, fittings, and fixtures.

END OF SECTION

SECTION 12 36 71
COUNTERTOPS

PART 1 GENERAL

1.01 SECTION INCLUDES
A. Countertops
B. Bench top and back

1.02 RELATED SECTIONS
A. Section 06 41 00 Architectural Wood Casework

1.03 REFERENCES
A. ASTM E84 Standard Test Method for Surface Burning Characteristics of Building Materials
B. ASTM D527 – Tensile Strength, Tensile Modulus, Elongation
C. ASTM D790 – Flexural Strength, Flexural Modulus
D. ASTM D696 – Thermal Expansion
E. NEMA LD3 Boiling Water Surface Resistance
F. NEMA LD3 High Temperature Resistance
G. NEMA LD3 Ball Drop (Impact)
H. NEMA KD3 Gloss 60 Degree Gardner
I. ASTM D785 – Hardness Test
J. ASTM D256 – Izod Impact
K. ANSI Z124 Abrasion Resistance
L. ASTM D570 Water Absorption
M. ANSI Z124 Colorfastness
N. ASTM D695 Compressive Strength
O. NSF/ANSI 51 Food Equipment Materials
P. Forest Stewardship Councel (FSC-US), Information regarding FSC in LEED projects

1.04 SUBMITTALS
A. See Section 01 30 00 – Administrative Requirements, for submittal procedures.
B. Product Data: Manufacturer's data sheets on each product to be used, including:
   1. Product description
   2. Fabrication/Installation instructions and recommendations
   3. Storage and handling requirements and recommendations
   4. Care and maintenance data
   5. Specimen warranty
C. Shop Drawings:
   1. Indicate color, thickness, and finish
   2. Indicate field-verified dimensions
   3. Indicate locations and dimensions of cutouts
D. Verification Samples: For each type of product specified, product samples (12"x12"x.75") representing actual product appearance (i.e. color and pattern)
E. Maintenance Instructions: Manufacturer's instructions and recommendations/guidelines for maintaining the surface.

1.05 QUALITY ASSURANCE
A. Fabricator Qualifications: Recommended fabricator by material manufacturer and/or distributor.
B. Installer Qualifications: Fabricator.

1.06 DELIVERY, STORAGE, AND HANDLING

A. Store products in manufacturer's unopened packaging until ready for installation.
B. Store and dispose of solvent-based materials, and materials used with solvent-based materials, in accordance with requirements of local authorities having jurisdiction.
C. Maintain environmental conditions (temperature, humidity, and ventilation) within limits recommended by manufacturer for optimum results. Do not install products under environmental conditions outside manufacturer's absolute limits.

PART 2 PRODUCTS

2.01 MANUFACTURERS

A. Basis of Design: Richlite Company: www.richlite.com
   1. Product: Northwest
B. Substitutions: Request for substitutions will be considered in accordance with provisions of Section 01600 – Product Requirements.

2.02 COUNTERTOP ASSEMBLIES

A. Countertop Assemblies: Surfaced with paper composite panel.
   1. Flat Panel Thickness: 3/4", minimum.
   2. Color: Black Diamond
   3. Exposed Edge Treatment: Same thickness as countertop.
      a. Square edge
   4. Built-up Edges and/or Aprons/Skirts: Preferred method is a “stacked built-up edge” as per manufacturer’s fabrication guidelines.
   5. Finish on Exposed Surfaces: Matte, with field-applied surface sealer.

2.03 MATERIAL

A. Paper Composite Sheets: Cellulose or hemp-fiber paper heat pressed with phenolic resin; color consistent throughout thickness.
   1. Surface Burning Characteristics: Flame spread 30, maximum; smoke developed 30, maximum; when tested in accordance with ASTM E 84.
   2. Density: 75.84 pounds per cu ft (1215 kg per cu m).
   3. Water Absorption: 0.36 percent for 1 inch (25 mm) thickness, unsealed material, 24 hour fully submerged test.
   4. Specific Gravity: 1.213.
   5. Thermal Properties:
      a. Coefficient of Thermal Expansion, X Direction: 5.2 microinches per inch degree F (9.4 microns per mm degree C).
      b. Coefficient of Thermal Expansion, Y Direction: 12.8 microinches per inch degree F (23.0 microns per mm degree C).
      c. Coefficient of Thermal Expansion, Z Direction: 45.9 microinches per inch degree F (82.7 microns per mm degree C), for span of 73.5 inches (1.87 m).
      d. Thermal Conductivity: 0.00051 Cal cm/sq cm sec degree C.
   6. Tensile Strength:
      a. X Direction: 19,200 psi (132.4 MPa).
      b. Y Direction: 13,100 psi (90.3 MPa).
   7. Compressive Strength:
      a. X Direction: 18,400 psi (126.9 MPa); 7.09 percent strain at failure.
      b. Y Direction: 15,900 psi (109.6 MPa); 7.15 percent strain at failure.
      c. Z Direction: 30,000 psi (206.8 MPa); 20 percent strain at failure.
   8. Flexural Strength, Face in Tension:
      a. X Direction: 22,000 psi (151.7 MPa).
      b. Y Direction: 17,300 psi (119.3 MPa).

9. Flexural Strength, Edge in Tension:
   a. X Direction: 20,400 psi (140.6 MPa).
   b. Y Direction: 16,100 psi (111.0 MPa).
10. Izod Impact, Face Impact:
   a. X Direction: 2.48 ft lb per inch of width (0.046 J/m of width).
   b. Y Direction: 1.46 ft lb per inch of width (0.027 J/m of width).
11. Izod Impact, Edge Impact:
   a. X Direction: 0.68 ft lb per inch of width (0.013 J/m of width).
   b. Y Direction: 0.62 ft lb per inch of width (0.012 J/m of width).

E. Adhesives
   1. Adhesives: Chemical resistant two-part epoxy waterproof adhesive as recommended by manufacturer.

F. Joint Sealant
   1. Sealant type: Mildew-resistant Silicone
   2. Sealant color: Clear

2.4 FABRICATION

A. Inspect material for defects prior to fabrication.
   1. Ensure that the material is within manufacturer's flatness tolerance.
   2. Visually inspect material to ensure that an acceptable color match is achieved.
   3. Record panel number[s] of all material for warranty purposes.

B. Fabricate in accordance to manufacturer's recommendations/guidelines. Material can be fabricated 'dry' in a similar manner as a traditional wood product, or 'wet' in a similar manner as traditional stone. *Manufacturer's Fabrication Guide clearly explains the unique differences.

C. Layout: Fabricate tops and splashes in a manner that utilizes the largest panel sizes available, thus minimizing the number of necessary seams.
   1. Where seams are necessary, ensure they are performed as per manufacturer's recommendations. *Improper seaming practices can result in structural and/or cosmetic failures.
   2. Seam placement and planning can be critical.
      a. Most colors contain a level of "mottling" which offers a subtle grain direction running lengthwise within the panels.
      b. Seams should be at natural position such as corners and midpoints as indicated in drawings.

D. Cutouts: Prepare all cutouts accurately to size. All exposed edges should be finished/polished.

E. Built-up Edges/Aprons:
   1. "Stacked" edges are preferred from both a structural and aesthetic standpoint.
   2. "Mitered" edges require additional support and attention to ensure desired aesthetic appearance.

PART 3 EXECUTION

3.01 EXAMINATION

A. Do not begin installation until substrates have been properly prepared.

B. If substrate preparation is the responsibility of another installer, notify Architect of unsatisfactory preparation before proceeding.

C. Verify that wall surfaces have been finished and mechanical and electrical services and outlets are installed in proper locations.

3.02 PREPARATION

A. Clean surfaces thoroughly prior to installation.

B. Prepare surfaces using manufacturer's recommendations.

C. Protect jobsite and surfaces against dust and water.

3.03 INSTALLATION

A. Securely attach countertops to cabinets using concealed fasteners. Make flat surfaces level; shim where required.

B. Seal joint between back/end splashes and vertical surfaces.

1. Where indicated use cove molding.
2. Where applied cove molding is not indicated use specified sealant.

3.04 CLEANING AND PROTECTION

A. Clean countertop surfaces thoroughly.

B. Protect installed products until completion of project..

C. Touch-up, repair or replace damaged products before Substantial Completion.

END OF SECTION

General Notes

1. All work shall conform to all applicable codes and regulations in effect at the project site.
2. Do not scale drawings.
3. The Contractor shall report any and all discrepancies to the Architect for clarification before proceeding.
4. Dimensions noted to existing planes shall refer to the finished surface of the wall, floor or ceiling plane. All items of work are to be new, unless noted as existing.
5. Contractors shall verify all dimensions in field before purchasing materials.
6. Typical construction is noted throughout the project. Repeated similar graphic representation is sufficient. Notes at each occurrence are not required.
7. All items detailed in section are continuous unless noted otherwise.
8. Fasteners, adhesives and other system components typically required are not consistently noted or detailed. Only unique conditions are illustrated. Provide all items required to safely secure, attach or stabilize all work as recommended or required by code, or necessary for the assemblys proper performance whether or not detailed.
9. All dimensions are to the face of concrete, masonry, wood studs and center of frame openings unless noted otherwise.
10. Refer to project specifications for additional information.

Demolition Notes

1. Protect all areas adjacent to or affected by work during construction. Provide dust containment for all work areas. Clean work area and areas affected by cutting and patching operations.
2. Refer to drawings for specific scope notes.
3. All portions of the building to be removed shall be legally disposed of off-site unless directed otherwise.
4. Should unanticipated suspected hazardous materials be encountered, Contractor shall notify Owner & Architect immediately for direction.
5. Provide cutting and patching work to properly complete the work of the project, complying with the project requirements. Do not cut and patch in a manner that would result in a failure of the work to perform as intended, decrease energy performance, increase maintenance, decrease operation life or decrease safety performance.
6. Match existing materials for cutting and patching work with new materials conforming to project requirements. Review with Owner & Architect prior to installation.
7. Inspect conditions prior to work to identify scope and type of work.
8. Cutting: Use cutting tools, not chopping tools. Make neat hole. Minimize damage to adjacent work. Inspect for concealed utilities and structure before cutting.
9. Patching: Make patches seams and joints durable and inconspicuous.
10. Review unique existing conditions found in the field during demolition w/ Architect.

400 EAST AVENUE
WARWICK RI

ABBREVATIONS

ADJ.	ADJACENT	COORD.	COORDINATE	L.C.C.	LEAD COATED COPPER	SD	SIDE
A.F.	ABOVE SUBFLOOR	DIA.	DIAMETER	MIL	MILLIMETER	SIM.	SIMILAR
A.F.F.	ABOVE FINISHED FLOOR	DN	DOWN	MIN.	MINUTE FIRERATING	STL.	STEEL
AL.	ALUMINUM	D.SPT	DOWNSPOUT	MTL.	METAL	T	TREAD
ARCH.	ARCHITECT	DTL.	DETAIL	M.O.	MASONRY OPENING	T.O.	TOP OF
ALTERN.	ALTERNATE	ELEV/EL.	ELEVATION	N.I.C.	NOT IN CONTRACT	T.O.F.	TOP OF FOOTING
&	AND	EXIST	EXISTING	N.T.S.	NOT TO SCALE	T.O.S.	TOP OF SHELF
@	AT	EXT.	EXTERIOR	O.C.	ON CENTER	T.O.W.	TOP OF WALL
B.O.F.	BOTTOM OF FOOTING	EQ	EQUAL	OPP.	OPPOSITE HAND	T.S.	TUBE STEEL
BLKG.	BLOCKING	E.V.	EXHAUST VENT	P.C.C.	PRE-CAST CONCRETE	TYP.	TYPICAL
BLUEBD.	BLUEBOARD	FIN. FLR.	FINISH FLOOR	PL.	PLATE	U.N.O.	UNLESS NOTED OTHERWISE
CL.	CENTERLINE	FLR.	FLOOR	P.T.	PRESSURE TREATED	VCT	VINYL COMPOSITION TILE
CLG.	CEILING	FND.	FOUNDATION	PTD.	PAINTED	V.I.F.	VERIFY IN FIELD
CLR.	CLEAR	GWB	GYPSUM WALLBOARD	P.V.	PLUMBING VENT	W/	WITH
C.L.L.	CONTRACT LIMIT LINE	HM	HOLLOW METAL	PWD.	PLYWOOD	WDW	WINDOW
C.O.	CASED OPENING	HT.	HEIGHT	REQ'D	REQUIRED	WD.	WOOD
COL.	COLUMN	INT.	INTERIOR	R	RISER	WSU.	WATERPROOF SHINGLE UNDERLAYMENT
CONC.	CONCRETE	INSUL.	INSULATION	R=	RADIUS		
CONT.	CONTINUOUS			R.O.	ROUGH OPENING		

GENERAL LEGEND

- #1 — REVISION #1
- ELEVATION DATUM
- 5 / A2 — EXTERIOR ELEVATION KEY
- X / A11 — SECTION KEY
- 5 / A2 — DETAIL KEY
- A6.1 / 1 — INTERIOR ELEVATION KEY
- ROOM NAME

DRAWING LIST

TITLE		DATE
COVER SHEET		09/28/15
A1.1	EXISTING AND PROPOSED FLOOR PLANS	09/28/15
A6.1	CONTROL DESK ELEVATIONS AND SECTIONS	09/28/15
A6.2	WORK STATION ELEVATION AND SECTIONS	09/28/15
A6.3	BENCH ENLARGED PLANS, ELEVATION AND SECTION	09/28/15

CVR
1508E

COVER SHEET
DATE: 01/12/16
SCALE: AS NOTED

CCRI OBSERVATORY FURNITURE
400 EAST AVENUE. WARWICK, RI 02886

BREWSTER THORNTON GROUP LLP
ARCHITECTS
150 Chestnut Street
Providence, RI
02903
Tel 401.861.1600
Fax 401.861.5588

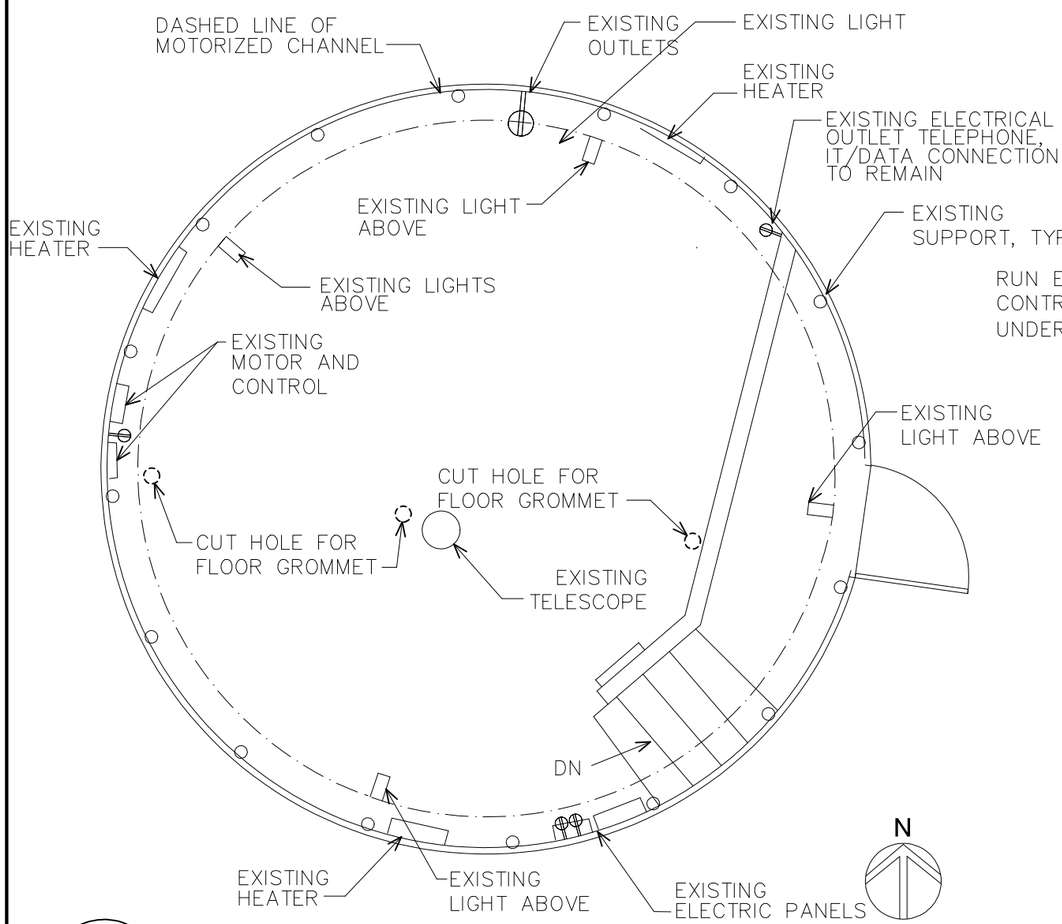

1 / A1.1 OBSERVATORY DEMOLITION PLAN

1/4" = 1'-0"

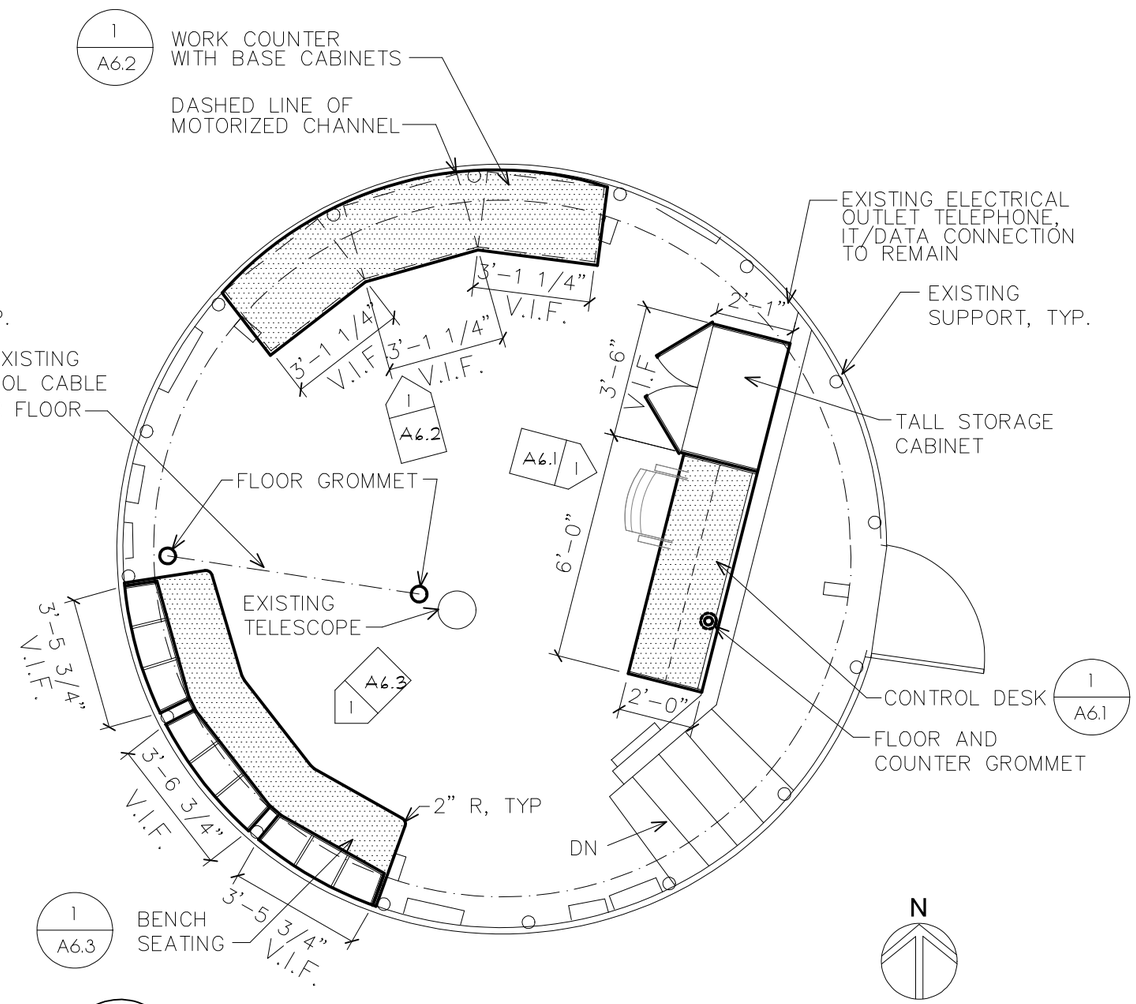

2 / A1.1 OBSERVATORY PLAN

1/4" = 1'-0"

NOTES:

1. PROVIDE FLOOR GROMMETS WITH BRUSH SEAL: KOLDLOK 40003 6" FLOOR GROMMET OR EQUAL

A1.1

1508E

EXISTING AND PROPOSED FLOOR PLANS

DATE: 01/12/16 SCALE: AS NOTED

CCRI OBSERVATORY FURNITURE

400 EAST AVENUE, WARWICK, RI 02886

BREWSTER THORNTON GROUP LLP
ARCHITECTS
150 Chestnut Street
Providence, RI
02903
Tel 401.861.1600
Fax 401.861.5588

CABINET AND COUNTER TOP NOTES:

CABINET – COMPACT P-LAM
BASE – P-LAM

COUNTER – RICHLITE NORTHWEST
SUBSTRATE – EXT. PLYWOOD

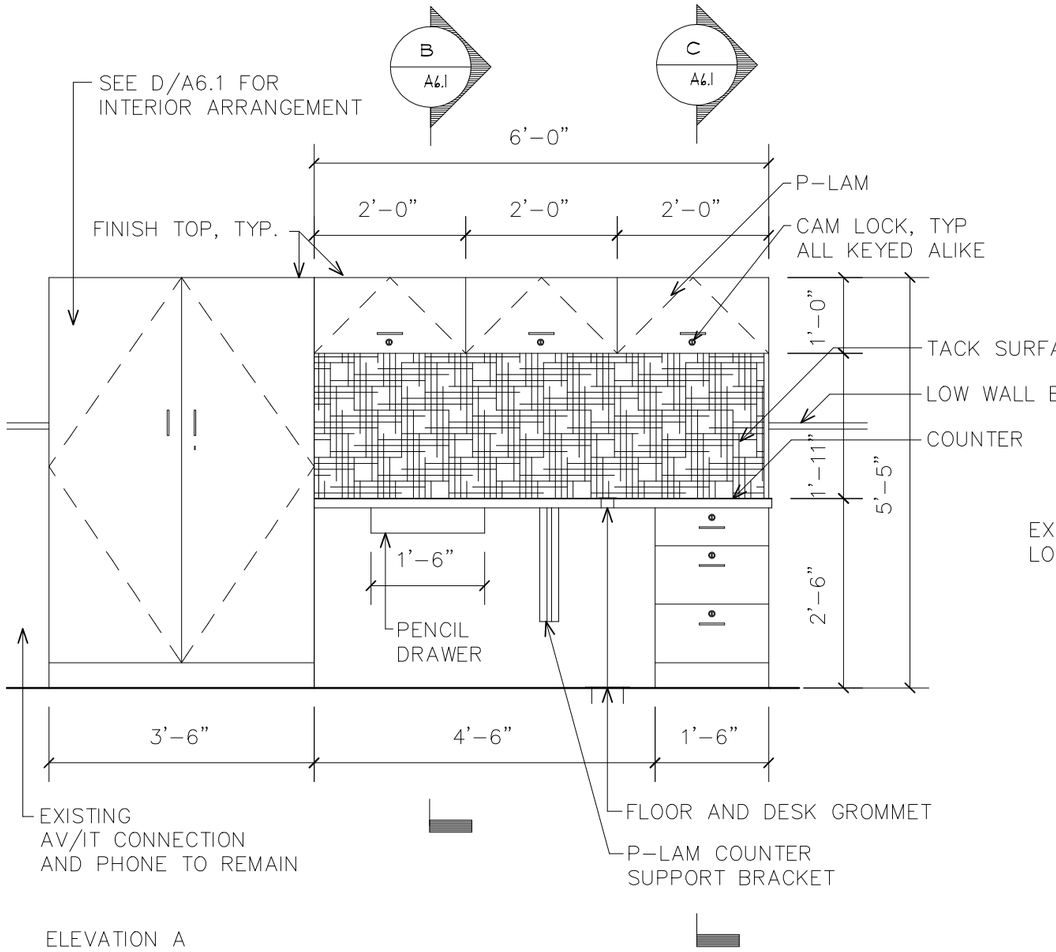

ELEVATION A

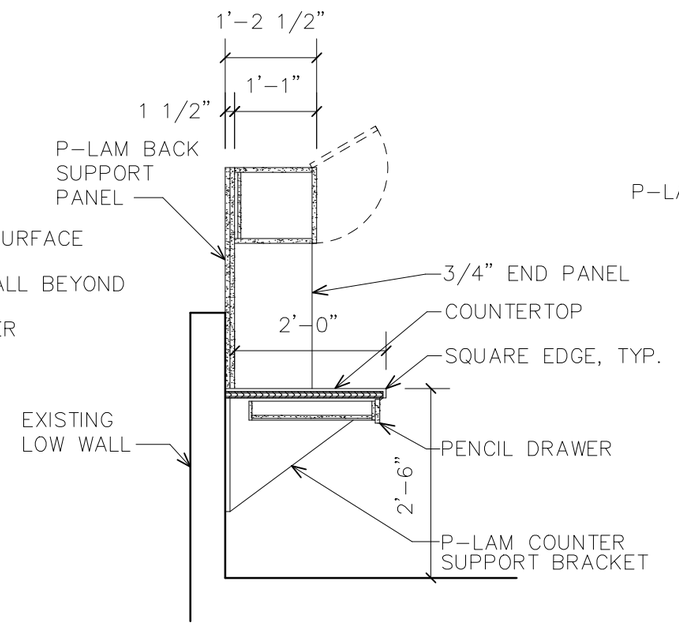

SECTION B

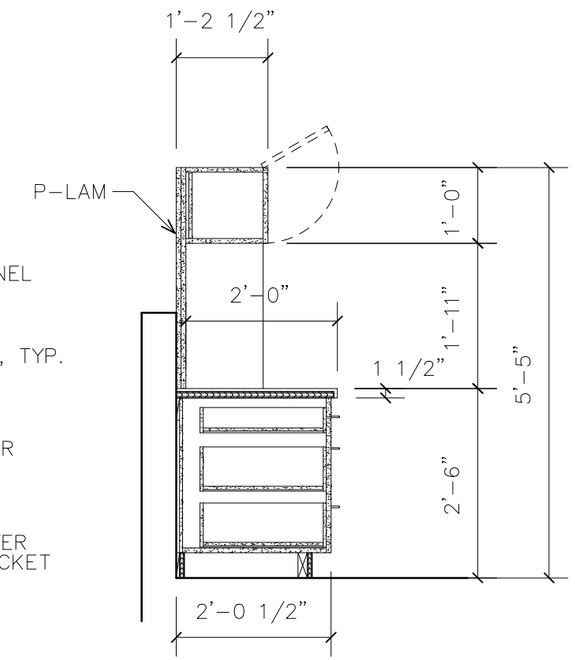

SECTION C

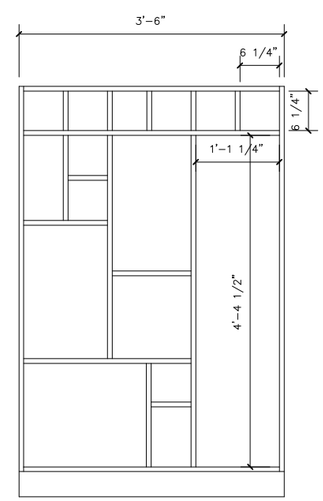

TALL CABINET INTERIOR
ELEVATION D

1 / A6.1 CONTROL DESK

1/2" = 1'-0"

A6.1

1508E

CONTROL DESK ELEVATIONS AND SECTIONS
DATE: 01/12/16 SCALE: AS NOTED

CCRI OBSERVATORY FURNITURE

400 EAST AVENUE, WARWICK, RI 02886

BREWSTER THORNTON GROUP LLP
ARCHITECTS
150 Chestnut Street
Providence, RI
02903
Tel 401.861.1600
Fax 401.861.5588

CABINET AND COUNTER TOP NOTES:

CABINET – COMPACT P-LAM
BASE – P-LAM

COUNTER – RICHLITE NORTHWEST
SUBSTRATE – EXT. PLYWOOD

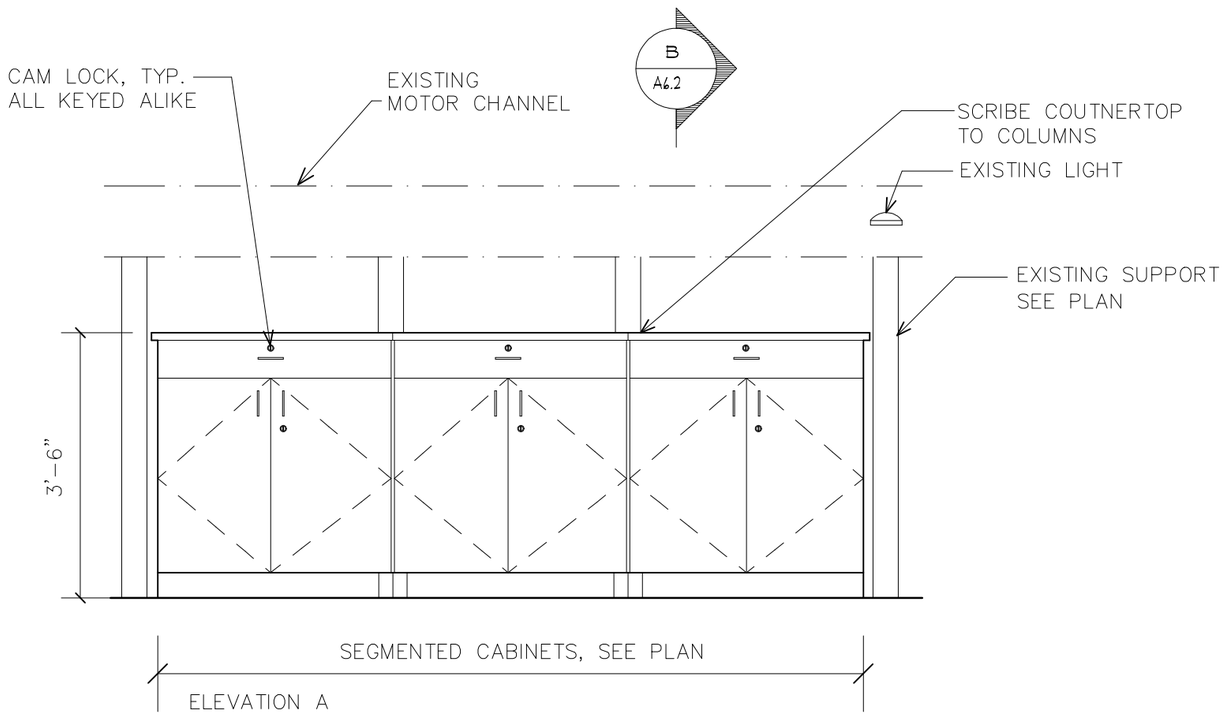

ELEVATION A

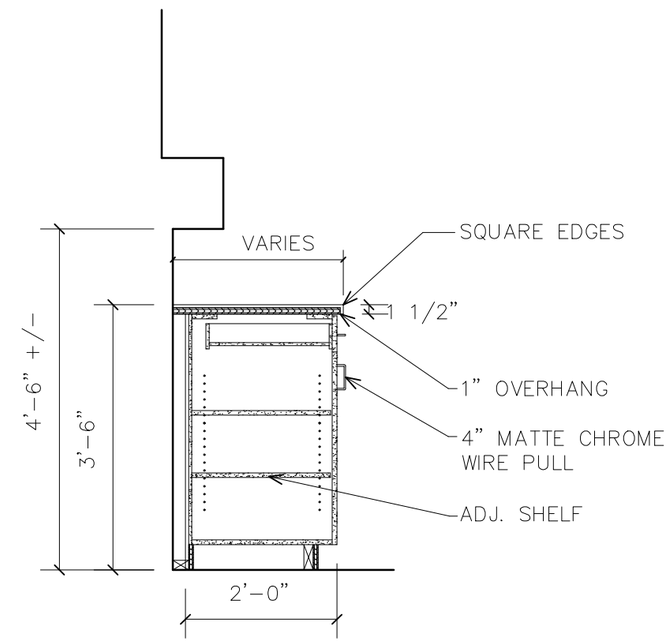

SECTION B

1 / A6.2 WORK COUNTER

1/2" = 1'-0"

A6.2

1508E

WORK STATION ELEVATION AND SECTIONS

DATE: 01/12/16 SCALE: AS NOTED

CCRI OBSERVATORY FURNITURE

400 EAST AVENUE, WARWICK, RI 02886

BREWSTER THORNTON GROUP LLP
ARCHITECTS
150 Chestnut Street
Providence, RI
02903
Tel 401.861.1600
Fax 401.861.5588

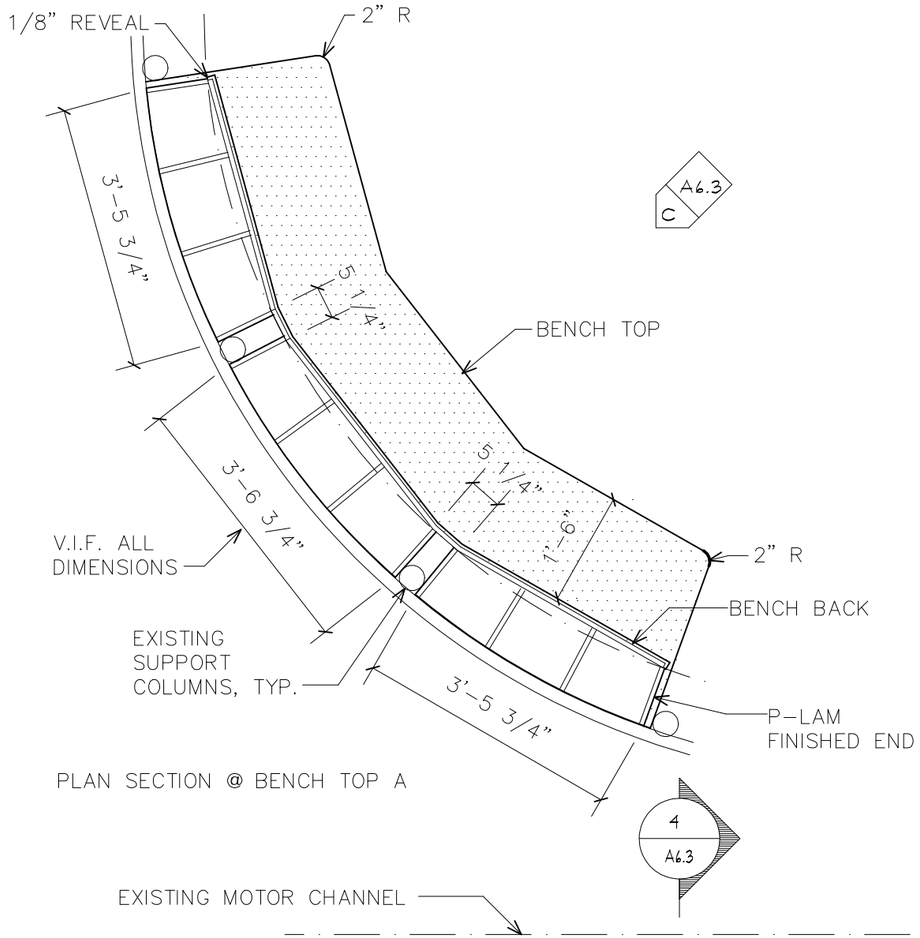

PLAN SECTION @ BENCH TOP A

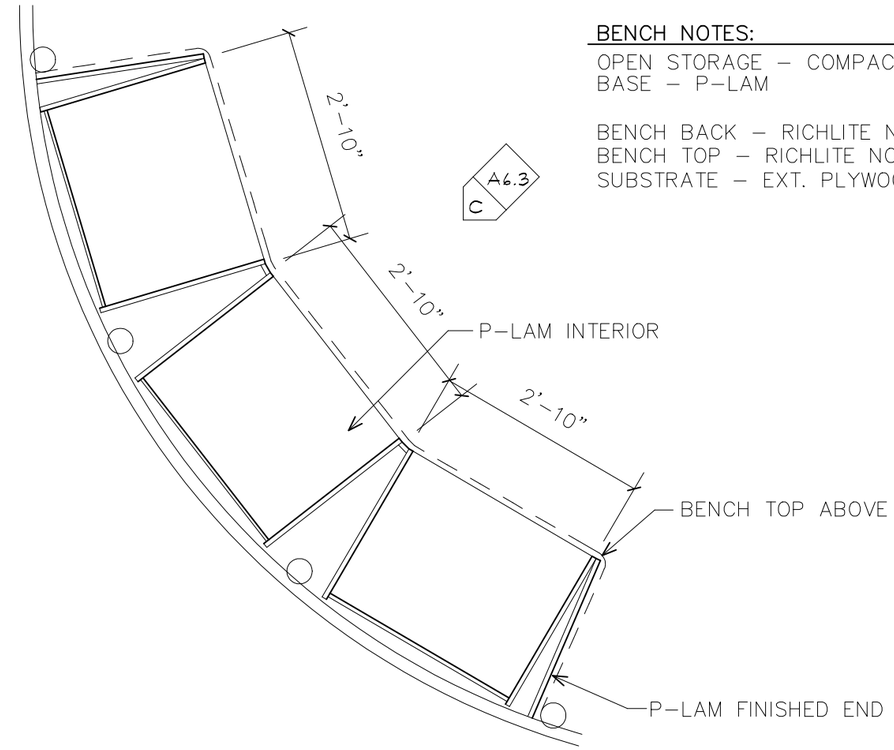

PLAN SECTION @ STORAGE B

BENCH NOTES:

OPEN STORAGE – COMPACT P-LAM
BASE – P-LAM

BENCH BACK – RICHLITE NORTHWEST
BENCH TOP – RICHLITE NORTHWEST
SUBSTRATE – EXT. PLYWOOD

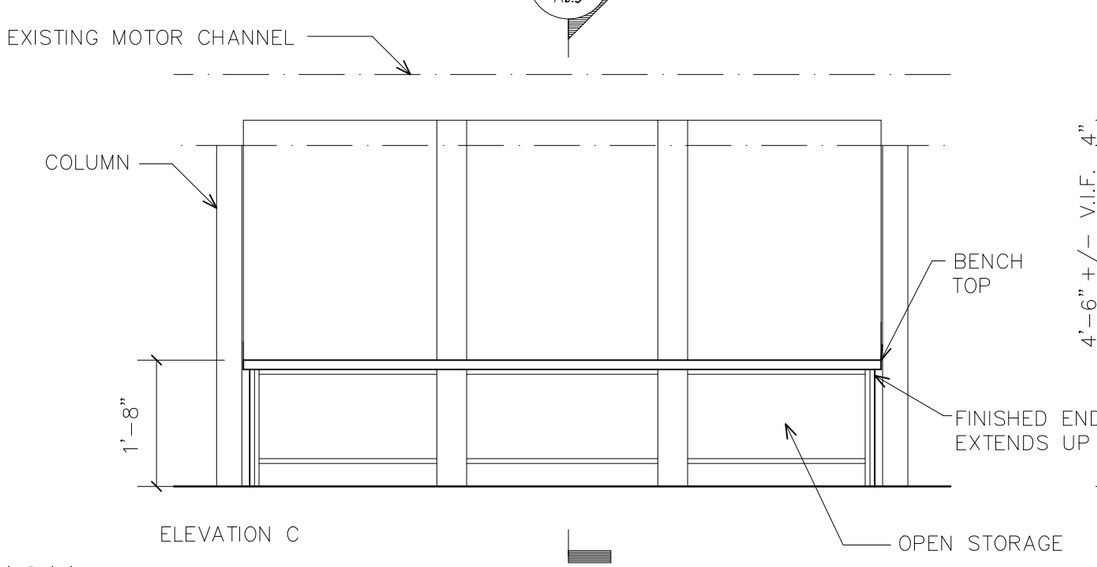

ELEVATION C

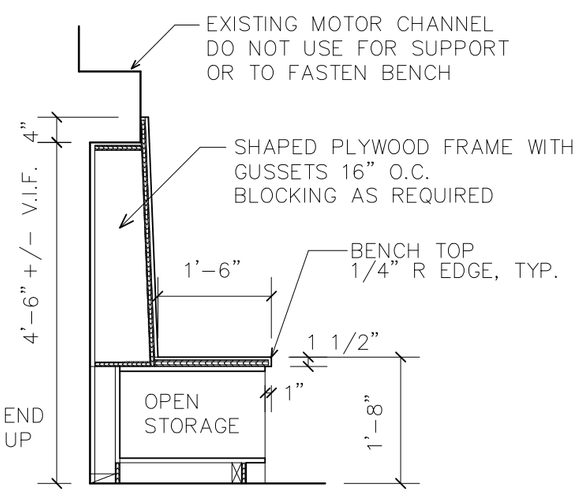

SECTION D

1 / A6.3 BENCH

1/2" = 1'-0"

A6.3

1508E

BENCH ENLARGED PLAN, ELEVATION AND SECTION

DATE: 01/12/16 SCALE: AS NOTED

CCRI OBSERVATORY FURNITURE

400 EAST AVENUE, WARWICK, RI 02886

BREWSTER THORNTON GROUP LLP
ARCHITECTS
150 Chestnut Street
Providence, RI 02903
Tel 401.861.1600
Fax 401.861.5588

LOCATION PLANS – LEVEL G

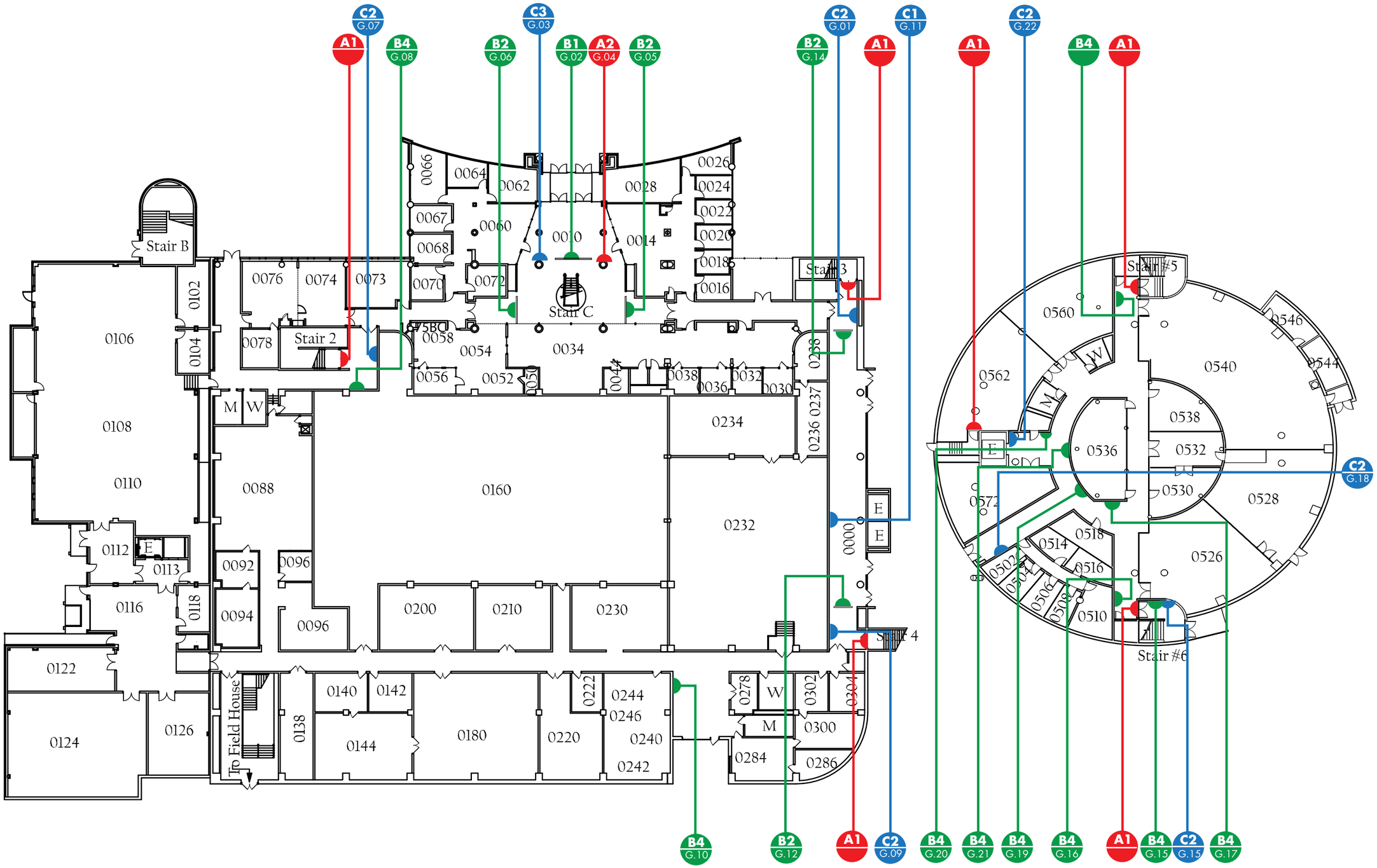

OWNER:

CCRI
400 East Avenue
Warwick, Rhode Island
02886-1807

ARCHITECT:

BREWSTER THORNTON ARCHITECTS
150 Chestnut Street
Providence, Rhode Island
02903

surfaceMATTER DESIGN

111 Chestnut Street
Providence, RI 02903
T 401.626.4472

© 2012 SurfaceMatter Design LLC.
No portion of this drawing may be reproduced without written consent of SurfaceMatter Design LLC.

date DECEMBER 16, 2015

page 6

LOCATION PLANS – LEVEL 1

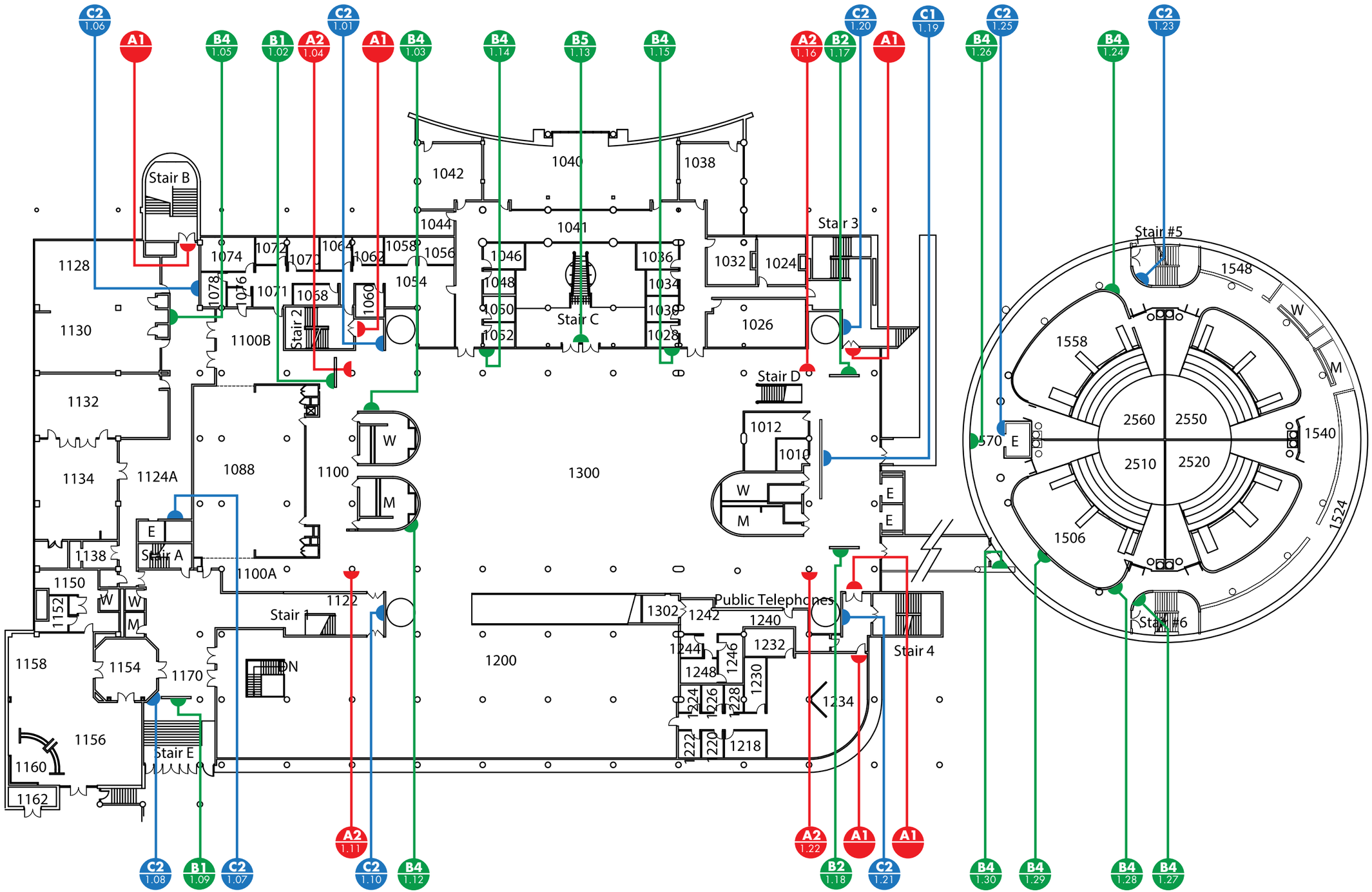

OWNER:

CCRI
400 East Avenue
Warwick, Rhode Island
02886-1807

ARCHITECT:

BREWSTER THORNTON ARCHITECTS
150 Chestnut Street
Providence, Rhode Island
02903

surfaceMATTER DESIGN

111 Chestnut Street
Providence, RI 02903
T 401.626.4472

© 2012 SurfaceMatter Design LLC.
No portion of this drawing may be reproduced without written consent of SurfaceMatter Design LLC.

date DECEMBER 16, 2015

LOCATION PLANS – LEVEL 2

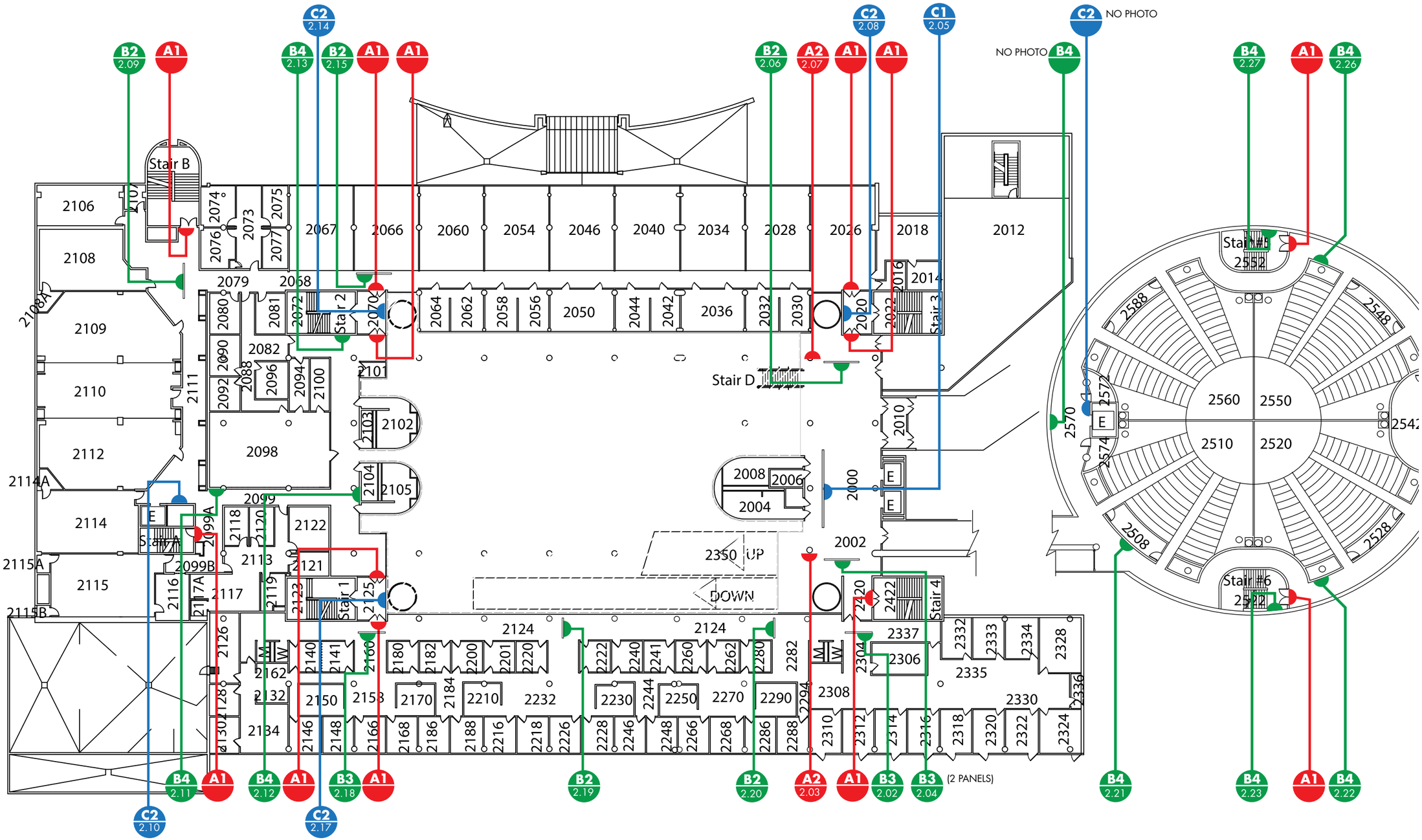

OWNER:

CCRI
400 East Avenue
Warwick, Rhode Island
02886-1807

ARCHITECT:

BREWSTER THORNTON ARCHITECTS
150 Chestnut Street
Providence, Rhode Island
02903

surfaceMATTER DESIGN

111 Chestnut Street
Providence, RI 02903
T 401.626.4472

© 2012 SurfaceMatter Design LLC.
No portion of this drawing may be reproduced without written consent of SurfaceMatter Design LLC.

date DECEMBER 16, 2015

LOCATION PLANS – LEVEL 3

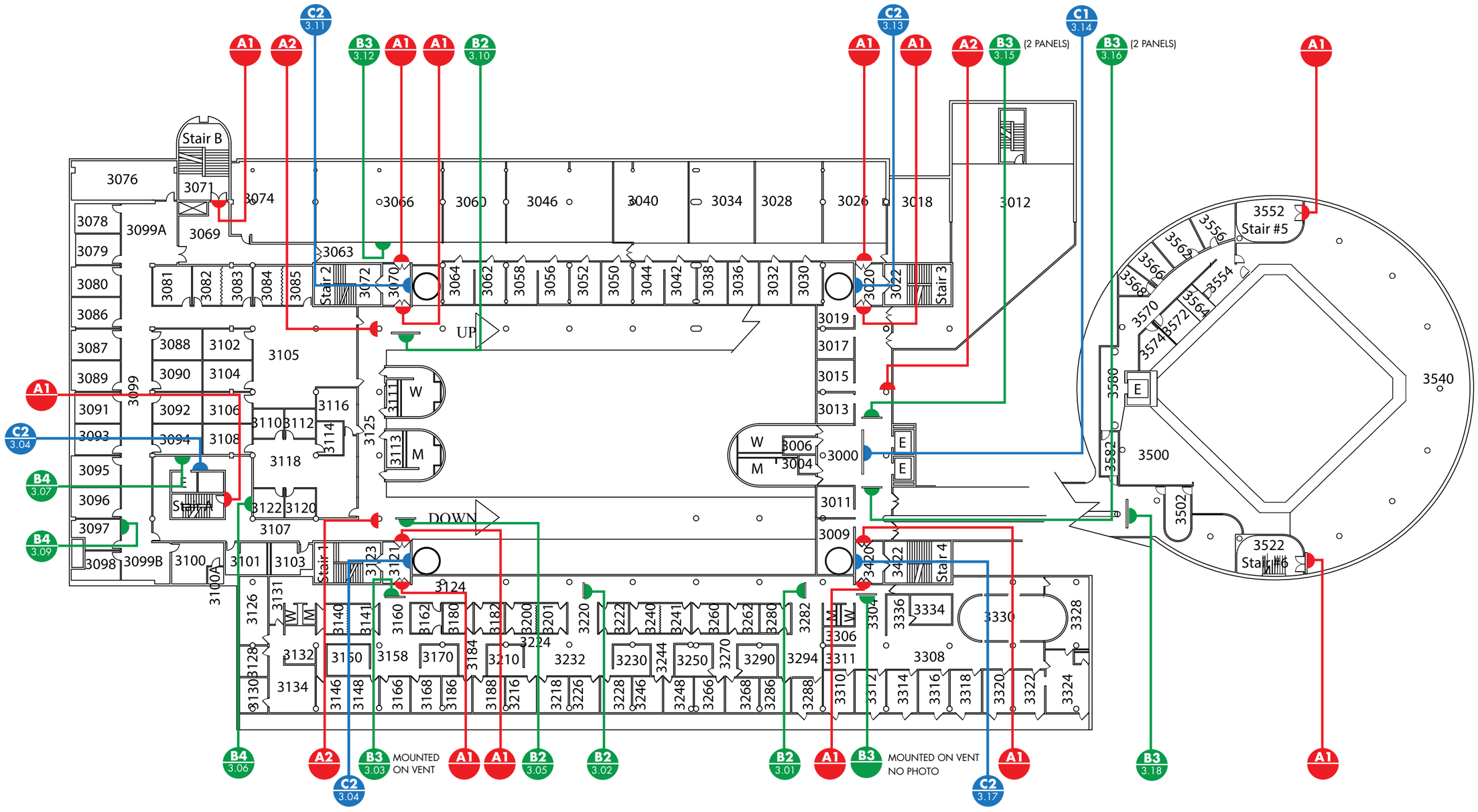

OWNER:

CCRI
400 East Avenue
Warwick, Rhode Island
02886-1807

ARCHITECT:

BREWSTER THORNTON ARCHITECTS
150 Chestnut Street
Providence, Rhode Island
02903

surfaceMatter DESIGN

111 Chestnut Street
Providence, RI 02903
T 401.626.4472

© 2012 SurfaceMatter Design LLC.
No portion of this drawing may be reproduced without written consent of SurfaceMatter Design LLC.

date DECEMBER 16, 2015

LOCATION PLANS – LEVEL 4

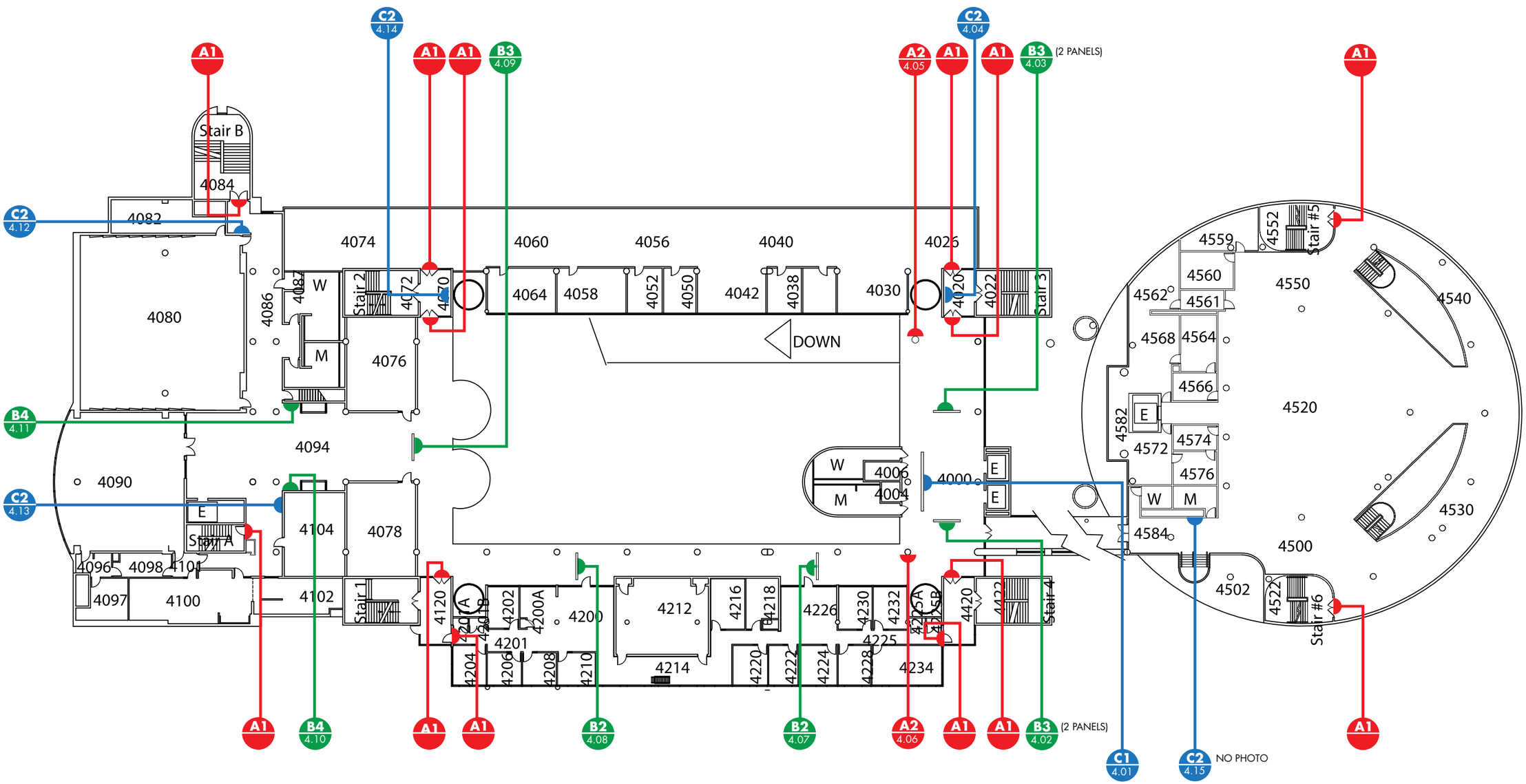

OWNER:

CCRI
400 East Avenue
Warwick, Rhode Island
02886-1807

ARCHITECT:

BREWSTER THORNTON ARCHITECTS
150 Chestnut Street
Providence, Rhode Island
02903

surfaceMATTER DESIGN

111 Chestnut Street
Providence, RI 02903
T 401.626.4472

© 2012 SurfaceMatter Design LLC.
No portion of this drawing may be reproduced without written consent of SurfaceMatter Design LLC.

date DECEMBER 16, 2015

LOCATION PLANS – LEVEL 6

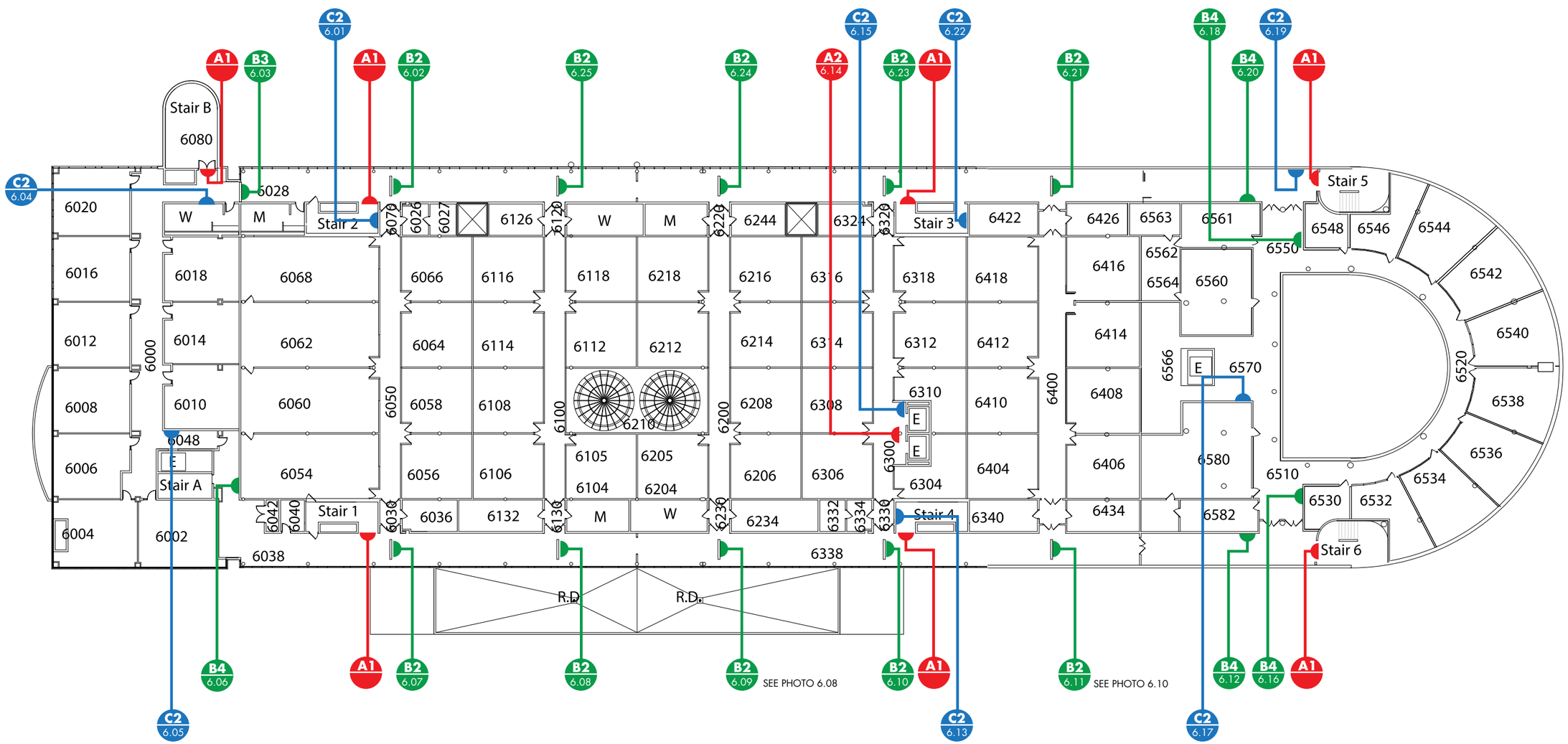

OWNER:

CCRI
400 East Avenue
Warwick, Rhode Island
02886-1807

ARCHITECT:

BREWSTER THORNTON ARCHITECTS
150 Chestnut Street
Providence, Rhode Island
02903

surfaceMATTER DESIGN

111 Chestnut Street
Providence, RI 02903
T 401.626.4472

© 2012 SurfaceMatter Design LLC.
No portion of this drawing may be reproduced without written consent of SurfaceMatter Design LLC.

date DECEMBER 16, 2015

page 11

A1 – STAIR ID

NOTE:
CONTRACTOR TO COORDINATE STAIR ID SIGN INSTALLATION WITH THE OWNER. DOOR REPLACEMENT TO BE COMPLETED UNDER SEPARATE CONTRACT. ALL SIGNS TO BE INSTALLED ON NEW DOORS

TYPICAL STAIR ID LAYOUTS

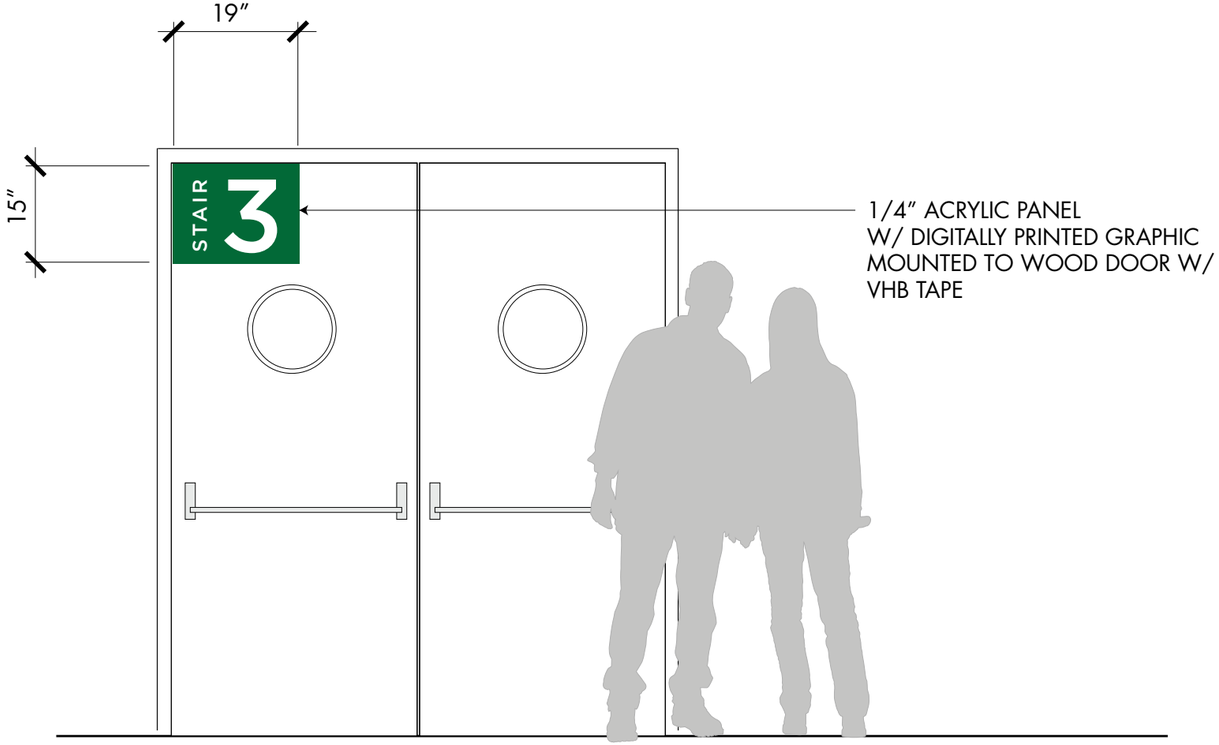

STAIR ID - ELEVATION
SCALE: 1/2″ = 1′ - 0″

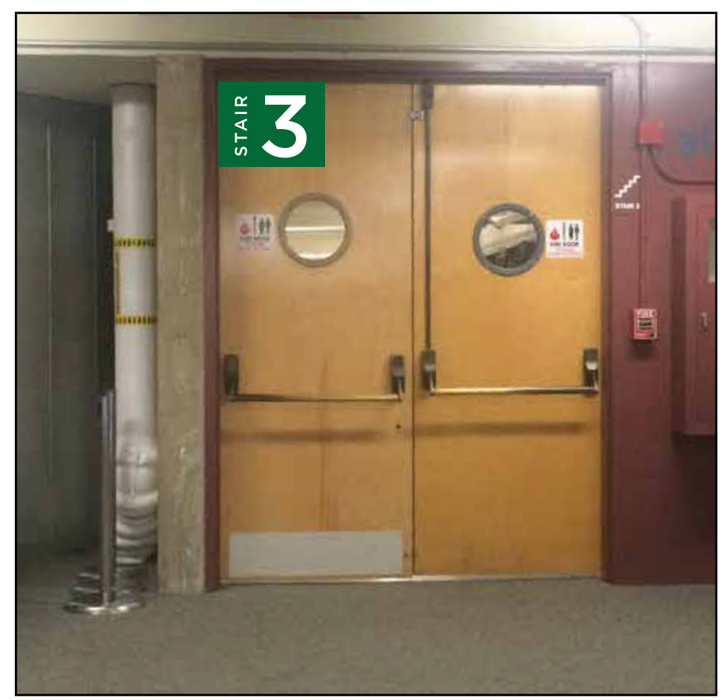

TYPICAL APPLICATION

OWNER:

CCRI
400 East Avenue
Warwick, Rhode Island
02886-1807

ARCHITECT:

BREWSTER THORNTON ARCHITECTS
150 Chestnut Street
Providence, Rhode Island
02903

surfaceMatter DESIGN

111 Chestnut Street
Providence, RI 02903
T 401.626.4472

© 2012 SurfaceMatter Design LLC.
No portion of this drawing may be reproduced without written consent of SurfaceMatter Design LLC.

date DECEMBER 16, 2015