June 15, 2016

STATE OF RHODE ISLAND AND PROVIDENCE PLANTATION
DEPARTMENT OF ADMINISTRATION

DIVISION OF PURCHASES BID NO. 7550649

RHODE ISLAND DEPARTMENT OF TRANSPORTATION

RHODE ISLAND CONTRACT NO.2016-CB-038

FEDERAL-AID PROJECT NO. FAP Nos: REV 1950(001)

I-195 Relocation – Contract 16 – Providence River Pedestrian Bridge

Providence River Pedestrian Bridge and East Side Park - South Water Street, Providence, RI

CITY/TOWN OF Providence

COUNTY OF PROVIDENCE

NOTICE TO PROSPECTIVE BIDDERS

ADDENDUM NO. 4 Prospective bidders and all concerned are hereby notified of the following changes in the Plans, Specifications, Proposal and Distribution of Quantities for this contract. These changes shall be incorporated in the Plans, Specifications, Proposal and Distribution of Quantities, and shall become an integral part of the Contract Documents.

A. Clarification

1. Reuse of Contaminated Soils.

   All soil tests for this contract have been found to be contaminated. Reuse of this material as backfill within excavations or trenches shall only be permitted with the approval of the Engineer on a case by case basis. All material must meet the requirements of Sections 202 and 203 of the Standard Specifications.

B. Proposal Addition/Deletion

1. Proposal Page P-1(R-1)

   Delete Proposal Page P-1(R-1) in its entirety and replace it with Proposal Page P-1(R-2) attached to this Addendum No. 1. Item Code 212.2000 has been revised to a Minimum Acceptable Bid.

2. Proposal Pages P-36(R-3) and P-37(R-3)

   Delete Proposal pages P-36(R-3) and P-37(R-3) in their entirety and replace them with Proposal pages P-36(R-4) and P-37(R-4) attached to this Addendum No. 4. The Addendum Date has been added. All Proposal pages will be generated by the Quest Lite Program.

C. Contract Documents

1. Pages CS-1 and CS-2

   Delete pages CS-1 and CS-2 in their entirety and replace them with CS-1(R-1) and CS-2(R-1) attached to this Addendum No. 4. Sections 1 and 4 have been revised.

D. Specification Change/Addition

1. Index page ii

   Delete index page ii in its entirety and replace it with index page ii(R-1) attached to this Addendum No. 4. The title for Item Code 806.9903 has been revised. Item Code 806.9904 has been deleted. Item Code 806.9914 has been added to the index.

2. Pages JS-100 through JS-110

   Delete pages JS-100 through JS-110 in their entirety and replace them with pages JS-100(R-1) through JS-110(R-1) attached to this Addendum No. 4. Multiple sections of the specification have been revised. Stainless steel drain clean out plates have been added. Electrical vault access hatch and enclosure fencing have been added. Item code 806.9904 has been deleted. Item code 806.9914 has been added and is paid for by the square foot (SF).

3. Pages JS-111 and JS-112

   Delete pages JS-111 and JS-112 in their entirety and replace them with pages JS-111(R-1) and JS-112(R-1) attached to this Addendum No. 4. The Materials and Basis of Payment sections have been revised.

4. Pages JS-120 through JS-124

   Delete pages JS-120 through JS-124 in their entirety and replace them with pages JS-120(R-1) though JS-124(R-1) attached to this Addendum No. 4. Multiple sections of the specification have been revised. Installer prequalifications have been revised.

5. Page JS-138

   Delete page JS-138 in its entirety and replace it with page JS-138(R-1) attached to this Addendum No. 4. The Basis of Payment section has been revised. The quantities of steel have been revised.

6. Pages JS-160 through JS-175

   Delete pages JS-160, JS-161, JS-162(R-1) and JS-163 through JS-175 in their entirety and replace them with pages JS-160(R-1), JS-161(R-1), JS-162(R-2), and JS-163(R-1) through JS-175(R-1) attached to this Addendum No. 4. Multiple sections of the specification have been revised including but not limited to hardware requirements.

7. Pages JS-184 through JS-188

   Delete pages JS-184 through JS-188 in their entirety and replace them with pages JS-184(R-1) through JS-188(R-1) attached to this Addendum No. 4. Multiple sections of the specification have been revised including Materials and Fabrication, and Basis of Payment.

8. Pages JS-190 through JS-193

   Delete pages JS-190 through JS-193 in their entirety and replace them with pages JS-190(R-1) through JS-193(R-1) attached to this Addendum No. 4. Multiple sections of the specification have been revised including Materials and Construction Methods.

9. Pages JS-203, JS-204 and JS-205

   Delete Pages JS-203, JS-204 and JS-205 in their entirety and replace them with pages JS-203(R-1), JS-204(R-1) and JS-205(R-1) attached to this Addendum No. 4. The computer hardware, software and internet service requirements have been revised.

10. Page JS-207

    Delete page JS-207 in its entirety and replace it with page JS-207(R-1) attached to this Addendum No. 4. The prices for Liquid Asphalt Cement and Diesel Fuel have been revised.

11. Pages JS-215 through JS-217

    Delete pages JS-215 through JS-217 in their entirety and replace them with pages JS-215(R-1) through JS-217(R-1) attached to this Addendum No. 4. Multiple sections of the specification have been revised.

12. Page JS-277

    Delete Page JS-277 in its entirety and replace it with page JS-277(R-1) attached to this Addendum No. 4. The Basis of Payment section has been revised.

E. Distribution of Quantities

1. DOQ Index Pages 2(R-1) and 5(R-1)

   Delete DOQ Index Pages 2(R-1) and 5(R-1) in their entirety and replace them with DOQ Index Pages 2(R-2) and 5(R-2) attached to this Addendum No. 4. Item Code 806.9904 has been deleted and Item Codes 706.9000 and 806.9914 have been added.

2. DOQ Pages 6(R-1), 7(R-1), 8(R-1) and 9(R-1)

   Delete DOQ pages 6(R-1), 7(R-1), 8(R-1) and 9(R-1) in their entirety and replace them with DOQ pages 6(R-2), 7(R-2), 8(R-2) and 9(R-2) attached to this Addendum No. 4. Item Codes 201.0720 and 201.0730 have been revised.

3. DOQ Page 15(R-1)

   Delete DOQ page 15(R-1) in its entirety and replace it with DOQ page 15(R-2) attached to this Addendum No. 4. Item Code 203.0400 has been revised.

4. DOQ Pages 25 and 26

   Delete DOQ pages 25 and 26 in their entirety and replace them with DOQ pages 25(R-1) and 26(R-1) attached to this Addendum No. 4. Item Code 803.9902 has been revised.

5. DOQ Page 30

   Delete DOQ page 30 in its entirety and replace it with DOQ page 30(R-1) attached to this Addendum No. 4. Item Code 806.9904 has been deleted.

6. DOQ Pages 34, 35 and 36

   Delete DOQ pages 34, 35 and 36 in their entirety and replace them with DOQ pages 34(R-1), 35(R-1) and 36(R-1) attached to this Addendum No. 4. Item Codes 807.9901, 808.0504, 808.0505, 808.0506 and 808.0514 have been revised.

7. DOQ Page 39

   Delete DOQ page 39 in its entirety and replace it with DOQ page 39(R-1) attached to this Addendum No. 4. Item Code 819.0800 has been revised.

8. DOQ Page 45

   Delete DOQ page 45 in its entirety and replace it with DOQ page 45(R-1) attached to this Addendum No. 4. The quantity and title for Item Code 830.9910 have been revised.

9. DOQ Page 56

   Delete DOQ page 56 in its entirety and replace it with DOQ page 56(R-1) attached to this Addendum No. 4. Item Code 929.0110 has been revised.

10. DOQ Pages 72(R-1) and 73

    Delete DOQ page 72(R-1) in its entirety and replace it with DOQ page 72(R-2) and new DOQ page 73 attached to this Addendum No. 4. Item Codes 706.9000 and 806.9914 have been added. The new items required the addition of a new page.

F. Plans - Volume 1

1. Sheet V1_013

   Delete Sheet V1_013 in its entirety and replace it with sheet V1_013(R-1) attached to this Addendum No. 4. A callout has been removed.

2. Sheet V1_024

   Delete Sheet V1_024 in its entirety and replace it with sheet V1_024(R-1) attached to this Addendum No. 4. The details have been revised.

3. Sheet V1_031

   Delete Sheet V1_031 in its entirety and replace it with sheet V1_031(R-1) attached to this Addendum No. 4. The planter detail has been revised.

4. Sheet V1_035

   Delete Sheet V1_035 in its entirety and replace it with sheet V1_035(R-1) attached to this Addendum No. 4. A call out has been added.

5. Sheet V1_048

   Delete Sheet V1_048 in its entirety and replace it with sheet V1_048(R-1) attached to this Addendum No. 4. The plan and sections have been revised.

6. Sheet V1_052

   Delete Sheet V1_052 in its entirety and replace it with sheet V1_052(R-1) attached to this Addendum No. 4. The boardwalk and details have been revised.

7. Sheet V1_053

   Delete Sheet V1_053 in its entirety and replace it with sheet V1_053(R-1) attached to this Addendum No. 4. Details and rail post spacing have been revised.

8. Sheet V1_054

   Delete Sheet V1_054 in its entirety and replace it with sheet V1_054(R-1) attached to this Addendum No. 4. Details for the rail post and baseplates have been revised.

9. Sheet V1_055

   Delete Sheet V1_055 in its entirety and replace it with sheet V1_055(R-1) attached to this Addendum No. 4. A detail has been revised.

G. Plans - Volume 2

01. Sheet V2_002

    Delete Sheet V2_002 in its entirety and replace it with sheet V2_002(R-1) attached to this Addendum No. 4. The work point legend has been revised.

02. Sheet V2_004

    Delete Sheet V2_004 in its entirety and replace it with sheet V2_004(R-1) attached to this Addendum No. 4. The Notes and details have been revised.

03. Sheet V2_005

    Delete Sheet V2_005 in its entirety and replace it with sheet V2_005(R-1) attached to this Addendum No. 4. The Notes and details have been revised.

04. Sheet V2_006

    Delete Sheet V2_006 in its entirety and replace it with sheet V2_006(R-1) attached to this Addendum No. 4. The steel mesh and callouts have been revised.

05. Sheet V2_007

    Delete Sheet V2_007 in its entirety and replace it with sheet V2_007(R-1) attached to this Addendum No. 4. The details have been revised.

06. Sheet V2_008

    Delete Sheet V2_008 in its entirety and replace it with sheet V2_008(R-1) attached to this Addendum No. 4. The bench locations have been revised.

07. Sheet V2_012

    Delete Sheet V2_012 in its entirety and replace it with sheet V2_012(R-1) attached to this Addendum No. 4. The details have been revised. Galvanized wire mesh has been added.

08. Sheet V2_013

    Delete Sheet V2_013 in its entirety and replace it with sheet V2_013(R-1) attached to this Addendum No. 4. The work points and panel numbers have been revised. A drain access cleanout has been added.

09. Sheet V2_014

    Delete Sheet V2_014 in its entirety and replace it with sheet V2_014(R-1) attached to this Addendum No. 4. The work points and panel numbers have been revised. A drain access cleanout has been added.

10. Sheet V2_015

    Delete Sheet V2_015 in its entirety and replace it with sheet V2_015(R-1) attached to this Addendum No. 4. The work points and panel numbers have been revised. A drain access cleanout has been added.

11. Sheet V2_016

    Delete Sheet V2_016 in its entirety and replace it with sheet V2_016(R-1) attached to this Addendum No. 4. The work points and panel numbers have been revised. A drain access cleanout has been added.

12. Sheet V2_017

    Delete Sheet V2_017 in its entirety and replace it with sheet V2_017(R-1) attached to this Addendum No. 4. The details have been revised.

13. Sheet V2_020

    Delete Sheet V2_020 in its entirety and replace it with sheet V2_020(R-1) attached to this Addendum No. 4. The detail numbers have been revised.

14. Sheet V2_021

    Delete Sheet V2_021 in its entirety and replace it with sheet V2_021(R-1) attached to this Addendum No. 4. The details have been revised. A table has been added.

15. Sheet V2_022

    Delete Sheet V2_022 in its entirety and replace it with sheet V2_022(R-1) attached to this Addendum No. 4. The notes and detail numbers have been revised.

16. Sheet V2_028

    Delete Sheet V2_028 in its entirety and replace it with sheet V2_028(R-1) attached to this Addendum No. 4. The detail scale has been revised.

17. Sheet V2_031

    Delete Sheet V2_031 in its entirety and replace it with sheet V2_031(R-1) attached to this Addendum No. 4. The details has been revised. Floor lights and junction box notes have been added.

18. Sheet V2_032

    Delete Sheet V2_032 in its entirety and replace it with sheet V2_032(R-1) attached to this Addendum No. 4. The details have been revised. Floor lights and junction box notes have been added.

19. Sheet V2_033

    Delete Sheet V2_033 in its entirety and replace it with sheet V2_033(R-1) attached to this Addendum No. 4. The details have been revised. Floor lights and junction box notes have been added.

20. Sheet V2_034

    Delete Sheet V2_034 in its entirety and replace it with sheet V2_034(R-1) attached to this Addendum No. 4. A note has been added to the detail.

21. Sheet V2_035

    Delete Sheet V2_035 in its entirety and replace it with sheet V2_035(R-1) attached to this Addendum No. 4. A note has been added to the detail.

22. Sheet V2_036

    Delete Sheet V2_036 in its entirety and replace it with sheet V2_036(R-1) attached to this Addendum No. 4. A note has been added to the detail.

23. Sheet V2_037

    Delete Sheet V2_037 in its entirety and replace it with sheet V2_037(R-1) attached to this Addendum No. 4. A detail note has been revised.

24. Sheet V2_038

    Delete Sheet V2_038 in its entirety and replace it with sheet V2_038(R-1) attached to this Addendum No. 4. A detail note has been revised.

25. Sheet V2_039

    Delete Sheet V2_039 in its entirety and replace it with sheet V2_039(R-1) attached to this Addendum No. 4. Dimensioning in the details have been revised.

26. Sheet V2_040

    Delete Sheet V2_040 in its entirety and replace it with sheet V2_040(R-1) attached to this Addendum No. 4. The detail notes have been revised.

27. Sheet V2_041

    Delete Sheet V2_041 in its entirety and replace it with sheet V2_041(R-1) attached to this Addendum No. 4. The detail notes have been revised.

28. Sheets V2_043 through V2_048

    Delete Sheets V2_043 through V2_048 in their entirety and replace them with sheets V2_043(R-1), V2_044(R-1), V2_045(R-1), V2_046(R-1), V2_047(R-1) and V2_048(R-1) attached to this Addendum No. 4. The work points, spot elevations, detail scales and references have been revised.

29. Sheet V2_049

    Delete Sheet V2_049 in its entirety and replace it with sheet V2_049(R-1) attached to this Addendum No. 4. The detail notes have been revised.

30. Sheet V2_050

    Delete Sheet V2_050 in its entirety and replace it with sheet V2_050(R-1) attached to this Addendum No. 4. The table has been revised.

31. Sheet V2_051

    Delete Sheet V2_051 in its entirety and replace it with sheet V2_051(R-1) attached to this Addendum No. 4. The detail scales have been revised.

32. Sheet V2_052

    Delete Sheet V2_052 in its entirety and replace it with sheet V2_052(R-1) attached to this Addendum No. 4. The detail notes have been revised.

33. Sheet V2_053

    Delete Sheet V2_053 in its entirety and replace it with sheet V2_053(R-1) attached to this Addendum No. 4. The detail notes have been revised.

34. Sheet V2_054

    Delete Sheet V2_054 in its entirety and replace it with sheet V2_054(R-1) attached to this Addendum No. 4. The details and detail scales have been revised.

35. Sheet V2_058

    Delete Sheet V2_058 in its entirety and replace it with sheet V2_058(R-1) attached to this Addendum No. 4. The details have been revised.

36. Sheet V2_059

    Delete Sheet V2_059 in its entirety and replace it with sheet V2_059(R-1) attached to this Addendum No. 4. The work points and details have been revised. A floor drain has been added.

37. Sheet V2_061

    Delete Sheet V2_061 in its entirety and replace it with sheet V2_061(R-1) attached to this Addendum No. 4. The detail notes have been revised.

38. Sheet V2_064

    Delete Sheet V2_064 in its entirety and replace it with sheet V2_064(R-1) attached to this Addendum No. 4. The work point table has been revised.

39. Sheet V2_065

    Delete Sheet V2_065 in its entirety and replace it with sheet V2_065(R-1) attached to this Addendum No. 4. The details have been revised.

40. Sheet V2_066

    Delete Sheet V2_066 in its entirety and replace it with sheet V2_066(R-1) attached to this Addendum No. 4. The details and work point table have been revised.

41. Sheet V2_067

    Delete Sheet V2_067 in its entirety and replace it with sheet V2_067(R-1) attached to this Addendum No. 4. The details have been revised.

42. Sheet V2_068

    Delete Sheet V2_068 in its entirety and replace it with sheet V2_068(R-1) attached to this Addendum No. 4. The details have been revised.

43. Sheet V2_068a

    Add Sheet A-532, V2_068a, Lower Bridge Railing – Sections and Details attached to this Addendum No. 4 to Volume 2. Additional details have been added to the contract. These details required the addition of new sheet V2_068a.

44. Sheet V2_071

    Delete Sheet V2_071 in its entirety and replace it with sheet V2_071(R-1) attached to this Addendum No. 4. The General Notes have been revised.

45. Sheet V2_072

    Delete Sheet V2_072 in its entirety and replace it with sheet V2_072(R-1) attached to this Addendum No. 4. The Stainless Steel Notes have been revised.

46. Sheet V2_073

    Delete Sheet V2_073 in its entirety and replace it with sheet V2_073(R-1) attached to this Addendum No. 4. The Lower Deck geometry has been revised. CMU added for electrical room.

47. Sheet V2_076

    Delete Sheet V2_076 in its entirety and replace it with sheet V2_076(R-1) attached to this Addendum No. 4. The Lower Deck geometry has been revised.

48. Sheet V2_077

Delete Sheet V2_077 in its entirety and replace it with sheet V2_077(R-1) attached to this Addendum No. 4. The Lower Deck elevations have been revised.

49. Sheet V2_078

Delete Sheet V2_078 in its entirety and replace it with sheet V2_078(R-1) attached to this Addendum No. 4. An elevation has been revised.

50. Sheet V2_080

Delete Sheet V2_080 in its entirety and replace it with sheet V2_080(R-1) attached to this Addendum No. 4. Dimensioning has been revised at the pier.

51. Sheet V2_081

Delete Sheet V2_081 in its entirety and replace it with sheet V2_081(R-1) attached to this Addendum No. 4. The bearings at Pier B5 have been revised.

52. Sheet V2_082

Delete Sheet V2_082 in its entirety and replace it with sheet V2_082(R-1) attached to this Addendum No. 4. The Lower Deck geometry has been revised. CMU added for electrical room.

53. Sheet V2_083

Delete Sheet V2_083 in its entirety and replace it with sheet V2_083(R-1) attached to this Addendum No. 4. The Lower Deck geometry has been revised. The framing has been revised. The stairs have been deleted.

54. Sheet V2_084

Delete Sheet V2_084 in its entirety and replace it with sheet V2_084(R-1) attached to this Addendum No. 4. The Lower Deck geometry has been revised. CMU added for electrical room. The stairs have been deleted.

55. Sheet V2_085

Delete Sheet V2_085 in its entirety and replace it with sheet V2_085(R-1) attached to this Addendum No. 4. The Lower Deck geometry has been revised. CMU added for electrical room. The stairs have been deleted.

56. Sheet V2_089

Delete Sheet V2_089 in its entirety and replace it with sheet V2_089(R-1) attached to this Addendum No. 4. The Lower Deck geometry has been revised. The framing has been revised. The stairs have been deleted.

57. Sheet V2_090

Delete Sheet V2_090 in its entirety and replace it with sheet V2_090(R-1) attached to this Addendum No. 4. The Lower Deck geometry has been revised. The framing has been revised. The stairs have been deleted.

58. Sheet V2_091

Delete Sheet V2_091 in its entirety and replace it with sheet V2_091(R-1) attached to this Addendum No. 4. The Lower Deck geometry has been revised. The framing has been revised. The stairs have been deleted.

59. Sheet V2_092

Delete Sheet V2_092 in its entirety and replace it with sheet V2_092(R-1) attached to this Addendum No. 4. The Lower Deck geometry has been revised. The framing has been revised. The stairs have been deleted.

60. Sheet V2_098

Delete Sheet V2_098 in its entirety and replace it with sheet V2_098(R-1) attached to this Addendum No. 4. Dimensioning has been revised at the pier.

61. Sheet V2_099

Delete Sheet V2_099 in its entirety and replace it with sheet V2_099(R-1) attached to this Addendum No. 4. Dimensioning has been revised at the pier.

62. Sheet V2_100

Delete Sheet V2_100 in its entirety and replace it with sheet V2_100(R-1) attached to this Addendum No. 4. The pier section has ben revised.

63. Sheet V2_102

Delete Sheet V2_102 in its entirety and replace it with sheet V2_102(R-1) attached to this Addendum No. 4. The sections have been revised.

64. Sheet V2_113

Delete Sheet V2_113 in its entirety and replace it with sheet V2_113(R-1) attached to this Addendum No. 4. The wall footing has been revised. A section has been added.

65. Sheet V2_114

Delete Sheet V2_114 in its entirety and replace it with sheet V2_114(R-1) attached to this Addendum No. 4. Additional reinforcing has been shown.

66. Sheet V2_121

Delete Sheet V2_121 in its entirety and replace it with sheet V2_121(R-1) attached to this Addendum No. 4. Plan references and callouts have been revised.

67. Sheet V2_122

Delete Sheet V2_122 in its entirety and replace it with sheet V2_122(R-1) attached to this Addendum No. 4. The girder table has been revised.

68. Sheet V2_123

Delete Sheet V2_123 in its entirety and replace it with sheet V2_123(R-1) attached to this Addendum No. 4. A detail has been deleted.

69. Sheet V2_128

Delete Sheet V2_128 in its entirety and replace it with sheet V2_128(R-1) attached to this Addendum No. 4. The beam schedule has been made easier to read.

70. Sheet V2_136

Delete Sheet V2_136 in its entirety and replace it with sheet V2_136(R-1) attached to this Addendum No. 4. A detail has been revised.

71. Sheet V2_137

Delete Sheet V2_137 in its entirety and replace it with sheet V2_137(R-1) attached to this Addendum No. 4. Details have been revised.

72. Sheet V2_140

Delete Sheet V2_140 in its entirety and replace it with sheet V2_140(R-1) attached to this Addendum No. 4. A detail has been revised.

73. Sheet V2_149

Delete Sheet V2_149 in its entirety and replace it with sheet V2_149(R-1) attached to this Addendum No. 4. The notes have been revised.

74. Sheet V2_150

Delete Sheet V2_150 in its entirety and replace it with sheet V2_150(R-1) attached to this Addendum No. 4. The notes have been revised.

75. Sheet V2_151

Delete Sheet V2_151 in its entirety and replace it with sheet V2_151(R-1) attached to this Addendum No. 4. The notes have been revised.

76. Sheet V2_152

Delete Sheet V2_152 in its entirety and replace it with sheet V2_152(R-1) attached to this Addendum No. 4. The notes have been revised.

77. Sheet V2_154

Delete Sheet V2_154 in its entirety and replace it with sheet V2_154(R-1) attached to this Addendum No. 4. The notes have been revised.

78. Sheet V2_155

Delete Sheet V2_155 in its entirety and replace it with sheet V2_155(R-1) attached to this Addendum No. 4. The notes have been revised.

79. Sheet V2_156

Delete Sheet V2_156 in its entirety and replace it with sheet V2_156(R-1) attached to this Addendum No. 4. The notes have been revised.

80. Sheet V2_157

Delete Sheet V2_157 in its entirety and replace it with sheet V2_157(R-1) attached to this Addendum No. 4. The notes have been revised.

81. Sheet V2_160

Delete Sheet V2_160 in its entirety and replace it with sheet V2_160(R-1) attached to this Addendum No. 4. The notes have been revised.

82. Sheet V2_160a

Add sheet V2_160a attached to this Addendum No. 4. A Lighting Control Wiring Diagram has been added to the plan set.

David W. Fish

RI Department of Transportation
Chief Engineer

SPECIAL NOTICE

PROPOSAL

Project Name - I-195 Relocation – Contract 16 – Providence River Pedestrian Bridge

Estimate Name - Addendum No. 4: I-195 Relocation – Contract 16 – Providence River Pedestrian Bridge

R.I. Contract No. - 2016-CB-038

FAP Nos - REV 1950(001)

All items in the Proposal must have a unit bid price in words and figures. All unit bid prices must be extended. Bids will not be accepted if they contain no unit price for an item or if they contain zero in words and figures as the unit price bid.

The minimum acceptable bid price for:

Code 212.2000, CLEANING AND MAINTENANCE OF EROSION CONTROLS is Ten Thousand Dollars And No Cents ($10,000.00) per LS

Code 907.0100, WATER FOR DUST CONTROL is Fourteen Dollars And Fifty Cents ($14.50) per MGAL

Code 907.0200, CALCIUM CHLORIDE FOR DUST CONTROL (PROJECT WIDE) is Three Hundred Dollars And No Cents ($300.00) per TON

Code 914.5010, FLAGPERSONS is Forty Nine Dollars And Fifty Cents ($49.50) per MHRS

Code 914.5020, FLAGPERSONS - OVERTIME is Sixty Three Dollars And Fifty Cents ($63.50) per MHRS

Code 937.0200, MAINTENANCE AND MOVEMENT TRAFFIC PROTECTION is Five Thousand Dollars And No Cents ($5,000.00) per LS

Code 943.0200, TRAINEE MAN-HOURS is Six Dollars And No Cents ($6.00) per MHRS

The only acceptable bid price for:

Code 201.0730, DISPOSE SOLID WASTE is Thirty Eight Dollars And No Cents ($38.00) per TON

Code 202.9987, DISPOSAL OF CONTAMINATED SOIL, TYPE 1 is Fifteen Dollars And No Cents ($15.00) per TON

Code 202.9989, DISPOSAL OF CONTAMINATED SOIL, TYPE 2 is Twenty Five Dollars And No Cents ($25.00) per TON

Code 202.9990, LOAD, HAUL, AND DISPOSE CONTAMINATED SOIL, TYPE 3 is One Dollar And No Cents ($1.00) per EACH

Code 903.9990, FENCE - AS DIRECTED is One Dollar And No Cents ($1.00) per EACH

Code L01.9990, SITE PREPERATION AND LANDSCAPING - AS DIRECTED is One Dollar And No Cents ($1.00) per EACH

Code 937.9999, PEDESTRIAN WAY is Fifty Thousand Dollars And No Cents ($50,000.00) per LS

Revised: 2/19/2002

Total or gross sum of bid for Rhode Island Contract Number: 2016-CB-038

Federal-Aid Project Number(s): REV 1950(001)

WRITTEN IN WORDS:

The undersigned bidder declares that this Proposal is made without connection with any other person or persons making proposals for the same work, and is in all respects fair and without collusion or fraud. The undersigned bidder submits herewith, a proposal guarantee in the form of a bid bond in favor of the State of Rhode Island in the amount of 5% of the total or gross sum of the bid and agrees and consents that the proposal guarantee shall be forfeited to the State as liquidated damages if the required contract agreement and contract bond are not executed within ten(10) days of the notice of award. All surety companies must be listed with The Department of the Treasury, Fiscal Services, Circular 570, (Latest Revision published by The Federal Register). The State reserves the right to retain the surety of all bidders until the successful bidder enters into the Contract or until such time as the award or cancellation of the Contract is announced at which point Sureties will be returned to all bidders by the State of Rhode Island, Office of Purchases. The undersigned bidder further agrees, if awarded the contract on this proposal, to begin work within ten (10) calendar days after the date of execution of the contract unless otherwise specified under special provisions or permitted by the Engineer, and further agrees to complete the work on or before the dates outlined in the Contract Documents.

COMPLETION DATE(S)

DESCRIPTION	DATE
Advertise Date	May 26, 2016
Pre-Bid Date	June 7, 2016
Bid-Opening Date	July 8, 2016
Substantial Completion Date	August 17, 2018

THE BIDDER ACKNOWLEDGES RECEIPT OF THE FOLLOWING:

ADDENDA	DATE POSTED
NO.1	June 1, 2016
NO.2	June 3, 2016
NO.3	June 7, 2016
NO.4	June 14, 2016

DOCUMENT(S)	PAGE
1. Status Certification for: Debarment, Eligibility, Indictments, Convictions or Civil Judgements	1
2. Anti-Collusion Certificate	2
4. DBE Affirmative Action Certification	3 - 9
3. Disclosure of Lobbying Activities	

Total or gross sum of bid for Rhode Island Contract Number: 2016-CB-038

Federal-Aid Project Number(s): REV 1950(001)

Whoever, being an officer, agent, or employee of the United States, or of any State, or Territory, or whoever, whether a person, association, firm, or corporation, knowingly makes any false statement, false representation, or false report as to the character, quality, quantity, or cost of the material used or to be used, or the quantity or quality of the work performed or to be performed, or the costs thereof in connection with the submission of plans, maps, specifications, contracts, or costs of construction of any highway or related project submitted for approval to the Secretary of Transportation; or Whoever, knowingly makes any false statement, false representation, false report, or false claim with respect to the character, quality, quantity, or cost of any work performed or to be performed, or materials furnished or to be furnished, in connection with the construction of any highway or related project approved by the Secretary of Transportation; or Whoever, knowingly makes any false statement or false representation as to a material fact in any statement, certificate, or report submitted pursuant to the provisions of the Federal-aid Road Act approved July 11, 1916 (39 Stat. 355), as amended and supplemented, Shall be fined not more than $10,000 or imprisoned not more than five years, or both. By signing here the signee agrees that the disk submitted is the same as the paper submitted and that any discrepancies may result in disqualification of the bid.

BEING EITHER A (INDIVIDUAL, PARTNERSHIP,)
(OR CORPORATION INCORPORATED)
(UNDER THE LAWS OF ANY STATE)
(IN THE UNITED STATES OF AMERICA)

_____

Contractor

COMPOSED OF OFFICERS, PARTNERS
OR OWNER, AS FOLLOWS.

_____

President

_____

Vice-President

_____

Secretary

_____

Treasurer

Address _____

_____

CERTIFICATION SUMMARY: I hereby certify that I have read all of the above requirements and understand that it affects the acceptablility of my bid(s).

_____

Name of Signatore - Title Date

1. BRIEF SCOPE OF WORK:

Rhode Island Contract No. 2016-CB-038, Funding No. REV 1950(001), County of Providence, City of Providence, Rhode Island: Improvements to Interstate Route 195, Contract 16. This Contract includes the construction of the Providence River Pedestrian Bridge, the East Side Boardwalk, East Side Riverwalls, modifications to existing cast-in-place retaining walls, and waterfront site improvements.

This contract includes extensive fabrication and construction of complex architectural elements.

The bridge construction includes; cast-in-place wingwalls, abutment stems and pier pedestals, and bridge decks; straight and curved steel plate girders and rolled sections; fabricated architectural steel bridge piers; timber framing; timber piles; micro piles; IPE timber decks; architectural rail systems; architectural WANA timber-steel framed fascia panels; architectural masonry; and extensive architectural lighting.

Site work includes riprap; precast concrete modular block riverwalls; grading; and embankment construction. Incidental construction includes site preparation; embankment construction; salt marsh planting; plantable soil and seed; maintenance and protection of traffic; dewatering; excavation; handling and disposal of contaminated soil; and all other incidentals, complete and accepted within the project.

The contract documents include digital models of the pedestrian bridge to be used by the Contractor for layout and to develop shop drawings. Experience with the use of digital models will be required.

2. LIST OF CONTRACT DOCUMENTS:

There are two disks (1 CD and 1 DVD) with the Contract Documents loaded on them. The contents are as follows;

CD Disk 1 - Contents

Contract Specifications
Standard Specifications for Road & Bridge Construction Amended 2013, with all revisions
Compilation of Approved Specifications Supplement No. 17 May 2016
Compilation of Approved Specifications, April 2016
RI Department of Administration Procurement
Required Contract Provisions – Federal Aid Construction Contracts
Rhode Island Standard Details
Bridge Design Standard Details
General Provisions
General Provisions - Contract Specific
Specifications – Job Specific
Distribution of Quantities
Federal Wage Rates
Quest Software Information & Files
Quest Lite User Manual

Quest Lite Installation
Quest Lite Upgrade File
Quest Lite Launch (Bid File)
Plan Sets: Volume 1 – Park Plans
Volume 2 – Providence River Pedestrian Bridge Plans

The drawings for each of the volumes are compiled into one PDF file for each volume (Disk 1). In addition, each drawing file for the Contract is provided individually. The drawing files are subdivided by directories for each volume of drawings. For a detailed list of drawings, see CS pages Appendix B

DVD Disk 2 – Contents
Geometry Control Envelope ARCH_XYZ.3dm – 3D digital Model

3. LEGAL RELATIONS AND RESPONSIBILITIES TO PUBLIC UTILITIES AND FACILITIES:

In those areas where the Contractor's operations are adjacent or proximate to underground or overhead utilities such as gas, electric, water, telephone, fire alarm, sanitary and storm sewers, the provisions of Section 105.06 of the Rhode Island Standard Specifications for Road and Bridge Construction shall be followed.

During the progress of the work, the Contractor shall cooperate with the Owners of the utilities and permit their representative's access to the work to determine if their utilities are being endangered in any way.

4. UTILITY AND MUNICIPAL NOTIFICATION AND COORDINATION:

The contractor shall contact DIG SAFE (1-888-344-7233) prior to commencing with construction. Representatives of the utility companies shall be notified at least 48 hours prior to work each time it is taking place in the vicinity of their facilities.

The Contractor shall schedule the construction so as to allow for a coordinated site and utility effort. Upon award, the Contractor shall notify the lead utilities in writing relative to his anticipated start date. The Contractor shall include separate line items for construction for and by each utility company and location in the contract schedule and keep the utilities companies updated as the schedule is revised. The Contractor shall note that this contract includes work for:

National Grid Electric (NGRIDE)

Immediately following the preconstruction conference, the Contractor shall initiate coordination with utility companies as needed. All locations for utility work given below are approximate. All costs for coordination and meeting attendance shall be incidental to the various items of work.

INDEX
SPECIAL PROVISIONS
CONSTRUCTION SPECIFIC

CODE	TITLE	PAGE
209.9901	Furnish, Maintain and Remove Inlet Protection	JS-46
212.1000	Maintenance and Cleaning of Erosion and Pollution Controls	JS-47
401.9901	Hand Placed Bituminous Pavement	JS-48
701.9933	Furnish and Install NGRID 2-Way 4-inch PVC Conduit	JS-49
803.9901	Partial Removal and Disposal of Masonry Walls and Abutments	JS-50
803.9902	Partial Removal and Disposal of Masonry Bridge Piers and Pile Caps	
804.9901	Tropical Hardwood Timber Piles Furnish and Drive Over 40 Feet Long	JS-53
804.9911	Mobilization & Demobilization Of Micropile Equipment	JS-70
804.9912	Drilled Micropile	
804.9914	Micropile Load Test	
804.9930	Confirmatory Soil Borings - Land	JS-88
804.9931	Confirmatory Soil Borings -Water	
805.9901	Gabion Mattress	JS-92
805.9910	Geotextile Fabric	JS-96
805.9920	Geofoam	JS-97
806.9901	IPE Wood Deck, Upper Deck	JS-100
806.9902	IPE Wood Deck, Terrace	
806.9903	IPE Wood Deck, Lower Deck, Type A	
806.9905	IPE Edge Board, Upper Deck	
806.9906	IPE Edge Board, Lower Deck	
806.9907	IPE Edge Board, Terrace	
806.9910	IPE Wood Deck, Boardwalk	
806.9911	IPE Edge Board, Boardwalk	
806.9914	**IPE Wood Deck, Lower Deck, Type B**	
806.9920	Treated Timber Girders, Head Beams, Diaphragm Blocks, and Stringers for Boardwalk	JS-111
806.9921	WANA Wood, Upper Bridge Fascia – North	JS-113
806.9922	WANA Wood, Upper Bridge Fascia – South	
806.9923	WANA Wood, Lower Bridge Fascia – South	
806.9924	WANA Wood, Lower Bridge Fascia – North	
808.9901	Modular Block Wall (Precast Concrete)	JS-120

JOB SPECIFIC

CODE 806.9901
IPE WOOD DECK, UPPER DECK

CODE 806.9902
IPE WOOD DECK, TERRACE

CODE 806.9903
IPE WOOD DECK, LOWER DECK, TYPE A

CODE 806.9914
IPE WOOD DECK, LOWER DECK, TYPE B

CODE 806.9905
IPE EDGE BOARD, UPPER DECK

CODE 806.9906
IPE EDGE BOARD, LOWER DECK

CODE 806.9907
IPE EDGE BOARD, TERRACE

CODE 806.9910
IPE WOOD DECK, BOARDWALK

CODE 806.9911
IPE EDGE BOARD, BOARDWALK

DESCRIPTION:

Work under this item shall consist of, all work associated with the furnishing, fabricating, storing, handling, hauling, cutting/scribing to length/shape and installing the **Ipe Wood** in accordance with Section 806 of the Rhode Island Department of Transportation Standard Specifications, the Contract Plans and this special provision, or as directed by the Engineer. The Contractor shall subcontract these items such that they are furnished, fabricated, and installed by one of the three prequalified firms as specified in item code 105.9999.

MATERIALS:

Materials for Ipe Wood shall conform to both the applicable provisions of SECTION M.11; TIMBER, of the Rhode Island Department of Transportation Standard Specifications and the following additional requirements;

The Contractor shall use the following wood species for all wood components associated with the Ipe Wood Deck and Ipe Edge Board identified as "**Ipe Wood**" in this special provision.

Ipe Wood
Botanical Name: Tabebuia spp. (Lapacho group)
Janka Hardness of 3,680 lb_f

Bending strength is 23,360 psi
Shrinkage: Radial: 5.9%, Tangential: 7.2%, Volumetric: 12.4%, T/R Ratio: 1.2
Class A fire rating

Supplier shall pre-treat all surfaces of wood decking with VOC compliant Penetrating UV Protection Oil Finish as manufactured by Penofin prior to delivery to Contractor.

Manufacturer: Minimum 5 years' experience producing similar products.

Supplier to provide Contractor with Chain of Custody documentation for wood including required compliance with Lacey Act provisions.

Provide a manufacturer's standard 25 year warranty. The terms of the warranty shall state that the application of Ipe decking installed per supplier and fastener manufacturer recommendations is guaranteed to resist rot and insect damage for 25 years from the original installation date.

All Pressure-Treated Sleepers shall be treated Southern Pine #2 or better, with the following minimum tabulated values:

F_{bo} = 1500 psi
E = 1,600,000 psi.

See the plans for lengths.

All Stainless Steel for drain clean-out plates shall be austenitic UNS S31603 (316L).

Stainless Steel shall be treated with a medium grade, anti-slip surface coating, UL slip-resistant certified, with the following minimum tabulated values:

Surface Hardness	HRB 90 (Rockwell 'B' Scale)
Bond Strength to steel	7,300 psi
Coefficient of Friction	0.6

Slip resistant material shall be applied to stainless steel as a thermal spray coating (metalizing). The Slip Resistant Material shall be a high purity nickel chrome wire (Ni 20Cr).

The Slip Resistant application must conform to the following;

Static Coefficient Of Friction (COF) using the ASTM C-1028 method and device, both wet and dry, are above 0.05.
Slip Resistance Factor using the ASTM F-1679 method and device, both wet and dry, are above 0.50.
Dynamic Coefficient Of Friction (COF) using the ASTM E-303 method and device, both wet and dry, are above 0.50.

Surface Preparation:
The steel surface shall be clean and free of oxides (rust), dirt, oils or grease before metalizing. The surface shall be grit blasted to SSPC Surface Preparation Specification 10. The grit blast medium shall be 24 mesh aluminum oxide. The piece shall be metalized within 6 hours of blasting. Oils and grease shall be removed by use of an aqueous alkaline solution and/or hand or power tool cleaning.

Anti-Slip Coat Application:
The metalizing applicator shall be capable of providing 200 amp spray arc and 60 psi compressed air, a deposit rate of 11 lbs/hr/100A and a deposit efficiency of 70%. Typical wire Coverage shall be 0.8 oz/sq.ft/mil

All Stainless Steel Sheet, Strip and Plates shall conform to ASTM A240/A240M and ASTM A480/A480M with a Sulphur content not to exceed 0.005%. Stainless Steel Sheet and Plates shall be Stretcher Leveled Standard of Flatness in accordance with ASTM 480/480M Table A2.8. Contractor to provide copies of certification showing compliance.

Stainless Steel Fasteners shall conform to Group 2 ASTM F593G or F593H (condition CW1 or CW2) or A1082/A1082M UNS S32101, S32304 or S32205.

All Slip-Resistant Stainless Steel Plates shall have a diamond (tread/checkered pattern) on the travel surface. Slip-Resistant pattern shall be in general conformance with the geometric requirements of ASTM A 793.

The following **Ipe Wood** types are to be provided as described below;

A. Ipe Wood Deck, Upper Deck – Item Code 806.9901

A typical **Ipe Wood Deck, Upper Deck** shall consist of the following materials;

(1) 3x6 Ipe Decking – Actual Size 2 ½" x 5 ½". Length specified on plans and shaped in the 3D Digital Model. Each length of decking material in a single bay shall be a single piece of wood.
(2) 3x12 Ipe Decking – Actual Size 2 ½" x 11 ¼". Length specified on plans and in 3D Digital Model. Each length of decking material in a single bay shall be a single piece of wood.
(3) #14 x 4" Stainless Steel Flat Head Ejector Screws – as manufactured by Muro North America Inc.
(4) 2x6 Pressure-Treated Sleeper – Actual Size 1 ½" x 5 ½". Length varies.
(5) Stainless steel self-tapping wood-to-steel screws
(6) Flush Mounted Floor Box (Item Code T05.9901)
(7) End Sealer – AnchorSeal as manufactured by UC Coatings or approved equal.
(8) Electrical Vault Fencing Enclosure
    a. Wire Mesh, Square Weave, Stainless Steel Type 316, Woven Construction, 2"x2" Mesh, 0.0630" Wire, .437" Opening.
    b. 2" x 2" x 3/16" Clip Angle with Thermal Sprayed Zinc Coating per Section 827 and Painted per section 825.
    c. 316 Stainless steel expansion anchor with 2" stainless steel fender washer
    d. Tamper-proof stainless steel nut and washer assembly
(9) Electrical Vault Access Hatch
    a. 3"x3" Heavy Duty, 316 Stainless Steel Flush Lift Ring with four (4) #8 counter-sunk screws.
    b. Hinge, 4 ½" x 4 ½" Extra Heavy Duty, Non-Removable Pins
    c. Stainless Steel, Compression Latch with Key-Operated Head and Large Size-Flush Design body style.

d. 3 ½" x 3 ½" x 5/16" Steel Angle Frame with Thermal Sprayed Zinc Coating per Section 827 and Painted per section 825.

B. Ipe Wood Deck, Terrace – Item Code 806.9902

A typical **Ipe Wood Deck, Terrace** shall consist of the following materials;

(1) 5/4x6 Ipe Decking – Actual Size 1" x 5 ½". Length specified on plans and shaped in the 3D Digital Model. Each length of decking material in a single bay of terrace hall be a single piece of wood.
(2) #10 x 2 ½" Stainless Steel Flat Head Ejector Screws – as manufactured by Muro North America Inc.
(3) 2x4 Pressure-Treated Sleeper – Actual Size 1 ½" x 3 ½". Length varies.
(4) Powder actuated nails
(5) End Sealer – AnchorSeal as manufactured by UC Coatings or approved equal.
(6) 14" x 5 ½" x ¼" Stainless Steel Drain Clean-Out Plate with Tamperproof Countersunk Stainless Steel screws at locations noted on plans.
(7) Anti-Slip Surface Covering on Stainless Steel Plate

C. Ipe Wood Deck, Lower Deck, Type A – Item Code 806.9903

A typical **Ipe Wood Deck, Lower Deck** shall consist of the following materials;

(1) 5/4x6 Ipe Decking – Actual Size 1" x 5 ½". Length specified on plans and shaped in the 3D Digital Model. Each length of decking material in a single structural bay shall be a single piece of wood.
(2) #10 x 2 ½" Stainless Steel Flat Head Ejector Screws – as manufactured by Muro North America Inc.
(3) 2x4 Pressure-Treated Sleeper – Actual Size 1 ½" x 3 ½". Length varies.
(4) Powder actuated nails
(5) Polyvinyl Chloride shims plates. Various sizes. Minimum compressive strength of 8,000 psi.
(6) End Sealer – AnchorSeal as manufactured by UC Coatings or approved equal.
(7) 14" x 5 ½" x ¼" Stainless Steel Drain Clean-Out Plate with Tamperproof Countersunk Stainless Steel screws at locations noted on plans.
(8) Anti-Slip Surface Covering on Stainless Steel Plate.

D. Ipe Wood Deck, Lower Deck, Type B – Item Code 806.9914

A typical **Ipe Wood Deck, Lower Deck** shall consist of the following materials;

(1) 5/4x3 Ipe Decking – Actual Size 1" x 2 ¾". Length specified on plans and shaped in the 3D Digital Model. Each length of decking material in a single bay shall be a single piece of wood.
(2) #10 x 2 ½" Stainless Steel Flat Head Ejector Screws – as manufactured by Muro North

America Inc.
(3) 2x4 Pressure-Treated Sleeper – Actual Size 1 ½" x 3 ½". Length varies.
(4) Powder actuated nails
(5) Polyvinyl Chloride shims plates. Various sizes. Minimum compressive strength of 8,000 psi.
(6) End Sealer – AnchorSeal as manufactured by UC Coatings or approved equal.
(7) 14" x 5 ½" x ¼" Stainless Steel Drain Clean-Out Plate with Tamperproof Countersunk Stainless Steel screws at locations noted on plans.
(8) Anti-Slip Surface Covering on Stainless Steel Plate.

E. Ipe Edge Board, Upper Deck – Item Code 806.9905

A typical **Ipe Edge Board, Upper Deck** shall consist of the following materials;

(1) 3x12 Ipe Timber – Actual Size 2 ½" x 11 ¼". Exposed outer edge shall be chamfered at 78.8 degrees per plans. Length specified on plans and shaped in the 3D Digital Model. Each length of Edge Board shall be a single piece of wood.
(2) #14 x 4" Stainless Steel Flat Head Ejector Screws – as manufactured by Muro North America Inc.
End Sealer – AnchorSeal as manufactured by UC Coatings or approved equal.

F. Ipe Edge Board, Lower Deck – Item Code 806.9906

A typical **Ipe Edge Board, Lower Deck** shall consist of the following materials;

(1) 5/4x10 Ipe Board – Actual Size 1" x 9 ¼". Exposed outer edge shall be chamfered inwards at 77 degrees. Length specified on plans and shaped in the 3D Digital Model. Each length of Edge Board shall be a single piece of wood. Refer to plans and 3D Digital Model for fabrication of curved Ipe Edge Board, Lower Deck.
(2) 2x8 Ipe Blocking – Actual Size 1 ½" x 7 ¼". Exposed outer edge shall be chamfered at 77 degrees per plans.
(3) #10 x 2 ½" Stainless Steel Flat Head Ejector Screws – as manufactured by Muro North America Inc.
(4) End Sealer – AnchorSeal as manufactured by UC Coatings or approved equal.

G. Ipe Edge Board, Terrace – Item Code 806.9907

A typical **Ipe Edge Board, Terrace** shall consist of the following materials;

(1) 2x8 Ipe Lumber – Actual Size 1 ½" x 7 ¼". Exposed outer edge shall be chamfered inwards per plans. Length specified on plans and shaped in the 3D Digital Model. Each length of Edge Board shall be a single piece of wood. Refer to plans and 3D Digital Model for fabrication of curved Ipe Edge Board, Terrace.
(2) 2x6 Pressure-Treated Sleeper – Actual Size 1 ½" x 5 ½". Length varies
(3) #10 x 3" Stainless Steel Flat Head Ejector Screws – as manufactured by Muro North America Inc.

(4) 1"x1"x1/8" stainless steel angle
(5) #10 x 3/8" self-tapping stainless steel flat head screw
(6) Luminaire Type LR – with Drivers (Item Code T07.9906) per Electrical Plans.
(7) End Sealer – AnchorSeal as manufactured by UC Coatings or approved equal.

H. 806.9910 Ipe Wood Deck, Boardwalk
A typical **Ipe Wood Deck, Boardwalk** shall consist of the following materials;

(1) 1x6 Ipe Decking – Actual Size ¾" x 5 ½". Minimum Length 8 feet.
(2) #10 x 2" Stainless Steel Flat Head Ejector Screws – as manufactured by Muro North America Inc.
(3) 1x10 Ipe Edge Board – Actual Size ¾" x 9 ¼". Length and edge cut varies per the plans.
(4) End Sealer – AnchorSeal as manufactured by UC Coatings or approved equal.

I. 806.9911 Ipe Edge Board, Boardwalk
A typical **Ipe Edge Board, Boardwalk** shall consist of the following materials;

(1) 1x10 Ipe Edge Board – Actual Size ¾" x 9 ¼". Length and edge cut varies per the plans.
(2) #10 x 2" Stainless Steel Flat Head Ejector Screws – as manufactured by Muro North America Inc.
(3) End Sealer – AnchorSeal as manufactured by UC Coatings or approved equal.

Submittals

The Contractor shall provide samples and submit shop drawings as identified below;

A. Samples:
1. Ipe Wood: Submit samples for size, color and texture required. Minimum length for each sample shall be 12". Samples should be pretreated with VOC compliant Penetrating UV Protection Oil Finish as manufactured by Penofin.
2. Shims: Submit samples for sizes required and manufacturer data.
3. Fasteners: Submit 2 samples and manufacturer data sheets for each fastener type required.
4. Stainless Steel Plate with Anti-Slip Surface Covering - minimum 5 ½" x 14" x ¼". Provide two countersunk holes for fastener installation.
5. Fasteners: Submit samples and manufacturer data sheets for tamper-proof Stainless Steel Fasteners for Stainless Steel Plate.
6. Wire Mesh: Submit 12"x12" sample for size and finish required.
7. Lift Ring: Submit a sample for size and finish required.
8. Hinge: sample for size and finish required.
9. Compression Latch; sample for size, style and finish required.

B. Shop Drawings:
Submit shop drawing for Ipe Wood identifying all components required. Shop drawings shall include plan drawings showing layout of all Ipe Wood Deck areas and detail drawings showing how the various components fit together. Include manufacturer's literature

completely describing all components of this special provision and giving detailed installation recommendations and instructions. Also include detailed installation drawings for all Ipe Wood Deck and Ipe Wood, Steps. The Contractor may reference the 3D Digital Model of the pedestrian bridge released with the contract documents for this project. **The 3D Digital Model is to be used for reference only.**

CONSTRUCTION METHODS:

The Construction Methods of the Ipe Wood shall be accordance with Section 806 of the Rhode Island Department of Transportation Standard Specifications and as supplemented or modified herein.

Prior to start of installation, inspect existing conditions to ensure surfaces are suitable for installation of decking. Starting work indicates Contractor's acceptance of existing conditions. Contractor shall follow manufacturer's recommendations for proper acclimation of wood prior to installation.

All lumber used in fabrication of sleepers shall be pressure treated with wood preservative in accordance with the requirements of AASHTO M133 and AWPA Standard C14.

To the extent possible, all sleeper wood shall be cut, drilled and completely fabricated prior to pressure treatment with preservatives. When field fabrication of wood is required or if wood is damaged, all cuts, bore holes, and damage shall be immediately field treated with 3 brush coats of hot preservative oil.

In addition to the requirements of RI Standard Specifications, Section 806, the following shall apply.

A. Install in accordance with manufacturer's instructions including the following:
   1. Install materials plumb, true to line, cut and fitted.
   2. Scribe and cope as required for accurate fit to adjacent construction.
   3. Fasten tight to supports. Provide shims if there are variations in framing.
   4. Seal cut ends with AnchorSeal in accordance with manufacturer's instructions.
   5. For all pressure treated sleepers supply common and botanical names, results of ASTM D143 testing, and grading rules and certification of person performing the grading. All suppliers shall list at least three public installations of their product with references consisting of either the engineer or architect for the project. Supplier shall also provide certification from the country supplying the wood that their product is from a sustainable source.

B. Protect Ipe Wood from damage during construction operations. Promptly repair any damaged surfaces. Remove and replace work which is not repaired to the satisfaction of the Engineer.

C. Thoroughly clean, sweep and collect debris prior to rinsing with water prior to final acceptance. Debris laden water shall not be allowed to discharge into the River Provide a final coat of VOC compliant Penetrating UV Protection Oil Finish as manufactured by Penofin to exposed surface area only.

D. Handling of Pressure-Treated Sleepers

Timber shall be kept out of direct sunlight until ready to be installed and finished. A tarp will suffice.

E. Cutting and Machining of Pressure-Treated Sleepers

Sleepers shall be cut and machined with carbide tipped cutters. Due to its high density, a slower feed rate is recommended when machining these woods. After cross-cutting, exposed ends should be sealed with a clear paraffin wax based end sealer (such as "Anchorseal" by UC Coatings) applied with a foam brush. Individuals who may be sensitive to certain species should wear protective clothing, respiratory masks or goggles to limit exposure.

F. Fasteners for Pressure-Treated Sleepers

All connections shall be constructed in accordance with the details on the plans and in accordance with RI Standard Specification Section 806.

A. Ipe Wood Deck, Upper Deck

A typical **Ipe Wood Deck, Upper Deck** shall be installed as follows;

(1) Maintain gap per recommended installation guidelines between adjacent decking boards. Secure to sleepers with countersunk 4" x #14 Stainless Steel Ejector Screws. Provide 4 screws at mid-span locations and 2 screws at end conditions. Screw head shall be countersunk below surface of finish deck per manufacturer recommended installation guidelines.

(2) Secure Sleeper to structural steel cross-framing with 2 rows of powder actuated nails at 16" on center.

(3) Install Flush Mounted Floor Boxes (Item Code T05.9901) at locations noted on the plans. Floor box to be secured to miscellaneous steel angle framing and mounted flush with adjacent wood decking. Coordinate locations with Architectural and Electrical plans.

(4) Install Electrical Vault Access Hatch at locations noted on the plans. Access Hatch to be secured over steel angle frame and include two (2) compression latches, two (2) flush lift rings and four (4) extra-heavy duty hinges.

(5) Install Electrical Vault Fencing Enclosure at locations noted on plans. Provide continuous 2"x2" wire mesh between top of CMU wall and underside of Ipe Wood Deck at interior perimeter of Electrical Vault. Secure with expansion anchors and fender washers at CMU wall and secure to clip angles with tamper-proof bolted nut & washer assembly at top of steel and underside of Ipe Wood Deck.

B. Ipe Wood Deck, Terrace

A typical **Ipe Wood Deck, Terrace** shall be installed as follows;

(1) Maintain gap per recommended installation guidelines between adjacent Decking Boards. Secure to sleepers with countersunk 2 ½" x #10 Stainless Steel Ejector Screws. Provide 2 screws at sleeper locations.

(2) Secure Sleeper to concrete slab with 2 rows of powder actuated nails at 16" on center.
(3) Concrete slab shall be clean and debris free prior to installing deck.
(4) Install stainless steel clean-out plate with anti-slip coating and tamper-proof screws at locations above drains below deck as indicated on the plans.

C. Ipe Wood Deck, Lower Deck, Type A

A typical **Ipe Wood Deck, Lower Deck** shall be installed as follows;

(1) Maintain gap per recommended installation guidelines between adjacent decking boards.
(2) Secure to sleepers with countersunk 2 ½" x #10 Stainless Steel Ejector Screws. Provide 2 screws at sleeper locations. Screw head shall be countersunk below surface of finish deck per manufacturer recommended installation guidelines.
(3) Secure to concrete slab with 2 rows of powder actuated nails at 16" on center.
(4) Install plastic shim plates – size and location per plans.
(5) Concrete slab shall be clean and debris free prior to installing deck
(6) Install stainless steel clean-out plate with anti-slip coating and tamper-proof screws at locations above drains below deck as indicated on the plans.

D. Ipe Wood Deck, Lower Deck, Type B

A typical **Ipe Wood Deck, Lower Deck** shall be installed as follows;

(1) Maintain gap per recommended installation guidelines between adjacent decking boards.
(2) Secure to sleepers with countersunk 2 ½" x #10 Stainless Steel Ejector Screws. Provide 2 screws at sleeper locations. Screw head shall be countersunk below surface of finish deck per manufacturer recommended installation guidelines.
(3) Secure to concrete slab with 2 rows of powder actuated nails at 16" on center.
(4) Install plastic shim plates – size and location per plans.
(5) Concrete slab shall be clean and debris free prior to installing deck
(6) Install stainless steel clean-out plate with anti-slip coating and tamper-proof screws at locations above drains below deck as indicated on the plans.

E. Ipe Edge Board, Upper Deck

A typical **Ipe Edge Board, Upper Deck** shall be installed as follows;

(1) Provide a 5/8" gap between adjacent edge boards at Vertical Support A.1 locations of "Architectural Railing, Type A, Upper Deck w/LED".. Provide 1 ¼" x 1 ¼" notch in boards at electrical chase locations in Vertical Support A.2 of "Architectural Railing, Type A, Upper Deck w/LED".
(2) Secure Edge Board, Upper Deck to continuous support angle with stainless steel self-tapping countersunk wood-to-steel screws. Provide 4 screws per Ipe Edge Board, Upper Deck, spaced per plans. Screw head shall be countersunk below surface of finish deck per manufacturer recommended installation guidelines.
(3) Notch Edge Board, Upper Deck at base plate bolted connections to achieve a level surface alignment.

F. Ipe Edge Board, Lower Deck

A typical **Ipe Edge Board, Lower Deck** shall be installed as follows;

(1) Provide a ¾" gap between adjacent edge boards at Vertical Support B.1 locations of "Architectural Railing, Type B, Lower Deck w/LED". Provide 1 ¼" x 1 ¼" notch in boards at electrical chase locations in Vertical Support B.2 of "Architectural Railing, Type B, Lower Deck w/LED".
(2) Secure Edge Board to continuous 2x8 Ipe Blocking with 2 ½" x #10 Stainless Steel Flat Head Ejector Screws. Screw head shall be countersunk below surface of finish deck per manufacturer recommended installation guidelines.
(3) Secure Ipe Blocking to structural steel cross-framing or concrete slab with 2 rows of countersunk stainless steel self-tapping wood-to-steel screws at 16" on center. Pre-drill Ipe blocking prior to installation.

G. Ipe Edge Board, Terrace

A typical **Ipe Edge Board, Terrace** shall be installed as follows;

(1) Maintain gap per recommended installation guidelines between adjacent edge boards.
(2) Secure edge board to sleepers with countersunk #10 x 3" Stainless Steel Flat Head Ejector Screws. Provide screws at 16" on center. Screw head shall be countersunk below surface of finish deck per manufacturer recommended installation guidelines.
(3) Secure Sleeper to concrete slab with 2 rows of powder actuated nails at 16" on center.
(4) Secure stainless steel angled in routered notch of edge board per plans with #10 x 3/8" self-tapping stainless steel flat head screws at 16" o.c.
(5) Install Luminaire Type TR LED light fixture per Electrical Plans.

H. Ipe Wood Deck, Boardwalk

A typical **Ipe Wood Deck, Boardwalk** shall be installed as follows;

(1) Maintain gap per recommended installation guidelines between adjacent decking boards.
(2) Secure to each stringer with countersunk 2 ½" x #10 Stainless Steel Ejector Screws. Screw head shall be countersunk below surface of finish deck per manufacturer recommended installation guidelines.

I. 806.9911 Ipe Edge Board, Boardwalk

A typical **Ipe Edge Board, Boardwalk** shall be installed as follows;

(1) Cut, shape edge boards to fit outside radius as indicated on plans.
(2) Maintain gap per recommended installation guidelines between adjacent decking boards.
(2) Secure to each stringer with countersunk 2 ½" x #10 Stainless Steel Ejector Screws. Screw head shall be countersunk below surface of finish deck per manufacturer recommended installation guidelines.

METHOD OF MEASUREMENT:

Ipe Wood shall be measured by the square foot (SF) or linear foot (LF) as listed below and be placed in various parts of the completed structure in accordance with the Plans and/or as directed by the Engineer. Computation of quantity shall be based on the actual number of square feet (including

gaps and joints), or linear feet (including gaps and joints) actually installed on the bridge, walkway, or boardwalk of the respective materials actually installed. Waste and trimmed material shall not be measured for payment.

Contract Item		Measurement Unit
806.9901	Ipe Wood Deck, Upper Deck	SF
806.9902	Ipe Wood Deck, Terrace	SF
806.9903	Ipe Wood Deck, Lower Deck, Type A	SF
806.9914	Ipe Wood Deck, Lower Deck, Type B	SF
806.9905	Ipe Edge Board, Upper Deck	LF
806.9906	Ipe Edge Board, Lower Deck	LF
806.9907	Ipe Edge Board, Terrace	LF
806.9910	Ipe Wood Deck, Boardwalk	SF
806.9911	Ipe Edge Board, Boardwalk	LF

BASIS OF PAYMENT

Ipe Wood shall be paid for at the contract unit price as listed below. The price so-stated constitutes complete compensation for all labor, materials and equipment, including all installed Ipe Wood, Stainless Steel Fasteners, Stainless Steel Wire Mesh, Clip Angles, Stainless Steel Hinges, Stainless Steel Lift Rings, Stainless Steel Compression Latches, Steel Angle Frame, Stainless Steel Drain Access Plates with Anti-Slip coating, materials and construction of Electrical Access Hatch including wire mesh and steel frame (painted and metalized), sleepers, cutting, trimming, shaping, cleaning the deck, cleaning the concrete surfaces, Luminaires and drivers as well as all other incidentals and ancillary electrical hardware required to finish the work, complete and accepted by the Engineer. Waste and trimmed material shall not be considered for payment. Method of Measurement and Basis of Payment apply to SF and LF installed.

Contract Item		Payment Unit
806.9901	Ipe Wood Deck, Upper Deck	SF
806.9902	Ipe Wood Deck, Terrace	SF
806.9903	Ipe Wood Deck, Lower Deck, Type A	SF
806.9914	Ipe Wood Deck, Lower Deck, Type B	SF
806.9905	Ipe Edge Board, Upper Deck	LF
806.9906	Ipe Edge Board, Lower Deck	LF
806.9907	Ipe Edge Board, Terrace	LF
806.9910	Ipe Wood Deck, Boardwalk	SF
806.9911	Ipe Edge Board, Boardwalk	LF

END OF SECTION

S:\PROJECTS\I195FD\DESIGN\Contract 16\Addendum 4\Spec files\806.991-994-IPE WOOD add 4.docx

ITEM CODE 806.9920
TREATED TIMBER GIRDERS, HEAD BEAMS, DIAPHRAGM BLOCKS, AND STRINGERS FOR BOARDWALK

DESCRIPTION

Work under this item shall consist of, all work associated with the furnishing, fabricating, storing, handling, hauling and installing the treated timber head beams, girders, stringers and diaphragm blocks for the boardwalk framing in accordance with Section 806 of the RIDOT Standard Specifications, the Contract Plans and this special provision, or as directed by the Engineer.

MATERIALS

All timber including head beams, girders, stringers and blocking, shall be treated Southern Pine #1 or #2, as shown on the plan.

The nominal sizes, allowable Flexure Bending Stress and minimum Modulus of Elasticity of the various timber framing elements are;

Girders: Southern Pine #2, 16"x16" and 12"x16", F_{bo} = 850 psi, E= 1,200,000 psi
Diaphragm Blocks: Southern Pine #2, 6"x12", F_{bo} = 975 psi, E= 1,600,000 psi
Stringers: Southern Pine #2, 3"x 6", F_{bo} = 1250 psi, E=1,600,000 psi
Head Beams: Southern Pine #1, 8"x12", F_{bo} = 1250 psi, E=1,700,000 psi

See the plans for lengths.

CONSTRUCTION METHODS

All lumber and timber used in fabrication shall be pressure treated with wood preservative in accordance with the requirements of AASHTO M133 and AWPA Standard C14.

To the extent possible, all wood shall be cut, drilled and completely fabricated prior to pressure treatment with preservatives. When field fabrication of wood is required or if wood is damaged, all cuts, bore holes, and damage shall be immediately field treated with 3 brush coats of hot preservative oil.

In addition to the requirements of RI Standard Specifications, Section 806, the following shall apply.

A. Handling of timber

Timber shall be kept out of direct sunlight until ready to be installed and finished. A tarp will suffice.

B. Cutting and Machining

Timber shall be cut and machined with carbide tipped cutters. Due to its high density, a slower feed rate is recommended when machining these woods. After cross-cutting, exposed ends should be sealed with a clear paraffin wax based end sealer (such as "Anchorseal" by UC Coatings) applied with a foam brush. Individuals who may be sensitive to certain species should wear protective clothing, respiratory masks or goggles to limit exposure.

D. Fasteners

All connections shall be constructed in accordance with the details on the plans and in accordance with RI Standard Specification Section 806.

E. Submittals

For all timber, supply common and botanical names, results of ASTM D143 testing, and grading rules and certification of person performing the grading. All suppliers shall list at least three public installations of their product with references consisting of either the engineer or architect for the project. Supplier shall also provide certification from the country supplying the wood that their product is from a sustainable source.

METHOD OF MEASURMENT

Item Code 806.9920 Treated Timber Girders, Head Beams, Diaphragm Blocks, and Stringers for Boardwalk shall be measured as a lump sum for all elements listed for the boardwalk framing taken together as one item.

BASIS OF PAYMENT

Item Code 806.9920 Treated Timber Girders, Head Beams, Diaphragm Blocks, and Stringers for Boardwalk shall be paid for at the contract bid price per lump sum for all the timber framing elements taken together as a lump sum. The price so stated constitutes full and complete compensation for all labor, materials, and equipment, including all lumber, preservative treatment, and all other incidentals required to finish the work, complete and accepted by the Engineer. Waste and trimmed material shall not be considered for payment. Hardware for timber construction is paid per item 806.1750 and 824.9920

S:\PROJECTS\I195FD\DESIGN\Contract 16\C16 Specs\Bridge Specs\2016-5-PS&E Submission\8069902-Treated Timber Girder, Stringer,Head Beam and Diaphragm Block add4.docx

ITEM CODE 808.9901
MODULAR BLOCK WALL (PRECAST CONCRETE)

DESCRIPTION: This item shall consist of furnishing and constructing a precast concrete modular block retaining wall and all other work associated with the construction of said items in the locations, grades, and to the dimensions and details shown on the contract drawings, and in accordance with these specifications, the Rhode Island Department of Transportation Standard Specification and all applicable compilations of approved specifications and/or as directed by the Engineer.

RELATED ITEMS:

203.0700	Pervious Fill
203.99	Dewatering
203.9999	Structure Excavation and Backfill
805.9910	Gabion Mattress
805.9910	Geotextile Fabric
834.9905	Capstone Type A

MATERIALS:

A. Concrete Blocks: Concrete Blocks will be installed at the edge of the tidal zone and exposed to brackish flooding on a regular basis. Concrete blocks shall be solid precast concrete, exhibiting minimal porosity, approximately 18" (inches) high by 4-foot long and 23" to 28" (inches) deep, with complementary interlocking top knobs/bottom grooves. All blocks of the same type (bottom blocks, top blocks, etc.) shall have uniform exterior dimensions. Blocks shall be precast concrete in accordance with ASTM C94. Use densified silica fume mineral admixture for increased porosity per manufacturer's specifications.

Concrete used in the production of the precast modular block units shall be first-purpose, fresh concrete. It shall not consist of returned, reconstituted, surplus or waste concrete. It shall be an original production mix and exhibit the following:

1. Minimum 28-day compressive strength of 5,000 psi.
2. Shall be free of water soluble chlorides and chloride based accelerator admixtures.
3. 4 ½ % - 7 ½ % air-entrainment in conformance ASTM C94.
4. Maximum slump of 5 inches +/- 1½ inches (125 mm +/- 40 mm) per ASTM C143 for conventional concrete mix designs.
5. Slump Flow for Self-Consolidating Concrete (SCC) mix designs shall be between 18 inches and 32 inches (450 mm and 800 mm) as tested in accordance with ASTM C1611.

Face of the wall shall have a "Limestone" pattern and tinted a color to match the texture and color stone on the existing piers of the future Providence River Pedestrian Bridge.

Wall units shall be produced by a licensed provider. Acceptable Suppliers/Manufacturers are listed below or as approved by Engineer:

Redi-Rock	Recon Retaining Walls	Big-b Block Walls
info@redirock.com	reconwalls.com	bigblockinc.com

B. Foundation Soil: The foundation shall be a Gabion Mattress Code 805.9901 placed on native undisturbed in-situ soils. Excavation shall conform to Section 203 of the Rhode Island Standard Specifications and Special Provision 203.9999. Dewatering shall conform to Section 203 of the Rhode Island Standard Specifications and Special Provision 203.99.

C. Backfill shall be Pervious Fill conforming to Section 203 and M.01.03 of the Rhode Island Standard Specifications,

D. Weep Holes shall conform to Rhode Island Standard 10.3.0. Method installing of weep holes through blocks shall be as recommended by block manufacturer. Weep holes shall be at an approximate elevation of 1.5 PMHW.

Other: Additional materials, if required for the concrete block retaining wall, shall be in accordance with the manufacturer's requirements and specifications and shall be approved by the Engineer. Metal shall not be used to interlock the blocks.

SUBMITTALS: All submittals (product data sheets, shop drawings, design reports, etc.) related to elements of this item shall be made in accordance with the provisions of SECTION 105.02 of the Standard Specifications and as modified by these contract documents.

A. Product Data: Contractor shall submit the retaining wall product submittal package for review and approval. The submittal package shall include technical specifications and product data from the manufacturer for the following:
    1. Precast Modular Block System brochure, color and texture charts. Color and texture to be chosen by the Engineer.
    2. Detailed Precast Modular Block design mix, including all admixtures, in general conformance with Section 601 of the Rhode Island Standard Specifications and concrete test results including:
        a. 28-day compressive strength
        b. Air content
        c. Slump or Slump Flow (as applicable)

B. Installer Qualification Data. Contractor shall submit the qualifications of the business entity responsible for installation of the retaining wall. In order to demonstrate basic competence in the construction of precast modular block walls, the Retaining Wall Installation Contractor shall document compliance with the following:
    1. Experience.

a. Construction of at least five (5) precast modular block (large block) retaining wall structures within the past three (3) years.

2. Retaining Wall Installation Contractor experience documentation for each qualifying project shall include:
   a. Project name and location
   b. Date (month and year) of construction completion
   c. Contact information of Owner or General Contractor
   d. Type (trade name) of precast modular block system built
   e. Maximum height of the wall constructed
   f. Face area of the wall constructed
3. In lieu of the requirements set forth in items 1 and 2 above, the Retaining Wall Installation Contractor must be a certified as demonstrated by satisfactory completion of a certified precast modular block retaining wall installation training program administered by the precast modular block manufacturer.

C. Retaining Wall Stability Design Calculations and Construction Shop Drawings stamped by an Engineer licensed to practice in the jurisdiction of the project location. The Contractor shall furnish detailed construction shop drawings and copies of the supporting structural calculations report to the Engineer for review and approval. This submittal shall include the following:
   1. Signed, sealed and dated drawings and engineering calculations.
   2. Modular Block dimensions vary slightly per each Manufacturer therefor Modular Wall block design in contract drawings is for design intent only. The Contractor shall submit detailed shop drawings showing the approved manufacturer's specific type blocks to be used to match the design intent. Shop drawings shall show detailed measurements of all block pieces including weep holes. Contractor shall coordinate the submissions of the Modular Walls and Granite Capstones (834.9905) so that the Modular wall is approved before submitting the Capstone Drawing layout and sizing.

D. Warranty: Provide written warranty, signed by the Contractor, fabricator, and installer agreeing to repair or remove, replace and reinstall at no additional cost to the State all precast units that become defective within five years from date of Substantial Completion. "Defective" is defined as unusual weathering, spalling, color change, staining from reinforcement or connectors, or other defects as determined by the Engineer.

E. Samples: Submit three samples approximately 12" x 12" x 2" to illustrate the quality, color, texture of the surface finish. Engineers' review of samples will be for color, texture, and general condition.

CONSTRUCTION METHOD:

GENERAL

General excavation/earthwork required for this item shall be performed in accordance with the applicable requirements set forth in Section 202 of the Standard Specifications and sections 203.99 and 203.9999 of the special provisions.

MODULAR CONCRETE BLOCK RETAINING WALL

Gabion Mattress Placement shall be in accordance with Code 805.9901. Excavation shall conform to Section 203 and Special Provision 203.9999 of the Rhode Island Standard Specifications, along the grades and dimensions shown on the Construction Drawings or as directed by the Engineer. Dewatering shall conform to Section 203 of the Rhode Island Standard Specifications and Special Provision 203.99.

Laying Blocks: The blocks shall be laid to line and in courses roughly leveled up. All blocks shall be laid with bearing beds parallel to the natural bed of the foundation material. Care must be taken to insure that each block takes a firm bearing at not less than three separate points upon the underlying course. Face joints shall not exceed one inch in width unless otherwise directed by the Engineer. The chinking of joints in the faces of the wall will not be permitted.

Ensure that each course of concrete blocks is offset according to the plans and details.

Pervious Fill: shall be placed behind the wall, to the dimensions shown on the drawings, in maximum lifts of 6 inches, compacted to a minimum density of 95% as determined by the Modified Proctor Density Test and separated from other soils using the approved non-woven geotextile. No heavy compaction equipment shall be allowed within 1 meter (3 feet) of the back of the wall fascia during construction.

The approved non-woven geotextile shall be set against the back of the lowest block wall unit, over the prepared foundation, and extend towards the back of the excavation, up the excavation face and back over the top of the drainage material to the retaining wall, or as directed by the Engineer.

Capstone to be placed on all top wall surfaces. (See item code 834.9905)

The Contractor shall note that the inverts of most of the modular walls are slightly above mean high water elevation. Partial construction of the walls to elevations above mean high water is required to be completed during times of low tide. The Contractor shall plan excavation and construction sequencing accordingly to conform to this requirement.

METHOD OF MEASURMENT: Item code 808.9901 Modular Block Wall (Precast Concrete) will be measured by the 'Square Foot' of vertical wall face (not including capstones) as measured from the top of the Gabion Mattress and horizontally along the face of the wall furnished and installed in accordance with the plan and/or as directed by the Engineer.

BASIS OF PAYMENT: The accepted quantity for item code 808.9901 Modular Block Wall (Precast Concrete) will be paid for at the contract unit per 'Square Foot' of wall face as listed in the Proposal. This payment shall constitute full and complete compensation for all labor, equipment, tools, excavation support, precast concrete blocks, pipes for weep holes, dewatering, and all incidentals required to complete the work in place and accepted by the Engineer.

Excavation, Fine Grading, Capstone, Pervious Fill, Backfill, Gabion Mattress and Geotextile Fabric shall be paid for under their respective item codes.

S:\PROJECTS\I195FD\DESIGN\Contract 16\C16 Specs\Beta\Beta PS&E\808 9901_Modular Concrete Wall mod PAA add4.doc

weight to be furnished. No adjustment in the Contract Price will be made if the weight furnished is more or less than the estimated weight unless changes in the work are ordered by the Engineer in writing. If such changes are ordered which vary the weight of the steel to be furnished, the Lump Sum price shall be adjusted by increasing or decreasing the payment based on a value per pound arrived at by dividing the Contract Lump Sum amount by the estimate of weight shown below.

824.04.2 Shear Connectors. "Welded Stud Shear Connectors" will be measured by the number of each such piece actually welded to steel flanges in accordance with the Plans and/or as directed by the Engineer.

824.05 BASIS OF PAYMENT
Delete the first paragraph of Section 824.05.1 and replace with the following:

824.05.1 Structural Steel; Furnish, Fabricate and Erect. All work performed under the following item codes shall be measured and paid for under the Lump Sum prices bid for each respective item as listed in the Proposal. The prices so-stated shall constitute full and complete compensation for all labor, materials, and equipment, including furnishing, fabricating, delivering, erecting, painting, metalizing, and all other incidentals required to finish the work, complete and accepted by the Engineer.

Item Code 824.9902 - ASTM A500 Grade B Tube Sections Furnish Fabricate & Erect
Estimated weight = 32,000 LBS

Item Code 824.9905 - AASHTO M270 Grade 50 Steel Furnish Fabricate & Erect Built-Up Simple Spans
Estimated weight = 118,500 LBS

Item Code 824.9906 - AASHTO M270 Grade 50 Steel Furnish Fabricate & Erect Built-Up Curved (Large Radius)
Estimated weight = 265,000 LBS

Item Code 824.9907 - AASHTO M270 Grade 50s Rolled Steel Floor Beams Furnish Fabricate & Erect
Estimated weight = 244,800 LBS

Steel for temporary uses including but not limited to temporary supports, bracing or shoring shall not be measured for or considered for payment.

824.05.2 Shear Connectors. The accepted quantity of "Welded Stud Shear Connectors" will be paid for at the Contract Unit Price per Each as listed in the Proposal. The price so-stated shall constitute full and complete compensation for all labor, materials, and equipment, and all other incidentals to finish the work, complete, in place and accepted by the Engineer.

S:\PROJECTS\I195FD\DESIGN\Contract 16\C16 Specs\Inform\PS&E\5-19-16\Special Provisions - 05.18.2016\Add 4\824.9902-.9907 Str Steel Ped Bridge add 4.doc

JOB SPECIFIC

ITEM CODE 830.9901
ARCHITECTURAL RAILING, TYPE A, UPPER DECK W/LED

ITEM CODE 830.9902
ARCHITECTURAL RAILING, TYPE B, LOWER DECK W/LED

ITEM CODE 830.9903
ARCHITECTURAL RAILING, TYPE C, HANDRAIL AT STEPS

ITEM CODE 830.9904
ARCHITECTURAL RAILING, TYPE D, WEST ABUTMENT W/LED

ITEM CODE 830.9905
ARCHITECTURAL RAILING, TYPE E, EAST ABUTMENT W/LED

ITEM CODE 830.9906
ARCHITECTURAL RAILING, TYPE F, HANDRAIL W/LED

ITEM CODE 830.9910
ARCHITECTURAL RAILING, TYPE BW, BOARDWALK

ITEM CODE 830.9911
ARCHITECTURAL RAILING, TYPE W, WALL D & BOARDWALK WINGWALL

DESCRIPTION:

Work under this item shall consist of, all work associated with the furnishing, fabricating, storing, handling, hauling and installing the Architectural Railing in accordance with Section 830 of the Rhode Island Department of Transportation Standard Specifications, the Contract Plans and this special provision, or as directed by the Architect and Engineer. The Contractor shall subcontract these items such that they are furnished, fabricated, and installed by one of the three prequalified firms as specified in item code 105.9999.

MATERIALS:

Materials for Architectural Railing shall conform to both the applicable provisions of SECTION M.11; TIMBER, and M.05; METALS, of the Rhode Island Department of Transportation Standard Specifications and the following additional requirements;

All Stainless Steel shall be austenitic UNS S31603 (316L).

Stainless Steel finish is to be Wet Polished Long Grain #4 or Hairline Polish.

Maximum installed Surface Roughness of Stainless Steel shall be 20 µin (micro inches) or less and shall be certified by the fabricator using a profilometer.

All Stainless Steel Sheet, Strip and Plates shall conform to ASTM A240/A240M and ASTM A480/A480M with a Sulphur content not to exceed 0.005%. Stainless Steel Sheet and Plates shall be Stretcher Leveled Standard of Flatness in accordance with ASTM 480/480M Table A2.8. Contractor to provide copies of certification showing compliance.

All stainless steel bars and hot or cold rolled shapes shall conform to ASTM A276

All welding shall comply with AWS D1.6, "Structural Welding Code--Stainless Steel". All welds to be pickled to comply with ASTM A380 ad chemically passivated to comply with ASTM A967. Contractor shall certify that the finished installed surfaces are free of iron contamination using one of the tests prescribed in ASTM A967. Wet towel test is permissible.

Stainless Steel Fasteners shall conform to Group 2 ASTM F593G or F593H (condition CW1 or CW2) or A1082/A1082M UNS S32101, S32304 or S32205.

The Contractor shall use the following wood species for all wood components associated with the Architectural Railing Types identified as "**Ipe Guard**" in this special provision.

Ipe Wood
Botanical Name: Tabebuia spp. (Lapacho group)
Janka Hardness of 3,680 lb_f
Bending strength is 23,360 psi
Shrinkage: Radial: 5.9%, Tangential: 7.2%, Volumetric: 12.4%, T/R Ratio: 1.2
Class A fire rating

Supplier shall pre-treat all surfaces of wood guard with VOC compliant Penetrating UV Protection Oil Finish as manufactured by Penofin prior to delivery to Contractor..

Manufacturer: Minimum 5 years' experience producing similar products.

Supplier to provide Contractor with Chain of Custody documentation for wood including required compliance with Lacey Act provisions.

Provide a manufacturer's standard 25 year warranty. The terms of the warranty shall state that the application of Ipe decking installed per supplier and fastener manufacturer recommendations is guaranteed to resist rot and insect damage for 25 years from the original purchase date.

Structural Requirements: Architectural Railing shall be capable of withstanding the effects of gravity loads and the following loads and stresses within limits and under conditions indicated on the Plans:

1. Handrails:
    a. Uniform load of 50 lbs/ft. (0.73 kN/m) applied in any direction.
    b. Concentrated load of 200 lbs (0.89 kN) applied in any direction.
    c. Uniform and concentrated loads need not be assumed to act concurrently.
2. Top Rails of Guards:
    a. 50 lbs/ft. (0.73 kN/m) applied horizontally and concurrently with 100 lbs/ft. (1.46 kN/m) applied vertically downward.
    b. Concentrated load of 200 lbs (0.89 kN) applied in any direction.
    c. Uniform and concentrated loads need not be assumed to act concurrently.
3. Wire Rope Infill:
    a. Concentrated load of 200 lbs (0.89 kN) applied horizontally on an area of 1 SF (0.093 sm).
4. Railing shall comply with all requirements of the ADA and OSHA regulations.

Architectural Railing shall be designed, fabricated, and installed to comply with applicable codes and regulations.

1. Minimum guardrail height: 42 inches (1067 mm).
2. Maximum opening in guardrail: Shall restrict 4 inches (102 mm) diameter sphere.
3. Handrail diameter: 1-1/4 inches (32 mm) minimum and 2 inches (51 mm) maximum.
4. Handrail clearance from wall: 1-1/2 inches (38 mm) minimum.

The Wire rope railing systems shall be designed, fabricated, and installed to accommodate expansion and contraction of metal components without causing undue stress, buckling, opening of joints, and distortion.

Design supports and hardware to withstand loads encountered without excessive deflection or distortion when cables are tensioned to required amounts required to conform to applicable building codes.

Exposed fasteners shall be of same materials, color and finish as material to which applied. Exposed surfaces throughout project shall have same inherent texture and color for similar locations.

Wire Rope to be ASTM A492 UNS S31600 (316) stainless steel. Fabricate wire rope with integral colored filament designating specific manufacturer.

A. Type 1: Stainless Steel Wire Rope Construction, 6 x 7 +WC INOX No. 10820-0600 with VISSLINE external thread ends RH on both ends as manufactured by Jakob, Inc. or approved equal.
   1. Diameter: 6 mm
   2. Breaking load including safety factor: 4,000 pounds (1,814 kg) minimum.
   3. Tension cables per manufacturer recommendation

The following Architectural Railing types are to be produced as described below;

A. Architectural Railing, Type A, Upper Deck w/LED – Item Code 830.9901

A typical Architectural Railing, Type A, Upper Deck w/LED shall consist of the following materials;

(1) Guard Rail shall be 1 ¼" diameter stainless steel pipe.
(2) Guard Rail Sleeve Insert shall be stainless steel pipe sized to fit interior diameter of between continuous Guard Rail end conditions.
(3) Custom Profiled 2x10 Ipe Guard – shaped per plans and 3D Digital Model. Provide end sealer – AnchorSeal as manufactured by UC Coatings.
(4) Two (2) 2 ½" wide - 4" x 15/16" x 3/16" bent stainless steel bent plate support.
(5) Rail support arm shall be 5/8" thick stainless steel.
(6) Two (2) vertical railing bars shall be ½" thick stainless steel plate.
(7) One (1) Intermediate support bar shall be ¼" thick x 1 ½" wide stainless steel plate.
(8) Four (4) flathead countersunk sex bolts shall be ½" diameter stainless steel.
(9) Tensioned stainless steel wire rope shall be 6mm in diameter.
(10) Electrical chase shall be 3/16" x 1 ¼" stainless steel square tube and continuous through base plate below.
(11) One (1) translucent panel with flat polished edges and satin underside finish shall be 1" thick x 1" wide cast resin.
(12) Two (2) threaded cap stainless steel fastener.
(13) Two (2) clips shall be 3/16" thick stainless steel angles.
(14) Foot Rail shall be 1" diameter stainless steel pipe.
(15) Stainless Steel Vertical support base Vertical support base shall be 5/8" thick stainless steel.
(16) Stainless Steel Base Plate and fasteners as specified in the Structural Drawings.
(17) Plate-to-plate fasteners shall be ½" diameter flathead countersunk stainless steel sex bolts.
(18) Luminaire Type H (Item Code T07.9902)
(19) Luminaire Type H2 (Item Code T07.9903)
(20) Luminaire Type V (Item Code T07.9913)
(21) Lighting DMX power integrator–for luminaire Type V (Item Code T07.9914)

(22) lighting power supplies/drivers – for Luminaire Types H, H2 (Item Code T07.9917)

B. Architectural Railing, Type B, Lower Deck w/LED – Item Code 830.9902

A typical Architectural Railing, Type B, Lower Deck w/LED shall consist of the following materials;

(1) Guard rail shall be 1 ¼" diameter stainless steel pipe.
(2) Guard rail support shall be 5/8" thick stainless steel plate.
(3) Two (2) flathead countersunk sex bolts shall be 5/8" diameter stainless steel.
(4) Continuous bar shall be ½" thick by 2 ½" wide stainless steel plate
(5) (2) Plate support angles shall be 3/16" x 4" x 2.5" stainless steel.
(6) Vertical railing bar shall ½" thick x 2 ½" wide stainless steel plate.
(7) Intermediate support bar shall be ¼" thick x 1 ½" wide stainless steel plate.
(8) Two (2) flathead countersunk sex bolts shall be 5/8" diameter stainless steel.
(9) Tensioned stainless steel wire rope shall be 6mm.
(10) Foot rail shall be 1" diameter stainless steel pipe.
(11) Stainless Steel Vertical support base shall be ¾" thick stainless steel.
(12) Stainless Steel Base Plate and fasteners as specified in the Structural Drawings.
(13) Plate-to-plate fasteners shall be ½" diameter flathead countersunk stainless steel sex bolts.
(14) Handrail shall be 1 ½" diameter stainless with integral Luminaire Type IHA (Item Code T07.9904)
(15) Lighting Power Supplies/Drivers – For Luminaire Types IHA (Item Code T07.9905)

C. Architectural Railing, Type C, Handrail at Steps – Item Code 830.9903

A typical Architectural Railing, Type C, Handrail at Steps shall consist of the following materials;

(1) Handrail shall be 1 ½" diameter stainless steel pipe.
(2) Two (2) vertical bar supports shall be 3/8" thick x 2" wide stainless steel plates.
(3) Guard rail support shall be ¾" thick x 2" wide stainless steel plate.
(4) Vertical support shall be ¾" thick x 2" wide stainless steel plate with welded connection to Grade, Riser or Wall Base Plate.
(5) Riser Base Plate shall be ½" thick stainless steel plate.
(6) Grade Base Plate shall be 5/8" thick stainless steel plate
(7) Wall Base Plate shall be ½" thick stainless steel plate
(8) Countersunk, stainless steel expansion anchors at connections to cast-in-place concrete wall, slab and steps.

(9) Plate-to-plate fasteners shall be ½" diameter flathead countersunk S.S. sex bolts.

D. Architectural Railing, Type D, West Abutment w/LED – Item Code 830.9904

A typical Architectural Railing, Type D, West Abutment w/LED shall consist of the following materials;

(1) Custom Profiled 2x10 Ipe Guard – shaped per plans and 3D Digital Model. Provide end sealer – AnchorSeal as manufactured by UC Coatings.
(2) Guard rail support arm shall be 5/8" thick stainless steel.
(3) Continuous bar shall be 3/8" thick by 2 ½" wide stainless steel plate.
(4) Continuous angle shall be 1" x 1" x 3/16" stainless steel.
(5) Two (2) vertical railing bar shall ½" thick x 2 ½" wide stainless steel plate.
(6) Intermediate support bar shall be ¼" thick x 1 ½" wide.
(7) Intermediate support mounting plate shall be 1 ½" x 2 ½" x 3/8" stainless steel plate.
(8) Two (2) flathead countersunk sex bolts shall be ½" diameter stainless steel.
(9) Tensioned stainless steel wire rope shall be 6mm.
(10) Wall plate shall be 4 ½" x 4 ½" x 3/8" stainless steel plate with a 2 7/8" x4 ½" x 5/8" welded Vertical Support Plate with drilled holes for sex bolt connections.
(11) Plate-to-plate fasteners shall be ½" diameter flathead countersunk stainless steel sex bolts.
(12) Luminaire Type H (Item Code T07.9902)
(13) Luminaire Type H2 (Item Code T07.9903)
(14) Lighting power supplies/drivers – for Luminaire Types H, H2 (Item Code T07.9917)

E. Architectural Railing, Type E, East Abutment w/LED – Item Code 830.9905

A typical Architectural Railing, Type E, East Abutment w/LED shall consist of the following materials;

(1) Custom Profiled 2x10 Ipe Guard – shaped per plans and 3D Digital Model. Provide end sealer – AnchorSeal as manufactured by UC Coatings.
(2) Two (2) plate supports angles shall be 4" x 2 ½" x 3/16" stainless steel.
(3) Continuous bar shall be 3/8" thick by 2 ½" wide stainless steel plate.
(4) Continuous angle shall be 1" x 1" x 3/16" stainless steel.
(5) Two (2) vertical railing bar shall ½" thick x 2 ½" wide stainless steel plate.
(6) Guard rail support shall be 5/8" thick stainless steel plate.
(7) Two (2) flathead countersunk sex bolts shall be ½" diameter stainless steel.

(8) Tensioned stainless steel wire rope shall be 6mm.
(9) Base shall be ½" thick stainless steel plate.
(10) Plate-to-plate fasteners shall be 3/8" diameter flathead countersunk S.S. sex bolts.
(11) Luminaire Type H (Item Code T07.9902)
(12) Lighting power supplies/drivers – for Luminaire Types H (Item Code T07.9917)

F. Architectural Railing, Type F, Handrail w/LED – Item Code 830.9906

A typical Architectural Railing, Type F, Handrail w/LED shall consist of the following materials;

(1) Handrail with integral LED lighting shall be 1 ½" diameter stainless steel pipe.
(2) Wall mounting plate shall be ¼" thick stainless steel.
(3) Three (3) flathead countersunk stainless steel tamper-proof expansion anchor per wall plate.
(4) Rod support shall be ½" diameter stainless steel pipe.
(5) Luminaire Type H (Item Code T07.9902)
(6) Lighting power supplies/drivers – for Luminaire Types H (Item Code T07.9917)

G. Architectural Railing, Type BW, Boardwalk – Item Code 830.99010 & Type W, Wall D and Boardwalk Wingwall – Item Code 830.9911

A typical Architectural Railing, Type BW, Boardwalk & Type W, Wall D and Boardwalk Wingwall shall consist of the following materials;

(1) Guard rail shall be 1 ¼" diameter stainless steel pipe.
(2) Guard rail support shall be 5/8" thick stainless steel plate.
(3) Two (2) flathead countersunk sex bolts shall be ½" diameter stainless steel.
(4) Continuous bar shall be ⅜" thick by 2 ½" wide stainless steel plate
(5) (2) Plate support angles shall be 3/16" x 4" x 2.5" stainless steel.
(6) Vertical railing bar shall ½" thick x 2 ½" wide stainless steel plate.
(7) Intermediate support bar shall be ¼" thick x 1 ½" wide stainless steel plate.
(8) Two (2) flathead countersunk sex bolts shall be 3/8" diameter stainless steel.
(9) Tensioned stainless steel wire rope shall be 6mm.
(10) Foot rail shall be 1" diameter stainless steel pipe.
(11) Vertical support base shall be 5/8" thick stainless steel.
(12) Anchorage bolts and base plate shall be stainless steel
(13) Plate-to-plate fasteners shall be 3/8" diameter flathead countersunk stainless steel sex bolts.
(14) Handrail shall be 1 ½" diameter stainless
(15) Special rail posts and plates at corners

Type BW and W railings do not have lighting.

Submittals

The Contractor shall provide samples and submit shop drawings as identified below. All shop drawings and samples should be submitted as a comprehensive package for each Architectural Railing type;

A. Samples:
   1. Post and rail sections - minimum 4 inch (100 mm) long piece of each handrail type.
   2. Infill
      a. Cable – minimum 12 inch long piece with end fittings.
      b. Translucent Panel – minimum 8 inch long piece of cast resin.
   3. Fasteners: Submit samples and manufacturer data sheets for each fastener type required.
   4. Profiled Ipe Wood: Submit 1 sample (minimum of 48" long) of profiled Ipe Wood Guard with integral Luminaire Type H (Item Code T07.9902). Pre-treat all surfaces of wood guard with VOC compliant Penetrating UV Protection Oil Finish as manufactured by Penofin
   5. Submit 2 samples (minimum of 24" long) of stainless steel handrail with integral Luminaire Type IHAL.
   6. Stainless Steel Rod and Pipe: Submit 2 samples of each diameter specified with specified finish.

B. Field Mock-up:
   Provide a mock-up of each railing type identified within this special provision for evaluation of preparation techniques and installation workmanship.
   1. Locate in areas designated by Engineer.
   2. Size: Minimum of 10 linear feet and including typical anchors and connections.
   3. Do not proceed with remaining work until workmanship is approved by the Engineer.
   4. Rework mock-up as required to produce acceptable work.
   5. Retain mock-up during construction as quality standard.
   6. If approved by Engineer the mock-up can be incorporated into the work.

C. Shop Drawings
   Submit shop drawings for Architectural Railings identifying all components required. Shop drawings shall include plan drawings showing layout and detail drawings showing how the various components fit together. Include manufacturer's literature completely describing all components of this special provision and giving detailed installation recommendations and instructions. The Contractor may reference the 3D digital model released with the tender documents for this project.

CONSTRUCTION METHODS:
The Construction Methods of the Architectural Railing shall be in accordance with Section 830 of the Rhode Island Standard Specifications for Road and Bridge Construction and as supplemented or modified herein.

Assemble and install Architectural Railing as indicated on plans. Secure to structural steel perimeter framing at locations indicated on plans and approved by the Engineer. All hardware, fasteners and bolts should be designated as 'tamper-proof'.

A. Architectural Railing, Type A, Upper Deck w/LED
A typical Architectural Railing, Type A, Upper Deck w/LED shall be assembled and installed as follows;

(1) All exposed steel edges and corner conditions to be eased to a radius of 1/32 inch (1 mm) unless otherwise indicated.
(2) Ipe Guard Rail shall be 2"x10" profiled Ipe wood board. All, corners, bends and turns of the profiled Ipe guard rail shall be mitered. Two 4"x2.5"x1" pockets shall be milled for 3/16" stainless steel plate supports at each end of Ipe wood guard rail.
(3) Install Luminaire Type H/ H2 within Ipe Guard Rail as identified on the plans. Use manufacturer recommended fasteners for connections to Ipe wood guard rail. Provide connection to lighting power supplies/drivers per electrical plans.
(4) Two (2) Plate Supports shall be welded to ¼" thick stainless steel vertical railing bars. All corners, bends and turns in the plate shall be mitered.
(5) Continuous angle shall be fastened at 16" intervals to Ipe wood guard rail. Holes shall be provided at fastener connections.
(6) All corners, bends and turns in the pipe rail shall have radius as identified on the plans. Provide countersunk tapped connection to sleeve insert at pipe-to-pipe connections. All tapped connections to be outward facing from interior deck of the pedestrian bridge.
(7) Guard Rail Sleeve Insert shall be sized to fit interior diameter of adjacent Guard Rail end condition. Provide tapped connections to stainless steel pipe Guard Rail.
(8) Provide shop welded connection of stainless steel bent plate to rail support. Grind smooth all welds.
(9) Stainless steel rail support arm plate shall be deburred with beveled edges. Provide Four (4) holes provided for flathead countersunk stainless steel sex bolt connection with vertical support plates. One (1) hole provided for tensioned stainless steel rope pass-through.
(10) Stainless steel vertical railing shall be deburred with beveled edges. Provide two (2) holes for 1 ¼" diameter stainless steel guard rail and foot rail thru-connections. Provide eight (8) holes shall be provided for countersunk flathead stainless steel sex bolt connection to rail support arm and vertical support base

plate. Provide eleven (11) holes for tensioned stainless steel wire rope.

(11) Stainless steel intermediate support bar shall be secured with a continuous shop weld to stainless steel guard rail and stainless steel foot rail. Provide ten (10) holes for 6mm diameter tensioned stainless steel wire rope.

(12) Stainless steel wire rope shall be fastened on each end to wire threading tensioner assembly.

(13) Electrical chase shall be clip mounted with flat head countersunk stainless steel screws through base plate below. One (1) 18"x1 ¼" stainless steel section of front plate shall be removed for electrical access and conduit feed. Install luminaire Type V and provide connection to lighting DMX power integrator.

(14) Run conduit through stainless steel electrical chase below.

(15) Two (2) holes shall be provided for stainless steel clip angle connections with stainless steel threaded cap by panel manufacturer to translucent cast resin panel.

(16) Two (2) threaded cap stainless steel fasteners shall be provided by the manufacturer for stainless steel clip angle connections to top and bottom vertical supports.

(17) Two (2) clips stainless steel angles shall be welded to vertical supports on each end of 1" cast resin translucent panel. One (1) hole shall be provided on each vertical leg for stainless steel threaded cap connection.

(18) Pipe rail shall be secured with continuous welded connections to adjacent components. Grind smooth all welds. All corners, bends and turns in the pipe rail shall be mitered. Four holes for tapped connections shall be provided at each end of guard rail pipe.

(19) Vertical support base shall be secured to bridge structure below as specified in the Structural Drawings. Four (4) holes shall be provided for flathead countersunk stainless steel sex bolt connections with vertical railing bars as specified in the Structural Drawings. One (1) 1 ¼" hole shall be provided for stainless steel foot rail and stainless steel rail sleeve connection. Vertical support base plate shall be secured with a continuous welded connection to stainless steel base plate. Two (2) stainless steel bushings each 5/16" thick shall be provided for fastening on either side of 5/8" plate at sex bolt locations.

(20) Secure stainless steel base plate with a continuous welded connection to vertical support base. Fasteners shall be provided for connection to structure below as specified on the Structural Drawings.

B. Architectural Railing, Type B, Lower Deck w/LED

A typical Architectural Railing, Type B, Lower Deck w/LED shall be assembled and installed as follows;

(1) All exposed steel edges and corner conditions to be eased to a radius of 1/32 inch (1 mm) unless otherwise indicated.

(2) Handrail Pipe with integral Luminaire Type IHA (Item Code T07.9904) shall be

secured to the stainless steel guard rail support plates at each end per manufacturer recommendations. All corners, bends and turns in the pipe rail shall have radius as identified on the plans.

(3) Guard Rail Sleeve Insert shall be sized to fit interior diameter of between continuous Guard Rail end conditions. Provide through openings for tapped connections to stainless steel pipe hand rail.

(4) Continuous stainless steel horizontal bar shall be secured with continuous welded connections to ½" thick stainless steel vertical railing bar. All corners, bends and turns in the plate shall be mitered. Grind smooth all welds.

(5) Vertical railing bar shall be fastened to stainless steel support plates through 5/8" flathead countersunk stainless steel sex bolts. Provided nine (9) holes for 6mm diameter tensioned stainless steel wire rope. Four (4) holes shall be provided for flathead countersunk stainless steel sex bolt. One (1) hole shall be provided for 1 ¼" stainless steel foot rail. Vertical railing bar shall be secured to stainless steel foot rail through a continuous welded connection. Grind smooth all welds.

(6) Stainless steel intermediate support bar shall be secured in a continuous weld to stainless steel guard rail and stainless steel foot rail. Provide nine (9) holes for 6mm diameter tensioned stainless steel wire rope.

(7) Stainless steel wire rope shall be fastened on each end to wire threading tensioner assembly.

(8) Foot rail shall be rim welded on each end to vertical railing bar. All corners, bends and turns in the pipe rail shall be mitered.

(9) Vertical support base shall be secured to bridge structure below as specified in the Structural Drawings. Two (2) holes shall be provided for flathead countersunk stainless steel sex bolt connections with vertical railing bars as specified in the Structural Drawings. One (1) 1 ¼" hole shall be provided for stainless steel foot rail and stainless steel rail sleeve connection. Two (2) bushings each 5/16" thick shall be provided for fastening on either side of 5/8" plate at sex bolt locations.

(10) Provide a continuous welded connection to vertical support base and base plate. Grind smooth all welds. Fasten to structure below with two (2) nut and bolt fastener connections.

(11) Run conduit through stainless steel electrical chase below.

(12) Two (2) clips stainless steel angles shall be welded to vertical supports on each end of 1" cast resin translucent panel. One (1) hole shall be provided on each vertical leg for stainless steel threaded cap connection. Provide two (2) holes shall be for ½" diameter flathead countersunk stainless steel sex bolt connections with vertical railing bars. One (1) removable section shall be provided for maintenance access to electrical chase.

(13) Stainless steel pipe shall be welded on each end to stainless steel handrail support rod. Holes shall be provided for attachment per light fixture manufacturer requirements

(14) Handrail support rod shall be secured with a continuous welded connection to

stainless steel guard rail support and top electrical chase. Grind smooth all welds.

C. Architectural Railing, Type C, Handrail at Steps

A typical Architectural Railing, Type C, Handrail at Steps shall be assembled and installed as follows;

(1) All exposed steel edges and corner conditions to be eased to a radius of 1/32 inch (1 mm) unless otherwise indicated.
(2) Handrail shall be shop welded to ½" diameter stainless steel rod support for electrical feed. Where pipe rail returns into concrete slab, drill a hole 3 inches deep and set with non-shrink hydraulic cement. All corners, bends and turns in the pipe rail shall be mitered. Grind smooth all welds.
(3) Rod support shall be shop welded to handrail support plate and wall mounting plate. Grind smooth all welds.
(4) Two (2) vertical bar supports shall be secured to handrail support plate with ½" diameter flathead countersunk S.S. sex bolts. Four (4) holes shall be provided for ½" diameter flathead countersunk S.S. sex bolts.
(5) Guard rail support shall be secured to vertical supports through 3/8" diameter flathead countersunk S.S. sex bolts. Two (2) holes shall be provided for 3/8" diameter flathead countersunk S.S. sex bolts.
(6) Vertical support and base plate shall be mounted top of "Masonry Veneer, Bluestone Steps" and secured to cast-in-place concrete steps. Pre-drill and provide 4" long countersunk, stainless steel expansion anchors at mounting location.
(7) Riser Base Plate shall mounted to face of "Masonry Veneer, Bluestone Steps" riser. Pre-drill and provide 3" long countersunk, stainless steel expansion anchors at mounting location.
(8) Wall Plate shall mounted to face of "Masonry Veneer, Bluestone Tile, Sloped". Pre-drill and provide countersunk, stainless steel expansion anchor at mounting locations to fully-grouted CMU wall – minimum 3" depth penetration into CMU.

D. Architectural Railing, Type D, West Abutment w/LED

A typical Architectural Railing, Type D, West Abutment w/LED shall be assembled and installed as follows;

(1) All exposed steel edges and corner conditions to be eased to a radius of 1/32 inch (1 mm) unless otherwise indicated.
(2) Ipe Guard Rail shall be 2"x10" profiled Ipe wood board. All, corners, bends and turns of the profiled Ipe guard rail shall be mitered. Two 4"x2.5"x1" pockets shall be milled for 3/16" stainless steel plate supports at each end of Ipe wood guard rail.

(3) Install Luminaire Type H/ H2 within Ipe Guard Rail as identified on the plans. Use manufacturer recommended fasteners for connections to Ipe wood guard rail. Provide connection to lighting power supplies/drivers per electrical plans.
(4) Two (2) plate supports angle shall be shop welded to ¼" thick stainless steel vertical railing bars at each end. All corners, bends and turns in the plate shall have radius as identified on the plans. Grind smooth all welds.
(5) Continuous stainless steel horizontal bar shall be secured with continuous shop welded connections to ½" thick stainless steel vertical railing bar. All corners, bends and turns in the plate shall have radius as identified on the plans. Grind smooth all welds.
(6) Continuous angle shall be fastened at 16" intervals to Ipe wood guard rail. Holes shall be provided at fastener connections.
(7) Vertical railing bar shall be fastened to stainless steel support plates through ½"" flathead countersunk stainless steel sex bolts. Provided nine holes for 6mm diameter tensioned stainless steel wire rope as required to accommodate changing slope of top of abutment wall. Four (4) holes shall be provided for 3/8" flathead countersunk stainless steel sex bolt.
(8) Stainless steel intermediate support bar shall be secured in a continuous shop weld to stainless steel guard rail and stainless steel foot rail. Provide nine (9) holes for 6mm diameter tensioned stainless steel wire rope.
(9) Intermediate support mounting plate shall be secured to face of retaining wall with 3/8" flathead countersunk stainless steel sex bolts. Two (2) holes shall be provided for 3/8" flathead countersunk stainless steel sex bolts for connection to face of retaining wall.
(10) Guard rail support shall be secured to vertical railing bars with 3/8" diameter flathead countersunk S.S. sex bolts. Two (2) holes shall be provided for 3/8" diameter flathead countersunk S.S. sex bolts. One (1) hole shall be provided for 6 mm stainless steel wire rope.
(11) Stainless steel wire rope shall be fastened on each end to wire threading tensioner assembly.
(12) Horizontal stainless steel face plate shall be secured to face of retaining wall with 3/8" diameter flathead countersunk stainless steel sex bolt connections with vertical rail supports. One (1) hole shall be provided for 3/8" diameter flathead countersunk stainless steel sex bolt connections with vertical rail supports. Vertical support base plate shall be welded to ½" thick stainless steel base plate. Grind smooth all welds.
(13) Vertical support base plate shall be welded to ½" thick stainless steel base plate. Grind smooth all welds.

E. Architectural Railing, Type E, East Abutment w/LED

A typical Architectural Railing, Type E, East Abutment w/LED shall be assembled and installed as follows;

(1) All exposed steel edges and corner conditions to be eased to a radius of 1/32 inch (1 mm) unless otherwise indicated.
(2) Ipe Guard Rail shall be 2"x10" profiled Ipe wood board. All, corners, bends and turns of the profiled Ipe guard rail shall be mitered. Two 4"x2.5"x1" pockets shall be milled for 3/16" stainless steel plate supports at each end of Ipe wood guard rail.
(3) Install Luminaire Type H within Ipe Guard Rail as identified on the plans. Use manufacturer recommended fasteners for connections to Ipe wood guard rail. Provide connection to lighting power supplies/drivers per electrical plans.
(4) Two (2) plate supports angle shall be shop welded to ¼" thick stainless steel vertical railing bars at each end. All corners, bends and turns in the plate shall have radius as identified on the plans. Grind smooth all welds.
(5) Continuous stainless steel horizontal bar shall be secured with continuous shop welded connections to ½" thick stainless steel vertical railing bar. All corners, bends and turns in the plate shall be mitered. Grind smooth all welds.
(6) Continuous angle shall be fastened at 16" intervals to Ipe wood guard rail. Holes shall be provided at fastener connections.
(7) Vertical railing bars shall be shop welded to handrail support plate. Four (4) holes shall be provided for ½" diameter flathead countersunk S.S. sex bolts. One (1) hole shall be provided for 6mm diameter tensioned stainless steel rope. Grind smooth all welds.
(8) Guard rail support shall be secured to vertical railing bars with ½" diameter flathead countersunk S.S. sex bolts. Two (2) holes shall be provided for ½" diameter flathead countersunk S.S. sex bolts. Holes shall be provided for 6 mm stainless steel wire rope were necessary.
(9) Stainless steel wire rope shall be fastened on each end to wire threading tensioner assembly.
(10) At Cast-In-Place Concrete Wall - Base shall be secured with a continuous welded connection to vertical rail support. Four (4) holes shall be provided for flathead stainless steel countersunk expansion anchor connection to concrete retaining wall below.
(11) At Steel Framed Wall - Base shall be secured with a continuous welded connection to vertical rail support. Four (4) holes shall be provided for ½"-24 UNF x 3" socket countersunk screw with stainless steel nut and washer assembly connection through stainless steel plate, Ipe blocking and to steel wall framing below.

F. Architectural Railing, Type F, Handrail w/LED

A typical Architectural Railing, Type F, Handrail w/LED shall be assembled and installed as follows;

(1) All exposed steel edges and corner conditions to be eased to a radius of 1/32 inch (1 mm) unless otherwise indicated.

(2) Handrail Pipe with integral Luminaire Type IHAL (Item Code T07.9904) shall be secured to handrail support per manufacturer recommendations.
(3) Three (3) holes shall be provided for ½" flathead countersunk stainless steel tamper-proof expansion anchors to accommodate connections of wall mounting plate to concrete wall.
(4) Rod support shall be shop welded to handrail support plate and wall mounting plate. Grind smooth all welds.

G. Architectural Railing, Type BW, Boardwalk & Type W, Wall D and Boardwalk Wingwall

A typical Architectural Railing, Type BW, Boardwalk & Type W, Wall D and Boardwalk Wingwall shall be assembled and installed as follows;

(1) Handrail Pipe shall be secured to the stainless steel guard rail support plates at each end per manufacturer recommendations. All corners, bends and turns in the pipe rail shall have radius as identified on the plans.
(2) Guard Rail Sleeve Insert shall be sized to fit interior diameter of between continuous Guard Rail end conditions. Provide through openings for tapped connections to stainless steel pipe hand rail.
(3) Continuous stainless steel horizontal bar shall be secured with continuous welded connections to ½" thick stainless steel vertical railing bar. All corners, bends and turns in the plate shall be mitered. Grind smooth all welds.
(4) Vertical railing bar shall be fastened to stainless steel support plates through ½" flathead countersunk stainless steel sex bolts. Provided nine (9) holes for 6mm diameter tensioned stainless steel wire rope. Four (4) holes shall be provided for ½" flathead countersunk stainless steel sex bolt. One (1) hole shall be provided for 1 ¼" stainless steel foot rail. Vertical railing bar shall be secured to stainless steel foot rail through a continuous welded connection. Grind smooth all welds.
(5) Stainless steel intermediate support bar shall be secured in a continuous weld to stainless steel guard rail and stainless steel foot rail. Provide nine (9) holes for 6mm diameter tensioned stainless steel wire rope.
(6) Stainless steel wire rope shall be fastened on each end to wire threading tensioner assembly.
(7) Foot rail shall be rim welded on each end to vertical railing bar. All corners, bends and turns in the pipe rail shall be mitered.
(8) For type BW, Vertical support base shall be secured to boardwalk structure below with 3/4" diameter flathead counter countersunk stainless steel sex bolts. For type W, the vertical support base shall be secured to the walls or granite capstone by drilling and grouting adhesive anchors per section 819.9901 with stainless steel anchors.
(9) Provide a continuous welded connection to vertical support base and base plate. Grind smooth all welds. Fasten to structure below with two (2) nut and

bolt fastener connections.

(10) Stainless steel pipe shall be welded on each end to stainless steel handrail support rod. Holes shall be provided for attachment per light fixture manufacturer requirements

(11) Handrail support rod shall be secured with a continuous welded connection to stainless steel guard rail support and top electrical chase. Grind smooth all welds.

METHOD OF MEASUREMENT:

Architectural Railing shall be measured as listed below and be placed in various parts of the completed structure in accordance with the Plans and/or as directed by the Architect. Measurement shall be taken along the Ipe wood guard rail centerline-to-centerline of vertical rail supports.

Contract Item	Measurement Unit
830.9901 Architectural Railing, Type A, Upper Deck w/LED	LF
830.9902 Architectural Railing, Type B, Lower Deck w/LED	LF
830.9903 Architectural Railing, Type C, Handrail at Steps	LF
830.9904 Architectural Railing, Type D, West Abutment w/LED	LF
830.9905 Architectural Railing, Type E, East Abutment w/LED	LF
830.9906 Architectural Railing, Type F, Handrail w/LED	LF
830.9910 Architectural Railing, Type BW, Boardwalk	LF
830.9911 Architectural Railing, Type W, Wall D & Boardwalk Wingwall	LF

BASIS OF PAYMENT

Architectural Railing, Type A-F shall be paid for at the contract unit price as listed below. The price so-stated constitutes complete compensation for all labor, materials and equipment, including all including all Ipe Wood, Stainless Steel Shapes, Bars and Plates, Wire Rope, Stainless Steel Fasteners and hardware, welding, drilling and grouting, Luminaires, Lighting Transformers, DMX power integrator, power supplies and drivers as well as all other incidentals and ancillary electrical hardware required to finish the work, complete and accepted by the Engineer. Waste and trimmed material shall not be considered for payment.

Contract Item	Payment Unit
830.9901 Architectural Railing, Type A, Upper Deck w/LED	LF
830.9902 Architectural Railing, Type B, Lower Deck w/LED	LF
830.9903 Architectural Railing, Type C, Handrail at Steps	LF
830.9904 Architectural Railing, Type D, West Abutment w/LED	LF
830.9905 Architectural Railing, Type E, East Abutment w/LED	LF
830.9906 Architectural Railing, Type F, Handrail w/LED	LF
830.9910 Architectural Railing, Type BW, Boardwalk	LF
830.9911 Architectural Railing, Type W, Wall D & Boardwalk Wingwall	LF

END OF SECTION

S:\PROJECTS\I195FD\DESIGN\Contract 16\C16 Specs\Inform\PS&E\5-19-16\Special Provisions - 05.18.2016\Add 4\830.9901 - ARCHITECTURAL RAILING add 4.docx

ITEM CODE 834.9905 GRANITE CAPSTONE TYPE A
ITEM CODE 834.9907 GRANITE CAPSTONE TYPE C
ITEM CODE 834.9908 GRANITE CAPSTONE TYPE D

DESCRIPTION: This item shall govern the use of materials and equipment for providing and installing granite capstone on Wall D, a portion of Wall J, the north abutment of the boardwalk, Modular Walls MW 1, 2, and 3, configured in such shapes and locations and installed as indicated on the drawings and all other work associated with the construction of said items in the locations, grades, and to the dimensions and details shown on the contract drawings, and in accordance with these specifications and all applicable compilations of approved specifications and/or as directed by the Engineer.

RELATED SECTIONS:

808.9901 Modular Wall

MATERIALS AND FABRICATION:

Granite Capstone Types A is for the Modular walls. Granite Capstone Type C is for wall D and a portion of Wall J. Granite Capstone Type D is for the north abutment of the boardwalk.

A. Granite: Granite shall be fine to medium grained, of sound, compact structure, resistant to weathering action, uniform in color, free from seams, cracks, laminations and minerals that by weathering would cause discoloration or deterioration, and conforming to the following:

1. ASTM Designation C422.

2. Minimum Modulus of Rupture - 2,000 psi in accordance with ASTM Designation C99.

3. New Stone: warm gray in tone to match stones in the riverwalk on the west side of the river, and further north along South Water Street. Three acceptable stones are:

   - Deer Isle, as quarried by New England Stone, Smithfield, Rhode Island 02917, 401-232-2040.

   - Deer Isle, as quarried by Fletcher Granite, North Chelmsford, Massachusetts 01863, 978-251-4031.

   - Kershaw, as quarried by New England Stone, Smithfield, Rhode Island 02917, 401-232-2040.

Other quarry locations will be considered if existing stone color, texture, and structural properties are matched.

4. Fabrication: Stone shall be cut, fabricated and finished to the dimensions and configurations indicated on the detail drawings. All exposed surfaces shall have a rock face or thermal finish and all unexposed surfaces shall have a sawn finish in accordance with the National Builders Granite Quarries Association.

B. Mortar shall be in conformance with standard specification M.04.03.5 unless noted otherwise and sufficient water to make the mortar of consistency that it can be handled easily and spread with a trowel. Mortar shall be mixed only in those quantities required for immediate use. Mortar not used within 45 minutes after water has been added shall be discarded. Retempering of mortar will not be permitted.

C. Stainless steel dowels for Type A shall be provided as shown on drawings.

D. High strength non-shrink grout to be nonmetallic mixed to plastic consistency and shall be non-corrosive and non-staining to conform to ASTM C-827. Grout shall be suitable for outdoor use and it shall have a minimum compression strength of 8000 psi after 28 days in accordance with ASTM C-109.

E. Expansion joint sealant shall meet the requirements of Code 807.1670 "Polyurethane Joint Sealant" in these Special Provisions. Color is to match adjacent stone.

F. Galvanized reinforcing steel dowels drill and grout shall be provided for Types C and D as shown on the drawing and comply with standard specification 819.

CONSTRUCTION METHODS: The granite capstone shall be constructed at locations and to the dimensions as indicated on the plans.

A. PLACEMENT: Masonry shall be constructed by masons having a minimum of five years experience. The stone shall be set as shown on the plans. They shall be thoroughly cleaned free of dirt, dust, grease, oil, and etc., and wetted immediately before being set. Stone shall be carefully set without jarring the stone already laid. They shall be settled in full mortar beds and settled into place with suitable mauls before the mortar has set. In case any stone is moved or the joint broken, the stone shall be taken up, the mortar thoroughly cleaned from bed and joint and the stone reset in fresh mortar.

B. DOWEL HOLES. Drill holes in granite and base wall in locations to match accurately those in capstone. Provide clearance around dowels as shown and as required for grouting. These stones are to be doweled to wall below as shown on the drawings. Completely fill holes with grout.

C. DRILL AND GROUT REINFORCING DOWELS shall be in compliance with the standard specification 819.

D. GRANITE CUT STONES shall be set in such a manner as to wash or pitch water forward and not allow it to puddle on the top surface.

E. JOINTS AND POINTING:

1. General: Face joints for all cut stone shall not exceed 1/2" in width. The pointing or finishing of all vertical joints shall be concave.

2. Mortar joint. Face joints shall be properly pointed before the mortar sets. The mortar shall be well driven into the joints and finished with an approved pointing tool. The mortar in joints on top surfaces shall be crowned slightly at the center of the masonry to provide drainage. Walls shall be kept wet while pointing is being done and in hot or dry weather the pointed masonry shall be protected from the sun and kept wet for at least three days after completion.

F. Expansion Joints: Provide sealant at all joints. Depth of sealant should not exceed half the width of joint. Joints should be clean, dry and free from foreign matter. Avoid contamination of waterproofing, form release and curing agents. Joints must first be cleaned then primed as per manufacturer's instructions. Care must be taken to apply sealant only to the joint interface to avoid unsightly staining. Joint backing should be used to control the depth of joint. Immediately after application, tooling is required to insure firm, full contact with inner faces of the joint. Remove all excess sealant and smears next to the joint with solvent.

G. No part of any granite capstone is permitted to be laid over a concrete wall expansion joint except as detailed otherwise. If any stone is of excessive or inadequate length, it will be the responsibility of the contractor to replace it with one of correct length.

H. All exposed field cut faces to receive same finish as adjacent stone surfaces.

I. CLEANING EXPOSED SURFACES: All face stones shall be thoroughly cleaned of mortar stains immediately after being laid, while the mortar is fresh, and shall be kept clean until the work is completed. No staining is permitted on wall below.

J. Capstones shall be cut to fit as needed at corners, along curves, and for the beam seats at the north abutment. Field verify all measurements prior to fabricating stones.

SPECIAL PROVISIONS:

A. Inspection: This contractor shall inspect all surfaces, areas, and other contingent

construction in or to which their work is to be installed and insure himself that they are in proper condition to receive the work to be performed under this section. The contractor shall notify the Engineer in writing, before any work is installed, of any condition requiring correction. Failure to make such a report shall be construed as acceptance of the existing conditions and the responsibility to provide an acceptable installation.

B. The work of this section shall be performed by a qualified mason with a minimum of five years experience. Credentials accordingly shall be submitted to the Engineer.

C. Field verify dimension of substrate prior to fabrication of cutstone items.

DELIVERY, HANDLING, AND STORAGE:

A. All granite shall be delivered and stored with stones separated by wood slats that shall not be removed prior to installation.

B. All items shall be protected from staining and damage during temporary storage.

C. Any items damaged or with marred finish prior to acceptance shall be rejected and replaced.

D. Use fabric slings to handle stones: chains are not permitted.

QUALITY CONTROL -- Submit the following to the Engineer for approval:

A. Three samples 2" x 12" x 12" of each representative stone finish.

B. One sample cap stone for each type, full size approved sample may be used in work.

C. Shop drawings showing sizes of granite capstone (nominal sizes, corners, special pieces along curves and beamseats) and spacing and sizing of dowels.

D. Three samples of each anchoring device accompanied with engineering report verifying size and material of all metal components with respect to estimated loads and forces to be restrained. The report shall be sealed and signed by a professional engineer licensed to practice in Rhode Island.

E. Field sample in place: 2 lengths of granite capstone either side of expansion joint. Approved sample may remain as part of the completed work.

METHOD OF MEASUREMENT: Item Codes 834.9905 Granite Capstone Type A, 834.9907 Granite Capstone Type C, and 834.9908 Granite Capstone Type D_shall be measured for payment by the Linear Foot in one direction along the face of the wall or abutment, including

corner pieces, complete and accepted in accordance with this special provision and the contract drawings.

BASIS OF PAYMENT: Item Codes 834.9905 Granite Capstone Type A, 834.9907 Granite Capstone Type C, and 834.9908 Granite Capstone Type D will be paid for at the contract unit price as listed in the Proposal. This payment shall be full compensation for all labor, equipment, materials, and incidentals required to furnish and install the work to the line and grade as shown in the plans and herein specified. Mortar, drilling, dowels, grout, cutting, trimming, corner pieces, dowels, field modifications (trimming, cutting), expansion joint sealant, drilling and doweling into granite capstone and concrete walls shall be included in the cost of the capstones.

S:\PROJECTS\I195FD\DESIGN\Contract 16\C16 Specs\Beta\Beta PS&E\834.9905,9907,9908_Granite-Capstone_ADD 4.doc

JOB SPECIFIC

CODE 899.9901
ARCHITECTURAL STAINLESS STEEL MESH

DESCRIPTION:

Work under this item shall consist of, all work associated with the furnishing, fabricating, storing, handling, hauling and installing the Architectural Stainless Steel Mesh in accordance with Section 899 of the Rhode Island Department of Transportation Standard Specifications, the Contract Plans and this special provision, or as directed by the Engineer. The mesh shall be installed under the bridge at the locations shown on the plans and as directed by the Engineer.

MATERIALS:

Materials for Architectural Stainless Steel Mesh shall conform to the following requirements;

Architectural Stainless Steel Mesh assemblies shall be designed, fabricated, and installed to accommodate expansion and contraction of metal components without causing undue stress, buckling, opening of joints, and distortion. Design for the following minimum temperature ranges.

1. Ambient Temperature Range: 120 degrees F (67 degrees C).
2. Material Surface Temperature Range: 180 degrees F (100 degrees C).

Design supports and hardware to withstand loads encountered without excessive deflection or distortion when cables are tensioned to required amounts required to conform to applicable building codes.

Components shall be free from defects impairing strength, durability and appearance. Exposed surfaces throughout system shall have same inherent texture and color for similar locations.

Design system to prevent galvanic action and other forms of corrosion by insulating metals and other materials from direct contact with incompatible materials.

Exposed fasteners shall be of same materials, color and finish as material to which applied. Exposed surfaces throughout project shall have same inherent texture and color for similar locations.

Architectural Stainless Steel Mesh

Architectural Stainless Steel Mesh, shall consist of the following materials;

(1) Wire rope - 5/16" (8mm) with 6 x 7 + WC construction and 23 kg weight, ASTM A 492 and ASTM A 555, Type 316 stainless steel.
(2) Parallel ropes shall be 1/16" (1.5 mm) diameter stainless steel. Wire rope shall be fabricated from cold-drawn, AISI Type 316 stainless steel wire complying with ASTM A 492 and ASTM A 555. Lengths will be as indicated on the drawings.
(3) Rod spindles - solid stainless steel rods, AISI Type 316 complying with ASTM A276.
(4) Stainless steel clip - fabricated from AISI Type 316 and 316L stainless steel complying with ASTM F 1145.
(5) Stainless steel ring nut 2 1/8" O.D. (actual 54 mm) x 15/32" diameter (actual 12 mm) and support.
(6) Thread sleeve 13/32" diameter (actual 10 mm) x 1 ½" Length (actual 38 mm)
(7) Turnbuckle with clevis 14" assembly length (actual 355 mm). Various span range length in open/closed positions. Type 316 stainless steel.
(8) Swaged clevis 1 ¾" mm assembly length (actual 143 mm) x 41/64" diameter (actual 16 mm) fabricated from AISI Type 316 and 316L stainless steel complying with ASTM F 1145.
(9) Stainless steel hooks.

Submittals

The Contractor shall provide two samples representing actual products and finishes as follows;

A. Samples:
   1. Wire Rope and Fitting – Minimum size 12" x 12".
   2. Rods, minimum size 12" long.
   3. Typical Fittings.

B. Field Samples:
   Provide a mock-up for evaluation of preparation techniques and installation workmanship.
   1. Locate in areas designated by Engineer.
   2. Size: Minimum of 10 square feet and including typical anchors and connections.
   3. Do not proceed with remaining work until workmanship is approved by the Engineer.
   4. Rework mock-up as required to produce acceptable work.
   5. Retain mock-up during construction as quality standard.
   6. Upon approval mock-up work may be incorporated into final work.

C. Shop Drawings
Submit shop drawings for Architectural Stainless Steel Mesh identifying all components required. Shop drawings shall include plans, elevations and detail section drawings showing layout and how the various components fit together. Provide setting diagrams and templates for anchorages, sleeves, and bolts to be installed by others. Indicate materials, methods, finishes, fittings, fasteners, anchorages, and accessory items. Include manufacturer's literature completely describing all components of this special provision and giving detailed installation recommendations and instructions. The Contractor may reference the 3D digital model released with the contract documents for this project. The model contains the necessary level of detail for cross-trade coordination.

CONSTRUCTION METHODS:

INSTALLATION

1. Install wire rope assemblies in accordance with the plans, 3D Digital Model, manufacturer's instructions and the approved shop drawings
2. Parallel ropes shall be connected by reciprocally curved offset sleeves or clamps such that ropes are neither knotted nor crossed.
3. Install stainless steel Webnet Hooks along the North and South longitudinal axis to allow for inspection access to structure above.
4. Provide anchorage devices and fittings to secure to in-place construction; including threaded fittings for concrete inserts, toggle bolts and through-bolts.
5. Install components plumb, level, square, and rigid without kinks or sags.
6. Anchor stainless steel clip to structural steel plate girder as indicated on the plans.
7. Stainless steel ring nut and support shall be placed at midpoint of steel cross framing with bolted connection at structural steel cross framing – coordinate with structural drawings.
8. Separate dissimilar materials with bushings, grommets or washers to prevent electrolytic corrosion.
9. Use only manufacturer's supplied cable hardware – "JAKOB Rope Systems" or approved equal.
10. Ensure cables are clean, parallel to each other, and without kinks or sags.
11. Tension cable with hand or hydraulic equipment so that no slack is visible.
12. After final adjustment provide tamper resistant locktight materials on all fittings.
13. Adjust wire rope tension and connecting hardware.
14. Remove temporary coverings and protection of adjacent work areas. Clean installed products in accordance with manufacturer's instructions before owner's acceptance.

Protection

1. Protect installed products until completion of project.
2. Touch-up, repair or replace damaged products before Substantial Completion.
3. Protect installed products and finished surfaces from damage during construction.
4. Replace defective or damaged components as directed by the Engineer

METHOD OF MEASUREMENT:

Architectural Stainless Steel Mesh will be measured as listed below and be placed in parts of the completed structure in accordance with the Plans and/or as directed by the Architect.

Contract Item	Measurement Unit
899.9901 Architectural Stainless Steel Mesh	SF

BASIS OF PAYMENT

Architectural Stainless Steel Mesh will be paid for at the contract unit price as listed below. The price so-stated constitutes complete compensation for all labor, materials and equipment, hardware including Wire Rope, Parallel Ropes, Rod Spindles, Stainless Steel Clips, Stainless Steel Ring Nuts, Thread Sleeves, Turnbuckle with Clevis Assembly and Swaged Clevis as well as all other incidentals required to finish the work, complete and accepted by the Engineer.

Contract Item	Payment Unit
899.9901 Architectural Stainless Steel Mesh	SF

END OF SECTION

S:\PROJECTS\I195FD\DESIGN\Contract 16\C16 Specs\Inform\PS&E\5-19-16\Special Provisions - 05.18.2016\Add 4\899.9901-ARCHITECTURAL STAINLESS STEEL MESH add 4.docx

SECTION 929

FIELD OFFICES AND MATERIALS LABORATORY

Unless otherwise modified elsewhere in the Contract Documents, Section 929 of the Rhode Island Standard Specifications for Road and Bridge Construction and all revisions is revised as follows:

1. Replace paragraph 2 of Section **929.1000 Field Offices and Materials Laboratory – Description** of the Compilation of Approved Specifications, Supplement No. 12, Date: 12/23/11 with the following:

The contractor will provide a business grade, multi-function (Copy, Print, Scan, Fax) high volume stand alone color/black printer. The print quality shall be 1200 by 1200 dpi minimum resolution for black and white printing and 4800 X 1200 optimized dpi for color printing. It shall be capable of printing 25 ppm (black and white) and up to 25 ppm (color). It shall be capable of scanning up to 50 ppm in PDF format. The printer will have wireless capability and will be able to generate a maximum size printed document of II"xl7".

2. Replace paragraph 3 of Section **929.1000 Field Offices and Materials Laboratory – Description** of the Compilation of Approved Specifications, Supplement No. 12, Date: 12/23/11 with the following:

Two (2) new Microsoft Surface Pro 4 tablet computers with an i7 processor (minimum); 512GB Solid State Drive (SSD) (minimum); 12.3” touch screen display 2736 x 1824 (267 PPI) (minimum); 16GB of RAM (minimum); Intel® Iris™ graphics; External USB DVD±RW/CD-RW Drive; IEEE 802.11a/b/g/n compatible; two AC/DC power adaptors; and carrying bag. Installed software shall include the minimum of: Microsoft Windows 10 Pro with the latest service packs and security updates, Microsoft Office Professional (2016 version) with latest service packs, Adobe Acrobat Pro DC (or newer), and Symantec Endpoint Protection 12.1.6 (or better) with subscription support for the life of the project. All installation CDs, licenses, registration codes and user manuals/documentation shall be provided to the Engineer. Two (2) Microsoft Surface Pro 4 type cover, North American Layout (color to be determined by the engineer). Each tablet shall be equipped with a screen protector to resist scratches made of tempered glass that does not adversely affect touch sensitivity of the tablet. Each tablet shall also be equipped with a protective case that meets military drop-test standards (MIL STD 810G 516.6) when used with Microsoft Type Cover keyboard, is Compatible with Microsoft Type Cover Keyboard, and has built in Surface Pen storage(color to be determined by the engineer).

Three (3) new PC laptop computers with an 6th generation Intel i7-2.7 GHz processor (minimum) or greater; 512 GB SSD (minimum); 15” (1920x1080 resolution) LED-backlit widescreen display with webcam and microphone (minimum); Integrated 10/100/1000 Mbps Fast Ethernet LAN; 16 GB DDR4 SDRAM (minimum); DVD±RW/CD-RW drive; Built-in high-speed wireless LAN (802.11 b/g/n); Microsoft Windows 10 Pro 64-bit operating

system with latest service packs and security updates, three AC/DC power adaptors, and three carrying bag. The laptop shall be capable of two (2) external monitors simultaneously in an “extended desktop” configuration.

Installed software shall include the minimum of: Microsoft Windows 10 Pro 64-bit operating system with the latest service packs and security updates, Microsoft Office Professional (2016 version) with latest service packs, Adobe Acrobat Professional DC (or newer), Symantec Endpoint Protection 12.1.6 (or better) with subscription support for the life of the project. All installation CDs, licenses, registration codes and user manuals/documentation shall be provided to the Engineer.

Two (2) 2017 AutoCAD ARCHITECTURE, ENGINEERING & CONSTRUCTION COLLECTION (or newer) license for the life of the project plus one (1) year.

3. Replace paragraph 4 of Section **929.1000 Field Offices and Materials Laboratory – Description** of the Compilation of Approved Specifications, Supplement No. 12, Date: 12/23/11 with the following:

Two (2) Microsoft Surface Docks for Surface Pro 4 with a minimum of the following: 1 Gigabit Ethernet port, 4 USB 3.0 ports, 2 Mini Display Ports, External power supply, two (2) wireless 101 key enhanced keyboards, two (2) wireless optical mouse with scroll wheel and four (4) 24” (minimum) wide screen flat panel LCD Monitor with 1920 x 1080 (minimum) resolution.

Three (3) Docking Stations for the provided laptop computers with a minimum of the following: 1 Ethernet RJ-45 port, 4 USB 2.0 ports, 2 PS/2 ports, 1 serial port and 1 parallel port and a compatible monitor stand, two (2) wireless 101 key enhanced keyboards, two (2) wireless optical mouse with scroll wheel, and six (6) 24” (minimum) wide screen flat panel LCD Monitor with 1920 x 1080 (minimum) resolution.

4. Replace paragraph 5 of Section **929.1000 Field Offices and Materials Laboratory – Description** of the Compilation of Approved Specifications, Supplement No. 12, Date: 12/23/11 with the following:

One (1) 2 TB External Network-attached Hard Drive capable of backing up multiple computers and devices.

5. Replace paragraph 8 of Section **929.1000 Field Offices and Materials Laboratory – Description** of the Compilation of Approved Specifications, Supplement No. 12, Date: 12/23/11 with the following:

Four (4) 16.0 megapixel digital cameras with wide-angle 5X internal optical zoom and 2.5 inch LCD screen or better with rechargeable battery pack, battery charger, spare battery and 32 GB memory card. The camera shall be dustproof, waterproof to 50 feet (15 meters), and cold proof to 14°F.

6. The following equipment shall be added to Section 929.1000 Field Offices and

Materials Laboratory – Description

One (I) business grade scanner capable of generating PDF type files.

7. Delete Section 929.02.2 Minimum Spatial Requirements of the Compilation of Approved Specifications dated 01/24/11in its entirety and replace it with the following:

929.02.2 Minimum Spatial Requirements. The Engineer's field office shall contain a minimum of 1000 square feet of floor area, at least 5 rooms (not including a bathroom), and a minimum of 7 feet of headroom, or as approved by the Engineer. It shall contain a sufficient number of windows to provide at least 40 square feet natural light. Existing building structures meeting the above minimum requirements are considered acceptable. The field office or shall be located on a site that is both satisfactory to the Engineer and convenient to the project site with dedicated parking facilities capable of handling at least 10 vehicles.

8. The following shall be added to Section 929.03.2. f. Network Internet Service

The Contractor provided high speed internet service shall have a minimum upload speed of 50 Mbps and minimum download speed of 100 Mbps.

9. Delete 929.03.4. a Furnishings and Equipment of the Standard Specification in its entirety and replace it with the following: The field office will be provided with the following:

a. Furnishings: The following furnishings shall be new or approved by the Engineer when received by the Rhode Island Department of Transportation:

    1. Five (5) office type desks, minimum top dimensions 32" x 60", with two or more drawers on each side.
    2. Five (5) acceptable by the Engineer swivel desk chairs.
    3. Ten (10) folding-type chairs with cushioned seating area.
    4. One (I) conference/meetings table, minimum top dimensions 42” x 96”.
    5. Three (3) work table, 30 inches high, with a minimum of24 square feet of work area.
    6. One (1) drafting table, minimum top dimensions 36” x 60”.
    7. One drafting stool.
    8. A minimum of two fire resistant four-drawer type safe, legal size, with combination or key lock.
    9. A minimum of two four-drawer legal size metal filing cabinet equipped with lock.
    10. Two two-drawer (14W' x 16") metal filing cabinets.
    11. Eight (8) round wastebaskets.
    12. One plan rack of an approved design to be equipped with 10 rods.

CODE 938.1000

PRICE ADJUSTMENTS

DESCRIPTION.

a. Liquid Asphalt Cement. The Base Price of Liquid Asphalt Cement as required to implement **Subsection 938.03.1** of the Standard Specifications is $ 345.00 per ton.

In the case of modified asphalt binder, this price adjustment provision shall only apply to the neat liquid asphalt component. This provision shall not apply to the modifier component, manufacture, storage, transportation or other associated costs.

b. Diesel Fuel. The Base Price of Diesel Fuel as required to implement **Subsection 938.03.2** of the Standard Specifications is $1.6670 per gallon.

S:\PROJECTS\I195FD\DESIGN\Contract 16\C16 Specs\Highway\938.1000.doc

ITEM CODE L15.9901
PLANTER INTERIOR - BRIDGE

DESCRIPTION: This item of work shall consist of fabricating and installing the interior of the Pedestrian Bridge Planters including the waterproofing, insulation, drainage mat, sand bedding and self-watering devices as indicated on the plans, in accordance with these specifications, and/or as directed by the Engineer.

MATERIALS: All materials shall be in accordance with the applicable sections of the RIDOT's Standard Specifications for Road and Bridge Construction, 2010 Edition, and all applicable compilations with all addenda, unless otherwise specified below.

JOINT SEALER: Joint Sealer shall be Polyurethane meeting requirements of Section M. Materials of the Rhode Island Standard Specifications for Road and Bridge Construction, 2010 Edition and all the applicable compilation of approved specifications. **Joint Sealer Color shall match the color of the concrete.** The Contractor shall supply samples prior to starting work for approval.

BITUMINOUS WATERPROOFING: Bituminous Waterproofing shall be rubberized liquid asphalt membrane and shall conform to the requirements of M.12.02.1 of the State Specifications.

FOAM INSULATION: Shall be 1" thick Extruded Expanded Polystyrene (XEPs) foam board as used for Insulating Concrete Forms (ICFs) or approved equal. XEPs shall have a minimum R-5 value per inch.

DRAINAGE MAT: Drainage Mat shall be designed specifically for outdoor planter applications and shall be provided in 4' by 50' rolls consisting of three layers; a bottom, needle punched, non-woven protective film, a center high impact polystyrene dimpled core and a top, woven monofilament filter fabric. Dimpled core thickness shall be a minimum .44 inches with a compressive strength of 15,000 psf and a hydraulic flow equal to 21 gpm/ft. The top woven monofilament polypropylene filter fabric shall have a grab tensile strength of 410 x 220 lbs according (ASTM D-4632) , an apparent opening size of 45 sieve (ASTM D-4751), puncture resistance of 105 lbs (ASTM D-4833), and have a UV resistance of 90% at 100 hours (ASTM D-4355).

SELF WATER SYSTEM: Modular Self Water System (with hand-filled reservoirs) shall be designed for use in large planters. Modules shall be linked together and buried within the planter with a sensor system to monitor the moisture and release water into the planter when needed. Self- watering system is to be designed by the manufacturer and include all necessary parts and equipment needed based on the size and depth of the planters and the plants to be watered.

BEDDING SAND: Bedding Sand shall consist of hard, strong, durable particles which are free from coatings or any injurious amount of clay, loam, or other deleterious substances and shall conform to the following:

Sieve Size	Percent by Weight Passing Sieve
3/8"	100
#4	90-100
#50	10-40
#100	3-15
#200	0-7

CONSTRUCTION METHOD: The planter interior shall be installed at locations shown on the Plans, as outlined on the details, as outlined below or as directed by the Engineer.

a) Joint sealer shall be used along the inside bottom edges of the planters where the planters meet the concrete paving.

b) Paint bituminous waterproofing layer on all concrete horizontal and vertical surfaces within planter to manufacturer's specifications as indicated on plans.

c) Place foam insulation layer on bottom of inside of Planter C.

d) Install Drainage Mat on the side walls and the bottom of the planters according to manufacturer's instructions.

e) Install sand bedding as indicated on the plans.

f) Install self-watering system as indicated on plans and to manufacturer's specifications.

g) Install Install planting growing media and mulch as shown on plans.

SUBMITTALS:

SHOP DRAWINGS: The Contractor shall submit detailed shop drawings to the Engineer. Shop drawings shall include plans and elevations of the bituminous waterproofing, insulation, drainage mat, bedding sand, self-watering system layout, treatment at light foundations, and connection to drains. All dimensions, finishes, and techniques for installation shall be clearly noted on the shop drawings.

MANUFACTURER DATA SHEETS: The Contractor shall submit manufacturer data sheets for joint sealer, bituminous waterproofing, foam insulation, bedding sand, drainage mat and self-watering system to the Engineer for approval before ordering.

FIELD SAMPLE: The Contractor shall install the interior of the smallest planter joint sealer, bituminous waterproofing, foam insulation, drainage mat, bedding sand, and self-watering system as a field sample for Engineer's approval before continuing on to the installation of the remaining planters. Engineer shall be able to see each component for approval. If at any time the interior is not accepted the contractor shall remove the interior and reinstall at no additional expense to the State.

METHOD OF MEASUREMENT: "PLANTER INTERIOR - BRIDGE" will be measured by the "Lump Sum" for all planter units taken together actually installed in accordance with the plans and/or as directed by the Engineer.

BASIS OF PAYMENT: "PLANTER INTERIOR - BRIDGE" will be paid per "Lump Sum" for all planter units actually installed in accordance with the plans and/or as directed by the Engineer. The lump sum shall consist of all materials including drainage mat, self-watering system, insulation, bedding sand, bituminous waterproofing, joint sealer, labor, equipment, tools, operations, and incidentals listed and/or referenced in this specification and/or required to finish the work on all the planters, complete in place and accepted by the Engineer.

Planter Growing Media shall be paid for under its respective item code.
Floor drains and fittings shall be measured and paid for under the Pedestrian Bridge Drainage Items.

ITEM CODE 937.9999
PEDESTRIAN WAY

DESCRIPTION: This item shall consist of providing an open pedestrian way across the Providence River Pedestrian Bridge by Completion Date No. 2 as set forth in Special Provisions Construction General Section 6 Paragraph H and special provision 108.1000. The pedestrian way shall be an eight (8) foot wide clear path across the bridge and extending between South Water Street and Eddy Street. Once opened on the designated date, the pedestrian way shall remain open for the duration of the contract except as allowed below.

MATERIALS: All materials shall conform to the applicable sections of the Rhode Island Department of Transportation Standard Specifications for Road and Bridge Construction and supplemental specifications, and as specified elsewhere in the Contract Documents.

The pedestrian way shall be furnished with a suitable railing or fence to keep pedestrians away from the edge of the deck and falling into the river. The railing or fence shall meet all applicable AASHTO requirements for the proposed location on the bridge deck. The final bridge rail may be used for pedestrian way if it has been installed.

The Contractor shall submit his proposed method of providing the pedestrian way to the Engineer for review and approval as a shop drawing.

CONSTRUCTION METHODS: The methods of construction shall conform to the applicable sections of the Rhode Island Department of Transportation Standard Specifications for Road and Bridge Construction and supplemental specifications, and as directed by the Engineer. The surface for the pedestrian way shall be the final surface of the bridge. The pedestrian way shall only be suitable for pedestrians. Bicycles must be walked across the bridge. The pedestrian way shall extend beyond the bridge to South Water Street and Eddy Street along the proposed bituminous sidewalks shown on the plans.

The pedestrian way shall remain open at all times except that it may close during weekdays only to accommodate Contractor operations. The Contractor shall provide temporary lighting along the pedestrian way for nighttime use. The pedestrian way shall be kept free of obstacles, material stockpiles, equipment, dirt and debris. The entrance and exit shall be clearly marked.

METHOD OF MEASUREMENT: Item Code 937.9999 Pedestrian Way shall be measured for payment as a lump sum for all labor, materials and incidentals necessary to provide and maintain the pedestrian way, to keep it open at the requisite times, complete and accepted by the Engineer.

BASIS OF PAYMENT: Item Code 937.9999 Pedestrian Way, shall be paid for by the lump sum at the Contract Unit price listed in the proposal. This item shall be an only and acceptable price of $50,000.00. The price shall include all temporary rails, fences, temporary lighting, maintenance, pedestrian way walking surface, signs, and all other incidentals complete and accepted by the Engineer. No additional payment will be considered for delays or inefficiencies due to the presence of the pedestrian way.

The first payment of 40 percent of the lump sum price will be made when the pedestrian way is opened for use by pedestrians. The second payment of 40 percent of the lump sum price will be made when the pedestrian way has been open for use by pedestrians for 60 calendar days. The last payment of 20 percent of the lump sum price will be made at substantial completion. No payment will be made if the pedestrian way is not opened for pedestrians.
The bituminous sidewalk beyond the bridge will be paid for separately.

S:\PROJECTS\I195FD\DESIGN\Contract 16\C16 Specs\Highway\937.9999 Ped Way REV 01.doc

Table of Contents - Distribution of Quantities

Project Name - I-195 Relocation – Contract 16 – Providence River Pedestrian Bridge
Estimate Name - Addendum No. 4: I-195 Relocation – Contract 16 – Providence River Pedestrian Bridge
R.I. Contract No. - 2016-CB-038
FAP Nos: REV 1950(001)

ItemCode	Description	Page
410.1000	TEMPORARY PATCHING MATERIAL/TRENCHES	23
601.0300	CLASS A PORTLAND CEMENT CONCRETE	24
701.7724	24 INCH REINFORCED CONCRETE PIPE END SECTION STANDARD 2.3.0	24
701.9933	FURNISH AND INSTALL NGRID 2-WAY 4-INCH PVC CONDUIT	24
708.9041	CLEANING CATCH BASINS ALL TYPES AND SIZES	24
803.9901	PARTIAL REMOVAL AND DISPOSAL OF MASONRY WALLS AND ABUTMENTS	25
803.9902	**PARTIAL REMOVAL AND DISPOSAL OF MASONRY BRIDGE PIERS AND PILE CAPS**	**25**
804.2000	MOBILIZATION & DEMOBILIZATION OF PILE DRIVING EQUIPMENT	26
804.2300	PILE SHOES FOR TIMBER PILES	26
804.9901	TROPICAL HARDWOOD TIMBER PILES, FURNISH AND DRIVE OVER 40 FEET	26
804.9911	MOBILIZATION & DEMOBILIZATION OF MICROPILE EQUIPMENT	27
804.9912	DRILLED MICROPILE	27
804.9914	MICROPILE LOAD TEST	27
804.9930	CONFIRMATORY SOIL BORINGS - LAND	27
804.9931	CONFIRMATORY SOIL BORINGS -WATER	27
805.9901	GABION MATTRESS	27
805.9910	GEOTEXTILE FABRIC	28
805.9920	GEOFOAM	28
806.1750	HARDWARE FOR TIMBER CONSTRUCTION	29
806.9901	IPE WOOD DECK, UPPER DECK	29
806.9902	IPE WOOD DECK, TERRACE	29
806.9903	IPE WOOD DECK, LOWER DECK, TYPE A	29
806.9904	**** ITEM DELETED ****	**30**
806.9905	IPE EDGE BOARD, UPPER DECK	30
806.9906	IPE EDGE BOARD, LOWER DECK	30
806.9907	IPE EDGE BOARD, TERRACE	31
806.9910	IPE WOOD DECK, BOARDWALK	31
806.9911	IPE EDGE BOARD, BOARDWALK	31
806.9920	TREATED TIMBER GIRDERS, HEAD BEAMS, DIAPHRAGM BLOCKS, AND STRINGERS FOR BOARDWALK	31
806.9921	WANA WOOD, UPPER BRIDGE FASCIA - NORTH	32
806.9922	WANA WOOD, UPPER BRIDGE FASCIA - SOUTH	32
806.9923	WANA WOOD, LOWER BRIDGE FASCIA - SOUTH	32
806.9924	WANA WOOD, LOWER BRIDGE FASCIA - NORTH	33
807.0210	RANGED SPLIT FACE MASONRY	33
807.0360	POINTING & GROUTING MASONRY UNDERWATER	33
807.9901	**6", 8" & 12" CMU PLANTER WALLS**	**34**
808.0502	CONCRETE SUBSTRUCTURE CLASS XX 3/4" ABUT FOOTING	34
808.0504	**CONCRETE SUBSTRUCTURE CLASS XX 3/4" WALL FOOTING**	**34**
808.0505	**CONCRETE SUBSTRUCTURE CLASS HP 3/4'' WALL STEMS**	**34**
808.0506	**CONCRETE SUBSTRUCTURE CLASS HP 3/4'' ABUT STEMS**	**35**
808.0508	CONCRETE SUBSTRUCTURE CLASS XX 3/4'' APPROACH SLABS	35
808.0514	**CONCRETE SUBSTRUCTURE CLASS HP 3/4'' LESS FOOTINGS**	**35**
808.0800	CONCRETE RETAINING WALL CLASS HP 3/4" STANDARD 10.3.0	36
808.1501	CONCRETE SUPERSTRUCTURE CLASS HP 3/4'' BRIDGE DECKS	36
808.1680	PREFORMED NEOPRENE JOINT SEAL- EXPANSION AND FIXED	36
808.1810	CONCRETE SURFACE FINISHING RUBBED REGULAR	36
808.9901	MODULAR BLOCK WALL (PRECAST CONCRETE)	37
808.9910	RUBBER CONTROL JOINT	37
810.0210	GALVANIZED BAR REINFORCEMENT GRADE 60	37
811.2000	WALL DRAINS 4 INCH DIAMETER W/FILTER STONE	38

Table of Contents - Distribution of Quantities

Project Name - I-195 Relocation – Contract 16 – Providence River Pedestrian Bridge
Estimate Name - Addendum No. 4: I-195 Relocation – Contract 16 – Providence River Pedestrian Bridge
R.I. Contract No. - 2016-CB-038
FAP Nos: REV 1950(001)

ItemCode	Description	Page
T05.0320	PULL BOX ON STRUCTURE TYPE V STANDARD 18.6.3	67
T05.9901	FLUSH MOUNTED FLOOR BOX WITH DUPLEX GFCI OUTLET AND DOUBLE GANG BOX WITH WEATHERPROOF COVERS	68
T06.4010	1 IN. RIGID STEEL CONDUIT IN STRUCTURE	68
T06.4015	1-1/2 IN. RIGID STEEL CONDUIT IN STRUCTURE	68
T06.4020	2 IN. RIGID STEEL CONDUIT IN STRUCTURE	68
T06.4040	4 INCH RIGID STEEL CONDUIT IN STRUCTURE	69
T06.5220	2 INCH SCHEDULE 80 POLYVINYL CHLORIDE PLASTIC CONDUIT - UNDERGROUND	69
T06.5230	3 INCH SCHEDULE 80 POLYVINYL CHLORIDE PLASTIC CONDUIT - UNDERGROUND	69
T06.5240	4 INCH SCHEDULE 80 POLYVINYL CHLORIDE PLASTIC CONDUIT - UNDERGROUND	69
T06.9901	3/4" RIGID STEEL CONDUIT IN STRUCTURE	69
T06.9902	3/4" SCHEDULE 80 PVC CONDUIT WITHIN CONCRETE SLAB (LOWER DECK)	70
T06.9903	1 1/2" SCHEDULE 80 PVC CONDUIT WITHIN CONCRETE SLAB (LOWER DECK)	71
T07.9901	LUMINAIRE TYPE B	71
T07.9909	LUMINAIRE TYPE SL	71
T07.9912	LUMINAIRE TYPE UP	71
T09.9901	EQUIPMENT ENCLOSURE - 60" HIGH	71
T09.9902	EQUIPMENT ENCLOSURE - 48" HIGH	71
T09.9905	ELECTRICAL SERVICE PANEL - 120/240V, 1-PHASE, 200A MCB, INTEGRAL SPD	72
T09.9906	LIGHTING CONTROL RELAY PANEL WITH USER INTERFACE AND PHOTOCELL	72
T15.0100	DIRECTIONAL REGULATORY AND WARNING SIGNS	72
937.9999	PEDESTRIAN WAY	72
706.9000	**PLUG AND CAP PIPE ALL SIZES**	**72**
806.9914	**IPE WOOD DECK. LOWER DECK, TYPE B**	**73**

Distribution of Quantities

Project Name - I-195 Relocation – Contract 16 – Providence River Pedestrian Bridge
Estimate Name - Addendum No. 4: I-195 Relocation – Contract 16 – Providence River Pedestrian Bridge
R.I. Contract No. - 2016-CB-038
FAP Nos: REV 1950(001)

Item No.	Item Code	Description	UM	Qty.	Pay Code	Seq. No.
018	201.0720 Cont.	202.0540)				
		75+40 - 75+75 (22 CY X 1.49 TONS/CY)		33.00	0008	03
		75+93 - 76+45 (33 CY X 1.49 TONS/CY)		49.00	0008	03
		FROM STRUCTURAL EXCAVATION UNCLASSIFIED (CODE 203.0400)				
		ABUT. B2 & RET WALL (497 CY X 1.49 CY/TO)		741.00	0028	02
		ABUT. B8 RET WALL (440 CY X 1.49 TONS/CY)		656.00	0028	02
		WALL "J1" (23 CY X 1.49 TONS/CY)		34.00	0031	01
		FROM STRUCTURAL EXCAVATION UNCLASSIFIED WET (CODE 203.0420)				
		BOARDWALK (108 CY X 1.49 TONS/CY)		161.00	0008	03
		OVER EXCAVATON				
		MW-1 (50 CY X 1.49 TONS/CY)		75.00	0031	01
		MW-2 (13 CY X 1.49 TONS/CY)		19.00	0031	01
		MW-3 (11 CY X 1.49 TONS/CY)		16.00	0031	01
		SOUTH WATER STREET (CROSS SECTIONS, CODE 202.0300)				
		22+01 - 27+25, RT (90 CY X 1.49 TONS/CY)		134.00	0031	01
		27+25 - 28+25, RT (295 CY X 1.49 TONS/CY)		440.00	0031	01
		28+25 - 30+00, RT (967 CY X 1.49 TONS/CY)		1,441.00	0031	01
		30+00 - 30+90, RT (200 CY X 1.49 TONS/CY)		298.00	0031	01
		31+50 - 32+25, RT (55 CY X 1.49 TONS/CY)		82.00	0031	01

Distribution of Quantities

Project Name - I-195 Relocation – Contract 16 – Providence River Pedestrian Bridge
Estimate Name - Addendum No. 4: I-195 Relocation – Contract 16 – Providence River Pedestrian Bridge
R.I. Contract No. - 2016-CB-038
FAP Nos: REV 1950(001)

Item No.	Item Code	Description	UM	Qty.	Pay Code	Seq. No.
018	**201.0720 Cont.**	SOUTH WATER STREET (CROSS SECTIONS, CODE 202.0540)				
		22+01 - 27+25, RT (90 CY X 1.49 TONS/CY)		134.00	0031	01
		27+25 - 28+25, RT (130 CY X 1.49 TONS/CY)		194.00	0031	01
		28+25 - 30+00, RT (175 CY X 1.49 TONS/CY)		261.00	0031	01
		WALL MW-3 (CROSS SECTIONS, CODE 202.0300)				
		77+35 - 78+25 ((215 CY - 84 CY MASONRY)X1.49 TONS/CY)		195.00	0031	01
		WALL MW-3 (CROSS SECTIONS, CODE 202.0540)				
		77+35 - 78+25, RT (70 CY X 1.49 TONS/CY)		104.00	0031	01
		WEST APPROACH - TOP SOIL REMOVAL (6" DEEP)				
		S.R. 8, 6+15 - 8+75 RT (350 CY X 1.49 TONS/CY)		522.00	0031	01
		Item 201.0720 Total:		**5,589.00**		
019	**201.0730**	**DISPOSE SOLID WASTE**	**TON**			
		BOARDWALK (CROSS SECTIONS, CODE 202.0540)				
		75+40 - 75+75 (22 CY X 1.49 TONS/CY)		33.00	0008	03
		75+93 - 76+45 (33 CY X 1.49 TONS/CY)		49.00	0008	03
		FROM STRUCTURAL EXCAVATION UNCLASSIFIED (CODE 203.0400)				
		ABUT. B2 & RET WALL (497 CY X 1.49 CY/TO)		741.00	0028	02

Distribution of Quantities

Project Name - I-195 Relocation – Contract 16 – Providence River Pedestrian Bridge
Estimate Name - Addendum No. 4: I-195 Relocation – Contract 16 – Providence River Pedestrian Bridge
R.I. Contract No. - 2016-CB-038
FAP Nos: REV 1950(001)

Item No.	Item Code	Description	UM	Qty.	Pay Code	Seq. No.
019	201.0730 Cont.	ABUT. B8 RET WALL (440 CY X 1.49 TONS/CY)		656.00	0028	02
		WALL "J1" (23 CY X 1.49 TONS/CY)		34.00	0028	02
		FROM STRUCTURAL EXCAVATION UNCLASSIFIED WET (CODE 203.0420)				
		BOARDWALK (108 CY X 1.49 TONS/CY)		161.00	0008	03
		OVER EXCAVATON				
		MW-1 (50 CY X 1.49 TONS/CY)		75.00	0031	01
		MW-2 (13 CY X 1.49 TONS/CY)		19.00	0031	01
		MW-3 (11 CY X 1.49 TONS/CY)		16.00	0031	01
		SOUTH WATER STREET (CROSS SECTIONS, CODE 202.0300)				
		22+01 - 27+25, RT (90 CY X 1.49 TONS/CY)		134.00	0031	01
		27+25 - 28+25, RT (295 CY X 1.49 TONS/CY)		440.00	0031	01
		28+25 - 30+00, RT (967 CY X 1.49 TONS/CY)		1,441.00	0031	01
		30+00 - 30+90, RT (200 CY X 1.49 TONS/CY)		298.00	0031	01
		31+50 - 32+25, RT (55 CY X 1.49 TONS/CY)		82.00	0031	01
		SOUTH WATER STREET (CROSS SECTIONS, CODE 202.0540)				
		22+01 - 27+25, RT (90 CY X 1.49 TONS/CY)		134.00	0031	01
		27+25 - 28+25, RT (130 CY X 1.49 TONS/CY)		194.00	0031	01
		28+25 - 30+00, RT (175 CY X 1.49 TONS/CY)		261.00	0031	01
		WALL MW-3 (CROSS SECTIONS, CODE				

Distribution of Quantities

Project Name - I-195 Relocation – Contract 16 – Providence River Pedestrian Bridge
Estimate Name - Addendum No. 4: I-195 Relocation – Contract 16 – Providence River Pedestrian Bridge
R.I. Contract No. - 2016-CB-038
FAP Nos: REV 1950(001)

Item No.	Item Code	Description	UM	Qty.	Pay Code	Seq. No.
019	201.0730 Cont.	202.0300)				
		77+35 - 78+25 ((215 CY - 84 CY MASONRY)X1.49 TONS/CY)		195.00	0031	01
		WALL MW-3 (CROSS SECTIONS, CODE 202.0540)				
		77+35 - 78+25, RT (70 CY X 1.49 TONS/CY)		104.00	0031	01
		WEST APPROACH - TOP SOIL REMOVAL (6" DEEP)				
		S.R. 8, 6+15 - 8+75 RT (350 CY X 1.49 TONS/CY)		522.00	0031	01
		Item 201.0730 Total:		**5,589.00**		
020	201.9902	**REMOVE AND STOCKPILE ON SITE 3 BAR STEEL RAIL**	**LF**			
		SOUTH WATER STREET				
		29+70, 110' RT - 30+15, 115' RT (WALL D)		50.00	0031	01
		30+67, 80' RT - 30+90, 73' RT` (WALL J)		27.00	0031	01
		Item 201.9902 Total:		**77.00**		
021	201.9903	**REMOVE AND DISPOSE STONE GABIONS**	**CF**			
		SOUTH WATER STREET				
		30+70 - 30+95, 95' RT		560.00	0031	01
		Item 201.9903 Total:		**560.00**		
022	201.9904	**REMOVE AND DISPOSE GRANITE BLOCKS - ALL SIZES**	**EACH**			
		SERVICE ROAD 8				
		6+90, 91' RT		1.00	0031	01
		6+92, 81' RT		1.00	0031	01
		7+04, 93' RT		1.00	0031	01

Distribution of Quantities

Project Name - I-195 Relocation – Contract 16 – Providence River Pedestrian Bridge
Estimate Name - Addendum No. 4: I-195 Relocation – Contract 16 – Providence River Pedestrian Bridge
R.I. Contract No. - 2016-CB-038
FAP Nos: REV 1950(001)

Item No.	Item Code	Description	UM	Qty.	Pay Code	Seq. No.
S039	**202.9991**	**SOIL SAMPLING**	**EACH**			
		BOARDWALK				
		SOUTH ABUTMENT		1.00	0008	03
		I-195 CONTRACT 16				
		CONTRACT 16		4.00	0031	01
		PEDESTRIAN BRIDGE				
		ABUTMENT B2		1.00	0028	02
		ABUTMENT B8		2.00	0028	02
		SERVICE ROAD 8				
		6+25 - 8+50 (LOAM EXCAVATION)		1.00	0031	01
		SOUTH WATER STREET				
		22+01 - 27+25, RT		1.00	0031	01
		27+25 - 30+00, RT		3.00	0031	01
		30+00 - 31+50, RT		1.00	0031	01
		31+50 - 33+10, RT		2.00	0031	01
		Item 202.9991 Total:		**16.00**		
040	**203.0400**	**STRUCTURAL EXCAVATION UNCLASSIFIED**	**CY**			
		B2 ABUTMENT				
		ABUTMENT		130.00	0028	02
		RETAINING WALL		367.00	0028	02
		B8 ABUTMENT				
		ABUTMENT BACL		45.00	0028	02
		ABUTMENT FRONT		5.00	0028	02
		RETAINING WALL		390.00	0028	02
		WALL J1				
		WALL J1		23.00	0031	01
		Item 203.0400 Total:		**960.00**		
041	**203.0420**	**STRUCTURAL EXCAVATION UNCLASSIFIED**	**CY**			
		WET				
		BOARDWALK				
		SOUTH ABUTMENT		68.00	0008	03

Distribution of Quantities

Project Name - I-195 Relocation – Contract 16 – Providence River Pedestrian Bridge
Estimate Name - Addendum No. 4: I-195 Relocation – Contract 16 – Providence River Pedestrian Bridge
R.I. Contract No. - 2016-CB-038
FAP Nos: REV 1950(001)

Item No.	Item Code	Description	UM	Qty.	Pay Code	Seq. No.
060	708.9041 Cont.	29+50, 22' RT		1.00	0031	01
		30+75, 22' RT		1.00	0031	01
		SERVICE ROAD 8				
		6+92, 14' LT		1.00	0031	01
		9+03, 15' LT		1.00	0031	01
		9+07, 15' LT		1.00	0031	01
		9+13, 15' LT		1.00	0031	01
		SOUTH WATER STREET				
		28+41, 22' RT		1.00	0031	01
		29+50, 22' RT		1.00	0031	01
		30+75, 22' RT		1.00	0031	01
		Item 708.9041 Total:		**14.00**		
061	803.9901	**PARTIAL REMOVAL AND DISPOSAL OF MASONRY WALLS AND ABUTMENTS**	CY			
		WALL D AND NORTH ABUTMENT				
		1 NW END POST TO SW CORNER		35.00	0008	03
		2 SW CORNER TO- N. ABUTMENT		15.00	0008	03
		3 NORTH ABUTMENT		25.00	0008	03
		4 N. ABUTMENT TO WALL J		23.00	0008	03
		WALL J		7.00	0008	03
		Item 803.9901 Total:		**105.00**		
062	803.9902	**PARTIAL REMOVAL AND DISPOSAL OF MASONRY BRIDGE PIERS AND PILE CAPS**	CY			
		CONTRACT 16				
		ADD 5% AS DIRECTED			0028	02
		PEDESTRIAN BRIDGE PIERS				
		PIER B3		12.00	0028	02
		PIER B4		14.00	0028	02
		PIER B5		27.00	0028	02
		PIER B6		14.00	0028	02
		PIER B7		18.00	0028	02

Distribution of Quantities

Project Name - I-195 Relocation – Contract 16 – Providence River Pedestrian Bridge
Estimate Name - Addendum No. 4: I-195 Relocation – Contract 16 – Providence River Pedestrian Bridge
R.I. Contract No. - 2016-CB-038
FAP Nos: REV 1950(001)

Item No.	Item Code	Description	UM	Qty.	Pay Code	Seq. No.
062	**803.9902 Cont.**	**Item 803.9902 Total:**		**89.00**		
063	**804.2000**	**MOBILIZATION & DEMOBILIZATION OF PILE DRIVING EQUIPMENT**	**LS**			
		BOARDWALK				
		BOARDWALK, ABUTMENT AND PIERS		1.00	0008	03
		Item 804.2000 Total:		**1.00**		
064	**804.2300**	**PILE SHOES FOR TIMBER PILES**	**EACH**			
		BOARDWALK				
		PIER 1		3.00	0008	03
		PIER 2		3.00	0008	03
		PIER 3		3.00	0008	03
		PIER 4		3.00	0008	03
		SOUTH ABUTMENT		10.00	0008	03
		SW WINGWALL		6.00	0008	03
		Item 804.2300 Total:		**28.00**		
065	**804.9901**	**TROPICAL HARDWOOD TIMBER PILES, FURNISH AND DRIVE OVER 40 FEET**	**LF**			
		BOARDWALK				
		PEIR 3 (3@46')		138.00	0008	03
		PIER 1 (3@46')		138.00	0008	03
		PIER 2 (3@46')		138.00	0008	03
		PIER 4 (3@46')		138.00	0008	03
		SOUTH ABUTMENT				
		BATTERED PILES (4@50')		200.00	0008	03
		VERTICAL PILES (6@46')		276.00	0008	03
		SW WINGWALL				
		BATTERED PILES (3@50')		150.00	0008	03
		VERTICAL PILES (3@46')		138.00	0008	03
		Item 804.9901 Total:		**1,316.00**		

Distribution of Quantities

Project Name - I-195 Relocation – Contract 16 – Providence River Pedestrian Bridge
Estimate Name - Addendum No. 4: I-195 Relocation – Contract 16 – Providence River Pedestrian Bridge
R.I. Contract No. - 2016-CB-038
FAP Nos: REV 1950(001)

Item No.	Item Code	Description	UM	Qty.	Pay Code	Seq. No.
S077	**806.9903 Cont.**	SPAN 3 LOWER DECK				
		1X6 IPE NORTH		726.00	0028	02
		Item 806.9903 Total:		**1,263.00**		
S078	**806.9904**	**IPE WOOD DECK, LOWER DECK, TYPE B**	**LF**			
		SPAN 3 - LOWER DECK				
		1X6 SOUTH			0028	02
		Item 806.9904 Total:		****DELETED****		
S079	**806.9905**	**IPE EDGE BOARD, UPPER DECK**	**LF**			
		CONTRACT 16				
		QUANTITY ROUND OFF		2.50	0028	02
		SPAN 1				
		NORTH		36.50	0028	02
		SOUTH		63.50	0028	02
		SPAN 2				
		NORTH		80.00	0028	02
		SOUTH		74.50	0028	02
		SPAN 3				
		NORTH		75.00	0028	02
		SOUTH		45.00	0028	02
		SPAN 4				
		NORTH		69.00	0028	02
		SOUTH		64.50	0028	02
		SPAN 5				
		NORTH		70.00	0028	02
		SOUTH		67.50	0028	02
		SPAN 6				
		NORTH		67.50	0028	02
		SOUTH		69.50	0028	02
		Item 806.9905 Total:		**785.00**		
S080	**806.9906**	**IPE EDGE BOARD, LOWER DECK**	**LF**			

Distribution of Quantities

Project Name - I-195 Relocation – Contract 16 – Providence River Pedestrian Bridge
Estimate Name - Addendum No. 4: I-195 Relocation – Contract 16 – Providence River Pedestrian Bridge
R.I. Contract No. - 2016-CB-038
FAP Nos: REV 1950(001)

Item No.	Item Code	Description	UM	Qty.	Pay Code	Seq. No.
090	807.0360 Cont.	PIER B4		162.00	0028	02
		PIER B5				
		PIER B5		86.00	0028	02
		PIER B6				
		PIER B6		50.00	0028	02
		PIER B7				
		PIER B7		102.00	0028	02
		Item 807.0360 Total:		**508.00**		
091	807.9901	**6", 8" & 12" CMU PLANTER WALLS**	**SF**			
		LOWER PLATFORM				
		CMU PLANTER WALLS		2,255.00	0028	02
		Item 807.9901 Total:		**2,255.00**		
092	808.0502	**CONCRETE SUBSTRUCTURE CLASS XX**	**CY**			
		3/4" ABUT FOOTING				
		BOARDWALK				
		SOUTH ABUTMENT FOOTING		16.00	0008	03
		Item 808.0502 Total:		**16.00**		
093	808.0504	**CONCRETE SUBSTRUCTURE CLASS XX**	**CY**			
		3/4" WALL FOOTING				
		BOARDWALK				
		SW WINGWALL		12.00	0008	03
		PEDESTRIAN BRIDGE				
		B2 WINGWALL FOOTING		44.00	0028	02
		B8 WINGWALL FOOTING		113.00	0028	02
		Item 808.0504 Total:		**169.00**		
094	808.0505	**CONCRETE SUBSTRUCTURE CLASS HP**	**CY**			
		3/4'' WALL STEMS				
		BOARDWALK				
		SW WINGWALL		10.00	0008	03

Distribution of Quantities

Project Name - I-195 Relocation – Contract 16 – Providence River Pedestrian Bridge
Estimate Name - Addendum No. 4: I-195 Relocation – Contract 16 – Providence River Pedestrian Bridge
R.I. Contract No. - 2016-CB-038
FAP Nos: REV 1950(001)

Item No.	Item Code	Description	UM	Qty.	Pay Code	Seq. No.
094	**808.0505 Cont.**	PEDESTRIAN BRIDGE				
		B2 WINGWALL STEM		34.00	0028	02
		B8 WINGWALL STEM		78.00	0028	02
		Item 808.0505 Total:		**122.00**		
095	**808.0506**	**CONCRETE SUBSTRUCTURE CLASS HP**	**CY**			
		3/4'' ABUT STEMS				
		B2 ABUTMENT				
		B2 ABUTMENT		68.00	0028	02
		B8 ABUTMENT				
		B8 ABUTMENT		60.00	0028	02
		BOARDWALK				
		SOUTH ABUTMENT STEM		9.00	0008	03
		Item 808.0506 Total:		**137.00**		
096	**808.0508**	**CONCRETE SUBSTRUCTURE CLASS XX**	**CY**			
		3/4'' APPROACH SLABS				
		BOARDWALK				
		NORTH ABUTMENT		1.50	0008	03
		SOUTH ABUTMENT		1.50	0008	03
		PEDESTRIAN BRIDGE				
		APPROACH SLABS		13.00	0028	02
		Item 808.0508 Total:		**16.00**		
097	**808.0514**	**CONCRETE SUBSTRUCTURE CLASS HP**	**CY**			
		3/4'' LESS FOOTINGS				
		PIER B3				
		PIER B3		12.00	0028	02
		PIER B4				
		PIER B4		27.00	0028	02
		PIER B5				
		PIER B5		39.00	0028	02
		PIER B6				

Distribution of Quantities

Project Name - I-195 Relocation – Contract 16 – Providence River Pedestrian Bridge
Estimate Name - Addendum No. 4: I-195 Relocation – Contract 16 – Providence River Pedestrian Bridge
R.I. Contract No. - 2016-CB-038
FAP Nos: REV 1950(001)

Item No.	Item Code	Description	UM	Qty.	Pay Code	Seq. No.
097	808.0514 Cont.	PIER B6		15.00	0028	02
		PIER B7				
		PIER B7		15.00	0028	02
		Item 808.0514 Total:		**108.00**		
098	808.0800	**CONCRETE RETAINING WALL CLASS HP 3/4" STANDARD 10.3.0**	**CY**			
		WALL "J"				
		WALL J1		8.00	0008	03
		Item 808.0800 Total:		**8.00**		
099	808.1501	**CONCRETE SUPERSTRUCTURE CLASS HP 3/4'' BRIDGE DECKS**	**CY**			
		LOWER DECK				
		MAIN LOWER DECK		110.00	0028	02
		PLANTER CONCRETE DECKS		25.00	0028	02
		TOPPING SLAB		30.00	0028	02
		Item 808.1501 Total:		**165.00**		
100	808.1680	**PREFORMED NEOPRENE JOINT SEAL- EXPANSION AND FIXED**	**LF**			
		SOUTH ABUTMENT				
		JOINT AT SW WINGWALL		7.00	0008	03
		WALL J1				
		JOINT AT WALL J		5.00	0031	01
		Item 808.1680 Total:		**12.00**		
101	808.1810	**CONCRETE SURFACE FINISHING RUBBED REGULAR**	**SF**			
		BOARDWALK				
		SOUTH ABUTMENT		92.00	0008	03
		SW WINGWALL		40.00	0008	03
		Item 808.1810 Total:		**132.00**		

Distribution of Quantities

Project Name - I-195 Relocation – Contract 16 – Providence River Pedestrian Bridge
Estimate Name - Addendum No. 4: I-195 Relocation – Contract 16 – Providence River Pedestrian Bridge
R.I. Contract No. - 2016-CB-038
FAP Nos: REV 1950(001)

Item No.	Item Code	Description	UM	Qty.	Pay Code	Seq. No.
106	**819.0800 Cont.**	B2 ABUTMENT				
		B2 ABUTMENT		413.00	0028	02
		B3 PIER				
		B3 PIER		56.00	0028	02
		B4 PIER				
		B4 PIER		60.00	0028	02
		B5 PIER				
		B5 PER		143.00	0028	02
		B5 PIER			0028	02
		B6 PIER				
		B6 PIER		212.00	0028	02
		B7 PIER				
		B7 PIER		212.00	0028	02
		B8 ABUTMENT				
		B8 ABUTMENTS		250.00	0028	02
		Item 819.0800 Total:		**1,346.00**		
S107	**823.9901**	**EXPANSION JOINT COVER PLATE, STAINLESS STEEL**	**LF**			
		PED BRIDGE				
		ABUT B2		72.00	0028	02
		ABUT B8		35.00	0028	02
		PIER B3		28.00	0028	02
		PIER B5		32.00	0028	02
		Item 823.9901 Total:		**167.00**		
108	**824.0620**	**WELDED STUD SHEAR CONNECTORS 3/4 INCH DIAMETER**	**EACH**			
		LOWER DECK				
		LOWER DECK STEEL		2,168.00	0028	02
		Item 824.0620 Total:		**2,168.00**		
S109	**824.9901**	**ARCHITECTURAL STAINLES STEEL**	**SF**			

Distribution of Quantities

Project Name - I-195 Relocation – Contract 16 – Providence River Pedestrian Bridge
Estimate Name - Addendum No. 4: I-195 Relocation – Contract 16 – Providence River Pedestrian Bridge
R.I. Contract No. - 2016-CB-038
FAP Nos: REV 1950(001)

Item No.	Item Code	Description	UM	Qty.	Pay Code	Seq. No.
S125	**830.9906**	**ARCHITECTURAL RAILING, TYPE F, HANDRAIL W/LED**	**LF**			
		SPAN 3 LOWER DECK				
		NORTH		18.00	0028	02
		Item 830.9906 Total:		**18.00**		
S126	**830.9910**	**ARCHITECTURAL RAILING TYPE BW, BOARDWALK**	**LF**			
		BOARDWALK				
		EAST RAIL		97.00	0008	03
		WEST RAIL		130.00	0008	03
		Item 830.9910 Total:		**227.00**		
127	**830.9911**	**ARCHITECTURAL RAILING, TYPE W, WALL D & BOARDWALK WINGWALL**	**LF**			
		BOARDWALK / WALL D				
		WALL D, BOARDWALK - NE CORNER		9.00	0008	03
		WALL D, NW CORNER - SW CORNER		49.50	0008	03
		WALL D, SW CORNER - BOARDWALK		24.00	0008	03
		BOARDWALK, SOUTH ABUTMENT				
		SE RETURN WALL		10.00	0008	03
		SW RETURN & WINGWALL		30.00	0008	03
		Item 830.9911 Total:		**122.50**		
128	**830.9940**	**REMOVE, RESTORE, & RESET 3 BAR STEEL RAIL - WALL J**	**LF**			
		SOUTH WATER STREET				
		30+90, 73' RT - 31+60, 52' RT (WALL J)		78.00	0031	01
		Item 830.9940 Total:		**78.00**		
129	**830.9941**	**REMOVE, RESTORE & INSTALL FROM STOCKPILE 3 BAR STEEL RAIL- WALL J1**	**LF**			

Distribution of Quantities

Project Name - I-195 Relocation – Contract 16 – Providence River Pedestrian Bridge
Estimate Name - Addendum No. 4: I-195 Relocation – Contract 16 – Providence River Pedestrian Bridge
R.I. Contract No. - 2016-CB-038
FAP Nos: REV 1950(001)

Item No.	Item Code	Description	UM	Qty.	Pay Code	Seq. No.
160	**923.0105**	**DRUM BARRICADE STANDARD 26.2.0**	**BDAY**			
		I-195 CONTRACT 16				
		ASSUME 30 BARRELS / DAY FOR 15 MONTHS		13,950.00	0031	01
		SOUTH WATER STREET				
		PARKING LANE (17X450 DAYS)		7,650.00	0031	01
		Item 923.0105 Total:		**21,600.00**		
161	**923.0120**	**PLASTIC PIPE BARRICADE STANDARD 26.3.0**	**EACH**			
		PECK STREET				
		@ DYER STREET		2.00	0031	01
		Item 923.0120 Total:		**2.00**		
162	**923.0200**	**FLUORESCENT TRAFFIC CONES STANDARD 26.1.0**	**EACH**			
		PROJECTWIDE				
		PROJECTWIDE		100.00	0031	01
		Item 923.0200 Total:		**100.00**		
163	**926.0121**	**UNANCHORED PRECAST CONCRETE BARRIER FOR TEMPORARY TRAFFIC CONTROL STANDARD 40.5.0**	**LF**			
		PROPOSED PAVED STOCKPILE AREA				
		EAST RIVERBANK - (100'X50' OR AS NEEDED)		250.00	0031	01
		Item 926.0121 Total:		**250.00**		
164	**929.0110**	**FIELD OFFICE**	**PMO**			
		I-195 CONTRACT 16				
		24 MONTHS		30.00	0028	02
		Item 929.0110 Total:		**30.00**		

Distribution of Quantities

Project Name - I-195 Relocation – Contract 16 – Providence River Pedestrian Bridge
Estimate Name - Addendum No. 4: I-195 Relocation – Contract 16 – Providence River Pedestrian Bridge
R.I. Contract No. - 2016-CB-038
FAP Nos: REV 1950(001)

Item No.	Item Code	Description	UM	Qty.	Pay Code	Seq. No.
S225	**T09.9905**	**ELECTRICAL SERVICE PANEL - 120/240V, 1-PHASE, 200A MCB, INTEGRAL SPD**	**LS**			
		PEDESTRIAN BRIDGE				
		ABUTMENT B2		1.00	0028	02
		Item T09.9905 Total:		**1.00**		
S226	**T09.9906**	**LIGHTING CONTROL RELAY PANEL WITH USER INTERFACE AND PHOTOCELL**	**LS**			
		PEDESTRIAN BRIDGE				
		ABUTMENT B2		1.00	0028	02
		Item T09.9906 Total:		**1.00**		
227	**T15.0100**	**DIRECTIONAL REGULATORY AND WARNING SIGNS**	**SF**			
		I-195 CONTRACT 16				
		SUPPLEMENTAL SIGNS AS DIRECTED		10.00	0031	01
		PECK STREET				
		@ DYER STREET		10.00	0031	01
		Item T15.0100 Total:		**20.00**		
228	**937.9999**	**PEDESTRIAN WAY**	**LS**			
		PEDESTRIAN BRIDGE				
		PEDESTRAIN BRIDGE		1.00	0028	02
		Item 937.9999 Total:		**1.00**		
229	**706.9000**	**PLUG AND CAP PIPE ALL SIZES**	**EACH**			
		SOUTH WATER STREET				
		31+80, 48' RT		1.00	0031	01
		AS DIRECTED		2.00	0031	01
		Item 706.9000 Total:		**3.00**		

Distribution of Quantities

Project Name - I-195 Relocation – Contract 16 – Providence River Pedestrian Bridge
Estimate Name - Addendum No. 4: I-195 Relocation – Contract 16 – Providence River Pedestrian Bridge
R.I. Contract No. - 2016-CB-038
FAP Nos: REV 1950(001)

Item No.	Item Code	Description	UM	Qty.	Pay Code	Seq. No.
S230	**806.9914**	**IPE WOOD DECK. LOWER DECK, TYPE B**	**SF**			
		SPAN 3 - LOWER DECK				
		1X3 IPE DECKING		961.00	0028	02
		Item 806.9914 Total:		**961.00**		

FED ROAD DIV. NO.	STATE	FEDERAL AID PROJECT NO.	FISCAL YEAR	SHEET NO.	TOTAL SHEETS
1	R.I.	–		v1_013	V1_078

R-1

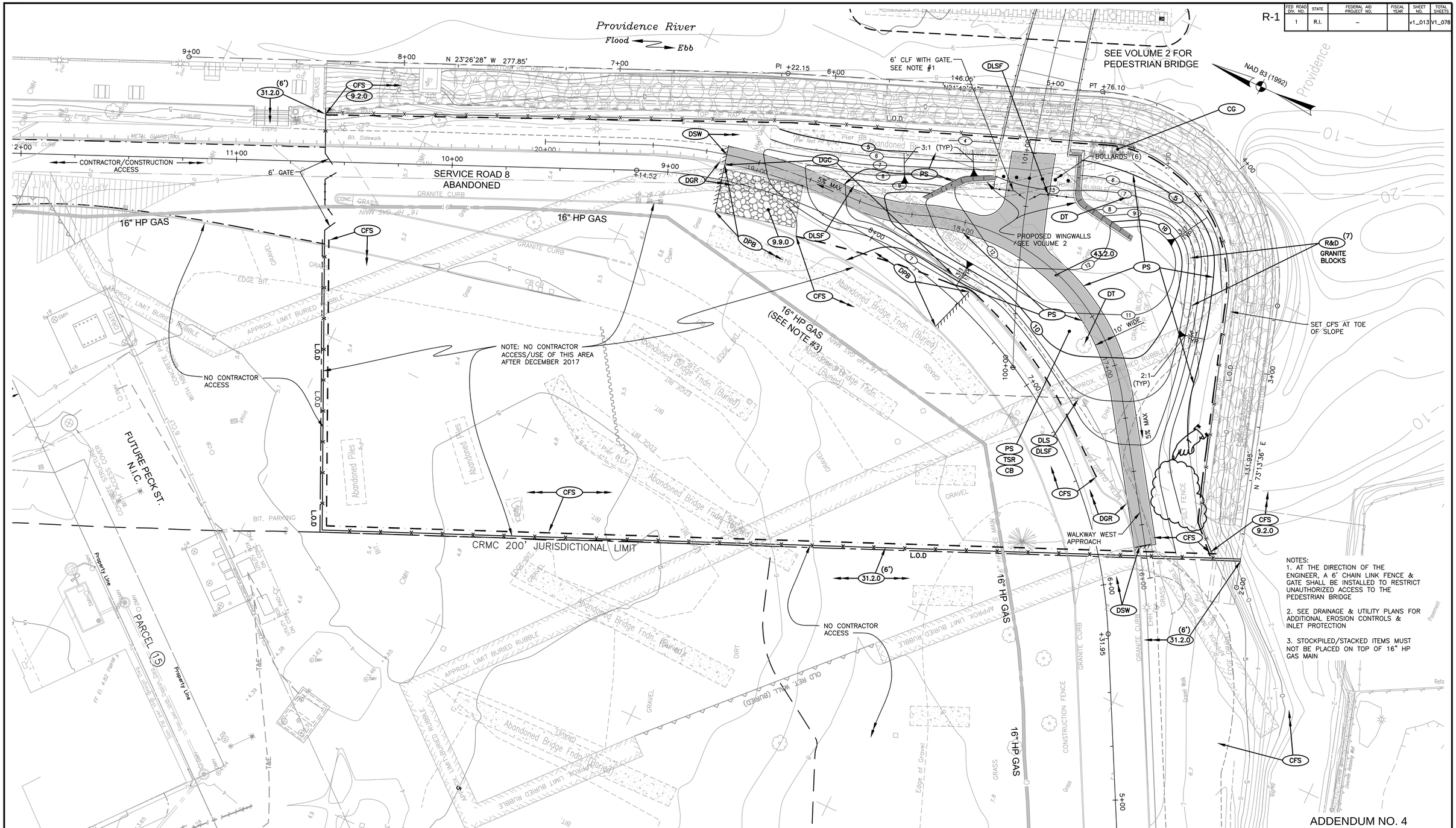

ADDENDUM NO. 4

CDR MAGUIRE

inFORM studio
235 east main street, suite 102b
northville, mi 48167
(p) 248.449.3564
(f) 248.449.6964
www.in-formstudio.com

Buro Happold

BETA Group, Inc.
Engineers • Planners • Landscape Architects
Lincoln, RI - Norwood, MA - Hartford, CT

RHODE ISLAND
DEPARTMENT OF TRANSPORTATION

INTERSTATE 195

DESIGNED BY:
CHECKED:
DATE:
SHEET: v1_013
OF: V1_078

SCALE: 1"=20'
0 10' 20' 40'

REVISIONS			REVISIONS		
NO.	DATE	BY	NO.	DATE	BY
1	6/10/12	JC III			

PROVIDENCE — IMPROVEMENTS TO INTERSTATE ROUTE 195 CONTRACT 16 VOLUME 1 — RHODE ISLAND

GENERAL PLAN NO. 1

V:\I-195Hwy\Contrct16\Plans\Advertising Archive C16\0012r_v1_013_general001_ADD04.dwg, 6/8/2016 9:30:23 AM, Paul Walz

0012r_v1_013_general001_ADD04

FED. ROAD DIV. NO.	STATE	FEDERAL AID PROJECT NO.	FISCAL YEAR	SHEET NO.	TOTAL SHEETS
1	R.I.	REV 1950(001)		V1_024	V1_078

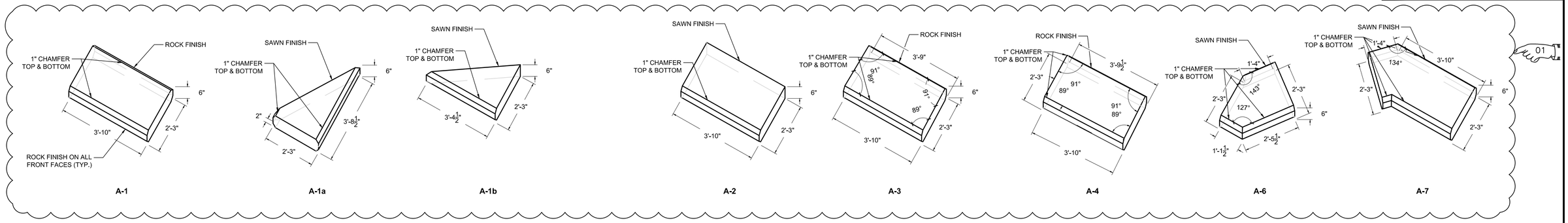

CS GRANITE CAPSTONE TYPE "A"

SCALE: 1/2"=1'

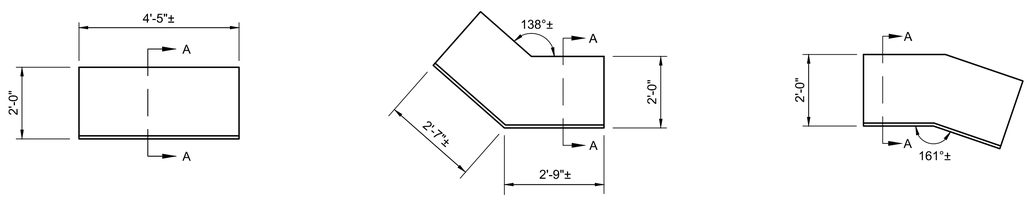

TYPICAL WALL D

NORTHEAST CORNER

WALL D - WALL J INTERSECTION

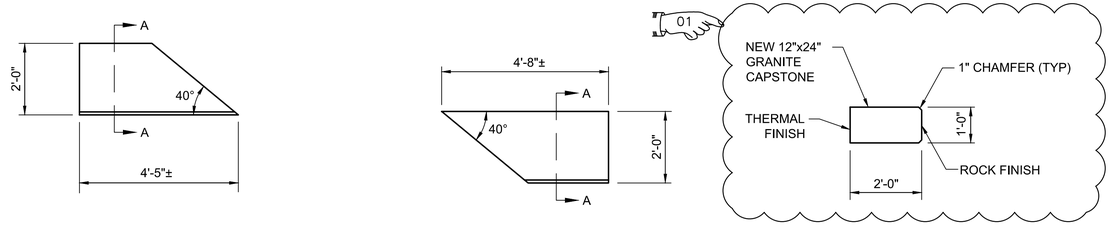

WALL D LOWER

WALL D UPPER

SECTION A-A

GRANITE CAPSTONE TYPE "C"

NOTE:
COORDINATE CAPSTONE JOINTS AND RAILING POSTS TO AVOID CONFLICTS

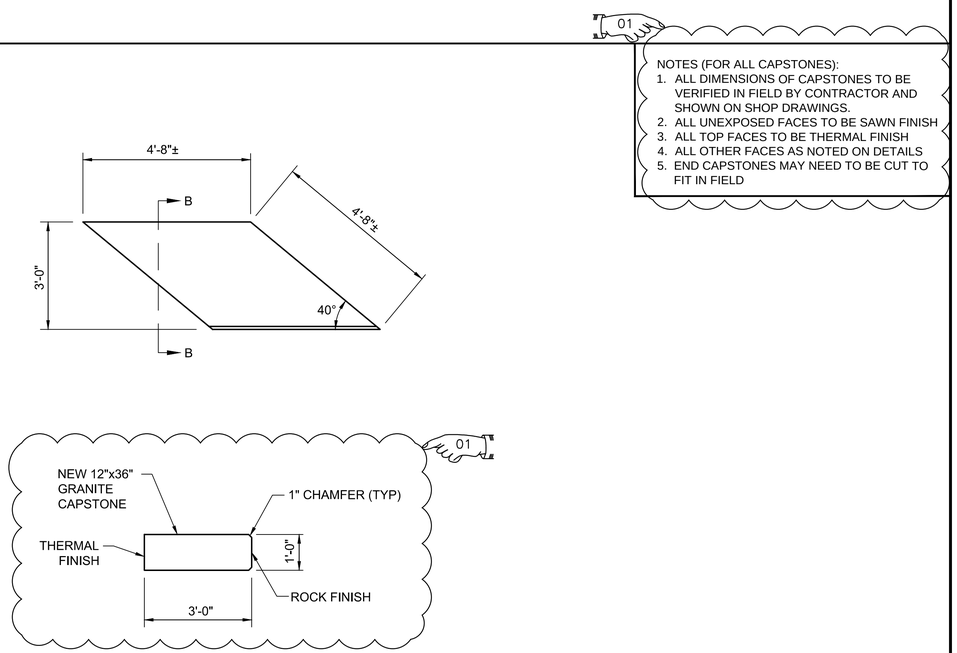

SECTION B-B

GRANITE CAPSTONE TYPE "D"

NOTE:
TYPE "D" CAPSTONE INCLUDES FLANKING STONES THAT ARE 18"± WIDE.

ADDENDUM NO. 4

CDR MAGUIRE

inFORM studio
235 east main street, suite 102b
northville, mi 48167
(p) 248.449.3564
(f) 248.449.6984
www.in-formstudio.com
Buro Happold

BETA Group, Inc.
Engineers • Planners • Landscape Architects
Lincoln, RI - Norwood, MA - Hartford, CT

RHODE ISLAND
DEPARTMENT OF TRANSPORTATION

INTERSTATE 195

DESIGNED BY: DC
CHECKED: KC
DATE:
SHEET: V1_024
OF: V1_078

SCALE: 1/2"=1'-0"

REVISIONS NO.	DATE	BY	REVISIONS NO.	DATE	BY
01	6/14/16	DC			

IMPROVEMENTS TO INTERSTATE ROUTE 195
PROVIDENCE — CONTRACT 16 VOLUME 1 — RHODE ISLAND

WALL DETAILS NO. 5
CAPSTONE

FED. ROAD DIV. NO.	STATE	FEDERAL AID PROJECT NO.	FISCAL YEAR	SHEET NO.	TOTAL SHEETS
1	R.I.	REV 1950(001)		V1_031	V1_078

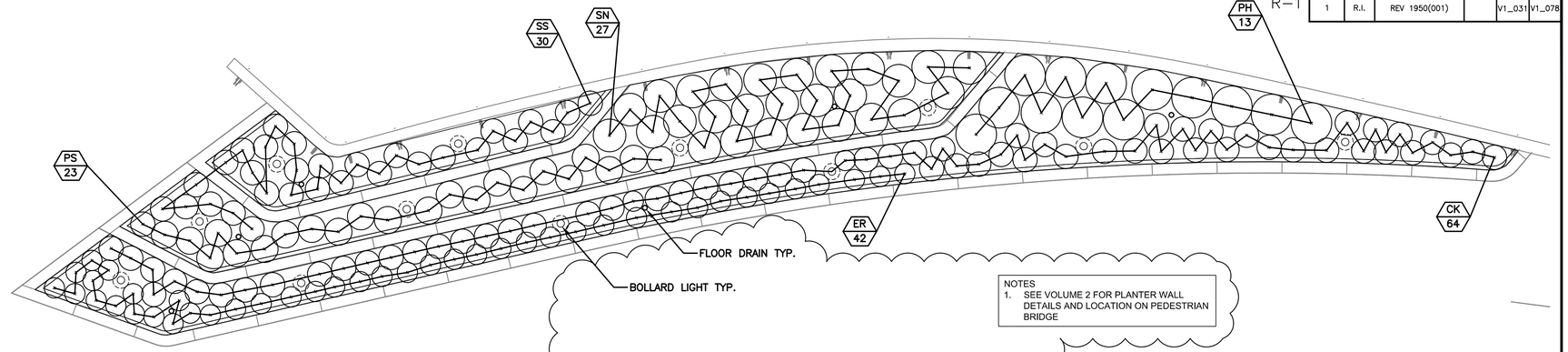

NOTES
1. SEE VOLUME 2 FOR PLANTER WALL DETAILS AND LOCATION ON PEDESTRIAN BRIDGE

PEDESTRIAN BRIDGE PLANTER PLANTING

SCALE: 1/4"=1'

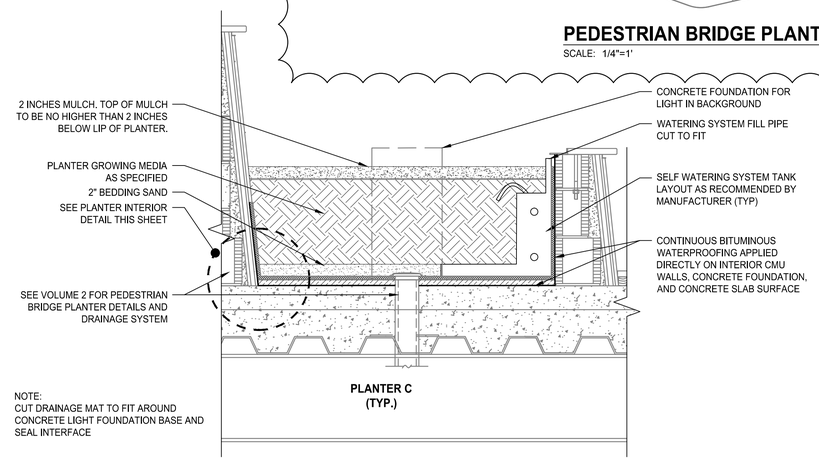

NOTE:
CUT DRAINAGE MAT TO FIT AROUND CONCRETE LIGHT FOUNDATION BASE AND SEAL INTERFACE

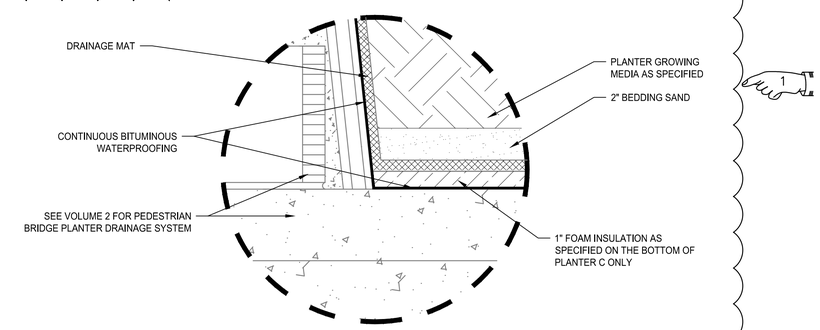

PLANTER INTERIOR DETAIL

SCALE: 3"=1'

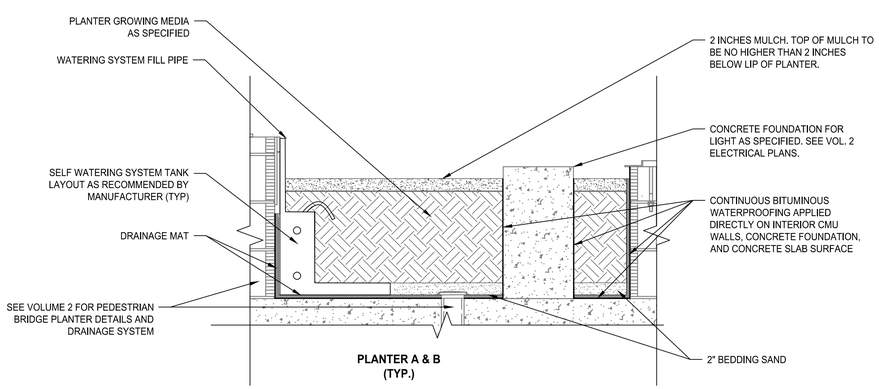

PEDESTRIAN BRIDGE PLANTER INTERIOR

SCALE: 1"=1'

COMPLETE PLANT LIST

KEY	QTY	BOTANICAL	COMMON	SIZE	SPACING	REMARKS
CK	64	CALAMAGROSTIS 'KARL FOERSTER'	FEATHER REED GRASS	#1 CONT.	18" O.C.	
DS	260	DISTICHLIS SPICATA	SALTGRASS	PLUGS	18" O.C.	EL. .5 TO 2 AS SHOWN
ER	42	ERAGROSTIS SPECTABILIS	PURPLE LOVEGRASS	#1 CONT.	15" O.C.	
PH	13	PANICUM VIRGATUM 'HEAVY METAL'	TALL BLUE SWITCHGRASS	#1 CONT.	30" O.C.	
PS	23	PANICUM VIRGATUM 'SHENANDOAH'	COMPACT RED SWITCHGRASS	#1 CONT.	18" O.C.	
SA	2103	SPARTINA ALTERNIFOLIA	SALTMARSH CORDGRASS	PLUGS	18" O.C.	@ ELEVATION -1 TO .5
SS	30	SCHIZACHYRIUM SCOPARIUM	LITTLE BLUESTEM	#1 CONT.	18" O.C.	
SN	27	SORGHASTRUM NUTANS	INDIAN GRASS	#1 CONT.	24" O.C.	

ADDENDUM NO. 4

CDR MAGUIRE

inFORM studio
235 east main street, suite 102b
northville, mi 48167
(p) 248.449.3564
(f) 248.449.6984
www.in-formstudio.com

Buro Happold

BETA Group, Inc.
Engineers • Planners • Landscape Architects
Lincoln, RI - Norwood, MA - Hartford, CT

RHODE ISLAND
DEPARTMENT OF TRANSPORTATION

INTERSTATE 195

DESIGNED BY: DC
CHECKED: KC
DATE:
SHEET: V1_031
OF: V1_078

SCALE: AS NOTED

REVISIONS			REVISIONS		
NO.	DATE	BY	NO.	DATE	BY
01	6/14/16	DC			

IMPROVEMENTS TO
INTERSTATE ROUTE 195
PROVIDENCE CONTRACT 16 VOLUME 1 RHODE ISLAND

LANDSCAPE DETAIL PLAN NO. 2
PEDESTRIAN BRIDGE PLANTING

G:\Planning Landscape\4000s\4314 – Providence I-195 Improvements – Contract 16\Drawing Files\Plan Set\Landscape Plans\C16\0012R_V1_031_LSDETAIL02_ADD04.dwg, 6/10/2016 11:16:07 AM, Domini Cunningham

0012R_V1_031_LSDETAIL02_ADD04

R-1

FED ROAD DIV. NO.	STATE	FEDERAL AID PROJECT NO.	FISCAL YEAR	SHEET NO.	TOTAL SHEETS
1	R.I.	–		v1_035	V1_078

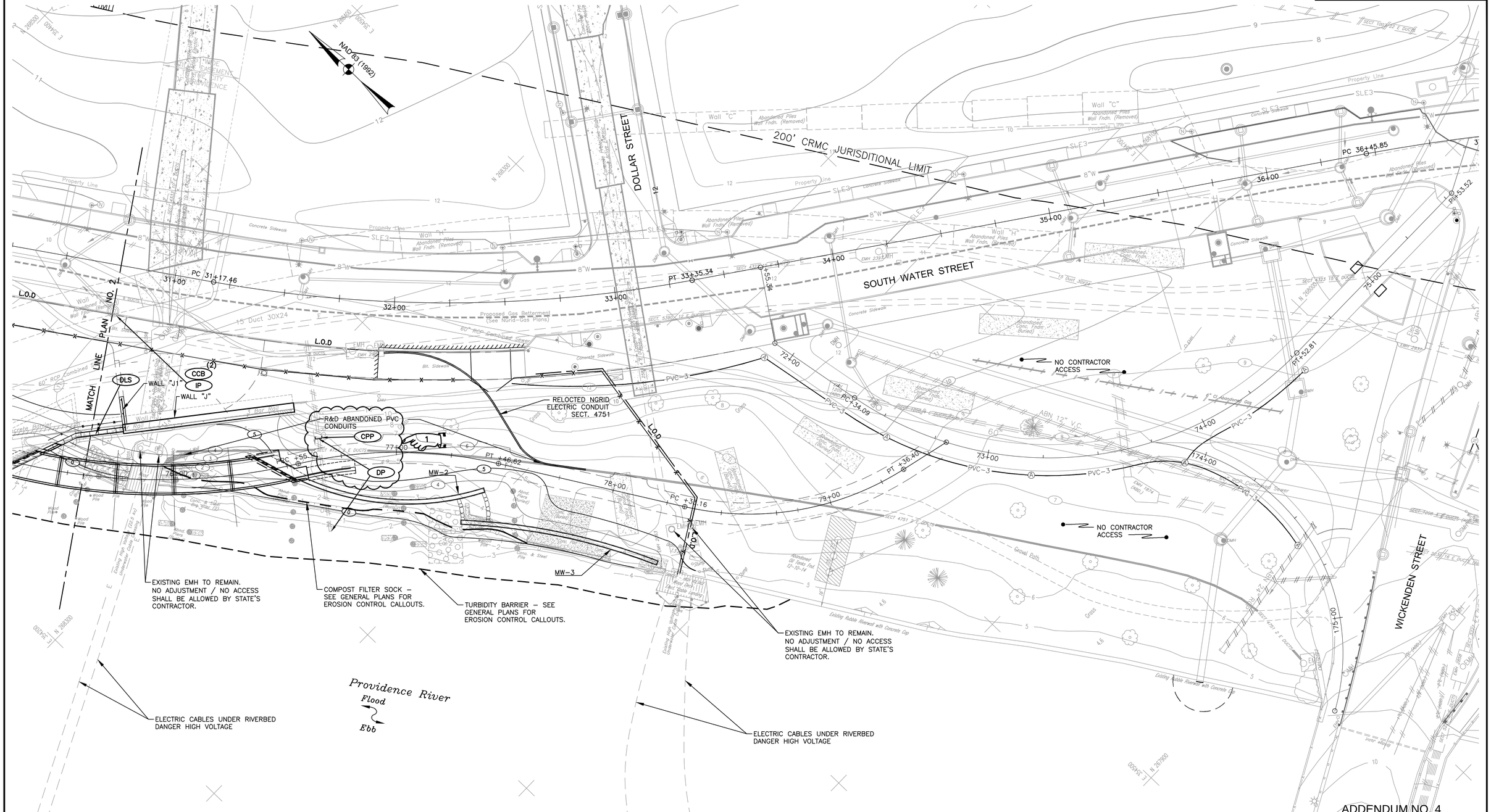

ADDENDUM NO. 4

CDR MAGUIRE

inFORM studio
235 east main street, suite 102b
northville, mi 48167
(p) 248.449.3564
(f) 248.449.6964
www.in-formstudio.com

Buro Happold

BETA Group, Inc.
Engineers • Planners • Landscape Architects
Lincoln, RI - Norwood, MA - Hartford, CT

RHODE ISLAND
DEPARTMENT OF TRANSPORTATION

INTERSTATE 195

DESIGNED BY:
CHECKED:
DATE:
SHEET: v1_035
OF: V1_078

SCALE: 1"=20'
0 10' 20' 40'

REVISIONS			REVISIONS		
NO.	DATE	BY	NO.	DATE	BY
1	6/10/12	JC III			

PROVIDENCE — IMPROVEMENTS TO INTERSTATE ROUTE 195 CONTRACT 16 VOLUME 1 — RHODE ISLAND

DRAINAGE & UTILITY PLAN NO. 3

V:\I-195Hwy\Contrct16\Plans\Advertising Archive C16\0012r_v1_035_drainutil003_ADD04.dwg, 6/10/2016 3:26:06 PM, Paul Walz

0012r_v1_035_drainutil003_ADD04

R-1

FED ROAD DIV. NO.	STATE	FEDERAL AID PROJECT NO.	FISCAL YEAR	SHEET NO.	TOTAL SHEETS
1	R.I.	–		v1_048	V1_078

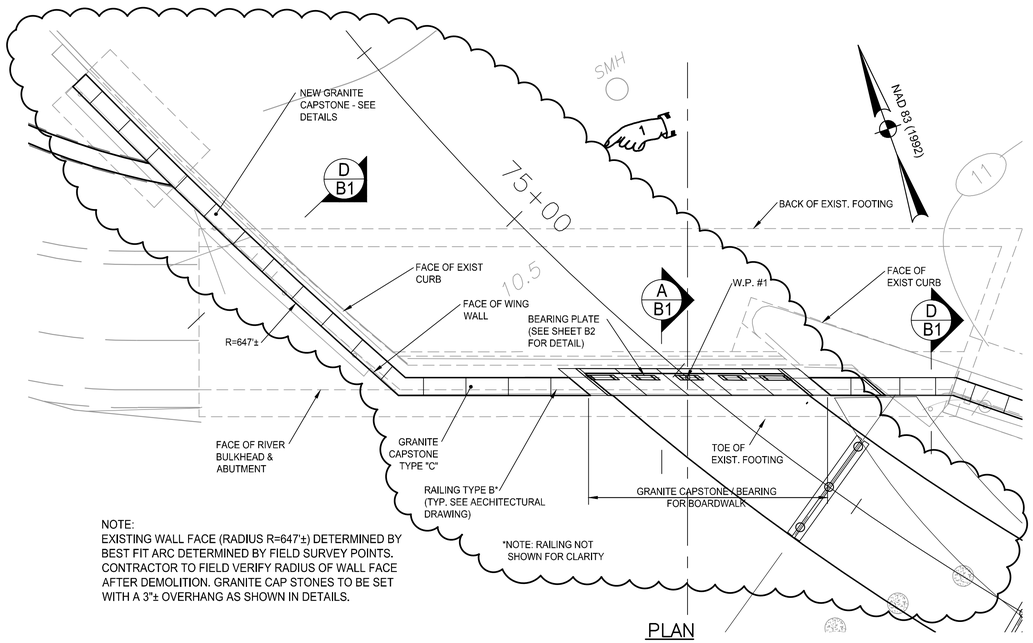

NOTE:
EXISTING WALL FACE (RADIUS R=647'±) DETERMINED BY BEST FIT ARC DETERMINED BY FIELD SURVEY POINTS. CONTRACTOR TO FIELD VERIFY RADIUS OF WALL FACE AFTER DEMOLITION. GRANITE CAP STONES TO BE SET WITH A 3"± OVERHANG AS SHOWN IN DETAILS.

PLAN
SCALE: 1/8"=1'-0"

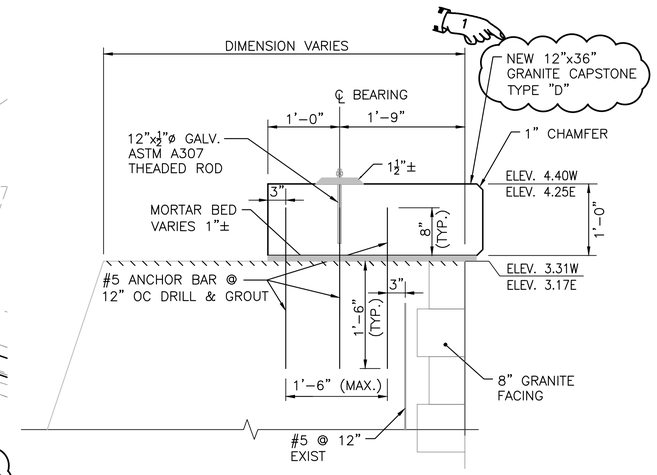

NEW GRANITE CAPSTONE ON NORTH ABUTMENT
SCALE: 1"=1'-0"

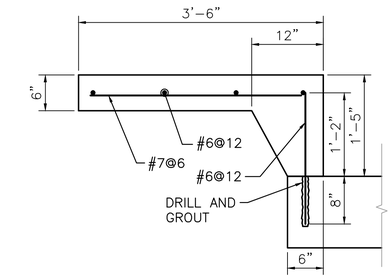

APPROACH SLAB DETAIL
SCALE: 1"=1'-0"

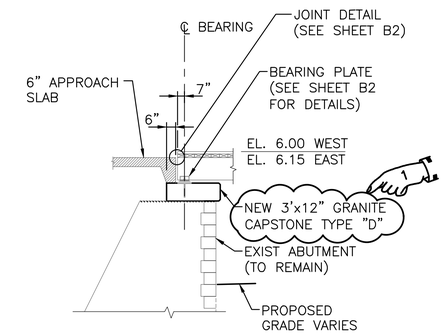

SECTION A B1
SCALE: 1/4"=1'-0"

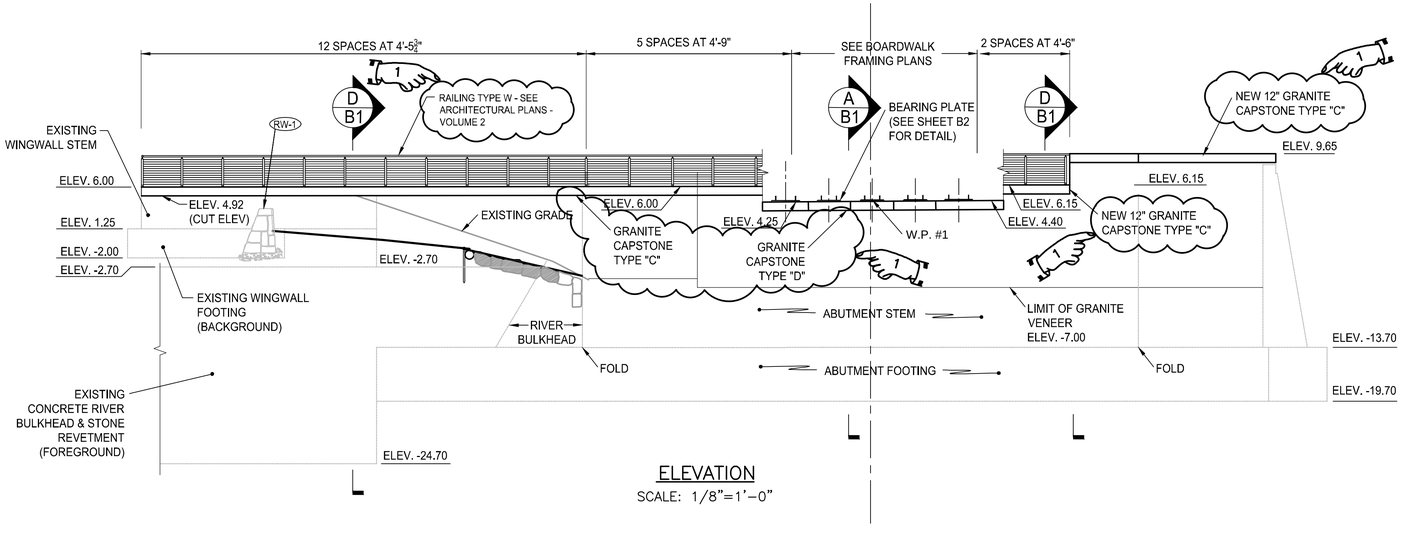

ELEVATION
SCALE: 1/8"=1'-0"

NORTH ABUTMENT AND WALL D

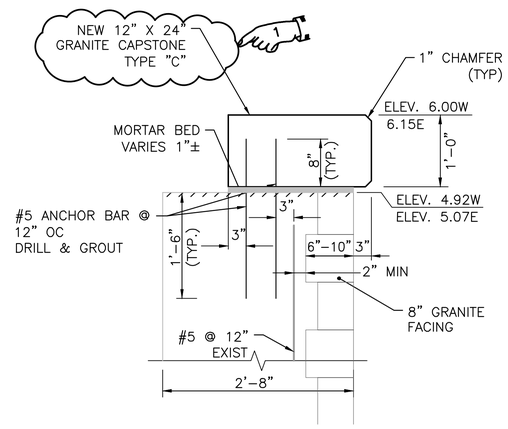

DETAIL

NEW GRANITE CAPSTONE ON WALL D
SCALE: 1"=1'-0"

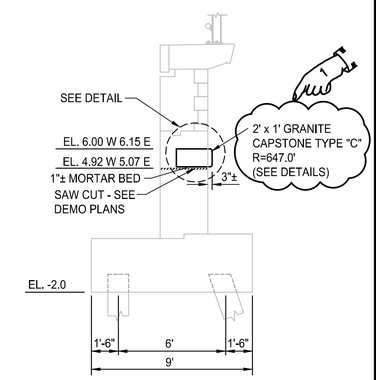

SECTION D B1
SCALE: 1/4"=1'-0"

ADDENDUM NO. 4

CDR MAGUIRE

inFORM studio
235 east main street, suite 102b
northville, mi 48167
(p) 248.449.3564
(f) 248.449.6964
www.in-formstudio.com

Buro Happold

BETA Group, Inc.
Engineers • Planners • Landscape Architects
Lincoln, RI - Norwood, MA - Hartford, CT

RHODE ISLAND
DEPARTMENT OF TRANSPORTATION

INTERSTATE 195

DESIGNED BY:
CHECKED:
DATE:
SHEET: v1_048
OF: V1_078

SCALE: AS NOTED

REVISIONS			REVISIONS		
NO.	DATE	BY	NO.	DATE	BY
1	6/10/12	JC III			

PROVIDENCE — IMPROVEMENTS TO INTERSTATE ROUTE 195 CONTRACT 16 VOLUME 1 — RHODE ISLAND

NORTH ABUTMENT PLAN, ELEVATION AND SECTION

B1

V:\I-195Hwy\Contrct16\Plans\Advertising Archive C16\0012r_v1_048_abutdetl001_ADD04.dwg, 6/13/2016 9:32:46 AM, Paul Walz

0012r_v1_048_abutdetl001_ADD04

FED ROAD DIV. NO.	STATE	FEDERAL AID PROJECT NO.	FISCAL YEAR	SHEET NO.	TOTAL SHEETS
1	R.I.	–		v1_052	V1_078

R-1

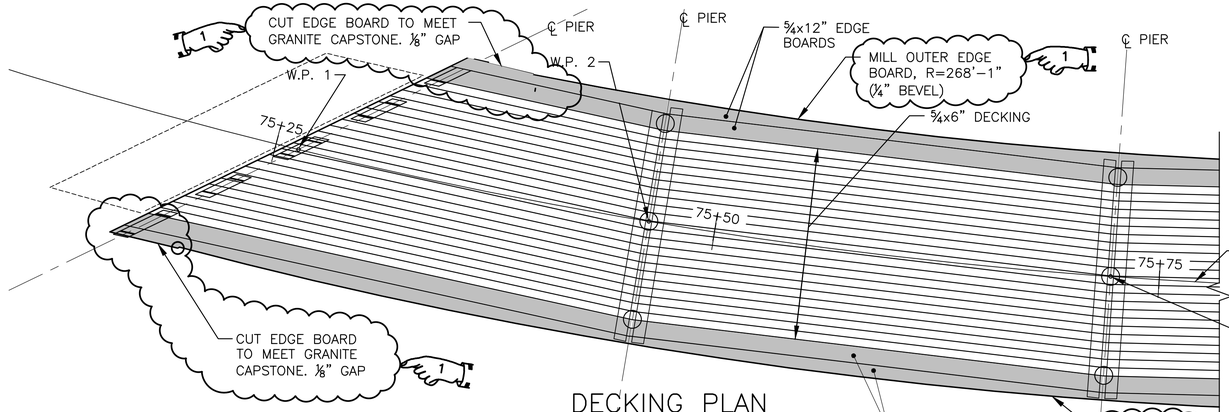

DECKING PLAN

SCALE:1/4"=1'-0"

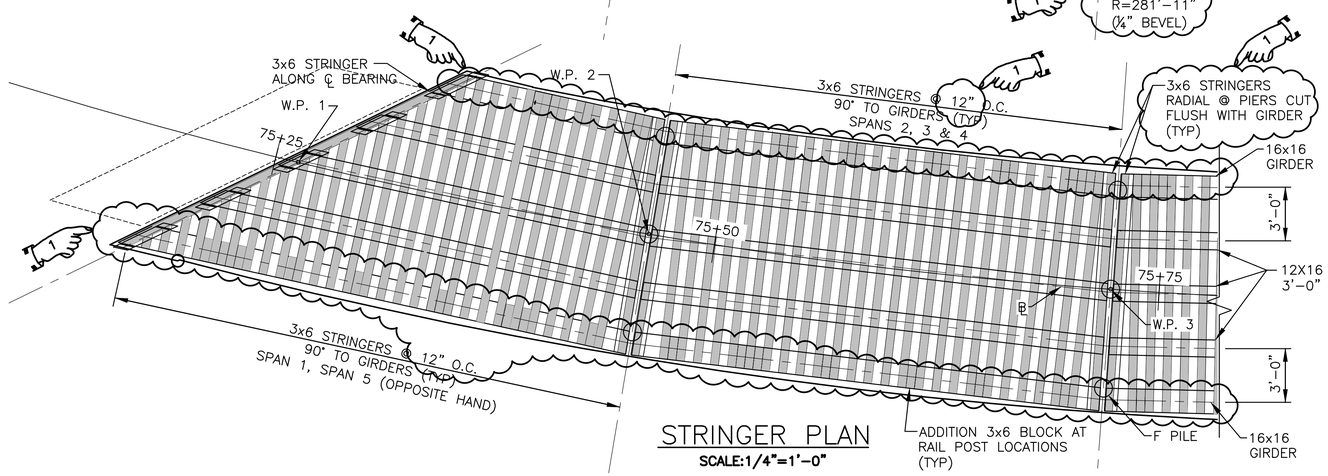

STRINGER PLAN

SCALE:1/4"=1'-0"

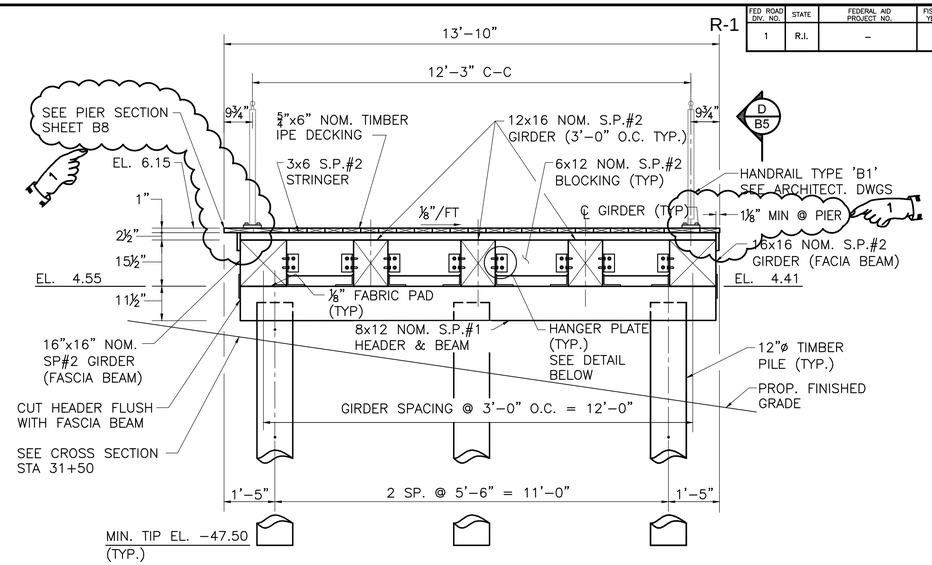

CROSS SECTION

SCALE: 1/2"=1'-0"

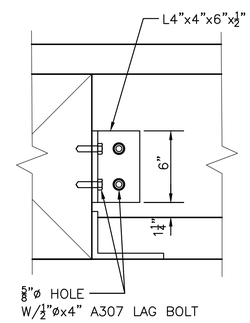

HANGER PLATE DETAIL

NOT TO SCALE

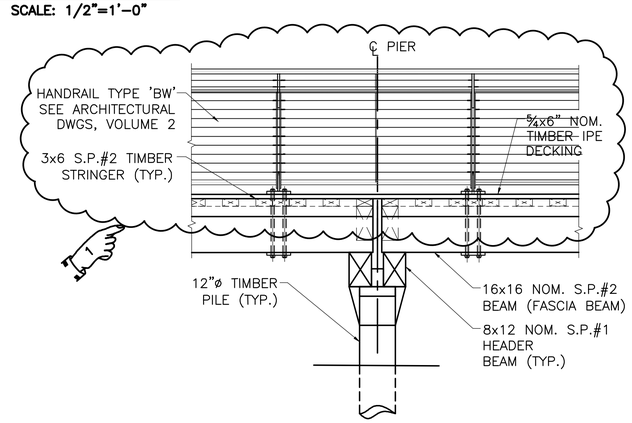

SECTION D/B5

SCALE: 1/2"=1'-0"

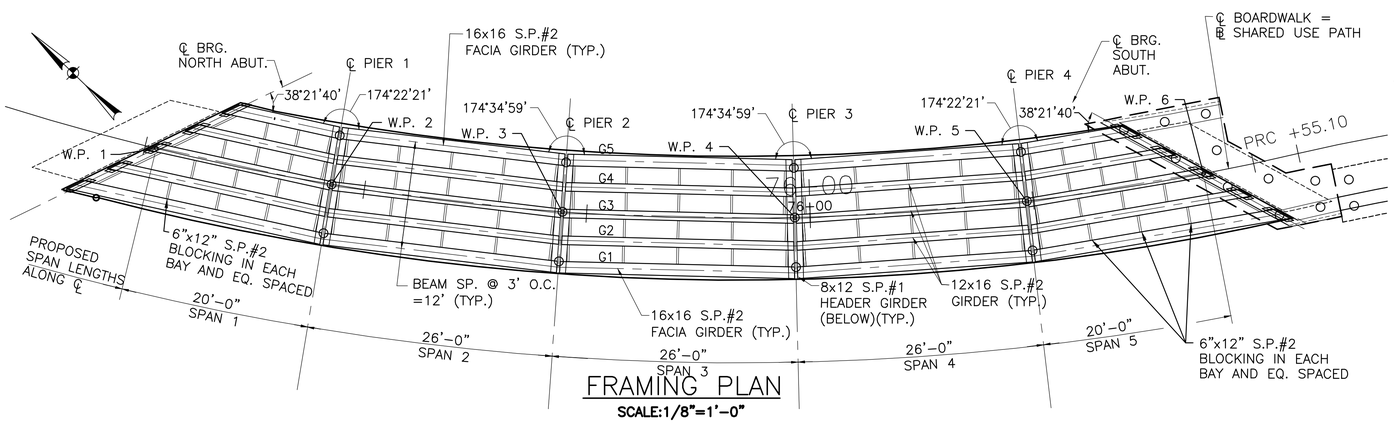

FRAMING PLAN

SCALE:1/8"=1'-0"

	GIRDER LENGTH (FT)				
	SPAN 1	SPAN 2	SPAN 3	SPAN 4	SPAN 5
GIRDER 5 (16"x16")	12.22	25.12	25.12	25.12	12.22
GIRDER 4 (12"x16")	16.34	25.4	25.4	25.4	16.34
GIRDER 3 (12"x16")	20.28	25.68	25.68	25.68	20.28
GIRDER 2 (12"x16")	24.22	25.97	25.97	25.97	24.22
GIRDER 1 (16"x16")	28.17	26.25	26.25	26.25	28.17

GIRDER LENGTHS SHALL BE FIELD VERIFIED AFTER PIER CONSTRUCTION.

NOTE: SEE SHEETS 6,7,8 FOR CONNECTION DETAILS.

ADDENDUM NO. 4

CDR MAGUIRE

inFORM studio
235 east main street, suite 102b
northville, mi 48167
(p) 248.449.3564
(f) 248.449.6904
www.in-formstudio.com

Buro Happold

BETA Group, Inc.
Engineers • Planners • Landscape Architects
Lincoln, RI - Norwood, MA - Hartford, CT

RHODE ISLAND
DEPARTMENT OF TRANSPORTATION

INTERSTATE 195

DESIGNED BY:
CHECKED:
DATE:
SHEET: v1_052
OF: V1_078

SCALE: AS SHOWN

REVISIONS			REVISIONS		
NO.	DATE	BY	NO.	DATE	BY
1	6/10/12	JC III			

IMPROVEMENTS TO
INTERSTATE ROUTE 195
PROVIDENCE CONTRACT 16 VOLUME 1 RHODE ISLAND

BOARDWALK FRAMING PLAN AND SECTION

B5

V:\I-195Hwy\Contrct16\Plans\Advertising Archive C16\0012r_v1_052_frambdwk001_ADD04.dwg, 6/13/2016 8:54:41 AM, Paul Walz

0012r_v1_052_frambdwk001_ADD04

R-1

FED ROAD DIV. NO.	STATE	FEDERAL AID PROJECT NO.	FISCAL YEAR	SHEET NO.	TOTAL SHEETS
1	R.I.	–		v1_053	V1_078

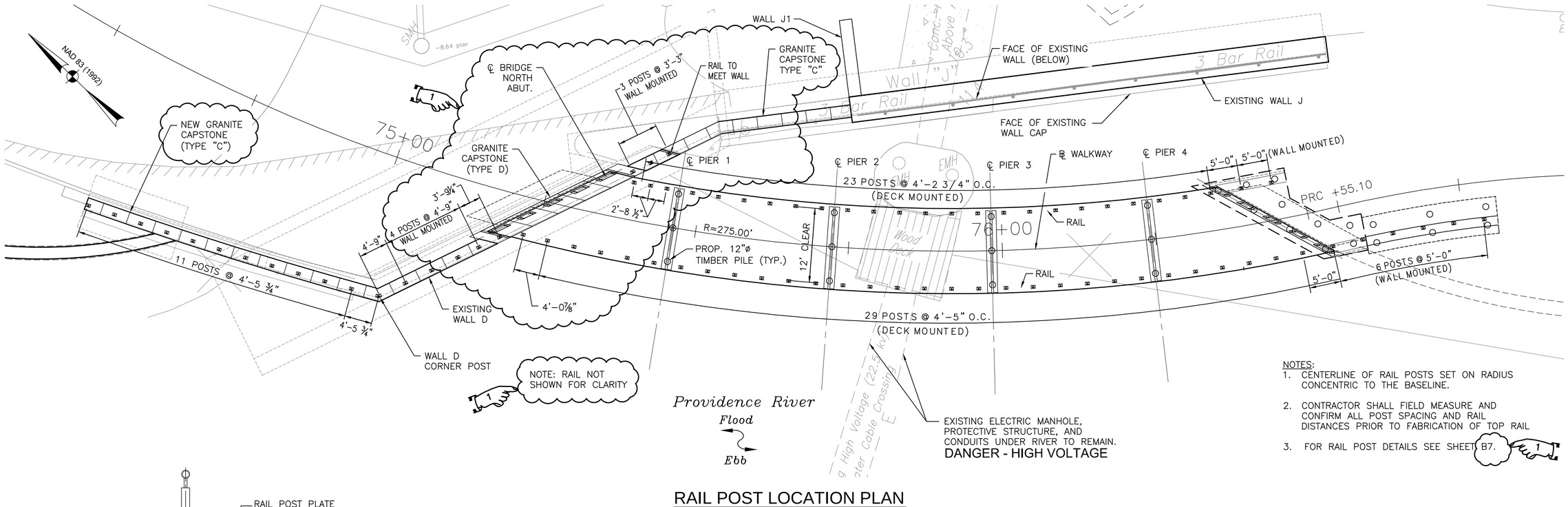

NOTES:
1. CENTERLINE OF RAIL POSTS SET ON RADIUS CONCENTRIC TO THE BASELINE.
2. CONTRACTOR SHALL FIELD MEASURE AND CONFIRM ALL POST SPACING AND RAIL DISTANCES PRIOR TO FABRICATION OF TOP RAIL
3. FOR RAIL POST DETAILS SEE SHEET B7.

RAIL POST LOCATION PLAN

SCALE: 1/8"=1'-0"

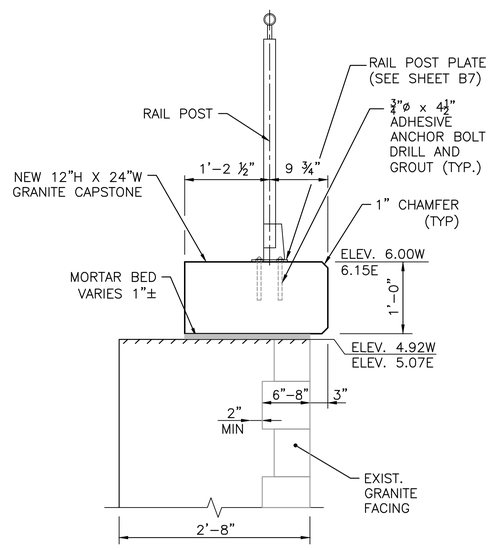

WALL RAIL POST DETAIL

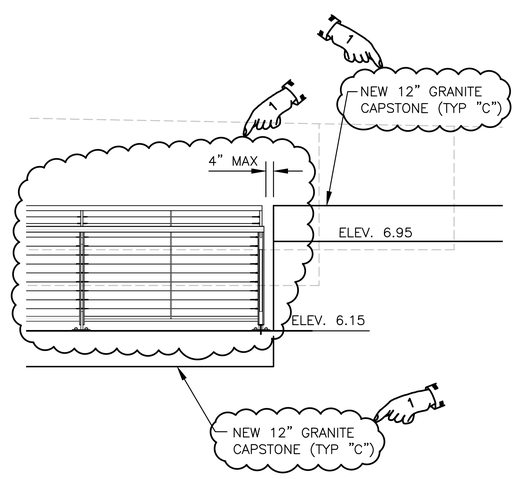

WALL RAILING ELEVATION

NEW GRANITE CAPSTONE & RAIL POST DETAIL

SCALE: 1/2"=1'-0"

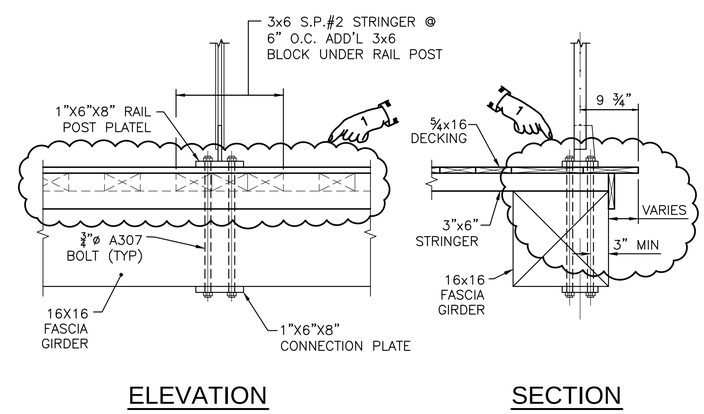

ELEVATION SECTION

BOARDWALK RAIL POST DETAIL

SCALE: 1"=1'-0"

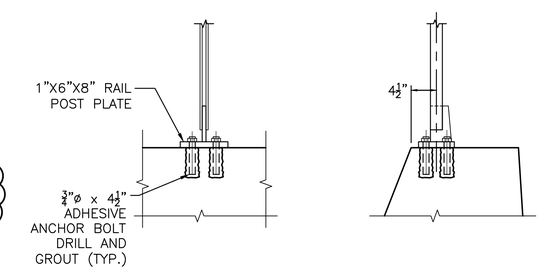

ELEVATION SECTION

WALL MOUNTED PLATE DETAIL

SCALE: 1"=1'-0"

ADDENDUM NO. 4

CDR MAGUIRE

inFORM studio
235 east main street, suite 102b
northville, mi 48167
(p) 248.449.3564
(f) 248.449.5964
www.in-formstudio.com

Buro Happold

BETA Group, Inc.
Engineers • Planners • Landscape Architects
Lincoln, RI - Norwood, MA - Hartford, CT

RHODE ISLAND
DEPARTMENT OF TRANSPORTATION

INTERSTATE 195

DESIGNED BY:
CHECKED:
DATE:
SHEET: v1_053
OF: V1_078

SCALE: AS SHOWN

REVISIONS			REVISIONS		
NO.	DATE	BY	NO.	DATE	BY
1	6/10/12	JC III			

IMPROVEMENTS TO INTERSTATE ROUTE 195
PROVIDENCE CONTRACT 16 VOLUME 1 RHODE ISLAND

BOARDWALK & WALL RAIL POST LOCATION PLAN

B6

V:\I-195Hwy\Contrct16\Plans\Advertising Archive C16\0012r_v1_053_rpostloc001_ADD04.dwg, 6/10/2016 11:13:03 AM, Paul Walz

0012r_v1_053_rpostloc001_ADD04

FED ROAD DIV. NO.	STATE	FEDERAL AID PROJECT NO.	FISCAL YEAR	SHEET NO.	TOTAL SHEETS
1	R.I.	–		v1_054	V1_078

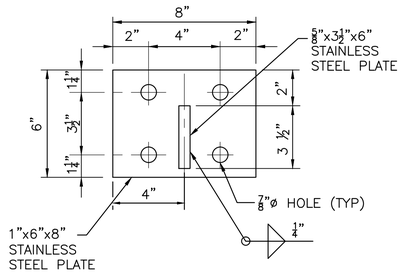

RAIL POST ANCHOR PLATE PLAN

SCALE: 3"=1'–0"

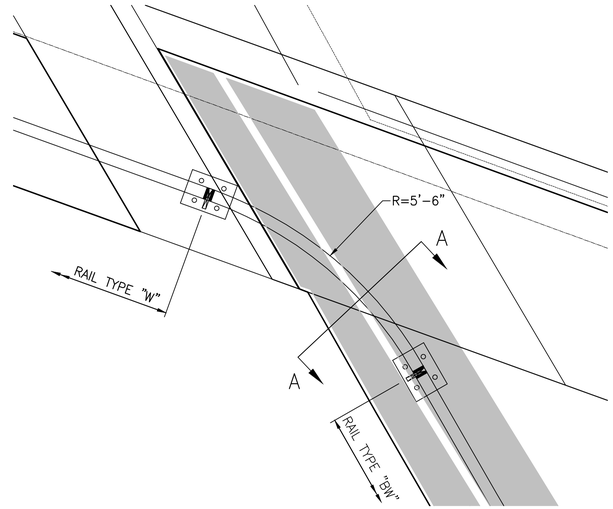

BOARDWALK RAIL NW CORNER

SCALE: 3"=1'–0"

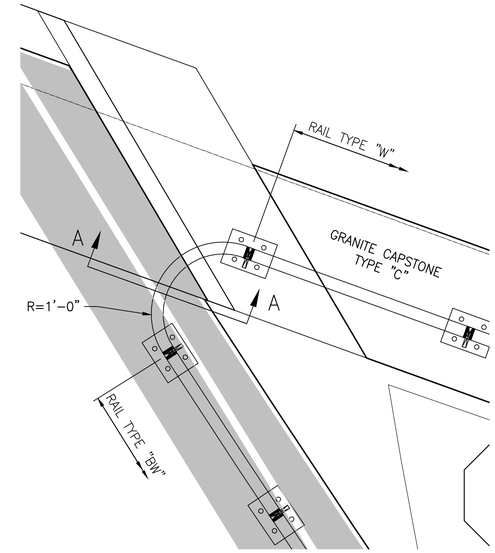

BOARDWALK RAIL NE CORNER

SCALE: 3"=1'–0"

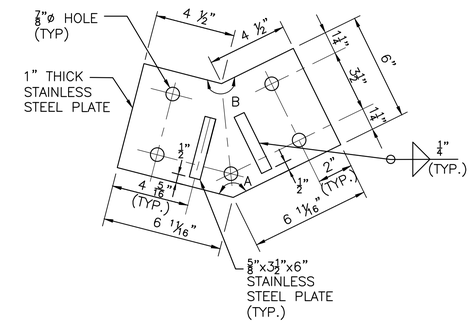

PLATE ANGLE TABLE

ANGLE A	139°27'28"
ANGLE B	220°32'32"

RAILING PLATE AT CORNER POST WALL D

SCALE: 3"=1'–0"

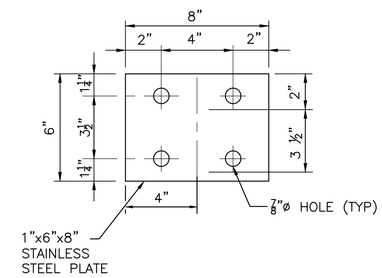

RAIL POST CONNECTION PLATE PLAN

SCALE: 3"=1'–0"

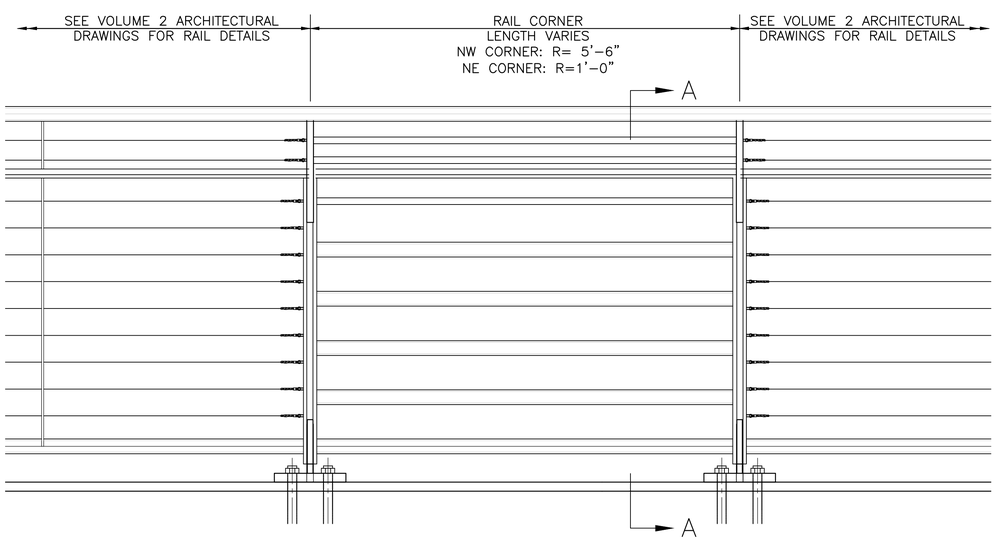

BOARDWALK RAILING CORNERS

SCALE: 1 1/2""=1'–0"

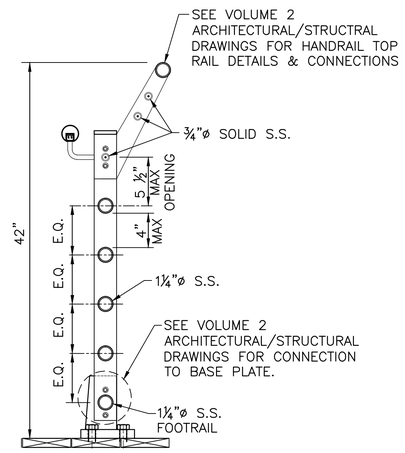

BOARDWALK RAILING CORNER SECTION A–A

SCALE: 1 1/2" =1'–0"

NOTES:

1. SEE ARCHITECTURAL/STRUCTURAL DRAWINGS FOR RAILING DETAILS.
2. RAILING STEEL PLATE SHALL BE ASTM A276 STAINLESS STEEL.
3. BOLTS/FASTENERS SHALL BE ASTM F593 STAINLESS STEEL.
4. SEE VOLUME 2 ARCHITECTURAL DRAWINGS "LOWER BRIDGE RAILINGS – SECTIONS AND DETAILS" FOR RAILING DETAILS.

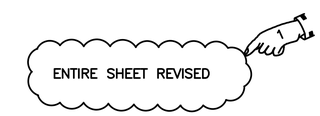

ADDENDUM NO. 4

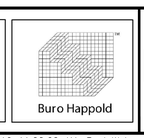

RHODE ISLAND
DEPARTMENT OF TRANSPORTATION

DESIGNED BY:
CHECKED:
DATE:
SHEET: v1_054
OF: V1_078

SCALE: AS NOTED

REVISIONS			REVISIONS		
NO.	DATE	BY	NO.	DATE	BY
1	6/10/12	JC III			

IMPROVEMENTS TO INTERSTATE ROUTE 195
PROVIDENCE — CONTRACT 16 VOLUME 1 — RHODE ISLAND

RAILING DETAILS SHEET — B7

R-1

FED. ROAD DIV. NO.	STATE	FEDERAL AID PROJECT NO.	FISCAL YEAR	SHEET NO.	TOTAL SHEETS
1	R.I.	–		v1_055	v1_078

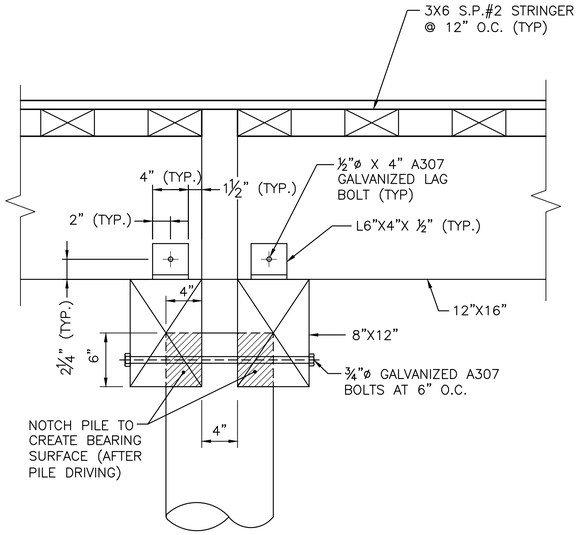

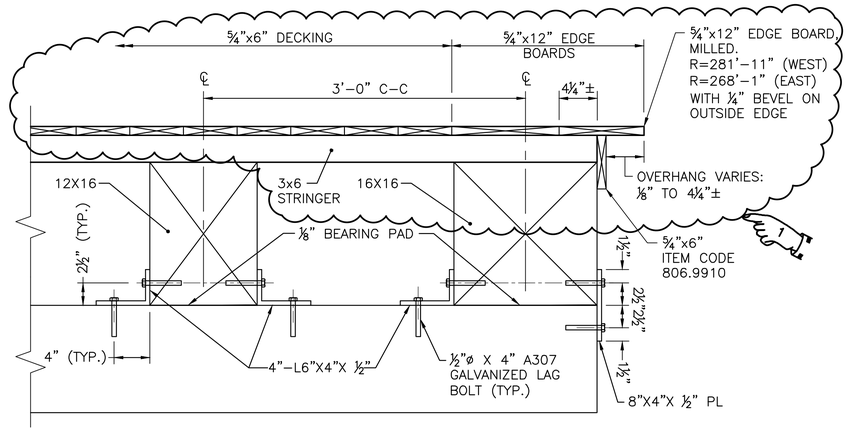

PIER SECTION

SCALE: 1 1/2"=1'-0"

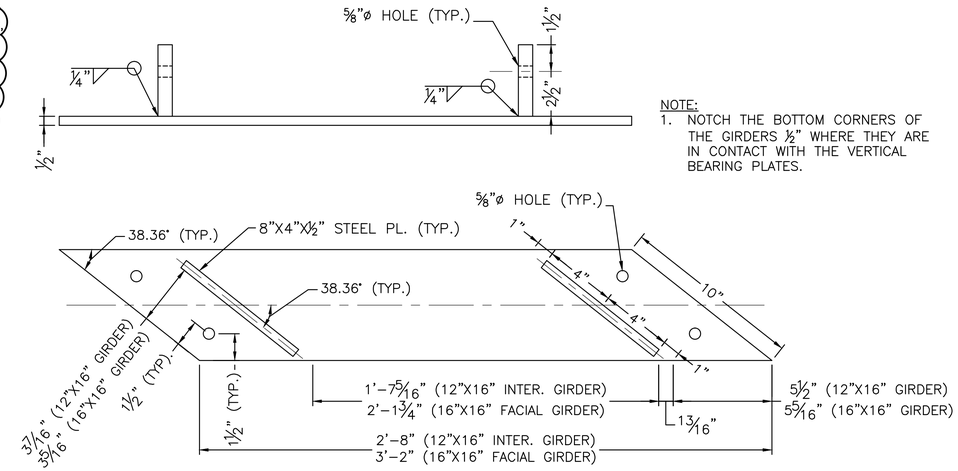

NOTE:
1. NOTCH THE BOTTOM CORNERS OF THE GIRDERS ½" WHERE THEY ARE IN CONTACT WITH THE VERTICAL BEARING PLATES.

GIRDER BEARING PLATE AT ABUTMENTS FOR 12"X16" INTER. GIRDER OR 16"X16" FACIAL GIRDER

SCALE: 3"=1'-0"

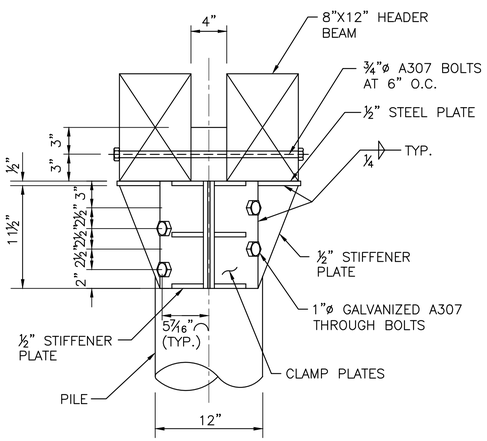

ELEVATION

SCALE: 1 1/2"=1'-0"

PILE CONNECTION COLLAR

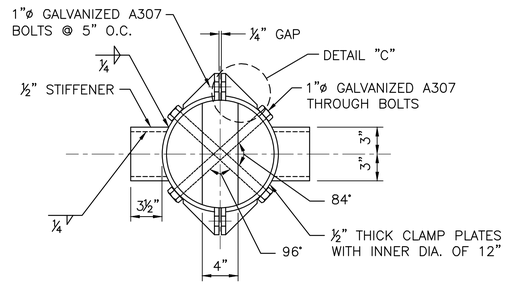

PLAN

SCALE: 1 1/2"=1'-0"

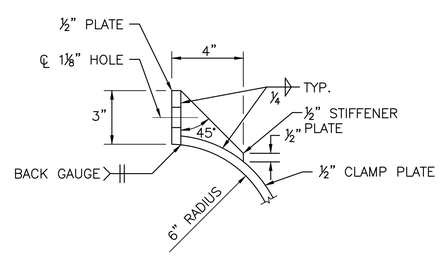

DETAIL C

SCALE: 3"=1'-0"

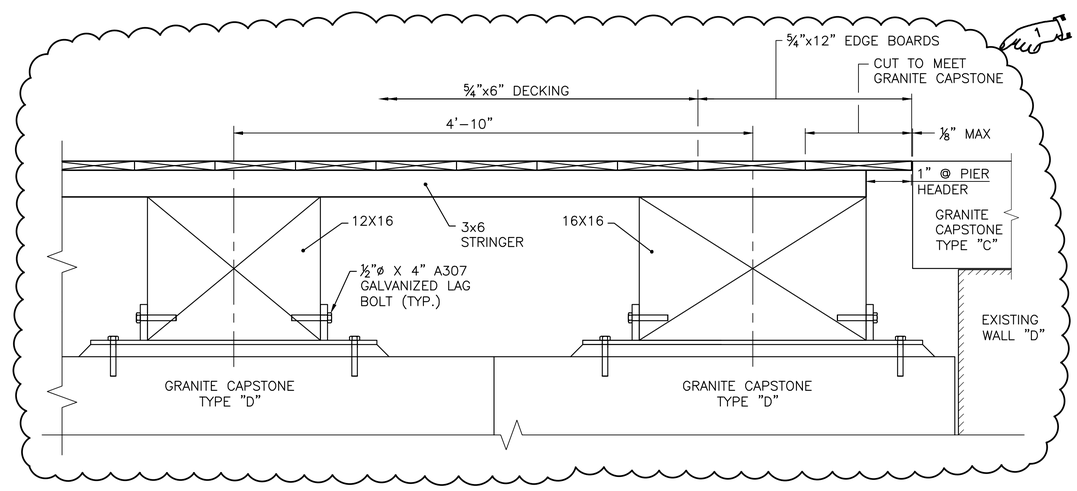

ABUTMENT SECTION

SCALE: 1 1/2"=1'-0"

ADDENDUM NO. 4

CDR MAGUIRE

inFORM studio
235 east main street, suite 102b
northville, mi 48167
(p) 248.449.3564
(f) 248.449.6904
www.in-formstudio.com

Buro Happold

BETA Group, Inc.
Engineers • Planners • Landscape Architects
Lincoln, RI - Norwood, MA - Hartford, CT

RHODE ISLAND
DEPARTMENT OF TRANSPORTATION

INTERSTATE 195

DESIGNED BY:
CHECKED:
DATE:
SHEET: v1_055
OF: V1_078

SCALE: AS NOTED

REVISIONS			REVISIONS		
NO.	DATE	BY	NO.	DATE	BY
1	6/10/12	JC III			

IMPROVEMENTS TO INTERSTATE ROUTE 195
PROVIDENCE — CONTRACT 16 VOLUME 1 — RHODE ISLAND

PIER PLAN AND DETAIL SHEET 1 — B8

V:\I-195Hwy\Contrct16\Plans\Advertising Archive C16\0012r_v1_055_pierplan001_ADD04.dwg, 6/10/2016 11:03:18 AM, Paul Walz

0012r_v1_055_pierplan001_ADD04

R-1	FED. ROAD DIV. NO.	STATE	FEDERAL AID PROJECT NO.	FISCAL YEAR	SHEET NO.	TOTAL SHEETS
	1	R.I.			V2_002	V2_163

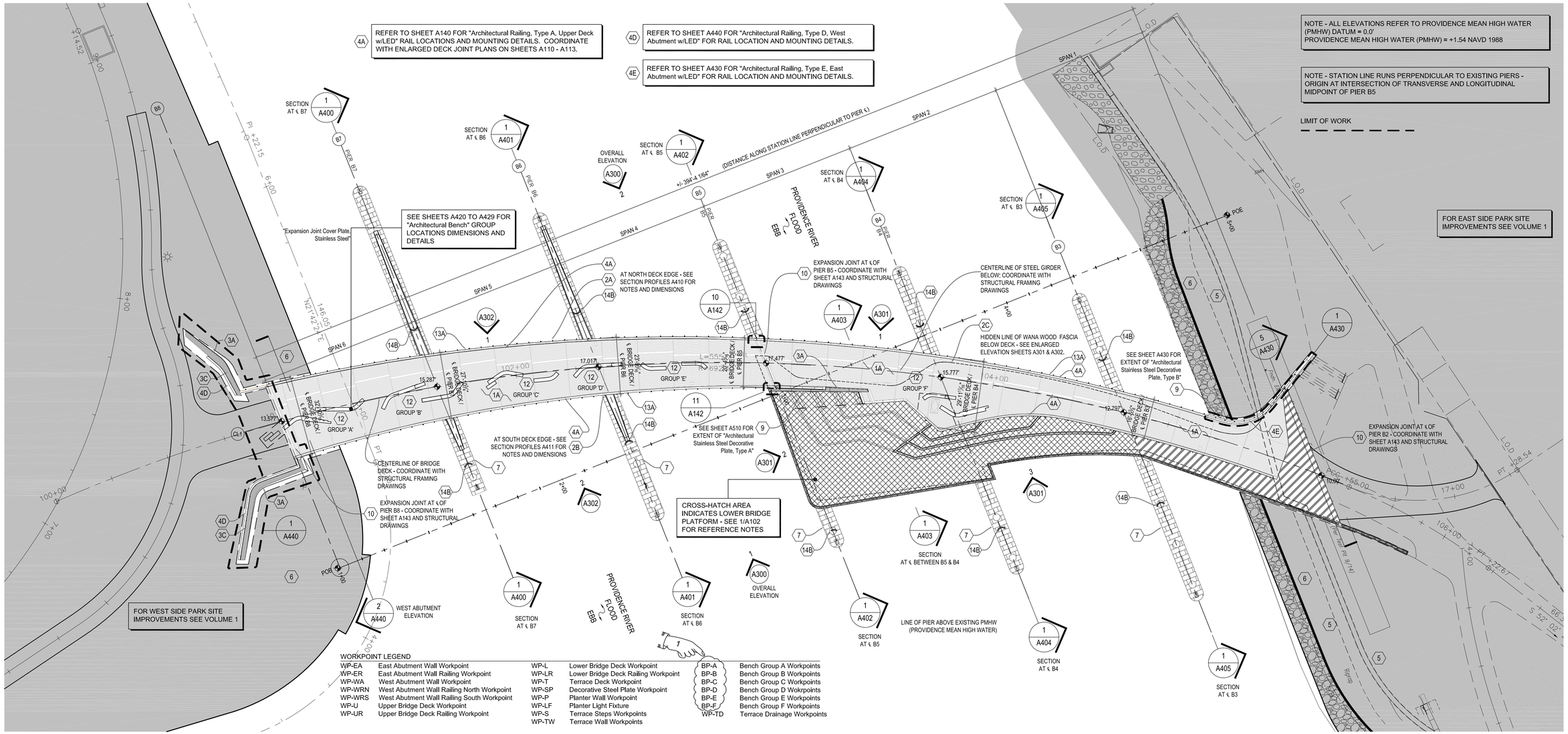

WORKPOINT LEGEND

WP-EA	East Abutment Wall Workpoint	WP-L	Lower Bridge Deck Workpoint	BP-A	Bench Group A Workpoints
WP-ER	East Abutment Wall Railing Workpoint	WP-LR	Lower Bridge Deck Railing Workpoint	BP-B	Bench Group B Workpoints
WP-WA	West Abutment Wall Workpoint	WP-T	Terrace Deck Workpoint	BP-C	Bench Group C Workpoints
WP-WRN	West Abutment Wall Railing North Workpoint	WP-SP	Decorative Steel Plate Workpoint	BP-D	Bench Group D Workpoints
WP-WRS	West Abutment Wall Railing South Workpoint	WP-P	Planter Wall Workpoint	BP-E	Bench Group E Workpoints
WP-U	Upper Bridge Deck Workpoint	WP-LF	Planter Light Fixture	BP-F	Bench Group F Workpoints
WP-UR	Upper Bridge Deck Railing Workpoint	WP-S	Terrace Steps Workpoints	WP-TD	Terrace Drainage Workpoints
		WP-TW	Terrace Wall Workpoints		

MATERIAL LEGEND

1A	IPE WOOD DECK, UPPER DECK	2D	WANA WOOD, LOWER BRIDGE FASCIA - SOUTH	4C	ARCHITECTURAL RAILING, TYPE C, HANDRAIL AT STEPS	8	COLUMN SUPPORT - SEE STRUCTURAL DRAWINGS
1B	IPE WOOD DECK, TERRACE	3A	MASONRY VENEER, BLUESTONE TILE	4D	ARCHITECTURAL RAILING, TYPE D, WEST ABUTMENT w/LED	9	ARCHITECTURAL S.S. DECORATIVE PLATE
1C	IPE WOOD DECK, LOWER DECK, TYPE A	3B	MASONRY VENEER, BLUESTONE TILE, SLOPED	4E	ARCHITECTURAL RAILING, TYPE E, EAST ABUTMENT w/LED	10	EXPANSION JOINT COVER PLATE, STAINLESS STEEL
1D	IPE WOOD DECK, LOWER DECK, TYPE B	3C	MASONRY VENEER, BLUESTONE COPING	4F	ARCHITECTURAL RAILING, TYPE F, HANDRAIL w/LED	11	ARCHITECTURAL STAINLESS STEEL MESH
2A	WANA WOOD, UPPER BRIDGE FASCIA - SOUTH	3D	MASONRY VENEER, BLUESTONE STEPS	5	RIVER WALL ON EXISTING RIP-RAP BASE (SEE VOLUME 1)	12	ARCHITECTURAL BENCH - SEE ENLARGED PLANS ON SHEET A420 - A426 TO BENCH TYPES
2B	WANA WOOD, LOWER BRIDGE FASCIA - NORTH	4A	ARCHITECTURAL RAILING, TYPE A, UPPER DECK w/LED	6	WETLAND PLANTING (SEE VOLUME 1)	13A	IPE EDGE BOARD, UPPER
2C	WANA WOOD, LOWER BRIDGE FASCIA - SOUTH	4B	ARCHITECTURAL RAILING, TYPE B, LOWER DECK w/LED	7	EXISTING PIER FOUNDATION W/ GRANITE MASONRY VENEER	13B	IPE EDGE BOARD, LOWER
						13C	IPE EDGE BOARD, TERRACE
						14A	LINEAR UPLIGHT - SEE ELECTRICAL DRAWINGS
						14B	PIER FLOOD LIGHT - SEE ELECTRICAL DRAWINGS
						14C	PLANTER BOLLARD LIGHT - SEE ELECTRICAL DRAWINGS

REFERENCE SHEET A101-A106 FOR MATERIALS NOT LABELED ON SHEET A102.

PLAN NORTH

1 / A101 PROVIDENCE PEDESTRIAN BRIDGE OVERALL UPPER DECK PLAN
1" = 20'-0"

ADDENDUM NO. 4

REF DWG #	REFRENCE DRAWING NAME
S101	OVERALL BRIDGE PLAN

CDR MAGUIRE

inFORM studio
235 east main street, suite 102b
northville, mi 48167
(p) 248.449.3564
(f) 248.449.6984
www.in-formstudio.com

Buro Happold

BETA Group, Inc.
Engineers • Planners • Landscape Architects
Lincoln, RI - Norwood, MA - Hartford, CT

RHODE ISLAND
DEPARTMENT OF TRANSPORTATION

INTERSTATE 195

DESIGNED BY:
CHECKED:
DATE:
SHEET: V2_002
OF: V2_163

SCALE:

REVISIONS			REVISIONS		
NO.	DATE	BY	NO.	DATE	BY
	6/14/2016				

IMPROVEMENTS TO INTERSTATE ROUTE 195
PROVIDENCE — CONTRACT 16 VOLUME 2 — RHODE ISLAND

OVERALL UPPER BRIDGE PLAN — A101

R:\Current\2010.1881.01_Providence Pedestrian Bridge\drawings\current\100% Submittal\1881_A101.dwg, 6/8/2016 9:37:36 AM, Cory Lavigne

FED. ROAD DIV. NO.	STATE	FEDERAL AID PROJECT NO.	FISCAL YEAR	SHEET NO.	TOTAL SHEETS
1	R.I.			V2_004	V2_163

R-1

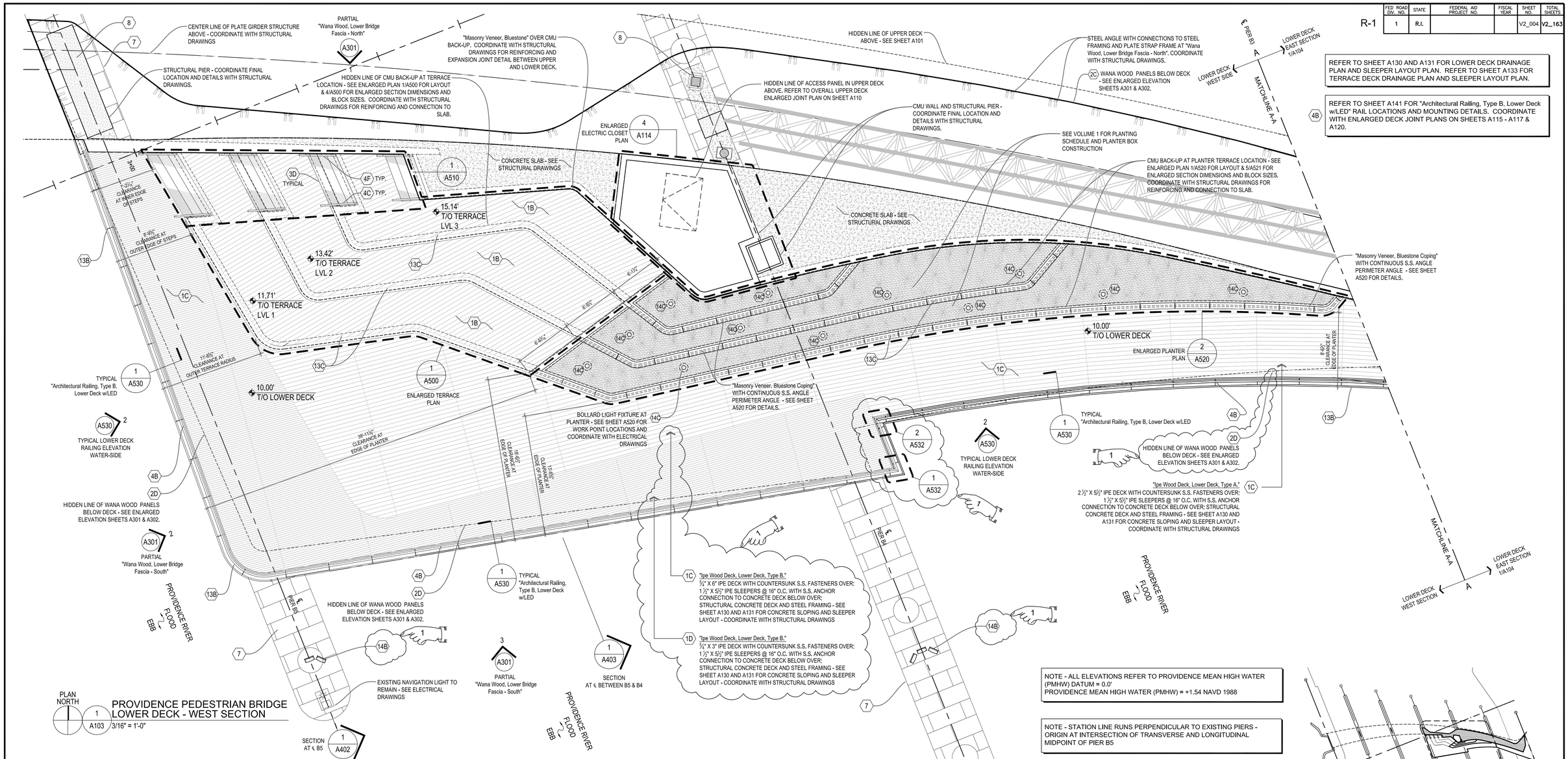

REFER TO SHEET A130 AND A131 FOR LOWER DECK DRAINAGE PLAN AND SLEEPER LAYOUT PLAN. REFER TO SHEET A133 FOR TERRACE DECK DRAINAGE PLAN AND SLEEPER LAYOUT PLAN.

REFER TO SHEET A141 FOR "Architectural Railing, Type B, Lower Deck w/LED" RAIL LOCATIONS AND MOUNTING DETAILS. COORDINATE WITH ENLARGED DECK JOINT PLANS ON SHEETS A115 - A117 & A120.

PROVIDENCE PEDESTRIAN BRIDGE LOWER DECK - WEST SECTION

PLAN NORTH 1 A103 3/16" = 1'-0"

NOTE - ALL ELEVATIONS REFER TO PROVIDENCE MEAN HIGH WATER (PMHW) DATUM = 0.0'
PROVIDENCE MEAN HIGH WATER (PMHW) = +1.54 NAVD 1988

NOTE - STATION LINE RUNS PERPENDICULAR TO EXISTING PIERS - ORIGIN AT INTERSECTION OF TRANSVERSE AND LONGITUDINAL MIDPOINT OF PIER B5

LIMIT OF WORK

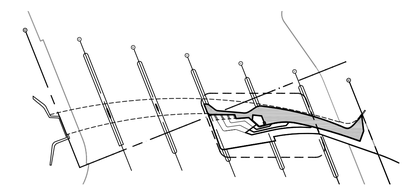

PLAN NORTH KEY PLAN LOWER DECK 1"=100'

MATERIAL LEGEND

- 1A IPE WOOD DECK, UPPER DECK
- 1B IPE WOOD DECK, TERRACE
- 1C IPE WOOD DECK, LOWER DECK, 5/4" X 6"
- 1D IPE WOOD DECK, LOWER DECK, 5/4" X 3"
- 2A WANA WOOD, UPPER BRIDGE FASCIA - SOUTH
- 2B WANA WOOD, LOWER BRIDGE FASCIA - NORTH
- 2C WANA WOOD, LOWER BRIDGE FASCIA - SOUTH
- 2D WANA WOOD, LOWER BRIDGE FASCIA - SOUTH
- 3A MASONRY VENEER, BLUESTONE TILE
- 3B MASONRY VENEER, BLUESTONE TILE, SLOPED
- 3C MASONRY VENEER, BLUESTONE COPING
- 3D MASONRY VENEER, BLUESTONE STEPS
- 4A ARCHITECTURAL RAILING, TYPE A, UPPER DECK w/LED
- 4B ARCHITECTURAL RAILING, TYPE B, LOWER DECK w/LED
- 4C ARCHITECTURAL RAILING, TYPE C, HANDRAIL AT STEPS
- 4D ARCHITECTURAL RAILING, TYPE D, WEST ABUTMENT w/LED
- 4E ARCHITECTURAL RAILING, TYPE E, EAST ABUTMENT w/LED
- 4F ARCHITECTURAL RAILING, TYPE F, HANDRAIL w/LED
- 5 RIVER WALL ON EXISTING RIP-RAP BASE (SEE VOLUME 1)
- 6 WETLAND PLANTING (SEE VOLUME 1)
- 7 EXISTING PIER FOUNDATION W/ GRANITE MASONRY VENEER
- 8 COLUMN SUPPORT - SEE STRUCTURAL DRAWINGS
- 9 ARCHITECTURAL S.S. DECORATIVE PLATE
- 10 EXPANSION JOINT COVER PLATE, STAINLESS STEEL
- 11 ARCHITECTURAL STAINLESS STEEL MESH
- 12 ARCHITECTURAL BENCH - SEE ENLARGED PLANS ON SHEET A420 - A426 TO BENCH TYPES
- 13A IPE EDGE BOARD, UPPER
- 13B IPE EDGE BOARD, LOWER
- 13C IPE EDGE BOARD, TERRACE
- 14A LINEAR UPLIGHT - SEE ELECTRICAL DRAWINGS
- 14B PIER FLOOD LIGHT - SEE ELECTRICAL DRAWINGS
- 14C PLANTER BOLLARD LIGHT - SEE ELECTRICAL DRAWINGS

REFERENCE SHEET A101-A106 FOR MATERIALS NOT LABELED ON SHEET A102.

ADDENDUM NO. 4

REF DWG #	REFRENCE DRAWING NAME
S123	LOWER LEVEL FRAMING PLAN
S130	OVERALL DECK PLAN

CDR MAGUIRE

inFORM studio
235 east main street, suite 102b
northville, mi 48167
(p) 248.449.3564
(f) 248.449.6984
www.in-formstudio.com
Buro Happold

BETA Group, Inc.
Engineers • Planners • Landscape Architects
Lincoln, RI - Norwood, MA - Hartford, CT

RHODE ISLAND DEPARTMENT OF TRANSPORTATION

INTERSTATE 195

DESIGNED BY:
CHECKED:
DATE:
SHEET: V2_004
OF: V2_163

SCALE:

REVISIONS			REVISIONS		
NO.	DATE	BY	NO.	DATE	BY
1	6/14/2016	CL			

IMPROVEMENTS TO INTERSTATE ROUTE 195
CONTRACT 16 VOLUME 2
PROVIDENCE RHODE ISLAND

BRIDGE PLAN - LOWER DECK - WEST A103

R:\Current\2010.1881.01_Providence Pedestrian Bridge\drawings\current\100% Submittal\1881_A102-A104.dwg, 6/8/2016 9:53:08 AM, Cory Lavigne

FED ROAD DIV. NO.	STATE	FEDERAL AID PROJECT NO.	FISCAL YEAR	SHEET NO.	TOTAL SHEETS
1	R.I.			V2_005	V2_163

R-1

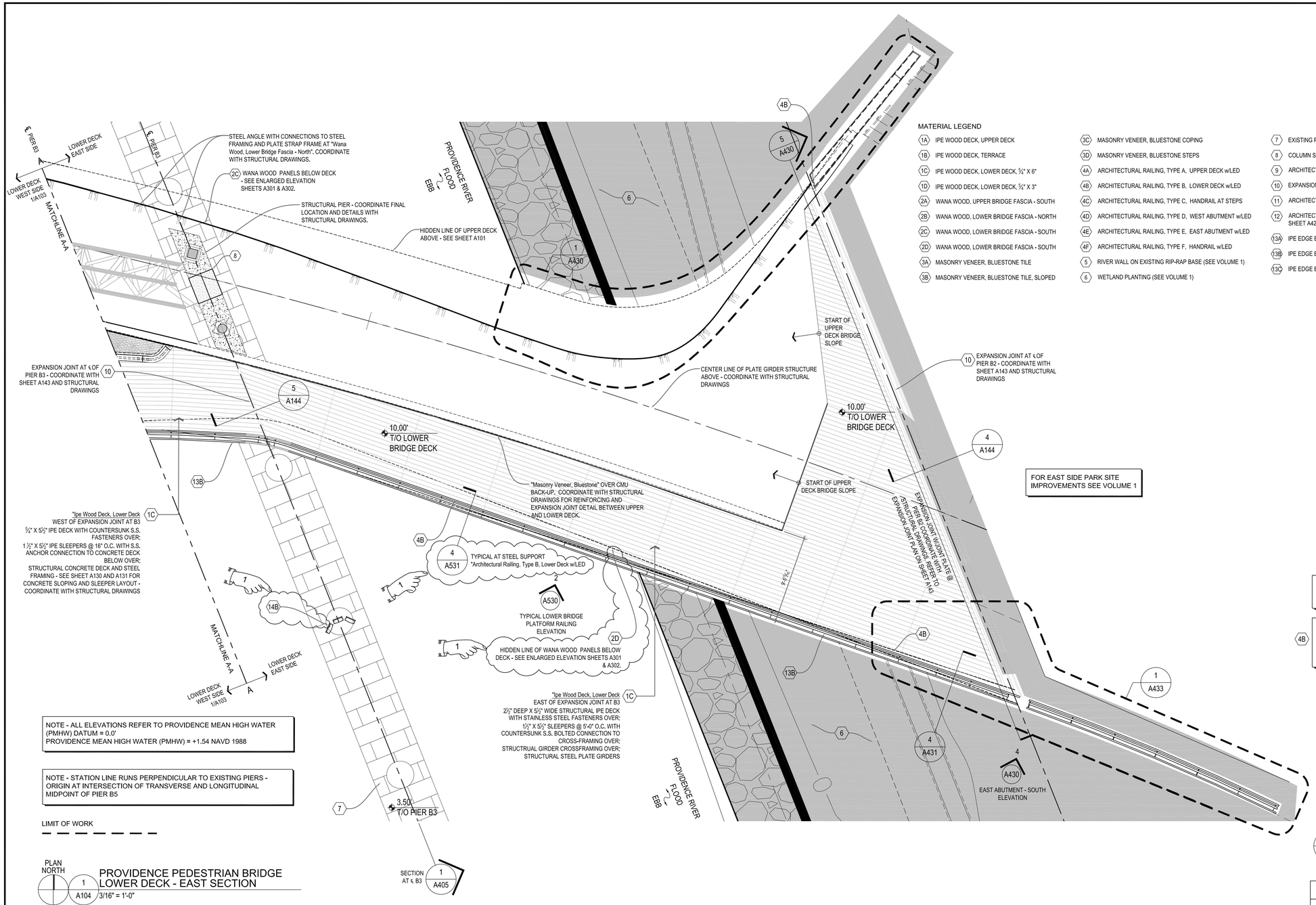

NOTE - ALL ELEVATIONS REFER TO PROVIDENCE MEAN HIGH WATER (PMHW) DATUM = 0.0'
PROVIDENCE MEAN HIGH WATER (PMHW) = +1.54 NAVD 1988

NOTE - STATION LINE RUNS PERPENDICULAR TO EXISTING PIERS - ORIGIN AT INTERSECTION OF TRANSVERSE AND LONGITUDINAL MIDPOINT OF PIER B5

FOR EAST SIDE PARK SITE IMPROVEMENTS SEE VOLUME 1

REFER TO SHEET A130 AND A131 FOR LOWER DECK DRAINAGE PLAN AND SLEEPER LAYOUT PLAN. REFER TO SHEET A132 FOR PARTIAL LOWER DECK SLEEPER LAYOUT PLAN.

4B REFER TO SHEET A141 FOR "Architectural Railing, Type B, Lower Deck w/LED" RAIL LOCATIONS AND MOUNTING DETAILS AND SHEET A430 FOR "Architectural Railing, Type E, East Abutment w/LED" RAIL LOCATIONS AND MOUNTING DETAILS COORDINATE WITH ENLARGED DECK JOINT PLANS ON SHEETS A115 - A117 & A120.

MATERIAL LEGEND

- 1A IPE WOOD DECK, UPPER DECK
- 1B IPE WOOD DECK, TERRACE
- 1C IPE WOOD DECK, LOWER DECK, 5/4" X 6"
- 1D IPE WOOD DECK, LOWER DECK, 5/4" X 3"
- 2A WANA WOOD, UPPER BRIDGE FASCIA - SOUTH
- 2B WANA WOOD, LOWER BRIDGE FASCIA - NORTH
- 2C WANA WOOD, LOWER BRIDGE FASCIA - SOUTH
- 2D WANA WOOD, LOWER BRIDGE FASCIA - SOUTH
- 3A MASONRY VENEER, BLUESTONE TILE
- 3B MASONRY VENEER, BLUESTONE TILE, SLOPED
- 3C MASONRY VENEER, BLUESTONE COPING
- 3D MASONRY VENEER, BLUESTONE STEPS
- 4A ARCHITECTURAL RAILING, TYPE A, UPPER DECK w/LED
- 4B ARCHITECTURAL RAILING, TYPE B, LOWER DECK w/LED
- 4C ARCHITECTURAL RAILING, TYPE C, HANDRAIL AT STEPS
- 4D ARCHITECTURAL RAILING, TYPE D, WEST ABUTMENT w/LED
- 4E ARCHITECTURAL RAILING, TYPE E, EAST ABUTMENT w/LED
- 4F ARCHITECTURAL RAILING, TYPE F, HANDRAIL w/LED
- 5 RIVER WALL ON EXISTING RIP-RAP BASE (SEE VOLUME 1)
- 6 WETLAND PLANTING (SEE VOLUME 1)
- 7 EXISTING PIER FOUNDATION W/ GRANITE MASONRY VENEER
- 8 COLUMN SUPPORT - SEE STRUCTURAL DRAWINGS
- 9 ARCHITECTURAL S.S. DECORATIVE PLATE
- 10 EXPANSION JOINT COVER PLATE, STAINLESS STEEL
- 11 ARCHITECTURAL STAINLESS STEEL MESH
- 12 ARCHITECTURAL BENCH - SEE ENLARGED PLANS ON SHEET A420 - A426 TO BENCH TYPES
- 13A IPE EDGE BOARD, UPPER
- 13B IPE EDGE BOARD, LOWER
- 13C IPE EDGE BOARD, TERRACE
- 14A LINEAR UPLIGHT - SEE ELECTRICAL DRAWINGS
- 14B PIER FLOOD LIGHT - SEE ELECTRICAL DRAWINGS
- 14C PLANTER BOLLARD LIGHT - SEE ELECTRICAL DRAWINGS

REFERENCE SHEET A101-A106 FOR MATERIALS NOT LABELED ON SHEET A102.

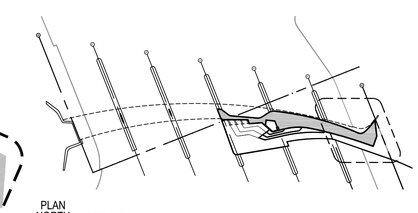

PLAN NORTH KEY PLAN LOWER DECK 1"=100'

ADDENDUM NO. 4

REF DWG #	REFRENCE DRAWING NAME
S123	LOWER LEVEL FRAMING PLAN
S130	OVERALL DECK PLAN

CDR MAGUIRE

inFORM studio
235 east main street, suite 102b
northville, mi 48167
(p) 248.449.3564
(f) 248.449.6984
www.in-formstudio.com
Buro Happold

BETA Group, Inc.
Engineers • Planners • Landscape Architects
Lincoln, RI - Norwood, MA - Hartford, CT

RHODE ISLAND
DEPARTMENT OF TRANSPORTATION

INTERSTATE 195

DESIGNED BY:
CHECKED:
DATE:
SHEET: V2_005
OF: V2_163

SCALE:

REVISIONS			REVISIONS		
NO.	DATE	BY	NO.	DATE	BY
1	6/14/2016	CL			

IMPROVEMENTS TO INTERSTATE ROUTE 195
CONTRACT 16 VOLUME 2
PROVIDENCE RHODE ISLAND

BRIDGE PLAN - LOWER PLATFORM - EAST

A104

R:\Current\2010.1881.01_Providence Pedestrian Bridge\drawings\current\100% Submittal\1881_A102-A104.dwg, 6/8/2016 9:55:35 AM, Cory Lavigne

R-1	FED ROAD DIV. NO.	STATE	FEDERAL AID PROJECT NO.	FISCAL YEAR	SHEET NO.	TOTAL SHEETS
	1	R.I.			V2_006	V2_163

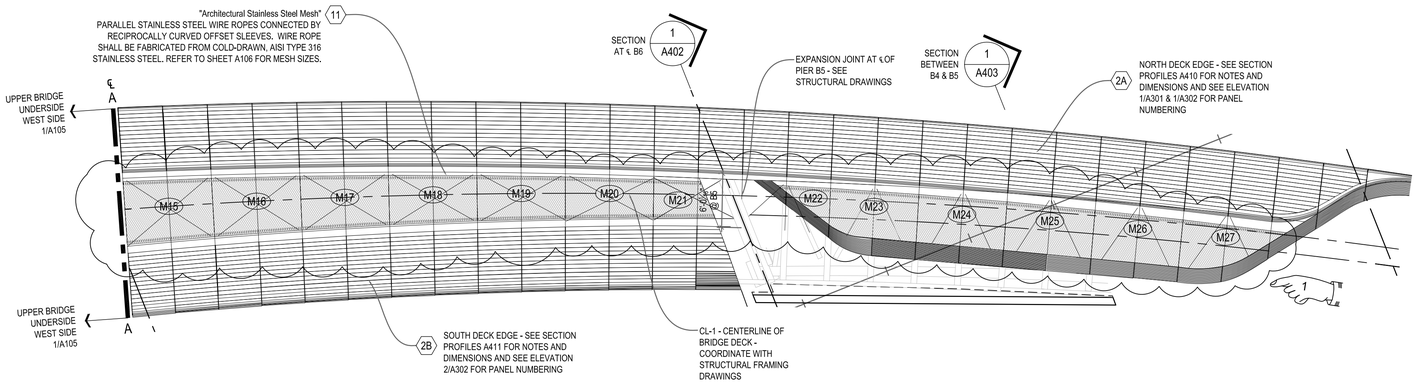

PLAN NORTH 2 A105 PROVIDENCE PEDESTRIAN BRIDGE REFLECTED UNDERSIDE PLAN 1/8" = 1'-0"

LINE TYPE INDICATES LOCATION OF WEBNET-HOOK ALONG N-S AXIS OF THE "Architectural Stainless Steel Mesh" TO ALLOW FOR INSPECTION ACCESS ABOVE. E-W AXIS TO MAINTAIN A FIXED TURNBUCKLE AND CLEVIS CONNECTION ALONG CABLE TO CLIPS WELDED ALONG THE UNDERSIDE OF THE BRIDGE SUPERSTRUCTURE

NOTE - ALL STEEL CONNECTION COMPONENTS FOR "Architectural Stainless Steel Mesh" TO RECEIVE THERMAL SPRAYED ZINC COATING PER SECTION 827 AND PAINTED PER SECTION 825

NOTE - ALL ELEVATIONS REFER TO PROVIDENCE MEAN HIGH WATER (PMHW) DATUM = 0.0'
PROVIDENCE MEAN HIGH WATER (PMHW) = +1.54 NAVD 1988

NOTE - STATION LINE RUNS PERPENDICULAR TO EXISTING PIERS - ORIGIN AT INTERSECTION OF TRANSVERSE AND LONGITUDINAL MIDPOINT OF PIER B5

Wana Wood, Upper Bridge Fascia - North
Wana Wood, Upper Bridge Fascia - South
Wana Wood, Lower Bridge Fascia - North
Wana Wood, Lower Bridge Fascia - South
Architectural Stainless Steel Mesh

CONTRACTOR/FABRICATOR TO REFERENCE 3D DIGITAL MODEL RELEASED WITH THE TENDER DOCUMENTS FOR THE PROVIDENCE RIVER PEDESTRIAN BRIDGE PROJECT. THIS MODEL CONTAINS THE NECESSARY LEVEL OF DETAIL FOR CROSS-TRADE COORDINATION AND CONSTRUCTION LAYOUT ASSOCIATED WITH THE ARCHITECTURAL COMPONENTS IDENTIFIED ABOVE. THE 3D DIGITAL MODEL IS INTENDED TO AID THE CONTRACTOR IN ESTIMATING QUANTITIES AND THE DETERMINATION OF MEANS AND METHODS. THIS MODEL IS NOT TOPOGRAPHICALLY REFERENCED AND SHOULD BE USED FOR GEOMETRIC REFERENCE ONLY.

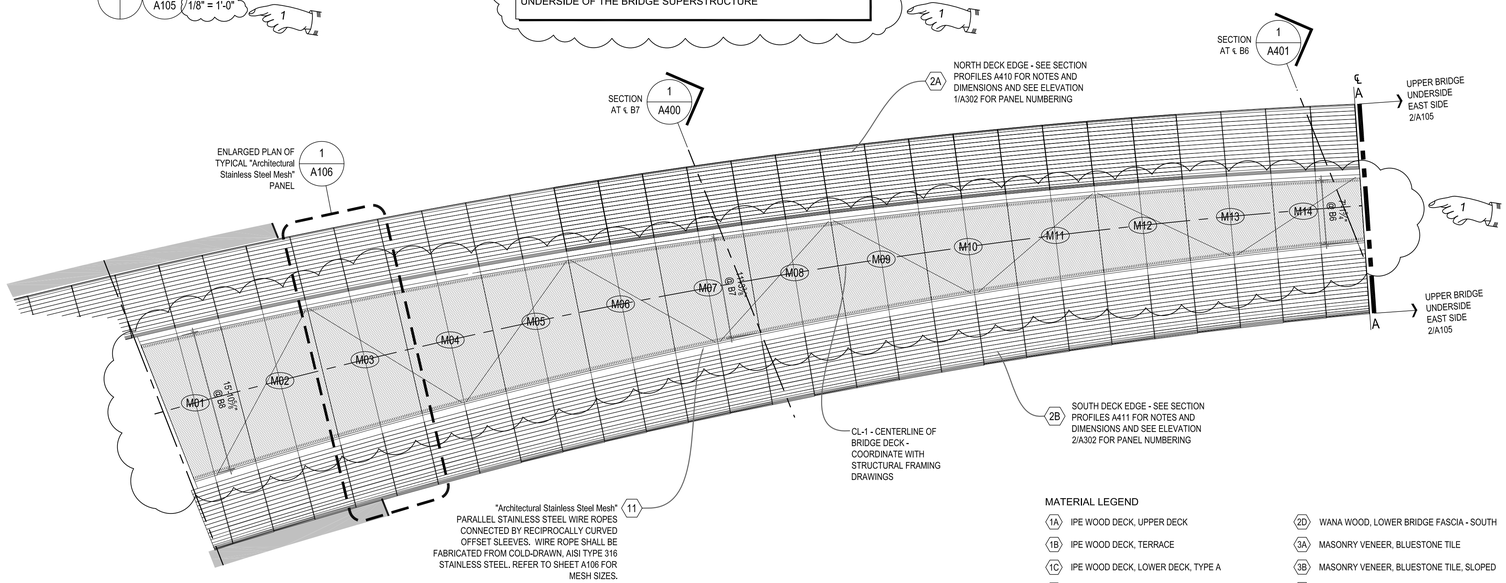

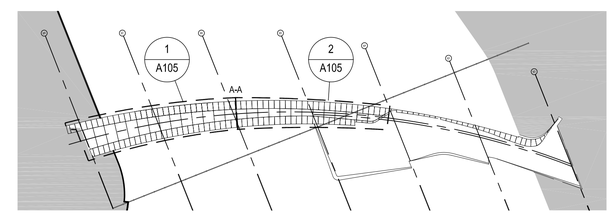

PLAN NORTH 1 A105 PROVIDENCE PEDESTRIAN BRIDGE REFLECTED UNDERSIDE PLAN 1/64" = 1'-0"

PLAN NORTH 1 A105 PROVIDENCE PEDESTRIAN BRIDGE REFLECTED UNDERSIDE PLAN 1/8" = 1'-0"

LINE TYPE INDICATES LOCATION OF WEBNET-HOOK ALONG N-S AXIS OF THE "Architectural Stainless Steel Mesh" TO ALLOW FOR INSPECTION ACCESS ABOVE. E-W AXIS TO MAINTAIN A FIXED TURNBUCKLE AND CLEVIS CONNECTION ALONG CABLE TO CLIPS WELDED ALONG THE UNDERSIDE OF THE BRIDGE SUPERSTRUCTURE

MATERIAL LEGEND

- 1A IPE WOOD DECK, UPPER DECK
- 1B IPE WOOD DECK, TERRACE
- 1C IPE WOOD DECK, LOWER DECK, TYPE A
- 1D IPE WOOD DECK, LOWER DECK, TYPE B
- 2A WANA WOOD, UPPER BRIDGE FASCIA - SOUTH
- 2B WANA WOOD, LOWER BRIDGE FASCIA - NORTH
- 2C WANA WOOD, LOWER BRIDGE FASCIA - SOUTH
- 2D WANA WOOD, LOWER BRIDGE FASCIA - SOUTH
- 3A MASONRY VENEER, BLUESTONE TILE
- 3B MASONRY VENEER, BLUESTONE TILE, SLOPED
- 3C MASONRY VENEER, BLUESTONE COPING
- 3D MASONRY VENEER, BLUESTONE STEPS
- 4A ARCHITECTURAL RAILING, TYPE A, UPPER DECK w/LED
- 4B ARCHITECTURAL RAILING, TYPE B, LOWER DECK w/LED
- 4C ARCHITECTURAL RAILING, TYPE C, HANDRAIL AT STEPS
- 4D ARCHITECTURAL RAILING, TYPE D, WEST ABUTMENT w/LED
- 4E ARCHITECTURAL RAILING, TYPE E, EAST ABUTMENT w/LED
- 4F ARCHITECTURAL RAILING, TYPE F, HANDRAIL w/LED
- 5 RIVER WALL ON EXISTING RIP-RAP BASE (SEE VOLUME 1)
- 6 WETLAND PLANTING (SEE VOLUME 1)
- 7 EXISTING PIER FOUNDATION W/ GRANITE MASONRY VENEER
- 8 COLUMN SUPPORT - SEE STRUCTURAL DRAWINGS
- 9 ARCHITECTURAL S.S. DECORATIVE PLATE
- 10 EXPANSION JOINT COVER PLATE, STAINLESS STEEL
- 11 ARCHITECTURAL STAINLESS STEEL MESH
- 12 ARCHITECTURAL BENCH - SEE ENLARGED PLANS ON SHEET A420 - A426 TO BENCH TYPES
- 13A IPE EDGE BOARD, UPPER
- 13B IPE EDGE BOARD, LOWER
- 13C IPE EDGE BOARD, TERRACE
- 14A LINEAR UPLIGHT - SEE ELECTRICAL DRAWINGS
- 14B PIER FLOOD LIGHT - SEE ELECTRICAL DRAWINGS
- 14C PLANTER BOLLARD LIGHT - SEE ELECTRICAL DRAWINGS

REFERENCE SHEET A101-A106 FOR MATERIALS NOT LABELED ON SHEET A102.

ADDENDUM NO. 4

REF DWG #	REFRENCE DRAWING NAME

CDR MAGUIRE

inFORM studio
235 east main street, suite 102b
northville, mi 48167
(p) 248.449.3564
(f) 248.449.6984
www.in-formstudio.com
Buro Happold

BETA Group, Inc.
Engineers • Planners • Landscape Architects
Lincoln, RI - Norwood, MA - Hartford, CT

RHODE ISLAND DEPARTMENT OF TRANSPORTATION

INTERSTATE 195

DESIGNED BY:
CHECKED:
DATE:
SHEET: V2_006
OF: V2_163

SCALE:

REVISIONS			REVISIONS		
NO.	DATE	BY	NO.	DATE	BY
1	6/14/2016	CL			

IMPROVEMENTS TO INTERSTATE ROUTE 195
PROVIDENCE CONTRACT 16 VOLUME 2 RHODE ISLAND

REFLECTED UNDERSIDE BRIDGE PLAN — A105

R:\Current\2010.1881.01_Providence Pedestrian Bridge\drawings\current\100% Submittal\1881_A105-A106.dwg, 6/9/2016 2:38:09 PM, Cory Lavigne

FED. ROAD DIV. NO.	STATE	FEDERAL AID PROJECT NO.	FISCAL YEAR	SHEET NO.	TOTAL SHEETS
1	R.I.			V2_007	V2_163

MESH NUMBER	PLAN DATA: UPPER BRIDGE MESH CEILING DIMENSION				
	AREA	SIDE A (FEET)	SIDE B (FEET)	SIDE C (FEET)	SIDE D (FEET)
M01	128.98	7.18	15.51	9.14	16.25
M02	147.93	9.68	14.75	9.89	15.51
M03	140.69	9.69	14.01	9.89	14.75
M04	133.61	9.7	13.29	9.89	14.01
M05	126.69	9.71	12.58	9.89	13.29
M06	119.93	9.72	11.89	9.89	12.58
M07	113.33	9.73	11.22	9.89	11.89
M08	106.9	9.74	10.57	9.89	11.22
M09	100.64	9.75	9.94	9.89	10.57
M10	94.55	9.76	9.32	9.89	9.94
M11	88.63	9.76	8.72	9.89	9.32
M12	82.89	9.77	8.14	9.89	8.72
M13	77.32	9.78	7.58	9.89	8.14

MESH NUMBER	PLAN DATA: UPPER BRIDGE MESH CEILING DIMENSION				
	AREA	SIDE A (FEET)	SIDE B (FEET)	SIDE C (FEET)	SIDE D (FEET)
M14	71.94	9.79	7.04	9.89	7.58
M15	66.74	9.8	6.52	9.89	7.04
M16	61.71	9.8	6.02	9.89	6.52
M17	56.87	9.81	5.53	9.89	6.02
M18	52.21	9.82	5.07	9.89	5.53
M19	47.74	9.83	4.62	9.89	5.07
M20	43.46	9.83	4.19	9.89	4.62
M21	24.7	6.88	3.84	5.23	4.19
M22	12.15	7.25	0	5.95	4.06
M23	51.6	9.83	5.35	9.89	5.13
M24	53.16	9.82	5.45	9.89	5.35
M25	53.53	9.81	5.42	9.89	5.45
M26	52.82	9.81	5.3	9.89	5.42

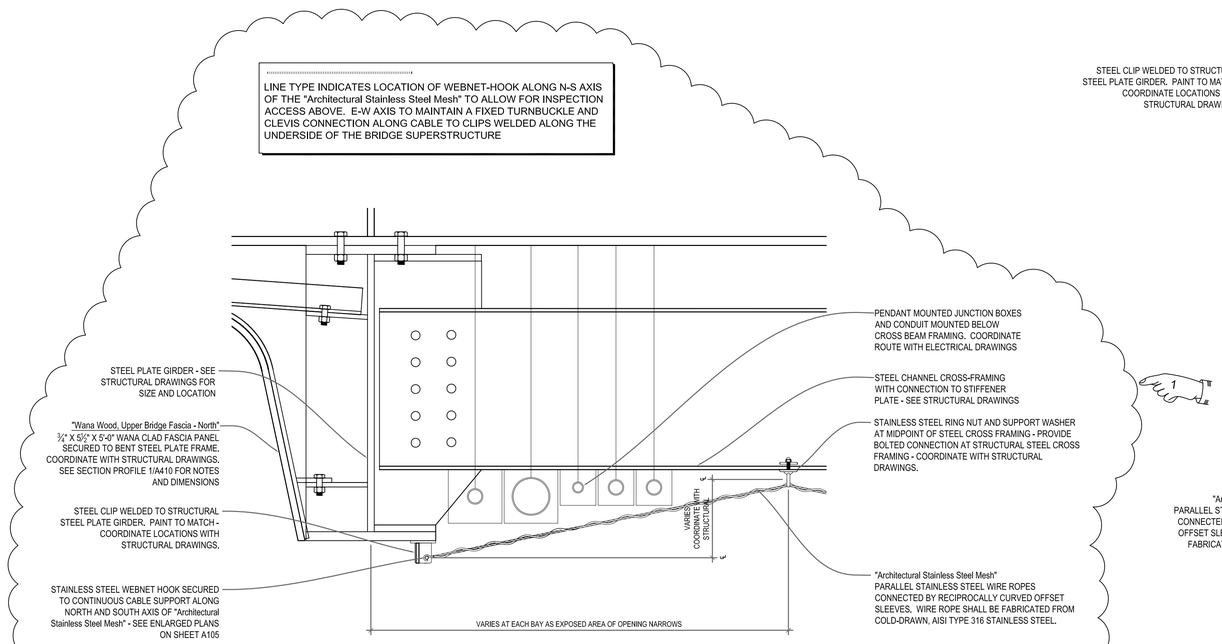

3 A106 PARTIAL SECTION (B8 - B5) "Architectural Stainless Steel Mesh"
1 1/2" = 1'-0"

NOTE - ALL STEEL CONNECTION COMPONENTS FOR "Architectural Stainless Steel Mesh" TO RECEIVE THERMAL SPRAYED ZINC COATING PER SECTION 827 AND PAINTED PER SECTION 825

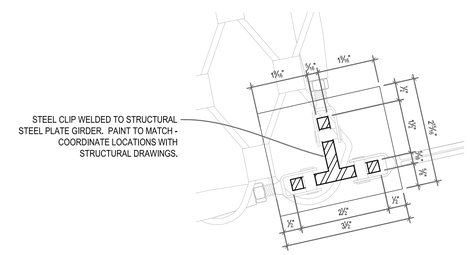

4 A106 ENLARGED CLIP DETAIL "Architectural Stainless Steel Mesh"
6" = 1'-0"

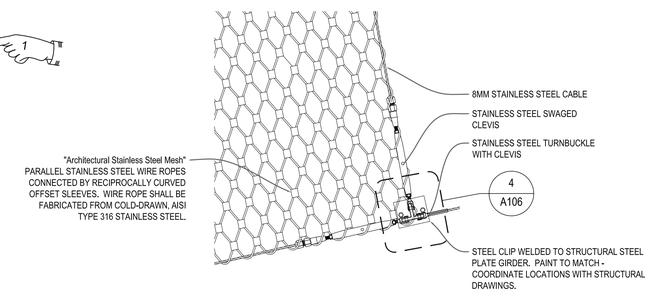

2 A106 ENLARGED END CONNECTION "Architectural Stainless Steel Mesh"
1 1/2" = 1'-0"

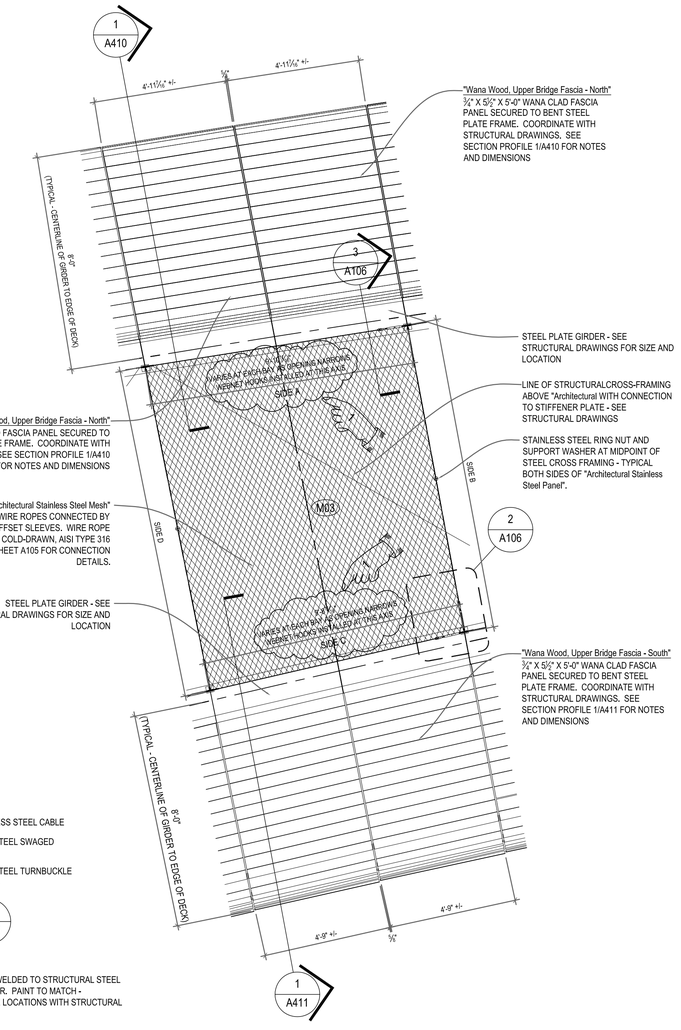

1 A106 ENLARGED REFLECTED PLAN "Architectural Stainless Steel Mesh"
3/8" = 1'-0"

ADDENDUM NO. 4

REF DWG #	REFRENCE DRAWING NAME

CDR MAGUIRE

inFORM studio
235 east main street, suite 102b
northville, mi 48167
(p) 248.449.3564
(f) 248.449.6984
www.in-formstudio.com
Buro Happold

BETA Group, Inc.
Engineers • Planners • Landscape Architects
Lincoln, RI - Norwood, MA - Hartford, CT

RHODE ISLAND STATE OF HOPE

RHODE ISLAND
DEPARTMENT OF TRANSPORTATION

INTERSTATE 195

DESIGNED BY:
CHECKED:
DATE:
SHEET: V2_007
OF: V2_163

SCALE:

REVISIONS			REVISIONS		
NO.	DATE	BY	NO.	DATE	BY
1	6/14/2016	CL			

IMPROVEMENTS TO
INTERSTATE ROUTE 195
CONTRACT 16 VOLUME 2
PROVIDENCE RHODE ISLAND

REFLECTED UNDERSIDE BRIDGE DETAILS

A106

R:\Current\2010.1881.01_Providence Pedestrian Bridge\drawings\current\100% Submittal\1881_A105-A106.dwg, 6/9/2016 3:07:17 PM, Cory Lavigne

FED. ROAD DIV. NO.	STATE	FEDERAL AID PROJECT NO.	FISCAL YEAR	SHEET NO.	TOTAL SHEETS
1	R.I.			V2_008	V2_163

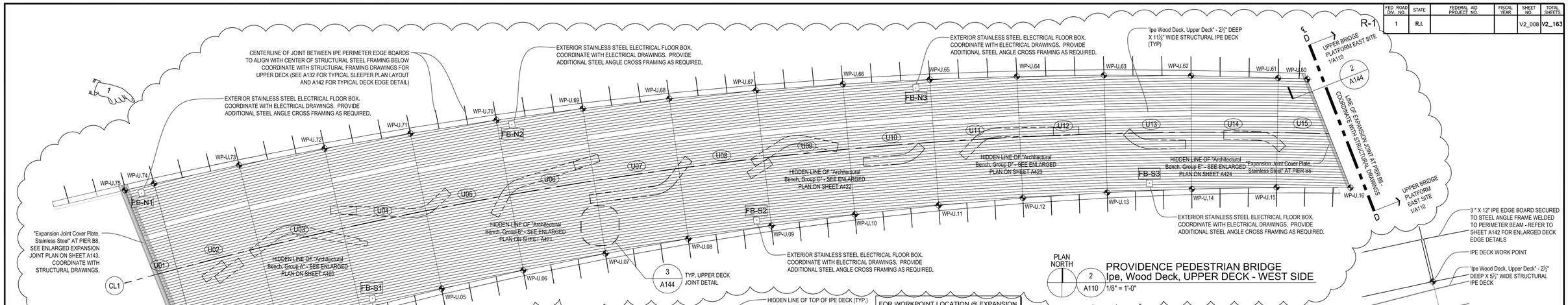

PLAN NORTH

2 / A110 PROVIDENCE PEDESTRIAN BRIDGE
Ipe, Wood Deck, UPPER DECK - WEST SIDE
1/8" = 1'-0"

4 / A110 KEY PLAN
WORK POINT LOCATION
1" = 1'-0"

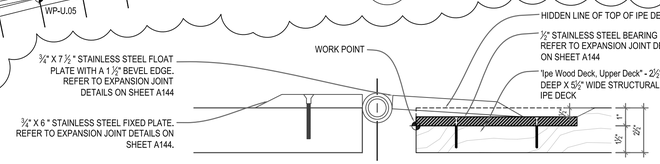

3 / A110 WORK POINT LOCATION
TYPICAL EXPANSION JOINT SECTION
3" = 1'-0"

FOR WORKPOINT LOCATION @ EXPANSION JOINT REFERENCE DETAIL 3/A110

NOTE - ALL ELEVATIONS REFER TO PROVIDENCE MEAN HIGH WATER (PMHW) DATUM = 0.0'
PROVIDENCE MEAN HIGH WATER (PMHW) = +1.54 NAVD 1988

NOTE - STATION LINE RUNS PERPENDICULAR TO EXISTING PIERS - ORIGIN AT INTERSECTION OF TRANSVERSE AND LONGITUDINAL MIDPOINT OF PIER B5

Ipe Wood, Upper Bridge Deck

CONTRACTOR/FABRICATOR TO REFERENCE 3D DIGITAL MODEL RELEASED WITH THE TENDER DOCUMENTS FOR THE PROVIDENCE RIVER PEDESTRIAN BRIDGE PROJECT. THIS MODEL CONTAINS THE NECESSARY LEVEL OF DETAIL FOR CROSS-TRADE COORDINATION AND CONSTRUCTION LAYOUT ASSOCIATED WITH THE ARCHITECTURAL COMPONENTS IDENTIFIED ABOVE. THE 3D DIGITAL MODEL IS INTENDED TO AID THE CONTRACTOR IN ESTIMATING QUANTITIES AND THE DETERMINATION OF MEANS AND METHODS. THIS MODEL IS NOT TOPOGRAPHICALLY REFERENCED AND SHOULD BE USED FOR GEOMETRIC REFERENCE ONLY.

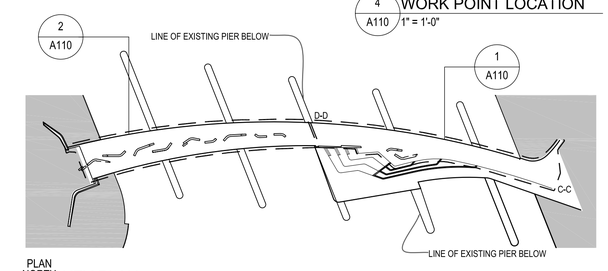

PLAN NORTH

KEY PLAN
UPPER DECK JOINT PLAN
1/64" = 1'-0"

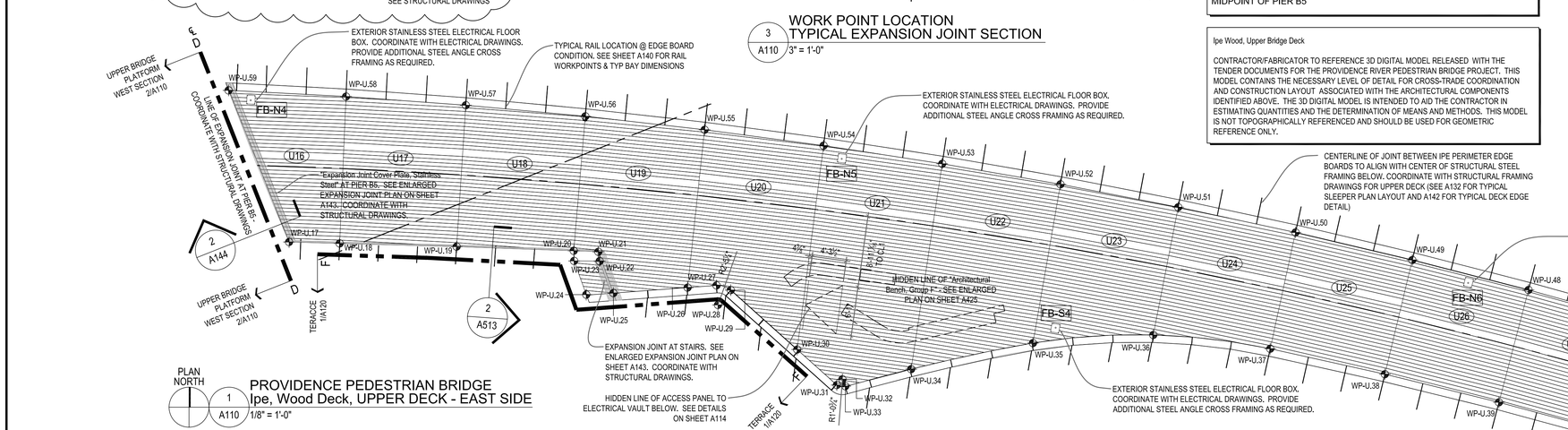

PLAN NORTH

1 / A110 PROVIDENCE PEDESTRIAN BRIDGE
Ipe, Wood Deck, UPPER DECK - EAST SIDE
1/8" = 1'-0"

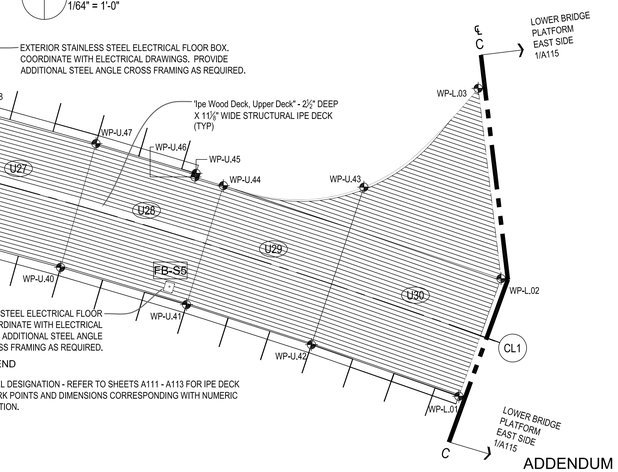

SYMBOL LEGEND

(XX) DECK PANEL DESIGNATION - REFER TO SHEETS A111 - A113 FOR IPE DECK PANEL WORK POINTS AND DIMENSIONS CORRESPONDING WITH NUMERIC IDENTIFICATION.

PLAN DATA

WORK POINT	UPPER BRIDGE PLATFORM STATION	STATION OFFSET	ELEVATION	WORK POINT	UPPER BRIDGE PLATFORM STATION	STATION OFFSET	ELEVATION	WORK POINT	UPPER BRIDGE PLATFORM STATION	STATION OFFSET	ELEVATION	WORK POINT	UPPER BRIDGE PLATFORM STATION	STATION OFFSET	ELEVATION	WORK POINT	UPPER BRIDGE PLATFORM STATION	STATION OFFSET	ELEVATION	WORK POINT	UPPER BRIDGE PLATFORM STATION	STATION OFFSET	ELEVATION
WP-U.1	1+00.71	50.25 LEFT	13.54 (PMHW)	WP-U.12	2+43.92	22.99 LEFT	17.31 (PMHW)	WP-U.23	3+29.45	11.88 RIGHT	16.80 (PMHW)	WP-U.34	3+63.65	40.01 RIGHT	15.41 (PMHW)	WP-U.45	4+59.82	75.90 RIGHT	11.41 (PMHW)	WP-U.56	3+37.48	04.35 LEFT	16.80 (PMHW)	WP-U.67	2+08.05	57.16 LEFT	16.32 (PMHW)
WP-U.2	1+02.25	50.13 LEFT	13.67 (PMHW)	WP-U.13	2+57.77	18.49 LEFT	17.50 (PMHW)	WP-U.24	3+29.31	16.42 RIGHT	16.74 (PMHW)	WP-U.35	3+79.00	42.60 RIGHT	14.88 (PMHW)	WP-U.46	4+60.07	75.58 RIGHT	11.41 (PMHW)	WP-U.57	3+24.11	11.15 LEFT	17.16 (PMHW)	WP-U.68	1+93.66	61.37 LEFT	15.94 (PMHW)
WP-U.3	1+16.55	48.88 LEFT	14.05 (PMHW)	WP-U.14	2+71.53	13.67 LEFT	17.60 (PMHW)	WP-U.25	3+32.59	17.44 RIGHT	16.54 (PMHW)	WP-U.36	3+93.34	47.21 RIGHT	14.27 (PMHW)	WP-U.47	4+50.91	68.36 RIGHT	11.89 (PMHW)	WP-U.58	3+10.61	17.68 LEFT	17.42 (PMHW)	WP-U.69	1+79.19	65.29 LEFT	15.56 (PMHW)
WP-U.4	1+30.85	47.30 LEFT	14.43 (PMHW)	WP-U.15	2+85.19	08.54 LEFT	17.60 (PMHW)	WP-U.26	3+41.46	20.23 RIGHT	16.35 (PMHW)	WP-U.37	4+06.28	54.20 RIGHT	13.67 (PMHW)	WP-U.48	4+38.97	59.29 RIGHT	12.49 (PMHW)	WP-U.59	2+97.30	23.80 LEFT	17.49 (PMHW)	WP-U.70	1+64.64	68.92 LEFT	15.18 (PMHW)
WP-U.5	1+45.13	45.40 LEFT	14.80 (PMHW)	WP-U.16	2+96.96	03.82 LEFT	17.51 (PMHW)	WP-U.27	3+44.90	21.31 RIGHT	16.23 (PMHW)	WP-U.38	4+18.42	62.44 RIGHT	13.08 (PMHW)	WP-U.49	4+26.86	50.46 RIGHT	13.08 (PMHW)	WP-U.60	2+96.96	23.89 LEFT	17.56 (PMHW)	WP-U.71	1+50.02	72.26 LEFT	14.80 (PMHW)
WP-U.6	1+59.38	43.17 LEFT	15.18 (PMHW)	WP-U.17	2+97.30	03.44 LEFT	17.40 (PMHW)	WP-U.28	3+44.07	23.80 RIGHT	16.18 (PMHW)	WP-U.39	4+30.37	70.96 RIGHT	12.49 (PMHW)	WP-U.50	4+14.58	41.88 RIGHT	13.67 (PMHW)	WP-U.61	2+92.41	25.97 LEFT	17.60 (PMHW)	WP-U.72	1+35.34	75.31 LEFT	14.43 (PMHW)
WP-U.7	1+73.61	40.62 LEFT	15.56 (PMHW)	WP-U.18	3+03.10	00.93 LEFT	17.34 (PMHW)	WP-U.29	3+46.37	22.53 RIGHT	16.17 (PMHW)	WP-U.40	4+42.12	79.76 RIGHT	11.89 (PMHW)	WP-U.51	4+02.12	33.54 RIGHT	14.28 (PMHW)	WP-U.62	2+78.62	31.86 LEFT	17.60 (PMHW)	WP-U.73	1+20.60	78.07 LEFT	14.05 (PMHW)
WP-U.8	1+87.79	37.74 LEFT	15.94 (PMHW)	WP-U.19	3+16.53	04.83 RIGHT	17.08 (PMHW)	WP-U.30	3+51.33	32.47 RIGHT	15.86 (PMHW)	WP-U.41	4+53.67	88.82 RIGHT	11.28 (PMHW)	WP-U.52	3+89.50	25.45 RIGHT	14.88 (PMHW)	WP-U.63	2+64.71	37.49 LEFT	17.50 (PMHW)	WP-U.74	1+05.80	80.53 LEFT	13.67 (PMHW)
WP-U.9	2+01.91	34.54 LEFT	16.32 (PMHW)	WP-U.20	3+29.94	10.71 RIGHT	16.71 (PMHW)	WP-U.31	3+54.26	38.32 RIGHT	15.68 (PMHW)	WP-U.42	4+64.99	98.14 RIGHT	10.71 (PMHW)	WP-U.53	3+76.72	17.61 RIGHT	15.41 (PMHW)	WP-U.64	2+50.69	42.83 LEFT	17.31 (PMHW)	WP-U.75	1+00.71	81.30 LEFT	13.46 (PMHW)
WP-U.10	2+15.99	31.01 LEFT	16.69 (PMHW)	WP-U.21	3+32.75	11.95 RIGHT	16.62 (PMHW)	WP-U.32	3+55.32	37.83 RIGHT	15.66 (PMHW)	WP-U.43	4+76.94	83.94 RIGHT	10.64 (PMHW)	WP-U.54	3+63.79	10.03 RIGHT	15.86 (PMHW)	WP-U.65	2+36.58	47.89 LEFT	17.05 (PMHW)				
WP-U.11	2+29.99	27.16 LEFT	17.05 (PMHW)	WP-U.22	3+32.47	13.10 RIGHT	16.70 (PMHW)	WP-U.33	3+55.22	38.99 RIGHT	15.65 (PMHW)	WP-U.44	4+62.42	77.96 RIGHT	11.27 (PMHW)	WP-U.55	3+50.70	02.71 RIGHT	16.35 (PMHW)	WP-U.66	2+22.36	52.67 LEFT	16.69 (PMHW)				

ADDENDUM NO. 4

REF DWG #	REFRENCE DRAWING NAME

CDR MAGUIRE

inFORM studio
235 east main street, suite 102b
northville, mi 48167
(p) 248.449.3564
(f) 248.449.6984
www.in-formstudio.com
Buro Happold

BETA Group, Inc.
Engineers • Planners • Landscape Architects
Lincoln, RI - Norwood, MA - Hartford, CT

RHODE ISLAND
DEPARTMENT OF TRANSPORTATION

INTERSTATE 195

DESIGNED BY:
CHECKED:
DATE:
SHEET: V2_008
OF: V2_163

SCALE:

REVISIONS NO.	DATE	BY	REVISIONS NO.	DATE	BY
1	6/14/2016	CL			

IMPROVEMENTS TO
INTERSTATE ROUTE 195
PROVIDENCE CONTRACT 16 VOLUME 2 RHODE ISLAND

OVERALL UPPER DECK
ENLARGED DECK JOINT PLANS

A110

R:\Current\2010.1881.01_Providence Pedestrian Bridge\drawings\current\100% Submittal\1881_A110-A114.dwg, 6/9/2016 8:27:08 AM, Cory Lavigne

FED ROAD DIV. NO.	STATE	FEDERAL AID PROJECT NO.	FISCAL YEAR	SHEET NO.	TOTAL SHEETS
1	R.I.			V2_012	V2_163

R-1

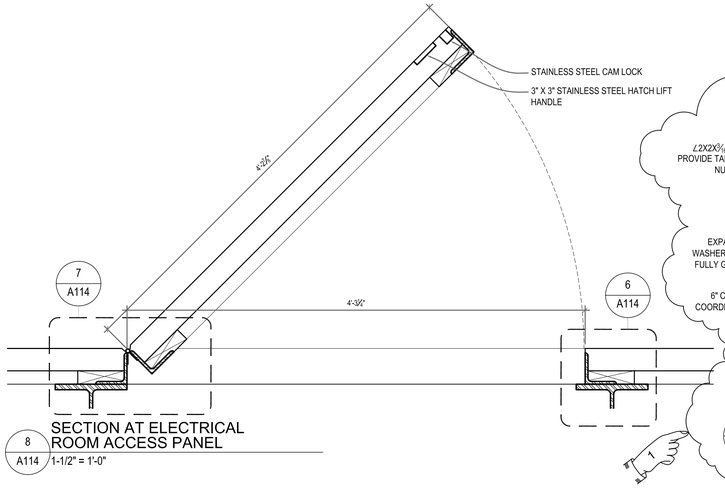

8 A114 SECTION AT ELECTRICAL ROOM ACCESS PANEL
1-1/2" = 1'-0"

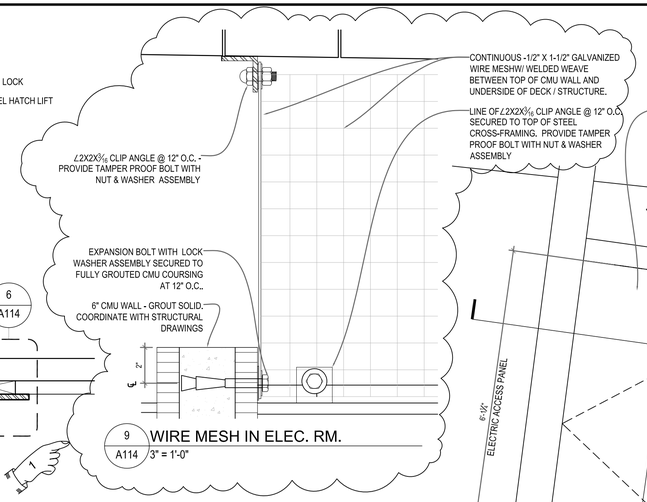

9 A114 WIRE MESH IN ELEC. RM.
3" = 1'-0"

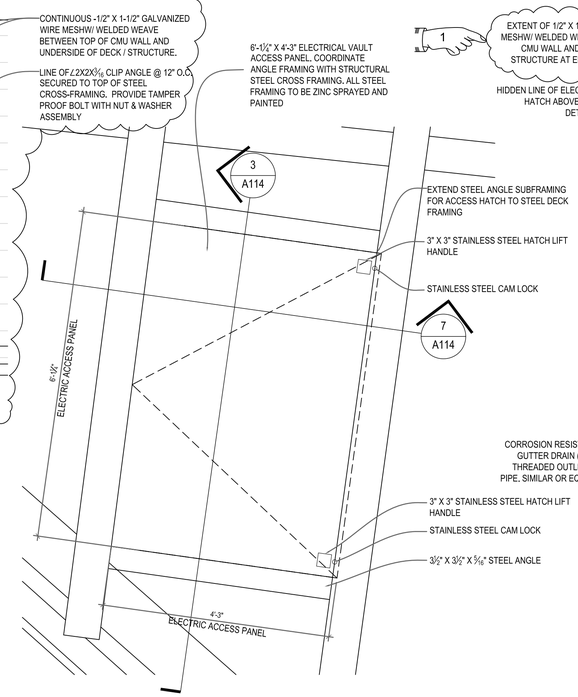

5 A114 ENLARGED STRUCTURAL FRAMING PLAN AT ELECTRICAL ROOM ACCESS PANEL
3/4" = 1'-0"

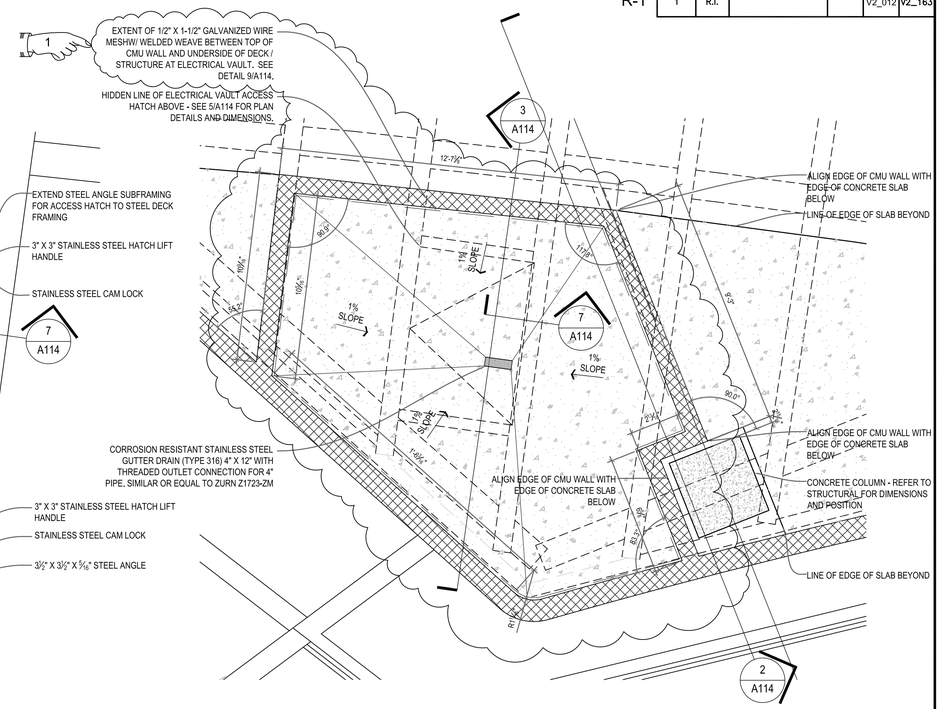

4 A114 ENLARGED PLAN AT ELECTRICAL ROOM
3/8" = 1'-0"

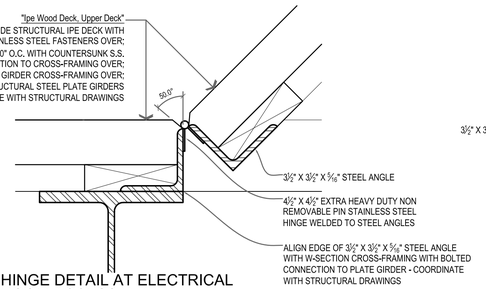

7 A114 HINGE DETAIL AT ELECTRICAL ROOM ACCESS PANEL
3" = 1'-0"

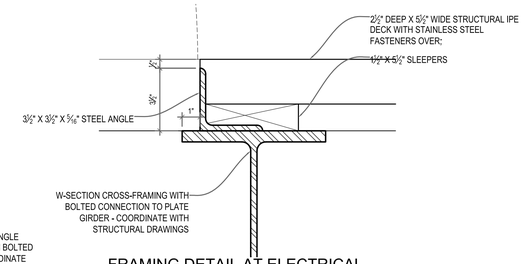

6 A114 FRAMING DETAIL AT ELECTRICAL ROOM ACCESS PANEL
3" = 1'-0"

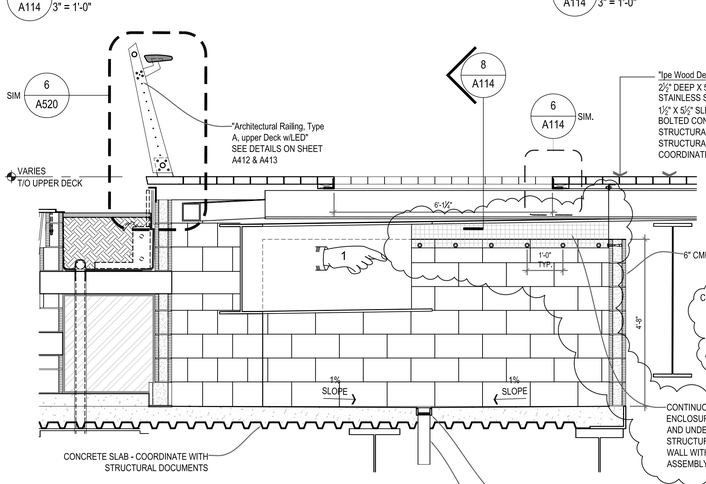

3 A114 ENLARGED CROSS SECTION / ELEVATION AT ELECTRICAL ROOM
1/2" = 1'-0"

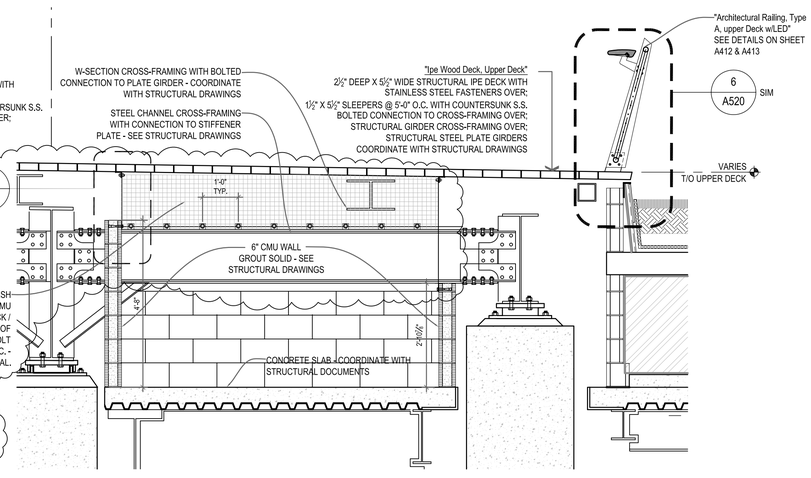

2 A114 ENLARGED CROSS SECTION / ELEVATION AT ELECTRICAL ROOM
1/2" = 1'-0"

NOTE - ALL NON-STAINLESS STEEL COMPONENTS TO RECEIVE THERMAL SPRAYED ZINC COATING PER SECTION 827 AND PAINTED PER SECTION 825

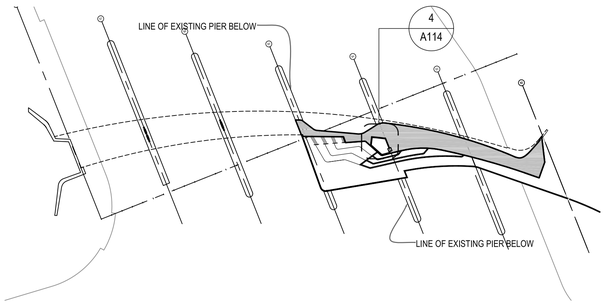

1 A114 KEY PLAN
1/64" = 1'-0"

ADDENDUM NO. 4

REF DWG #	REFRENCE DRAWING NAME

CDR MAGUIRE

inFORM studio
235 east main street, suite 102b
northville, mi 48167
(p) 248.449.3564
(f) 248.449.6984
www.in-formstudio.com

Buro Happold

BETA Group, Inc.
Engineers • Planners • Landscape Architects
Lincoln, RI - Norwood, MA - Hartford, CT

RHODE ISLAND
DEPARTMENT OF TRANSPORTATION

INTERSTATE 195

DESIGNED BY:
CHECKED:
DATE:
SHEET: V2_012
OF: V2_163

SCALE:

REVISIONS			REVISIONS		
NO.	DATE	BY	NO.	DATE	BY
1	6/14/2016	CL			

IMPROVEMENTS TO INTERSTATE ROUTE 195
PROVIDENCE — CONTRACT 16 VOLUME 2 — RHODE ISLAND

ELECTRICAL ROOM - PLANS & DETAILS

A114

R:\Current\2010.1881.01_Providence Pedestrian Bridge\drawings\current\100% Submittal\1881_A110-A114.dwg, 6/9/2016 8:23:10 AM, Cory Lavigne

FED. ROAD DIV. NO.	STATE	FEDERAL AID PROJECT NO.	FISCAL YEAR	SHEET NO.	TOTAL SHEETS
1	R.I.			V2_013	V2_163

R-1

WORK POINT	PLAN DATA "Ipe Wood Deck, Lower Deck" STATION	STATION OFFSET	ELEVATION
WP-L.1	4+78.18	109.59 RIGHT	10.00 (PMHW)
WP-L.2	4+87.42	99.10 RIGHT	10.00 (PMHW)
WP-L.3	4+92.95	78.22 RIGHT	10.00 (PMHW)
WP-L.4	4+94.63	77.22 RIGHT	10.00 (PMHW)
WP-L.5	4+94.64	105.61 RIGHT	10.00 (PMHW)
WP-L.6	4+92.72	103.95 RIGHT	10.00 (PMHW)
WP-L.7	4+92.75	118.84 RIGHT	10.00 (PMHW)
WP-L.8	4+94.65	120.48 RIGHT	10.00 (PMHW)
WP-L.9	4+94.65	136.53 RIGHT	10.00 (PMHW)
WP-L.10	4+84.62	127.85 RIGHT	10.00 (PMHW)
WP-L.11	4+77.05	121.32 RIGHT	10.00 (PMHW)
WP-L.12	4+69.70	114.96 RIGHT	10.00 (PMHW)
WP-L.13	4+62.42	108.67 RIGHT	10.00 (PMHW)
WP-L.14	4+55.14	102.37 RIGHT	10.00 (PMHW)
WP-L.15	4+47.83	96.06 RIGHT	10.00 (PMHW)
WP-L.16	4+40.52	89.74 RIGHT	10.00 (PMHW)

WORK POINT	PLAN DATA "Ipe Wood Deck, Lower Deck" STATION	STATION OFFSET	ELEVATION
WP-L.17	4+33.20	83.41 RIGHT	10.00 (PMHW)
WP-L.18	4+28.66	79.74 RIGHT	09.96 (PMHW)
WP-L.19	4+28.41	79.59 RIGHT	10.00 (PMHW)
WP-L.20	4+19.11	75.22 RIGHT	10.00 (PMHW)
WP-L.21	4+10.15	71.57 RIGHT	10.00 (PMHW)
WP-L.22	4+01.06	68.28 RIGHT	10.00 (PMHW)
WP-L.23	3+91.83	65.36 RIGHT	10.00 (PMHW)
WP-L.24	3+82.50	62.81 RIGHT	10.00 (PMHW)
WP-L.25	3+73.07	60.64 RIGHT	10.00 (PMHW)
WP-L.26	3+67.51	56.53 RIGHT	10.00 (PMHW)
WP-L.27	3+67.51	59.54 RIGHT	10.00 (PMHW)
WP-L.28	3+67.51	65.82 RIGHT	10.00 (PMHW)
WP-L.29	3+57.21	63.60 RIGHT	10.00 (PMHW)
WP-L.30	3+47.40	61.48 RIGHT	10.00 (PMHW)
WP-L.31	3+37.58	59.36 RIGHT	10.00 (PMHW)
WP-L.32	3+27.76	57.25 RIGHT	10.00 (PMHW)

WORK POINT	PLAN DATA "Ipe Wood Deck, Lower Deck" STATION	STATION OFFSET	ELEVATION
WP-L.33	3+17.94	55.14 RIGHT	10.00 (PMHW)
WP-L.34	3+12.52	49.93 RIGHT	10.00 (PMHW)
WP-L.35	3+13.12	44.97 RIGHT	10.00 (PMHW)
WP-L.36	3+08.17	45.73 RIGHT	10.00 (PMHW)
WP-L.37	3+08.12	53.03 RIGHT	10.00 (PMHW)
WP-L.38	2+98.30	50.91 RIGHT	10.00 (PMHW)
WP-L.39	2+96.60	50.54 RIGHT	10.00 (PMHW)
WP-L.40	2+97.48	46.43 RIGHT	10.00 (PMHW)
WP-L.41	2+93.28	46.30 RIGHT	10.00 (PMHW)
WP-L.42	2+94.84	02.15 LEFT	10.00 (PMHW)
WP-L.43	3+01.18	00.43 RIGHT	10.00 (PMHW)
WP-L.44	3+02.97	12.02 RIGHT	10.00 (PMHW)
WP-L.45	3+04.92	24.64 RIGHT	10.00 (PMHW)
WP-L.46	3+08.37	24.08 RIGHT	10.00 (PMHW)
WP-L.47	3+07.54	27.48 RIGHT	10.00 (PMHW)
WP-L.48	3+14.99	29.30 RIGHT	10.00 (PMHW)

WORK POINT	PLAN DATA "Ipe Wood Deck, Lower Deck" STATION	STATION OFFSET	ELEVATION
WP-L.49	3+21.61	30.91 RIGHT	10.00 (PMHW)
WP-L.50	3+20.90	33.83 RIGHT	10.00 (PMHW)
WP-L.51	3+22.88	31.57 RIGHT	10.00 (PMHW)
WP-L.52	3+24.61	33.09 RIGHT	10.00 (PMHW)
WP-L.53	3+33.72	41.10 RIGHT	10.00 (PMHW)
WP-L.54	3+39.70	46.35 RIGHT	10.00 (PMHW)
WP-L.55	3+41.02	44.84 RIGHT	10.00 (PMHW)
WP-L.56	3+40.72	46.82 RIGHT	10.00 (PMHW)
WP-L.57	3+43.07	47.18 RIGHT	10.00 (PMHW)
WP-L.58	3+52.95	48.71 RIGHT	10.00 (PMHW)
WP-L.59	3+62.84	50.24 RIGHT	10.00 (PMHW)
WP-L.60	3+74.83	52.27 RIGHT	10.00 (PMHW)
WP-L.61	3+84.60	54.48 RIGHT	10.00 (PMHW)
WP-L.62	3+94.23	57.22 RIGHT	10.00 (PMHW)
WP-L.63	4+03.70	60.48 RIGHT	10.00 (PMHW)
WP-L.64	4+12.97	64.24 RIGHT	10.00 (PMHW)

WORK POINT	PLAN DATA "Ipe Wood Deck, Lower Deck" STATION	STATION OFFSET	ELEVATION
WP-L.65	4+20.39	67.55 RIGHT	10.00 (PMHW)
WP-L.66	4+20.60	65.56 RIGHT	10.00 (PMHW)
WP-L.67	4+21.55	67.32 RIGHT	10.00 (PMHW)
WP-L.68	4+22.80	66.67 RIGHT	10.00 (PMHW)
WP-L.69	4+28.41	70.70 RIGHT	10.00 (PMHW)
WP-L.70	4+28.66	70.88 RIGHT	09.96 (PMHW)
WP-L.71	4+37.65	77.54 RIGHT	10.00 (PMHW)
WP-L.72	4+45.41	83.49 RIGHT	10.00 (PMHW)
WP-L.73	4+53.08	89.55 RIGHT	10.00 (PMHW)
WP-L.74	4+60.64	95.73 RIGHT	10.00 (PMHW)
WP-L.75	4+68.10	102.01 RIGHT	10.00 (PMHW)
WP-L.76	4+75.46	108.40 RIGHT	10.00 (PMHW)
WP-L.77	4+77.57	110.28 RIGHT	10.00 (PMHW)
WP-L.78	3+38.82	233.73 RIGHT	10.00 (PMHW)
WP-L.79	3+23.95	295.66 RIGHT	10.00 (PMHW)
WP-L.80	0+55.08	584.83 RIGHT	10.00 (PMHW)

REFER TO SHEET A141 FOR "Architectural Railing, Type B, Lower Deck w/LED" RAIL LOCATIONS AND MOUNTING DETAILS. COORDINATE WITH ENLARGED DECK JOINT PLANS ON SHEETS A115 - A117 & A120.

REFER TO SHEET A130 AND A131 FOR LOWER DECK DRAINAGE PLAN AND SLEEPER LAYOUT PLAN.

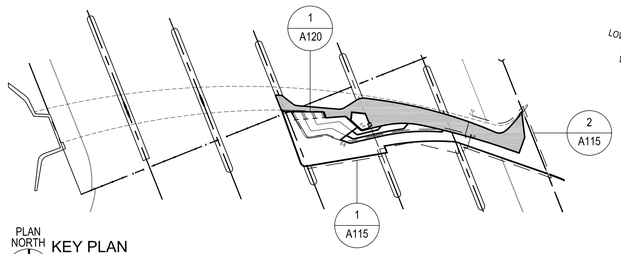

PLAN NORTH

KEY PLAN
OVERALL LOWER DECK JOINT PLAN

1/64" = 1'-0"

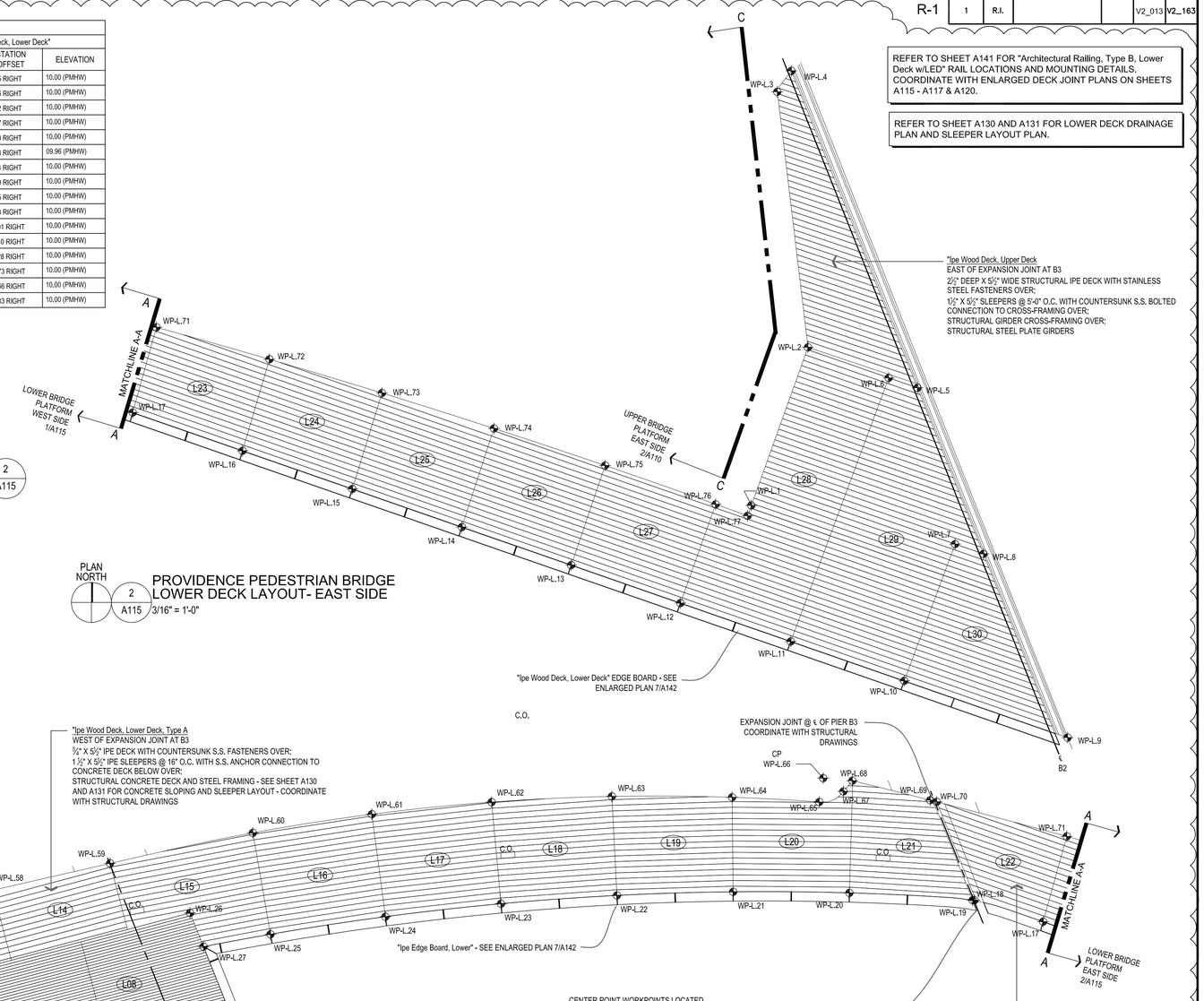

PLAN NORTH

PROVIDENCE PEDESTRIAN BRIDGE
LOWER DECK LAYOUT- EAST SIDE

2 / A115 3/16" = 1'-0"

"Ipe Wood, Lower Deck, Type A"
"Ipe Wood, Lower Deck, Type B"

THE CONTRACTOR MAY REFERENCE THE 3D DIGITAL MODEL RELEASED WITH THE TENDER DOCUMENTS FOR THIS PROJECT. THE MODEL CONTAINS THE NECESSARY LEVEL OF DETAIL FOR CROSS-TRADE COORDINATION AND CONSTRUCTION LAYOUT ASSOCIATED WITH THE COMPONENTS IDENTIFIED IN THIS SPECIAL PROVISION. THE 3D DIGITAL MODEL IS INTENDED TO AID THE CONTRACTOR IN ESTIMATING QUANTITIES AND MEANS AND METHODS. THE MODEL IS TO BE USED FOR REFERENCE ONLY.

C.O. 14" X 5-1/2" STAINLESS STEEL PLATE FOR DRAIN ACCESS CLEAN OUT. SEE TYPICAL DETAIL 3/A131

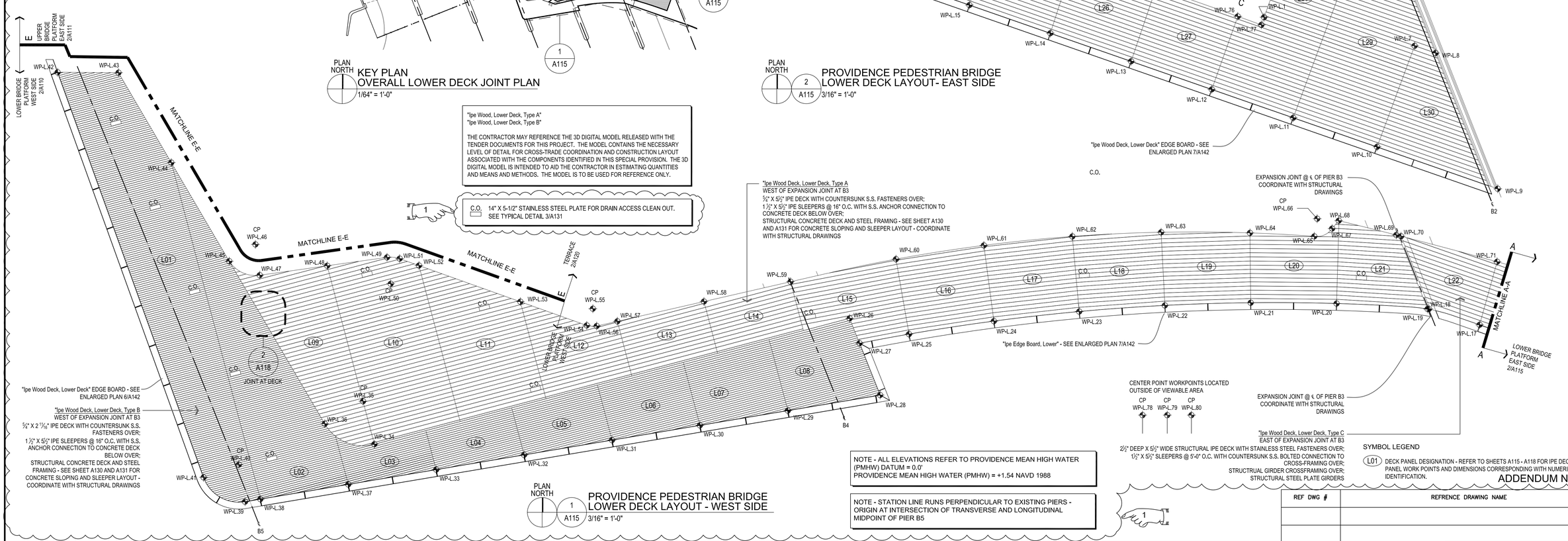

PLAN NORTH

PROVIDENCE PEDESTRIAN BRIDGE
LOWER DECK LAYOUT - WEST SIDE

1 / A115 3/16" = 1'-0"

NOTE - ALL ELEVATIONS REFER TO PROVIDENCE MEAN HIGH WATER (PMHW) DATUM = 0.0'
PROVIDENCE MEAN HIGH WATER (PMHW) = +1.54 NAVD 1988

NOTE - STATION LINE RUNS PERPENDICULAR TO EXISTING PIERS - ORIGIN AT INTERSECTION OF TRANSVERSE AND LONGITUDINAL MIDPOINT OF PIER B5

SYMBOL LEGEND

L01 DECK PANEL DESIGNATION - REFER TO SHEETS A115 - A118 FOR IPE DECK PANEL WORK POINTS AND DIMENSIONS CORRESPONDING WITH NUMERIC IDENTIFICATION.

ADDENDUM NO. 4

REF DWG #	REFRENCE DRAWING NAME

CDR MAGUIRE

inFORM studio
235 east main street, suite 102b
northville, mi 48167
(p) 248.449.3564
(f) 248.449.6984
www.in-formstudio.com
Buro Happold

BETA Group, Inc.
Engineers • Planners • Landscape Architects
Lincoln, RI - Norwood, MA - Hartford, CT

RHODE ISLAND
DEPARTMENT OF TRANSPORTATION

INTERSTATE 195

DESIGNED BY:
CHECKED:
DATE:
SHEET: V2_013
OF: V2_163

SCALE:

REVISIONS NO.	DATE	BY	REVISIONS NO.	DATE	BY
1	6/14/2016	CL			

IMPROVEMENTS TO
INTERSTATE ROUTE 195
CONTRACT 16 VOLUME 2

PROVIDENCE RHODE ISLAND

OVERALL LOWER DECK
ENLARGED DECK JOINT PLANS

A115

R:\Current\2010.1881.01_Providence Pedestrian Bridge\drawings\current\100% Submittal\1881_A115-A118.dwg, 6/10/2016 3:08:58 PM, InFORM 04

1881_A115-A118

FED ROAD DIV. NO.	STATE	FEDERAL AID PROJECT NO.	FISCAL YEAR	SHEET NO.	TOTAL SHEETS
1	R.I.			V2_014	V2_163

R-1

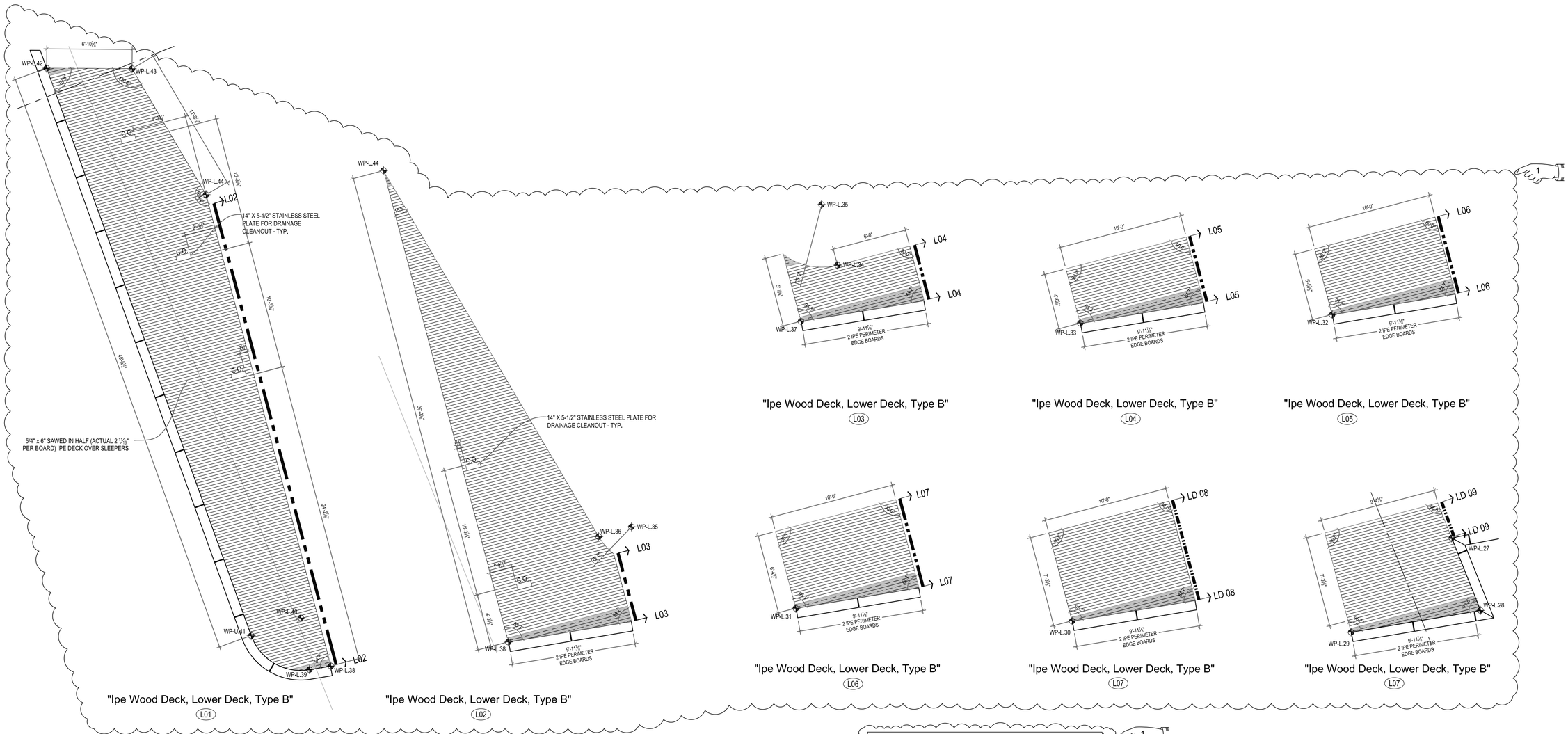

PLAN NORTH

1 / A116 LOWER DECK LAYOUT
1/4" = 1'-0"

C.O. 14" X 5-1/2" STAINLESS STEEL PLATE FOR DRAIN ACCESS CLEAN OUT. SEE TYPICAL DETAIL 3/A131

1/8" ROUTED GROOVE

CUSTOM IPE BOARD AT EDGE OF DECKING

DIMENSION & ANGLE FOR ALL IPE PERIMETER EDGE BOARDS TO BE COORDINATED WITH 3D DIGITAL MODEL ISSUED AS PART OF THIS CONSTRUCTION DOCUMENT PACKAGE

ADDENDUM NO. 4

REF DWG #	REFRENCE DRAWING NAME

CDR MAGUIRE

inFORM studio
235 east main street, suite 102b
northville, mi 48167
(p) 248.449.3564
(f) 248.449.6984
www.in-formstudio.com
Buro Happold

BETA Group, Inc.
Engineers • Planners • Landscape Architects
Lincoln, RI - Norwood, MA - Hartford, CT

RHODE ISLAND STATE OF HOPE

RHODE ISLAND
DEPARTMENT OF TRANSPORTATION

INTERSTATE 195

DESIGNED BY:
CHECKED:
DATE:
SHEET: V2_014
OF: V2_163

SCALE:

REVISIONS			REVISIONS		
NO.	DATE	BY	NO.	DATE	BY
1	6/14/2016	CL			

IMPROVEMENTS TO
INTERSTATE ROUTE 195
PROVIDENCE CONTRACT 16 VOLUME 2 RHODE ISLAND

ENLARGED DECK LAYOUT PLANS
LOWER DECK

A116

R:\Current\2010.1881.01_Providence Pedestrian Bridge\drawings\current\100% Submittal\1881_A115-A118.dwg, 6/10/2016 3:07:33 PM, InFORM 04

1881_A115-A118

FED ROAD DIV. NO.	STATE	FEDERAL AID PROJECT NO.	FISCAL YEAR	SHEET NO.	TOTAL SHEETS
1	R.I.			V2_015	V2_163

R-1

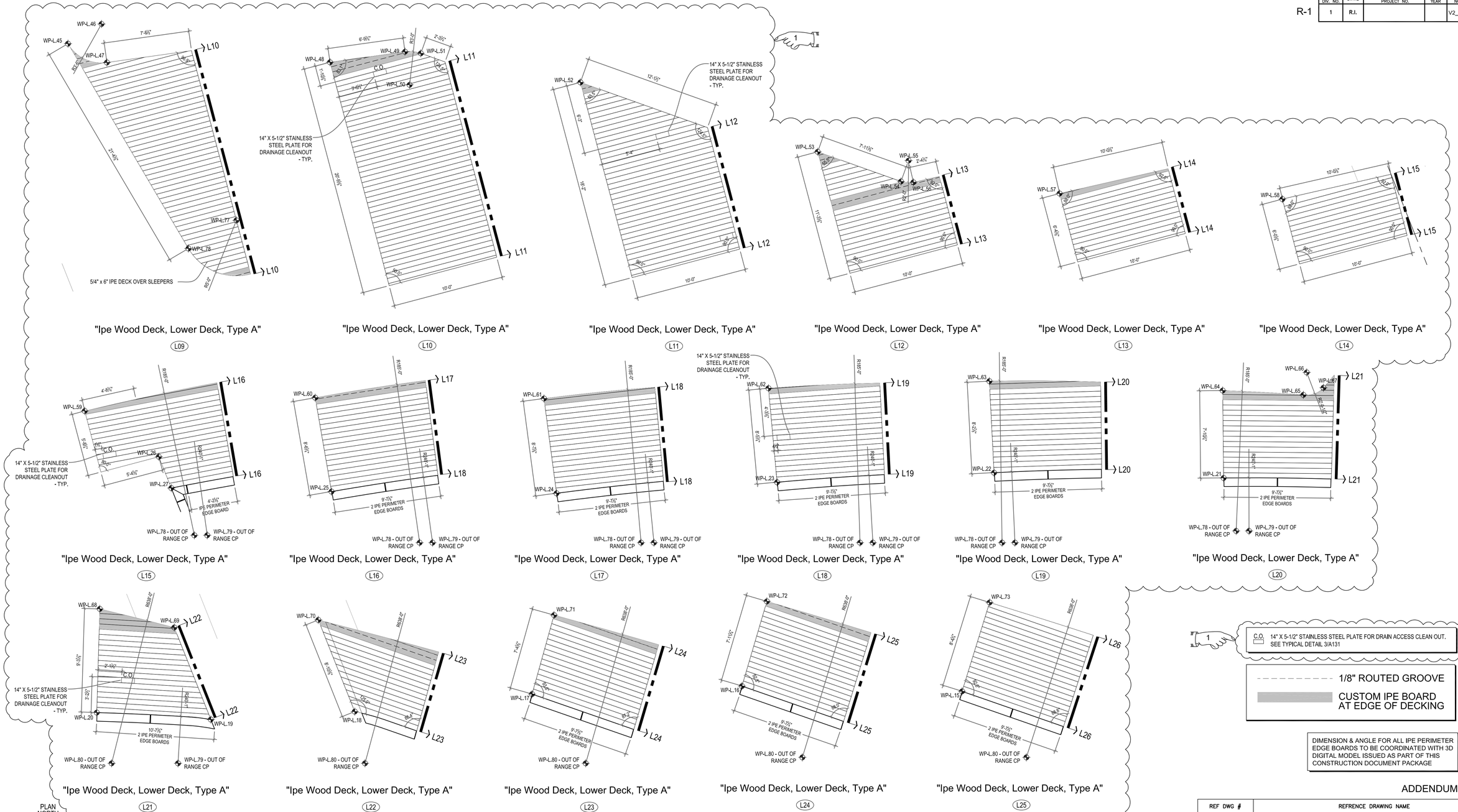

DIMENSION & ANGLE FOR ALL IPE PERIMETER EDGE BOARDS TO BE COORDINATED WITH 3D DIGITAL MODEL ISSUED AS PART OF THIS CONSTRUCTION DOCUMENT PACKAGE

ADDENDUM NO. 4

PLAN NORTH

1 A117 LOWER DECK LAYOUT
1/4" = 1'-0"

REF DWG #	REFRENCE DRAWING NAME

CDR MAGUIRE

inFORM studio
235 east main street, suite 102b
northville, mi 48167
(p) 248.449.3564
(f) 248.449.6984
www.in-formstudio.com
Buro Happold

BETA Group, Inc.
Engineers • Planners • Landscape Architects
Lincoln, RI - Norwood, MA - Hartford, CT

RHODE ISLAND
DEPARTMENT OF TRANSPORTATION

INTERSTATE 195

DESIGNED BY:
CHECKED:
DATE:
SHEET: V2_015
OF: V2_163

SCALE:

REVISIONS			REVISIONS		
NO.	DATE	BY	NO.	DATE	BY
1	6/14/2016	CL			

IMPROVEMENTS TO
INTERSTATE ROUTE 195
CONTRACT 16 VOLUME 2
PROVIDENCE RHODE ISLAND

ENLARGED DECK LAYOUT PLANS
LOWER DECK

A117

R:\Current\2010.1881.01_Providence Pedestrian Bridge\drawings\current\100% Submittal\1881_A115-A118.dwg, 6/10/2016 3:06:55 PM, InFORM 04

1881_A115-A118

R-1	FED ROAD DIV. NO.	STATE	FEDERAL AID PROJECT NO.	FISCAL YEAR	SHEET NO.	TOTAL SHEETS
	1	R.I.			V2_016	V2_163

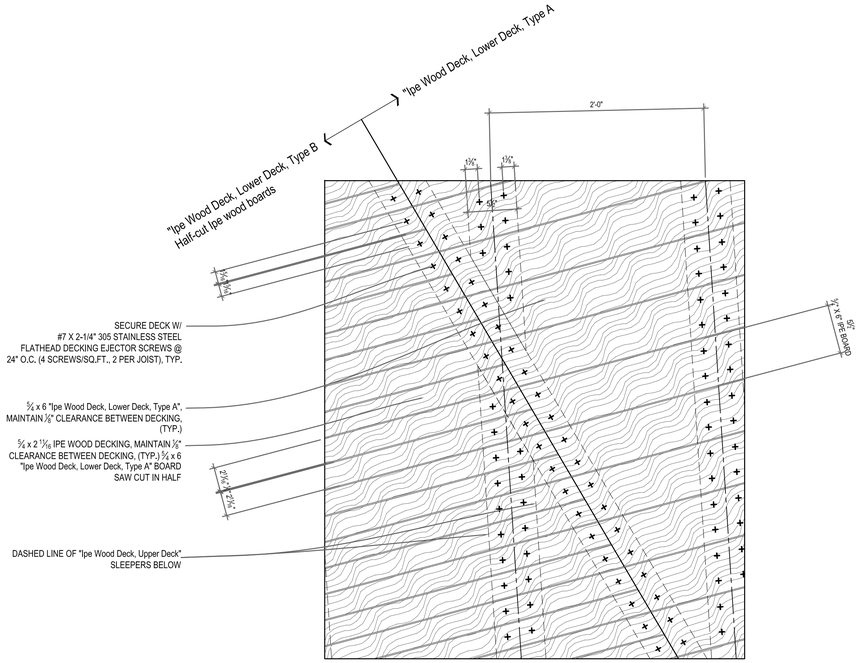

2 / A118 ENLARGED DECK PLAN AT JOINT BETWEEN LOWER DECK TYPES
1 1/2" = 1'-0"

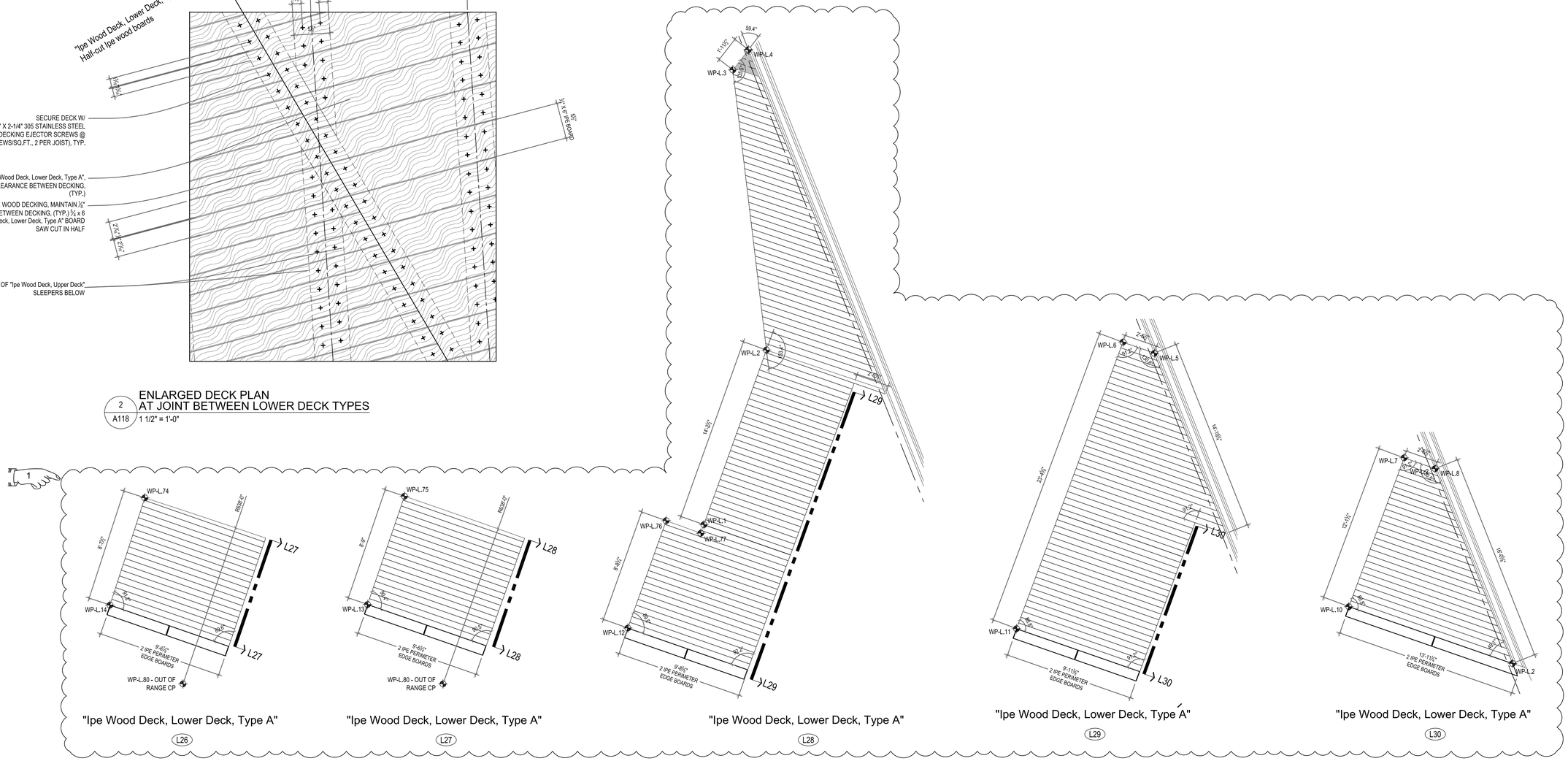

PLAN NORTH

1 / A118 LOWER DECK LAYOUT
1/4" = 1'-0"

DIMENSION & ANGLE FOR ALL IPE PERIMETER EDGE BOARDS TO BE COORDINATED WITH 3D DIGITAL MODEL ISSUED AS PART OF THIS CONSTRUCTION DOCUMENT PACKAGE

ADDENDUM NO. 4

REF DWG #	REFRENCE DRAWING NAME

CDR MAGUIRE

inFORM studio
235 east main street, suite 102b
northville, mi 48167
(p) 248.449.3564
(f) 248.449.6984
www.in-formstudio.com
Buro Happold

BETA Group, Inc.
Engineers • Planners • Landscape Architects
Lincoln, RI - Norwood, MA - Hartford, CT

RHODE ISLAND
DEPARTMENT OF TRANSPORTATION

INTERSTATE 195

DESIGNED BY:
CHECKED:
DATE:
SHEET: V2_016
OF: V2_163

SCALE:

REVISIONS			REVISIONS		
NO.	DATE	BY	NO.	DATE	BY
1	6/14/2016	CL			

IMPROVEMENTS TO
INTERSTATE ROUTE 195
CONTRACT 16 VOLUME 2
PROVIDENCE RHODE ISLAND

ENLARGED DECK LAYOUT PLANS
LOWER DECK

A118

R:\Current\2010.1881.01_Providence Pedestrian Bridge\drawings\current\100% Submittal\1881_A115-A118.dwg, 6/10/2016 3:03:07 PM, InFORM 04

1881_A115-A118

FED. ROAD DIV. NO.	STATE	FEDERAL AID PROJECT NO.	FISCAL YEAR	SHEET NO.	TOTAL SHEETS
1	R.I.			V2_017	V2_163

R-1

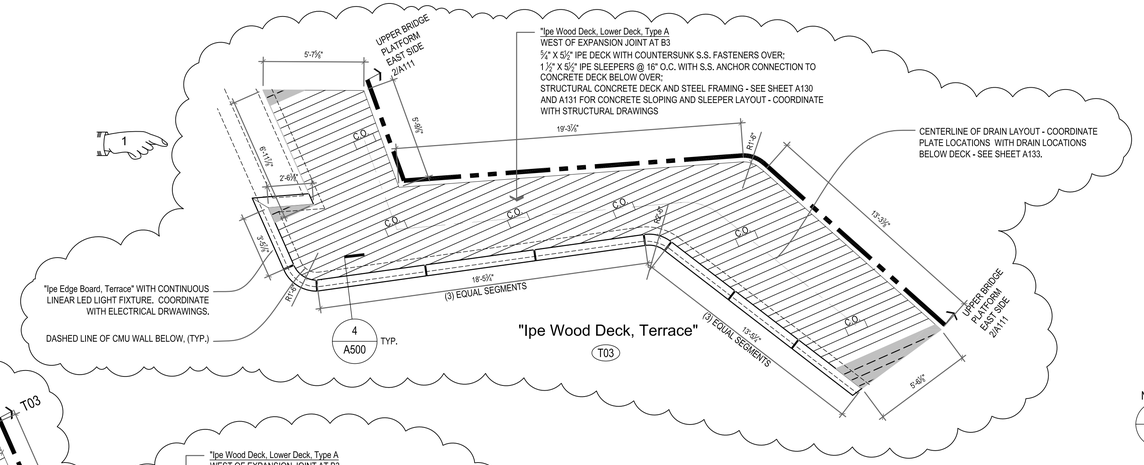

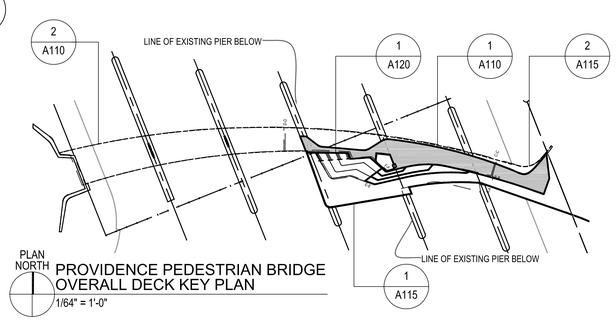

PROVIDENCE PEDESTRIAN BRIDGE OVERALL DECK KEY PLAN
1/64" = 1'-0"

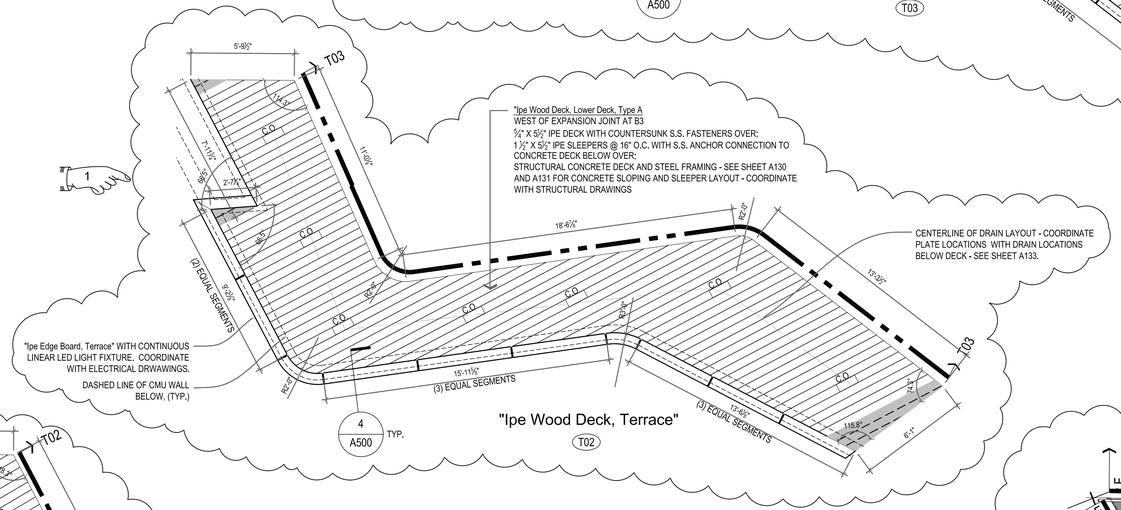

1/8" ROUTED GROOVE

CUSTOM IPE BOARD AT EDGE OF DECKING

DIMENSION & ANGLE FOR ALL IPE PERIMETER EDGE BOARDS TO BE COORDINATED WITH 3D DIGITAL MODEL ISSUED AS PART OF THIS CONSTRUCTION DOCUMENT PACKAGE

C.O. 14" X 5-1/2" STAINLESS STEEL PLATE FOR DRAIN ACCESS CLEAN OUT. SEE TYPICAL DETAIL 3/A131.

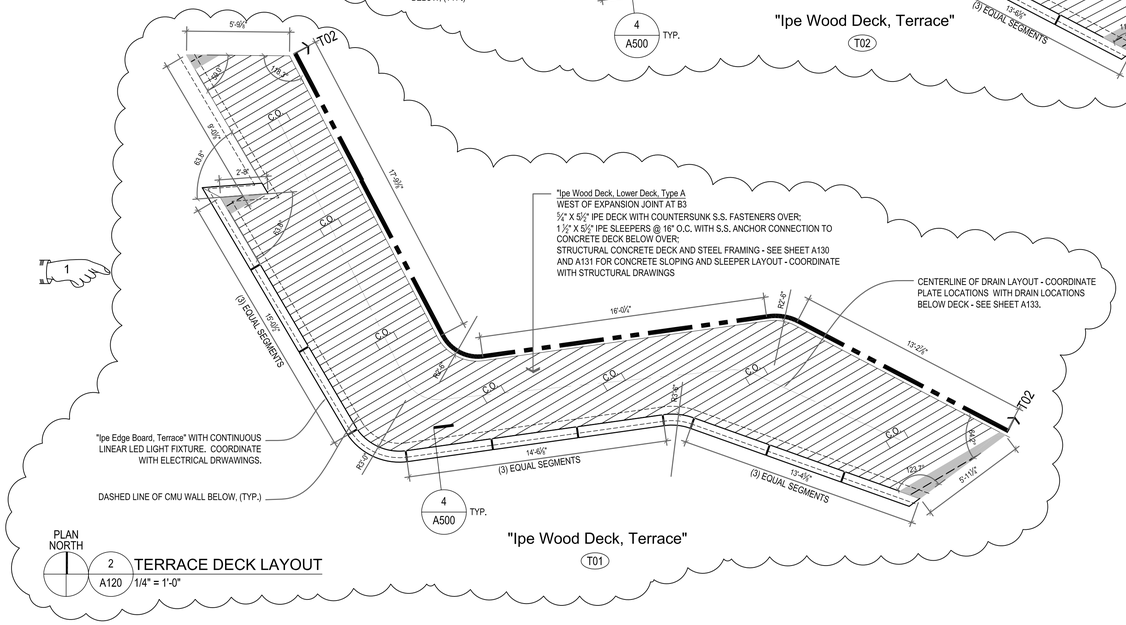

PLAN NORTH 2 A120 TERRACE DECK LAYOUT
1/4" = 1'-0"

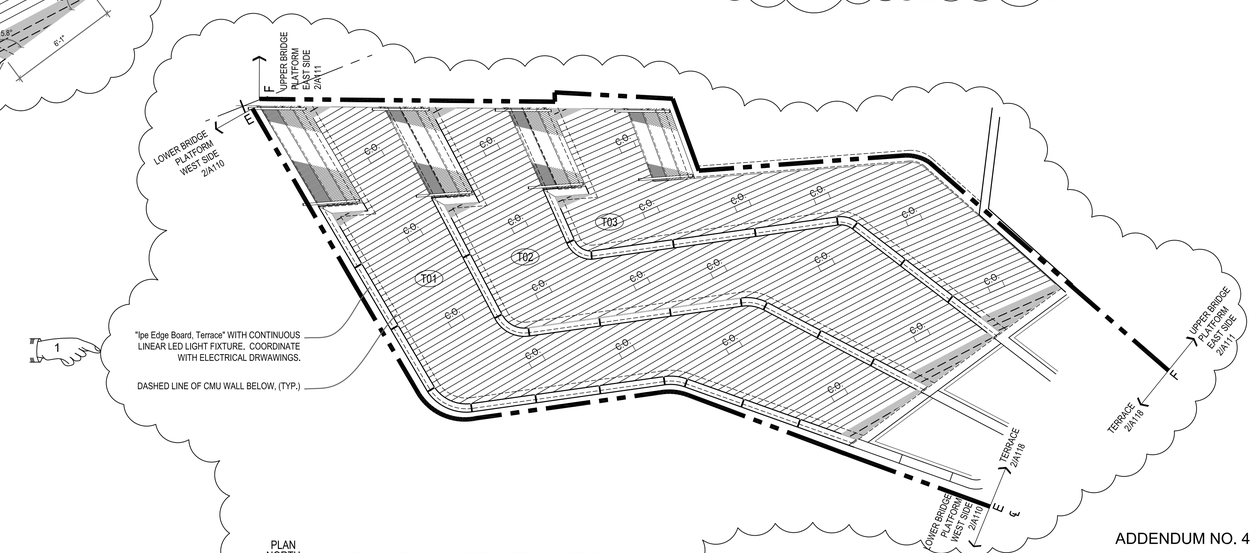

PLAN NORTH 1 A120 PROVIDENCE PEDESTRIAN BRIDGE TERRACE DECK LAYOUT
3/16" = 1'-0"

ADDENDUM NO. 4

REF. DWG #	REFRENCE DRAWING NAME
S701	ELEVATED PLANTER DETAILS
S704	TERRACE WALL DETAILS - 2

CDR MAGUIRE

inFORM studio
235 east main street, suite 102b
northville, mi 48167
(p) 248.449.3564
(f) 248.449.6984
www.in-formstudio.com
Buro Happold

BETA Group, Inc.
Engineers • Planners • Landscape Architects
Lincoln, RI - Norwood, MA - Hartford, CT

RHODE ISLAND STATE OF HOPE

RHODE ISLAND
DEPARTMENT OF TRANSPORTATION

INTERSTATE 195

DESIGNED BY:
CHECKED:
DATE:
SHEET: V2_017
OF: V2_163

SCALE:

REVISIONS			REVISIONS		
NO.	DATE	BY	NO.	DATE	BY
1	6/14/2016	CL			

IMPROVEMENTS TO INTERSTATE ROUTE 195
PROVIDENCE — CONTRACT 16 VOLUME 2 — RHODE ISLAND

OVERALL TERRACE DECK ENLARGED DECK JOINT PLANS

A120

R:\Current\2010.1881.01_Providence Pedestrian Bridge\drawings\current\100% Submittal\1881_A120.dwg, 6/9/2016 9:14:44 AM, Cory Lavigne

FED. ROAD DIV. NO.	STATE	FEDERAL AID PROJECT NO.	FISCAL YEAR	SHEET NO.	TOTAL SHEETS
1	R.I.			V2_020	V2_163

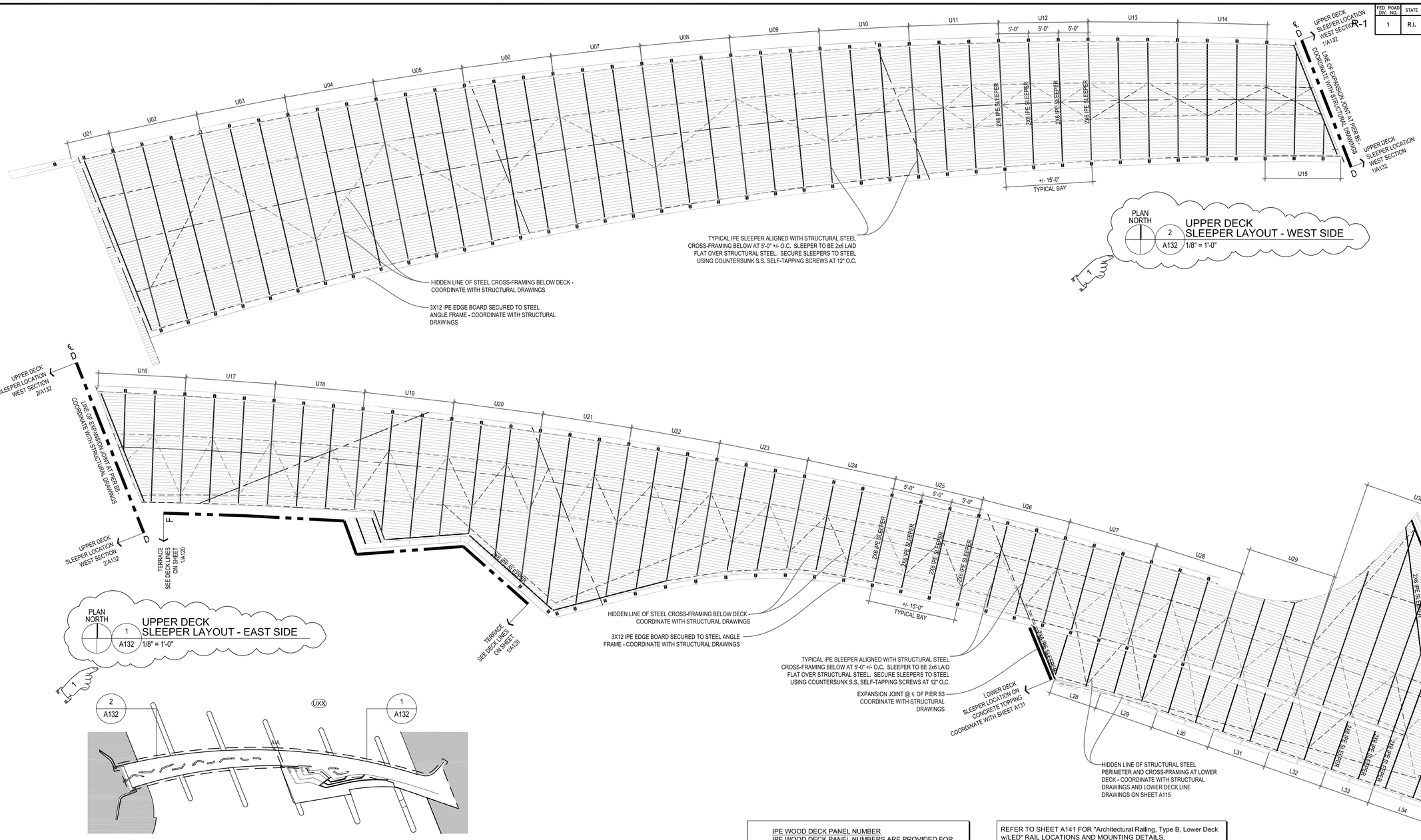

IPE WOOD DECK PANEL NUMBER
IPE WOOD DECK PANEL NUMBERS ARE PROVIDED FOR REFERENCE PURPOSES. COORDINATE SLEEPER LAYOUT WITH DECK LAYOUT SHEETS A110 TO A120 AND STRUCTURAL DRAWINGS.

REFER TO SHEET A141 FOR "Architectural Railing, Type B, Lower Deck w/LED" RAIL LOCATIONS AND MOUNTING DETAILS.

COORDINATE WITH ENLARGED DECK JOINT PLANS ON SHEETS A115 - A117 & A120. LINES ON PLAN REPRESENT CENTERLINES OF IPE SLEEPERS

ADDENDUM NO. 4

REF DWG #	REFRENCE DRAWING NAME

CDR MAGUIRE

inFORM studio
235 east main street, suite 102b
northville, mi 48167
(p) 248.449.3564
(f) 248.449.6984
www.in-formstudio.com
Buro Happold

BETA Group, Inc.
Engineers • Planners • Landscape Architects
Lincoln, RI - Norwood, MA - Hartford, CT

RHODE ISLAND
DEPARTMENT OF TRANSPORTATION

INTERSTATE 195

DESIGNED BY:
CHECKED:
DATE:
SHEET: V2_020
OF: V2_163

SCALE:

REVISIONS			REVISIONS		
NO.	DATE	BY	NO.	DATE	BY
1	6/14/2016	CL			

IMPROVEMENTS TO
INTERSTATE ROUTE 195
CONTRACT 16 VOLUME 2
PROVIDENCE RHODE ISLAND

UPPER AND PARTIAL LOWER DECK SLEEPER LAYOUT

A132

R:\Current\2010.1881.01_Providence Pedestrian Bridge\drawings\current\100% Submittal\1881_A132.dwg, 6/9/2016 8:46:44 AM, Cory Lavigne

R-1	FED. ROAD DIV. NO.	STATE	FEDERAL AID PROJECT NO.	FISCAL YEAR	SHEET NO.	TOTAL SHEETS
	1	R.I.			V2_021	V2_163

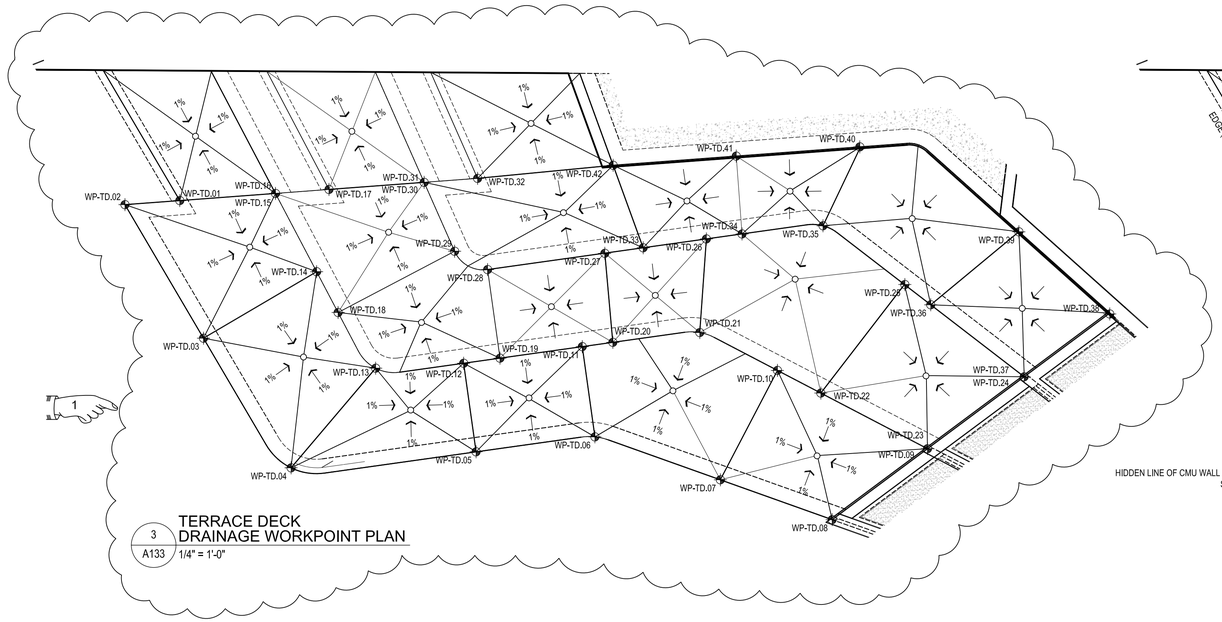

3 A133 TERRACE DECK DRAINAGE WORKPOINT PLAN
1/4" = 1'-0"

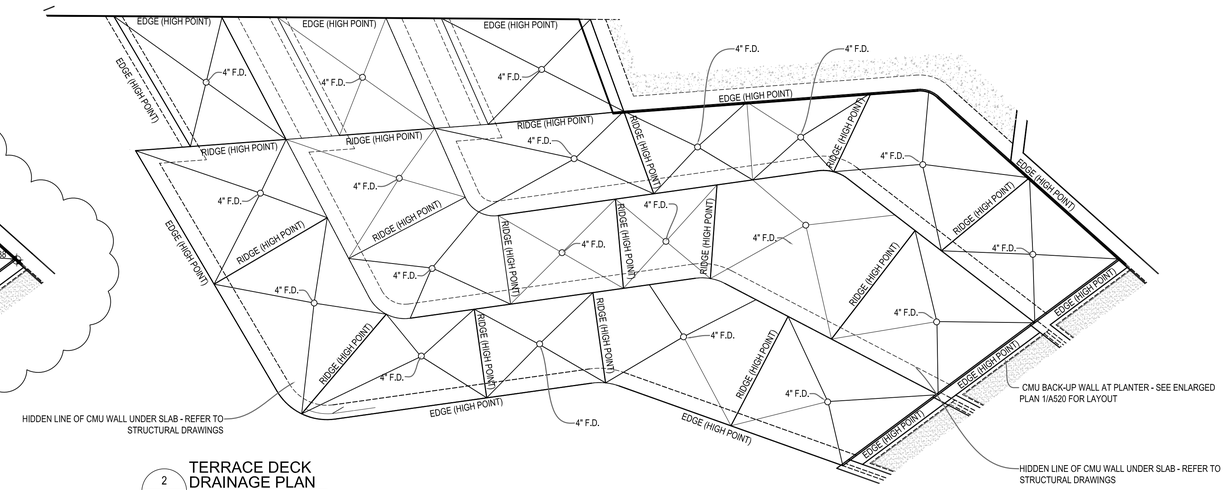

2 A133 TERRACE DECK DRAINAGE PLAN
1/4" = 1'-0"

WORK POINT	PLAN DATA Terrace Deck STATION	STATION OFFSET	ELEVATION
WP-TD.1	3+05.70	10.09 RIGHT	11.50 (PMHW)
WP-TD.2	3+02.77	09.17 RIGHT	11.50 (PMHW)
WP-TD.3	3+04.09	17.73 RIGHT	11.50 (PMHW)
WP-TD.4	3+05.97	26.28 RIGHT	11.50 (PMHW)
WP-TD.5	3+15.91	29.26 RIGHT	11.50 (PMHW)
WP-TD.6	3+22.39	30.94 RIGHT	11.50 (PMHW)
WP-TD.7	3+28.02	35.76 RIGHT	11.50 (PMHW)
WP-TD.8	3+33.01	40.14 RIGHT	11.50 (PMHW)
WP-TD.9	3+39.43	38.42 RIGHT	11.50 (PMHW)
WP-TD.10	3+33.25	31.25 RIGHT	11.50 (PMHW)
WP-TD.11	3+23.60	25.99 RIGHT	11.50 (PMHW)
WP-TD.12	3+17.09	24.40 RIGHT	11.50 (PMHW)
WP-TD.13	3+12.42	22.84 RIGHT	11.50 (PMHW)
WP-TD.14	3+11.35	16.61 RIGHT	11.50 (PMHW)

WORK POINT	PLAN DATA Terrace Deck STATION	STATION OFFSET	ELEVATION
WP-TD.15	3+10.82	11.70 RIGHT	11.50 (PMHW)
WP-TD.16	3+10.82	11.70 RIGHT	13.22 (PMHW)
WP-TD.17	3+13.68	12.59 RIGHT	13.22 (PMHW)
WP-TD.18	3+11.62	19.18 RIGHT	13.22 (PMHW)
WP-TD.19	3+19.09	24.89 RIGHT	13.22 (PMHW)
WP-TD.20	3+25.27	26.40 RIGHT	13.22 (PMHW)
WP-TD.21	3+29.99	27.68 RIGHT	13.22 (PMHW)
WP-TD.22	3+35.03	33.32 RIGHT	13.22 (PMHW)
WP-TD.23	3+39.43	38.42 RIGHT	13.22 (PMHW)
WP-TD.24	3+45.93	36.68 RIGHT	13.22 (PMHW)
WP-TD.25	3+41.62	29.41 RIGHT	13.22 (PMHW)
WP-TD.26	3+32.27	22.95 RIGHT	13.22 (PMHW)
WP-TD.27	3+26.70	21.60 RIGHT	13.22 (PMHW)
WP-TD.28	3+20.27	20.03 RIGHT	13.22 (PMHW)

WORK POINT	PLAN DATA Terrace Deck STATION	STATION OFFSET	ELEVATION
WP-TD.29	3+18.94	18.40 RIGHT	13.22 (PMHW)
WP-TD.30	3+18.77	14.19 RIGHT	13.22 (PMHW)
WP-TD.31	3+18.77	14.19 RIGHT	14.93 (PMHW)
WP-TD.32	3+21.63	15.09 RIGHT	14.93 (PMHW)
WP-TD.33	3+28.80	22.11 RIGHT	14.93 (PMHW)
WP-TD.34	3+34.22	23.43 RIGHT	14.93 (PMHW)
WP-TD.35	3+38.60	24.68 RIGHT	14.93 (PMHW)
WP-TD.36	3+42.56	31.01 RIGHT	14.93 (PMHW)
WP-TD.37	3+45.93	36.68 RIGHT	14.93 (PMHW)
WP-TD.38	3+51.70	35.13 RIGHT	14.93 (PMHW)
WP-TD.39	3+48.65	29.03 RIGHT	14.93 (PMHW)
WP-TD.40	3+42.18	21.35 RIGHT	14.93 (PMHW)
WP-TD.41	3+35.53	19.27 RIGHT	14.93 (PMHW)
WP-TD.42	3+28.95	17.20 RIGHT	14.93 (PMHW)

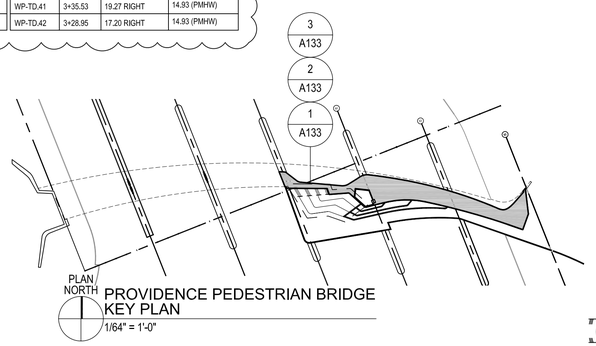

PROVIDENCE PEDESTRIAN BRIDGE KEY PLAN
1/64" = 1'-0"

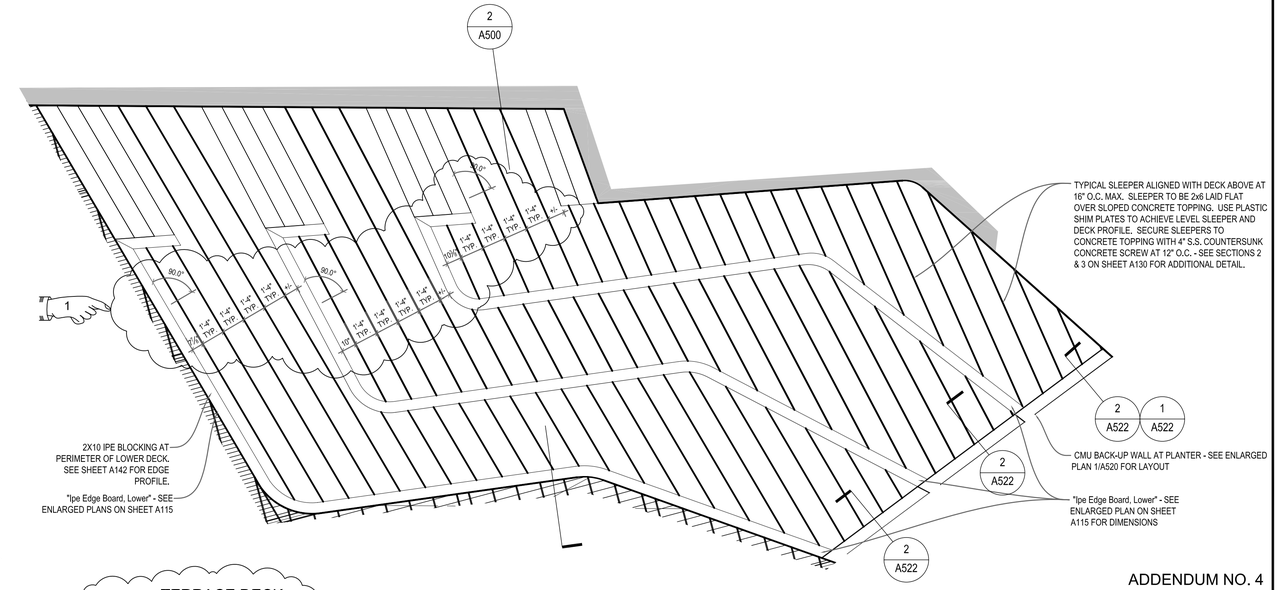

1 A133 TERRACE DECK SLEEPER LAYOUT
1/4" = 1'-0"

ADDENDUM NO. 4

REF DWG #	REFRENCE DRAWING NAME
S501	UPPER DECK DETAILS

CDR MAGUIRE

inFORM studio
235 east main street, suite 102b
northville, mi 48167
(p) 248.449.3564
(f) 248.449.6984
www.in-formstudio.com
Buro Happold

BETA Group, Inc.
Engineers • Planners • Landscape Architects
Lincoln, RI - Norwood, MA - Hartford, CT

RHODE ISLAND DEPARTMENT OF TRANSPORTATION

INTERSTATE 195

DESIGNED BY:
CHECKED:
DATE:
SHEET: V2_021
OF: V2_163

SCALE:

REVISIONS NO.	DATE	BY	REVISIONS NO.	DATE	BY
1	6/14/2016	CL			

IMPROVEMENTS TO INTERSTATE ROUTE 195
CONTRACT 16 VOLUME 2
PROVIDENCE RHODE ISLAND

TERRACE DECK DRAINAGE SLEEPER PLAN AND SECTIONS

A133

R:\Current\2010.1881.01_Providence Pedestrian Bridge\drawings\current\100% Submittal\1881_A133.dwg, 6/13/2016 12:02:35 PM, InFORM 04

1881_A133

FED. ROAD DIV. NO.	STATE	FEDERAL AID PROJECT NO.	FISCAL YEAR	SHEET NO.	TOTAL SHEETS
1	R.I.			V2_022	V2_163

R-1

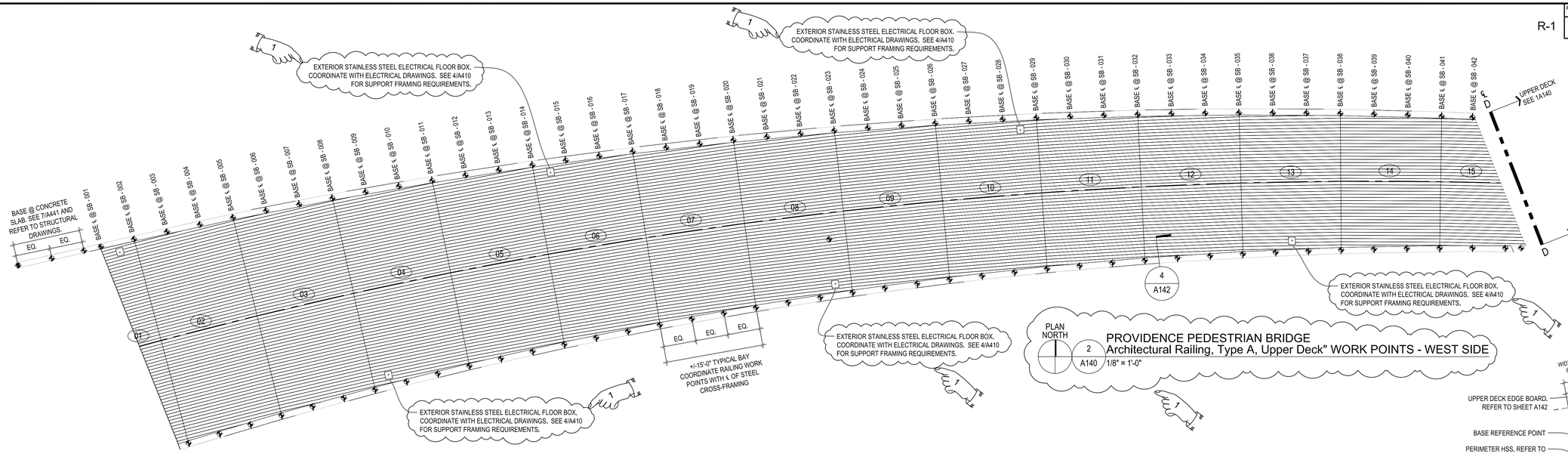

PLAN NORTH

2 A140 PROVIDENCE PEDESTRIAN BRIDGE
Architectural Railing, Type A, Upper Deck" WORK POINTS - WEST SIDE
1/8" = 1'-0"

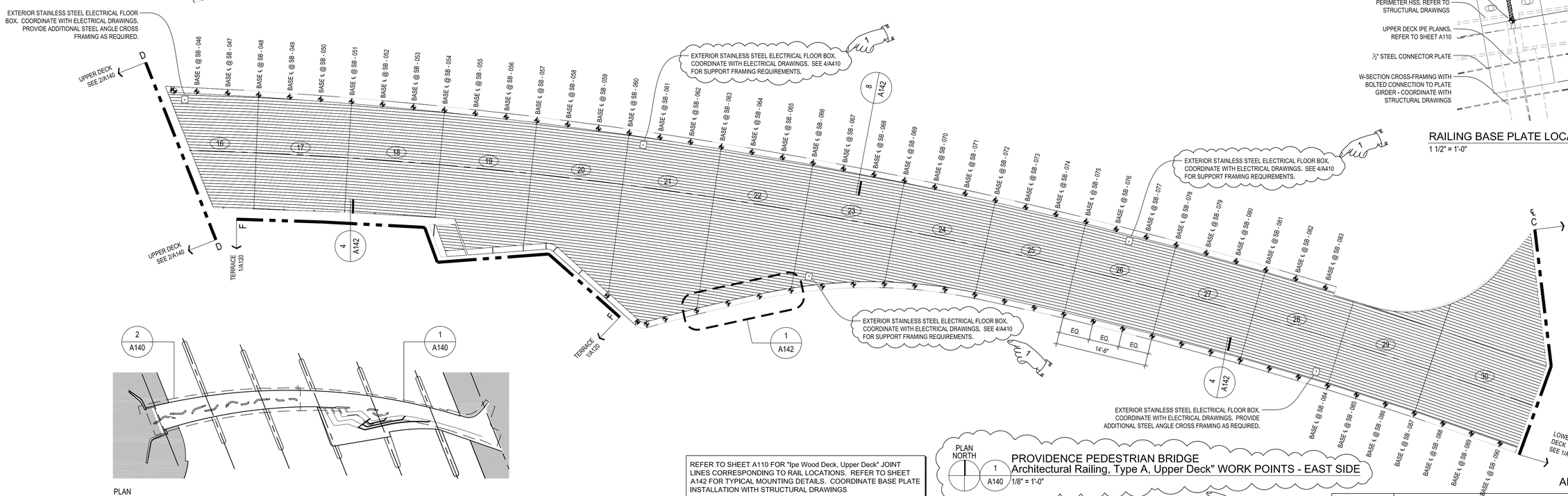

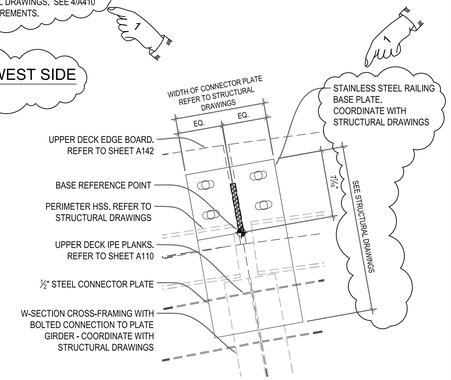

RAILING BASE PLATE LOCATION
1 1/2" = 1'-0"

PLAN NORTH

PROVIDENCE PEDESTRIAN BRIDGE
KEY PLAN
1/64" = 1'-0"

REFER TO SHEET A110 FOR "Ipe Wood Deck, Upper Deck" JOINT LINES CORRESPONDING TO RAIL LOCATIONS. REFER TO SHEET A142 FOR TYPICAL MOUNTING DETAILS. COORDINATE BASE PLATE INSTALLATION WITH STRUCTURAL DRAWINGS

PLAN NORTH

1 A140 PROVIDENCE PEDESTRIAN BRIDGE
Architectural Railing, Type A, Upper Deck" WORK POINTS - EAST SIDE
1/8" = 1'-0"

ADDENDUM NO. 4

REF DWG #	REFRENCE DRAWING NAME

CDR MAGUIRE

inFORM studio
235 east main street, suite 102b
northville, mi 48167
(p) 248.449.3564
(f) 248.449.6984
www.in-formstudio.com

Buro Happold

BETA Group, Inc.
Engineers • Planners • Landscape Architects
Lincoln, RI - Norwood, MA - Hartford, CT

RHODE ISLAND
DEPARTMENT OF TRANSPORTATION

INTERSTATE 195

DESIGNED BY:
CHECKED:
DATE:
SHEET: V2_022
OF: V2_163

SCALE:

REVISIONS			REVISIONS		
NO.	DATE	BY	NO.	DATE	BY
1	6/14/2016	CL			

IMPROVEMENTS TO
INTERSTATE ROUTE 195
CONTRACT 16 VOLUME 2
PROVIDENCE RHODE ISLAND

ENLARGED RAILING LOCATION PLAN
UPPER DECK

A140

R:\Current\2010.1881.01_Providence Pedestrian Bridge\drawings\current\100% Submittal\1881_A140.dwg, 6/9/2016 9:32:06 AM, Cory Lavigne

FED. ROAD DIV. NO.	STATE	FEDERAL AID PROJECT NO.	FISCAL YEAR	SHEET NO.	TOTAL SHEETS
1	R.I.			V2_028	V2_163

R-1

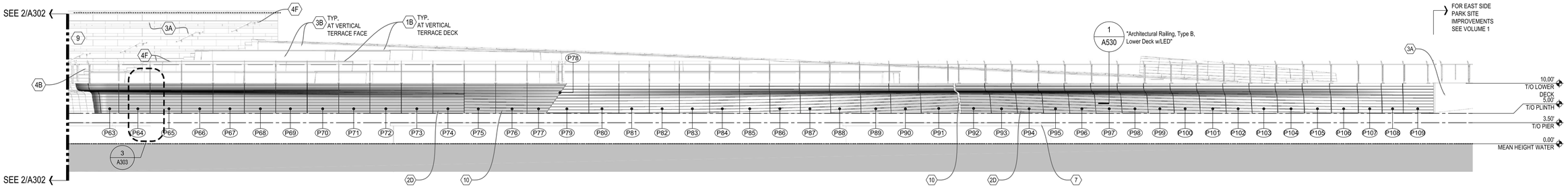

3 A301 ENLARGED ELEVATION
WANA WOOD, LOWER BRIDGE FASCIA - SOUTH
1/8" = 1'-0"

PXX WANA WOOD FASCIA PANEL NUMBER
WANA TO BE ¾" THICK x 5 ½" WIDE x LENGTH OF PANEL. PROVIDE A ⅛" GAP BETWEEN BOARDS - TYPICAL. SECURE WANA PANELS TO SUB-FRAMING WITH STAINLESS STEEL CONNECTORS. COORDINATE INSTALLATION WITH STRUCTURAL ANGLE PANEL FRAMING - SEE STRUCTURAL DRAWINGS.

MATERIAL LEGEND

- 1A IPE WOOD DECK, UPPER DECK
- 1B IPE WOOD DECK, TERRACE
- 1C IPE WOOD DECK, LOWER DECK, TYPE A
- 1D IPE WOOD DECK, LOWER DECK, TYPE B
- 2A WANA WOOD, UPPER BRIDGE FASCIA - SOUTH
- 2B WANA WOOD, LOWER BRIDGE FASCIA - NORTH
- 2C WANA WOOD, LOWER BRIDGE FASCIA - SOUTH
- 2D WANA WOOD, LOWER BRIDGE FASCIA - SOUTH
- 3A MASONRY VENEER, BLUESTONE TILE
- 3B MASONRY VENEER, BLUESTONE TILE, SLOPED
- 3C MASONRY VENEER, BLUESTONE COPING
- 3D MASONRY VENEER, BLUESTONE STEPS
- 4A ARCHITECTURAL RAILING, TYPE A, UPPER DECK w/LED
- 4B ARCHITECTURAL RAILING, TYPE B, LOWER DECK w/LED
- 4C ARCHITECTURAL RAILING, TYPE C, HANDRAIL AT STEPS
- 4D ARCHITECTURAL RAILING, TYPE D, WEST ABUTMENT w/LED
- 4E ARCHITECTURAL RAILING, TYPE E, EAST ABUTMENT w/LED
- 4F ARCHITECTURAL RAILING, TYPE F, HANDRAIL w/LED
- 5 RIVER WALL ON EXISTING RIP-RAP BASE (SEE VOLUME 1)
- 6 WETLAND PLANTING (SEE VOLUME 1)
- 7 EXISTING PIER FOUNDATION W/ GRANITE MASONRY VENEER
- 8 COLUMN SUPPORT - SEE STRUCTURAL DRAWINGS
- 9 ARCHITECTURAL S.S. DECORATIVE PLATE
- 10 EXPANSION JOINT COVER PLATE, STAINLESS STEEL
- 11 ARCHITECTURAL STAINLESS STEEL MESH
- 12 ARCHITECTURAL BENCH - SEE ENLARGED PLANS ON SHEET A420 - A426 TO BENCH TYPES
- 13A IPE EDGE BOARD, UPPER
- 13B IPE EDGE BOARD, LOWER
- 13C IPE EDGE BOARD, TERRACE
- 14A LINEAR UPLIGHT - SEE ELECTRICAL DRAWINGS
- 14B PIER FLOOD LIGHT - SEE ELECTRICAL DRAWINGS
- 14C PLANTER BOLLARD LIGHT - SEE ELECTRICAL DRAWINGS

REFERENCE SHEET A300 & A302 FOR MATERIALS NOT LABELED ON SHEET A301.

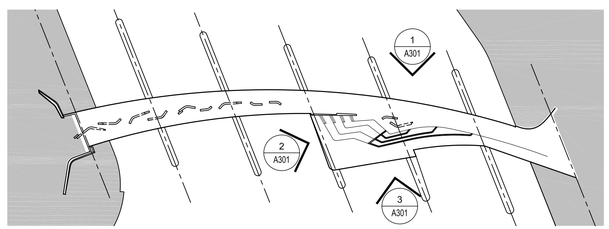

PROVIDENCE PEDESTRIAN BRIDGE
KEY PLAN
1/64" = 1'-0"

Wana Wood, Upper Bridge Fascia - North
Wana Wood, Upper Bridge Fascia - South
Wana Wood, Lower Bridge Fascia - North
Wana Wood, Lower Bridge Fascia - South

CONTRACTOR/FABRICATOR TO REFERENCE 3D DIGITAL MODEL RELEASED WITH THE TENDER DOCUMENTS FOR THE PROVIDENCE RIVER PEDESTRIAN BRIDGE PROJECT. THIS MODEL CONTAINS THE NECESSARY LEVEL OF DETAIL FOR CROSS-TRADE COORDINATION AND CONSTRUCTION LAYOUT ASSOCIATED WITH THE ARCHITECTURAL COMPONENTS IDENTIFIED ABOVE. THE 3D DIGITAL MODEL IS INTENDED TO AID THE CONTRACTOR IN ESTIMATING QUANTITIES AND THE DETERMINATION OF MEANS AND METHODS. THIS MODEL IS NOT TOPOGRAPHICALLY REFERENCED AND SHOULD BE USED FOR GEOMETRIC REFERENCE ONLY.

4A 4B REFER TO SHEETS A140 & A141 FOR "Architectural Railing, Type A, Upper Deck w/LED" AND "Architectural Railing, Type B, Lower Deck w/LED" RAIL LOCATIONS AND MOUNTING DETAILS. COORDINATE WITH ENLARGED DECK JOINT PLANS ON SHEETS A110 - A117 & A120.

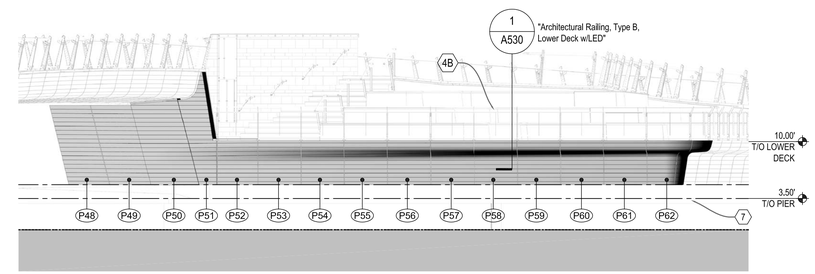

2 A301 ENLARGED ELEVATION
WANA WOOD, LOWER BRIDGE FASCIA - SOUTH
1/8" = 1'-0"

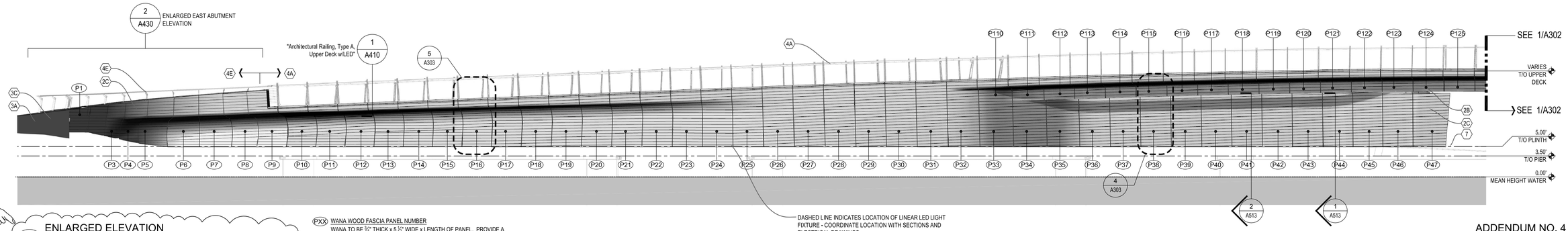

DASHED LINE INDICATES LOCATION OF LINEAR LED LIGHT FIXTURE - COORDINATE LOCATION WITH SECTIONS AND ELECTRICAL DRAWINGS.

1 A301 ENLARGED ELEVATION
WANA WOOD, LOWER BRIDGE FASCIA - NORTH
1/8" = 1'-0"

PXX WANA WOOD FASCIA PANEL NUMBER
WANA TO BE ¾" THICK x 5 ½" WIDE x LENGTH OF PANEL. PROVIDE A ⅛" GAP BETWEEN BOARDS - TYPICAL. SECURE WANA PANELS TO SUB-FRAMING WITH STAINLESS STEEL CONNECTORS. COORDINATE INSTALLATION WITH STRUCTURAL ANGLE PANEL FRAMING - SEE STRUCTURAL DRAWINGS.

ADDENDUM NO. 4

REF DWG #	REFRENCE DRAWING NAME

CDR MAGUIRE

inFORM studio
235 east main street, suite 102b
northville, mi 48167
(p) 248.449.3564
(f) 248.449.6984
www.in-formstudio.com
Buro Happold

BETA Group, Inc.
Engineers • Planners • Landscape Architects
Lincoln, RI - Norwood, MA - Hartford, CT

RHODE ISLAND
DEPARTMENT OF TRANSPORTATION

INTERSTATE 195

DESIGNED BY:
CHECKED:
DATE:
SHEET: V2_028
OF: V2_163

SCALE:

REVISIONS			REVISIONS		
NO.	DATE	BY	NO.	DATE	BY
1	6/14/2016	CL			

IMPROVEMENTS TO
INTERSTATE ROUTE 195
PROVIDENCE CONTRACT 16 VOLUME 2 RHODE ISLAND

ENLARGED ELEVATIONS
LOWER & UPPER BRIDGE FASCIA PANELS

A301

R:\Current\2010.1881.01_Providence Pedestrian Bridge\drawings\current\100% Submittal\1881_A301-A302.dwg, 6/9/2016 9:05:19 AM, Cory Lavigne

FED. ROAD DIV. NO.	STATE	FEDERAL AID PROJECT NO.	FISCAL YEAR	SHEET NO.	TOTAL SHEETS
1	R.I.			V2_031	V2_163

R-1

NOTE - DIMENSIONS ARE TO FACE OF C.I.P. CONCRETE.

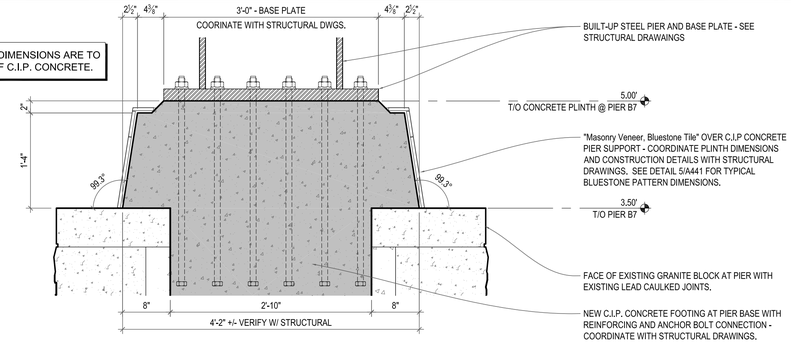

4 A400 PROVIDENCE PEDESTRIAN BRIDGE TYPICAL UPPER DECK SECTION - PIER B7
1/4" = 1'-0"

4A 4B REFER TO SHEETS A140 & A141 FOR "Architectural Railing, Type A, Upper Deck w/LED" AND "Architectural Railing, Type B, Lower Deck w/LED" RAIL LOCATIONS AND MOUNTING DETAILS. COORDINATE WITH ENLARGED DECK JOINT PLANS ON SHEETS A110 - A117 & A120.

"Architectural Railing, Type A, West ABUTMENT W/LED"

CONTRACTOR/FABRICATOR TO REFERENCE 3D DIGITAL MODEL RELEASED WITH THE TENDER DOCUMENTS FOR THE PROVIDENCE RIVER PEDESTRIAN BRIDGE PROJECT. THIS MODEL CONTAINS THE NECESSARY LEVEL OF DETAIL FOR CROSS-TRADE COORDINATION AND CONSTRUCTION LAYOUT ASSOCIATED WITH THE ARCHITECTURAL COMPONENTS IDENTIFIED ABOVE. THE 3D DIGITAL MODEL IS INTENDED TO AID THE CONTRACTOR IN ESTIMATING QUANTITIES AND THE DETERMINATION OF MEANS AND METHODS. THIS MODEL IS NOT TOPOGRAPHICALLY REFERENCED AND SHOULD BE USED FOR GEOMETRIC REFERENCE ONLY.

NOTE - ALL ELEVATIONS REFER TO PROVIDENCE MEAN HIGH WATER (PMHW) DATUM = 0.0'
PROVIDENCE MEAN HIGH WATER (PMHW) = +1.54 NAVD 1988

NOTE - STATION LINE RUNS PERPENDICULAR TO EXISTING PIERS - ORIGIN AT INTERSECTION OF TRANSVERSE AND LONGITUDINAL MIDPOINT OF PIER B5

NOTE - ALL STRUCTURAL STEEL AND FASCIA SUPPORT STEEL COMPONENTS TO RECIEVE THERMAL SPRAYED ZINC COATING PER SECTION 827 AND PAINTED PER SECTION 825

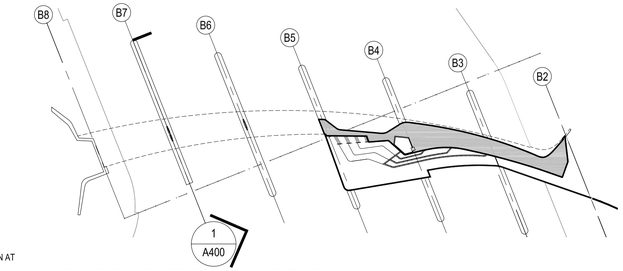

PROVIDENCE PEDESTRIAN BRIDGE KEY PLAN
1/64" = 1'-0"

4 A400 TYPICAL SECTION AT BUILT-UP PIER COORDINATE W/ STRUCTUREL

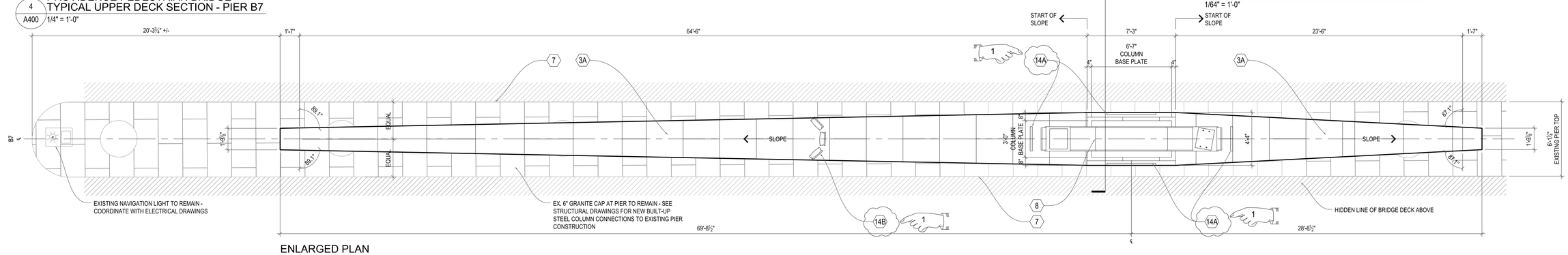

ENLARGED PLAN AT PIER B7
1/4" = 1'-0"

REFERENCE SHEET A500 - A505 FOR MATERIALS NOT LABELED ON THIS SHEET

MATERIAL LEGEND

- 1A IPE WOOD DECK, UPPER DECK
- 1B IPE WOOD DECK, TERRACE
- 1C IPE WOOD DECK, LOWER DECK, TYPE A
- 1D IPE WOOD DECK, LOWER DECK, TYPE B
- 2A WANA WOOD, UPPER BRIDGE FASCIA - SOUTH
- 2B WANA WOOD, LOWER BRIDGE FASCIA - NORTH
- 2C WANA WOOD, LOWER BRIDGE FASCIA - SOUTH
- 2D WANA WOOD, LOWER BRIDGE FASCIA - SOUTH
- 3A MASONRY VENEER, BLUESTONE TILE
- 3B MASONRY VENEER, BLUESTONE TILE, SLOPED
- 3C MASONRY VENEER, BLUESTONE COPING
- 3C MASONRY VENEER, BLUESTONE COPING
- 3D MASONRY VENEER, BLUESTONE STEPS
- 4A ARCHITECTURAL RAILING, TYPE A, UPPER DECK w/LED
- 4B ARCHITECTURAL RAILING, TYPE B, LOWER DECK w/LED
- 4C ARCHITECTURAL RAILING, TYPE C, HANDRAIL AT STEPS
- 4D ARCHITECTURAL RAILING, TYPE D, WEST ABUTMENT w/LED
- 4E ARCHITECTURAL RAILING, TYPE E, EAST ABUTMENT w/LED
- 4F ARCHITECTURAL RAILING, TYPE F, HANDRAIL w/LED
- 5 RIVER WALL ON EXISTING RIP-RAP BASE (SEE VOLUME 1)
- 6 WETLAND PLANTING (SEE VOLUME 1)
- 7 EXISTING PIER FOUNDATION W/ GRANITE MASONRY VENEER
- 8 COLUMN SUPPORT - SEE STRUCTURAL DRAWINGS
- 9 ARCHITECTURAL S.S. DECORATIVE PLATE
- 10 EXPANSION JOINT COVER PLATE, STAINLESS STEEL
- 11 ARCHITECTURAL STAINLESS STEEL MESH
- 12 ARCHITECTURAL BENCH - SEE ENLARGED PLANS ON SHEET A420 - A426 TO BENCH TYPES
- 13A IPE EDGE BOARD, UPPER
- 13B IPE EDGE BOARD, LOWER
- 13C IPE EDGE BOARD, TERRACE
- 14A LINEAR UPLIGHT - SEE ELECTRICAL DRAWINGS
- 14B PIER FLOOD LIGHT - SEE ELECTRICAL DRAWINGS
- 14C PLANTER BOLLARD LIGHT - SEE ELECTRICAL DRAWINGS

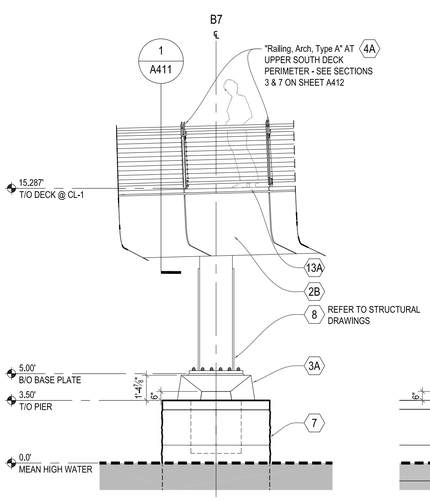

2 A400 PARTIAL SOUTH ELEVATION AT PIER B7
1/4" = 1'-0"

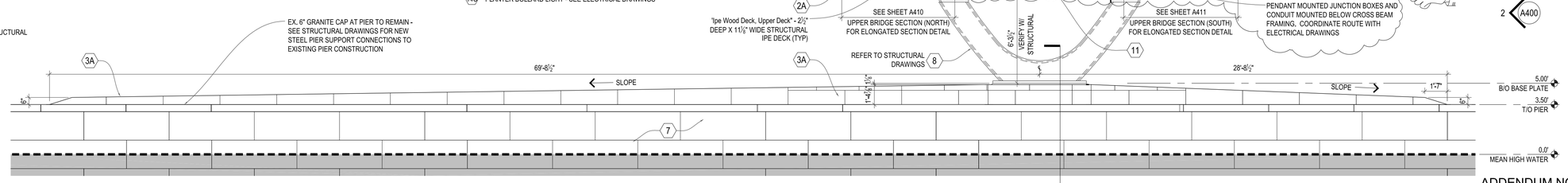

1 A400 CROSS-SECTION | ELEVATION AT PIER B7
1/4" = 1'-0"

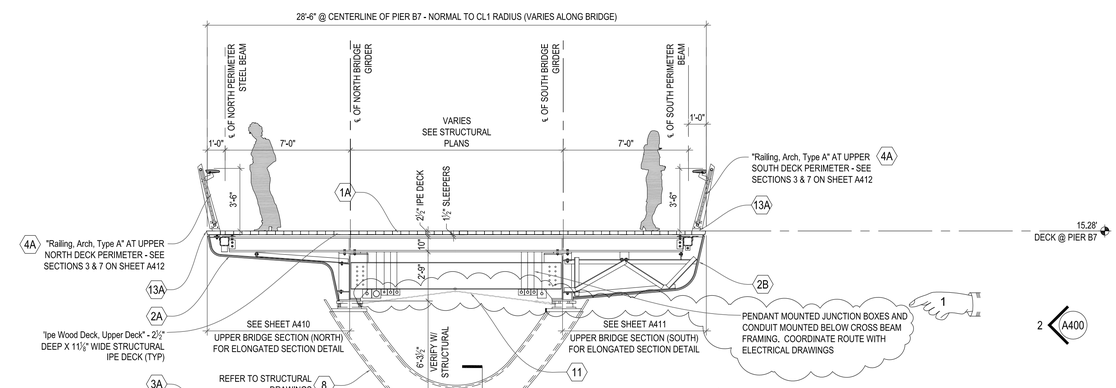

4 A400 TYPICAL SECTION AT BUILT-UP PIER COORDINATE W/ STRUCTUREL

ADDENDUM NO. 4

REF DWG #	REFRENCE DRAWING NAME

CDR MAGUIRE

inFORM studio
235 east main street, suite 102b
northville, mi 48167
(p) 248.449.3564
(f) 248.449.6984
www.in-formstudio.com
Buro Happold

BETA Group, Inc.
Engineers • Planners • Landscape Architects
Lincoln, RI - Norwood, MA - Hartford, CT

RHODE ISLAND
DEPARTMENT OF TRANSPORTATION

INTERSTATE 195

DESIGNED BY:
CHECKED:
DATE:
SHEET: V2_031
OF: V2_163

SCALE:

REVISIONS			REVISIONS		
NO.	DATE	BY	NO.	DATE	BY
1	6/14/2016	CL			

PROVIDENCE — IMPROVEMENTS TO INTERSTATE ROUTE 195 CONTRACT 16 VOLUME 2 — RHODE ISLAND

BRIDGE SECTIONS - PIER B7

A400

R:\Current\2010.1881.01_Providence Pedestrian Bridge\drawings\current\100% Submittal\1881_A400-A405.dwg, 6/9/2016 10:14:56 AM, Cory Lavigne

FED. ROAD DIV. NO.	STATE	FEDERAL AID PROJECT NO.	FISCAL YEAR	SHEET NO.	TOTAL SHEETS
1	R.I.			V2_032	V2_163

R-1

MATERIAL LEGEND

- 1A IPE WOOD DECK, UPPER DECK
- 1B IPE WOOD DECK, TERRACE
- 1C IPE WOOD DECK, LOWER DECK, TYPE A
- 1D IPE WOOD DECK, LOWER DECK, TYPE B
- 2A WANA WOOD, UPPER BRIDGE FASCIA - SOUTH
- 2B WANA WOOD, LOWER BRIDGE FASCIA - NORTH
- 2C WANA WOOD, LOWER BRIDGE FASCIA - SOUTH
- 2D WANA WOOD, LOWER BRIDGE FASCIA - SOUTH
- 3A MASONRY VENEER, BLUESTONE TILE
- 3B MASONRY VENEER, BLUESTONE TILE, SLOPED
- 3C MASONRY VENEER, BLUESTONE COPING
- 3C MASONRY VENEER, BLUESTONE COPING
- 3D MASONRY VENEER, BLUESTONE STEPS
- 4A ARCHITECTURAL RAILING, TYPE A, UPPER DECK w/LED
- 4B ARCHITECTURAL RAILING, TYPE B, LOWER DECK w/LED
- 4C ARCHITECTURAL RAILING, TYPE C, HANDRAIL AT STEPS
- 4D ARCHITECTURAL RAILING, TYPE D, WEST ABUTMENT w/LED
- 4E ARCHITECTURAL RAILING, TYPE E, EAST ABUTMENT w/LED
- 4F ARCHITECTURAL RAILING, TYPE F, HANDRAIL w/LED
- 5 RIVER WALL ON EXISTING RIP-RAP BASE (SEE VOLUME 1)
- 6 WETLAND PLANTING (SEE VOLUME 1)
- 7 EXISTING PIER FOUNDATION W/ GRANITE MASONRY VENEER
- 8 COLUMN SUPPORT - SEE STRUCTURAL DRAWINGS
- 9 ARCHITECTURAL S.S. DECORATIVE PLATE
- 10 EXPANSION JOINT COVER PLATE, STAINLESS STEEL
- 11 ARCHITECTURAL STAINLESS STEEL MESH
- 12 ARCHITECTURAL BENCH - SEE ENLARGED PLANS ON SHEET A420 - A426 TO BENCH TYPES
- 13A IPE EDGE BOARD, UPPER
- 13B IPE EDGE BOARD, LOWER
- 13C IPE EDGE BOARD, TERRACE
- 14A LINEAR UPLIGHT - SEE ELECTRICAL DRAWINGS
- 14B PIER FLOOD LIGHT - SEE ELECTRICAL DRAWINGS
- 14C PLANTER BOLLARD LIGHT - SEE ELECTRICAL DRAWINGS

REFERENCE SHEET A500 - A505 FOR MATERIALS NOT LABELED ON THIS SHEET

4A 4B REFER TO SHEETS A140 & A141 FOR "Architectural Railing, Type A, Upper Deck w/LED" AND "Architectural Railing, Type B, Lower Deck w/LED" RAIL LOCATIONS AND MOUNTING DETAILS. COORDINATE WITH ENLARGED DECK JOINT PLANS ON SHEETS A110 - A117 & A120.

"Architectural Railing, Type D, West ABUTMENT W/LED"

CONTRACTOR/FABRICATOR TO REFERENCE 3D DIGITAL MODEL RELEASED WITH THE TENDER DOCUMENTS FOR THE PROVIDENCE RIVER PEDESTRIAN BRIDGE PROJECT. THIS MODEL CONTAINS THE NECESSARY LEVEL OF DETAIL FOR CROSS-TRADE COORDINATION AND CONSTRUCTION LAYOUT ASSOCIATED WITH THE ARCHITECTURAL COMPONENTS IDENTIFIED ABOVE. THE 3D DIGITAL MODEL IS INTENDED TO AID THE CONTRACTOR IN ESTIMATING QUANTITIES AND THE DETERMINATION OF MEANS AND METHODS. THIS MODEL IS NOT TOPOGRAPHICALLY REFERENCED AND SHOULD BE USED FOR GEOMETRIC REFERENCE ONLY.

NOTE - ALL ELEVATIONS REFER TO PROVIDENCE MEAN HIGH WATER (PMHW) DATUM = 0.0'
PROVIDENCE MEAN HIGH WATER (PMHW) = +1.54 NAVD 1988

NOTE - STATION LINE RUNS PERPENDICULAR TO EXISTING PIERS - ORIGIN AT INTERSECTION OF TRANSVERSE AND LONGITUDINAL MIDPOINT OF PIER B5

NOTE - ALL STRUCTURAL STEEL AND FASCIA SUPPORT STEEL COMPONENTS TO RECIEVE THERMAL SPRAYED ZINC COATING PER SECTION 827 AND PAINTED PER SECTION 825

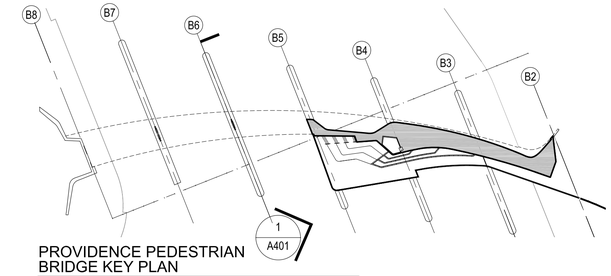

PROVIDENCE PEDESTRIAN BRIDGE KEY PLAN
1/64" = 1'-0"

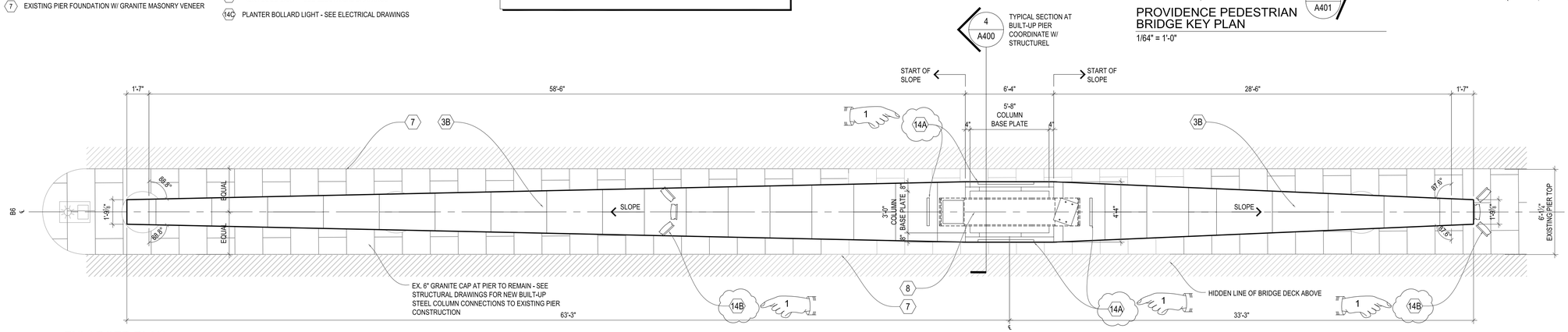

2 A401 ENLARGED PLAN AT PIER B6
1/4" = 1'-0"

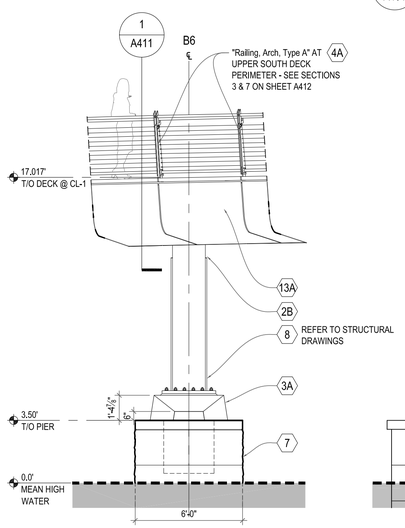

2 A401 PARTIAL SOUTH ELEVATION AT PIER B6
1/4" = 1'-0"

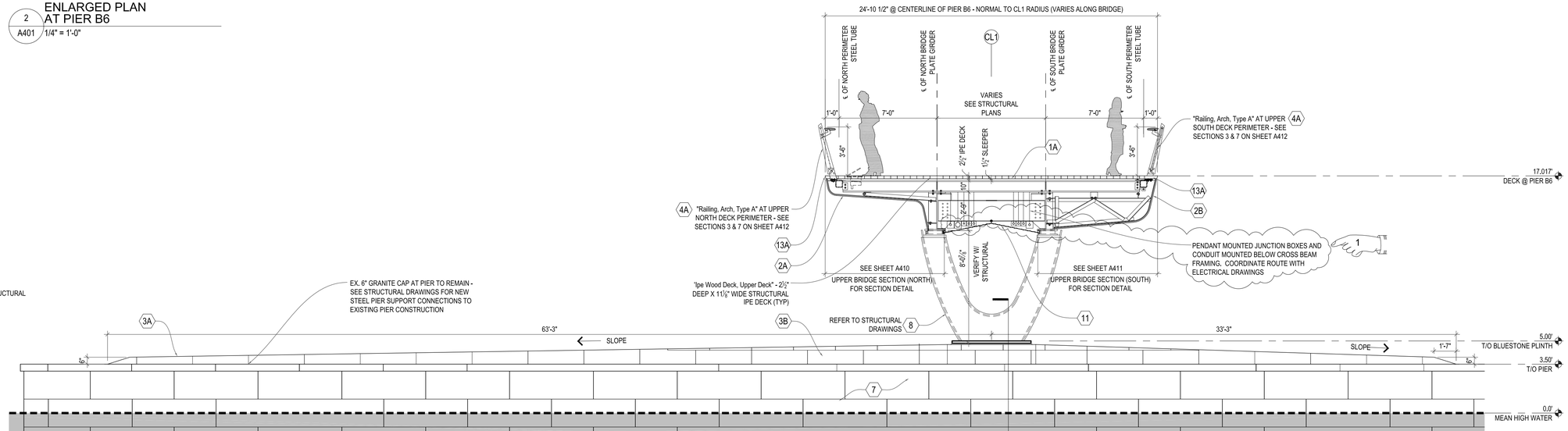

1 A401 CROSS-SECTION | ELEVATION AT PIER B6
1/4" = 1'-0"

4 A400 TYPICAL SECTION AT BUILT-UP PIER COORDINATE W/ STRUCTUREL

ADDENDUM NO. 4

REF DWG #	REFRENCE DRAWING NAME

CDR MAGUIRE

inFORM studio
235 east main street, suite 102b
northville, mi 48167
(p) 248.449.3564
(f) 248.449.6984
www.in-formstudio.com
Buro Happold

BETA Group, Inc.
Engineers • Planners • Landscape Architects
Lincoln, RI - Norwood, MA - Hartford, CT

RHODE ISLAND
DEPARTMENT OF TRANSPORTATION

INTERSTATE 195

DESIGNED BY:
CHECKED:
DATE:
SHEET: V2_032
OF: V2_163

SCALE:

REVISIONS			REVISIONS		
NO.	DATE	BY	NO.	DATE	BY
1	6/14/2016	CL			

IMPROVEMENTS TO
INTERSTATE ROUTE 195
CONTRACT 16 VOLUME 2
PROVIDENCE RHODE ISLAND

BRIDGE SECTIONS - PIER B6

A401

R:\Current\2010.1881.01_Providence Pedestrian Bridge\drawings\current\100% Submittal\1881_A400-A405.dwg, 6/9/2016 10:34:43 AM, Cory Lavigne

R-1

FED. ROAD DIV. NO.	STATE	FEDERAL AID PROJECT NO.	FISCAL YEAR	SHEET NO.	TOTAL SHEETS
1	R.I.			V2_033	V2_163

MATERIAL LEGEND

- 1A IPE WOOD DECK, UPPER DECK
- 1B IPE WOOD DECK, TERRACE
- 1C IPE WOOD DECK, LOWER DECK, TYPE A
- 1D IPE WOOD DECK, LOWER DECK, TYPE B
- 2A WANA WOOD, UPPER BRIDGE FASCIA - SOUTH
- 2B WANA WOOD, LOWER BRIDGE FASCIA - NORTH
- 2C WANA WOOD, LOWER BRIDGE FASCIA - SOUTH
- 2D WANA WOOD, LOWER BRIDGE FASCIA - SOUTH
- 3A MASONRY VENEER, BLUESTONE TILE
- 3B MASONRY VENEER, BLUESTONE TILE, SLOPED
- 3C MASONRY VENEER, BLUESTONE COPING
- 3C MASONRY VENEER, BLUESTONE COPING
- 3D MASONRY VENEER, BLUESTONE STEPS
- 4A ARCHITECTURAL RAILING, TYPE A, UPPER DECK w/LED
- 4B ARCHITECTURAL RAILING, TYPE B, LOWER DECK w/LED
- 4C ARCHITECTURAL RAILING, TYPE C, HANDRAIL AT STEPS
- 4D ARCHITECTURAL RAILING, TYPE D, WEST ABUTMENT w/LED
- 4E ARCHITECTURAL RAILING, TYPE E, EAST ABUTMENT w/LED
- 4F ARCHITECTURAL RAILING, TYPE F, HANDRAIL w/LED
- 5 RIVER WALL ON EXISTING RIP-RAP BASE (SEE VOLUME 1)
- 6 WETLAND PLANTING (SEE VOLUME 1)
- 7 EXISTING PIER FOUNDATION W/ GRANITE MASONRY VENEER
- 8 COLUMN SUPPORT - SEE STRUCTURAL DRAWINGS
- 9 ARCHITECTURAL S.S. DECORATIVE PLATE
- 10 EXPANSION JOINT COVER PLATE, STAINLESS STEEL
- 11 ARCHITECTURAL STAINLESS STEEL MESH
- 12 ARCHITECTURAL BENCH - SEE ENLARGED PLANS ON SHEET A420 - A426 TO BENCH TYPES
- 13A IPE EDGE BOARD, UPPER
- 13B IPE EDGE BOARD, LOWER
- 13C IPE EDGE BOARD, TERRACE
- 14A LINEAR UPLIGHT - SEE ELECTRICAL DRAWINGS
- 14B PIER FLOOD LIGHT - SEE ELECTRICAL DRAWINGS
- 14C PLANTER BOLLARD LIGHT - SEE ELECTRICAL DRAWINGS

REFERENCE SHEET A500 - A505 FOR MATERIALS NOT LABELED ON THIS SHEET

4A 4B REFER TO SHEETS A140 & A141 FOR "Architectural Railling, Type A, Upper Deck w/LED" AND "Architectural Railling, Type B, Lower Deck w/LED" RAIL LOCATIONS AND MOUNTING DETAILS. COORDINATE WITH ENLARGED DECK JOINT PLANS ON SHEETS A110 - A117 & A120.

"Architectural Railing, Type A, West ABUTMENT W/LED"

CONTRACTOR/FABRICATOR TO REFERENCE 3D DIGITAL MODEL RELEASED WITH THE TENDER DOCUMENTS FOR THE PROVIDENCE RIVER PEDESTRIAN BRIDGE PROJECT. THIS MODEL CONTAINS THE NECESSARY LEVEL OF DETAIL FOR CROSS-TRADE COORDINATION AND CONSTRUCTION LAYOUT ASSOCIATED WITH THE ARCHITECTURAL COMPONENTS IDENTIFIED ABOVE. THE 3D DIGITAL MODEL IS INTENDED TO AID THE CONTRACTOR IN ESTIMATING QUANTITIES AND THE DETERMINATION OF MEANS AND METHODS. THIS MODEL IS NOT TOPOGRAPHICALLY REFERENCED AND SHOULD BE USED FOR GEOMETRIC REFERENCE ONLY.

NOTE - ALL ELEVATIONS REFER TO PROVIDENCE MEAN HIGH WATER (PMHW) DATUM = 0.0'
PROVIDENCE MEAN HIGH WATER (PMHW) = +1.54 NAVD 1988

NOTE - STATION LINE RUNS PERPENDICULAR TO EXISTING PIERS - ORIGIN AT INTERSECTION OF TRANSVERSE AND LONGITUDINAL MIDPOINT OF PIER B5

NOTE - ALL STRUCTURAL STEEL AND FASCIA SUPPORT STEEL COMPONENTS TO RECIEVE THERMAL SPRAYED ZINC COATING PER SECTION 827 AND PAINTED PER SECTION 825

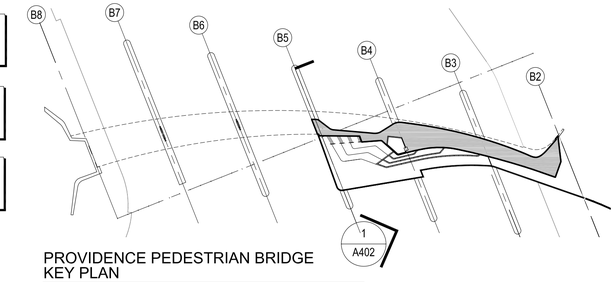

PROVIDENCE PEDESTRIAN BRIDGE KEY PLAN
1/64" = 1'-0"

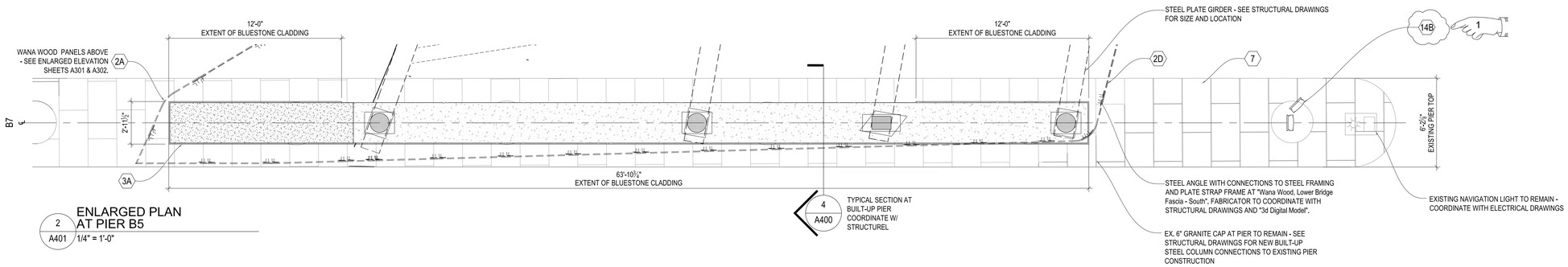

2 A401 ENLARGED PLAN AT PIER B5
1/4" = 1'-0"

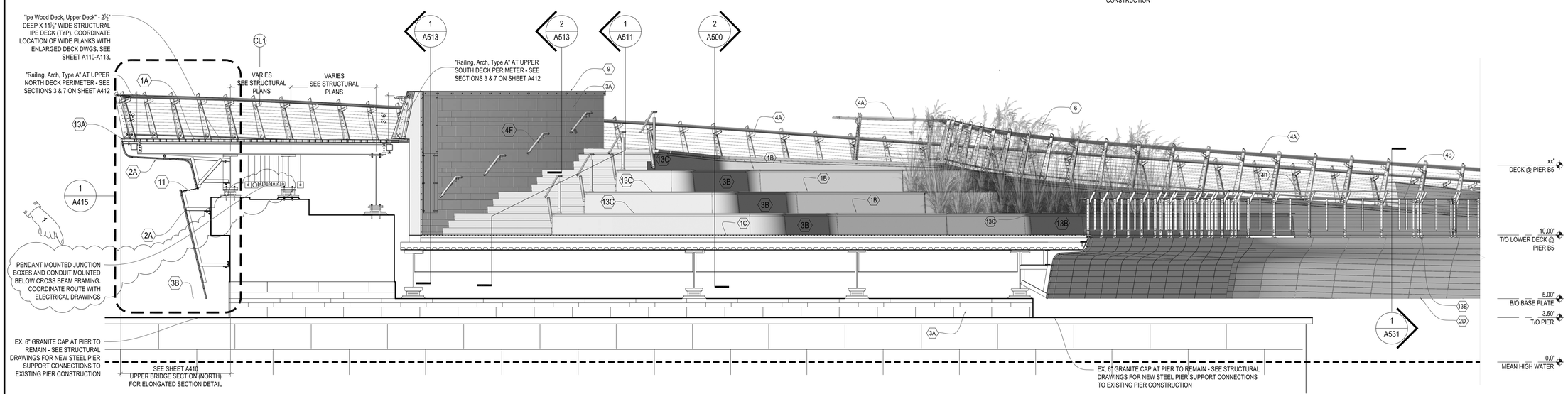

1 A402 CROSS-SECTION | ELEVATION AT PIER B5
1/4" = 1'-0"

ADDENDUM NO. 4

REF DWG #	REFRENCE DRAWING NAME

CDR MAGUIRE

inFORM studio
235 east main street, suite 102b
northville, mi 48167
(p) 248.449.3564
(f) 248.449.6984
www.in-formstudio.com

Buro Happold

BETA Group, Inc.
Engineers • Planners • Landscape Architects
Lincoln, RI - Norwood, MA - Hartford, CT

RHODE ISLAND DEPARTMENT OF TRANSPORTATION

INTERSTATE 195

DESIGNED BY:
CHECKED:
DATE:
SHEET: V2_033
OF: V2_163

SCALE:

REVISIONS			REVISIONS		
NO.	DATE	BY	NO.	DATE	BY
1	6/14/2016	CL			

IMPROVEMENTS TO INTERSTATE ROUTE 195
CONTRACT 16 VOLUME 2
PROVIDENCE RHODE ISLAND

BRIDGE SECTIONS - PIER B5

A402

R:\Current\2010.1881.01_Providence Pedestrian Bridge\drawings\current\100% Submittal\1881_A400-A405.dwg, 6/9/2016 10:45:04 AM, Cory Lavigne

R-1	FED. ROAD DIV. NO.	STATE	FEDERAL AID PROJECT NO.	FISCAL YEAR	SHEET NO.	TOTAL SHEETS
	1	R.I.			V2_034	V2_163

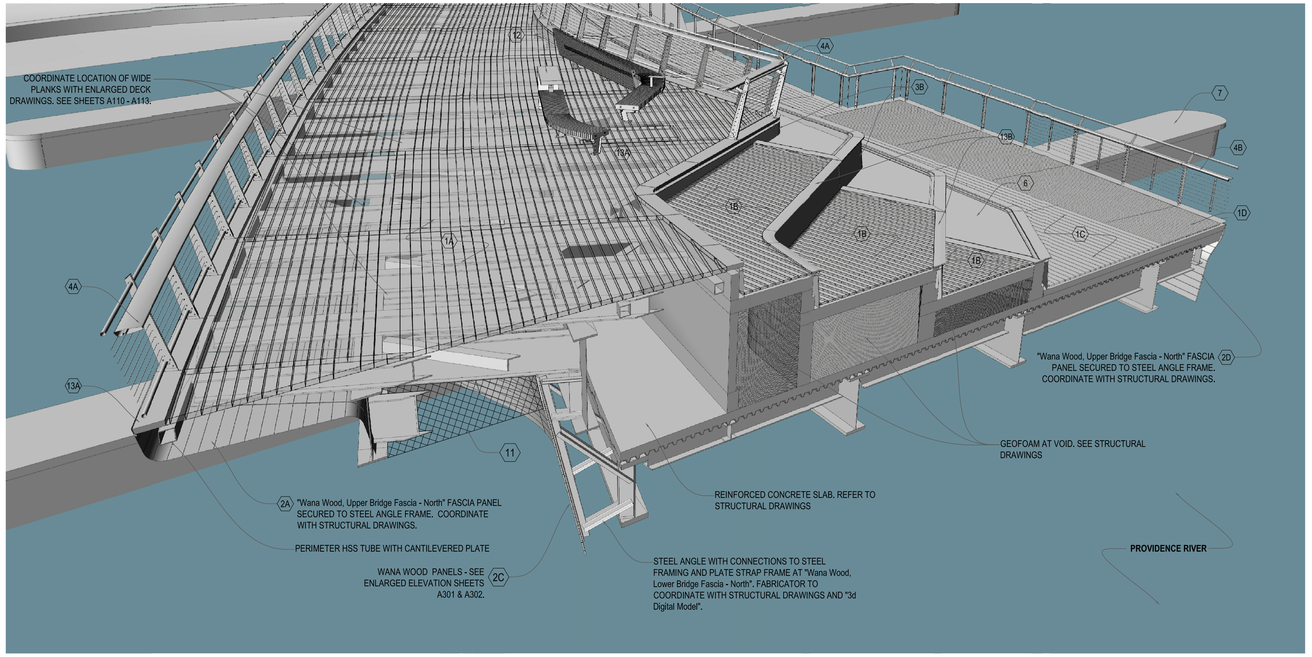

2 / A403 AXONOMETRIC SECTION BETWEEN PIER B5 AND B4
N.T.S.

REFERENCE SHEET A500 - A505 FOR MATERIALS NOT LABELED ON THIS SHEET

MATERIAL LEGEND

- 1A IPE WOOD DECK, UPPER DECK
- 1B IPE WOOD DECK, TERRACE
- 1C IPE WOOD DECK, LOWER DECK, TYPE A
- 1D IPE WOOD DECK, LOWER DECK, TYPE B
- 2A WANA WOOD, UPPER BRIDGE FASCIA - SOUTH
- 2B WANA WOOD, LOWER BRIDGE FASCIA - NORTH
- 2C WANA WOOD, LOWER BRIDGE FASCIA - SOUTH
- 2D WANA WOOD, LOWER BRIDGE FASCIA - SOUTH
- 3A MASONRY VENEER, BLUESTONE TILE
- 3B MASONRY VENEER, BLUESTONE TILE, SLOPED
- 3C MASONRY VENEER, BLUESTONE COPING
- 3C MASONRY VENEER, BLUESTONE COPING
- 3D MASONRY VENEER, BLUESTONE STEPS
- 4A ARCHITECTURAL RAILING, TYPE A, UPPER DECK w/LED
- 4B ARCHITECTURAL RAILING, TYPE B, LOWER DECK w/LED
- 4C ARCHITECTURAL RAILING, TYPE C, HANDRAIL AT STEPS
- 4D ARCHITECTURAL RAILING, TYPE D, WEST ABUTMENT w/LED
- 4E ARCHITECTURAL RAILING, TYPE E, EAST ABUTMENT w/LED
- 4F ARCHITECTURAL RAILING, TYPE F, HANDRAIL w/LED
- 5 RIVER WALL ON EXISTING RIP-RAP BASE (SEE VOLUME 1)
- 6 WETLAND PLANTING (SEE VOLUME 1)
- 7 EXISTING PIER FOUNDATION W/ GRANITE MASONRY VENEER
- 8 COLUMN SUPPORT - SEE STRUCTURAL DRAWINGS
- 9 ARCHITECTURAL S.S. DECORATIVE PLATE
- 10 EXPANSION JOINT COVER PLATE, STAINLESS STEEL
- 11 ARCHITECTURAL STAINLESS STEEL MESH
- 12 ARCHITECTURAL BENCH - SEE ENLARGED PLANS ON SHEET A420 - A426 TO BENCH TYPES
- 13A IPE EDGE BOARD, UPPER
- 13B IPE EDGE BOARD, LOWER
- 13C IPE EDGE BOARD, TERRACE
- 14A LINEAR UPLIGHT - SEE ELECTRICAL DRAWINGS
- 14B PIER FLOOD LIGHT - SEE ELECTRICAL DRAWINGS
- 14C PLANTER BOLLARD LIGHT - SEE ELECTRICAL DRAWINGS

4A, 4B: REFER TO SHEETS A140 & A141 FOR "Architectural Railing, Type A, Upper Deck w/LED" AND "Architectural Railing, Type B, Lower Deck w/LED" RAIL LOCATIONS AND MOUNTING DETAILS. COORDINATE WITH ENLARGED DECK JOINT PLANS ON SHEETS A110 - A117 & A120.

"Ipe Wood Deck, Upper Deck"
"Ipe Wood Deck, Terrace"
"Ipe Wood Deck, Lower Deck, Type A"
"Ipe Wood Deck, Lower Deck, Type B"
"Ipe Edge Board, Upper Deck"
"Ipe Edge Board, Lower Deck"
"Ipe Edge Board, Terrace"

"Wana Wood, Upper Bridge Fascia - North"
"Wana Wood, Upper Bridge Fascia - South"
"Wana Wood, Lower Bridge Fascia - North"
"Wana Wood, Lower Bridge Fascia - South"

"Masonry Veneer, Bluestone Tile, Sloped"

"Architectural Railing, Type A, Upper Deck W/LED"
"Architectural Railing, Type B, Lower Deck W/LED"

CONTRACTOR/FABRICATOR TO REFERENCE 3D DIGITAL MODEL RELEASED WITH THE TENDER DOCUMENTS FOR THE PROVIDENCE RIVER PEDESTRIAN BRIDGE PROJECT. THIS MODEL CONTAINS THE NECESSARY LEVEL OF DETAIL FOR CROSS-TRADE COORDINATION AND CONSTRUCTION LAYOUT ASSOCIATED WITH THE ARCHITECTURAL COMPONENTS IDENTIFIED ABOVE. THE 3D DIGITAL MODEL IS INTENDED TO AID THE CONTRACTOR IN ESTIMATING QUANTITIES AND THE DETERMINATION OF MEANS AND METHODS. THIS MODEL IS NOT TOPOGRAPHICALLY REFERENCED AND SHOULD BE USED FOR GEOMETRIC REFERENCE ONLY.

NOTE - ALL ELEVATIONS REFER TO PROVIDENCE MEAN HIGH WATER (PMHW) DATUM = 0.0'
PROVIDENCE MEAN HIGH WATER (PMHW) = +1.54 NAVD 1988

NOTE - STATION LINE RUNS PERPENDICULAR TO EXISTING PIERS - ORIGIN AT INTERSECTION OF TRANSVERSE AND LONGITUDINAL MIDPOINT OF PIER B5

NOTE - ALL STRUCTURAL STEEL AND FASCIA SUPPORT STEEL COMPONENTS TO RECIEVE THERMAL SPRAYED ZINC COATING PER SECTION 827 AND PAINTED PER SECTION 825

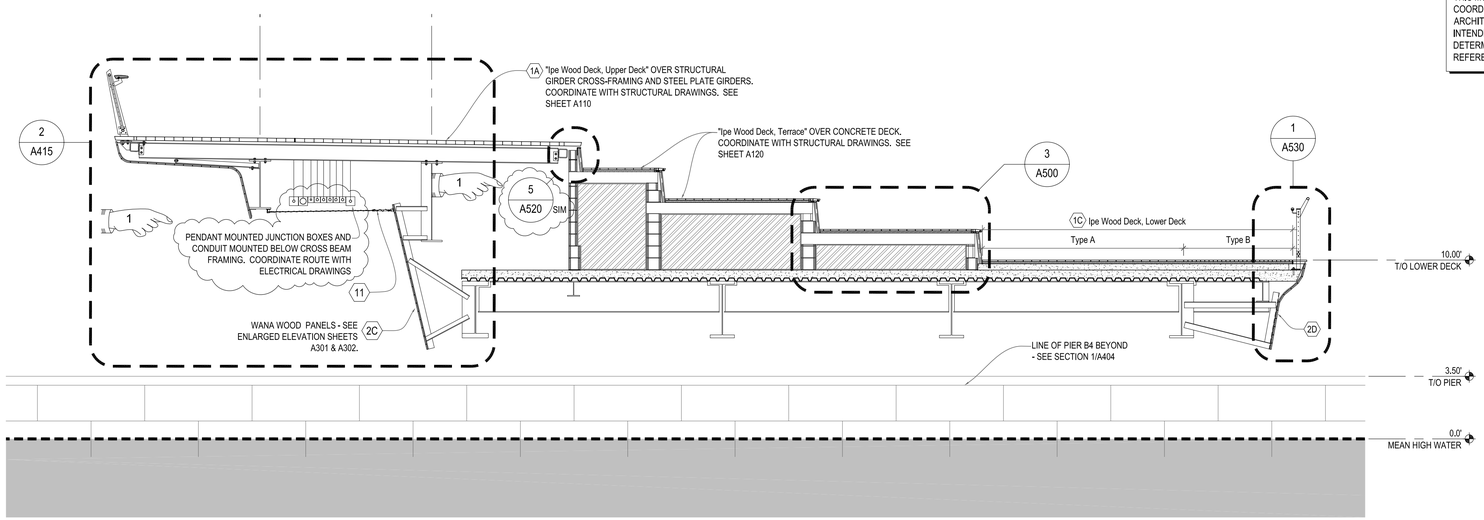

1 / A403 CROSS-SECTION | ELEVATION BETWEEN PIER B5 AND B4
1/4" = 1'-0"

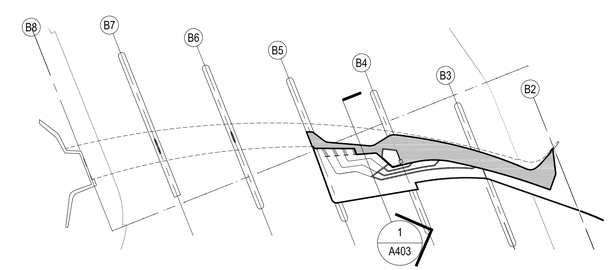

PROVIDENCE PEDESTRIAN BRIDGE KEY PLAN
1/64" = 1'-0"

ADDENDUM NO. 4

REF DWG #	REFRENCE DRAWING NAME

CDR MAGUIRE

inFORM studio
235 east main street, suite 102b
northville, mi 48167
(p) 248.449.3564
(f) 248.449.6984
www.in-formstudio.com

Buro Happold

BETA Group, Inc.
Engineers • Planners • Landscape Architects
Lincoln, RI - Norwood, MA - Hartford, CT

RHODE ISLAND DEPARTMENT OF TRANSPORTATION

INTERSTATE 195

DESIGNED BY:
CHECKED:
DATE:
SHEET: V2_034
OF: V2_163

SCALE:

REVISIONS			REVISIONS		
NO.	DATE	BY	NO.	DATE	BY
1	6/14/2016	CL			

IMPROVEMENTS TO INTERSTATE ROUTE 195
PROVIDENCE — CONTRACT 16 VOLUME 2 — RHODE ISLAND

BRIDGE SECTIONS - @ MIDSPAN OF PIER B4 & B5 | A403

R:\Current\2010.1881.01_Providence Pedestrian Bridge\drawings\current\100% Submittal\1881_A400-A405.dwg, 6/9/2016 9:53:34 AM, Cory Lavigne

FED. ROAD DIV. NO.	STATE	FEDERAL AID PROJECT NO.	FISCAL YEAR	SHEET NO.	TOTAL SHEETS
1	R.I.			V2_035	V2_163

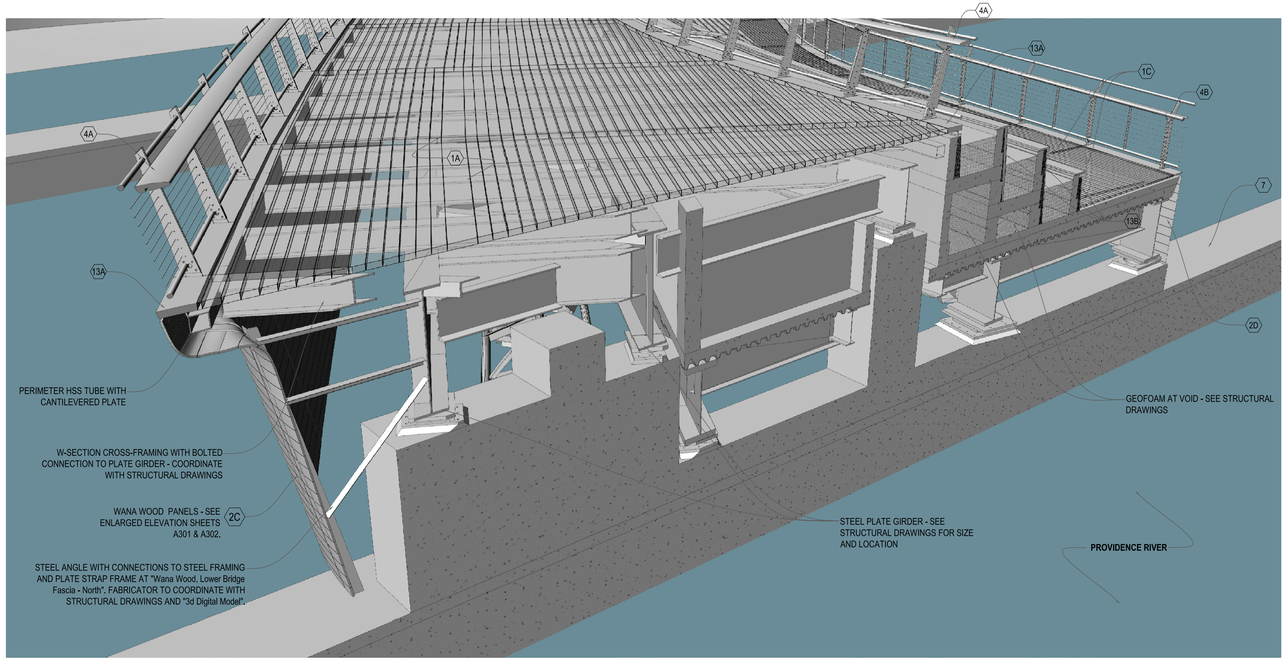

2 / A404 AXONOMETRIC SECTION AT PIER B4
N.T.S.

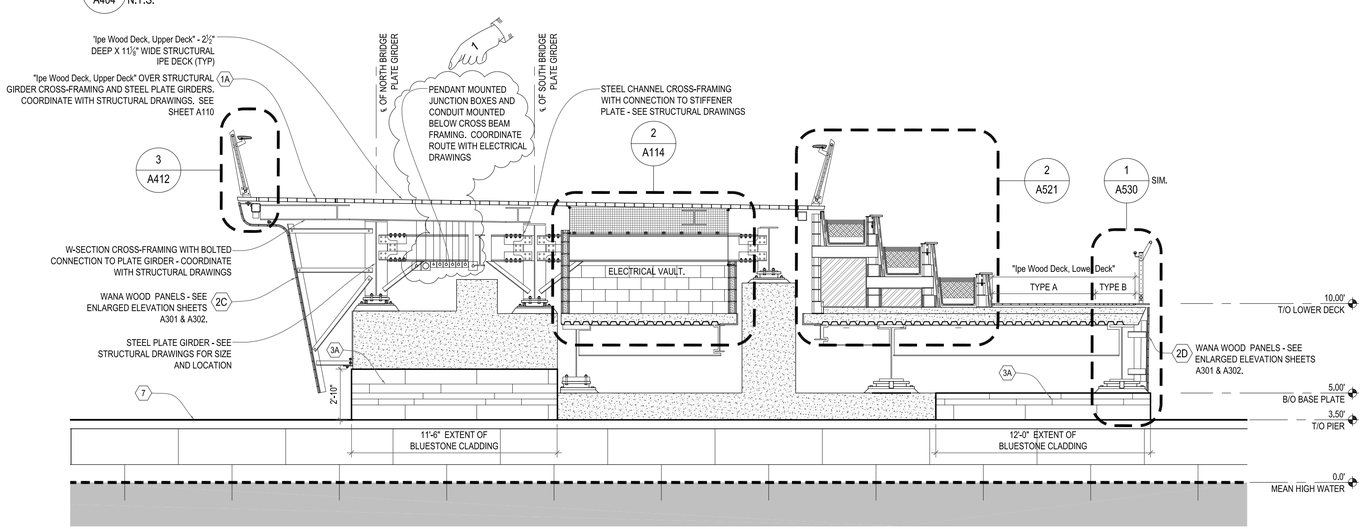

1 / A404 CROSS-SECTION | ELEVATION AT PIER B4
1/4" = 1'-0"

REFERENCE SHEET A500 - A505 FOR MATERIALS NOT LABELED ON THIS SHEET

MATERIAL LEGEND

- 1A IPE WOOD DECK, UPPER DECK
- 1B IPE WOOD DECK, TERRACE
- 1C IPE WOOD DECK, LOWER DECK, TYPE A
- 1D IPE WOOD DECK, LOWER DECK, TYPE B
- 2A WANA WOOD, UPPER BRIDGE FASCIA - SOUTH
- 2B WANA WOOD, LOWER BRIDGE FASCIA - NORTH
- 2C WANA WOOD, LOWER BRIDGE FASCIA - SOUTH
- 2D WANA WOOD, LOWER BRIDGE FASCIA - SOUTH
- 3A MASONRY VENEER, BLUESTONE TILE
- 3B MASONRY VENEER, BLUESTONE TILE, SLOPED
- 3C MASONRY VENEER, BLUESTONE COPING
- 3C MASONRY VENEER, BLUESTONE COPING
- 3D MASONRY VENEER, BLUESTONE STEPS
- 4A ARCHITECTURAL RAILING, TYPE A, UPPER DECK w/LED
- 4B ARCHITECTURAL RAILING, TYPE B, LOWER DECK w/LED
- 4C ARCHITECTURAL RAILING, TYPE C, HANDRAIL AT STEPS
- 4D ARCHITECTURAL RAILING, TYPE D, WEST ABUTMENT w/LED
- 4E ARCHITECTURAL RAILING, TYPE E, EAST ABUTMENT w/LED
- 4F ARCHITECTURAL RAILING, TYPE F, HANDRAIL w/LED
- 5 RIVER WALL ON EXISTING RIP-RAP BASE (SEE VOLUME 1)
- 6 WETLAND PLANTING (SEE VOLUME 1)
- 7 EXISTING PIER FOUNDATION W/ GRANITE MASONRY VENEER
- 8 COLUMN SUPPORT - SEE STRUCTURAL DRAWINGS
- 9 ARCHITECTURAL S.S. DECORATIVE PLATE
- 10 EXPANSION JOINT COVER PLATE, STAINLESS STEEL
- 11 ARCHITECTURAL STAINLESS STEEL MESH
- 12 ARCHITECTURAL BENCH - SEE ENLARGED PLANS ON SHEET A420 - A426 TO BENCH TYPES
- 13A IPE EDGE BOARD, UPPER
- 13B IPE EDGE BOARD, LOWER
- 13C IPE EDGE BOARD, TERRACE
- 14A LINEAR UPLIGHT - SEE ELECTRICAL DRAWINGS
- 14B PIER FLOOD LIGHT - SEE ELECTRICAL DRAWINGS
- 14C PLANTER BOLLARD LIGHT - SEE ELECTRICAL DRAWINGS

4A 4B REFER TO SHEETS A140 & A141 FOR "Architectural Railing, Type A, Upper Deck w/LED" AND "Architectural Railing, Type B, Lower Deck w/LED" RAIL LOCATIONS AND MOUNTING DETAILS. COORDINATE WITH ENLARGED DECK JOINT PLANS ON SHEETS A110 - A117 & A120.

"Ipe Wood Deck, Upper Deck"
"Ipe Wood Deck, Terrace"
"Ipe Wood Deck, Lower Deck, Type A"
"Ipe Wood Deck, Lower Deck, Type B"
"Ipe Edge Board, Upper Deck"
"Ipe Edge Board, Lower Deck"
"Ipe Edge Board, Terrace"

"Wana Wood, Upper Bridge Fascia - North"
"Wana Wood, Upper Bridge Fascia - South"
"Wana Wood, Lower Bridge Fascia - North"
"Wana Wood, Lower Bridge Fascia - South"

"Masonry Veneer, Bluestone Tile, Sloped"

"Architectural Railing, Type A, Upper Deck W/LED"
"Architectural Railing, Type B, Lower Deck W/LED"

CONTRACTOR/FABRICATOR TO REFERENCE 3D DIGITAL MODEL RELEASED WITH THE TENDER DOCUMENTS FOR THE PROVIDENCE RIVER PEDESTRIAN BRIDGE PROJECT. THIS MODEL CONTAINS THE NECESSARY LEVEL OF DETAIL FOR CROSS-TRADE COORDINATION AND CONSTRUCTION LAYOUT ASSOCIATED WITH THE ARCHITECTURAL COMPONENTS IDENTIFIED ABOVE. THE 3D DIGITAL MODEL IS INTENDED TO AID THE CONTRACTOR IN ESTIMATING QUANTITIES AND THE DETERMINATION OF MEANS AND METHODS. THIS MODEL IS NOT TOPOGRAPHICALLY REFERENCED AND SHOULD BE USED FOR GEOMETRIC REFERENCE ONLY.

NOTE - ALL ELEVATIONS REFER TO PROVIDENCE MEAN HIGH WATER (PMHW) DATUM = 0.0'
PROVIDENCE MEAN HIGH WATER (PMHW) = +1.54 NAVD 1988

NOTE - STATION LINE RUNS PERPENDICULAR TO EXISTING PIERS - ORIGIN AT INTERSECTION OF TRANSVERSE AND LONGITUDINAL MIDPOINT OF PIER B5

NOTE - ALL STRUCTURAL STEEL AND FASCIA SUPPORT STEEL COMPONENTS TO RECIEVE THERMAL SPRAYED ZINC COATING PER SECTION 827 AND PAINTED PER SECTION 825

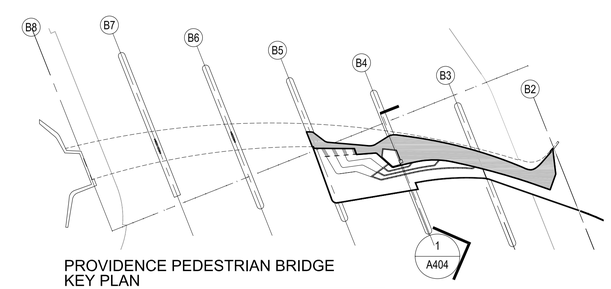

PROVIDENCE PEDESTRIAN BRIDGE KEY PLAN
1/64" = 1'-0"

ADDENDUM NO. 4

REF DWG #	REFRENCE DRAWING NAME

CDR MAGUIRE

inFORM studio
235 east main street, suite 102b
northville, mi 48167
(p) 248.449.3564
(f) 248.449.6984
www.in-formstudio.com
Buro Happold

BETA Group, Inc.
Engineers • Planners • Landscape Architects
Lincoln, RI - Norwood, MA - Hartford, CT

RHODE ISLAND
DEPARTMENT OF TRANSPORTATION

INTERSTATE 195

DESIGNED BY:
CHECKED:
DATE:
SHEET: V2_035
OF: V2_163

SCALE:

REVISIONS			REVISIONS		
NO.	DATE	BY	NO.	DATE	BY
1	6/14/2016	CL			

IMPROVEMENTS TO
INTERSTATE ROUTE 195
CONTRACT 16 VOLUME 2
PROVIDENCE RHODE ISLAND

BRIDGE SECTIONS - PIER B4

A404

R-1	FED. ROAD DIV. NO.	STATE	FEDERAL AID PROJECT NO.	FISCAL YEAR	SHEET NO.	TOTAL SHEETS
	1	R.I.			V2_036	V2_163

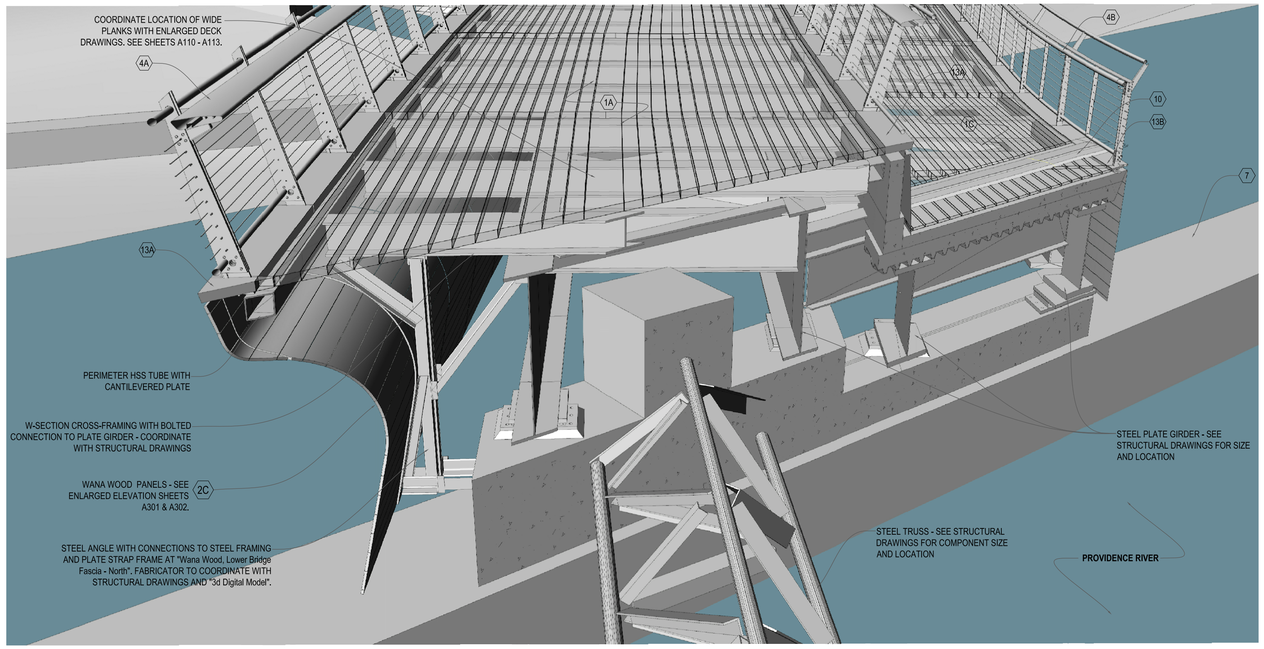

2 / A405 AXONOMETRIC SECTION AT PIER B3
N.T.S.

REFERENCE SHEET A500 - A505 FOR MATERIALS NOT LABELED ON THIS SHEET

MATERIAL LEGEND

- 1A IPE WOOD DECK, UPPER DECK
- 1B IPE WOOD DECK, TERRACE
- 1C IPE WOOD DECK, LOWER DECK, TYPE A
- 1D IPE WOOD DECK, LOWER DECK, TYPE B
- 2A WANA WOOD, UPPER BRIDGE FASCIA - SOUTH
- 2B WANA WOOD, LOWER BRIDGE FASCIA - NORTH
- 2C WANA WOOD, LOWER BRIDGE FASCIA - SOUTH
- 2D WANA WOOD, LOWER BRIDGE FASCIA - SOUTH
- 3A MASONRY VENEER, BLUESTONE TILE
- 3B MASONRY VENEER, BLUESTONE TILE, SLOPED
- 3C MASONRY VENEER, BLUESTONE COPING
- 3C MASONRY VENEER, BLUESTONE COPING
- 3D MASONRY VENEER, BLUESTONE STEPS
- 4A ARCHITECTURAL RAILING, TYPE A, UPPER DECK w/LED
- 4B ARCHITECTURAL RAILING, TYPE B, LOWER DECK w/LED
- 4C ARCHITECTURAL RAILING, TYPE C, HANDRAIL AT STEPS
- 4D ARCHITECTURAL RAILING, TYPE D, WEST ABUTMENT w/LED
- 4E ARCHITECTURAL RAILING, TYPE E, EAST ABUTMENT w/LED
- 4F ARCHITECTURAL RAILING, TYPE F, HANDRAIL w/LED
- 5 RIVER WALL ON EXISTING RIP-RAP BASE (SEE VOLUME 1)
- 6 WETLAND PLANTING (SEE VOLUME 1)
- 7 EXISTING PIER FOUNDATION W/ GRANITE MASONRY VENEER
- 8 COLUMN SUPPORT - SEE STRUCTURAL DRAWINGS
- 9 ARCHITECTURAL S.S. DECORATIVE PLATE
- 10 EXPANSION JOINT COVER PLATE, STAINLESS STEEL
- 11 ARCHITECTURAL STAINLESS STEEL MESH
- 12 ARCHITECTURAL BENCH - SEE ENLARGED PLANS ON SHEET A420 - A426 TO BENCH TYPES
- 13A IPE EDGE BOARD, UPPER
- 13B IPE EDGE BOARD, LOWER
- 13C IPE EDGE BOARD, TERRACE
- 14A LINEAR UPLIGHT - SEE ELECTRICAL DRAWINGS
- 14B PIER FLOOD LIGHT - SEE ELECTRICAL DRAWINGS
- 14C PLANTER BOLLARD LIGHT - SEE ELECTRICAL DRAWINGS

4A / 4B REFER TO SHEETS A140 & A141 FOR "Architectural Railing, Type A, Upper Deck w/LED" AND "Architectural Railing, Type B, Lower Deck w/LED" RAIL LOCATIONS AND MOUNTING DETAILS. COORDINATE WITH ENLARGED DECK JOINT PLANS ON SHEETS A110 - A117 & A120.

NOTE - ALL ELEVATIONS REFER TO PROVIDENCE MEAN HIGH WATER (PMHW) DATUM = 0.0'
PROVIDENCE MEAN HIGH WATER (PMHW) = +1.54 NAVD 1988

NOTE - STATION LINE RUNS PERPENDICULAR TO EXISTING PIERS - ORIGIN AT INTERSECTION OF TRANSVERSE AND LONGITUDINAL MIDPOINT OF PIER B5

NOTE - ALL STRUCTURAL STEEL AND FASCIA SUPPORT STEEL COMPONENTS TO RECIEVE THERMAL SPRAYED ZINC COATING PER SECTION 827 AND PAINTED PER SECTION 825

"Ipe Wood Deck, Upper Deck"
"Ipe Wood Deck, Terrace"
"Ipe Wood Deck, Lower Deck, Type A"
"Ipe Wood Deck, Lower Deck, Type B"
"Ipe Edge Board, Upper Deck"
"Ipe Edge Board, Lower Deck"
"Ipe Edge Board, Terrace"

"Wana Wood, Upper Bridge Fascia - North"
"Wana Wood, Upper Bridge Fascia - South"
"Wana Wood, Lower Bridge Fascia - North"
"Wana Wood, Lower Bridge Fascia - South"

"Masonry Veneer, Bluestone Tile, Sloped"

"Architectural Railing, Type A, Upper Deck W/LED"
"Architectural Railing, Type B, Lower Deck W/LED"

CONTRACTOR/FABRICATOR TO REFERENCE 3D DIGITAL MODEL RELEASED WITH THE TENDER DOCUMENTS FOR THE PROVIDENCE RIVER PEDESTRIAN BRIDGE PROJECT. THIS MODEL CONTAINS THE NECESSARY LEVEL OF DETAIL FOR CROSS-TRADE COORDINATION AND CONSTRUCTION LAYOUT ASSOCIATED WITH THE ARCHITECTURAL COMPONENTS IDENTIFIED ABOVE. THE 3D DIGITAL MODEL IS INTENDED TO AID THE CONTRACTOR IN ESTIMATING QUANTITIES AND THE DETERMINATION OF MEANS AND METHODS. THIS MODEL IS NOT TOPOGRAPHICALLY REFERENCED AND SHOULD BE USED FOR GEOMETRIC REFERENCE ONLY.

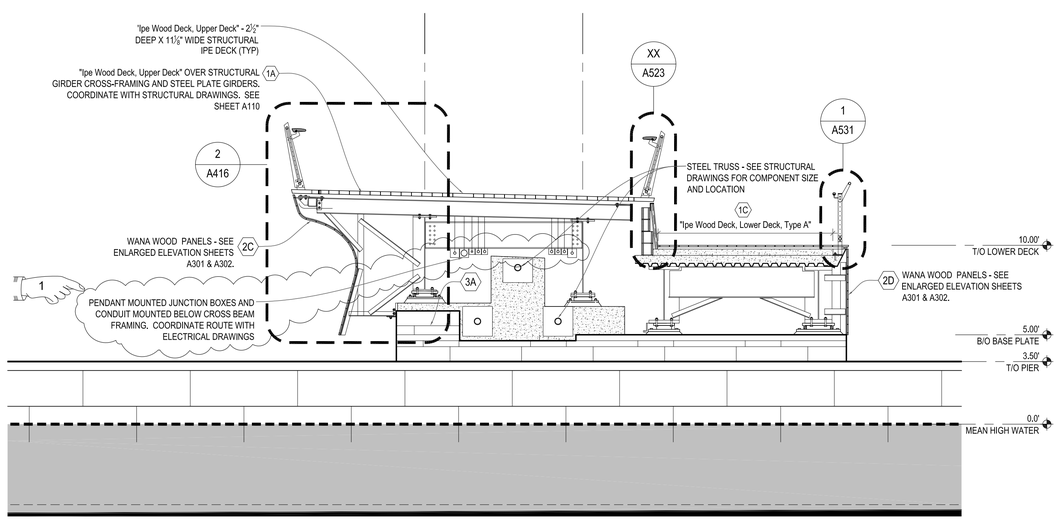

1 / A405 CROSS-SECTION | ELEVATION AT PIER B3
1/4" = 1'-0"

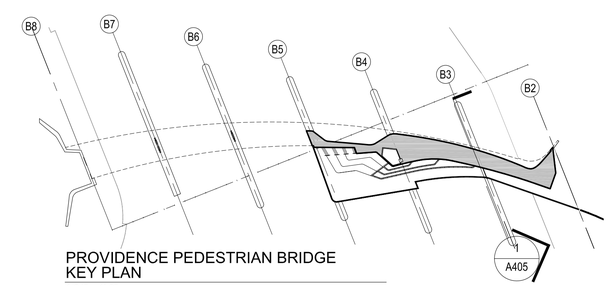

PROVIDENCE PEDESTRIAN BRIDGE KEY PLAN
1/64" = 1'-0"

ADDENDUM NO. 4

REF DWG #	REFRENCE DRAWING NAME

CDR MAGUIRE

inFORM studio
235 east main street, suite 102b
northville, mi 48167
(p) 248.449.3564
(f) 248.449.6984
www.in-formstudio.com

Buro Happold

BETA Group, Inc.
Engineers • Planners • Landscape Architects
Lincoln, RI - Norwood, MA - Hartford, CT

RHODE ISLAND DEPARTMENT OF TRANSPORTATION

INTERSTATE 195

DESIGNED BY:
CHECKED:
DATE:
SHEET: V2_036
OF: V2_163

SCALE:

REVISIONS			REVISIONS		
NO.	DATE	BY	NO.	DATE	BY
1	6/14/2016	CL			

IMPROVEMENTS TO INTERSTATE ROUTE 195
PROVIDENCE — CONTRACT 16 VOLUME 2 — RHODE ISLAND

BRIDGE SECTIONS - PIER B4

A405

R:\Current\2010.1881.01_Providence Pedestrian Bridge\drawings\current\100% Submittal\1881_A400-A405.dwg, 6/9/2016 11:01:03 AM, Cory Lavigne

R-1	FED. ROAD DIV. NO.	STATE	FEDERAL AID PROJECT NO.	FISCAL YEAR	SHEET NO.	TOTAL SHEETS
	1	R.I.			V2_037	V2_163

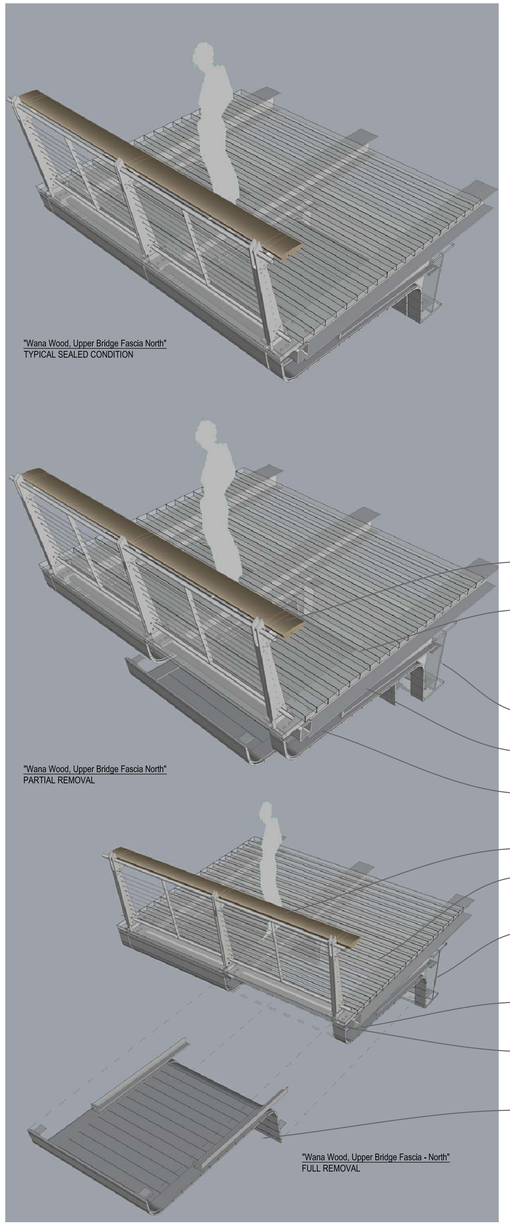

3 / A410 UPPER BRIDGE SECTION NORTH FASCIA ACCESS / REMOVAL SEQUENCE
N.T.S.

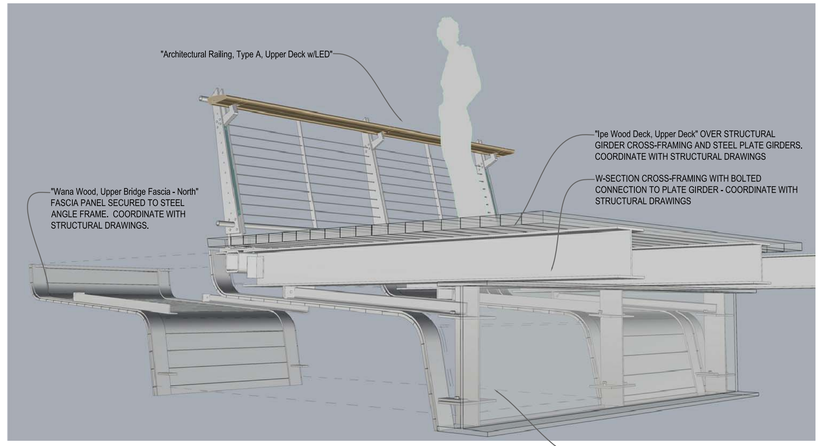

2 / A410 UPPER BRIDGE SECTION NORTH FASCIA ACCESS
N.T.S.

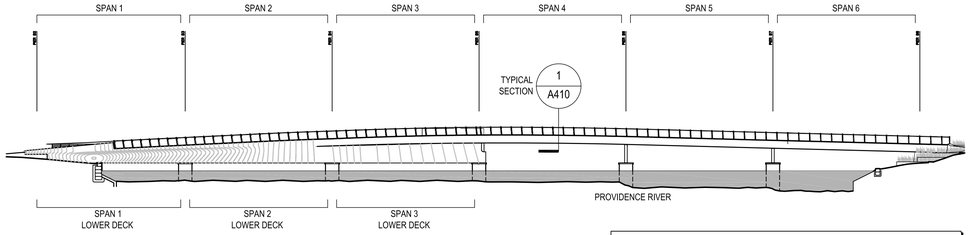

KEY ELEVATION
OVERALL NORTH ELEVATION
1/32" = 1'-0"

NOTE - ALL SUPPORT CROSS FRAMING AND CONNECTION COMPONENTS TO RECEIVE THERMAL SPRAYED ZINC COATING PER SECTION 827 AND PAINTED PER SECTION 825

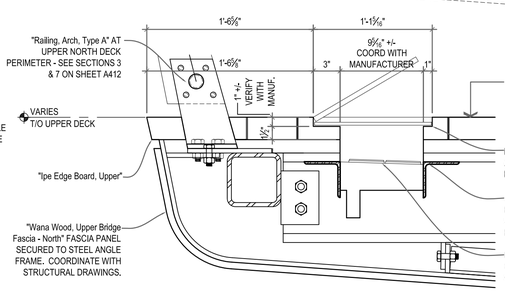

4 / A410 FRAMING DETAIL AT ELECTRICAL FLOOR BOX
1 1/2" = 1'-0"

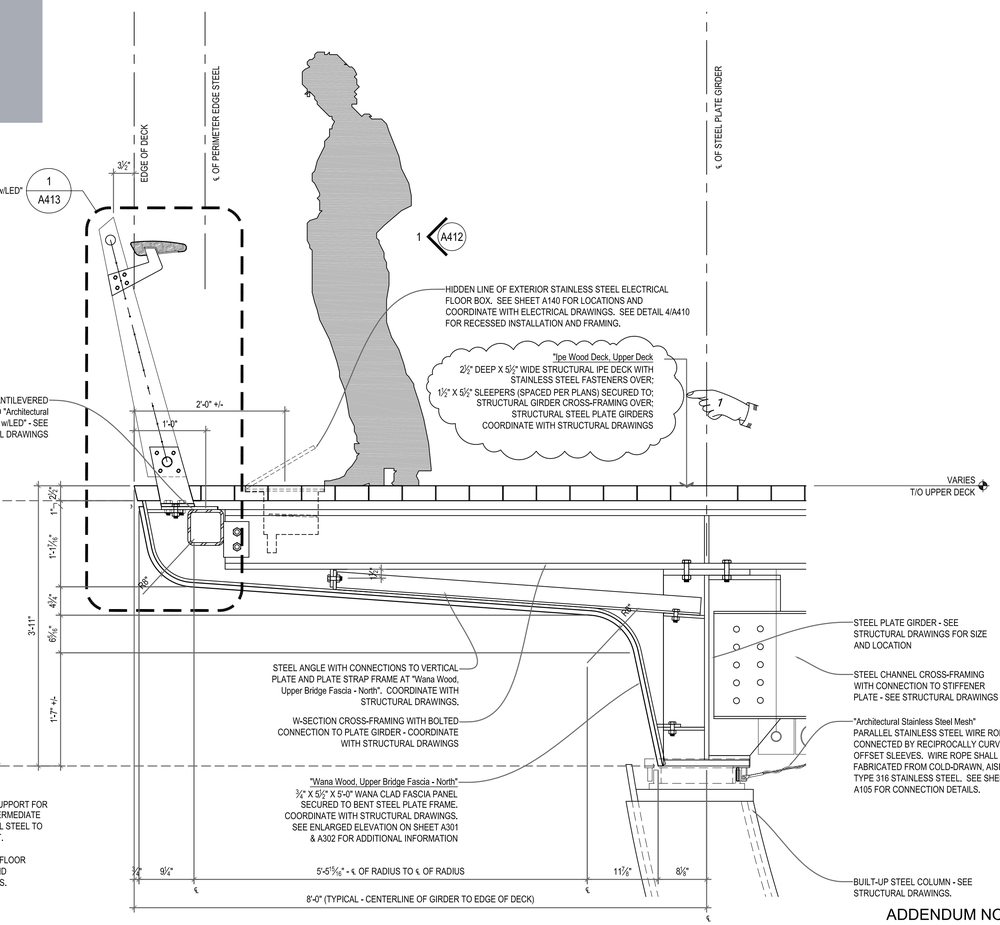

ADDENDUM NO. 4

1 / A410 UPPER BRIDGE SECTION TYPICAL NORTH RAIL
1" = 1'-0"

REF DWG #	REFRENCE DRAWING NAME
S501	UPPER DECK DETAILS - 1
S502	UPPER DECK DETAILS - 2

CDR MAGUIRE

inFORM studio
235 east main street, suite 102b
northville, mi 48167
(p) 248.449.3564
(f) 248.449.6984
www.in-formstudio.com
Buro Happold

BETA Group, Inc.
Engineers • Planners • Landscape Architects
Lincoln, RI - Norwood, MA - Hartford, CT

RHODE ISLAND
DEPARTMENT OF TRANSPORTATION

INTERSTATE 195

DESIGNED BY:
CHECKED:
DATE:
SHEET: V2_037
OF: V2_163

SCALE:

REVISIONS			REVISIONS		
NO.	DATE	BY	NO.	DATE	BY
1	6/14/2016	CL			

IMPROVEMENTS TO
INTERSTATE ROUTE 195
PROVIDENCE — CONTRACT 16 VOLUME 2 — RHODE ISLAND

BRIDGE SECTIONS AND DETAILS — A410

R:\Current\2010.1881.01_Providence Pedestrian Bridge\drawings\current\100% Submittal\1881_A410-A413.dwg, 6/9/2016 1:54:09 PM, Cory Lavigne

R-1	FED ROAD DIV. NO.	STATE	FEDERAL AID PROJECT NO.	FISCAL YEAR	SHEET NO.	TOTAL SHEETS
	1	R.I.			V2_038	V2_163

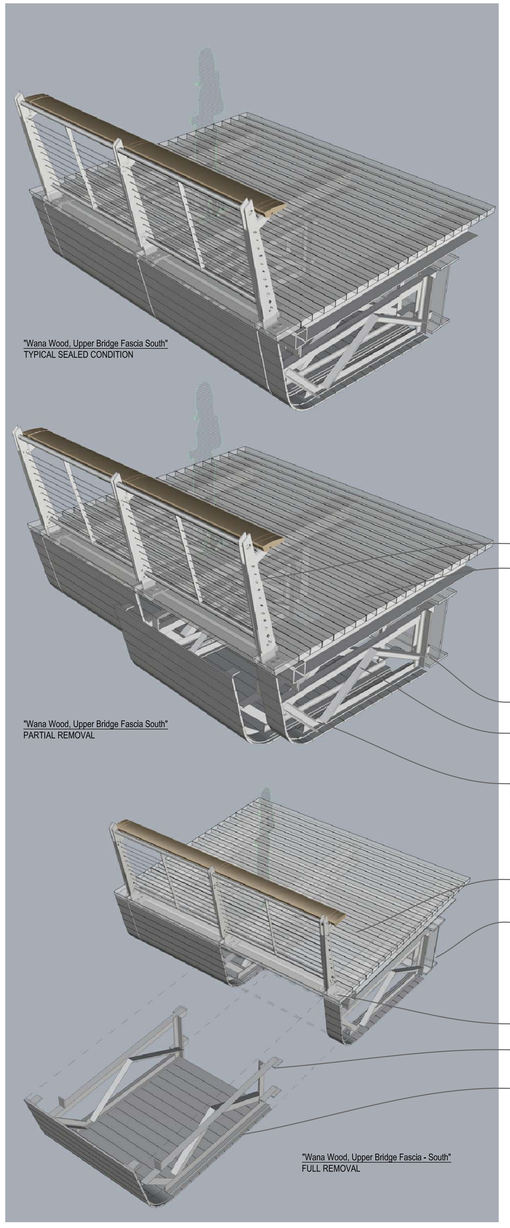

3 A411 UPPER BRIDGE SECTION NORTH FASCIA ACCESS / REMOVAL SEQUENCE
N.T.S.

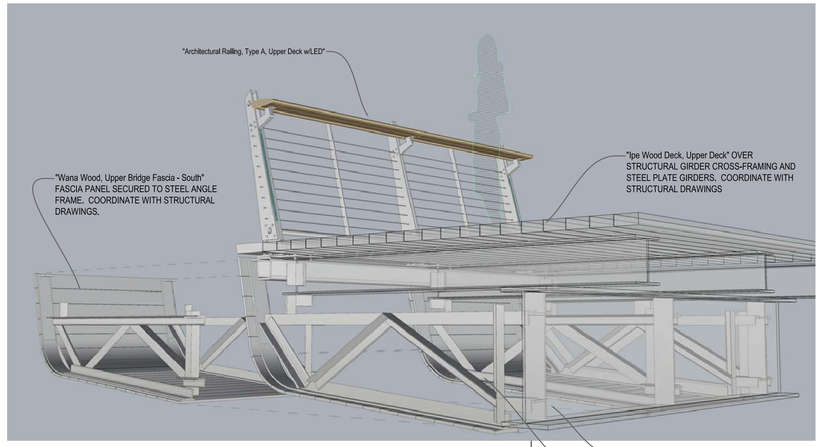

2 A411 UPPER BRIDGE SECTION SOUTH FASCIA ACCESS
N.T.S.

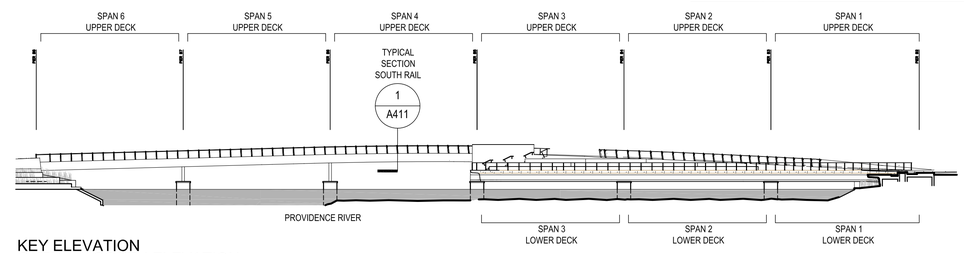

KEY ELEVATION
OVERALL SOUTH ELEVATION
1/32" = 1'-0"

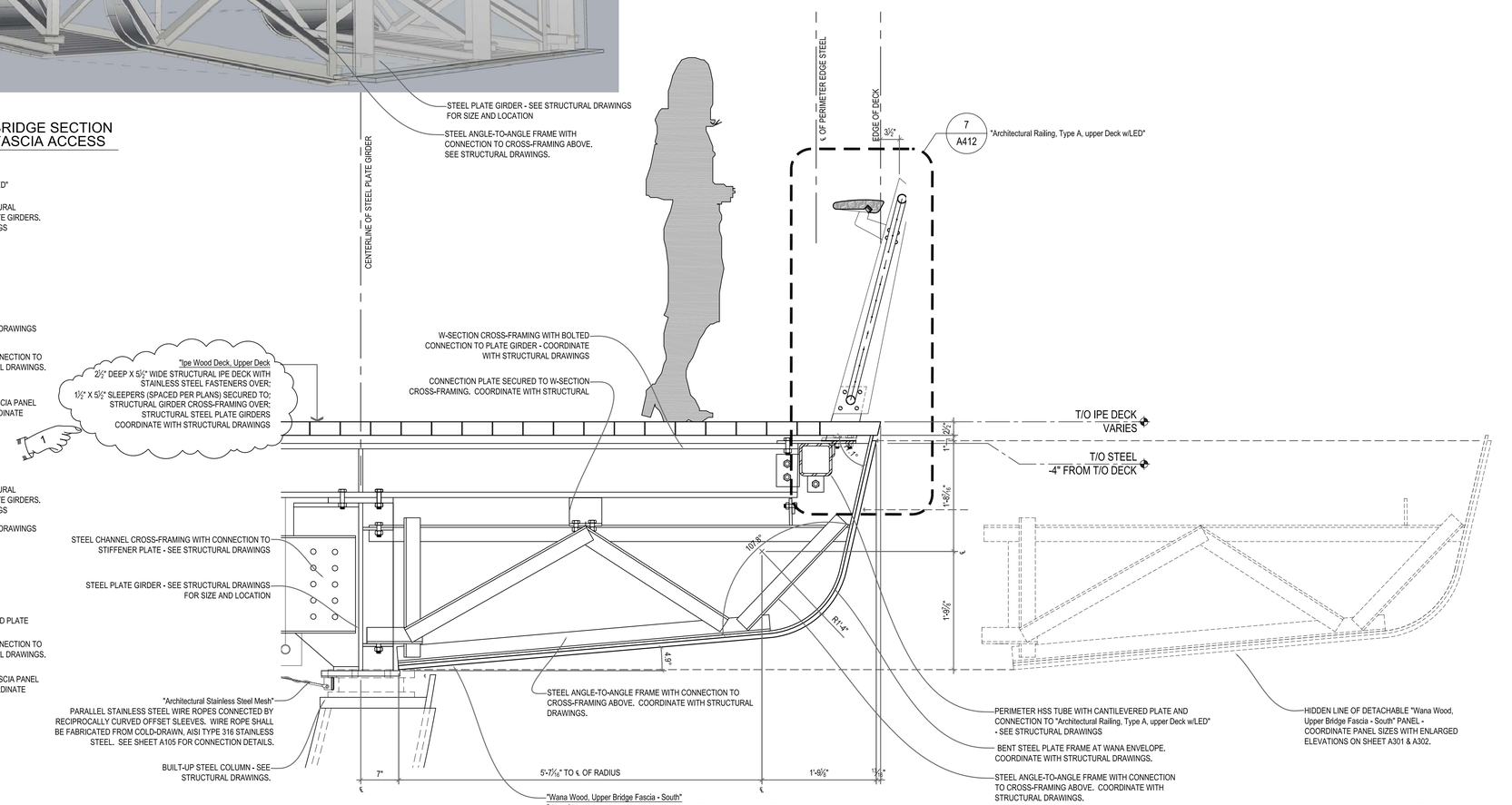

1 A411 UPPER BRIDGE SECTION TYPICAL SOUTH-WEST RAIL
1" = 1'-0"

ADDENDUM NO. 4

REF DWG #	REFRENCE DRAWING NAME
S501	UPPER DECK DETAILS - 1
S502	UPPER DECK DETAILS - 2

CDR MAGUIRE

inFORM studio
235 east main street, suite 102b
northville, mi 48167
(p) 248.449.3564
(f) 248.449.6984
www.in-formstudio.com
Buro Happold

BETA Group, Inc.
Engineers • Planners • Landscape Architects
Lincoln, RI - Norwood, MA - Hartford, CT

RHODE ISLAND DEPARTMENT OF TRANSPORTATION

INTERSTATE 195

DESIGNED BY:
CHECKED:
DATE:
SHEET: V2_038
OF: V2_163

SCALE:

REVISIONS			REVISIONS		
NO.	DATE	BY	NO.	DATE	BY
1	6/14/2016	CL			

IMPROVEMENTS TO INTERSTATE ROUTE 195
CONTRACT 16 VOLUME 2
PROVIDENCE RHODE ISLAND

BRIDGE SECTIONS AND DETAILS

A411

R:\Current\2010.1881.01_Providence Pedestrian Bridge\drawings\current\100% Submittal\1881_A410-A413.dwg, 6/9/2016 1:53:26 PM, Cory Lavigne

R-1	FED ROAD DIV. NO.	STATE	FEDERAL AID PROJECT NO.	FISCAL YEAR	SHEET NO.	TOTAL SHEETS
	1	R.I.			V2_039	V2_163

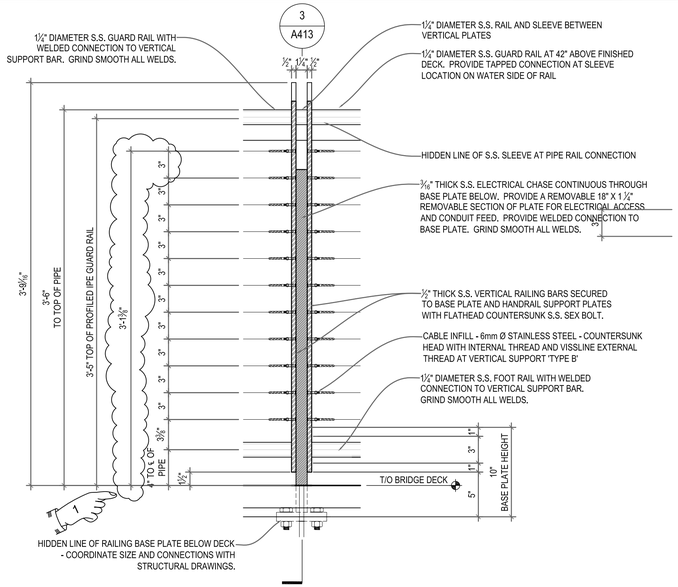

6 A412 VERTICAL SUPPORT TYPE A.2 ENLARGED ELEVATION - WATER SIDE
1 1/2" = 1'-0"

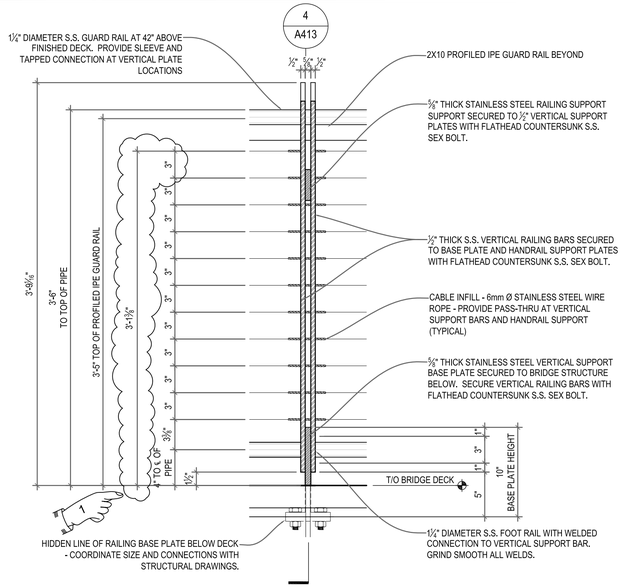

5 A412 VERTICAL SUPPORT TYPE A.1 ENLARGED ELEVATION - WATER SIDE
1 1/2" = 1'-0"

STAINLESS STEEL NOTES

SHOP FABRICATE AND ASSEMBLE HANDRAILS AND RAILINGS TO THE GREATEST EXTENT POSSIBLE TO MINIMIZE FIELD SPLICING AND ASSEMBLY. DISASSEMBLE UNITS ONLY AS NECESSARY FOR TRANSPORT TO SITE. CLEARLY MARK UNITS FOR REASSEMBLY AND COORDINATED INSTALLATION. USE CONNECTIONS THAT MAINTAIN STRUCTURAL VALUE OF JOINED PIECES. FABRICATE HANDRAILS AND GUARDRAILS IN ACCORDANCE TO APPROVED SHOP DRAWING AND FIELD DIMENSIONS WITH BENDS WHERE INDICATED ON SHOP DRAWINGS UTILIZING ESTABLISHED WORKING POINTS.

FORM BENDS TO UNIFORM RADIUS, FREE OF DISTORTION, TWISTS, CRACKS AND GRAIN SEPARATION.

SPLICES AND EXPANSION JOINTS SHALL UTILIZE INTERNAL SPLICE CONNECTORS WITH SET SCREWS TO ALLOW FOR RAIL EXPANSION OVER AMBIENT TEMPERATURE CHANGE.

WELD ALL SHOP ASSEMBLED CONNECTIONS CONTINUOUS WITHOUT UNDERCUT AND OR DISTORTION OF RAIL MATERIALS. GRIND AND OR DRESS EXPOSED WELDS SMOOTH AND FLUSH TO CORNER OR FILLET WITHOUT WEAKENING RAIL CONNECTION. REMOVE ALL BURRS AND SHARP EDGES FROM EXPOSED ENDS OF FINAL RAIL ASSEMBLIES.

PROVIDE DRAINAGE AND WEEP HOLES WITHIN RAIL ASSEMBLIES TO PREVENT ENTRAPMENT OF WATER WITHIN RAIL ASSEMBLIES.

ASSEMBLE RAILS FITTING SPLICES TOGETHER TO FORM TIGHT HAIRLINE JOINTS WHILE ALLOWING FOR THERMAL EXPANSION AS REQUIRED.
MAKE ALL ADJUSTMENTS TO ALIGNMENT FOR SATISFACTORY RAIL APPEARANCE AND TO PLUMB POSTS PRIOR TO FINAL TIGHTENING OF FASTENERS

DESIGN COMPONENTS TO ALLOW FOR EXPANSION AND CONTRACTION WITHOUT CAUSING BUCKLING,EXCESSIVE OPENING OF JOINTS, OR OVERSTRESSING OF WELDS AND FASTENERS.

FORM CHANGES IN DIRECTION OF RAILING MEMBERS AS SHOWN ON CONTRACT DRAWINGS.

UNLESS OTHERWISE INDICATED, FABRICATE MEMBERS AND FITTINGS TO PRODUCE FLUSH, SMOOTH, RIGID, HAIRLINE JOINTS.

PROVIDE INSERTS AND OTHER ANCHORAGE DEVICES TO CONNECT HANDRAILS AND RAILINGS TO CONCRETE OR STEEL. FABRICATE ANCHORAGE DEVICES CAPABLE OF WITHSTANDING LOADS IMPOSED BY HANDRAILS AND RAILINGS. COORDINATE ANCHORAGE DEVICES WITH SUPPORTING BRIDGE STRUCTURE.

WIRE ROPE TO BE 6 MM ASTM A 492 AND ASTM A 555, TYPE 316 STAINLESS STEEL. FABRICATE WIRE ROPE WITH INTEGRAL COLORED FILAMENT DESIGNATING SPECIFIC MANUFACTURER.
PROVIDE WIRE ROPE TENDONS IN LENGTHS INDICATED ON DRAWINGS AND APPROVED SHOP DRAWINGS. PROVIDE OPTIMUM ADJUSTMENT IN BOTH DIRECTIONS BY CALCULATING FINAL TENDON LENGTHS WITH ALLOWANCE FOR TENSIONING FITTINGS WITH 2/3 OPEN AND WITH 1/3 OF THREAD LENGTH ENGAGED.

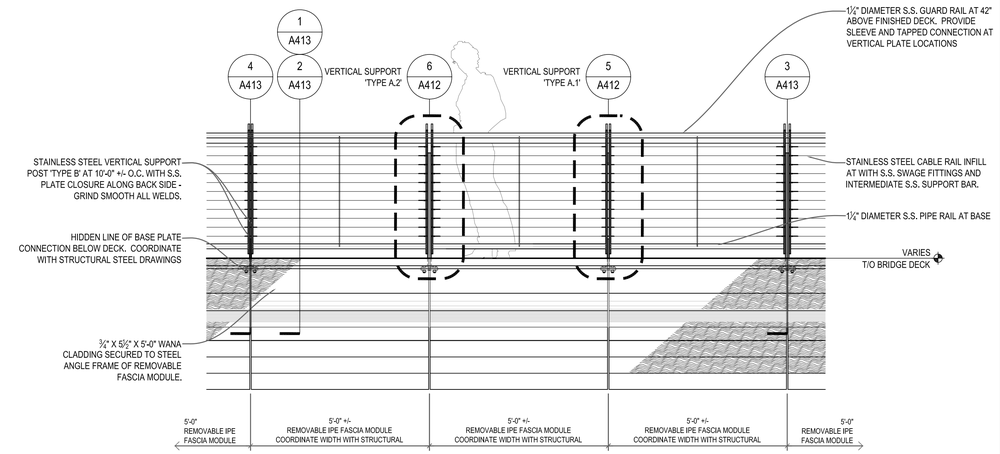

2 A412 "Architectural Railing, Type A, Upper Deck w/LED" ELEVATION - WATER SIDE
1/2" = 1'-0"

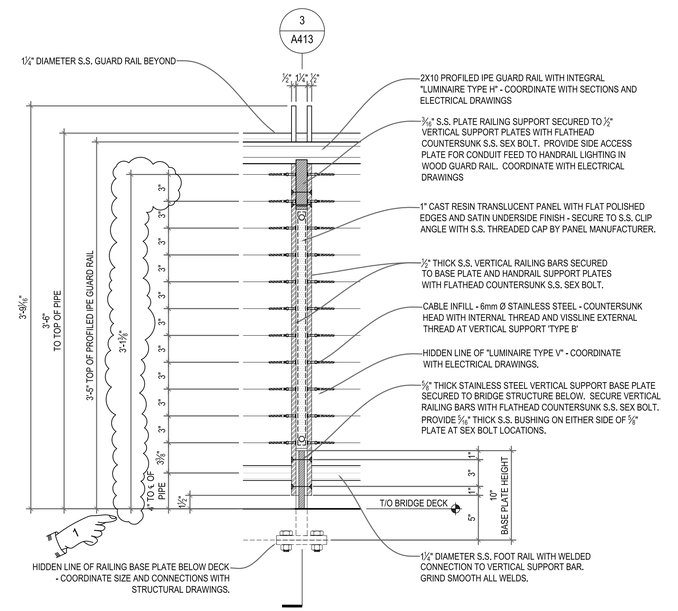

4 A412 VERTICAL SUPPORT TYPE A.2 ENLARGED ELEVATION - DECK SIDE
1 1/2" = 1'-0"

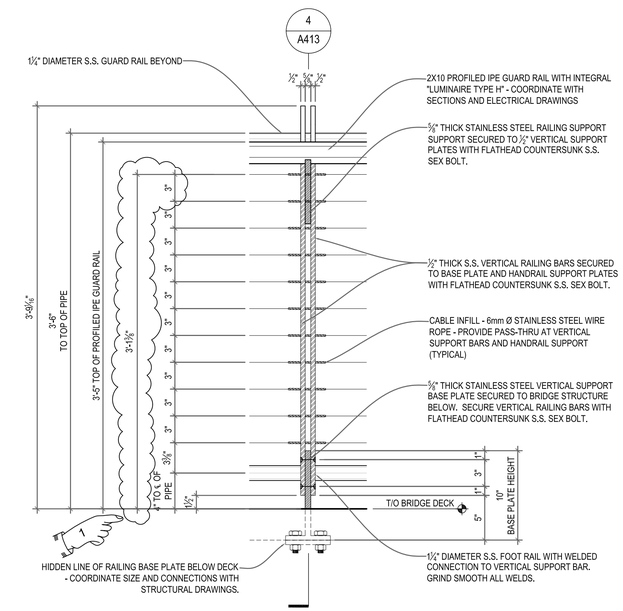

3 A412 VERTICAL SUPPORT TYPE A.1 ENLARGED ELEVATION - DECK SIDE
1 1/2" = 1'-0"

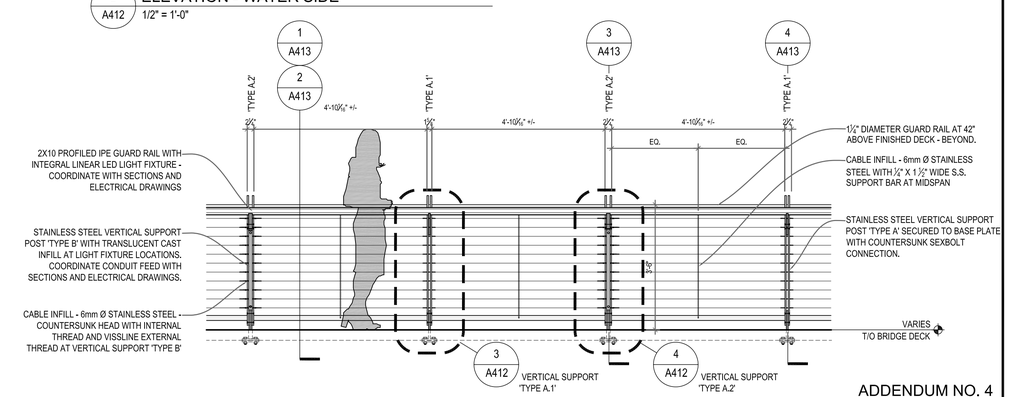

1 A412 "Architectural Railing, Type A, Upper Deck w/LED" ELEVATION - INTERIOR DECK SIDE
1/2" = 1'-0"

ADDENDUM NO. 4

REF DWG #	REFRENCE DRAWING NAME

CDR MAGUIRE

inFORM studio
235 east main street, suite 102b
northville, mi 48167
(p) 248.449.3564
(f) 248.449.6984
www.in-formstudio.com
Buro Happold

BETA Group, Inc.
Engineers • Planners • Landscape Architects
Lincoln, RI - Norwood, MA - Hartford, CT

RHODE ISLAND DEPARTMENT OF TRANSPORTATION

INTERSTATE 195

DESIGNED BY:
CHECKED:
DATE:
SHEET: V2_039
OF: V2_163

SCALE:

REVISIONS			REVISIONS		
NO.	DATE	BY	NO.	DATE	BY
1	6/14/2016	CL			

IMPROVEMENTS TO INTERSTATE ROUTE 195
PROVIDENCE CONTRACT 16 VOLUME 2 RHODE ISLAND

UPPER BRIDGE RAILING ELEVATIONS

A412

R:\Current\2010.1881.01_Providence Pedestrian Bridge\drawings\current\100% Submittal\1881_A410-A413.dwg, 6/9/2016 1:52:44 PM, Cory Lavigne

FED ROAD DIV. NO.	STATE	FEDERAL AID PROJECT NO.	FISCAL YEAR	SHEET NO.	TOTAL SHEETS
1	R.I.			V2_040	V2_163

R-1

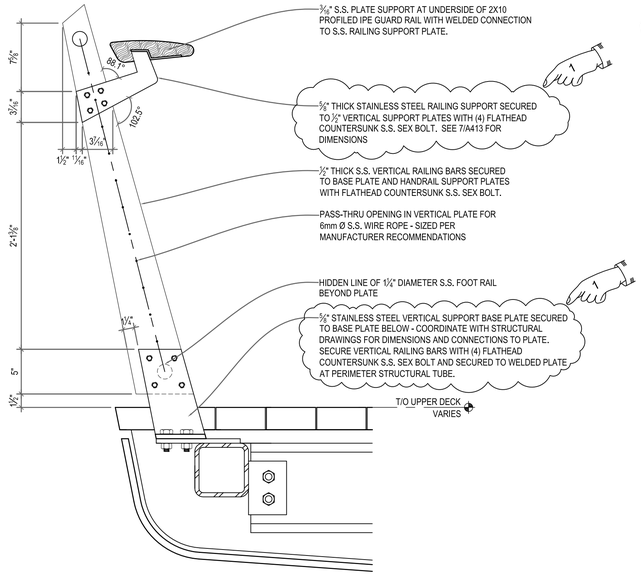

4 A413 VERTICAL SUPPORT TYPE A.1 SECTION
1 1/2" = 1'-0"

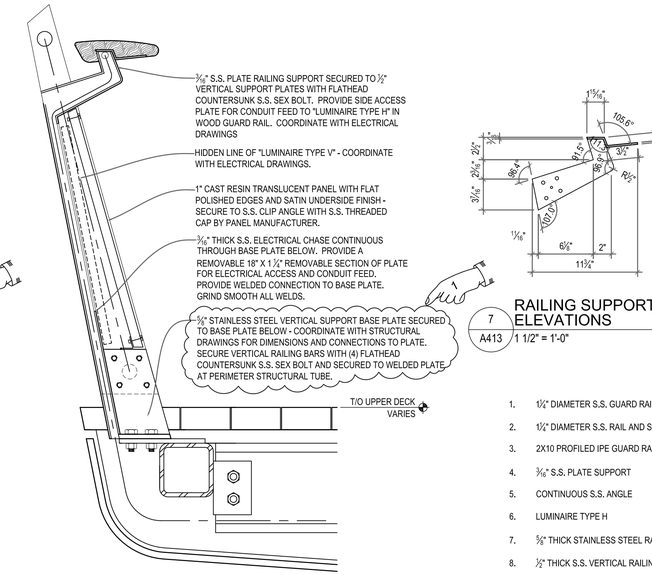

3 A413 VERTICAL SUPPORT TYPE A.2 SECTION
1 1/2" = 1'-0"

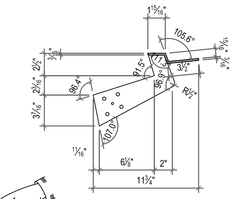

7 A413 RAILING SUPPORT ELEVATIONS
1 1/2" = 1'-0"

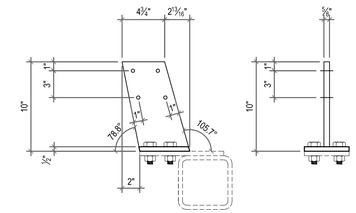

6 A413 BASEPLATE AT VERTICAL SUPPORT ELEVATIONS
1 1/2" = 1'-0"

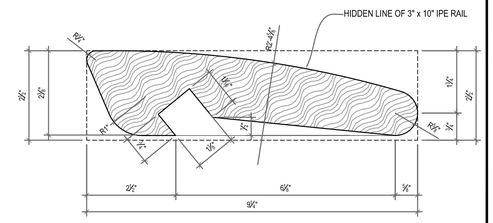

5 A413 IPE GUARD RAIL ENLARGED SECTION
6" = 1'-0"

1. 1 1/4" DIAMETER S.S. GUARD RAIL
2. 1 1/4" DIAMETER S.S. RAIL AND SLEEVE
3. 2X10 PROFILED IPE GUARD RAIL
4. 3/16" S.S. PLATE SUPPORT
5. CONTINUOUS S.S. ANGLE
6. LUMINAIRE TYPE H
7. 5/8" THICK STAINLESS STEEL RAILING SUPPORT
8. 1/2" THICK S.S. VERTICAL RAILING BAR
9. 1/4" THICK X 1 1/2" WIDE INTERMEDIATE S.S. SUPPORT BAR
10. (4) FLATHEAD COUNTERSUNK S.S. SEX BOLT
11. 6mm Ø STAINLESS STEEL WIRE ROPE
12. 3/16" THICK S.S. ELECTRICAL CHASE CONTINUOUS THROUGH BASE PLATE BELOW
13. 1" CAST RESIN TRANSLUCENT PANEL
14. S.S. THREADED CAP BY PANEL MANUFACTURER
15. 3/16" S.S. CLIP
16. 1 1/4" DIAMETER S.S. FOOT RAIL
17. 5/8" THICK S.S. VERTICAL SUPPORT BASE PLATE
11. S.S. BASE PLATE AND FASTENERS - SEE STRUCTURAL DRAWINGS

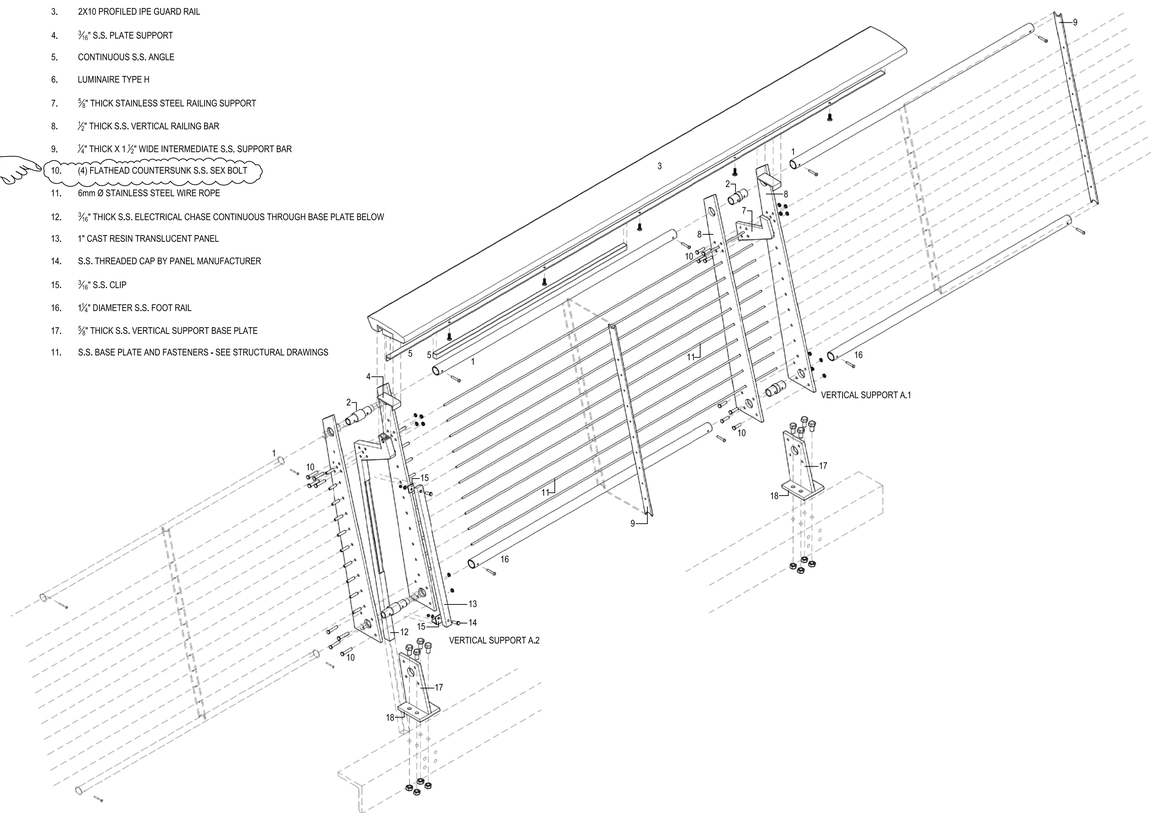

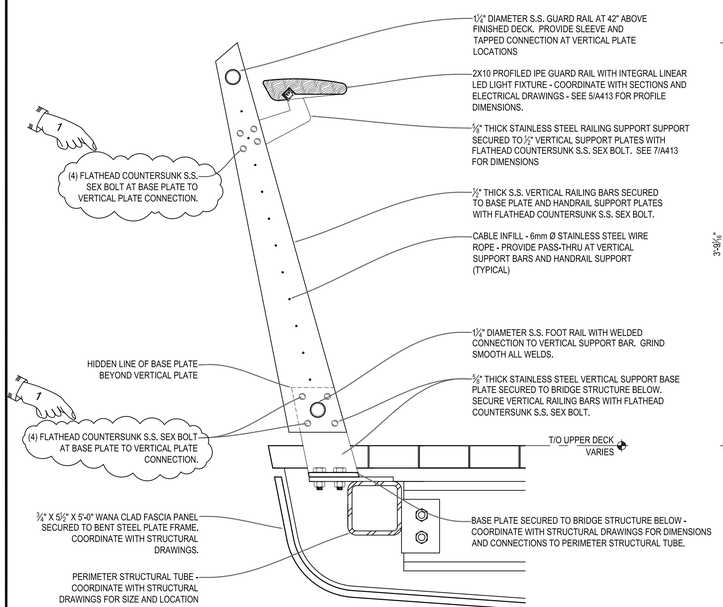

2 A413 TYPICAL MID-SPAN RAIL SECTION NOTED
1 1/2" = 1'-0"

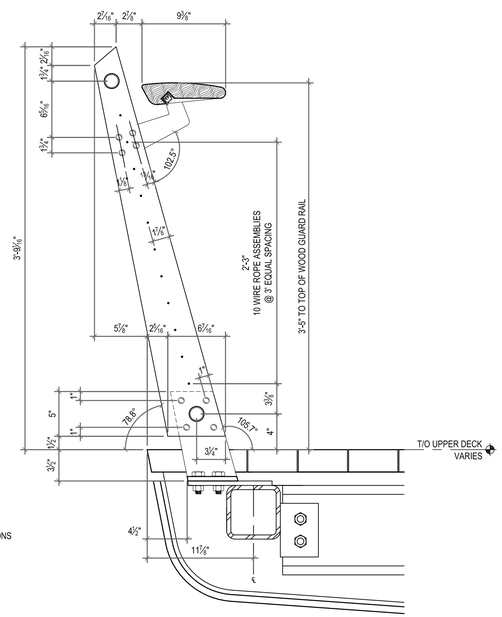

1 A413 TYPICAL MID-SPAN RAIL SECTION DIMENSIONED
1 1/2" = 1'-0"

ADDENDUM NO. 4

REF DWG #	REFRENCE DRAWING NAME

CDR MAGUIRE

inFORM studio
235 east main street, suite 102b
northville, mi 48167
(p) 248.449.3564
(f) 248.449.6984
www.in-formstudio.com
Buro Happold

BETA Group, Inc.
Engineers • Planners • Landscape Architects
Lincoln, RI - Norwood, MA - Hartford, CT

RHODE ISLAND
DEPARTMENT OF TRANSPORTATION

INTERSTATE 195

DESIGNED BY:
CHECKED:
DATE:
SHEET: V2_040
OF: V2_163

SCALE:

REVISIONS			REVISIONS		
NO.	DATE	BY	NO.	DATE	BY
1	6/14/2016	CL			

IMPROVEMENTS TO
INTERSTATE ROUTE 195
CONTRACT 16 VOLUME 2
PROVIDENCE RHODE ISLAND

UPPER BRIDGE RAILING SECTIONS

A413

R:\Current\2010.1881.01_Providence Pedestrian Bridge\drawings\current\100% Submittal\1881_A410-A413.dwg, 6/9/2016 1:59:53 PM, Cory Lavigne

FED ROAD DIV. NO.	STATE	FEDERAL AID PROJECT NO.	FISCAL YEAR	SHEET NO.	TOTAL SHEETS
1	R.I.			V2_041	V2_163

R-1

NOTE - ALL ELEVATIONS REFER TO PROVIDENCE MEAN HIGH WATER (PMHW) DATUM = 0.0'
PROVIDENCE MEAN HIGH WATER (PMHW) = +1.54 NAVD 1988

NOTE - ALL STRUCTURAL STEEL AND FASCIA SUPPORT STEEL COMPONENTS TO RECIEVE THERMAL SPRAYED ZINC COATING PER SECTION 827 AND PAINTED PER SECTION 825

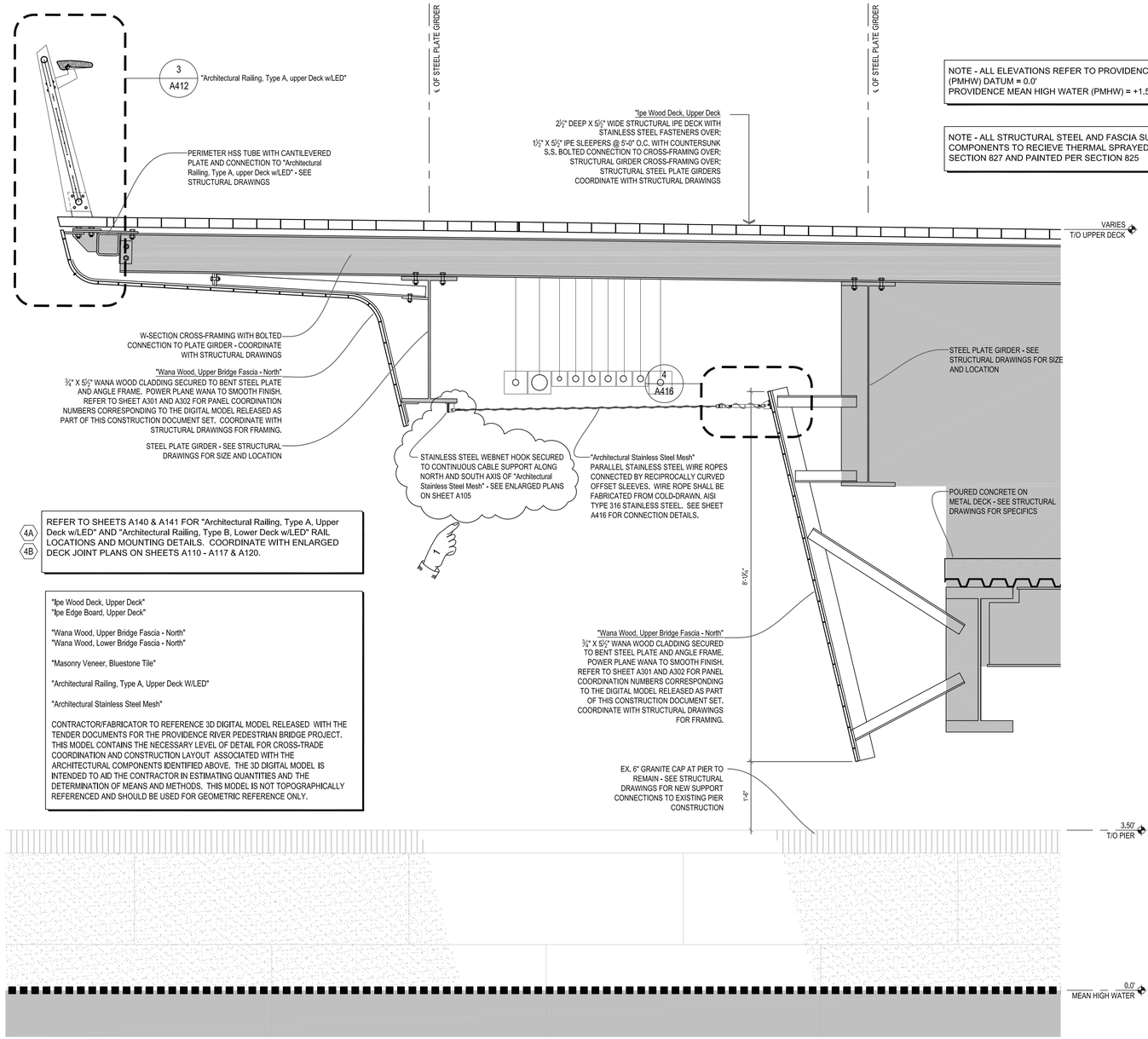

4A
4B
REFER TO SHEETS A140 & A141 FOR "Architectural Railing, Type A, Upper Deck w/LED" AND "Architectural Railing, Type B, Lower Deck w/LED" RAIL LOCATIONS AND MOUNTING DETAILS. COORDINATE WITH ENLARGED DECK JOINT PLANS ON SHEETS A110 - A117 & A120.

"Ipe Wood Deck, Upper Deck"
"Ipe Edge Board, Upper Deck"

"Wana Wood, Upper Bridge Fascia - North"
"Wana Wood, Lower Bridge Fascia - North"

"Masonry Veneer, Bluestone Tile"

"Architectural Railing, Type A, Upper Deck W/LED"

"Architectural Stainless Steel Mesh"

CONTRACTOR/FABRICATOR TO REFERENCE 3D DIGITAL MODEL RELEASED WITH THE TENDER DOCUMENTS FOR THE PROVIDENCE RIVER PEDESTRIAN BRIDGE PROJECT. THIS MODEL CONTAINS THE NECESSARY LEVEL OF DETAIL FOR CROSS-TRADE COORDINATION AND CONSTRUCTION LAYOUT ASSOCIATED WITH THE ARCHITECTURAL COMPONENTS IDENTIFIED ABOVE. THE 3D DIGITAL MODEL IS INTENDED TO AID THE CONTRACTOR IN ESTIMATING QUANTITIES AND THE DETERMINATION OF MEANS AND METHODS. THIS MODEL IS NOT TOPOGRAPHICALLY REFERENCED AND SHOULD BE USED FOR GEOMETRIC REFERENCE ONLY.

2 / A415 NORTH FASCIA SECTION BETWEEN PIERS B4 & B5
3/4" = 1'-0" 1 / A403

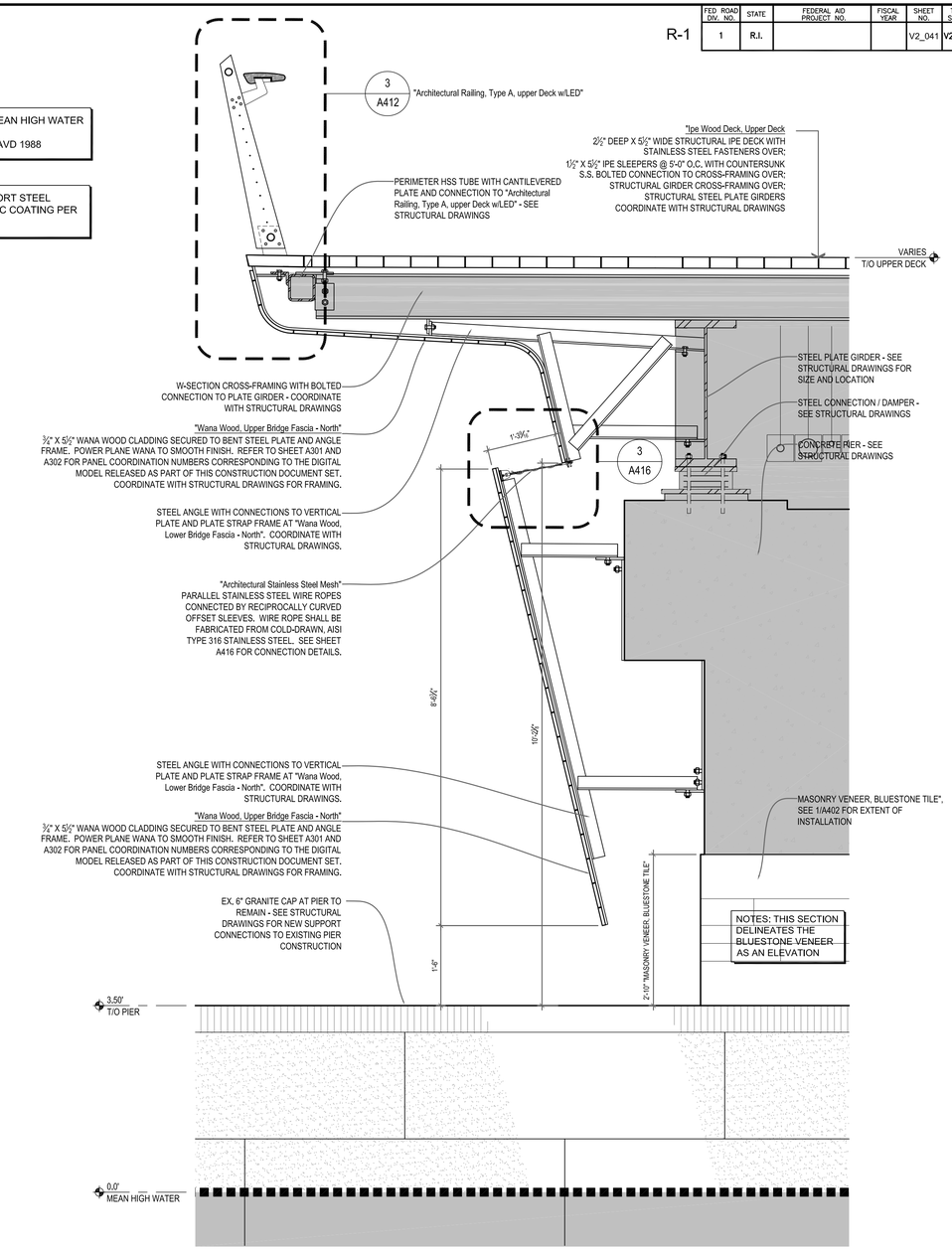

1 / A415 NORTH FASCIA SECTION AT PIER B5
3/4" = 1'-0" 1 / A402

ADDENDUM NO. 4

REF DWG #	REFRENCE DRAWING NAME
S231	B5 PIER DETAILS

CDR MAGUIRE

inFORM studio
235 east main street, suite 102b
northville, mi 48167
(p) 248.449.3564
(f) 248.449.6984
www.in-formstudio.com

Buro Happold

BETA Group, Inc.
Engineers • Planners • Landscape Architects
Lincoln, RI - Norwood, MA - Hartford, CT

RHODE ISLAND
DEPARTMENT OF TRANSPORTATION

INTERSTATE 195

DESIGNED BY:
CHECKED:
DATE:
SHEET: V2_041
OF: V2_163

SCALE:

REVISIONS			REVISIONS		
NO.	DATE	BY	NO.	DATE	BY
1	6/14/2016	CL			

IMPROVEMENTS TO
INTERSTATE ROUTE 195
CONTRACT 16 VOLUME 2
PROVIDENCE RHODE ISLAND

FASCIA SECTIONS AND DETAILS

A415

R:\Current\2010.1881.01_Providence Pedestrian Bridge\drawings\current\100% Submittal\1881_A415-A416.dwg, 6/9/2016 3:16:15 PM, Cory Lavigne

FED. ROAD DIV. NO.	STATE	FEDERAL AID PROJECT NO.	FISCAL YEAR	SHEET NO.	TOTAL SHEETS
1	R.I.			V2_043	V2_163

R-1

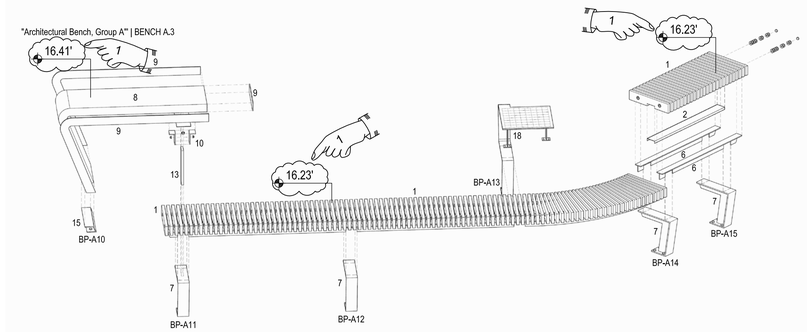

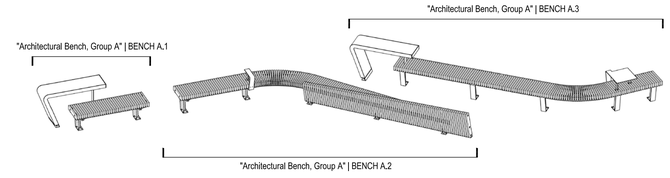

3 A420 "Architectural Bench, Group A" KEY PLAN
N.T.S.

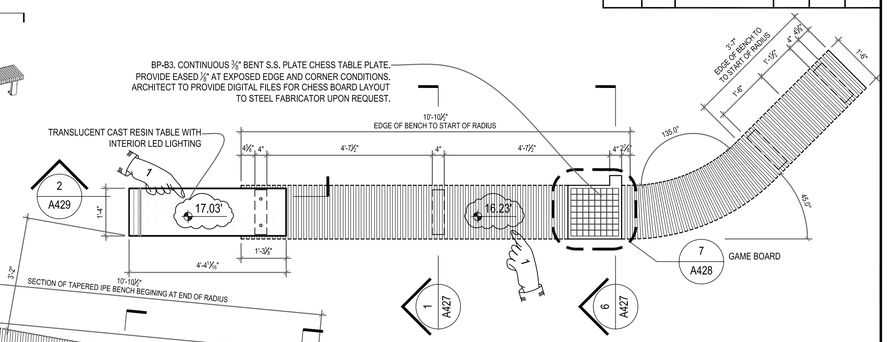

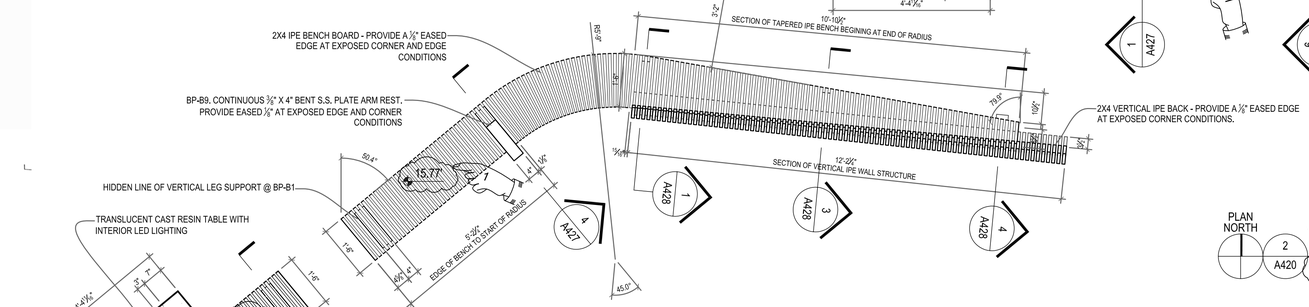

PLAN NORTH

2 A420 "Architectural Bench, Group A" SEAT LEVEL PLAN
1/2" = 1'-0"

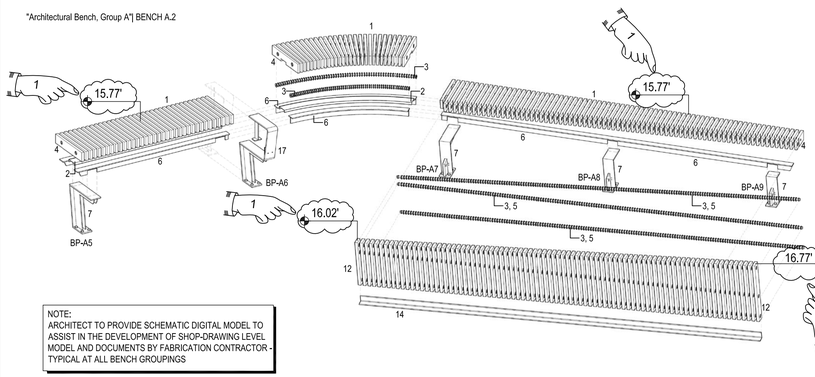

NOTE:
ARCHITECT TO PROVIDE SCHEMATIC DIGITAL MODEL TO ASSIST IN THE DEVELOPMENT OF SHOP-DRAWING LEVEL MODEL AND DOCUMENTS BY FABRICATION CONTRACTOR - TYPICAL AT ALL BENCH GROUPINGS

NOTE:
"Architectural Bench, Group A" WORK POINTS DERIVED FROM CENTER POINT OF BASE PLATE. SEE ENLARGED PLANS ON SHEET A428 FOR PRECISE DIMENSIONAL LOCATION PRIOR TO INSTALLATION. COORDINATE PLATE ATTACHMENT WITH STRUCTURAL STEEL FRAMING BELOW DECK. COORDINATE WITH STRUCTURAL DRAWINGS.

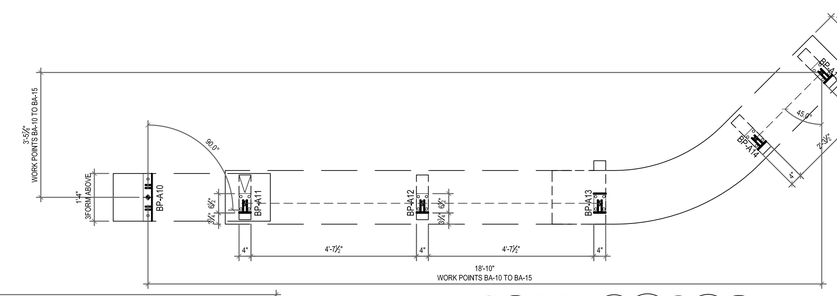

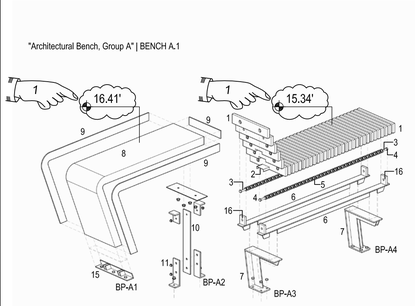

4 A420 "Architectural Bench, Group A" COMPONENT AXONOMETRIC
N.T.S.

1. 2x4 IPE BENCH AND VERTICAL BACKER - PROVIDE A 1/8" EASED EDGE AT ALL EXPOSED CORNER AND EDGE CONDITIONS
2. 1/8" THICK CONTINUOUS S.S. BENT PLATE WITH INTEGRAL LINEAR LED LIGHT FIXTURE
3. CONTINUOUS 1/2" Ø S.S. THREADED ROD THROUGH BENCH BOARDS
4. COUNTERSUNK S.S. NUT AND 1 1/4" Ø WASHER ASSEMBLY AT BENCH END BOARD
5. 7/8" LONG X 3/4" Ø S.S. BUSHING AT GAPS BETWEEN IPE BENCH BOARDS (TYPICAL)
6. CONTINUOUS S.S. STRUCTURAL T-SECTION WITH NOTCHED AND WELDED CONNECTIONS TO VERTICAL LEG SUPPORTS, TAPERED AT ENDS
7. S.S. VERTICAL LEG SUPPORT. COORIDINATE CONDUIT LOCATIONS WITH ELECTRICAL DRAWINGS
8. TRANSLUCENT CAST RESIN TABLE WITH INTERIOR LED LIGHTING
9. PERIMETER S.S. EDGE PLATE
10. S.S. VERTICAL BAR SUPPORT WITH S.S. ANGLE CONNECTIONS AT TABLE BASE
11. S.S. ANGLE SLOTTED CONNECTION AT BASE OF VERTICAL SUPPORT. SECURED TO STRUCTURE
12. 5/8" X 3 1/2" VERTICAL IPE BACK WALL - CUT TO MATCH SLOPE
13. S.S. VERTICAL BAR SUPPORT WITH S.S. PLATE CONNECTION AT TOP OF LEG
14. S.S. ANGLE SUPPORT AT BOTTOM OF IPE BACK WALL
15. S.S. TABLE SUPPORT SECURED TO STRUCTURE. REFER TO A429
16. 2 1/4" W x 3 1/4" H x 3/4" THICK S.S. SPACER PLATE WELDED TO TOP OF S.S. T-SECTION. PROVIDE OPENING FOR 1/2" Ø ROD. REFER TO A429
17. S.S. VERTICAL LEG SUPPORT WITH CONTINUOUS 3/8" X 4" BENT S.S. PLATE ARM REST
18. S.S. VERTICAL LEG SUPPORT WITH CONTINUOUS 3/8" X 4" BENT S.S. PLATE GAME BOARD
19. S.S. VERTICAL LEG SUPPORT WITH S.S. PLATE INTEGRAL W/ IPE BACK WALL

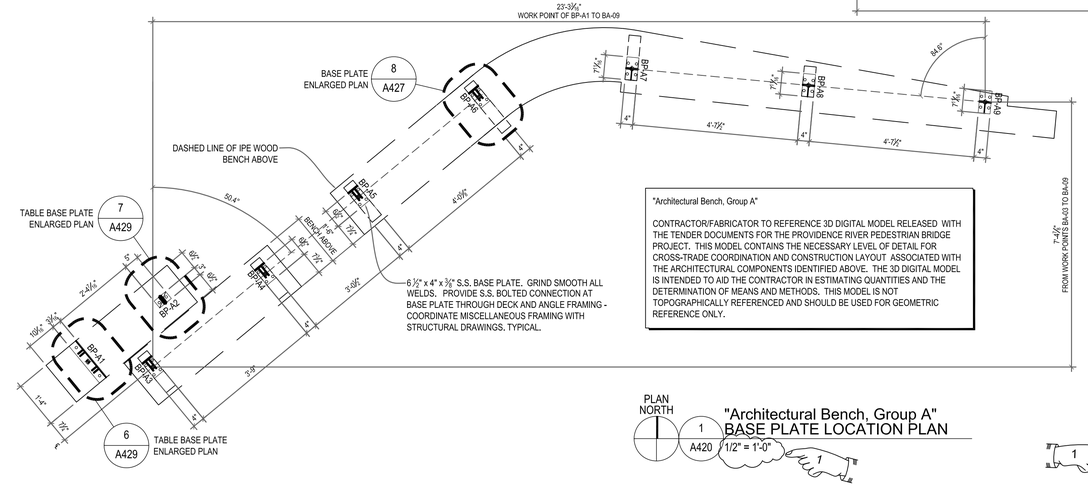

"Architectural Bench, Group A"

CONTRACTOR/FABRICATOR TO REFERENCE 3D DIGITAL MODEL RELEASED WITH THE TENDER DOCUMENTS FOR THE PROVIDENCE RIVER PEDESTRIAN BRIDGE PROJECT. THIS MODEL CONTAINS THE NECESSARY LEVEL OF DETAIL FOR CROSS-TRADE COORDINATION AND CONSTRUCTION LAYOUT ASSOCIATED WITH THE ARCHITECTURAL COMPONENTS IDENTIFIED ABOVE. THE 3D DIGITAL MODEL IS INTENDED TO AID THE CONTRACTOR IN ESTIMATING QUANTITIES AND THE DETERMINATION OF MEANS AND METHODS. THIS MODEL IS NOT TOPOGRAPHICALLY REFERENCED AND SHOULD BE USED FOR GEOMETRIC REFERENCE ONLY.

PLAN NORTH

1 A420 "Architectural Bench, Group A" BASE PLATE LOCATION PLAN
1/2" = 1'-0"

WORK POINT	PLAN DATA		
	UPPER BRIDGE PLATFORM		
	STATION	STATION OFFSET	ELEVATION
BP-A1	1+08.68	62.28 LEFT	13.79 (PMHW)
BP-A2	1+11.29	63.01 LEFT	13.86 (PMHW)
BP-A3	1+10.27	61.41 LEFT	13.84 (PMHW)
BP-A4	1+14.21	62.50 LEFT	13.95 (PMHW)
BP-A5	1+17.47	63.42 LEFT	14.02 (PMHW)
BP-A6	1+21.68	64.59 LEFT	14.13 (PMHW)
BP-A7	1+25.95	63.68 LEFT	14.24 (PMHW)
BP-A8	1+30.26	61.22 LEFT	14.35 (PMHW)
BP-A9	1+34.57	58.77 LEFT	14.47 (PMHW)
BP-A10	1+33.29	64.71 LEFT	14.42 (PMHW)
BP-A11	1+35.70	63.46 LEFT	14.48 (PMHW)
BP-A12	1+40.22	61.44 LEFT	14.61 (PMHW)
BP-A13	1+44.75	59.42 LEFT	14.73 (PMHW)
BP-A14	1+49.46	59.30 LEFT	14.85 (PMHW)
BP-A15	1+51.91	60.24 LEFT	14.91 (PMHW)

ADDENDUM NO. 4

REF DWG #	REFRENCE DRAWING NAME
A101	OVERALL UPPER BRIDGE PLAN

CDR MAGUIRE

inFORM studio
235 east main street, suite 102b
northville, mi 48167
(p) 248.449.3564
(f) 248.449.6984
www.in-formstudio.com
Buro Happold

BETA Group, Inc.
Engineers • Planners • Landscape Architects
Lincoln, RI - Norwood, MA - Hartford, CT

STATE OF RHODE ISLAND — HOPE

RHODE ISLAND
DEPARTMENT OF TRANSPORTATION

INTERSTATE 195

DESIGNED BY:
CHECKED:
DATE:
SHEET: V2_043
OF: V2_163

SCALE:

REVISIONS			REVISIONS		
NO.	DATE	BY	NO.	DATE	BY
1	6/14/2016	CL			

IMPROVEMENTS TO INTERSTATE ROUTE 195
PROVIDENCE — CONTRACT 16 VOLUME 2 — RHODE ISLAND

BENCH PLANS AND COMPONENT DRAWINGS GROUP A

A420

R:\Current\2010.1881.01_Providence Pedestrian Bridge\drawings\current\100% Submittal\1881_A420-A426.dwg, 6/9/2016 11:13:06 AM, Cory Lavigne

FED ROAD DIV. NO.	STATE	FEDERAL AID PROJECT NO.	FISCAL YEAR	SHEET NO.	TOTAL SHEETS
1	R.I.			V2_044	V2_163

R-1

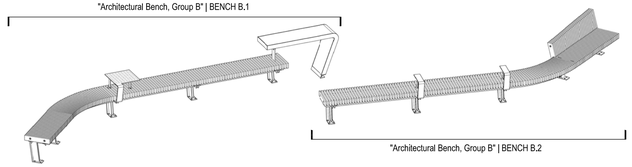

3 A421 "Architectural Bench, Group B" KEY PLAN
N.T.S.

"Architectural Bench, Group B" | BENCH B.1

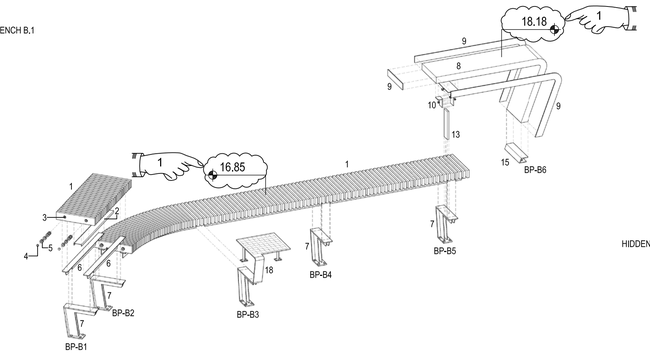

"Architectural Bench, Group B" | BENCH B.2

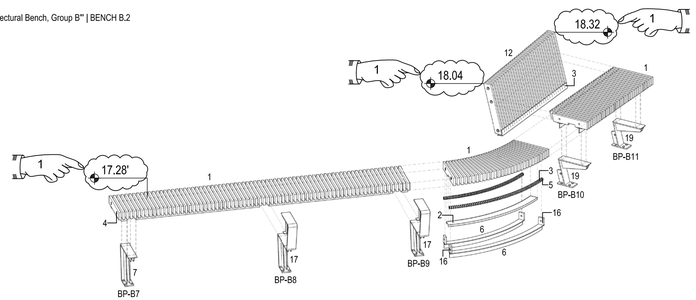

4 A421 "Architectural Bench, Group B" COMPONENT AXONOMETRIC
N.T.S.

NOTE:
ARCHITECT TO PROVIDE SCHEMATIC DIGITAL MODEL TO ASSIST IN THE DEVELOPMENT OF SHOP-DRAWING LEVEL MODEL AND DOCUMENTS BY FABRICATION CONTRACTOR - TYPICAL AT ALL BENCH GROUPINGS

1. 2x4 IPE BENCH AND VERTICAL BACKER - PROVIDE A 1/8" EASED EDGE AT ALL EXPOSED CORNER AND EDGE CONDITIONS
2. 1/8" THICK CONTINUOUS S.S. BENT PLATE WITH INTEGRAL LINEAR LED LIGHT FIXTURE
3. CONTINUOUS 1/2" Ø S.S. THREADED ROD THROUGH BENCH BOARDS
4. COUNTERSUNK S.S. NUT AND 1 1/2" Ø WASHER ASSEMBLY AT BENCH END BOARD
5. 7/8" LONG X 3/4" Ø S.S. BUSHING AT GAPS BETWEEN IPE BENCH BOARDS (TYPICAL)
6. CONTINUOUS S.S. STRUCTURAL T-SECTION WITH NOTCHED AND WELDED CONNECTIONS TO VERTICAL LEG SUPPORTS, TAPERED AT ENDS
7. S.S. VERTICAL LEG SUPPORT. COORDINATE CONDUIT LOCATIONS WITH ELECTRICAL DRAWINGS
8. TRANSLUCENT CAST RESIN TABLE WITH INTERIOR LED LIGHTING
9. PERIMETER S.S. EDGE PLATE
10. S.S. VERTICAL BAR SUPPORT WITH S.S. ANGLE CONNECTIONS AT TABLE BASE
11. S.S. ANGLE SLOTTED CONNECTION AT BASE OF VERTICAL SUPPORT. SECURED TO STRUCTURE
12. 3/4" X 3 1/2" VERTICAL IPE BACK WALL - CUT TO MATCH SLOPE
13. S.S. VERTICAL BAR SUPPORT WITH S.S. PLATE CONNECTION AT TOP OF LEG
14. S.S. ANGLE SUPPORT AT BOTTOM OF IPE BACK WALL
15. S.S. TABLE SUPPORT SECURED TO STRUCTURE. REFER TO A429
16. 2 1/2" W x 3 1/2" H x 3/8" THICK S.S. SPACER PLATE WELDED TO TOP OF S.S. T-SECTION. PROVIDE OPENING FOR 1/2" Ø ROD. REFER TO A429
17. S.S. VERTICAL LEG SUPPORT WITH CONTINUOUS 3/8" X 4" BENT S.S. PLATE ARM REST
18. S.S. VERTICAL LEG SUPPORT WITH CONTINUOUS 3/8" X 4" BENT S.S. PLATE GAME BOARD
19. S.S. VERTICAL LEG SUPPORT WITH S.S. PLATE INTEGRAL W/ IPE BACK WALL

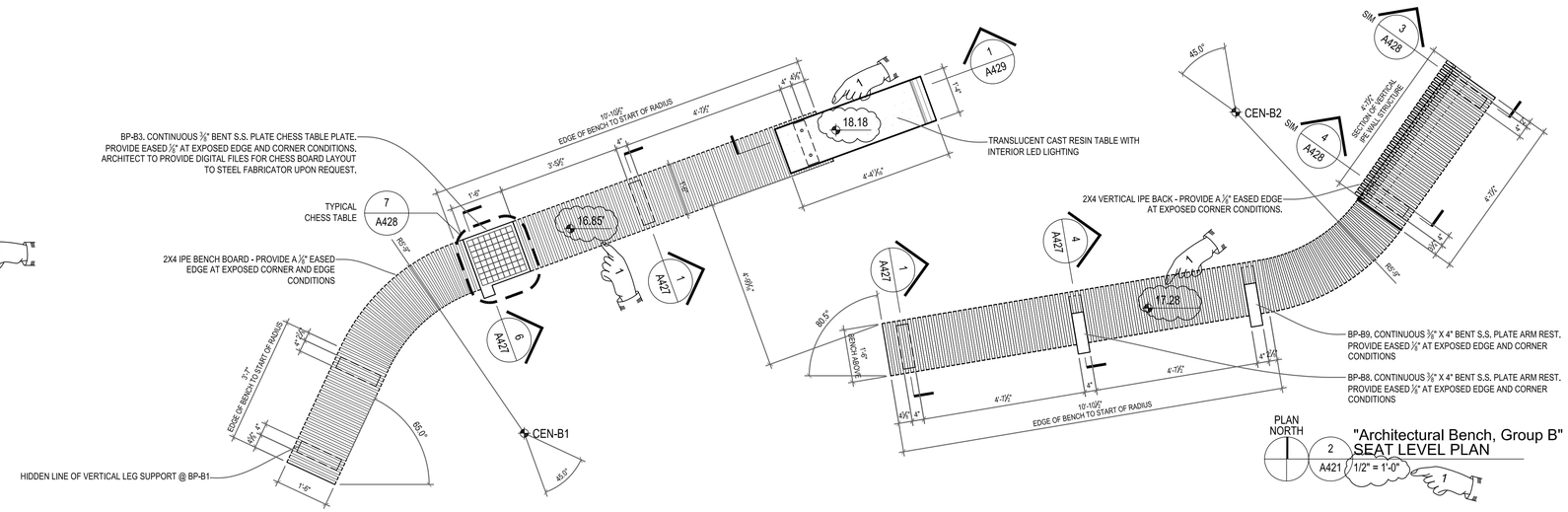

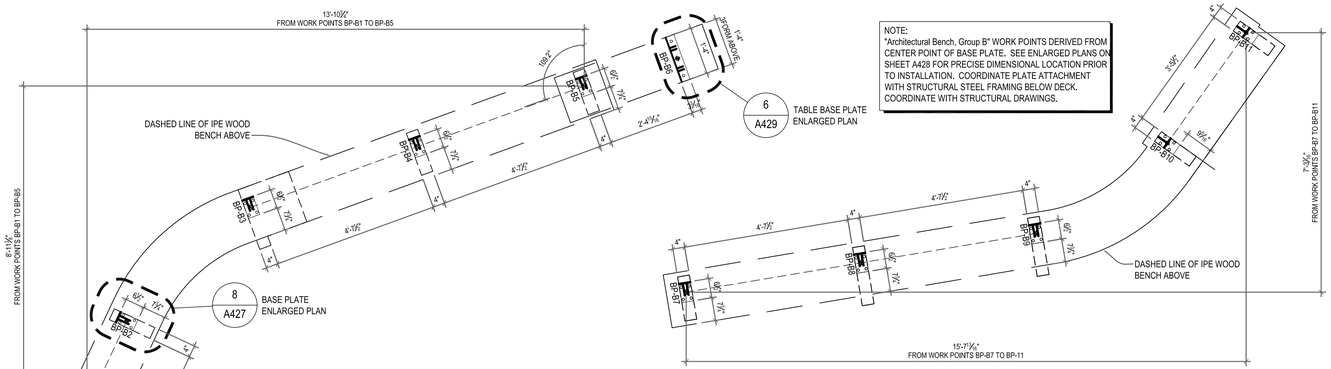

NOTE:
"Architectural Bench, Group B" WORK POINTS DERIVED FROM CENTER POINT OF BASE PLATE. SEE ENLARGED PLANS ON SHEET A428 FOR PRECISE DIMENSIONAL LOCATION PRIOR TO INSTALLATION. COORDINATE PLATE ATTACHMENT WITH STRUCTURAL STEEL FRAMING BELOW DECK. COORDINATE WITH STRUCTURAL DRAWINGS.

"Architectural Bench, Group B"

CONTRACTOR/FABRICATOR TO REFERENCE 3D DIGITAL MODEL RELEASED WITH THE TENDER DOCUMENTS FOR THE PROVIDENCE RIVER PEDESTRIAN BRIDGE PROJECT. THIS MODEL CONTAINS THE NECESSARY LEVEL OF DETAIL FOR CROSS-TRADE COORDINATION AND CONSTRUCTION LAYOUT ASSOCIATED WITH THE ARCHITECTURAL COMPONENTS IDENTIFIED ABOVE. THE 3D DIGITAL MODEL IS INTENDED TO AID THE CONTRACTOR IN ESTIMATING QUANTITIES AND THE DETERMINATION OF MEANS AND METHODS. THIS MODEL IS NOT TOPOGRAPHICALLY REFERENCED AND SHOULD BE USED FOR GEOMETRIC REFERENCE ONLY.

WORK POINT	PLAN DATA		
	UPPER BRIDGE PLATFORM		
	STATION	STATION OFFSET	ELEVATION
BP-B1	1+58.60	54.27 LEFT	15.10 (PMHW)
BP-B2	1+60.57	55.99 LEFT	15.14 (PMHW)
BP-B3	1+65.04	57.49 LEFT	15.25 (PMHW)
BP-B4	1+69.98	57.14 LEFT	15.38 (PMHW)
BP-B5	1+74.93	56.80 LEFT	15.49 (PMHW)
BP-B6	1+77.63	56.44 LEFT	15.57 (PMHW)
BP-B7	1+75.19	50.37 LEFT	15.54 (PMHW)
BP-B8	1+79.99	49.13 LEFT	15.67 (PMHW)
BP-B9	1+84.79	47.90 LEFT	15.80 (PMHW)
BP-B10	1+89.21	48.65 LEFT	15.91 (PMHW)
BP-B11	1+92.46	50.60 LEFT	15.98 (PMHW)

PLAN NORTH
1 A421 "Architectural Bench, Group B" BASE PLATE LOCATION PLAN
1/2" = 1'-0"

ADDENDUM NO. 4

REF DWG #	REFRENCE DRAWING NAME
A101	OVERALL UPPER BRIDGE PLAN

CDR MAGUIRE

inFORM studio
235 east main street, suite 102b
northville, mi 48167
(p) 248.449.3564
(f) 248.449.6984
www.in-formstudio.com
Buro Happold

BETA Group, Inc.
Engineers • Planners • Landscape Architects
Lincoln, RI - Norwood, MA - Hartford, CT

RHODE ISLAND STATE OF HOPE

RHODE ISLAND
DEPARTMENT OF TRANSPORTATION

INTERSTATE 195

DESIGNED BY:
CHECKED:
DATE:
SHEET: V2_044
OF: V2_163

SCALE:

REVISIONS			REVISIONS		
NO.	DATE	BY	NO.	DATE	BY
1	6/14/2016	CL			

IMPROVEMENTS TO
INTERSTATE ROUTE 195
CONTRACT 16 VOLUME 2
PROVIDENCE RHODE ISLAND

BENCH PLANS AND COMPONENT DRAWINGS
GROUP B

A421

R:\Current\2010.1881.01_Providence Pedestrian Bridge\drawings\current\100% Submittal\1881_A420-A426.dwg, 6/9/2016 11:12:26 AM, Cory Lavigne

R-1	FED. ROAD DIV. NO.	STATE	FEDERAL AID PROJECT NO.	FISCAL YEAR	SHEET NO.	TOTAL SHEETS
	1	R.I.			V2_045	V2_163

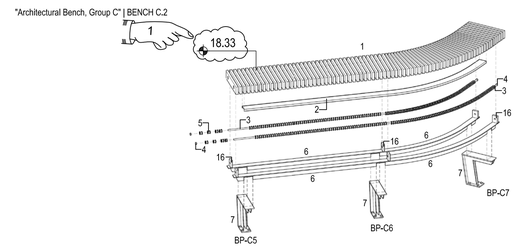

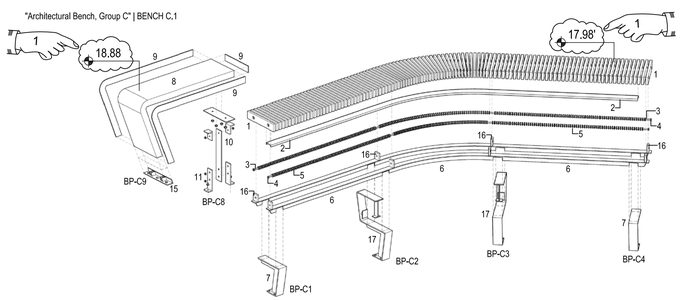

"Architectural Bench, Group C"
COMPONENT AXONOMETRIC
4 / A422 N.T.S.

NOTE:
ARCHITECT TO PROVIDE SCHEMATIC DIGITAL MODEL TO ASSIST IN THE DEVELOPMENT OF SHOP-DRAWING LEVEL MODEL AND DOCUMENTS BY FABRICATION CONTRACTOR - TYPICAL AT ALL BENCH GROUPINGS

1. 2x4 IPE BENCH AND VERTICAL BACKER - PROVIDE A 1/8" EASED EDGE AT ALL EXPOSED CORNER AND EDGE CONDITIONS
2. 1/8" THICK CONTINUOUS S.S. BENT PLATE WITH INTEGRAL LINEAR LED LIGHT FIXTURE
3. CONTINUOUS 1/2" Ø S.S. THREADED ROD THROUGH BENCH BOARDS
4. COUNTERSUNK S.S. NUT AND 1 1/2" Ø WASHER ASSEMBLY AT BENCH END BOARD
5. 1/8" LONG X 3/4" Ø S.S. BUSHING AT GAPS BETWEEN IPE BENCH BOARDS (TYPICAL)
6. CONTINUOUS S.S. STRUCTURAL T-SECTION WITH NOTCHED AND WELDED CONNECTIONS TO VERTICAL LEG SUPPORTS, TAPERED AT ENDS
7. S.S. VERTICAL LEG SUPPORT. COORIDINATE CONDUIT LOCATIONS WITH ELECTRICAL DRAWINGS
8. TRANSLUCENT CAST RESIN TABLE WITH INTERIOR LED LIGHTING
9. PERIMETER S.S. EDGE PLATE
10. S.S. VERTICAL BAR SUPPORT WITH S.S. ANGLE CONNECTIONS AT TABLE BASE
11. S.S. ANGLE SLOTTED CONNECTION AT BASE OF VERTICAL SUPPORT. SECURED TO STRUCTURE
12. 5/8" X 3 1/2" VERTICAL IPE BACK WALL - CUT TO MATCH SLOPE
13. S.S. VERTICAL BAR SUPPORT WITH S.S. PLATE CONNECTION AT TOP OF LEG
14. S.S. ANGLE SUPPORT AT BOTTOM OF IPE BACK WALL
15. S.S. TABLE SUPPORT SECURED TO STRUCTURE. REFER TO A429
16. 2 1/2" W x 3 1/2" H x 3/8" THICK S.S. SPACER PLATE WELDED TO TOP OF S.S. T-SECTION. PROVIDE OPENING FOR 1/2" Ø ROD. REFER TO A429
17. S.S. VERTICAL LEG SUPPORT WITH CONTINUOUS 3/8" X 4" BENT S.S. PLATE ARM REST
18. S.S. VERTICAL LEG SUPPORT WITH CONTINUOUS 3/8" X 4" BENT S.S. PLATE GAME BOARD
19. S.S. VERTICAL LEG SUPPORT WITH S.S. PLATE INTEGRAL W/ IPE BACK WALL

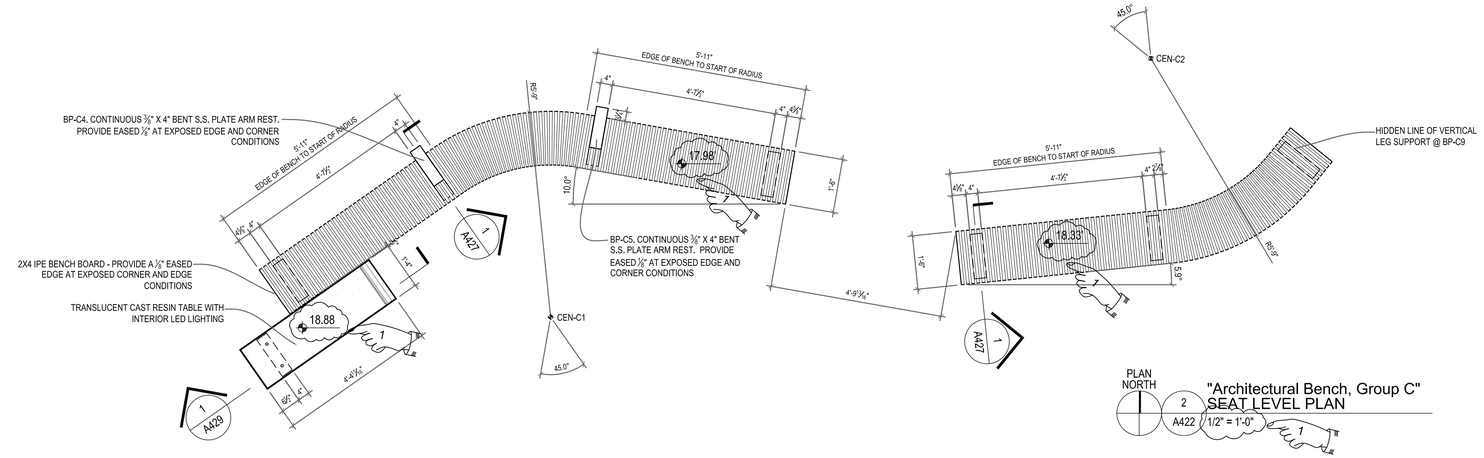

PLAN NORTH
"Architectural Bench, Group C"
SEAT LEVEL PLAN
2 / A422 1/2" = 1'-0"

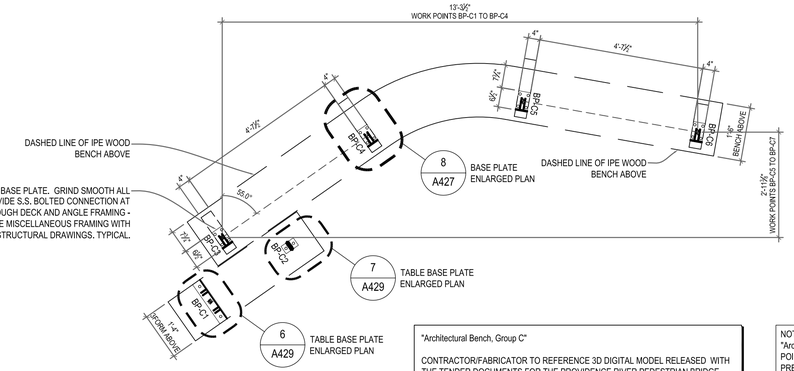

"Architectural Bench, Group C"

CONTRACTOR/FABRICATOR TO REFERENCE 3D DIGITAL MODEL RELEASED WITH THE TENDER DOCUMENTS FOR THE PROVIDENCE RIVER PEDESTRIAN BRIDGE PROJECT. THIS MODEL CONTAINS THE NECESSARY LEVEL OF DETAIL FOR CROSS-TRADE COORDINATION AND CONSTRUCTION LAYOUT ASSOCIATED WITH THE ARCHITECTURAL COMPONENTS IDENTIFIED ABOVE. THE 3D DIGITAL MODEL IS INTENDED TO AID THE CONTRACTOR IN ESTIMATING QUANTITIES AND THE DETERMINATION OF MEANS AND METHODS. THIS MODEL IS NOT TOPOGRAPHICALLY REFERENCED AND SHOULD BE USED FOR GEOMETRIC REFERENCE ONLY.

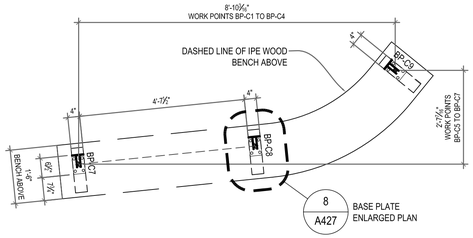

NOTE:
"Architectural Bench, Group C" WORK POINTS DERIVED FROM CENTER POINT OF BASE PLATE. SEE ENLARGED PLANS ON SHEET A428 FOR PRECISE DIMENSIONAL LOCATION PRIOR TO INSTALLATION. COORDINATE PLATE ATTACHMENT WITH STRUCTURAL STEEL FRAMING BELOW DECK. COORDINATE WITH STRUCTURAL DRAWINGS.

1

WORK POINT	PLAN DATA		
	UPPER BRIDGE PLATFORM		
	STATION	STATION OFFSET	ELEVATION
BP-C1	2+02.52	44.22 LEFT	16.27 (PMHW)
BP-C2	2+05.18	44.74 LEFT	16.33 (PMHW)
BP-C3	2+03.55	45.72 LEFT	16.28 (PMHW)
BP-C4	2+08.42	46.67 LEFT	16.40 (PMHW)
BP-C5	2+12.78	45.78 LEFT	16.51 (PMHW)
BP-C6	2+16.89	43.01 LEFT	16.63 (PMHW)
BP-C7	2+21.30	38.88 LEFT	16.76 (PMHW)
BP-C8	2+26.01	37.34 LEFT	16.88 (PMHW)
BP-C9	2+30.45	37.68 LEFT	16.98 (PMHW)

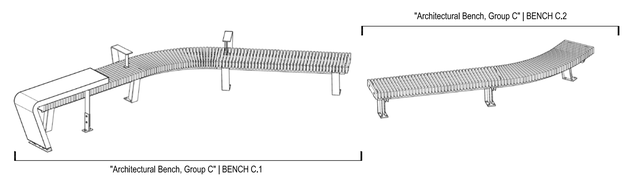

"Architectural Bench, Group C"
KEY PLAN
3 / A422 N.T.S.

PLAN NORTH
"Architectural Bench, Group C"
BASE PLATE LOCATION PLAN
1 / A422 1/2" = 1'-0"

ADDENDUM NO. 4

REF DWG #	REFRENCE DRAWING NAME
A101	OVERALL UPPER BRIDGE PLAN

CDR MAGUIRE

inFORM studio
235 east main street, suite 102b
northville, mi 48167
(p) 248.449.3564
(f) 248.449.6984
www.in-formstudio.com

Buro Happold

BETA Group, Inc.
Engineers • Planners • Landscape Architects
Lincoln, RI - Norwood, MA - Hartford, CT

RHODE ISLAND STATE OF HOPE

RHODE ISLAND
DEPARTMENT OF TRANSPORTATION

INTERSTATE 195

DESIGNED BY:
CHECKED:
DATE:
SHEET: V2_045
OF: V2_163

SCALE:

REVISIONS			REVISIONS		
NO.	DATE	BY	NO.	DATE	BY
1	6/14/2016	CL			

IMPROVEMENTS TO
INTERSTATE ROUTE 195
PROVIDENCE CONTRACT 16 VOLUME 2 RHODE ISLAND

BENCH PLANS AND COMPONENT DRAWINGS
GROUP C

A422

R:\Current\2010.1881.01_Providence Pedestrian Bridge\drawings\current\100% Submittal\1881_A420-A426.dwg, 6/9/2016 11:11:44 AM, Cory Lavigne

R-1	FED. ROAD DIV. NO.	STATE	FEDERAL AID PROJECT NO.	FISCAL YEAR	SHEET NO.	TOTAL SHEETS
	1	R.I.			V2_046	V2_163

"Architectural Bench, Group D" | BENCH D.1

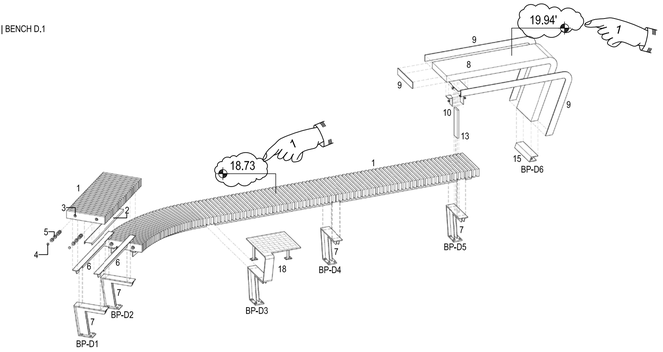

4 / A423 "Architectural Bench, Group D" COMPONENT AXONOMETRIC
N.T.S.

NOTE:
ARCHITECT TO PROVIDE SCHEMATIC DIGITAL MODEL TO ASSIST IN THE DEVELOPMENT OF SHOP-DRAWING LEVEL MODEL AND DOCUMENTS BY FABRICATION CONTRACTOR - TYPICAL AT ALL BENCH GROUPINGS

1. 2x4 IPE BENCH AND VERTICAL BACKER - PROVIDE A ⅛" EASED EDGE AT ALL EXPOSED CORNER AND EDGE CONDITIONS
2. ⅛" THICK CONTINUOUS S.S. BENT PLATE WITH INTEGRAL LINEAR LED LIGHT FIXTURE
3. CONTINUOUS ½" Ø S.S. THREADED ROD THROUGH BENCH BOARDS
4. COUNTERSUNK S.S. NUT AND 1 ¼" Ø WASHER ASSEMBLY AT BENCH END BOARD
5. ⅞" LONG X ¾" Ø S.S. BUSHING AT GAPS BETWEEN IPE BENCH BOARDS (TYPICAL)
6. CONTINUOUS S.S. STRUCTURAL T-SECTION WITH NOTCHED AND WELDED CONNECTIONS TO VERTICAL LEG SUPPORTS, TAPERED AT ENDS
7. S.S. VERTICAL LEG SUPPORT. COORIDINATE CONDUIT LOCATIONS WITH ELECTRICAL DRAWINGS
8. TRANSLUCENT CAST RESIN TABLE WITH INTERIOR LED LIGHTING
9. PERIMETER S.S. EDGE PLATE
10. S.S. VERTICAL BAR SUPPORT WITH S.S. ANGLE CONNECTIONS AT TABLE BASE
11. S.S. ANGLE SLOTTED CONNECTION AT BASE OF VERTICAL SUPPORT. SECURED TO STRUCTURE
12. ⅝" X 3 ½" VERTICAL IPE BACK WALL - CUT TO MATCH SLOPE
13. S.S. VERTICAL BAR SUPPORT WITH S.S. PLATE CONNECTION AT TOP OF LEG
14. S.S. ANGLE SUPPORT AT BOTTOM OF IPE BACK WALL
15. S.S. TABLE SUPPORT SECURED TO STRUCTURE. REFER TO A429
16. 2 ½" W x 3 ½" H x ¾" THICK S.S. SPACER PLATE WELDED TO TOP OF S.S. T-SECTION. PROVIDE OPENING FOR ½" Ø ROD. REFER TO A429
17. S.S. VERTICAL LEG SUPPORT WITH CONTINUOUS ⅜" X 4" BENT S.S. PLATE ARM REST
18. S.S. VERTICAL LEG SUPPORT WITH CONTINUOUS ⅜" X 4" BENT S.S. PLATE GAME BOARD
19. S.S. VERTICAL LEG SUPPORT WITH S.S. PLATE INTEGRAL W/ IPE BACK WALL

"Architectural Bench, Group D" | BENCH D.1

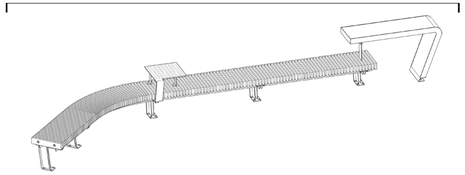

3 / A423 "Architectural Bench, Group D" KEY PLAN
N.T.S.

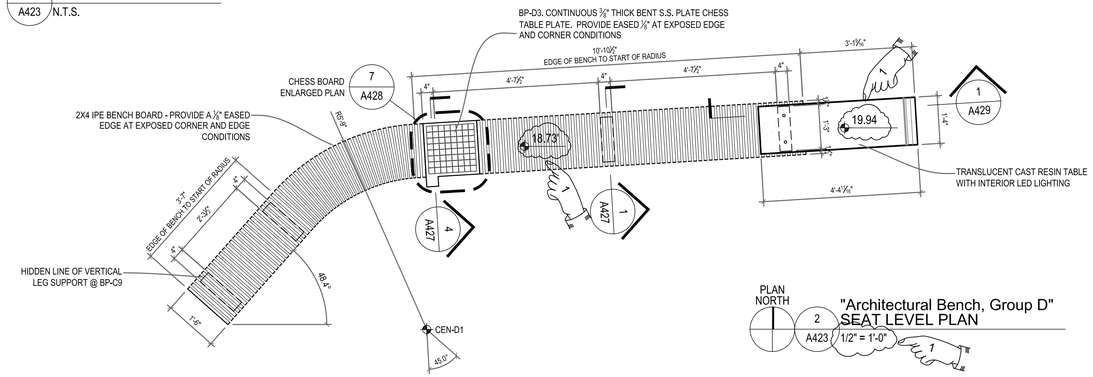

"Architectural Bench, Group D"

CONTRACTOR/FABRICATOR TO REFERENCE 3D DIGITAL MODEL RELEASED WITH THE TENDER DOCUMENTS FOR THE PROVIDENCE RIVER PEDESTRIAN BRIDGE PROJECT. THIS MODEL CONTAINS THE NECESSARY LEVEL OF DETAIL FOR CROSS-TRADE COORDINATION AND CONSTRUCTION LAYOUT ASSOCIATED WITH THE ARCHITECTURAL COMPONENTS IDENTIFIED ABOVE. THE 3D DIGITAL MODEL IS INTENDED TO AID THE CONTRACTOR IN ESTIMATING QUANTITIES AND THE DETERMINATION OF MEANS AND METHODS. THIS MODEL IS NOT TOPOGRAPHICALLY REFERENCED AND SHOULD BE USED FOR GEOMETRIC REFERENCE ONLY.

NOTE:
"Architectural Bench, Group D" WORK POINTS DERIVED FROM CENTER POINT OF BASE PLATE. SEE ENLARGED PLANS ON SHEET A428 FOR PRECISE DIMENSIONAL LOCATION PRIOR TO INSTALLATION. COORDINATE PLATE ATTACHMENT WITH STRUCTURAL STEEL FRAMING BELOW DECK. COORDINATE WITH STRUCTURAL DRAWINGS.

WORK POINT	PLAN DATA		
	UPPER BRIDGE PLATFORM		
	STATION	STATION OFFSET	ELEVATION
BP-D1	2+37.37	33.87 LEFT	17.14 (PMHW)
BP-D2	2+39.76	34.96 LEFT	17.17 (PMHW)
BP-D3	2+44.47	35.12 LEFT	17.25 (PMHW)
BP-D4	2+49.11	33.37 LEFT	17.33 (PMHW)
BP-D5	2+53.76	31.64 LEFT	17.39 (PMHW)
BP-D6	2+56.31	30.49 LEFT	17.51 (PMHW)

PLAN NORTH
1 / A423 "Architectural Bench, Group D" BASE PLATE LOCATION PLAN
1/2" = 1'-0"

ADDENDUM NO. 4

REF DWG #	REFRENCE DRAWING NAME
A101	OVERALL UPPER BRIDGE PLAN

CDR MAGUIRE

inFORM studio
235 east main street, suite 102b
northville, mi 48167
(p) 248.449.3564
(f) 248.449.6984
www.in-formstudio.com
Buro Happold

BETA Group, Inc.
Engineers • Planners • Landscape Architects
Lincoln, RI - Norwood, MA - Hartford, CT

RHODE ISLAND DEPARTMENT OF TRANSPORTATION

INTERSTATE 195

DESIGNED BY:
CHECKED:
DATE:
SHEET: V2_046
OF: V2_163

SCALE:

REVISIONS			REVISIONS		
NO.	DATE	BY	NO.	DATE	BY
1	6/14/2016	CL			

IMPROVEMENTS TO INTERSTATE ROUTE 195
CONTRACT 16 VOLUME 2
PROVIDENCE RHODE ISLAND

BENCH PLANS AND COMPONENT DRAWINGS GROUP D

A423

R:\Current\2010.1881.01_Providence Pedestrian Bridge\drawings\current\100% Submittal\1881_A420-A426.dwg, 6/9/2016 11:11:01 AM, Cory Lavigne

FED ROAD DIV. NO.	STATE	FEDERAL AID PROJECT NO.	FISCAL YEAR	SHEET NO.	TOTAL SHEETS
1	R.I.			V2_047	V2_163

R-1

1. 2x4 IPE BENCH AND VERTICAL BACKER - PROVIDE A ⅛" EASED EDGE AT ALL EXPOSED CORNER AND EDGE CONDITIONS
2. ⅛" THICK CONTINUOUS S.S. BENT PLATE WITH INTEGRAL LINEAR LED LIGHT FIXTURE
3. CONTINUOUS ½" Ø S.S. THREADED ROD THROUGH BENCH BOARDS
4. COUNTERSUNK S.S. NUT AND 1 ½" Ø WASHER ASSEMBLY AT BENCH END BOARD
5. ⅞" LONG X ¾" Ø S.S. BUSHING AT GAPS BETWEEN IPE BENCH BOARDS (TYPICAL)
6. CONTINUOUS S.S. STRUCTURAL T-SECTION WITH NOTCHED AND WELDED CONNECTIONS TO VERTICAL LEG SUPPORTS, TAPERED AT ENDS
7. S.S. VERTICAL LEG SUPPORT. COORIDINATE CONDUIT LOCATIONS WITH ELECTRICAL DRAWINGS
8. TRANSLUCENT CAST RESIN TABLE WITH INTERIOR LED LIGHTING
9. PERIMETER S.S. EDGE PLATE
10. S.S. VERTICAL BAR SUPPORT WITH S.S. ANGLE CONNECTIONS AT TABLE BASE
11. S.S. ANGLE SLOTTED CONNECTION AT BASE OF VERTICAL SUPPORT. SECURED TO STRUCTURE
12. ¾" X 3 ½" VERTICAL IPE BACK WALL - CUT TO MATCH SLOPE
13. S.S. VERTICAL BAR SUPPORT WITH S.S. PLATE CONNECTION AT TOP OF LEG
14. S.S. ANGLE SUPPORT AT BOTTOM OF IPE BACK WALL
15. S.S. TABLE SUPPORT SECURED TO STRUCTURE. REFER TO A429
16. 2 ¼" W x 3 ¼" H x ¾" THICK S.S. SPACER PLATE WELDED TO TOP OF S.S. T-SECTION. PROVIDE OPENING FOR ½" Ø ROD. REFER TO A429
17. S.S. VERTICAL LEG SUPPORT WITH CONTINUOUS ⅜" X 4" BENT S.S. PLATE ARM REST
18. S.S. VERTICAL LEG SUPPORT WITH CONTINUOUS ⅜" X 4" BENT S.S. PLATE GAME BOARD
19. S.S. VERTICAL LEG SUPPORT WITH S.S. PLATE INTEGRAL W/ IPE BACK WALL

"Architectural Bench, Group E" | BENCH E.1
"Architectural Bench, Group E" | BENCH E.2 SIM

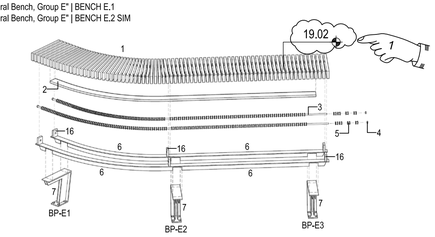

NOTE:
ARCHITECT TO PROVIDE SCHEMATIC DIGITAL MODEL TO ASSIST IN THE DEVELOPMENT OF SHOP-DRAWING LEVEL MODEL AND DOCUMENTS BY FABRICATION CONTRACTOR - TYPICAL AT ALL BENCH GROUPINGS

4 A424 "Architectural Bench, Group E" COMPONENT AXONOMETRIC
N.T.S.

NOTE:
"Architectural Bench, Group E" WORK POINTS DERIVED FROM CENTER POINT OF BASE PLATE. SEE ENLARGED PLANS ON SHEET A428 FOR PRECISE DIMENSIONAL LOCATION PRIOR TO INSTALLATION. COORDINATE PLATE ATTACHMENT WITH STRUCTURAL STEEL FRAMING BELOW DECK. COORDINATE WITH STRUCTURAL DRAWINGS.

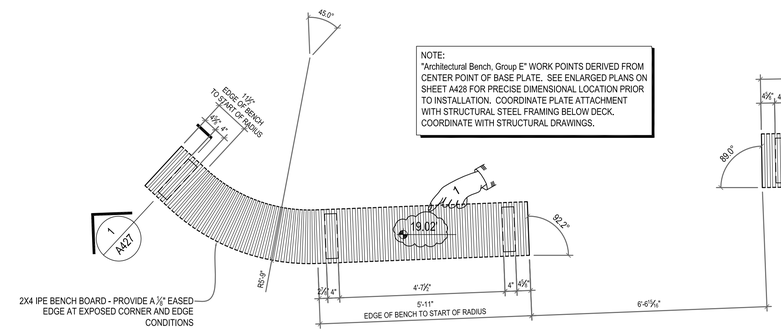

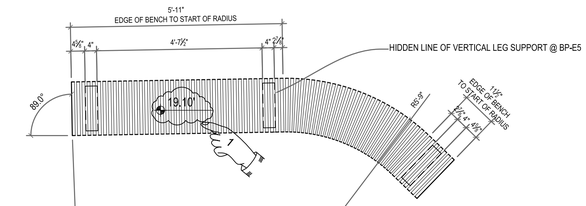

PLAN NORTH
3 A424 "Architectural Bench, Group E" SEAT LEVEL PLAN
1/2" = 1'-0"

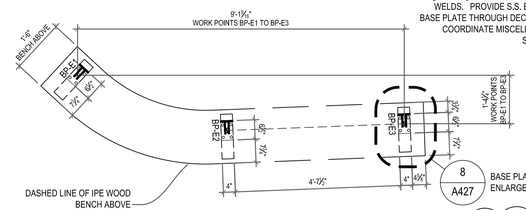

8 A427 BASE PLATE ENLARGED PLAN

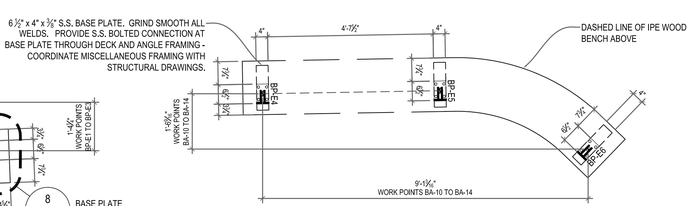

1

	PLAN DATA		
WORK POINT	UPPER BRIDGE PLATFORM		
	STATION	STATION OFFSET	ELEVATION
BP-E1	2+65.10	26.53 LEFT	17.53 (PM/HW)
BP-E2	2+68.27	23.41 LEFT	17.56 (PM/HW)
BP-E3	2+72.88	21.57 LEFT	17.59 (PM/HW)
BP-E4	2+80.53	19.94 LEFT	17.60 (PM/HW)
BP-E5	2+85.09	18.01 LEFT	17.60 (PM/HW)
BP-E6	2+88.21	14.83 LEFT	17.60 (PM/HW)

PLAN NORTH
1 A424 "Architectural Bench, Group E" BASE PLATE LOCATION PLAN
1/2" = 1'-0"

"Architectural Bench, Group E" | BENCH E.1

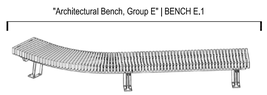

"Architectural Bench, Group E" | BENCH E.2

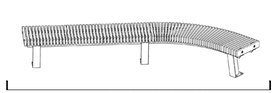

2 A424 "Architectural Bench, Group E" KEY PLAN
N.T.S.

"Architectural Bench, Group E"

CONTRACTOR/FABRICATOR TO REFERENCE 3D DIGITAL MODEL RELEASED WITH THE TENDER DOCUMENTS FOR THE PROVIDENCE RIVER PEDESTRIAN BRIDGE PROJECT. THIS MODEL CONTAINS THE NECESSARY LEVEL OF DETAIL FOR CROSS-TRADE COORDINATION AND CONSTRUCTION LAYOUT ASSOCIATED WITH THE ARCHITECTURAL COMPONENTS IDENTIFIED ABOVE. THE 3D DIGITAL MODEL IS INTENDED TO AID THE CONTRACTOR IN ESTIMATING QUANTITIES AND THE DETERMINATION OF MEANS AND METHODS. THIS MODEL IS NOT TOPOGRAPHICALLY REFERENCED AND SHOULD BE USED FOR GEOMETRIC REFERENCE ONLY.

ADDENDUM NO. 4

REF DWG #	REFRENCE DRAWING NAME
A101	OVERALL UPPER BRIDGE PLAN

CDR MAGUIRE

inFORM studio
235 east main street, suite 102b
northville, mi 48167
(p) 248.449.3564
(f) 248.449.6984
www.in-formstudio.com
Buro Happold

BETA Group, Inc.
Engineers • Planners • Landscape Architects
Lincoln, RI - Norwood, MA - Hartford, CT

RHODE ISLAND DEPARTMENT OF TRANSPORTATION

INTERSTATE 195

DESIGNED BY:
CHECKED:
DATE:
SHEET: V2_047
OF: V2_163

SCALE:

REVISIONS			REVISIONS		
NO.	DATE	BY	NO.	DATE	BY
1	6/14/2016	CL			

IMPROVEMENTS TO INTERSTATE ROUTE 195
PROVIDENCE CONTRACT 16 VOLUME 2 RHODE ISLAND

BENCH PLANS AND COMPONENT DRAWINGS GROUP E

A424

R:\Current\2010.1881.01_Providence Pedestrian Bridge\drawings\current\100% Submittal\1881_A420-A426.dwg, 6/9/2016 11:07:02 AM, Cory Lavigne

FED. ROAD DIV. NO.	STATE	FEDERAL AID PROJECT NO.	FISCAL YEAR	SHEET NO.	TOTAL SHEETS
1	R.I.			V2_048	V2_163

R-1

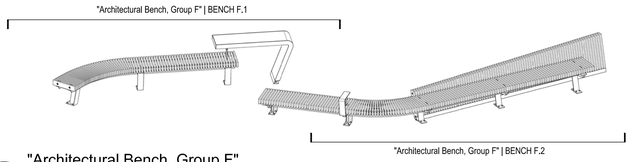

3 A425 "Architectural Bench, Group F" KEY PLAN
N.T.S.

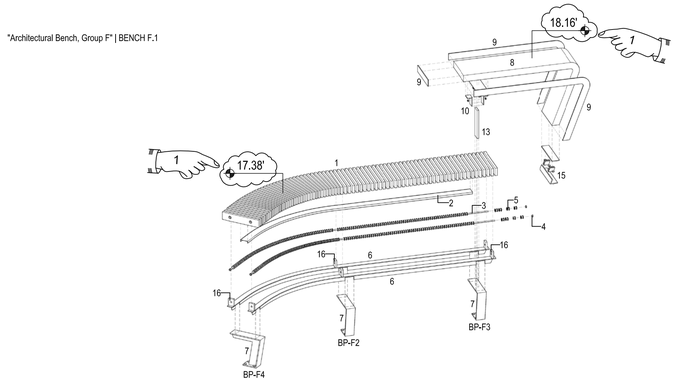

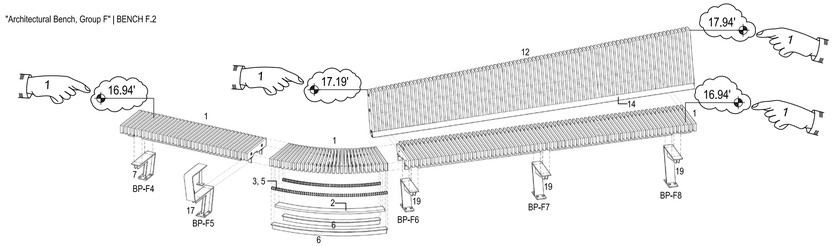

4 A425 "Architectural Bench, Group F" COMPONENT AXONOMETRIC
N.T.S.

NOTE:
ARCHITECT TO PROVIDE SCHEMATIC DIGITAL MODEL TO ASSIST IN THE DEVELOPMENT OF SHOP-DRAWING LEVEL MODEL AND DOCUMENTS BY FABRICATION CONTRACTOR - TYPICAL AT ALL BENCH GROUPINGS

1. 2x4 IPE BENCH AND VERTICAL BACKER - PROVIDE A ⅛" EASED EDGE AT ALL EXPOSED CORNER AND EDGE CONDITIONS
2. ¼" THICK CONTINUOUS S.S. BENT PLATE WITH INTEGRAL LINEAR LED LIGHT FIXTURE
3. CONTINUOUS ½" Ø S.S. THREADED ROD THROUGH BENCH BOARDS
4. COUNTERSUNK S.S. NUT AND 1 ¼" Ø WASHER ASSEMBLY AT BENCH END BOARD
5. ⅞" LONG X ¾" Ø S.S. BUSHING AT GAPS BETWEEN IPE BENCH BOARDS (TYPICAL)
6. CONTINUOUS S.S. STRUCTURAL T-SECTION WITH NOTCHED AND WELDED CONNECTIONS TO VERTICAL LEG SUPPORTS, TAPERED AT ENDS
7. S.S. VERTICAL LEG SUPPORT. COORIDINATE CONDUIT LOCATIONS WITH ELECTRICAL DRAWINGS
8. TRANSLUCENT CAST RESIN TABLE WITH INTERIOR LED LIGHTING
9. PERIMETER S.S. EDGE PLATE
10. S.S. VERTICAL BAR SUPPORT WITH S.S. ANGLE CONNECTIONS AT TABLE BASE
11. S.S. ANGLE SLOTTED CONNECTION AT BASE OF VERTICAL SUPPORT. SECURED TO STRUCTURE
12. ⅝" X 3½" VERTICAL IPE BACK WALL - CUT TO MATCH SLOPE
13. S.S. VERTICAL BAR SUPPORT WITH S.S. PLATE CONNECTION AT TOP OF LEG
14. S.S. ANGLE SUPPORT AT BOTTOM OF IPE BACK WALL
15. S.S. TABLE SUPPORT SECURED TO STRUCTURE. REFER TO A429
16. 2 ¼" W x 3 ¼" H x ¾" THICK S.S. SPACER PLATE WELDED TO TOP OF S.S. T-SECTION. PROVIDE OPENING FOR ½" Ø ROD. REFER TO A429
17. S.S. VERTICAL LEG SUPPORT WITH CONTINUOUS ⅜" X 4" BENT S.S. PLATE ARM REST
18. S.S. VERTICAL LEG SUPPORT WITH CONTINUOUS ⅜" X 4" BENT S.S. PLATE GAME BOARD
19. S.S. VERTICAL LEG SUPPORT WITH S.S. PLATE INTEGRAL W/ IPE BACK WALL

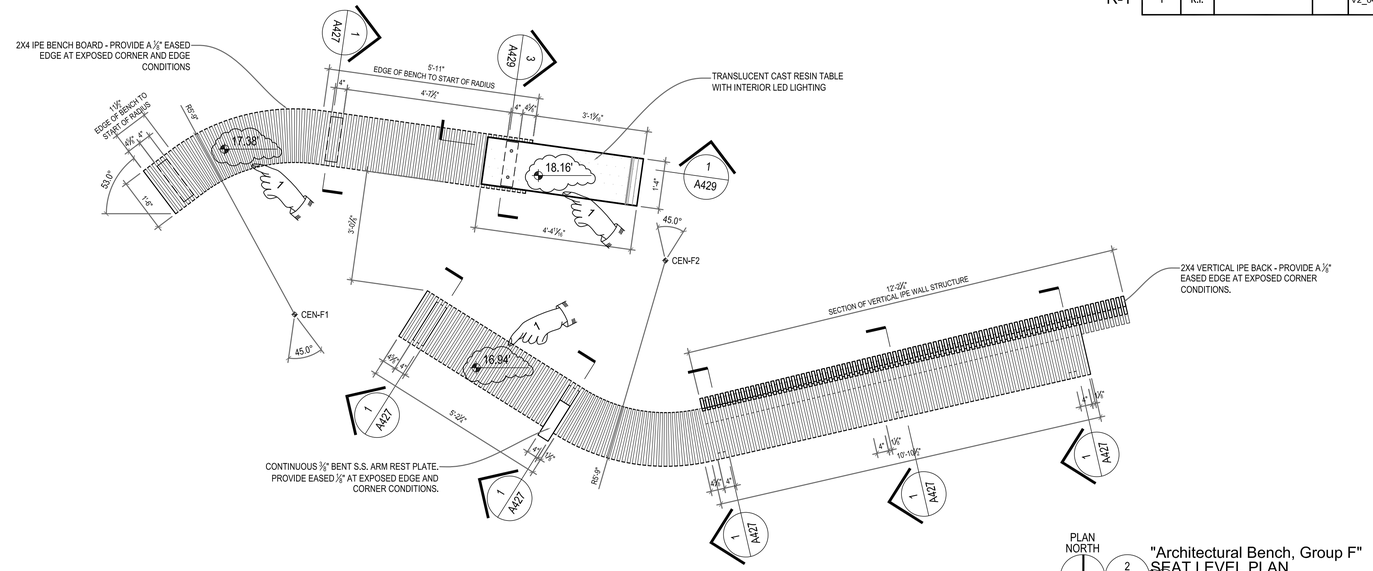

PLAN NORTH

2 A425 "Architectural Bench, Group F" SEAT LEVEL PLAN
1/2" = 1'-0"

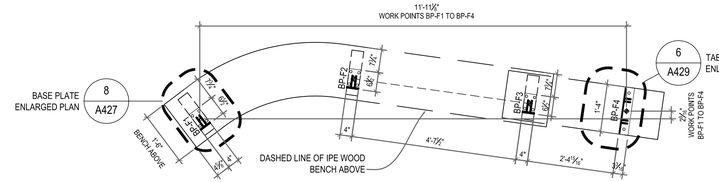

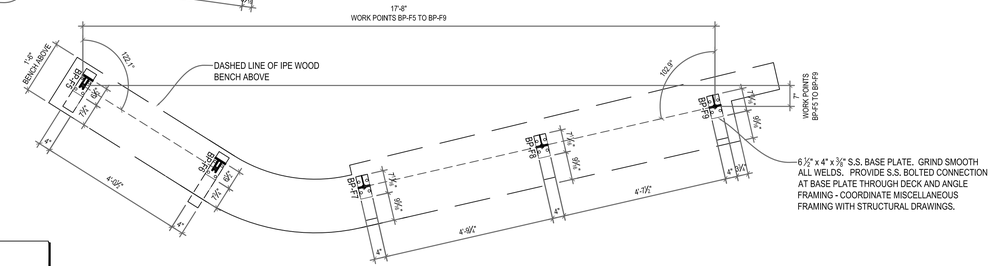

NOTE:
"Architectural Bench, Group F" WORK POINTS DERIVED FROM CENTER POINT OF BASE PLATE. SEE ENLARGED PLANS ON SHEET A428 FOR PRECISE DIMENSIONAL LOCATION PRIOR TO INSTALLATION. COORDINATE PLATE ATTACHMENT WITH STRUCTURAL STEEL FRAMING BELOW DECK. COORDINATE WITH STRUCTURAL DRAWINGS.

"Architectural Bench, Group F"

CONTRACTOR/FABRICATOR TO REFERENCE 3D DIGITAL MODEL RELEASED WITH THE TENDER DOCUMENTS FOR THE PROVIDENCE RIVER PEDESTRIAN BRIDGE PROJECT. THIS MODEL CONTAINS THE NECESSARY LEVEL OF DETAIL FOR CROSS-TRADE COORDINATION AND CONSTRUCTION LAYOUT ASSOCIATED WITH THE ARCHITECTURAL COMPONENTS IDENTIFIED ABOVE. THE 3D DIGITAL MODEL IS INTENDED TO AID THE CONTRACTOR IN ESTIMATING QUANTITIES AND THE DETERMINATION OF MEANS AND METHODS. THIS MODEL IS NOT TOPOGRAPHICALLY REFERENCED AND SHOULD BE USED FOR GEOMETRIC REFERENCE ONLY.

WORK POINT	PLAN DATA		
	UPPER BRIDGE PLATFORM		
	STATION	STATION OFFSET	ELEVATION
BP-F1	3+53.93	24.16 RIGHT	15.92 (PMHW)
BP-F2	3+58.35	24.72 RIGHT	15.88 (PMHW)
BP-F3	3+62.67	27.16 RIGHT	15.64 (PMHW)
BP-F4	3+65.09	28.39 RIGHT	15.55 (PMHW)
BP-F5	3+59.13	30.29 RIGHT	15.68 (PMHW)
BP-F6	3+61.72	33.82 RIGHT	15.56 (PMHW)
BP-F7	3+65.39	35.92 RIGHT	15.43 (PMHW)
BP-F8	3+70.28	36.73 RIGHT	15.26 (PMHW)
BP-F9	3+75.17	37.54 RIGHT	15.09 (PMHW)

PLAN NORTH

1 A425 "Architectural Bench, Group F" BASE PLATE LOCATION PLAN
1/2" = 1'-0"

ADDENDUM NO. 4

REF DWG #	REFRENCE DRAWING NAME
A101	OVERALL UPPER BRIDGE PLAN

CDR MAGUIRE

inFORM studio
235 east main street, suite 102b
northville, mi 48167
(p) 248.449.3564
(f) 248.449.6984
www.in-formstudio.com
Buro Happold

BETA Group, Inc.
Engineers • Planners • Landscape Architects
Lincoln, RI - Norwood, MA - Hartford, CT

RHODE ISLAND DEPARTMENT OF TRANSPORTATION

INTERSTATE 195

DESIGNED BY:
CHECKED:
DATE:
SHEET: V2_048
OF: V2_163

SCALE:

REVISIONS			REVISIONS		
NO.	DATE	BY	NO.	DATE	BY
1	6/14/2016	CL			

IMPROVEMENTS TO INTERSTATE ROUTE 195
PROVIDENCE CONTRACT 16 VOLUME 2 RHODE ISLAND

BENCH PLANS AND COMPONENT DRAWINGS GROUP F

A425

R:\Current\2010.1881.01_Providence Pedestrian Bridge\drawings\current\100% Submittal\1881_A420-A426.dwg, 6/9/2016 11:05:07 AM, Cory Lavigne

FED ROAD DIV. NO.	STATE	FEDERAL AID PROJECT NO.	FISCAL YEAR	SHEET NO.	TOTAL SHEETS
1	R.I.			V2_049	V2_163

R-1

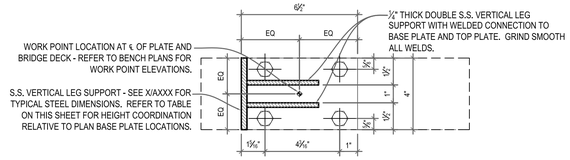

8 / A427 — ENLARGED PLAN DETAIL TYPICAL BENCH BASE PLATE
1 1/2" = 1'-0"

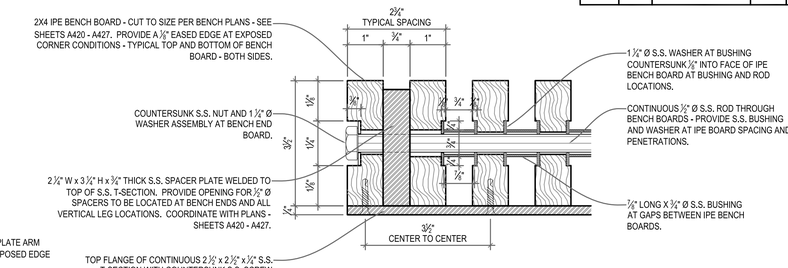

3 / A427 — ENLARGED SECTION BENCH END DETAIL
6" = 1'-0"

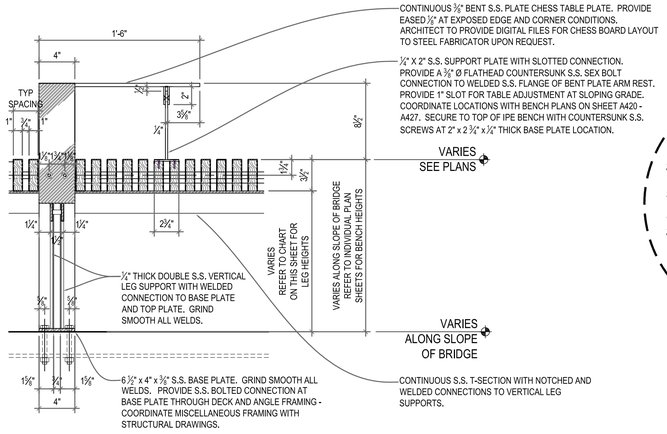

7 / A427 — LONGITUDINAL SECTION CHESS TABLE
1 1/2" = 1'-0"

REFER TO DETAIL 5/A427 FOR EXPANDED NOTE AND MATERIAL DESCRIPTIONS WHICH HAVE BEEN EXCLUDED FOR CLARITY

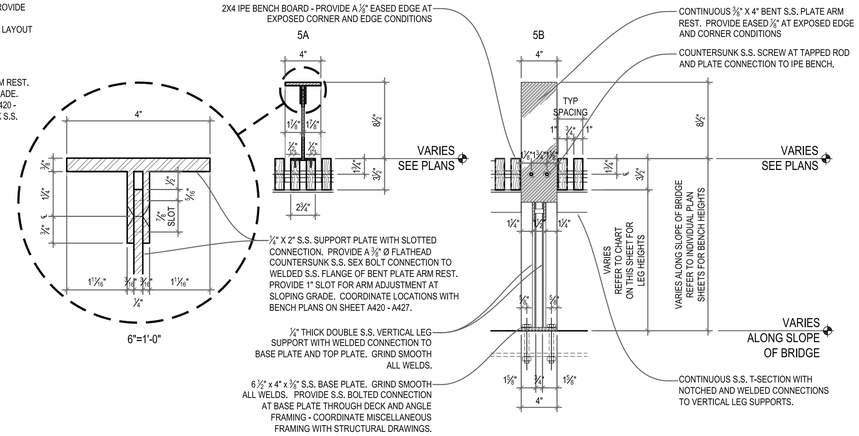

5 / A427 — LONGITUDINAL SECTION ARM REST
1 1/2" = 1'-0"

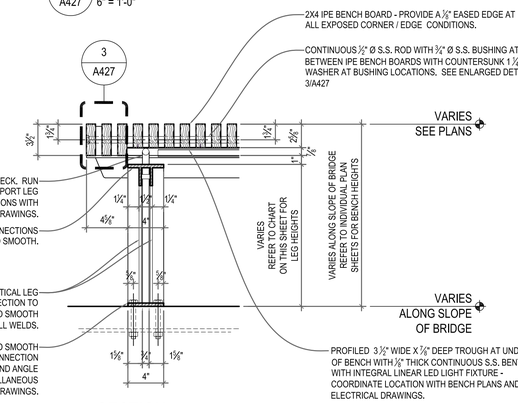

2 / A427 — SECTION TYPICAL BENCH END SECTION
1 1/2" = 1'-0"

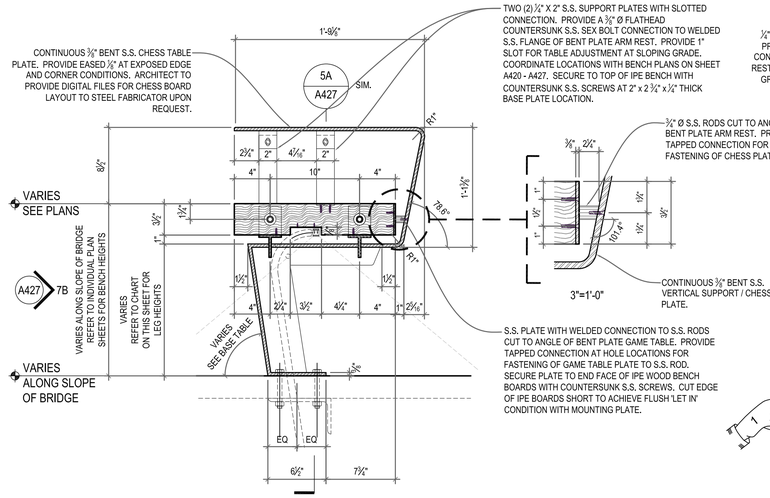

6 / A427 — TRANSVERSE SECTION CHESS TABLE
1 1/2" = 1'-0"

REFER TO DETAIL 1/A427 AND 4/A427 FOR EXPANDED NOTE AND MATERIAL DESCRIPTIONS WHICH HAVE BEEN EXCLUDED FOR CLARITY

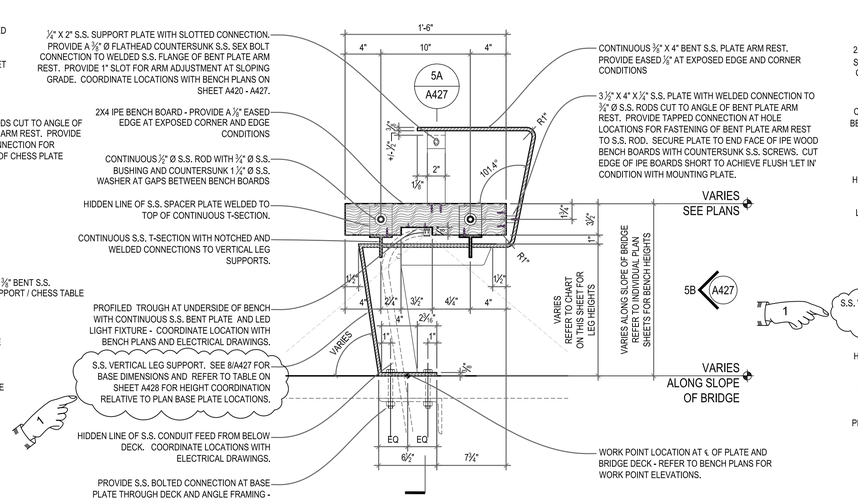

4 / A427 — TRANSVERSE SECTION ARM REST
1 1/2" = 1'-0"

REFER TO DETAIL 1/A427 FOR EXPANDED NOTE AND MATERIAL DESCRIPTIONS WHICH HAVE BEEN EXCLUDED FOR CLARITY

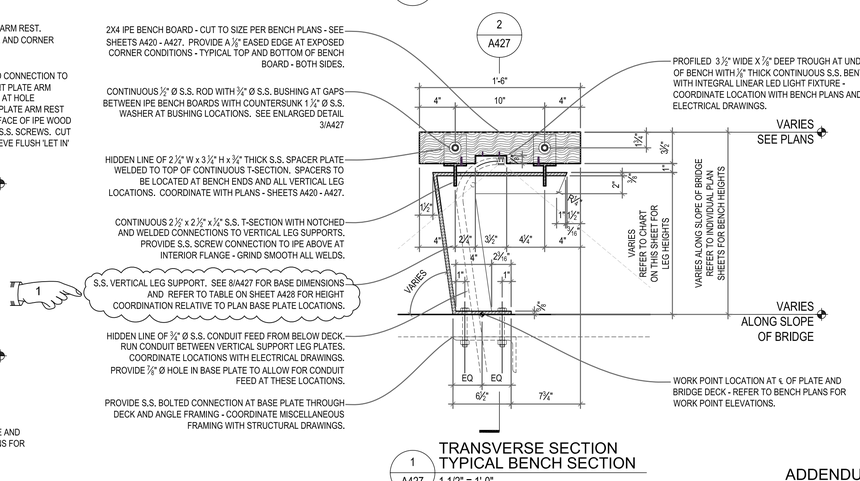

1 / A427 — TRANSVERSE SECTION TYPICAL BENCH SECTION
1 1/2" = 1'-0"

ADDENDUM NO. 4

REF DWG #	REFRENCE DRAWING NAME

CDR MAGUIRE

inFORM studio
235 east main street, suite 102b
northville, mi 48167
(p) 248.449.3564
(f) 248.449.6984
www.in-formstudio.com
Buro Happold

BETA Group, Inc.
Engineers • Planners • Landscape Architects
Lincoln, RI - Norwood, MA - Hartford, CT

RHODE ISLAND DEPARTMENT OF TRANSPORTATION

INTERSTATE 195

DESIGNED BY:
CHECKED:
DATE:
SHEET: V2_049
OF: V2_163

SCALE:

REVISIONS			REVISIONS		
NO.	DATE	BY	NO.	DATE	BY
1	6/14/2016	CL			

IMPROVEMENTS TO INTERSTATE ROUTE 195
PROVIDENCE — CONTRACT 16 VOLUME 2 — RHODE ISLAND

TYPICAL BENCH SECTIONS AND DETAILS — A427

R:\Current\2010.1881.01_Providence Pedestrian Bridge\drawings\current\100% Submittal\1881_A427-A429.dwg, 6/9/2016 8:04:16 AM, Cory Lavigne

FED. ROAD DIV. NO.	STATE	FEDERAL AID PROJECT NO.	FISCAL YEAR	SHEET NO.	TOTAL SHEETS
1	R.I.			V2_050	V2_163

R-1

TYPICAL BENCH SECTION

WORK POINT	LEG HEIGHT	WORK POINT	LEG HEIGHT	WORK POINT	LEG HEIGHT	WORK POINT	LEG HEIGHT
BP-A3	1' 1-1/2"	BP-B2	1' 3-7/8"	BP-C9	0' 11-3/4"	BP-E4	1' 1-1/2"
BP-A4	1' 0-1/4"	BP-B4	1' 1-1/4"	BP-D1	1' 2-3/4"	BP-E5	1' 1-1/2"
BP-A5	1' 4-1/2"	BP-B5	0' 11-7/8"	BP-D2	1' 2-1/4"	BP-E6	1' 1-1/2"
BP-A11	1' 4-1/2"	BP-B7	1' 4-1/2"	BP-D4	1' 0-1/2"	BP-F1	1' 0-7/8"
BP-A12	1' 3"	BP-C3	1' 3-7/8"	BP-D5	0' 11-3/4"	BP-F2	1' 1-1/2"
BP-A14	0' 11-1/1"	BP-C6	0' 11-3/4"	BP-E1	1' 1-3/8"	BP-F3	1' 4-3/8"
BP-A15	0' 11-3/8"	BP-C7	1' 2-1/2"	BP-E2	1' 1-1/8"	BP-F5	0' 10-5/8"
BP-B1	1' 4-1/2"	BP-C8	1' 1"	BP-E3	1' 0-5/8"		

ARMREST BENCH SECTION

WORK POINT	LEG HEIGHT
BP-A6	1' 3-1/4"
BP-B8	1' 2-7/8"
BP-B9	1' 1-1/4"
BP-C4	1' 2-3/8"
BP-C5	1' 1-1/4"
BP-F6	1' 0-1/8"

CHESS TABLE SECTION

WORK POINT	LEG HEIGHT
BP-A13	1' 1-1/2"
BP-B3	1' 2-3/4"
BP-D3	1' 1-3/8"

WALL-BENCH SECTION

WORK POINT	LEG HEIGHT
BP-A7	1' 1-7/8"
BP-A8	1' 0-1/2"
BP-A9	0' 11-1/8"
BP-B10	0' 11-7/8"
BP-B11	0' 11-1/8"
BP-F7	1' 1-5/8"
BP-F8	1' 3-3/4"
BP-F9	1' 5-3/4"

CAST-RESIN TABLE

WORK POINT	LEG HEIGHT
BP-A2	2' 6-1/2"
BP-A11	1' 2-1/8"
BP-B5	1' 8-3/8"
BP-C2	2' 6-5/8"
BP-D5	1' 6-3/4"
BP-F3	1' 1-7/8"

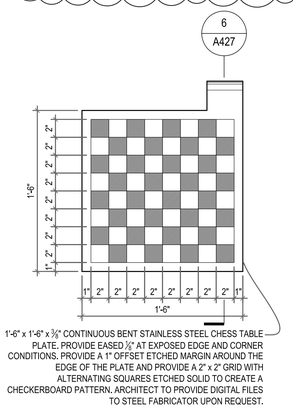

6 A428 ELEVATION TYPICAL BENCH END SECTION
1 1/2" = 1'-0"

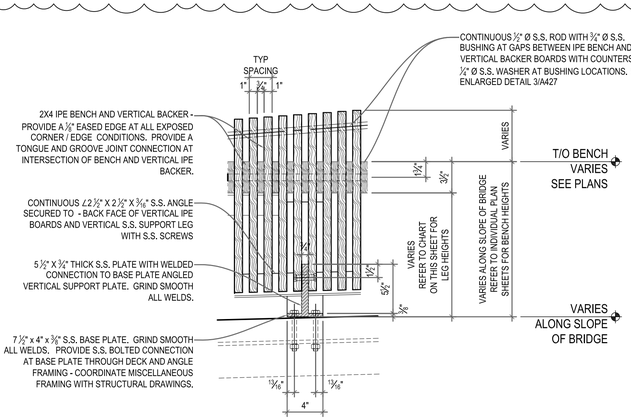

6 A428 ELEVATION TYPICAL BENCH END SECTION
1 1/2" = 1'-0"

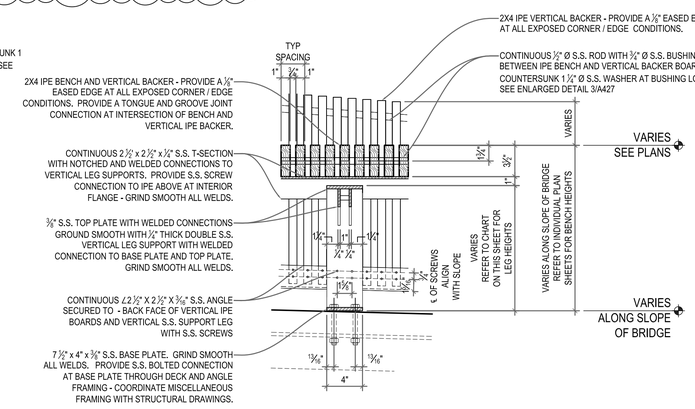

5 A428 SECTION / ELEVATION TYPICAL BENCH END SECTION
1 1/2" = 1'-0"

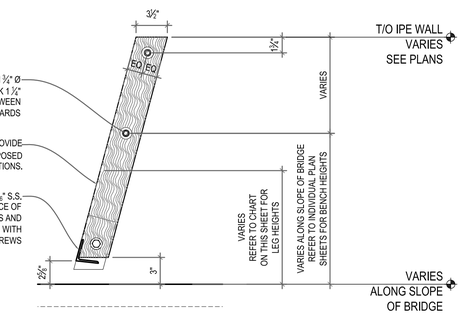

4 A428 SECTION TYPICAL WALL-BENCH SECTION
1 1/2" = 1'-0"

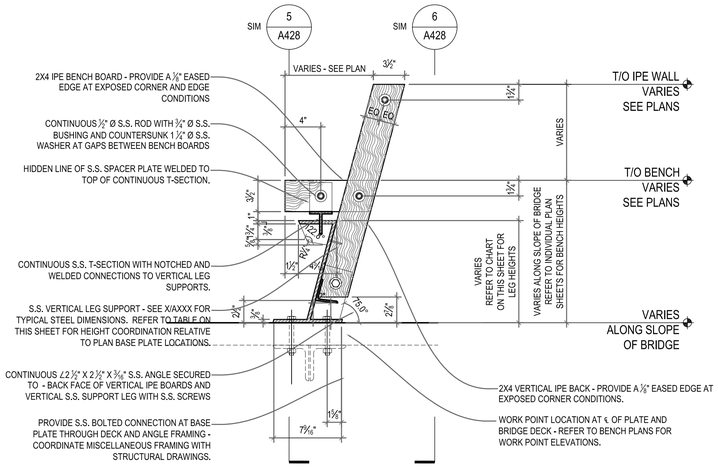

4 A428 SECTION TYPICAL BENCH SECTION
1 1/2" = 1'-0"

REFER TO DETAIL 1/A428 FOR EXPANDED NOTE AND MATERIAL DESCRIPTIONS WHICH HAVE BEEN EXCLUDED FOR CLARITY

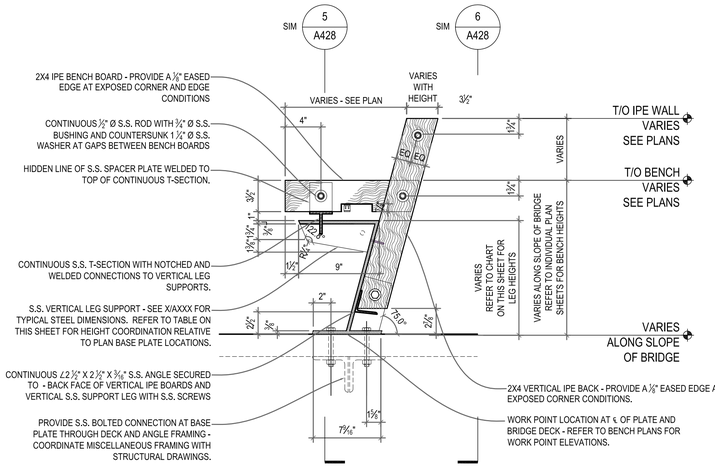

3 A428 SECTION TYPICAL BENCH SECTION
1 1/2" = 1'-0"

REFER TO DETAIL 1/A428 FOR EXPANDED NOTE AND MATERIAL DESCRIPTIONS WHICH HAVE BEEN EXCLUDED FOR CLARITY

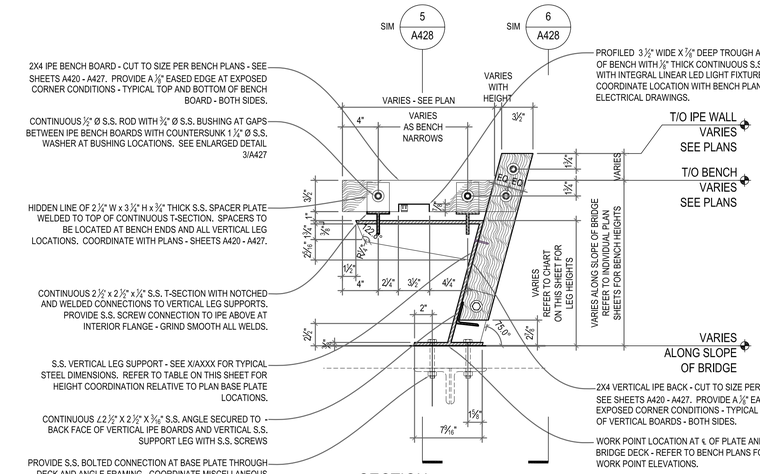

1 A428 SECTION TYPICAL WALL-BENCH SECTION
1 1/2" = 1'-0"

ADDENDUM NO. 4

REF DWG #	REFRENCE DRAWING NAME

CDR MAGUIRE

inFORM studio
235 east main street, suite 102b
northville, mi 48167
(p) 248.449.3564
(f) 248.449.6984
www.in-formstudio.com
Buro Happold

BETA Group, Inc.
Engineers • Planners • Landscape Architects
Lincoln, RI - Norwood, MA - Hartford, CT

RHODE ISLAND
DEPARTMENT OF TRANSPORTATION

INTERSTATE 195

DESIGNED BY:
CHECKED:
DATE:
SHEET: V2_050
OF: V2_163

SCALE:

REVISIONS			REVISIONS		
NO.	DATE	BY	NO.	DATE	BY
1	6/14/2016	CL			

IMPROVEMENTS TO
INTERSTATE ROUTE 195
PROVIDENCE CONTRACT 16 VOLUME 2 RHODE ISLAND

TYPICAL BENCH SECTIONS AND DETAILS

A428

R:\Current\2010.1881.01_Providence Pedestrian Bridge\drawings\current\100% Submittal\1881_A427-A429.dwg, 6/9/2016 7:55:13 AM, Cory Lavigne

R-1	FED ROAD DIV. NO.	STATE	FEDERAL AID PROJECT NO.	FISCAL YEAR	SHEET NO.	TOTAL SHEETS
	1	R.I.			V2_051	V2_163

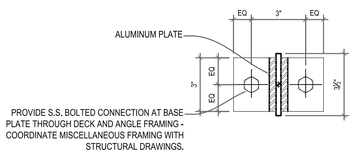

7 A429 ENLARGED PLAN DETAIL CAST RESIN TABLE - BASE PLATE DETAIL 2
3" = 1'-0"

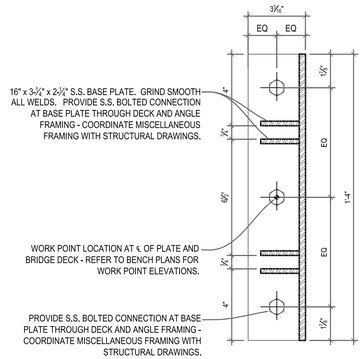

6 A429 ENLARGED PLAN DETAIL CAST RESIN TABLE - BASE PLATE DETAIL 1
3" = 1'-0"

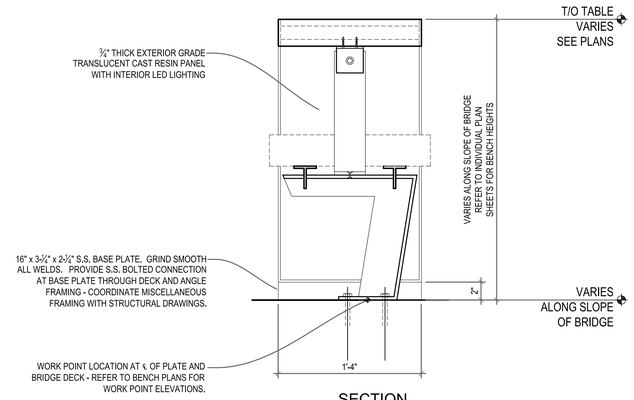

5 A429 SECTION CAST RESIN TABLE - BENCH MOUNT
1 1/2" = 1'-0"

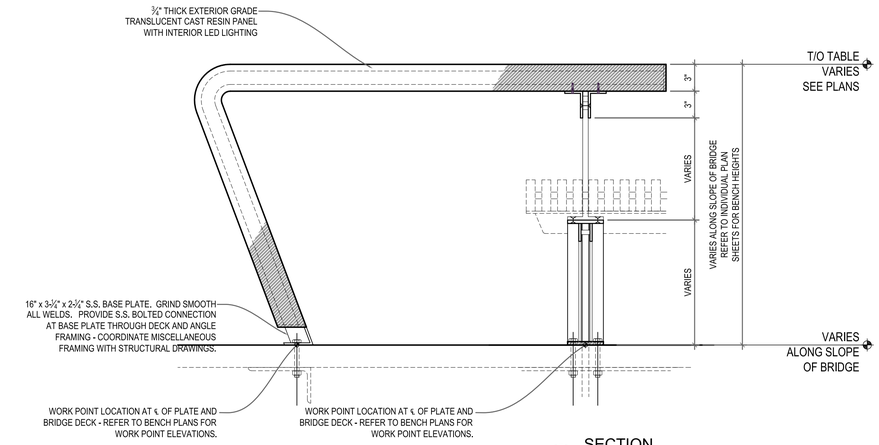

4 A429 SECTION CAST RESIN TABLE - BENCH MOUNT
1 1/2" = 1'-0"

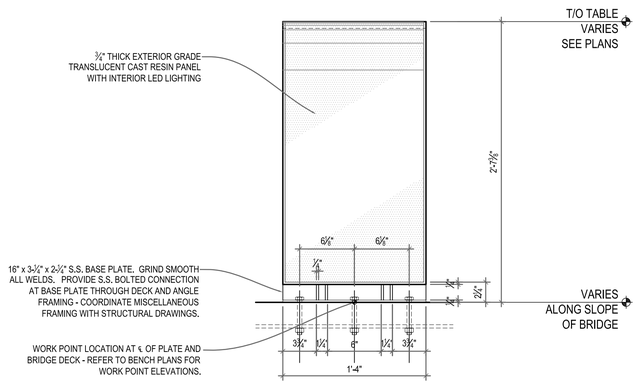

3 A429 SECTION CAST RESIN TABLE - GROUND MOUNT
1 1/2" = 1'-0"

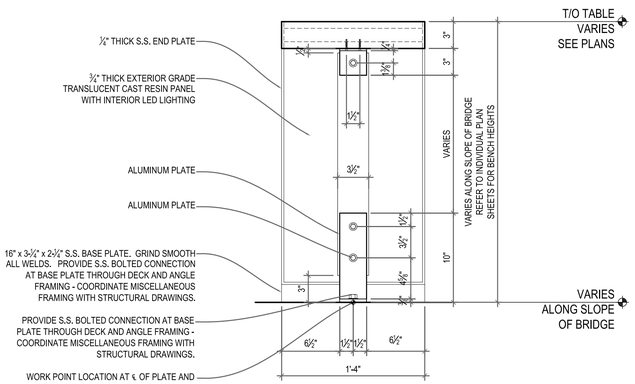

2 A429 SECTION CAST RESIN TABLE - GROUND MOUNT
1 1/2" = 1'-0"

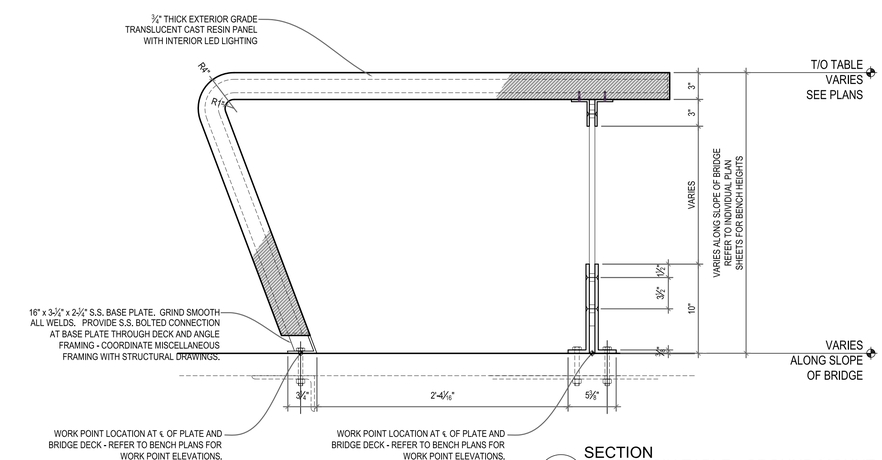

1 A429 SECTION CAST RESIN TABLE - GROUND MOUNT
1 1/2" = 1'-0"

ADDENDUM NO. 4

REF DWG #	REFRENCE DRAWING NAME

CDR MAGUIRE

inFORM studio
235 east main street, suite 102b
northville, mi 48167
(p) 248.449.3564
(f) 248.449.6984
www.in-formstudio.com

Buro Happold

BETA Group, Inc.
Engineers • Planners • Landscape Architects
Lincoln, RI - Norwood, MA - Hartford, CT

RHODE ISLAND
DEPARTMENT OF TRANSPORTATION

INTERSTATE 195

DESIGNED BY:
CHECKED:
DATE:
SHEET: V2_051
OF: V2_163

SCALE:

REVISIONS			REVISIONS		
NO.	DATE	BY	NO.	DATE	BY
1	6/14/2016	CL			

IMPROVEMENTS TO
INTERSTATE ROUTE 195
CONTRACT 16 VOLUME 2

PROVIDENCE RHODE ISLAND

TYPICAL BENCH SECTIONS AND DETAILS

A429

R:\Current\2010.1881.01_Providence Pedestrian Bridge\drawings\current\100% Submittal\1881_A427-A429.dwg, 6/9/2016 8:05:07 AM, Cory Lavigne

FED. ROAD DIV. NO.	STATE	FEDERAL AID PROJECT NO.	FISCAL YEAR	SHEET NO.	TOTAL SHEETS
1	R.I.			V2_052	V2_163

R-1

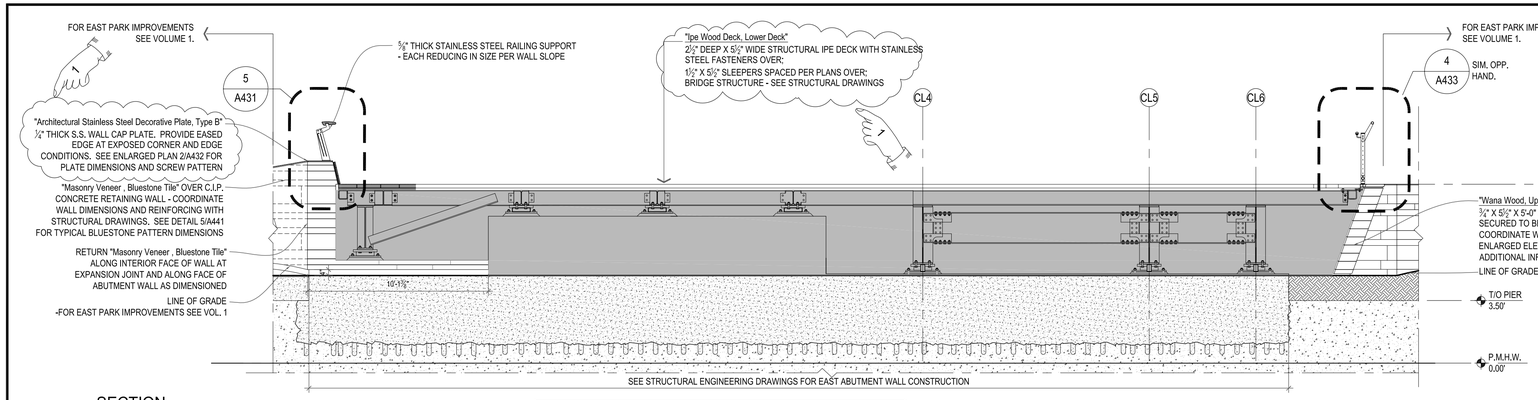

5/A431 — 5/A430 SECTION EAST ABUTMENT @ B2 — 1/4" = 1'-0"

"Masonry Veneer , Bluestone Tile" LAYING PATTERN IS INTENDED AS A GUIDE FOR PRELIMINARY PATTERN DESIGN ONLY. CONTRACTOR TO REFERENCE 5/A441 FOR TYPICAL ELEVATION PATTERN

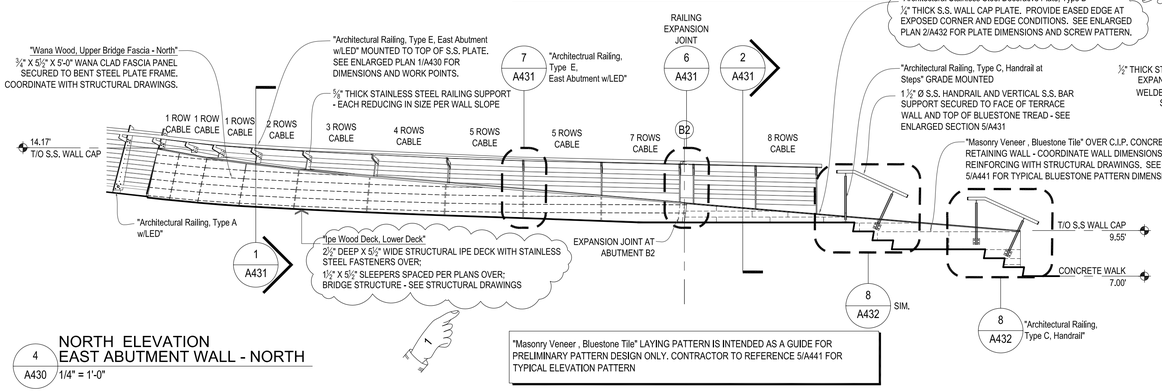

4/A430 NORTH ELEVATION EAST ABUTMENT WALL - NORTH — 1/4" = 1'-0"

"Masonry Veneer , Bluestone Tile" LAYING PATTERN IS INTENDED AS A GUIDE FOR PRELIMINARY PATTERN DESIGN ONLY. CONTRACTOR TO REFERENCE 5/A441 FOR TYPICAL ELEVATION PATTERN

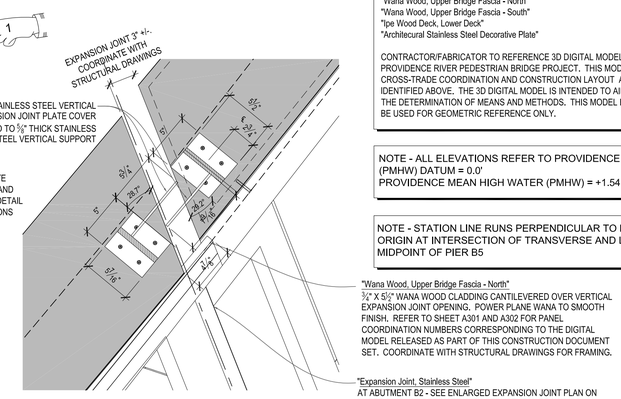

3/A430 EAST ABUTMENT WALL - NORTH ENLARGED PLAN — 1-1/2" = 1'-0"

"Architectural Railing, Type A w/LED"
"Architectural Railing, Type C"
"Architectural Railing, Type E, East Abutment w/LED"
"Wana Wood, Upper Bridge Fascia - North"
"Wana Wood, Upper Bridge Fascia - South"
"Ipe Wood Deck, Lower Deck"
"Architectural Stainless Steel Decorative Plate"

CONTRACTOR/FABRICATOR TO REFERENCE 3D DIGITAL MODEL RELEASED WITH THE TENDER DOCUMENTS FOR THE PROVIDENCE RIVER PEDESTRIAN BRIDGE PROJECT. THIS MODEL CONTAINS THE NECESSARY LEVEL OF DETAIL FOR CROSS-TRADE COORDINATION AND CONSTRUCTION LAYOUT ASSOCIATED WITH THE ARCHITECTURAL COMPONENTS IDENTIFIED ABOVE. THE 3D DIGITAL MODEL IS INTENDED TO AID THE CONTRACTOR IN ESTIMATING QUANTITIES AND THE DETERMINATION OF MEANS AND METHODS. THIS MODEL IS NOT TOPOGRAPHICALLY REFERENCED AND SHOULD BE USED FOR GEOMETRIC REFERENCE ONLY.

NOTE - ALL ELEVATIONS REFER TO PROVIDENCE MEAN HIGH WATER (PMHW) DATUM = 0.0'
PROVIDENCE MEAN HIGH WATER (PMHW) = +1.54 NAVD 1988

NOTE - STATION LINE RUNS PERPENDICULAR TO EXISTING PIERS - ORIGIN AT INTERSECTION OF TRANSVERSE AND LONGITUDINAL MIDPOINT OF PIER B5

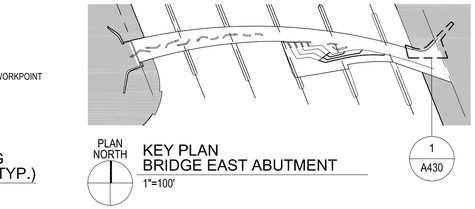

EAST ABUTMENT RAILING WORKPOINT LOCATION (TYP.) — 3" = 1'-0"

PLAN NORTH

KEY PLAN BRIDGE EAST ABUTMENT — 1"=100' — 1/A430

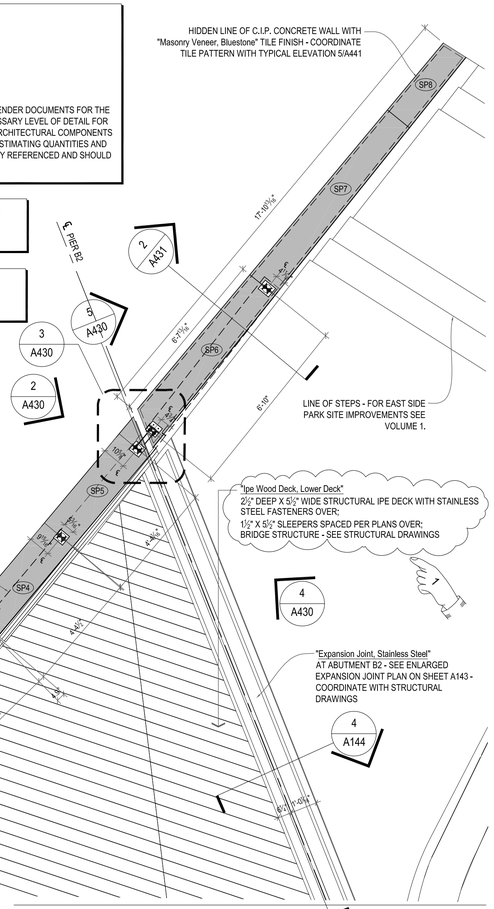

1/A430 EAST ABUTMENT WALL - NORTH ENLARGED PLAN — 3/8" = 1'-0"

ADDENDUM NO. 4

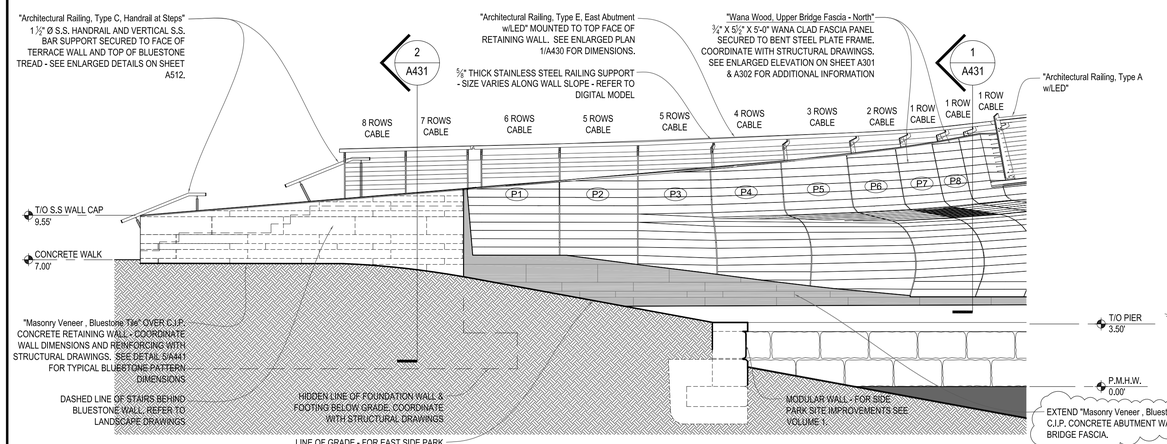

2/A430 NORTH ELEVATION EAST ABUTMENT WALL - SOUTH — 1/4" = 1'-0"

"Masonry Veneer , Bluestone Tile" LAYING PATTERN IS INTENDED AS A GUIDE FOR PRELIMINARY PATTERN DESIGN ONLY. CONTRACTOR TO REFERENCE 5/A441 FOR TYPICAL ELEVATION PATTERN

REF DWG #	REFRENCE DRAWING NAME
S201	B2 ABUTMENT ELEVATION - 1

CDR MAGUIRE

inFORM studio
235 east main street, suite 102b
northville, mi 48167
(p) 248.449.3564
(f) 248.449.6984
www.in-formstudio.com
Buro Happold

BETA Group, Inc.
Engineers • Planners • Landscape Architects
Lincoln, RI - Norwood, MA - Hartford, CT

RHODE ISLAND DEPARTMENT OF TRANSPORTATION

INTERSTATE 195

DESIGNED BY:
CHECKED:
DATE:
SHEET: V2_052
OF: V2_163

SCALE:

REVISIONS			REVISIONS		
NO.	DATE	BY	NO.	DATE	BY
1	6/14/2016	CL			

IMPROVEMENTS TO INTERSTATE ROUTE 195
PROVIDENCE — CONTRACT 16 VOLUME 2 — RHODE ISLAND

EAST ABUTMENT WALLS
NORTH PLAN, ELEVATIONS, AND SECTIONS

A430

R:\Current\2010.1881.01_Providence Pedestrian Bridge\drawings\current\100% Submittal\1881_A430-A433.dwg, 6/9/2016 1:12:30 PM, Cory Lavigne

FED. ROAD DIV. NO.	STATE	FEDERAL AID PROJECT NO.	FISCAL YEAR	SHEET NO.	TOTAL SHEETS
1	R.I.			V2_053	V2_163

R-1

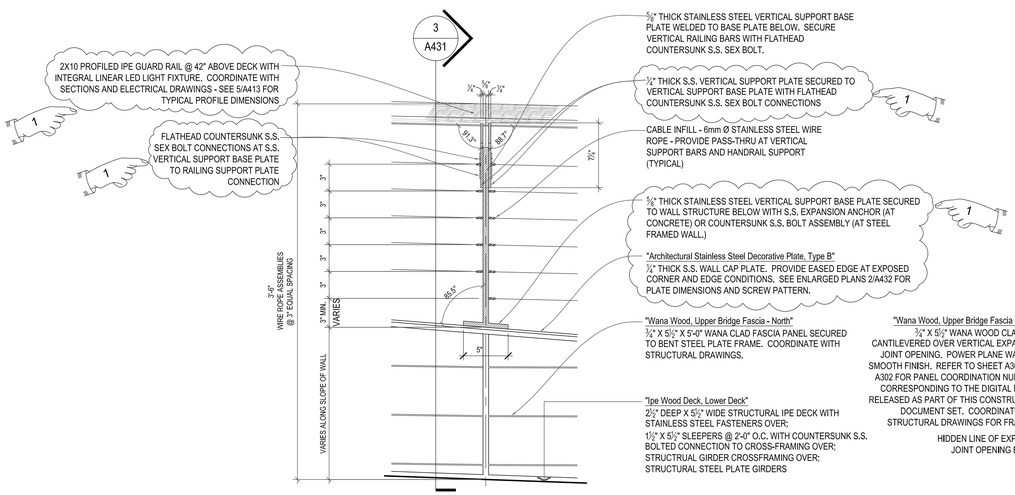

7 A431 "Architectural Railing, Type E, East Abutment w/LED" ENLARGED ELEVATION - VERTICAL SUPPORT
1 1/2" = 1'-0"

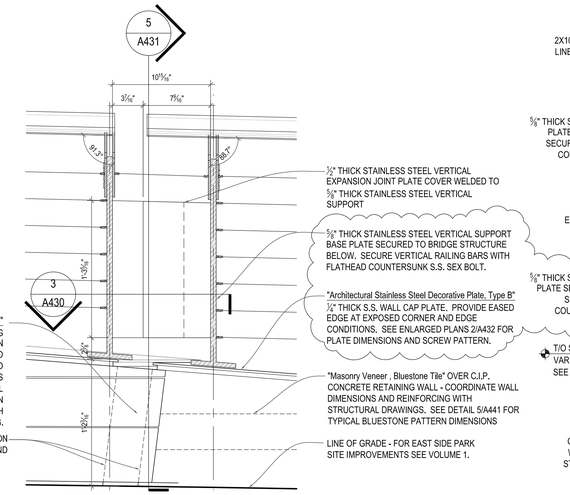

6 A431 "Architectural Railing, Type E, East Abutment w/LED" ENLARGED ELEVATION - VERTICAL SUPPORT
1 1/2" = 1'-0"

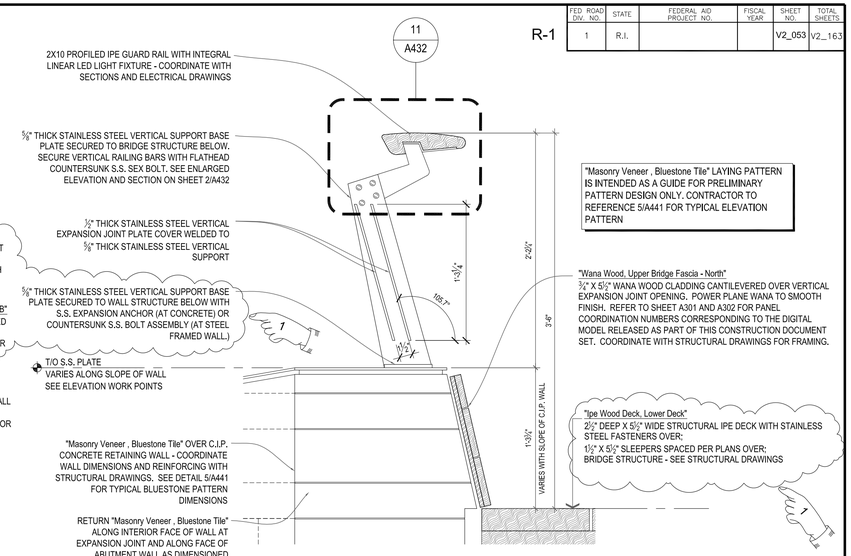

5 A431 SECTION - EAST ABUTMENT WALL AT EXPANSION JOINT - DIMENSIONED
1 1/2" = 1'-0"

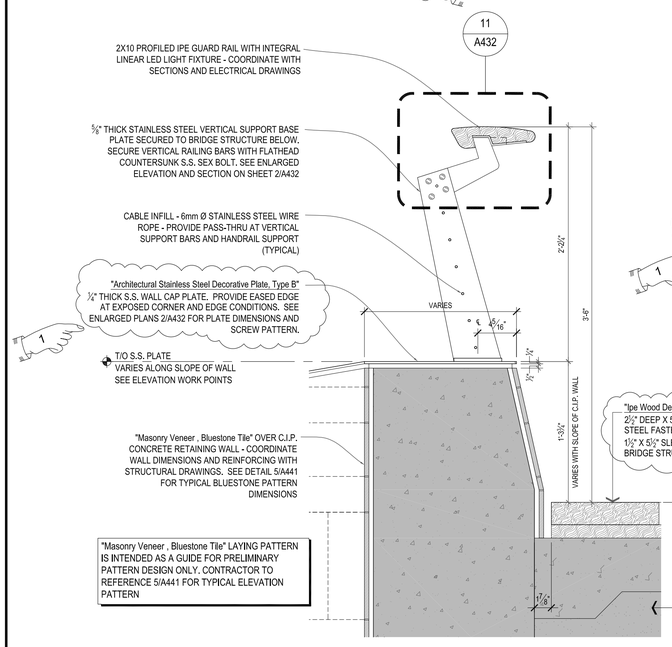

4 A431 TYPICAL SECTION - EAST ABUTMENT WALL - NORTH DIMENSIONED
1 1/2" = 1'-0"

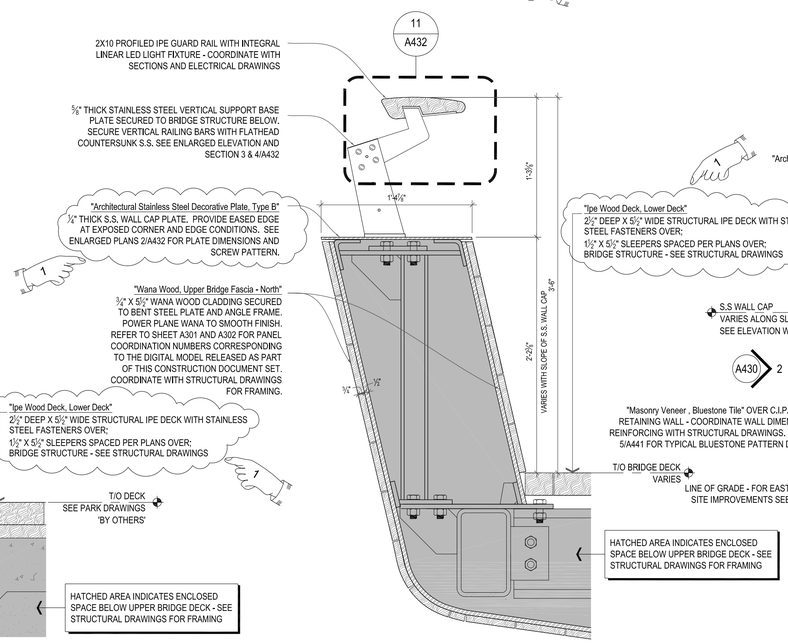

3 A431 TYPICAL END RAIL SECTION - EAST ABUTMENT WALL - NORTH DIMENSIONED
1 1/2" = 1'-0"

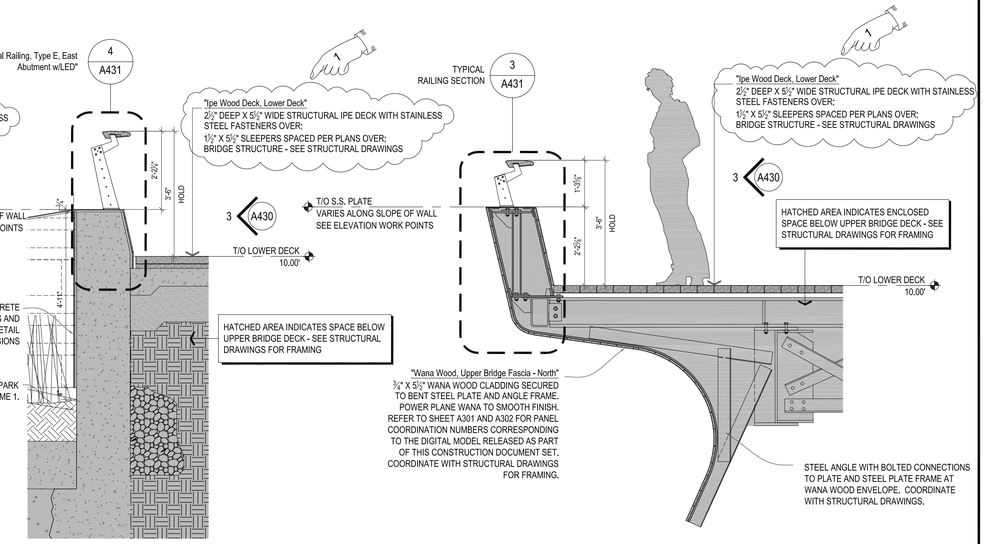

2 A431 TYPICAL WALL SECTION - C.I.P. EAST ABUTMENT WALL - NORTH
1/2" = 1'-0"

1 A431 MIDSPAN TYPICAL WALL SECTION EAST ABUTMENT WALL - NORTH
1/2" = 1'-0"

ADDENDUM NO. 4

REF DWG #	REFRENCE DRAWING NAME

CDR MAGUIRE

inFORM studio
235 east main street, suite 102b
northville, mi 48167
(p) 248.449.3564
(f) 248.449.6984
www.in-formstudio.com

Buro Happold

BETA Group, Inc.
Engineers • Planners • Landscape Architects
Lincoln, RI - Norwood, MA - Hartford, CT

RHODE ISLAND DEPARTMENT OF TRANSPORTATION

INTERSTATE 195

DESIGNED BY:
CHECKED:
DATE:
SHEET: V2_053
OF: V2_163

SCALE:

REVISIONS			REVISIONS		
NO.	DATE	BY	NO.	DATE	BY
1	6/14/2016	CL			

IMPROVEMENTS TO INTERSTATE ROUTE 195
PROVIDENCE CONTRACT 16 VOLUME 2 RHODE ISLAND

EAST ABUTMENT WALLS - SECTIONS AND DETAILS

A431

R:\Current\2010.1881.01_Providence Pedestrian Bridge\drawings\current\100% Submittal\1881_A430-A433.dwg, 6/9/2016 12:59:19 PM, Cory Lavigne

FED. ROAD DIV. NO.	STATE	FEDERAL AID PROJECT NO.	FISCAL YEAR	SHEET NO.	TOTAL SHEETS
1	R.I.			V2_054	V2_163

R-1

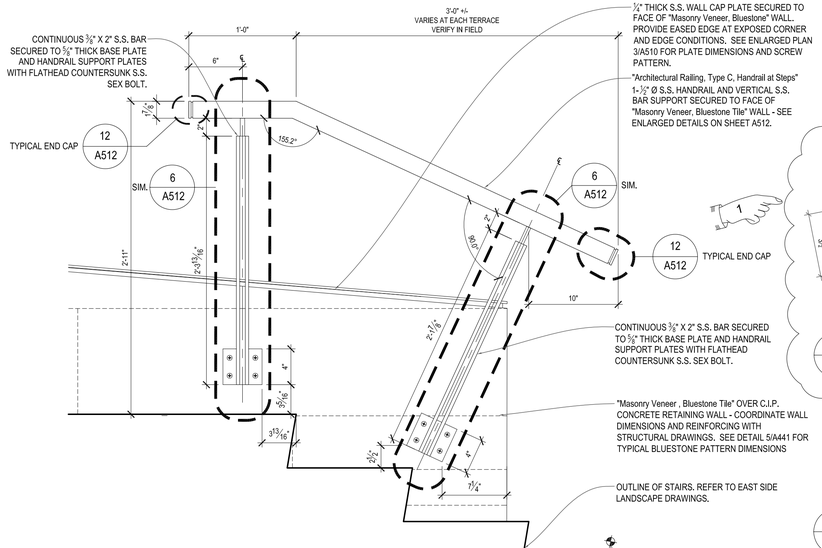

8 A432 "Architectrual Railing, Type F, East Abutment Handrail" ENLARGED ELEVATION - VERTICAL SUPPORT
1 1/2" = 1'-0"

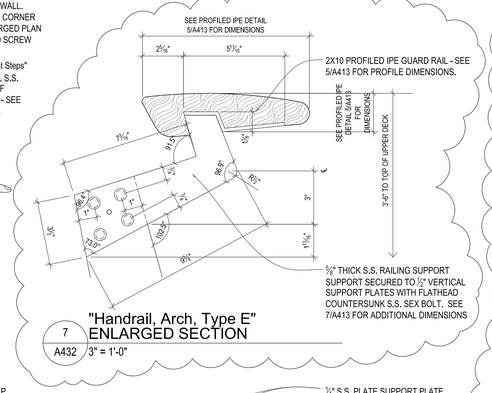

7 A432 "Handrail, Arch, Type E" ENLARGED SECTION
3" = 1'-0"

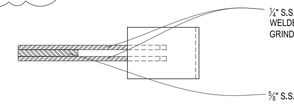

6 A432 "Handrail, Arch, Type E" ENLARGED PLAN
3" = 1'-0"

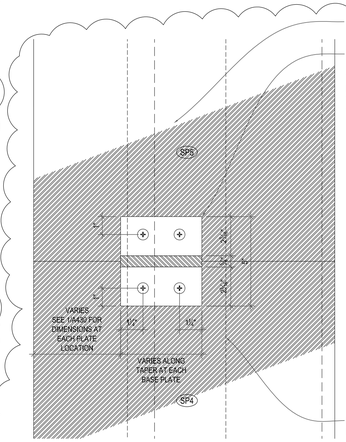

5 A432 " Architectural Railing, Type E" ENLARGED S.S. SUPPORT PLAN
3" = 1'-0"

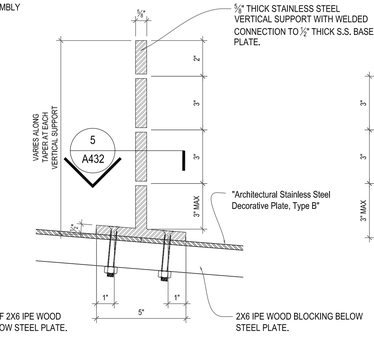

4 A432 " Architectural Railing, Type E" ENLARGED S.S. SUPPORT SECTION
3" = 1'-0"

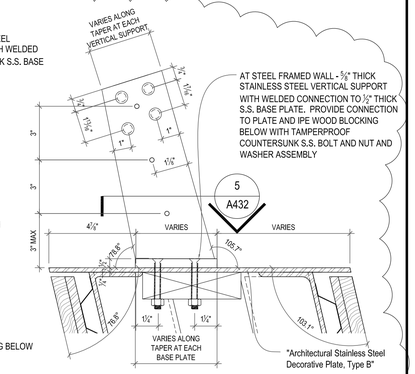

3 A432 " Architectural Railing, Type E" ENLARGED S.S. SUPPORT SECTION
3" = 1'-0"

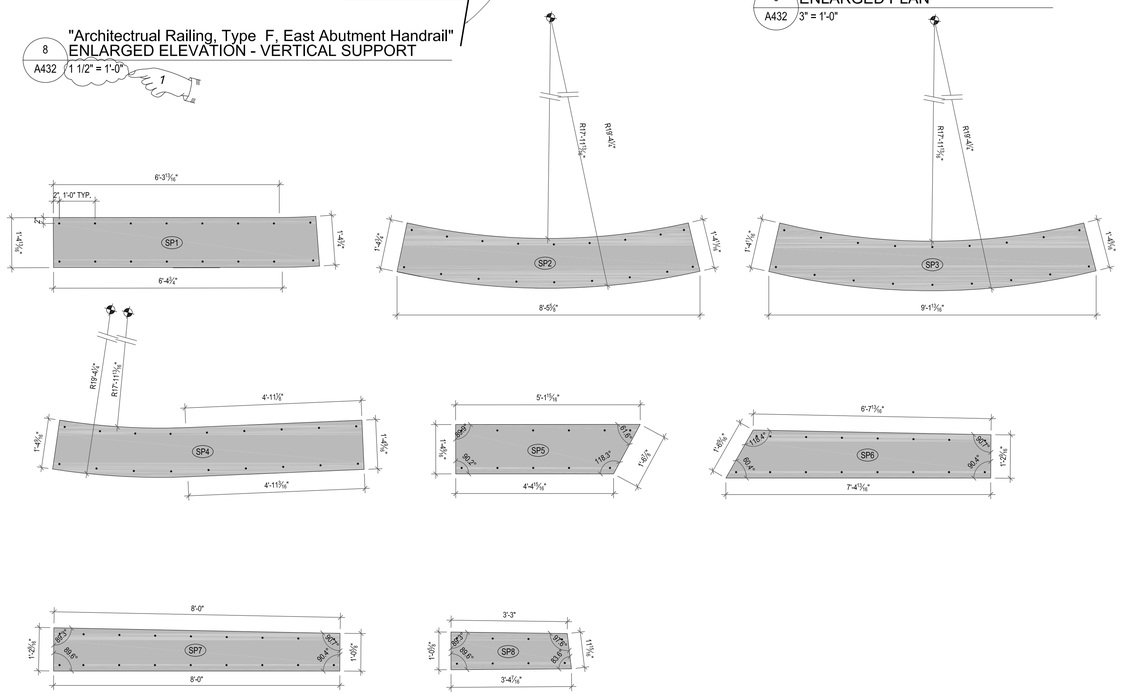

2 A432 "Architectural Stainless Steel Decorative Plate, Type B" STAINLESS STEEL PLATE LAYOUT
1/2" = 1'-0"

ADDENDUM NO. 4

REF DWG #	REFRENCE DRAWING NAME

CDR MAGUIRE

inFORM studio
235 east main street, suite 102b
northville, mi 48167
(p) 248.449.3564
(f) 248.449.6984
www.in-formstudio.com

Buro Happold

BETA Group, Inc.
Engineers • Planners • Landscape Architects
Lincoln, RI - Norwood, MA - Hartford, CT

RHODE ISLAND
DEPARTMENT OF TRANSPORTATION

INTERSTATE 195

DESIGNED BY:
CHECKED:
DATE:
SHEET: V2_054
OF: V2_163

SCALE:

REVISIONS			REVISIONS		
NO.	DATE	BY	NO.	DATE	BY
1	6/14/2016	CL			

PROVIDENCE — IMPROVEMENTS TO INTERSTATE ROUTE 195 CONTRACT 16 VOLUME 2 — RHODE ISLAND

EAST ABUTMENT WALLS - SECTIONS AND DETAILS

A432

R:\Current\2010.1881.01_Providence Pedestrian Bridge\drawings\current\100% Submittal\1881_A430-A433.dwg, 6/8/2016 7:29:40 PM, Cory Lavigne

FED. ROAD DIV. NO.	STATE	FEDERAL AID PROJECT NO.	FISCAL YEAR	SHEET NO.	TOTAL SHEETS
1	R.I.			V2_058	V2_163

R-1

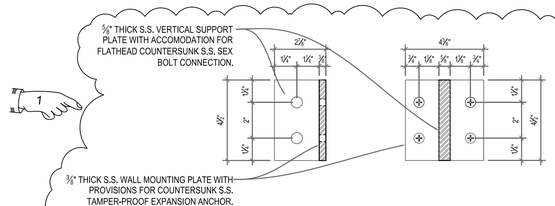

4 A441 "Architectural Railing, Type D, West Abutment w/LED WALL PLATE
3" = 1'-0"

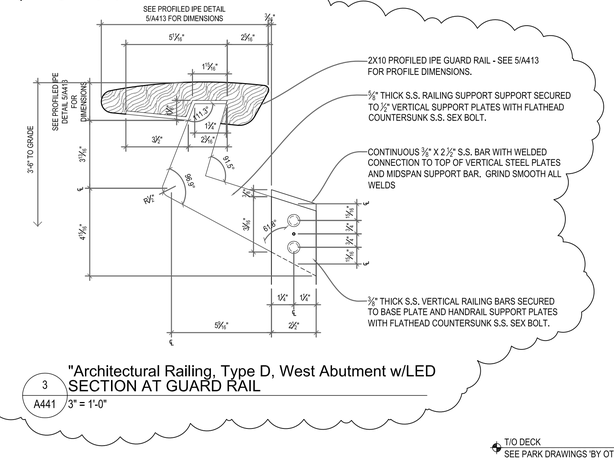

3 A441 "Architectural Railing, Type D, West Abutment w/LED SECTION AT GUARD RAIL
3" = 1'-0"

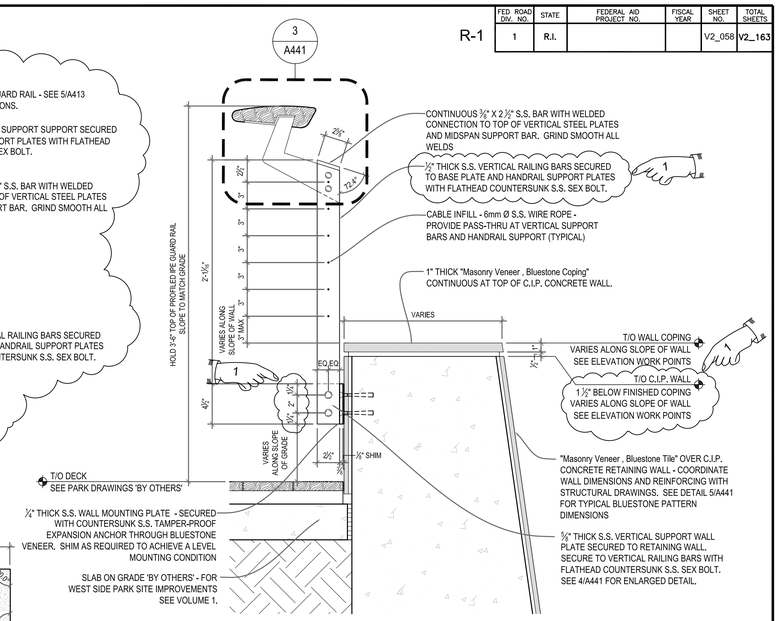

2 A441 "Architectural Railing, Type D, West Abutment w/LED" SECTION
1 1/2" = 1'-0"

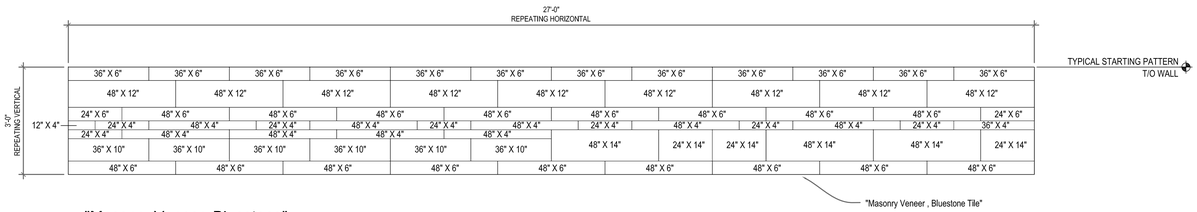

5 A441 "Masonry Veneer, Bluestone" TYPICAL ELEVATION PATTERN
1/2" = 1'-0"

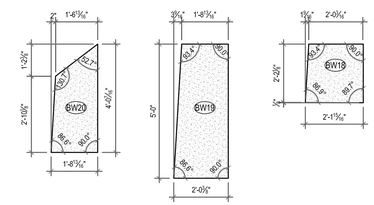

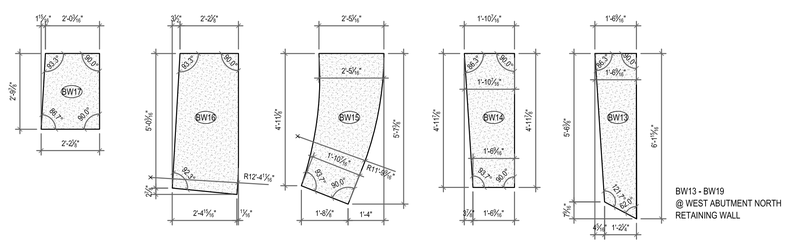

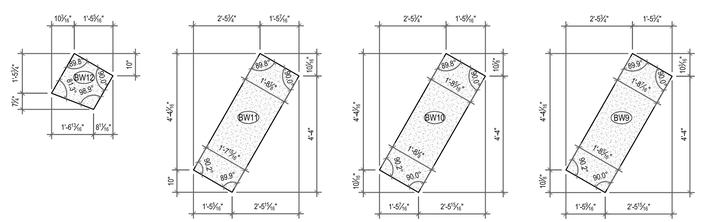

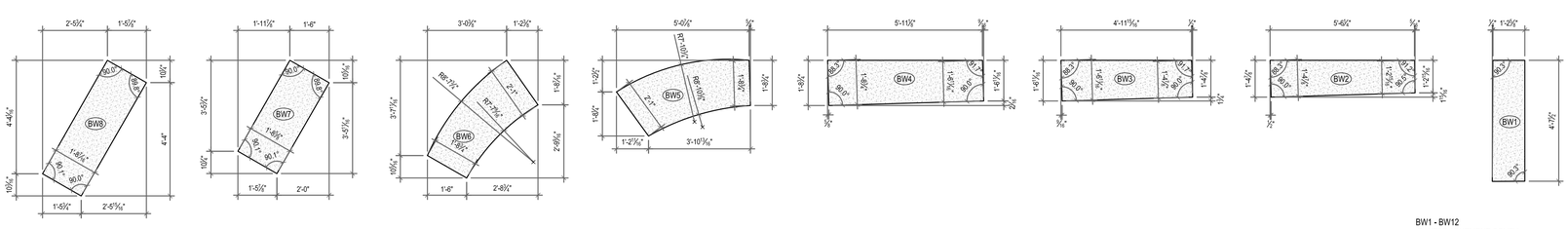

5 A441 "Masonry Veneer, Bluestone Coping" ENLARGED PLANS - WEST ABUTMENT
1/2" = 1'-0"

BW1 "Masonry Veneer, Bluestone Coping" AT WEST ABUTMENT
SEE ENLARGED PLAN 1/A440 FOR "Masonry Veneer, Bluestone Coping" LOCATION. CONTRACTOR TO PROVIDE SIZE AND QUANTITIES AS INDICATED AND INSTALL PER PLAN AND SECTIONS. HARD COPY DRAWINGS SHALL ONLY BE USED FOR REFERENCE. CONTRACTOR TO FIELD VERIFY SIZE PRIOR TO FABRICATION AND NOTIFY ARCHITECT OF ANY DISCREPANCY.

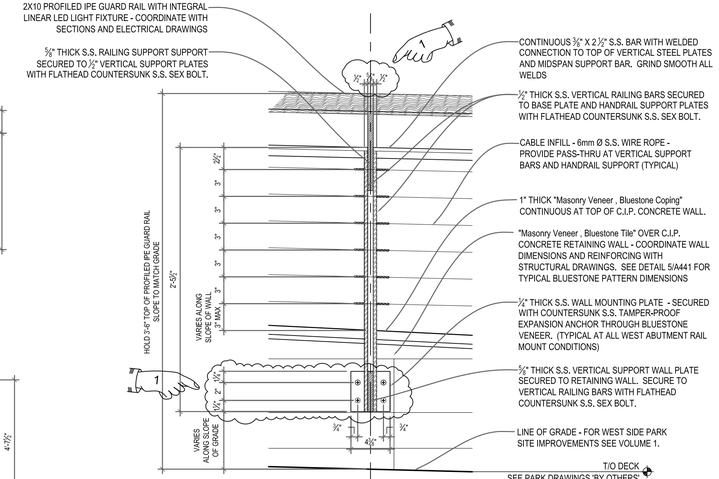

1 A441 "Architectural Railing, Type D, West Abutment w/LED" ENLARGED ELEVATION - VERTICAL SUPPORT
1 1/2" = 1'-0"

ADDENDUM NO. 4

REF DWG #	REFRENCE DRAWING NAME

CDR MAGUIRE

inFORM studio
235 east main street, suite 102b
northville, mi 48167
(p) 248.449.3564
(f) 248.449.6984
www.in-formstudio.com
Buro Happold

BETA Group, Inc.
Engineers • Planners • Landscape Architects
Lincoln, RI - Norwood, MA - Hartford, CT

RHODE ISLAND DEPARTMENT OF TRANSPORTATION

INTERSTATE 195

DESIGNED BY:
CHECKED:
DATE:
SHEET: V2_058
OF: V2_163

SCALE:

REVISIONS			REVISIONS		
NO.	DATE	BY	NO.	DATE	BY
1	6/14/2016	CL			

PROVIDENCE — IMPROVEMENTS TO INTERSTATE ROUTE 195 CONTRACT 16 VOLUME 2 — RHODE ISLAND

WEST ABUTMENT WALLS SECTIONS AND DETAILS

A441

R:\Current\2010.1881.01_Providence Pedestrian Bridge\drawings\current\100% Submittal\1881_A440-A441.dwg, 6/9/2016 3:36:50 PM, Cory Lavigne

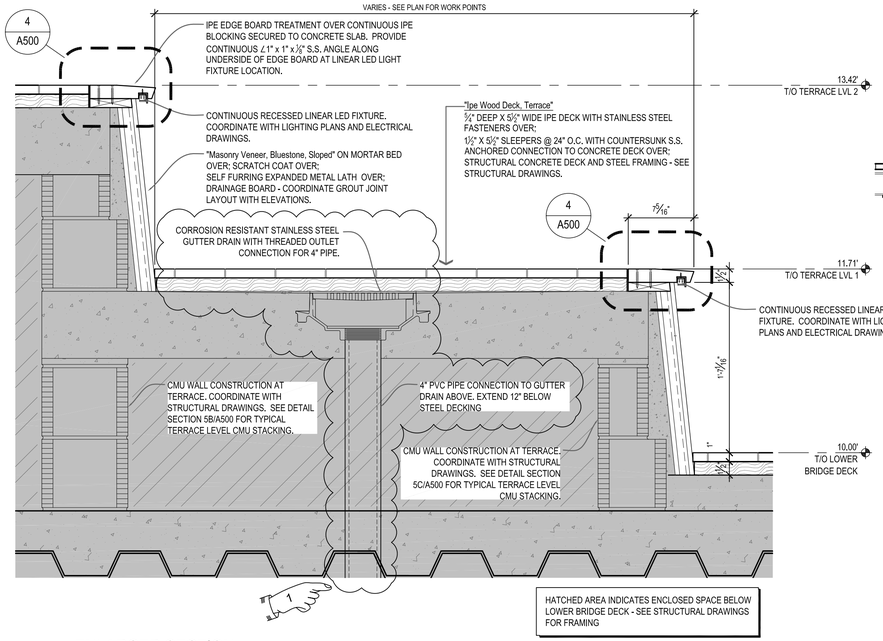

3 A500 ENLARGED SECTION TERRACE
1-1/2" = 1'-0"

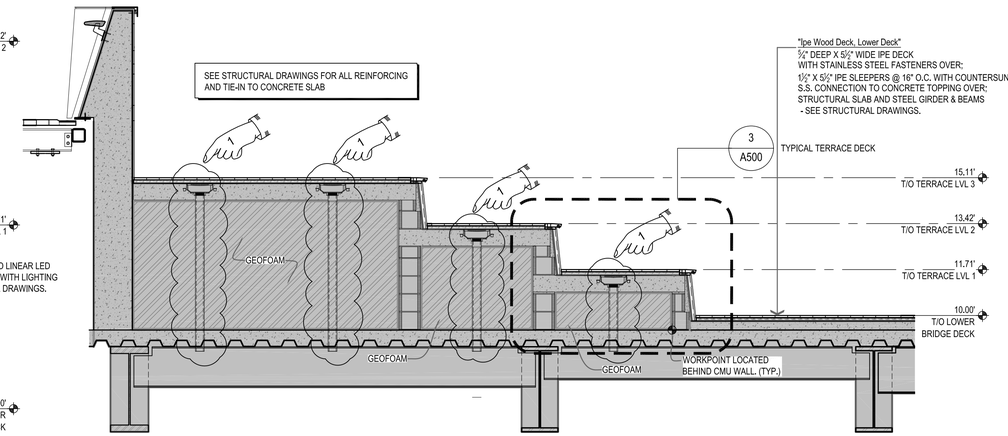

2 A500 SECTION TERRACE
3/8" = 1'-0"

	PLAN DATA		
WORK POINT	CMU Terrace Wall		
	STATION	STATION OFFSET	ELEVATION
WP-T.1	3+04.84	01.91 RIGHT	09.44 (PMHW)
WP-T.2	3+06.27	11.11 RIGHT	09.44 (PMHW)
WP-T.3	3+03.76	10.32 RIGHT	09.44 (PMHW)
WP-T.4	3+05.94	24.45 RIGHT	09.44 (PMHW)
WP-T.5	3+08.36	24.08 RIGHT	09.44 (PMHW)
WP-T.6	3+07.78	26.46 RIGHT	09.44 (PMHW)
WP-T.7	3+21.85	29.88 RIGHT	09.44 (PMHW)
WP-T.8	3+20.89	33.82 RIGHT	09.44 (PMHW)
WP-T.9	3+23.57	30.78 RIGHT	09.44 (PMHW)
WP-T.10	3+33.94	39.89 RIGHT	09.44 (PMHW)
WP-T.11	3+13.31	05.34 RIGHT	09.44 (PMHW)
WP-T.12	3+14.19	13.60 RIGHT	09.44 (PMHW)
WP-T.13	3+11.75	12.83 RIGHT	09.44 (PMHW)
WP-T.14	3+12.67	21.52 RIGHT	09.44 (PMHW)
WP-T.15	3+14.11	21.36 RIGHT	09.44 (PMHW)
WP-T.16	3+13.77	22.77 RIGHT	09.44 (PMHW)
WP-T.17	3+29.40	26.58 RIGHT	09.44 (PMHW)
WP-T.18	3+28.56	30.03 RIGHT	09.44 (PMHW)
WP-T.19	3+31.25	27.71 RIGHT	09.44 (PMHW)
WP-T.20	3+40.29	38.19 RIGHT	09.44 (PMHW)
WP-T.21	3+21.79	08.78 RIGHT	09.44 (PMHW)
WP-T.22	3+22.07	16.06 RIGHT	09.44 (PMHW)
WP-T.23	3+19.62	15.30 RIGHT	09.44 (PMHW)
WP-T.24	3+19.74	18.37 RIGHT	09.44 (PMHW)
WP-T.25	3+20.68	18.33 RIGHT	09.44 (PMHW)
WP-T.26	3+20.46	19.25 RIGHT	09.44 (PMHW)
WP-T.27	3+37.98	23.52 RIGHT	09.44 (PMHW)
WP-T.28	3+37.26	26.49 RIGHT	09.44 (PMHW)
WP-T.29	3+39.88	24.93 RIGHT	09.44 (PMHW)
WP-T.30	3+46.74	36.46 RIGHT	09.44 (PMHW)

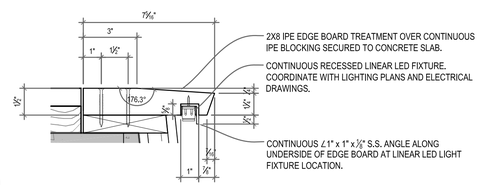

4 A500 ENLARGED SECTION TERRACE EDGE BOARD
3" = 1'-0"

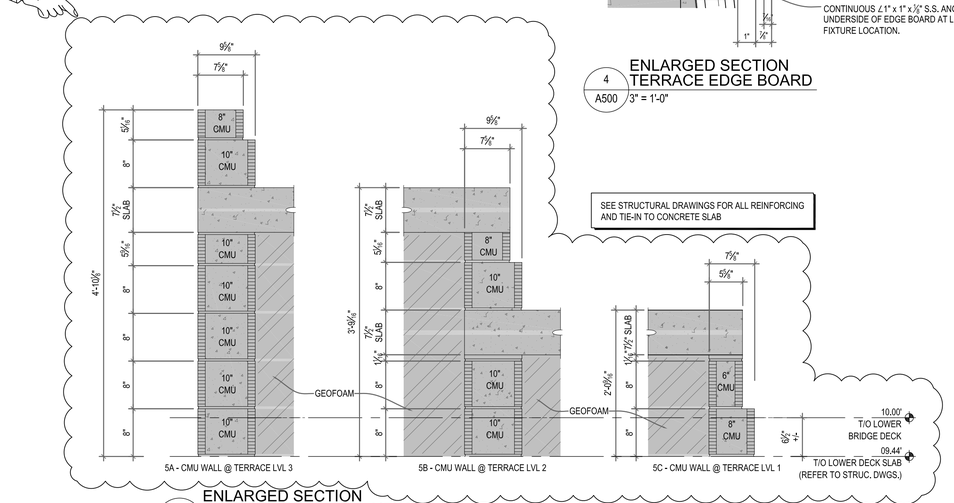

5 A500 ENLARGED SECTION TERRACE WALL CMU SIZES
1 " = 1'-0"

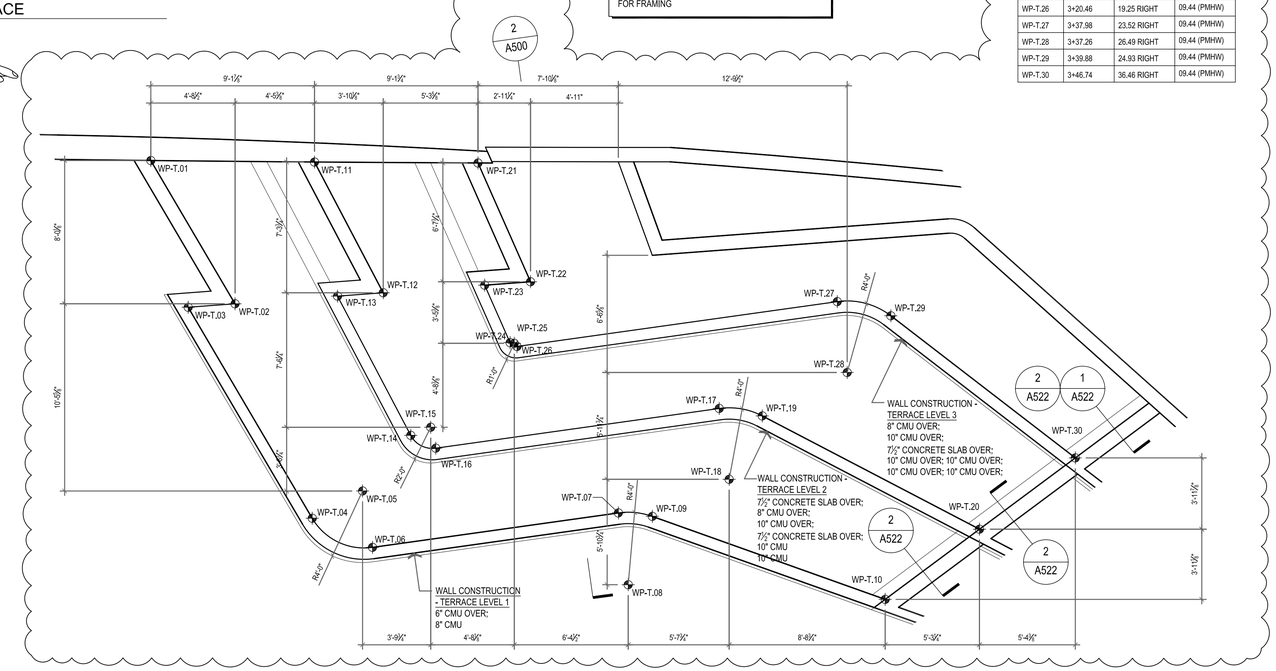

1 A500 ENLARGED DIMENSION PLAN TERRACE CMU BACK-UP WALL
1/4" = 1'-0"

ADDENDUM NO. 4

REF DWG #	REFRENCE DRAWING NAME

CDR MAGUIRE

inFORM studio
235 east main street, suite 102b
northville, mi 48167
(p) 248.449.3564
(f) 248.449.5984
www.in-formstudio.com
Buro Happold

BETA Group, Inc.
Engineers • Planners • Landscape Architects
Lincoln, RI - Norwood, MA - Hartford, CT

RHODE ISLAND DEPARTMENT OF TRANSPORTATION

INTERSTATE 195

DESIGNED BY:
CHECKED:
DATE:
SHEET: V2_059
OF: V2_163

SCALE:

REVISIONS			REVISIONS		
NO.	DATE	BY	NO.	DATE	BY
1	6/14/2016	CL			

IMPROVEMENTS TO INTERSTATE ROUTE 195
PROVIDENCE CONTRACT 16 VOLUME 2 RHODE ISLAND

ENLARGED TERRACE PLAN SECTIONS AND DETAILS

A500

FED. ROAD DIV. NO.	STATE	FEDERAL AID PROJECT NO.	FISCAL YEAR	SHEET NO.	TOTAL SHEETS
1	R.I.			V2_061	V2_163

R-1

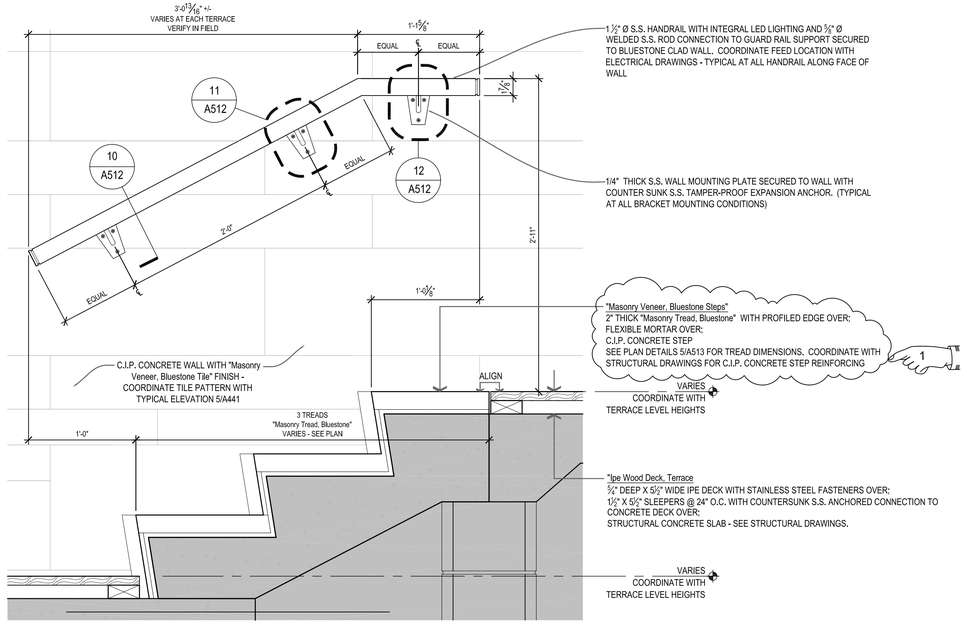

4 A511 TYPICAL SECTION STEP AT TERRACE WALL
1 1/2" = 1'-0"

HATCHED AREA INDICATES ENCLOSED SPACE BELOW UPPER BRIDGE DECK - SEE STRUCTURAL DRAWINGS FOR FRAMING

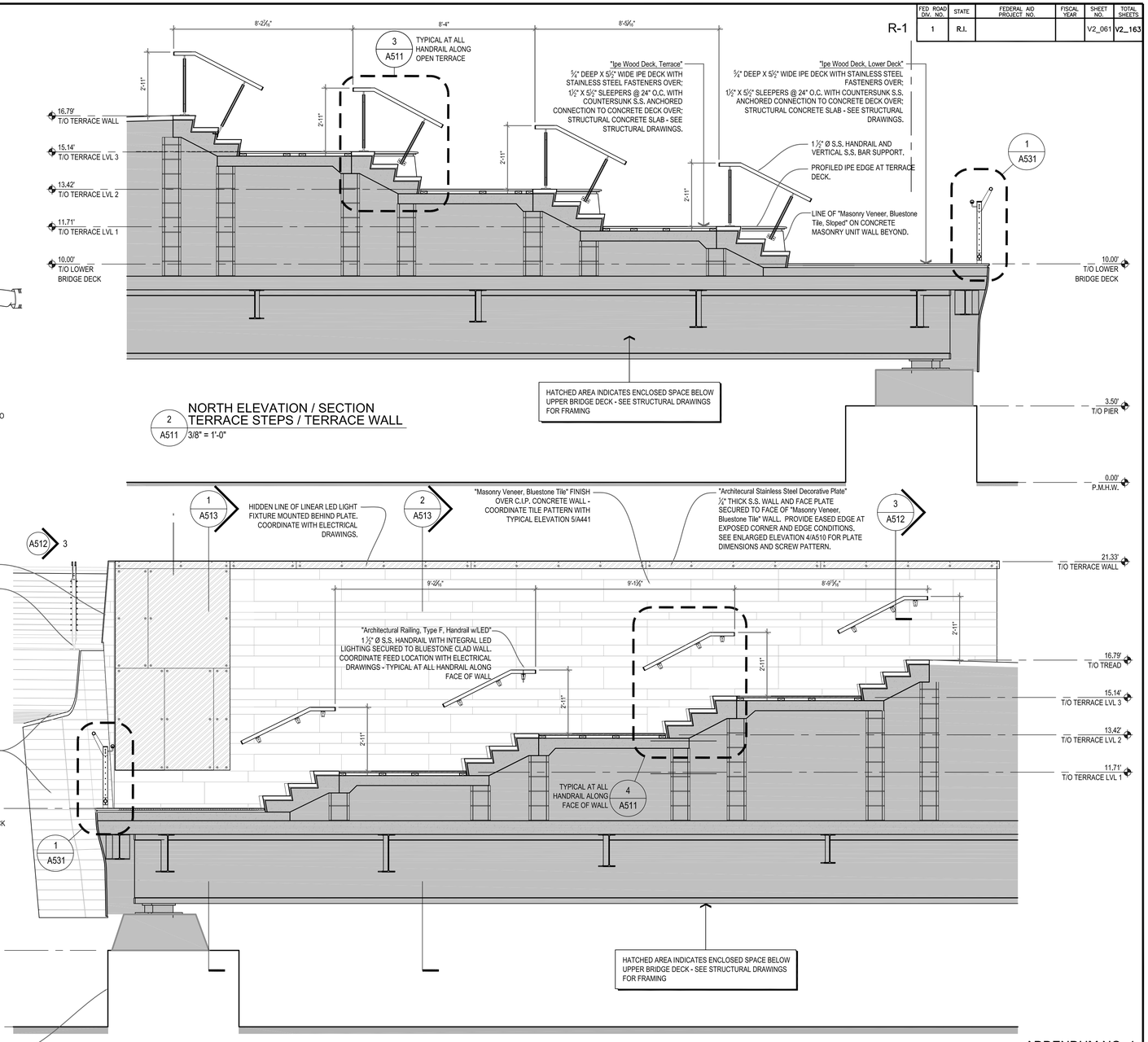

2 A511 NORTH ELEVATION / SECTION TERRACE STEPS / TERRACE WALL
3/8" = 1'-0"

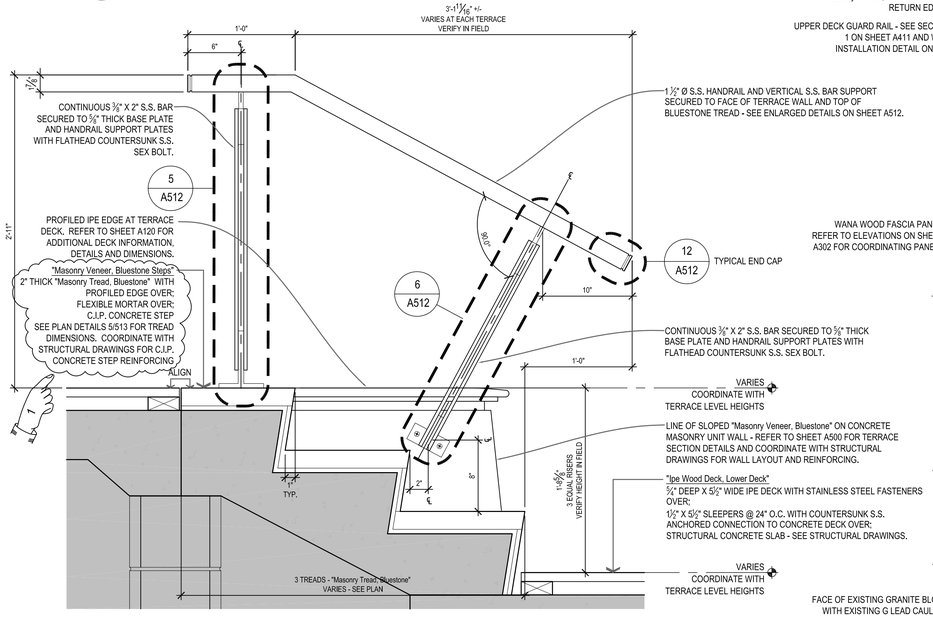

3 A511 TYPICAL SECTION STEP AT OPEN TERRACE
1 1/2" = 1'-0"

HATCHED AREA INDICATES ENCLOSED SPACE BELOW UPPER BRIDGE DECK - SEE STRUCTURAL DRAWINGS FOR FRAMING

1 A511 NORTH ELEVATION / SECTION TERRACE STEPS / TERRACE WALL - LOWER DECK
3/8" = 1'-0"

ADDENDUM NO. 4

REF DWG #	REFRENCE DRAWING NAME

CDR MAGUIRE

inFORM studio
235 east main street, suite 102b
northville, mi 48167
(p) 248.449.3564
(f) 248.449.6984
www.in-formstudio.com
Buro Happold

BETA Group, Inc.
Engineers • Planners • Landscape Architects
Lincoln, RI - Norwood, MA - Hartford, CT

RHODE ISLAND
DEPARTMENT OF TRANSPORTATION

INTERSTATE 195

DESIGNED BY:
CHECKED:
DATE:
SHEET: V2_061
OF: V2_163

SCALE:

REVISIONS			REVISIONS		
NO.	DATE	BY	NO.	DATE	BY
1	6/14/2016	CL			

IMPROVEMENTS TO
INTERSTATE ROUTE 195
CONTRACT 16 VOLUME 2
PROVIDENCE RHODE ISLAND

TERRACE ELEVATIONS AND SECTIONS
WALL AND STEPS

A511

R:\Current\2010.1881.01_Providence Pedestrian Bridge\drawings\current\100% Submittal\1881_A510-A513.dwg, 6/9/2016 8:17:53 AM, Cory Lavigne

FED ROAD DIV. NO.	STATE	FEDERAL AID PROJECT NO.	FISCAL YEAR	SHEET NO.	TOTAL SHEETS
1	R.I.			V2_064	V2_163

R-1

4 A520 ENLARGED PLANTER ELEVATION @ LOWER DECK STEEL FRAMING
1/4" = 1'-0"

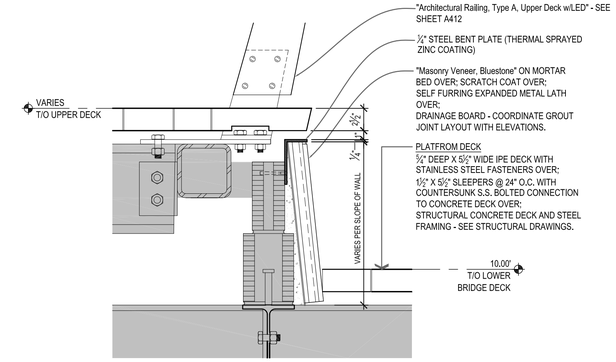

5 A520 TERRACE WALL SECTION (TYP.) @ LOWER DECK STEEL FRAMING
1 1/2" = 1'-0"

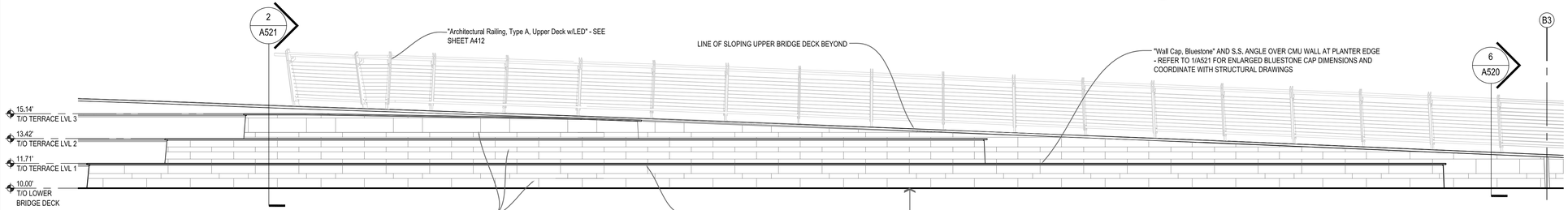

3 A520 ENLARGED PLANTER ELEVATION @ LOWER DECK CONCRETE SLAB
1/4" = 1'-0"

PD 4" DIA S.S. DRAIN THROUGH PLANT BOX BELOW. COORDINATE W/ VOLUME 1 DRAWINGS FOR INTERIOR PLANTER CONSTRUCTION, DRAINAGE AND PLANT SCHEDULE

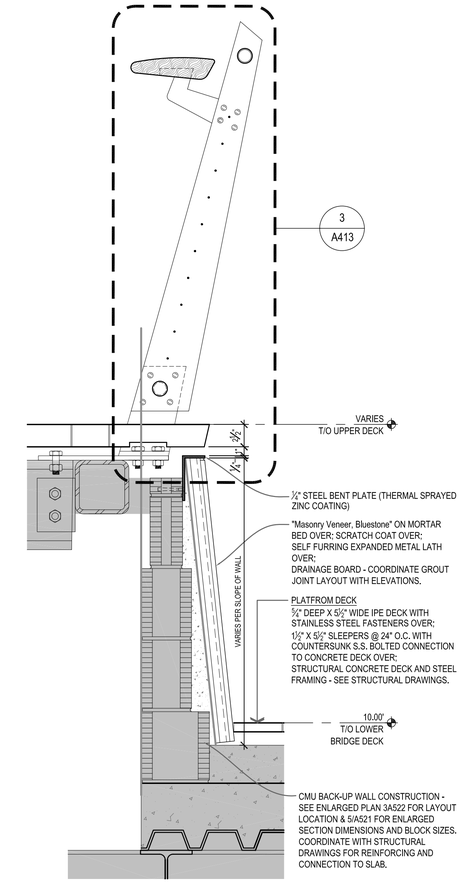

6 A520 TERRACE WALL SECTION (TYP.) @ LOWER DECK CONCRETE SLAB
1 1/2" = 1'-0"

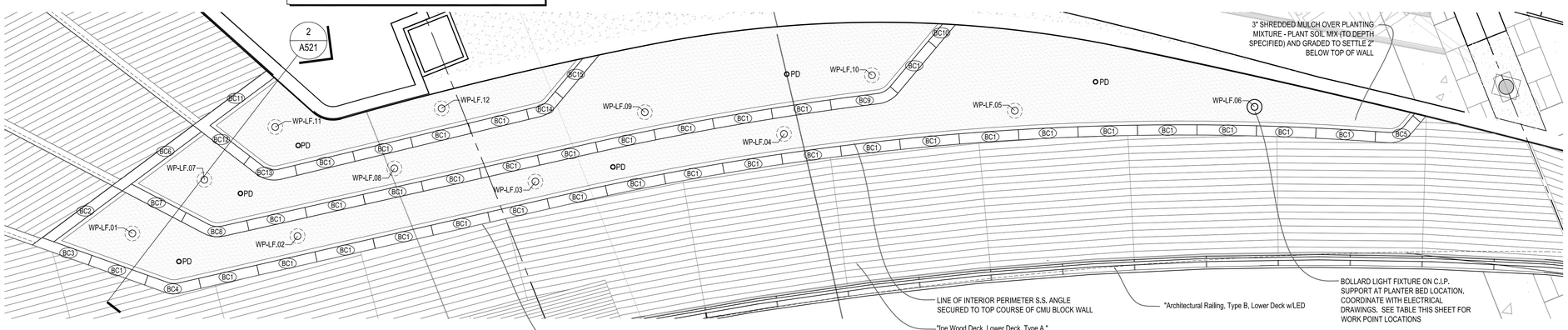

2 A520 ENLARGED LANDSCAPE PLAN TERRACE PLANTER
1/4" = 1'-0" 1/A103

BC1 BLUESTONE COPING NUMBER
FOR INDIVIDUAL COPING DIMENSIONS FOR "Wall Cap, Bluestone" SEE DETAIL 1 ON SHEET A521. CONTRACTOR TO PROVIDE SIZE AND QUANTITIES AS INDICATED AND INSTALL PER PLAN AND SECTIONS. HARD COPY DRAWINGS SHALL ONLY BE USED FOR REFERENCE. CONTRACTOR TO FIELD VERIFY SIZE PRIOR TO FABRICATION AND NOTIFY ARCHITECT OF ANY DISCREPANCY.

NOTES:
REFER TO LANDSCAPE DRAWINGS FOR ALL PLANTING DETAILS, SCHEDULES, AND REQUIREMENTS.

WORK POINT	PLAN DATA PLANTER LIGHT FIXTURES STATION	STATION OFFSET	ELEVATION
WP-LF.1	3+39.17	41.90 RIGHT	09.44 (PMHW)
WP-LF.2	3+49.41	46.17 RIGHT	09.44 (PMHW)
WP-LF.3	3+65.60	48.66 RIGHT	09.44 (PMHW)
WP-LF.4	3+82.29	51.85 RIGHT	09.44 (PMHW)

WORK POINT	PLAN DATA PLANTER LIGHT FIXTURES STATION	STATION OFFSET	ELEVATION
WP-LF.5	3+97.26	56.13 RIGHT	09.44 (PMHW)
WP-LF.6	4+12.31	61.83 RIGHT	09.44 (PMHW)
WP-LF.7	3+45.00	40.34 RIGHT	11.50 (PMHW)
WP-LF.8	3+57.13	44.34 RIGHT	11.50 (PMHW)

WORK POINT	PLAN DATA PLANTER LIGHT FIXTURES STATION	STATION OFFSET	ELEVATION
WP-LF.9	3+74.14	47.05 RIGHT	11.50 (PMHW)
WP-LF.10	3+89.23	50.38 RIGHT	11.50 (PMHW)
WP-LF.11	3+50.72	38.81 RIGHT	13.21 (PMHW)
WP-LF.12	3+61.56	41.77 RIGHT	13.21 (PMHW)

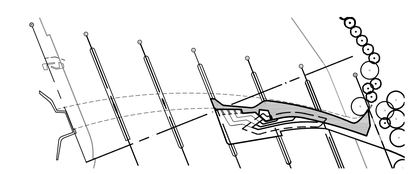

PLAN NORTH KEY PLAN LOWER DECK
1"=100'

ADDENDUM NO. 4

REF DWG #	REFRENCE DRAWING NAME

CDR MAGUIRE

inFORM studio
235 east main street, suite 102b
northville, mi 48167
(p) 248.449.3564
(f) 248.449.9984
www.in-formstudio.com
Buro Happold

BETA Group, Inc.
Engineers • Planners • Landscape Architects
Lincoln, RI - Norwood, MA - Hartford, CT

RHODE ISLAND DEPARTMENT OF TRANSPORTATION

INTERSTATE 195

DESIGNED BY:
CHECKED:
DATE:
SHEET: V2_064
OF: V2_163

SCALE:

REVISIONS NO.	DATE	BY	REVISIONS NO.	DATE	BY
1	6/14/2016	CL			

PROVIDENCE — IMPROVEMENTS TO INTERSTATE ROUTE 195 CONTRACT 16 VOLUME 2 — RHODE ISLAND

ENLARGED PLANTER CMU PLAN, ELEVATION AND LANDSCAPE PLAN

A520

R:\Current\2010.1881.01_Providence Pedestrian Bridge\drawings\current\100% Submittal\1881_A520-A522.dwg, 6/10/2016 1:51:00 PM, InFORM 04

1881_A520-A522

FED ROAD DIV. NO.	STATE	FEDERAL AID PROJECT NO.	FISCAL YEAR	SHEET NO.	TOTAL SHEETS
1	R.I.			V2_065	V2_163

R-1

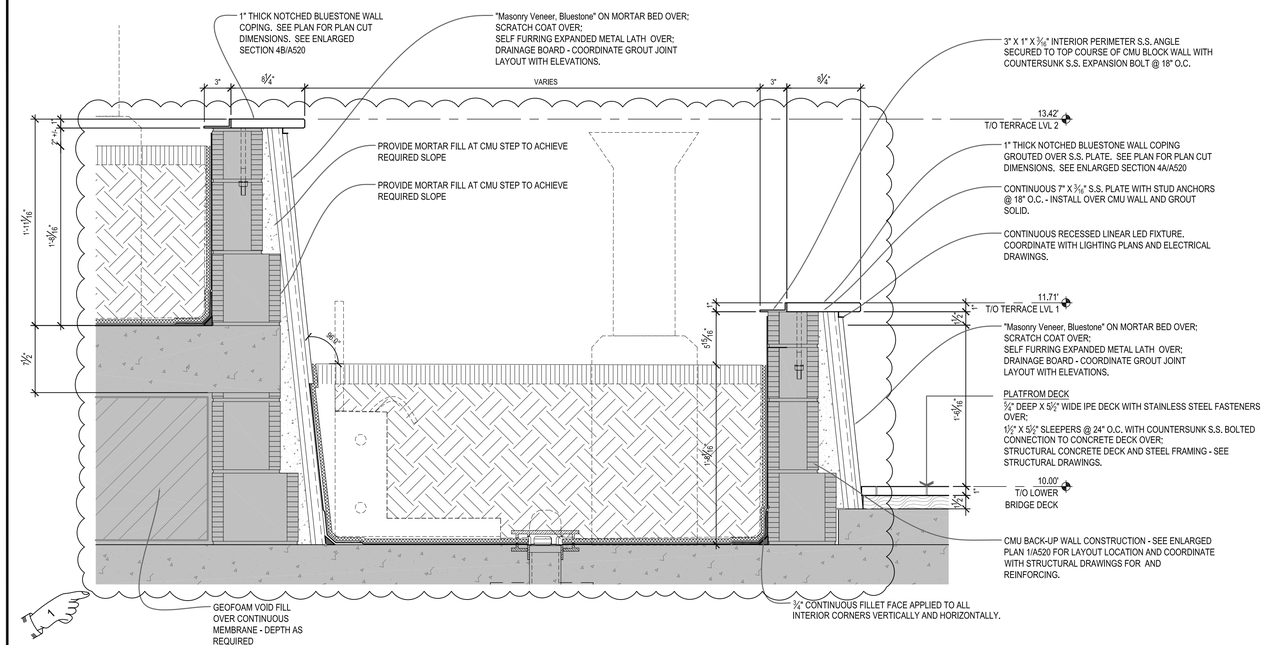

3 A521 TYPICAL SECTION TERRACE PLANTER
1 1/2" = 1'-0" 2/A521

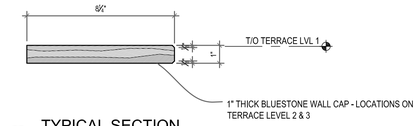

4 A521 TYPICAL SECTION "Wall Cap, Bluestone"
3" = 1'-0"

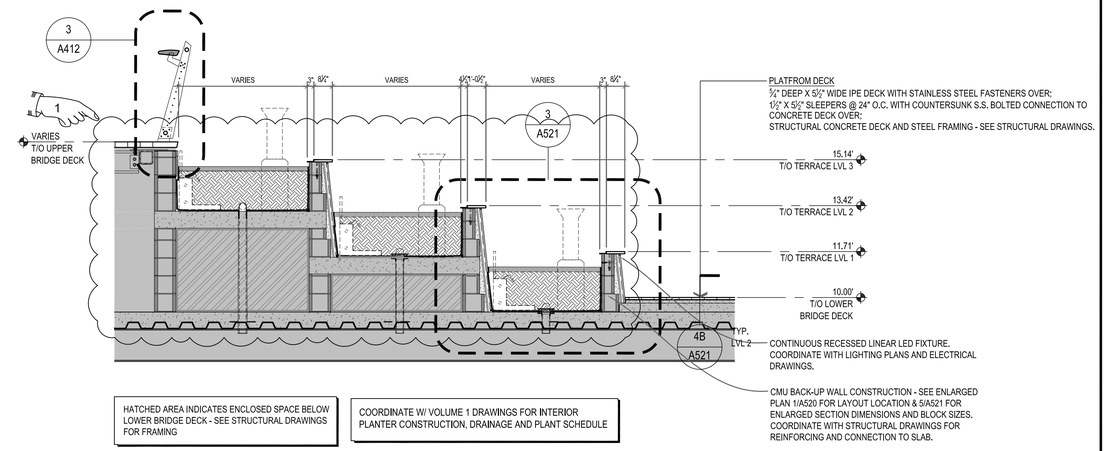

2 A521 SECTION TERRACE PLANTER
3/8" = 1'-0"

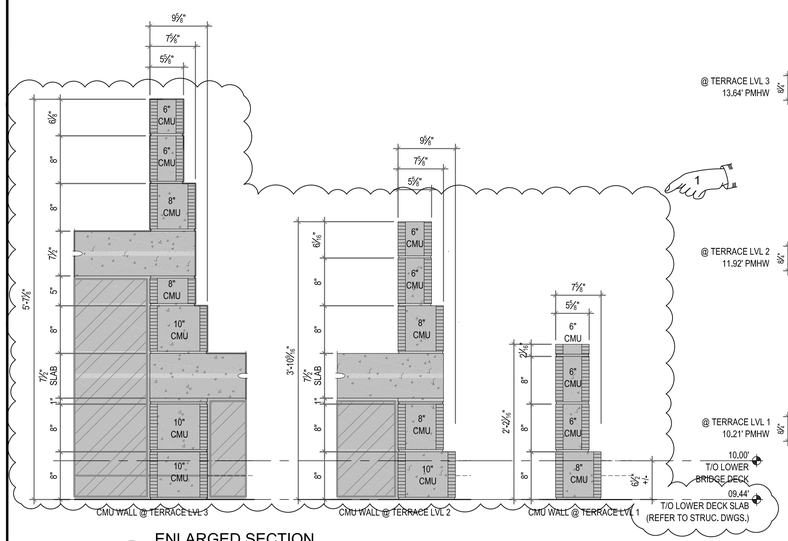

5 A521 ENLARGED SECTION TERRACE PLANTER CMU SIZES
1 " = 1'-0"

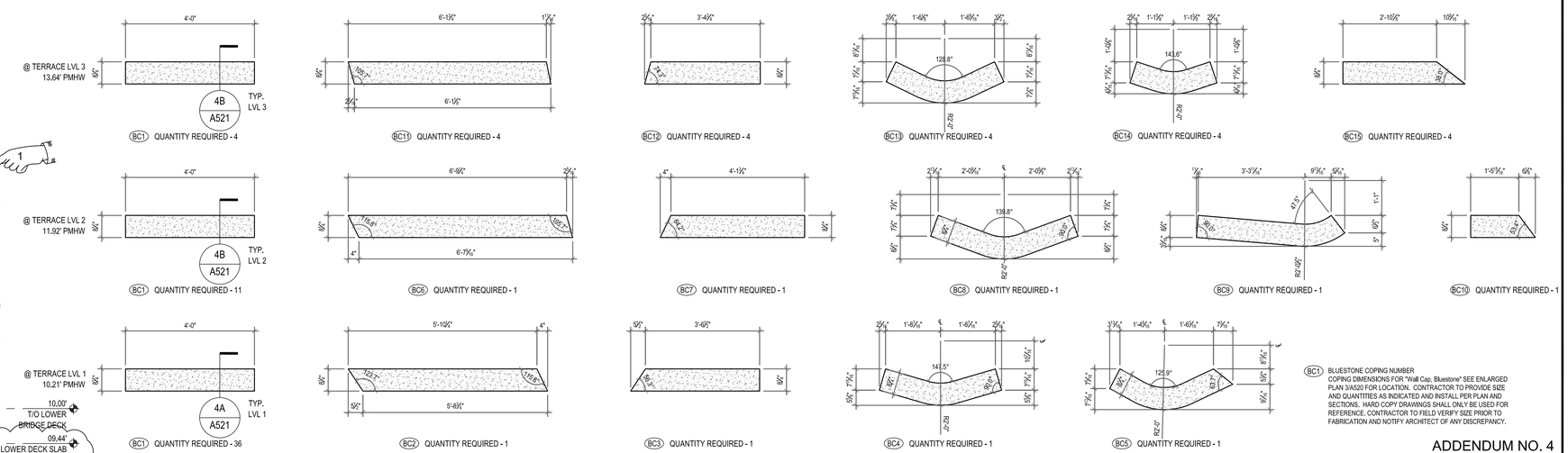

BC1 BLUESTONE COPING NUMBER
COPING DIMENSIONS FOR "Wall Cap, Bluestone" SEE ENLARGED PLAN 3/A520 FOR LOCATION. CONTRACTOR TO PROVIDE SIZE AND QUANTITIES AS INDICATED AND INSTALL PER PLAN AND SECTIONS. HARD COPY DRAWINGS SHALL ONLY BE USED FOR REFERENCE. CONTRACTOR TO FIELD VERIFY SIZE PRIOR TO FABRICATION AND NOTIFY ARCHITECT OF ANY DISCREPANCY.

1 A521 "Wall Cap, Bluestone" ENLARGED PLANS
1/2" = 1'-0"

ADDENDUM NO. 4

REF DWG #	REFRENCE DRAWING NAME

CDR MAGUIRE

inFORM studio
235 east main street, suite 102b
northville, mi 48167
(p) 248.449.3564
(f) 248.449.6984
www.in-formstudio.com

Buro Happold

BETA Group, Inc.
Engineers • Planners • Landscape Architects
Lincoln, RI - Norwood, MA - Hartford, CT

RHODE ISLAND DEPARTMENT OF TRANSPORTATION

INTERSTATE 195

DESIGNED BY:
CHECKED:
DATE:
SHEET: V2_065
OF: V2_163

SCALE:

REVISIONS			REVISIONS		
NO.	DATE	BY	NO.	DATE	BY
1	6/14/2016	CL			

IMPROVEMENTS TO INTERSTATE ROUTE 195
CONTRACT 16 VOLUME 2
PROVIDENCE RHODE ISLAND

ENLARGED PLANTER SECTIONS AND DETAILS — A521

R:\Current\2010.1881.01_Providence Pedestrian Bridge\drawings\current\100% Submittal\1881_A520-A522.dwg, 6/10/2016 6:23:51 PM, InFORM 04

1881_A520-A522

FED. ROAD DIV. NO.	STATE	FEDERAL AID PROJECT NO.	FISCAL YEAR	SHEET NO.	TOTAL SHEETS
1	R.I.			V2_066	V2_163

R-1

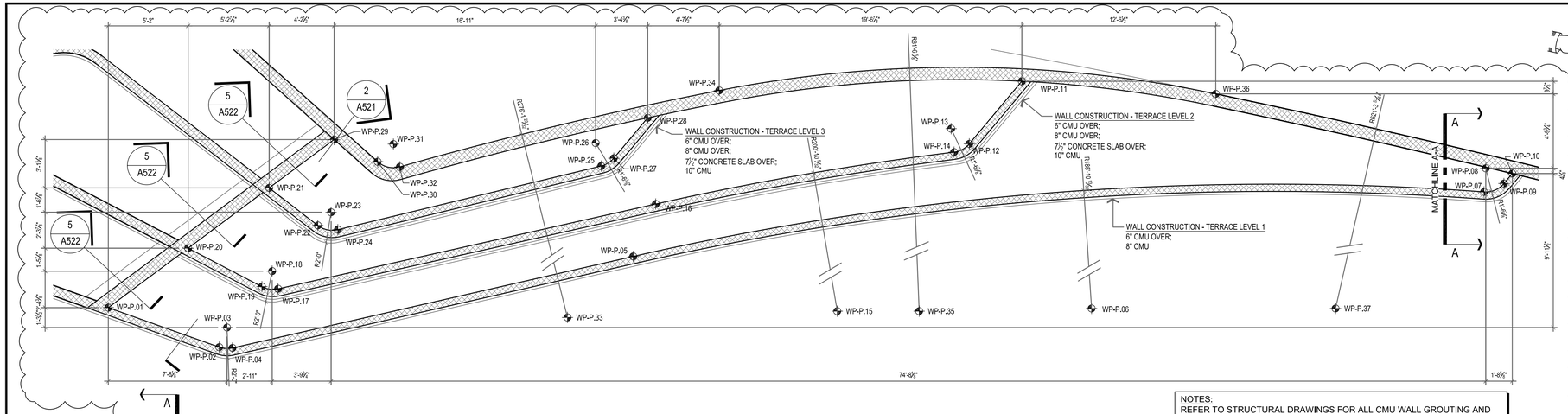

NOTES:
REFER TO STRUCTURAL DRAWINGS FOR ALL CMU WALL GROUTING AND REINFORCEMENT DETAILS AND REQUIREMENTS.

WORK POINT	PLAN DATA PLANTER STATION	STATION OFFSET	ELEVATION
WP-P.1	3+34.43	40.57 RIGHT	09.44 (PMHW)
WP-P.2	3+40.27	45.70 RIGHT	09.44 (PMHW)
WP-P.3	3+41.02	44.84 RIGHT	09.44 (PMHW)
WP-P.4	3+40.84	45.97 RIGHT	09.44 (PMHW)
WP-P.5	3+67.23	50.05 RIGHT	09.44 (PMHW)
WP-P.6	3+38.82	233.73 RIGHT	09.44 (PMHW)
WP-P.7	4+20.10	66.58 RIGHT	09.44 (PMHW)
WP-P.8	4+20.60	65.56 RIGHT	09.44 (PMHW)
WP-P.9	4+21.13	66.57 RIGHT	09.44 (PMHW)
WP-P.10	4+22.05	66.07 RIGHT	09.44 (PMHW)
WP-P.11	3+94.77	48.80 RIGHT	09.44 (PMHW)
WP-P.12	3+89.98	51.38 RIGHT	09.44 (PMHW)
WP-P.13	3+89.46	50.41 RIGHT	09.44 (PMHW)
WP-P.14	3+89.18	51.48 RIGHT	09.44 (PMHW)
WP-P.15	3+38.39	245.80 RIGHT	09.44 (PMHW)
WP-P.16	3+69.92	47.44 RIGHT	09.44 (PMHW)
WP-P.17	3+44.98	43.49 RIGHT	09.44 (PMHW)
WP-P.18	3+45.16	42.35 RIGHT	09.44 (PMHW)
WP-P.19	3+44.29	43.10 RIGHT	09.44 (PMHW)
WP-P.20	3+40.66	38.90 RIGHT	09.44 (PMHW)
WP-P.21	3+46.96	37.21 RIGHT	09.44 (PMHW)

WORK POINT	PLAN DATA PLANTER STATION	STATION OFFSET	ELEVATION
WP-P.22	3+49.11	40.83 RIGHT	09.44 (PMHW)
WP-P.23	3+50.08	40.25 RIGHT	09.44 (PMHW)
WP-P.24	3+49.93	41.37 RIGHT	09.44 (PMHW)
WP-P.25	3+67.58	43.90 RIGHT	09.44 (PMHW)
WP-P.26	3+67.76	42.62 RIGHT	09.44 (PMHW)
WP-P.27	3+68.37	43.76 RIGHT	09.44 (PMHW)
WP-P.28	3+71.51	42.08 RIGHT	09.44 (PMHW)
WP-P.29	3+52.03	35.85 RIGHT	09.44 (PMHW)
WP-P.30	3+54.01	38.52 RIGHT	09.44 (PMHW)
WP-P.31	3+55.21	37.92 RIGHT	09.44 (PMHW)
WP-P.32	3+55.05	39.25 RIGHT	09.44 (PMHW)
WP-P.33	3+25.48	313.81 RIGHT	09.44 (PMHW)
WP-P.34	3+78.10	42.72 RIGHT	09.44 (PMHW)
WP-P.35	3+61.09	122.48 RIGHT	09.44 (PMHW)
WP-P.36	4+03.30	52.70 RIGHT	09.44 (PMHW)
WP-P.37	0+64.07	573.24 RIGHT	09.44 (PMHW)
WP-P.38	4+28.41	69.95 RIGHT	09.44 (PMHW)
WP-P.39	4+28.66	70.13 RIGHT	09.65 (PMHW)
WP-P.40	0+64.07	573.24 RIGHT	09.64 (PMHW)
WP-P.41	4+77.99	109.80 RIGHT	09.65 (PMHW)

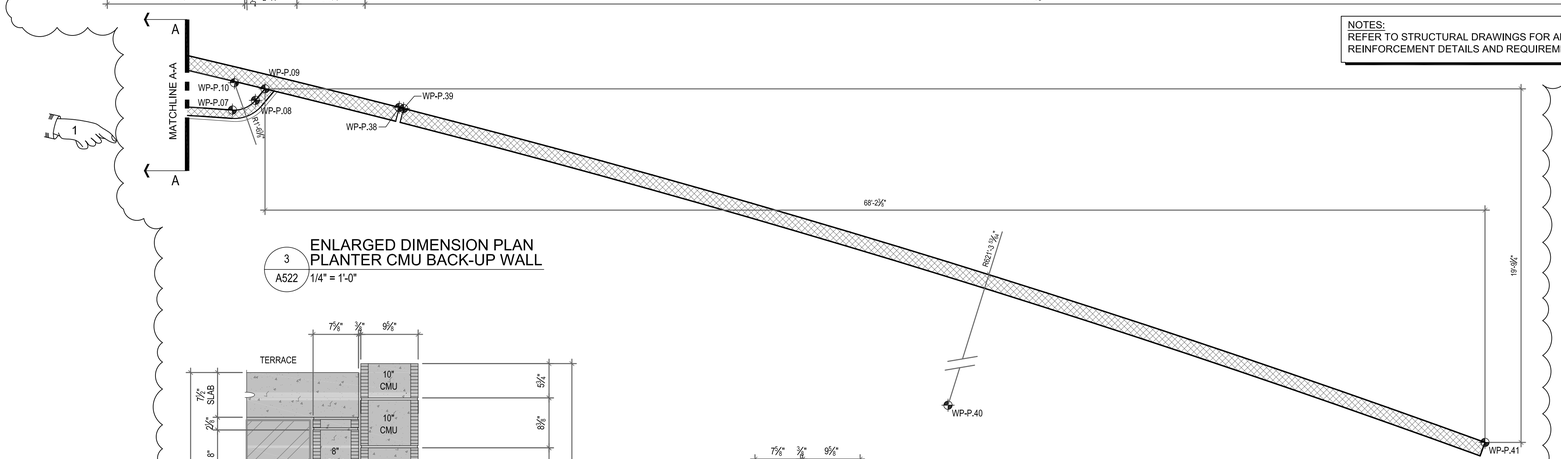

3 A522 ENLARGED DIMENSION PLAN PLANTER CMU BACK-UP WALL
1/4" = 1'-0"

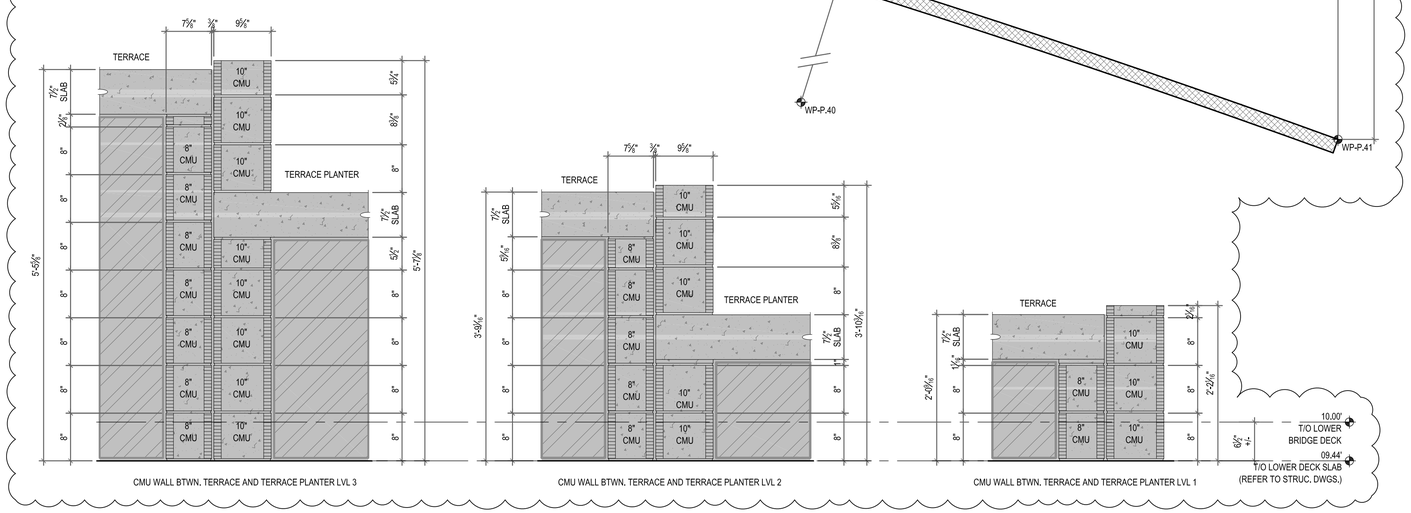

2 A522 ENLARGED SECTION TERRACE PLANTER CMU SIZES
1 " = 1'-0"

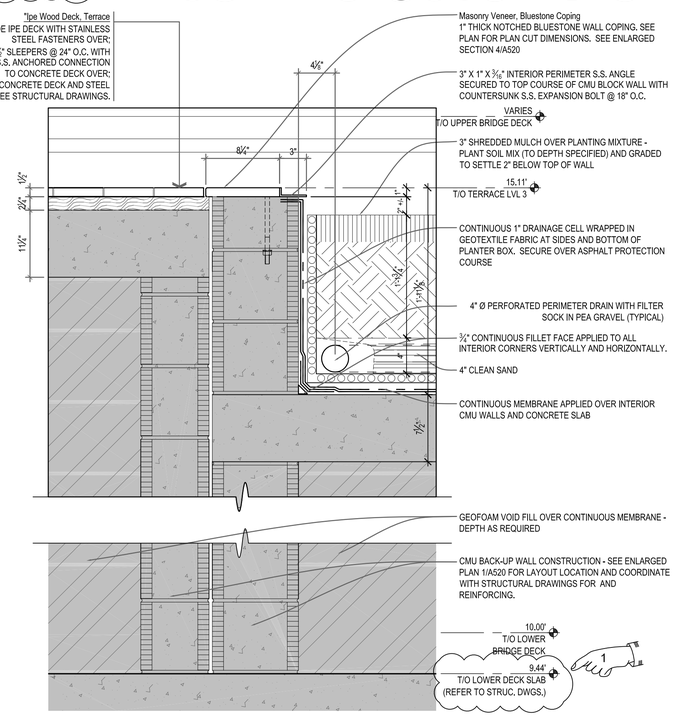

1 A522 TYPICAL SECTION TERRACE PLANTER
1 1/2" = 1'-0"

HATCHED AREA INDICATES ENCLOSED SPACE BELOW LOWER BRIDGE DECK - SEE STRUCTURAL DRAWINGS FOR FRAMING

ADDENDUM NO. 4

REF DWG #	REFRENCE DRAWING NAME

CDR MAGUIRE

inFORM studio
235 east main street, suite 102b
northville, mi 48167
(p) 248.449.3564
(f) 248.449.6984
www.in-formstudio.com
Buro Happold

BETA Group, Inc.
Engineers • Planners • Landscape Architects
Lincoln, RI - Norwood, MA - Hartford, CT

RHODE ISLAND DEPARTMENT OF TRANSPORTATION

INTERSTATE 195

DESIGNED BY:
CHECKED:
DATE:
SHEET: V2_066
OF: V2_163

SCALE:

REVISIONS NO.	DATE	BY	REVISIONS NO.	DATE	BY
1	6/14/2016	CL			

IMPROVEMENTS TO INTERSTATE ROUTE 195
PROVIDENCE CONTRACT 16 VOLUME 2 RHODE ISLAND

TERRACE WALL SECTIONS AND DETAILS — A522

R:\Current\2010.1881.01_Providence Pedestrian Bridge\drawings\current\100% Submittal\1881_A520-A522.dwg, 6/10/2016 2:35:23 PM, InFORM 04

1881_A520-A522

FED. ROAD DIV. NO.	STATE	FEDERAL AID PROJECT NO.	FISCAL YEAR	SHEET NO.	TOTAL SHEETS
1	R.I.			V2_067	V2_163

R-1

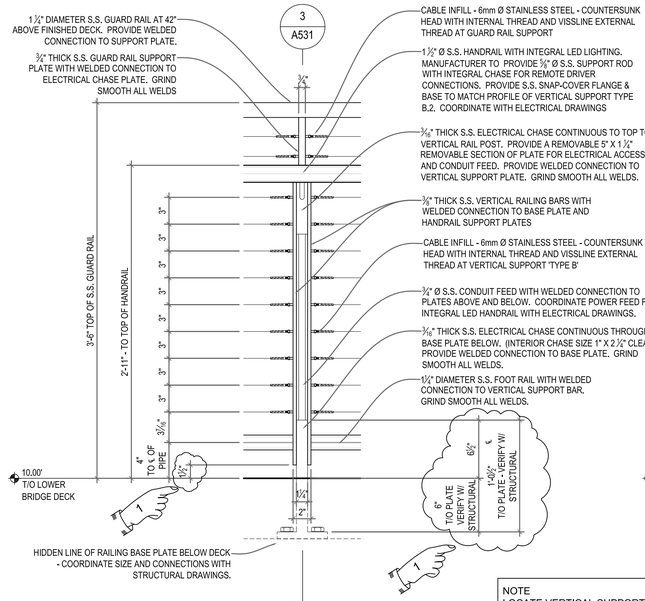

5 A530 VERTICAL SUPPORT TYPE B.2 ENLARGED ELEVATION - DECK SIDE
1 1/2" = 1'-0"

NOTE
LOCATE VERTICAL SUPPORT TYPE B.2 PER LOWER DECK RAILING WORK POINT PLAN ON SHEET A141. COORDINATE HANDRAIL POWER WITH ELECTRICAL DRAWINGS

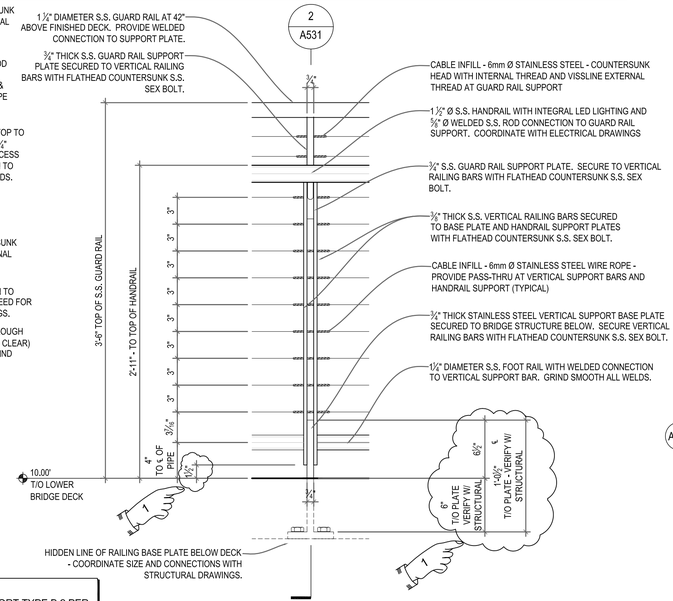

4 A530 VERTICAL SUPPORT TYPE B.1 ENLARGED ELEVATION - DECK SIDE
1 1/2" = 1'-0"

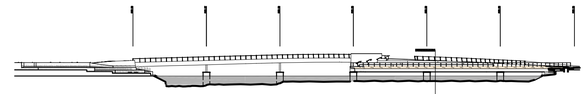

KEY ELEVATION
OVERALL SOUTH ELEVATION
1/64" = 1'-0"

1 A530 "Architectural Railing, Type B, Lower Deck w/LED"

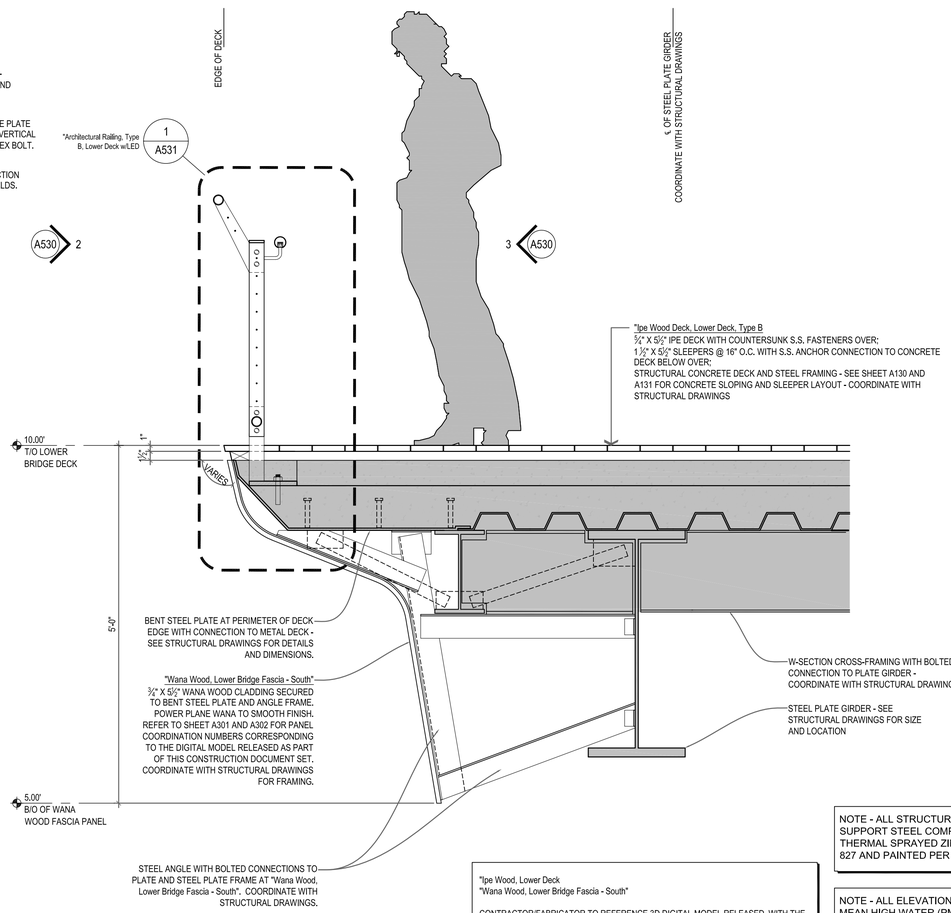

1 A530 LOWER BRIDGE SECTION
TYPICAL LOWER RAIL
1" = 1'-0" 1/A300

"Ipe Wood, Lower Deck
"Wana Wood, Lower Bridge Fascia - South"

CONTRACTOR/FABRICATOR TO REFERENCE 3D DIGITAL MODEL RELEASED WITH THE TENDER DOCUMENTS FOR THE PROVIDENCE RIVER PEDESTRIAN BRIDGE PROJECT. THIS MODEL CONTAINS THE NECESSARY LEVEL OF DETAIL FOR CROSS-TRADE COORDINATION AND CONSTRUCTION LAYOUT ASSOCIATED WITH THE ARCHITECTURAL COMPONENTS IDENTIFIED ABOVE. THE 3D DIGITAL MODEL IS INTENDED TO AID THE CONTRACTOR IN ESTIMATING QUANTITIES AND THE DETERMINATION OF MEANS AND METHODS. THIS MODEL IS NOT TOPOGRAPHICALLY REFERENCED AND SHOULD BE USED FOR GEOMETRIC REFERENCE ONLY.

NOTE - ALL STRUCTURAL STEEL AND FASCIA SUPPORT STEEL COMPONENTS TO RECIEVE THERMAL SPRAYED ZINC COATING PER SECTION 827 AND PAINTED PER SECTION 825

NOTE - ALL ELEVATIONS REFER TO PROVIDENCE MEAN HIGH WATER (PMHW) DATUM = 0.0' PROVIDENCE MEAN HIGH WATER (PMHW) = +1.54 NAVD 1988

HATCHED AREA INDICATES ENCLOSED SPACE BELOW LOWER BRIDGE DECK - SEE STRUCTURAL DRAWINGS FOR FRAMING

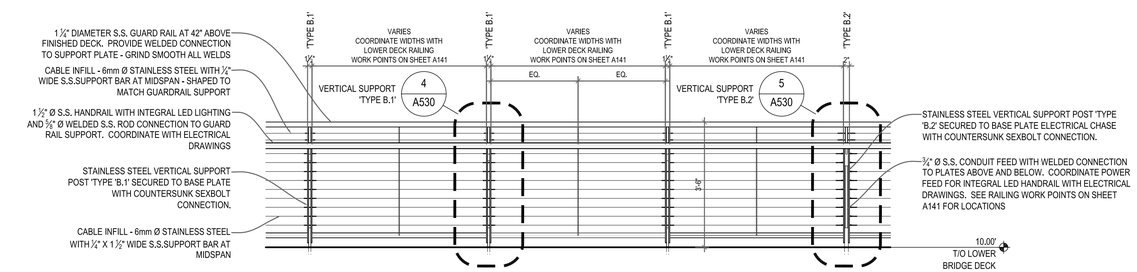

3 A530 "Architectural Railing, Type B, Lower Deck w/LED
ELEVATION - INTERIOR DECK SIDE
1/2" = 1'-0"

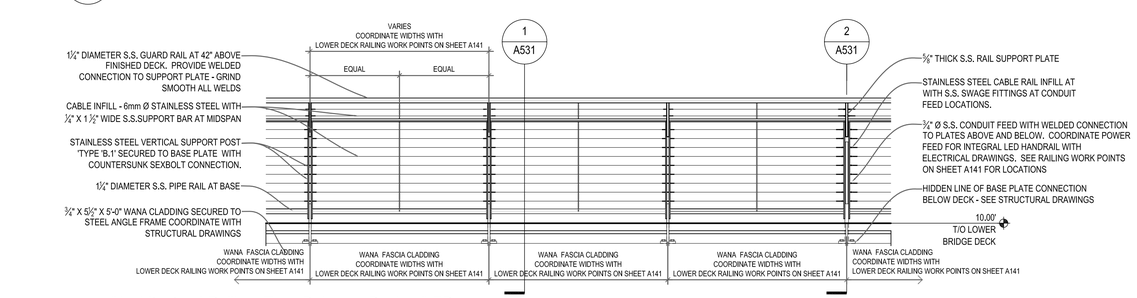

2 A530 "Architectural Railing, Type B, Lower Deck w/LED
ENLARGED ELEVATION - WATER SIDE
1/2" = 1'-0"

REF DWG #	REFRENCE DRAWING NAME
S510	LOWER DECK DETAILS - 1

ADDENDUM NO. 4

CDR MAGUIRE

inFORM studio
235 east main street, suite 102b
northville, mi 48167
(p) 248.449.3564
(f) 248.449.6984
www.in-formstudio.com
Buro Happold

BETA Group, Inc.
Engineers • Planners • Landscape Architects
Lincoln, RI - Norwood, MA - Hartford, CT

RHODE ISLAND
DEPARTMENT OF TRANSPORTATION

INTERSTATE 195

DESIGNED BY:
CHECKED:
DATE:
SHEET: V2_067
OF: V2_163

SCALE:

REVISIONS			REVISIONS		
NO.	DATE	BY	NO.	DATE	BY
1	6/14/2016	CL			

IMPROVEMENTS TO
INTERSTATE ROUTE 195
CONTRACT 16 VOLUME 2
PROVIDENCE RHODE ISLAND

LOWER BRIDGE RAILING SECTIONS AND DETAILS

A530

R:\Current\2010.1881.01_Providence Pedestrian Bridge\drawings\current\100% Submittal\1881_A530-A531.dwg, 6/8/2016 1:17:11 PM, Cory Lavigne

FED. ROAD DIV. NO.	STATE	FEDERAL AID PROJECT NO.	FISCAL YEAR	SHEET NO.	TOTAL SHEETS
1	R.I.			V2_068	V2_163

R-1

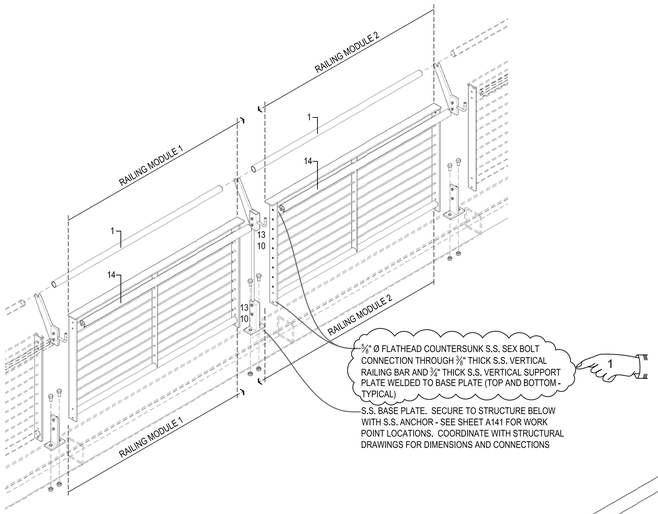

INSTALLATION AXONOMETRIC
"Architectural Railing, Type B, Lower Deck w/LED
N.T.S.

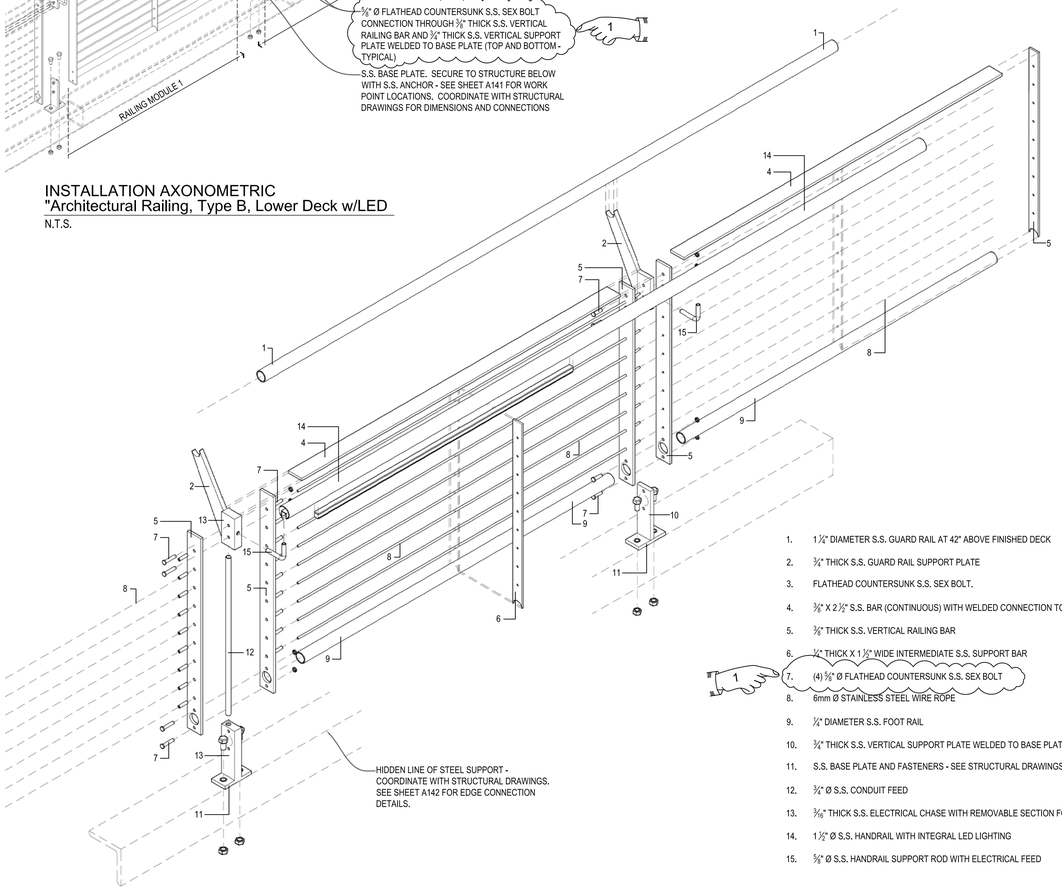

EXPOLDED AXONOMETRIC
"Architectural Railing, Type B, Lower Deck w/LED
N.T.S.

1. 1¼" DIAMETER S.S. GUARD RAIL AT 42" ABOVE FINISHED DECK
2. ¾" THICK S.S. GUARD RAIL SUPPORT PLATE
3. FLATHEAD COUNTERSUNK S.S. SEX BOLT.
4. ⅜" X 2½" S.S. BAR (CONTINUOUS) WITH WELDED CONNECTION TO VERTICAL SUPPORT
5. ⅜" THICK S.S. VERTICAL RAILING BAR
6. ¼" THICK X 1½" WIDE INTERMEDIATE S.S. SUPPORT BAR
7. (4) ⅝" Ø FLATHEAD COUNTERSUNK S.S. SEX BOLT
8. 6mm Ø STAINLESS STEEL WIRE ROPE
9. ¼" DIAMETER S.S. FOOT RAIL
10. ¾" THICK S.S. VERTICAL SUPPORT PLATE WELDED TO BASE PLATE
11. S.S. BASE PLATE AND FASTENERS - SEE STRUCTURAL DRAWINGS
12. ¾" Ø S.S. CONDUIT FEED
13. 3/16" THICK S.S. ELECTRICAL CHASE WITH REMOVABLE SECTION FOR ACCESS
14. 1½" Ø S.S. HANDRAIL WITH INTEGRAL LED LIGHTING
15. ⅝" Ø S.S. HANDRAIL SUPPORT ROD WITH ELECTRICAL FEED

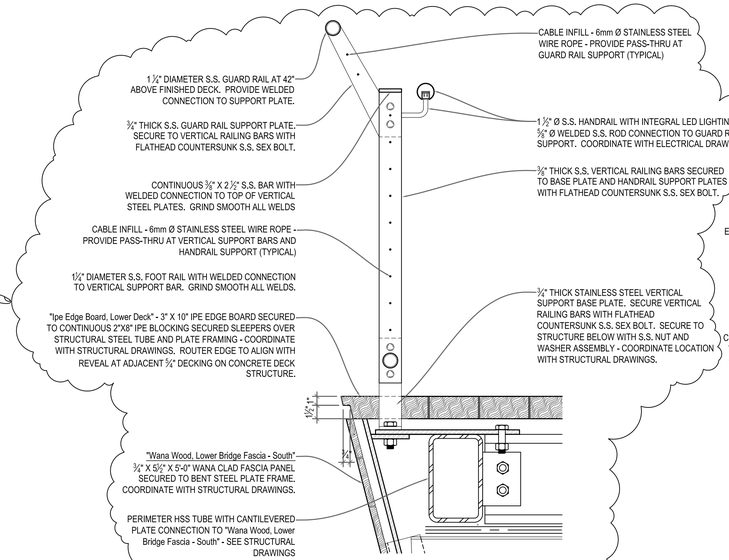

4 A531 TYPICAL MID-SPAN RAIL SECTION NOTED - STEEL STRUCTURE BASE
1 1/2" = 1'-0"

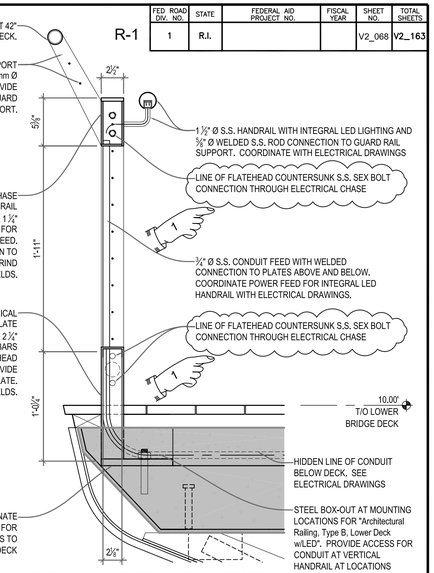

3 A531 TYPICAL MID-SPAN RAIL SECTION ELECTRICAL CHASE
1 1/2" = 1'-0"

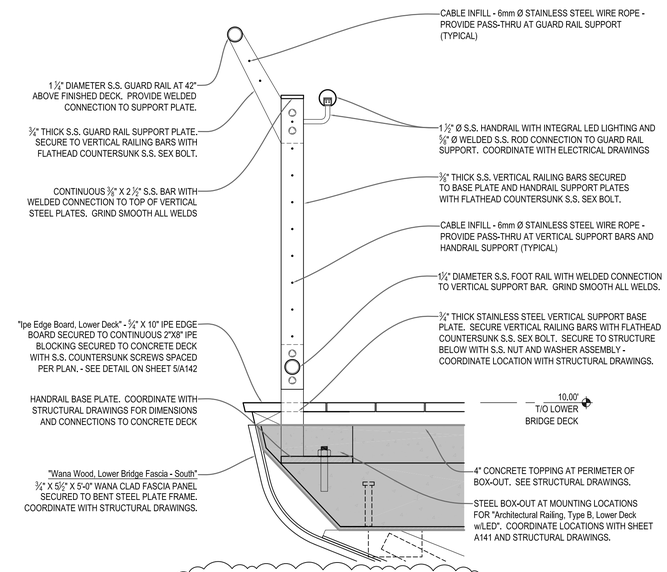

2 A531 TYPICAL MID-SPAN RAIL SECTION NOTED - CONCRETE DECK BASE
1 1/2" = 1'-0"

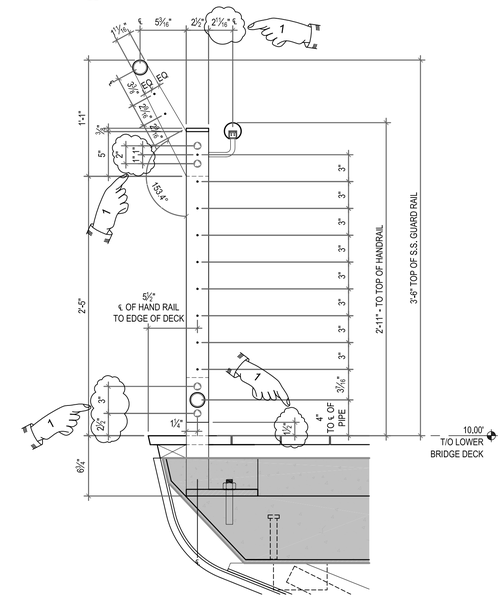

1 A531 TYPICAL MID-SPAN RAIL SECTION DIMENSIONED
1 1/2" = 1'-0"

ADDENDUM NO. 4

REF DWG #	REFRENCE DRAWING NAME
S510	LOWER DECK DETAILS - 1

CDR MAGUIRE

inFORM studio
235 east main street, suite 102b
northville, mi 48167
(p) 248.449.3564
(f) 248.449.6984
www.in-formstudio.com
Buro Happold

BETA Group, Inc.
Engineers • Planners • Landscape Architects
Lincoln, RI - Norwood, MA - Hartford, CT

RHODE ISLAND
DEPARTMENT OF TRANSPORTATION

INTERSTATE 195

DESIGNED BY:
CHECKED:
DATE:
SHEET: V2_068
OF: V2_163

SCALE:

REVISIONS			REVISIONS		
NO.	DATE	BY	NO.	DATE	BY
1	6/14/2016	CL			

IMPROVEMENTS TO
INTERSTATE ROUTE 195
PROVIDENCE — CONTRACT 16 VOLUME 2 — RHODE ISLAND

LOWER BRIDGE RAILING SECTIONS AND DETAILS

A531

R:\Current\2010.1881.01_Providence Pedestrian Bridge\drawings\current\100% Submittal\1881_A530-A531.dwg, 6/8/2016 2:03:25 PM, Cory Lavigne

FED ROAD DIV. NO.	STATE	FEDERAL AID PROJECT NO.	FISCAL YEAR	SHEET NO.	TOTAL SHEETS
1	R.I.			V2_068A	V2_163

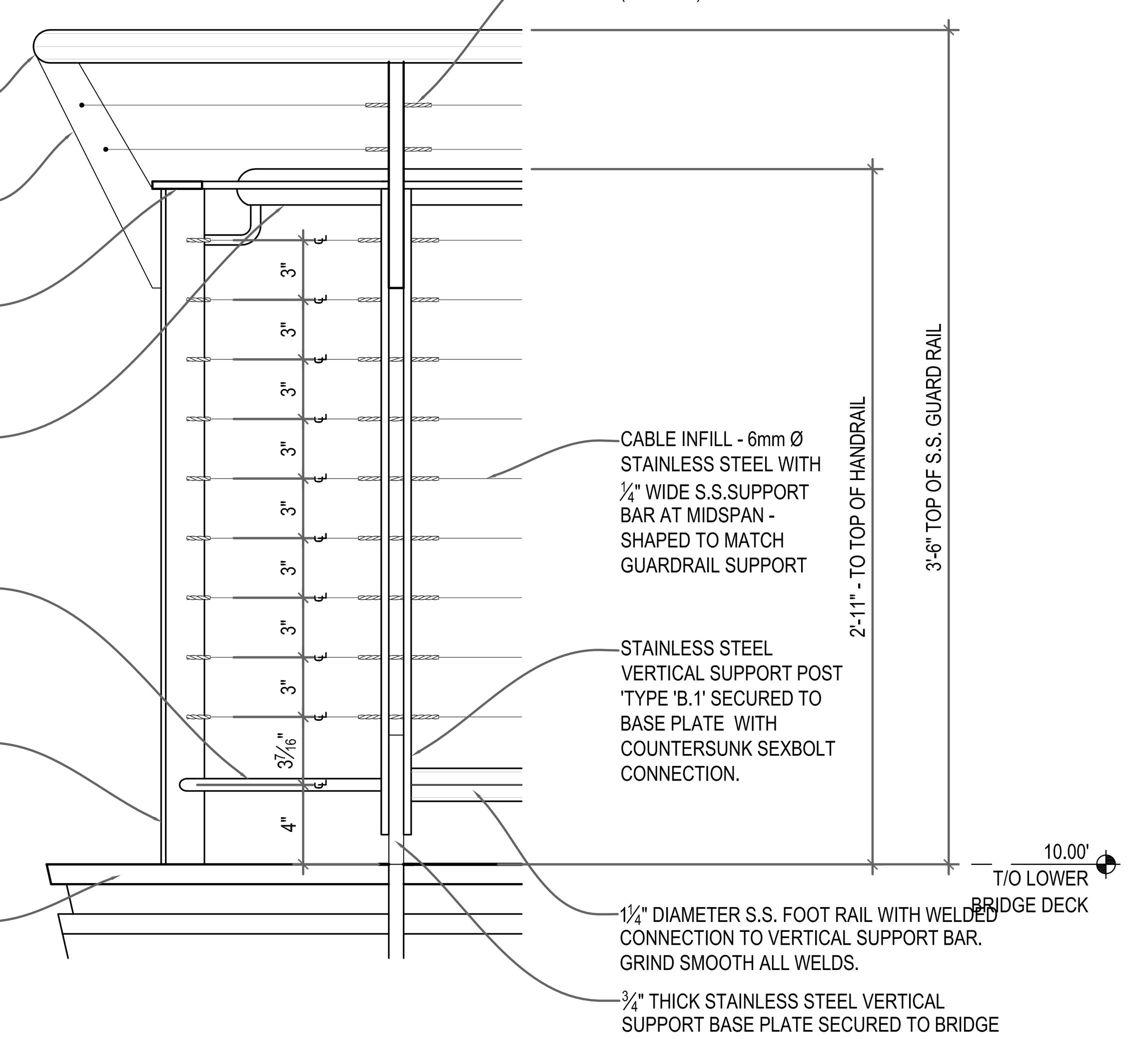

3 / A532 ENLARGED ELEVATION AT CORNER RAIL CONDITION
1 1/2" = 1'-0"

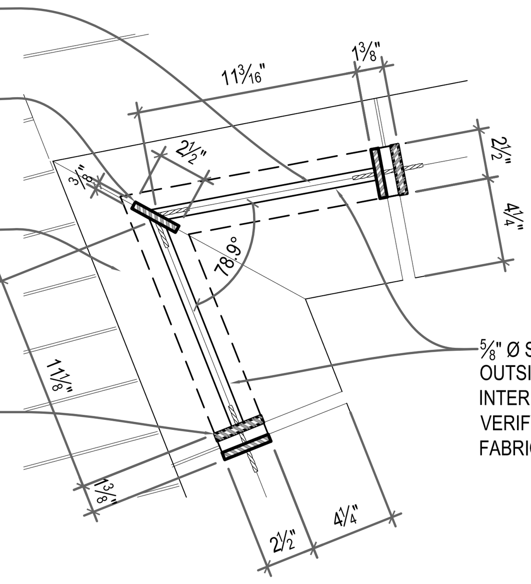

2 / A532 ENLARGED PLAN INSIDE CORNER CONDITION
1 1/2" = 1'-0"

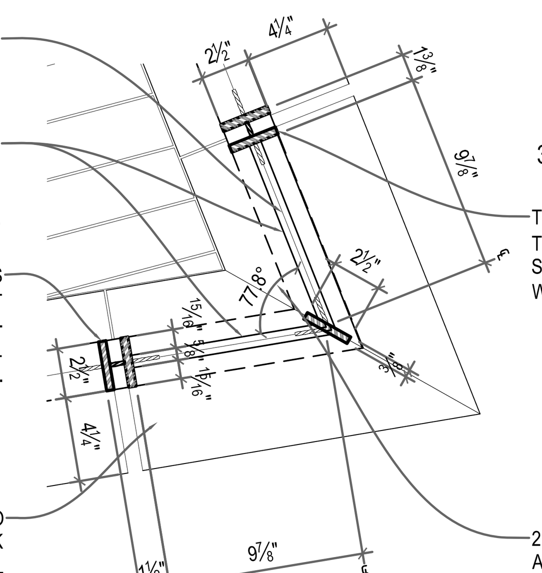

1 / A532 ENLARGED PLAN OUTSIDE CORNER CONDITION
1 1/2" = 1'-0"

ADDENDUM NO. 4

REF DWG #	REFRENCE DRAWING NAME
S510	LOWER DECK DETAILS - 1

CDR MAGUIRE

inFORM studio
235 east main street, suite 102b
northville, mi 48167
(p) 248.449.3564
(f) 248.449.6984
www.in-formstudio.com

Buro Happold

BETA Group, Inc.
Engineers • Planners • Landscape Architects
Lincoln, RI - Norwood, MA - Hartford, CT

STATE OF RHODE ISLAND — HOPE

RHODE ISLAND
DEPARTMENT OF TRANSPORTATION

INTERSTATE 195

DESIGNED BY:
CHECKED:
DATE:
SHEET: V2_068A
OF: V2_163

SCALE:

REVISIONS			REVISIONS		
NO.	DATE	BY	NO.	DATE	BY
1	6/14/2016	CL			

PROVIDENCE — IMPROVEMENTS TO INTERSTATE ROUTE 195 CONTRACT 16 VOLUME 2 — RHODE ISLAND

LOWER BRIDGE RAILING
SECTIONS AND DETAILS

A532

R:\Current\2010.1881.01_Providence Pedestrian Bridge\drawings\current\100% Submittal\1881_A530-A531.dwg, 6/8/2016 2:15:45 PM, Cory Lavigne

FED ROAD DIV. NO.	STATE	FEDERAL AID PROJECT NO.	FISCAL YEAR	SHEET NO.	TOTAL SHEETS
1	R.I.			V2_071	V2_163

R-1

GENERAL NOTES

1. ALL CONSTRUCTION INDICATED ON THESE PLANS SHALL BE IN ACCORDANCE WITH:
   - THE *2013* EDITION OF AND SUPPLEMENTS TO THE RHODE ISLAND DEPARTMENT OF TRANSPORTATION STANDARD SPECIFICATIONS FOR ROAD AND BRIDGE CONSTRUCTION (RI STANDARD SPECIFICATIONS).
   - THE *2007* EDITION OF AND SUPPLEMENTS TO THE RHODE ISLAND DEPARTMENT OF TRANSPORTATION LRFD BRIDGE DESIGN MANUAL.
   - THE AMERICAN ASSOCIATION OF STATE HIGHWAY AND TRANSPORTATION OFFICIALS (AASHTO) LRFD BRIDGE CONSTRUCTION SPECIFICATIONS, *3RD EDITION, 2015,* INCLUDING THE LATEST INTERIM REVISIONS. THE SPECIFICATIONS ACCOMPANYING THESE PLANS.
   - THE AMERICAN ASSOCIATION OF STATE HIGHWAY AND TRANSPORTATION OFFICIALS (AASHTO) LRFD BRIDGE DESIGN SPECIFICATIONS, *7TH EDITION, 2015,* INCLUDING THE LATEST INTERIM REVISIONS.
   - THE AMERICAN ASSOCIATION OF STATE HIGHWAY AND TRANSPORTATION OFFICIALS (AASHTO) LRFD GUIDE SPECIFICATIONS FOR THE DESIGN OF PEDESTRIAN BRIDGES, *2ND EDITION*, *2015.*
   - THE AMERICAN ASSOCIATION OF STATE HIGHWAY AND TRANSPORTATION OFFICIALS (AASHTO) GUIDE FOR THE DEVELOPMENT OF BICYCLE FACILITIES, *4TH EDITION, 2012*
   - THE AMERICAN ASSOCIATION OF STATE HIGHWAY AND TRANSPORTATION OFFICIALS (AASHTO) STANDARD SPECIFICATION FOR THE STRUCTURAL SUPPORT FOR HIGHWAY SIGNS AND LUMINARIES, *6TH EDITION, 2015.*
   - THE AMERICAN ASSOCIATION OF STATE HIGHWAY AND TRANSPORTATION OFFICIALS (AASHTO) AND THE AMERICAN WELDING SOCIETY AASHTO/AWS D1.5:2015 BRIDGE WELDING CODE.
   - THE AMERICAN WELDING SOCIETY AWS D1.6:2007 STRUCTURAL WELDING CODE - STAINLESS STEEL
   - THE AMERICAN WOOD COUNCIL ASD/LRFD NDS: NATIONAL DESIGN STANDARD FOR WOOD CONSTRUCTION, ANSI/AWC NDS-2015

   1

2. DIMENSIONS, STATIONS, AND ELEVATIONS ARE SHOWN TO THE NEAREST ONE-HUNDREDTH OF A FOOT OR ONE-EIGHTH OF AN INCH, EXCEPT STRUCTURAL STEEL DIMENSIONS WHICH ARE TO THE NEAREST ONE-SIXTEENTH OF AN INCH.
3. ALL ELEVATIONS ARE REFERENCED TO THE PROVIDENCE MEAN HIGH WATER.
4. COORDINATES USED ON THESE PLANS ARE BASED ON THE STATEWIDE COORDINATE SYSTEM, THE NORTH AMERICAN DATUM OF 1983 (NAD 83).
5. ANGLES ARE SHOWN TO THE NEAREST SECOND.
6. ALL FOOTINGS SHALL BE APPROVED BY THE ENGINEER AS TO DIMENSIONS, ELEVATIONS, AND SUITABILITY OF FOUNDATION MATERIAL BEFORE THE PLACING OF CONCRETE.
7. ALL WORKING POINTS ARE SHOWN AT THE CENTERLINES OF BEARINGS OF ABUTMENTS AND AT THE CENTERLINES OF PIERS, UNLESS OTHERWISE NOTED.
8. ALL ABUTMENTS AND WALLS ARE DRAWN LOOKING AT THE EXPOSED FACES.
9. BOTH FEDERAL AND STATE LAW (RI. GENERAL LAW 39-1.2) REQUIRE NOTIFICATION OF APPROPRIATE UTILITY COMPANIES BEFORE DIGGING, TRENCHING,BLASTING, DEMOLISHING, BORING, BACK FILLING, GRADING, LANDSCAPING, OR OTHER EARTH MOVING OPERATIONS. IT IS THE CONTRACTOR'S RESPONSIBILITY TO NOTIFY ALL UTILITY COMPANIES (INCLUDING THROUGH THE "dIG SAFE" PROGRAM) TO ENSURE THAT ALL UTILITIES, BOTH UNDERGROUND AND OVERHEAD, HAVE BEEN MARKED BEFORE COMMENCEMENT OF SUCH WORK. THE CONTRACTOR SHOULD UNDERSTAND THAT NOT ALL UTILITIES SUBSCRIBE TO THE "DIG SAFE" PROGRAM. ANY DAMAGE TO EXISTING UTILITIES MARKED IN THE FIELD, OR AS A RESULT OF FAILING TO CONTACT THE APPROPRIATE UTILITY COMPANIES, SHALL BE REPAIRED OR REPLACED (AS DEEMED APPROPRIATE BY THE STATE AND/OR THE IMPACTED UTILITY COMPANY) AT NO ADDITIONAL COST TO THE STATE.
10. FOR ALL INFORMATION NOT SPECIFICALLY CALLED OUT IN THESE DRAWINGS SHALL COMPLY WITH RIDOT STANDARD SPECIFICATIONS AND DETAILS.
11. PRECONSTRUCTION SURVEY BY THE CONTRACTOR SHALL VERIFY CENTERLINE OF PIERS.
12. FIELD VERIFICATION SURVEY BY THE CONTRACTOR SHALL VERIFY SUPERSTRUCTURE STEEL PRIOR TO DECK AND FACIA INSTALLATION.

DESIGN DATA

1. **DESIGN SPECIFICATIONS**

   1

   - THE *2007* EDITION OF AND SUPPLEMENTS TO THE RHODE ISLAND DEPARTMENT OF TRANSPORTATION LRFD BRIDGE DESIGN MANUAL.
   - ALL OTHER APPLICABLE DESIGN SPECIFICATIONS ARE REFERENCED IN SECTION 1 OF THE RHODE ISLAND LRFD BRIDGE DESIGN MANUAL DATED *2007*.
   - THE AMERICAN ASSOCIATION OF STATE HIGHWAY AND TRANSPORTATION OFFICIALS (AASHTO) LRFD BRIDGE DESIGN SPECIFICATIONS, *7TH EDITION, 2015,* INCLUDING THE LATEST INTERIM REVISIONS.
   - THE AMERICAN ASSOCIATION OF STATE HIGHWAY AND TRANSPORTATION OFFICIALS (AASHTO) LRFD GUIDE SPECIFICATIONS FOR THE DESIGN OF PEDESTRIAN BRIDGES, *2ND EDITION*, *2015.*
   - THE AMERICAN ASSOCIATION OF STATE HIGHWAY AND TRANSPORTATION OFFICIALS (AASHTO) GUIDE FOR THE DEVELOPMENT OF BICYCLE FACILITIES, *4TH EDITION, 2012*
   - THE AMERICAN ASSOCIATION OF STATE HIGHWAY AND TRANSPORTATION OFFICIALS (AASHTO) STANDARD SPECIFICATION FOR THE STRUCTURAL SUPPORT FOR HIGHWAY SIGNS AND LUMINARIES, *6TH EDITION, 2015.*
   - THE AMERICAN ASSOCIATION OF STATE HIGHWAY AND TRANSPORTATION OFFICIALS (AASHTO) AND THE AMERICAN WELDING SOCIETY AASHTO/AWS D1.5:2015 BRIDGE WELDING CODE
   - THE AMERICAN WELDING SOCIETY AWS D1.6:2007 STRUCTURAL WELDING CODE - STAINLESS STEEL
   - THE AMERICAN WOOD COUNCIL ASD/LRFD NDS: NATIONAL DESIGN STANDARD FOR WOOD CONSTRUCTION, ANSI/AWC NDS-2015
   - IN CASE OF CONFLICT, THE RHODE ISLAND LRFD BRIDGE DESIGN MANUAL SHALL GOVERN.
2. **LOAD COMBINATIONS**
   - AASHTO LRFD GUIDE SPECIFICATION FOR THE DESIGN OF PEDESTRIAN BRIDGES ARTICLE 3.7 STATES LOAD COMBINATIONS STRENGTH II, STRENGTH V AND FATIGUE II NEED NOT BE CONSIDERED.
   - SERVICE LOAD III AND SERVICE LOAD IV ARE ASSOCIATE WITH CRACK CONTROL IN PRESTRESSED CONCRETE AND WILL NOT BE PART OF THIS PROJECT.
   - LOAD COMBINATION STRENGTH I AND STRENGTH III WILL BE EVALUATED FOR THIS PROJECT WITHOUT LOAD WA: WATER LOAD AND STREAM PRESSURE. THESE LOAD COMBINATIONS ARE ASSOCIATED WITH NORMAL CONDITIONS. AS THE PIERS ARE EXISTING AND NOT BEING MODIFIED AT THE WATERLINE FOR THIS PROJECT THEY NEED NOT BE CONSIDERED. FLOODS WHICH ARE SUFFICIENTLY HIGH TO PUT PRESSURE ON THE NEW SUPERSTRUCTURE WILL BE EVALUATED AS PART OF THE EXTREME EVENT II LOAD COMBINATION AS A CHECK FLOOD.
3. **LOAD MODIFIERS**

   THE LOAD MODIFIERS FOR THIS PROJECT ARE AS FOLLOWS:
   - THE LOAD MODIFIER FOR DUCTILITY SHALL BE TAKEN AS 1.0 FOR ALL LIMIT STATES.
4. **LOAD FACTORS**

   ALL LOAD FACTORS SHALL BE IN ACCORDANCE WITH THE AASHTO LRFD BRIDGE DESIGN SPECIFICATIONS, EXCEPT AS MODIFIED IN THE RHODE ISLAND LRFD BRIDGE DESIGN MANUAL (SPECIFIED BELOW).
   - THE LOAD FACTOR FOR TEMPERATURE GRADIENT SHALL BE TAKEN AS SERVICE I - 0.5, SERVICE II-0.5.
   - THE LOAD FACTOR FOR LIVE LOAD FOR THE EXTREME EVENT I SHALL BE TAKEN AS ZERO.
   - THE LOAD FACTOR FOR DEAD LOAD FOR THE EXTREME EVENT I AND EXTREME EVENT II SHALL BE TAKEN AS 1.0
   - THE LOAD FACTOR FOR SETTLEMENT FOR ALL LIMIT STATES SHALL BE TAKEN AS 1.0
5. **LIVE LOADS**
   - THE DESIGN VEHICULAR LIVE LOAD IS NOT ALLOWED ON THE BRIDGE
   - THE DESIGN PEDESTRIAN LIVE LOAD SHALL BE 90 PSF
   - THE DESIGN EQUESTRIAN LOAD SHALL BE 1 KIP ON A 4-INCH AREA.
   - HANDRAIL RAIL POST LOAD SHALL BE 200 LBS PLUS 50 LBS/FT.
   - THE INFILL CHAINLINK/METAL FABRIC MESH FENCE LOAD SHALL BE 15 PSF.
6. **FOUNDATION DESIGN DATA**

   BRIDGE IS BEING CONSTRUCTED ON EXISTING PIER AND FOUNDATIONS.
7. **WIND LOADING DESIGN DATA**

   THE WIND LOADING DESIGN SHALL BE IN ACCORDANCE WITH THE AASHTO LRFD GUIDE SPECIFICATIONS FOR THE DESIGN OF PEDESTRIAN BRIDGES WHICH REFERENCES THE AASHTO STANDARD SPECIFICATION FOR THE STRUCTURAL SUPPORT OF HIGHWAY SIGNS LUMINARIES AND TRAFFIC SIGNALS, THE RHODE ISLAND LRFD BRIDGE DESIGN MANUAL, AND AS MODIFIED HEREIN.
   - EXCEPT DURING CONSTRUCTION, THE DESIGN WIND PRESSURE IS BASED ON A DESIGN WIND SPEED OF 110 MPH.
   - THE DESIGN WIND PRESSURES DURING CONSTRUCTION SHALL BE AS SPECIFIED UNDER THE NOTES TITLED "GENERAL NOTES REGARDING TEMPORARY CONSTRUCTION CONDITIONS".
8. **HYDRAULIC AND SCOUR DATA**

   BRIDGE IS BEING CONSTRUCTED ON EXISTING PIER AND FOUNDATIONS.
9. **THERMAL DESIGN FORCE DATA**
   - UNIFORM TEMPERATURE EFFECTS HAVE BEEN TAKEN INTO CONSIDERATION IN ACCORDANCE WITH THE PROCEDURE *A* OF THE AASHTO LRFD BRIDGE DESIGN SPECIFICATIONS. THE MINIMUM DESIGN TEMPERATURE SHALL BE *-30* DEGREES F, AND THE MAXIMUM TEMPERATURE SHALL BE 120 DEGREES F.
     *THE NEUTRAL TEMPERATURE FOR DESIGN IS TAKEN AS 60 DEGREES F.
10. **SEISMIC DESIGN DATA**
    - THE PROVIDENCE PEDESTRIAN BRIDGE IS CLASSIFIED AS A NON-CRITICAL BRIDGE AND DOES NOT REQUIRE A DETAILED SEISMIC ANALYSIS PER RIDOT ARTICLE 3.6.11. RIDOT DOES REQUIRE THAT ALL HORIZONTAL CONNECTIONS BETWEEN THE SUPERSTRUCTURE AND THE SUBSTRUCTURE BE DESIGNED FOR A FORCE NOT LESS THAN 0.2 TIMES THE VERTICAL DEAD LOAD AND THE SUPERIMPOSED DEAD LOAD REACTION.
    - BEAM SETS WILL MEET THE REQUIREMENTS OF RIDOT ARTICLE 4.5.3.

MATERIALS

STRUCTURAL STEEL:
- AASHTO DESIGNATION M 270, GRADE 50 - STEEL PLATE
- AASHTO DESIGNATION M 270, GRADE 50S - ROLLED STEEL SHAPES
- ASTM DESIGNATION A500, GRADE B - STRUCTURAL TUBING

REINFORCING STEEL:
- AASHTO DESIGNATION M 31, GRADE 60 (GALV.)

CONCRETE STRENGTHS:
- CLASS HP ¾" f'c=5,000 PSI

  BRIDGE DECK AND SUBSTRUCTURE

STRUCTURAL FASTENERS:
- AASHTO DESIGNATION M 164 - HIGH STRENGTH BOLTS
- ASTM DESIGNATION F 1554, GRADE 55 - ANCHOR BOLTS
- ASTM DESIGNATION 593G, GRADE CW1 - STAINLESS STEEL BOLTS AND THREADED ROD

FOUNDATIONS

BRIDGE IS BEING CONSTRUCTED ON EXISTING PIER AND FOUNDATIONS. GEOTECHNICAL INFORMTION FOR THE PREJECT HAS BEEN TAKEN FROM "GEOTECHNICAL DATA REPORT OF ROUTE I-195 RIVERSIDE PARKS, PEDESTRIAN BRIDGE & PERFORMANCE PAVILION. PROVIDENCE, RHODE ISLAND" PREPARED BY PAUL B. ALDLINGER & ASSOCIATES, MAY 2014.

CONCRETE NOTES

1. CLASSES OF CONCRETE SHALL BE HIGH PERFORMANCE CLASS HP, CLASS XX AND CLASS A, AS DESCRIBED IN THE RI STANDARD SPECIFICATIONS AND THE SPECIAL PROVISIONS OF THE SPECIFICATIONS. REFER TO THE "MATERIAL" NOTES FOR CLASSES OF CONCRETE SPECIFIED FOR VARIOUS COMPONENTS.

   ALL CLASSES OF CONCRETE ARE TO BE MODIFIED THROUGH THE ADDITION OF CALCIUM NITRITE-BASED CORROSION INHIBITOR IN ACCORDANCE WITH SECTION 605 OF THE RI STANDARD SPECIFICATIONS. IN ADDITION, HP CONCRETE USED FOR DECKS ONLY SHALL ALSO BE MODIFIED WITH ADDITION OF SYNTHETIC FIBERS IN ACCORDANCE WITH SECTION 604 OF THE RI STANDARD SPECIFICATIONS. HP CONCRETE USED FOR PRESTRESSED PRECAST CONCRETE IS NOT REQUIRED TO BE MODIFIED WITH THE USE OF SYNTHETIC FIBER.
2. THE CONTRACTOR MAY, AT THE APPROVAL OF THE ENGINEER, PROPOSE THE USE OF SELF-CONSOLIDATING CONCRETE FOR ANY CLASS OF CONCRETE ON THIS PROJECT. SECTION 606 "SELF CONSOLIDATING CONCRETE (SCC)", CONTAINS THE REQUIREMENTS FOR MODIFYING ALL CLASSES OF CONCRETE MIX DESIGN FOR SELF-CONSOLIDATING APPLICATIONS.
3. ALL PORTLAND CEMENT CONCRETE SHALL BE AIR-ENTRAINED.
4. ALL REINFORCING STEEL SHALL BE GALVANIZED. ALL WIRE TIES AND MISCELLANEOUS HARDWARE USED FOR PLACEMENT OF GALVANIZED COATED REINFORCING SHALL ALSO BE GALVANIZED COATED. GALVANIZED COATING FOR REINFORCING STEEL SHALL CONFORM TO ASTM A767.
5. ALL CRITICAL LAP SPLICES SHALL BE AS SHOWN ON THE PLANS. ALL SPLICES NOT SHOWN ON THE PLANS SHALL BE LAPPED IN ACCORDANCE WITH THE AASHTO LRFD BRIDGE DESIGN SPECIFICATIONS FOR CLASS C LAP SPLICES.
6. THE TOP BARS IN THE DECK SLABS SHALL BE SPLICED AT THE CENTER OF SPANS BETWEEN GIRDERS. THE BOTTOM BARS SHALL BE SPLICED OVER THE GIRDERS.
7. UNLESS OTHERWISE INDICATED ON THE PLANS, ALL MAIN REINFORCING BARS SHALL HAVE THE FOLLOWING MINIMUM COVER:

CONCRETE CAST AGAINST OR PERMANENTLY EXPOSED TO EARTH (FOOTINGS, ABUTMENT AND WALL FACES, BACKWALLS)		3"
CONCRETE DIRECTLY EXPOSED TO SALT WATER		4"
DECK SLABS (WITH WEARING SURFACE)	TOP	2" (+1/4", -0")
	BOTTOM	1" (+1/8", -0")
DECK SLABS (EXPOSED DECKS)	TOP	3" (+1/4", -0")
	BOTTOM	1" (+1/8", -0")
DECK OVERLAYS FOR PRESTRESSED BUTTED BOX BEAMS & VOIDED SLABS	TOP	2.5" (+1/4", -0")
BOTTOM OF DECK SLAB OVER SALT OR BRACKISH WATER	BOTTOM	1.5" (+1/8", -0")
ALL OTHER BARS		2"

   COVER TO TIES AND STIRRUPS MAY BE 0.5 INCH LESS THAN THE ABOVE VALUES SPECIFIED FOR MAIN REINFORCING, BUT IN NO CASE LESS THAN 1.5 INCHES.
8. ALL ANCHOR BOLTS SHALL BE ASTM DESIGNATION A449 OR F593 AND SHALL BE GALVANIZED IN ACCORDANCE WITH AASHTO DESIGNATION M 232 OR METALIZED IN ACCORDANCE WITH SECTION M.05. SWEDGED RODS SHALL BE AASHTO DESIGNATION M 270 GRADE 36 AND SHALL BE GALVANIZED IN ACCORDANCE WITH AASHTO DESIGNATION M 232.
9. ALL ANCHOR BOLTS SHALL BE SET PRIOR TO PLACEMENT OF CONCRETE UNLESS OTHERWISE AUTHORIZED BY THE ENGINEER.
10. HORIZONTAL CONSTRUCTION JOINTS OTHER THAN THOSE SHOWN ON PLANS WILL NOT BE PERMITTED WITHOUT A WRITTEN REQUEST BY THE CONTRACTOR AND PRIOR AUTHORIZATION BY THE ENGINEER.
11. UNLESS OTHERWISE NOTED ON THE PLANS, ALL EXPOSED CONCRETE SURFACES VISIBLE IN ELEVATION TO ONE FOOT BELOW FINAL GROUND LINE (AND THE UNDERSIDE OF ALL CONCRETE DECK SLABS OUTSIDE OF THE FASCIA BEAMS), SHALL RECEIVE A CONCRETE SURFACE RUBBED FINISH IN ACCORDANCE WITH THE RI STANDARD SPECIFICATIONS.
12. THE ENTIRE TOPSIDE SURFACES OF ABUTMENT AND PIER CAP BEAM SEATS, AS WELL AS VERTICAL FACES OF BACKWALLS, SHALL BE PROVIDED WITH A FILM-FORMING SEALER (M12.03.1) CONCRETE SURFACE TREATMENT-PROTECTIVE COATING IN ACCORDANCE WITH SECTION 820 OF THE RI STANDARD SPECIFICATIONS.
13 ALL EXPOSED EDGES AND REENTRANT CORNERS NOT OTHERWISE DETAILED ON THE PLANS SHALL HAVE A MINIMUM ¾" CHAMFER.
14. ALL JOINT SEALANT SHALL BE POLYURETHANE, POLYURETHANE ELASTOMETRIC, OR SILICONE SEALANT AS DESIGNATED ON THE PLANS. THE COLOR OF THE JOINT SEALANT, WHERE EXPOSED, SHALL BE NEUTRAL (LIGHT GRAY OR TAN). THE COLOR OF THE SEALANT, WHERE NOT EXPOSED, WILL BE AT THE DISCRETION OF THE CONTRACTOR.
15. THE CONTRACTOR SHALL BE RESPONSIBLE FOR PREVENTING CONCRETE STAINS OR DISCOLORATIONS DURING CONSTRUCTION. STAINS OR DISCOLORATIONS SHALL BE REMOVED BY THE CONTRACTOR AT NO ADDITIONAL COST TO THE STATE.
16. UNLESS OTHERWISE NOTED ON THE PLANS, JOINT FILLER IS TO BE A PREFORMED, NON-EXPANSIVE, NON-EXTRUDING TYPE IN ACCORDANCE WITH SECTION M.02.11.1 OF THE RI STANDARD SPECIFICATIONS.
17. PLACEMENT, FINISHING AND CURING OF BRIDGE DECK CONCRETE SHALL BE IN ACCORDANCE WITH SECTION 814 OF THE RI STANDARD SPECIFICATIONS AND IN ACCORDANCE WITH THE SEQUENCE AND DIRECTION OF POURS AS SHOWN ON THE PLANS.
18. UNLESS OTHERWISE INDICATED ON THE PLANS, ALL DECK FORMS SHALL BE OF THE REMOVABLE TYPE THAT WILL PRODUCE THE DIMENSIONS SHOWN ON THE PLANS.
19. EMBEDMENT LENGTHS FOR DRILLED AND GROUTED DOWELS SHALL BE IN ACCORDANCE WITH SECTION 819 OF THE RI STANDARD SPECIFICATIONS.
20. IN ACCORDANCE WITH THE RI STANDARD SPECIFICATIONS, ALL METAL TIES OR ANCHORAGES WHICH ARE REQUIRED FOR CONCRETE FORMWORK SHALL BE SO CONSTRUCTED THAT THEY CAN BE REMOVED TO AT LEAST TWO INCHES BELOW THE EXPOSED SURFACE OF THE CONCRETE WITHOUT CAUSING DAMAGE TO THE CONCRETE SURFACE. SNAP TIES MAY BE USED ONLY IF APPROVED BY THE ENGINEER. IF THE CONTRACTOR PROPOSES TO USE THEM, A CATALOG CUT AND OTHER NECESSARY INFORMATION MUST BE SUBMITTED TO THE ENGINEER TO DEMONSTRATE THAT THE TIES WILL SNAP-OFF FAR ENOUGH INTO THE CONCRETE TO ALLOW FOR PROPER PATCHING. SNAP TIES MUST PROVIDE ADEQUATE STRENGTH TO SUPPORT THE FORMS. ALL CAVITIES SHALL BE FILLED WITH AN APPROVED CEMENT MORTAR MEETING THE REQUIREMENTS OF ASTM C 928.

LEGEND:
- FREE BEARINGS SEE DWG S-901 FOR ADDITIONAL INFORMATION
- GUIDED BEARINGS SEE DWG S-901 FOR ADDITIONAL INFORMATION
- CENTERLINE
- WORK POINT
- MOMENT CONNECTION OR MOMENT SPLICE
- FIXED BEARINGS SEE DWG S-901 FOR ADDITIONAL INFORMATION
- COLUMN UP/DOWN SYMBOL
- FIELD SPLICE

ADDENDUM NO. 4

REF DWG #	REFERENCE DRAWING NAME

CDR MAGUIRE

100 BROADWAY,
23rd FLOOR NEW YORK,
NY 10005

Tel: 212 334 2025
Fax: 212 334 5528
web: www.burohappold.com

Buro Happold

BETA Group, Inc.
Engineers• Planners • Landscape Architects
Lincoln, RI - Norwood, MA - Hartford, CT

RHODE ISLAND
DEPARTMENT OF TRANSPORTATION

INTERSTATE 195

DESIGNED BY: AN
CHECKED: CDL
DATE: 04/21/14
SHEET: V2_071
OF: V2_163

SCALE: NTS

NO.	DATE	BY	NO.	DATE	BY
1	6/14/2016	DF			

PROVIDENCE — IMPROVEMENTS TO INTERSTATE ROUTE 195 — CONTRACT 16 VOLUME 2 — RHODE ISLAND

GENERAL NOTES SHEET 2

S-002

FED. ROAD DIV. NO.	STATE	FEDERAL AID PROJECT NO.	FISCAL YEAR	SHEET NO.	TOTAL SHEETS
1	R.I.			V2_072	V2_163

R-1

STRUCTURAL STEEL NOTES

1. FRAMING DIMENSIONS ARE GIVEN ALONG CENTERLINES OF GIRDERS AND ALONG CENTERLINES OF BEARINGS ON ABUTMENTS AND PIERS. THE FABRICATOR IS RESPONSIBLE FOR INCORPORATING THE CAMBER, CROSS SLOPE, AND OTHER EFFECTS THAT MAY IMPACT THE OVERALL GIRDER LENGTHS, DIMENSIONS AND/OR THE DETAILING.

2. INSTABILITY DURING CONSTRUCTION OF THE HORIZONTALLY CURVED GIRDERS (INCLUDING DURING LIFTING, TRANSPORTING AND ERECTION) MAY PRESENT A HAZARDOUS SITUATION. THE CONTRACTOR SHALL TAKE ALL NECESSARY PRECAUTIONS AND MEASURES TO ENSURE STABILITY AND THEREBY SAFETY DURING THE STEEL ERECTION AND CONSTRUCTION.

3. THE SHOPS FABRICATING THE STRUCTURAL STEEL (EXCEPT FOR EXPANSION JOINTS, RAILINGS AND BEARINGS), MUST BE CERTIFIED FOR “ADVANCED (ABR)” IN ACCORDANCE WITH THE AISC QUALITY CERTIFICATION PROGRAM OR EQUIVALENT. SHOPS FABRICATING THE EXPANSION JOINTS, RAILINGS AND BEARINGS SHALL, AT A MINIMUM, BE CERTIFIED FOR “SIMPLE STEEL BRIDGE STRUCTURES (SBR)”.

   THE SHOPS SHALL ALSO BE CERTIFIED UNDER THE AISC “SOPHISTICATED PAINT ENDORSEMENT (SPE)” QUALITY PROGRAM OR THE SSPC-QP3 PAINT CERTIFICATION PROGRAM.

   THE FABRICATOR MUST SUBMIT PROOF OF CURRENT CERTIFICATION AS SPECIFIED.

4. THE STEEL ERECTOR/CONTRACTOR FOR THIS PROJECT SHALL BE CERTIFIED FOR “ADVANCED CERTIFIED STEEL ERECTOR (ACSE)” IN ACCORDANCE WITH THE AISC QUALITY CERTIFICATION PROGRAM. THE ERECTOR/CONTRACTOR OF THE STRUCTURAL STEEL SHALL BE REQUIRED TO SUBMIT PROOF OF CURRENT CERTIFICATION AS SPECIFIED.

5. THIS BRIDGE CONTAINS FRACTURE CRITICAL MEMBERS (FCM). THESE MEMBERS HAVE BEEN DESIGNATED ON THE STEEL FRAMING AND/OR THE STEEL DETAIL SHEETS.

6. SHOP DRAWINGS FOR ALL FABRICATED STEEL INCLUDING BEARINGS, EXPANSION JOINTS, RAILINGS AND FALSEWORK SHALL BE SUBMITTED TO THE ENGINEER IN SUFFICIENT TIME TO PERMIT CAREFUL CHECKING PRIOR TO FABRICATION.

7. INSPECTION OF WELDS INCLUDING RADIOGRAPHIC TESTING (RT) AND MAGNETIC PARTICLE TESTING (MT) SHALL BE IN ACCORDANCE WITH THE RI STANDARD SPECIFICATIONS AND THE AASHTO/AWS BRIDGE WELDING CODE, EXCEPT THAT THE REMAINING PERCENTAGE OF ALL GROOVE WELDS NOT RT TESTED SHALL BE MT OR DYE-PENETRANT TESTED.

8. STRUCTURAL STEEL SHAPES AND PLATES SHALL CONFORM TO THE LATEST PROVISIONS OF AASHTO DESIGNATION M 270 GRADE 50, AND 50S AS DESIGNATED ON THE PLANS.

9. ALL AASHTO M 270 STRUCTURAL STEEL USED IN GIRDERS (INCLUDING CONNECTION PLATES AND STIFFENERS), SHALL MEET THE ZONE 2 CHARPY V-NOTCH FRACTURE TOUGHNESS TEST REQUIREMENTS AS SPECIFIED IN TABLE 6.6.2-2 OF THE AASHTO LRFD BRIDGE DESIGN SPECIFICATIONS FOR “NONFRACTURE-CRITICAL” AND “FRACTURE-CRITICAL” COMPONENTS. THE ZONE 2 FRACTURE TOUGHNESS REQUIREMENTS ARE AS FOLLOWS:

   NONFRACTURE-CRITICAL

   GRADE 50 15 FT-LBS @ 40°F (UP TO 4 INCHES THICK)
   GRADE 50S 15 FT-LBS @ 40°F (UP TO AND INCLUDING 2 INCHES THICK)
   GRADE 50S 20 FT-LBS @ 40°F (FROM 2 INCH THICK UP TO AND INCLUDING 4 INCHES THICK)

   FRACTURE-CRITICAL

   GRADE 50 25 FT-LBS @ 40°F (UP TO 4 INCHES THICK)
   GRADE 50S 25 FT-LBS @ 40°F (UP TO AND INCLUDING 2 INCHES THICK)
   GRADE 50S 30 FT-LBS @ 40°F (FROM 2 INCH THICK UP TO AND INCLUDING 4 INCHES THICK)

   SAMPLING AND TESTING PROCEDURES SHALL BE IN ACCORDANCE WITH AASHTO T 243. THE FREQUENCY OF TESTING SHALL BE IN ACCORDANCE WITH THE AASHTO LRFD BRIDGE DESIGN SPECIFICATIONS.
   PLATES AND STIFFENERS USED FOR CONNECTIONS SHALL BE CONSIDERED FRACTURE CRITICAL.

   THE CHARPY V-NOTCH FRACTURE TOUGHNESS TEST REQUIREMENT IS NOT MANDATORY FOR THE FOLLOWING STEEL COMPONENTS:

   - BEARINGS, MASONRY PLATES AND SOLE PLATES
   - EXPANSION JOINTS AND MODULAR BRIDGE JOINT SYSTEMS
   - DRAINAGE MATERIAL
   - RAILINGS
   - FOUNDATION H-PILES AND PIPE PILES
   - SUPPORT OF EXCAVATION COMPONENTS

11. WELDING SHALL BE IN ACCORDANCE WITH THE LATEST STRUCTURAL WELDING CODE AASHTO/AWS D1.5 (INCLUDING ALL INTERIMS TO DATE) AND APPLICABLE SUPPLEMENTAL AWS PUBLICATIONS AND THE CONTRACT DOCUMENTS.

12. ALL HIGH STRENGTH BOLTS SHALL CONFORM TO AASHTO DESIGNATION M 164, AND THEY SHALL BE INSTALLED IN ACCORDANCE WITH SECTION 824 OF THE RI STANDARD SPECIFICATIONS.

13. NUTS TO BE HOT DIPPED OR MECHANICALLY GALVANIZED SHALL BE AASHTO M291 GRADE DH (PROPERTY CLASS 10S).

14. ALL M164 BOLTS SHALL BE HOT DIPPED GALVANIZED IN ACCORDANCE WITH AASHTO M232 CLASS C OR MECHANICALLY GALVANIZED IN ACCORDANCE WITH AASHTO M298 CLASS 50. BOLTS SHALL BE FIELD PAINTED AFTER INSTALLATION TO MATCH BRIDGE GIRDERS AND SUPPORT STEEL.

15. WASHERS MEETING AASHTO DESIGNATION M 293 ARE TO BE USED OVER ALL HOLES THAT ARE MORE THAN 1/16” IN DIAMETER GREATER THAN THE BOLT DIAMETER AND UNDER ALL PARTS TURNED DURING ASSEMBLY.

16. STRUCTURAL STEEL SHALL BE PREPARED AND PAINTED IN ACCORDANCE WITH THE RI STANDARD SPECIFICATIONS.

17. ALL GIRDERS SHALL BE PAINTED ON ALL SIDES UNLESS THE GIRDERS ARE TO SUPPORT A STEEL DECK AND CONCRETE SLAB. IN THESE CASES THE UPPER SURFACES OF THE GIRDER TOP FLANGES SHALL BE FREE OF PAINT, OIL OR OTHER IMPURITIES THAT WOULD IN ANY REDUCE THE BOND OF CONCRETE TO STEEL.

18. PRIOR TO FABRICATION, ALL MATERIALS SHALL BE BLAST-CLEANED TO AT LEAST SSPC-SP6 TO REMOVE ALL OIL, DIRT, GREASE, MILL SCALE AND OTHER DELETERIOUS MATERIALS FROM THE SURFACES OF THE STEEL TO BE FABRICATED.

19. PRIOR TO SHOP COATING AS SPECIFIED IN SECTION 825 OF THE RI STANDARD SPECIFICATIONS, ALL CORNERS AND EDGES OF STEEL WHICH HAVE BEEN FLAME CUT OR OTHERWISE HARDENED SHALL BE SOFTENED BY GRINDING OR BLAST-CLEANING TO PROVIDE A SURFACE SUITABLE FOR APPLICATION OF THE SPECIFIED PAINT SYSTEM.

20. WELDING OF ATTACHMENTS TO GIRDER FLANGES OR WEBS FOR CONSTRUCTION PURPOSES IS NOT PERMITTED EXCEPT WHEN APPROVED BY THE ENGINEER.

21. THE ENDS OF ALL GIRDERS SHALL BE VERTICAL AFTER ALL DEAD LOADS HAVE BEEN PLACED.

22. INTERMEDIATE STIFFENERS SHALL BE PLACED ON THE INTERIOR SIDE OF THE FASCIA PLATE GIRDER WEBS AND ON BOTH SIDES OF ALL INTERIOR PLATE GIRDER WEBS.

23. BEARING STIFFENERS SHALL BE FABRICATED AS SHOWN ON THE PLANS AND SHALL BE PLACED ON BOTH SIDES OF ALL PLATE GIRDER WEBS.

24. INTERMEDIATE STIFFENERS AND CONNECTION PLATES SHALL BE SET PERPENDICULAR TO THE FLANGES OF THE GIRDERS.

25. END BEARING STIFFENERS AT GIRDER ENDS SHALL BE PLUMB.

26. BOLTED CONNECTIONS SHALL BE DESIGNED AS SLIP-CRITICAL CONNECTIONS. THE FAYING SURFACES SHALL SATISFY CLASS B SURFACE CONDITION AS DEFINED IN THE AASHTO LRFD BRIDGE DESIGN SPECIFICATIONS.

27. ALL SHOP CONNECTIONS AND SPLICES SHALL BE WELDED. WELDING PROCEDURES AND TECHNIQUES TO BE USED IN FABRICATION AND ERECTION OF THE GIRDERS SHALL BE AS SHOWN ON THE SHOP DRAWINGS AND SHALL INCORPORATE THE FOLLOWING:

   a. BOTH FLANGES AND THE WEB SHALL BE COMPLETELY FABRICATED FOR THEIR ENTIRE LENGTHS BEFORE THE WELDING OF THE FLANGES TO THE WEB IS PERFORMED.

   b. ALL WEB AND FLANGE SPLICES OTHER THAN THOSE SHOWN ON THE PLANS MUST BE APPROVED BY THE ENGINEER. ALTERNATE OR ADDITIONAL SPLICES ARE TO BE LOCATED AND DESIGNED BY THE FABRICATOR AND SHOWN ON THE SHOP DRAWINGS. THESE SPLICES ARE TO FULLY DEVELOP THE STRENGTH OF THE WEB AND FLANGE PLATES. WEB SPLICES, IF USED, SHALL BE LOCATED 2'-0” MINIMUM FROM ANY STIFFENER.

   c. NO MORE THAN TWO SHOP WEB SPLICES WILL BE PERMITTED BETWEEN FIELD SPLICES. SPLICING OF GIRDERS BY FIELD WELDING WILL NOT BE PERMITTED.

28. WHEN STEEL DIE STAMPS ARE USED TO IDENTIFY PIECES AND MEMBERS, FABRICATORS SHALL UTILIZE LOW STRESS STAMPS.

29. FOR SIZE AND LOCATION OF ANCHOR BOLTS, SEE PIER, ABUTMENT, AND BEARING DRAWINGS.

30. HEAT STRAIGHTENING IS NOT PERMITTED UNLESS SPECIFICALLY APPROVED BY THE ENGINEER.

31. ALL BOLTS FOR PRIMARY STEEL (PLATE GIRDERS, FLOOR BEAMS, ETC) SHALL BE 1" DIA.

32. ALL BOLTS FOR SECONDARY STEEL SHALL BE 3/4" DIA (U.O.N.)

POST INSTALLED ANCHORS AND REINFORCEMENT

1. ALL ADHESIVE ANCHORS TO USE HILTI HIT HY200 W/ SAFE SET TECHNOLOGY OR OTHER EQUIVALENT PRODUCT ON RIDOT APPROVE PRODUCTS LIST.

2. THREADED ROD TO BE USED WITH ADHESIVE ANCHORS ARE TO BE ASTM A193 GRADE B7 STEEL OR AASHTO M31 GRADE 60 REINFORCEMENT

3. ASTM A563 GRADE DH NUTS TO BE USED WITH ALL ASTM A193 GRADE B7 ANCHOR RODS

BEARINGS

1. LOADS, DISPLACEMENTS AND ROTATIONS OF BRIDGE BEARINGS CAN BE FOUND ON S-901

2. ALL BEARINGS SHALL CONFORM TO THE AASHTO LRFD BRIDGE CONSTRUCTION SPECIFICATION AND AASHTO M251 "STANDARD SPECIFICATION FOR PLATE AND LAMINATED ELASTOMETRIC BRIDGE BEARINGS".

3. THE BEARINGS ARE DESIGNED SUCH THAT THE SUPERSTRUCTURE MAY BE ERECTED WHEN THE AMBIENT AIR TEMPERATURE IS BETWEEN 40 DEGREES AND 90 DEGREES FAHRENHEIT.

4. THE CONTINUOUS WELD CONNECTING THE BEARING SOLE PLATE AND MASONRY PLATE TO THE SUPER- AND SUB-STRUCTURES RESPECTIVELY SHALL BE ALLOWED TO COOL AFTER EACH PASS. HOWEVER THE TEMPERATURE ADJACENT TO THE ELASTOMER SHALL NOT EXCEED 200 DEGREES FAHRENHEIT. TEMPERATURE SHALL BE CONTROLLED BY WELDING PROCEDURE, TEMPERATURE INDICATOR CRAYONS AND OR OTHER DEVICES APPROVED BY THE ENGINEER.

5. THE RAW ELEMENTS SHALL BE VIRGIN NEOPRENE (POLYCHLOROPRENE) AND SHALL HAVE A LOW-TEMPERATURE GRADE 3 OR HIGHER.

6. STEEL PLATES USED IN MASONRY, SOLE AND SHIM PLATES, UNLESS OTHERWISE NOTED, SHALIBE AASHTO M 270 GRADE 50.

GENERAL NOTES REGARDING TEMPORARY CONSTRUCTION CONDITIONS:

1. DESIGN WIND PRESSURES FOR CONSTRUCTION:

   MINIMUM WIND PRESSURES TO BE USED BY THE CONTRACTOR FOR DESIGN DURING THE CONSTRUCTION CONTRACT (WITH THE EXCEPTION OF SIGNS) SHALL BE FROM THE FOLLOWING TABLE:

HEIGHT ABOVE GROUND	WIND PRESSURE (PSF)
UP TO 17’	33

   TABLE NOTES:

   A. APPLICATION OF THE TABULAR PRESSURE:

      a. BRIDGE COMPONENTS DURING CONSTRUCTION, PRIOR TO THE INSTALLATION OF THE PERMANENT BRACING SYSTEMS, NOT INCLUDING CRANE LIFTING.
      b. FALSE WORK, SHORING, AND SCAFFOLDING AS DEFINED IN FHWA “GUIDE DESIGN SPECIFICATION FOR BRIDGE TEMPORARY WORKS”, EXCLUDING 3-DIMENSIONAL LATTICED OR TRUSSED FRAMES OR TOWERS;
      c. TEMPORARY SHIELDING.

WIND PRESSURES FOR ALL OTHER STRUCTURES SHALL BE CALCULATED BASED ON ASCE “DESIGN LOADS ON STRUCTURES DURING CONSTRUCTION”, SEI/ASCE 37-02 (ALL REFERENCES TO THE ASCE 7 IN THE SEI/ASCE 37-02 PUBLICATION, SHALL BE THE LATEST REVISION OF ASCE 7). THE EXPOSURE CATEGORY SHALL BE C .

2. ERECTION OF BRIDGE COMPONENTS:

   FOR THE ERECTION OF STRUCTURES, THE FOLLOWING SHALL APPLY:

   - THE CONTRACTOR SHALL SUBMIT AN ERECTION PLAN THAT PROVIDES COMPLETE DETAILS OF THE PROCESS INCLUDING, BUT NOT LIMITED TO, TEMPORARY SUPPORTS, SCHEDULING AND OPERATION SEQUENCING, CRANE PLACEMENT, AND ASSUMED LOADS AND CALCULATED STRESSES DURING VARYING STAGES OF LIFTING. THIS APPLIES TO STRUCTURES OF ANY KIND. THE CAPACITY OF THE CRANE AND ALL LIFTING AND CONNECTING DEVICES SHALL BE ADEQUATE FOR 125 PERCENT OF THE TOTAL PICK LOAD INCLUDING SPREADERS AND OTHER MATERIALS. THIS FACTOR OF SAFETY SHALL BE IN ADDITION TO ALL MANUFACTURERS’ PUBLISHED FACTORS OF SAFETY.
   - A REGISTERED PROFESSIONAL ENGINEER, LICENSED IN THE STATE OF RHODE ISLAND, WILL BE REQUIRED TO STAMP THE CONTRACTOR’S ERECTION PLAN.
   - THE CONTRACTOR’S PROFESSIONAL ENGINEER WILL BE REQUIRED TO INSPECT AND PROVIDE WRITTEN APPROVAL OF EACH PHASE OF A GIRDER INSTALLATION, PRIOR TO ALLOWING VEHICLES OR PEDESTRIANS ON OR BELOW THE STRUCTURE. THE PROFESSIONAL ENGINEER MUST ALSO STAMP ALL CHANGES TO THE CONTRACTOR’S ERECTION PLAN. ADDITIONALLY, ALL PROPOSED CHANGES MUST BE SUBMITTED TO RIDOT FOR REVIEW AND APPROVAL PRIOR TO IMPLEMENTATION.
   - A MANDATORY PRE-ERECTION CONFERENCE WILL BE HELD AT LEAST TWO WEEKS PRIOR TO THE START OF THE GIRDER INSTALLATION TO DISCUSS THE PLAN AND PROCEDURES, WORK SCHEDULES, CONTINGENCY PLANS, SAFETY REQUIREMENTS AND TRAFFIC CONTROL. THE CONTRACTOR’S PROFESSIONAL ENGINEER AND ERECTION SUBCONTRACTOR WILL BE REQUIRED TO ATTEND THIS MEETING, AS WILL THE RIDOT RESIDENT ENGINEER, THE DESIGN PROJECT ENGINEER AND THE DESIGN CONSULTANT. BASED UPON DISCUSSIONS AT THIS MEETING AND A REVIEW OF THE CONTRACTOR’S ERECTION PLAN, RIDOT MAY ORDER THE CONTRACTOR TO MODIFY AND RESUBMIT THE ERECTION PLAN TO THE ENGINEER FOR REVIEW AND APPROVAL.
   - THE CONTRACTOR WILL BE REQUIRED TO PERFORM DAILY INSPECTIONS OF THE ERECTED GIRDERS UNTIL THE BRIDGE DECK IS COMPLETELY POURED ON THE LOWER DECK AND THE FLOOR BEAMS AND HORZ TRUSS MEMBERS ARE INSTALLED ON THE UPPER BRIDGE
   - THE COST OF PREPARING AND STAMPING THE ERECTION PLAN, COMPUTATIONS, AND REPORTS, RESPONDING TO RIDOT’S COMMENTS AND MAKING THE NECESSARY REVISIONS, AND ATTENDANCE AT MEETINGS SHALL BE CONSIDERED INCIDENTAL TO THE COST OF THE SUPERSTRUCTURE PAY ITEM, BE IT CONCRETE, STEEL OR TIMBER.

TIMBER:

1. ALL TIMBER INCLUDING DECKING AND CLADDING SHALL BE TROPICAL HARDWOOD OF THE FOLLOWING TYPES:

   - IPE
   - BETHBARA
   - LAPACHO (TABEBUIA SPP. - LAPACHO GROUP)
   - WANA WOOD

   WOOD BLOCKING MAY BE STRUCTURAL GRADE PLASTIC LUMBER CONFORMING TO ASTM D7568. WOOD SHIMS MAY BE THE SAME TROPICAL HARDWOOD AT THE WOOD DECK/CLADDING OT STRUCTURAL GRADE PLASTIC LUMBER CONFORMING TO ASTM D7568. SLEEPERS SHALL BE TROPICAL HARDWOOD AS SPECIFIED BY ARCHITECTURAL DRAWINGS AND SPECIFICATIONS.

2. DECK SHALL BE FASTENED WITH STAINLESS STEEL SCREWS OR BOLTS. ALL FASTENERS SCREWS SHALL BE PREDRILLED AND COUNTERSUNK WITH PILOT HOLES IN ACCORDANCE WITH THE SPECIAL PROVISIONS. FASTENING SHALL CONFORM TO THE SPECIAL PROVISIONS, FASTENERS DO NOT NEED TO BE PREDRILLED WHEN USING INJECTOR SCREW TECHNOLOGY.

3. ALL OTHER CONNECTIONS SHALL BE MADE WITH GALVANIZED HARDWARE IN ACCORDANCE WITH RI STANDARD SPECIFICATIONS SECTION M.05.04.13.

4. ALL CONNECTIONS INCLUDING NAILING SHALL BE MADE WITH PRE-DRILLED HOLES.

5. TIMBER SHALL BE CUT AND MACHINED WITH CARBIDE TIPPED TOOLS. AFTER CROSS-CUTTING, EXPOSED ENDS SHALL BE SEALED WITH A CLEAR PARAFFIN WAX SEALER.

6. TIMBER SHALL BE KEPT OUT OF DIRECT SUNLIGHT UNTIL READY TO BE INSTALLED AND FINISHED.

7. DECK WOOD SHALL BE FINISHED WITH A WOOD STABILIZING AGENT APPLIED TO SURFACES EXPOSED TO DIRECT SUNLIGHT. APPLY DURING OR IMMEDIATELY AFTER EACH SECTION IS INSTALLED.

8. BLOCKING SHALL BE PROVIDED AT THE ENDS OF EACH STRINGER AND AT ALL RAIL POST AND LIGHT POST ATTACHMENTS. BLOCKING SHALL BE CONNECTED TO STRINGERS USING WOOD SCREWS OR NAILS WITH PREDRILLED HOLES 1/8" SMALLER IN DIAMETER THAN THE SCREWS OR NAILS.

9. TIMBER WHICH, AT THE DISCRETION OF THE ENGINEER, IS WARPED, BOWED, SPLIT, OR SPLINTERED, SHALL NOT BE INCORPORATED IN THE WORK AT NO EXPENSE TO THE STATE.

10. TIMBER SIZES ARE ASSUMED TO BE DRESSED SIZES WITH DIMENSIONS 1/2" LESS THAN THE NOMINAL DIMENSIONS. 2X10'S AND 2X12'S ARE ASSUMED TO HAVE DRESSED DEPTHS 3/4" LESS THAN THE NOMINAL DEPTH.

11. ROUGH SAWN LUMBER IS PERMITTED FOR MEMBERS OTHER THAN THE DECK. IF ROUGH SAWN MEMBERS ARE USED, OR IF THE DRESSED SIZE VARIES FROM THAT ASSUMED, THE BEAM SEAT ELEVATION AND CONNECTION DETAILS SHALL BE ADJUSTED ACCORDINGLY.

DESIGN TIDAL INFORMATION

PROVIDENCE MEAN HIGH WATER ELEVATION = 0.00' (NGVD 1929 EL= 2.35')

THE CONTRACTOR SHALL NOTE THAT HIGHER AND LOWER TIDES ARE POSSIBLE.
ALL ELEVATIONS SHOWN IN PROJECT ARE WITH REFERENCE TO PROVIDENCE MEAN HIGH WATER ELEVATION.

SURFACE FINISHES

1. PRIMARY STRUCTURAL STEEL MEMBERS, INCLUDING STEEL PIERS, PLATE GIRDERS AND DECK BEAMS SHALL BE METALIZED AND PAINTED,

2, SECONDARY STEEL MEMBERS SHALL BE METALIZED AND PAINTED.

3. HOT DIPPED GALVANIZING MAY NOT REPLACE METALIZING

WELDING

1. WELDING ELECTRODES SHALL HAVE THE SAME CORROSION RESISTANCE AS THE BASE METAL AND SHALL BE LOW HYDROGEN TYPE.

2. ALL REASONABLE AND PRUDENT PRECAUTIONS SHOULD BE TAKEN TO MINIMIZE THE INTRODUCTION OF WATER AND OTHER HYDROGEN SOURCES INTO THE WELDED ZONE.

3. PRIOR TO WELDING, IF STRUCTURE IS EXPOSED TO RAIN, SNOW,ICE, ETC OR WHEN WELDING IS TO BE DONE WHEN THE RELATIVE HUMIDITY EXCEEDS 90% A PREHEAT TEMPERATURE OF 250°F IS REQUIRED.

4. PRIOR TO WELDING, IF STANDING WATER OR DEW IS PRESENT ON THE SURFACE ABOUT TO BE WELDED, THE WATER MUST BE REMOVED BY HEATING UNTIL NO WATER IS VISIBLY PRESENT AND THE SURFACE TEMPERATURE OF THE STEEL IS A MINIMUM OF 300°F.

5. ALL FIELD WELDING SHALL USE A MINIMUM PREHEAT AND INTERPASS TEMPERATURE OF 250°F UNLESS A HIGHER TEMPERATURE IS REQUIRED.

6. SMAW FILLER METAL SHALL BE STORED IN A HERMETICALLY SEALED CONTAINER UNTIL OPENING WHEN THEY WILL BE IMMEDIATELY PLACED IN A 250°F OVEN UNTIL USED IN THE WORK. IF THE WELD METAL IS NOT USED WITHIN 2 HOURS AFTER REMOVAL FROM THE HERMETICALLY SEALED CONTAINER OR THE STORAGE OVEN, THE METAL MUST BE REDRIED FOR A MINIMUM OF 2 HOURS AT 450°F TO 550°F.

7. THE FOLLOWING TYPE OF WELDS ARE PROHIBITED:

   a. ALL PJP GROOVE WELDS IN BUTT JOINTS EXCEPT THOSE CONFORMING TO AWS ARTICLE 2.17.3

   b. CJP GROOVE WELDS, IN ALL MEMBERS CARTING CALCULATED STRESS OR IN SECONDARY MEMBERS SUBJECT TO TENSION OR THE REVERSAL OF STRESS, MADE FROM ONE SIDE ONLY WITHOUT ANY BACKING OR WITH BACKING OTHER THAN STEEL, THAT HAS NOT BEEN QUALIFIED TO CONFORMANCE WITH AWS ARTICLE 5.7.5 AND 5.12.4

   c. INTERMITTENT GROOVE WELDS

   d. INTERMITTENT FILLER WELDS, EXCEPT AS APPROVED BY THE ENGINEER

   e. FLAT POSITION BEVEL-GROOVE AND J-GROOVE WELDS IN BUTT JOINTS WHERE THE V-GROOVE AND U-GROOVE WELDS ARE PRACTICABLE

   f. PLUG AND SLOT WELDS IN MEMBERS SUBJECT TO TENSION AND REVERSAL OF STRESS

8. CONNECTIONS OR SPLICE IN BEAMS OR GIRDERS WHEN MADE BY GROOVE WELDS SHALL HAVE CJP GROOVE WELDS. CONNECTIONS OR SPLICES MADE WITH FILLET OR PLUG WELDS SHALL BE DESIGNED FOR THE AVERAGE OF THE CALCULATED STRESS AND THE STRENGTH OF THE MEMBER, BUT NOT LESS THAN 75 PERCENT OF THE STRENGTH OF THE MEMBER. WHEN THERE IS REPEATED APPLICATION OF LOAD, THE MAXIMUM STRESS OR STRESS RANGE IN SUCH CONNECTIONS OR SPLICES SHALL NOT EXCEED THE FATIGUE STRESS ALLOWED BY AASHTO SPECIFICATIONS. (AWS ARTICLE 2.17.6.1)

9. SPLICES BETWEEN SECTIONS OF ROLLED BEAMS OR BUILT-UP GIRDERS SHALL PREFERABLY BE MADE IN A SINGLE TRANSVERSE PLANE. SHOP SPLICES OF WEBS AND FLANGES IN BUILT-UP GIRDERS, MADE BEFORE THE WEBS AND FLANGES ARE JOINED TO EACH OTHER MAY BE LOCATED IN A SINGLE TRANSVERSE PLANE OR MULTIPLE TRANSVERSE PLANES, BUT THE FATIGUE STRESS PROVISIONS OF THE AASHTO SPECIFICATIONS SHALL APPLY. (AWS ARTICLE 2.17.6.2)

10. THE CONNECTION AT THE ENDS OF NON-CONTINUOUS BEAMS SHALL BE DESIGNED WITH FLEXIBILITY SO AS TO AVOID EXCESSIVE SECONDARY STRESSES DUE TO BENDING. SEATED CONNECTIONS WITH FLEXIBLE OR GUIDING DEVICE TO PREVENT END TWISTING ARE RECOMMENDED. (AWS ARTICLE 2.17.6.3)

11. WELDING SYMBOLS SHALL BE THOSE SHOWN IN THE LATEST EDITION OF AWS A2.4, STANDARD SYMBOLS FOR WELDING, BRAZING AND NONDESTRUCTIVE EXAMINATION. SPECIAL CONDITIONS SHALL BE FULLY EXPLAINED BY NOTES OR DETAILS.

12. FOR ALL COMPLETE PENETRATION WELDS (CJP) BACKING BARS SHALL BE REMOVED AND THE WELDS BACKGOUGED. NON FUSEABLE BACKING BARS SHALL BE USED.

13. NO SHOP FILLET WELD SHALL BE LESS THAN 1/4".

14. ALL SHEAR STUD CONNECTORS SHALL BE WELDED BY THE AUTOMATIC TIMED ELECTRIC ARC PROCESS, SHEAR STUDS SHALL BE INSPECTED AND TESTED IN ACCORDANCE WITH SECTION 824 OF THE RI STANDARD SPECIFICATIONS.

15. WELD FILLER MATERIAL SHALL MEET THE CHARPY V-NOTCH (CVN) TESTING REQUIREMENT OF 20 FT-LBS AT -20 DEGREES F.

STAINLESS STEEL

1. GENERAL REQUIREMENTS

A. WHEN MEMBERS ARE SPECIFIED AS STAINLESS STEEL THE FOLLOWING REQUIREMENTS SHALL BE FOLLOWED WHEN POSSIBLE.

B. THE FABRICATOR IS SOLELY RESPONSIBLE FOR DETERMINING THE FINAL FABRICATION METHODS.

C. STAINLESS STEEL FABRICATION SHALL FOLLOW THE RECOMMENDATIONS OF AISC DESIGN GUIDE 27- STRUCTURAL STAINLESS STEEL AND BEST INDUSTRY PRACTICE. 1

2. STORAGE AND HANDLING

A. FABRICATOR SHOULD MAKE EVERY EFFORT TO MINIMIZE CARBON STEEL CONTAMINATION OF STAINLESS STEEL DURING FABRICATION, SHIPPING AND ERECTION.

B. THE STEEL SHOULD BE INSPECTED IMMEDIATELY AFTER DELIVERY FOR ANY SURFACE DAMAGE.

C. THE STEEL MAY HAVE PROTECTIVE PLASTIC OR OTHER COATING. THIS SHOULD BE LEFT ON AS LONG AS POSSIBLE, REMOVING IT JUST BEFORE FINAL FABRICATION. THE PROTECTIVE COVERING IS REQUIRED FOR FINISHES WHICH COULD BE DAMAGED DURING SHIPMENT AND ERECTION (E.G FOR BRIGHT ANNEALED FINISHES) OR AS SPECIFIED IN THE CONTRACT DOCUMENTS. 1

D. STORAGE IN SALT-LADEN HUMID ATMOSPHERES SHOULD BE AVOIDED.

E. STAINLESS STEEL SHALL NOT BE STORED DIRECTLY ON RACKS WITH CARBON STEEL RUBBING SURFACES. RUBBING SURFACES SHALL BE PROTECTED BY WOODEN, RUBBER OR PLASTIC BATTENS OR SHEATHS. SHEETS AND PLATES SHOULD BE STACKED VERTICALLY WHEN EVER POSSIBLE; HORIZONTALLY STACKED SHEETS MAY GET WALKED ON WITH A RISK OF IRON CONTAMINATION AND SURFACE DAMAGE.

G. CARBON STEEL LIFTING TACKLE, E.G. CHAINS, HOOKS, AND CLEATS SHOULD BE AVOIDED. THE USE OF ISOLATING MATERIALS, OR THE USE OF SUCTION CUPS WHICH PREVENT IRON PICK SHOULD BE USED WHEN EVER POSSIBLE. THE FORKS OF FORK LIFT TRUCKS MUST ALSO BE PROTECTED. 1

E. CONTACT WITH CHEMICALS INCLUDING UNDUE AMOUNTS OF OILS AND GREASES WHICH MAY STAIN SOME FINISHES SHOULD BE AVOIDED.

G. THE FABRICATOR SHALL MAKE ALL NECESSARY PRECAUTIONS TO PROTECT THE FINISHED FABRICATION DURING TRANSPORTATION.

3. FABRICATION

A. SEGREGATED FABRICATION AREAS FOR CARBON STEEL AND STAINLESS STEEL SHOULD BE USED WHEN EVER POSSIBLE. ONLY TOOLS DEDICATED TO STAINLESS STEEL SHOULD BE USED, MOST NOTABLY THIS APPLIES TO GRINDING WHEELS AND WIRE BRUSHES. WIRE BRUSHES AND WIRE WOOL SHALL BE OF STAINLESS STEEL AND IDEALLY A GRADE THAT IS EQUIVALENT IN TERMS OF CORROSION RESISTANCE (E.G. DO NOT USE FERRITIC STAINLESS STEEL BRUSHES ON AUSTENITIC STAINLESS STEEL

B. CARE SHOULD BE TAKEN IN MARKING FINISHED SURFACES WITH MARKING PENS/CRAYONS. WHEN EVER POSSIBLE MARKING SHOULD BE MADE ON A PROTECTIVE FILM, RATHER THEN THE FINISHED SURFACE. IF MARKINGS MUST BE MADE ON THE FINISHED SURFACE, A CHECK SHOULD
BE MADE IN AREA OF LIMITED VISIBILITY TO ENSURE THAT THE MARKS CAN BE REMOVED WITHOUT HARMING THE SURFACE.

C. UNLESS SPECIFIED OTHERWISE ON THE CONTRACT DRAWINGS THE FOLLOWING MINIMUM INTERNAL RADIUS SHALL BE USED FOR FABRICATIONS:
   1. 2*T FOR AUSTENITIC GRADES
   2. 2.5*T FOR DUPLEX GRADES
   WHERE T IS THE THICKNESS OF THE MATERIAL

D. UNLESS SPECIFIED OTHERWISE ON THE CONTRACT DRAWINGS, FOR TUBULAR SECTIONS:
   1. THE OUTER TUBE DIAMETER TO WALL THICKNESS RATIO SHALL NOT EXCEED
15
   2. THE BENDING RADIUS (AS MEASURED ALONG THE CENTERLINE OF THE TUBE) SHALL NOT BE LESS THEN 2.5*D, WHERE D IS THE OUTER DIAMETER.
   3. ANY WELDS SHOULD BE LOCATED AS CLOSE TO THE NEUTRAL AXIS AS POSSIBLE TO REDUCE BENDING STRESS AT THE WELD.

E. HOLES MAY BE DRILLED, PUNCHED OR LASER CUT. PUNCHED HOLES IN AUSTENITIC STAINLESS STEEL SHALL TYPICALLY BE LIMITED MEMBERS OF APPROXIMATELY 3/4” THICKNESS. THE MINIMUM SIZED HOLE TO BE PUNCHED SHALL BE 0.08” GREATER THAN THE MATERIAL THICKNESS. PUNCHED HOLES SHALL BE AVOIDED IN CORROSIVE ENVIRONMENTS.

F. SURFACES TO BE WELDED SHALL BE FREE OF OILS AND OTHER HYDROCARBONS, AND WAX CRAYON MARKS AS TO AVOID ANY UNNECESSARY CARBON PICK-UP.

4. WELDING

A. ALL STAINLESS STEEL WELDING SHALL CONFORM TO THE LATEST EDITION OF THE AWS
D1.6/D1.6M STRUCTURAL WELDING CODE – STAINLESS AND AWS D10.18/D10.18M GUIDE FOR THE
WELDING FERRIC AND AUSTENTIC DUPLEX STAINLESS STEEL PIPING AND TUBING (IF
APPROPRIATE).

B. WELDING SHALL BE DONE WITH AN ELECTRODE WHICH HAS IS MATCHING OR COMPATIBLE ALLOY
TO THE STAINLESS STEEL GRADE BEING WELDED.

C. WELDING DETAILS SHALL BE PREPARED BY THE STEEL DETAILER TO MINIMIZE AND LIMIT CREVICE CORROSIONS. WELDING DEFICIENCIES SUCH AS UNDERCUT, LACK OF PENETRATION, WELD SPLATTER, SLAG, AND ARC STRIKES SHOULD BE CONTROLLED TO MINIMIZE SITES OF POTENTIAL CORROSION.

D. ANY POTENTIAL SOURCES OF CARBON CONTAMINATION SUCH AS OILS AND OTHER HYDROCARBONS, DIRT AND OTHER DEBRIS, STRIPPABLE PLASTIC FILM AND WAX CRAYONS MARKS SHOULD BE REMOVED PRIOR TO ANY WELDING,

E. WELDED AREAS SHOULD BE CLEANED AND FREE OF ANY POTENTIALS SOURCES OF ZINC(SUCH AS FROM METALIZED/GALVANIZED PARTS) AND COPPER (SUCH AS FROM COPPER BACKING BARS) CONTAMINATION.

F. THE LOWEST POSSIBLE HEAT INPUT SHOULD BE USED FOR ALL WELDING TO AVOID EXCESSIVE DISTORTION AND THE FORMATION OF CHROMIUM CARBIDE PRECIPITATES.

G. IF STAINLESS STEEL IS TO BE WELDED TO CARBON/HSLA STEEL, STAINLESS STEEL WELDING ELECTRODE SHOULD BE USED.

ADDENDUM NO. 4

REF DWG #	REFERENCE DRAWING NAME

CDR MAGUIRE

100 BROADWAY,
23rd FLOOR NEW YORK,
NY 10005

Tel: 212 334 2025
Fax: 212 334 5528
web: www.burohappold.com

Buro Happold

BETA Group, Inc.
Engineers• Planners • Landscape Architects
Lincoln, RI - Norwood, MA - Hartford, CT

RHODE ISLAND
DEPARTMENT OF TRANSPORTATION

INTERSTATE 195

DESIGNED BY: AN
CHECKED: CDL
DATE: 04/21/14
SHEET: V2_072
OF: V2_163

SCALE: NTS

REVISIONS			REVISIONS		
NO.	DATE	BY	NO.	DATE	BY
1	6/14/2016	DF			

PROVIDENCE

IMPROVEMENTS TO
INTERSTATE ROUTE 195
CONTRACT 16 VOLUME 2

RHODE ISLAND

GENERAL NOTES SHEET 3

S-003

R-1	CO. ROAD REV. NO.	STATE	FEDERAL AID PROJECT NO.	FISCAL YEAR	SHEET NO.	TOTAL SHEETS
	1	R.I.			V2_073	V2_163

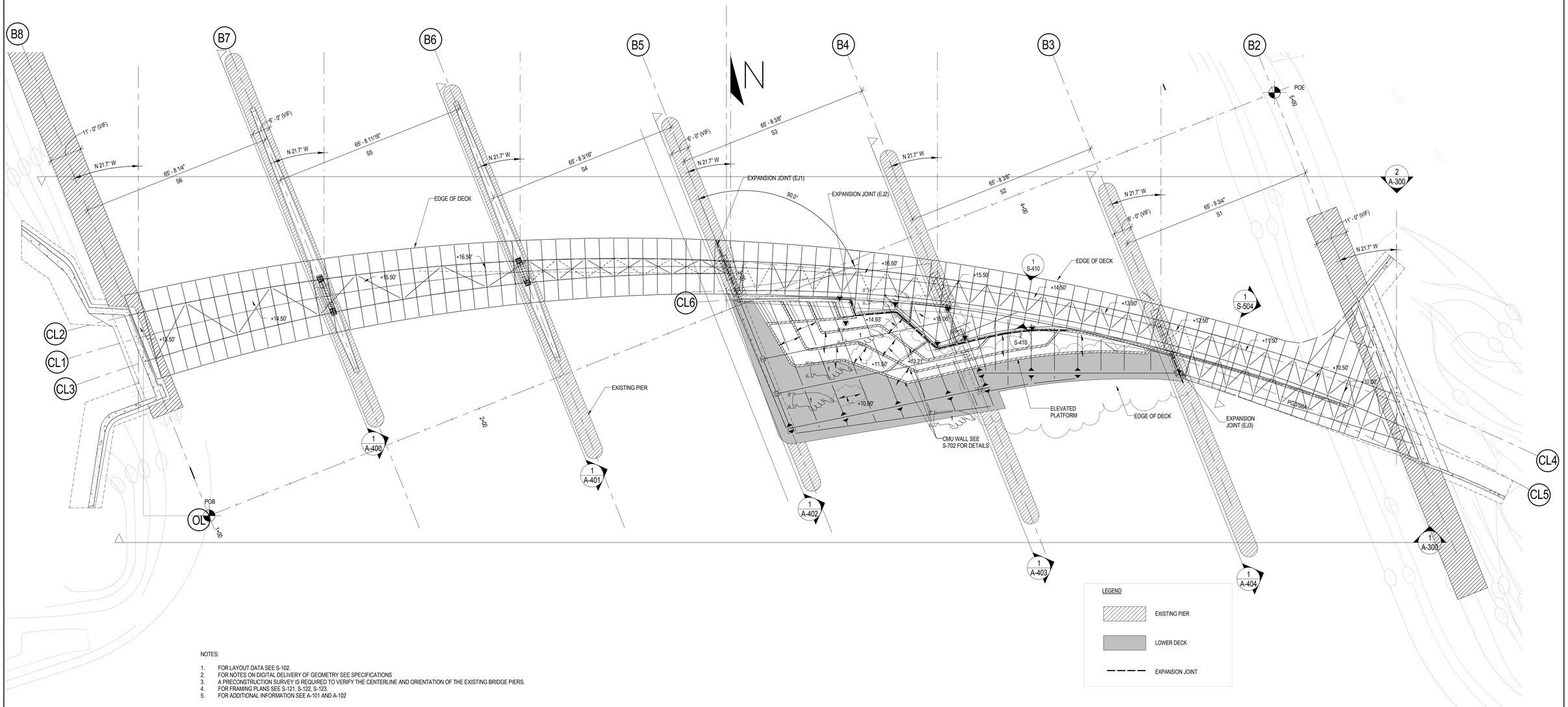

NOTES:

1. FOR LAYOUT DATA SEE S-102.
2. FOR NOTES ON DIGITAL DELIVERY OF GEOMETRY SEE SPECIFICATIONS
3. A PRECONSTRUCTION SURVEY IS REQUIRED TO VERIFY THE CENTERLINE AND ORIENTATION OF THE EXISTING BRIDGE PIERS.
4. FOR FRAMING PLANS SEE S-121, S-122, S-123.
5. FOR ADDITIONAL INFORMATION SEE A-101 AND A-102

ADDENDUM NO. 4

REF DWG #	REFERENCE DRAWING NAME
A-101	OVERALL BRIDGE PLAN
A-102	OVERALL LOWER BRIDGE PLAN
A-105	REFLECTED UNDERSIDE
A-110	OVERALL UPPER DECK ENLARGED DECK JOINT PLANS

CDR MAGUIRE

100 BROADWAY,
23rd FLOOR NEW YORK,
NY 10005

Tel: 212.334 2025

Fax: 212.334 5528

web: www.burohappold.com

Buro Happold

RHODE ISLAND
DEPARTMENT OF TRANSPORTATION

INTERSTATE 195

DESIGNED BY: AN
CHECKED: AN
DATE: 04/21/14
SHEET: V2_073
OF: V2_163

SCALE: 1/16" = 1'-0"

REVISIONS			REVISIONS		
NO.	DATE	BY	NO.	DATE	BY
1	6/14/2016	DF			

PROVIDENCE

IMPROVEMENTS TO
INTERSTATE ROUTE 195
CONTRACT 16 VOLUME 2

RHODE ISLAND

OVERALL BRIDGE PLAN

S-101

	CO. ROAD REV. NO.	STATE	FEDERAL AID PROJECT NO.	FISCAL YEAR	SHEET NO.	TOTAL SHEETS
R-1	1	R.I.			V2_076	V2_163

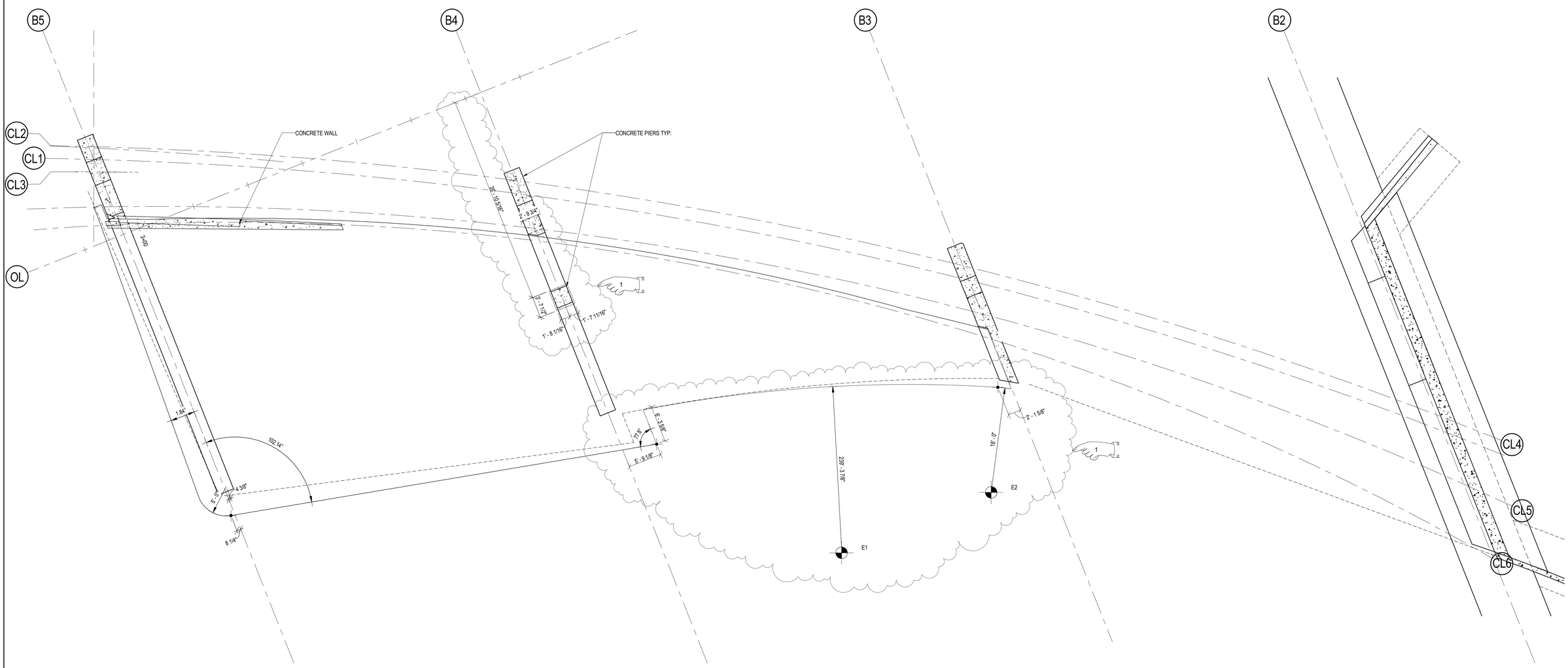

EDGE OF SLAB MARK	N:	E:
E1	267984.399	354014.851
E2	268211.188	354028.927

ADDENDUM NO. 4

REF DWG #	REFERENCE DRAWING NAME

CDR MAGUIRE

100 BROADWAY,
23rd FLOOR NEW YORK,
NY 10005

Tel: 212 334 2025
Fax: 212 334 5528
web: www.burohappold.com

Buro Happold

BETA Group, Inc.
Engineers • Planners • Landscape Architects
Lincoln, RI - Norwood, MA - Hartford, CT

RHODE ISLAND
DEPARTMENT OF TRANSPORTATION

INTERSTATE 195

DESIGNED BY: Designer
CHECKED: Checker
DATE: 06/20/14
SHEET: V2_076
OF: V2_163

SCALE: 1/8" = 1'-0"

REVISIONS			REVISIONS		
NO.	DATE	BY	NO.	DATE	BY
1	6/14/2016	DF			

IMPROVEMENTS TO
INTERSTATE ROUTE 195
PROVIDENCE CONTRACT 16 VOLUME 2 RHODE ISLAND

LOWER DECK

S-104

	FED. ROAD REGN. NO.	STATE	FEDERAL AID PROJECT NO.	FISCAL YEAR	SHEET NO.	TOTAL SHEETS
R-1	1	R.I.			V2_077	V2_163

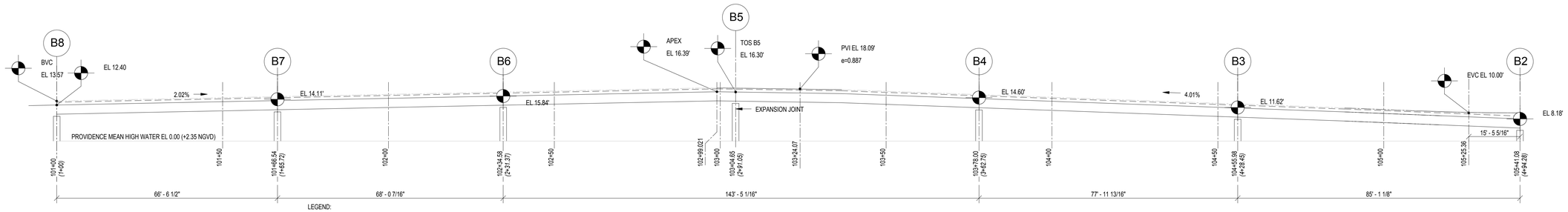

1 BRIDGE PROFILE ALONG CL1

SCALE 1/16" = 1'-0"

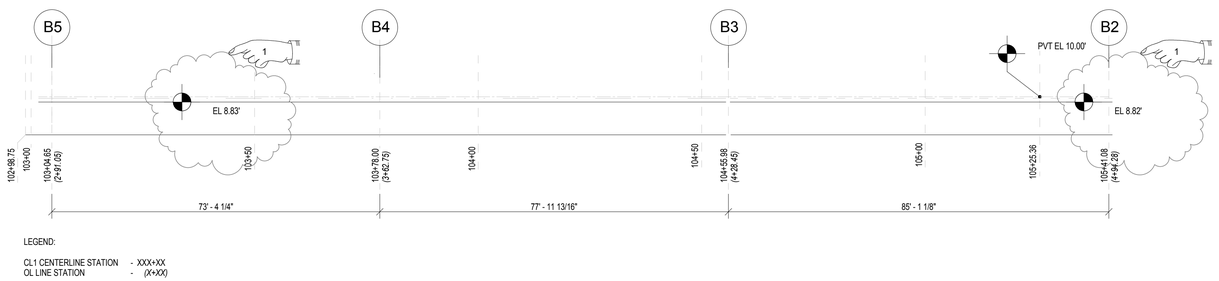

5 PROFILE OF LOWER PLATFORM

SCALE 1/16" = 1'-0"

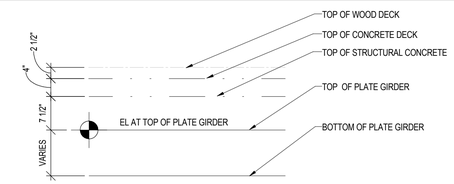

3 LOWER BRIDGE ELEVATION DETAIL

SCALE 3/4" = 1'-0"

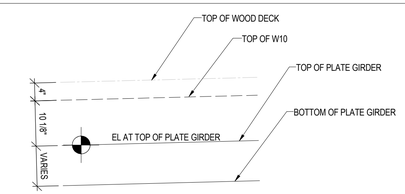

2 UPPER BRIDGE ELEVATION DETAIL

SCALE 3/4" = 1'-0"

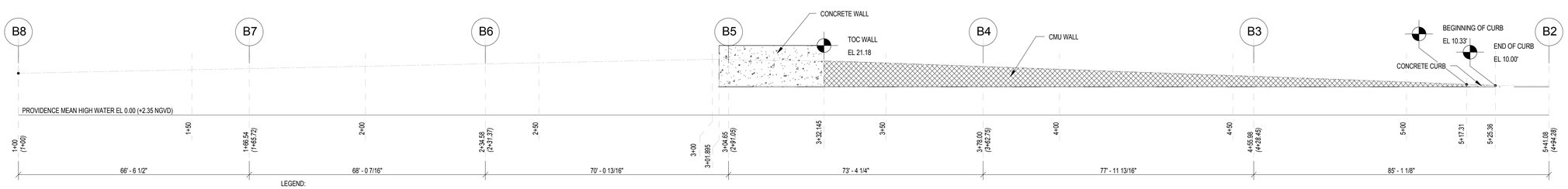

4 UNROLLED ELEVATION OF WALLS

SCALE 1/16" = 1'-0"

ADDENDUM NO. 4

REF DWG #	REFERENCE DRAWING NAME
A-301	OVERALL BRIDGE ELEVATIONS

CDR MAGUIRE

100 BROADWAY,
23rd FLOOR NEW YORK,
NY 10005

Tel: 212 334 2025
Fax: 212 334 5528
web: www.burohappold.com

Buro Happold

BETA Group, Inc.
Engineers • Planners • Landscape Architects
Lincoln, RI - Norwood, MA - Hartford, CT

RHODE ISLAND
DEPARTMENT OF TRANSPORTATION

INTERSTATE 195

DESIGNED BY: AN
CHECKED: AN
DATE: 04/21/14
SHEET: V2_077
OF: V2_163

SCALE: As indicated

REVISIONS			REVISIONS		
NO.	DATE	BY	NO.	DATE	BY
1	6/14/2016	DF			

IMPROVEMENTS TO
INTERSTATE ROUTE 195
CONTRACT 16 VOLUME 2

PROVIDENCE RHODE ISLAND

CL1 BRIDGE PROFILE

S-105

	LTD. ROMA REV. NO.	STATE	FEDERAL AID PROJECT NO.	FISCAL YEAR	SHEET NO.	TOTAL SHEETS
R-1	1	R.I.			V2_078	V2_163

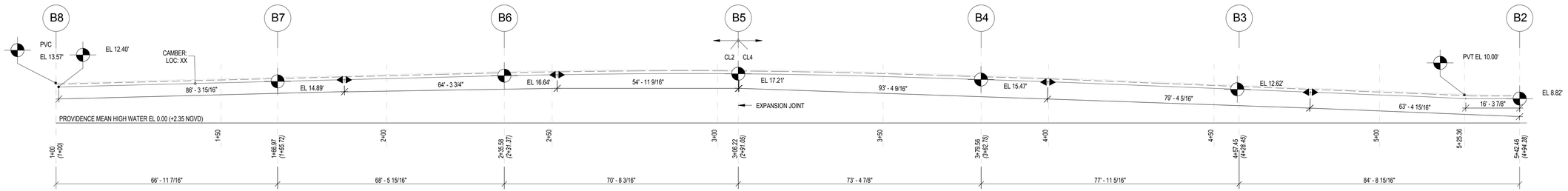

LEGEND:

CL2 / CL4 CENTERLINE STATION - X+XX
OL LINE STATION - *(X+XX)*

NOTES:

1. FOR GIRDER ELEVATIONS SEE S-301 TO S-303
2. FOR VERTICAL CURVATURE GEOMETRY SEE S-104
3. FOR HORIZONTAL CURVATURE GEOMETRY SEE S-103

1 UNROLLED CL2 AND CL4 ELEVATION

SCALE 1/16" = 1'-0"

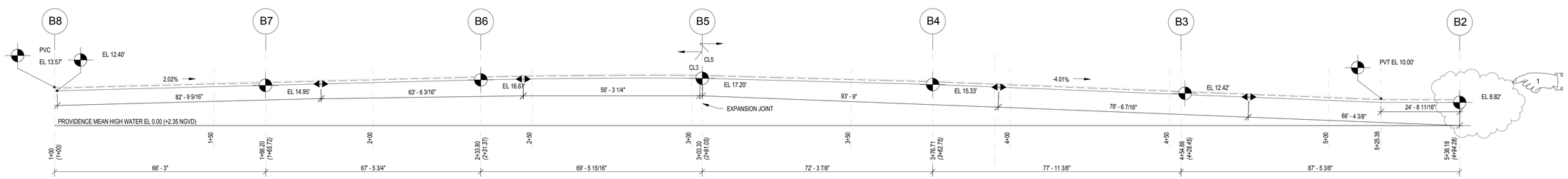

LEGEND:

CL1 CENTERLINE STATION - X+XX
OL LINE STATION - *(X+XX)*

NOTES:

1. FOR GIRDER ELEVATIONS SEE S-301 TO S-303

2 UNROLLED CL3 AND CL5 ELEVATION

SCALE 1/16" = 1'-0"

ADDENDUM NO. 4

REF DWG #	REFERENCE DRAWING NAME
S-103	BRIDGE ALIGNMENT PLAN
S-104	LOWER DECK
S-301 TO S-303	GIRDER ELEVATIONS

CDR MAGUIRE

100 BROADWAY,
23rd FLOOR NEW YORK,
NY 10005

Tel: 212 334 2025
Fax: 212 334 5528
web: www.burohappold.com

Buro Happold

BETA Group, Inc.
Engineers • Planners • Landscape Architects
Lincoln, RI - Norwood, MA - Hartford, CT

RHODE ISLAND
DEPARTMENT OF TRANSPORTATION

INTERSTATE 195

DESIGNED BY: AN
CHECKED: CDL
DATE: 04/21/14
SHEET: V2_078
OF: V2_163

SCALE: 1/16" = 1'-0"

REVISIONS			REVISIONS		
NO.	DATE	BY	NO.	DATE	BY
1	6/14/2016	DF			

PROVIDENCE

IMPROVEMENTS TO
INTERSTATE ROUTE 195
CONTRACT 16 VOLUME 2

RHODE ISLAND

CL2/4 AND CL3/5 BRIDGE PROFILE

S-106

R-1	CO. ROAD REV. NO.	STATE	FEDERAL AID PROJECT NO.	FISCAL YEAR	SHEET NO.	TOTAL SHEETS
	1	R.I.			V2_080	V2_163

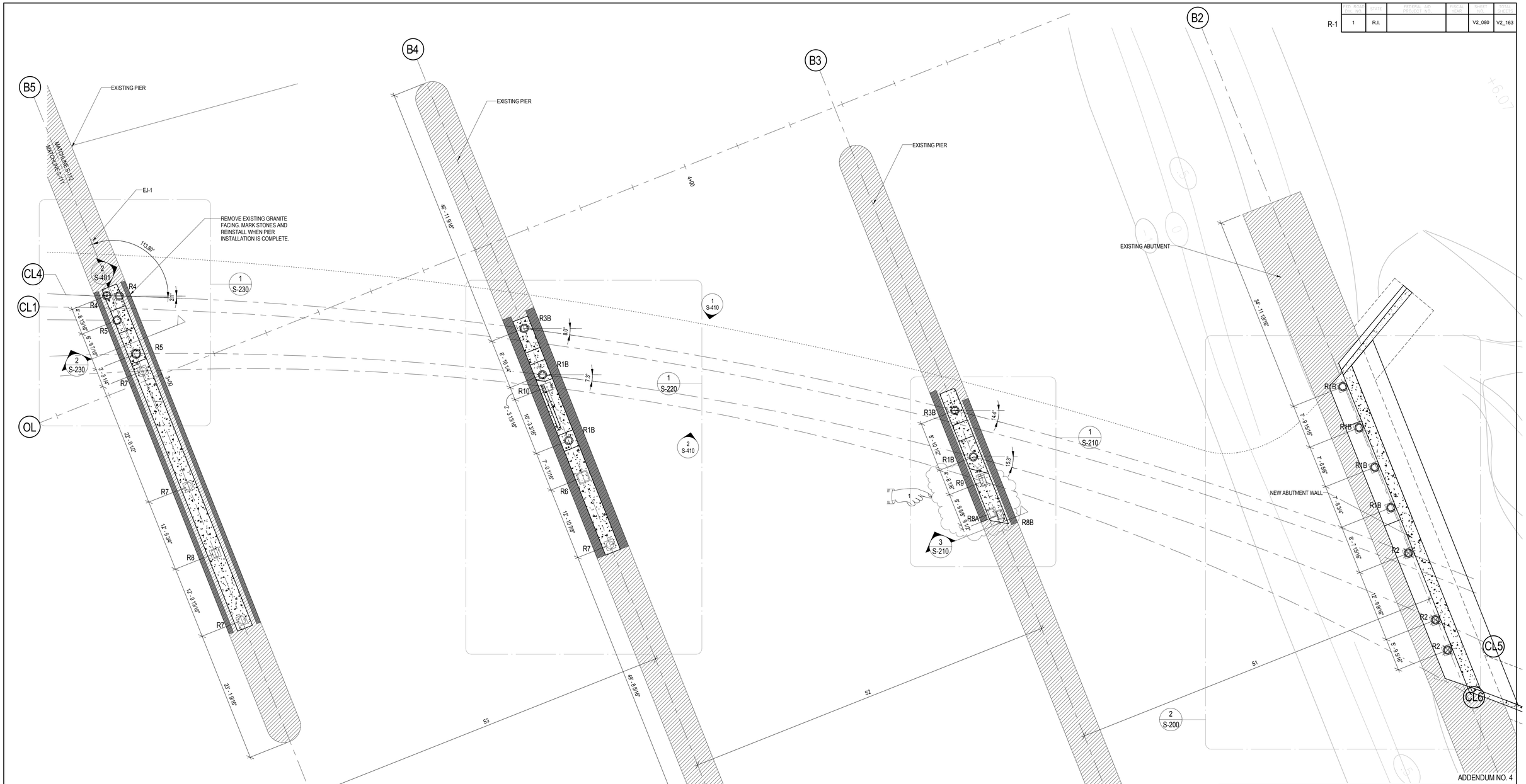

ADDENDUM NO. 4

NOTE:

1. NEW BRIDGE TO BE FOUNDED ON EXISTING BRIDGE PIERS.

REF DWG #	REFERENCE DRAWING NAME
A-141	RAILING LOCATION PLAN RAILING, ARCH, TYPE B & C- LOWER DECK
A-532	FISHING PIER RAILING SECTIONS & DETAILS

CDR MAGUIRE

100 BROADWAY,
23rd FLOOR NEW YORK,
NY 10005

Tel: 212 334 2025
Fax: 212 334 5528
web: www.burohappold.com

Buro Happold

BETA Group, Inc.
Engineers • Planners • Landscape Architects
Lincoln, RI - Norwood, MA - Hartford, CT

RHODE ISLAND
DEPARTMENT OF TRANSPORTATION

INTERSTATE 195

DESIGNED BY: ME
CHECKED: AN
DATE: 04/21/14
SHEET: V2_080
OF: V2_163

SCALE: 1/8" = 1'-0"

REVISIONS			REVISIONS		
NO.	DATE	BY	NO.	DATE	BY
1	6/14/2016	DF			

IMPROVEMENTS TO
INTERSTATE ROUTE 195
CONTRACT 16 VOLUME 2

PROVIDENCE RHODE ISLAND

EAST FOUNDATION PLAN

S-112

R-1	FED. ROAD PROJ. NO.	STATE	FEDERAL AID PROJECT NO.	FISCAL YEAR	SHEET NO.	TOTAL SHEETS
	1	R.I.			V2_081	V2_163

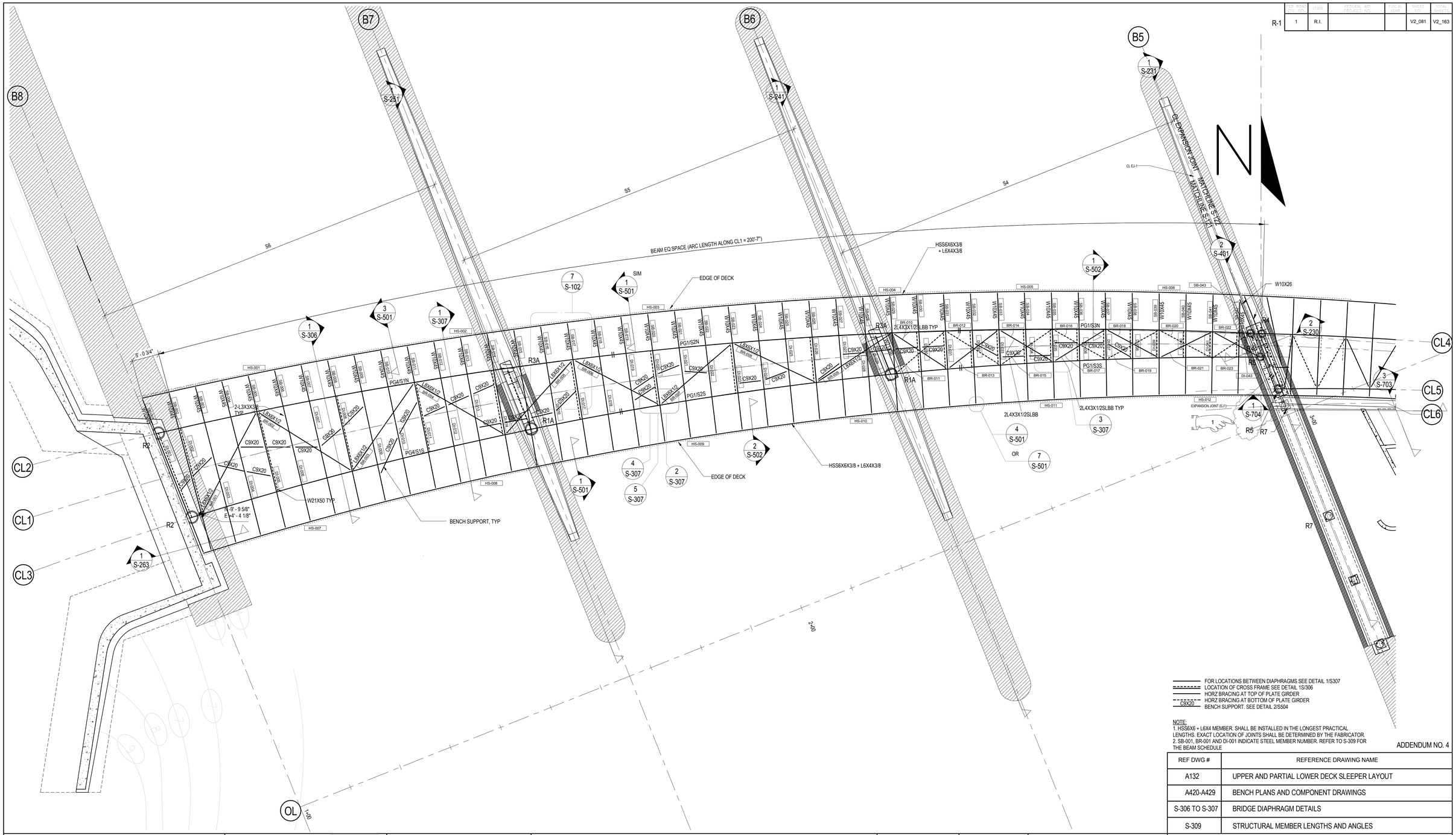

FOR LOCATIONS BETWEEN DIAPHRAGMS SEE DETAIL 1/S307
LOCATION OF CROSS FRAME SEE DETAIL 1S/306
HORZ BRACING AT TOP OF PLATE GIRDER
HORZ BRACING AT BOTTOM OF PLATE GIRDER
C9X20 — BENCH SUPPORT. SEE DETAIL 2/S504

NOTE:
1. HSS6X6 + L6X4 MEMBER. SHALL BE INSTALLED IN THE LONGEST PRACTICAL LENGTHS. EXACT LOCATION OF JOINTS SHALL BE DETERMINED BY THE FABRICATOR.
2. SB-001, BR-001 AND DI-001 INDICATE STEEL MEMBER NUMBER. REFER TO S-309 FOR THE BEAM SCHEDULE

ADDENDUM NO. 4

REF DWG #	REFERENCE DRAWING NAME
A132	UPPER AND PARTIAL LOWER DECK SLEEPER LAYOUT
A420-A429	BENCH PLANS AND COMPONENT DRAWINGS
S-306 TO S-307	BRIDGE DIAPHRAGM DETAILS
S-309	STRUCTURAL MEMBER LENGTHS AND ANGLES

CDR MAGUIRE

100 BROADWAY,
23rd FLOOR NEW YORK,
NY 10005

Tel: 212.334.2025
Fax: 212.334.5528
web: www.burohappold.com

Buro Happold

BETA Group, Inc.
Engineers • Planners • Landscape Architects
Lincoln, RI - Norwood, MA - Hartford, CT

RHODE ISLAND
DEPARTMENT OF TRANSPORTATION

INTERSTATE 195

DESIGNED BY: AN
CHECKED: CDL
DATE: 04/21/14
SHEET: V2_081
OF: V2_163

SCALE: 1/8" = 1'-0"

REVISIONS			REVISIONS		
NO.	DATE	BY	NO.	DATE	BY
1	6/14/2016	DF			

PROVIDENCE — IMPROVEMENTS TO INTERSTATE ROUTE 195 CONTRACT 16 VOLUME 2 — RHODE ISLAND

WEST FRAMING PLAN

S-121

R-1	CO. ROAD REV. NO.	STATE	FEDERAL AID PROJECT NO.	FISCAL YEAR	SHEET NO.	TOTAL SHEETS
	1	R.I.			V2_082	V2_163

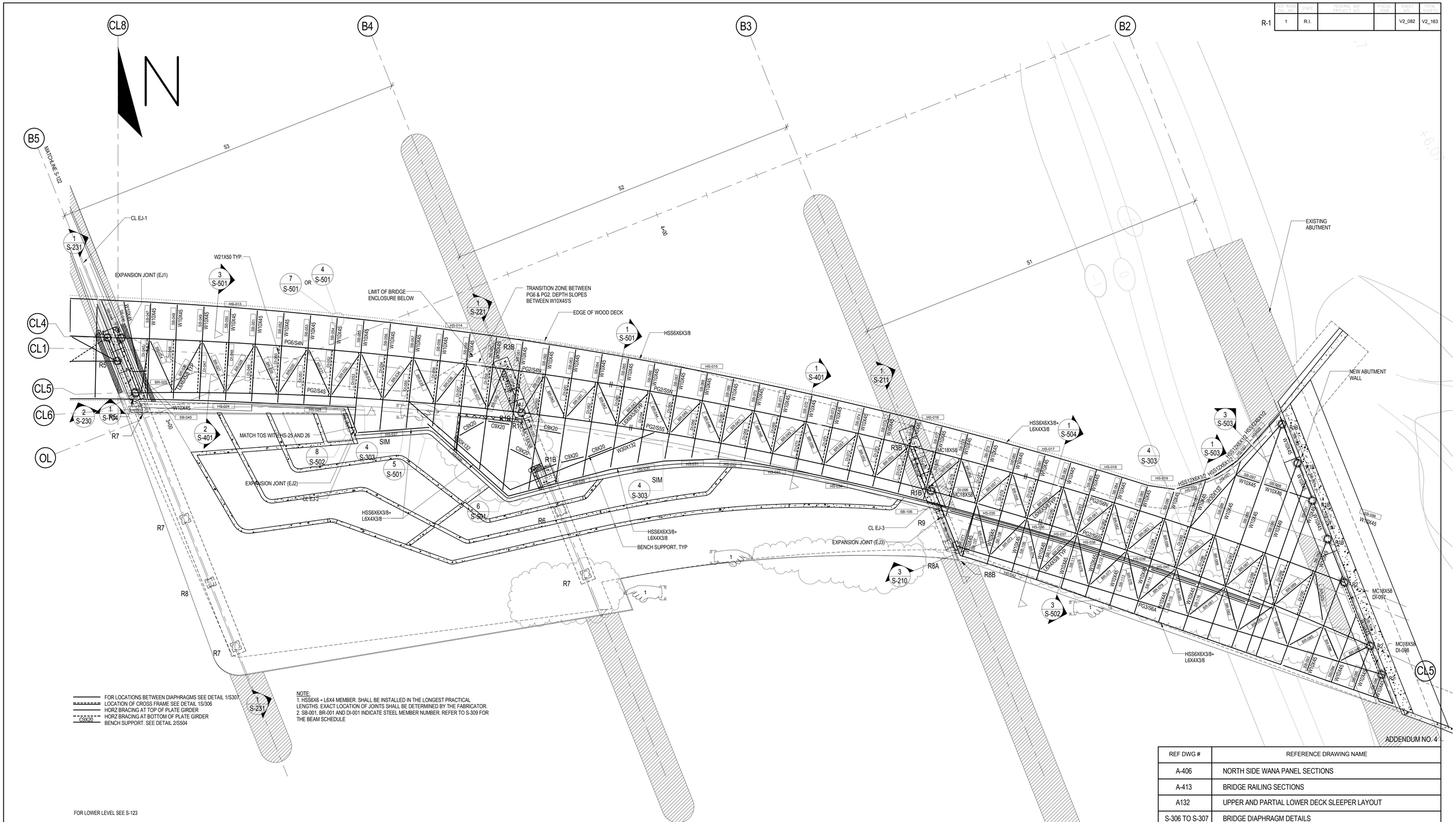

FOR LOCATIONS BETWEEN DIAPHRAGMS SEE DETAIL 1/S307
LOCATION OF CROSS FRAME SEE DETAIL 1S/306
HORZ BRACING AT TOP OF PLATE GIRDER
HORZ BRACING AT BOTTOM OF PLATE GIRDER
C9X20 BENCH SUPPORT. SEE DETAIL 2/S504

NOTE:
1. HSS6X6 + L6X4 MEMBER. SHALL BE INSTALLED IN THE LONGEST PRACTICAL LENGTHS. EXACT LOCATION OF JOINTS SHALL BE DETERMINED BY THE FABRICATOR.
2. SB-001, BR-001 AND DI-001 INDICATE STEEL MEMBER NUMBER. REFER TO S-309 FOR THE BEAM SCHEDULE

FOR LOWER LEVEL SEE S-123

REF DWG #	REFERENCE DRAWING NAME
A-406	NORTH SIDE WANA PANEL SECTIONS
A-413	BRIDGE RAILING SECTIONS
A132	UPPER AND PARTIAL LOWER DECK SLEEPER LAYOUT
S-306 TO S-307	BRIDGE DIAPHRAGM DETAILS

CDR MAGUIRE

100 BROADWAY,
23rd FLOOR NEW YORK,
NY 10005

Tel: 212 334 2025
Fax: 212 334 5528
web: www.burohappold.com

Buro Happold

BETA Group, Inc.
Engineers • Planners • Landscape Architects
Lincoln, RI - Norwood, MA - Hartford, CT

RHODE ISLAND
DEPARTMENT OF TRANSPORTATION

INTERSTATE 195

DESIGNED BY: AN
CHECKED: CDL
DATE: 04/21/14
SHEET: V2_082
OF: V2_163

SCALE: 1/8" = 1'-0"

REVISIONS			REVISIONS		
NO.	DATE	BY	NO.	DATE	BY
1	6/14/2016	DF			

PROVIDENCE — IMPROVEMENTS TO INTERSTATE ROUTE 195 CONTRACT 16 VOLUME 2 — RHODE ISLAND

EAST FRAMING PLAN

S-122

R-1	FED. ROAD PROJ. NO.	STATE	FEDERAL AID PROJECT NO.	FISCAL YEARS	SHEET NO.	TOTAL SHEETS
	1	R.I.			V2_083	V2_163

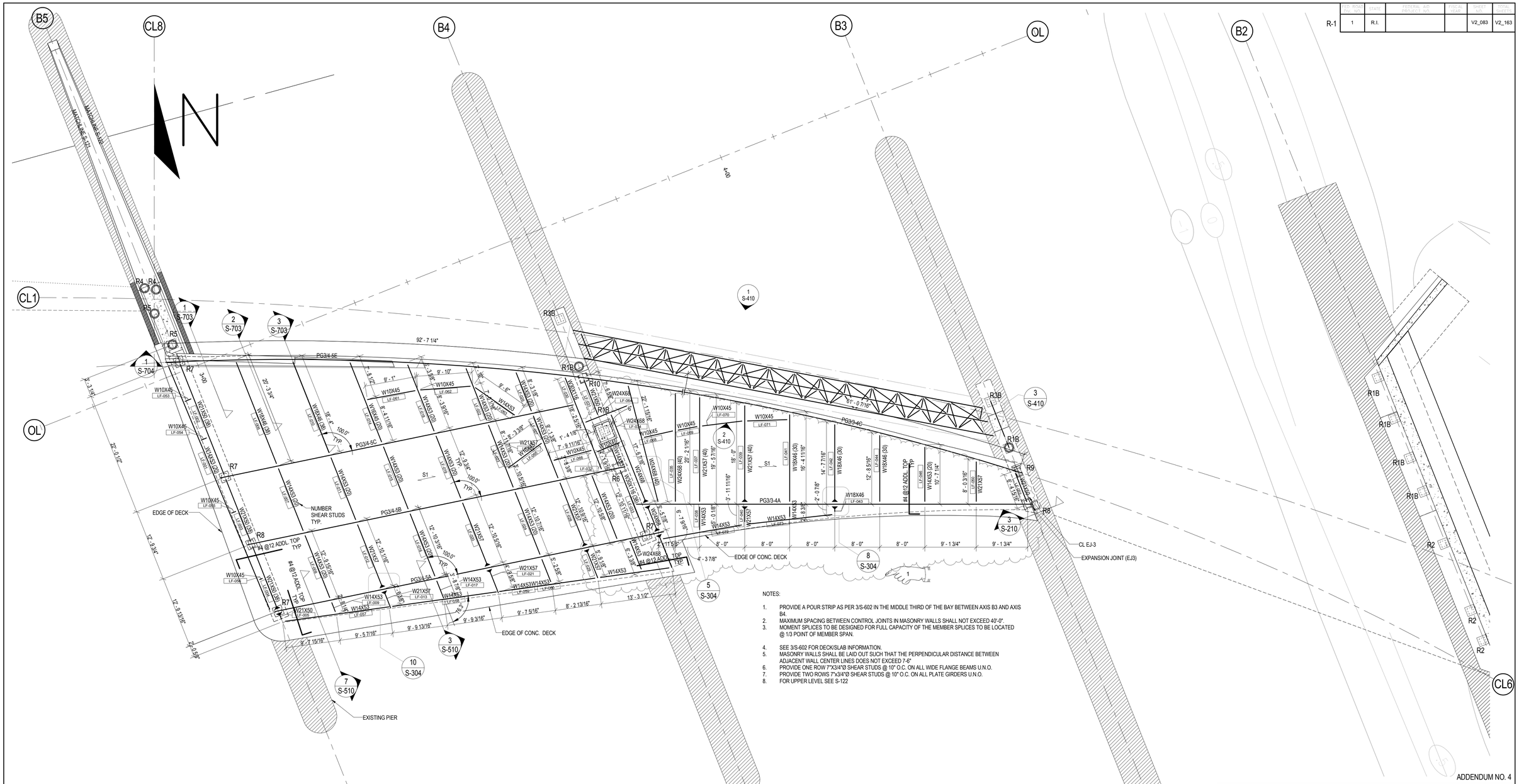

NOTES:

1. PROVIDE A POUR STRIP AS PER 3/S-602 IN THE MIDDLE THIRD OF THE BAY BETWEEN AXIS B3 AND AXIS B4.
2. MAXIMUM SPACING BETWEEN CONTROL JOINTS IN MASONRY WALLS SHALL NOT EXCEED 40'-0".
3. MOMENT SPLICES TO BE DESIGNED FOR FULL CAPACITY OF THE MEMBER SPLICES TO BE LOCATED @ 1/3 POINT OF MEMBER SPAN.
4. SEE 3/S-602 FOR DECK/SLAB INFORMATION.
5. MASONRY WALLS SHALL BE LAID OUT SUCH THAT THE PERPENDICULAR DISTANCE BETWEEN ADJACENT WALL CENTER LINES DOES NOT EXCEED 7'-6"
6. PROVIDE ONE ROW 7"X3/4"Ø SHEAR STUDS @ 10" O.C. ON ALL WIDE FLANGE BEAMS U.N.O.
7. PROVIDE TWO ROWS 7"x3/4"Ø SHEAR STUDS @ 10" O.C. ON ALL PLATE GIRDERS U.N.O.
8. FOR UPPER LEVEL SEE S-122

ADDENDUM NO. 4

REF DWG #	REFERENCE DRAWING NAME
A102	OVERALL LOWER BRIDGE PLAN
A103 TO A104	BRIDGE PLAN - LOWER PLATFORM - WEST & EAST
A130	LOWER DECK DRAINAGE PLAN AND DETAILS
A131	LOWER DECK SLEEPER LAYOUT

CDR MAGUIRE

100 BROADWAY,
23rd FLOOR NEW YORK,
NY 10005

Tel: 212.334 2025
Fax: 212.334 5528
web: www.burohappold.com

Buro Happold

BETA Group, Inc.
Engineers • Planners • Landscape Architects
Lincoln, RI - Norwood, MA - Hartford, CT

RHODE ISLAND
DEPARTMENT OF TRANSPORTATION

INTERSTATE 195

DESIGNED BY: AN
CHECKED: CDL
DATE: 04/21/14
SHEET: V2_083
OF: V2_163

SCALE: 1/8" = 1'-0"

REVISIONS			REVISIONS		
NO.	DATE	BY	NO.	DATE	BY
1	6/14/2016	DF			

PROVIDENCE

IMPROVEMENTS TO INTERSTATE ROUTE 195
CONTRACT 16 VOLUME 2

RHODE ISLAND

LOWER LEVEL FRAMING PLAN

S-123

R-1	FED. ROAD REGN. NO.	STATE	FEDERAL AID PROJECT NO.	FISCAL YEAR	SHEET NO.	TOTAL SHEETS
	1	R.I.			V2_084	V2_163

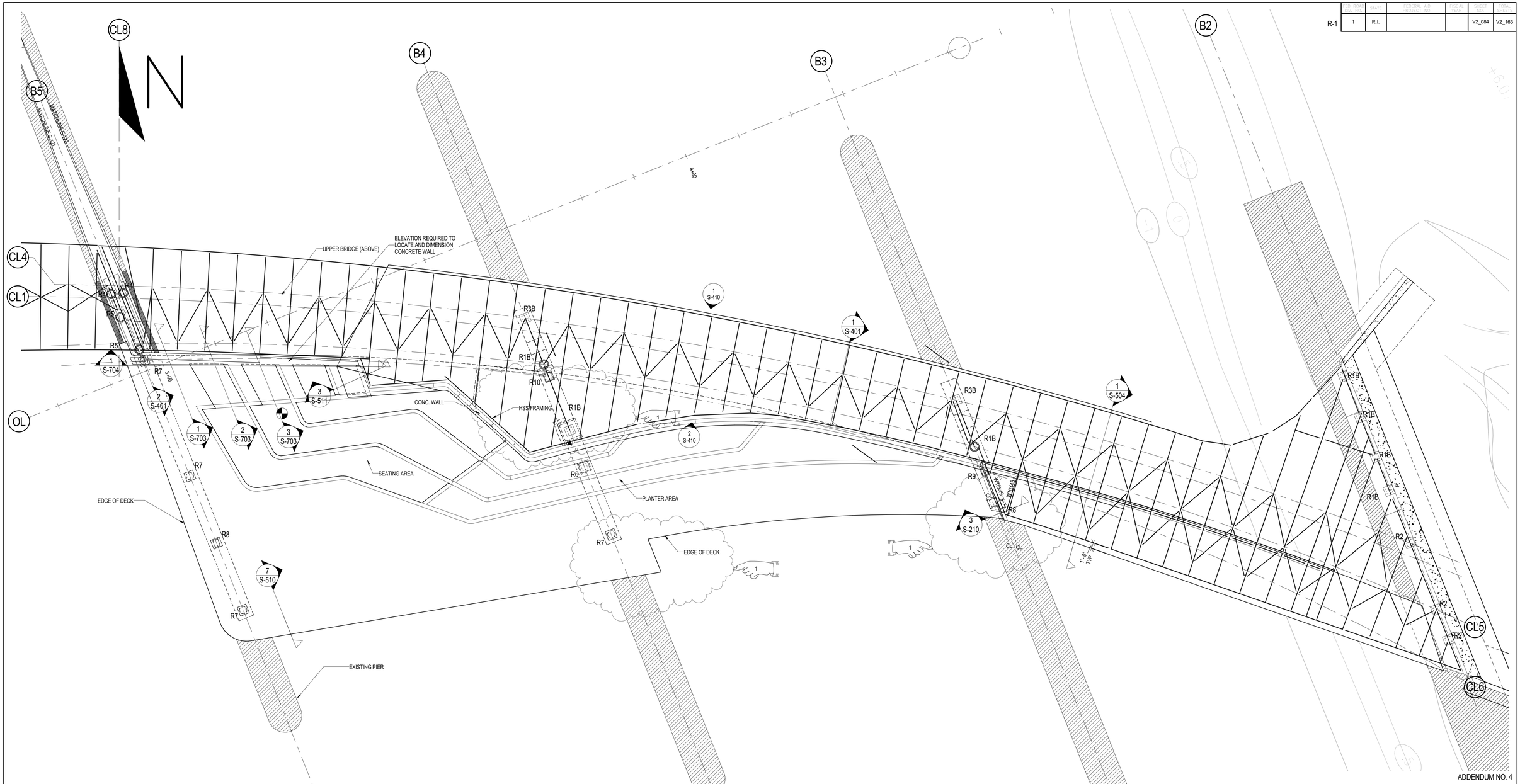

ADDENDUM NO. 4

REF DWG #	REFERENCE DRAWING NAME
A-130	LOWER DECK DRAINAGE PLAN AND SECTION
A-131	LOWER DECK SLEEPER LAYOUT
A-141	RAILING LOCATION PLAN RAILING, ARCH, TYPE B & C- LOWER DECK

CDR MAGUIRE

100 BROADWAY,
23rd FLOOR NEW YORK,
NY 10005

Tel: 212 334 2025
Fax: 212 334 5528
web: www.burohappold.com

Buro Happold

BETA Group, Inc.
Engineers • Planners • Landscape Architects
Lincoln, RI - Norwood, MA - Hartford, CT

RHODE ISLAND
DEPARTMENT OF TRANSPORTATION

INTERSTATE 195

DESIGNED BY: AN
CHECKED: EH
DATE: 09/22/14
SHEET: V2_084
OF: V2_163

SCALE: 1/8" = 1'-0"

REVISIONS			REVISIONS		
NO.	DATE	BY	NO.	DATE	BY
1	6/14/2016	DF			

PROVIDENCE

IMPROVEMENTS TO
INTERSTATE ROUTE 195
CONTRACT 16 VOLUME 2

RHODE ISLAND

OVERALL DECK PLAN

S-130

R-1	CO. ROAD ROUT. NO.	STATE	FEDERAL AID PROJECT NO.	FISCAL YEAR	SHEET NO.	TOTAL SHEETS
	1	R.I.			V2_085	V2_163

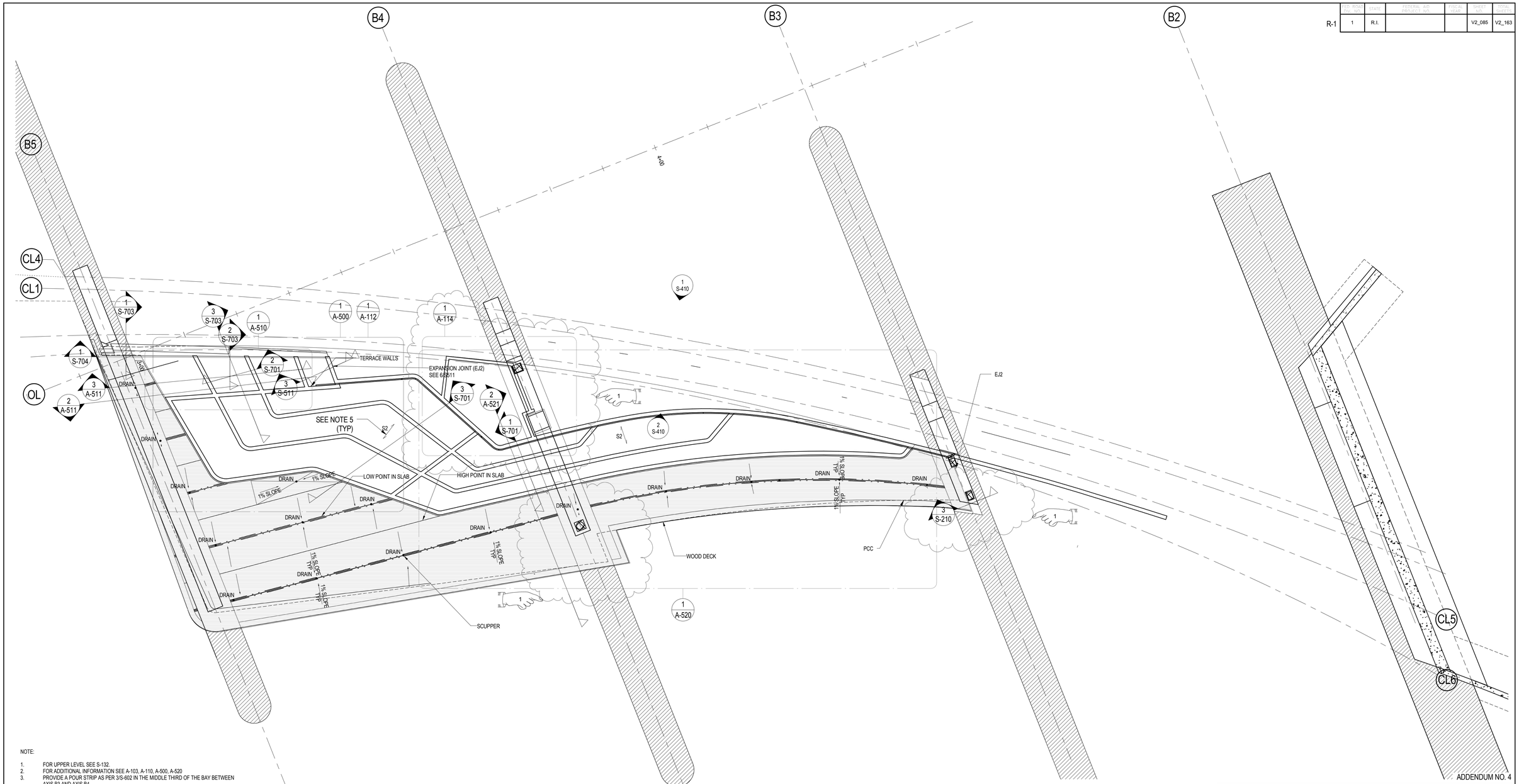

ADDENDUM NO. 4

NOTE:

1. FOR UPPER LEVEL SEE S-132.
2. FOR ADDITIONAL INFORMATION SEE A-103, A-110, A-500, A-520
3. PROVIDE A POUR STRIP AS PER 3/S-602 IN THE MIDDLE THIRD OF THE BAY BETWEEN AXIS B3 AND AXIS B4.
4. MAXIMUM SPACING BETWEEN CONTROL JOINTS IN MASONRY WALLS SHALL NOT EXCEED 40'-0".
5. SEE 3/S-602 FOR DECK/SLAB INFORMATION.
6. MASONRY WALLS SHALL BE LAID OUT SUCH THAT THE PERPENDICULAR DISTANCE BETWEEN ADJACENT WALL CENTER LINES DOES NOT EXCEED 7-6"

REF DWG #	REFERENCE DRAWING NAME	REF DWG #	REFERENCE DRAWING NAME
A-110	OVERALL UPPER DECK ENLARGED DECK JOINT PLANS	A-115	OVERALL LOWER DECK ENLARGED DECK JOINT PLANS
A-131	LOWER DECK SLEEPER LAYOUT	A-120	TERRACE DECK LAYOUT & ENLARGED PLANS
A-500	ENLARGED TERRACE PLAN SECTIONS AND DETAILS	A-130	LOWER DECK SLEEPER LAYOUT & DRAINAGE PLANS
A-520	ENLARGED PLANTER CMU PLAN, ELEVATION AND LANDSCAPE PLAN	A-133	TERRACE DRAINAGE PLAN AND SLIPPER LAYOUT

CDR MAGUIRE

100 BROADWAY,
23rd FLOOR NEW YORK,
NY 10005

Tel: 212.334.2025
Fax: 212.334.5528
web: www.burohappold.com

Buro Happold

BETA Group, Inc.
Engineers • Planners • Landscape Architects
Lincoln, RI - Norwood, MA - Hartford, CT

RHODE ISLAND
DEPARTMENT OF TRANSPORTATION

INTERSTATE 195

DESIGNED BY: AN
CHECKED: CDL
DATE: 04/21/14
SHEET: V2_085
OF: V2_163

SCALE: 1/8" = 1'-0"

REVISIONS			REVISIONS		
NO.	DATE	BY	NO.	DATE	BY
1	6/14/2016	DF			

PROVIDENCE — IMPROVEMENTS TO INTERSTATE ROUTE 195 CONTRACT 16 VOLUME 2 — RHODE ISLAND

LOWER DECK TOPPING AND TERRACE WALL LAYOUT

S-133

	FED. ROAD REGN. NO.	STATE	FEDERAL AID PROJECT NO.	FISCAL YEAR	SHEET NO.	TOTAL SHEETS
R-1	1	R.I.			V2_089	V2_163

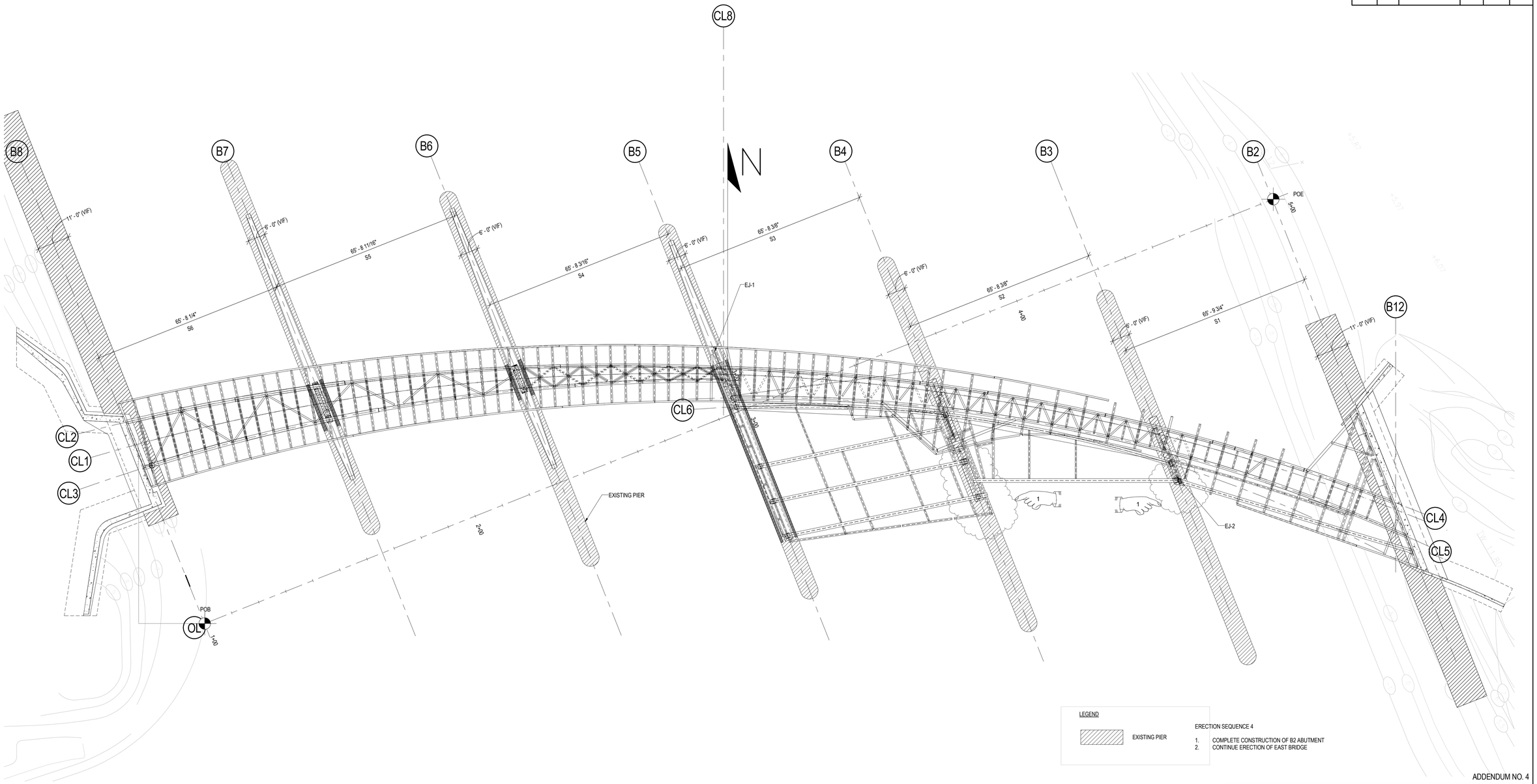

ADDENDUM NO. 4

REF DWG #	REFERENCE DRAWING NAME

CDR MAGUIRE

100 BROADWAY,
23rd FLOOR NEW YORK,
NY 10005

Tel: 212.334.2025

Fax: 212.334.5528

web: www.burohappold.com

Buro Happold

BETA Group, Inc.
Engineers • Planners • Landscape Architects
Lincoln, RI - Norwood, MA - Hartford, CT

RHODE ISLAND
DEPARTMENT OF TRANSPORTATION

INTERSTATE 195

DESIGNED BY: AN
CHECKED: MH
DATE: 11/19/14
SHEET: V2_089
OF: V2_163

SCALE: 1/16" = 1'-0"

REVISIONS			REVISIONS		
NO.	DATE	BY	NO.	DATE	BY
1	6/14/2016	DF			

PROVIDENCE

IMPROVEMENTS TO
INTERSTATE ROUTE 195
CONTRACT 16 VOLUME 2

RHODE ISLAND

ERECTION PLAN - 4

S-143

R-1	FED. ROAD REGN. NO.	STATE	FEDERAL AID PROJECT NO.	FISCAL YEAR	SHEET NO.	TOTAL SHEETS
	1	R.I.			V2_090	V2_163

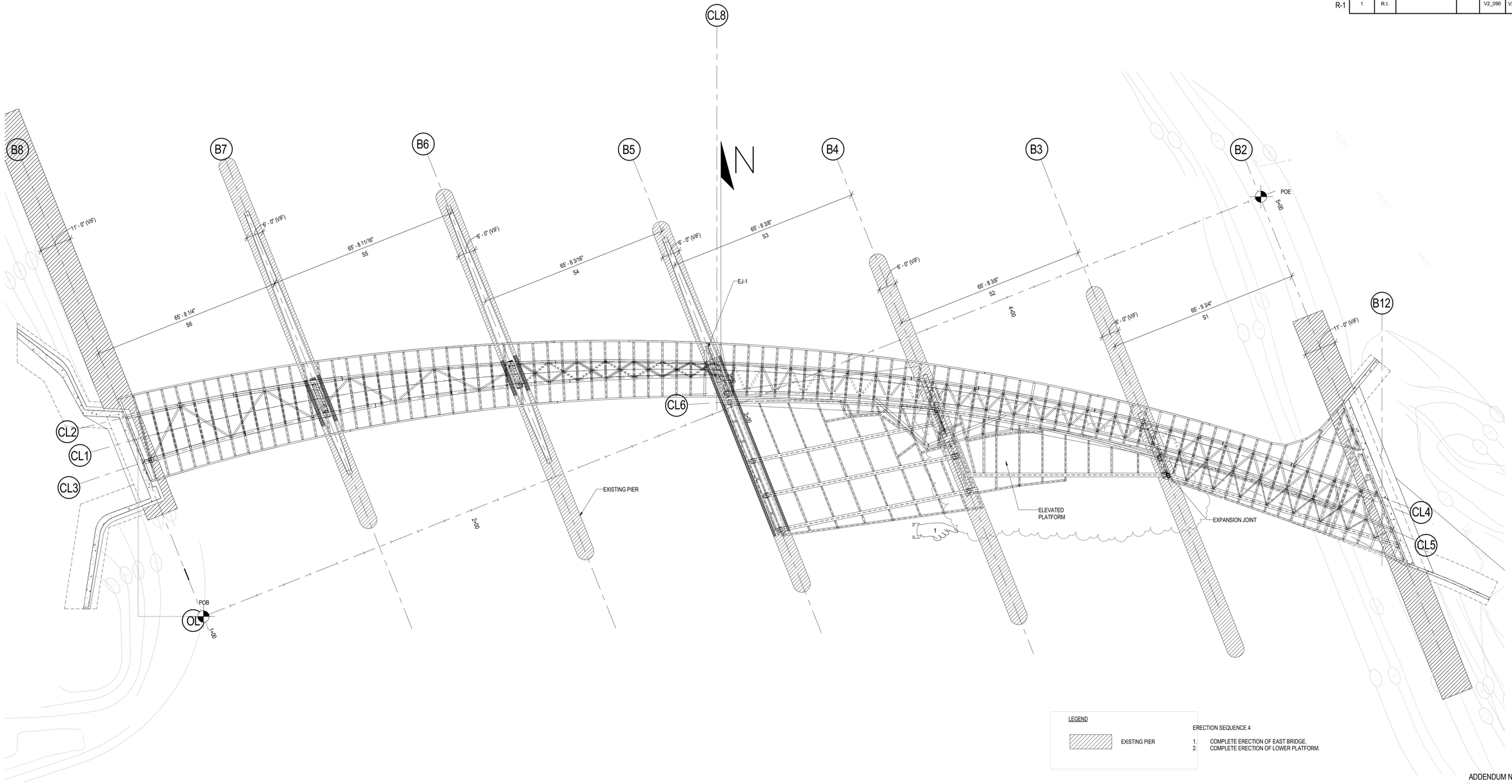

LEGEND

EXISTING PIER

ERECTION SEQUENCE 4

1. COMPLETE ERECTION OF EAST BRIDGE.
2. COMPLETE ERECTION OF LOWER PLATFORM.

ADDENDUM NO. 4

REF DWG #	REFERENCE DRAWING NAME

CDR MAGUIRE

100 BROADWAY,
23rd FLOOR NEW YORK,
NY 10005

Tel: 212.334.2025

Fax: 212.334.5528

web: www.burohappold.com

Buro Happold

BETA Group, Inc.
Engineers • Planners • Landscape Architects
Lincoln, RI - Norwood, MA - Hartford, CT

RHODE ISLAND
DEPARTMENT OF TRANSPORTATION

INTERSTATE 195

DESIGNED BY: ME
CHECKED: AN
DATE: 10/31/14
SHEET: V2_090
OF: V2_163

SCALE: 1/16" = 1'-0"

REVISIONS			REVISIONS		
NO.	DATE	BY	NO.	DATE	BY
1	6/14/2016	DF			

IMPROVEMENTS TO
INTERSTATE ROUTE 195
CONTRACT 16 VOLUME 2

PROVIDENCE RHODE ISLAND

ERECTION PLAN - 5

S-144

	FED. ROAD REGION NO.	STATE	FEDERAL AID PROJECT NO.	FISCAL YEAR	SHEET NO.	TOTAL SHEETS
R-1	1	R.I.			V2_091	V2_163

ADDENDUM NO. 4

REF DWG #	REFERENCE DRAWING NAME

CDR MAGUIRE

100 BROADWAY,
23rd FLOOR NEW YORK,
NY 10005

Tel: 212.334.2025
Fax: 212.334.5528
web: www.burohappold.com

Buro Happold

BETA Group, Inc.
Engineers • Planners • Landscape Architects
Lincoln, RI - Norwood, MA - Hartford, CT

RHODE ISLAND
DEPARTMENT OF TRANSPORTATION

INTERSTATE 195

DESIGNED BY: AN
CHECKED: MH
DATE: 10/31/14
SHEET: V2_091
OF: V2_163

SCALE: 1/16" = 1'-0"

REVISIONS			REVISIONS		
NO.	DATE	BY	NO.	DATE	BY
1	6/14/2016	DF			

IMPROVEMENTS TO
INTERSTATE ROUTE 195
CONTRACT 16 VOLUME 2

PROVIDENCE RHODE ISLAND

ERECTION PLAN - 6

S-145

	CO. ROAD REV. NO.	STATE	FEDERAL AID PROJECT NO.	FISCAL YEAR	SHEET NO.	TOTAL SHEETS
R-1	1	R.I.			V2_092	V2_163

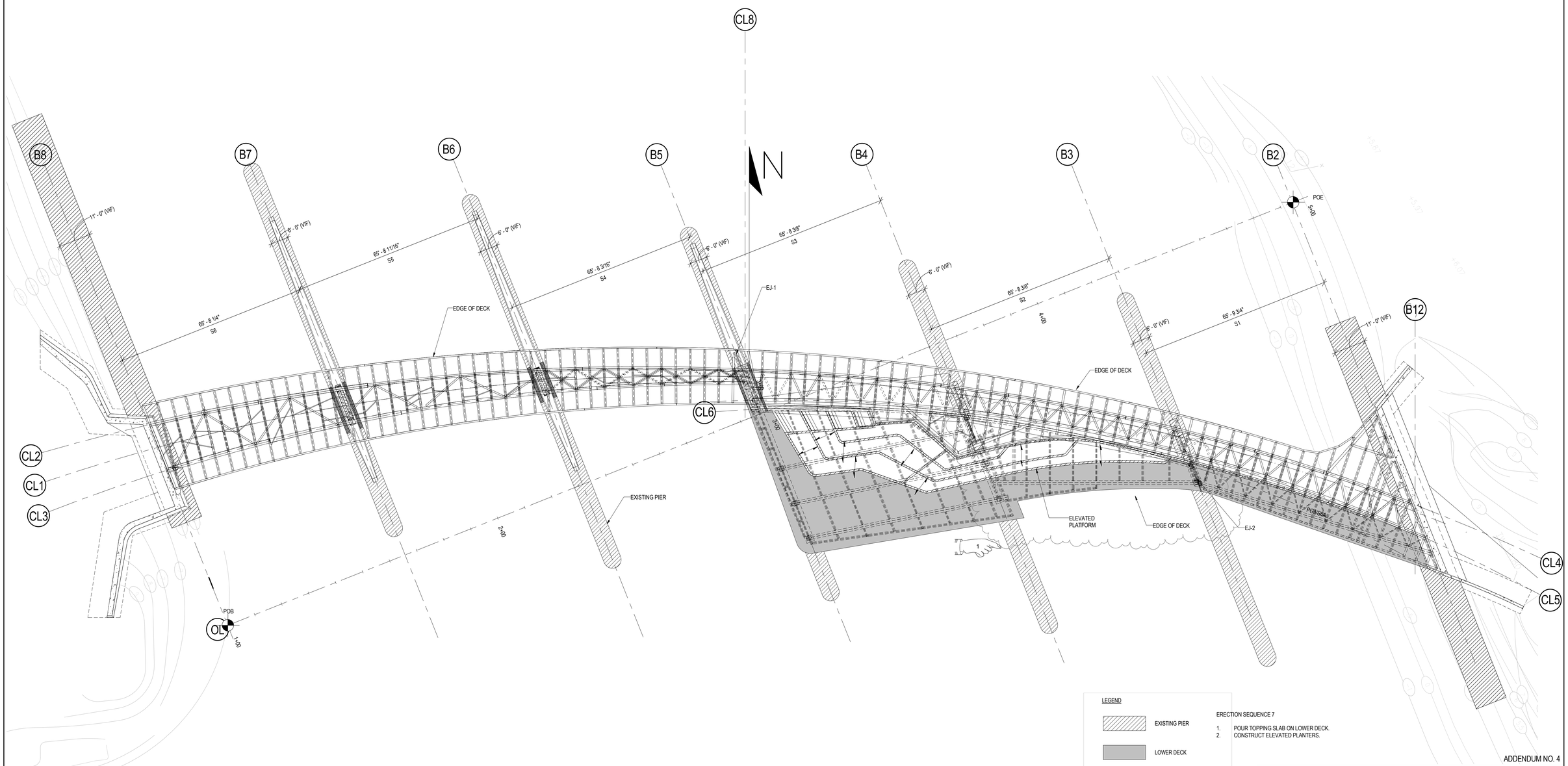

ADDENDUM NO. 4

REF DWG #	REFERENCE DRAWING NAME

CDR MAGUIRE

100 BROADWAY,
23rd FLOOR NEW YORK,
NY 10005

Tel: 212.334.2025
Fax: 212.334.5528
web: www.burohappold.com

Buro Happold

BETA Group, Inc.
Engineers • Planners • Landscape Architects
Lincoln, RI - Norwood, MA - Hartford, CT

RHODE ISLAND
DEPARTMENT OF TRANSPORTATION

INTERSTATE 195

DESIGNED BY: AN
CHECKED: MH
DATE: 10/31/14
SHEET: V2_092
OF: V2_163

SCALE: 1/16" = 1'-0"

REVISIONS			REVISIONS		
NO.	DATE	BY	NO.	DATE	BY
1	6/14/2016	DF			

IMPROVEMENTS TO
INTERSTATE ROUTE 195
CONTRACT 16 VOLUME 2

PROVIDENCE RHODE ISLAND

ERECTION PLAN - 7

S-146

	CO. ROAD REV. NO.	STATE	FEDERAL AID PROJECT NO.	FISCAL YEAR	SHEET NO.	TOTAL SHEETS
R-1	1	R.I.			V2_098	V2_163

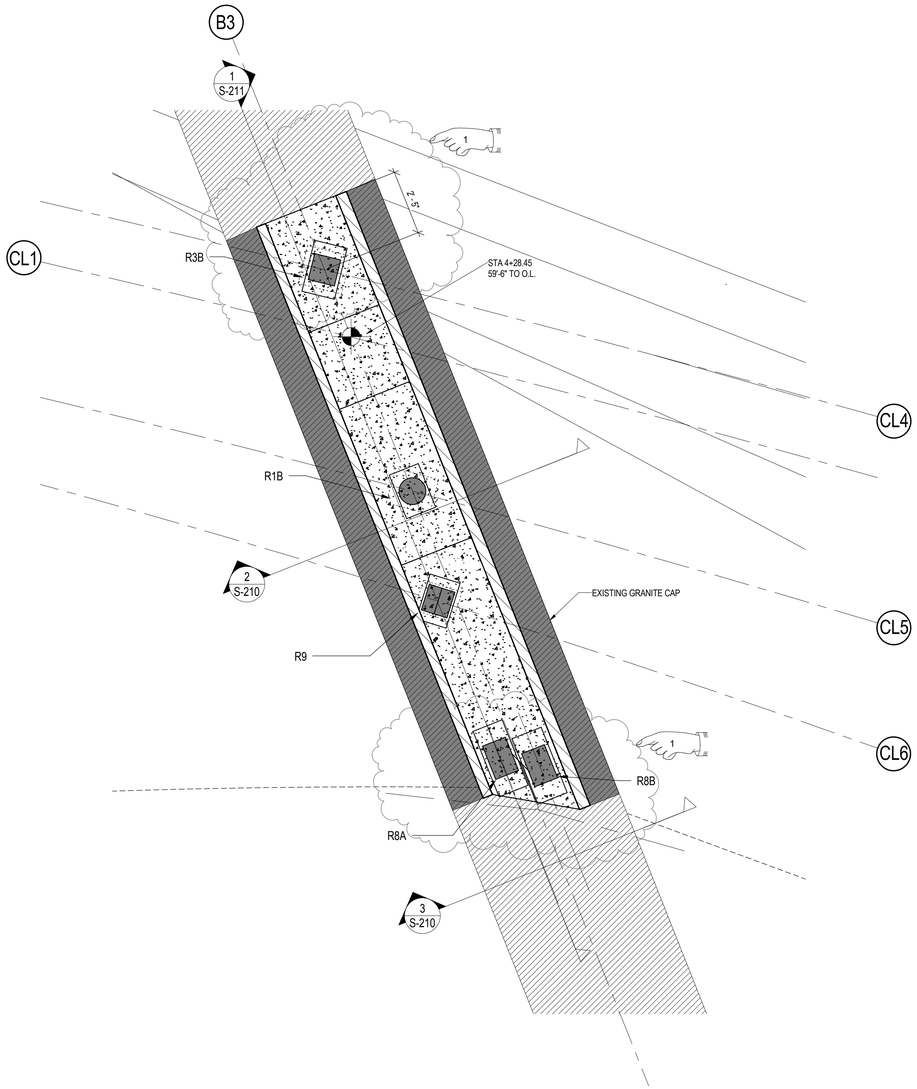

1 B3 - FIRST LEVEL WEST FOUNDATION PLAN

SCALE 3/8" = 1'-0"

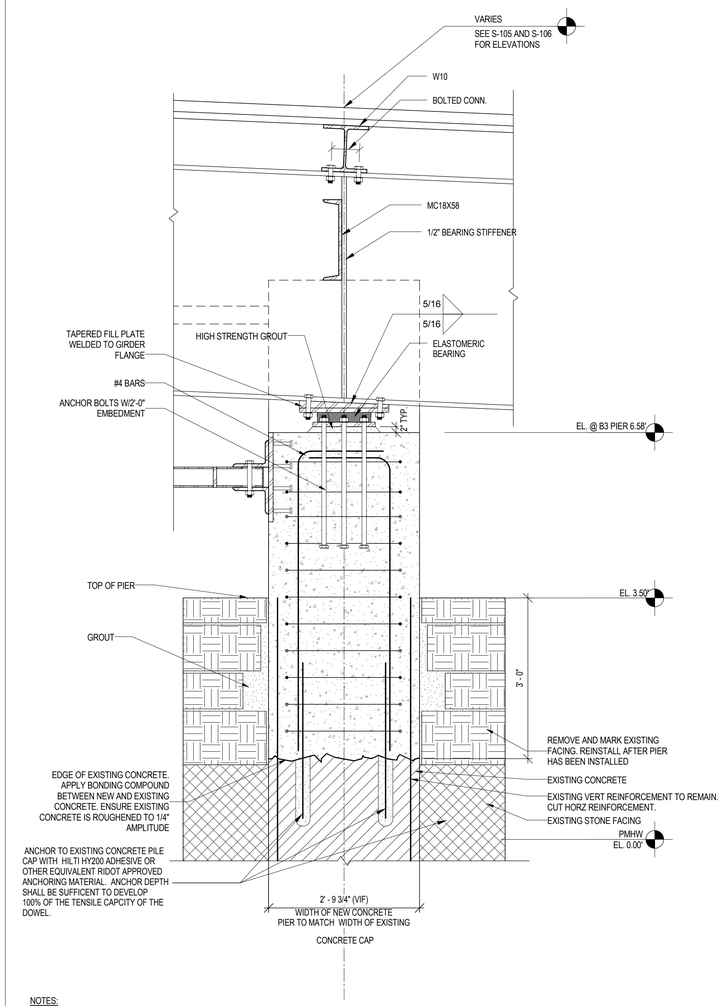

NOTES:
1. FOR BEARING DETAILS SEE S900 SERIES
2. SEE DETAIL 7/S511 FOR ADDITIONAL INFORMATION ON GRANITE INSTALLATION
3. PROVIDE WATERTIGHT FORMS
4. DEMO EXISTING PIER TO THE EXTENT AS SHOWN

2 B3 PIER DETAIL

SCALE 3/4" = 1'-0"

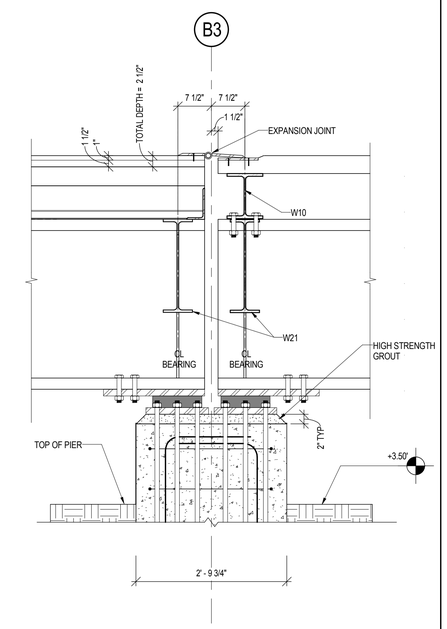

NOTES
1. FOR BEARING DETAILS SEE S900 SERIES

3 SECTION OF B3 EXPANSION JOINT 2

SCALE 3/4" = 1'-0"

ADDENDUM NO. 4

REF DWG #	REFERENCE DRAWING NAME

CDR MAGUIRE

100 BROADWAY,
23rd FLOOR NEW YORK,
NY 10005

Tel: 212.334.2025
Fax: 212.334.5528
web: www.burohappold.com

Buro Happold

BETA Group, Inc.
Engineers • Planners • Landscape Architects
Lincoln, RI - Norwood, MA - Hartford, CT

RHODE ISLAND
DEPARTMENT OF TRANSPORTATION

INTERSTATE 195

DESIGNED BY: SB
CHECKED: AN
DATE: 04/21/14
SHEET: V2_098
OF: V2_163

SCALE: As indicated

REVISIONS			REVISIONS		
NO.	DATE	BY	NO.	DATE	BY
1	6/14/2016	DF			

IMPROVEMENTS TO
INTERSTATE ROUTE 195
CONTRACT 16 VOLUME 2

PROVIDENCE RHODE ISLAND

B3 PIER

S-210

R-1	FED. ROAD REGION NO.	STATE	FEDERAL AID PROJECT NO.	FISCAL YEAR	SHEET NO.	TOTAL SHEETS
	1	R.I.			V2_099	V2_163

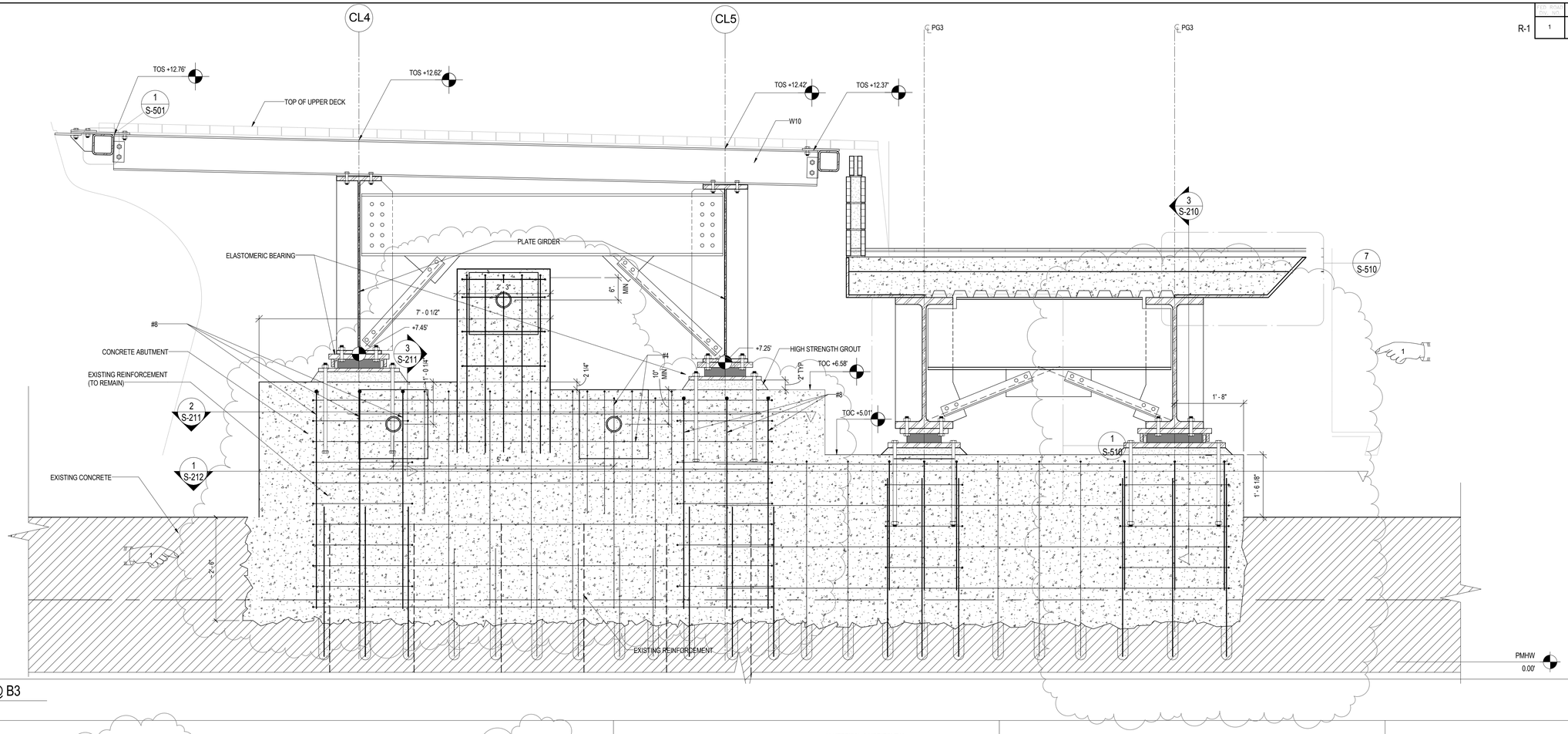

1 SECTION @ B3

SCALE 3/4" = 1'-0"

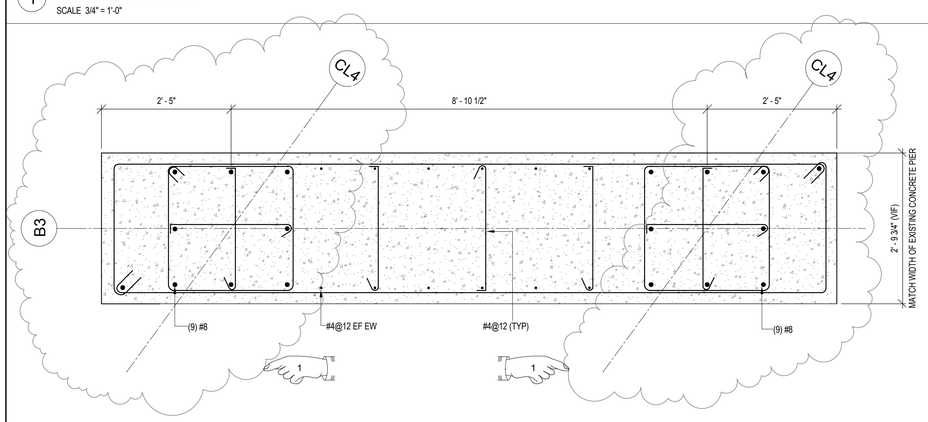

2 B3 PIER SECTION

SCALE 3/4" = 1'-0"

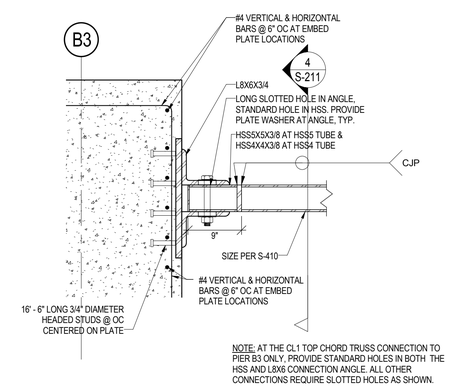

NOTE: AT THE CL1 TOP CHORD TRUSS CONNECTION TO PIER B3 ONLY, PROVIDE STANDARD HOLES IN BOTH THE HSS AND L8X6 CONNECTION ANGLE. ALL OTHER CONNECTIONS REQUIRE SLOTTED HOLES AS SHOWN.

3 TRUSS ANCHOR SECTION

SCALE 1" = 1'-0"

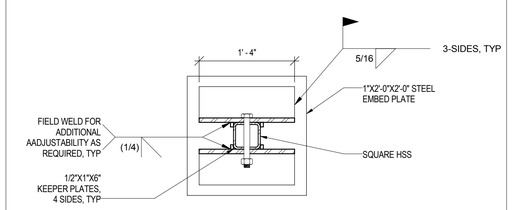

4 TRUSS ANCHOR DETAIL

SCALE 1" = 1'-0"

ADDENDUM NO. 4

REF DWG #	REFERENCE DRAWING NAME
A-406	NORTH SIDE WANA PANEL SECTIONS

CDR MAGUIRE

100 BROADWAY,
23rd FLOOR NEW YORK,
NY 10005

Tel: 212.334 2025
Fax: 212.334 5528
web: www.burohappold.com

Buro Happold

BETA Group, Inc.
Engineers • Planners • Landscape Architects
Lincoln, RI - Norwood, MA - Hartford, CT

RHODE ISLAND
DEPARTMENT OF TRANSPORTATION

INTERSTATE 195

DESIGNED BY: SB
CHECKED: AN
DATE: 04/21/14
SHEET: V2_099
OF: V2_163

SCALE: As incdated

REVISIONS			REVISIONS		
NO.	DATE	BY	NO.	DATE	BY
1	6/14/2016	DF			

PROVIDENCE — IMPROVEMENTS TO INTERSTATE ROUTE 195 CONTRACT 16 VOLUME 2 — RHODE ISLAND

B3 PIER DETAILS

S-211

	LD. ROAD REV. NO.	STATE	FEDERAL AID PROJECT NO.	FISCAL YEAR	SHEET NO.	TOTAL SHEETS
R-1	1	R.I.			V2_100	V2_163

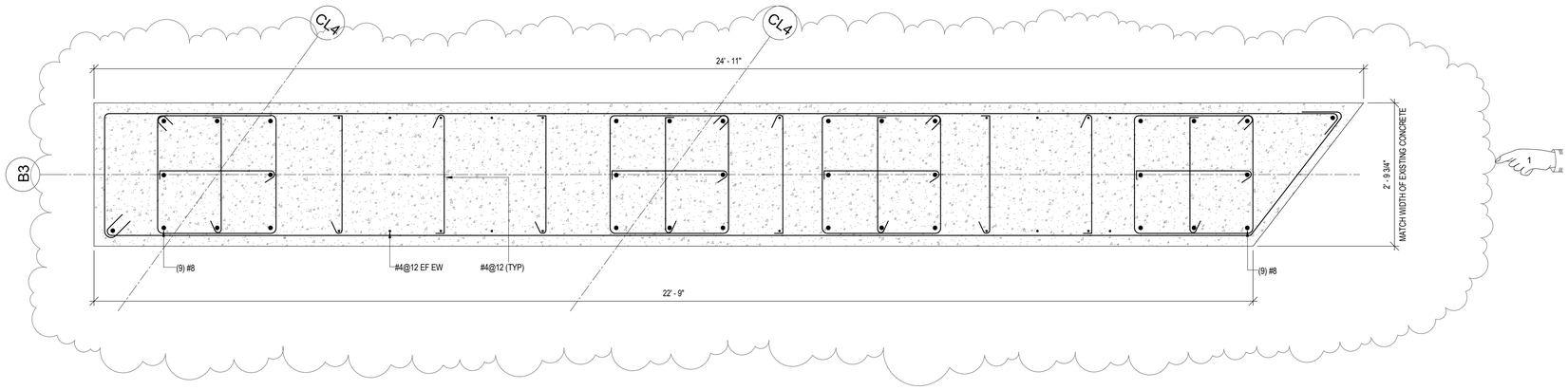

1 B3 PIER SECTION 2

SCALE 3/4" = 1'-0"

ADDENDUM NO. 4

REF DWG #	REFERENCE DRAWING NAME

CDR MAGUIRE

100 BROADWAY,
23rd FLOOR NEW YORK,
NY 10005

Tel: 212 334 2025

Fax: 212 334 5528

web: www.burohappold.com

Buro Happold

BETA Group, Inc.
Engineers • Planners • Landscape Architects
Lincoln, RI - Norwood, MA - Hartford, CT

RHODE ISLAND
DEPARTMENT OF TRANSPORTATION

INTERSTATE 195

DESIGNED BY: Designer
CHECKED: Checker
DATE: 04/20/16
SHEET: V2_100
OF: V2_163

SCALE: 3/4" = 1'-0"

REVISIONS			REVISIONS		
NO.	DATE	BY	NO.	DATE	BY
1	6/14/2016	DF			

IMPROVEMENTS TO
INTERSTATE ROUTE 195
CONTRACT 16 VOLUME 2

PROVIDENCE RHODE ISLAND

B3 PIER SECTION 2

S-212

R-1	FED. ROAD REGN. NO.	STATE	FEDERAL AID PROJECT NO.	FISCAL YEAR	SHEET NO.	TOTAL SHEETS
	1	R.I.			V2_102	V2_163

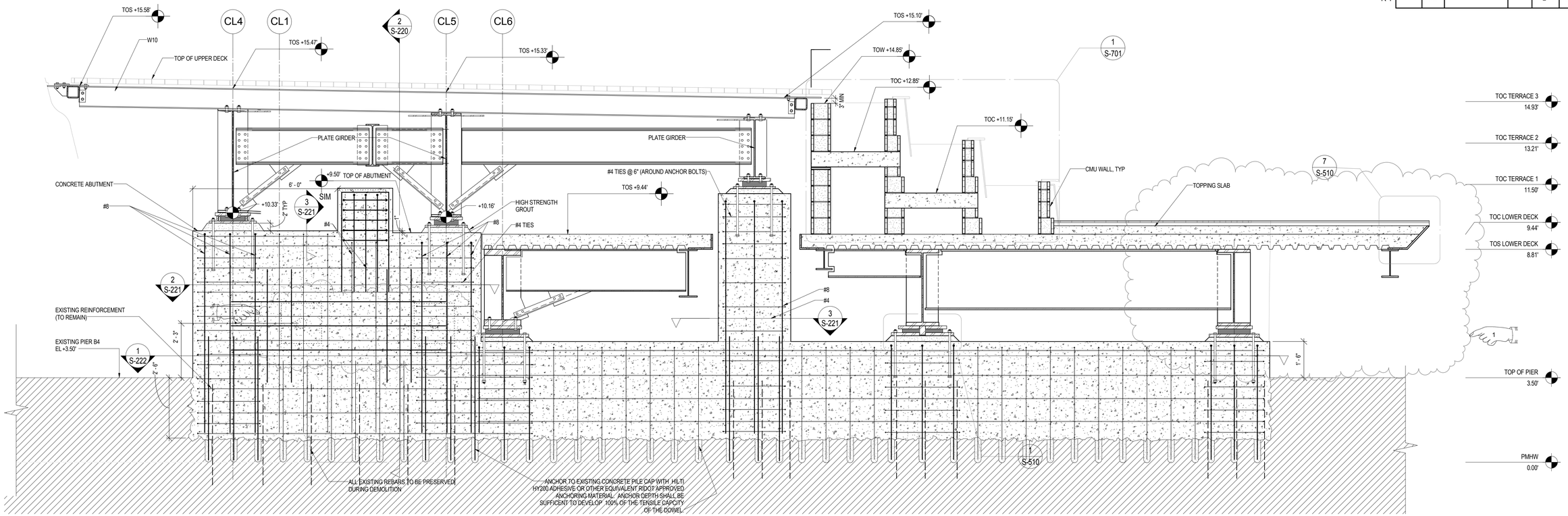

1 SECTION @ B4

SCALE 1/2" = 1'-0"

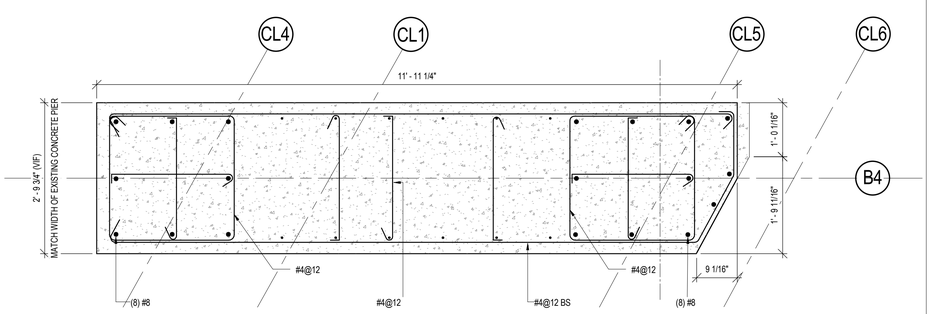

2 B4 PIER SECTION

SCALE 3/4" = 1'-0"

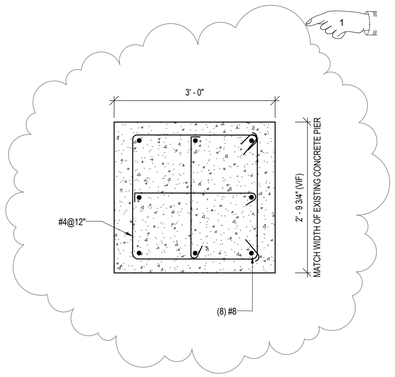

3 B4 PIER SECTION 2

SCALE 3/4" = 1'-0"

ADDENDUM NO. 4

REF DWG #	REFERENCE DRAWING NAME
A-406	NORTH SIDE WANA PANEL SECTIONS
A-521	ENLARGED PLANTER SECTIONS & DETAILS
A-522	TERRACE WALL SECTIONS & DETAILS

CDR MAGUIRE

100 BROADWAY,
23rd FLOOR NEW YORK,
NY 10005

Tel: 212 334 2025
Fax: 212 334 5528
web: www.burohappoldt.com

Buro Happold

BETA Group, Inc.
Engineers • Planners • Landscape Architects
Lincoln, RI - Norwood, MA - Hartford, CT

RHODE ISLAND
DEPARTMENT OF TRANSPORTATION

INTERSTATE 195

DESIGNED BY: SB
CHECKED: AN
DATE: 04/21/14
SHEET: V2_102
OF: V2_163

SCALE: As indicated

REVISIONS			REVISIONS		
NO.	DATE	BY	NO.	DATE	BY
1	6/14/2016	DF			

IMPROVEMENTS TO
INTERSTATE ROUTE 195
CONTRACT 16 VOLUME 2

PROVIDENCE RHODE ISLAND

B4 PIER DETAILS

S-221

R-1	CO. ROAD PROV. NO.	STATE	FEDERAL AID PROJECT NO.	FISCAL YEAR	SHEET NO.	TOTAL SHEETS
	1	R.I.			V2_113	V2_163

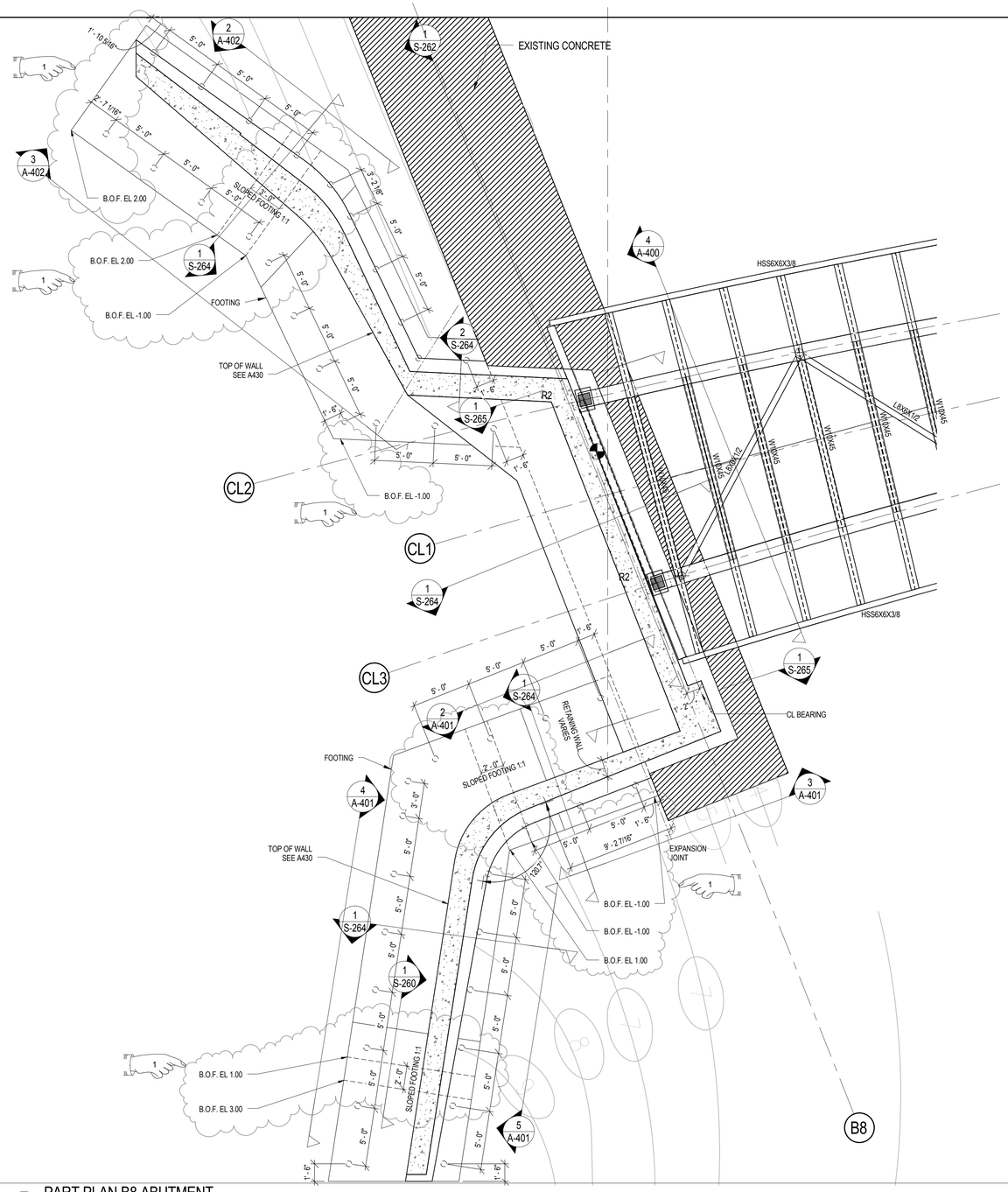

2 PART PLAN B8 ABUTMENT

SCALE 3/16" = 1'-0"

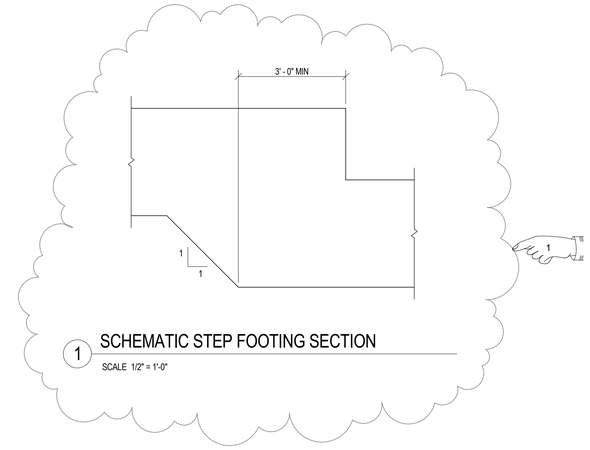

1 SCHEMATIC STEP FOOTING SECTION

SCALE 1/2" = 1'-0"

NOTE:
BOF INDICATES BOTTOM OF FOOTING.

ADDENDUM NO. 4

REF DWG #	REFERENCE DRAWING NAME
A-440	WEST ABUTMENT WALLS PLAN & ELEVATIONS

CDR MAGUIRE

100 BROADWAY,
23rd FLOOR NEW YORK,
NY 10005

Tel: 212 334 2025
Fax: 212 334 5528
web: www.burohappold.com

Buro Happold

BETA Group, Inc.
Engineers • Planners • Landscape Architects
Lincoln, RI - Norwood, MA - Hartford, CT

RHODE ISLAND
DEPARTMENT OF TRANSPORTATION

INTERSTATE 195

DESIGNED BY: Designer
CHECKED: Checker
DATE: 10/10/14
SHEET: V2_113
OF: V2_163

SCALE: As incidated

REVISIONS			REVISIONS		
NO.	DATE	BY	NO.	DATE	BY
1	6/14/2016	DF			

IMPROVEMENTS TO
INTERSTATE ROUTE 195
PROVIDENCE CONTRACT 16 VOLUME 2 RHODE ISLAND

PART PLAN - B8 ABUTMENTS

S-260

R-1	CO. ROAD REV. NO.	STATE	FEDERAL AID PROJECT NO.	FISCAL YEAR	SHEET NO.	TOTAL SHEETS
	1	R.I.			V2_114	V2_163

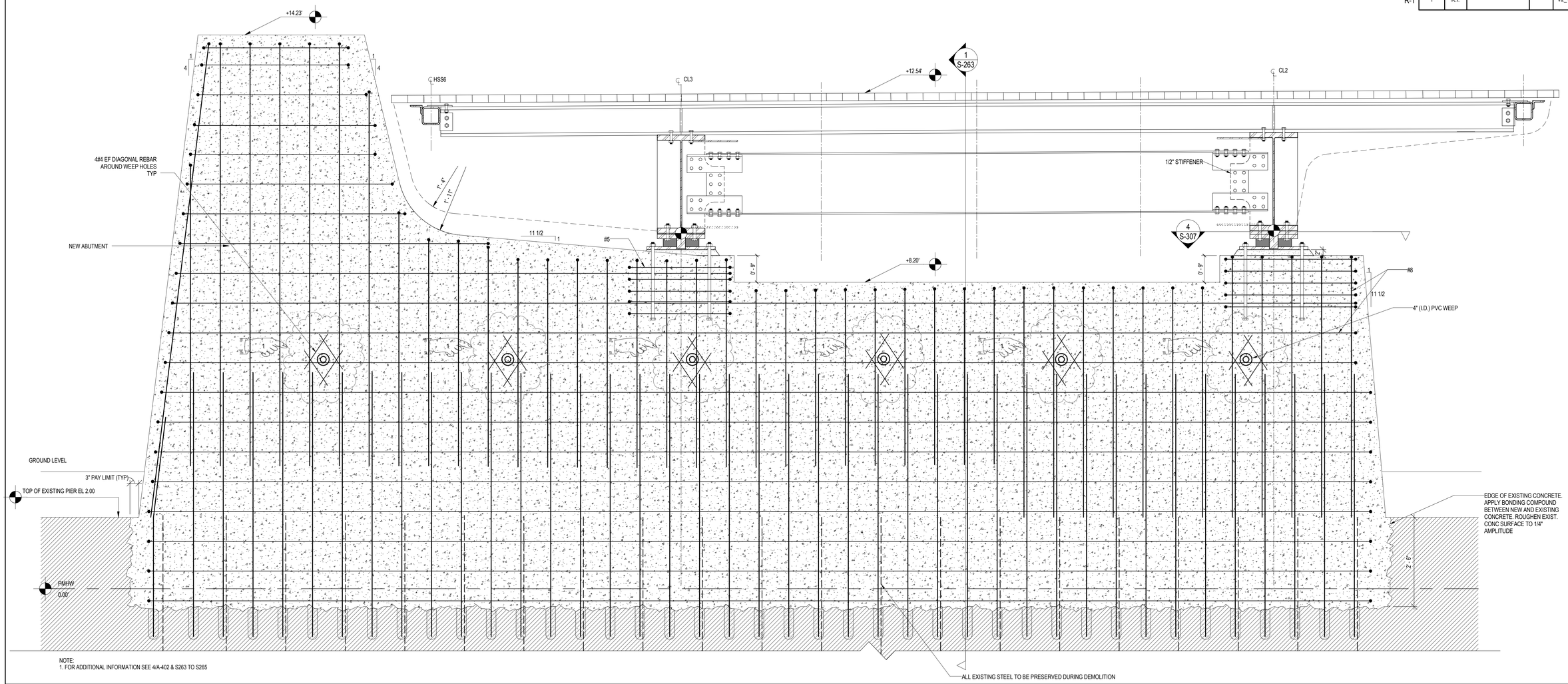

NOTE:
1. FOR ADDITIONAL INFORMATION SEE 4/A-402 & S263 TO S265

1 WEST ABUTMENT SECTION

SCALE 3/4" = 1'-0"

ADDENDUM NO. 4

REF DWG #	REFERENCE DRAWING NAME
A-403	WEST ABUTMENT WALLS PLAN & ELEVATIONS

CDR MAGUIRE

100 BROADWAY,
23rd FLOOR NEW YORK,
NY 10005

Tel: 212 334 2025
Fax: 212 334 5528
web: www.burohappold.com

Buro Happold

BETA Group, Inc.
Engineers • Planners • Landscape Architects
Lincoln, RI - Norwood, MA - Hartford, CT

RHODE ISLAND
DEPARTMENT OF TRANSPORTATION

INTERSTATE 195

DESIGNED BY: ME
CHECKED: AN
DATE: 04/21/14
SHEET: V2_114
OF: V2_163

SCALE: As incidated .

REVISIONS			REVISIONS		
NO.	DATE	BY	NO.	DATE	BY
1	6/14/2016	DF			

IMPROVEMENTS TO
INTERSTATE ROUTE 195
CONTRACT 16 VOLUME 2

PROVIDENCE RHODE ISLAND

B8 ABUTMENT ELEVATION - 1

S-261

R-1	FED. ROAD REGN. NO.	STATE	FEDERAL AID PROJECT NO.	FISCAL YEAR	SHEET NO.	TOTAL SHEETS
	1	R.I.			V2_121	V2_163

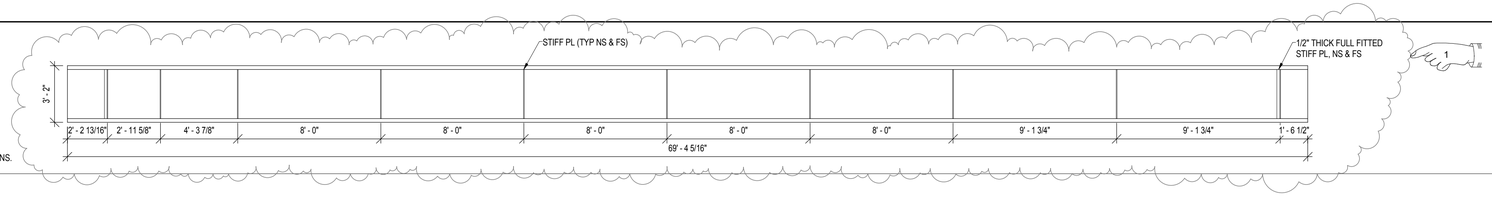

NOTES
1. SEE SHEET S-303 FOR PLATE GIRDER SIZE AND STIFFENER PLATE DIMENSIONS.

1 PG3/3-4A ELEVATION

SCALE 1/4" = 1'-0"

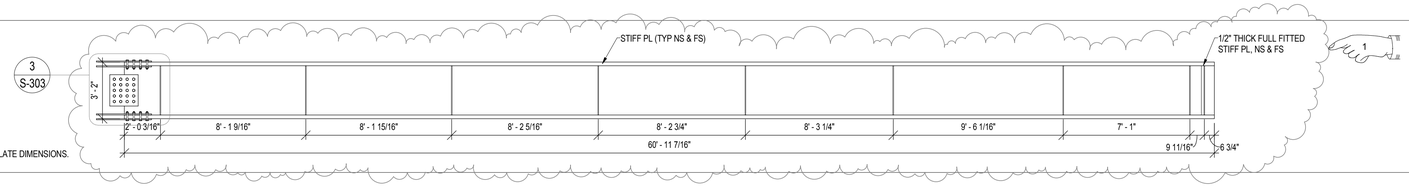

NOTES
1. SEE SHEET S-303 FOR PLATE GIRDER SIZE AND STIFFENER PLATE DIMENSIONS.

2 PG3/3-4C ELEVATION

SCALE 1/4" = 1'-0"

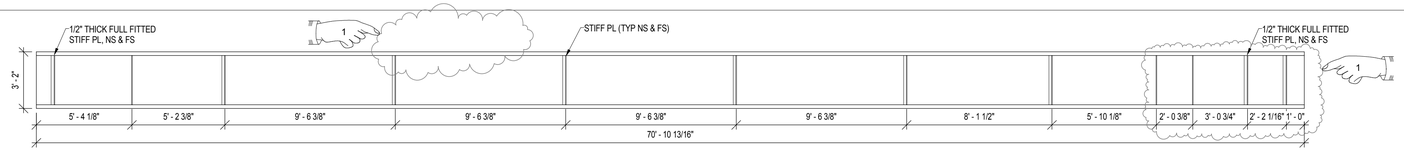

NOTES
1. SEE SHEET S-303 FOR PLATE GIRDER SIZE AND STIFFENER PLATE DIMENSIONS.

3 PG3/4-5A ELEVATION

SCALE 1/4" = 1'-0"

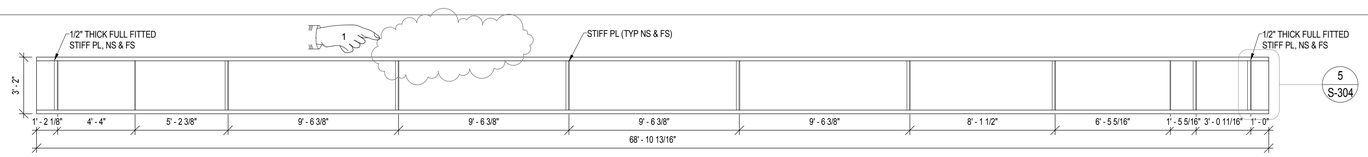

NOTES
1. SEE SHEET S-303 FOR PLATE GIRDER SIZE AND STIFFENER PLATE DIMENSIONS.

4 PG3/4-5B ELEVATION

SCALE 1/4" = 1'-0"

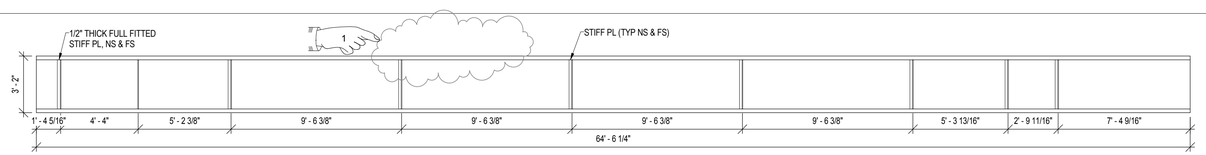

NOTES
1. SEE SHEET S-303 FOR PLATE GIRDER SIZE AND STIFFENER PLATE DIMENSIONS.

5 PG3/4-5C ELEVATION

SCALE 1/4" = 1'-0"

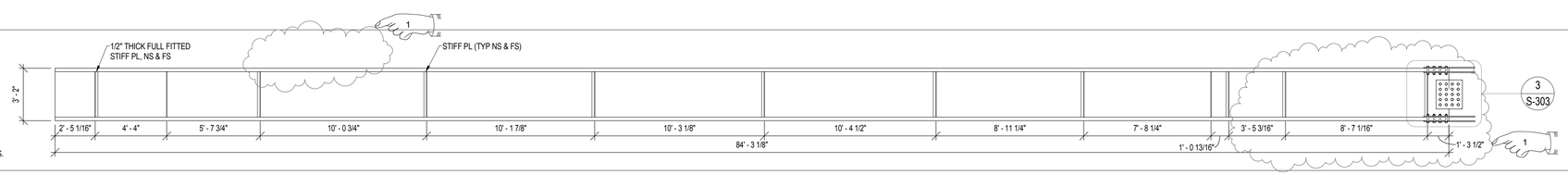

NOTES
1. SEE SHEET S-303 FOR PLATE GIRDER SIZE AND STIFFENER PLATE DIMENSIONS.

6 PG3/4-5E ELEVATION

SCALE 1/4" = 1'-0"

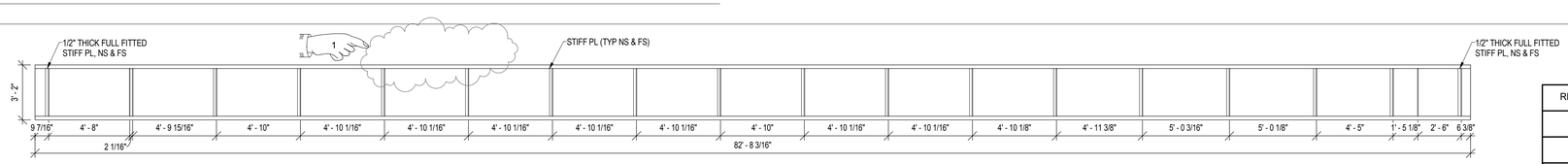

NOTES
1. SEE SHEET S-303 FOR PLATE GIRDER SIZE AND STIFFENER PLATE DIMENSIONS.

7 PG3/S6A ELEVATION

SCALE 1/4" = 1'-0"

ADDENDUM NO. 4

REF DWG #	REFERENCE DRAWING NAME

CDR MAGUIRE

100 BROADWAY,
23rd FLOOR NEW YORK,
NY 10005

Tel: 212.334.2025
Fax: 212.334.5528
web: www.burohappold.com

Buro Happold

BETA Group, Inc.
Engineers • Planners • Landscape Architects
Lincoln, RI - Norwood, MA - Hartford, CT

RHODE ISLAND
DEPARTMENT OF TRANSPORTATION

INTERSTATE 195

DESIGNED BY: Designer
CHECKED: Checker
DATE: 03/19/15
SHEET: V2_121
OF: V2_163

SCALE: 1/4" = 1'-0"

REVISIONS			REVISIONS		
NO.	DATE	BY	NO.	DATE	BY
1	6/14/2016	DF			

IMPROVEMENTS TO INTERSTATE ROUTE 195
CONTRACT 16 VOLUME 2

PROVIDENCE RHODE ISLAND

LOWER LEVEL GIRDER ELEVATIONS

S-302.2

R-1	CO. ROAD REV. NO.	STATE	FEDERAL AID PROJECT NO.	FISCAL YEAR	SHEET NO.	TOTAL SHEETS
	1	R.I.			V2_122	V2_163

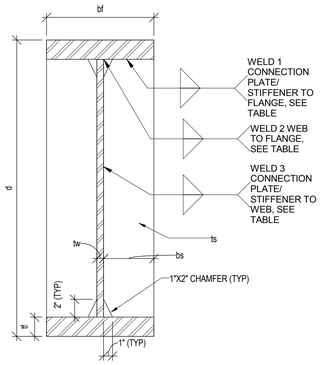

GIRDER	d (in)	tw (in)	tf (in)	bf (in)	ts (in)	bs (in)	CAMBER	WELD 1	WELD 2	WELD 3	STIFFENER PL SPACING (in)
PG1	33	1/2	1 3/4	12 1/2	3/4	6	(SEE TABLES ON S-306)	5/16	5/16	1/4	
PG2	51 1/2	1/2	1	13 1/2	3/4	6 1/2	(SEE TABLES ON S-306)	3/8	3/8	1/4	
PG3/3-4A	38	1/2	2 1/4	16			(SEE TABLES ON S-306)	3/8	1/4	1/4	
PG3/3-4C	38	1/2	2 1/4	16			(SEE TABLES ON S-306)	3/8	1/4	1/4	
PG3/4-5A	38	1/2	1 1/2	16			(SEE TABLES ON S-306)	3/8	1/4	1/4	
PG3/4-5B	38	5/8	2 1/2	16			(SEE TABLES ON S-306)	3/8	3/8	1/4	
PG3/4-5C	38	1/2	2	16			(SEE TABLES ON S-306)	3/8	1/4	1/4	
PG3/4-5E	38	5/8	3	16			(SEE TABLES ON S-306)	3/8	3/8	1/4	
PG3/S6A	38	1/2	2 1/4	16			(SEE TABLES ON S-306)	3/8	1/4	1/4	
PG4	33	1/2	1 3/4	16	3/4	7 3/4	(SEE TABLES ON S-306)	3/8	3/8	1/4	SEE ELEVATIONS
PG6	33	1/2	1 3/4	24	3/4	11 3/4	(SEE TABLES ON S-306)	3/8	3/8	1/4	

1 PLATE GIRDER SCHEDULE AND TYP DETAIL

NTS

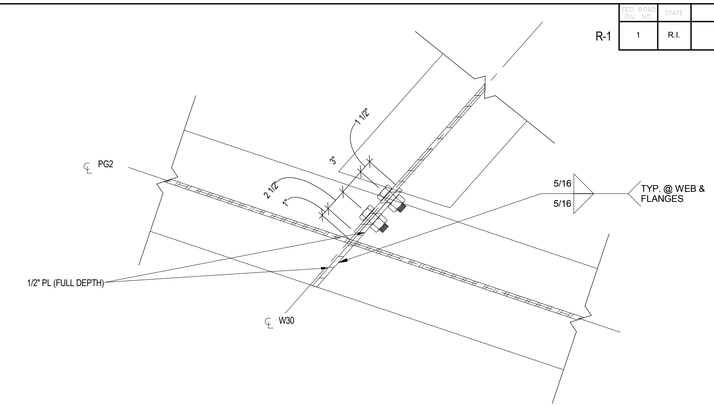

4 SHEAR CONNECTION DETAIL

SCALE 1 1/2" = 1'-0"

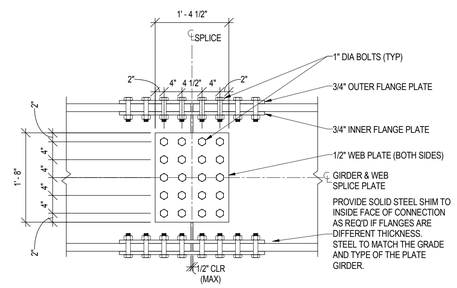

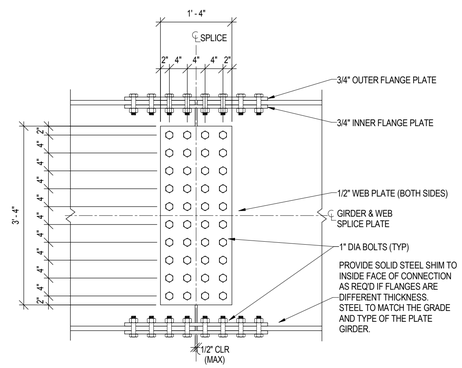

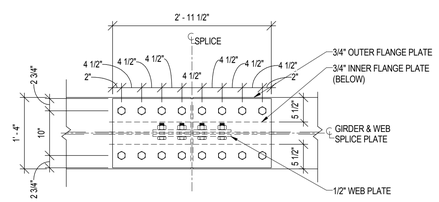

SPLICE DETAIL J1

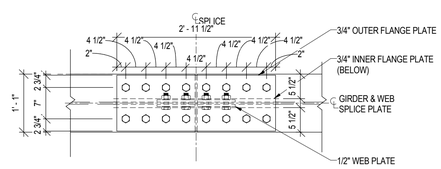

SPLICE DETAIL J2

NOTES:
1. FOR PG1, PG3 & PG4 SEE J1
2. FOR PG2 SEE J2

3 GIRDER SPLICE DETAIL

NTS

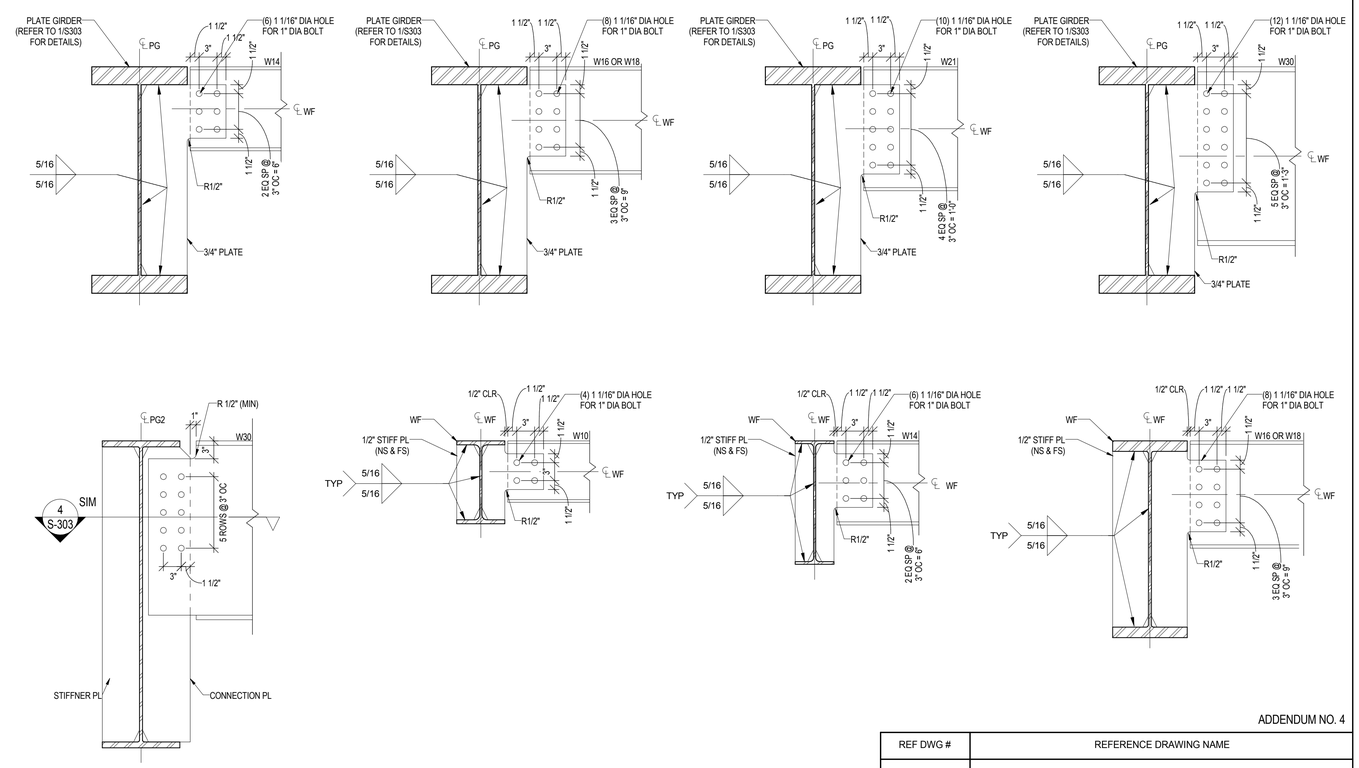

5 TYPICAL SHEAR CONNECTION

NTS

ADDENDUM NO. 4

REF DWG #	REFERENCE DRAWING NAME

CDR MAGUIRE

100 BROADWAY, 23rd FLOOR NEW YORK, NY 10005
Tel: 212.334 2025
Fax: 212.334 5528
web: www.burohappold.com

Buro Happold

BETA Group, Inc.
Engineers • Planners • Landscape Architects
Lincoln, RI - Norwood, MA - Hartford, CT

RHODE ISLAND
DEPARTMENT OF TRANSPORTATION

INTERSTATE 195

DESIGNED BY: AN
CHECKED: AN
DATE: 04/21/14
SHEET: V2_122
OF: V2_163

SCALE: As indicated

REVISIONS			REVISIONS		
NO.	DATE	BY	NO.	DATE	BY
1	6/14/2016	DF			

IMPROVEMENTS TO
INTERSTATE ROUTE 195
CONTRACT 16 VOLUME 2

PROVIDENCE RHODE ISLAND

PLATE GIRDER SCHEDULE

S-303

	FED. ROAD REGION NO.	STATE	FEDERAL AID PROJECT NO.	FISCAL YEARS	SHEET NO.	TOTAL SHEETS
R-1	1	R.I.			V2_123	V2_163

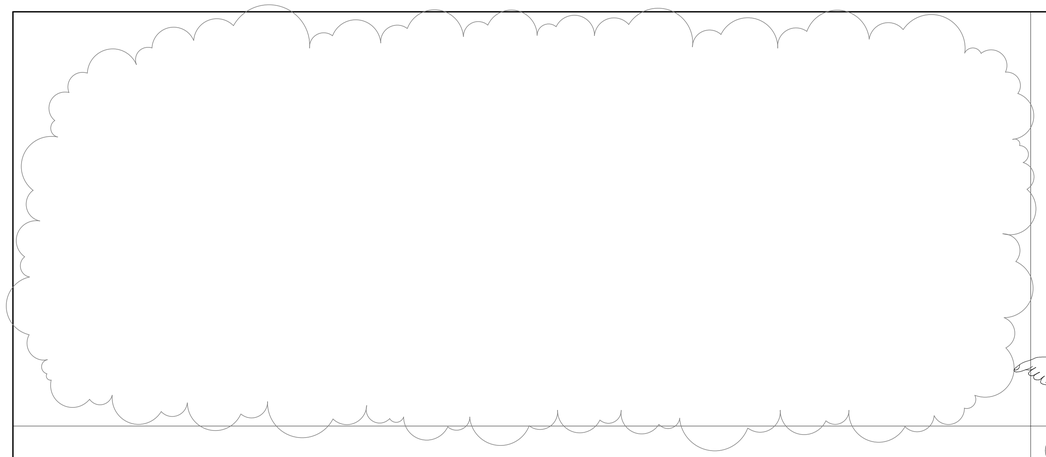

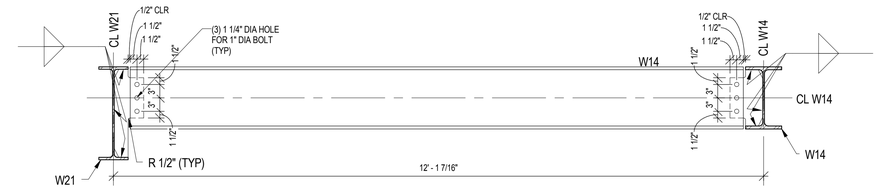

2 CONNECTION SECTION 1

SCALE 3/4" = 1'-0"

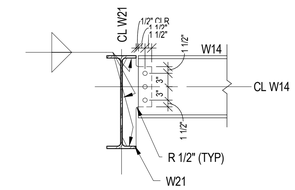

3 CONNECTION SECTION 2

SCALE 3/4" = 1'-0"

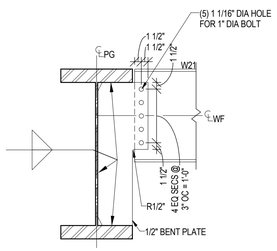

4 GIRDER CONNECTION

SCALE 3/4" = 1'-0"

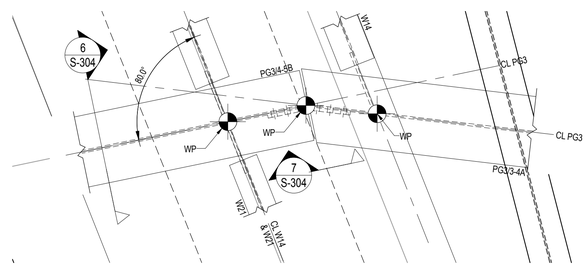

5 GIRDER CONNECTION LOWER LEVEL STEEL FRAMING PLAN

SCALE 3/4" = 1'-0"

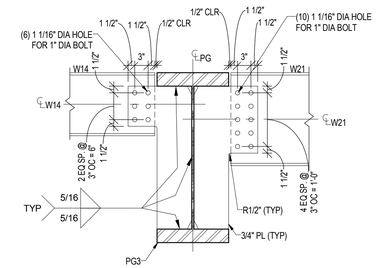

6 GIRDER CONNECTION 2

SCALE 3/4" = 1'-0"

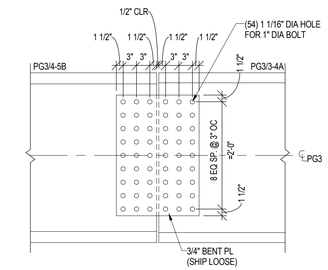

7 GIRDER CONNECTION 3

SCALE 3/4" = 1'-0"

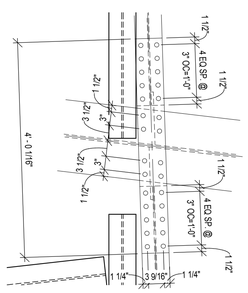

8 W18 MOMENT CONNECTION

SCALE 3/4" = 1'-0"

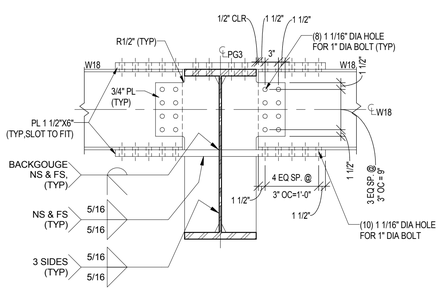

9 W18 MOMENT CONNECTION SECTION

SCALE 3/4" = 1'-0"

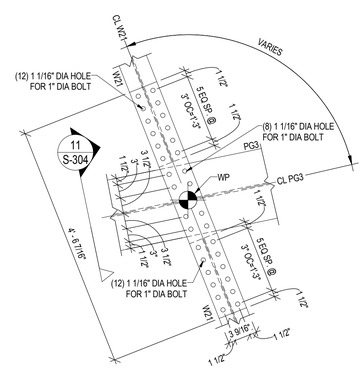

10 W21 MOMENT CONNECTION

SCALE 3/4" = 1'-0"

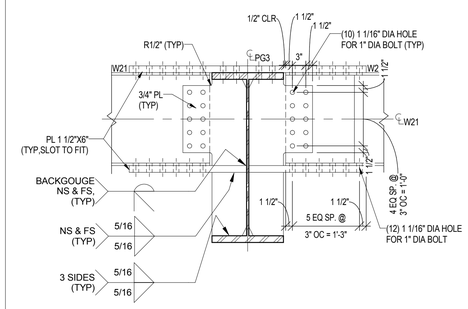

11 W21 MOMENT CONNECTION SECTION

SCALE 3/4" = 1'-0"

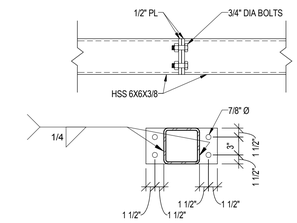

12 HSS SPLICE DETAIL

SCALE 1" = 1'-0"

ADDENDUM NO. 4

REF DWG #	REFERENCE DRAWING NAME

CDR MAGUIRE

100 BROADWAY,
23rd FLOOR NEW YORK,
NY 10005

Tel: 212 334 2025
Fax: 212 334 5528
web: www.burohappold.com

Buro Happold

BETA Group, Inc.
Engineers • Planners • Landscape Architects
Lincoln, RI - Norwood, MA - Hartford, CT

RHODE ISLAND
DEPARTMENT OF TRANSPORTATION

INTERSTATE 195

DESIGNED BY: Designer
CHECKED: Checker
DATE: 03/26/15
SHEET: V2_123
OF: V2_163

SCALE: As indicated

REVISIONS			REVISIONS		
NO.	DATE	BY	NO.	DATE	BY
1	6/14/2016	DF			

PROVIDENCE

IMPROVEMENTS TO
INTERSTATE ROUTE 195
CONTRACT 16 VOLUME 2

RHODE ISLAND

CONNECTION DETAILS

S-304

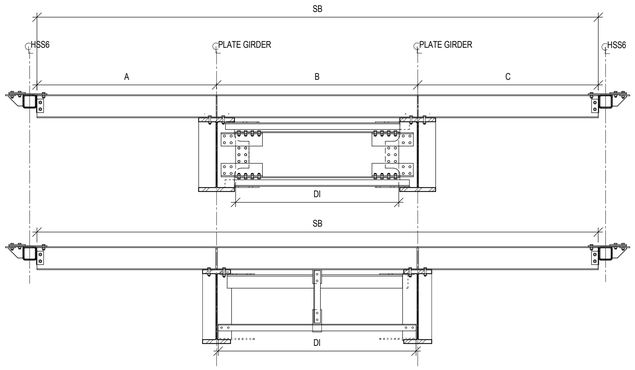

1 DIAGRAM UPPER BRIDGE CROSS FRAME

SCALE 3/8" = 1'-0"

MEMBER MARK	MEMBER TYPE	MEMBER LENGTH (SB)	A	B	C
SB-001	W10X45	30.435	6.828	16.839	6.769
SB-002	W10X45	29.983	6.745	16.483	6.755
SB-003	W10X45	29.600	6.738	16.107	6.755
SB-004	W10X45	29.221	6.733	15.733	6.755
SB-005	W10X45	28.846	6.730	15.360	6.755
SB-006	W10X45	28.474	6.731	14.989	6.755
SB-007	W10X45	28.107	6.734	14.619	6.755
SB-008	W10X45	27.745	6.740	14.250	6.755
SB-009	W10X45	27.386	6.746	13.885	6.755
SB-010	W10X45	27.032	6.745	13.532	6.755
SB-011	W10X45	26.682	6.744	13.183	6.754
SB-012	W10X45	26.336	6.744	12.838	6.754
SB-013	W10X45	25.994	6.744	12.496	6.754
SB-014	W10X45	25.657	6.745	12.158	6.754
SB-015	W10X45	25.324	6.746	11.824	6.754
SB-016	W10X45	24.996	6.748	11.494	6.754
SB-017	W10X45	24.671	6.750	11.167	6.754
SB-018	W10X45	24.351	6.751	10.846	6.754
SB-019	W10X45	24.036	6.752	10.530	6.755
SB-020	W10X45	23.729	6.751	10.219	6.755
SB-021	W10X45	23.418	6.749	9.913	6.757
SB-022	W10X45	23.116	6.745	9.613	6.758
SB-023	W10X45	22.819	6.741	9.318	6.760
SB-024	W10X45	22.525	6.736	9.027	6.762
SB-025	W10X45	22.237	6.732	8.741	6.764
SB-026	W10X45	21.953	6.729	8.459	6.765
SB-027	W10X45	21.673	6.729	8.180	6.765
SB-028	W10X45	21.398	6.731	7.904	6.764
SB-029	W10X45	21.128	6.735	7.631	6.762
SB-030	W10X45	20.862	6.741	7.362	6.759
SB-031	W10X45	20.601	6.750	7.097	6.755
SB-032	W10X45	20.345	6.758	6.834	6.752
SB-033	W10X45	20.093	6.761	6.580	6.752
SB-034	W10X45	19.845	6.763	6.331	6.752
SB-035	W10X45	19.602	6.764	6.086	6.752
SB-036	W10X45	19.364	6.765	5.847	6.752
SB-037	W10X45	19.130	6.765	5.613	6.752
SB-038	W10X45	18.900	6.761	5.387	6.752
SB-039	W10X45	18.676	6.758	5.166	6.752
SB-040	W10X45	18.456	6.755	4.949	6.752
SB-041	W10X45	18.241	6.753	4.736	6.752
SB-042	W10X45	18.281	6.752	4.528	6.752
SB-043	W10X45	20.183	7.400	4.767	7.387
SB-044	W10X45	6.240	7.353	11.053	1.028
SB-045	W10X45	19.692		2.530	
SB-046	W10X45	10.113	6.909	5.897	
SB-047	W10X45	17.626	6.608	10.069	0.950
SB-048	W10X45	17.430	6.507	9.849	1.074
SB-049	W10X45	17.240	6.411	9.637	1.193
SB-050	W10X45	17.055	6.319	9.431	1.305
SB-051	W10X45	16.874	6.231	9.233	1.410
SB-052	W10X45	16.699	6.147	9.041	1.510
SB-053	W10X45	16.460	6.068	8.857	1.603
SB-054	W10X45	16.206	5.993	8.680	1.690
SB-055	W10X45	19.582	5.922	8.510	1.770
SB-056	W10X45	19.893	5.845	8.358	1.845
SB-057	W10X45	18.945	5.771	8.213	1.913
SB-058	W10X45	17.963	5.700	8.077	1.974
SB-059	W10X45	21.450	5.632	7.949	2.029
SB-060	W10X45	24.727	5.566	7.830	2.078
SB-061	W10X45	27.940	5.503	7.720	2.120
SB-062	W10X45	27.181	5.442	7.619	2.156
SB-063	W10X45	25.084	5.384	7.526	2.186
SB-064	W10X45	22.943	5.329	7.442	2.209
SB-065	W10X45	20.761	5.269	7.371	2.223
SB-066	W10X45	19.067	5.212	7.306	2.229
SB-067	W10X45	17.342	5.158	7.250	2.229
SB-068	W10X45	16.215	5.109	7.202	2.224
SB-069	W10X45	15.054	5.063	7.164	2.214
SB-070	W10X45	14.353	5.021	7.134	2.198
SB-071	W10X45	14.274	4.984	7.113	2.176
SB-072	W10X45	14.201	4.950	7.101	2.150
SB-073	W10X45	14.136	4.917	7.101	2.118
SB-074	W10X45	14.075	4.889	7.108	2.079
SB-075	W10X45	14.019	4.863	7.123	2.033
SB-076	W10X45	13.967	4.839	7.147	1.981
SB-077	W10X45	13.838	4.817	7.181	1.921
SB-078	W10X45	13.876	4.798	7.223	1.855
SB-079	W10X45	13.837	4.780	7.274	1.783
SB-080	W10X45	13.803	4.765	7.336	1.702
SB-081	W10X45	13.772	4.748	7.408	1.616
SB-082	W10X45	13.747	4.737	7.487	1.523
SB-083	W10X45	13.688	4.728	7.574	1.423
SB-084	W10X45	13.674	4.749	7.672	1.253
SB-085	W10X45	13.678	4.830	7.777	1.183
SB-086	W10X45	14.739	4.972	7.891	1.084
SB-087	W10X45	18.047	5.169	8.016	0.960
SB-088	W10X45	23.647	5.416	8.155	0.829
SB-089	W10X45	35.526	5.699	8.296	0.692
SB-090	W10X45	37.354	6.017	8.440	10.016
SB-091	W10X45	31.583	6.405	8.550	9.817
SB-092	W10X45	25.667	7.160	8.708	9.498
SB-093	W10X45	19.435	0.310	8.912	9.226
SB-094	W10X45	13.796		3.763	9.122
SB-095	W10X45	8.416			
SB-096	W10X45	4.147			
SB-097	W10X45	5.117			
SB-098	W10X45	4.934			
SB-099	W10X45	4.926			
SB-100	W10X45	7.553			
SB-101	W10X45	7.688			
SB-102	W10X45	7.700			
SB-104	W10X45	24.416			
SB-105	W10X45	14.053			
SB-106	W10X45	3.533			
SB-107	W10X45	10.749			
SB-108	W10X45	10.876			
SB-109	W10X45	10.647			
SB-110	W10X45	10.552			
SB-111	W10X45	10.591			
SB-112	W10X45	10.674			
SB-113	W10X45	10.714			
SB-114	W10X45	10.710			
SB-115	W10X45	10.664			
SB-116	W10X45	10.574			
SB-117	W10X45	10.441			

MEMBER MARK	MEMBER TYPE	MEMBER LENGTH (DI)
DI-001	W21X50	15.379
DI-002	W21X50	15.044
DI-003	2L3X3X3/8	15.935
DI-004	2L3X3X3/8	15.556
DI-005	W21X50	13.921
DI-006	2L3X3X3/8	14.811
DI-007	2L3X3X3/8	14.445
DI-008	W21X50	12.810
DI-009	2L3X3X3/8	13.707
DI-010	2L3X3X3/8	13.378
DI-011	W21X50	11.744
DI-012	2L3X3X3/8	12.710
DI-013	2L3X3X3/8	12.360
DI-014	W21X50	10.719
DI-015	W21X50	10.727
DI-016	2L3X3X3/8	11.358
DI-017	W21X50	9.707
DI-018	2L3X3X3/8	10.686
DI-019	2L3X3X3/8	10.370
DI-020	W21X50	8.758
DI-021	2L3X3X3/8	9.753
DI-022	2L3X3X3/8	9.452
DI-023	W21X50	7.877
DI-024	2L3X3X3/8	8.866
DI-025	2L3X3X3/8	8.581
DI-026	W21X50	6.998
DI-027	2L3X3X3/8	8.019
DI-028	2L3X3X3/8	7.743
DI-029	W21X50	6.654
DI-030	W21X50	5.901
DI-031	W21X50	5.635
DI-032	W21X50	5.375
DI-033	W21X50	5.121
DI-034	W21X50	4.871
DI-035	W21X50	4.627
DI-036	W21X50	4.388
DI-037	W21X50	4.155
DI-038	W21X50	3.970
DI-039	W21X50	3.707
DI-040	W21X50	3.490
DI-041	W21X50	3.277
DI-042	W21X50	3.110
DI-043	W21X50	3.374
DI-044	W21X50	9.584
DI-045	W21X50	8.608
DI-046	W21X50	8.389
DI-047	W21X50	8.177
DI-048	W21X50	7.972
DI-049	W21X50	7.774
DI-050	W21X50	7.583
DI-051	W21X50	7.400
DI-052	W21X50	7.223
DI-053	W21X50	7.053
DI-054	W21X50	6.900
DI-055	W21X50	6.797
DI-056	W21X50	6.620
DI-057	W21X50	6.493
DI-058	W21X50	6.375
DI-059	W21X50	6.265
DI-060	W21X50	6.158
DI-061	W21X50	6.066
DI-062	W21X50	5.983
DI-063	W21X50	5.910
DI-064	W21X50	5.846
DI-065	W21X50	5.791
DI-066	W21X50	5.744
DI-067	W21X50	5.706
DI-068	W21X50	5.677
DI-069	W21X50	5.699
DI-070	W21X50	5.646
DI-071	W21X50	5.645
DI-072	W21X50	5.653
DI-073	W21X50	5.669
DI-074	W21X50	5.173
DI-075	W21X50	5.728
DI-076	W21X50	5.765
DI-077	W21X50	5.816
DI-078	W21X50	5.877
DI-079	W21X50	5.949
DI-080	W21X50	5.959
DI-081	W21X50	6.115
DI-082	W21X50	6.213
DI-083	W21X50	6.319
DI-084	W21X50	6.433
DI-085	W21X50	6.559
DI-086	W21X50	6.698
DI-087	W21X50	6.840
DI-088	W21X50	6.985
DI-089	W21X50	7.163
DI-090	W21X50	7.322
DI-091	MC18X58	4.329
DI-092	MC18X58	1.640
DI-093	MC18X58	11.154
DI-094	MC18X58	4.505
DI-095	MC18X58	7.204
DI-096	MC18X58	1.592
DI-097	MC18X58	11.480
DI-098	MC18X58	4.787

MEMBER MARK	MEMBER TYPE	MEMBER LENGTH (BR)	N ANGLE	S ANGLE
BR-001	L8X6X1/2	17.154	50.1	44.5
BR-002	L8X6X1/2	16.358	43.7	46.8
BR-003	L8X6X1/2	15.598	45.6	40.3
BR-004	L8X6X1/2	14.914	39.3	42.1
BR-005	L8X6X1/2	14.274	40.9	35.8
BR-006	L8X6X1/2	13.703	34.7	37.2
BR-007	L8X6X1/2	13.181	35.8	31.1
BR-008	L8X6X1/2	12.719	30.0	32.1
BR-009	L8X6X1/2	12.307	30.8	26.3
BR-010	2L4X3X1/2SLBB	6.796	35.6	37.9
BR-011	2L4X3X1/2SLBB	6.802	38.8	34.8
BR-012	2L4X3X1/2SLBB	6.498	33.7	35.9
BR-013	2L4X3X1/2SLBB	6.485	36.6	32.8
BR-014	2L4X3X1/2SLBB	6.211	31.7	33.7
BR-015	2L4X3X1/2SLBB	6.220	34.6	30.9
BR-016	2L4X3X1/2SLBB	5.960	29.7	31.6
BR-017	2L4X3X1/2SLBB	5.960	32.4	28.9
BR-018	2L4X3X1/2SLBB	5.735	27.8	29.5
BR-019	2L4X3X1/2SLBB	5.730	30.3	26.9
BR-020	2L4X3X1/2SLBB	5.532	26.6	28.3
BR-021	2L4X3X1/2SLBB	5.536	28.3	25.0
BR-022	2L4X3X1/2SLBB	4.430	25.4	27.0
BR-023	2L4X3X1/2SLBB	2.830	33.4	30.3
BR-024	L6X6X5/8	6.504	63.6	65.6
BR-025	L6X6X5/8	5.691	45.4	41.8
BR-026	L6X6X5/8	6.510	63.6	60.7
BR-027	L6X6X5/8	6.137	62.7	64.7
BR-028	L6X6X5/8	6.135	63.1	60.3
BR-029	L6X6X5/8	5.798	61.7	63.5
BR-030	L6X6X5/8	5.789	61.8	59.2
BR-031	L6X6X5/8	5.488	60.4	62.0
BR-032	L6X6X5/8	5.472	60.6	58.1
BR-033	L6X6X5/8	5.206	59.6	61.0
BR-034	L6X6X5/8	5.200	60.0	57.8
BR-035	L6X6X5/8	4.965	58.8	60.0
BR-036	L6X6X5/8	4.959	58.8	56.9
BR-037	L6X6X5/8	4.756	58.0	58.9
BR-038	L6X6X5/8	3.611	72.8	71.4
BR-039	L6X6X5/8	3.880	66.5	65.1
BR-040	L6X6X5/8	4.481	56.8	57.4
BR-041	L6X6X5/8	3.917	56.8	55.4
BR-042	L6X6X5/8	4.374	56.4	56.8
BR-043	L6X6X5/8	4.367	56.4	55.2
BR-044	L6X6X5/8	4.275	56.4	56.6
BR-045	L6X6X5/8	4.267	56.4	55.4
BR-046	L6X6X5/8	4.205	55.4	55.3
BR-047	L6X6X5/8	4.196	55.4	54.6
BR-048	L6X6X5/8	4.165	55.3	55.1
BR-049	L6X6X5/8	4.155	55.3	54.8
BR-050	L6X6X5/8	4.153	55.3	54.9
BR-051	L6X6X5/8	4.146	55.4	55.0
BR-052	L6X6X5/8	4.174	55.4	54.7
BR-053	L6X6X5/8	4.164	55.3	55.2
BR-054	L6X6X5/8	4.221	55.5	54.7
BR-055	L6X6X5/8	4.211	63.4	63.6
BR-056	L6X6X5/8	4.301	56.3	55.2
BR-057	L6X6X5/8	4.285	56.2	56.5
BR-058	L6X6X5/8	4.405	56.4	55.1
BR-059	L6X6X5/8	4.400	56.4	56.9
BR-060	L6X6X5/8	4.545	57.2	55.7
BR-061	L6X6X5/8	4.539	57.1	57.9
BR-062	L6X6X5/8	4.714	57.8	56.1
BR-063	L6X6X5/8	4.706	57.8	58.7
BR-064	L6X6X5/8	4.911	58.6	56.7
BR-065	L6X6X5/8	4.911	58.6	59.7
BR-066	L6X6X5/8	5.163	58.9	56.7
BR-067	L6X6X5/8	5.137	58.9	60.1
BR-068	L6X6X5/8	5.403	60.3	58.0
BR-069	L6X6X5/8	5.390	59.9	61.5
BR-070	L6X6X5/8	4.571	60.8	58.2
BR-071	L6X4X5/8	5.693	63.7	64.8
BR-072	L6X4X5/8	6.861	65.7	63.6
BR-073	L6X4X5/8	6.739	63.5	65.6
BR-074	L6X4X5/8	6.711	88.1	88.1
BR-075	L6X4X5/8	6.557	65.9	62.8
BR-076	L6X4X5/8	6.405	62.2	65.3
BR-077	L6X4X5/8	6.219	63.4	59.2
BR-078	L6X4X5/8	5.945	51.1	42.9
BR-079	L6X4X5/8	5.730	44.8	52.0
BR-080	L6X4X5/8	5.339	54.1	46.8
BR-081	L6X4X5/8	5.100	51.7	57.9
BR-082	L6X4X5/8	4.601	58.7	52.5
BR-083	L6X4X5/8	4.337	56.1	61.2
BR-084	L6X4X5/8	3.799	61.7	56.5
BR-085	L6X4X5/8	3.524	59.0	63.1
BR-086	L6X4X5/8	2.905	65.5	64.4
BR-087	L6X4X5/8	2.131	64.3	64.3

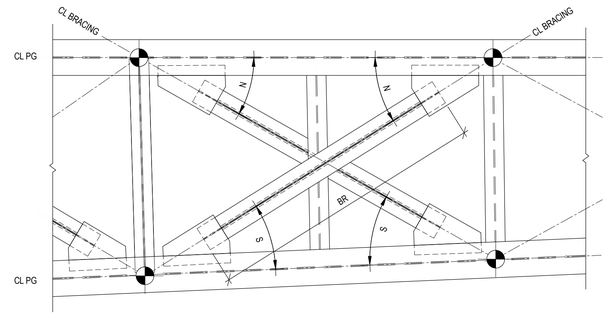

2 DIAPHRAM BRACING ANGLES

SCALE 1/2" = 1'-0"

R-1	CO. ROAD REV. NO.	STATE	FEDERAL AID PROJECT NO.	FISCAL YEAR	SHEET NO.	TOTAL SHEETS
	1	R.I.			V2_128	V2_163

ADDENDUM NO. 4

REF DWG #	REFERENCE DRAWING NAME

CDR MAGUIRE

100 BROADWAY,
23rd FLOOR NEW YORK,
NY 10005

Tel: 212 334 2025
Fax: 212 334 5528
web: www.burohappold.com

Buro Happold

BETA Group, Inc.
Engineers • Planners • Landscape Architects
Lincoln, RI - Norwood, MA - Hartford, CT

RHODE ISLAND
DEPARTMENT OF TRANSPORTATION

INTERSTATE 195

DESIGNED BY: Designer
CHECKED: Checker
DATE: 03/16/15
SHEET: V2_128
OF: V2_163

SCALE: As indicated

REVISIONS			REVISIONS		
NO.	DATE	BY	NO.	DATE	BY
1	6/14/2016	DF			

IMPROVEMENTS TO
INTERSTATE ROUTE 195
CONTRACT 16 VOLUME 2

PROVIDENCE RHODE ISLAND

STRUCTURAL MEMBER LENGTHS AND ANGLES

S-309

R-1	FED. ROAD REGION NO.	STATE	FEDERAL AID PROJECT NO.	FISCAL YEAR	SHEET NO.	TOTAL SHEETS
	1	R.I.			V2_136	V2_163

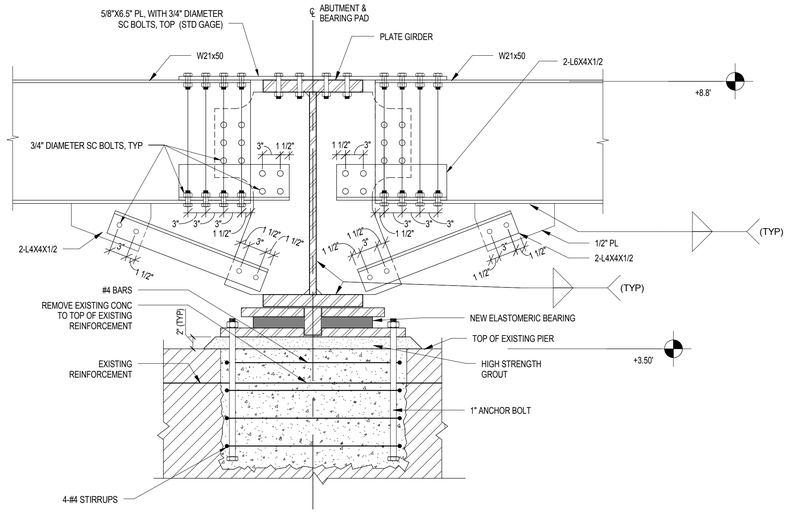

1 NEW BEARING ATTACHMENT DETAIL SECTION B

SCALE 1" = 1'-0"

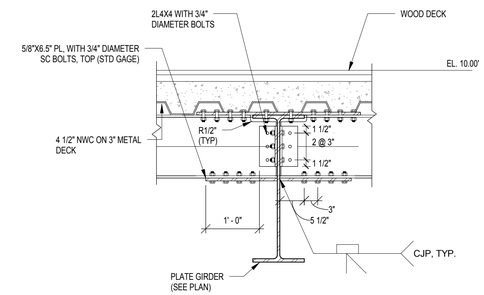

3 LOWER BRIDGE PLATFORM - SOUTH SIDE EDGE SECTION

SCALE 3/4" = 1'-0"

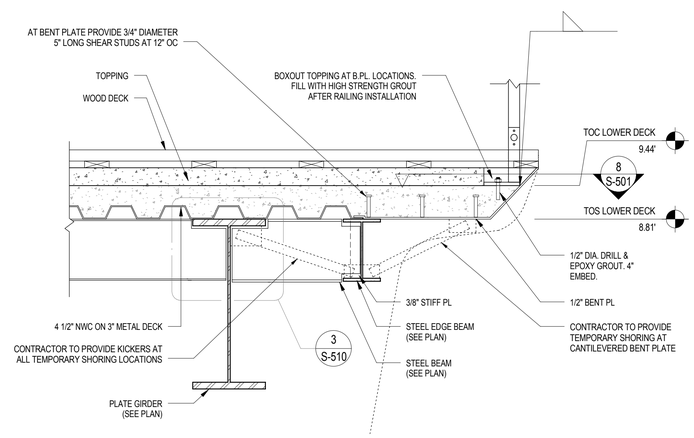

7 LOWER DECK EDGE OF SLAB DETAIL

SCALE 3/4" = 1'-0"

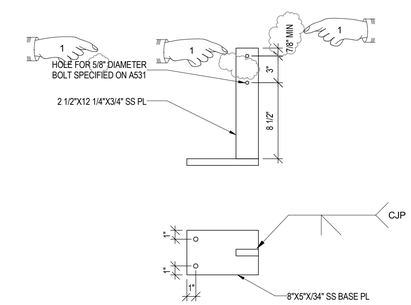

NOTE:
1. FOR RAILING DETAILS SEE A530 AND A531

2 LOWER DECK RAILING BASE PLATE

SCALE 1 1/2" = 1'-0"

ADDENDUM NO. 4

REF DWG #	REFERENCE DRAWING NAME
A-142	ENLARGED DECK EDGE & RAIL BASE DETAILS
A-530	LOWER BRIDGE DECK RAILING SECTION & DETAILS
A-531	LOWER BRIDGE PLATFORM RAILING SECTION & DETAILS
A-532	FISHING PIER RAILING SECTIONS & DETAILS

CDR MAGUIRE

100 BROADWAY, 23rd FLOOR NEW YORK, NY 10005

Tel: 212.334.2025

Fax: 212.334.5528

web: www.burohappold.com

Buro Happold

BETA Group, Inc.
Engineers • Planners • Landscape Architects
Lincoln, RI - Norwood, MA - Hartford, CT

RHODE ISLAND
DEPARTMENT OF TRANSPORTATION

INTERSTATE 195

DESIGNED BY: AN
CHECKED: AN
DATE: 04/21/14
SHEET: V2_136
OF: V2_163

SCALE: As indicated

REVISIONS			REVISIONS		
NO.	DATE	BY	NO.	DATE	BY
1	6/14/2016	DF			

IMPROVEMENTS TO
INTERSTATE ROUTE 195
CONTRACT 16 VOLUME 2

PROVIDENCE RHODE ISLAND

LOWER DECK DETAILS - 1

S-510

	CO. ROAD REV. NO.	STATE	FEDERAL AID PROJECT NO.	FISCAL YEAR	SHEET NO.	TOTAL SHEETS
R-1	1	R.I.			V2_137	V2_163

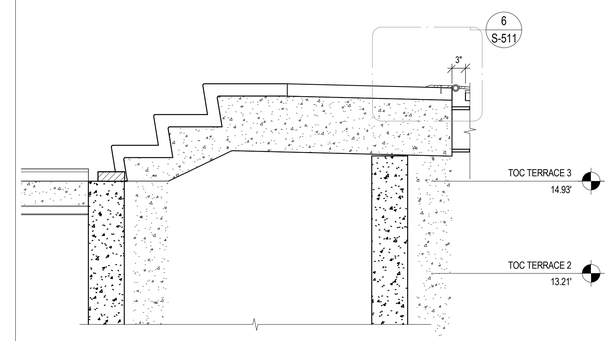

3 EXPANSION JOINT AT STAIRS

SCALE 3/4" = 1'-0"

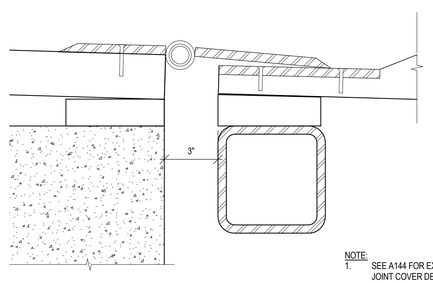

NOTE:
1. SEE A144 FOR EXPANSION JOINT COVER DETAILS

6 EXPANSION JOINT AT STAIRS

SCALE 3" = 1'-0"

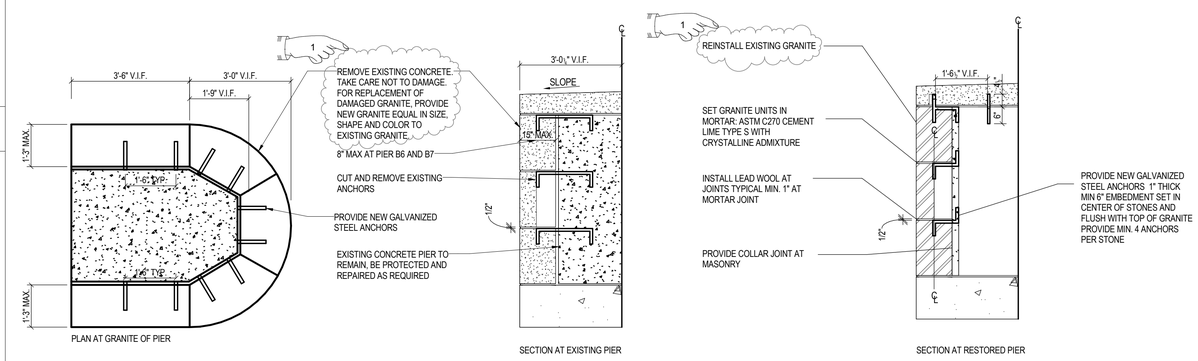

PLAN AT GRANITE OF PIER

SECTION AT EXISTING PIER

SECTION AT RESTORED PIER

7 LOWER DECK GRANITE

SCALE 12" = 1'-0"

ADDENDUM NO. 4

REF DWG #	REFERENCE DRAWING NAME
A-142	ENLARGED DECK EDGE & RAIL BASE DETAILS
A-533	FISHING PIER STEPS ENLARGED PLAJS, SECTIONS & DETAILS

CDR MAGUIRE

100 BROADWAY,
23rd FLOOR NEW YORK,
NY 10005

Tel: 212 334 2025
Fax: 212 334 5528
web: www.burohappold.com

Buro Happold

BETA Group, Inc.
Engineers • Planners • Landscape Architects
Lincoln, RI - Norwood, MA - Hartford, CT

RHODE ISLAND
DEPARTMENT OF TRANSPORTATION

INTERSTATE 195

DESIGNED BY: AN
CHECKED: EH
DATE: 10/17/14
SHEET: V2_137
OF: V2_163

SCALE: As indicated

REVISIONS			REVISIONS		
NO.	DATE	BY	NO.	DATE	BY
1	6/14/2016	DF			

PROVIDENCE

IMPROVEMENTS TO
INTERSTATE ROUTE 195
CONTRACT 16 VOLUME 2

RHODE ISLAND

LOWER DECK DETAILS - 2

S-511

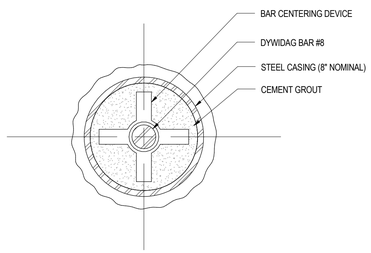

CASED SECTION
(UNBONDED ZONE)

SECTION A

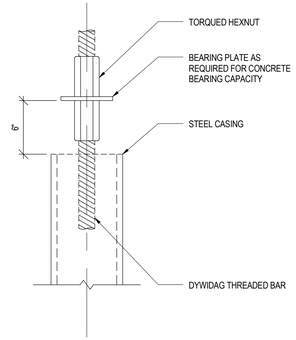

ELEVATION

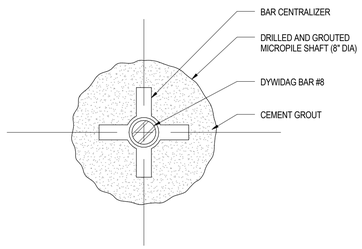

BONDED ZONE

SECTION B

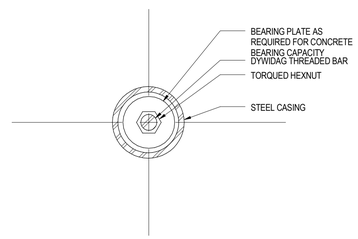

PLAN

1 TYPICAL MICROPILE SECTIONS AND DETAILS

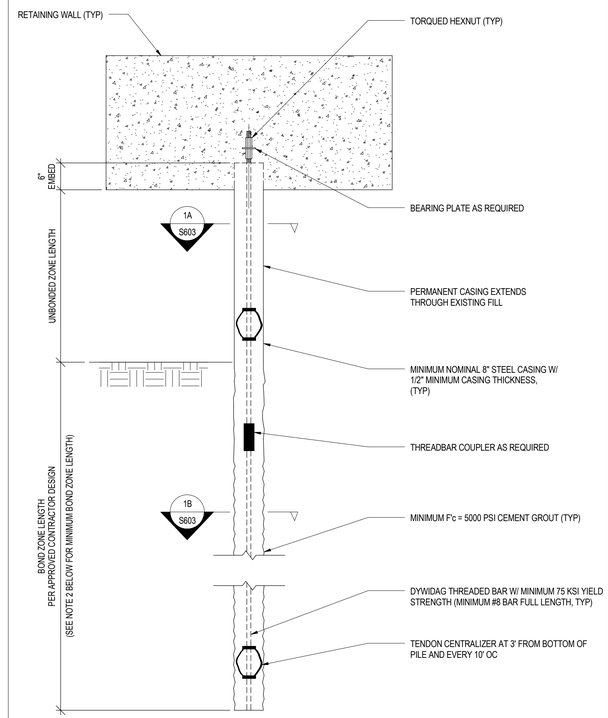

NOTES:
1. MICROPILE DESIGN DETAILS AND EMBEDMENT LENGTH TO BE DESIGNED BY THE CONTRACTOR. SEE SPECIFICATIONS AND DRAWINGS FOR FURTHER REQUIREMENTS.
2. MINIMUM BOND ZONE LENGTH 25'-0"
3. MINIMUM BOND ZONE GROUT DIAMETER 10"
4. MINIMUM CASING LENGTH IS 35'-0"

2 TYPICAL MICROPILE ELEVATION

FACTORED AXIAL RESISTANCE (KIPS)			
GEOTECHNICAL		STRUCTURAL	
STRENGTH LIMIT STATES	EXTREME LIMIT STATES	STRENGTH LIMIT STATES	EXTREME LIMIT STATES
*	*	75 KIPS	85 KIPS

1. MICROPILE RESISTANCE VALUES GIVEN IN THE TABLES ABOVE ARE THE MINIMUM REQUIRED RESISTANCES.
2. THE FACTORED DESIGN AXIAL RESISTANCE AT EACH LOCATION IS THE LESSER VALUE OF THE FACTORED GEOTECHNICAL AND THE FACTORED STRUCTURAL RESISTANCES INDICATED.
3. THE FACTORED GEOTECHNICAL AXIAL RESISTANCE FOR THE STRENGTH LIMIT STATE IS BASED ON THE NOMINAL AXIAL RESISTANCE AS DETERMINED USING AASHTO LRFD BRIDGE DESIGN SPECIFICATIONS - SECTION 10.9.3 AND A RESISTANCE FACTOR OF 0.7.
4. THE FACTORED GEOTECHNICAL AXIAL RESISTANCE FOR THE EXTREME LIMIT STATE IS BASED ON THE NOMINAL AXIAL RESISTANCE AS DETERMINED USING AASHTO LRFD BRIDGE DESIGN SPECIFICATIONS - SECTION 10.5.5.3 AND A RESISTANCE FACTOR OF 1.0.
5. CONTRACTOR TO ESTIMATE GROUND-GROUT BOND VALUE FOR MICROPILES.

3 DEEP FOUNDATIONS NOTES

SCALE 1 1/2" = 1'-0"

ADDENDUM NO. 4

REF DWG #	REFERENCE DRAWING NAME

CDR MAGUIRE

100 BROADWAY,
23rd FLOOR NEW YORK,
NY 10005

Tel: 212 334 2025
Fax: 212 334 5528
web: www.burohappold.com

Buro Happold

BETA Group, Inc.
Engineers • Planners • Landscape Architects
Lincoln, RI - Norwood, MA - Hartford, CT

RHODE ISLAND
DEPARTMENT OF TRANSPORTATION

INTERSTATE 195

DESIGNED BY: Designer
CHECKED: Checker
DATE: 05/13/16
SHEET: V2_140
OF: V2_163

SCALE: As indicated

REVISIONS			REVISIONS		
NO.	DATE	BY	NO.	DATE	BY
1	6/14/2016	DF			

PROVIDENCE — IMPROVEMENTS TO INTERSTATE ROUTE 195 CONTRACT 16 VOLUME 2 — RHODE ISLAND

DEEP FOUNDATIONS

S-650

FED. ROAD DIV. NO.	STATE	FEDERAL AID PROJECT NO.	FISCAL YEAR	SHEET NO.	TOTAL SHEETS
1	R.I.			V2_149	V2_163

R-1

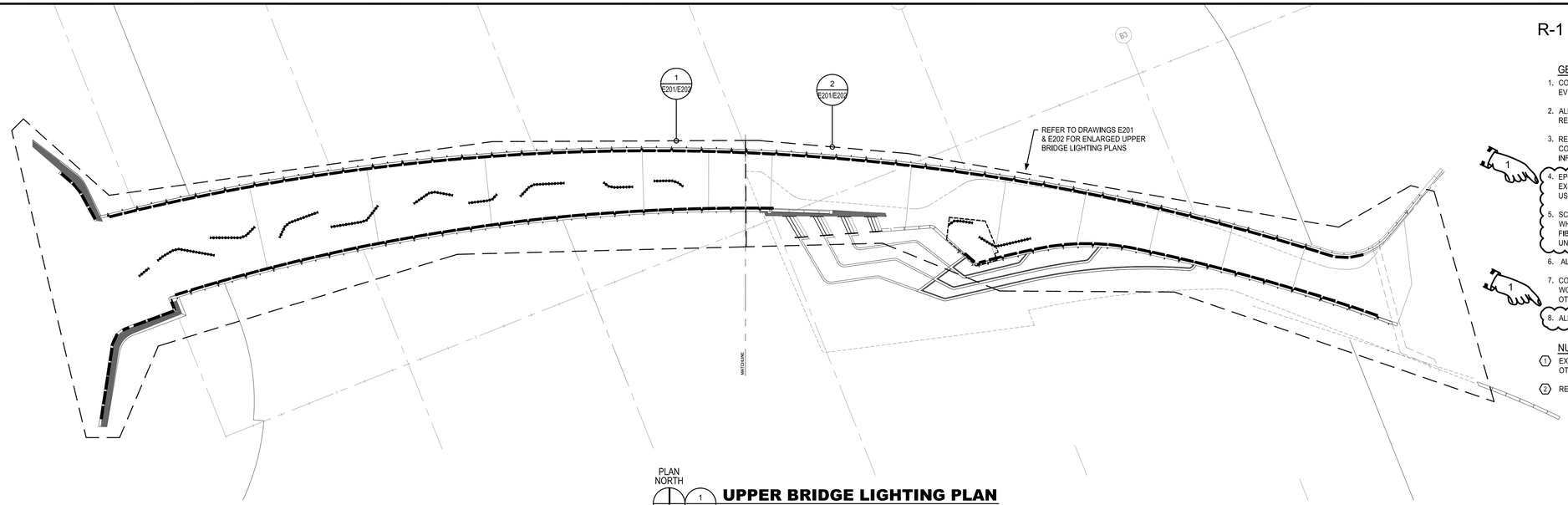

PLAN NORTH

1 / E200 **UPPER BRIDGE LIGHTING PLAN**

1" = 20'-0"

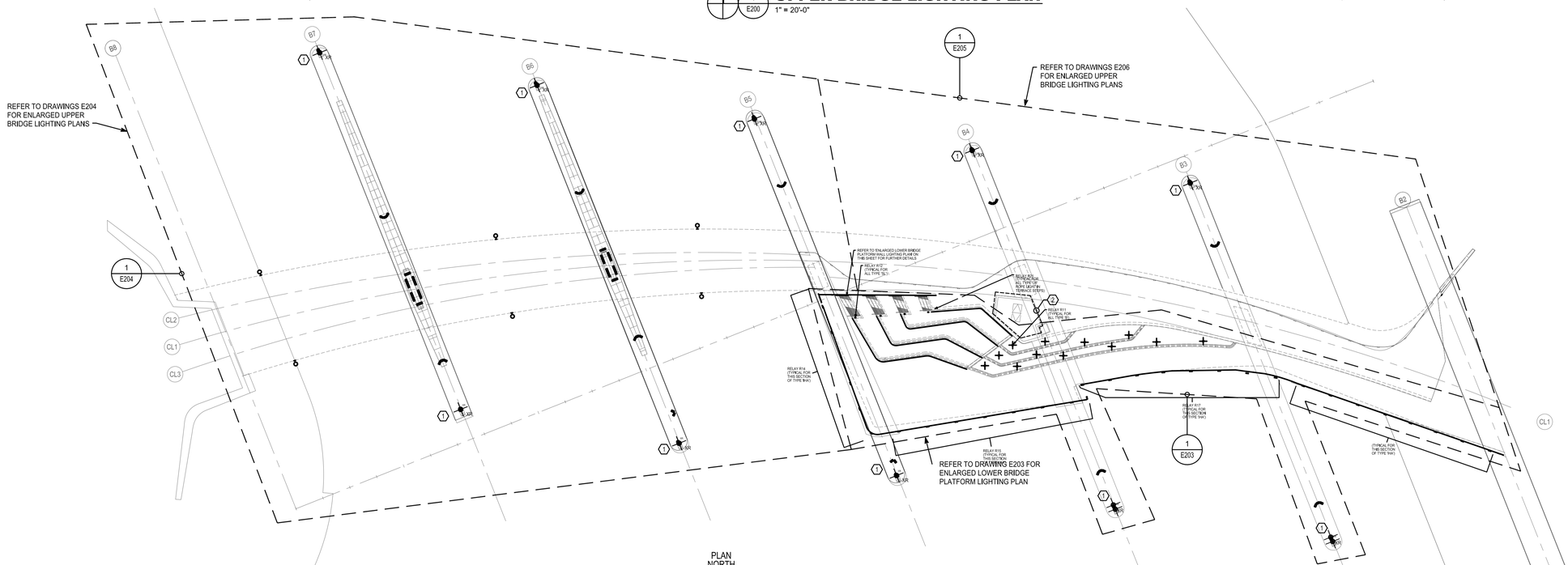

PLAN NORTH

2 / E200 **LOWER BRIDGE LIGHTING PLAN**

1" = 20'-0"

GENERAL NOTES

1. CONDUIT SHALL BE SECURED EVERY 5 FEET, WITH A JUNCTION BOX EVERY 10 FEET (TYPICAL).
2. ALL LIGHTING CIRCUITS SHALL BE RUN VIA LIGHTING CONTROL RELAY PANEL.
3. REFER TO CIRCUIT NUMBER NOTES ON THIS SHEET AND LIGHTING CONTROL SCHEDULE ON E701 FOR WIRE SIZES AND MORE INFORMATION.
4. EPOXY FIBERGLASS CONDUIT SHALL BE PROVIDED FOR ALL EXPOSED APPLICATIONS, FLEXIBLE LIQUID TIGHT CONDUIT MAY BE USED FOR CONCEALED AND PROTECTED FEEDS TO FIXTURES.
5. SCHEDULE 80 PVC SHALL BE FURNISHED FOR DUCT BANKS AND WHERE CONDUIT IS EMBEDDED OR CONCRETE ENCASED. EPOXY FIBERGLASS CONDUIT SHALL BE USED FOR OTHER APPLICATIONS, UNLESS OTHERWISE NOTED.
6. ALL WIRING SHALL BE THWN, UNLESS OTHERWISE NOTED.
7. CONDUIT AND JUNCTION BOXES SHALL BE LOCATED BELOW THE WOOD DECKING OR BEHIND THE WOOD PANELS, UNLESS OTHERWISE NOTED.
8. ALL UNISTRUT AND CONDUIT HANGERS SHALL BE FIBERGLASS.

NUMBERED NOTES

1. EXISTING NAVIGATION LIGHTS ON PIERS SHALL REMAIN UNLESS OTHERWISE NOTED.
2. REFER TO E502 FOR ELECTRICAL VAULT PLAN AND DETAILS.

ADDENDUM NO. 4

REF DWG #	REFRENCE DRAWING NAME

CDR MAGUIRE

inFORM studio
235 east main street, suite 102b
northville, mi 48167
(p) 248.449.3564
(f) 248.449.6984
www.in-formstudio.com

Buro Happold

BETA Group, Inc.
Engineers • Planners • Landscape Architects
Lincoln, RI - Norwood, MA - Hartford, CT

RHODE ISLAND
DEPARTMENT OF TRANSPORTATION

INTERSTATE 195

DESIGNED BY:
CHECKED:
DATE:
SHEET: V2_149
OF: V2_163

SCALE: 1" = 20'-0"

REVISIONS			REVISIONS		
NO.	DATE	BY	NO.	DATE	BY
1	06/14/16	GMF			

IMPROVEMENTS TO
INTERSTATE ROUTE 195
CONTRACT 16 VOLUME 2

PROVIDENCE RHODE ISLAND

UPPER AND LOWER BRIDGE LIGHTING PLANS

E200

14–0303_E200_ADD04

R-1	FED. ROAD DIV. NO.	STATE	FEDERAL AID PROJECT NO.	FISCAL YEAR	SHEET NO.	TOTAL SHEETS
	1	R.I.			V2_150	V2_163

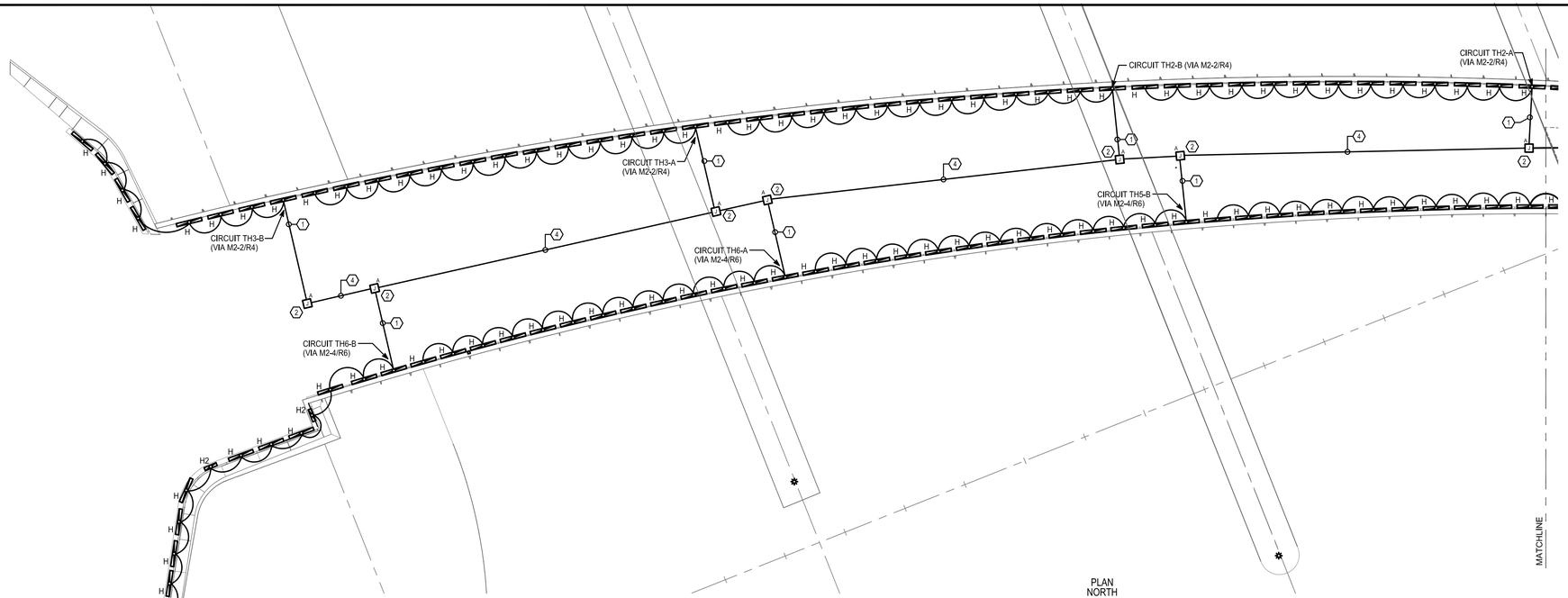

PLAN NORTH

1 / E201 **ENLARGED UPPER BRIDGE PARTIAL LIGHTING PLAN - TYPES 'H' & 'H2'**

1" = 10'-0"

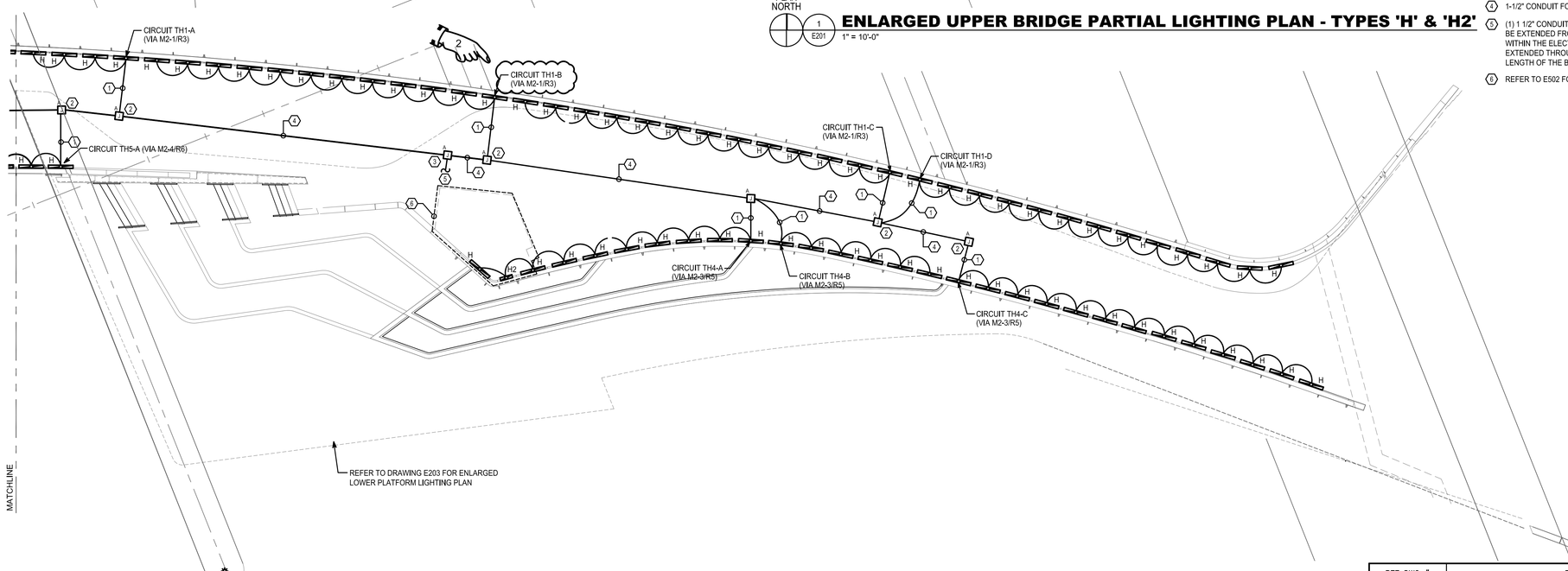

PLAN NORTH

2 / E201 **ENLARGED UPPER BRIDGE PARTIAL LIGHTING PLAN - TYPES 'H' & 'H2'**

1" = 10'-0"

GENERAL NOTES

1. CONDUIT SHALL BE SECURED EVERY 5 FEET, WITH A JUNCTION BOX EVERY 10 FEET (TYPICAL).
2. ALL LIGHTING CIRCUITS SHALL BE RUN VIA LIGHTING CONTROL RELAY PANEL.
3. REFER TO CIRCUIT NUMBER NOTES ON THIS SHEET AND LIGHTING CONTROL SCHEDULE AND LIGHTING TRANSFORMER SCHEDULE ON DRAWING E701 FOR WIRE SIZES AND MORE INFORMATION.
4. EPOXY FIBERGLASS CONDUIT SHALL BE PROVIDED FOR ALL EXPOSED APPLICATIONS. FLEXIBLE LIQUID TIGHT CONDUIT MAY BE USED FOR CONCEALED AND PROTECTED FEEDS TO FIXTURES.
5. SCHEDULE 80 PVC SHALL BE FURNISHED FOR DUCT BANKS AND WHERE CONDUIT IS EMBEDDED OR CONCRETE ENCASED. EPOXY FIBERGLASS CONDUIT SHALL BE USED FOR OTHER APPLICATIONS, UNLESS OTHERWISE NOTED.
6. ALL WIRING SHALL BE THWN, UNLESS OTHERWISE NOTED.
7. CONDUIT AND JUNCTION BOXES SHALL BE LOCATED BELOW THE WOOD DECKING OR BEHIND THE WOOD PANELS, UNLESS OTHERWISE NOTED.
8. REFER TO DRAWING E500 FOR UPPER PLATFORM TYPE 'H' MOUNTING AND CABLE DETAILS.
9. REFER TO SECTION ON DRAWING E503 FOR CONDUIT ROUTING DETAILS.
10. CONDUIT ROUTING AND CIRCUITING FOR TYPE 'H' FIXTURES TO BE AS DEPICTED AND SHALL FALL BETWEEN MIN/MAX DISTANCES LISTED ON LIGHTING TRANSFORMER SCHEDULE ON DRAWING E701.
11. ALL UNISTRUT AND CONDUIT HANGERS SHALL BE FIBERGLASS.

NUMBERED NOTES

1. PROVIDE CIRCUITING BETWEEN FIXTURES AND BACK TO TRANSFORMER TAP. REFER TO TRANSFORMER DETAILS ON E502 AND SCHEDULES ON E701 FOR MORE INFORMATION.
2. PROVIDE JUNCTION BOX TO INTERCEPT 1 1/2" CONDUIT ACROSS BRIDGE. EXTEND 3/4" CONDUIT FROM JUNCTION BOX TO FIXTURE. REFER TO DETAILS ON E500 FOR ADDITIONAL INFORMATION.
3. PROVIDE JUNCTION BOX TO INTERCEPT AND EXTEND 1-1/2" CONDUIT TO PANEL/TRANSFORMER/RELAY IN ELECTRICAL VAULT.
4. 1-1/2" CONDUIT FOR TYPE 'H' FIXTURE CIRCUITING (TYPICAL).
5. (1) 1 1/2" CONDUIT FOR POWER TO TYPE 'H' FIXTURES SHALL BE EXTENDED FROM THE LIGHTING CONTROL PANEL/XFMR WITHIN THE ELECTRICAL VAULT. THE CONDUIT SHALL THEN BE EXTENDED THROUGH THE BRIDGE STRUCTURE ACROSS THE LENGTH OF THE BRIDGE AS SHOWN.
6. REFER TO E502 FOR ELECTRICAL VAULT PLAN AND DETAILS.

ADDENDUM NO. 4

REF DWG #	REFRENCE DRAWING NAME

CDR MAGUIRE

inFORM studio
235 east main street, suite 102b
northville, mi 48167
(p) 248.449.3564
(f) 248.449.6984
www.in-formstudio.com

Buro Happold

BETA Group, Inc.
Engineers • Planners • Landscape Architects
Lincoln, RI - Norwood, MA - Hartford, CT

RHODE ISLAND DEPARTMENT OF TRANSPORTATION

INTERSTATE 195

DESIGNED BY:
CHECKED:
DATE:
SHEET: V2_150
OF: V2_163

SCALE: 1" = 10'-0"

REVISIONS			REVISIONS		
NO.	DATE	BY	NO.	DATE	BY
1	06/14/16	GMF			

IMPROVEMENTS TO INTERSTATE ROUTE 195
CONTRACT 16 VOLUME 2
PROVIDENCE RHODE ISLAND

ENLARGED UPPER BRIDGE LIGHTING PLANS — E201

14–0303_E201_ADD04

R-1	FED. ROAD DIV. NO.	STATE	FEDERAL AID PROJECT NO.	FISCAL YEAR	SHEET NO.	TOTAL SHEETS
	1	R.I.			V2_151	V2_163

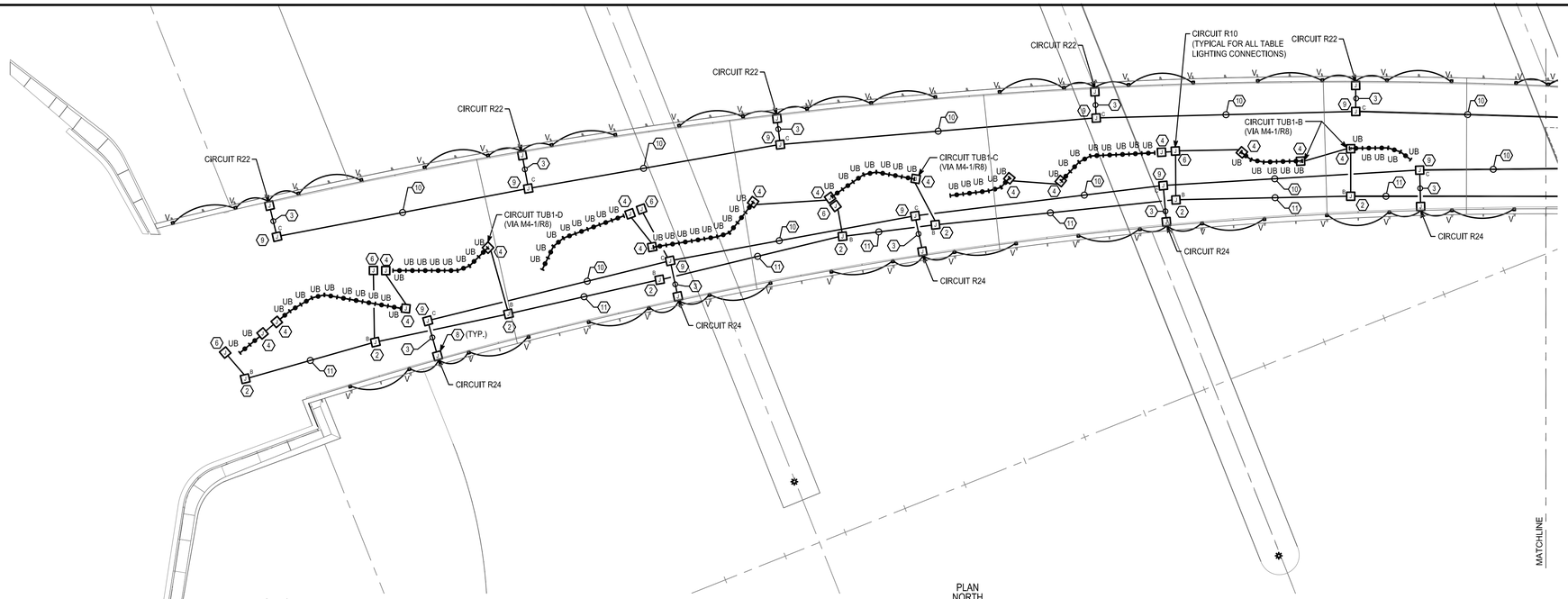

PLAN NORTH

1 / E202 **ENLARGED UPPER BRIDGE PARTIAL LIGHTING PLAN - TYPES 'V' & 'UB'**

1" = 10'-0"

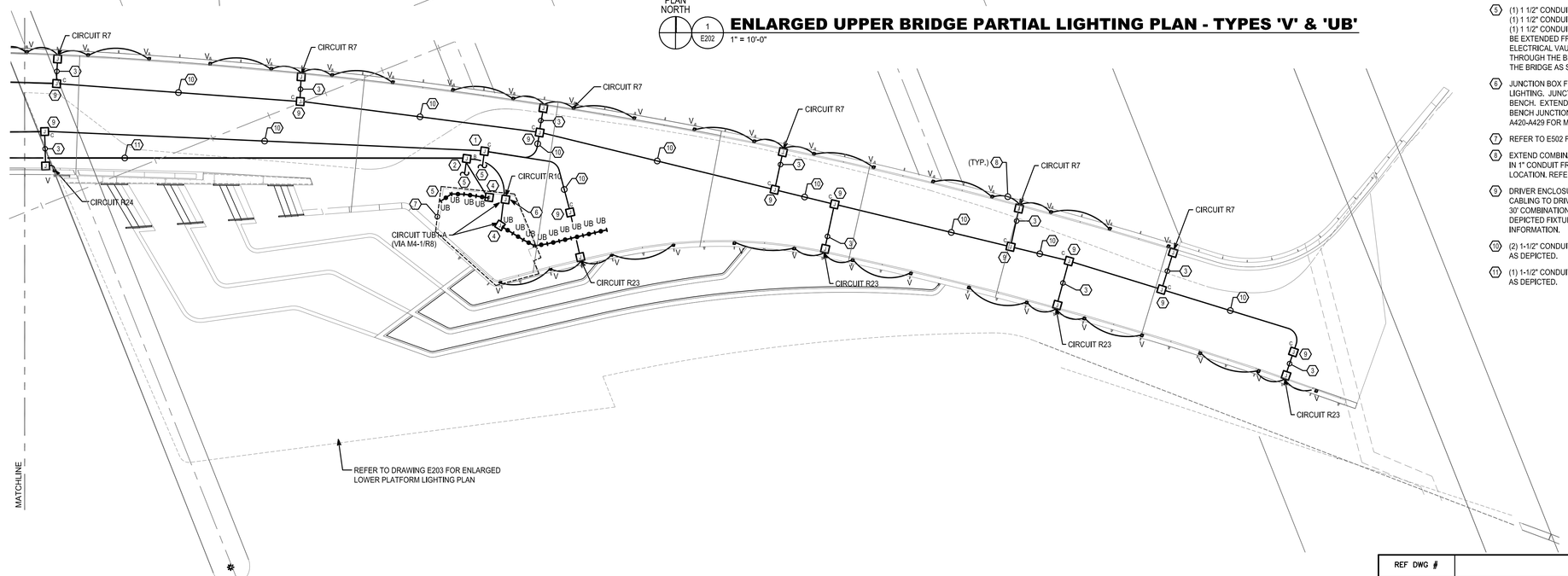

PLAN NORTH

2 / E202 **ENLARGED UPPER BRIDGE PARTIAL LIGHTING PLAN - TYPES 'V' & 'UB'**

1" = 10'-0"

GENERAL NOTES

1. CONDUIT SHALL BE SECURED EVERY 5 FEET, WITH A JUNCTION BOX EVERY 10 FEET (TYPICAL).
2. ALL LIGHTING CIRCUITS SHALL BE RUN VIA LIGHTING CONTROL RELAY PANEL.
3. REFER TO CIRCUIT NUMBER NOTES ON THIS SHEET AND LIGHTING CONTROL SCHEDULE ON E701 FOR WIRE SIZES AND MORE INFORMATION.
4. EPOXY FIBERGLASS CONDUIT SHALL BE PROVIDED FOR ALL EXPOSED APPLICATIONS. FLEXIBLE LIQUID TIGHT CONDUIT MAY BE USED FOR CONCEALED AND PROTECTED FEEDS TO FIXTURES.
5. SCHEDULE 80 PVC SHALL BE FURNISHED FOR DUCT BANKS AND WHERE CONDUIT IS EMBEDDED OR CONCRETE ENCASED. EPOXY FIBERGLASS CONDUIT SHALL BE USED FOR OTHER APPLICATIONS, UNLESS OTHERWISE NOTED.
6. ALL WIRING SHALL BE THWN, UNLESS OTHERWISE NOTED.
7. CONDUIT AND JUNCTION BOXES SHALL BE LOCATED BELOW THE WOOD DECKING OR BEHIND THE WOOD PANELS, UNLESS OTHERWISE NOTED.
8. REFER TO SECTION ON DRAWING E503 FOR CONDUIT ROUTING DETAILS.
9. ALL UNISTRUT AND CONDUIT HANGERS SHALL BE FIBERGLASS.

NUMBERED NOTES

1. PROVIDE JUNCTION BOX TO INTERCEPT (2) 1-1/2" CONDUITS FOR TYPE 'V' FIXTURES.
2. PROVIDE JUNCTION BOX FOR 'UB' FIXTURES TO INTERCEPT 1-1/2" CONDUIT ACROSS BRIDGE. EXTEND 3/4" CONDUIT FROM JUNCTION BOX TO FIXTURE.
3. PROVIDE COMBINATION POWER AND DATA IN CABLES IN 1-1/4" CONDUIT BETWEEN TYPE 'V' DRIVER ENCLOSURE ([7]) AND JUNCTION BOX AT POST. REFER TO DETAILS ON E300 AND E500 AND SCHEDULES ON E701 FOR ADDITIONAL INFORMATION.
4. JUNCTION BOX SHALL BE MOUNTED ON UNDERSIDE OF DECK. EXTEND 3/4" CONDUIT FROM JUNCTION BOX BELOW DECK TO BENCH FIXTURE. EXTEND 3/4" CONDUIT BETWEEN BENCHES AS SHOWN. PROVIDE LIGHT FIXTURES WITH PLUG AND PLAY WHIPS BETWEEN FIXTURES IN THE SAME BENCH. REFER TO BENCH DETAILS ON DRAWINGS A420-A429 FOR MORE INFORMATION.
5. (1) 1 1/2" CONDUIT FOR POWER TO TYPE 'V' FIXTURES, (1) 1 1/2" CONDUIT FOR DMX TO TYPE 'V' FIXTURES, AND (1) 1 1/2" CONDUIT FOR POWER TO BENCH LIGHTING SHALL BE EXTENDED FROM THE LIGHTING CONTROL PANEL WITHIN THE ELECTRICAL VAULT. THE CONDUIT SHALL THEN BE EXTENDED THROUGH THE BRIDGE STRUCTURE ACROSS THE LENGTH OF THE BRIDGE AS SHOWN.
6. JUNCTION BOX FOR CONNECTION TO INTEGRAL 3 FORM TABLE LIGHTING. JUNCTION BOX SHALL BE MOUNTED ON UNDERSIDE OF BENCH. EXTEND 3/4" CONDUIT FROM JUNCTION BOX BELOW DECK TO BENCH JUNCTION BOX. REFER TO BENCH DETAILS ON DRAWINGS A420-A429 FOR MORE INFORMATION.
7. REFER TO E502 FOR ELECTRICAL VAULT PLAN AND DETAILS.
8. EXTEND COMBINATION POWER AND DATA CABLE FOR TYPE 'V' FIXTURES IN 1" CONDUIT FROM JUNCTION BOX AT FIRST POST AT EACH 'V' FIXTURE LOCATION. REFER TO DETAIL ON DRAWING E500 FOR MORE INFORMATION.
9. DRIVER ENCLOSURE FOR TYPE 'V' FIXTURES. EXTEND POWER AND DMX CABLING TO DRIVERS. DRIVER ENCLOSURE TO BE LOCATED SUCH THAT 30' COMBINATION POWER AND DATA CABLE CAN BE EXTENDED TO DEPICTED FIXTURES. REFER TO DETAIL ON DRAWING E503 FOR MORE INFORMATION.
10. (2) 1-1/2" CONDUITS FOR TYPE 'V' FIXTURES EXTENDS LENGTH OF BRIDGE AS DEPICTED.
11. (1) 1-1/2" CONDUITS FOR TYPE 'UB' FIXTURES EXTENDS LENGTH OF BRIDGE AS DEPICTED.

ADDENDUM NO. 4

REF DWG #	REFRENCE DRAWING NAME

CDR MAGUIRE

inFORM studio
235 east main street, suite 102b
northville, mi 48167
(p) 248.449.3564
(f) 248.449.6984
www.in-formstudio.com

Buro Happold

BETA Group, Inc.
Engineers • Planners • Landscape Architects
Lincoln, RI - Norwood, MA - Hartford, CT

RHODE ISLAND DEPARTMENT OF TRANSPORTATION

INTERSTATE 195

DESIGNED BY:
CHECKED:
DATE:
SHEET: V2_151
OF: V2_163

SCALE: 1" = 10'-0"

REVISIONS			REVISIONS		
NO.	DATE	BY	NO.	DATE	BY
1	06/14/16	GMF			

IMPROVEMENTS TO INTERSTATE ROUTE 195
PROVIDENCE — CONTRACT 16 VOLUME 2 — RHODE ISLAND

ENLARGED UPPER BRIDGE LIGHTING PLANS

E202

14-0303_E202_ADD04

R-1	FED. ROAD DIV. NO.	STATE	FEDERAL AID PROJECT NO.	FISCAL YEAR	SHEET NO.	TOTAL SHEETS
	1	R.I.			V2_152	V2_163

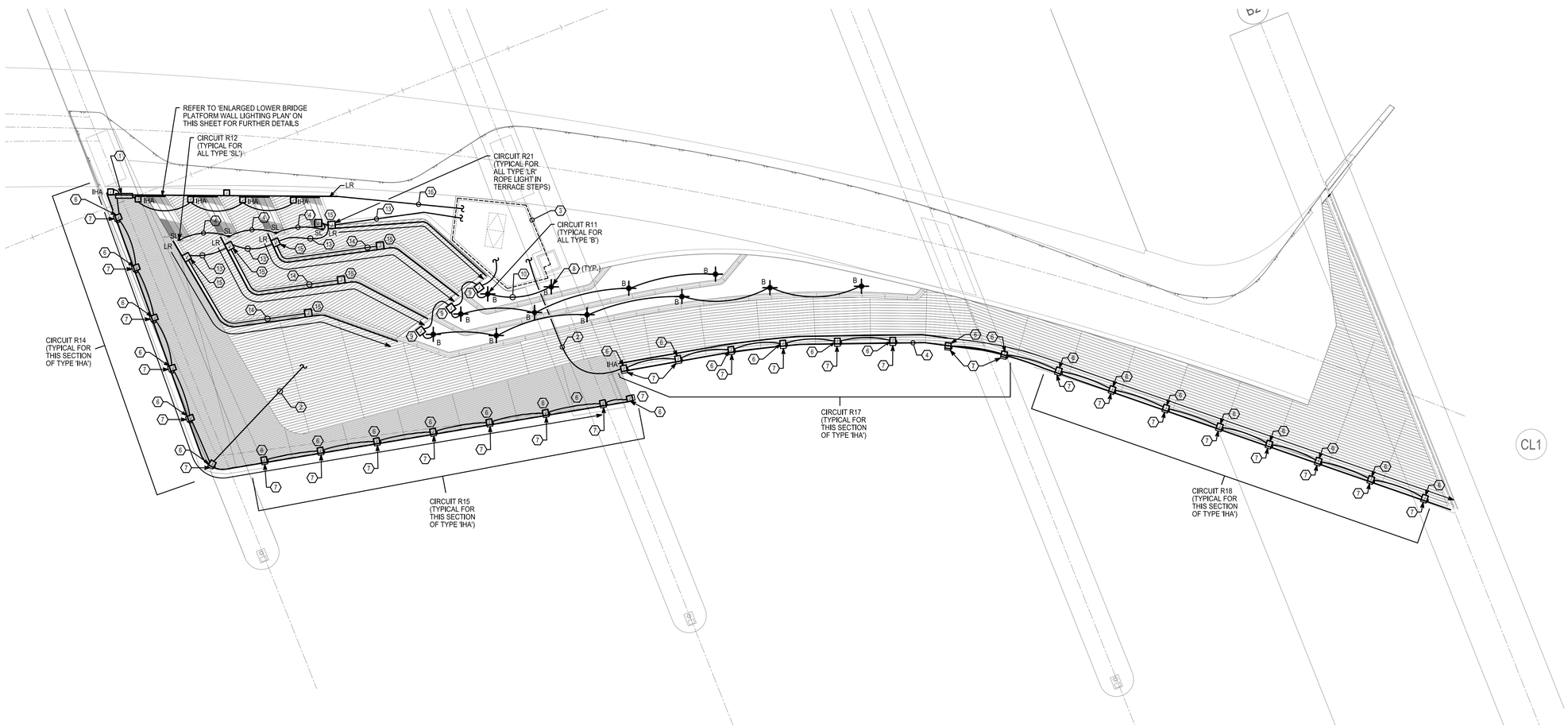

PLAN NORTH

1 / E203 **ENLARGED LOWER BRIDGE PLATFORM LIGHTING PLAN**

1" = 10'-0"

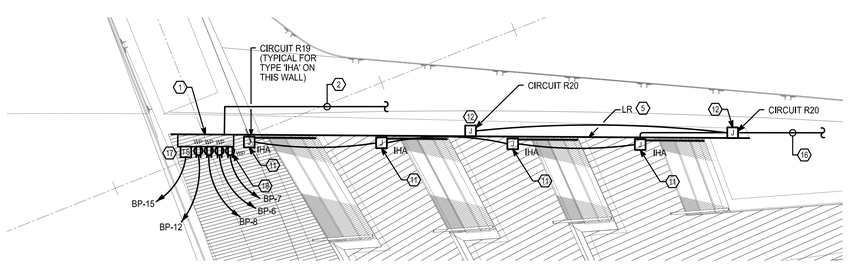

PLAN NORTH

2 / E203 **ENLARGED LOWER BRIDGE PLATFORM WALL LIGHTING PLAN**

1" = 5'-0"

NUMBERED NOTES

1. ENCLOSURE RECESSED IN CONCRETE WALL BEHIND STEEL PANEL FOR LIGHTING CONTROL PANEL TOUCH SCREEN AND WEATHERPROOF RECEPTACLES. REFER TO ARCHITECTURAL PLANS FOR ADDITIONAL INFORMATION.
2. EXTEND (2) 1" CONDUITS - ONE FOR TOUCHSCREEN LOW VOLTAGE CABLING AND ONE FOR 120V POWER CIRCUIT IN ENCLOSURE BACK TO ELECTRIC VAULT.
3. REFER TO E502 FOR ELECTRICAL VAULT PLAN AND DETAILS.
4. (1) 3/4" CONDUIT WITH CABLING FOR STEP LIGHTS EMBEDDED IN CONCRETE WALL. REFER TO LIGHTING CONTROL SCHEDULE ON E700 FOR ADDITIONAL INFORMATION.
5. LED ROPE LIGHTING SHALL BE MOUNTED ALONG TOP OF WALL AND CONCEALED. REFER TO DETAIL 1 ON A511 AND DETAIL 3 ON A513 FOR MORE INFORMATION.
6. JUNCTION BOX WITH WEATHERPROOF COVER SHALL BE EMBEDDED IN CONCRETE BENEATH DECK. EXTEND 3/4" CONDUIT EMBEDDED IN CONCRETE WITH WIRING ACCORDING TO SCHEDULES ON E701 BETWEEN JUNCTION BOXES AND BACK TO THE LIGHTING CONTROL PANEL IN ELECTRIC VAULT AS SHOWN. 3/4" CONDUIT SHALL BE EXTENDED UP INTO HANDRAIL POST ADJACENT TO EACH JUNCTION BOX. THE WIRING SHALL BE SPLICED WITHIN THE POSTS AT THE HANDHOLE AND RUN BACK DOWN THROUGH THE CONDUIT TO THE NEXT POST. REFER TO DETAILS ON A530 & A531 AND DETAIL 3 ON E501 FOR MORE INFORMATION. (TYPICAL OF TYPE 'IHA')
7. EXTEND WIRING FROM SPLICE IN HANDRAIL HANDHOLE TO DRIVER LOCATED IN HANDRAIL. REFER TO DETAIL 3 ON A531.
8. REFER TO DRAWING A520 FOR EXACT BOLLARD LOCATIONS AND REFER TO DETAIL 1 ON DRAWING E503 FOR BOLLARD MOUNTING DETAIL.
9. JUNCTION BOX MOUNTED IN PLANTER FOR BOLLARD. REFER TO DETAIL 1 ON DRAWING E503 FOR MORE INFORMATION.
10. 3/4" CONDUIT WITH WIRING EMBEDDED IN CONCRETE BETWEEN FIXTURES (TYPICAL).
11. RECESSED JUNCTION BOX BEHIND HANDRAIL IN WALL AND 3/4" CONDUIT WITH WIRING BETWEEN BOXES AND BACK TO ELECTRIC VAULT (COMBINE WITH 'LR' CABLING IN ONE CONDUIT). ROUTE WIRING THROUGH HANDRAIL POST TO INTEGRAL DRIVER.REFER TO DETAILS ON DRAWING A511 AND DETAIL 10 ON DRAWING A512 FOR EXACT MOUNTING LOCATION OF JUNCTION BOX AND DETAILS.
12. JUNCTION BOX IN WALL FOR CONNECTION TO TYPE 'LR' ROPE LIGHT. PROVIDE 3/4" CONDUIT WITH WIRE IN CONCRETE BACK TO POWER SUPPLY IN ELECTRIC VAULT. REFER TO E700 FOR CABLING REQUIREMENTS.
13. 1-1/2" CONDUIT WITH WIRE EMBEDDED IN CONCRETE BACK TO LIGHTING CONTROL PANEL AND POWER SUPPLIES IN ELECTRIC VAULT.
14. EXTEND 3/4" CONDUIT WITH WIRE TO JUNCTION BOX.
15. JUNCTION BOX IN WALL FOR CONNECTION TO TYPE 'LR' ROPE LIGHT. WIRING SHALL BE ROUTED FROM EACH JUNCTION BOX BACK TO POWER SUPPLY IN ELECTRIC VAULT.
16. EXTEND CABLING FOR TYPE 'LR' AND TYPE 'IHA' FIXTURES IN (1) 1" CONDUIT EMBEDDED IN CONCRETE BACK TO ELECTRIC VAULT.
17. TOUCHSCREEN USER INTERFACE (MOUNTED IN WEATHERPROOF ENCLOSURE) FOR LIGHTING CONTROL SYSTEM TO BE MOUNTED IN RECESSED ENCLOSURE. EXTEND CABLING FOR INTERCONNECTION TO LIGHTING CONTROL PANEL LOCATED IN ELECTRIC VAULT IN (1) 1" CONDUIT.
18. PROVIDE WEATHERPROOF RECEPTACLES IN RECESSED ENCLOSURE AND EXTEND (1) 1" CONDUIT BACK TO PANEL 'BP' IN ELECTRIC VAULT.

GENERAL NOTES

1. CONDUIT SHALL BE SECURED EVERY 5 FEET, WITH A JUNCTION BOX EVERY 10 FEET (TYPICAL).
2. ALL LIGHTING CIRCUITS SHALL BE RUN VIA LIGHTING CONTROL RELAY PANEL.
3. ALL CONDUIT FOR THE LOWER PLATFORM SHALL BE RUN WITHIN THE CONCRETE SLAB BACK TO THE ENCLOSURE RECESSED IN THE CONCRETE WALL.
4. REFER TO CIRCUIT NUMBER NOTES ON THIS SHEET AND LIGHTING CONTROL SCHEDULE ON E701 FOR WIRE SIZES AND MORE INFORMATION.
5. EPOXY FIBERGLASS CONDUIT SHALL BE PROVIDED FOR ALL EXPOSED APPLICATIONS. FLEXIBLE LIQUID TIGHT CONDUIT MAY BE USED FOR CONCEALED AND PROTECTED FEEDS TO FIXTURES.
6. SCHEDULE 80 PVC SHALL BE FURNISHED FOR DUCT BANKS AND WHERE CONDUIT IS EMBEDDED OR CONCRETE ENCASED. EPOXY FIBERGLASS CONDUIT SHALL BE USED FOR OTHER APPLICATIONS, UNLESS OTHERWISE NOTED.
7. ALL WIRING SHALL BE THWN, UNLESS OTHERWISE NOTED.
8. REFER TO E502 FOR ACCESS PANEL/ENCLOSURE DETAIL.
9. CONDUIT AND JUNCTION BOXES SHALL BE LOCATED BELOW THE WOOD DECKING OR BEHIND THE WOOD PANELS, UNLESS OTHERWISE NOTED.
10. ALL UNISTRUT AND CONDUIT HANGERS SHALL BE FIBERGLASS.

ADDENDUM NO. 4

REF DWG #	REFRENCE DRAWING NAME

CDR MAGUIRE

inFORM studio
235 east main street, suite 102b
northville, mi 48167
(p) 248.449.3564
(f) 248.449.6984
www.in-formstudio.com

Buro Happold

BETA Group, Inc.
Engineers • Planners • Landscape Architects
Lincoln, RI - Norwood, MA - Hartford, CT

RHODE ISLAND
DEPARTMENT OF TRANSPORTATION

DESIGNED BY:
CHECKED:
DATE:
SHEET: V2_152
OF: V2_163

SCALE: 1" = 10'-0"

REVISIONS			REVISIONS		
NO.	DATE	BY	NO.	DATE	BY
1	06/14/16	GMF			

IMPROVEMENTS TO
INTERSTATE ROUTE 195
CONTRACT 16 VOLUME 2

PROVIDENCE RHODE ISLAND

ENLARGED LOWER BRIDGE PLATFORM LIGHTING PLAN

E203

14-0303_E203_ADD04

FED. ROAD DIV. NO.	STATE	FEDERAL AID PROJECT NO.	FISCAL YEAR	SHEET NO.	TOTAL SHEETS
1	R.I.			V2_154	V2_163

R-1

GENERAL NOTES

1. TYPE 'PLNS' AND 'PLVN' PIER LIGHTS SHALL BE CAREFULLY AIMED AND ADJUSTED. FINAL CONFIGURATION TO BE APPROVED BY ARCHITECTS/ENGINEERS.
2. REFER TO DRAWING A401 FOR PIER AND COLUMN DETAILS.
3. EPOXY FIBERGLASS CONDUIT SHALL BE PROVIDED FOR ALL EXPOSED APPLICATIONS. FLEXIBLE LIQUID TIGHT CONDUIT MAY BE USED FOR CONCEALED AND PROTECTED FEEDS TO FIXTURES.
4. SCHEDULE 80 PVC SHALL BE FURNISHED FOR DUCT BANKS AND WHERE CONDUIT IS EMBEDDED OR CONCRETE ENCASED. EPOXY FIBERGLASS CONDUIT SHALL BE USED FOR OTHER APPLICATIONS, UNLESS OTHERWISE NOTED.
5. ALL UNISTRUT AND CONDUIT HANGERS SHALL BE FIBERGLASS.

NUMBERED NOTES

1. UPLIGHT JUNCTION BOX TO BE MOUNTED ADJACENT TO UPLIGHTS. EXTEND 120V POWER AND DMX TO CONTROL BOX. EXTEND POWER/DATA FIXTURE CABLE TO FIXTURES. EXTEND/ROUTE POWER/CONTROL CONDUITS INSIDE STEEL COLUMN.
2. MOUNT LINEAR UPLIGHT TO FACE OF COLUMN/CAP. REFER TO DETAIL 2 ON THIS DRAWING FOR MORE INFORMATION.
3. MOUNT LINEAR UPLIGHT TO FACE OF COLUMN/CAP. REFER TO DETAIL 3 ON THIS DRAWING FOR MORE INFORMATION.
4. PIER LIGHT JUNCTION BOX TO BE MOUNTED TO PIER. EXTEND 120V POWER AND DMX TO CONTROL BOX. COORDINATE MOUNTING OF PIER LIGHTS (PLNS & PLVN) WITH ARCHITECTURAL DRAWINGS.
5. (1) 1" CONDUITS EMBEDDED IN PIER. EXTEND TO JUNCTION BOXES IN COLUMN.
6. EXISTING NAVIGATION LIGHT TO REMAIN UNLESS OTHERWISE NOTED.
7. (1) 1-1/2" CONDUIT FOR POWER FOR PIER LIGHTS AND UPLIGHTS.
8. PROVIDE JUNCTION BOXES FOR POWER FOR PIER LIGHTS AND UPLIGHTS.
9. CHANNEL MARGIN NAVIGATION LIGHT. MOUNT TO UNDERSIDE OF BRIDGE WITH STEM; PROVIDE ALL MOUNTING HARDWARE REQUIRED.
10. CENTER CHANNEL NAVIGATION LIGHT. MOUNT TO UNDERSIDE OF BRIDGE WITH STEM; PROVIDE ALL MOUNTING HARDWARE REQUIRED.
11. JUNCTION BOX FOR NAVIGATION LIGHTING CIRCUIT.
12. 2 #10 & 1 #10 EGC IN (1) 1" CONDUIT.

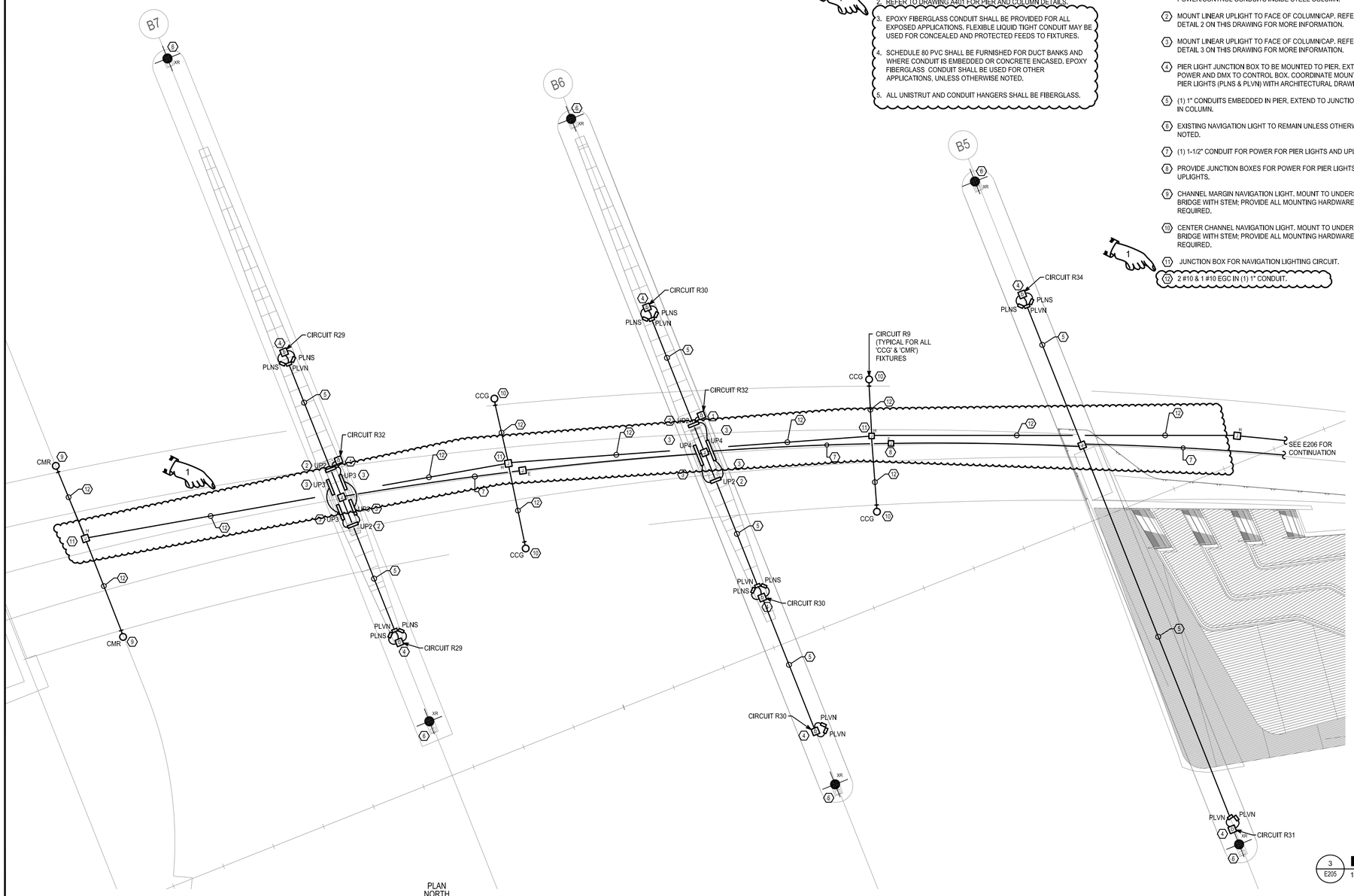

1 / E205 **ENLARGED LOWER BRIDGE PARTIAL LIGHTING PLAN- WEST**
1" = 10'-0"

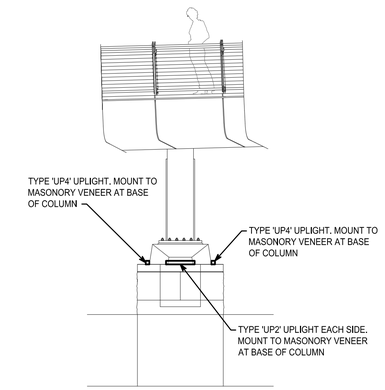

2 / E205 **PIER 'B6' COLUMN ELEVATION - LIGHTING (SIDE)**
1" = 5'-0"

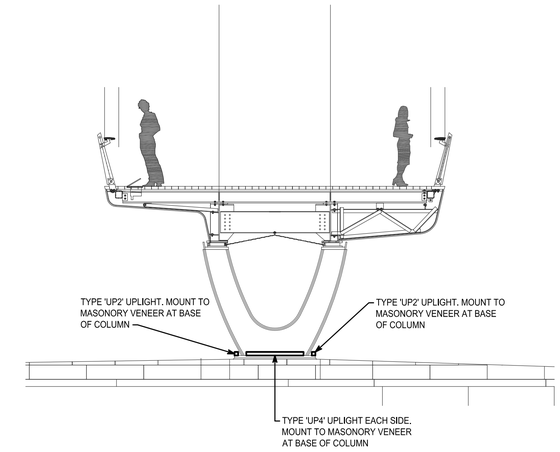

3 / E205 **PIER 'B6' COLUMN ELEVATION - LIGHTING (FRONT)**
1" = 5'-0"

ADDENDUM NO. 4

REF DWG #	REFRENCE DRAWING NAME

CDR MAGUIRE

inFORM studio
235 east main street, suite 102b
northville, mi 48167
(p) 248.449.3564
(f) 248.449.6984
www.in-formstudio.com

Buro Happold

BETA Group, Inc.
Engineers • Planners • Landscape Architects
Lincoln, RI - Norwood, MA - Hartford, CT

RHODE ISLAND
DEPARTMENT OF TRANSPORTATION

INTERSTATE 195

DESIGNED BY:
CHECKED:
DATE:
SHEET: V2_154
OF: V2_163

SCALE: 1" = 10'-0"

REVISIONS			REVISIONS		
NO.	DATE	BY	NO.	DATE	BY
1	06/14/16	GMF			

IMPROVEMENTS TO
INTERSTATE ROUTE 195
CONTRACT 16 VOLUME 2
PROVIDENCE RHODE ISLAND

ENLARGED LOWER BRIDGE LIGHTING PLAN — E205

14-0303_E205_ADD04

R-1	FED. ROAD DIV. NO.	STATE	FEDERAL AID PROJECT NO.	FISCAL YEAR	SHEET NO.	TOTAL SHEETS
	1	R.I.			V2_155	V2_163

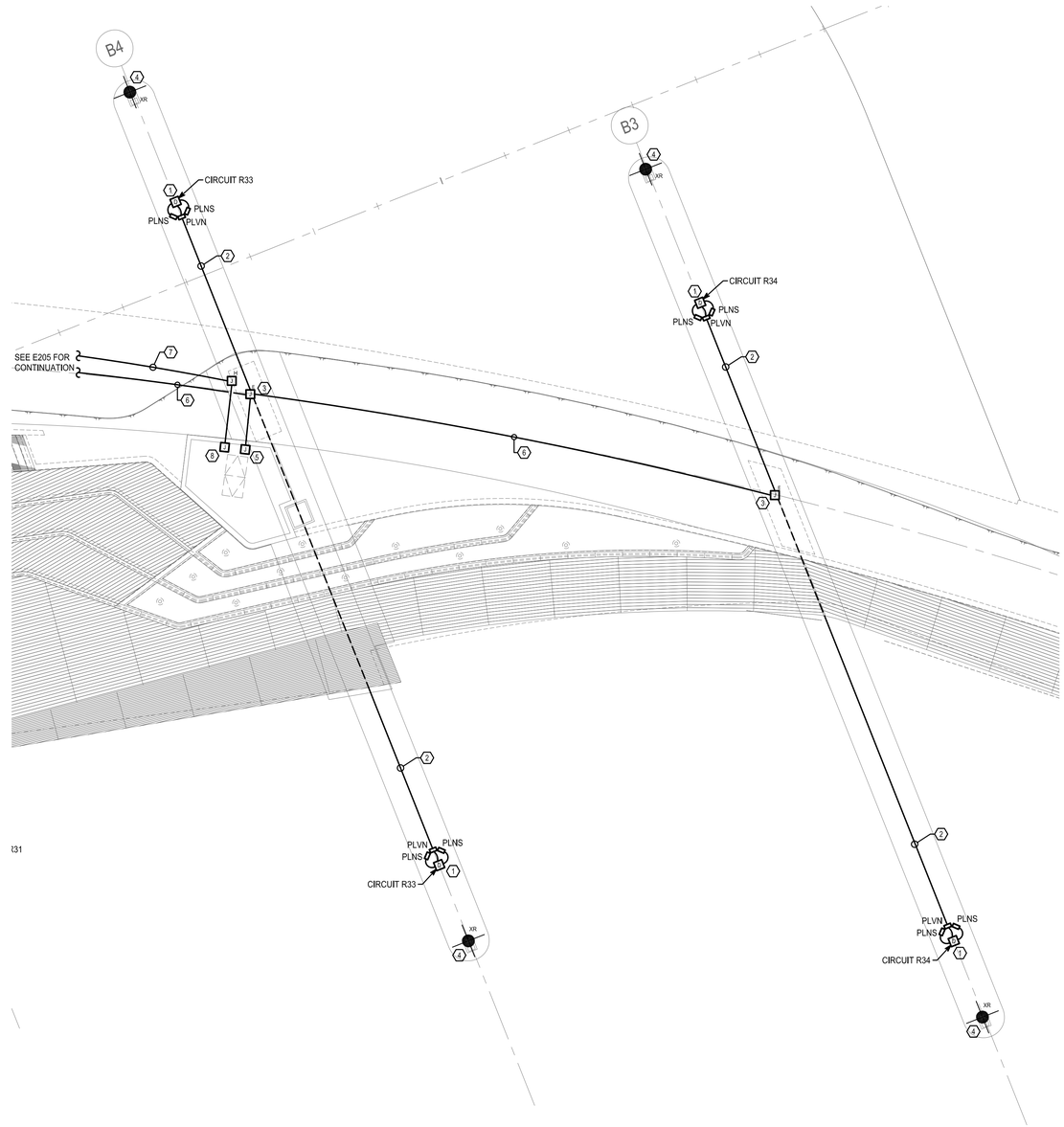

PLAN NORTH

1 E206 **ENLARGED LOWER BRIDGE PARTIAL LIGHTING PLAN- EAST**

1" = 10'-0"

NUMBERED NOTES

1. PIER LIGHT JUNCTION BOX TO BE MOUNTED TO PIER. EXTEND 120V POWER AND DMX TO CONTROL BOX. COORDINATE MOUNTING OF PIER LIGHTS (PLNS & PLVN) WITH ARCHITECTURAL DRAWINGS.
2. (1) 1" CONDUITS EMBEDDED IN PIER, EXTEND TO JUNCTION BOXES IN COLUMN.
3. PROVIDE JUNCTION BOXES FOR POWER FOR PIER LIGHTS.
4. EXISTING NAVIGATION LIGHT TO REMAIN UNLESS OTHERWISE NOTED.
5. EXTEND 1-1/2" CONDUIT (POWER) AND ASSOCIATED CIRCUITS FOR PIER LIGHTS ('PLNS' & 'PLVN') AND UPLIGHTS ('UP2', 'UP3' & 'UP4') TO ELECTRICAL VAULT.
6. (1) 1-1/2" CONDUIT FOR POWER FOR PIER LIGHTS AND UPLIGHTS.
7. 2 #10 & 1 #10 EGC IN (1) 1" CONDUIT.
8. (1) 3/4" CONDUIT AND WIRING FOR POWER TO TYPE 'CMR' AND 'CCG' FIXTURES SHALL BE EXTENDED FROM THE LIGHTING CONTROL PANEL WITHIN THE ELECTRICAL VAULT. CONDUIT SHALL THEN EXTEND THROUGH THE BRIDGE STRUCTURE ACROSS THE LENGTH OF THE BRIDGE AS DEPICTED.

GENERAL NOTES

1. TYPE 'PLNS' AND 'PLVN' PIER LIGHTS SHALL BE CAREFULLY AIMED AND ADJUSTED. FINAL CONFIGURATION TO BE APPROVED BY ARCHITECTS/ENGINEERS.
2. REFER TO DRAWING A401 FOR PIER AND COLUMN DETAILS.
3. EPOXY FIBERGLASS CONDUIT SHALL BE PROVIDED FOR ALL EXPOSED APPLICATIONS. FLEXIBLE LIQUID TIGHT CONDUIT MAY BE USED FOR CONCEALED AND PROTECTED FEEDS TO FIXTURES.
4. SCHEDULE 80 PVC SHALL BE FURNISHED FOR DUCT BANKS AND WHERE CONDUIT IS EMBEDDED OR CONCRETE ENCASED. EPOXY FIBERGLASS CONDUIT SHALL BE USED FOR OTHER APPLICATIONS UNLESS OTHERWISE NOTED.
5. ALL UNISTRUT AND CONDUIT HANGERS SHALL BE FIBERGLASS.

ADDENDUM NO. 4

REF DWG #	REFRENCE DRAWING NAME

CDR MAGUIRE

inFORM studio
235 east main street, suite 102b
northville, mi 48167
(p) 248.449.3564
(f) 248.449.6984
www.in-formstudio.com

Buro Happold

BETA Group, Inc.
Engineers • Planners • Landscape Architects
Lincoln, RI - Norwood, MA - Hartford, CT

RHODE ISLAND
DEPARTMENT OF TRANSPORTATION

INTERSTATE 195

DESIGNED BY:
CHECKED:
DATE:
SHEET: V2_155
OF: V2_163

SCALE: 1" = 10'-0"

REVISIONS			REVISIONS		
NO.	DATE	BY	NO.	DATE	BY
1	06/14/16	GMF			

PROVIDENCE — IMPROVEMENTS TO INTERSTATE ROUTE 195 CONTRACT 16 VOLUME 2 — RHODE ISLAND

ENLARGED LOWER BRIDGE LIGHTING PLAN — E206

14-0303_E206_ADD04

R-1	FED. ROAD DIV. NO.	STATE	FEDERAL AID PROJECT NO.	FISCAL YEAR	SHEET NO.	TOTAL SHEETS
	1	R.I.			V2_156	V2_163

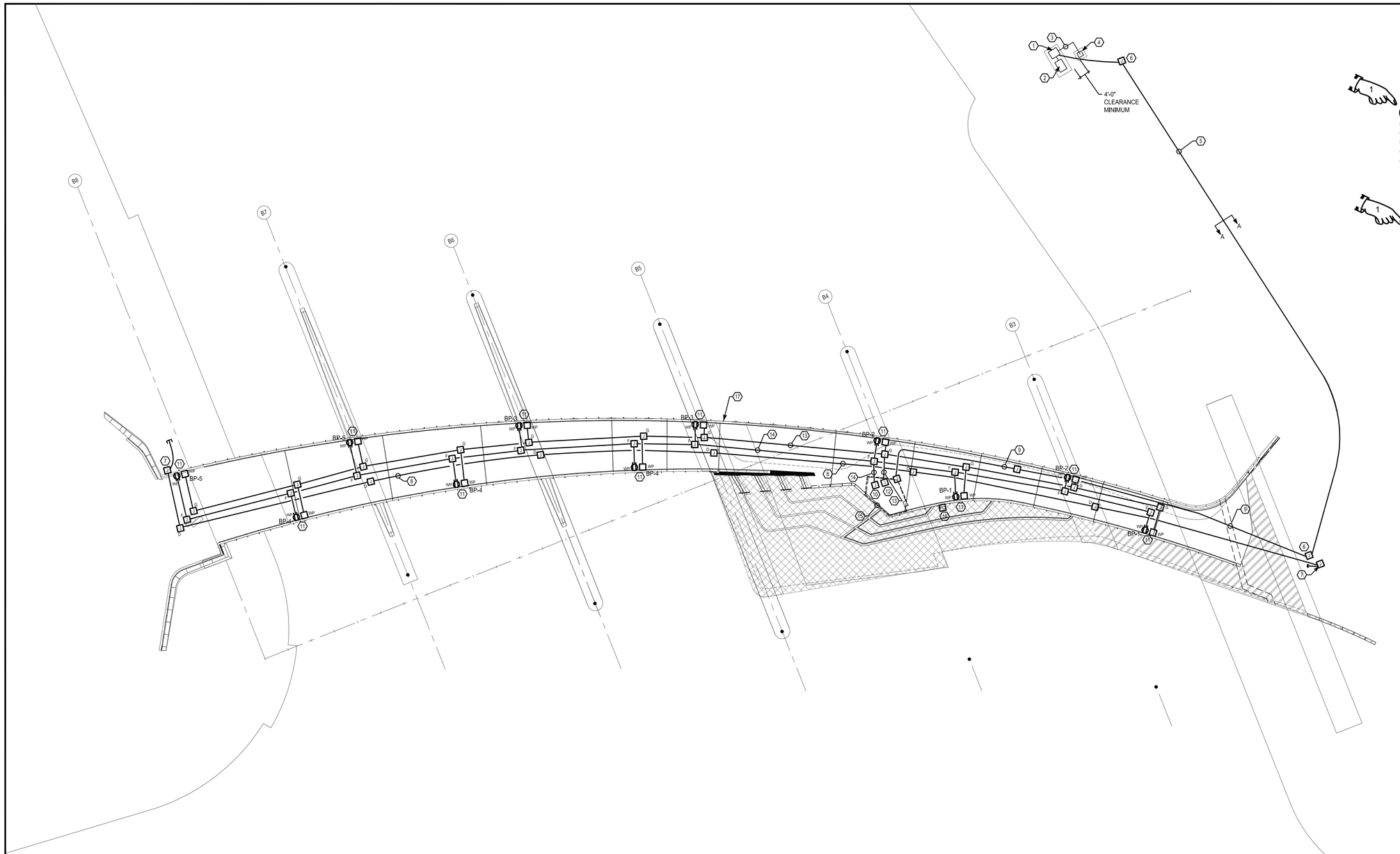

PLAN NORTH

1 / E300

PROVIDENCE PEDESTRIAN BRIDGE POWER PLAN

1" = 20'-0"

GENERAL NOTES

1. PROVIDE STAINLESS STEEL CONDUIT WHERE EXPOSED (TYPICAL FOR ENTIRE PROJECT).
2. CONDUIT SHALL BE SECURED EVERY 5 FEET, WITH A STAINLESS STEEL JUNCTION BOX EVERY 10 FEET (TYPICAL).
3. EPOXY FIBERGLASS CONDUIT SHALL BE PROVIDED FOR ALL EXPOSED APPLICATIONS. FLEXIBLE LIQUID TIGHT CONDUIT MAY BE USED FOR CONCEALED AND PROTECTED FEEDS TO FIXTURES.
4. SCHEDULE 80 PVC SHALL BE FURNISHED FOR DUCT BANKS AND WHERE CONDUIT IS EMBEDDED OR CONCRETE ENCASED. EPOXY FIBERGLASS CONDUIT SHALL BE USED FOR OTHER APPLICATIONS, UNLESS OTHERWISE NOTED.
5. ALL WIRING SHALL BE THWN, UNLESS OTHERWISE NOTED.
6. CONDUIT AND JUNCTION BOXES SHALL BE LOCATED BELOW THE WOOD DECKING OR BEHIND THE WOOD PANELS, UNLESS OTHERWISE NOTED.
7. ALL UNISTRUT AND CONDUIT HANGERS SHALL BE FIBERGLASS.

NUMBERED NOTES

1. EXISTING 50KVA PAD MOUNTED UTILITY TRANSFORMER. 4160/12470V PRIMARY, 120/240V-1ϕ-3W SECONDARY.
2. EXISTING SERVICE PEDESTAL WITH 200A/2P FUSED DISCONNECT, UTILITY METER, AND 120/240V-1ϕ-3W 225A PANEL.
3. 3 #3/0 IN (1) 2" CONDUIT AND (1) SPARE 2" CONDUIT FROM EXISTING TRANSFORMER TO NEW SERVICE DISCONNECT.
4. NEW SERVICE PEDESTAL WITH DISCONNECT SWITCHES AND UTILITY METER. REFER TO RISER DIAGRAM AND PEDESTAL DETAIL ON E600 FOR MORE INFORMATION.
5. EXTEND DUCT BANK PER RIDOT STANDARDS FOR BRIDGE POWER TO JUNCTION BOX LOCATED ADJACENT TO EXISTING PIER, CUT AND PATCH ASPHALT AS REQUIRED. REFER TO RISER DIAGRAM FOR CONDUIT AND WIRING INFORMATION.
6. PROVIDE QUAZITE BOX PER RIDOT STANDARDS FOR BRIDGE POWER. REFER TO DETAIL 4 ON DRAWING E503. TRANSITION CONDUITS ABOVE GROUND AND UP THE SURFACE OF THE PIER TO THE UNDERSIDE OF THE BRIDGE AND THROUGH THE BRIDGE STRUCTURE TO THE SERVICE ENCLOSURE WITHIN THE ELECTRICAL VAULT.
7. PROVIDE QUAZITE BOX PER RIDOT STANDARDS FOR EMPTY CONDUIT WITH PULLSTRING FOR BROWN UNIVERSITY. CONDUIT SHALL BE EXTENDED 5 FEET BEYOND BOX, STUBBED UP, AND CAPPED.
8. (1) 4" CONDUIT WITH PULLSTRING FOR BROWN UNIVERSITY. CONDUIT SHALL BE RUN UP FROM QUAZITE BOX ON THE SURFACE OF THE PIER TO THE UNDERSIDE OF THE BRIDGE AND THROUGH THE BRIDGE STRUCTURE TO THE PIER AND QUAZITE BOX ON THE OTHER SHORE.
9. (2) 3" CONDUITS FOR BRIDGE POWER SHALL BE RUN FROM THE QUAZITE BOX TO BRIDGE SERVICE PANEL LOCATED WITHIN THE ELECTRICAL VAULT. REFER TO RISER DIAGRAM FOR WIRING INFORMATION. PROVIDE JUNCTION BOXES AS REQUIRED.
10. (1) 1 1/2" CONDUIT FOR RECEPTACLES SHALL BE ROUTED THROUGH THE BRIDGE STRUCTURE AND DOWN TO THE PANEL WITHIN THE ELECTRICAL VAULT. REFER TO E502 FOR ELECTRICAL VAULT PLAN AND DETAILS.
11. PROVIDE GFCI DUPLEX RECEPTACLE AND DOUBLE GANG JUNCTION BOX WITH WEATHERPROOF COVERPLATE FOR FUTURE SOUND SYSTEM CONNECTIONS WITHIN WEATHERPROOF FLOOR BOX FLUSH MOUNTED IN DECKING. REFER TO DETAIL ON E503 AND ARCHITECTURAL PLANS FOR MORE INFORMATION.
12. (1) 1 1/2" CONDUIT WITH PULLSTRING SHALL BE ROUTED THROUGH THE BRIDGE STRUCTURE AND DOWN TO FUTURE SOUND SYSTEM BOX IN ELECTRICAL VAULT. REFER TO E502 FOR ELECTRICAL VAULT PLAN AND DETAILS.
13. (1) 1 1/2" CONDUIT WITH PULLSTRING THROUGH THE UNDERSIDE OF THE BRIDGE. PROVIDE 3/4" CONDUIT FROM THE 1-1/2" CONDUIT OUT TO EACH BOX AS SHOWN FOR FUTURE SPEAKER SYSTEM. (TYPICAL).
14. PROVIDE 3 SETS OF 2 #10 & 1 #10 EGC (CKTS BP-1, 2 & 3) AND 2 SETS OF 2 #8 & 1 #10 EGC (CKTS BP-4 & 5) IN 1-1/2" CONDUIT FROM SERVICE PANEL 'BP'. REFER TO RECEPTACLES FOR CIRCUIT NUMBER. PROVIDE 3/4" CONDUIT FROM THE 1-1/4" CONDUIT OUT TO RECEPTACLES AS SHOWN.
15. REFER TO E502 FOR ELECTRICAL VAULT PLAN AND DETAILS..
16. PHOTOCELL SHALL BE SURFACE MOUNTED TO THE BRIDGE. COORDINATE FINAL LOCATION IN THE FIELD WITH MANUFACTURER. PROVIDE CABLING IN 1" CONDUIT BACK TO LIGHTING CONTROL PANEL WITHIN ELECTRICAL VAULT.
17. PROVIDE GROUNDING FOR BRIDGE ACCORDING TO DETAIL ON E600. BARE 4/0 COPPER WIRE SHALL BE ROUTED THROUGH THE STRUCTURE BELOW THE DECKING IN THE CENTER OF THE BRIDGE.

ADDENDUM NO. 4

REF DWG #	REFRENCE DRAWING NAME

CDR MAGUIRE

inFORM studio
235 east main street, suite 102b
northville, mi 48167
(p) 248.449.3564
(f) 248.449.6984
www.in-formstudio.com

Buro Happold

BETA Group, Inc.
Engineers • Planners • Landscape Architects
Lincoln, RI - Norwood, MA - Hartford, CT

RHODE ISLAND
DEPARTMENT OF TRANSPORTATION

INTERSTATE 195

DESIGNED BY:
CHECKED:
DATE:
SHEET: V2_156
OF: V2_163

SCALE:
1" = 20'-0"

REVISIONS			REVISIONS		
NO.	DATE	BY	NO.	DATE	BY
1	06/14/16	GMF			

IMPROVEMENTS TO
INTERSTATE ROUTE 195
CONTRACT 16 VOLUME 2

PROVIDENCE RHODE ISLAND

BRIDGE POWER PLAN

E300

14-0303_E300_ADD04

FED. ROAD DIV. NO.	STATE	FEDERAL AID PROJECT NO.	FISCAL YEAR	SHEET NO.	TOTAL SHEETS
1	R.I.			V2_157	V2_163

GENERAL NOTES:

1. REFER TO ARCHITECTURAL PLANS FOR DIMENSIONS AND DETAILS. ALL MOUNTING AND WIRING DETAILS SHALL BE COORDINATED WITH ARCHITECTURAL PLANS.

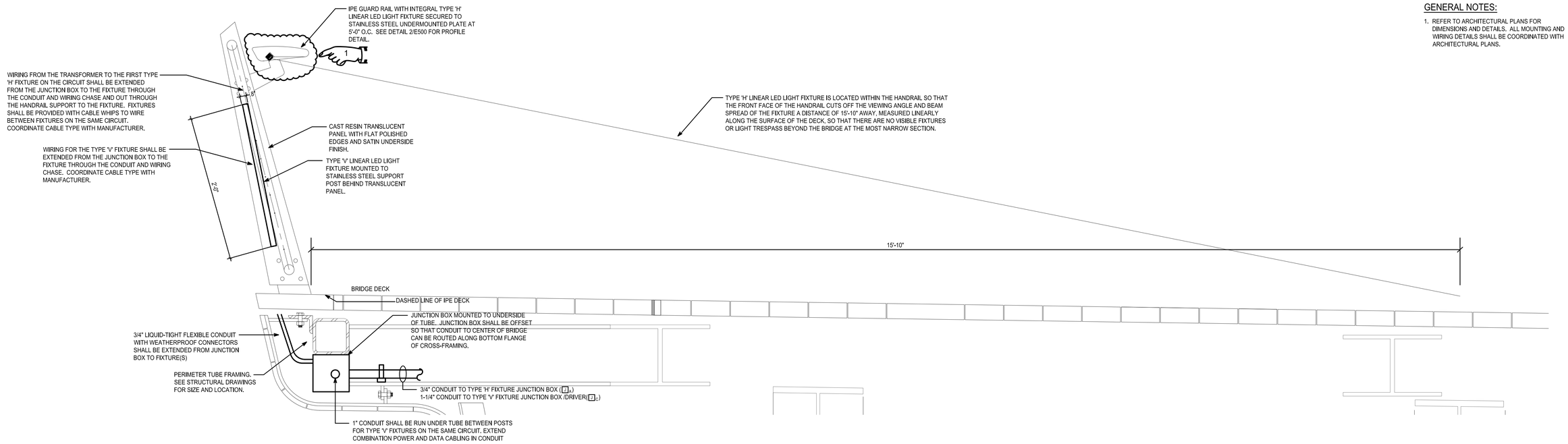

1 / E500 RAILING, ARCH, TYPE A SECTION BETWEEN PLATES
1 1/2" = 1'-0"

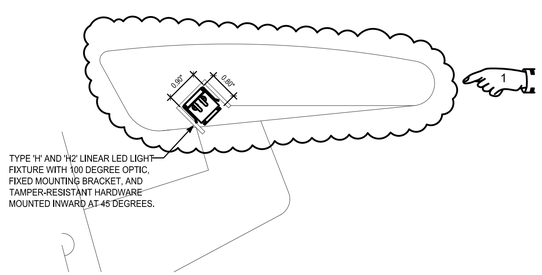

2 / E500 IPE GUARD RAIL ENLARGED SECTION
6" = 1'-0"

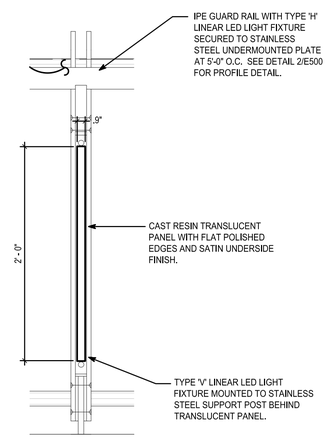

3 / E500 VERTICAL RAILING LIGHTING ENLARGED ELEVATION
1 1/2" = 1'-0"

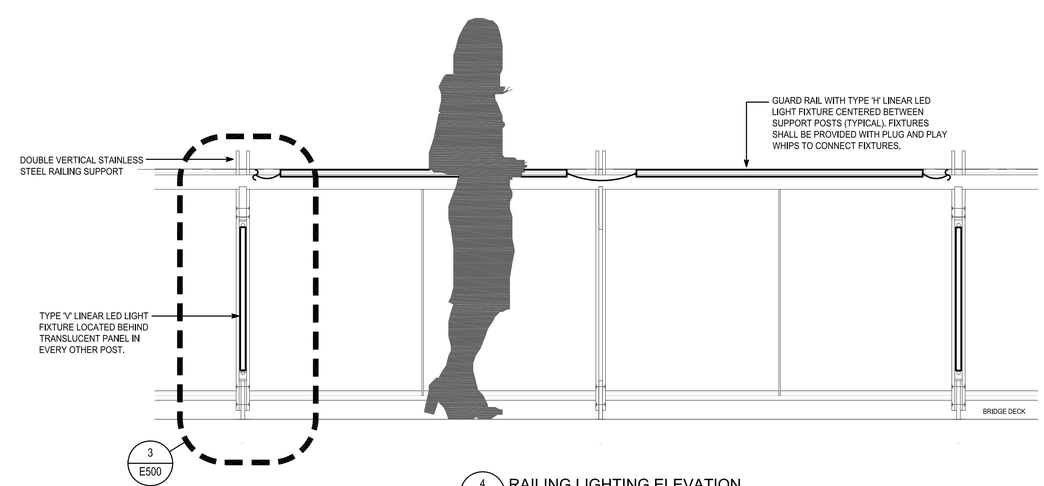

4 / E500 RAILING LIGHTING ELEVATION
1" = 1'-0"

ADDENDUM NO. 4

REF DWG #	REFRENCE DRAWING NAME

CDR MAGUIRE

inFORM studio
235 east main street, suite 102b
northville, mi 48167
(p) 248.449.3564
(f) 248.449.6984
www.in-formstudio.com

Buro Happold

BETA Group, Inc.
Engineers • Planners • Landscape Architects
Lincoln, RI - Norwood, MA - Hartford, CT

RHODE ISLAND
DEPARTMENT OF TRANSPORTATION

INTERSTATE 195

DESIGNED BY:
CHECKED:
DATE:
SHEET: V2_157
OF: V2_163

SCALE: AS NOTED

REVISIONS			REVISIONS		
NO.	DATE	BY	NO.	DATE	BY
1	06/14/16	GMF			

IMPROVEMENTS TO INTERSTATE ROUTE 195
PROVIDENCE — CONTRACT 16 VOLUME 2 — RHODE ISLAND

ELECTRICAL SECTIONS & DETAILS — E500

14-0303_E500_ADD04

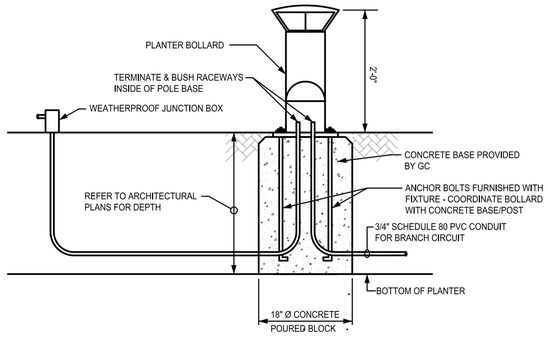

NOTES:

1. COORDINATE WITH ARCHITECTURAL PLANS. REFER TO A520 AND A521 FOR MORE INFORMATION.

1 / E503 **PLANTER BOLLARD DETAIL**
NO SCALE

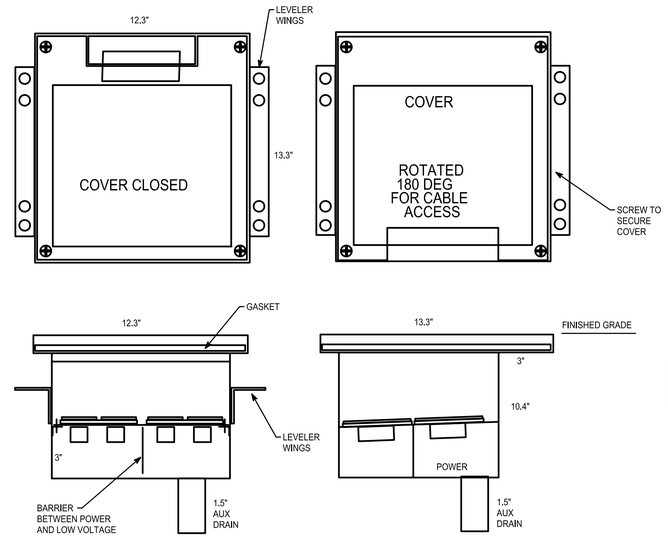

NOTES:

1. ALL CONDUIT ENTRIES ARE MADE IN THE FIELD BY THE EC TO ACCOMMODATE FIELD REQUIREMENTS. CONDUIT ENTRY IS BELOW THE DEVICE PLATE ONLY. (SIDE ONLY)
2. REFER TO ARCHITECTURAL DRAWINGS A110 AND A113 FOR FLOOR BOX LOCATIONS. COORDINATE WITH ARCHITECTURAL SECTION - REFER TO DETAIL 1 ON A410.

RUBBER 2" STOPPER SLOTTED WITH HOLE TO MATCH CORD(SW)

COVER: 1/4" 304 BRUSHED STAINLESS

ENCLOSURE: #16 STAINLESS STEEL

INSERT: 304 STAINLESS STEEL WITH GFCI DUPLEX RECEPTACLE AND DOUBLE GANG BOX WITH WEATHERPROOF COVERPLATE

GASKET: 1/8" NEOPREME CLOSED CELL

SIZE: 12X12X10"DEEP ±

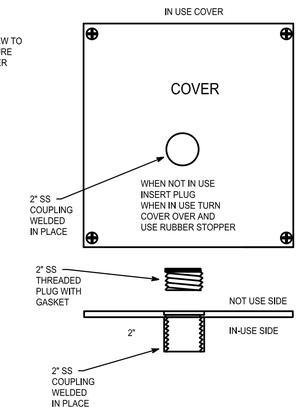

2 / E503 **WEATHERPROOF FLOOR BOX DETAIL**
NO SCALE

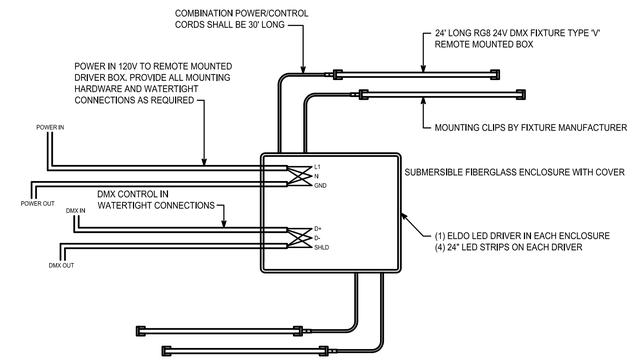

3 / E503 **TYPE 'V' FIXTURE REMOTE DRIVER DETAIL**
NO SCALE

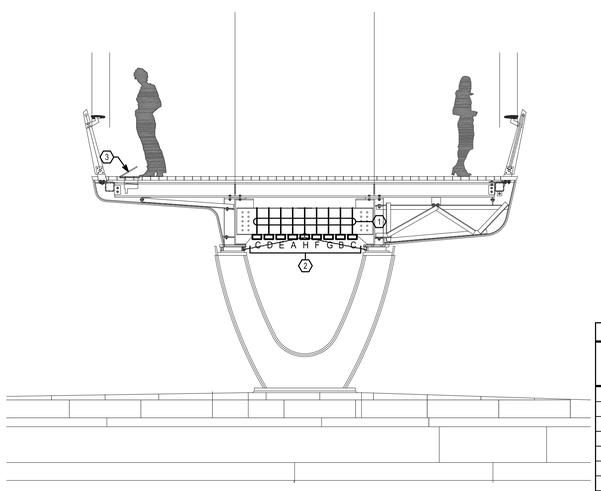

4 / E503 **BRIDGE SECTION - ELECTRICAL PATHWAYS**
1/4" 1'-0"

NUMBERED NOTES

1. PROVIDE FIBERGLASS/STAINLESS STEEL PENDANT MOUNTING HARDWARE FOR JUNCTION BOXES, DRIVERS AND CONDUITS AS REQUIRED. ELECTRICAL BOXES, DRIVERS, CONDUITS ETC TO BE MOUNTED BELOW CROSS BEAM. COORDINATE FINAL ROUTING WITH GENERAL CONTRACTOR.
2. REFER TO JUNCTION BOX SCHEDULE THIS DRAWING, E200 SERIES AND DRAWING E300 FOR MORE DETAILS ON EACH JUNCTION BOX/DEVICE.
3. RECESSED ELECTRICAL BOX. REFER TO DRAWINGS E300 AND E503 FOR MORE INFORMATION.

UPPER BRIDGE JUNCTION BOX SCHEDULE

TYPE	DESCRIPTION	ASSOCIATED CONDUIT SIZE
A	POWER - TYPE 'H' FIXTURES	1-1/2"
B	POWER - TYPE 'UB' FIXTURES	1-1/2"
C	POWER - TYPE 'V' FIXTURES (DRIVER ENCL.)	(2) 1-1/2"
D	BROWN UNIVERSITY SPARE	4"
E	POWER - PIER LIGHTS AND UPLIGHTS	1"
F	POWER - ENCLOSURE	1-1/2"
G	FUTURE SOUND - ENCLOSURE	1-1/2"
H	POWER - NAVAGATION LIGHTS	1"

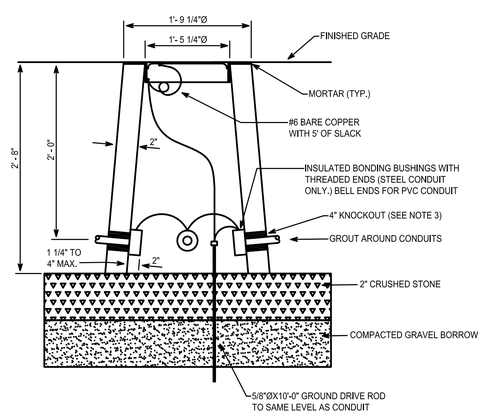

NOTES:

1. SHALL BE IN ACCORDANCE WITH SECTION T.06 OF THE RI STANDARD SPECIFICATIONS.
2. COVER TO HAVE NON-SLIP DIAMOND SURFACE AND THE WORD "ELECTRIC" ON ELECTRIC HANDHOLES, "SIGNAL" ON SIGNAL HANDHOLES, AND "COMM" ON TELEPHONE HANDHOLES.
3. 4" KNOCKOUTS ARE TO BE PROVIDED ON ALL FOUR SIDES OF THE HANDHOLE. FOLLOWING CONDUIT INSTALLATION THE CONTRACTOR SHALL SEAL AROUND CONDUIT ENTRANCES WITH CEMENT.
4. MINIMUM REQUIRED CONCRETE REINFORCEMENT = 0.068 SQ. IN./LIN. FT. (EACH WAY).
5. HANDHOLE RING TO BE SET IN MORTAR OVER HANDHOLE WALL.
6. FRAME AND COVER TO BE PROVIDED WITH GROUND CONNECTOR (FASTENED WITH 3/8-16 THREADS INTO BLIND HOLE) AND WELDED NUT. BOND BOTH ITEMS TO GROUND ROD USING #6CU. BARE CONDUCTOR.
7. MAXIMUM ADJUSTMENT FOR COVER TO FINISHED GRADE SHALL BE 3".

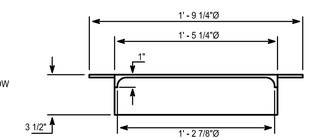

6 / E503 **ELECTRIC HANDHOLE DETAIL**
NO SCALE

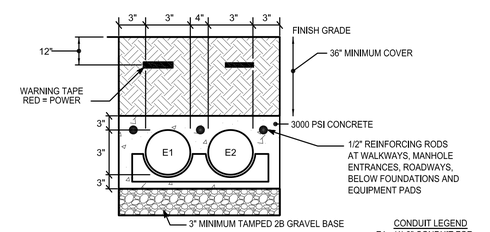

CONDUIT LEGEND
E1- (1) 3" CONDUIT FOR PANEL 'BP' FEEDER
E2- (1) 3" SPARE CONDUIT

5 / E503 **NEW DUCT BANK DETAIL 'A-A'**
NO SCALE

ADDENDUM NO. 4

REF DWG #	REFRENCE DRAWING NAME

CDR MAGUIRE

inFORM studio
235 east main street, suite 102b
northville, mi 48167
(p) 248.449.3564
(f) 248.449.6984
www.in-formstudio.com
Buro Happold

BETA Group, Inc.
Engineers • Planners • Landscape Architects
Lincoln, RI - Norwood, MA - Hartford, CT

RHODE ISLAND DEPARTMENT OF TRANSPORTATION

INTERSTATE 195

DESIGNED BY:
CHECKED:
DATE:
SHEET: V2_160
OF: V2_163

SCALE: NO SCALE

REVISIONS			REVISIONS		
NO.	DATE	BY	NO.	DATE	BY
1	06/14/16	GMF			

IMPROVEMENTS TO INTERSTATE ROUTE 195
CONTRACT 16 VOLUME 2
PROVIDENCE RHODE ISLAND

ELECTRICAL DETAILS — E503

14-0303_E503_ADD04

FED. ROAD DIV. NO.	STATE	FEDERAL AID PROJECT NO.	FISCAL YEAR	SHEET NO.	TOTAL SHEETS
1	R.I.			V2_160A	V2_163

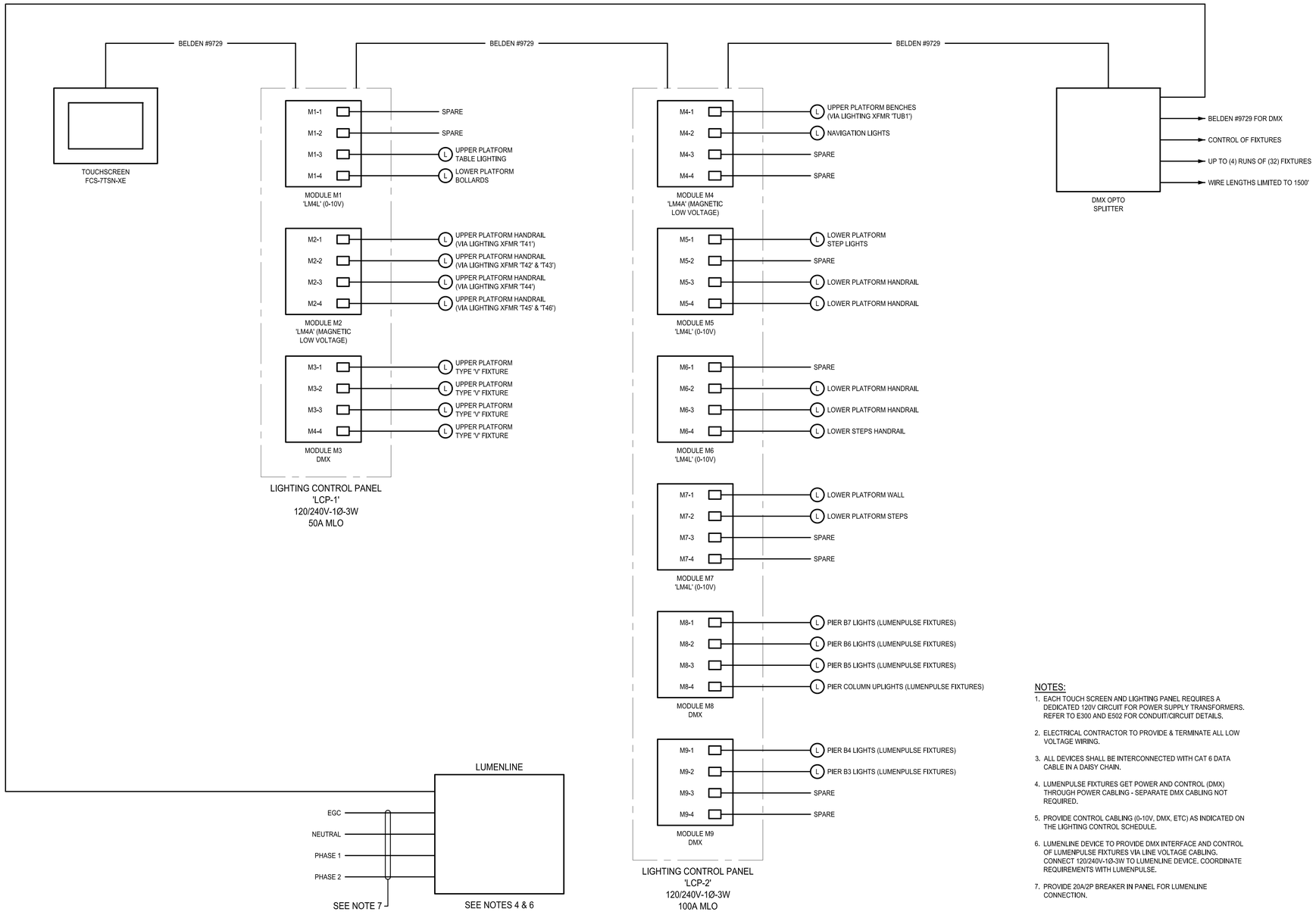

NOTES:

1. EACH TOUCH SCREEN AND LIGHTING PANEL REQUIRES A DEDICATED 120V CIRCUIT FOR POWER SUPPLY TRANSFORMERS. REFER TO E300 AND E502 FOR CONDUIT/CIRCUIT DETAILS.
2. ELECTRICAL CONTRACTOR TO PROVIDE & TERMINATE ALL LOW VOLTAGE WIRING.
3. ALL DEVICES SHALL BE INTERCONNECTED WITH CAT 6 DATA CABLE IN A DAISY CHAIN.
4. LUMENPULSE FIXTURES GET POWER AND CONTROL (DMX) THROUGH POWER CABLING - SEPARATE DMX CABLING NOT REQUIRED.
5. PROVIDE CONTROL CABLING (0-10V, DMX, ETC) AS INDICATED ON THE LIGHTING CONTROL SCHEDULE.
6. LUMENLINE DEVICE TO PROVIDE DMX INTERFACE AND CONTROL OF LUMENPULSE FIXTURES VIA LINE VOLTAGE CABLING. CONNECT 120/240V-1Ø-3W TO LUMENLINE DEVICE. COORDINATE REQUIREMENTS WITH LUMENPULSE.
7. PROVIDE 20A/2P BREAKER IN PANEL FOR LUMENLINE CONNECTION.

ADDENDUM NO. 4

1 / E504 **LIGHTING CONTROL WIRING DIAGRAM**
NO SCALE

REF DWG #	REFRENCE DRAWING NAME

CDR MAGUIRE

inFORM studio
235 east main street, suite 102b
northville, mi 48167
(p) 248.449.3564
(f) 248.449.6984
www.in-formstudio.com

Buro Happold

BETA Group, Inc.
Engineers • Planners • Landscape Architects
Lincoln, RI - Norwood, MA - Hartford, CT

RHODE ISLAND
DEPARTMENT OF TRANSPORTATION

INTERSTATE 195

DESIGNED BY:
CHECKED:
DATE:
SHEET: V2_160A
OF: V2_163

SCALE: NO SCALE

REVISIONS			REVISIONS		
NO.	DATE	BY	NO.	DATE	BY
1	06/14/16	GMF			

IMPROVEMENTS TO
INTERSTATE ROUTE 195
PROVIDENCE CONTRACT 16 VOLUME 2 RHODE ISLAND

LIGHTING CONTROL WIRING DIAGRAM | E504

14-0303_E504_ADD04