March 17, 2016

STATE OF RHODE ISLAND AND PROVIDENCE PLANTATION
DEPARTMENT OF ADMINISTRATION

DIVISION OF PURCHASES BID NO. 7550361

RHODE ISLAND DEPARTMENT OF TRANSPORTATION

RHODE ISLAND CONTRACT NO.2015-CT-096

FEDERAL-AID PROJECT NO. FAP Nos: STPG-HSIP(018)

HSIP - Signal Improvements to Mineral Spring Avenue (HSIP Funds)

Mineral Spring Avenue Sta. 148+00 to Sta. 183+36

CITY/TOWN OF North Providence

COUNTY OF PROVIDENCE

NOTICE TO PROSPECTIVE BIDDERS

ADDENDUM NO. 1 Prospective bidders and all concerned are hereby notified of the following changes in the Plans, Specifications, Proposal and Distribution of Quantities for this contract. These changes shall be incorporated in the Plans, Specifications, Proposal and Distribution of Quantities, and shall become an integral part of the Contract Documents.

A. Clarification

1. Substantial Completion Date

   The Substantial Completion Date has been revised to 06/09/2017.

B. Specifications - Job Specific

1. JS-i and JS-ii

   Replace JS – i, and JS – ii with JS – i (R-1) and JS – ii (R-1) attached to this Addendum No. 1. The title of item code 201.9911 has been modified and item codes 201.9912 and 905.9901 have been added.

2. JS-3

   Replace JS – 3 with JS – 3 (R-1) attached to this Addendum No. 1. The Substantial Completion Date has been revised.

3. JS–17 and JS–18

   Replace JS – 17 and JS – 18 with JS – 17 (R-1) and JS – 18 (R-1) attached to this Addendum No. 1. The specification has been revised.

4. JS-18A

   Insert page JS – 18A attached to this Addendum No. 1. Job Specific specification for item code 201.9912 has been added.

5. JS-22A and JS-22B

   Insert page JS – 22A and JS – 22B attached to this Addendum No. 1. Job Specific specification for item code 905.9901 has been added.

C. Distribution of Quantities

1. Index

   Replace Index: 1, Index: 2, Index: 3 and Index: 4 with Pages Index: 1(R-1), Index: 2(R-1), Index: 3 (R-1), and Index: 4(R-1) attached to this Addendum No. 1. Item Codes 201.0418, 701.8100, and 714.8163 have been deleted, Item Code 201.9911 has been revised, and Item Code 201.9912 has been added.

2. Page 3 of 72

   Replace Page 3 of 72 with Page 3 of 73(R-1) attached to this Addendum No. 1. Item Code 201.0418 Remove and Dispose Hydrant has been removed.

3. Page 7 of 72

   Replace Page 7 of 72 with Page 7 of 73(R-1) attached to this Addendum No. 1 and add Page 7a of 73 attached to this Addendum No. 1. The description and unit of measurement for Item Code 201.9911 has been revised. The description for this item code is now Remove, Handle, Stockpile, Manage, and Haul Soil Impacted by Hazardous Material and the unit of measurement is Tons.

4. Page 10 of 72

   Replace Page 10 of 72 with Page 10 of 73(R-1) attached to this Addendum No. 1. Item Code 701.8100 Furnish and Install Ductile Iron Fittings has been removed.

5. Page 18 of 72

   Replace Page 18 of 72 with Page 18 of 73(R-1) attached to this Addendum No. 1. Item Code 714.8163 Post Type Hydrant has been removed.

6. Page 72 of 72

   Replace Page 72 of 72 with Page 72 of 73(R-1) attached to this Addendum No. 1 and add Page 73 of 73 attached to this Addendum No. 1. Item Code 201.9912 Dispose Soil Impacted by Hazardous Material has been added.

D. Plans

1. General Plan No. 4

   Replace the “General Plan No. 4” plan sheet with the “General Plan No. 4”(R-1) plan sheet attached to this Addendum No. 1. The hydrant replacement work will be completed by others.

2. Details No. 1

   Replace the “Details No. 1” plan sheet with the “Details No. 1”(R-1) plan sheet attached to this Addendum No. 1. The ‘Test Pit Permanent Patch Detail’ and the “Decorative Crosswalk Detail” have been revised.

3. Details No. 3

   Replace the “Details No. 3” plan sheet with the “Details No. 3”(R-1) plan sheet attached to this Addendum No. 1. The ‘Hydrant Detail” has been removed.

RI Department of Transportation
Chief Engineer

SPECIFICATIONS - JOB SPECIFIC

TABLE OF CONTENTS

CODE	TITLE	PAGE
108.01	Prosecution and Progress – Subletting of Contract	JS–1
108.03	Prosecution and Progress – Project Schedule Program and Software	JS–2
108.1000	Prosecution and Progress – Failure to Complete on Time	JS–3
109.04	Measurement and Payment - Differing Site Conditions, Changes, Extra Work, and Force Account Work	JS–4
109.06	Measurement and Payment – Partial Payments	JS–8
109.09	Measurement and Payment – Acceptance and Final Payment	JS–9
201.9901 201.9902 201.9903 201.9904	Remove and Salvage Traffic Signal Equipment at Traffic Signal No. 395 Remove and Salvage Traffic Signal Equipment at Traffic Signal No. 396 Remove and Salvage Traffic Signal Equipment at Traffic Signal No. 319 Remove and Salvage Traffic Signal Equipment at Traffic Signal No. 081	JS–10
201.9905	Remove and Salvage Overhead Center Turn Lane Sign and Structure	JS–12
201.9906	Remove and Dispose Overhead Emergency Preemption Wiring	JS–13
201.9907	Remove, Salvage, and Reinstall Optical Preemption Traffic Control System at Traffic Signal No. 395	JS–14
201.9908	Remove, Salvage, and Reinstall Optical Preemption Traffic Control System No. 396	JS–14
201.9909 201.9910	Remove, Stockpile, and Reset Bench Remove, Stockpile, and Reset Village Sign	JS–16
201.9911	Remove, Handle, Stockpile, Manage, and Haul Soil Impacted by Hazardous Materials	JS–17
201.9912	Dispose Soil Impacted by Hazardous Materials	JS–18A
206.9901	Inlet Sediment Control Device	JS–19
212.2000	Cleaning and Maintenance of Erosion Controls	JS–20

CODE	TITLE	PAGE
903.9901	Furnish and Install Bollard	JS–21
905.1000	Sidewalks	JS–22
905.9901	Furnish and Install Decorative Crosswalk	JS–22A
907.1000	Dust Control	JS–23
919.9901	Test Pits	JS–24
937.1000	Maintenance and Movement of Traffic Protective Devices	JS–25
938.1000	Price Adjustments	JS–26
943.0200	Trainee Man-Hours	JS–27
L02.1000	Seeding	JS–31
T04.9901	12-Strand Single Mode Fiber Optic Cable	JS–32
T04.9902	36-Strand Single Mode Fiber Optic Cable	
T04.9903	Fiber Optic Patch Cord	JS–42
T04.9904	Optical Detector Cable	JS–43
T13.9901	Optical Detector – Single Channel, One-Way	
T13.9902	Optical Detector Phase Selector and Chassis	
T13.9903	Optical Confirmation Beacon	
T13.9904	Optical Emitter – Handheld	
T13.9905	Optical Emitter – Mobile	
T05.0500	Fiber Optic Handhole	JS–47
T05.0510	Fiber Optic Manhole	
T05.9901	Break into Fiber Optic Manhole Access Point	JS–49
T06.9901	Dual 1-1/4 Inch High Density Polyethylene Duct – Under Existing Pavement	JS–50
T06.9902	Dual 1-1/4 Inch High Density Polyethylene Duct – Underground	
T06.9903	Single 1-1/4 Inch High Density Polyethylene Duct – Underground	
T06.9904	Single 1-1/4 Inch High Density Polyethylene Duct – Under Existing Pavement	
T11.9901	Dual Mast Arm (45x15) Galvanized Steel Traffic Signal Post and Foundation at Signal No. 395	JS–53
T11.9902	45-Foot Galvanized Steel Mast Arm Traffic Signal Post and Foundation at Signal No. 396	
T11.9903	20-Foot Galvanized Steel Mast Arm Traffic Signal Post and Foundation at	

JOB SPECIFIC

CODE 108.1000

PROSECUTION AND PROGRESS

In accordance with Section 108.08, Failure to Complete on Time, Para. a., Phased Completion, Interim Completion and Substantial Completion the following defines the Substantial Completion Dates and Associated Liquidated Damages:

Substantial Completion: See Table Below

All Contract work shall be completed, as defined by Section 101.71.

Liquidated Damages: $1,500.00 per calendar day.

NTP	Substantial Completion
On or before July 3, 2016	09-JUN-17
July 4, 2016 to November 28, 2016	25-AUG-17

JOB SPECIFIC

CODE 201.9911
REMOVE, HANDLE, STOCKPILE, MANAGE, AND HAUL SOIL IMPACTED BY HAZARDOUS MATERIAL

DESCRIPTION: This work consists of the removal, handling, stockpiling, management, and hauling off-site soil excavated during construction that is demonstrated or suspected to have been impacted from petroleum, petroleum-based asphalts, or other hazardous materials listed in Table 1 of the Rhode Island Department of Environmental Management Remediation Regulations. The excavation of this material will be paid for under item code 202.0100. Disposal fees associated with the removed soil impacted by hazardous material will be paid for under item code 201.9912.

CONSTRUCTION SOIL MANAGEMENT PLAN: The Contractor shall comply with the Construction Soil Management Plan included in Appendix E of the Contract Documents.

HEALTH AND SAFETY: Contractor shall comply with all Occupational Safety and Health Administration (OSHA) standards set forth in 29 CFR 1910.120 and any site-specific health and safety requirements established for this project. The Contractor's employees and any subcontractor's employees who will potentially encounter subsurface soil on this project are required to have OSHA 40-hour HAZWOPPER health and safety training and the 8-hour OSHA annual refresher course, as applicable. Level D personal protection equipment (PPE) shall be the minimum personal protection level used for any personnel that may come in contact with subsurface soils.

EQUIPMENT/MATERIALS: The methods employed in performing the work and all equipment, tools, and machinery used in handling material and executing any part of the work shall be in accordance with these specifications and subject to approval by the Engineer and Environmental Consultant prior to the commencement of work; if found unsatisfactory, it shall be changed to Engineer's and Environmental Consultant's specifications and approval. Contractor shall have Level D PPE available for all personnel engaged in this work and shall have an inventory of PPE in the event that the level of PPE necessary needs to be upgraded at any time during the project.

CONSTRUCTION METHODS: The Contractor shall notify the Environmental Consultant 48 hours prior to commencing work to arrange for the appropriate personnel to be on-site to witness soil excavation. Impacted soil shall be identified through field screening (visual, olfactory, or photo-ionization detection (PID)) performed by the Environmental Consultant. Upon excavation, Contractor shall segregate material demonstrated or suspected to be impacted and stockpile it at an on-site location until it can be sampled by the Environmental Consultant for laboratory analysis.

The Environmental Consultant will perform characterization on material designated for possible off-site disposal and provide the analytical results to the Contractor so he may obtain approval of an appropriate disposal outlet (e.g., RIRRC Central Landfill). The laboratory results, materials characterization, and recommendations will be provided within 14 calendar days of collection of the sample. The actual requirements for acceptance of this material shall be as determined by the disposal outlet selected by the Contractor. Additional requirements may include, but not necessarily be limited to, providing a bag sample of material to the disposal outlet and performing analysis for flash point, free liquids, and other physical characteristics. Contractor is made aware that some or all of this material may be suitable for reuse within certain areas of the project site upon the results of the field screening and/or chemical

analysis. The Environmental Consultant will identify which material should be segregated for offsite disposal per the Construction Soil Management Plan.

The Contractor shall take all precautions necessary to minimize exposure or direct contact with material suspected to be impacted by hazardous materials. The Contractor shall also take all precautions necessary to avoid transport of the material through erosion or wind entrainment. This shall include, but not necessarily be limited to, stockpiling material on two layers of 6 mil polyethylene sheeting, covering stockpiled material with a layer of 6 mil polyethylene sheeting, and surrounding stockpiles with haybales or silt fence. Stockpile areas shall be selected by the Contractor and shall be subject to approval of the Engineer. Stockpiles and any associated erosion controls shall be inspected daily and restored as necessary to control dust and erosion.

The Contractor shall provide the Engineer with disposal documentation following its delivery to the selected disposal facility. This shall include time-stamped weight slips, signed by the material hauler and personnel at the disposal outlet, indicating the quantity of material disposed. Contractor is required to submit this information for payment under this item.

METHOD OF MEASUREMENT: "Remove, Handle, Stockpile, Manage, and Haul Soil Impacted by Hazardous Material" will be measured for payment by ton. The number of tons shall be determined from weight slips generated by the disposal facility.

BASIS OF PAYMENT: The accepted quantities of "Remove, Handle, Stockpile, Manage, and Haul Soil Impacted by Hazardous Material" shall be paid for at the contract bid price per ton as listed in the Proposal. The price so-stated constitutes full and complete compensation for all labor, materials, and equipment, including handling, removing, managing, stockpiling, and hauling of soil impacted by hazardous materials as described by this specification and all other incidentals required to furnish the work, complete and accepted by the Engineer. Disposal and actual excavation of soil shall be paid for under separate bid items.

JOB SPECIFIC

CODE 201.9912
DISPOSE SOIL IMPACTED BY HAZARDOUS MATERIAL

DESCRIPTION: This item consists of compensation for actual disposal fees determined by the disposal outlet associated with the soil impacted by hazardous materials as described in item code 201.9911. The work associated with removal, handling, stockpiling, management, and hauling off-site of this material is included under item code 201.9911.

CONSTRUCTION SOIL MANAGEMENT PLAN: The Contractor shall comply with the Construction Soil Management Plan included in Appendix E of the Contract Documents.

DISPOSAL METHODS: Upon receipt of the analytical results from the Environmental Consultant, the Contractor shall obtain approval of an appropriate disposal outlet (e.g., RIRRC Central Landfill). The actual requirements for acceptance of this material shall be as determined by the disposal outlet selected by the Contractor. The Contractor shall provide the Engineer with disposal documentation following its delivery to the selected disposal facility. This shall include time-stamped weight slips, signed by the material hauler and personnel at the disposal outlet, indicating the quantity of material disposed. Contractor is required to submit this information for payment under this item.

METHOD OF MEASUREMENT: "Dispose Soil Impacted by Hazardous Material" will be measured for payment by ton. The number of tons shall be determined from weight slips generated by the disposal facility.

BASIS OF PAYMENT: The accepted quantities of "Dispose Soil Impacted by Hazardous Material" shall be paid for at the contract bid price per ton as listed in the Proposal. The price so-stated constitutes full and complete compensation for all actual disposal fees as determined by the disposal outlet. Excavation, removal, handling, stockpiling, managing, and hauling this material will be paid for under a separate bid items.

JOB SPECIFIC

CODE 905.9901
FURNISH AND INSTALL DECORATIVE CROSSWALK

DESCRIPTION: Work under this item shall consist of the installation of decorative stamped asphalt material simulating hand laid red brick for crosswalks, as shown on the Contract Drawings.

MANUFACTURER: The material shall be TrafficPatternsXD™ paving material manufactured by Ennis-Flint. There will be no approved equal.

The Contractor shall obtain from the Manufacturer, and submit to the Engineer, an affidavit regarding patent infringement rights stating that any suit or claim against the State due to alleged infringement rights shall be defended by the Manufacturer who will bear all costs, expenses and attorney's fees incurred thereof.

MATERIALS: The product used in this surfacing system shall be TrafficPatternsXD™. The crosswalk style shall be 8-foot wide Offset Brick as shown on the Plans.

Ennis-Flint
115 Todd Court
Thomasville, NC 27360
Telephone: 336-475-6600
Email: sales@ennisflint.com
http://www.ennisflint.com

The TrafficPatternsXD™ texturing tools shall be approved by the Manufacturer and be of high quality produce a brick pattern for the crosswalks. The Contractor shall refer to the Plans for the orientation of the brick patterns.

CONSTRUCTION METHODS: The installation of the decorative crosswalk must be completed by an accredited TrafficPatternsXD™ installer.

The decorative crosswalk shall be installed in accordance with the manufacturer's recommendations.

Any residue resulting from this work shall be removed and legally disposed of in a proper manner. The completed work area is to be left in a neat and clean condition, to the satisfaction of the Engineer.

PROTECTION OF PROPERTY: All surfaces, utility structures, poles, curbing, stone and other features not intended to be affected by the installation of the textured paving shall be protected from being contacted by the TrafficPatternsXD™ material. The Contractor shall be responsible for completely cleaning and/or restoring any surface or object or drainage system that is contaminated as a result of the Contractor's activities, at no additional cost to the State.

METHOD OF MEASUREMENT: "Furnish and Install Decorative Crosswalk" will be measured by the number of square feet actually furnished and installed in accordance with the Plans and/or as directed by the Engineer.

BASIS OF PAYMENT: The accepted quantity of "Furnish and Install Decorative Crosswalk" will be paid for at the contract unit price per square foot as listed in the Proposal. The price so-stated constitutes full and complete compensation for all labor, materials, and equipment, and all incidentals required to finish the work, complete and accepted by the Engineer.

Table of Contents - Distribution of Quantities

Project Name - HSIP - Signal Improvements to Mineral Spring Avenue (HSIP Funds)
Estimate Name - Addendum No. 1
R.I. Contract No. - 2015-CT-096
FAP Nos: STPG-HSIP(018)

ItemCode	Description	Page
201.0301	CUTTING AND DISPOSING ISOLATED TREES AND STUMPS (4"- 24")	1
201.0403	REMOVE AND DISPOSE SIDEWALKS	1
201.0409	REMOVE AND DISPOSE FLEXIBLE PAVEMENT	2
201.0415	REMOVE AND DISPOSE GUARDRAIL AND POST ALL TYPES	3
201.0418	**** ITEM DELETED ****	**3**
201.0423	REMOVE AND DISPOSE HANDHOLE	3
201.0610	REMOVE AND DISPOSE DIRECTIONAL, WARNING, REGULATORY, SERVICE, AND STREET SIGNS	4
201.9901	REMOVE AND SALVAGE TRAFFIC SIGNAL EQUIPMENT AT TRAFFIC SIGNAL NO. 395	5
201.9902	REMOVE AND SALVAGE TRAFFIC SIGNAL EQUIPMENT AT TRAFFIC SIGNAL NO. 396	5
201.9903	REMOVE AND SALVAGE TRAFFIC SIGNAL EQUIPMENT AT TRAFFIC SIGNAL NO. 319	5
201.9904	REMOVE AND SALVAGE TRAFFIC SIGNAL EQUIPMENT AT TRAFFIC SIGNAL NO. 081	6
201.9905	REMOVE AND SALVAGE OVERHEAD CENTER TURN LANE SIGN AND STRUCTURE	6
201.9906	REMOVE AND DISPOSE OVERHEAD EMERGENCY PREEMPTION WIRING	6
201.9907	REMOVE, SALVAGE, AND REINSTALL OPTICAL PREEMPTION TRAFFIC CONTROL SYSTEM AT TRAFFIC SIGNAL NO. 395	6
201.9908	REMOVE, SALVAGE, AND REINSTALL OPTICAL PREEMPTION TRAFFIC CONTROL SYSTEM NO. 396	6
201.9909	REMOVE, STOCKPILE, AND RESET BENCH	7
201.9910	REMOVE, STOCKPILE, AND RESET VILLAGE SIGN	7
201.9911	**REMOVE, HANDLE, STOCKPILE, MANAGE, AND HAUL SOIL IMPACTED BY HAZARDOUS MATERIAL**	**7**
202.0100	EARTH EXCAVATION	7
202.0201	ROCK EXCAVATION MECHANICAL	8
204.0100	TRIMMING AND FINE GRADING	8
205.0240	TRENCH ROCK EXCAVATION (0-7')	8
206.9901	INLET SEDIMENT CONTROL DEVICE	8
212.2000	CLEANING AND MAINTENANCE OF EROSION CONTROLS	8
302.0100	GRAVEL BORROW SUBBASE COURSE	9
401.1000	CLASS 19.0 HMA	9
401.3000	CLASS 9.5 HMA	9
401.3100	MODIFIED CLASS 9.5 HMA	9
403.0300	ASPHALT EMULSION TACK COAT	10
414.0100	WARM MIX ADDITIVE	10
601.0300	CLASS A PORTLAND CEMENT CONCRETE	10
701.0412	REINFORCED CONCRETE PIPE M 170 CLASS III 12 INCH	10
701.8100	**** ITEM DELETED ****	**10**
701.8151	CURB STOP BOX	10
702.0517	FRAME AND GRATE, STANDARD 6.3.2	11
702.0543	GRANITE APRON STONE 38'' STANDARD 7.3.8	11
702.0713	PRECAST CONCRETE DROP INLET WITH APRON STONE STANDARD 4.5.1	11
707.1800	ADJUST CATCH BASIN TO MANHOLE AND FURNISH FRAME AND COVER	11
707.1900	ADJUST FRAME & COVER TO GRADE	12
707.2000	ADJUST FRAME AND GRATE TO GRADE	13
708.9040	CLEANING AND FLUSHING PIPE ALL SIZES	14
708.9041	CLEANING CATCH BASINS ALL TYPES AND SIZES	16
708.9042	CLEANING MANHOLES ALL TYPES AND SIZES	16
712.0100	WATER GATE BOX	16
712.0200	GAS GATE BOX	17
714.8163	**** ITEM DELETED ****	**18**

Table of Contents - Distribution of Quantities

Project Name - HSIP - Signal Improvements to Mineral Spring Avenue (HSIP Funds)
Estimate Name - Addendum No. 1
R.I. Contract No. - 2015-CT-096
FAP Nos: STPG-HSIP(018)

ItemCode	Description	Page
901.0101	GUARDRAIL STEEL BEAM SINGLE FACE EARTH AND ASPHALT	18
901.0151	TERMINAL END SECTION SINGLE FACE STANDARD 34.3.2	19
903.9901	FURNISH AND INSTALL BOLLARD	19
905.0110	PORTLAND CEMENT SIDEWALK MONOLITHIC STANDARD 43.1.0	19
905.0115	PORTLAND CEMENT CONCRETE DRIVEWAY STANDARD 43.5.0	21
905.9901	FURNISH AND INSTALL DECORATIVE CROSSWALK	21
906.0110	GRANITE CURB, QUARRY SPLIT STRAIGHT, STANDARD 7.3.0	21
906.0111	GRANITE CURB, QUARRY SPLIT CIRCULAR, STANDARD 7.3.0	22
906.0118	6' GRANITE TRANSITION CURB, QUARRY SPLIT SPECIAL TRANSITION STANDARD 7.3.2	22
906.0130	GRANITE RAMP STONE STRAIGHT STANDARD 7.3.9	23
906.0131	GRANITE RAMP STONE CIRCULAR STANDARD 7.3.9	24
906.0700	REMOVE, HANDLE, HAUL TRIM RESET CURB EDGING, STRAIGHT, CIRCULAR ALL TYPES	24
906.9901	GRANITE WHEELCHAIR RAMP HIGH SIDE TRANSITION, STANDARD 7.3.3	26
907.0100	WATER FOR DUST CONTROL	26
914.5010	FLAGPERSONS	27
914.5020	FLAGPERSONS - OVERTIME	27
919.9901	TEST PITS	27
922.0100	TEMPORARY CONSTRUCTION SIGNS STANDARD 29.1.0 AND 27.1.1	27
923.0105	DRUM BARRICADE STANDARD 26.2.0	28
923.0125	PLASTIC PIPE TYPE III BARRICADE STANDARD 26.3.1	28
923.0200	FLUORESCENT TRAFFIC CONES STANDARD 26.1.0	28
923.9901	LONGITUDINAL CHANNELIZING DEVICES	29
925.0112	PORTABLE CHANGEABLE MESSAGE SIGN	29
929.0110	FIELD OFFICE	29
931.0110	CLEANING AND SWEEPING PAVEMENT	29
932.0100	CUTTING AND MATCHING ASPHALT	29
932.0200	FULL-DEPTH SAWCUT OF BITUMINOUS PAVEMENT	31
932.0220	FULL DEPTH SAWCUT OF BITUMINOUS SIDEWALK/DRIVEWAY	33
932.0230	FULL DEPTH SAWCUT OF PORTLAND CEMENT CONCRETE SIDEWALK/DRIVEWAY	34
935.0400	REMOVING BITUMINOUS PAVEMENT BY MICRO MILLING	35
936.0100	MOBILIZATION AND DEMOBILIZATION	35
937.0200	MAINTENANCE AND MOVEMENT TRAFFIC PROTECTION	35
942.0200	DETECTABLE WARNING PANEL STANDARD 48.1.0	35
943.0200	TRAINEE MAN-HOURS	36
L01.0102	LOAM BORROW 4 INCHES DEEP	36
L02.0102	RESIDENTIAL SEEDING (TYPE 2)	37
L11.0102	TREE PLANT PROTECTION DEVICE STANDARD 51.1.0	37
L11.0104	DRIP-LINE TREE PROTECTION DEVICE STANDARD 51.1.1	37
T04.5001	6 AWG SINGLE CONDUCTOR CABLE 600V INSULATION	37
T04.5302	14 AWG 2 CONDUCTOR TWISTED SHIELDED CABLE	38
T04.5303	14 AWG 3 CONDUCTOR CABLE	38
T04.5305	14 AWG 5 CONDUCTOR CABLE	39
T04.7500	SPLICE KIT	39
T04.9901	12-STRAND SINGLE MODE FIBER OPTIC CABLE	39
T04.9902	36-STRAND SINGLE MODE FIBER OPTIC CABLE	40
T04.9903	FIBER OPTIC PATCH CORD	40
T04.9904	OPTICAL DETECTOR CABLE	41
T05.0100	PRECAST TYPE A HANDHOLE STANDARD 18.2.0	41
T05.0400	BREAK INTO EXISTING HANDHOLE	42
T05.0500	FIBER OPTIC HANDHOLE	43
T05.0510	FIBER OPTIC MANHOLE	43
T05.1030	ADJUST HANDHOLE TO GRADE	44

Table of Contents - Distribution of Quantities

Project Name - HSIP - Signal Improvements to Mineral Spring Avenue (HSIP Funds)
Estimate Name - Addendum No. 1
R.I. Contract No. - 2015-CT-096
FAP Nos: STPG-HSIP(018)

ItemCode	Description	Page
T05.9901	BREAK INTO FIBER OPTIC MANHOLE ACCESS POINT	45
T06.1020	2 IN. RIGID STEEL CONDUIT - UNDERGROUND	45
T06.2020	2 IN. RIGID STEEL CONDUIT-OVERHEAD	45
T06.3020	2 IN. RIGID STEEL CONDUIT-UNDER EXISTING PAVEMENT	46
T06.5120	2 INCH SCHEDULE 40 POLYVINYL CHLORIDE PLASTIC CONDUIT - UNDERGROUND	46
T06.5130	3 INCH SCHEDULE 40 POLYVINYL CHLORIDE PLASTIC CONDUIT - UNDERGROUND	47
T06.5420	2 INCH SCHEDULE 80 POLYVINYL CHLORIDE PLASTIC CONDUIT - UNDER EXISTING PAVEMENT	49
T06.5430	3 INCH SCHEDULE 80 POLYVINYL CHLORIDE PLASTIC CONDUIT - UNDER EXISTING PAVEMENT	49
T06.6020	2 INCH POLYVINYL CHLORIDE PLASTIC CONDUIT-OVERHEAD	50
T06.9901	DUAL 1-1/4 INCH HIGH DENSITY POLYETHYLENE DUCT – UNDER EXISTING PAVEMENT	50
T06.9902	DUAL 1-1/4 INCH HIGH DENSITY POLYETHYLENE DUCT – UNDERGROUND	50
T06.9903	SINGLE 1-1/4 INCH HIGH DENSITY POLYETHYLENE DUCT – UNDERGROUND	51
T06.9904	SINGLE 1-1/4 INCH HIGH DENSITY POLYETHYLENE DUCT – UNDER EXISTING PAVEMENT	51
T08.0100	LIGHT STANDARD FOUNDATION WITH ANCHOR BOLTS STANDARD 18.1.0	51
T08.1700	REMOVE AND RELOCATE LIGHT STANDARD	51
T11.2008	TRAFFIC SIGNAL STANDARD,8 FOOT,STD 19.4.0 ALUMINUM PEDESTAL POLE AND FOUNDATION	52
T11.2010	TRAFFIC SIGNAL STANDARD,10 FT, STD 19.4.0 ALUMINUM PEDESTAL POLE AND FOUNDATION	52
T11.9901	DUAL MAST ARM (45X15) GALVANIZED STEEL TRAFFIC SIGNAL POST AND FOUNDATION STANDARD 19.2.0 AT SIGNAL NO. 395	53
T11.9902	45-FOOT GALVANIZED STEEL MAST ARM TRAFFIC SIGNAL POST AND FOUNDATION STANDARD 19.2.0 AT SIGNAL NO. 396	53
T11.9903	20-FOOT GALVANIZED STEEL MAST ARM TRAFFIC SIGNAL POST AND FOUNDATION AT TRAFFIC SIGNAL NO. 396	53
T11.9904	DUAL GALVANIZED STEEL MAST ARM (45X20) TRAFFIC SIGNAL POST AND FOUNDATION AT TRAFFIC SIGNAL NO. 319	53
T11.9906	50-FOOT GALVANIZED STEEL MAST ARM TRAFFIC SIGNAL POST AND FOUNDATION AT TRAFFIC SIGNAL NO. 319 (SOUTHEAST)	54
T11.9907	DUAL MAST ARM (45X35) GALVANIZED STEEL MAST ARM TRAFFIC SIGNAL POST AND FOUNDATION AT TRAFFIC SIGNAL NO. 081	54
T11.9908	25-FOOT GALVANIZED STEEL MAST ARM TRAFFIC SIGNAL POST AND FOUNDATION AT TRAFFIC SIGNAL NO. 081 (NORTHEAST)	54
T11.9909	25-FOOT GALVANIZED STEEL MAST ARM TRAFFIC SIGNAL POST AND FOUNDATION AT TRAFFIC SIGNAL NO. 081 (SOUTHEAST)	54
T12.0018	ACTUATED CONTROLLER TS-2, TYPE 1 W/8 PHASE ASSEMBLY GROUND MOUNTED INCLUDING FOUNDATION AND CABINET STD. 19.1.0	55
T12.9150	METER SOCKET W/MANUAL BY-PASS	55
T12.9901	FIBER ETHERNET SWITCH	56
T12.9902	FIBER OPTIC PATCH PANEL - 12 POSITION	56
T12.9903	FIBER OPTIC SPLICE ENCLOSURE - 72 STRAND	57
T12.9904	MODIFY EXISTING ACTRA SYSTEM AND CONFIGURE REMOTE MONITORING STATIONS	57
T13.1000	TRAFFIC DETECTORS-LOOP, STANDARD 19.6.0	57
T13.1004	TRAFFIC DETECTOR RELAY-LOOP 4 CHANNEL	58
T13.8210	ACCESSIBLE PEDESTRIAN DETECTOR - PUSHBUTTON WITH SIGN	58
T13.8220	ACCESSIBLE PEDESTRIAN DETECTOR - CONFIGURATION DEVICE	59

Table of Contents - Distribution of Quantities

Project Name - HSIP - Signal Improvements to Mineral Spring Avenue (HSIP Funds)
Estimate Name - Addendum No. 1
R.I. Contract No. - 2015-CT-096
FAP Nos: STPG-HSIP(018)

ItemCode	Description	Page
T13.9901	OPTICAL DETECTOR - SINGLE CHANNEL, ONE-WAY	59
T13.9902	OPTICAL DETECTOR PHASE SELECTOR AND CHASSIS	59
T13.9903	OPTICAL DETECTOR CONFIRMATION BEACON	59
T13.9904	OPTICAL EMITTER - MOBILE	59
T13.9905	OPTICAL EMITTER - HANDHELD	59
T14.3513	1 WAY 3 SECTION MAST ARM MOUNTED SIGNAL HEAD 12 INCH	60
T14.3613	1 WAY 3 SECTION BRACKET MOUNTED SIGNAL HEAD 12 INCH	60
T14.3713	1 WAY 3 SECTION PEDESTAL MOUNTED SIGNAL HEAD 12 INCH	60
T14.9901	ONE-WAY PEDESTAL MOUNTED LED PEDESTRIAN SIGNAL HEAD WITH COUNTDOWN TIMER 12 INCH	61
T14.9902	ONE-WAY BRACKET MOUNTED LED PEDESTRIAN SIGNAL HEAD WITH COUNTDOWN TIMER 12 INCH	61
T15.0200	REMOVE AND RELOCATE DIRECTIONAL REGULATORY AND WARNING SIGN	61
T15.2000	PARKING SIGNS	62
T15.9901	DIRECTIONAL. REGULATORY, AND WARNING SIGNS	62
T15.9902	STREET SIGN OVERHEAD MOUNTED	64
T15.9903	DIRECTIONAL, REGULATORY, AND WARNING SIGNS OVERHEAD MOUNTED	64
T20.0006	6 INCH WHITE FAST - DRYING WATERBORNE PAVEMENT MARKING PAINT	65
T20.0012	12 INCH WHITE FAST - DRYING WATERBORNE PAVEMENT MARKING PAINT	65
T20.0104	4 INCH YELLOW FAST - DRYING WATERBORNE PAVEMENT MARKING PAINT	65
T20.0106	6 INCH YELLOW FAST - DRYING WATERBORNE PAVEMENT MARKING PAINT	65
T20.0108	8 INCH YELLOW FAST - DRYING WATERBORNE PAVEMENT MARKING PAINT	65
T20.0820	FAST DRYING WATERBONE PAVEMENT ARROW - STRAIGHT, LEFT, RIGHT, OR COMBINED STANDARD 20.1.0	66
T20.0900	BI-DIRECTIONAL CONTROL DEVICE STANDARD 20.2.0	66
T20.1000	REMOVE EXISTING PAVEMENT MARKINGS	66
T20.1106	6 INCH TEMPORARY WATERBORNE PAINT PAVEMENT MARKINGS WHITE	66
T20.1112	12 INCH TEMPORARY WATERBORNE PAINT PAVEMENT MARKINGS WHITE	66
T20.1204	4 INCH TEMPORARY WATERBORNE PAINT PAVEMENT MARKINGS YELLOW	66
T20.1206	6 INCH TEMPORARY WATERBORNE PAINT PAVEMENT MARKINGS YELLOW	67
T20.1208	8 INCH TEMPORARY WATERBORNE PAINT PAVEMENT MARKINGS YELLOW	67
T20.1310	TEMPORARY WATERBORNE PAINT PAVEMENT ARROW - STRAIGHT, LEFT, RIGHT OR COMBINED STANDARD 20.1.0	67
T20.2006	6 INCH EPOXY RESIN PAVEMENT MARKINGS WHITE	67
T20.2012	12 INCH EPOXY RESIN PAVEMENT MARKINGS WHITE	68
T20.2014	4 INCH EPOXY RESIN PAVEMENT MARKINGS YELLOW	70
T20.2016	6 INCH EPOXY RESIN PAVEMENT MARKINGS YELLOW	71
T20.2018	8 INCH EPOXY RESIN PAVEMENT MARKINGS YELLOW	71
T20.2020	EPOXY RESIN PAVEMENT ARROW - STRAIGHT, LEFT, RIGHT, OR COMBINED STANDARD 20.1.0	71
201.9912	**DISPOSE SOIL IMPACTED BY HAZARDOUS MATERIAL**	**72**

Distribution of Quantities

Project Name - HSIP - Signal Improvements to Mineral Spring Avenue (HSIP Funds)
Estimate Name - Addendum No. 1
R.I. Contract No. - 2015-CT-096
FAP Nos: STPG-HSIP(018)

Item No.	Item Code	Description	UM	Qty.	Pay Code	Seq. No.
003	**201.0409 Cont.**	168+44 RT - 168+45 RT		2.00	0021	01
		168+60 RT - 168+77 RT		2.00	0021	01
		168+61 LT - 168+77 LT		2.00	0021	01
		168+84 RT - 168+89 RT		5.00	0021	01
		169+68 LT - 167+73 LT		2.00	0021	01
		169+95 LT - 170+05 LT		4.00	0021	01
		171+84 LT - 171+93 LT		3.00	0021	01
		174+05 LT - 174+12 LT		3.00	0021	01
		174+49 LT - 174+58 LT		3.00	0021	01
		176+28 LT - 176+36 LT		3.00	0021	01
		176+57 LT - 176+65 LT		3.00	0021	01
		178+47 LT - 178+56 LT		2.00	0021	01
		178+77 LT - 178+86 LT		2.00	0021	01
		180+87 LT - 180+96 LT		3.00	0021	01
		181+19 LT - 181+27 LT		3.00	0021	01
		AS DIRECTED BY THE ENGINEER		16.00	0021	01
		FOR WCR INSTALLATIONS				
		Item 201.0409 Total:		**203.00**		
004	**201.0415**	**REMOVE AND DISPOSE GUARDRAIL AND POST ALL TYPES**	**LF**			
		MINERAL SPRING AVENUE				
		155+34 RT - 155+38 RT		27.00	0021	01
		160+32 RT - 160+79 RT		50.00	0021	01
		Item 201.0415 Total:		**77.00**		
005	**201.0418**	**REMOVE AND DISPOSE HYDRANT**	**EACH**			
		MINERAL SPRING AVENUE				
		168+65 RT			0021	01
		Item 201.0418 Total:		****DELETED****		
006	**201.0423**	**REMOVE AND DISPOSE HANDHOLE**	**EACH**			
		MINERAL SPRING AVENUE				

Distribution of Quantities

Project Name - HSIP - Signal Improvements to Mineral Spring Avenue (HSIP Funds)
Estimate Name - Addendum No. 1
R.I. Contract No. - 2015-CT-096
FAP Nos: STPG-HSIP(018)

Item No.	Item Code	Description	UM	Qty.	Pay Code	Seq. No.
015	**201.9908 Cont.**	**OPTICAL PREEMPTION TRAFFIC CONTROL SYSTEM NO. 396**				
		TRAFFIC SIGNALS				
		MINERAL SPRING AVENUE & RTE 146 NB RAMP		1.00	0021	01
		Item 201.9908 Total:		**1.00**		
016	**201.9909**	**REMOVE, STOCKPILE, AND RESET BENCH**	**EACH**			
		MINERAL SPRING AVENUE				
		160+83 R		1.00	0021	01
		163+19 L		1.00	0021	01
		166+69 L		1.00	0021	01
		167+86 R		1.00	0021	01
		167+98 R		1.00	0021	01
		Item 201.9909 Total:		**5.00**		
017	**201.9910**	**REMOVE, STOCKPILE, AND RESET VILLAGE SIGN**	**EACH**			
		MINERAL SPRING AVENUE				
		167+85 R		1.00	0021	01
		167+96 R		1.00	0021	01
		Item 201.9910 Total:		**2.00**		
018	**201.9911**	**REMOVE, HANDLE, STOCKPILE, MANAGE, AND HAUL SOIL IMPACTED BY HAZARDOUS MATERIAL**	**TON**			
		MINERAL SPRING AVENUE				
		MINERAL SPRING AVENUE		100.00	0021	01
		Item 201.9911 Total:		**100.00**		
019	**202.0100**	**EARTH EXCAVATION**	**CY**			
		MINERAL SPRING AVENUE				
		REFERENCE ITEM 201.0409		45.00	0021	01

Distribution of Quantities

Project Name - HSIP - Signal Improvements to Mineral Spring Avenue (HSIP Funds)
Estimate Name - Addendum No. 1
R.I. Contract No. - 2015-CT-096
FAP Nos: STPG-HSIP(018)

Item No.	Item Code	Description	UM	Qty.	Pay Code	Seq. No.
019	**202.0100 Cont.**	REFERENCE ITEM 905.0110		397.00	0021	01

Distribution of Quantities

Project Name - HSIP - Signal Improvements to Mineral Spring Avenue (HSIP Funds)
Estimate Name - Addendum No. 1
R.I. Contract No. - 2015-CT-096
FAP Nos: STPG-HSIP(018)

Item No.	Item Code	Description	UM	Qty.	Pay Code	Seq. No.
028	**401.3100 Cont.**	MINERAL SPRING AVENUE				
		148+00 - 186+36		1,820.00	0021	01
		Item 401.3100 Total:		**1,820.00**		
029	**403.0300**	**ASPHALT EMULSION TACK COAT**	**SY**			
		MINERAL SPRING AVENUE				
		PAVEMENT RESURFACING LIMITS		18,110.00	0021	01
		Item 403.0300 Total:		**18,110.00**		
030	**414.0100**	**WARM MIX ADDITIVE**	**EACH**			
		MINERAL SPRING AVENUE				
		FOR HMA ITEMS		1,984.00	0021	01
		Item 414.0100 Total:		**1,984.00**		
031	**601.0300**	**CLASS A PORTLAND CEMENT CONCRETE**	**CY**			
		MINERAL SPRING AVENUE				
		REFERENCE STATIONS FROM ITEM		42.00	0021	01
		CODE 906.0700				
		Item 601.0300 Total:		**42.00**		
032	**701.0412**	**REINFORCED CONCRETE PIPE M 170**	**LF**			
		CLASS III 12 INCH				
		MINERAL SPRING AVENUE				
		155+36 R - 155+40 R		5.00	0021	01
		Item 701.0412 Total:		**5.00**		
033	**701.8100**	**FURNISH AND INSTALL DUCTILE IRON**	**LBS**			
		FITTINGS				
		MINERAL SPRING AVENUE				
		168+60 R - 168+90 R			0021	01
		Item 701.8100 Total:		****DELETED****		
034	**701.8151**	**CURB STOP BOX**	**EACH**			

Distribution of Quantities

Project Name - HSIP - Signal Improvements to Mineral Spring Avenue (HSIP Funds)
Estimate Name - Addendum No. 1
R.I. Contract No. - 2015-CT-096
FAP Nos: STPG-HSIP(018)

Item No.	Item Code	Description	UM	Qty.	Pay Code	Seq. No.
045	**712.0200 Cont.**	158+48 L		1.00	0021	01
		160+11 L		1.00	0021	01
		160+61 L		1.00	0021	01
		160+67 R		1.00	0021	01
		160+82 L		1.00	0021	01
		160+86 L		1.00	0021	01
		161+56 R		1.00	0021	01
		161+77 R		1.00	0021	01
		162+93 L		1.00	0021	01
		164+66 L		1.00	0021	01
		164+67 L		1.00	0021	01
		165+71 L		1.00	0021	01
		166+67 R		1.00	0021	01
		166+77 L		1.00	0021	01
		166+79 R		1.00	0021	01
		167+42 R		1.00	0021	01
		167+71 L		1.00	0021	01
		168+41 L		1.00	0021	01
		168+42 R		1.00	0021	01
		168+44 R		1.00	0021	01
		168+46 R		1.00	0021	01
		168+77 R		1.00	0021	01
		BETWEEN CHARLES STREET &		10.00	0021	01
		DORA STREET				
		Item 712.0200 Total:		**34.00**		
046	**714.8163**	**POST TYPE HYDRANT**	**EACH**			
		MINERAL SPRING AVENUE				
		STA 168+86 RT			0021	01
		Item 714.8163 Total:	****DELETED****			
S047	**901.0101**	**GUARDRAIL STEEL BEAM SINGLE FACE**	**LF**			
		EARTH AND ASPHALT				

Distribution of Quantities

Project Name - HSIP - Signal Improvements to Mineral Spring Avenue (HSIP Funds)
Estimate Name - Addendum No. 1
R.I. Contract No. - 2015-CT-096
FAP Nos: STPG-HSIP(018)

Item No.	Item Code	Description	UM	Qty.	Pay Code	Seq. No.
S168	**T20.2020 Cont.**	ROADWAY				
		148+14 C		1.00	0021	01
		148+41 C		1.00	0021	01
		151+52 C		1.00	0021	01
		151+81 C		1.00	0021	01
		153+09 C		1.00	0021	01
		153+35 C		1.00	0021	01
		154+06 C		1.00	0021	01
		154+33 C		1.00	0021	01
		158+89 C		1.00	0021	01
		159+17 C		1.00	0021	01
		159+60 C		1.00	0021	01
		159+88 C		1.00	0021	01
		160+95 R		1.00	0021	01
		160+96 C		1.00	0021	01
		161+23 R		1.00	0021	01
		161+25 C		1.00	0021	01
		161+75 R		1.00	0021	01
		161+85 R		1.00	0021	01
		162+35 C		1.00	0021	01
		162+64 C		1.00	0021	01
		164+05 C		1.00	0021	01
		164+42 C		1.00	0021	01
		165+25 C		1.00	0021	01
		165+51 C		1.00	0021	01
		167+33 C		1.00	0021	01
		167+60 C		1.00	0021	01
		168+25 R		2.00	0021	01
		168+30 L		2.00	0021	01
		Item T20.2020 Total:		**30.00**		
169	**201.9912**	**DISPOSE SOIL IMPACTED BY HAZARDOUS MATERIAL**	**TON**			

Distribution of Quantities

Project Name - HSIP - Signal Improvements to Mineral Spring Avenue (HSIP Funds)
Estimate Name - Addendum No. 1
R.I. Contract No. - 2015-CT-096
FAP Nos: STPG-HSIP(018)

Item No.	Item Code	Description	UM	Qty.	Pay Code	Seq. No.
169	**201.9912 Cont.**	MINERAL SPRING AVENUE				
		MINERAL SPRING AVENUE		100.00		
		Item 201.9912 Total:		**100.00**		

FED. ROAD DIV. NO.	STATE	FEDERAL AID PROJECT NO.	FISCAL YEAR	SHEET NO.	TOTAL SHEETS
1	RI	STPG-HSIP(018)	2016	9	34

R-1

BASELINE ALIGNMENT DATA

NUMBER	START STATION	RADIUS	LENGTH	LINE/CHORD DIRECTION	DELTA Δ	NORTHING	EASTING
C1	161+16.50	1260.83	493.60	N83° 30' 26"E	22.4306	285991.6138	347758.1845
L4	166+10.09		1830.91	N72° 17' 31"E		286047.0743	348245.4912

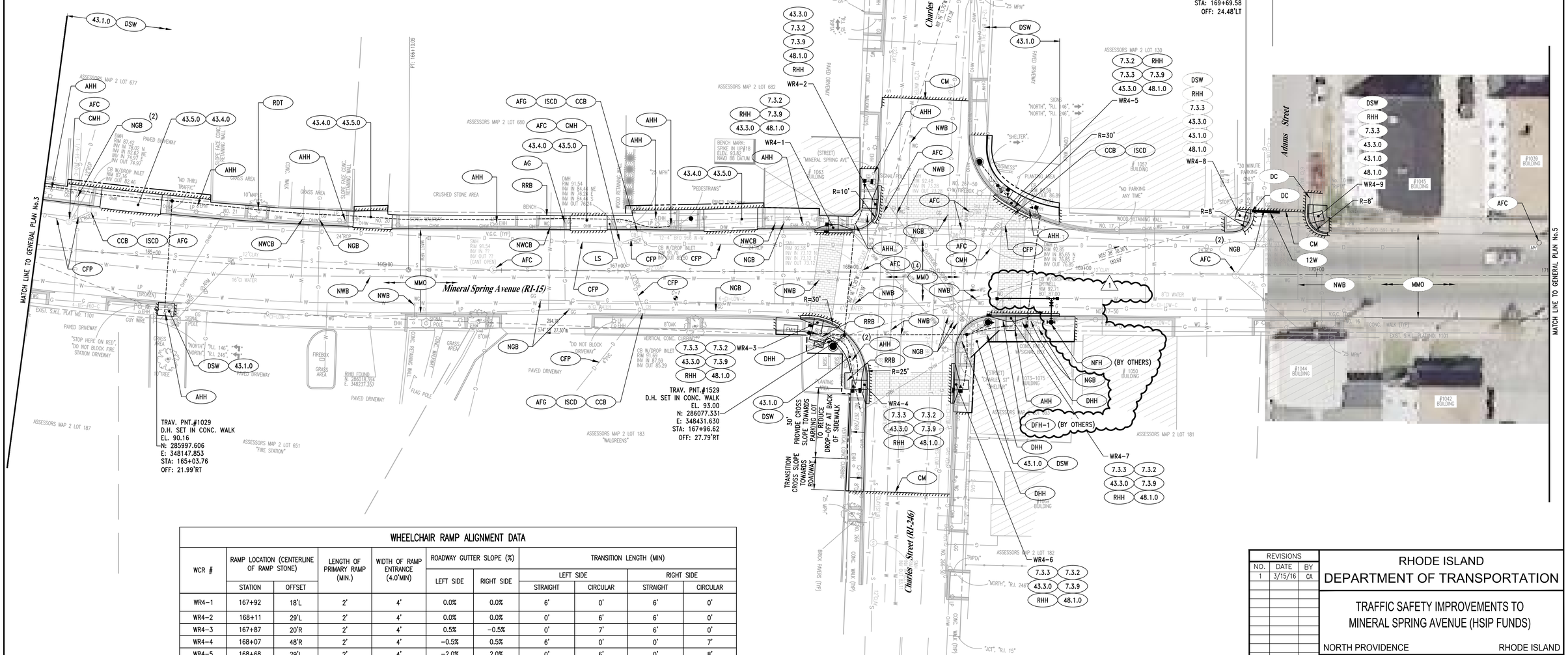

WHEELCHAIR RAMP ALIGNMENT DATA

WCR #	RAMP LOCATION (CENTERLINE OF RAMP STONE)		LENGTH OF PRIMARY RAMP (MIN.)	WIDTH OF RAMP ENTRANCE (4.0'MIN)	ROADWAY GUTTER SLOPE (%)		TRANSITION LENGTH (MIN)			
							LEFT SIDE		RIGHT SIDE	
	STATION	OFFSET			LEFT SIDE	RIGHT SIDE	STRAIGHT	CIRCULAR	STRAIGHT	CIRCULAR
WR4-1	167+92	18'L	2'	4'	0.0%	0.0%	6'	0'	6'	0'
WR4-2	168+11	29'L	2'	4'	0.0%	0.0%	0'	6'	6'	0'
WR4-3	167+87	20'R	2'	4'	0.5%	-0.5%	0'	7'	6'	0'
WR4-4	168+07	48'R	2'	4'	-0.5%	0.5%	6'	0'	0'	7'
WR4-5	168+68	29'L	2'	4'	-2.0%	2.0%	0'	6'	0'	8'
WR4-6	168+44	48'R	2'	4'	0.5%	-0.5%	7'	0'	6'	0'
WR4-7	168+69	18'R	2'	4'	-1.0%	1.0%	6'	0'	7'	0'
WR4-8	169+72	23'L	3'	4'	-1.5%	2.5%	0'	3.9' (ETR)	3'	0'
WR4-9	169+96	23'L	2'	4'	1.0%	1.0%	4'*	0'	0'	5'

* Transition stone has no reveal.

ADDENDUM No.1

REVISIONS		
NO.	DATE	BY
1	3/15/16	CA

RHODE ISLAND
DEPARTMENT OF TRANSPORTATION

TRAFFIC SAFETY IMPROVEMENTS TO
MINERAL SPRING AVENUE (HSIP FUNDS)

NORTH PROVIDENCE RHODE ISLAND

GENERAL PLAN No. 4
STA. 164+50 TO STA. 171+00

CHECKED BY _____ DATE _____ SCALE 1"=20'

PARE CORPORATION
ENGINEERS - SCIENTISTS - PLANNERS
8 BLACKSTONE VALLEY PLACE
LINCOLN, RI 02865
401-334-4100

0071V_V1_009_GENERAL004_REV01

FED. ROAD DIV. NO.	STATE	FEDERAL AID PROJECT NO.	FISCAL YEAR	SHEET NO.	TOTAL SHEETS
1	RI	STPG-HSIP(018)	2016	32	34

R-1

DETAIL REMOVED 1

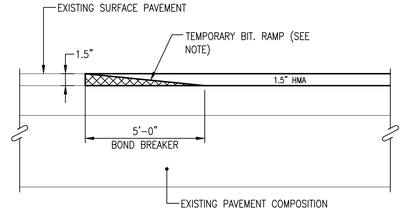

NOTE:
A BOND BREAKER (TAPERED OR EQUIVALENT) SHALL BE PLACED 5'-0" FROM THE JOINT AS A TEMPORARY RAMP. PRIOR TO PLACING THE SURFACE COURSE, THE BOND BREAKER SHALL BE REMOVED.

CM CUT AND MATCH DETAIL
NOT TO SCALE

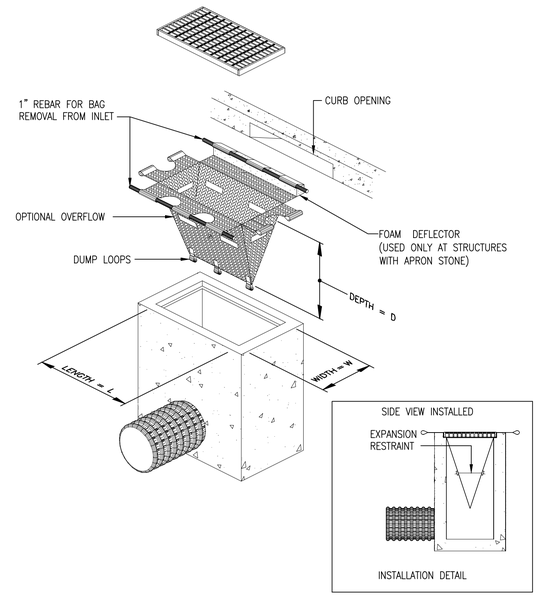

ISCD INLET SEDIMENT CONTROL DEVICE (WITH OPTIONAL CURB DEFLECTOR)
NOT TO SCALE

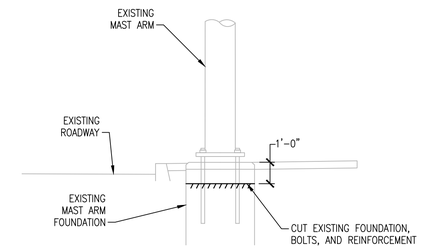

NOTE:
REMOVAL AND DISPOSAL OF EXISTING MAST ARM FOUNDATION SHALL INCLUDE REMOVAL OF ALL ANCHOR BOLTS AND REINFORCING WITHIN THE ONE-FOOT SECTION TO BE REMOVED.

DMF REMOVE AND DISPOSE MAST ARM FOUNDATION
NOT TO SCALE

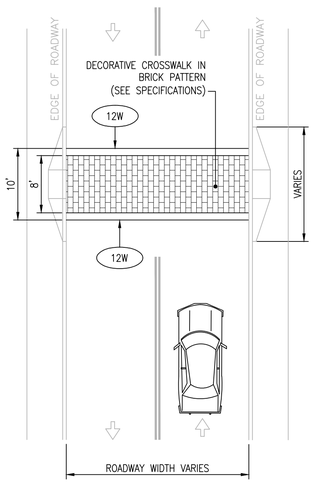

NOTE:
ALL MARKINGS ARE WHITE EPOXY RESIN

DCW DECORATIVE CROSSWALK DETAIL
NOT TO SCALE

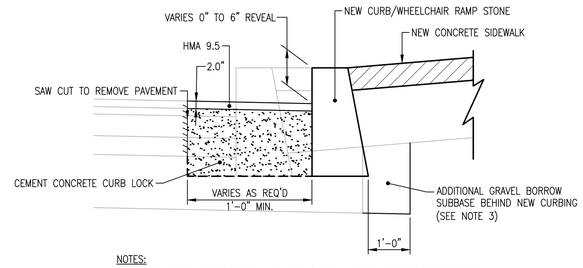

NOTES:
1. SHALL BE IN ACCORDANCE WITH RI STD DETAIL 7.6.0 AND SECTION 906 OF THE RI STANDARD SPECIFICATIONS.
2. CEMENT CONCRETE CURB LOCK SHALL BE USED FOR THE ENTIRE WIDTH BETWEEN THE PAVEMENT SAW CUT LINE AND THE NEW FACE OF CURBING.
3. WHERE NEW CURBING IS REQUIRED TO BE INSTALLED FURTHER BACK BEHIND THE GUTTER LINE AS SHOWN ABOVE, ADDITIONAL GRAVEL BORROW SUBBASE SHALL BE REQUIRED TO BE PLACED A MINIMUM OF 1'-0" BEHIND THE BACK OF CURBING.

CURB SETTING DETAIL FOR LARGE VOID AREAS
NOT TO SCALE

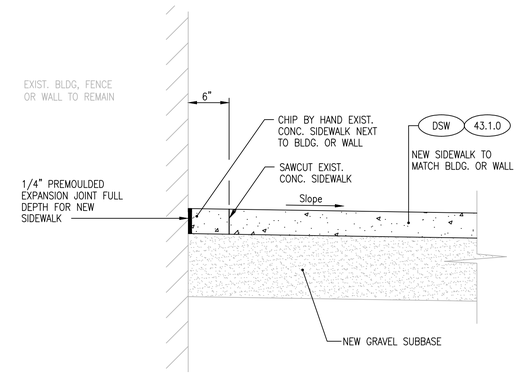

NOTES:
1. CARE SHALL BE TAKEN WHEN REMOVING SIDEWALKS NOT TO AFFECT THE STRUCTURAL INTEGRITY OF BUILDINGS, WALLS, AND OTHER VERTICAL STRUCTURES.
2. THE CONTRACTOR SHALL CUT A 6" x 12" TEST AREA AT EACH WALL AND REMOVE THE SIDEWALK, FOR THE ENGINEER TO VISUALLY INSPECT THE DISTURBED AREA.
3. THE HANDWORK REQUIRED TO REMOVE THE SECTIONS OF SIDEWALK NEXT TO BUILDING OR WALL SHALL BE INCIDENTAL TO THE REMOVE AND DISPOSE SIDEWALK WORK ITEM.

SIDEWALK REMOVAL AT WALL/STRUCTURE
NOT TO SCALE

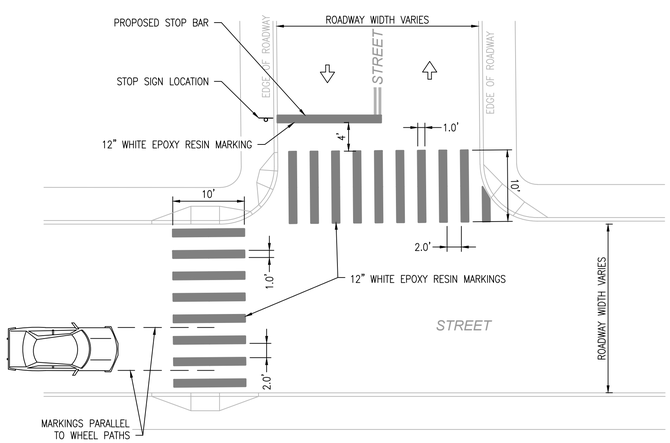

NOTE:
ALL MARKINGS ARE WHITE EPOXY RESIN

CW TYPICAL CROSSWALK STRIPING DETAIL
NOT TO SCALE

NOTES:
1. WHERE DIRECTED BY THE RESIDENT ENGINEER, REMOVAL OF THE ADJACENT SIDEWALK PANEL MAY BE REQUIRED TO FACILITATE THE REMOVAL, HANDLING, HAULING, TRIMMING AND RESETTING (RHH) OF GRANITE CURB TO MATCH AND TRANSITION TO THE EXISTING SIDEWALK AS WELL AS THE CURBING TO REMAIN.
2. ADDITIONALLY, THE RHH OF THE EXISTING ADJACENT GRANITE GRANITE CURB MAY BE REQUIRED TO FACILITATE THE CONSTRUCTION OF THE PROPOSED WHEELCHAIR RAMP TRANSITION CURB TO MEET AND MATCH THE EXISTING CURB JOINT.
3. PAYMENT FOR SUCH WORK, IF REQUIRED, WILL BE PER THE APPROPRIATE BID ITEMS.

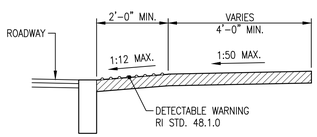

SECTION A-A

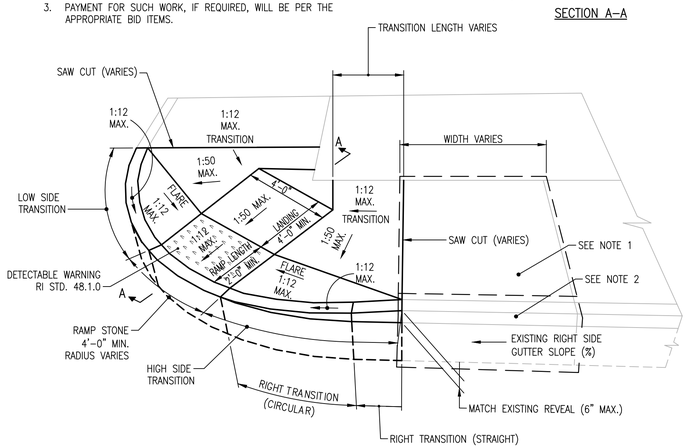

CORNER WHEELCHAIR RAMP DETAIL
NOT TO SCALE

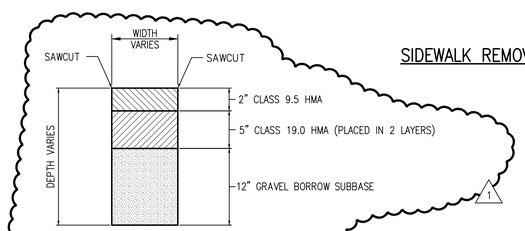

NOTE:
BACKFILL, IF REQUIRED, SHALL BE IN ACCORDANCE WITH SECTION 919 OF THE RHODE ISLAND STANDARD SPECIFICATIONS FOR ROAD AND BRIDGE CONSTRUCTION, 2010 EDITION, INCLUDING ALL SUPPLEMENTS AND ADDENDA.

TEST PIT PERMANENT PATCH DETAIL
NOT TO SCALE

REVISIONS		
NO.	DATE	BY
1	3/15/16	CA

RHODE ISLAND
DEPARTMENT OF TRANSPORTATION

TRAFFIC SAFETY IMPROVEMENTS TO
MINERAL SPRING AVENUE (HSIP FUNDS)

NORTH PROVIDENCE RHODE ISLAND

DETAILS No.1

CHECKED BY _____ DATE _____ SCALE N.T.S.

PARE CORPORATION
ENGINEERS - SCIENTISTS - PLANNERS
8 BLACKSTONE VALLEY PLACE
LINCOLN, RI 02865
401-334-4100

ADDENDUM No.1

FED. ROAD DIV. NO.	STATE	FEDERAL AID PROJECT NO.	FISCAL YEAR	SHEET NO.	TOTAL SHEETS
1	RI	STPG-HSIP(018)	2016	34	34

R-1

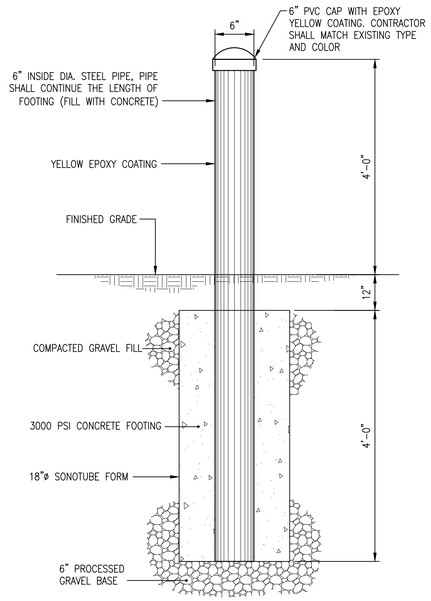

BOL BOLLARD DETAIL
NOT TO SCALE

DETAIL REMOVED 1

ADDENDUM No.1

REVISIONS		
NO.	DATE	BY
1	3/15/16	CA

RHODE ISLAND
DEPARTMENT OF TRANSPORTATION

TRAFFIC SAFETY IMPROVEMENTS TO
MINERAL SPRING AVENUE (HSIP FUNDS)

NORTH PROVIDENCE RHODE ISLAND

DETAILS No.3

CHECKED BY _____ DATE _____ SCALE AS NOTED

PARE
PARE CORPORATION
ENGINEERS - SCIENTISTS - PLANNERS
8 BLACKSTONE VALLEY PLACE
LINCOLN, RI 02865
401-334-4100

0071V_V1_034_DETAIL003_REV01