State of Rhode Island

Department of Administration
Division of Purchases
One Capitol Hill
Providence, RI 02908

INVITATION TO BID

SOLICITATION TITLE: **EMERGENCY REPAIRS TO BRIDGES 185, 243, 382, 416, 423 & 729**
SOLICITATION NUMBER: **7550279**
BID PROPOSAL SUBMISSION DEADLINE: **February 26, 2016 at 1:00 PM**

PREBID CONFERENCE N/A

☐ NONMANDATORY

☐ MANDATORY ➡ Bidder must attend the mandatory prebid conference. The bidder's representative must register with the Division of Purchases at the mandatory prebid conference and identify the bidder he or she represents.

Location:
Date:
Time:

QUESTIONS about this solicitation must be emailed and received by the Division of Purchases at LISA.HILL@PURCHASING.RI.GOV no later than Friday, February 19, 2016, 5:00 PM, in a Microsoft Word attachment with the corresponding solicitation number. Questions, if any, and responses will be posted on the Division of Purchases website at www.purchasing.ri.gov as an addendum to this solicitation

BID BOND REQUIRED: ☐ NO
☒ YES

PAYMENT AND PERFORMANCE BOND REQUIRED: ☐ NO
☒ YES

SPECIFICATIONS AND PLANS: ☒ NO
☐ YES ➡ See Electronic Solicitation Bidding Information.
Click on the online active "D" link in the "info" column.

Continued onto next page

State of Rhode Island

Department of Administration
Division of Purchases
One Capitol Hill
Providence, RI 02908

INVITATION TO BID

SOLICITATION TITLE: **EMERGENCY REPAIRS TO BRIDGES 185, 243, 382, 416, 423, & 729**
SOLICITATION NUMBER: **7550279**
BID PROPOSAL SUBMISSION DEADLINE: **February 26, 2016 at 1:00 PM**

RIVIP REGISTRATION: Bidders must be registered vendors through the online Division of Purchases Rhode Island Vendor Information Program at www.purchasing.ri.gov. To register or update information, click on "Vendor Center," then "Vendor Information" from the dropdown menu on the left.

BIDDER CERTIFICATION COVER FORM: Bidders must download (obtainable at www.purchasing.ri.gov), complete, and submit a Bidder Certification Cover Form with each bid proposal.

Solicitation Date:	Friday, February 12, 2016
Project Description:	EMERGENCY BRIDGE REPAIRS
Project Location:	VARIOUS
Completion Time:	90 DAYS FROM AWARD
User Agency:	DEPARTMENT OF TRANSPORTATION
Awarding Authority:	The State of Rhode Island Department of Administration Division of Purchases, 2nd Floor One Capitol Hill, Providence, RI 02908-5855
Design Agent:	DEPARTMENT OF TRANSPORTATION 2 CAPITOL HILL PROVIDENCE, RI

The State of Rhode Island through its, Department of Administration, Division of Purchases, is soliciting bid proposals to perform the work described in the plans and specifications dated NA/ for the Project in accordance with this solicitation.

Bidders are invited to submit bid proposals to the Division of Purchases by the bid proposal submission deadline.

This solicitation contains, and is subject to the terms and conditions of, the Invitation to Bid, Instructions to Bidders, Bid Preparation Checklist (with applicable forms), Agreement, General Conditions, any Supplemental Conditions, Specifications and Plans, Bidder Certification Cover Form, and Bid Form. The solicitation is available at www.purchasing.ri.gov.

The award of the contract pursuant to this solicitation will be made to the responsive and responsible bidder with the lowest bid price. *The Division of Purchases reserves the right to waive any technicalities in the bid proposals, accept or reject any bid proposal, award a contract in the best interest of the State, or revoke any solicitation.*

Continued onto next page

State of Rhode Island

Department of Administration
Division of Purchases
One Capitol Hill
Providence, RI 02908

INVITATION TO BID

Electronic Solicitation Bidding Information

Downloading and Accessing Additional Electronic Solicitation Files

Accessing electronic files on the purchasing website will require Adobe viewer. All bid solicitations that include a "D" in the "Info" column will require WinZip 8.1 software. The WinZip file may contain one or more files. These files may require additional software such as Microsoft Office.

Specifications that have a file for download are marked with a "D" in the "Info" field of the bid search results page located on the Purchasing website. The "D" will indicate an active link to the WinZip file until the bid reaches its opening date. Clicking on the active "D" link will allow you to open or save the WinZip file associated with the bid. Opening the WinZip file will offer you the option of saving to your local computer.

Once saved, you can open the WinZip file and view the files. The individual files can be saved to your computer in a location such as "Desktop" or "My Documents".

Buyer Name: LISA HILL , Title: CHIEF BUYER

State of Rhode Island Department of Administration
Division of Purchases

REVISED
November 20, 2013

NOTICE TO VENDORS

Each bid proposal for a *public works project* must include a "public copy" to be available for public inspection upon the opening of bids. **Bid proposals that do not include a copy for public inspection will be deemed nonresponsive.**

The public copy must be submitted in .pdf (portable document file) format on a ***read-only*** CD-R media disc. The disc must include ***all of the documents*** submitted in response to the solicitation concatenated or merged into one file. The file must be named in the following manner:

BidNumber_DateofBid_VendorName_VendorID.pdf

The Bidder Certification Cover Form contains all of the information for the file name. The date of bid must appear as mm-dd-yyyy. The vendor name must appear as one word, with no spaces or punctuation. Underscores must separate the fields.

Example: 7543210_11-08-2013_OceanStateCompanyInc_9867.pdf

The public copy disc must be separately enclosed in a protective cover clearly marked "Public Copy" and include the following information (all available from the Bidder Certification Cover Form): (1) title of solicitation; (2) name of bidder and RIVIP vendor ID number; (3) bid number; and (4) date of bid.

The public copy may redact any trade secrets or commercial or financial information which is of a privileged or confidential nature pursuant to the "Access to Public Records Act," R. I. Gen. Laws §§ 38-2-1 *et seq.*

For further information on how to comply with this statutory requirement, see R. I. Gen. Laws §§ 37-2-18(b) and (j). Also see Procurement Regulation 5.11 accessible at www.purchasing.ri.gov

Solicitation #: 7550279
Solicitation Title: EMERGENCY REPAIRS TO BRIDGES 185, 243, 382, 416, 423, & 729

BID FORM

To: The State of Rhode Island Department of Administration
Division of Purchases, 2nd Floor
One Capitol Hill, Providence, RI 02908-5855

Bidder: _____
Legal name of entity

_____
Address (street/city/state/zip)

_____
Contact name Contact email

_____
Contact telephone Contact fax

1. BASE BID PRICE

The Bidder submits this bid proposal to perform all of the work (including labor and materials) described in the solicitation for this Base Bid Price (*including the costs for all Allowances, Bonds, and Addenda)*:

$_____
(base bid price *in figures* printed electronically, typed, or handwritten legibly in ink)

_____
(base bid price *in words* printed electronically, typed, or handwritten legibly in ink)

- **Allowances**

The Base Bid Price ***includes*** the costs for the following Allowances:

No. 1: _____ $_____

No. 2: _____ $_____

No. 3: _____ $_____

Total Allowances: $_____

- **Bonds**

  The Base Bid Price ***includes*** the costs for all Bid and Payment and Performance Bonds required by the solicitation.

- **Addenda**

  The Bidder has examined the entire solicitation (including the following Addenda), and the Base Bid Price ***includes*** the costs of any modifications required by the Addenda.

  All Addenda must be acknowledged.

  Addendum No. 1 dated: _____

  Addendum No. 2 dated: _____

  Addendum No. 3 dated: _____

  Addendum No. 4 dated: _____

  Addendum No. 5 dated: _____

  Addendum No. 6 dated: _____

2. ALTERNATES (*Additions/Subtractions* to Base Bid Price)

The Bidder offers to: (i) perform the work described in these Alternates as selected by the State in the order of priority specified below, based on the availability of funds and the best interest of the State; and (ii) increase or reduce the Base Bid Price by the amount set forth below for each Alternate selected.

Check "Add" or "Subtract."

____ Add ____ Subtract Alternate No. 1: _____

$_____
(amount *in figures* printed electronically, typed, or handwritten legibly in ink)

_____
(amount *in words* printed electronically, typed, or handwritten legibly in ink)

____ Add ____ Subtract Alternate No. 2: _____

$_____
(amount *in figures* printed electronically, typed, or handwritten legibly in ink)

_____
(amount *in words* printed electronically, typed, or handwritten legibly in ink)

____ Add ____ Subtract Alternate No. 3: _____

$_____
(alternate amount *in figures* printed electronically, typed, or handwritten legibly in ink)

_____
(alternate amount *in words* printed electronically, typed, or handwritten legibly in ink)

3. UNIT PRICES

The Bidder submits these predetermined Unit Prices as the basis for any change orders approved in advance by the State. These Unit Prices include ***all*** costs, including labor, materials, services, regulatory compliance, overhead, and profit.

Unit Price No. 1: _____ $_____

Unit Price No. 2: _____ $_____

Unit Price No. 3: _____ $_____

4. CONTRACT TIME

The Bidder offers to perform the work in accordance with the timeline specified below:

Solicitation #: 7550279
Solicitation Title: EMERGENCY REPAIRS TO BRIDGES 185, 243, 382, 416, 423, & 729

- Start of construction: _____
- Substantial completion: _____
- Final completion: _____

5. LIQUIDATED DAMAGES

The successful bidder awarded a contract pursuant to this solicitation shall be liable for and pay the State, as liquidated damages and not as a penalty, the following amount for each calendar day of delay beyond the date for substantial completion, as determined in the sole discretion of the State: $__N/A_____.

This bid proposal is irrevocable for 60 days from the bid proposal submission deadline.

If the Bidder is determined to be the successful bidder pursuant to this solicitation, the Bidder will promptly: (i) comply with each of the requirements of the Tentative Letter of Award; and (ii) commence and diligently pursue the work upon issuance and receipt of the purchase order from the State and authorization from the user agency.

The person signing below certifies that he or she has been duly authorized to execute and submit this bid proposal on behalf of the Bidder.

BIDDER

Date:_____

_____
Name of Bidder

_____
Signature in ink

Solicitation #: 7550279
Solicitation Title: EMERGENCY REPAIRS TO BRIDGES 185, 243, 382, 416, 423, & 729

_____
Printed name and title of person signing on behalf of Bidder
#_____
Bidder's Contractor Registration Number

STATE OF RHODE ISLAND AND PROVIDENCE PLANTATIONS

Department of Labor and Training
Center General Complex
1511 Pontiac Avenue
Cranston, RI 02920-4407

TTY: Via RI Relay 711

Lincoln D. Chafee
Governor
Charles J. Fogarty
Director

STATE CONTRACT ADDENDUM

RHODE ISLAND DEPARTMENT OF LABOR AND TRAINING

PREVAILING WAGE REQUIREMENTS (37-13-1 ET SEQ.)

The prevailing wage requirements are generally set forth in RIGL 37-13-1 et seq. These requirements refer to the prevailing rate of pay for regular, holiday, and overtime wages to be paid to each craftsmen, mechanic, teamster, laborer, or other type of worker performing work on public works projects when state or municipal funds exceed one thousand dollars ($1,000).

All Prevailing Wage Contractors and Subcontractors are required to:

1. Submit to the Awarding Authority a list of the contractor's subcontractors for any part or all of the prevailing wage work in accordance with RIGL § 37-13-4;

2. Pay all prevailing wage employees at least once per week and in accordance with RIGL §37-13-7 (see Appendix B attached);

3. Post the prevailing wage rate scale and the Department of Labor and Training's prevailing wage poster in a prominent and easily accessible place on the work site in accordance with RIGL §37-13-11; posters may be downloaded at www.dlt.ri.gov/pw/Posters.htm .poster/htm or obtained from the Department of Labor and Training, Center General Complex, 1511 Pontiac Avenue, Cranston, Rhode Island;

4. Access the Department of Labor and Training website, at www.dlt.ri.gov on or before July 1st of each year, until such time as the contract is completed, to ascertain the current prevailing wage rates and the amount of payment or contributions for each covered prevailing wage employee and make any necessary adjustments to the covered employee's prevailing wage rates effective July Ist of each year in compliance with RIGL §37-13-8;

5. Attach a copy of this CONTRACT ADDENDUM and its attachments as a binding obligation to any and all contracts between the contractor and any

STATE OF RHODE ISLAND AND PROVIDENCE PLANTATIONS

Department of Labor and Training
Center General Complex
1511 Pontiac Avenue
Cranston, RI 02920-4407

Telephone; (401) 462-8000
TTY; Via RI Relay 711

Lincoln D. Chafee
Governor
Charles J. Fogarty
Director

subcontractors and their assignees for prevailing wage work performed pursuant to this contract;

6. Provide for the payment of overtime for prevailing wage employees who work in excess of eight (8) hours in any one day or forty (40) hours in any one week as provided by RIGL §37-13-10;

7. Maintain accurate prevailing wage employee payroll records on a Rhode Island Certified Weekly Payroll form available for download at www.dlt.ri.gov/pw.forms/htm, as required by RIGL §37-13-13, and make those records available to the Department of Labor and Training upon request;

8. Furnish the fully executed RI Certified Weekly Payroll Form to the awarding authority on a monthly basis for all work completed in the preceding month.

9. For general or primary contracts one million dollars ($1,000,000) or more, shall maintain on the work site a fully executed RI Certified Prevailing Wage Daily Log listing the contractor's employees employed each day on the public works site; the RI Certified Prevailing Wage Daily Log shall be available for inspection on the public works site at all times; this rule shall not apply to road, highway, or bridge public works projects. Where applicable, furnish both the Rhode Island Certified Prevailing Wage Daily Log together with the Rhode Island Weekly Certified Payroll to the awarding authority.

10. Assure that all covered prevailing wage employees on construction projects with a total project cost of one hundred thousand dollars ($100,000) or more has a OSHA ten (10) hour construction safety certification in compliance with RIGL § 37-23-1;

11. Employ apprentices for the performance of the awarded contract when the contract is valued at one million dollars ($1,000,000) or more, and comply with the apprentice to journeyperson ratio for each trade approved by the apprenticeship council of the Department of Labor and Training in compliance with RIGL §37-13-3.1;

12. Assure that all prevailing wage employees who perform work which requires a Rhode Island trade license possess the appropriate Rhode Island trade license in compliance with Rhode Island law; and

STATE OF RHODE ISLAND AND PROVIDENCE PLANTATIONS

Department of Labor and Training

Center General Complex
1511 Pontiac Avenue
Cranston, RI 02920-4407

Telephone: (401) 462-8000
TTY: Via RI Relay 711

Lincoln D. Chafee
Governor

Charles J. Fogarty
Director

13. Comply with all applicable provisions of RIGL §37-13-1, et. seq;

Any questions or concerns regarding this CONTRACT ADDENDUM should be addressed to the contractor or subcontractor's attorney. Additional Prevailing Wage information may be obtained from the Department of Labor and Training at www.dlt.ri.gov/pw.

CERTIFICATION

I hereby certify that I have reviewed this CONTRACT ADDENDUM and understand my obligations as stated above.

By: _____

Title: _____

Subscribed and sworn before me this___day of_____, 20_.

_____
Notary Public
My commission expires:_____

An Equal Opportunity Employer/Program, /Auxiliary aids and services are available upon request to individuals with disabilities.

TTY via RI Relay 711

STATE OF RHODE ISLAND AND PROVIDENCE PLANTATIONS

Department of Labor and Training
Center General Complex
1511 Pontiac Avenue
Cranston, RI 02920-4407

Telephone: (401) 462-8000

APPENDIX A

TITLE 37
Public Property and Works

CHAPTER 37-13
Labor and Payment of Debts by Contractors

SECTION 37-13-5

§37-13-5 Payment for trucking or materials furnished - Withholding of sums due. -A contractor or subcontractor on public works authorized by a proper authority shall pay any obligation or charge for trucking and material which have been furnished for the use of the contractor or subcontractor, in connection with the public works being performed by him or her, within ninety (90) days after the obligation or charge is incurred or the trucking service has been performed or the material has been delivered to the site of the work, whichever is later. When it is brought to the notice of the proper authority in a city or town, or the proper authority in the state having supervision of the contract, that the obligation or charge has not been paid by the contractor or subcontractor, the proper authority may deduct and hold for a period not exceeding sixty (60) days, from sums of money due to the contractor or subcontractor, the equivalent amount of such sums certified by a trucker or materialman creditor as due him or her, as provided in this section, and which the proper authority determines is reasonable for trucking performed or materials furnished for the public works.

APPRENDIX B

TITLE 37
Public Property and Works

CHAPTER 37-13
Labor and Payment of Debts by Contractors

SECTION 37-13-7

§ 37-13-7 Specification in contract of amount and frequency of payment of wages. -(a) Every call for bids for every contract in excess of one thousand dollars ($1,000), to which the state of Rhode Island or any political subdivision thereof or any public agency or quasi-public agency is a party, for construction, alteration, and/or repair, including painting and decorating, of public buildings or public works of the state of Rhode Island or any political subdivision thereof, or any public agency or quasi-public agency and which requires or involves the employment of employees, shall contain a provision stating the minimum wages to be paid various types of employees which shall be based upon the wages that will be determined by the director of labor and training to be prevailing for the corresponding types of employees employed on projects of a character similar to the contract work in the city, town, village, or other appropriate political subdivision of the state of Rhode Island in which the work is to be performed. Every contract shall contain a stipulation that the contractor or his or her subcontractor shall pay all the employees employed directly upon the site of the work, unconditionally and not less often than once a week, and without subsequent deduction or rebate on any account, the full amounts accrued at time of payment computed at wage rates not less than those stated in the call for bids, regardless of any contractual relationships which may be alleged to exist between the contractor or subcontractor and the employees, and that the scale of wages to be paid shall be posted by the contractor in a prominent and easily accessible place at the site of the work; and the further stipulation that there may be withheld from the contractor so much of the accrued payments as may be considered necessary to pay to the employees employed by the contractor, or any subcontractor on the work, the difference between the rates of wages required by the contract to be paid the employees on the work and the rates of wages received by the employees and not refunded to the contractor, subcontractors, or their agents.

(b) The terms "wages", "scale of wages", "wage rates", "minimum wages", and "prevailing wages" shall include:

(1) The basic hourly rate of pay; and

(2)) The amount of:

(A) The rate of contribution made by a contractor or subcontractor to a trustee or to a third person pursuant to a fund, plan, or program; and

(B) The rate of costs to the contractor or subcontractor which may be reasonably anticipated in providing benefits to employees pursuant to an enforceable commitment to carry out a financially responsible plan or program which was communicated in writing to the employees affected, for medical or hospital care, pensions on retirement or death, compensation for injuries or illness resulting from occupational activity, or insurance to provide any of the foregoing, for unemployment benefits, life insurance, disability and sickness insurance, or accident insurance, for vacation and holiday pay, for defraying costs of apprenticeship or other similar programs, or for other bona fide fringe benefits, but only where the contractor or subcontractor is not required by other federal, state, or local law to provide any of the benefits; provided, that the obligation of a contractor or subcontractor to make payment in accordance with the prevailing wage determinations of the director of labor and training insofar as this chapter of this title and other acts incorporating this chapter of this title by reference are concerned may be discharged by the making of payments in cash, by the making of contributions of a type referred to in subsection (b)(2), or by the assumption of an enforceable commitment to bear the costs of a plan or program of a type referred to in this subdivision, or any combination thereof, where the aggregate of any payments, contributions, and costs is not less than the rate of pay described in subsection (b)(1) plus the amount referred to in subsection (b)(2).

(c) The term "employees", as used in this section, shall include employees of contractors or subcontractors performing jobs on various types of public works including mechanics, apprentices, teamsters, chauffeurs, and laborers engaged in the transportation of gravel or fill to the site of public works, the removal and/or delivery of gravel or fill or ready-mix concrete, sand, bituminous stone, or asphalt flowable fill from the site of public works, or the transportation or removal of gravel or fill from one location to another on the site of public works, and the employment of the employees shall be subject to the provisions of subsections (a) and (b).

(d) The terms "public agency" and "quasi-public agency" shall include, but not be limited to, the Rhode Island industrial recreational building authority, the Rhode Island economic development corporation, the Rhode Island airport corporation, the Rhode Island industrial facilities corporation, the Rhode Island refunding bond authority, the Rhode Island housing and mortgage finance corporation, the Rhode Island resource recovery corporation, the Rhode Island public transit authority, the Rhode Island student loan authority, the water resources board corporate, the Rhode Island health and education building corporation, the Rhode Island higher education assistance authority, the Rhode Island turnpike and bridge authority, the Narragansett Bay water quality management district commission, Rhode Island telecommunications authority, the convention center authority, the board of governors for higher education, the board of regents for elementary and secondary education, the capital center commission, the housing resources commission, the Quonset Point-Davisville management corporation, the Rhode Island children's crusade for higher education, the Rhode Island depositors economic protection corporation, the Rhode Island lottery commission, the Rhode Island

partnership for science and technology, the Rhode Island public building authority, and the Rhode Island underground storage tank board.

STATE OF RHODE ISLAND AND PROVIDENCE PLANTATIONS

Department of Administration
DIVISION OF PURCHASES
One Capitol Hill
Providence, RI 02908-5855

Tel: (401) 574-8100
Fax: (401) 574-8387
Website: www.purchasing.ri.gov

DIVISION OF PURCHASES
INSTRUCTIONS TO BIDDERS
PUBLIC WORKS CONSTRUCTION (PWC)

Compliance with Instructions to Bidders

These Instructions to Bidders contain terms and conditions that will govern the preparation and submission of a bid proposal and any contract awarded pursuant to this solicitation.

Bidders must comply with each and every requirement of these Instructions to Bidders. Any failure to comply with any requirement may result in the determination of a nonresponsive bid proposal and/or the rejection of the bid proposal.

Priority of Terms and Conditions

The terms and conditions in these Instructions to Bidders *supersede* any and all inconsistent or conflicting terms and conditions in any other provision of any other document in this solicitation or in the bid proposal and govern this solicitation, the bid proposal, and any contract awarded pursuant to this solicitation.

Offer to Contract

Bid proposals constitute an offer to contract with the State of Rhode Island through the Department of Administration Division of Purchases on the terms and conditions contained in the solicitation, the laws of the State of Rhode Island, including all procurement statutes and regulations (available at www.purchasing.ri.gov), and applicable federal and local law, all of which are incorporated into this solicitation and any contract awarded pursuant to this solicitation by this reference.

Comprehensive Review and Inspection

The bidder is responsible for carefully reviewing all of the requirements of this solicitation, inspecting the project location, including checking and/or verifying measurements, site conditions, any limitations, and other details, prior to preparing and submitting its bid proposal. Failure to submit a complete bid proposal may result in rejection of the bid proposal. Claims for additional costs or time resulting from the bidder's failure to inspect and/or verify will not be considered.

Addenda

Responses to questions from bidders, interpretations of plans and specifications, changes prior to the bid proposal submission deadline, approvals of any substitutions, and supplemental instructions and terms will be posted as addenda on the Division of Purchases website at www.purchasing.ri.gov, and all addenda become incorporated into this solicitation upon posting. Bidders are responsible for checking the website to determine the issuance of any addenda. No addenda will be posted within the 5-day period preceding the bid proposal submission deadline except for an addendum withdrawing the solicitation or extending the bid proposal submission deadline.

Prebid Conference

At the discretion of the State Purchasing Agent, a prebid conference - mandatory or nonmandatory - may be held. Bidders must attend a mandatory prebid conference and are encouraged to attend a nonmandatory prebid conference. The bidder's representative must register with the Division of Purchases at a mandatory prebid conference and identify the bidder he or she represents.

Costs

The bidder is responsible for all costs and expenses to develop and submit a bid proposal in response to this solicitation.

Preparation of Bid Proposal

Bid proposals must be made on the Bid Form included in the solicitation and in accordance with the instructions in this solicitation. All applicable blanks must be completed in a legible manner, printed electronically, typed, or handwritten in ink, and amounts must be expressed in both words and figures. In the event of any contradictory terms, handwritten terms prevail over printed or typed terms, and words prevail over figures. Signatures must be in ink. No additional provisions, conditions, or limitations may be made by the bidder, and any erasures and/or corrections must be initialed in ink by the person signing on behalf of the bidder.

This solicitation contains a Bid Preparation Checklist to assist the bidder in preparing a bid proposal for submission.

Submission of Bid Proposal

Each bid proposal (a complete package, with the signed Bidder Certification Cover Form, signed Bid Form, Bid Surety, IRS Form W-9, signed General Contractor Apprenticeship Certification, if applicable, and public copy CD-R media disk) must be submitted in a *separate sealed envelope* with the bidder's name and address and the specific "Solicitation Number," "Solicitation Title," and the "Bid Proposal Submission Deadline" marked in the upper left-hand corner of the envelope.

The bid proposal must be delivered (via mail, messenger service, or personal delivery) to the Division of Purchases and date-stamped receipted by the date and time specified for the bid proposal submission deadline. Bidders should mail bid proposals sufficiently in advance of the bid proposal submission deadline to ensure timely delivery to the Division of Purchases or, when delivering a bid proposal in person or by messenger, should allow additional time for parking and clearance through security checkpoints. Bid proposals must be addressed to:

Rhode Island Department of Administration
Division of Purchases
One Capitol Hill, Second Floor
Providence, RI 02908-5855

Bid proposals that are not received by the Division of Purchases by the bid proposal submission deadline for whatever reason will be deemed late and will not be considered. The submission time will be determined by the time clock in the Division of Purchases. Postmarks will not be considered proof of timely submission.

At the bid proposal submission deadline, bid proposals will be opened and read aloud in public.

Bid Price

The bidder must submit a Base Bid Price on the Bid Form to perform all of the work specified in the solicitation, including the cost of the bonds and any allowances and addenda. The costs of alternates shall not be included in the calculation of the Base Bid Price. The bidder shall separately provide the cost for each alternate listed in the Bid Form. The cost for each alternate must be designated as an addition to, or subtraction from, the Base Bid Price. Alternates will be selected, if any, by the Division of Purchases in the order of priority listed in the Bid Form.

Bidder Certification Cover Form

The bidder must download, complete, sign, and submit the Bidder Certification Cover Form for this solicitation as the first document with each bid proposal. The Bidder Certification Cover Form is downloadable with the solicitation from the Division of Purchases website by logging in as a RIVIP vendor and clicking on the applicable "Bid Number."

Public Copy

Bid proposals submitted in response to this solicitation are public records pursuant to the Rhode Island "Access to Public Records Act," R. I. Gen. Laws §§ 38-2-1 et seq. Each bid proposal must include a "public copy" to be available for public inspection upon the opening of bids. Bidders may redact in the pubic copy any trade secrets or commercial or financial information which is of a privileged or confidential nature pursuant to the Access to Public Records Act.

The public copy must be submitted in .pdf (portable document file) format on a ***read-only*** CD-R media disk. The disk must include ***all of the documents*** submitted in response to the solicitation concatenated or merged into one file.

The public copy disk must be separately enclosed in a protective cover clearly marked "Public Copy" and include the following information: (1) Solicitation Title; (2) name of bidder and RIVIP vendor ID number; (3) Solicitation Number; and (4) bid proposal submission deadline.

The .pdf file must be named in the following manner:

SolicitationNumber_Bid Proposal Submission Deadline_BidderName_VendorID.pdf

The bid proposal submission deadline must appear as mm-dd-yyyy. The bidder name must appear as one word, with no spaces or punctuation. Underscores must separate the fields.

Example: 7543210_11-08-2013_OceanStateCompanyInc_9867.pdf

The public copy of each bid proposal will be posted on the Division of Purchases website. .

For Rhode Island Department of Transportation highway and bridge projects, in addition to the Quest Lite compatible electronic copy and one hard copy, the bidder must also include a duplicate original of the Quest Lite compatible electronic copy on a ***read-only*** CD-R media disk as the "public copy."

Contractors Registration

The bidder must have and maintain a valid certificate of registration issued by the Contractors' Registration Board throughout the term of the contract awarded pursuant to this solicitation and ensure that its subcontractors, unless exempt from registration, also obtain and maintain valid certificates of registration.

Subcontractors

The bidder must demonstrate that it is able to perform a substantial portion of the work using its own workforce. Any bidder that does not maintain a permanent workforce and/or proposes to perform a disproportionate amount of the work through one or more subcontractors will be considered unqualified. The successful bidder must establish to the satisfaction of the State Purchasing Agent the reliability and responsibility of any subcontractors proposed to perform any work pursuant to this solicitation.

Taxes

The State of Rhode Island is exempt from federal excise taxes and state and municipal sales and use taxes. The bidder shall not include such taxes in any prices in the bid proposal.

Bid Surety

Bidders must furnish, with their bid proposals, either a bid bond from a surety licensed to conduct business in the State of Rhode Island or a certified check payable to the State of Rhode Island in the amount of five (5%) percent of the bid proposal. (*Bidders for Rhode Island Department of Transportation highway and bridge projects must furnish, with their bid proposals, a bid bond from a surety licensed to conduct business in the State of Rhode Island. Certified checks are not permitted for these projects.)* An attorney-in-fact who executes a bond on behalf of the surety must provide a certified current copy of the power of attorney. A successful bidder who fails to submit the additional documentation required by the tentative letter of award and/or fails to commence and pursue the work in accordance with the contract awarded pursuant to this solicitation may forfeit, at the discretion of the State Purchasing Agent, the full amount of the bid surety as liquidated damages. The State will retain the bid surety of all bidders until the earliest of: (i) the issuance of the Purchase Order; (ii) the 61st day following the bid proposal submission deadline; or (iii) the rejection of all bid proposals.

Divestiture of Investments in Iran Requirement

No bidder engaged in investment activities in Iran as described in R.I. Gen. Laws § 37-2.5-2(b) may submit a bid proposal to, or renew a contract with, the Division of Purchases. Each bidder submitting a bid proposal or entering into a renewal of a contract is required to certify that the bidder does not appear on the list maintained by the General Treasurer pursuant to R.I. Gen. Laws § 37-2.5-3.

Domestic Steel

Any steel products required by the plans and specifications in this solicitation must be formed, extruded, forged, cast, fabricated, or otherwise processed from steel made in the United States.

Withdrawal

A bidder may withdraw its bid proposal at any time prior to the bid proposal submission deadline. Bid proposals are irrevocable for a period of 60 days following the bid proposal submission deadline.

Reservation of Rights

The Division of Purchases reserves the right, at any time, for any reason, in its sole discretion, to: (i) revoke, suspend, or terminate this solicitation; (ii) accept or reject any and all bid proposals, in whole or in part; (iii) waive any technical defects, irregularities, or omissions in any bid proposals; and/or (iv) terminate any contract awarded pursuant to this solicitation, with or without cause.

Award

The State Purchasing Agent, in his or her sole discretion, will award the contract pursuant to this solicitation to the responsive and responsible bidder who submits the lowest responsive and responsible bid proposal. The State Purchasing Agent may determine, in his or her sole discretion, the low bid proposal on the basis of the amount of the Base Bid Price plus the alternates selected in accordance with the Bid Form. The successful bidder will receive a tentative letter of award from the Division of Purchases with instructions for the bidder to submit further documentation. The successful bidder shall be authorized to commence work only upon the issuance of the Purchase Order by the Division of Purchases and, in addition, an authorization from the user agency. The issuance of the Purchase Order and the continuation of any contract awarded pursuant to this solicitation is contingent upon the availability of funds.

Payment and Performance Bonds

The successful bidder must furnish a 100% payment and performance bond from a surety licensed to conduct business in the State of Rhode Island upon the tentative award of the contract pursuant to this solicitation.

Prevailing Wages

For contracts priced under $1 Million

The successful bidder and its subcontractors must pay their workers at the applicable prevailing wage rates (adjusted every July 1) for the various trades on a weekly basis, pay their workers one and one-half times the applicable prevailing wage rates for each hour worked in excess of 8 hours in any one day or 40 hours in any one week, and submit certified weekly payroll forms on a monthly basis to the user agency. Prevailing wage posters and rate schedules, available at the Rhode Island Department of Labor and Training website at www.dlt.ri.gov, must be posted at the project site.

For contracts priced $1 Million or More

The successful bidder and its subcontractors must pay their workers at the applicable prevailing wage rates (adjusted every July 1) for the various trades on a weekly basis, pay their workers one and one-half times the applicable prevailing wage rates for each hour worked in excess of 8 hours in any one day or 40 hours in any one week, submit certified weekly payroll forms on a monthly basis to the user agency, and maintain a certified prevailing wage daily log at the project site. Prevailing wage posters and rate schedules, available at the Rhode Island Department of Labor and Training website at www.dlt.ri.gov, must be posted at the project site.

Apprenticeship

if the value of the project pursuant to this solicitation is at least $1 Million (including all alternates), the successful bidder must employ apprentices on this project (in accordance with the apprentice to journeyperson ratio for each trade approved by the State Apprenticeship Council. The bidder must complete, sign, and submit the General Contractor Apprenticeship Certification Form, included in the solicitation, with the bid proposal.

The successful bidder will also be required to complete, sign, and submit the General Contractor Apprenticeship Re-Certification and Certification Form following receipt of the tentative letter of award, and, in addition, each subcontractor must complete, sign, and submit to the successful bidder the Subcontractor Apprenticeship Certification Form prior to the commencement of any work on the project pursuant to this solicitation.

Specific information about apprentice occupations and apprenticeship requirements is available on the Rhode Island Department of Labor and Training website at www.dlt.ri.gov/apprenticeship.

Occupational Safety

The successful bidder must ensure (if the total contract price is at least $100,000) that all employees at the project site possess a card issued by the United States Department of Labor certifying successful completion of an OSHA ten (10) hour construction safety program.

Hazardous Substances

The successful bidder must submit a chemical identification list to the Rhode Island Department of Labor and Training upon receipt of a Purchase Order from the Division of Purchases prior to performance of the contract awarded pursuant to this solicitation and make available to all employees a list of any hazardous substances that may present a risk of exposure.

Substitutions

Any proposal in response to a request for substitutions in this solicitation must include the detailed information necessary for a comprehensive evaluation, including (without limitation) the name of the material or equipment of the proposed substitution and a complete description of the proposed substitution, with drawings and performance and test data. Products specified in this solicitation establish a standard of quality, performance, dimension, function, and appearance. Proposed substitutions must meet the standard and will not be considered without the prior written approval of the Division of Purchases. All substitution approvals will be posted, as addenda to the solicitation on the Division of Purchases website.

Licenses

The successful bidder and anyone performing any work on the contract awarded pursuant to this solicitation must possess all of the licenses required by any federal, state, or local law to perform such work.

Insurance

The successful bidder must submit a copy of an endorsement and a certificate of insurance that references the solicitation number and names the State of Rhode Island as "certificate holder" and as "additional insured" upon the issuance of the tentative letter of award, on an annual basis during the term of the contract awarded pursuant to this solicitation, and from time to time upon request. The certificate of insurance must state that 30 days' advance notice of cancellation, nonrenewal, or material change in coverage (referencing the solicitation number) will be sent to: Rhode Island Department of Administration, Division of Purchases, One Capitol Hill, Providence, Rhode Island 02908-5855, fax # 401-574-8387, and provide evidence of the following specific types and amounts of insurance:

Type of Insurance	Amount of Coverage
Comprehensive General Liability	$1 Million each occurrence (inclusive of both bodily injury and property damage)_
	$1 Million products and completed operations aggregate
	$1 Million general aggregate

Comprehensive General Liability coverage shall include:

Independent contractors
Contractual (including construction "hold harmless" and other types of contracts or agreements in effect for insured operations)
Completed operations
Personal injury (with employee exclusion deleted)

Automobile Liability

Combined Single Limit — $1 Million each occurrence

Bodily injury, property damage, including nonowned and/or hired vehicles and equipment

Workers Compensation

Coverage B — $100,000

Environmental Impairment ("pollution control") — $1 Million or 5% of contract amount, whichever is greater

Builder's Risk — Contract amount

All insurance required by this solicitation, whether through a policy or an endorsement, shall include: (i) a waiver of subrogation, waiving any right the insurance company may have to recover against the State of Rhode Island; and (ii) a provision that the bidder's insurance coverage shall be primary in relation to any insurance, self-insurance, or self-retention maintained by the State of Rhode Island, and any insurance, self-insurance, or self-retention maintained by the State of Rhode island shall be in excess of the bidder's insurance.

The State Purchasing Agent reserves the right to accept alternate forms and plans of insurance and/or to require additional or more extensive coverage.

Minority Business Enterprises

The Division of Purchases reserves the right to give additional consideration to bid proposals submitted by minority/women business enterprises certified by the Division of Purchases, Minority Business Office ("MBEs") provided that any such bid proposal is fully responsive to the terms and conditions of this solicitation, and the bid price is determined, in the discretion of the Division of Purchases, to be within a competitive range.

Any bidder who does not intend to perform all of the work with its own forces shall recruit and engage MBEs to perform at least 10% of the dollar value of the contract awarded pursuant to this solicitation. To reach that goal, the bidder may allocate up to 60% of its costs for materials and supplies obtained from MBE dealers or 100% of its costs for materials and supplies obtained from MBE manufacturers.

The successful bidder must submit a plan to meet this requirement for approval by the Division of Purchases, Minority Business Enterprise Compliance Office within the 21-day period following the tentative letter of award, identifying all MBEs, and must also demonstrate its good faith best efforts to meet these MBE goals. Information about this requirement and a directory of MBEs certified in Rhode Island is available at www.mbe.ri.gov or (401) 574-8670.

Equal Opportunity

The successful bidder must demonstrate a commitment to equal opportunity and submit an affirmative action plan for review by the Rhode Island Department of Administration State Equal Opportunity Office within the 21-day period following the tentative letter of award. Information about this requirement is available at www.diversity.ri.gov/eeo/eoopagehome.htm or (401) 222-3090.

Drug-Free Workplace

The successful bidder shall comply, and require that its employees comply, with the State of Rhode Island Drug Free Workplace policy and provide a certificate of compliance within the 21-day period following the tentative letter of award.

Sprinkler Impairment

The successful bidder must comply with the requirements of the State of Rhode Island's insurance carrier for sprinkler impairment and hot work, accessible at the Division of Purchases website at www.purchasing.ri.gov.

Foreign Corporations

No foreign corporation or limited liability company may transact business in the State of Rhode Island until it shall have obtained a Certificate of Authority from the Rhode Island Secretary of State, and no foreign limited partnership may transact business in the State of Rhode Island until it shall have obtained a Certificate of Registration from the Rhode Island Secretary of State. The successful bidder, if a corporation or limited liability company, will be required to provide a Good Standing Certificate, and if a limited partnership, will be required to provide a Letter of Legal Existence, issued by the Rhode Island Secretary of State within the 21-day period following the tentative letter of award.

Campaign Finance

The successful bidder who has contributed, within the 24 months preceding the contract award, an aggregate amount of more than $250.00 within a calendar year to any Rhode Island general officer, candidate for general office, any member of the general assembly, or any Rhode Island political party, must file a "Vendor Affidavit" with the State of Rhode Island Board of Elections. Information about "Vendor Affidavits" and electronic filing is available at www.elections.ri.gov or Board of Elections, Campaign Finance, (401) 222-2056.

Binding Contract

The form of agreement the successful bidder will be required to execute is included in the solicitation. A binding contract between the State of Rhode Island and the successful bidder will be formed by the issuance of a Purchase Order from the Division of Purchases, *and only by the issuance of a Purchase Order, and only to the extent of available funds*. The binding contract will incorporate and be subject to the terms and conditions of the solicitation, including the Invitation to Bid, the Instructions to Bidders, the General Conditions, any Supplemental Conditions, the Plans and Specifications, the Bid Preparation Checklist, the Bid Form, the Bidder Certification Cover Form, the Agreement, and also the Purchase Order. The successful bidder shall be authorized to commence work only upon the issuance of the Purchase Order and, in addition, an authorization from the user agency.

Compliance with Terms of Contract

Failure of the successful bidder to comply with the terms and conditions of any contract awarded pursuant to this solicitation may result in nonpayment, suspension or termination of the contract, suspension or debarment of the bidder, or any other necessary or appropriate remedy.

RI Contract No. 2016-CB-015
Emergency Repairs to Bridges
185, 243, 382, 416, 423 & 729

The Contractor shall not use private property to store equipment or materials without written approval of the property owner. All work must be completed from the State Right-of-Way. No areas shall be disturbed outside the limits of work.

All work shall be completed in accordance with the Traffic-Related Work Restrictions indicated in the Maintenance & Protection of Traffic Plans. The Contractor shall maintain the existing travel ways during the hours when lane closures are not allowed.

RIDOT will pay for police when they are used one for one with flaggers. The contractor is required to include flaggers in their bid.

All RIDOT Standard Specifications, latest Compilations and Material Testing requirements apply to this contract.

All work on, over, under, within, or adjacent to the railroad right-of-way shall be in strict conformance with AMTRAK requirements. The Contractor shall coordinate with AMTRAK to gain access to the railroad right-of-way and to obtain AMTRAK work time restrictions. Unless otherwise indicated by AMTRAK, the Contractor shall anticipate a maximum 4 hour track outage during night time in which to conduct his work.

The Contractor shall coordinate with utility companies and provide adequate protection of their facilities.

Verizon requires the Contractor to provide temporary protection of the existing conduits adjacent to Beam “A” on Bridge No. 185. A Verizon Contract Work Inspector will confirm that the protection is in place and properly installed prior to the start of construction activities.

NGRID Gas requires the Contractor to provide temporary protection of the existing gas line on Bridge No. 382. A National Grid Damage Prevention Inspector will confirm that the protection is in place and properly installed prior to the start of construction activities.

The Contractor shall be aware of the following National Grid Gas moratorium listed below.

"Due to system reliability and public safety concerns, it is National Grid's practice to restrict all construction work on or near gas facilities between November 15th and April 15th. All scheduled work should be completed between April 15th and November 15th. As gas usage peak during the months of December to March driven by heating needs, National Grid’s priority is to provide our customers with safe and reliable gas service. Any work on or near the gas facility will expose our customers to unnecessary risk. Exceptions will be considered on a case by case basis. Approvals from Gas Control, Operational Engineering, and Project Engineering will be required for these cases."

The Contractor is hereby notified that the existing paint system at Bridge No. 423 has been confirmed by testing to contain lead. It is likely that lead paint is also present on the remaining bridges in this contract and appropriate measures for removal, containment, collection, and disposal of debris and spent materials as well as personnel and environmental protection during paint removal operations shall be employed.

The Steel Erector/Contractor for this project shall be certified for "Certified Steel Erector (CSE)" in accordance with the AISC Quality Certification Program. The Erector/Contractor of the structural steel shall be required to submit proof of current certification as specified.

The contractor shall submit proposed jack information to the RIDOT for review. RIDOT will review within four (4) days of receipt. A shop drawing submission & review will not be required for steel beam/girder repairs; however, the Contractor shall provide RIDOT with a record copy of all fabrication drawings used to perform these repairs.

Installation of steel repair plates at Bridge No. 729 must be completed within 30 working days after the Notice to Proceed. All other contract work must be completed within 90 working days after the Notice to Proceed

Payment of Lump Sum items will be based on the percentage of work completed. The State will hold 10% of the Lump Sum item until Final Acceptance. A 3% retainage will not be held.

No additional payment will be made for material, equipment, labor or incidentals necessary to perform operations during cold or inclement weather. Any additional costs associated with cold or inclement weather work will be considered incidental to the respective items for which the costs incurred.

Environmental permits have not been issued for this project. For bridges located over waterways, it is assumed that all work will be performed from above, and no water access will be required. Should the Contractor elect to perform work from within any waterway, it shall be his responsibility to obtain any and all necessary permits from RIDEM and any other governing body.

All Construction Layout and Survey will be incidental to this Contract.

The Contractor shall provide containment and heating, as required, for any temperature sensitive work.

Performance Bonds and Insurance are required as per the Bid Proposal Form.

Latest Federal Wage rates shall apply. Subcontractor agreements must be submitted and accepted by the Department.

Photographs depicting the general repair areas for each bridge, taken from recent RIDOT Inspection Reports, have been provided herein. These photos are for orientation / informational purposes only, and may contain annotations & callouts that do not specifically correspond to the scope of proposed work for this project.

MUNICIPAL CONTACT INFORMATION:

Cranston Police Department
5 Garfield Avenue
Cranston, RI 02920
401-942-2211

Lincoln Police Department
100 Old River Road
Lincoln, RI 02865
401-333-1111

North Kingstown Police Department
8166 Post Road
North Kingstown, RI 02852
401-294-3311

Warwick Police Department
99 Veterans Memorial Drive
Warwick, RI 02886
401-468-4200

West Warwick Police Department
1162 Main Street
West Warwick, RI 02893
401-821-4323

Rhode Island State Police
1575 Old Louisquisset Pike
Lincoln, RI 02865
401-444-1100

National Grid Gas (Engineering)
Mr. Jim Paulette – Principal Engineer
National Grid - Gas
40 Sylvan Road
Waltham, MA 02451
401-465-8580

Telephone
Mr. Peter DeCosta
Verizon Outside Plant Engineer
Verizon Communications
385 Myles Standish Industrial Park
Taunton, MA 02780
508-884-4950

EMERGENCY REPAIR INVENTORY

EMERGENCY REPAIRS TO BRIDGES
185, 243, 382, 416, 423 & 729

TOWNS OF LINCOLN, NORTH KINGSTOWN & WEST WARWICK, CITIES OF CRANSTON & WARWICK

Pontiac Bridge No. 018501 – RI Rte. 5 Greenwich Avenue over Pawtuxet River, Warwick

Two span rolled steel beam bridge displays significant steel section losses at the ends of Beam "A" in both spans at the pier. Perform structural steel repairs using steel plates and angles, bolted in place. Note that there is significant debris (sticks, etc.) lodged between Beam "A" and adjacent utility conduits. Also, working room is severely limited due to the positioning of these adjacent utility conduits.

The repairs (Refer to Plans & Specifications) shall include, but not be limited to, the following:

- Install temporary traffic control in accordance with the Maintenance & Protection of Traffic Plans.
- Perform field measurements.
- Submit record copy of steel beam repairs shop drawings (RIDOT Review is not required).
- Remove debris lodged between Beam "A" and adjacent utility conduits.
- Install required temporary utility protection.
- Clean & prepare steel beam surfaces to be repaired.
- Furnish and install steel beam repair plates.
- Repaint steel repair areas.
- Remove temporary utility protection.
- Remove temporary traffic control devices.

Lafayette Railroad Bridge No. 024301 – RI Rte. 4 over AMTRAK, North Kingstown

Single span rolled steel beam bridge displays significant steel section losses at the end of Beam "I" at the North Abutment. There is also severe scaling and spalling of the concrete beam seats which is undermining the bridge bearings at Beams "A" & "R" at the North Abutment and causing heavy deterioration of the beamseat pedestals at Beams "C", "D", & "E" at the South Abutment. Perform structural steel repair at Beam "I" using steel plates and angles, bolted in place. Perform structural concrete masonry repairs (form and cast-in-place) at Beams "A" & "R" at the North Abutment. Note that, due to the undermining of the bearings and the poor condition of the concrete in these areas, temporary jacking and shoring will be required to perform the concrete masonry repairs. Perform structural concrete masonry repairs (patching mortar) at Beams "C", "D", & "E" at the South Abutment. Temporary jacking and shoring is not required at these three locations.

The repairs (Refer to Plans & Specifications) shall include, but not be limited to, the following:

- Perform field measurements.
- Submit proposed jack information for review.
- Submit record copy of steel beam repairs shop drawings (RIDOT Review is not required).
- Install temporary jacking & shoring at locations shown on the plans.
- Jack beams to relieve load.

- Remove and dispose deteriorated & loose concrete and debris (including pigeon waste) at the beam seats and the beam ends at the direction of Engineer.
- Sawcut concrete around perimeter of proposed concrete repair areas.
- Remove loose, deteriorated concrete to sound concrete and to expose existing reinforcing steel (all existing reinforcing steel shall remain).
- Install formwork and cast new concrete to the lines and grades of original construction.
- Perform patching repairs to the lines and grades of original construction.
- Lower beams and remove temporary jacking and shoring components.
- Clean & prepare steel stringer surfaces.
- Furnish and install repair plates.
- Repaint steel repair area.
- Upon completion of the work, the Contractor shall remove the existing traffic drums and water-filled temporary traffic barriers along the East and West shoulders of the bridge and deliver them to the RIDOT Maintenance facility at 360 Lincoln Avenue in Warwick.

<u>Clyde Bridge No. 038201 – RI Rte. 115 Main Street over Pawtuxet River, West Warwick</u>
Three span rolled steel beam bridge displays significant steel section losses at the end of Beam "G" in Span 1 at Pier 1 and in Span 2 at Pier 2. Perform structural steel repairs using steel plates and angles, bolted in place.

The repairs (Refer to Plans & Specifications) shall include, but not be limited to, the following:

- Install temporary traffic control in accordance with the Maintenance & Protection of Traffic Plans.
- Perform field measurements.
- Submit record copy of steel beam repairs shop drawings (RIDOT Review is not required).
- Install required temporary utility protection.
- Clean & prepare steel beam surfaces to be repaired.
- Furnish and install steel beam repair plates.
- Repaint steel repair areas.
- Remove temporary utility protection.
- Remove temporary traffic control devices.
- Upon completion of the work, the Contractor shall remove the existing traffic drums and water-filled temporary traffic barriers along the West shoulder of the roadway at the bridge and deliver them to the RIDOT Maintenance facility at 360 Lincoln Avenue in Warwick.

<u>Breakneck Hill Road Bridge No. 041601 – RI Rte. 123 Breakneck Hill Road over RI Rte. 146, Lincoln</u>
Single span rolled steel beam bridge displays significant steel section losses at the ends of Beam "B" in Span 1 at the West Abutment and Pier. Perform structural steel repairs at Beam "B" using steel plates and angles, bolted in place. Note that the westbound shoulder of Breakneck Hill Road must be closed to vehicular traffic during installation of the proposed steel beam repair plates. Refer to the Maintenance & Protection of Traffic Plans.

The repairs (Refer to Plans & Specifications) shall include, but not be limited to, the following:

- Install temporary traffic control in accordance with the Maintenance & Protection of Traffic Plans.

- Perform field measurements.
- Submit record copy of steel beam repairs shop drawings (RIDOT Review is not required).
- Clean & prepare steel beam surfaces to be repaired.
- Furnish and install steel beam repair plates.
- Repaint steel repair areas.
- Remove temporary traffic control devices.

Meshanticut Viaduct Bridge No. 042301 – RI Rte. 2 SB over RI Rte. 5 Oaklawn Avenue & Lane C, Cranston:

Three-span rolled steel beam bridge displays significant pack rust between the bottom flange and cover plate at the northern end of Beam "H" in Span 2. Expansive forces induced by this pack rust have deformed the end of the cover plate vertically by 1/8" and caused a 4" long crack to form in the bottom flange-to-cover plate weld. Remove the pack rust by mechanical means, remove the cracked welds by grinding, re-weld the end of the cover plate, and install bolted steel repair plates. Note that the repair location is over a grassy area, and not in the roadway.

The repairs (Refer to Plans & Specifications) shall include, but not be limited to, the following:

- Perform field measurements.
- Submit record copy of steel beam repairs shop drawings (RIDOT Review is not required).
- Clean & prepare steel beam surfaces to be repaired.
- Remove pack rust by mechanical means.
- Perform non-destructive testing to determine extents of weld cracking.
- Remove damaged weld by grinding.
- Re-weld to match original limits.
- Furnish and install steel beam repair plates.
- Repaint steel repair area.

Phenix Avenue Bridge No. 072901 – RI Rte. 51 Phenix Avenue over I-295 NB, Cranston:

Single span welded steel plate girder bridge displays significant steel section losses at the ends of Girders "A", "B", and "C" at the East Abutment. Perform structural steel repairs at these locations using steel plates and angles, bolted and/or welded in place.

- Install temporary traffic control in accordance with the Maintenance & Protection of Traffic Plans.
- Perform field measurements.
- Submit record copy of steel girder repairs shop drawings (RIDOT Review is not required).
- Clean & prepare steel girder surfaces to be repaired.
- Furnish and install steel girder repair plates.
- Repaint steel repair areas.
- Remove temporary traffic control devices.

Bridge No. 185 Orientation Photos

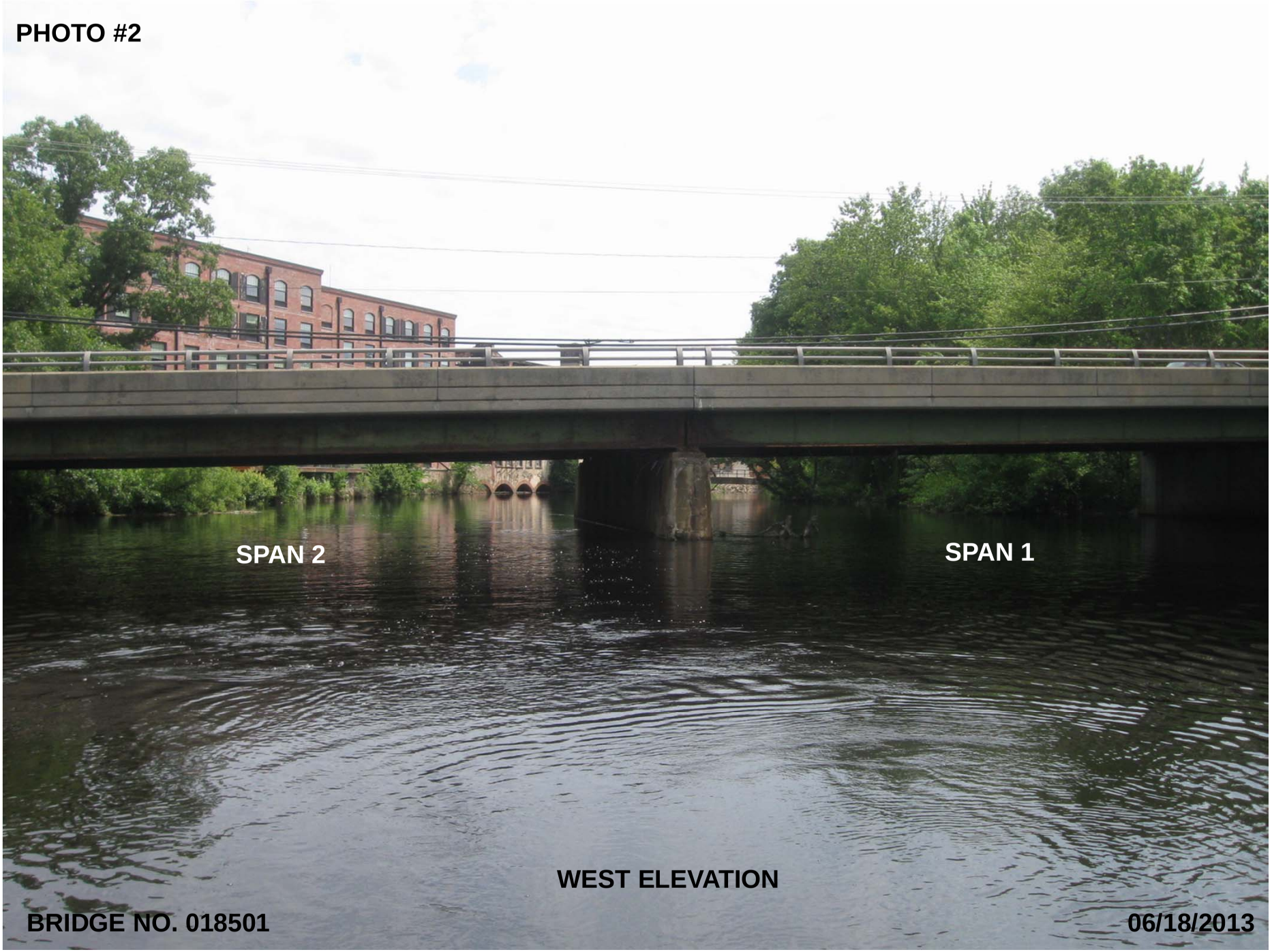
PHOTO #2
SPAN 2
SPAN 1
WEST ELEVATION
BRIDGE NO. 018501
06/18/2013

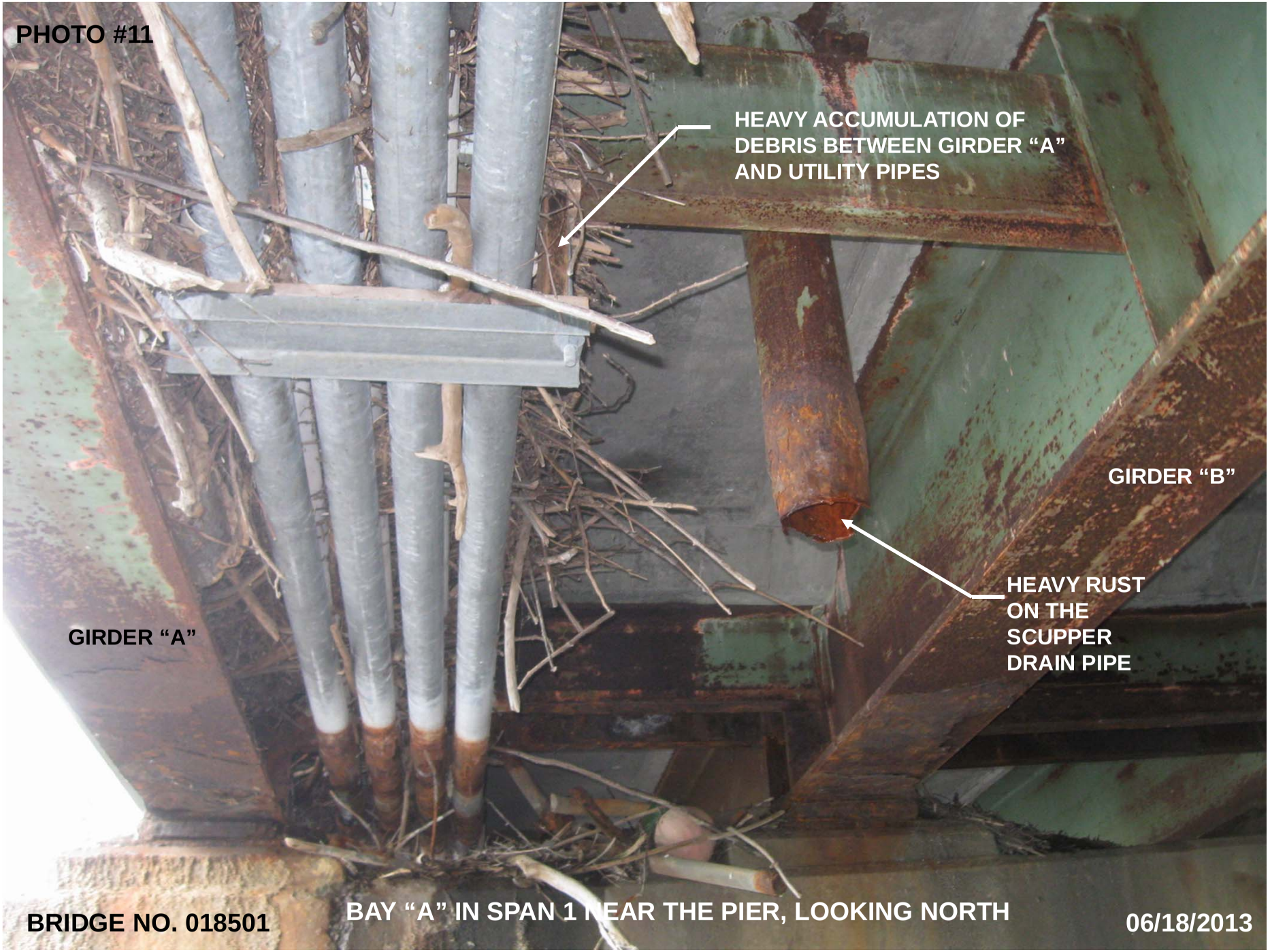
PHOTO #11
HEAVY ACCUMULATION OF DEBRIS BETWEEN GIRDER "A" AND UTILITY PIPES
GIRDER "B"
HEAVY RUST ON THE SCUPPER DRAIN PIPE
GIRDER "A"
BRIDGE NO. 018501
BAY "A" IN SPAN 1 NEAR THE PIER, LOOKING NORTH
06/18/2013

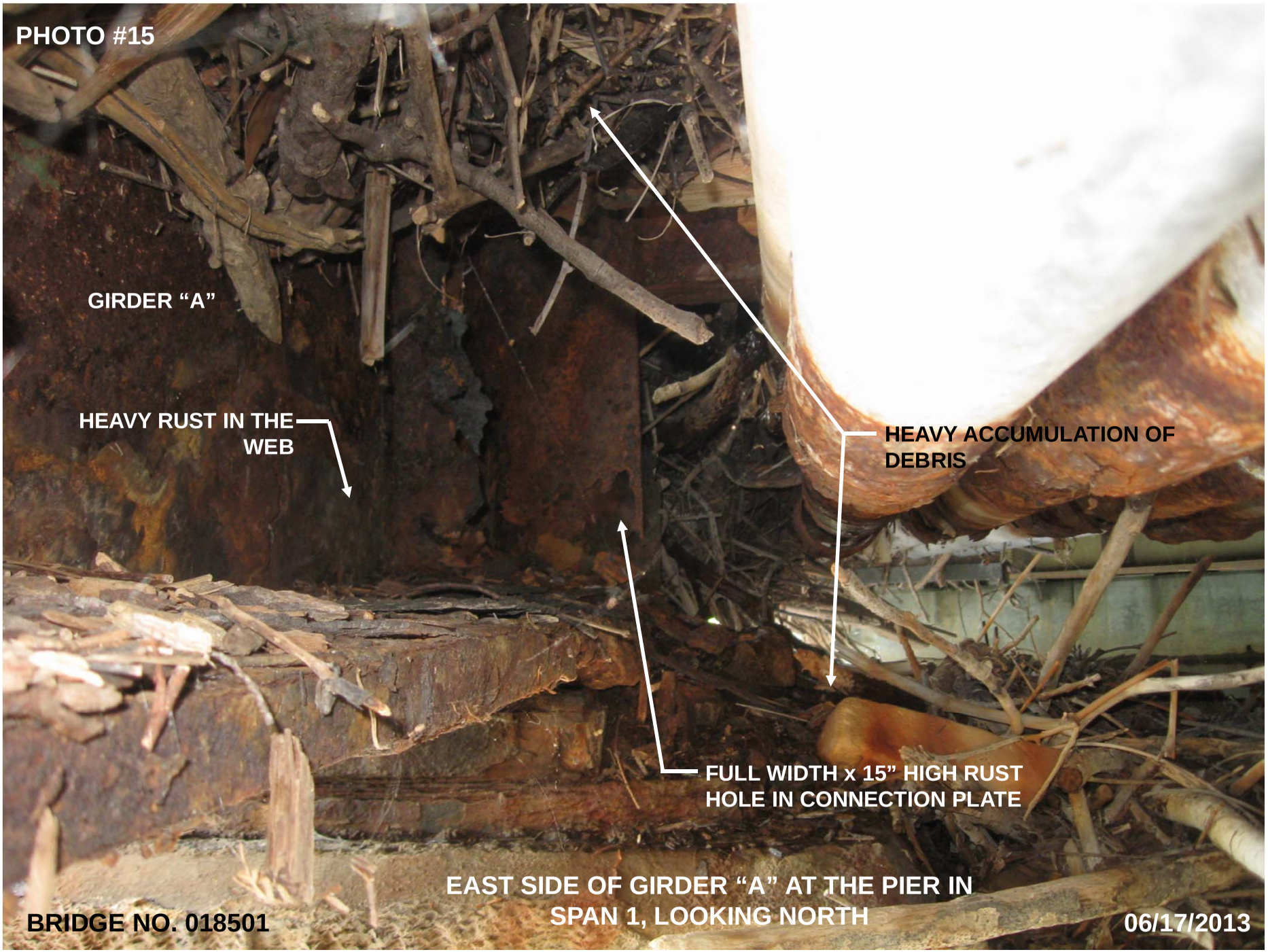
PHOTO #15
GIRDER "A"
HEAVY RUST IN THE WEB
HEAVY ACCUMULATION OF DEBRIS
FULL WIDTH x 15" HIGH RUST HOLE IN CONNECTION PLATE
EAST SIDE OF GIRDER "A" AT THE PIER IN SPAN 1, LOOKING NORTH
BRIDGE NO. 018501
06/17/2013

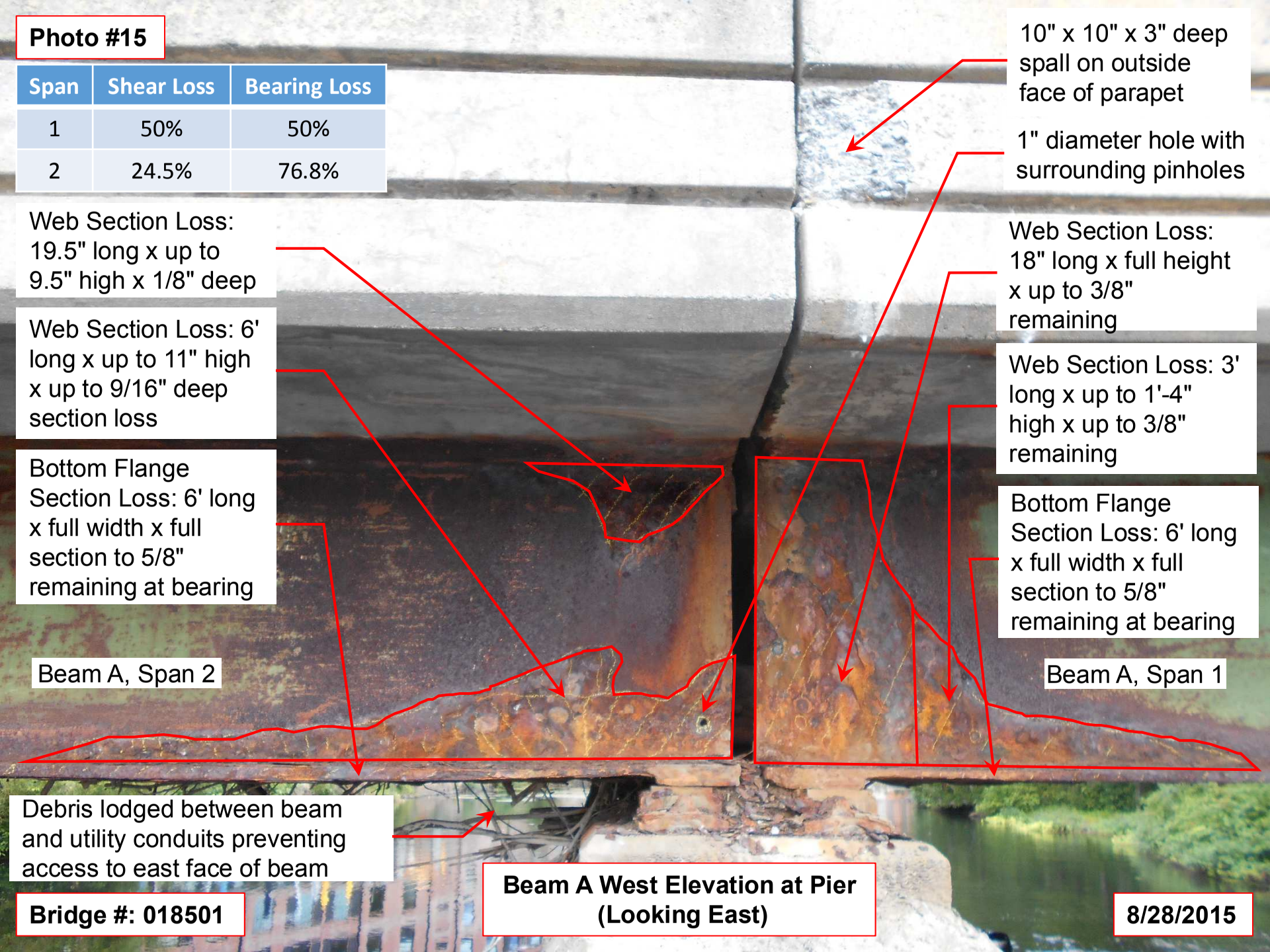
Photo #15
Span | Shear Loss | Bearing Loss
1 | 50% | 50%
2 | 24.5% | 76.8%
Web Section Loss: 19.5" long x up to 9.5" high x 1/8" deep
Web Section Loss: 6' long x up to 11" high x up to 9/16" deep section loss
Bottom Flange Section Loss: 6' long x full width x full section to 5/8" remaining at bearing
Beam A, Span 2
Debris lodged between beam and utility conduits preventing access to east face of beam
10" x 10" x 3" deep spall on outside face of parapet
1" diameter hole with surrounding pinholes
Web Section Loss: 18" long x full height x up to 3/8" remaining
Web Section Loss: 3' long x up to 1'-4" high x up to 3/8" remaining
Bottom Flange Section Loss: 6' long x full width x full section to 5/8" remaining at bearing
Beam A, Span 1
Bridge #: 018501
Beam A West Elevation at Pier (Looking East)
8/28/2015

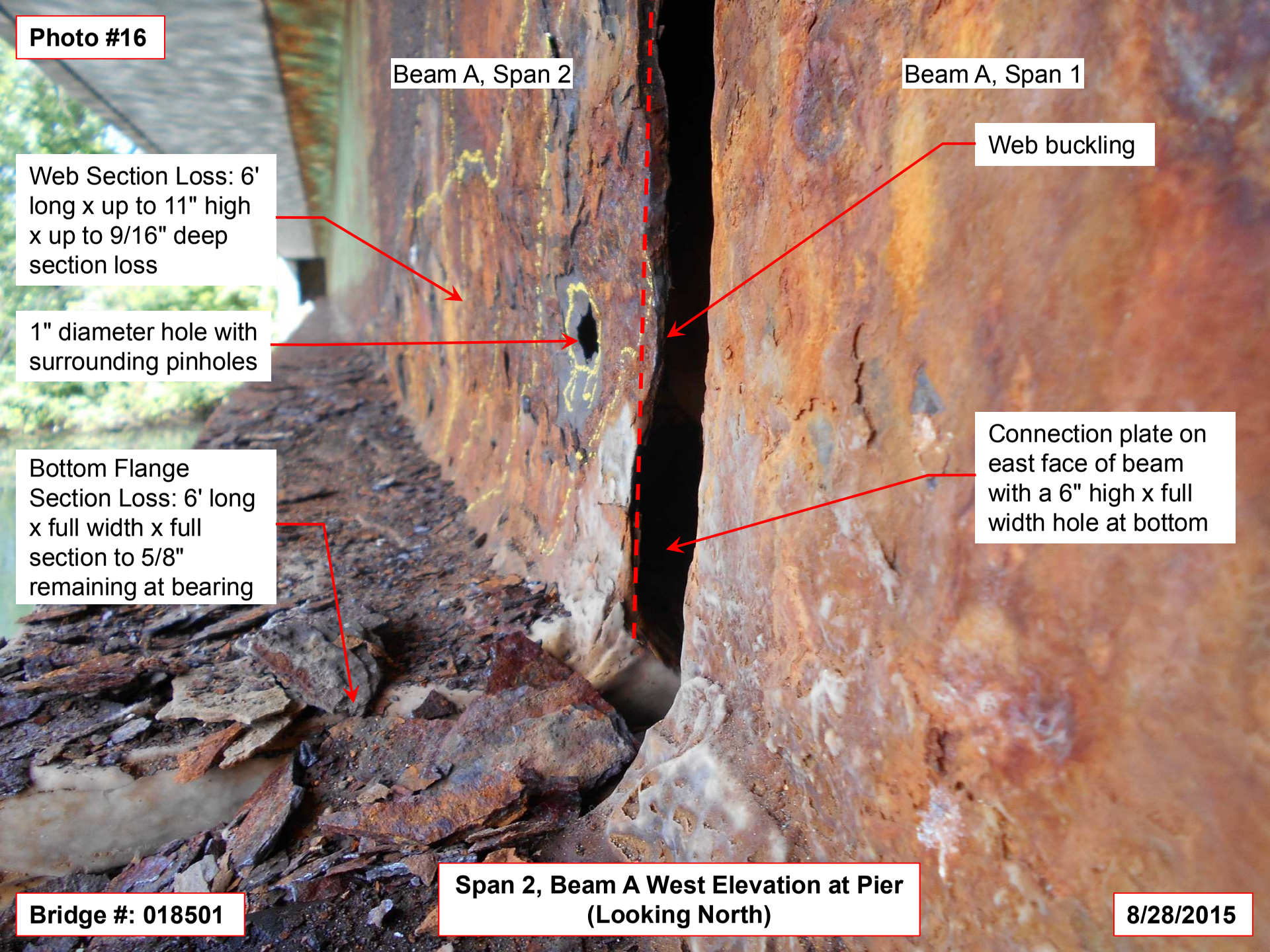
Photo #16
Beam A, Span 2
Beam A, Span 1
Web buckling
Web Section Loss: 6' long x up to 11" high x up to 9/16" deep section loss
1" diameter hole with surrounding pinholes
Connection plate on east face of beam with a 6" high x full width hole at bottom
Bottom Flange Section Loss: 6' long x full width x full section to 5/8" remaining at bearing
Bridge #: 018501
Span 2, Beam A West Elevation at Pier (Looking North)
8/28/2015

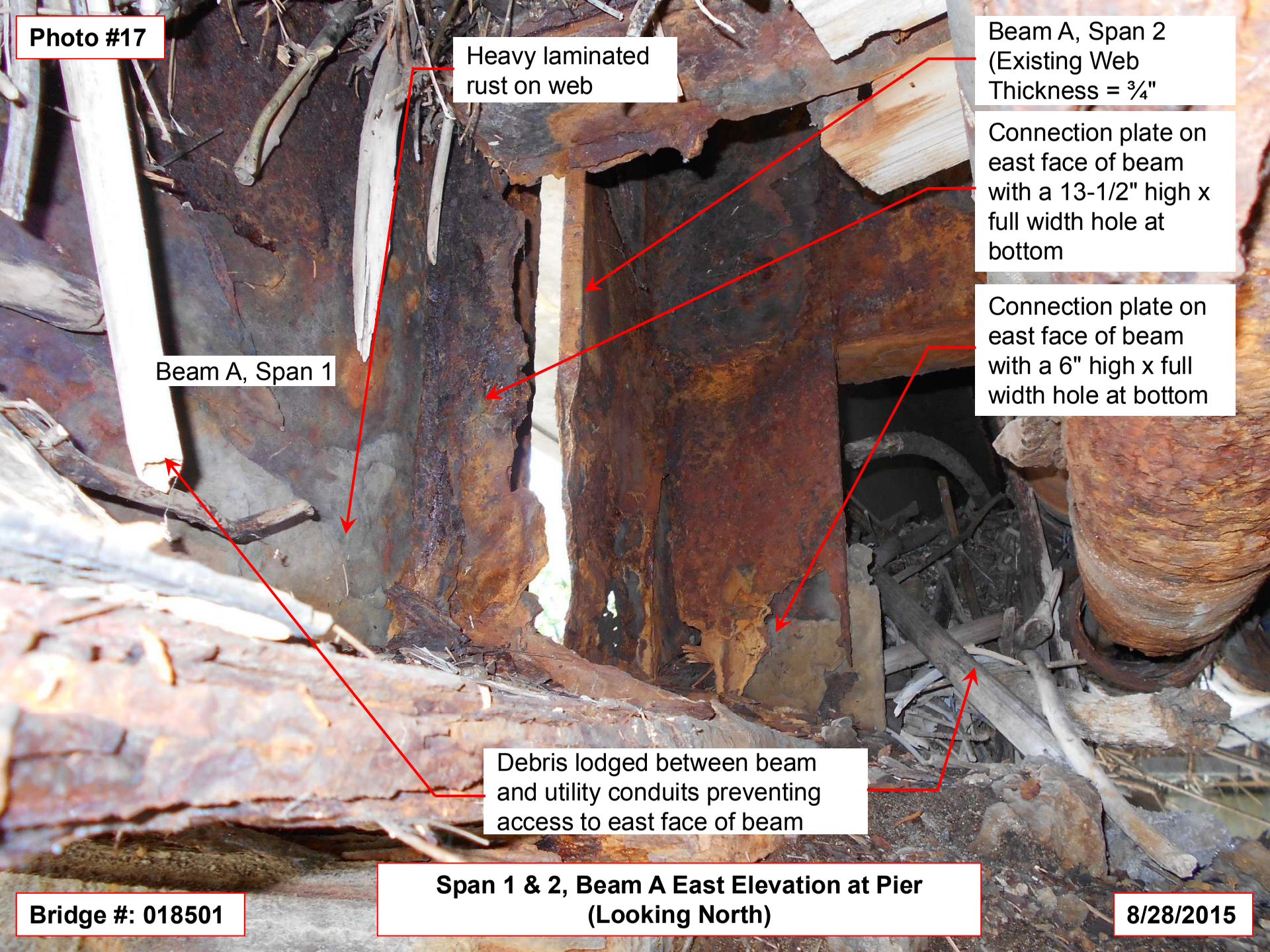
Photo #17
Heavy laminated rust on web
Beam A, Span 2 (Existing Web Thickness = ¾"
Connection plate on east face of beam with a 13-1/2" high x full width hole at bottom
Connection plate on east face of beam with a 6" high x full width hole at bottom
Beam A, Span 1
Debris lodged between beam and utility conduits preventing access to east face of beam
Bridge #: 018501
Span 1 & 2, Beam A East Elevation at Pier (Looking North)
8/28/2015

Bridge No. 243 Orientation Photos

Bridge #: 024301
Photo #: 5
8/7/2013
(Beam "A")
(Abutment #1)
(Track #1)
(Track #2)
West Elevation View, looking East.

Bridge #: 024301
Photo #: 6
8/7/2013
(Beam "R")
(Abutment #1)
(Graffiti)
(Track #2)
(Track #1)
East Elevation View, looking West.

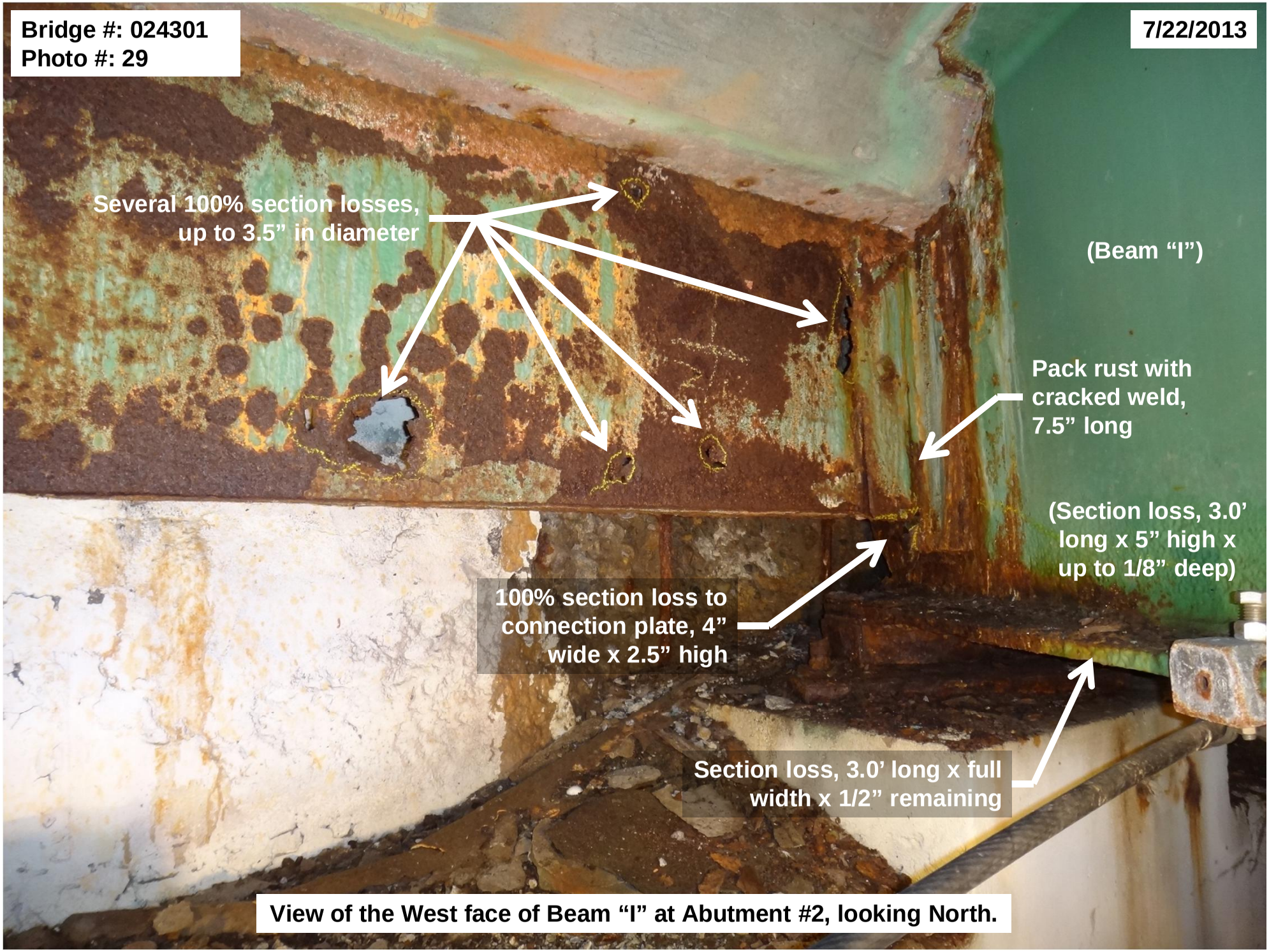

View of the West face of Beam “I” at Abutment #2, looking North.

Bridge #: 024301
Photo #: 30

7/22/2013

100% section loss,
4” high x 3” wide

Expanded position,
up to 2” to the North

View of the East face of Beam “I” at Abutment #2, looking West.

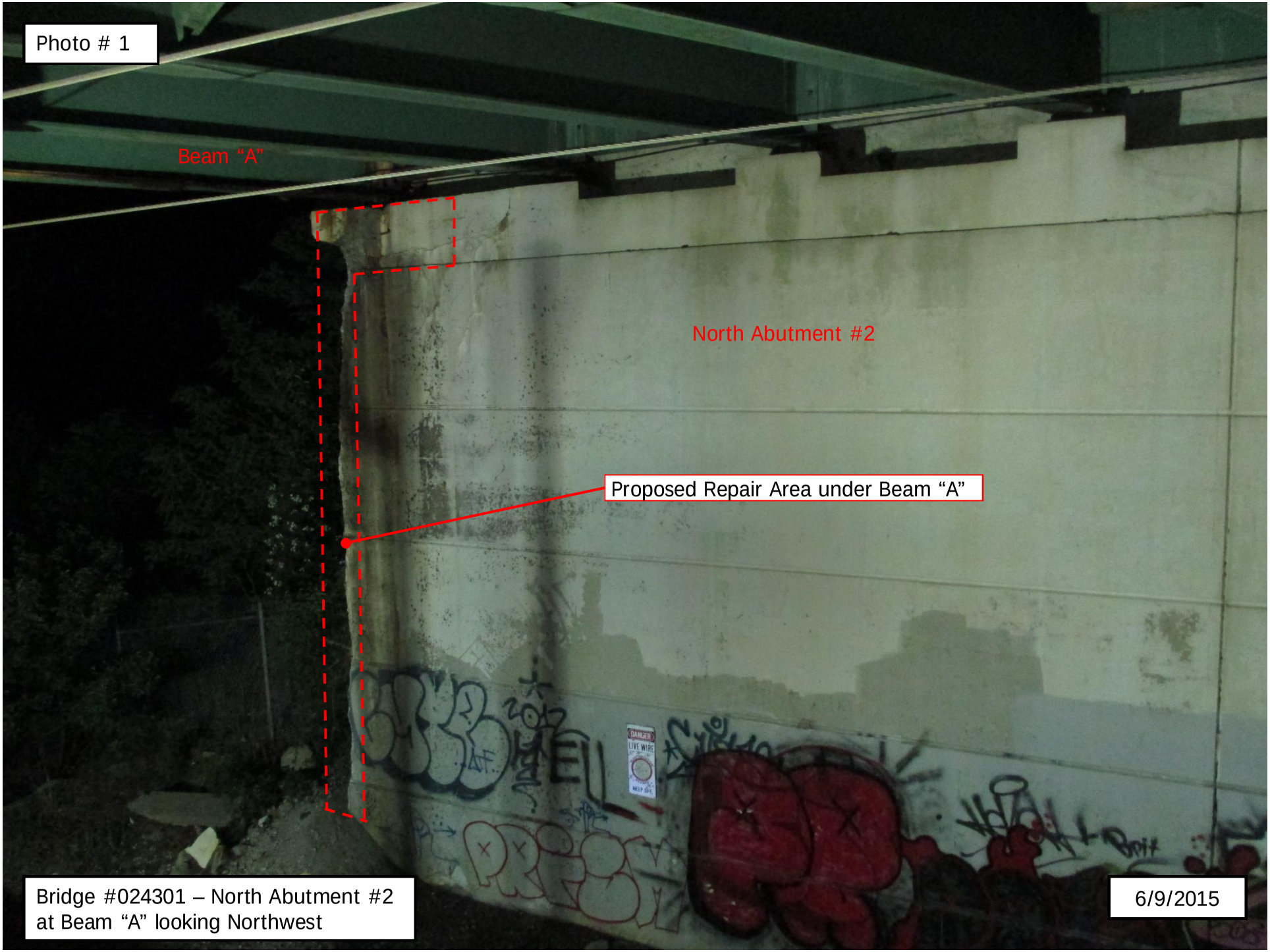
Photo # 1
Beam "A"
North Abutment #2
Proposed Repair Area under Beam "A"
DANGER
LIVE WIRE
KEEP OFF
Bridge #024301 – North Abutment #2
at Beam "A" looking Northwest
6/9/2015

Photo # 2
Beam "A"
Proposed Repair Area under Beam "A"
Note Exposed Bearing Anchor
Bridge #024301 – North Abutment #2 at Beam "A" looking East
6/9/2015

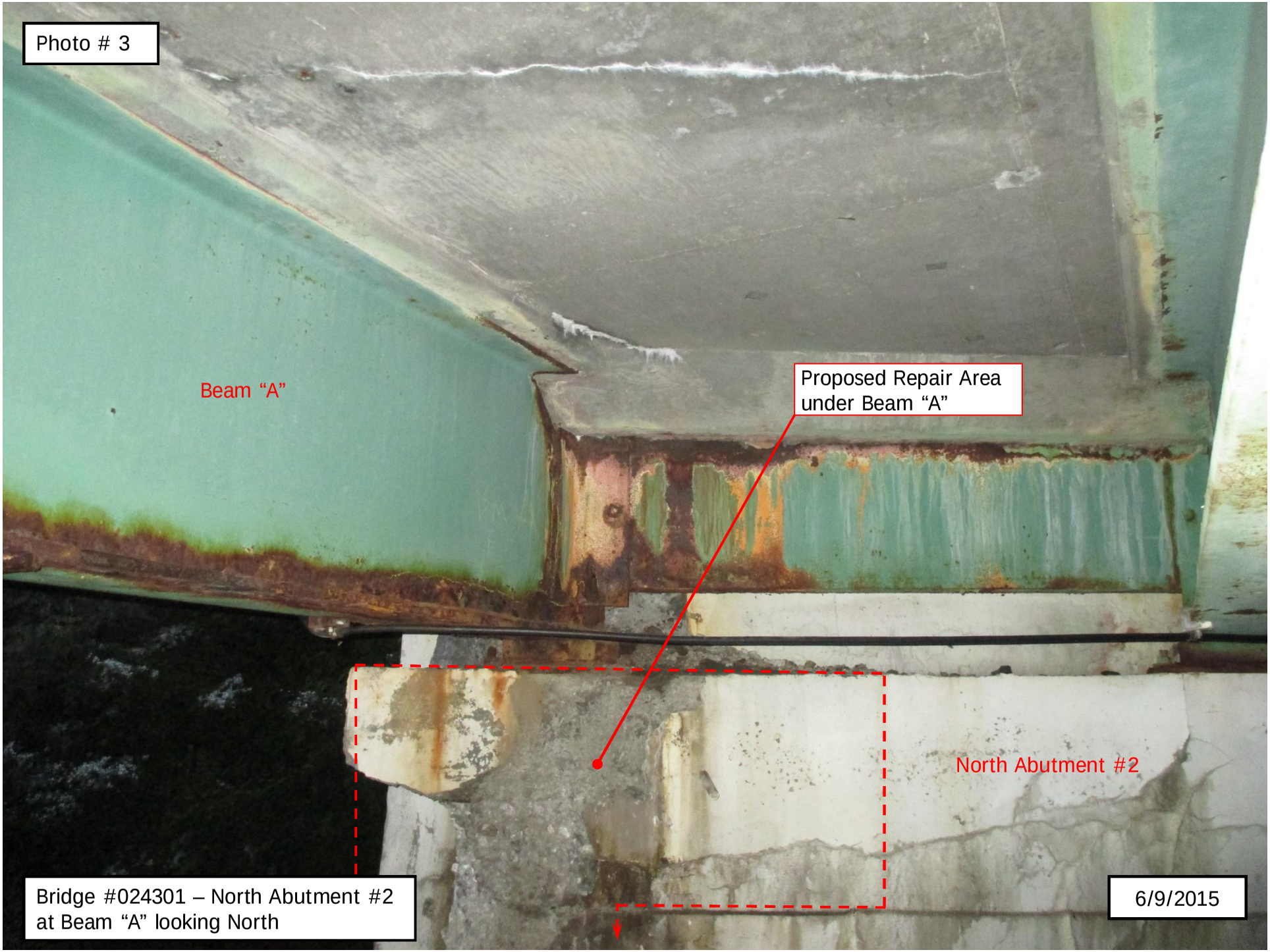
Photo # 3
Beam "A"
Proposed Repair Area
under Beam "A"
North Abutment #2
Bridge #024301 – North Abutment #2
at Beam "A" looking North
6/9/2015

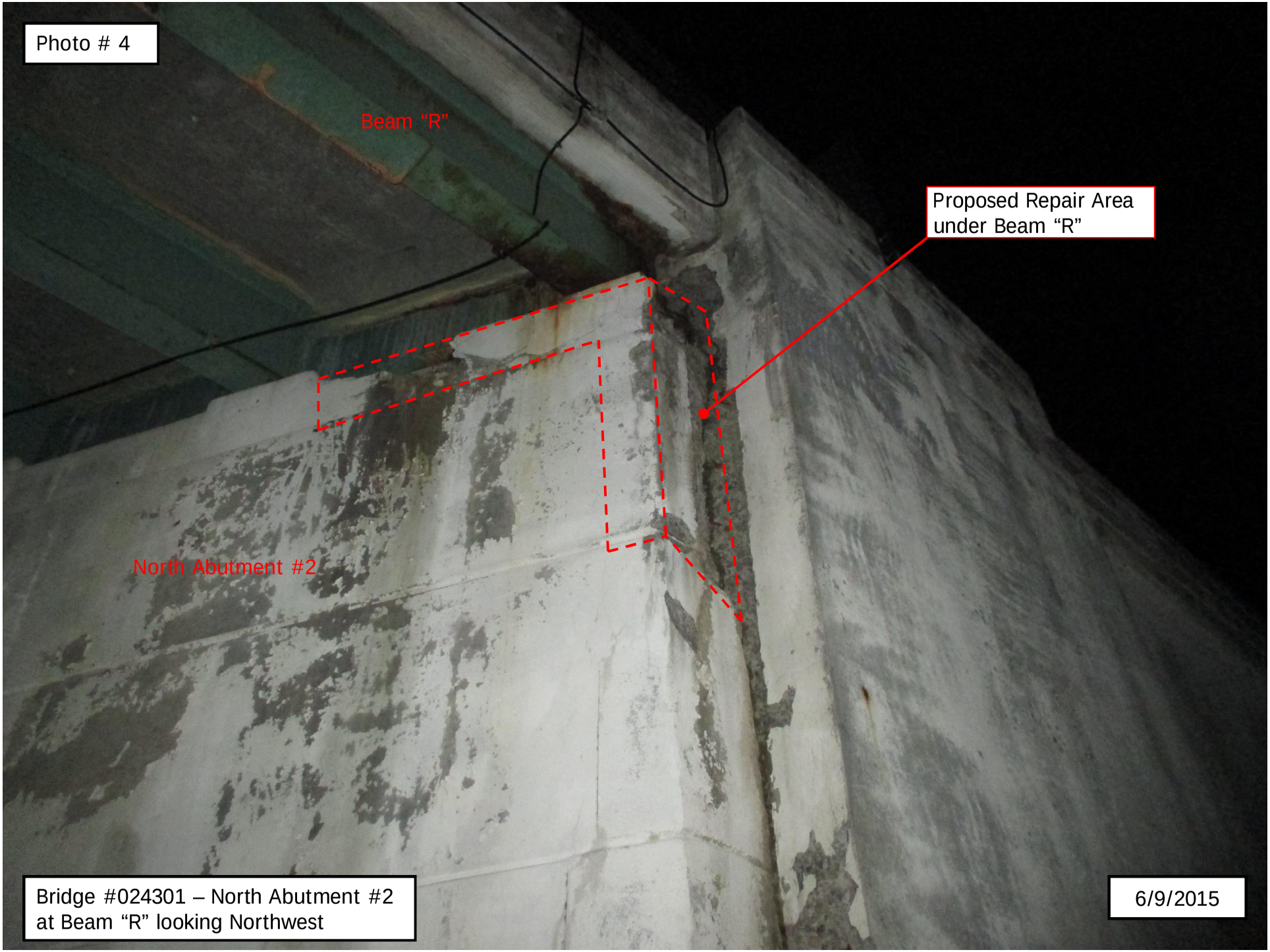
Photo # 4
Beam "R"
Proposed Repair Area under Beam "R"
North Abutment #2
Bridge #024301 – North Abutment #2 at Beam "R" looking Northwest
6/9/2015

Photo # 5
Beam "R"
Proposed Repair Area under Beam "R"
North Abutment #2
Bridge #024301 – North Abutment #2 at Beam "R" looking Northwest
6/9/2015

Photo # 6
Beam "R"
Proposed Repair Area under Beam "R"
Bridge #024301 – North Abutment #2 at Beam "R" looking West
6/9/2015

Photo # 7
Beam "R"
Proposed Repair Area
under Beam "R"
Bridge #024301 – North Abutment #2
at Beam "R" looking Northeast
6/9/2015

Photo # 8
Beam "C"
Proposed Repair Area
at Beam "C" Pedestal
Bridge #024301 – South Abutment #1
at Beam "C" looking Southwest
6/9/2015

Photo # 9
Beam "D"
Proposed Repair Area
at Beam "D" Pedestal
Bridge #024301 – South Abutment #1
at Beam "D" looking Southeast
6/9/2015

Photo # 10
Proposed Repair Area at Beam “D” Pedestal and at Beamseat
Beam “D”
Bridge #024301 – South Abutment #1 at Beam “D” looking West
6/9/2015

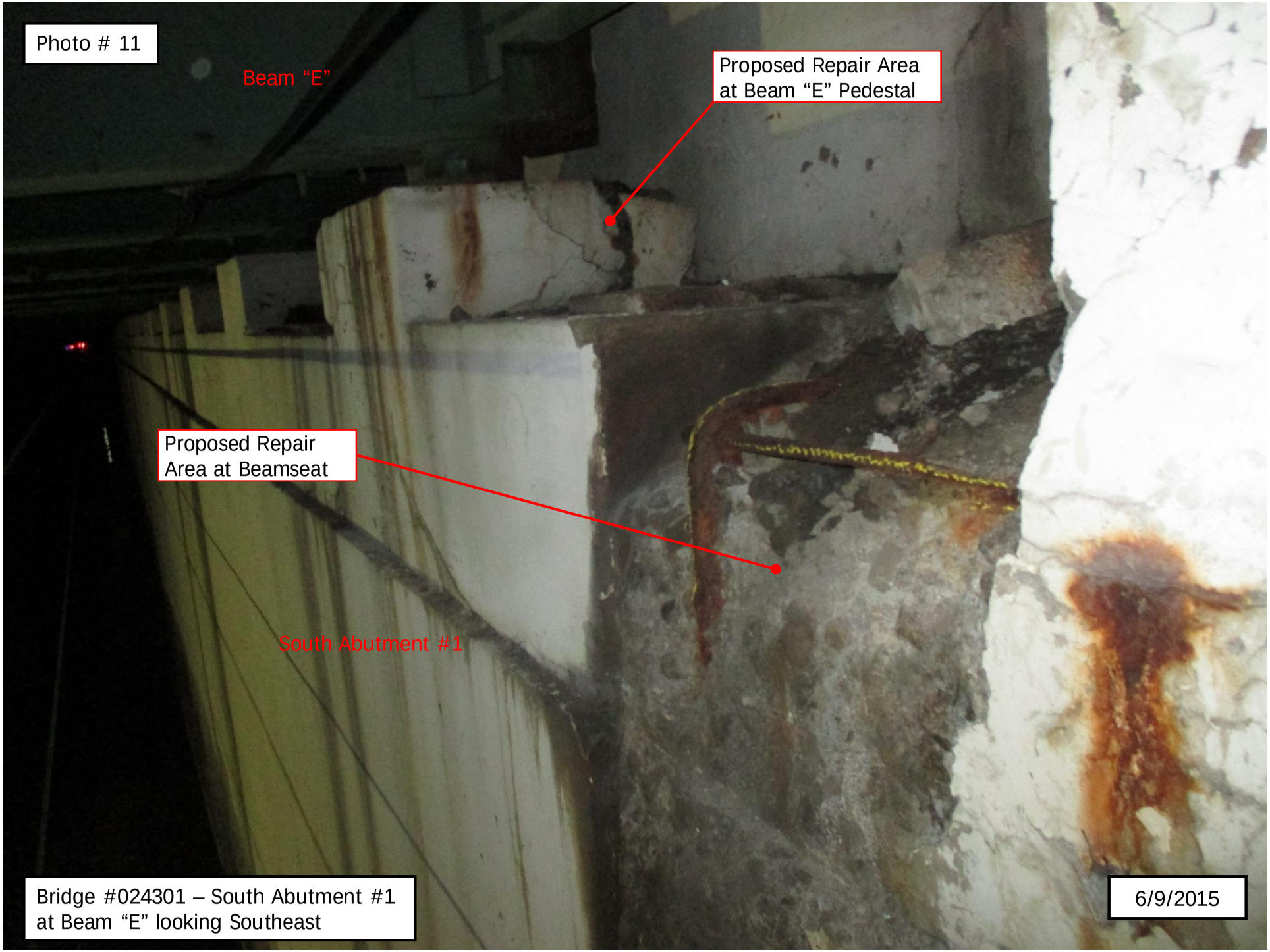
Photo # 11
Beam "E"
Proposed Repair Area at Beam "E" Pedestal
Proposed Repair Area at Beamseat
South Abutment #1
Bridge #024301 – South Abutment #1 at Beam "E" looking Southeast
6/9/2015

Photo # 12
Beam "E"
Proposed Repair Area
at Beam "E" Pedestal
Bridge #024301 – South Abutment #1
at Beam "E" looking Southwest
6/9/2015

Bridge No. 382 Orientation Photos

BRIDGE NO. 038201 | Span 2, beam G at pier 2 east face, looking southwest | 07/06/2015

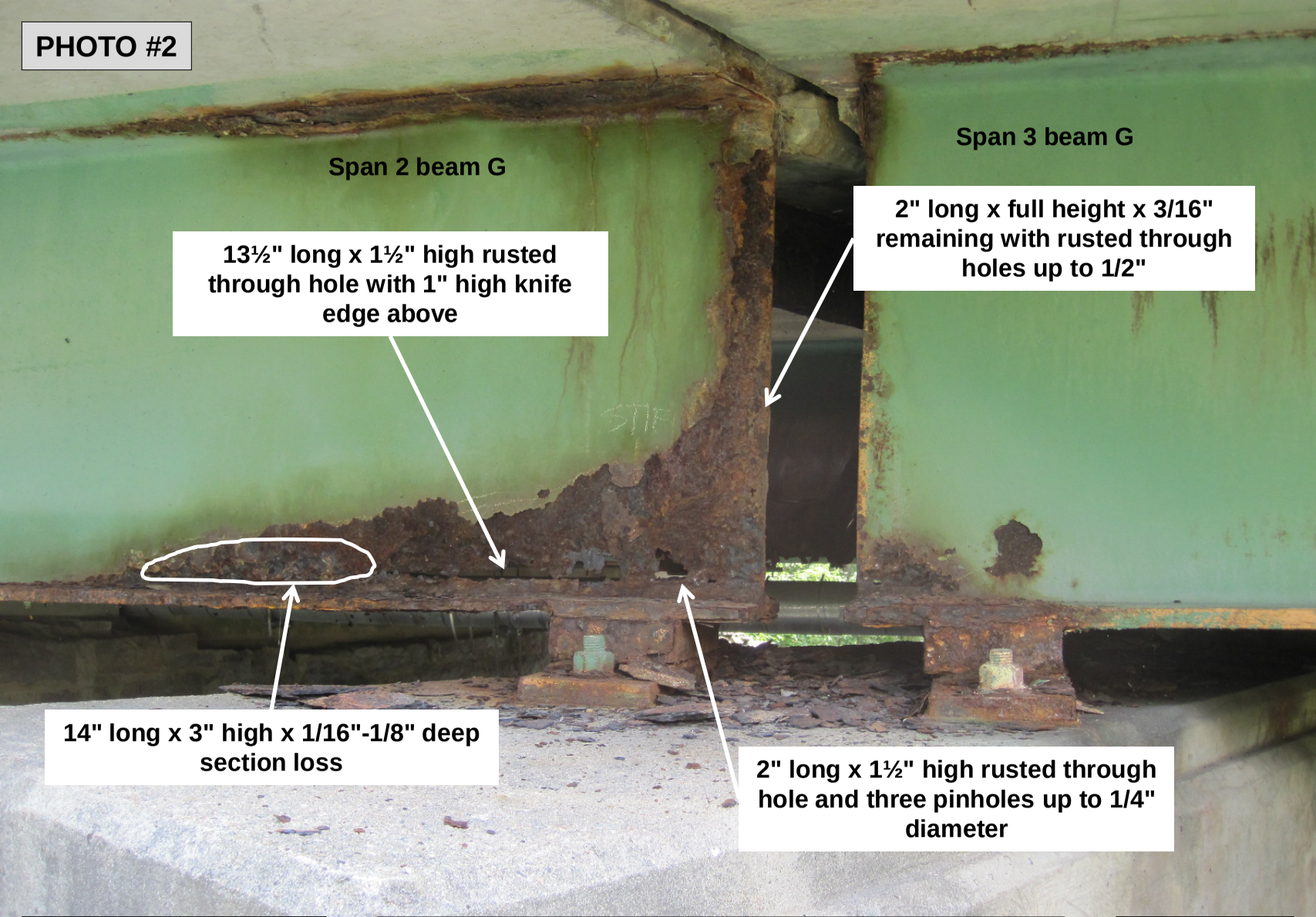
PHOTO #2
Span 2 beam G
Span 3 beam G
13½" long x 1½" high rusted through hole with 1" high knife edge above
2" long x full height x 3/16" remaining with rusted through holes up to 1/2"
14" long x 3" high x 1/16"-1/8" deep section loss
2" long x 1½" high rusted through hole and three pinholes up to 1/4" diameter
BRIDGE NO. 038201
Span 2, beam G at pier 2 west face, looking east
07/06/2015

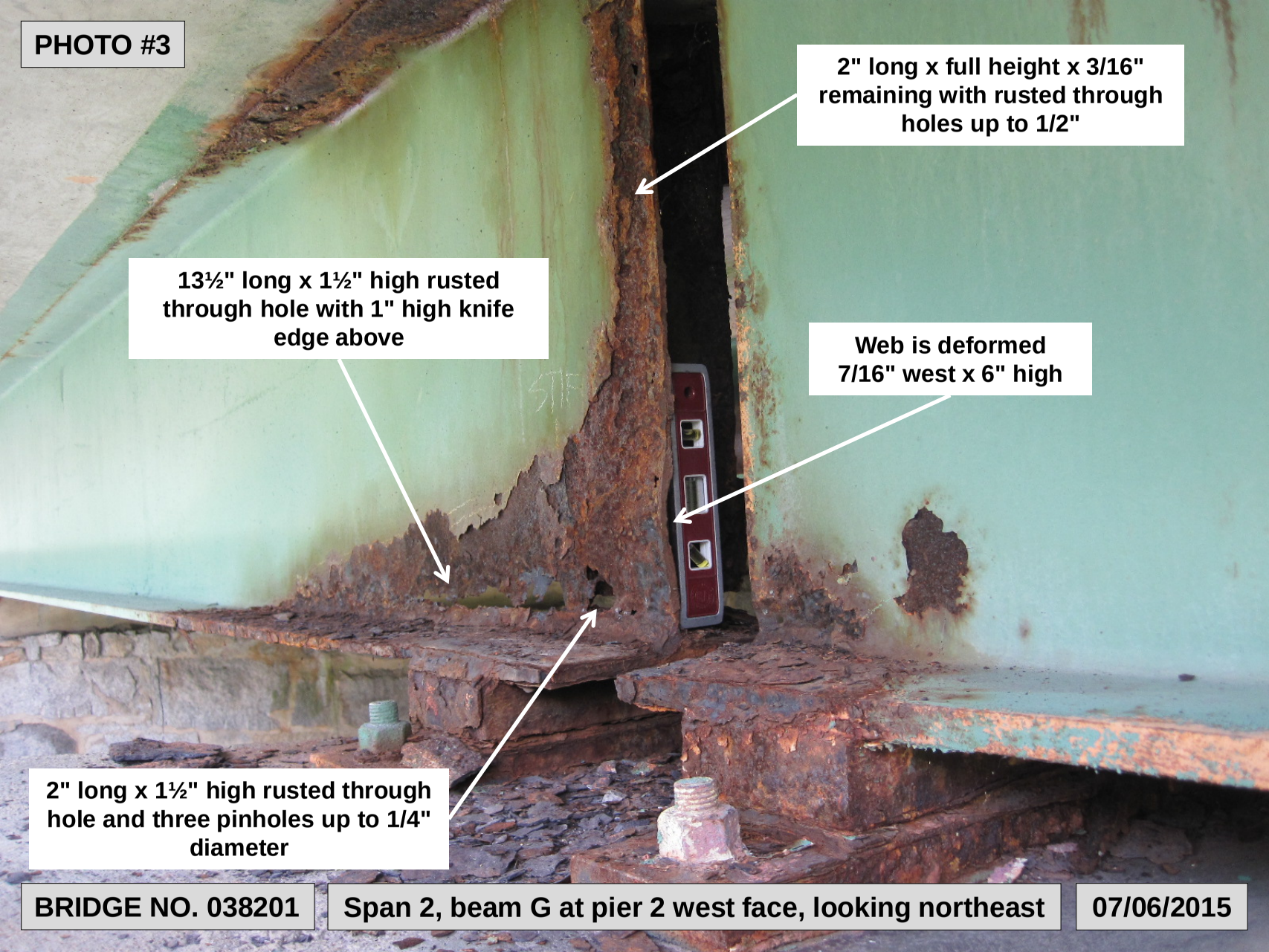
PHOTO #3
2" long x full height x 3/16" remaining with rusted through holes up to 1/2"
13½" long x 1½" high rusted through hole with 1" high knife edge above
Web is deformed 7/16" west x 6" high
2" long x 1½" high rusted through hole and three pinholes up to 1/4" diameter
BRIDGE NO. 038201
Span 2, beam G at pier 2 west face, looking northeast
07/06/2015

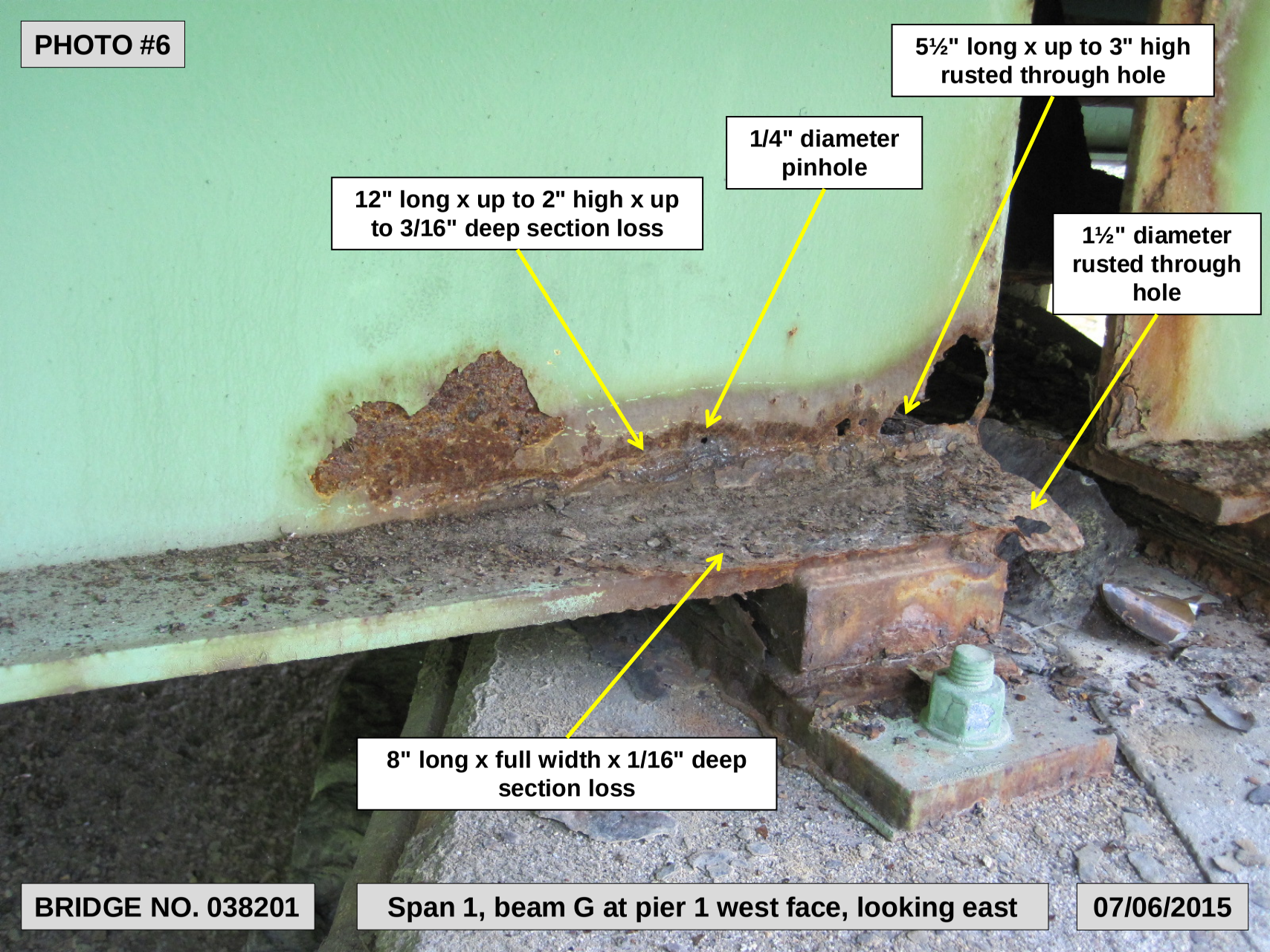
PHOTO #6
5½" long x up to 3" high rusted through hole
1/4" diameter pinhole
12" long x up to 2" high x up to 3/16" deep section loss
1½" diameter rusted through hole
8" long x full width x 1/16" deep section loss
BRIDGE NO. 038201
Span 1, beam G at pier 1 west face, looking east
07/06/2015

PHOTO #7
4½" wide x up to 2" high rusted through hole
10" long x 3" high x 1/4" deep (average) section loss
BRIDGE NO. 038201
Span 1, beam G at pier 1 east face, looking west
07/06/2015

Bridge No. 416 Orientation Photos

Photo #1
Beam "A"
Beam "B"
Bridge No. 041601
Beam "B", Span 1 at the Pier, looking east
07/09/2015

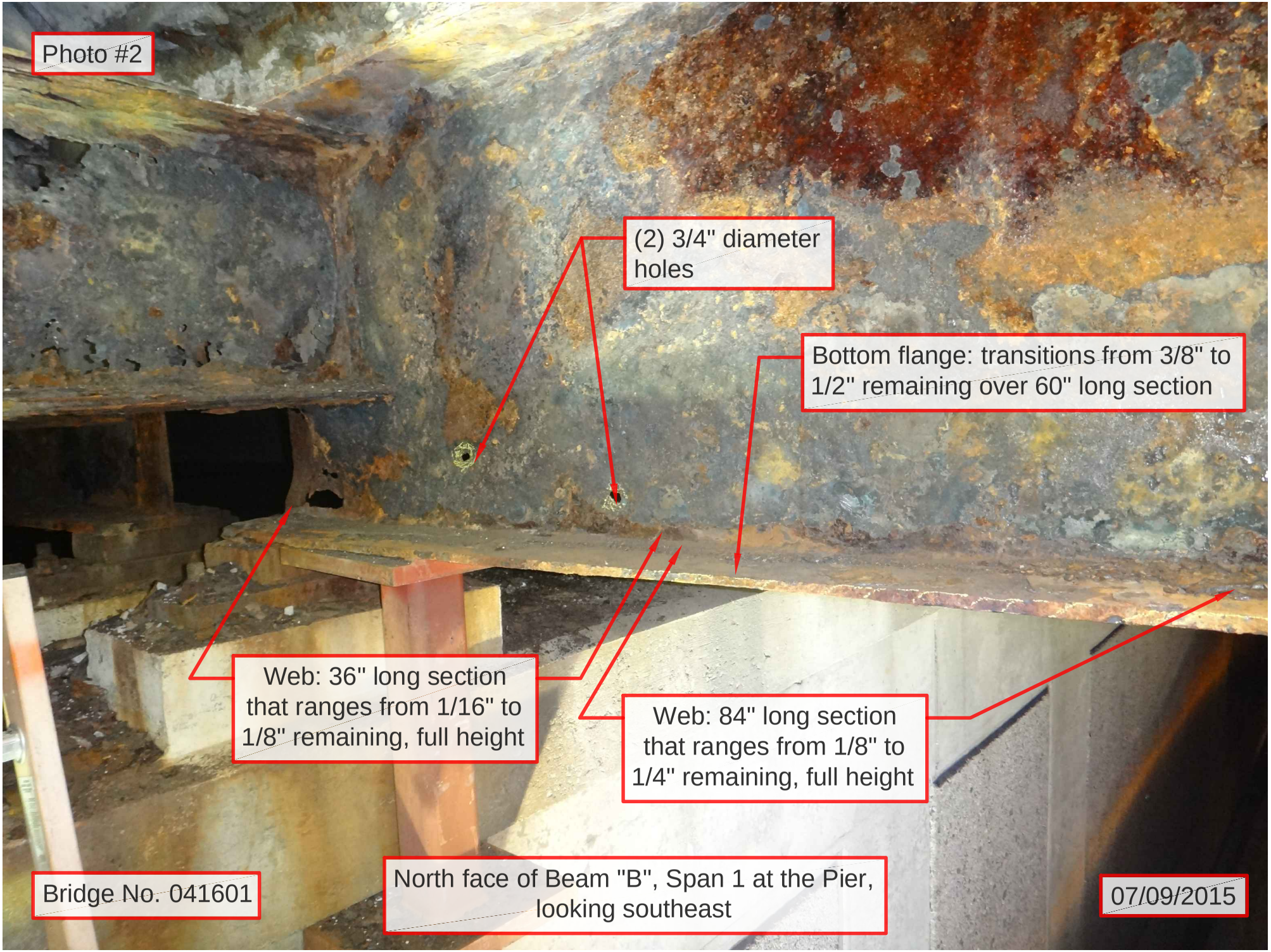
Photo #2
(2) 3/4" diameter holes
Bottom flange: transitions from 3/8" to 1/2" remaining over 60" long section
Web: 36" long section that ranges from 1/16" to 1/8" remaining, full height
Web: 84" long section that ranges from 1/8" to 1/4" remaining, full height
Bridge No. 041601
North face of Beam "B", Span 1 at the Pier, looking southeast
07/09/2015

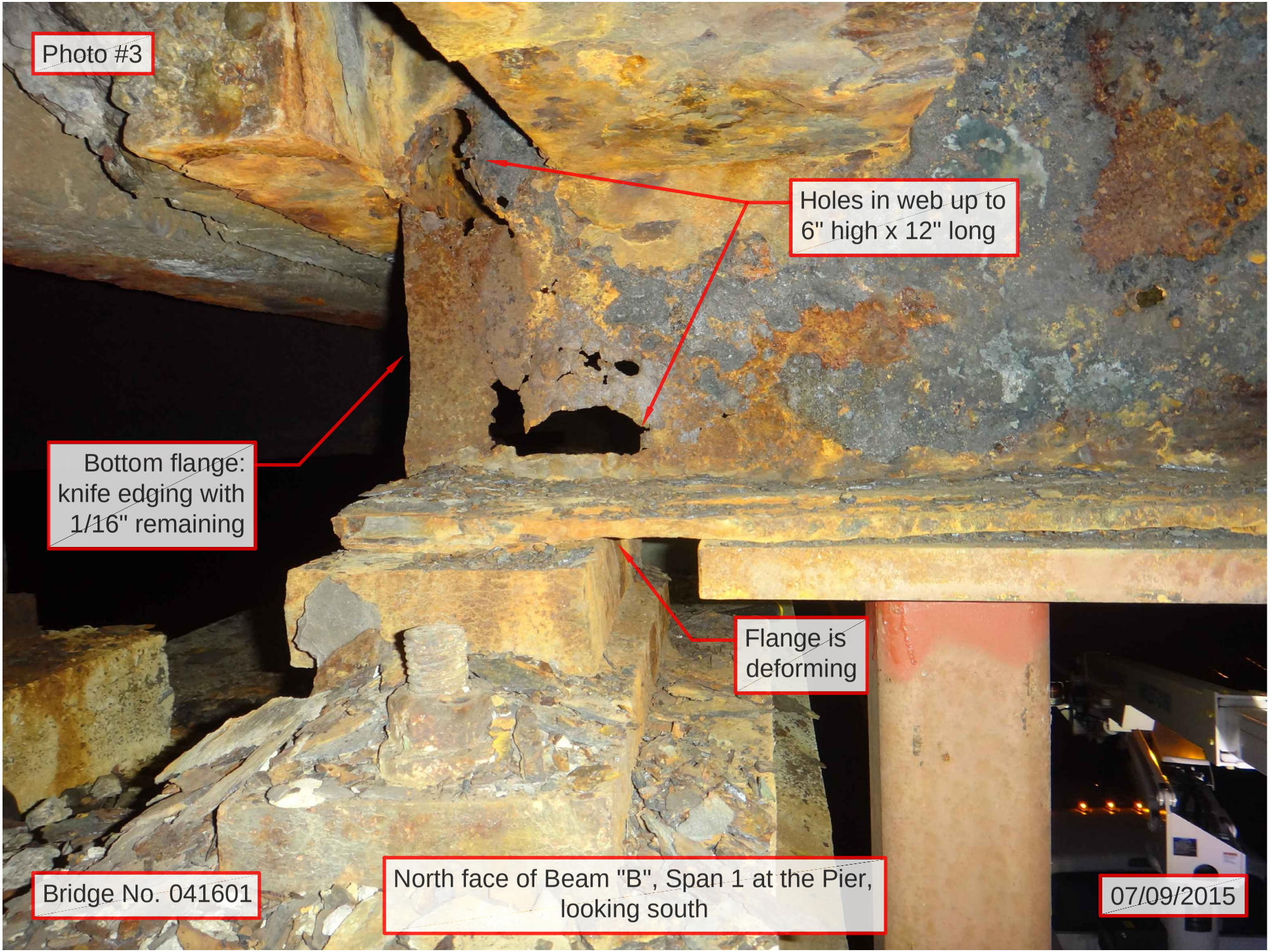
Photo #3
Holes in web up to 6" high x 12" long
Bottom flange: knife edging with 1/16" remaining
Flange is deforming
Bridge No. 041601
North face of Beam "B", Span 1 at the Pier, looking south
07/09/2015

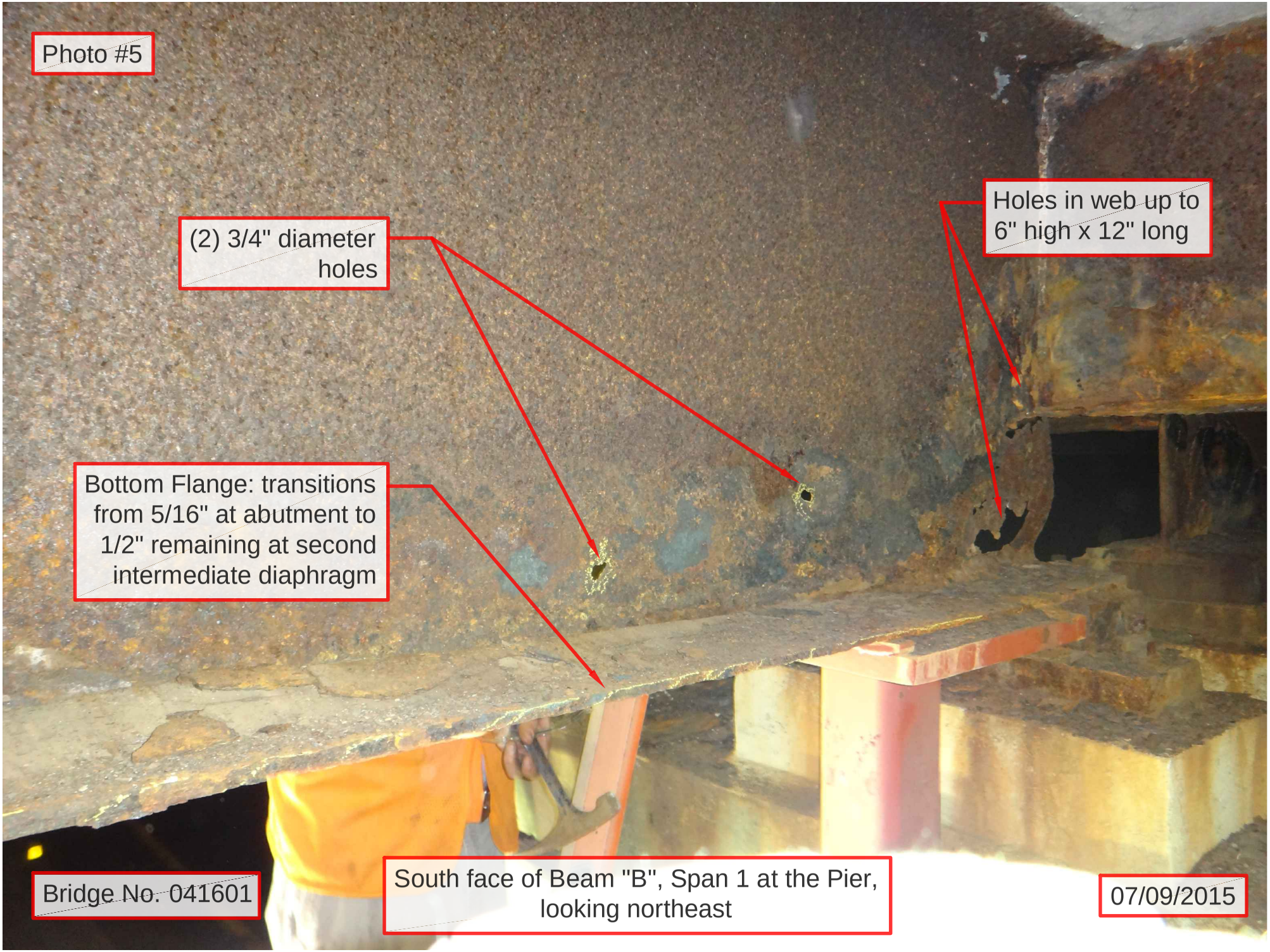
Photo #5
(2) 3/4" diameter holes
Holes in web up to 6" high x 12" long
Bottom Flange: transitions from 5/16" at abutment to 1/2" remaining at second intermediate diaphragm
Bridge No. 041601
South face of Beam "B", Span 1 at the Pier, looking northeast
07/09/2015

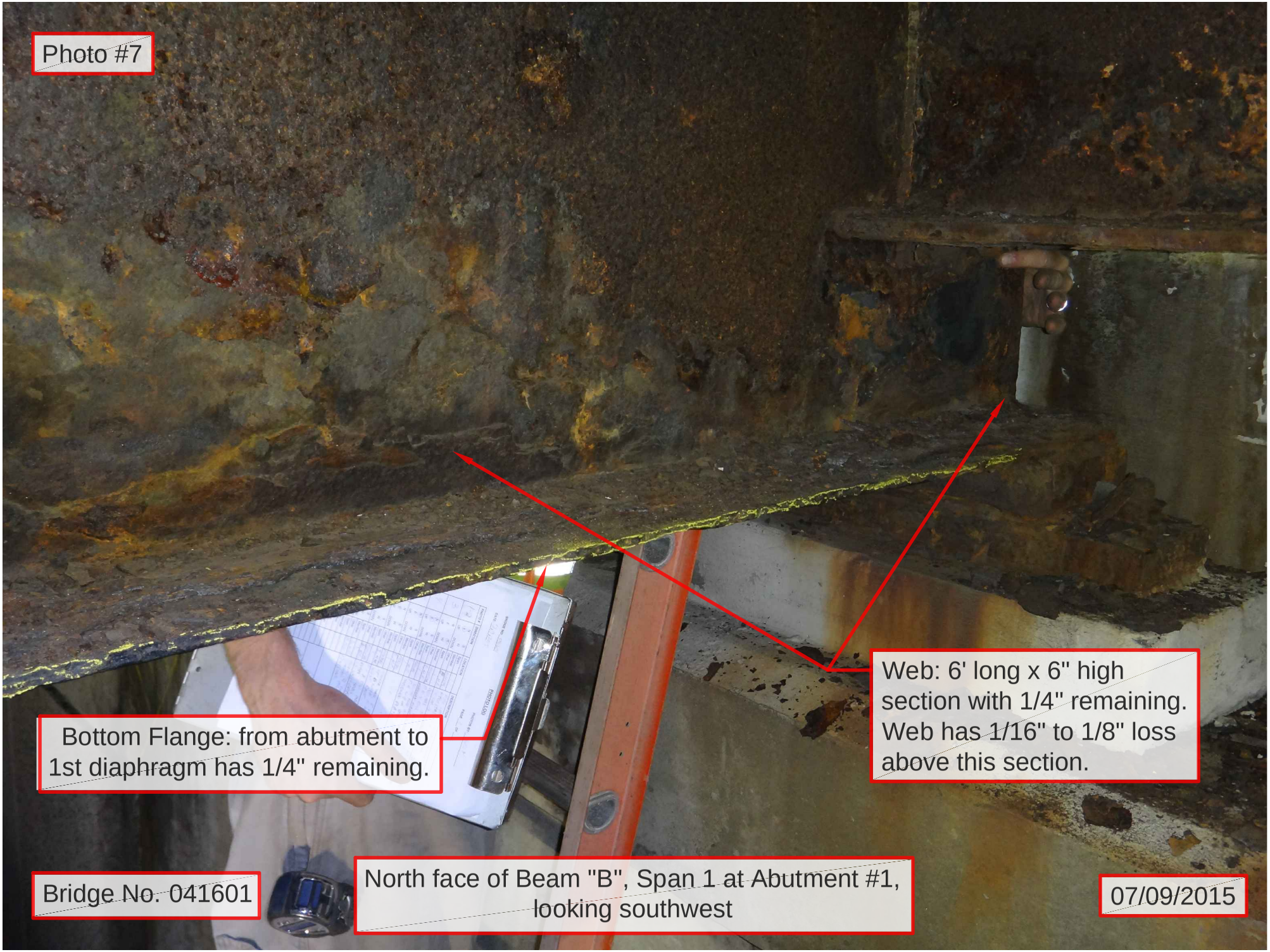
Photo #7
Bottom Flange: from abutment to 1st diaphragm has 1/4" remaining.
Web: 6' long x 6" high section with 1/4" remaining. Web has 1/16" to 1/8" loss above this section.
Bridge No. 041601
North face of Beam "B", Span 1 at Abutment #1, looking southwest
07/09/2015

Bridge No. 423 Orientation Photos

Photo # 2
No minimum vertical clearance sign
Span 1
Span 2
Span 3
SOUTHBOUND
Bridge #042301 East Elevation, Looking West
10/7/2015

Photo # 21
Scattered areas of light to moderate surface rust on girders
Underside of deck has scattered transverse and longitudinal hairline cracks
Girder 'A'
Girder 'H'
Bridge #042301 Span 2 Underside, Looking North
10/7/2015

Photo # 27
See Photo 28
Up to 1/8" thick pack rust between bottom flange and cover plate
Bridge #042301 Span 2, Girder 'H' Near Pier 2 – North End of Bottom Flange Cover Plate, Looking South
10/7/2015

Photo # 28
4” long crack in cover plate weld
Bridge #042301 Span 2, Girder ‘H’ Near Pier 2 – North End of Bottom Flange Cover Plate, Looking Southwest
10/7/2015

Bridge No. 729 Orientation Photos

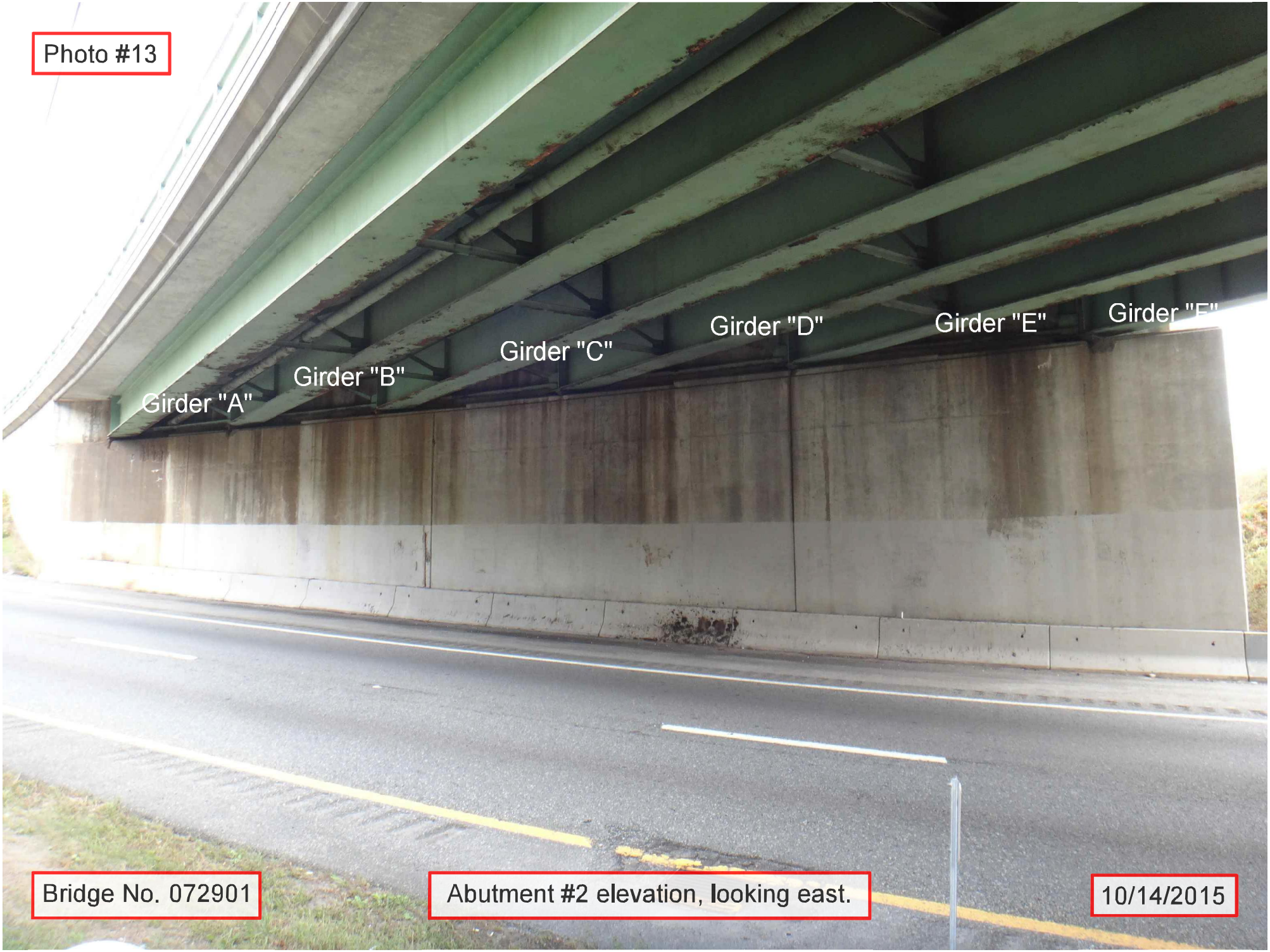
Photo #13
Girder "A"
Girder "B"
Girder "C"
Girder "D"
Girder "E"
Girder "F"
Bridge No. 072901
Abutment #2 elevation, looking east.
10/14/2015

Photo # 31

Bridge #072901 Girder 'A' at Abutment #2

10/24/2014

Photo # 32
Web exhibits 4½"
x 2" web hole
Bridge #072901 Girder 'B' North Face at
Abutment #2
10/24/2014

Photo # 33

Bridge #072901 Girder 'B' South Face at Abutment #2

10/24/2014

Photo # 34
Web exhibits 36″ heavy rusting with (3) holes measuring 8″ x 1″, 3″ x 2½″, 2″ x ½″
Bridge #072901 Girder 'C' North Face at Abutment #2
10/24/2014

Photo # 35

Bridge #072901 Girder 'C' South Face at Abutment #2

10/24/2014

CODE 201

REMOVE, HANDLE & HAUL EXISTING PLASTIC TRAFFIC BARRELS & BARRIERS

DESCRIPTION: The work under this item shall include removing, handling and hauling the existing plastic traffic barrels and water-filled barriers on RI Route 4 at Bridge No. 243 in North Kingstown, and RI Route 115 Main Street at Bridge No. 382 in West Warwick, and delivering them to the RIDOT Maintenance facility identified below.

CONSTRUCTION METHODS: All existing plastic traffic barrels and barriers shall be removed from the job site, placed on transport vehicles and delivered to the RIDOT Highway & Bridge Maintenance facility at 360 Lincoln Avenue in Warwick, RI between the hours of 7:00 AM – 2:30 PM Monday through Friday. The contractor shall contact Fran Chatelle (Central Stockroom) at Phone No. 734-4810 to make advanced arrangements for the delivery. The barrels and barriers shall be carefully unloaded and stacked at the direction of the Engineer. Any damage to the existing plastic traffic barrels and barriers as a result of the Contractors handling, hauling & delivering of them to the RIDOT Highway & Bridge Maintenance facility shall be the responsibility of the Contractor and any damaged barrels and/or barriers shall be replaced by the Contractor at no cost to the State.

METHOD OF MEASUREMENT: This item will not be measured for payment.

BASIS OF PAYMENT: No separate payment will be made for this item. Costs for this item shall be included in Item 824.9901 Emergency Repairs to Bridges 185, 243, 382, 416, 423 & 729.

CODE 824

PACK RUST REPAIR – BRIDGE NO. 423

DESCRIPTION: This work shall consist of clearing pack rust from between the bottom flange and partial-length cover plate termination, at the location indicated and as detailed on the contract drawings. This work shall also include installing a polyurethane sealant within the void left by the pack rust removal.

MATERIALS:

- Polyurethane sealant in conformance with RIDOT Standard Specifications Section M.02.11.5 and compatible with the paint manufacturer's requirements.

CONSTRUCTION METHODS: Existing pack rust between the cover plate and bottom flange shall be cleared/chipped away using hand tools to the depth of separation between the plates or to the satisfaction of the Engineer.

After pack rust removal, the repair area shall be thoroughly cleaned of any loose material, rust, dirt, grease, etc., and prepared in accordance with sealant manufacturer's instructions. The voided area left by the pack rust shall then be filled with a polyurethane sealant, applied in accordance with the manufacturer's requirements.

Contractor shall complete pack rust removal prior to beginning the cracked weld repair detailed under Item Code 824 "Repair of Cracked Weld – Bridge No. 423." Polyurethane sealant shall be installed subsequent to completion of the cracked weld repair, and prior to the installation of the proposed cover plate retrofit shown on the contract drawings.

METHOD OF MEASUREMENT: This item will not be measured for payment.

BASIS OF PAYMENT: No separate payment will be made for this item. Costs for this item shall be included in Item 824.9901 Emergency Repairs to Bridges 185, 243, 382, 416, 423 & 729.

CODE 824

REPAIR OF CRACKED WELD – BRIDGE NO. 423

DESCRIPTION: This work shall consist of repairing a cover plate weld crack at the location indicated on the contract drawings or as directed by the Engineer. This work shall also include NDT testing, and any miscellaneous staging, scaffolding or other items required to complete this work to the satisfaction of the Engineer.

CONSTRUCTION METHODS: All welding shall be performed in accordance with the latest edition of the ANSI/AASHTO/AWS D1.5 Bridge Welding Code. For applications not included in that code, AWS D1.1 shall be used.

In order to accurately define the limits of the cracked weld, the Contractor shall retain the services of a certified testing agency to conduct visual inspection and non-destructive testing (either dye penetrant, magnetic particle, or ultrasonic testing) of the longitudinal cover plate weld at the location indicated on the contract drawings.

After the limits of the crack in the existing weld have been identified, the Contractor shall remove the cracked weld sections by grinding. Other methods of weld removal are not permitted without prior approval of the Engineer. Removal shall be performed with care to avoid damage to existing steel components to remain. After the grinding is completed and approved by the Engineer, the Contractor shall repair the connection by re-welding to restore the weld to its original size. Dye-penetrant, magnetic particle or ultrasonic testing of the re-welding shall also be performed to confirm the quality of the weld for acceptance of the repair.

In the event that the Contractor damages existing steel components to remain during removal operations, he shall replace, repair, or reinforce the damaged area as may be needed to restore the steel component(s) to existing condition prior to damage. This work shall be performed by the Contractor as ordered by the Engineer at no additional cost to the State.

All areas shall be surface prepared (including localized de-leading) as required prior to any testing and welding operation.

Contractor shall complete cracked weld repair after completion of the pack rust removal detailed under Item Code 824 “Pack Rust Repair – Bridge No. 423” and prior to the installation of the proposed cover plate retrofit shown on the contract drawings.

METHOD OF MEASUREMENT: This item will not be measured for payment.

BASIS OF PAYMENT: No separate payment will be made for this item. Costs for this item shall be included in Item 824.9901 Emergency Repairs to Bridges 185, 243, 382, 416, 423 & 729.

CODE 824

STEEL BEAM / GIRDER REPAIRS

DESCRIPTION: This item of work shall consist of supplementing and/or strengthening corroded / damaged portions of the existing steel beams or girders at Bridge No's. 185, 243, 382, 416, 423 & 729 with additional new structural elements and shall include removing and disposing of portions of existing structural steel; furnishing, fabricating, erecting, and painting of new structural elements; local deleading (including proper personnel protection and collection & disposal of paint removed); any miscellaneous shields, staging, access, scaffolding; field measurements; surface preparation; field drilling holes; field bolting; field welding; temporary protective shielding for utilities; and other incidental items required to complete this work, complete in place and accepted by the Engineer, in accordance with the Contract and as specified in these Special Provisions.

MATERIALS: All structural steel components shall be in accordance with Section 824 of the Standard Specifications and the following:

- All welding shall be performed in accordance with the latest edition of the ANSI/AASHTO/AWS D1.5 Bridge Welding Code. For applications not included in that code, AWS D1.1 shall be used.
- All structural steel shall conform to AASHTO Description M270 Grade 36 (M270 Grade 50 is an acceptable substitute).
- All bolts shall be high strength bolts AASHTO Designation M164 (ASTM A325).
- All washers shall conform to the requirements of ASTM Designation F436. Nuts (unless designated otherwise) shall be heavy hexagonal nuts conforming to ASTM Designation A563.
- Epoxy resin paste shall be a high modulus, high strength, structural epoxy paste adhesive conforming to ASTM C-881 Types I, II, & IV, Grade 3, Classes B&C.

CONSTRUCTION METHODS: The Contractor's operation shall be in accordance with the Maintenance and Protection of Traffic Plan sheets included in the Contract Drawings.

The Contractor shall assure that no debris or any other foreign materials falls onto the ground or river beneath the structures. Should any debris fall despite this assurance, all work shall stop until such time as the debris has been recovered to the satisfaction of the Engineer. Any damage or injury resulting from falling debris shall be the sole responsibility of the Contractor. Any delay caused as a result of cessation of work and approval of the revised procedure of operation shall not relieve the Contractor of any of his responsibilities under this Contract, including the timely completion of work. Any additional costs incurred as a result of debris falling shall be borne solely by the Contractor.

Existing dimensions, material types, and member sizes, were obtained from the original Contract Drawings. Prior to fabrication of any steel component, the Contractor shall obtain field measurements of all dimensions and layout information which may affect his fabrication work. The State will not be responsible for any additional time or cost to the Contractor as a result of the Contractor's errors in taking field measurements.

The existing steel surfaces shall be cleaned of all scale, rust, loose paint, and other loosely adherent foreign matter detrimental to achieving a level and uniform faying surface. The steel surface preparation shall be performed only in the general area of repair. The contact surfaces between the existing steel and new steel shall be cleaned, surface prepared and painted, as a minimum, with the primer coat prior to the installation of the supplemental steel.

The removal and disposal of paint including the protection of personnel and the environment shall be in accordance with the latest Environmental Protection Agency and the RI Department of Environmental Managements Regulations.

Except as noted on the plans, bolts shall be tightened in accordance with the "Turn of the Nut" method. Bolts indicated to not be fully tightened shall use lock nuts or double nuts.

The Contractor shall exercise due caution and take all necessary precautions to prevent damage to existing utilities. Where specified on the plans and/or contract document the Contractor shall design, furnish, fabricate, erect and remove temporary protective shielding to protect the existing utilities to the satisfaction of the Utility Company. The installation of temporary protection shall be in accordance with the Utility Company standard procedures and specifications, and shall be considered incidental to this item of work.

In the event that the existing steel to remain is damaged during any of the Contractors operations, the Contractor shall replace, repair, or reinforce the damaged area as may be necessary to restore the damage to pre-existing conditions. This work shall be performed by the Contractor as ordered by the Engineer at no additional cost to the State, including the design necessary to restore the steel to its original structural integrity. The design must be submitted to the State for review and approval and be stamped by a RI Professional Engineer.

New structural steel shall be painted in accordance with Section 825 of the Standard Specifications, including all revisions.

METHOD OF MEASUREMENT: This item will not be measured for payment.

BASIS OF PAYMENT: No separate payment will be made for this item. Costs for this item shall be included in Item 824.9901 Emergency Repairs to Bridges 185, 243, 382, 416, 423 & 729.

CODE 824

TEMPORARY JACKING AND SHORING OF BEAMS

DESCRIPTION: The work covered under this Special Provision shall consist of furnishing, fabricating, erecting and removing temporary jacking and shoring assemblies at Bridge No. 243 to allow for the repair of beam seats as indicated on the Contract Drawings and to the satisfaction of the Engineer. Each assembly is comprised of a single braced column founded on a timber/steel cribbing system placed on the existing ground below the bridge. The design for the shoring assemblies has been provided on the Contract Drawings.

MATERIALS: All structural steel plates and shapes shall conform to AASHTO M270 Grade 50 and all Hollow Structural Sections shall conform to ASTM A500 Grade B.

All bolts shall be high strength bolts conforming to AASHTO M 164 (ASTM A325). All nuts, washers and hardware items shall be compatible with bolts.

High strength threaded anchor rods shall conform to ASTM A1554 Grade 105.

The adhesive anchors for securing and bracing the new shoring columns to the existing abutment stem shall be on the Department's Approved Materials List.

All welding shall be performed in accordance with the latest edition of the ANSI/AASHTO/AWS D1.5 Bridge Welding Code. For applications not included in that code, AWS D1.1 shall be used.

Timber blocking and cribbing shall conform to the requirements of Section M.11 of the Standard Specifications and the General Notes of the Contract Drawings.

CONSTRUCTION METHODS: Shoring assemblies shall be furnished, fabricated, and erected as indicated in the Contract Drawings, in accordance with relative provisions of Subsection 824.03 of the Standard Specifications, and as specified in these Special Provisions.

All work shall be performed in accordance with the Maintenance and Protection of Traffic Plans.

The Contractor shall ensure that no debris or any other foreign material falls onto the ground beneath the bridge. Should any debris fall onto the ground, all work shall stop until such time as the debris has been recovered to the satisfaction of the Engineer. Any delay caused as a result of cessation of work shall not relieve the Contractor of any responsibilities under this contract, including the timely completion of the work.

A qualified representative of the manufacturer of the jacks shall be present in the field to give the Contractor such technical site assistance as may be necessary to assure that the jacking is performed properly and safely.

At no time shall the beam jacking be performed unless the Engineer is present. The Contractor shall provide a minimum of two working days advance notice to the Engineer, prior to the beam jacking.

In order to ensure that the structure is supported on the jack for the least possible amount of time, the Contractor shall have all materials, equipment, tools, spare parts, and labor on hand prior to commencing with the jacking operation and beam seat repairs.

The Contractor shall submit to the Engineer, a record of the jacking load encountered just prior to the dial lock-off or final shimming, clearly indicating the corresponding jack number, abutment location, and beam number.

Care must be taken to minimize disturbance to the existing site conditions. All equipment, shoring and bracing systems shall be removed upon completion of the work, and the area restored to its original condition to the approval of the Engineer, at no additional cost to the State of Rhode Island.

The beam shall be jacked from a shoring system founded on top of cribbing to be placed on top of the existing ground surface. The timber cribbing has been designed to limit the loading to 4 kips per square foot. Lateral stability of the shoring system must be maintained throughout the jacking process.

In addition to the above requirements, the following shall apply:

1. The Contractor shall carefully lower the structure by using the hydraulic system of the jacks.

2. Materials and equipment used to perform these operations shall be capable of supporting the beams under full load, including dead and live loads.

3. Jack capacities shall be as indicated on the Contract Drawings.

4. The Contractor shall jack the structure only the height necessary to relieve the load from the bearing to accommodate the proposed work (beam seat repairs) but not to exceed 1/16 inch.

5. The Contractor shall consider the possibility of the lead time, if any, to obtain the required jack. Any resulting delays in operations will not result in claims for additional payment to the State of Rhode Island, nor an extension of the project completion date.

6. The hydraulic system of the jack shall not be relied upon to sustain the jacking load once the lifting has been completed.

7. The beam elevation shall be the same before and after the completion of work.

8. In the case of a failure of the hydraulic system of a jack, the beam shall be supported such that the jack can be replaced. All repairs as required by the Engineer (including associated design) shall be performed by the Contractor prior to further jacking, at no additional cost to the State. The Contractor shall provide one (1) emergency back-up jack on site in case of a failure of the jack.

9. The Contractor shall ensure that the existing bearing is unrestrained in the vertical direction prior to jacking, such that the bearing provides no resistance to the

jacking. This can be performed by loosening the anchor nuts and if needed grinding out the welds connecting the beam flange to the bearing after the jack has been brought up tight against the beam. If the welds connecting the beam flange to the bearing are ground out, they shall be field welded together upon completion of the work. Other methods for removing the bearing-to-flange welds besides grinding will not be permitted. Anchor nuts shall be tightened to original position upon completion of repairs. The cost of freeing the bearing, if necessary, shall be included in the cost of this item.

10. The Contractor shall be warned that the existing bearing may become unstable once the weight of the structure has been transferred to the jack, and shall take necessary precautions to prevent the bearing from falling and causing damage or injury.

11. The Contractor shall thoroughly familiarize himself with the site conditions prior to commencing work.

12. Where applicable, the existing railings, fencing and guardrails adjacent to roadway expansion joints shall be disconnected prior to the jacking operation and be reinstalled at the completion of the work.

13. The survey work as directed shall be performed prior to the commencement of jacking.

14. Beveled bearing/shim plates shall be provided at locations where necessary.

15. The certified jack capacity and stroke shall be clearly indicated on each jack. The minimum stroke requirement shall be 2 inches for each jack.

16. The shoring system shown on the Contract Drawings has been designed for all applied vertical and lateral loads in accordance with the latest AASHTO Specifications. It is not necessary to submit a shop drawing for the temporary shoring structure unless the Contractor elects to alter the design. All alternate details must be submitted to the Engineer for review and approval as part of the shop drawing submittals.

17. Materials and equipment used to perform the work shall be capable of supporting the beam's full dead and live load.

METHOD OF MEASUREMENT: This item will not be measured for payment.

BASIS OF PAYMENT: No separate payment will be made for this item. Costs for this item shall be included in Item 824.9901 Emergency Repairs to Bridges 185, 243, 382, 416, 423 & 729.

ITEM CODE 824.9901

EMERGENCY REPAIRS TO BRIDGES 185, 243, 382, 416, 423 & 729

DESCRIPTION:

This item includes all labor, materials, equipment, and incidentals required to complete all of the work under this repair contract. Specific requirements are described below and in the referenced special provisions, however this item shall be considered to include all work, indicated or implied, to make the emergency repairs to Bridges 185, 243, 382, 416, 423 & 729 complete.

Unless otherwise stated, all work shall conform to the applicable provisions of the Rhode Island Standard Specifications for Road and Bridge Construction, latest edition and all Compilations. Where the RI Standard Specifications and these special provisions do not specify the materials or methods, the Contractor shall perform the work utilizing the best materials and practices in the industry.

Referenced Special Provisions:

- Item code 201 - “REMOVE, HANDLE & HAUL EXISTING PLASTIC TRAFFIC BARRELS & BARRIERS”
- Item code 824 - “PACK RUST REPAIR – BRIDGE NO. 423”
- Item code 824 - “REPAIR OF CRACKED WELD – BRIDGE NO. 423”
- Item code 824 - “STEEL BEAM / GIRDER REPAIRS”
- Item code 824 - “TEMPORARY JACKING AND SHORING OF BEAMS”
- Item code 825 - “REPAINTING EXISTING STRUCTURAL STEEL”

Maintenance & Protection of Traffic:

This work includes all temporary traffic signs, temporary precast concrete barriers, fluorescent traffic cones, shock absorbing barrier modules, flagger’s, moving and maintaining traffic devices, materials, labor and incidentals needed on a daily basis for the duration of the project.

Prior to construction, the Contractor shall coordinate requirements for Uniformed Traffic Control Persons with the Engineer. It will be the responsibility of the Engineer to retain the services of the local police with cruisers for traffic control and protection for this project. The Contractor will not be required to bid on, or to compensate for, the services of the local police.

METHOD OF MEASUREMENT:

This item will not be measured for payment.

BASIS OF PAYMENT:

Item Code 824.9901 “Emergency Repairs to Bridges 185, 243, 382, 416, 423 & 729” will be paid at the contract “Lump Sum” price as listed on Page 1 of the Bid Proposal Form. The price so stated shall constitute full and complete compensation for this contract in its entirety, including for all labor, materials, equipment, tools, and other incidentals required to complete the emergency repairs to Bridges 185, 243, 382, 416, 423 & 729 as described in these special provisions and elsewhere in the Contract Documents, complete in place and accepted by the Engineer.

CODE 825

REPAINTING EXISTING STRUCTURAL STEEL

DESCRIPTION: The work under this item shall conform to the requirements of Section 825 of the Standard Specifications, including all revisions. This work shall consist of thorough cleaning; preparation of surfaces; and repainting of existing superstructure structural steel, its components and other steel materials to the limits indicated on the Plans or as directed by the Engineer, all in accordance with these Special Provisions.

This work shall include Personnel and Environmental Protection and Containment, Collection, Storage and Disposal of Debris and Spent Materials as described under Section 826 of the Standard Specifications, including all revisions.

MATERIALS: All materials shall conform to the requirements of Section 825 of the Standard Specifications, including all revisions.

CONSTRUCTION METHODS: Construction methods shall conform to the requirements of Section 825 of the Standard Specifications, including all revisions.

The Contractor shall exercise due caution and take all necessary precautions to prevent damage to existing utilities. Where specified on the plans and/or contract document the Contractor shall design, furnish, fabricate, erect and remove temporary protective shielding to protect the existing utilities to the satisfaction of the Utility Company. The installation of temporary protection shall be in accordance with the Utility Company standard procedures and specifications, and shall be considered incidental to this item of work.

METHOD OF MEASUREMENT: This item will not be measured for payment.

BASIS OF PAYMENT: No separate payment will be made for this item. Costs for this item shall be included in Item 824.9901 Emergency Repairs to Bridges 185, 243, 382, 416, 423 & 729.

REQUIRED CONTRACT PROVISIONS
FEDERAL-AID CONSTRUCTION CONTRACTS

REQUIRED CONTRACT PROVISIONS
FEDERAL-AID CONSTRUCTION CONTRACTS

I. General
II. Nondiscrimination
III. Nonsegregated Facilities
IV. Davis-Bacon and Related Act Provisions
V. Contract Work Hours and Safety Standards Act Provisions
VI. Subletting or Assigning the Contract
VII. Safety: Accident Prevention
VIII. False Statements Concerning Highway Projects
IX. Implementation of Clean Air Act and Federal Water Pollution Control Act
X. Compliance with Governmentwide Suspension and Debarment Requirements
XI. Certification Regarding Use of Contract Funds for Lobbying

ATTACHMENTS

A. Employment and Materials Preference for Appalachian Development Highway System or Appalachian Local Access Road Contracts (included in Appalachian contracts only)

I. GENERAL

1. Form FHWA-1273 must be physically incorporated in each construction contract funded under Title 23 (excluding emergency contracts solely intended for debris removal). The contractor (or subcontractor) must insert this form in each subcontract and further require its inclusion in all lower tier subcontracts (excluding purchase orders, rental agreements and other agreements for supplies or services).

The applicable requirements of Form FHWA-1273 are incorporated by reference for work done under any purchase order, rental agreement or agreement for other services. The prime contractor shall be responsible for compliance by any subcontractor, lower-tier subcontractor or service provider.

Form FHWA-1273 must be included in all Federal-aid design-build contracts, in all subcontracts and in lower tier subcontracts (excluding subcontracts for design services, purchase orders, rental agreements and other agreements for supplies or services). The design-builder shall be responsible for compliance by any subcontractor, lower-tier subcontractor or service provider.

Contracting agencies may reference Form FHWA-1273 in bid proposal or request for proposal documents, however, the Form FHWA-1273 must be physically incorporated (not referenced) in all contracts, subcontracts and lower-tier subcontracts (excluding purchase orders, rental agreements and other agreements for supplies or services related to a construction contract).

2. Subject to the applicability criteria noted in the following sections, these contract provisions shall apply to all work performed on the contract by the contractor's own organization and with the assistance of workers under the contractor's immediate superintendence and to all work performed on the contract by piecework, station work, or by subcontract.

3. A breach of any of the stipulations contained in these Required Contract Provisions may be sufficient grounds for withholding of progress payments, withholding of final payment, termination of the contract, suspension / debarment or any other action determined to be appropriate by the contracting agency and FHWA.

4. Selection of Labor: During the performance of this contract, the contractor shall not use convict labor for any purpose within the limits of a construction project on a Federal-aid highway unless it is labor performed by convicts who are on parole, supervised release, or probation. The term Federal-aid highway does not include roadways functionally classified as local roads or rural minor collectors.

II. NONDISCRIMINATION

The provisions of this section related to 23 CFR Part 230 are applicable to all Federal-aid construction contracts and to all related construction subcontracts of $10,000 or more. The provisions of 23 CFR Part 230 are not applicable to material supply, engineering, or architectural service contracts.

In addition, the contractor and all subcontractors must comply with the following policies: Executive Order 11246, 41 CFR 60, 29 CFR 1625-1627, Title 23 USC Section 140, the Rehabilitation Act of 1973, as amended (29 USC 794), Title VI of the Civil Rights Act of 1964, as amended, and related regulations including 49 CFR Parts 21, 26 and 27; and 23 CFR Parts 200, 230, and 633.

The contractor and all subcontractors must comply with: the requirements of the Equal Opportunity Clause in 41 CFR 60-1.4(b) and, for all construction contracts exceeding $10,000, the Standard Federal Equal Employment Opportunity Construction Contract Specifications in 41 CFR 60-4.3.

Note: The U.S. Department of Labor has exclusive authority to determine compliance with Executive Order 11246 and the policies of the Secretary of Labor including 41 CFR 60, and 29 CFR 1625-1627. The contracting agency and the FHWA have the authority and the responsibility to ensure compliance with Title 23 USC Section 140, the Rehabilitation Act of 1973, as amended (29 USC 794), and Title VI of the Civil Rights Act of 1964, as amended, and related regulations including 49 CFR Parts 21, 26 and 27; and 23 CFR Parts 200, 230, and 633.

The following provision is adopted from 23 CFR 230, Appendix A, with appropriate revisions to conform to the U.S. Department of Labor (US DOL) and FHWA requirements.

1. Equal Employment Opportunity: Equal employment opportunity (EEO) requirements not to discriminate and to take affirmative action to assure equal opportunity as set forth under laws, executive orders, rules, regulations (28 CFR 35, 29 CFR 1630, 29 CFR 1625-1627, 41 CFR 60 and 49 CFR 27) and orders of the Secretary of Labor as modified by the provisions prescribed herein, and imposed pursuant to 23 U.S.C. 140 shall constitute the EEO and specific affirmative action standards for the contractor's project activities under

this contract. The provisions of the Americans with Disabilities Act of 1990 (42 U.S.C. 12101 et seq.) set forth under 28 CFR 35 and 29 CFR 1630 are incorporated by reference in this contract. In the execution of this contract, the contractor agrees to comply with the following minimum specific requirement activities of EEO:

a. The contractor will work with the contracting agency and the Federal Government to ensure that it has made every good faith effort to provide equal opportunity with respect to all of its terms and conditions of employment and in their review of activities under the contract.

b. The contractor will accept as its operating policy the following statement:

"It is the policy of this Company to assure that applicants are employed, and that employees are treated during employment, without regard to their race, religion, sex, color, national origin, age or disability. Such action shall include: employment, upgrading, demotion, or transfer; recruitment or recruitment advertising; layoff or termination; rates of pay or other forms of compensation; and selection for training, including apprenticeship, pre-apprenticeship, and/or on-the-job training."

2. EEO Officer: The contractor will designate and make known to the contracting officers an EEO Officer who will have the responsibility for and must be capable of effectively administering and promoting an active EEO program and who must be assigned adequate authority and responsibility to do so.

3. Dissemination of Policy: All members of the contractor's staff who are authorized to hire, supervise, promote, and discharge employees, or who recommend such action, or who are substantially involved in such action, will be made fully cognizant of, and will implement, the contractor's EEO policy and contractual responsibilities to provide EEO in each grade and classification of employment. To ensure that the above agreement will be met, the following actions will be taken as a minimum:

a. Periodic meetings of supervisory and personnel office employees will be conducted before the start of work and then not less often than once every six months, at which time the contractor's EEO policy and its implementation will be reviewed and explained. The meetings will be conducted by the EEO Officer.

b. All new supervisory or personnel office employees will be given a thorough indoctrination by the EEO Officer, covering all major aspects of the contractor's EEO obligations within thirty days following their reporting for duty with the contractor.

c. All personnel who are engaged in direct recruitment for the project will be instructed by the EEO Officer in the contractor's procedures for locating and hiring minorities and women.

d. Notices and posters setting forth the contractor's EEO policy will be placed in areas readily accessible to employees, applicants for employment and potential employees.

e. The contractor's EEO policy and the procedures to implement such policy will be brought to the attention of employees by means of meetings, employee handbooks, or other appropriate means.

4. Recruitment: When advertising for employees, the contractor will include in all advertisements for employees the notation: "An Equal Opportunity Employer." All such advertisements will be placed in publications having a large circulation among minorities and women in the area from which the project work force would normally be derived.

a. The contractor will, unless precluded by a valid bargaining agreement, conduct systematic and direct recruitment through public and private employee referral sources likely to yield qualified minorities and women. To meet this requirement, the contractor will identify sources of potential minority group employees, and establish with such identified sources procedures whereby minority and women applicants may be referred to the contractor for employment consideration.

b. In the event the contractor has a valid bargaining agreement providing for exclusive hiring hall referrals, the contractor is expected to observe the provisions of that agreement to the extent that the system meets the contractor's compliance with EEO contract provisions. Where implementation of such an agreement has the effect of discriminating against minorities or women, or obligates the contractor to do the same, such implementation violates Federal nondiscrimination provisions.

c. The contractor will encourage its present employees to refer minorities and women as applicants for employment. Information and procedures with regard to referring such applicants will be discussed with employees.

5. Personnel Actions: Wages, working conditions, and employee benefits shall be established and administered, and personnel actions of every type, including hiring, upgrading, promotion, transfer, demotion, layoff, and termination, shall be taken without regard to race, color, religion, sex, national origin, age or disability. The following procedures shall be followed:

a. The contractor will conduct periodic inspections of project sites to insure that working conditions and employee facilities do not indicate discriminatory treatment of project site personnel.

b. The contractor will periodically evaluate the spread of wages paid within each classification to determine any evidence of discriminatory wage practices.

c. The contractor will periodically review selected personnel actions in depth to determine whether there is evidence of discrimination. Where evidence is found, the contractor will promptly take corrective action. If the review indicates that the discrimination may extend beyond the actions reviewed, such corrective action shall include all affected persons.

d. The contractor will promptly investigate all complaints of alleged discrimination made to the contractor in connection with its obligations under this contract, will attempt to resolve such complaints, and will take appropriate corrective action within a reasonable time. If the investigation indicates that the discrimination may affect persons other than the complainant, such corrective action shall include such other persons. Upon completion of each investigation, the contractor will inform every complainant of all of their avenues of appeal.

6. Training and Promotion:

a. The contractor will assist in locating, qualifying, and increasing the skills of minorities and women who are

applicants for employment or current employees. Such efforts should be aimed at developing full journey level status employees in the type of trade or job classification involved.

b. Consistent with the contractor's work force requirements and as permissible under Federal and State regulations, the contractor shall make full use of training programs, i.e., apprenticeship, and on-the-job training programs for the geographical area of contract performance. In the event a special provision for training is provided under this contract, this subparagraph will be superseded as indicated in the special provision. The contracting agency may reserve training positions for persons who receive welfare assistance in accordance with 23 U.S.C. 140(a).

c. The contractor will advise employees and applicants for employment of available training programs and entrance requirements for each.

d. The contractor will periodically review the training and promotion potential of employees who are minorities and women and will encourage eligible employees to apply for such training and promotion.

7. Unions: If the contractor relies in whole or in part upon unions as a source of employees, the contractor will use good faith efforts to obtain the cooperation of such unions to increase opportunities for minorities and women. Actions by the contractor, either directly or through a contractor's association acting as agent, will include the procedures set forth below:

a. The contractor will use good faith efforts to develop, in cooperation with the unions, joint training programs aimed toward qualifying more minorities and women for membership in the unions and increasing the skills of minorities and women so that they may qualify for higher paying employment.

b. The contractor will use good faith efforts to incorporate an EEO clause into each union agreement to the end that such union will be contractually bound to refer applicants without regard to their race, color, religion, sex, national origin, age or disability.

c. The contractor is to obtain information as to the referral practices and policies of the labor union except that to the extent such information is within the exclusive possession of the labor union and such labor union refuses to furnish such information to the contractor, the contractor shall so certify to the contracting agency and shall set forth what efforts have been made to obtain such information.

d. In the event the union is unable to provide the contractor with a reasonable flow of referrals within the time limit set forth in the collective bargaining agreement, the contractor will, through independent recruitment efforts, fill the employment vacancies without regard to race, color, religion, sex, national origin, age or disability; making full efforts to obtain qualified and/or qualifiable minorities and women. The failure of a union to provide sufficient referrals (even though it is obligated to provide exclusive referrals under the terms of a collective bargaining agreement) does not relieve the contractor from the requirements of this paragraph. In the event the union referral practice prevents the contractor from meeting the obligations pursuant to Executive Order 11246, as amended, and these special provisions, such contractor shall immediately notify the contracting agency.

8. Reasonable Accommodation for Applicants / Employees with Disabilities: The contractor must be familiar with the requirements for and comply with the Americans with Disabilities Act and all rules and regulations established there under. Employers must provide reasonable accommodation in all employment activities unless to do so would cause an undue hardship.

9. Selection of Subcontractors, Procurement of Materials and Leasing of Equipment: The contractor shall not discriminate on the grounds of race, color, religion, sex, national origin, age or disability in the selection and retention of subcontractors, including procurement of materials and leases of equipment. The contractor shall take all necessary and reasonable steps to ensure nondiscrimination in the administration of this contract.

a. The contractor shall notify all potential subcontractors and suppliers and lessors of their EEO obligations under this contract.

b. The contractor will use good faith efforts to ensure subcontractor compliance with their EEO obligations.

10. Assurance Required by 49 CFR 26.13(b):

a. The requirements of 49 CFR Part 26 and the State DOT's U.S. DOT-approved DBE program are incorporated by reference.

b. The contractor or subcontractor shall not discriminate on the basis of race, color, national origin, or sex in the performance of this contract. The contractor shall carry out applicable requirements of 49 CFR Part 26 in the award and administration of DOT-assisted contracts. Failure by the contractor to carry out these requirements is a material breach of this contract, which may result in the termination of this contract or such other remedy as the contracting agency deems appropriate.

11. Records and Reports: The contractor shall keep such records as necessary to document compliance with the EEO requirements. Such records shall be retained for a period of three years following the date of the final payment to the contractor for all contract work and shall be available at reasonable times and places for inspection by authorized representatives of the contracting agency and the FHWA.

a. The records kept by the contractor shall document the following:

(1) The number and work hours of minority and non-minority group members and women employed in each work classification on the project;

(2) The progress and efforts being made in cooperation with unions, when applicable, to increase employment opportunities for minorities and women; and

(3) The progress and efforts being made in locating, hiring, training, qualifying, and upgrading minorities and women;

b. The contractors and subcontractors will submit an annual report to the contracting agency each July for the duration of the project, indicating the number of minority, women, and non-minority group employees currently engaged in each work classification required by the contract work. This information is to be reported on Form FHWA-1391. The staffing data should represent the project work force on board in all or any part of the last payroll period preceding the end of July. If on-the-job training is being required by special provision, the contractor

will be required to collect and report training data. The employment data should reflect the work force on board during all or any part of the last payroll period preceding the end of July.

III. NONSEGREGATED FACILITIES

This provision is applicable to all Federal-aid construction contracts and to all related construction subcontracts of $10,000 or more.

The contractor must ensure that facilities provided for employees are provided in such a manner that segregation on the basis of race, color, religion, sex, or national origin cannot result. The contractor may neither require such segregated use by written or oral policies nor tolerate such use by employee custom. The contractor's obligation extends further to ensure that its employees are not assigned to perform their services at any location, under the contractor's control, where the facilities are segregated. The term "facilities" includes waiting rooms, work areas, restaurants and other eating areas, time clocks, restrooms, washrooms, locker rooms, and other storage or dressing areas, parking lots, drinking fountains, recreation or entertainment areas, transportation, and housing provided for employees. The contractor shall provide separate or single-user restrooms and necessary dressing or sleeping areas to assure privacy between sexes.

IV. DAVIS-BACON AND RELATED ACT PROVISIONS

This section is applicable to all Federal-aid construction projects exceeding $2,000 and to all related subcontracts and lower-tier subcontracts (regardless of subcontract size). The requirements apply to all projects located within the right-of-way of a roadway that is functionally classified as Federal-aid highway. This excludes roadways functionally classified as local roads or rural minor collectors, which are exempt. Contracting agencies may elect to apply these requirements to other projects.

The following provisions are from the U.S. Department of Labor regulations in 29 CFR 5.5 "Contract provisions and related matters" with minor revisions to conform to the FHWA-1273 format and FHWA program requirements.

1. Minimum wages

a. All laborers and mechanics employed or working upon the site of the work, will be paid unconditionally and not less often than once a week, and without subsequent deduction or rebate on any account (except such payroll deductions as are permitted by regulations issued by the Secretary of Labor under the Copeland Act (29 CFR part 3)), the full amount of wages and bona fide fringe benefits (or cash equivalents thereof) due at time of payment computed at rates not less than those contained in the wage determination of the Secretary of Labor which is attached hereto and made a part hereof, regardless of any contractual relationship which may be alleged to exist between the contractor and such laborers and mechanics.

Contributions made or costs reasonably anticipated for bona fide fringe benefits under section 1(b)(2) of the Davis-Bacon Act on behalf of laborers or mechanics are considered wages paid to such laborers or mechanics, subject to the provisions of paragraph 1.d. of this section; also, regular contributions made or costs incurred for more than a weekly period (but not less often than quarterly) under plans, funds, or programs which cover the particular weekly period, are deemed to be constructively made or incurred during such weekly period. Such laborers and mechanics shall be paid the appropriate wage rate and fringe benefits on the wage determination for the classification of work actually performed, without regard to skill, except as provided in 29 CFR 5.5(a)(4). Laborers or mechanics performing work in more than one classification may be compensated at the rate specified for each classification for the time actually worked therein: Provided, That the employer's payroll records accurately set forth the time spent in each classification in which work is performed. The wage determination (including any additional classification and wage rates conformed under paragraph 1.b. of this section) and the Davis-Bacon poster (WH–1321) shall be posted at all times by the contractor and its subcontractors at the site of the work in a prominent and accessible place where it can be easily seen by the workers.

b.(1) The contracting officer shall require that any class of laborers or mechanics, including helpers, which is not listed in the wage determination and which is to be employed under the contract shall be classified in conformance with the wage determination. The contracting officer shall approve an additional classification and wage rate and fringe benefits therefore only when the following criteria have been met:

(i) The work to be performed by the classification requested is not performed by a classification in the wage determination; and

(ii) The classification is utilized in the area by the construction industry; and

(iii) The proposed wage rate, including any bona fide fringe benefits, bears a reasonable relationship to the wage rates contained in the wage determination.

(2) If the contractor and the laborers and mechanics to be employed in the classification (if known), or their representatives, and the contracting officer agree on the classification and wage rate (including the amount designated for fringe benefits where appropriate), a report of the action taken shall be sent by the contracting officer to the Administrator of the Wage and Hour Division, Employment Standards Administration, U.S. Department of Labor, Washington, DC 20210. The Administrator, or an authorized representative, will approve, modify, or disapprove every additional classification action within 30 days of receipt and so advise the contracting officer or will notify the contracting officer within the 30-day period that additional time is necessary.

(3) In the event the contractor, the laborers or mechanics to be employed in the classification or their representatives, and the contracting officer do not agree on the proposed classification and wage rate (including the amount designated for fringe benefits, where appropriate), the contracting officer shall refer the questions, including the views of all interested parties and the recommendation of the contracting officer, to the Wage and Hour Administrator for determination. The Wage and Hour Administrator, or an authorized representative, will issue a determination within 30 days of receipt and so advise the contracting officer or

will notify the contracting officer within the 30-day period that additional time is necessary.

(4) The wage rate (including fringe benefits where appropriate) determined pursuant to paragraphs 1.b.(2) or 1.b.(3) of this section, shall be paid to all workers performing work in the classification under this contract from the first day on which work is performed in the classification.

c. Whenever the minimum wage rate prescribed in the contract for a class of laborers or mechanics includes a fringe benefit which is not expressed as an hourly rate, the contractor shall either pay the benefit as stated in the wage determination or shall pay another bona fide fringe benefit or an hourly cash equivalent thereof.

d. If the contractor does not make payments to a trustee or other third person, the contractor may consider as part of the wages of any laborer or mechanic the amount of any costs reasonably anticipated in providing bona fide fringe benefits under a plan or program, Provided, That the Secretary of Labor has found, upon the written request of the contractor, that the applicable standards of the Davis-Bacon Act have been met. The Secretary of Labor may require the contractor to set aside in a separate account assets for the meeting of obligations under the plan or program.

2. Withholding

The contracting agency shall upon its own action or upon written request of an authorized representative of the Department of Labor, withhold or cause to be withheld from the contractor under this contract, or any other Federal contract with the same prime contractor, or any other federally-assisted contract subject to Davis-Bacon prevailing wage requirements, which is held by the same prime contractor, so much of the accrued payments or advances as may be considered necessary to pay laborers and mechanics, including apprentices, trainees, and helpers, employed by the contractor or any subcontractor the full amount of wages required by the contract. In the event of failure to pay any laborer or mechanic, including any apprentice, trainee, or helper, employed or working on the site of the work, all or part of the wages required by the contract, the contracting agency may, after written notice to the contractor, take such action as may be necessary to cause the suspension of any further payment, advance, or guarantee of funds until such violations have ceased.

3. Payrolls and basic records

a. Payrolls and basic records relating thereto shall be maintained by the contractor during the course of the work and preserved for a period of three years thereafter for all laborers and mechanics working at the site of the work. Such records shall contain the name, address, and social security number of each such worker, his or her correct classification, hourly rates of wages paid (including rates of contributions or costs anticipated for bona fide fringe benefits or cash equivalents thereof of the types described in section 1(b)(2)(B) of the Davis-Bacon Act), daily and weekly number of hours worked, deductions made and actual wages paid. Whenever the Secretary of Labor has found under 29 CFR 5.5(a)(1)(iv) that the wages of any laborer or mechanic include the amount of any costs reasonably anticipated in providing benefits under a plan or program described in section 1(b)(2)(B) of the Davis-Bacon Act, the contractor shall maintain records which show that the commitment to provide such benefits is enforceable, that the plan or program is financially responsible, and that the plan or program has been communicated in writing to the laborers or mechanics affected, and records which show the costs anticipated or the actual cost incurred in providing such benefits. Contractors employing apprentices or trainees under approved programs shall maintain written evidence of the registration of apprenticeship programs and certification of trainee programs, the registration of the apprentices and trainees, and the ratios and wage rates prescribed in the applicable programs.

b.(1) The contractor shall submit weekly for each week in which any contract work is performed a copy of all payrolls to the contracting agency. The payrolls submitted shall set out accurately and completely all of the information required to be maintained under 29 CFR 5.5(a)(3)(i), except that full social security numbers and home addresses shall not be included on weekly transmittals. Instead the payrolls shall only need to include an individually identifying number for each employee (e.g. , the last four digits of the employee's social security number). The required weekly payroll information may be submitted in any form desired. Optional Form WH–347 is available for this purpose from the Wage and Hour Division Web site at http://www.dol.gov/esa/whd/forms/wh347instr.htm or its successor site. The prime contractor is responsible for the submission of copies of payrolls by all subcontractors. Contractors and subcontractors shall maintain the full social security number and current address of each covered worker, and shall provide them upon request to the contracting agency for transmission to the State DOT, the FHWA or the Wage and Hour Division of the Department of Labor for purposes of an investigation or audit of compliance with prevailing wage requirements. It is not a violation of this section for a prime contractor to require a subcontractor to provide addresses and social security numbers to the prime contractor for its own records, without weekly submission to the contracting agency..

(2) Each payroll submitted shall be accompanied by a "Statement of Compliance," signed by the contractor or subcontractor or his or her agent who pays or supervises the payment of the persons employed under the contract and shall certify the following:

(i) That the payroll for the payroll period contains the information required to be provided under §5.5 (a)(3)(ii) of Regulations, 29 CFR part 5, the appropriate information is being maintained under §5.5 (a)(3)(i) of Regulations, 29 CFR part 5, and that such information is correct and complete;

(ii) That each laborer or mechanic (including each helper, apprentice, and trainee) employed on the contract during the payroll period has been paid the full weekly wages earned, without rebate, either directly or indirectly, and that no deductions have been made either directly or indirectly from the full wages earned, other than permissible deductions as set forth in Regulations, 29 CFR part 3;

(iii) That each laborer or mechanic has been paid not less than the applicable wage rates and fringe benefits or cash equivalents for the classification of work performed, as specified in the applicable wage determination incorporated into the contract.

(3) The weekly submission of a properly executed certification set forth on the reverse side of Optional Form WH–347 shall satisfy the requirement for submission of the "Statement of Compliance" required by paragraph 3.b.(2) of this section.

(4) The falsification of any of the above certifications may subject the contractor or subcontractor to civil or criminal prosecution under section 1001 of title 18 and section 231 of title 31 of the United States Code.

c. The contractor or subcontractor shall make the records required under paragraph 3.a. of this section available for inspection, copying, or transcription by authorized representatives of the contracting agency, the State DOT, the FHWA, or the Department of Labor, and shall permit such representatives to interview employees during working hours on the job. If the contractor or subcontractor fails to submit the required records or to make them available, the FHWA may, after written notice to the contractor, the contracting agency or the State DOT, take such action as may be necessary to cause the suspension of any further payment, advance, or guarantee of funds. Furthermore, failure to submit the required records upon request or to make such records available may be grounds for debarment action pursuant to 29 CFR 5.12.

4. Apprentices and trainees

a. Apprentices (programs of the USDOL).

Apprentices will be permitted to work at less than the predetermined rate for the work they performed when they are employed pursuant to and individually registered in a bona fide apprenticeship program registered with the U.S. Department of Labor, Employment and Training Administration, Office of Apprenticeship Training, Employer and Labor Services, or with a State Apprenticeship Agency recognized by the Office, or if a person is employed in his or her first 90 days of probationary employment as an apprentice in such an apprenticeship program, who is not individually registered in the program, but who has been certified by the Office of Apprenticeship Training, Employer and Labor Services or a State Apprenticeship Agency (where appropriate) to be eligible for probationary employment as an apprentice.

The allowable ratio of apprentices to journeymen on the job site in any craft classification shall not be greater than the ratio permitted to the contractor as to the entire work force under the registered program. Any worker listed on a payroll at an apprentice wage rate, who is not registered or otherwise employed as stated above, shall be paid not less than the applicable wage rate on the wage determination for the classification of work actually performed. In addition, any apprentice performing work on the job site in excess of the ratio permitted under the registered program shall be paid not less than the applicable wage rate on the wage determination for the work actually performed. Where a contractor is performing construction on a project in a locality other than that in which its program is registered, the ratios and wage rates (expressed in percentages of the journeyman's hourly rate) specified in the contractor's or subcontractor's registered program shall be observed.

Every apprentice must be paid at not less than the rate specified in the registered program for the apprentice's level of progress, expressed as a percentage of the journeymen hourly rate specified in the applicable wage determination. Apprentices shall be paid fringe benefits in accordance with the provisions of the apprenticeship program. If the apprenticeship program does not specify fringe benefits, apprentices must be paid the full amount of fringe benefits listed on the wage determination for the applicable classification. If the Administrator determines that a different practice prevails for the applicable apprentice classification, fringes shall be paid in accordance with that determination.

In the event the Office of Apprenticeship Training, Employer and Labor Services, or a State Apprenticeship Agency recognized by the Office, withdraws approval of an apprenticeship program, the contractor will no longer be permitted to utilize apprentices at less than the applicable predetermined rate for the work performed until an acceptable program is approved.

b. Trainees (programs of the USDOL).

Except as provided in 29 CFR 5.16, trainees will not be permitted to work at less than the predetermined rate for the work performed unless they are employed pursuant to and individually registered in a program which has received prior approval, evidenced by formal certification by the U.S. Department of Labor, Employment and Training Administration.

The ratio of trainees to journeymen on the job site shall not be greater than permitted under the plan approved by the Employment and Training Administration.

Every trainee must be paid at not less than the rate specified in the approved program for the trainee's level of progress, expressed as a percentage of the journeyman hourly rate specified in the applicable wage determination. Trainees shall be paid fringe benefits in accordance with the provisions of the trainee program. If the trainee program does not mention fringe benefits, trainees shall be paid the full amount of fringe benefits listed on the wage determination unless the Administrator of the Wage and Hour Division determines that there is an apprenticeship program associated with the corresponding journeyman wage rate on the wage determination which provides for less than full fringe benefits for apprentices. Any employee listed on the payroll at a trainee rate who is not registered and participating in a training plan approved by the Employment and Training Administration shall be paid not less than the applicable wage rate on the wage determination for the classification of work actually performed. In addition, any trainee performing work on the job site in excess of the ratio permitted under the registered program shall be paid not less than the applicable wage rate on the wage determination for the work actually performed.

In the event the Employment and Training Administration withdraws approval of a training program, the contractor will no longer be permitted to utilize trainees at less than the applicable predetermined rate for the work performed until an acceptable program is approved.

c. Equal employment opportunity. The utilization of apprentices, trainees and journeymen under this part shall be in conformity with the equal employment opportunity requirements of Executive Order 11246, as amended, and 29 CFR part 30.

d. Apprentices and Trainees (programs of the U.S. DOT).

Apprentices and trainees working under apprenticeship and skill training programs which have been certified by the Secretary of Transportation as promoting EEO in connection with Federal-aid highway construction programs are not subject to the requirements of paragraph 4 of this Section IV. The straight time hourly wage rates for apprentices and trainees under such programs will be established by the particular programs. The ratio of apprentices and trainees to journeymen shall not be greater than permitted by the terms of the particular program.

5. Compliance with Copeland Act requirements. The contractor shall comply with the requirements of 29 CFR part 3, which are incorporated by reference in this contract.

6. Subcontracts. The contractor or subcontractor shall insert Form FHWA-1273 in any subcontracts and also require the subcontractors to include Form FHWA-1273 in any lower tier subcontracts. The prime contractor shall be responsible for the compliance by any subcontractor or lower tier subcontractor with all the contract clauses in 29 CFR 5.5.

7. Contract termination: debarment. A breach of the contract clauses in 29 CFR 5.5 may be grounds for termination of the contract, and for debarment as a contractor and a subcontractor as provided in 29 CFR 5.12.

8. Compliance with Davis-Bacon and Related Act requirements. All rulings and interpretations of the Davis-Bacon and Related Acts contained in 29 CFR parts 1, 3, and 5 are herein incorporated by reference in this contract.

9. Disputes concerning labor standards. Disputes arising out of the labor standards provisions of this contract shall not be subject to the general disputes clause of this contract. Such disputes shall be resolved in accordance with the procedures of the Department of Labor set forth in 29 CFR parts 5, 6, and 7. Disputes within the meaning of this clause include disputes between the contractor (or any of its subcontractors) and the contracting agency, the U.S. Department of Labor, or the employees or their representatives.

10. Certification of eligibility.

a. By entering into this contract, the contractor certifies that neither it (nor he or she) nor any person or firm who has an interest in the contractor's firm is a person or firm ineligible to be awarded Government contracts by virtue of section 3(a) of the Davis-Bacon Act or 29 CFR 5.12(a)(1).

b. No part of this contract shall be subcontracted to any person or firm ineligible for award of a Government contract by virtue of section 3(a) of the Davis-Bacon Act or 29 CFR 5.12(a)(1).

c. The penalty for making false statements is prescribed in the U.S. Criminal Code, 18 U.S.C. 1001.

V. CONTRACT WORK HOURS AND SAFETY STANDARDS ACT

The following clauses apply to any Federal-aid construction contract in an amount in excess of $100,000 and subject to the overtime provisions of the Contract Work Hours and Safety Standards Act. These clauses shall be inserted in addition to the clauses required by 29 CFR 5.5(a) or 29 CFR 4.6. As used in this paragraph, the terms laborers and mechanics include watchmen and guards.

1. Overtime requirements. No contractor or subcontractor contracting for any part of the contract work which may require or involve the employment of laborers or mechanics shall require or permit any such laborer or mechanic in any workweek in which he or she is employed on such work to work in excess of forty hours in such workweek unless such laborer or mechanic receives compensation at a rate not less than one and one-half times the basic rate of pay for all hours worked in excess of forty hours in such workweek.

2. Violation; liability for unpaid wages; liquidated damages. In the event of any violation of the clause set forth in paragraph (1.) of this section, the contractor and any subcontractor responsible therefor shall be liable for the unpaid wages. In addition, such contractor and subcontractor shall be liable to the United States (in the case of work done under contract for the District of Columbia or a territory, to such District or to such territory), for liquidated damages. Such liquidated damages shall be computed with respect to each individual laborer or mechanic, including watchmen and guards, employed in violation of the clause set forth in paragraph (1.) of this section, in the sum of $10 for each calendar day on which such individual was required or permitted to work in excess of the standard workweek of forty hours without payment of the overtime wages required by the clause set forth in paragraph (1.) of this section.

3. Withholding for unpaid wages and liquidated damages. The FHWA or the contacting agency shall upon its own action or upon written request of an authorized representative of the Department of Labor withhold or cause to be withheld, from any moneys payable on account of work performed by the contractor or subcontractor under any such contract or any other Federal contract with the same prime contractor, or any other federally-assisted contract subject to the Contract Work Hours and Safety Standards Act, which is held by the same prime contractor, such sums as may be determined to be necessary to satisfy any liabilities of such contractor or subcontractor for unpaid wages and liquidated damages as provided in the clause set forth in paragraph (2.) of this section.

4. Subcontracts. The contractor or subcontractor shall insert in any subcontracts the clauses set forth in paragraph (1.) through (4.) of this section and also a clause requiring the subcontractors to include these clauses in any lower tier subcontracts. The prime contractor shall be responsible for compliance by any subcontractor or lower tier subcontractor with the clauses set forth in paragraphs (1.) through (4.) of this section.

VI. SUBLETTING OR ASSIGNING THE CONTRACT

This provision is applicable to all Federal-aid construction contracts on the National Highway System.

1. The contractor shall perform with its own organization contract work amounting to not less than 30 percent (or a greater percentage if specified elsewhere in the contract) of the total original contract price, excluding any specialty items designated by the contracting agency. Specialty items may be performed by subcontract and the amount of any such specialty items performed may be deducted from the total original contract price before computing the amount of work required to be performed by the contractor's own organization (23 CFR 635.116).

a. The term "perform work with its own organization" refers to workers employed or leased by the prime contractor, and equipment owned or rented by the prime contractor, with or without operators. Such term does not include employees or equipment of a subcontractor or lower tier subcontractor, agents of the prime contractor, or any other assignees. The term may include payments for the costs of hiring leased employees from an employee leasing firm meeting all relevant Federal and State regulatory requirements. Leased employees may only be included in this term if the prime contractor meets all of the following conditions:

(1) the prime contractor maintains control over the supervision of the day-to-day activities of the leased employees;
(2) the prime contractor remains responsible for the quality of the work of the leased employees;
(3) the prime contractor retains all power to accept or exclude individual employees from work on the project; and
(4) the prime contractor remains ultimately responsible for the payment of predetermined minimum wages, the submission of payrolls, statements of compliance and all other Federal regulatory requirements.

b. "Specialty Items" shall be construed to be limited to work that requires highly specialized knowledge, abilities, or equipment not ordinarily available in the type of contracting organizations qualified and expected to bid or propose on the contract as a whole and in general are to be limited to minor components of the overall contract.

2. The contract amount upon which the requirements set forth in paragraph (1) of Section VI is computed includes the cost of material and manufactured products which are to be purchased or produced by the contractor under the contract provisions.

3. The contractor shall furnish (a) a competent superintendent or supervisor who is employed by the firm, has full authority to direct performance of the work in accordance with the contract requirements, and is in charge of all construction operations (regardless of who performs the work) and (b) such other of its own organizational resources (supervision, management, and engineering services) as the contracting officer determines is necessary to assure the performance of the contract.

4. No portion of the contract shall be sublet, assigned or otherwise disposed of except with the written consent of the contracting officer, or authorized representative, and such consent when given shall not be construed to relieve the contractor of any responsibility for the fulfillment of the contract. Written consent will be given only after the contracting agency has assured that each subcontract is evidenced in writing and that it contains all pertinent provisions and requirements of the prime contract.

5. The 30% self-performance requirement of paragraph (1) is not applicable to design-build contracts; however, contracting agencies may establish their own self-performance requirements.

VII. SAFETY: ACCIDENT PREVENTION

This provision is applicable to all Federal-aid construction contracts and to all related subcontracts.

1. In the performance of this contract the contractor shall comply with all applicable Federal, State, and local laws governing safety, health, and sanitation (23 CFR 635). The contractor shall provide all safeguards, safety devices and protective equipment and take any other needed actions as it determines, or as the contracting officer may determine, to be reasonably necessary to protect the life and health of employees on the job and the safety of the public and to protect property in connection with the performance of the work covered by the contract.

2. It is a condition of this contract, and shall be made a condition of each subcontract, which the contractor enters into pursuant to this contract, that the contractor and any subcontractor shall not permit any employee, in performance of the contract, to work in surroundings or under conditions which are unsanitary, hazardous or dangerous to his/her health or safety, as determined under construction safety and health standards (29 CFR 1926) promulgated by the Secretary of Labor, in accordance with Section 107 of the Contract Work Hours and Safety Standards Act (40 U.S.C. 3704).

3. Pursuant to 29 CFR 1926.3, it is a condition of this contract that the Secretary of Labor or authorized representative thereof, shall have right of entry to any site of contract performance to inspect or investigate the matter of compliance with the construction safety and health standards and to carry out the duties of the Secretary under Section 107 of the Contract Work Hours and Safety Standards Act (40 U.S.C.3704).

VIII. FALSE STATEMENTS CONCERNING HIGHWAY PROJECTS

This provision is applicable to all Federal-aid construction contracts and to all related subcontracts.

In order to assure high quality and durable construction in conformity with approved plans and specifications and a high degree of reliability on statements and representations made by engineers, contractors, suppliers, and workers on Federal-aid highway projects, it is essential that all persons concerned with the project perform their functions as carefully, thoroughly, and honestly as possible. Willful falsification, distortion, or misrepresentation with respect to any facts related to the project is a violation of Federal law. To prevent any misunderstanding regarding the seriousness of these and similar acts, Form FHWA-1022 shall be posted on each Federal-aid highway project (23 CFR 635) in one or more places where it is readily available to all persons concerned with the project:

18 U.S.C. 1020 reads as follows:

"Whoever, being an officer, agent, or employee of the United States, or of any State or Territory, or whoever, whether a person, association, firm, or corporation, knowingly makes any false statement, false representation, or false report as to the character, quality, quantity, or cost of the material used or to be used, or the quantity or quality of the work performed or to be performed, or the cost thereof in connection with the submission of plans, maps, specifications, contracts, or costs of construction on any highway or related project submitted for approval to the Secretary of Transportation; or

Whoever knowingly makes any false statement, false representation, false report or false claim with respect to the character, quality, quantity, or cost of any work performed or to be performed, or materials furnished or to be furnished, in connection with the construction of any highway or related project approved by the Secretary of Transportation; or

Whoever knowingly makes any false statement or false representation as to material fact in any statement, certificate, or report submitted pursuant to provisions of the Federal-aid Roads Act approved July 1, 1916, (39 Stat. 355), as amended and supplemented;

Shall be fined under this title or imprisoned not more than 5 years or both."

IX. IMPLEMENTATION OF CLEAN AIR ACT AND FEDERAL WATER POLLUTION CONTROL ACT

This provision is applicable to all Federal-aid construction contracts and to all related subcontracts.

By submission of this bid/proposal or the execution of this contract, or subcontract, as appropriate, the bidder, proposer, Federal-aid construction contractor, or subcontractor, as appropriate, will be deemed to have stipulated as follows:

1. That any person who is or will be utilized in the performance of this contract is not prohibited from receiving an award due to a violation of Section 508 of the Clean Water Act or Section 306 of the Clean Air Act.
2. That the contractor agrees to include or cause to be included the requirements of paragraph (1) of this Section X in every subcontract, and further agrees to take such action as the contracting agency may direct as a means of enforcing such requirements.

X. CERTIFICATION REGARDING DEBARMENT, SUSPENSION, INELIGIBILITY AND VOLUNTARY EXCLUSION

This provision is applicable to all Federal-aid construction contracts, design-build contracts, subcontracts, lower-tier subcontracts, purchase orders, lease agreements, consultant contracts or any other covered transaction requiring FHWA approval or that is estimated to cost $25,000 or more – as defined in 2 CFR Parts 180 and 1200.

1. Instructions for Certification – First Tier Participants:

a. By signing and submitting this proposal, the prospective first tier participant is providing the certification set out below.

b. The inability of a person to provide the certification set out below will not necessarily result in denial of participation in this covered transaction. The prospective first tier participant shall submit an explanation of why it cannot provide the certification set out below. The certification or explanation will be considered in connection with the department or agency's determination whether to enter into this transaction. However, failure of the prospective first tier participant to furnish a certification or an explanation shall disqualify such a person from participation in this transaction.

c. The certification in this clause is a material representation of fact upon which reliance was placed when the contracting agency determined to enter into this transaction. If it is later determined that the prospective participant knowingly rendered an erroneous certification, in addition to other remedies available to the Federal Government, the contracting agency may terminate this transaction for cause of default.

d. The prospective first tier participant shall provide immediate written notice to the contracting agency to whom this proposal is submitted if any time the prospective first tier participant learns that its certification was erroneous when submitted or has become erroneous by reason of changed circumstances.

e. The terms "covered transaction," "debarred," "suspended," "ineligible," "participant," "person," "principal," and "voluntarily excluded," as used in this clause, are defined in 2 CFR Parts 180 and 1200. "First Tier Covered Transactions" refers to any covered transaction between a grantee or subgrantee of Federal funds and a participant (such as the prime or general contract). "Lower Tier Covered Transactions" refers to any covered transaction under a First Tier Covered Transaction (such as subcontracts). "First Tier Participant" refers to the participant who has entered into a covered transaction with a grantee or subgrantee of Federal funds (such as the prime or general contractor). "Lower Tier Participant" refers any participant who has entered into a covered transaction with a First Tier Participant or other Lower Tier Participants (such as subcontractors and suppliers).

f. The prospective first tier participant agrees by submitting this proposal that, should the proposed covered transaction be entered into, it shall not knowingly enter into any lower tier covered transaction with a person who is debarred, suspended, declared ineligible, or voluntarily excluded from participation in this covered transaction, unless authorized by the department or agency entering into this transaction.

g. The prospective first tier participant further agrees by submitting this proposal that it will include the clause titled "Certification Regarding Debarment, Suspension, Ineligibility and Voluntary Exclusion-Lower Tier Covered Transactions," provided by the department or contracting agency, entering into this covered transaction, without modification, in all lower tier covered transactions and in all solicitations for lower tier covered transactions exceeding the $25,000 threshold.

h. A participant in a covered transaction may rely upon a certification of a prospective participant in a lower tier covered transaction that is not debarred, suspended, ineligible, or voluntarily excluded from the covered transaction, unless it knows that the certification is erroneous. A participant is responsible for ensuring that its principals are not suspended, debarred, or otherwise ineligible to participate in covered transactions. To verify the eligibility of its principals, as well as the eligibility of any lower tier prospective participants, each participant may, but is not required to, check the Excluded Parties List System website (https://www.epls.gov/), which is compiled by the General Services Administration.

i. Nothing contained in the foregoing shall be construed to require the establishment of a system of records in order to render in good faith the certification required by this clause. The knowledge and information of the prospective participant is not required to exceed that which is normally possessed by a prudent person in the ordinary course of business dealings.

j. Except for transactions authorized under paragraph (f) of these instructions, if a participant in a covered transaction knowingly enters into a lower tier covered transaction with a person who is suspended, debarred, ineligible, or voluntarily excluded from participation in this transaction, in addition to other remedies available to the Federal Government, the department or agency may terminate this transaction for cause or default.

* * * * *

2. Certification Regarding Debarment, Suspension, Ineligibility and Voluntary Exclusion – First Tier Participants:

a. The prospective first tier participant certifies to the best of its knowledge and belief, that it and its principals:

(1) Are not presently debarred, suspended, proposed for debarment, declared ineligible, or voluntarily excluded from participating in covered transactions by any Federal department or agency;

(2) Have not within a three-year period preceding this proposal been convicted of or had a civil judgment rendered against them for commission of fraud or a criminal offense in connection with obtaining, attempting to obtain, or performing a public (Federal, State or local) transaction or contract under a public transaction; violation of Federal or State antitrust statutes or commission of embezzlement, theft, forgery, bribery, falsification or destruction of records, making false statements, or receiving stolen property;

(3) Are not presently indicted for or otherwise criminally or civilly charged by a governmental entity (Federal, State or local) with commission of any of the offenses enumerated in paragraph (a)(2) of this certification; and

(4) Have not within a three-year period preceding this application/proposal had one or more public transactions (Federal, State or local) terminated for cause or default.

b. Where the prospective participant is unable to certify to any of the statements in this certification, such prospective participant shall attach an explanation to this proposal.

2. **Instructions for Certification - Lower Tier Participants:**

(Applicable to all subcontracts, purchase orders and other lower tier transactions requiring prior FHWA approval or estimated to cost $25,000 or more - 2 CFR Parts 180 and 1200)

a. By signing and submitting this proposal, the prospective lower tier is providing the certification set out below.

b. The certification in this clause is a material representation of fact upon which reliance was placed when this transaction was entered into. If it is later determined that the prospective lower tier participant knowingly rendered an erroneous certification, in addition to other remedies available to the Federal Government, the department, or agency with which this transaction originated may pursue available remedies, including suspension and/or debarment.

c. The prospective lower tier participant shall provide immediate written notice to the person to which this proposal is submitted if at any time the prospective lower tier participant learns that its certification was erroneous by reason of changed circumstances.

d. The terms "covered transaction," "debarred," "suspended," "ineligible," "participant," "person," "principal," and "voluntarily excluded," as used in this clause, are defined in 2 CFR Parts 180 and 1200. You may contact the person to which this proposal is submitted for assistance in obtaining a copy of those regulations. "First Tier Covered Transactions" refers to any covered transaction between a grantee or subgrantee of Federal funds and a participant (such as the prime or general contract). "Lower Tier Covered Transactions" refers to any covered transaction under a First Tier Covered Transaction (such as subcontracts). "First Tier Participant" refers to the participant who has entered into a covered transaction with a grantee or subgrantee of Federal funds (such as the prime or general contractor). "Lower Tier Participant" refers any participant who has entered into a covered transaction with a First Tier Participant or other Lower Tier Participants (such as subcontractors and suppliers).

e. The prospective lower tier participant agrees by submitting this proposal that, should the proposed covered transaction be entered into, it shall not knowingly enter into any lower tier covered transaction with a person who is debarred, suspended, declared ineligible, or voluntarily excluded from participation in this covered transaction, unless authorized by the department or agency with which this transaction originated.

f. The prospective lower tier participant further agrees by submitting this proposal that it will include this clause titled "Certification Regarding Debarment, Suspension, Ineligibility and Voluntary Exclusion-Lower Tier Covered Transaction," without modification, in all lower tier covered transactions and in all solicitations for lower tier covered transactions exceeding the $25,000 threshold.

g. A participant in a covered transaction may rely upon a certification of a prospective participant in a lower tier covered transaction that is not debarred, suspended, ineligible, or voluntarily excluded from the covered transaction, unless it knows that the certification is erroneous. A participant is responsible for ensuring that its principals are not suspended, debarred, or otherwise ineligible to participate in covered transactions. To verify the eligibility of its principals, as well as the eligibility of any lower tier prospective participants, each participant may, but is not required to, check the Excluded Parties List System website (https://www.epls.gov/), which is compiled by the General Services Administration.

h. Nothing contained in the foregoing shall be construed to require establishment of a system of records in order to render in good faith the certification required by this clause. The knowledge and information of participant is not required to exceed that which is normally possessed by a prudent person in the ordinary course of business dealings.

i. Except for transactions authorized under paragraph e of these instructions, if a participant in a covered transaction knowingly enters into a lower tier covered transaction with a person who is suspended, debarred, ineligible, or voluntarily excluded from participation in this transaction, in addition to other remedies available to the Federal Government, the

department or agency with which this transaction originated may pursue available remedies, including suspension and/or debarment.

* * * * *

Certification Regarding Debarment, Suspension, Ineligibility and Voluntary Exclusion--Lower Tier Participants:

1. The prospective lower tier participant certifies, by submission of this proposal, that neither it nor its principals is presently debarred, suspended, proposed for debarment, declared ineligible, or voluntarily excluded from participating in covered transactions by any Federal department or agency.

2. Where the prospective lower tier participant is unable to certify to any of the statements in this certification, such prospective participant shall attach an explanation to this proposal.

* * * * *

XI. CERTIFICATION REGARDING USE OF CONTRACT FUNDS FOR LOBBYING

This provision is applicable to all Federal-aid construction contracts and to all related subcontracts which exceed $100,000 (49 CFR 20).

1. The prospective participant certifies, by signing and submitting this bid or proposal, to the best of his or her knowledge and belief, that:

a. No Federal appropriated funds have been paid or will be paid, by or on behalf of the undersigned, to any person for influencing or attempting to influence an officer or employee of any Federal agency, a Member of Congress, an officer or employee of Congress, or an employee of a Member of Congress in connection with the awarding of any Federal contract, the making of any Federal grant, the making of any Federal loan, the entering into of any cooperative agreement, and the extension, continuation, renewal, amendment, or modification of any Federal contract, grant, loan, or cooperative agreement.

b. If any funds other than Federal appropriated funds have been paid or will be paid to any person for influencing or attempting to influence an officer or employee of any Federal agency, a Member of Congress, an officer or employee of Congress, or an employee of a Member of Congress in connection with this Federal contract, grant, loan, or cooperative agreement, the undersigned shall complete and submit Standard Form-LLL, "Disclosure Form to Report Lobbying," in accordance with its instructions.

2. This certification is a material representation of fact upon which reliance was placed when this transaction was made or entered into. Submission of this certification is a prerequisite for making or entering into this transaction imposed by 31 U.S.C. 1352. Any person who fails to file the required certification shall be subject to a civil penalty of not less than $10,000 and not more than $100,000 for each such failure.

3. The prospective participant also agrees by submitting its bid or proposal that the participant shall require that the language of this certification be included in all lower tier subcontracts, which exceed $100,000 and that all such recipients shall certify and disclose accordingly.

ATTACHMENT A - EMPLOYMENT AND MATERIALS PREFERENCE FOR APPALACHIAN DEVELOPMENT HIGHWAY SYSTEM OR APPALACHIAN LOCAL ACCESS ROAD CONTRACTS

This provision is applicable to all Federal-aid projects funded under the Appalachian Regional Development Act of 1965.

1. During the performance of this contract, the contractor undertaking to do work which is, or reasonably may be, done as on-site work, shall give preference to qualified persons who regularly reside in the labor area as designated by the DOL wherein the contract work is situated, or the subregion, or the Appalachian counties of the State wherein the contract work is situated, except:

a. To the extent that qualified persons regularly residing in the area are not available.

b. For the reasonable needs of the contractor to employ supervisory or specially experienced personnel necessary to assure an efficient execution of the contract work.

c. For the obligation of the contractor to offer employment to present or former employees as the result of a lawful collective bargaining contract, provided that the number of nonresident persons employed under this subparagraph (1c) shall not exceed 20 percent of the total number of employees employed by the contractor on the contract work, except as provided in subparagraph (4) below.

2. The contractor shall place a job order with the State Employment Service indicating (a) the classifications of the laborers, mechanics and other employees required to perform the contract work, (b) the number of employees required in each classification, (c) the date on which the participant estimates such employees will be required, and (d) any other pertinent information required by the State Employment Service to complete the job order form. The job order may be placed with the State Employment Service in writing or by telephone. If during the course of the contract work, the information submitted by the contractor in the original job order is substantially modified, the participant shall promptly notify the State Employment Service.

3. The contractor shall give full consideration to all qualified job applicants referred to him by the State Employment Service. The contractor is not required to grant employment to any job applicants who, in his opinion, are not qualified to perform the classification of work required.

4. If, within one week following the placing of a job order by the contractor with the State Employment Service, the State Employment Service is unable to refer any qualified job applicants to the contractor, or less than the number requested, the State Employment Service will forward a certificate to the contractor indicating the unavailability of applicants. Such certificate shall be made a part of the contractor's permanent project records. Upon receipt of this certificate, the contractor may employ persons who do not normally reside in the labor area to fill positions covered by the certificate, notwithstanding the provisions of subparagraph (1c) above.

5. The provisions of 23 CFR 633.207(e) allow the contracting agency to provide a contractual preference for the use of mineral resource materials native to the Appalachian region.

6. The contractor shall include the provisions of Sections 1 through 4 of this Attachment A in every subcontract for work which is, or reasonably may be, done as on-site work.

APPENDIX A

TITLE VI ASSURANCE

Rhode Island Department of Transportation
Title VI Assurance

Appendix A

During the performance of this Contract, the contractor, for itself, its assignees and successors in interest (the Contractor) agrees as follows:

(1) **Compliance with Regulations:** The Contractor shall comply with the regulations relative to nondiscrimination in federally-assisted programs of the Rhode Island Department of Transportation (the Department), 49 C.F.R. Part 21, as they may be amended from time to time (the Regulations), and which are herein incorporated by reference and made a part of this Contract.

(2) **Nondiscrimination:** The Contractor, with regard to the work performed by it during the Contract, shall not discriminate on the grounds of race, color, sex, national origin, age, or disability in the selection and retention of subcontractors, including procurements of materials and leases of equipment. The Contractor shall not participate either directly or indirectly in the discrimination prohibited by section 21.5 of the Regulations, including employment practices when the Contract covers a program set forth in Appendix B of the Regulations.

(3) **Solicitations for Subcontractors, Including Procurements of Materials and Equipment:** In all solicitations either by competitive bidding or negotiation made by the Contractor for work to be performed under a subcontract, including procurements of materials or leases of equipment, each potential subcontractor or supplier shall be notified by the Contractor of the Contractor's obligations under this Contract and the Regulations relative to nondiscrimination on the grounds of race, color, sex, national origin, age, or disability.

(4) **Information and Reports:** The Contractor shall provide all information and reports required by the Regulations or directives issued pursuant thereto, and shall permit access to its books, records, accounts, other sources of information, and its facilities as may be determined by the Department or the Federal Highway Administration to be pertinent to ascertain compliance with such Regulations, orders and instructions. Where any information required of the Contractor is in the exclusive possession of another who fails or refuses to furnish this information, the Contractor shall so certify to the Department, or the Federal Highway Administration, as appropriate, and shall set forth what efforts it has made to obtain the information.

(5) **Sanctions for Noncompliance:** In the event of the Contractor's noncompliance with the nondiscrimination provisions of this Contract, the Department shall impose such contract sanctions as it or the Federal Highway Administration may determine to be appropriate, including, but not limited to:

(a) withholding of payments to the Contractor under the Contract until the Contractor complies, and/or
(b) cancellation, termination or suspension of the Contract, in whole or in part.

(6) **Incorporation of Provisions:** The Contractor shall include the provisions of paragraphs (1) through (6) in every subcontract, including procurements of materials and leases of equipment, unless exempt by the Regulations or directives issued pursuant thereto.

The Contractor shall take such action with respect to any subcontract or procurement as the Department or the Federal Highway Administration may direct as a means of enforcing such provisions, including sanctions for non-compliance; provided, however, that in the event the Contractor becomes involved in or is threatened with litigation with a subcontractor or supplier as a result of such direction, the Contractor may request the Department to enter into such litigation to protect the interests of the Department and, in addition, the Contractor may request the United States to enter into such litigation to protect the interests of the United States.

APPENDIX

CERTIFICATIONS

Dated: 6/27/2011

CERTIFICATION FOR TITLE VI ASSURANCE

I, _____, _____ a duly authorized representative of
(Name) *(Title)*

_____ do hereby certify that the organization affirmatively agrees to the provisions
(Company)

set forth below:

1. **The Certificate.**

   For all contracts subject to Title VI of the Civil Rights Act of 1964, 42 U.S.C. part 2000d – 2000d4 (the Act) and 49 C.F.R. Part 21, Nondiscrimination in Federally-Assisted Programs of the Department of Transportation – Effectuation of Title VI of the Civil Rights Act of 1964 (the Regulations), prospective bidders shall be required to complete a Certification affirming compliance with the Act and the Regulations.

2. **Certification.**

   By submission of a Proposal, each bidder and each person signing a Proposal subject to the Act and the Regulations certifies that the bidder shall affirmatively agree as follows:

   (a) **Compliance with Regulations:**

   The bidder shall comply with the regulations relative to nondiscrimination in federally-assisted programs of the Department, 49 C.F.R. Part 21, as they may be amended from time to time.

   (b) **Nondiscrimination:**

   The bidder shall not discriminate on the grounds of race, color, sex, national origin, age, or disability in the selection and retention of subcontractors, including procurements of materials and leases of equipment. The bidder shall not participate either directly or indirectly in the discrimination prohibited by section 21.5 of the Regulations, including employment practices when the Contract covers a program set forth in Appendix B of the Regulations.

   (c) **Solicitations for Subcontractors, Including Procurements of Materials and Equipment:**

   In all solicitations either by competitive bidding or negotiation made by the bidder for work to be performed under a subcontract, including procurements of materials or leases of equipment, each potential subcontractor or supplier shall be notified by the bidder of its obligations relative to nondiscrimination on the grounds of race, color, sex, national origin, age, or disability.

   (d) **Information and Reports:**

   The bidder shall provide all information and reports required by the Regulations or directives issued pursuant thereto, and shall permit access to its books, records, accounts, other sources of information, and its facilities as may be determined by the Department or the Federal Highway Administration to be pertinent to ascertain compliance with such Regulations, orders and instructions. Where any information required of the bidder is in the exclusive possession of another who fails or refuses to furnish this information, the bidder shall so certify to the Department, or the Federal Highway Administration, as appropriate, and shall set forth what efforts it has made to obtain the information.

   (e) **Sanctions for Noncompliance:**

   In the event of the bidder's noncompliance with the nondiscrimination provisions, the Department shall impose such contract sanctions as it or the Federal Highway Administration may determine to be appropriate, including, but not limited to:

   (1) withholding of payments under the Contract until the bidder complies, and/or

   (2) cancellation, termination or suspension of the Contract, in whole or in part.

   (f) **Incorporation of Provisions:**

The bidder shall include the provisions of paragraphs (a) through (f) in every subcontract, including procurements of materials and leases of equipment, unless exempt by the Regulations or directives issued pursuant thereto.

The bidder shall take such action with respect to any subcontract or procurement as the Department or the Federal Highway Administration may direct as a means of enforcing such provisions, including sanctions for noncompliance; provided, however, that in the event the bidder becomes involved in or is threatened with litigation with a subcontractor or supplier as a result of such direction, the bidder may request the Department to enter into such litigation to protect the interests of the Department and, in addition, the bidder may request the United States to enter into such litigation to protect the interests of the United States.

49 CFR Part 29 - Appendix A

CERTIFICATION REGARDING DEBARMENT, SUSPENSION, AND OTHER RESPONSIBILITY MATTERS--PRIMARY COVERED TRANSACTIONS

Instructions For Certification

1. By signing and submitting this proposal, the prospective primary participant is providing the certification set out below.

2. The inability of a person to provide the certification required below will not necessarily result in denial of participation in this covered transaction. The prospective participant shall submit an explanation of why it cannot provide the certification set out below. The certification or explanation will be considered in connection with the department or agency's determination whether to enter into this transaction. However, failure of the prospective primary participant to furnish a certification or an explanation shall disqualify such person from participation in this transaction.

3. The certification in this clause is a material representation of fact upon which reliance was placed when the department or agency determined to enter into this transaction. If it is later determined that the prospective primary participant knowingly rendered an erroneous certification, in addition to other remedies available to the Federal Government, the department or agency may terminate this transaction for cause or default.

4. The prospective primary participant shall provide immediate written notice to the department or agency to which this proposal is submitted if at any time the prospective primary participant learns that its certification was erroneous when submitted or has become erroneous by reason of changed circumstances.

5. The terms covered transaction, debarred, suspended, ineligible, lower tier covered transaction, participant, person, primary covered transaction, principal, proposal, and voluntarily excluded, as used in this clause, have the meanings set out in the Definitions and Coverage sections of the rules implementing Executive Order 12549. You may contact the department or agency to which this proposal is being submitted for assistance in obtaining a copy of those regulations.

6. The prospective primary participant agrees by submitting this proposal that, should the proposed covered transaction be entered into, it shall not knowingly enter into any lower tier covered transaction with a person who is proposed for debarment under 48 CFR part 9, subpart 9.4, debarred, suspended, declared ineligible, or voluntarily excluded from participation in this covered transaction, unless authorized by the department or agency entering into this transaction.

7. The prospective primary participant further agrees by submitting this proposal that it will include the clause titled ``Certification Regarding Debarment, Suspension, Ineligibility and Voluntary Exclusion- Lower Tier Covered Transaction," provided by the department or agency entering into this covered transaction, without modification, in all lower tier covered transactions and in all solicitations for lower tier covered transactions.

8. A participant in a covered transaction may rely upon a certification of a prospective participant in a lower tier covered transaction that it is not proposed for debarment under 48 CFR part 9, subpart 9.4, debarred, suspended, ineligible, or voluntarily excluded from the covered transaction, unless it knows that the certification is erroneous. A participant may decide the method and frequency by which it determines the eligibility of its principals. Each participant may, but is not required to, check the List of Parties Excluded from Federal Procurement and Nonprocurement Programs.

9. Nothing contained in the foregoing shall be construed to require establishment of a system of records in order to render in good faith the certification required by this clause. The knowledge and information of a participant is not required to exceed that which is normally possessed by a prudent person in the ordinary course of business dealings.

10. Except for transactions authorized under paragraph 6 of these instructions, if a participant in a covered transaction knowingly enters into a lower tier covered transaction with a person who is proposed for debarment under 48 CFR part 9, subpart 9.4, suspended, debarred, ineligible, or voluntarily excluded from participation in this transaction, in addition to other remedies available to the Federal Government, the department or agency may terminate this transaction for cause or default.

CERTIFICATION REGARDING DEBARMENT, SUSPENSION, AND OTHER RESPONSIBILITY MATTERS--PRIMARY COVERED TRANSACTIONS

(1) The prospective primary participant certifies to the best of its knowledge and belief, that it and its principals:

(a) Are not presently debarred, suspended, proposed for debarment, declared ineligible, or voluntarily excluded by any Federal department or agency;

(b) Have not within a three-year period preceding this proposal been convicted of or had a civil judgment rendered against them for commission of fraud or a criminal offense in connection with obtaining, attempting to obtain, or performing a public (Federal, State or local) transaction or contract under a public transaction; violation of Federal or State antitrust statutes or commission of embezzlement, theft, forgery, bribery, falsification or destruction of records, making false statements, or receiving stolen property;

(c) Are not presently indicted for or otherwise criminally or civilly charged by a governmental entity (Federal, State or local) with commission of any of the offenses enumerated in paragraph (1)(b) of this certification;

(d) Have not within a three-year period preceding this application/proposal had one or more public transactions (Federal, State or local) terminated for cause or default.

(2) Where the prospective primary participant is unable to certify to any of the statements in this certification, such prospective participant shall attach an explanation to this proposal.

Signature/Authorized Certifying Official	Typed Name and Title
Applicant/Organization	Date Signed

49 CFR Part 29 - Appendix B

CERTIFICATION REGARDING DEBARMENT, SUSPENSION, INELIGIBILITY AND VOLUNTARY EXCLUSION--LOWER TIER COVERED TRANSACTIONS

Instructions For Certification

1. By signing and submitting this proposal, the prospective lower tier participant is providing the certification set out below.

2. The certification in this clause is a material representation of fact upon which reliance was placed when this transaction was entered into. If it is later determined that the prospective lower tier participant knowingly rendered an erroneous certification, in addition to other remedies available to the Federal Government the department or agency with which this transaction originated may pursue available remedies, including suspension and/or debarment.

3. The prospective lower tier participant shall provide immediate written notice to the person to which this proposal is submitted if at any time the prospective lower tier participant learns that its certification was erroneous when submitted or had become erroneous by reason of changed circumstances.

4. The terms covered transaction, debarred, suspended, ineligible, lower tier covered transaction, participant, person, primary covered transaction, principal, proposal, and voluntarily excluded, as used in this clause, have the meaning set out in the Definitions and Coverage sections of rules implementing Executive Order 12549. You may contact the person to which this proposal is submitted for assistance in obtaining a copy of those regulations.

5. The prospective lower tier participant agrees by submitting this proposal that, should the proposed covered transaction be entered into, it shall not knowingly enter into any lower tier covered transaction with a person who is proposed for debarment under 48 CFR part 9, subpart 9.4, debarred, suspended, declared ineligible, or voluntarily excluded from participation in this covered transaction, unless authorized by the department or agency with which this transaction originated.

6. The prospective lower tier participant further agrees by submitting this proposal that it will include this clause titled ``Certification Regarding Debarment, Suspension, Ineligibility and Voluntary Exclusion-Lower Tier Covered Transaction," without modification, in all lower tier covered transactions and in all solicitations for lower tier covered transactions.

7. A participant in a covered transaction may rely upon a certification of a prospective participant in a lower tier covered transaction that it is not proposed for debarment under 48 CFR part 9, subpart 9.4, debarred, suspended, ineligible, or voluntarily excluded from covered transactions, unless it knows that the certification is erroneous. A participant may decide the method and frequency by which it determines the eligibility of its principals. Each participant may, but is not required to, check the List of Parties Excluded from Federal Procurement and Nonprocurement Programs.

8. Nothing contained in the foregoing shall be construed to require establishment of a system of records in order to render in good faith the certification required by this clause. The knowledge and information of a participant is not required to exceed that which is normally possessed by a prudent person in the ordinary course of business dealings.

9. Except for transactions authorized under paragraph 5 of these instructions, if a participant in a covered transaction knowingly enters into a lower tier covered transaction with a person who is proposed for debarment under 48 CFR part 9, subpart 9.4, suspended, debarred, ineligible, or voluntarily excluded from participation in this transaction, in addition to other remedies available to the Federal Government, the department or agency with which this transaction originated may pursue available remedies, including suspension and/or debarment.

CERTIFICATION REGARDING DEBARMENT, SUSPENSION, INELIGIBILITY AN VOLUNTARY EXCLUSION--LOWER TIER COVERED TRANSACTIONS

(1) The prospective lower tier participant certifies, by submission of this proposal, that neither it nor its principals is presently debarred, suspended, proposed for debarment, declared ineligible, or voluntarily excluded from participation in this transaction by any Federal department or agency.

(2) Where the prospective lower tier participant is unable to certify to any of the statements in this certification, such prospective participant shall attach an explanation to this proposal.

Signature/Authorized Certifying Official	Typed Name and Title
Applicant/Organization	Date Signed

Revised: 5/15/92

BID CONDITIONS

NOTICE OF REQUIREMENT FOR AFFIRMATIVE ACTION TO ENSURE EQUAL OPPORTUNITY (Executive Order 11246)

1. The Offeror's or Bidder's attention is called to the "Equal Opportunity Clause" and the "Standard Federal Equal Employment Opportunity Construction Contract Specifications set forth herein.

2. The goals and timetables for minority and female participation, expressed in percentage terms for the Contractor's aggregate work force in each trade on all construction work in the covered area, are as follows:

Timetables	Goals for Minority Participation for Each Trade	Goals for Female Participation in Each Trade
	3.0% R.I. Except Newport County	6.9%
	3.1% Newport County	6.9%

These goals are applicable to all the Contractor's construction work (whether or not it is Federal or Federally assisted) performed in the covered area. If the Contractor performs construction work in a geographical area located outside of the covered area, it shall apply the goals established for such geographical area where the work is actually performed. With regard to this second area, the Contractor also is subject to the goals for both its federally involved and nonfederally involved construction.

The Contractor's compliance with the Executive Order and the regulations in 41 CFR Part 60-4 shall be based on its implementation of the Equal Opportunity Clause, specific affirmative action obligations required by the specifications set forth in 41 CFR 60-4.3(a), and its efforts to met the goals. The hours of minority and female employment and training must be substantially uniform throughout the length of the contract, and in each trade, and the Contractor shall make a good faith effort to employ minorities and women evenly on each of its projects. The transfer of minority or female employees or trainees from Contractor to Contractor or from project to project for the sole purpose of meeting the Contractor's goals shall be a violation of the contract, Executive Order and the regulations in 41 CFR Part 60-4. Compliance with the goals will be measured against the total work hours performed.

3. The Contractor shall provide written notification to the Director of the Office of Federal Contract Compliance Programs through the Area Director, OFCCP, 169 Weybosset Street, Providence, Rhode Island 02903, within 10 working days of award of any construction subcontract in excess of $10,000.00 at any tier for construction work under the contract resulting from this solicitation. The notification shall list the name, address and telephone number of the Subcontractor; employer identification number; estimated dollar amount of the subcontract; estimated starting and completion dates of the subcontract; and the geographical area in which the contract is to be performed.

4. As used in this Notice, and in the contract resulting from this Solicitation, the "covered area" is the State of Rhode Island.

STANDARD FEDERAL EQUAL EMPLOYMENT OPPORTUNITY
CONSTRUCTION CONTRACT SPECIFICATIONS
(Executive Order 11246)

1. As used in these specifications:

   (a) "Covered area" means the geographical area described in the solicitation from which this contract resulted.

   (b) "Director" means Director, Office of Federal Contract Compliance Programs United States Department of Labor, or any person to whom the Director delegates authority.

   (c) "Employer identification number" means the Federal Social Security number used on the Employer's Quarterly Federal Tax Return, U.S. Treasury Department Form 941.

   (d) "Minority" includes:

      (i) Black (all persons having origins in any of the Black African racial groups not of Hispanic origin);

      (ii) Hispanic (all persons of Mexican, Puerto Rican, Cuban, Central or South American or other Spanish Culture or origin, regardless of race);

      (iii) Asian and Pacific Islander (all persons having origins in any of the original peoples of the Far East, Southeast Asia, the Indian Subcontinent, or the Pacific Islands); and

      (iv) American Indian or Alaskan Native (all persons having origins in any of the original peoples of North America and maintaining identifiable tribal affiliations through membership and participation or community identifi- cation).

2. Whenever the Contractor, or any Subcontractor at any tier subcontracts a portion of the work involving any construction trade, it shall physically include in each subcontract in excess of $10,000.00 the provisions of these specifications and the Notice which contains the applicable goals for minority and female participation and which is set forth in the solicitations from which this contract resulted.

3. If the Contractor is participating (pursuant to 41 CFR 60-4.5) in a Hometown Plan approved by the U.S. Department of Labor in the covered area either individually or through an association, its affirmative action obligations on all work in the Plan area (including goals and timetables) shall be in accordance with that Plan for those trades which have unions participating in the Plan. Contractors must be able to demonstrate their participation in and compliance with the provisions of any such Hometown Plan. Each Contractor or Subcontractor participating in an approved Plan is individually required to comply with its obligations under the EEO clause, and to make a good faith effort to achieve each goal under the Plan in each trade in which it has employees. The overall good faith performance by other Contractors or Subcontractors toward a goal in a approved Plan does not excuse any covered Contractor's or Subcontractor's failure to take good faith efforts to achieve the Plan goals and timetables.

4. The Contractor shall implement the specific affirmative action standards provided in paragraphs 7a through p of these specifications. The goals set forth in the solicitation from which this contract resulted are expressed as percentages of the total hours of employment and training of minority and female utilization the Contractor should reasonably be able to achieve in each construction trade in which it has employees in the covered area. Covered Construction Contractors performing construction work in geographical areas where they do not have a Federal or federally assisted construction contract shall apply the minority and female goals established for the geographical

area where the work is being performed. Goals are published periodically in the Federal Register in notice form, and such notices may be obtained from any Office of Federal Contract Compliance Programs office or from Federal procurement contracting officers. The Contractor is expected to make substantially uniform progress in meeting its goals in each craft during the period specified.

5. Neither the provisions of any collective bargaining agreement, nor the failure by a union with whom the Contractor has a collective bargaining agreement, to refer either minorities or women shall excuse the Contractor's obligations under these specifications, Executive Order 11246, or the regulations promulgated pursuant thereto.

6. In order for the nonworking training hours of apprentices and trainees to be counted in meeting the goals such apprentices and trainees must be employed by the Contractor during the training period, and the Contractor must have made a commitment to employ the apprentices and trainees at the completion of their training, subject to the availability to employment opportunities. Trainees must be trained pursuant to training programs approved by the U.S. Department of Labor.

7. The Contractor shall take specific affirmative actions to ensure equal employment opportunity. The evaluation of the Contractor's compliance with these specifications shall be based upon its effort to achieve maximum results from its actions. The Contractor shall document these efforts fully, and shall implement affirmative action steps at least as extensive as the following:

   (a) Ensure and maintain a working environment free of harassment, intimidation and coercion at all sites, and in all facilities at which the Contractor's employees are assigned to work. The Contractor, where possible, will assign two or more women to each construction project. The Contractor shall specifically ensure that all on site supervisory personnel are aware of and carry out the Contractor's obligation to maintain such a working environment, with specific attention to minority or female individuals working at such sites or in such facilities.

   (b) Establish and maintain a current list of minority and female recruitment sources, provide written notification to minority and female recruitment sources and to community organizations when the Contractor or its unions have employment opportunities available, and maintain a record of the organization responses.

   (c) Maintain a current file of the names, addresses and telephone numbers of each minority and female off-the-street applicant and minority or female referral from a union, a recruitment source or community organization and of what action was taken with respect to each such individual. If such individual was sent to the union hiring hall for referral and was not referred back to the Contractor by the union or, if referred, not employed by the Contractor, this shall be documented in the file with the reason therefor, along with whatever additional actions the Contractor may have taken.

   (d) Provide immediate written notification to the Director when the union or unions with which the Contractor has a collective bargaining agreement has not referred to the Contractor a minority person or woman sent by the Contractor, or when the Contractor has other information that the union referral process has impeded the Contractor's efforts to meet its obligations.

   (e) Develop on-the-job training opportunities and/or participate in training programs for the area which expressly include minorities and women, including upgrading programs and apprenticeship and trainee programs relevant to the Contractor's employment needs, especially those programs funded or approved by the Department of Labor. The Contractor shall provide notice of these programs to the sources complied under 7b above.

   (f) Disseminate the Contractor's EEO policy by providing notice of the policy to unions and training programs and requesting their cooperation is assisting the Contractor in meeting its EEO obligations; by including it in any policy manual and collective bargaining agreement; by publicizing it in the company newspaper, annual report, etc.; by specific review of the policy with all management personnel and with all minority and female employees at least once a year; and by posting the company EEO policy on bulletin boards

accessible to all employees at each location where construction work is performed.

(g) Review, at least annually, the company's EEO policy and affirmative action obligations under these specifications with all employees having any responsibility for hiring, assignment, layoff, termination or other employment decisions including specific review of these items with on site supervisory personnel such as Superintendents, Supervisors, etc., prior to the initiation of construction work at any job site. A written record shall be made and maintained identifying the time and place of these meetings, persons attending, subject matter discussed, and disposition of the subject matter.

(h) Disseminate the Contractor's EEO policy externally by including it in any advertising in the news media, specifically including minority and female news media, and providing written notification to and discussing the Contractor's EEO policy with other Contractors and Subcontractors with whom the Contractor does or anticipates doing business.

(i) Direct its recruitment efforts, both oral and written, to minority female and community organizations, to schools with minority and female students and to minority and female recruitment and training organizations serving the Contractor's recruitment area and employment needs. Not later than one month prior to the date for the acceptance of applications for apprenticeship or other training by any recruitment source, the Contractor shall send written notification to organizations such as the above, describing the openings, screening procedures, and tests to be used in the selection procedures.

(j) Encourage present minority and female employees to recruit other minority persons and women and, where reasonable, provide after school, summer and vacation employment to minority and female youth both on the site and in other areas of a Contractor's work force.

(k) Validate all tests and other selection requirements where there is an obligation to do so under 41 CFR Part 60-3.

(l) Conduct, at least annually, an inventory and evaluation of all minority and female personnel for promotional opportunities and encourage these employees to seek or to prepare for, through appropriate training, etc., such opportunities.

(m) Ensure that seniority practices, job classifications, work assignments and other personnel practices, do not have a discriminatory effect by continually monitoring all personnel and employment related activities to ensure that the EEO policy and the Contractor's obligations under these specifications are being carried out.

(n) Ensure that all facilities and company activities are nonsegregated except that separate or single-user toilet and necessary changing facilities shall be provided to assure privacy between the sexes.

(o) Document and maintain a record of all solicitations of offers for subcontracts from minority and female construction contractors and suppliers, including circulation of solicitations to minority and female contractor associations and other business associations.

(p) Conduct a review, at least annually, of all supervisors' adherence to and performance under the Contractor's EEO policies and affirmative action obligations.

8. Contractors are encouraged to participate in voluntary associations which assist in fulfilling one or more of their affirmative action obligations (7a through p). The efforts of a contractor associations, joint contractor union, contractor-community, or other similar group of which the Contractor is a member and participant, may be asserted as fulfilling any one or more of its obligations under 7a through p of these Specifications provided that the Contractor actively participates in the group, makes every effort to assure that the group has a positive impact on the employment of minorities and women in the industry, ensures that the concrete benefits of the program are reflected in the Contractor's minority and female work force participation, makes a good faith effort to meet its individual goals and timetables, and can provide access to documentation which demonstrates the effectiveness of

actions taken on behalf of the Contractor. The obligation to comply, however, is the Contractor's and failure of such a group to fulfill an obligation shall not be a defense for the Contractor's noncompliance.

9. A single goal for minorities and a separate single goal for women have been established. The Contractor, however, is required to provide equal employment opportunity and to take affirmative action for all minority groups, both male and female, and all women, both minority and nonminority. Consequently, the Contractor may be in violation of the Executive Order if a particular group is employed in a substantially disparate manner (for example, even though a Contractor has achieved its goals for women generally, the Contractor may be in violation of the Executive Order if a specific minority group of women is underutilized).

10. The Contractor shall not use the goals and timetables or affirmative action standards to discriminate against any person because of race, color, religion, sex, or national origin.

11. The Contractor shall not enter into any subcontract with any person or firm debarred from Government contracts pursuant to Executive Order 11246.

12. The Contractor shall carry out such sanctions and penalties for violation of these specifications and of the Equal Opportunity Clause, including suspension, termination and cancellation of existing subcontracts as may be imposed or ordered pursuant to Executive Order 11246, as amended, and its implementing regulations, by the Office of Federal Contract Compliance Programs. Any Contractor who fails to carry out such sanctions and penalties shall be in violation of these specifications and Executive Order 11246, as amended.

13. The Contractor, in fulfilling its obligations under these specifications shall implement specific affirmative action steps, at least as extensive as those standards prescribed in paragraph 7 of these specifications, so as to achieve maximum results from its efforts to ensure equal employment opportunity. If the Contractor fails to comply with the requirements of the Executive Order, the implementing regulations, or these specifications, the Director shall proceed in accordance with 41 CFR 60-4.8.

14. The Contractor shall designate a responsible official to monitor all employment related activity to ensure that the company EEO policy is being carried out, to submit reports relating to the provisions hereof as may be required by the Government and to keep records. Records shall at least include for each employee the name, address, telephone numbers, construction trade, union affiliation, if any, employee identification number when assigned, social security number, race, sex, status (e.g., mechanic, apprentice, trainee,helper, or laborer), dates of changes in status, hours worked per week in the indicated trade, rate of pay, and locations at which the work was performed. Records shall be maintained in an easily understandable and retrievable form; however, to the degree that existing records satisfy this requirement, Contractors shall not be required to maintain separate records.

15. Nothing herein provided shall be construed as a limitation upon application of other laws which establish different standards of compliance or upon the application of requirements for the hiring of local or other area residents (e.g., those under the Public Works Employment Act of 1977 and the Community Development Block Grant Program.).

    (a) A Form 257, Monthly Employment Utilization Report, is to be completed by both Contractor and Subcontractors, and signed by the designated EEO Officer or an authorized representative of the prime or subcontractor. The reports are to be submitted by the 5th of each month during the term of the contract. The Contractor shall submit an aggregate Form 257 showing its entire work force, minority work force, and female work force (in work hours), on all construction work (Federal and non-federally assisted) in the covered area. The Contractor shall collect and submit reports for each Subcontractor's aggregate work force, providing the same information as above.

    (b) The Contractor shall submit a Form PR-1391, Federal-Aid Highway Construction Contractors' Annual EEO Report, to be completed by the Contractor and each Subcontractor for every month of July, during which work was performed and submitted to the State. **A separate report is to be completed for each Contractor and subcontractor holding contracts or subcontracts exceeding $10,000.00, except where specified.** The employment data entered should reflect the work force on board during all or any part of

the last payroll period preceding the end of the month of July.

NOTE: Include the R.I. Contract Number in the upper right hand corner of the form.

(c) The Contractor shall submit a Form EEO-10, Federal-Aid Highway Construction Contractors' Semiannual Training Report, to be completed by the Contractor semiannually for each individual employed on this contract (including any subcontractors under it who have provided training during the reporting period under the training special provision). This report is to be submitted by the 20th of the month following the reporting period (July 20 and January 20). The original of this report is to be furnished to the trainee, and two (2) copies submitted to the State.

These reports are required by the Public Laws of Rhode Island (1960), Chapters 85, 96, & 88; 23 U.S.C., 140(a); 23 CFR, Part 23; and Executive Order 11246.

Revised: 4/12/2002

ANTI-COLLUSION CERTIFICATE FOR CONTRACT AND FORCE ACCOUNT
[Unsworn Declaration]

Title 23, United States Code, Section 112(c), requires, as a condition precedent to approval by the Director of Public Roads of the contract for this work, that there be filed an unsworn declaration executed by, on behalf of, the person, firm, association, or corporation submitting the bid certifying that such person, firm, association, or corporation has not either directly or indirectly, entered into any agreement, participated in any collusion, or otherwise taken any action, in restraint of free competitive bidding in connection with the submitted bid. This unsworn statement shall be in the form of a declaration executed under penalty of perjury under the laws of the United States.

To the: **STATE OF RHODE ISLAND AND PROVIDENCE PLANTATIONS**
DEPARTMENT OF TRANSPORTATION, DIVISION OF PUBLIC WORKS

State of _____

County of _____

I, _____, _____, under penalty under the laws of the United States, do depose and say:

On behalf of _____, of _____ that said Contractor has not, either directly or indirectly, entered into any agreement, participated in any collusion, or otherwise taken any action in restraint of free competitive bidding in connection with Rhode Island Contract Number , Federal-Aid Project Number , County of , Town-City , Road-Bridge .

FED. ROAD DIV. NO.	STATE	FEDERAL AID PROJECT NO.	FISCAL YEAR	SHEET NO.	TOTAL SHEETS
	RI		2016	1	17

INDEX OF DRAWINGS

SHEET No.	DESCRIPTION
1	LOCUS MAP AND NOTES
	PONTIAC BRIDGE NO. 185
2	STEEL BEAM REPAIR DETAILS
	LAFAYETTE RAILROAD BRIDGE NO. 243
3	GENERAL PLAN AND NOTES
4	STRUCTURAL CONC. MASONRY REPAIR DETAILS - SHEET 1
5	STRUCTURAL CONC. MASONRY REPAIR DETAILS - SHEET 2
6	STEEL BEAM REPAIR DETAILS
7	TEMPORARY SHORING DETAILS
	CLYDE BRIDGE NO. 382
8	STEEL BEAM REPAIR DETAILS AREA #1
9	STEEL BEAM REPAIR DETAILS AREA #2
	BREAKNECK HILL ROAD BRIDGE NO. 416
10	STEEL BEAM REPAIR DETAILS AREA #1
11	STEEL BEAM REPAIR DETAILS AREA #2
	MESHANTICUT VIADUCT BRIDGE NO. 423
12	STEEL BEAM REPAIR DETAILS
	PHENIX AVENUE BRIDGE NO. 729
13	STEEL GIRDER REPAIR DETAILS AREA #1
14	STEEL GIRDER REPAIR DETAILS AREA #2 AND #3
15-17	MAINTENANCE AND PROTECTION OF TRAFFIC PLANS SHEET 1-3

STEEL BEAM/GIRDER REPAIR NOTES:

1. FOR LOCATION OF STRUCTURAL STEEL REPAIRS, REFER TO EACH INDIVIDUAL BRIDGE GENERAL PLAN.
2. UNLESS OTHERWISE APPROVED BY THE ENGINEER, ALL BOLT HOLES IN NEW STRUCTURAL STEEL COMPONENTS SHALL BE SHOP DRILLED, 13/16" DIAMETER HOLES.
3. ALL BOLT HOLES IN EXISTING STRUCTURAL STEEL MEMBERS SHALL BE FIELD DRILLED 13/16" DIAMETER.
4. THE EXACT LOCATION OF FIELD DRILLED BOLT HOLES TO BE DETERMINED IN THE FIELD.
5. WHERE BOLT LOCATIONS COINCIDE WITH HEAVILY DETERIORATED PORTIONS OF THE WEB OR FLANGE (MATERIAL LOSS GREATER THAN 1/8"), THE BOLTS SHALL HAVE DOUBLE NUTS. THE FIRST NUT SHALL BE SEATED SNUG TIGHT AGAINST THE SURFACE AND THEN HELD IN PLACE WITH A WRENCH WHILE TIGHTENING A SECOND NUT AGAINST IT.
6. LIMIT OF PAINTING EXISTING STRUCTURAL STEEL SHALL INCLUDE THE ENTIRE PERIMETER OF THE EXISTING BEAM, TO THE LIMITS SHOWN ON THE PLANS, INCLUDING THE EXPOSED SURFACES, AREAS OF THE BEARINGS AND ANCHOR BOLTS.
7. ALL STEEL REPAIRS SHALL BE PERFORMED AFTER THE EXISTING STEEL BEAMS HAVE BEEN SURFACE PREPPED AND PRIMED AND PRIOR TO THE APPLICATION OF THE FINISH COAT OF PAINT.
8. ALL NEW STEEL COMPONENTS SHALL RECEIVE A SHOP APPLIED COAT OF PRIMER. TOP COATS OF PAINT SHALL BE FIELD APPLIED AFTER INSTALLATION OF STEEL REPAIR COMPONENTS.
9. CONTRACTOR SHALL FIELD VERIFY EXISTING CONDITIONS AND PROPOSED REPAIR DIMENSIONS PRIOR TO FABRICATING STEEL REPAIRS.
10. THE CONTRACTOR SHALL BE RESPONSIBLE FOR OVERALL FIT OF ALL FIELD BOLTED CONNECTIONS. BOLT SPACING SHOWN MAY NEED TO BE ADJUSTED BASED ON ACTUAL FIELD CONDITIONS. FINAL BOLT SPACING AND DETAILS SHALL BE SUBMITTED WITH THE REQUIRED SHOP DRAWINGS FOR REVIEW AND APPROVAL PRIOR TO FABRICATION.
11. ALL AREAS OF EXISTING STRUCTURAL STEEL WITH SECTION LOSS, HOLES, VOIDS, ETC. SHALL BE FILLED WITH STRUCTURAL EPOXY RESIN PASTE PRIOR TO INSTALLING REPAIR PLATES.
12. ALL WELDING SHALL BE PERFORMED IN ACCORDANCE WITH THE LATEST EDITION OF THE ANSI/AASHTO/AWS D1.5 BRIDGE WELDING CODE. FOR APPLICATIONS NOT INCLUDED IN THAT CODE, AWS D1.1 SHALL BE USED.
13. WELDING ELECTRODES SHALL HAVE THE SAME CORROSION RESISTANCE AS THE BASE METAL AND SHALL BE FREE OF MOISTURE AT THE TIME OF USE.
14. THE STEEL ERECTOR/CONTRACTOR FOR THIS PROJECT SHALL BE CERTIFIED FOR "CERTIFIED STEEL ERECTOR (CSE)" IN ACCORDANCE WITH THE AISC QUALITY CERTIFICATION PROGRAM. THE ERECTOR/CONTRACTOR OF THE STRUCTURAL STEEL SHALL BE REQUIRED TO SUBMIT PROOF OF CURRENT CERTIFICATION AS SPECIFIED.

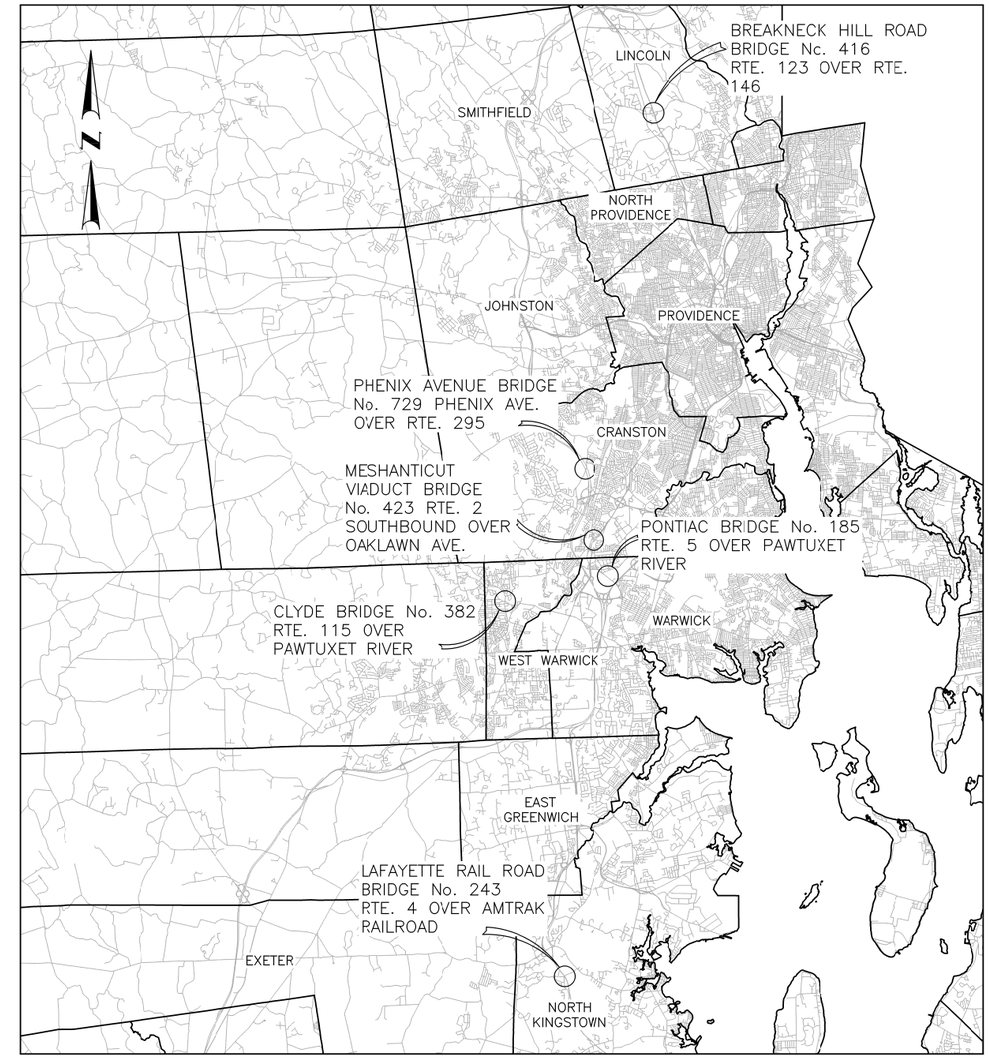

LOCUS MAP
NOT TO SCALE

REVISIONS		
NO.	DATE	BY

COMMONWEALTH ENGINEERS & CONSULTANTS, INC.
400 SMITH STREET
PROVIDENCE, RI 02908

RHODE ISLAND
DEPARTMENT OF TRANSPORTATION

EMERGENCY REPAIRS TO BRIDGES
185, 243, 382, 416, 423 & 729

RHODE ISLAND

LOCUS MAP
AND NOTES

CHECKED BY _____ DATE _____ SCALE AS SHOWN

0144L_V1_001_BCOVER

FED. ROAD DIV. NO.	STATE	FEDERAL AID PROJECT NO.	FISCAL YEAR	SHEET NO.	TOTAL SHEETS
	RI		2016	2	17

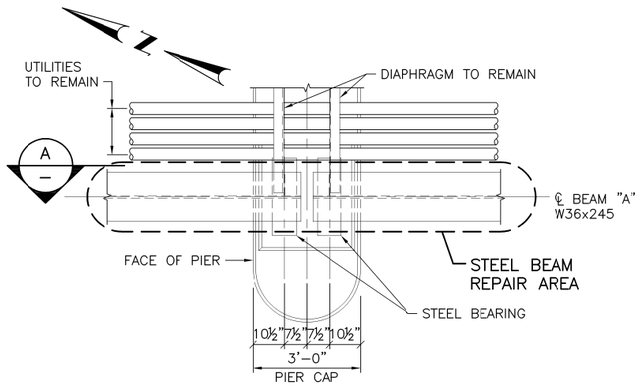

PIER – PLAN
SCALE:1/2"=1'-0"

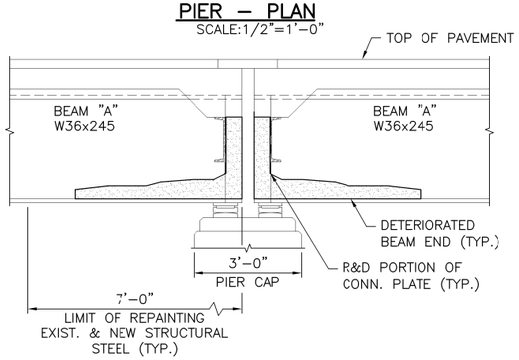

SECTION THRU PIER CAP (EXISTING)

SECTION A
SCALE:1/2"=1'-0"

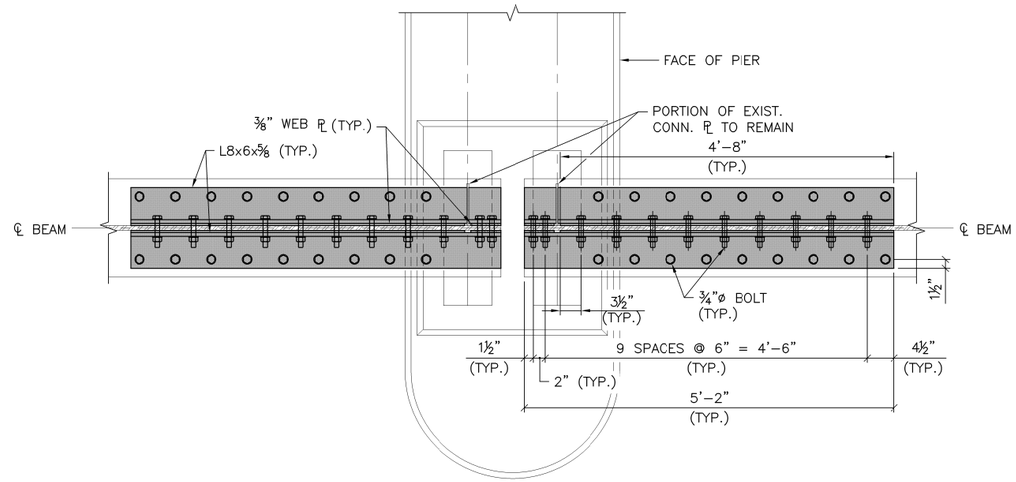

SECTION B
SCALE:1"=1'-0"

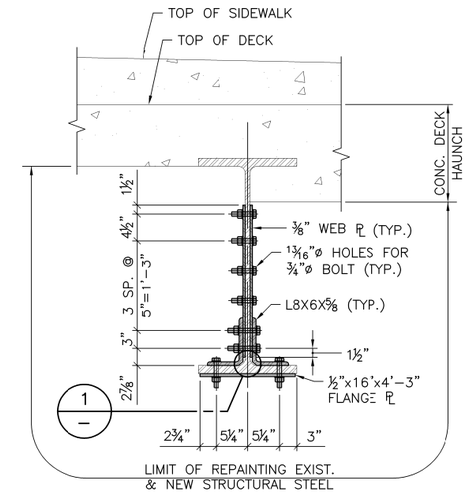

SECTION THRU PIER (PROPOSED)

SECTION C
SCALE:1"=1'-0"

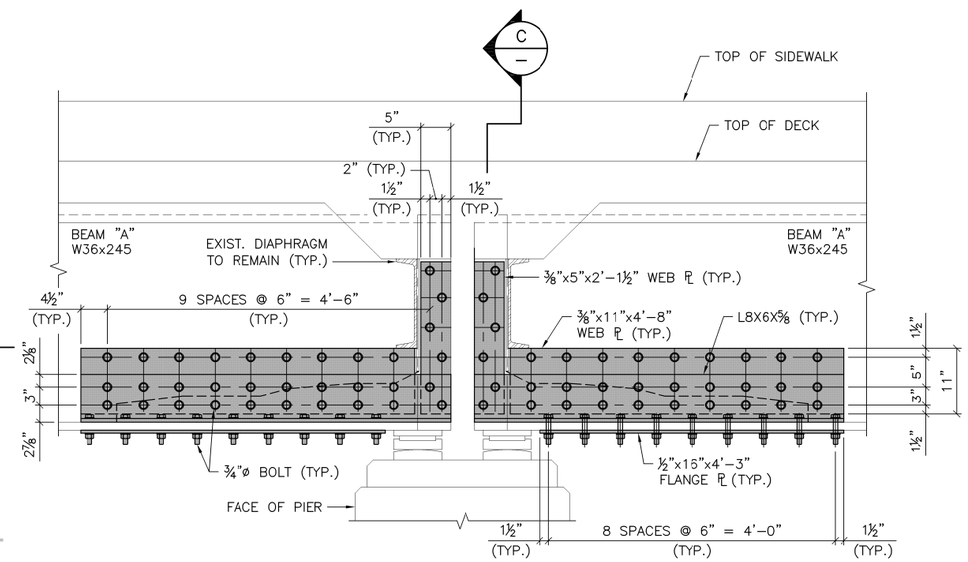

(PROPOSED)
SECTION THRU PIER
SCALE:1"=1'-0"

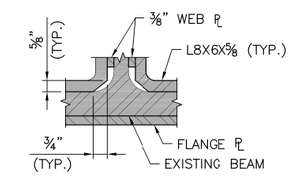

DETAIL 1
SCALE:3"=1'-0"

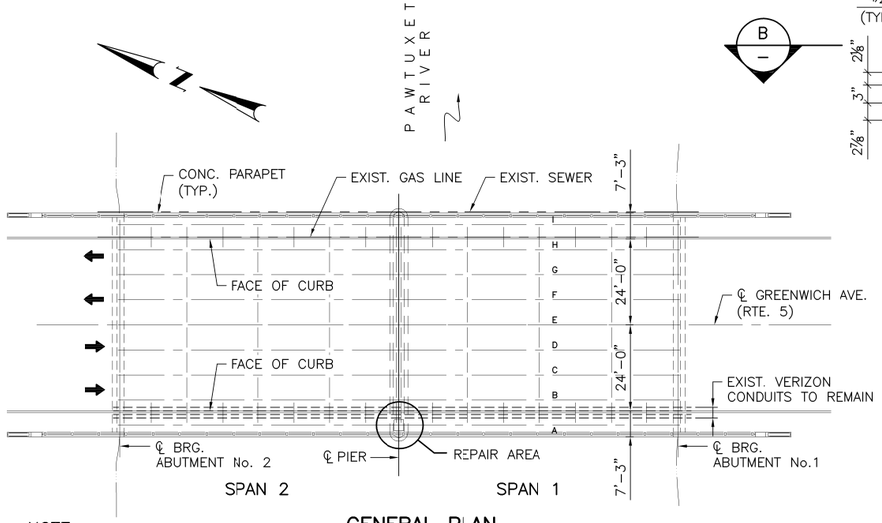

GENERAL PLAN
NOT TO SCALE

NOTE:
REMOVE DEBRIS FROM ADJACENT AREAS AS NECESSARY TO PERFORM WORK

NOTE:
REFER TO "LOCUS MAP AND NOTES" SHEET FOR "STEEL BEAM/GIRDER REPAIR NOTES".

COMMONWEALTH ENGINEERS & CONSULTANTS, INC.
100 SMITH STREET
PROVIDENCE, RI 02908

REVISIONS		
NO.	DATE	BY

RHODE ISLAND
DEPARTMENT OF TRANSPORTATION

EMERGENCY REPAIRS TO BRIDGES
185, 243, 382, 416, 423 & 729
PONTIAC BRIDGE No. 185
WARWICK, RHODE ISLAND

STEEL BEAM REPAIR DETAILS

CHECKED BY _____ DATE _____ SCALE AS SHOWN

0144L_V1_002_STLDETL001

FED. ROAD DIV. NO.	STATE	FEDERAL AID PROJECT NO.	FISCAL YEAR	SHEET NO.	TOTAL SHEETS
	RI		2016	3	17

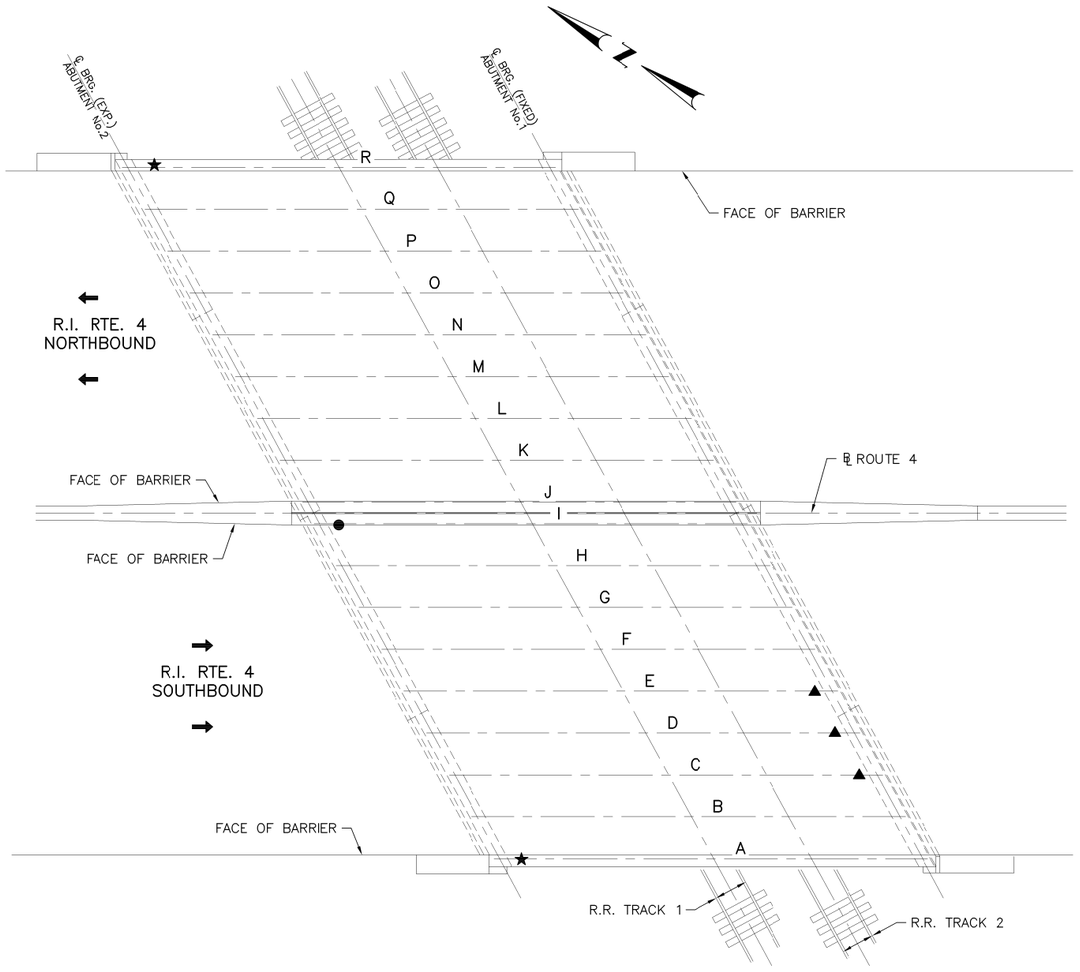

GENERAL PLAN

SCALE: 1"=10'-0"

LEGEND

▲ DENOTES LOCATION OF PROPOSED STRUCTURAL CONCRETE MASONRY REPAIR (PATCHING) TO CONCRETE BEAM SEAT

● DENOTES LOCATION OF PROPOSED STEEL BEAM REPAIR

★ DENOTES LOCATION OF PROPOSED STRUCTURAL CONCRETE MASONRY REPAIR (FORM AND CAST-IN-PLACE) TO CONCRETE BEAM SEAT AND ABUTMENT STEM. TEMPORARY JACKING AND SHORING OF BEAM REQUIRED TO PERFORM REPAIR.

REVISIONS		
NO.	DATE	BY

COMMONWEALTH ENGINEERS & CONSULTANTS, INC.
400 SMITH STREET
PROVIDENCE, RI 02908

RHODE ISLAND
DEPARTMENT OF TRANSPORTATION

EMERGENCY REPAIRS TO BRIDGES
185, 243, 382, 416, 423 & 729
LAFAYETTE RAILROAD BRIDGE No. 243
NORTH KINGSTOWN, RHODE ISLAND

GENERAL PLAN AND NOTES

CHECKED BY _____ DATE _____ SCALE AS SHOWN

0144_V1_003_BGENERAL

FED. ROAD DIV. NO.	STATE	FEDERAL AID PROJECT NO.	FISCAL YEAR	SHEET NO.	TOTAL SHEETS
	RI		2016	4	17

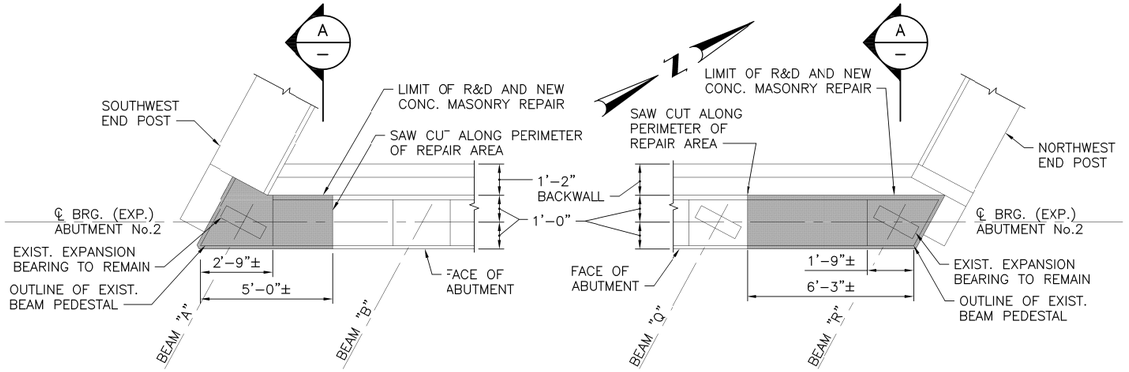

PARTIAL PLAN – SOUTH CORNER

PARTIAL PLAN – NORTH CORNER

STRUCTURAL CONCRETE MASONRY REPAIR AT ABUTMENT No. 2

SCALE: ⅜"=1'-0"

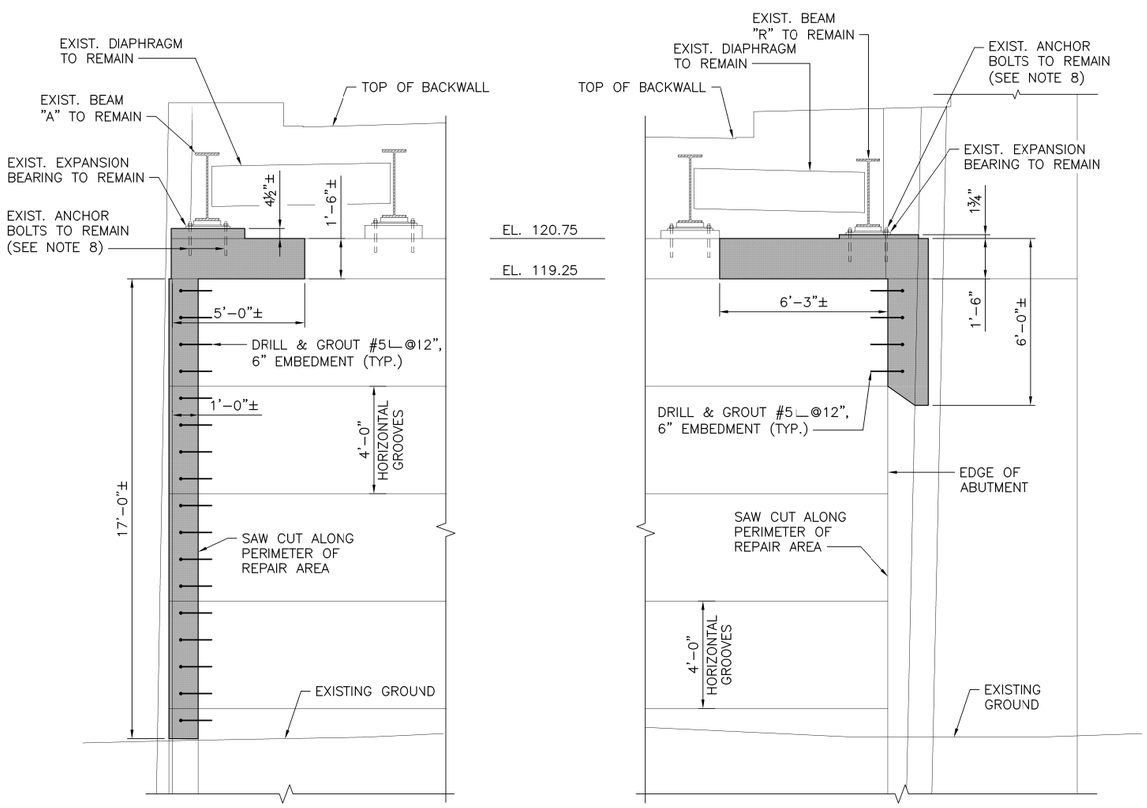

PARTIAL ELEVATION – SOUTH CORNER

PARTIAL ELEVATION – NORTH CORNER

STRUCTURAL CONCRETE MASONRY REPAIR AT ABUTMENT No. 2

SCALE: ⅜"=1'-0"

CONCRETE REHABILITATION NOTES:

1. ALL CONCRETE REPAIR WORK SHALL BE IN ACCORDANCE WITH THE R.I. STANDARD SPECIFICATIONS SECTION 817, "REPAIRS TO STRUCTURE CONCRETE MASONRY" AND THE SPECIAL PROVISIONS CONTAINED IN THE CONTRACT SPECIFICATIONS.
2. ALL LOOSE AND DELAMINATED CONCRETE SHALL BE REMOVED TO THE LIMITS SHOWN ON THE PLANS, OR TO A SOUND SURFACE AT THE DIRECTION OF THE ENGINEER. THE ENGINEER SHALL BE THE SOLE JUDGE IN DETERMINING THE SOUNDNESS OF THE CONCRETE TO REMAIN.
3. IN AREAS WHERE REINFORCING STEEL IS FOUND TO BE SURROUNDED BY DETERIORATED CONCRETE OR WHERE AT LEAST ONE-HALF OF THE REBAR SURFACE AREA IS EXPOSED THE DEPTH OF CONCRETE REMOVAL SHALL BE SUCH AS TO INCLUDE ALL DETERIORATED CONCRETE BUT NOT LESS THAN THAT DEPTH NECESSARY TO ALLOW FOR ONE INCH MINIMUM ANNULAR CLEARANCE AROUND THE REINFORCING BAR.
4. AFTER REMOVAL HAS BEEN COMPLETED, ALL BOND INHIBITING MATERIALS SUCH AS LOOSELY BONDED AGGREGATES, DIRT, OR GREASE, SHALL BE REMOVED FROM THE SURFACE BY SANDBLASTING OR BY OTHER SUITABLE METHODS APPROVED BY THE ENGINEER.
5. IF THE CORRODED REINFORCING HAS LOST MORE THAN 25% OF ITS ORIGINAL DIAMETER, THE REINFORCING STEEL SHALL BE SUPPLEMENTED WITH NEW REINFORCING BY PLACING THE NEW BAR PARALLEL TO THE EXISTING REINFORCING. NEW BARS CONSIDERED MAIN REINFORCEMENT SHALL BE EXTENDED BEYOND THE AFFECTED AREA IN EACH DIRECTION BY THE REQUIRED LAP LENGTHS (30 BAR DIAMETERS). IF NECESSARY, ADDITIONAL CHIPPING WILL BE REQUIRED TO PROVIDE THIS LAP. THE SIZE OF THE SUPPLEMENTAL REINFORCING SHALL MATCH THE EXISTING REINFORCING.
6. ALL HEAVY OXIDES AND SCALES SHALL BE REMOVED FROM AFFECTED REINFORCING BY SANDBLASTING OR BY OTHER SUITABLE METHODS APPROVED BY THE ENGINEER IN ORDER TO PROMOTE MAXIMUM BOND OF THE NEW CONCRETE.
7. THE CONTRACTOR SHALL PROVIDE A FINISHED REPAIR SURFACE TO MATCH THE EXISTING ADJACENT CONCRETE FINISH.
8. PRIOR TO INSTALLATION OF NEW CONCRETE MASONRY, THE CONTRACTOR SHALL THOROUGHLY CLEAN, REPAIR AND/OR REPLACE THE EXISTING ANCHOR BOLTS, AS NECESSARY TO THE SATISFACTION OF THE ENGINEER. THE COST FOR CLEANING OR REPAIRING EXISTING ANCHOR BOLTS AND/OR FURNISHING NEW ANCHOR BOLTS WILL BE CONSIDERED INCIDENTAL TO AND INCLUDED IN THE LUMP SUM REPAIRS.
9. THE CONTRACTOR SHALL ENSURE THAT THE EXISTING BEARING IS UNRESTRAINED IN THE VERTICAL DIRECTION PRIOR TO JACKING, SUCH THAT THE BEARING PROVIDES NO RESISTANCE TO THE JACKING. THIS CAN BE PERFORMED BY LOOSENING THE ANCHOR NUTS AND IF NEEDED GRINDING OUT THE WELDS CONNECTING THE BEAM FLANGE TO THE BEARING AFTER THE JACK HAS BEEN BROUGHT UP TIGHT AGAINST THE BEAM. IF THE WELDS CONNECTING THE BEAM FLANGE TO THE BEARING ARE GROUND OUT, THEY SHALL BE FIELD WELDED TOGETHER UPON COMPLETION OF THE WORK. OTHER METHODS FOR REMOVING THE BEARING-TO-FLANGE WELDS BESIDES GRINDING WILL NOT BE PERMITTED. ANCHOR NUTS SHALL BE TIGHTENED TO ORIGINAL POSITION UPON COMPLETION OF REPAIRS. THE COST OF FREEING (IF NECESSARY) AND RE-ATTACHING THE BEARING SHALL BE CONSIDERED INCIDENTAL TO THE WORK.
10. THE CONTRACTOR SHALL BE WARNED THAT THE EXISTING BEARING MAY BECOME UNSTABLE ONCE THE WEIGHT OF THE STRUCTURE HAS BEEN TRANSFERRED TO THE JACK., AND SHALL TAKE NECESSARY PRECAUTIONS TO PREVENT THE BEARING FROM FALLING AND CAUSING DAMAGE OR INJURY.

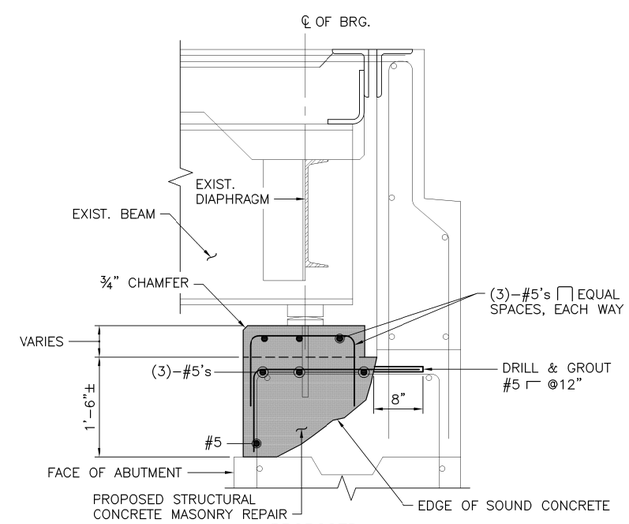

PROPOSED

SECTION A/–

SCALE: 1"=1'-0"

COMMONWEALTH ENGINEERS & CONSULTANTS, INC.
400 SMITH STREET
PROVIDENCE, RI 02908

REVISIONS		
NO.	DATE	BY

RHODE ISLAND
DEPARTMENT OF TRANSPORTATION

EMERGENCY REPAIRS TO BRIDGES
185, 243, 382, 416, 423 & 729
LAFAYETTE RAILROAD BRIDGE No. 243
NORTH KINGSTOWN, RHODE ISLAND

STRUCTURAL CONC. MASONRY REPAIR DETAILS - SHEET 1

CHECKED BY _____ DATE _____ SCALE AS SHOWN

0144L_V1_004_CONCDETL001

FED. ROAD DIV. NO.	STATE	FEDERAL AID PROJECT NO.	FISCAL YEAR	SHEET NO.	TOTAL SHEETS
	RI		2016	5	17

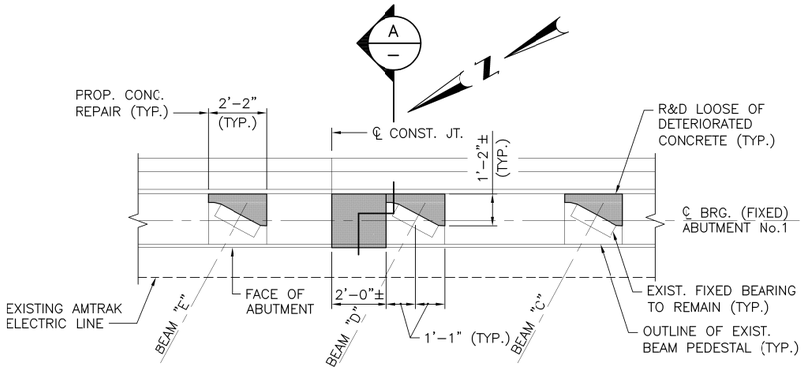

PARTIAL PLAN – ABUTMENT No.1

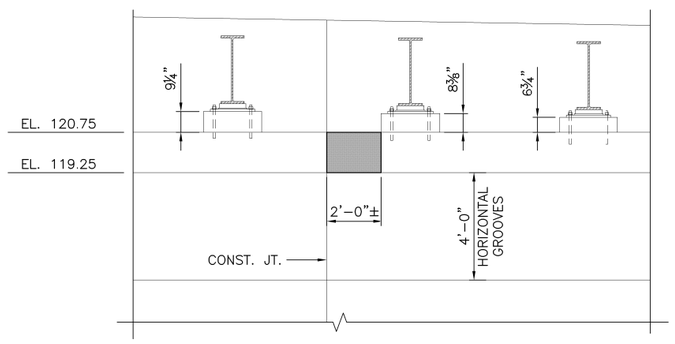

PARTIAL ELEVATION – ABUTMENT No. 1

PATCHING METHOD REPAIR AT ABUTMENT No. 1

SCALE: ⅜"=1'-0"

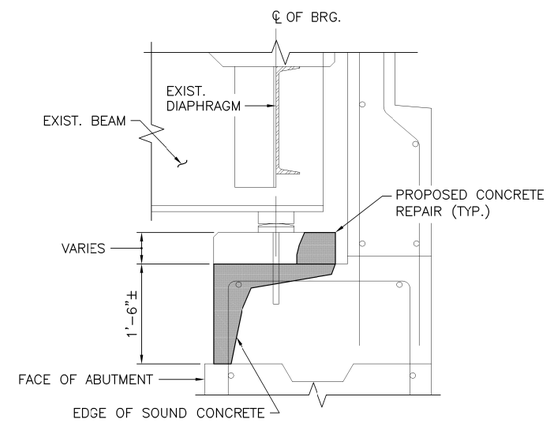

PROPOSED

SECTION A/–

SCALE: 1"=1'-0"

PEDESTAL REPAIR NOTES:

1. DURING THE REMOVAL OF THE LOOSE AND DELAMINATED CONCRETE THE CONTRACTOR SHALL AVOID OVER BREAKING THE CONCRETE TO MINIMIZE THE UNDERMINING OF THE EXISTING STEEL BEARING.
2. THE ENGINEER WILL BE THE BE THE SOLE JUDGE IN DETERMINING THE LIMITS FOR THE CONCRETE REMOVAL.
3. THE CONTRACTOR SHALL BE RESPONSIBLE TO MAINTAIN THE STABILITY OF THE EXISTING STEEL BEARING AND ANCHOR BOLTS WHILE PERFORMING THESE REPAIRS.

REVISIONS		
NO.	DATE	BY

RHODE ISLAND
DEPARTMENT OF TRANSPORTATION

EMERGENCY REPAIRS TO BRIDGES
185, 243, 382, 416, 423 & 729
LAFAYETTE RAILROAD BRIDGE No. 243
NORTH KINGSTOWN, RHODE ISLAND

STRUCTURAL CONC. MASONRY REPAIR DETAILS - SHEET 2

CHECKED BY _____ DATE _____ SCALE AS SHOWN

COMMONWEALTH ENGINEERS & CONSULTANTS, INC.
400 SMITH STREET
PROVIDENCE, RI 02908

0144L_V1_005_CONCDETL002

FED. ROAD DIV. NO.	STATE	FEDERAL AID PROJECT NO.	FISCAL YEAR	SHEET NO.	TOTAL SHEETS
	RI		2016	6	17

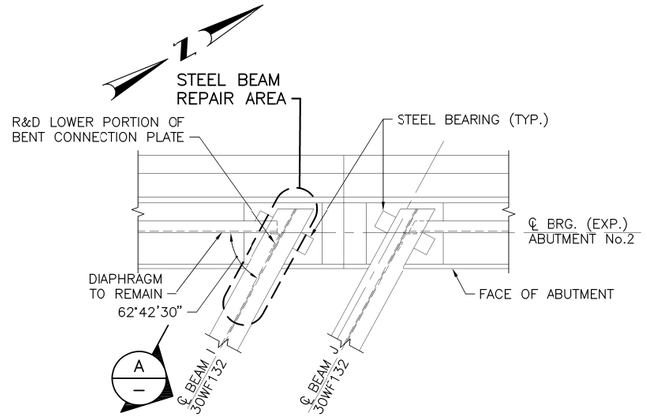

ABUTMENT – PLAN
SCALE:1/2"=1'-0"

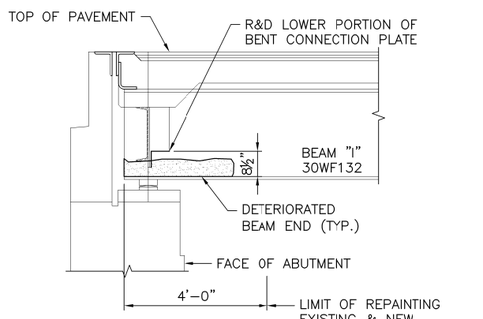

(EXISTING)
SECTION A
SCALE:1/2"=1'-0"

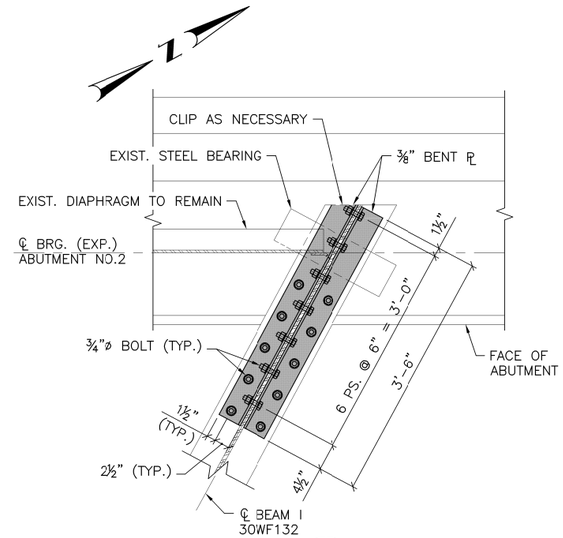

SECTION B
SCALE:1"=1'-0"

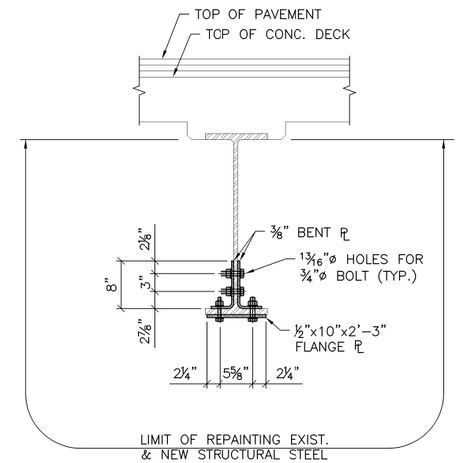

SECTION C
SCALE:1"=1'-0"

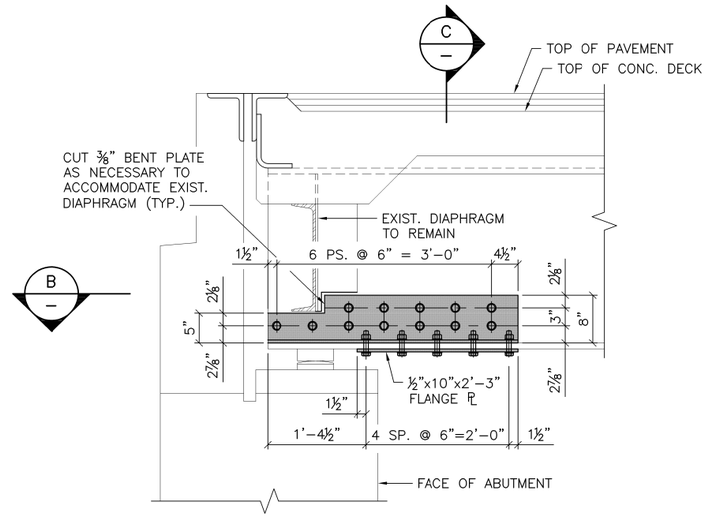

(PROPOSED)
SECTION THRU ABUTMENT
SCALE:1"=1'-0"

NOTE:
REFER TO "LOCUS MAP AND NOTES" SHEET FOR "STEEL BEAM/GIRDER REPAIR NOTES".

LEGEND

DENOTES NEW STEEL COMPONENTS

REVISIONS		
NO.	DATE	BY

COMMONWEALTH ENGINEERS & CONSULTANTS, INC.
400 SMITH STREET
PROVIDENCE, RI 02908

RHODE ISLAND
DEPARTMENT OF TRANSPORTATION

EMERGENCY REPAIRS TO BRIDGES
185, 243, 382, 416, 423 & 729
LAFAYETTE RAILROAD BRIDGE No. 243
NORTH KINGSTOWN, RHODE ISLAND

STEEL BEAM REPAIR DETAILS

CHECKED BY _____ DATE _____ SCALE AS SHOWN

0144L_V1_006_STLDETL002

FED. ROAD DIV. NO.	STATE	FEDERAL AID PROJECT NO.	FISCAL YEAR	SHEET NO.	TOTAL SHEETS
	RI		2016	7	17

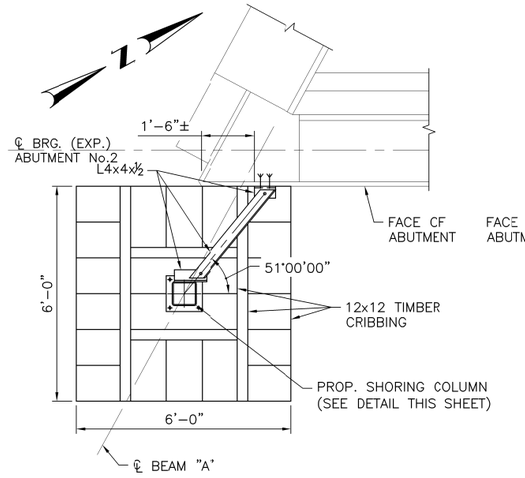

PLAN

TEMPORARY SHORING AT ABUTMENT SOUTHWEST CORNER

NOT TO SCALE

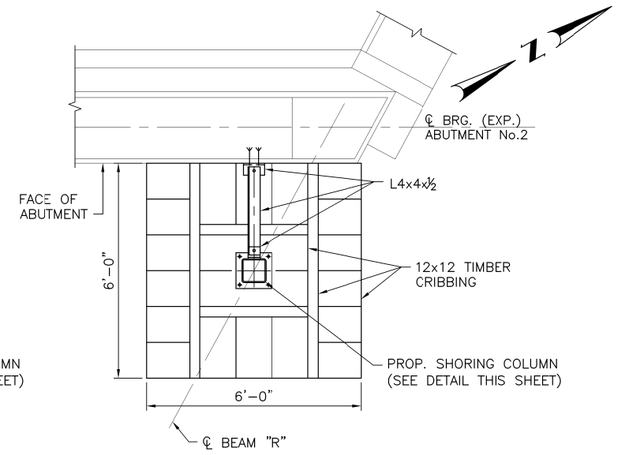

PLAN

TEMPORARY SHORING AT ABUTMENT NORTHWEST CORNER

NOT TO SCALE

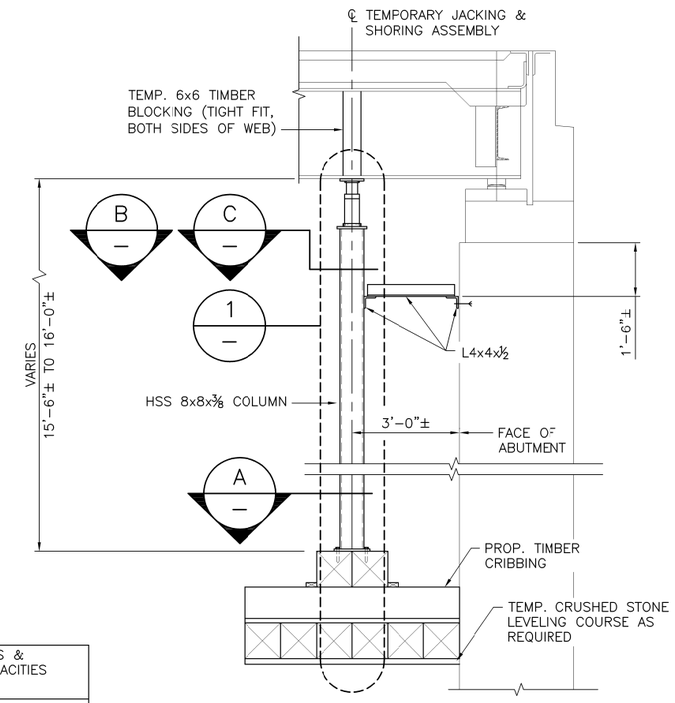

TEMPORARY SHORING AT ABUTMENT – ELEVATION

SCALE: 1/2"=1'-0"

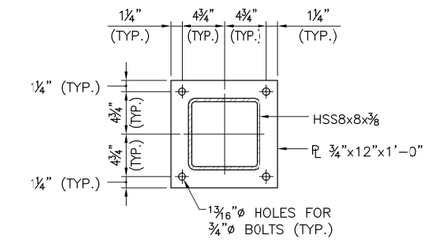

SECTION A

SCALE: 1 1/2"=1'-0"

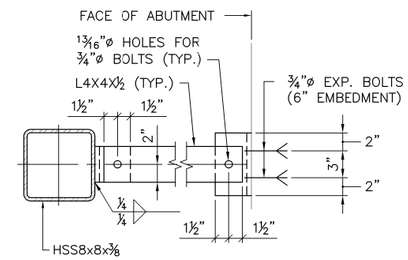

SECTION AT BEAM "R"

SCALE: 1 1/2"=1'-0"

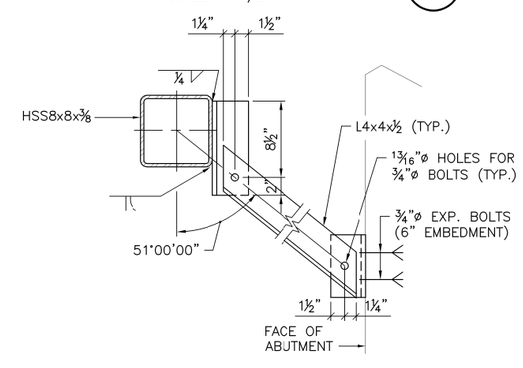

SECTION AT BEAM "A"

SCALE: 1 1/2"=1'-0"

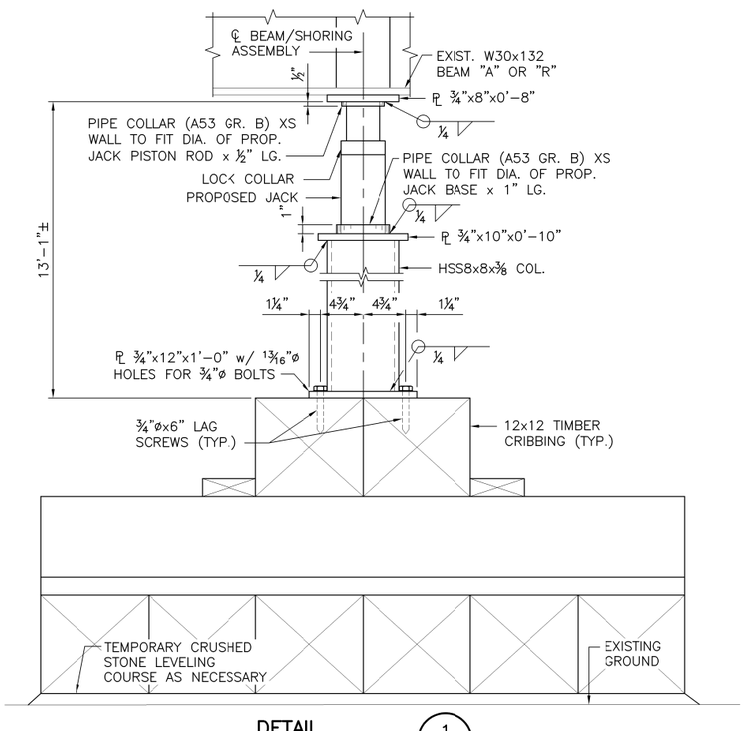

DETAIL 1

SCALE: 1 1/2"=1'-0"

ABUTMENT No. 2	REACTION LOADS & MINIMUM JACK CAPACITIES (KIPS)		
	DL	LL+I	JACK CAPACITY 1.5x(DL+(LL+I))
BEAMS A & R	27	56	125

* LL+I BASED ON HS-25 DESIGN TRUCK WITH IMPACT

JACKING NOTES:

1. LOADS GIVEN AS "DL" AND "LL+I" ARE UNFACTORED LOADS APPROXIMATE TO WITHIN 15%.
2. THE CONTRACTOR SHALL REFER TO ITEM CODE 824 "TEMPORARY JACKING AND SHORING OF BEAMS" OF THE CONTRACT DOCUMENTS.
3. DEFINITION OF TERMS:
   "DL" =DEAD LOAD AT JACK
   "LL+I" =LIVE LOAD AND IMPACT AT JACK
   "JACK CAPACITY" = MINIMUM REQUIRED JACK CAPACITY (KIPS), INCLUDING A 50% DESIGN SAFETY FACTOR.
   THIS SAFETY FACTOR IS IN ADDITION TO THE JACK MANUFACTURER'S PUBLISHED FACTORS OF SAFETY.

TEMPORARY JACKING AND SHORING OF BEAM NOTES:

1. ALL WORK SHALL BE IN ACCORDANCE WITH SPECIAL PROVISIONS ITEM CODE 824.99 "TEMPORARY JACKING AND SHORING OF BEAMS".
2. THE BEAM IS TO BE TEMPORARILY JACKED AND SHORED TO PERFORM THE PROPOSED CONCRETE BEAM SEAT REPAIRS.
3. THE CONTRACTOR SHALL JACK THE SPECIFIED BEAMS ONLY THE AMOUNT REQUIRED TO RELIEVE THE LOAD, NOT TO EXCEED 1/16" MAXIMUM AT THE BEARING.
4. ANY DAMAGE TO THE BRIDGE STRUCTURE AS A RESULT OF JACKING OR AS A RESULT OF THE CONTRACTOR'S OPERATIONS SHALL BE REPAIRED BY THE CONTRACTOR TO THE SATISFACTION OF THE ENGINEER AT NO ADDITIONAL COST TO THE STATE.
5. ALL WORK SHALL BE PERFORMED IN ACCORDANCE WITH THE MAINTENANCE AND PROTECTION OF TRAFFIC PLANS INCLUDED IN THE CONTRACT DOCUMENTS.
6. JACKING AND SHORING SHALL REMAIN IN PLACE UNTIL THE 28 DAY COMPRESSIVE STRENGTH OF THE NEW CONCRETE HAS BEEN ATTAINED.

TIMBER CRIBBING NOTES:

1. TIMBER FOR CRIBBING SHALL BE SOUTHERN YELLOW PINE, GRADE No. 2. TIMBER OF ANOTHER SPECIES AND GRADE, HAVING STRENGTH PROPERTIES EQUAL TO OR GREATER THAN SPECIFIED HEREIN, SHALL BE PERMITTED UPON APPROVAL BY THE ENGINEER. NO ADDITIONAL PAYMENT SHALL BE MADE IF ANOTHER SPECIES AND GRADE ARE UTILIZED.

BASE DESIGN VALUES AS FOLLOWS:

F_b = 850 psi. F_v = 100 psi* $F_{c\perp}$ = 375 psi. E = 1,200,000 psi.

*WHEN SHEAR STRESS FACTORS ARE APPLIED, USE Fv = 90 psi.

THE FOLLOWING ADJUSTMENT FACTORS APPLY:

WET SERVICE FACTOR:	F_b	F_v	$F_{c\perp}$	E
C_m =	1.0	1.0	1.0	1.0

SHEAR STRESS FACTOR: C_H = 1.0

LOAD DURATION FACTOR: C_D = 1.0

COMMONWEALTH ENGINEERS & CONSULTANTS, INC.
400 SMITH STREET
PROVIDENCE, RI 02908

REVISIONS		
NO.	DATE	BY

RHODE ISLAND
DEPARTMENT OF TRANSPORTATION

EMERGENCY REPAIRS TO BRIDGES
185, 243, 382, 416, 423 & 729
LAFAYETTE RAILROAD BRIDGE No. 243
NORTH KINGSTOWN, RHODE ISLAND

TEMPORARY SHORING DETAILS

CHECKED BY _____ DATE _____ SCALE AS SHOWN

0144L_V1_007_MISCDETL001

FED. ROAD DIV. NO.	STATE	FEDERAL AID PROJECT NO.	FISCAL YEAR	SHEET NO.	TOTAL SHEETS
	RI		2016	8	17

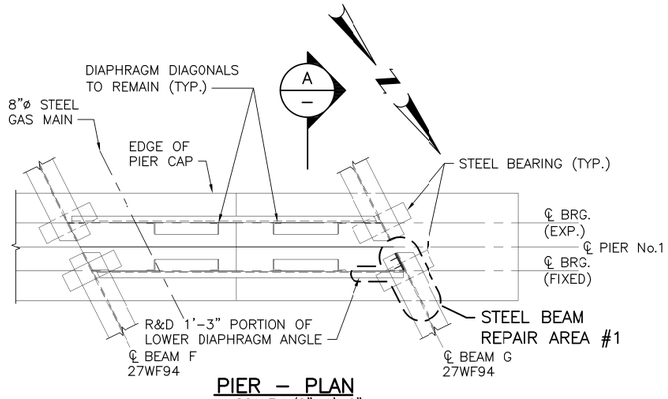

PIER – PLAN
SCALE:1/2"=1'-0"

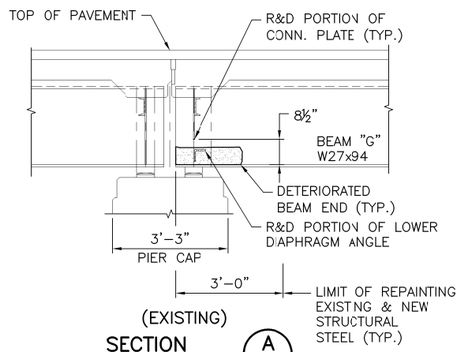

(EXISTING)
SECTION A
SCALE:1/2"=1'-0"

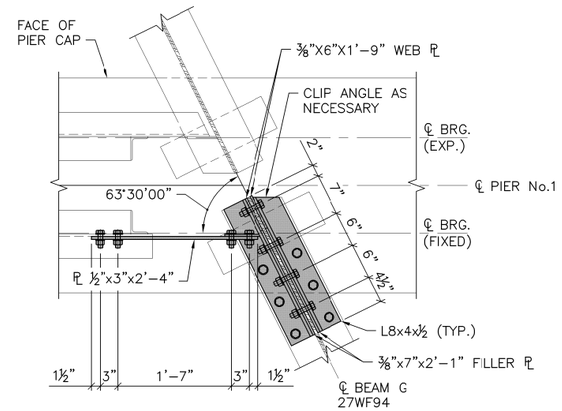

SECTION THRU PIER (PROPOSED)
SECTION B
SCALE:1"=1'-0"

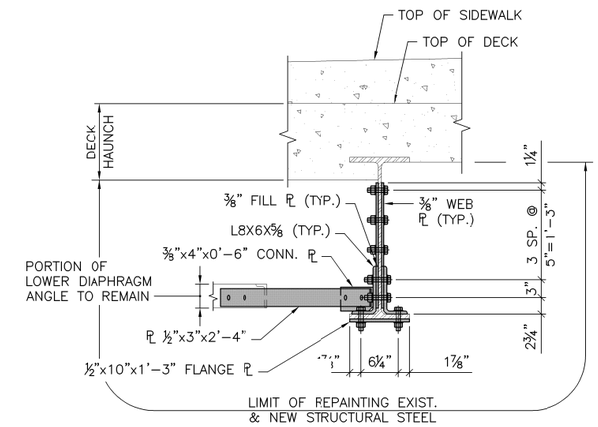

SECTION THRU PIER (PROPOSED)
SECTION C
SCALE:1"=1'-0"

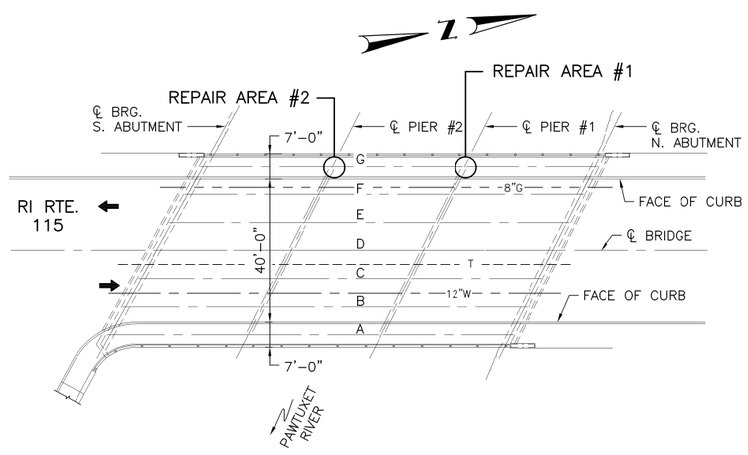

GENERAL PLAN
NOT TO SCALE

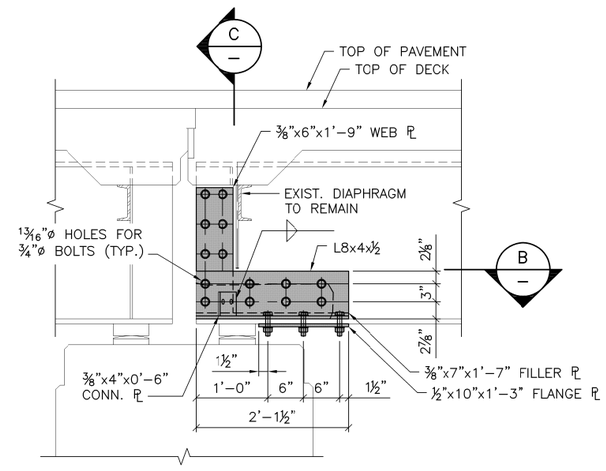

(PROPOSED)
SECTION THRU PIER
SCALE:1"=1'-0"

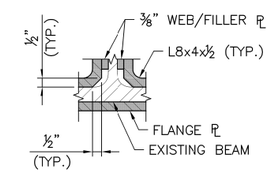

DETAIL 1
SCALE:3"=1'-0"

NOTE:
REFER TO "LOCUS MAP AND NOTES" SHEET FOR "STEEL BEAM/GIRDER REPAIR NOTES".

COMMONWEALTH ENGINEERS & CONSULTANTS, INC.
400 SMITH STREET
PROVIDENCE, RI 02908

REVISIONS		
NO.	DATE	BY

RHODE ISLAND
DEPARTMENT OF TRANSPORTATION

EMERGENCY REPAIRS TO BRIDGES
185, 243, 382, 416, 423 & 729
CLYDE BRIDGE No. 382
WEST WARWICK, RHODE ISLAND

STEEL BEAM REPAIR DETAILS
AREA #1

CHECKED BY _____ DATE _____ SCALE AS SHOWN

0144L_V1_008_STLDETL003

FED. ROAD DIV. NO.	STATE	FEDERAL AID PROJECT NO.	FISCAL YEAR	SHEET NO.	TOTAL SHEETS
	RI		2016	9	17

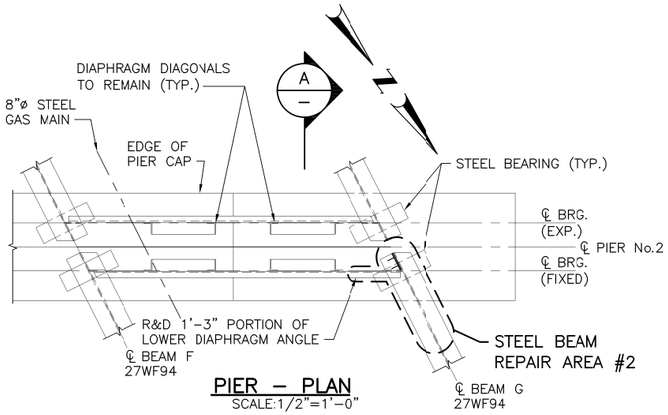

PIER – PLAN
SCALE:1/2"=1'-0"

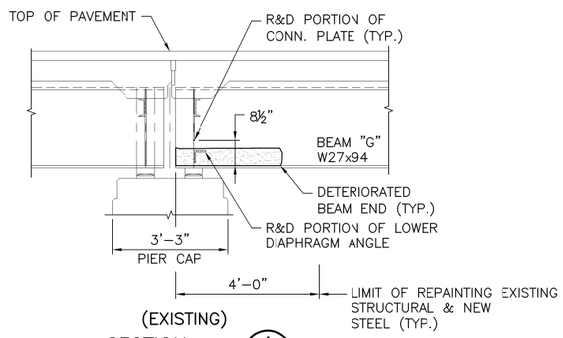

(EXISTING)
SECTION A
SCALE:1/2"=1'-0"

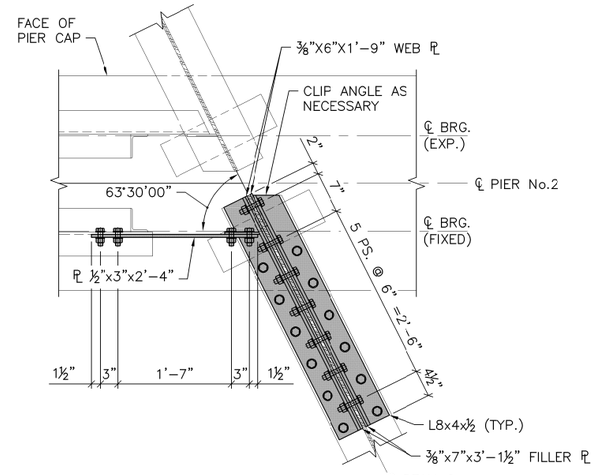

SECTION THRU PIER (PROPOSED)
SECTION B
SCALE:1"=1'-0"

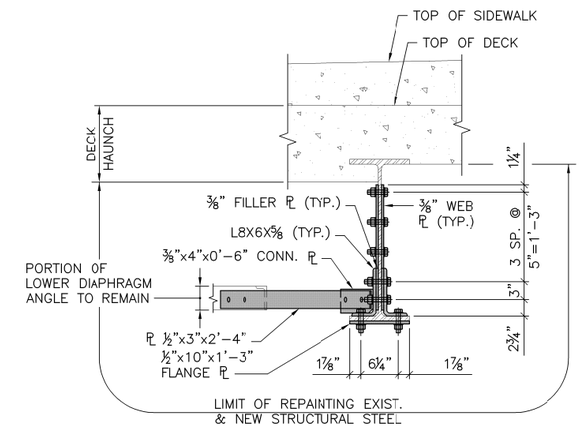

SECTION THRU PIER (PROPOSED)
SECTION C
SCALE:1"=1'-0"

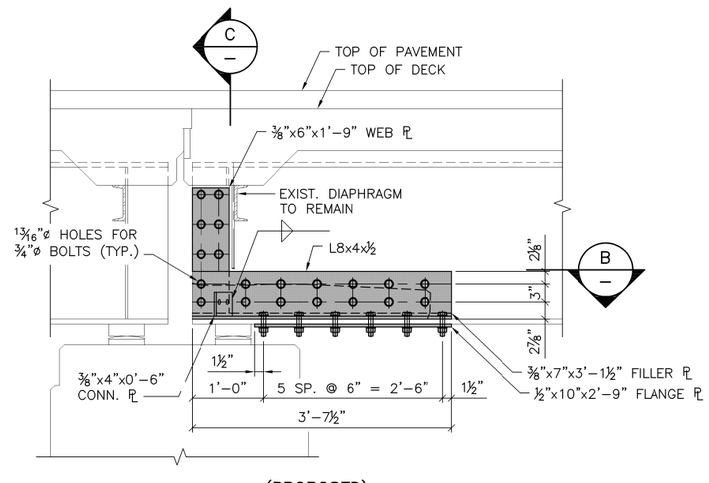

(PROPOSED)
SECTION THRU PIER
SCALE:1"=1'-0"

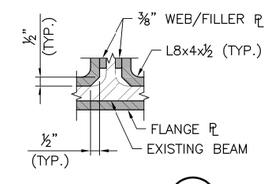

DETAIL 1
SCALE:3"=1'-0"

NOTE:
1. REFER TO CLYDE BRIDGE No. 382 "STEEL BEAM REPAIR #1" SHEET FOR GENERAL PLAN AND LOCATION OF REPAIR AREA #2.
2. REFER TO "LOCUS MAP AND NOTES" SHEET FOR "STEEL BEAM/GIRDER REPAIR NOTES".

REVISIONS		
NO.	DATE	BY

RHODE ISLAND
DEPARTMENT OF TRANSPORTATION

EMERGENCY REPAIRS TO BRIDGES
185, 243, 382, 416, 423 & 729
CLYDE BRIDGE No. 382
WEST WARWICK, RHODE ISLAND

STEEL BEAM REPAIR DETAILS
AREA #2

COMMONWEALTH ENGINEERS & CONSULTANTS, INC.
400 SMITH STREET
PROVIDENCE, RI 02908

CHECKED BY _____ DATE _____ SCALE AS SHOWN

0144L_V1_009_STLDETL004

FED. ROAD DIV. NO.	STATE	FEDERAL AID PROJECT NO.	FISCAL YEAR	SHEET NO.	TOTAL SHEETS
	RI		2016	10	17

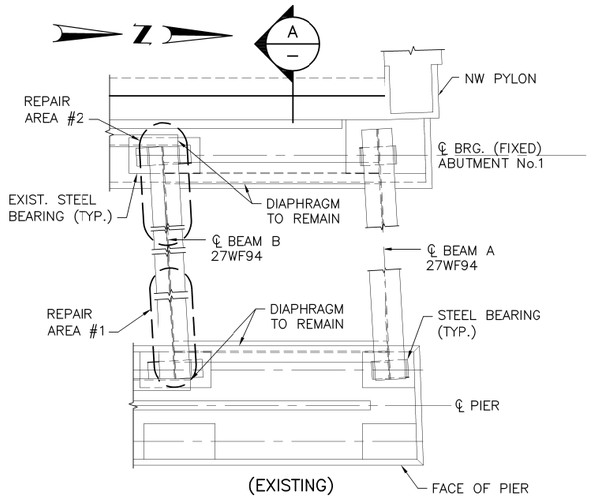

(EXISTING)
PIER – PLAN
SCALE:1/2"=1'-0"

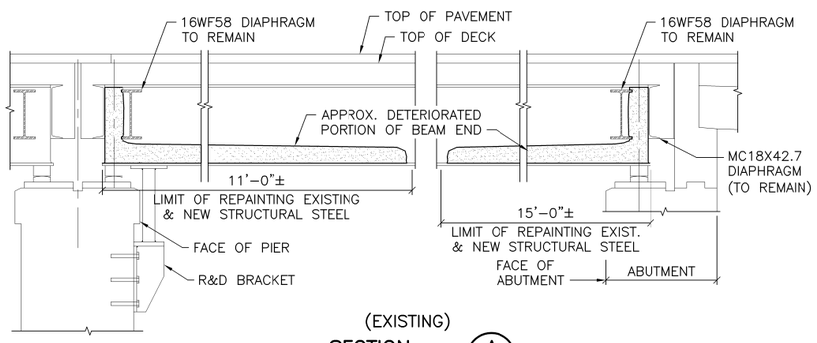

(EXISTING)
SECTION A
SCALE:1/2"=1'-0"

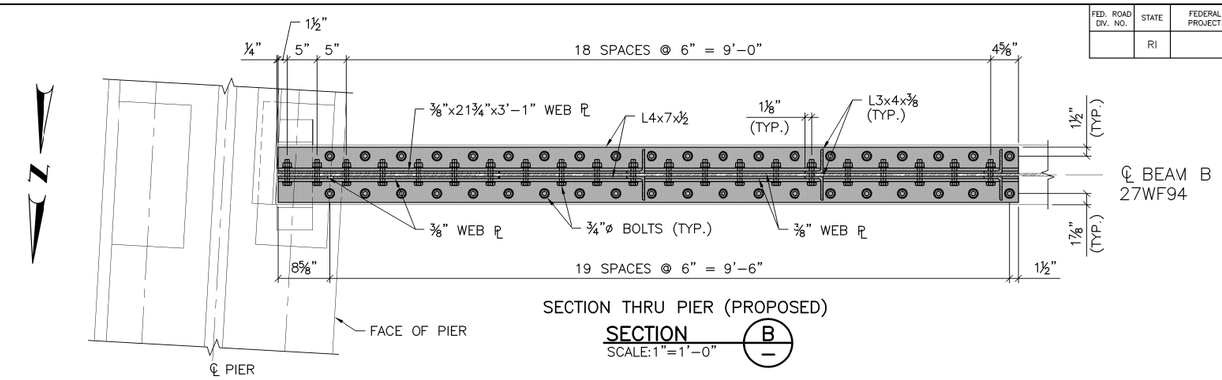

SECTION THRU PIER (PROPOSED)
SECTION B
SCALE:1"=1'-0"

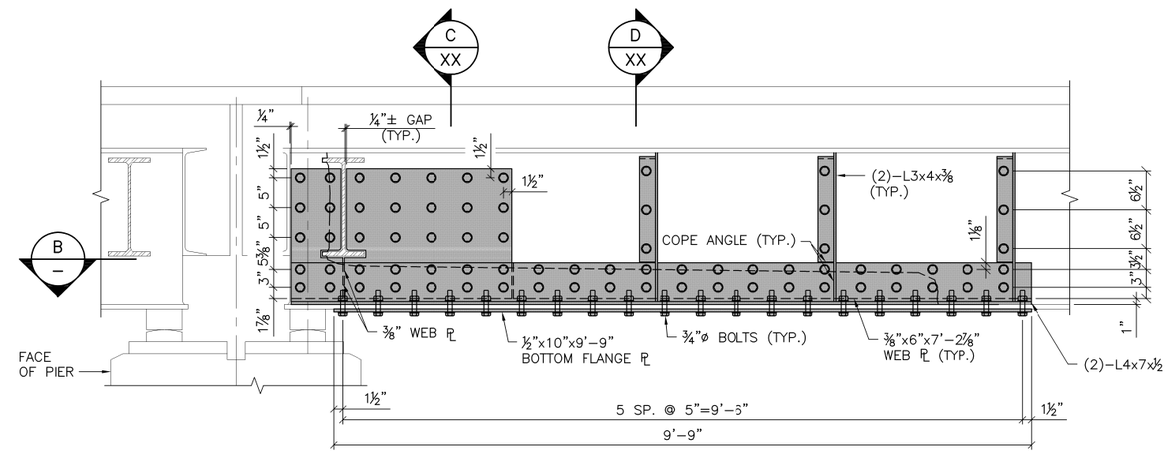

STEEL BEAM REPAIR – (PROPOSED)
ELEVATION – REPAIR AREA #1
SCALE:1"=1'-0"

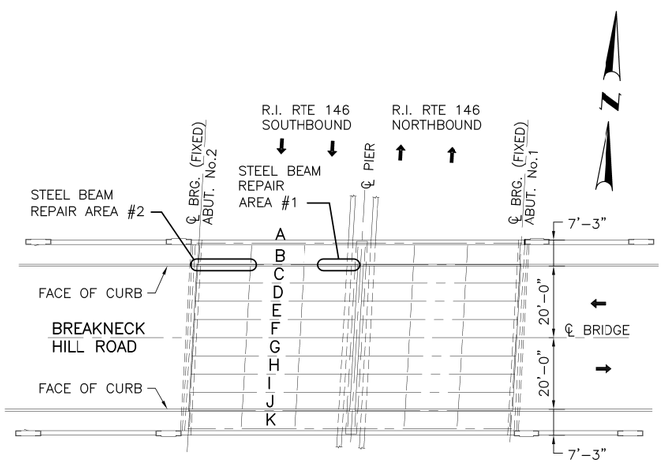

GENERAL PLAN
NOT TO SCALE

NOTE:
REFER TO "LOCUS MAP AND NOTES" SHEET FOR "STEEL BEAM/GIRDER REPAIR NOTES".

LEGEND

DENOTES AREAS OF NEW STEEL REPAIR

COMMONWEALTH ENGINEERS & CONSULTANTS, INC.
400 SMITH STREET
PROVIDENCE, RI 02908

REVISIONS		
NO.	DATE	BY

RHODE ISLAND
DEPARTMENT OF TRANSPORTATION

EMERGENCY REPAIRS TO BRIDGES
185, 243, 382, 416, 423 & 729
BREAKNECK HILL ROAD BRIDGE NO. 416
LINCOLN, RHODE ISLAND

STEEL BEAM REPAIR DETAILS
AREA #1

CHECKED BY _____ DATE _____ SCALE AS SHOWN

0144L_V1_010_STELDETL005

FED. ROAD DIV. NO.	STATE	FEDERAL AID PROJECT NO.	FISCAL YEAR	SHEET NO.	TOTAL SHEETS
	RI		2016	11	17

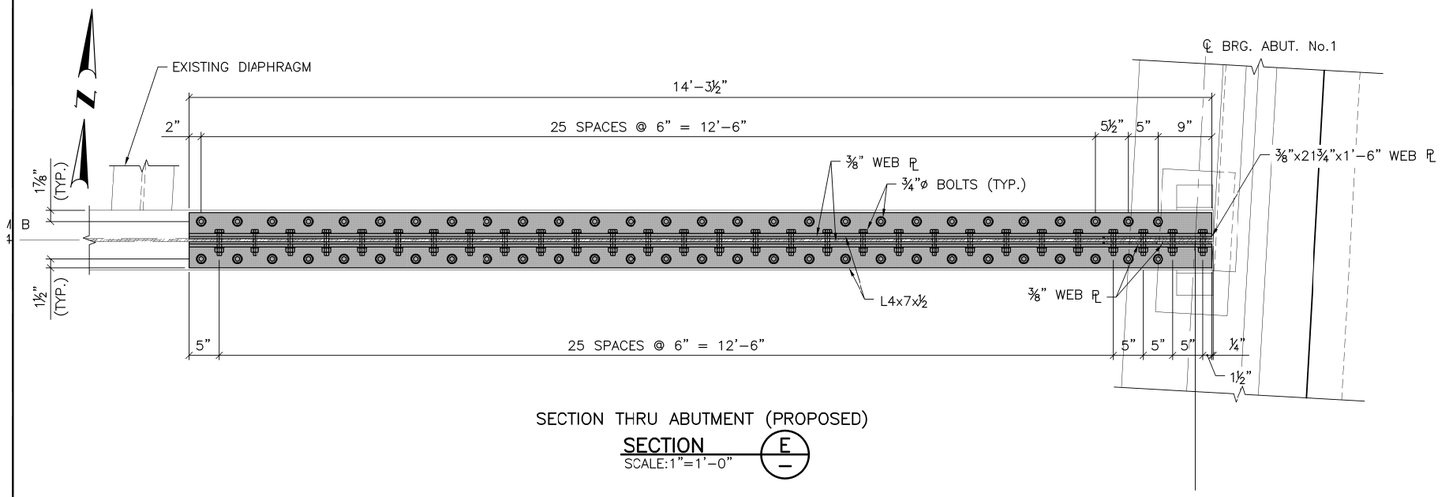

SECTION THRU ABUTMENT (PROPOSED)

SECTION E/–

SCALE:1"=1'-0"

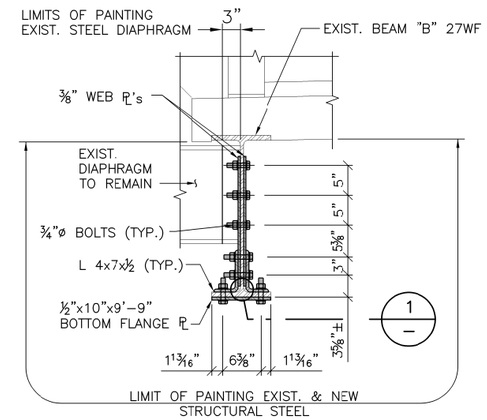

STEEL BEAM REPAIR AREA

SECTION C/XX C/–

SCALE:1"=1'-0"

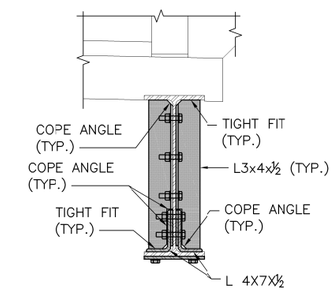

STEEL BEAM REPAIR AREA

SECTION D/–

SCALE:1"=1'-0"

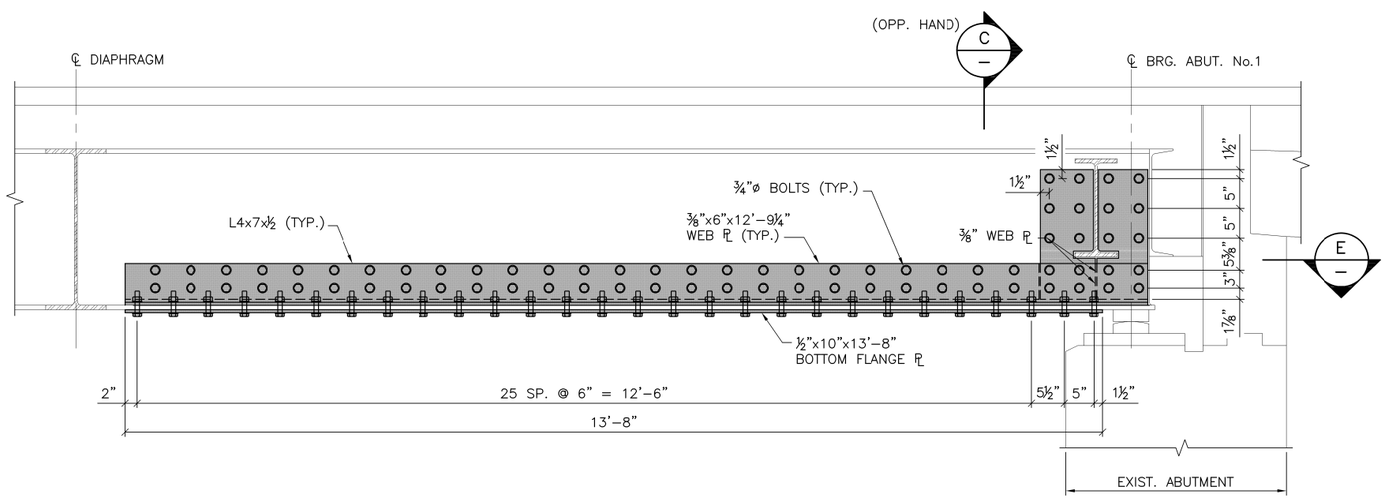

STEEL BEAM REPAIR – (PROPOSED)

ELEVATION – REPAIR AREA #2

SCALE:1"=1'-0"

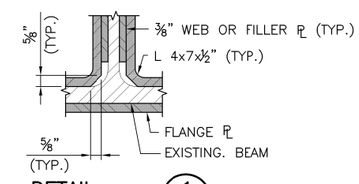

DETAIL 1/–

SCALE:3"=1'-0"

NOTES:

1. REFER TO BREAKNECK HILL ROAD BRIDGE No. 416 "STEEL BEAM REPAIR #1" SHEET FOR GENERAL PLAN AND LOCATION OF REPAIR AREA #2.
2. REFER TO "LOCUS MAP AND NOTES" SHEET FOR "STEEL BEAM/GIRDER REPAIR NOTES".

LEGEND

DENOTES AREAS OF NEW STEEL REPAIR

COMMONWEALTH ENGINEERS & CONSULTANTS, INC.
400 SMITH STREET
PROVIDENCE, RI 02908

REVISIONS		
NO.	DATE	BY

RHODE ISLAND
DEPARTMENT OF TRANSPORTATION

EMERGENCY REPAIRS TO BRIDGES
185, 243, 382, 416, 423 & 729
BREAKNECK HILL ROAD BRIDGE NO. 416
LINCOLN, RHODE ISLAND

STEEL BEAM REPAIR DETAILS
AREA #2

CHECKED BY _____ DATE _____ SCALE AS SHOWN

0144L_V1_011_STELDETL006

FED. ROAD DIV. NO.	STATE	FEDERAL AID PROJECT NO.	FISCAL YEAR	SHEET NO.	TOTAL SHEETS
	RI		2016	12	17

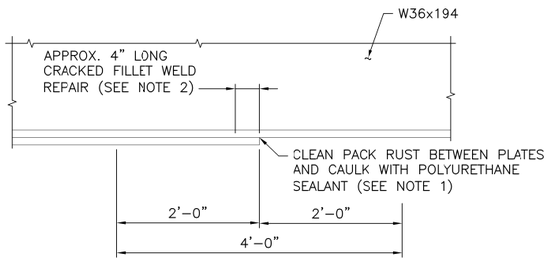

PACKED RUST & CRACKED WELD REPAIR NOTES:

1. THE WORK ASSOCIATED WITH CLEANING PACK RUST AND CAULKING WITH SEALANT SHALL BE IN ACCORDANCE WITH ITEM CODE 824 "PACK RUST REPAIR – BRIDGE No. 423".
2. THE WORK ASSOCIATED WITH WELD REPAIR SHALL BE IN ACCORDANCE WITH ITEM CODE 824 "REPAIR OF CRACKED WELD – BRIDGE No. 423".
3. PACK RUST REPAIR TO BE COMPLETED PRIOR TO WELD REPAIR.

STEEL BEAM REPAIR AREA

PARTIAL ELEVATION – LOOKING NORTH

SCALE: 1"=1'-0"

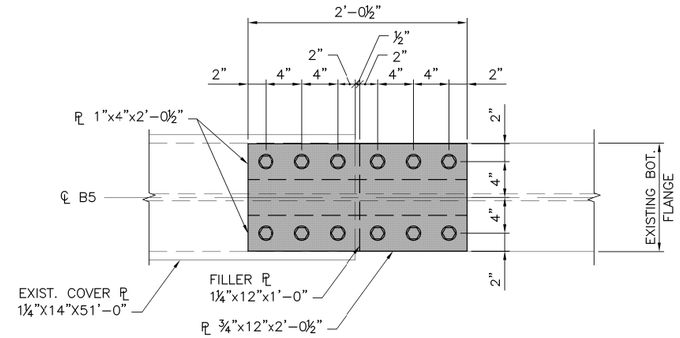

STEEL BEAM REPAIR AREA

PLAN VIEW – UNDERSIDE OF BEAM

SCALE: 1½"=1'-0"

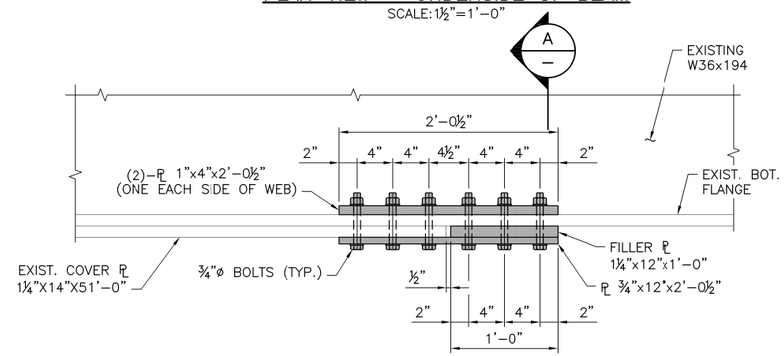

STEEL BEAM REPAIR AREA

PARTIAL ELEVATION – LOOKING NORTH

SCALE: 1½"=1'-0"

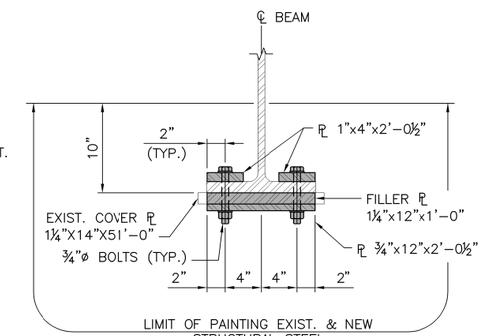

STEEL BEAM REPAIR AREA

SECTION A

SCALE: 1½"=1'-0"

BOLTED STEEL REPAIR NOTES:

1. THE WORK ASSOCIATED WITH THE INSTALLATION OF THE BOLTED STEEL REPAIR PLATES SHALL BE IN ACCORDANCE WITH ITEM 824 "STEEL BEAM/GIRDER REPAIRS".
2. PACK RUST REPAIR AND WELD REPAIR TO BE COMFLETED PRIOR TO BOLTED STEEL REPAIR.

NOTE:
REFER TO "LOCUS MAP AND NOTES" SHEET FOR "STEEL BEAM/GIRDER REPAIR NOTES".

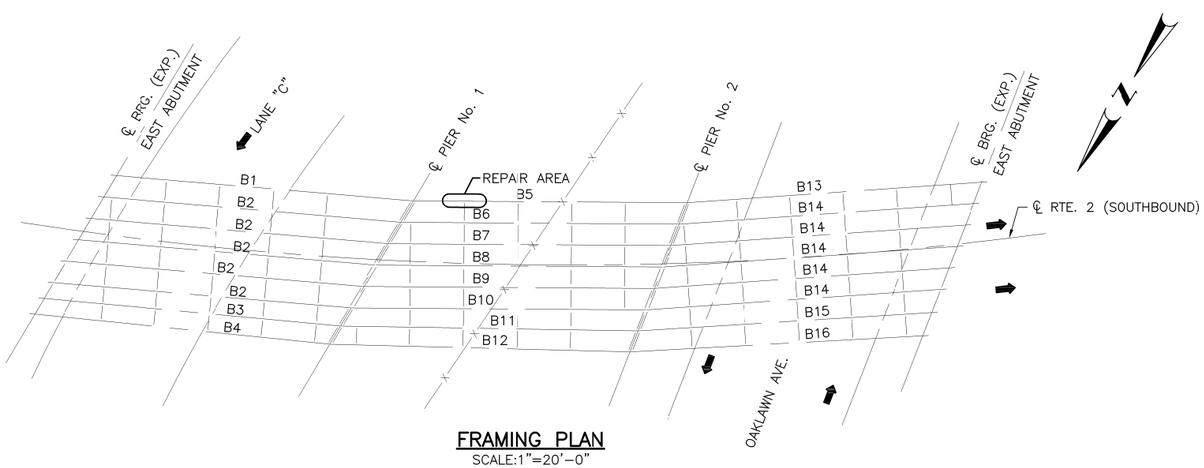

FRAMING PLAN

SCALE: 1"=20'-0"

LEGEND

DENOTES AREAS OF NEW STEEL REPAIR

COMMONWEALTH ENGINEERS & CONSULTANTS, INC.
400 SMITH STREET
PROVIDENCE, RI 02908

REVISIONS		
NO.	DATE	BY

RHODE ISLAND
DEPARTMENT OF TRANSPORTATION

EMERGENCY REPAIRS TO BRIDGES
185, 243, 382, 416, 423 & 729
MESHANTICUT VIADUCT BRIDGE NO. 423
CRANSTON, RHODE ISLAND

STEEL BEAM REPAIR DETAILS

CHECKED BY _____ DATE _____ SCALE AS SHOWN

0144L_V1_012_STELDETL007

FED. ROAD DIV. NO.	STATE	FEDERAL AID PROJECT NO.	FISCAL YEAR	SHEET NO.	TOTAL SHEETS
	RI		2016	13	17

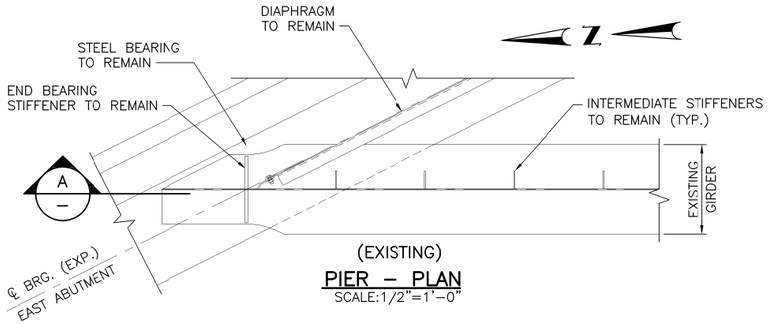

(EXISTING)
PIER – PLAN
SCALE:1/2"=1'–0"

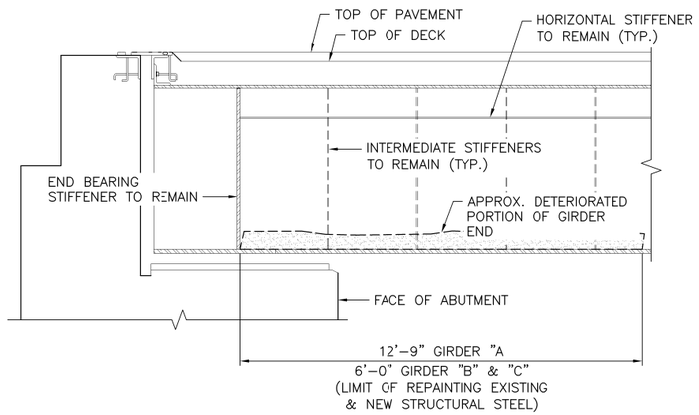

(EXISTING)
SECTION A
SCALE:1/2"=1'–0"

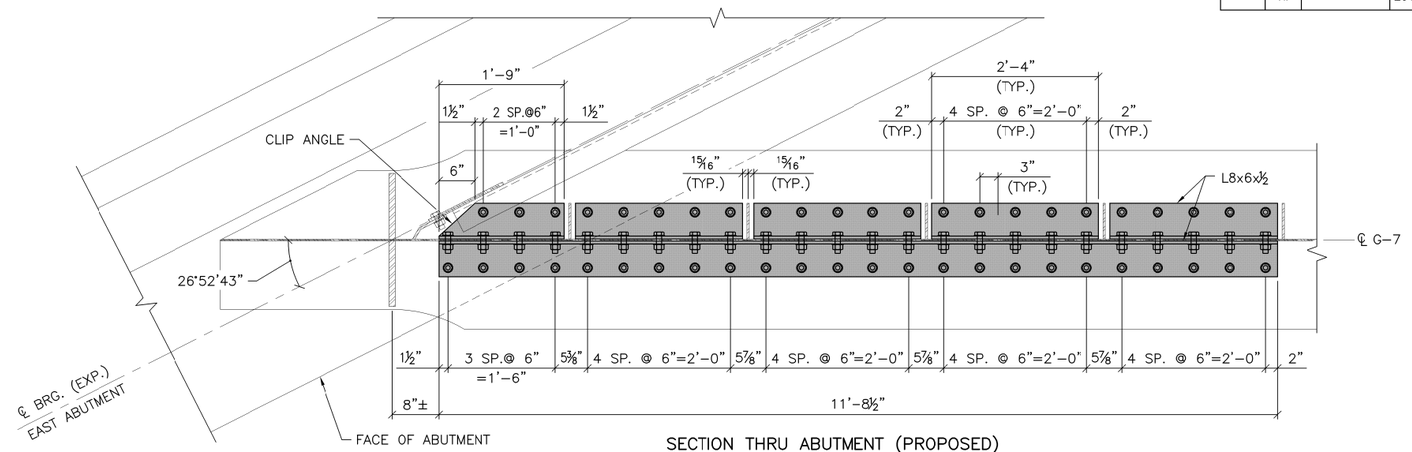

SECTION THRU ABUTMENT (PROPOSED)
SECTION B
SCALE:1"=1'–0"

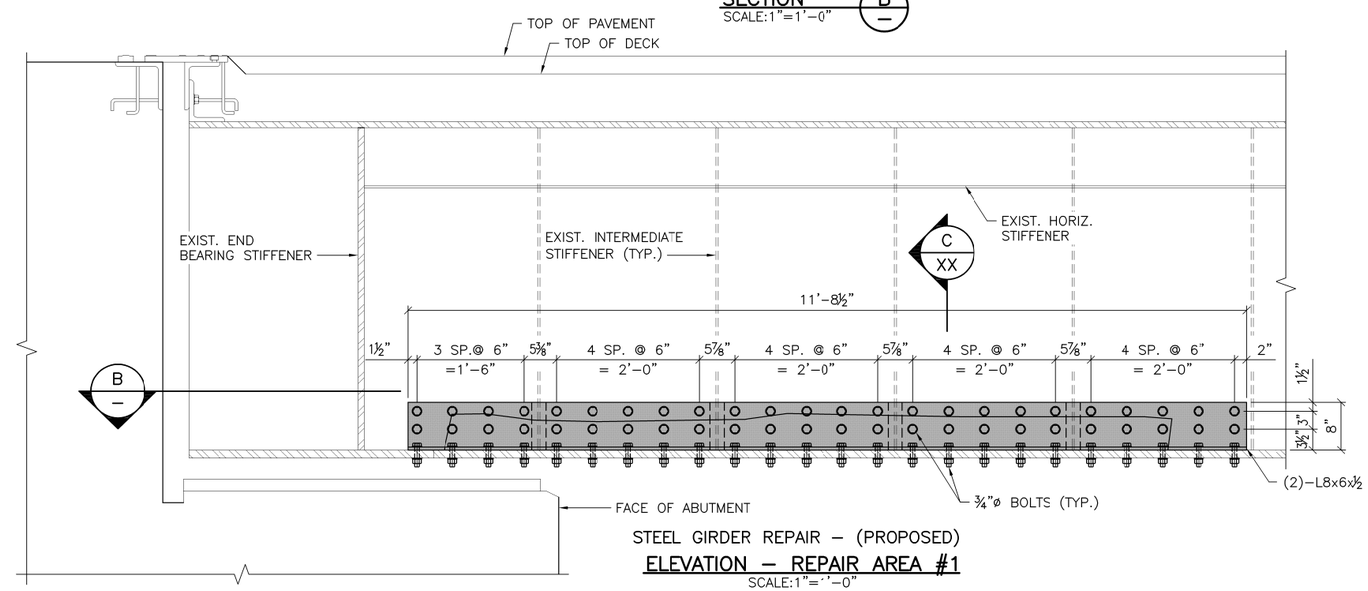

STEEL GIRDER REPAIR – (PROPOSED)
ELEVATION – REPAIR AREA #1
SCALE:1"=1'–0"

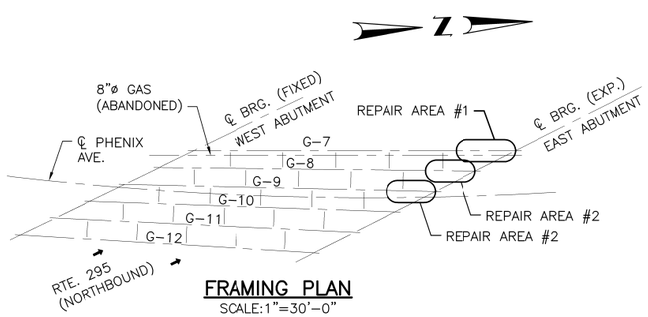

FRAMING PLAN
SCALE:1"=30'–0"

NOTE:
REFER TO "LOCUS MAP AND NOTES" SHEET FOR "STEEL BEAM/GIRDER REPAIR NOTES".

LEGEND

DENOTES AREAS OF NEW STEEL REPAIR

COMMONWEALTH ENGINEERS & CONSULTANTS, INC.
400 SMITH STREET
PROVIDENCE, RI 02908

REVISIONS		
NO.	DATE	BY

RHODE ISLAND
DEPARTMENT OF TRANSPORTATION

EMERGENCY REPAIRS TO BRIDGES
185, 243, 382, 416, 423 & 729
PHENIX AVENUE BRIDGE No. 729
CRANSTON, RHODE ISLAND

STEEL GIRDER REPAIR DETAILS AREA #1

CHECKED BY _____ DATE _____ SCALE AS SHOWN

0144L_V1_013_STELDETL008

FED. ROAD DIV. NO.	STATE	FEDERAL AID PROJECT NO.	FISCAL YEAR	SHEET NO.	TOTAL SHEETS
	RI		2016	14	17

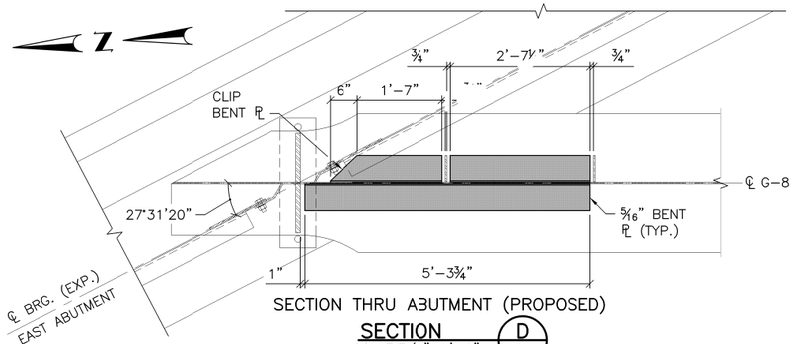

SECTION THRU ABUTMENT (PROPOSED)

SECTION D — SCALE:3/4"=1'-0"

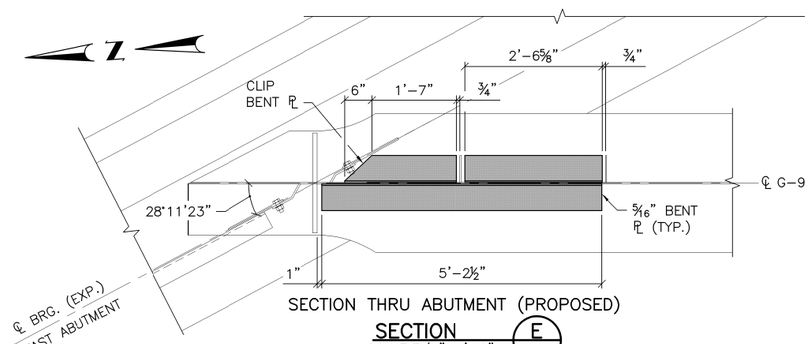

SECTION THRU ABUTMENT (PROPOSED)

SECTION E — SCALE:3/4"=1'-0"

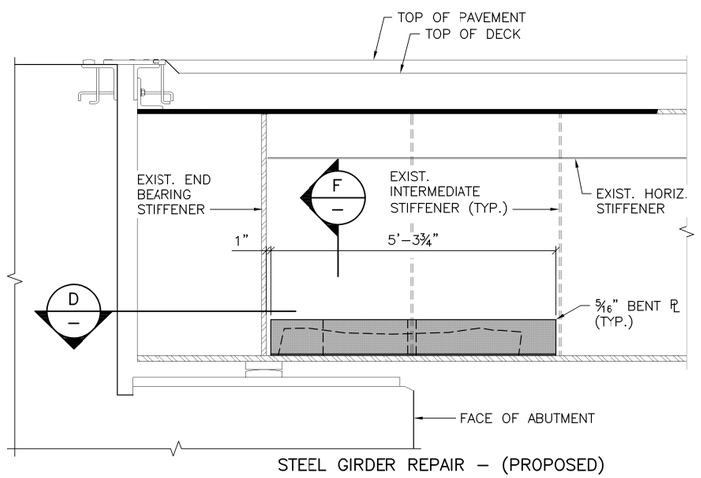

STEEL GIRDER REPAIR – (PROPOSED)

ELEVATION – REPAIR AREA #2

SCALE:3/4"=1'-0"

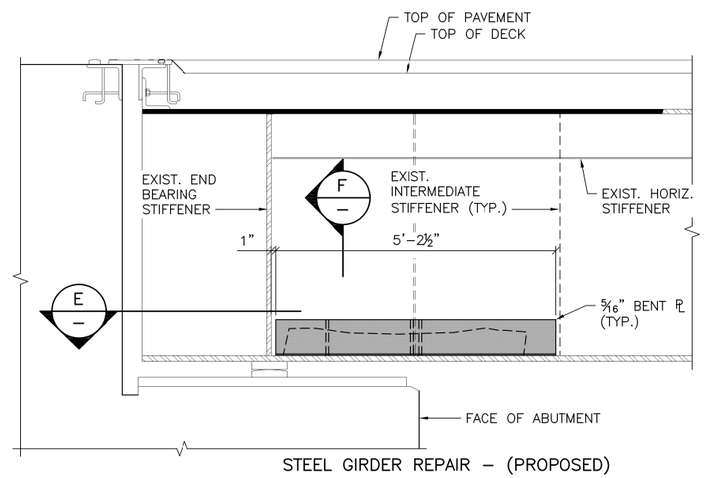

STEEL GIRDER REPAIR – (PROPOSED)

ELEVATION – REPAIR AREA #3

SCALE:3/4"=1'-0"

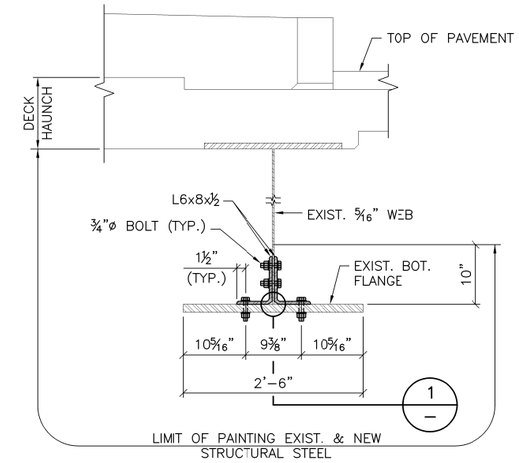

STEEL GIRDER REPAIR AREA (PROPOSED)

SECTION C — SCALE:1"=1'-0"

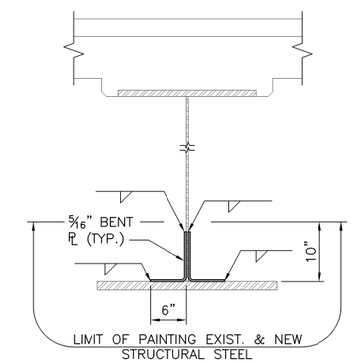

STEEL GIRDER REPAIR AREA (PROPOSED)

SECTION F — SCALE:1"=1'-0"

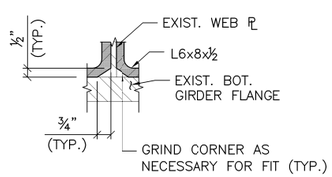

DETAIL 1 — SCALE:3"=1'-0"

NOTE:
REFER TO "LOCUS MAP AND NOTES" SHEET FOR "STEEL BEAM/GIRDER REPAIR NOTES".

LEGEND

DENOTES AREAS OF NEW STEEL REPAIR

COMMONWEALTH ENGINEERS & CONSULTANTS, INC.
400 SMITH STREET
PROVIDENCE, RI 02908

REVISIONS		
NO.	DATE	BY

RHODE ISLAND
DEPARTMENT OF TRANSPORTATION

EMERGENCY REPAIRS TO BRIDGES
185, 243, 382, 416, 423 & 729
PHENIX AVENUE BRIDGE No. 729
CRANSTON, RHODE ISLAND

STEEL GIRDER REPAIR
DETAILS AREA #2 AND #3

CHECKED BY _____ DATE _____ SCALE AS SHOWN

0144L_V1_014_STELDETL009

FED. ROAD DIV. NO.	STATE	FEDERAL AID PROJECT NO.	FISCAL YEAR	SHEET NO.	TOTAL SHEETS
	RI		2016	15	17

NOTES:

1. ALL TEMPORARY TRAFFIC CONTROL WORK, SIGN LEGENDS AND BORDERS, AND MOUNTINGS SHALL CONFORM TO THE LATEST EDITION OF THE "MANUAL ON UNIFORM TRAFFIC CONTROL DEVICES" (MUTCD) WITH ALL REVISIONS, AND THE "RIDOT STANDARD SPECIFICATIONS FOR ROAD AND BRIDGE CONSTRUCTION", LATEST EDITION WITH ALL REVISIONS.
2. TEMPORARY CONSTRUCTION SIGNING AND ALL OTHER TRAFFIC CONTROL DEVICES SHALL BE IN PLACE PRIOR TO THE START OF ANY WORK.
3. TEMPORARY CONSTRUCTION SIGNING, BARRICADES AND ALL OTHER NECESSARY WORK ZONE TRAFFIC CONTROL DEVICES SHALL BE REMOVED FROM THE HIGHWAY OR COVERED WHEN THEY ARE NOT REQUIRED FOR CONTROL OF TRAFFIC.
4. DISTANCES ARE A GUIDE AND MAY BE ADJUSTED IN THE FIELD BY THE ENGINEER.
5. THE W20-5 SIGNS AND THE "C" DIMENSIONS MAY BE OMITTED IF POSTED SPEED LIMIT IS 30 MPH OR LOWER.
6. MAXIMUM SPACING OF CHANNELIZATION DEVICES (DRUMS OR CONES) IN A TAPER IS EQUAL IN FEET TO THE SPEED LIMIT IN MPH. MAXIMUM SPACING OF CHANNELIZATION DEVICES IN A TANGENT SECTION IS EQUAL IN FEET TO TWO TIMES THE SPEED LIMIT IN MPH.
7. MINIMUM LANE WIDTH IS TO BE 11 FEET UNLESS OTHERWISE SHOWN. MINIMUM LANE WIDTH TO BE MEASURED FROM THE EDGE OF CHANNELIZATION DEVICES.
8. THE SIZES OF ALL DIAMOND SHAPED ADVANCE WARNING SIGNS SHALL BE 36" X 36".
9. A "ROAD WORK AHEAD" SIGN SHALL BE PLACED ON ALL SIDE STREETS INTERSECTING THE ADVANCE WARNING AREA.
10. TRAFFIC CONTROL SET-UP FOR WORK WITHIN THE ROUTE 5 SOUTHBOUND LANE WILL BE REVERSED FROM SETUP SHOWN.

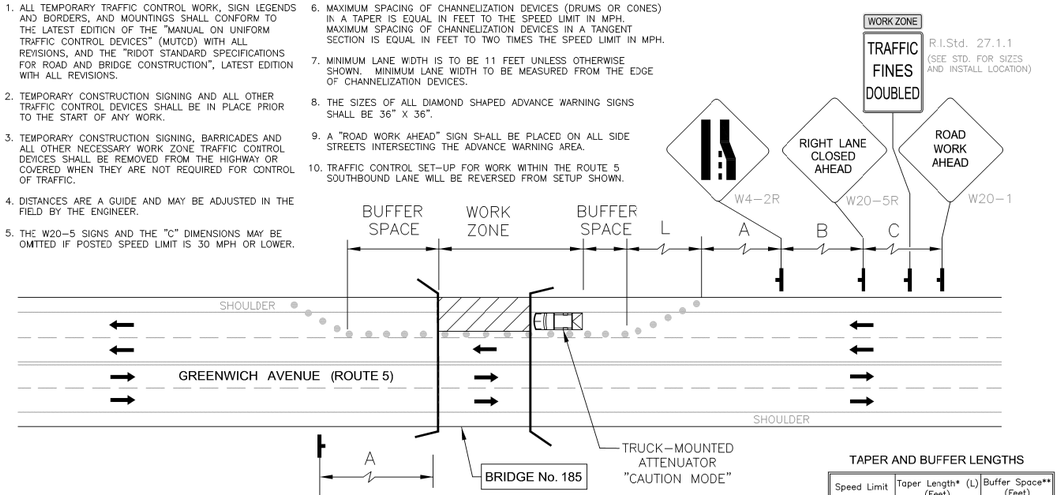

MINIMUM ADVANCE WARNING SIGN SPACING

Posted Speed Limit & Roadway Location	Distance Between Signs (Feet)		
	A	B	C
25 MPH OR LESS in URBAN OR RURAL AREA	100	100	100
30 MPH OR GREATER in URBAN AREA	350	350	350
30 MPH OR GREATER in RURAL AREA	500	500	500

TAPER AND BUFFER LENGTHS

Speed Limit	Taper Length* (L) (Feet)	Buffer Space** (Feet)
25 MPH	125	55
30 MPH	180	85
35 MPH	245	120
40 MPH	320	170
45 MPH	540	220
50 MPH	600	280

* Required
** Suggested

BRIDGE NO. 185

NOT TO SCALE

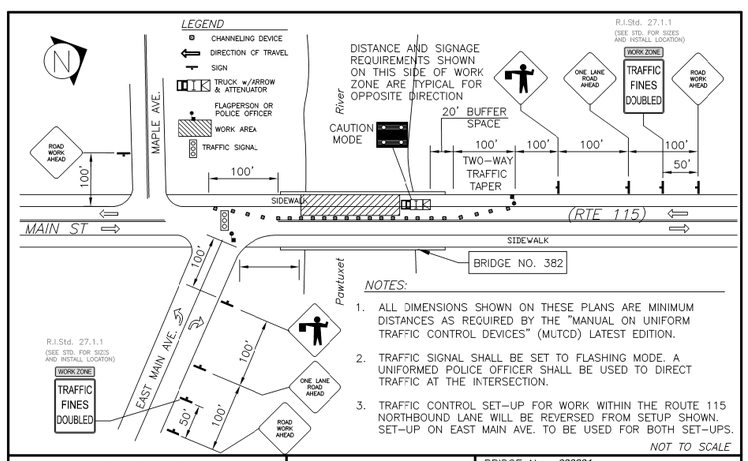

NOTES:

1. ALL DIMENSIONS SHOWN ON THESE PLANS ARE MINIMUM DISTANCES AS REQUIRED BY THE "MANUAL ON UNIFORM TRAFFIC CONTROL DEVICES" (MUTCD) LATEST EDITION.
2. TRAFFIC SIGNAL SHALL BE SET TO FLASHING MODE. A UNIFORMED POLICE OFFICER SHALL BE USED TO DIRECT TRAFFIC AT THE INTERSECTION.
3. TRAFFIC CONTROL SET-UP FOR WORK WITHIN THE ROUTE 115 NORTHBOUND LANE WILL BE REVERSED FROM SETUP SHOWN. SET-UP ON EAST MAIN AVE. TO BE USED FOR BOTH SET-UPS.

NOT TO SCALE

RHODE ISLAND
DEPARTMENT of TRANSPORTATION

SHORT-TERM
TRAFFIC CONTROL PLAN

BRIDGE No. 038201
CITY/TOWN WEST WARWICK
LOCATION MAIN STREET (ROUTE 115) / PAWTUXET PIVER
SPEED LIMIT 25 MPH

BRIDGE NO. 382

NOT TO SCALE

NOTES:

1. ALL TEMPORARY TRAFFIC CONTROL SET-UPS AND DEVICES AND THEIR INSTALLATION, MAINTENANCE, AND REMOVAL SHALL CONFORM TO THE LATEST EDITION OF THE "MANUAL ON UNIFORM TRAFFIC CONTROL DEVICES" (MUTCD) WITH ALL REVISIONS, AND THE LATEST EDITION OF THE "RIDO" STANDARD SPECIFICATIONS FOR ROAD AND BRIDGE CONSTRUCTION" WITH ALL REVISIONS.
2. ALL TEMPORARY TRAFFIC CONTROL DEVICES SHALL BE IN PLACE PRIOR TO THE START OF WORK.
3. ALL TEMPORARY TRAFFIC CONTROL DEVICES SHALL BE REMOVED AS SOON AS PRACTICAL WHEN THEY ARE NO LONGER NEEDED. WHEN WORK IS SUSPENDED FOR SHORT PERIODS OF TIME, TEMPORARY TRAFFIC CONTROL DEVICES THAT ARE NO LONGER APPROPRIATE SHALL BE REMOVED OR COVERED.
4. DISTANCES ARE A GUIDE AND MAY BE ADJUSTED IN THE FIELD BY THE ENGINEER.
5. MAXIMUM SPACING OF CHANNELIZATION DEVICES IN A TAPER IS EQUAL IN FEET TO THE SPEED LIMIT IN MPH. MAXIMUM SPACING OF CHANNELIZATION DEVICES IN A TANGENT SECTION IS EQUAL IN FEET TO TWO TIMES THE SPEED LIMIT IN MPH.
6. MINIMUM LANE WIDTH IS TO BE 11 FEET UNLESS OTHERWISE SHOWN. MINIMUM LANE WIDTH TO BE MEASURED FROM THE EDGE OF CHANNELIZATION DEVICES OR TEMPORARY BARRIER.
7. TEMPORARY TRAFFIC CONTROL SET-UP FOR A LEFT SHOULDER CLOSURE SHALL BE SIMILAR TO THE SET-UP SHOWN, WITH APPROPRIATE CHANGES TO SIGNS AND OTHER DEVICES TO INDICATE THE LEFT SHOULDER CLOSURE.
8. THE SIZES OF ALL DIAMOND SHAPED ADVANCE WARNING SIGNS SHALL BE 48" X 48".
9. THE DISTANCE BETWEEN THE SHADOW VEHICLE AND THE WORK SPACE SHOULD BE SELECTED BASED ON TRAFFIC AND SITE CONDITIONS AS WELL AS THE CHARACTERISTICS OF THE SHADOW VEHICLE/ATTENUATOR AND ITS MANUFACTURER'S RECOMMENDATIONS, BUT SHOULD BE NO GREATER THAN THE MINIMUM DISTANCE SUFFICIENT TO ENSURE THAT THE SHADOW VEHICLE WILL NOT ROLL INTO THE WORK SPACE WHEN HIT BY AN ERRANT VEHICLE.
10. WHERE A SIDE STREET OR RAMP INTERSECTS THE WORK ZONE, ADDITIONAL TEMPORARY TRAFFIC CONTROL DEVICES SHALL BE INSTALLED IN ACCORDANCE WITH PART 6 OF THE MUTCD.

TAPER AND BUFFER LENGTHS

Speed Limit	Taper Length* (L) Feet	Buffer Space** Feet
40 MPH	320	180
45 MPH	540	220
50 MPH	600	280
55 MPH	660	340
60 MPH	720	420
65 MPH	780	490

* Required
** Suggested

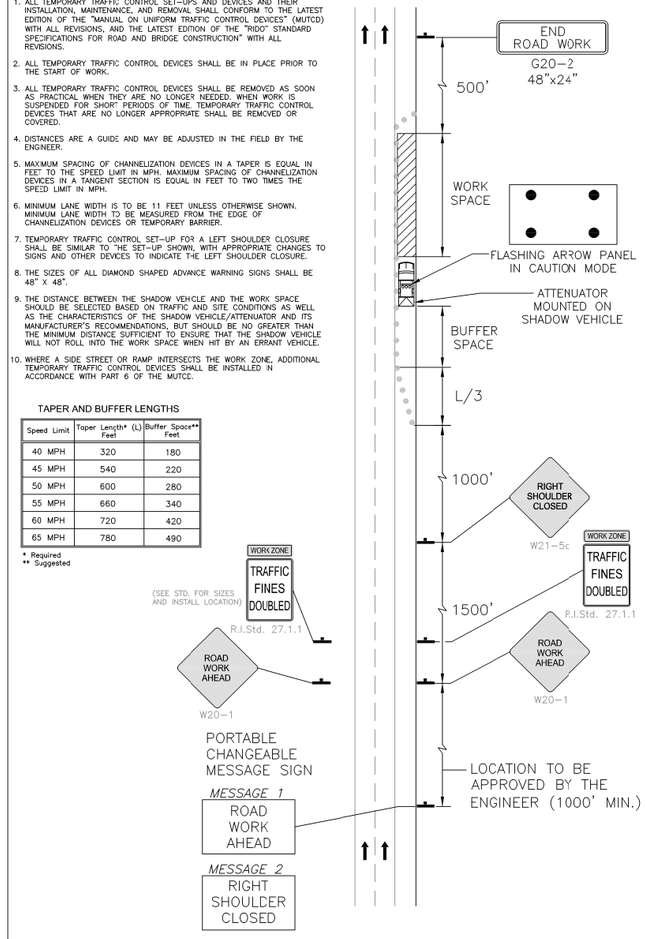

RHODE ISLAND
DEPARTMENT OF TRANSPORTATION

TEMPORARY
TRAFFIC CONTROL PLAN

TYPICAL SHOULDER CLOSURE ON FREEWAY OR EXPRESSWAY

BRIDGE NO. 729

NOT TO SCALE

REVISIONS		
NO.	DATE	BY

RHODE ISLAND
DEPARTMENT OF TRANSPORTATION

EMERGENCY REPAIRS TO BRIDGES
185, 243, 382, 416, 423 & 729

RHODE ISLAND

MAINTENANCE & PROTECTION
OF TRAFFIC PLAN NO. 1

COMMONWEALTH ENGINEERS & CONSULTANTS, INC.
400 SMITH STREET
PROVIDENCE, RI 02908

CHECKED BY _____ DATE _____ SCALE AS SHOWN

0144L_V1_015_TCONTROL001

FED. ROAD DIV. NO.	STATE	FEDERAL AID PROJECT NO.	FISCAL YEAR	SHEET NO.	TOTAL SHEETS
	RI		2016	16	17

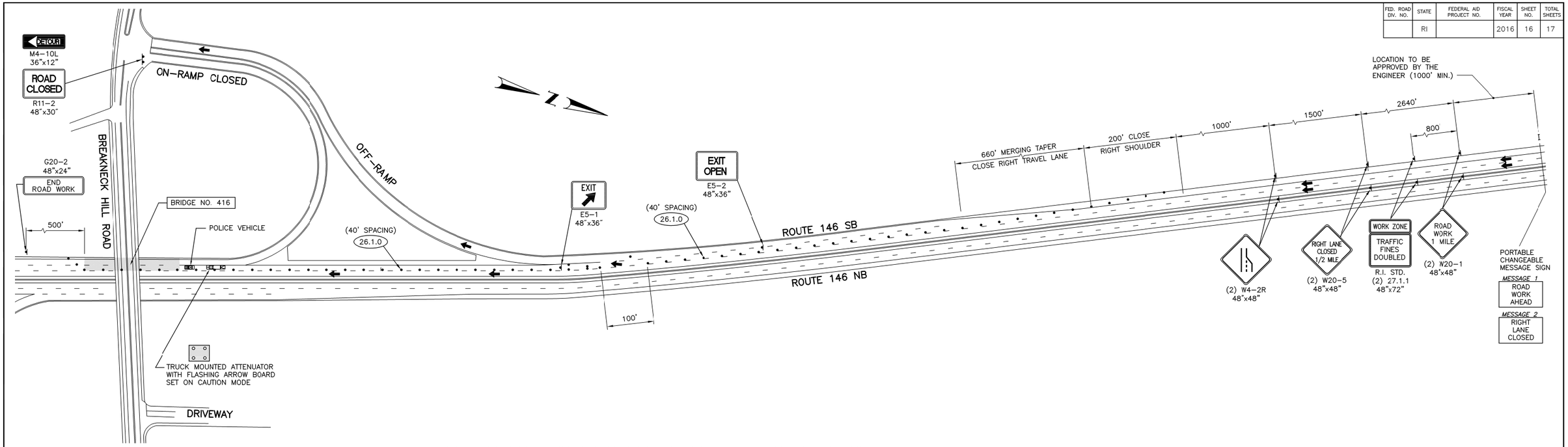

ROUTE 146 SOUTHBOUND LOW SPEED TRAVEL LANE & ON-RAMP CLOSURES

SCALE: 1"=100'

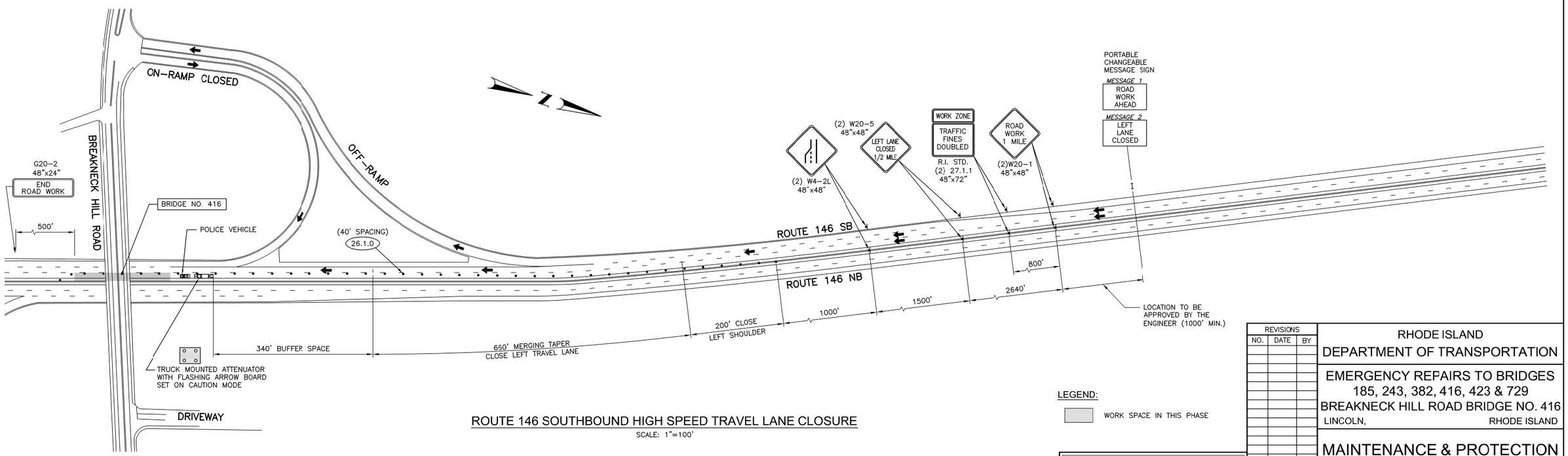

ROUTE 146 SOUTHBOUND HIGH SPEED TRAVEL LANE CLOSURE

SCALE: 1"=100'

LEGEND:

WORK SPACE IN THIS PHASE

COMMONWEALTH ENGINEERS & CONSULTANTS, INC.
400 SMITH STREET
PROVIDENCE, RI 02908

REVISIONS		
NO.	DATE	BY

RHODE ISLAND
DEPARTMENT OF TRANSPORTATION

EMERGENCY REPAIRS TO BRIDGES
185, 243, 382, 416, 423 & 729
BREAKNECK HILL ROAD BRIDGE NO. 416
LINCOLN, RHODE ISLAND

MAINTENANCE & PROTECTION
OF TRAFFIC PLAN NO. 2

CHECKED BY _____ DATE _____ SCALE AS SHOWN

0144L_V1_016_TCONTROL002

FED. ROAD DIV. NO.	STATE	FEDERAL AID PROJECT NO.	FISCAL YEAR	SHEET NO.	TOTAL SHEETS
	RI		2016	17	17

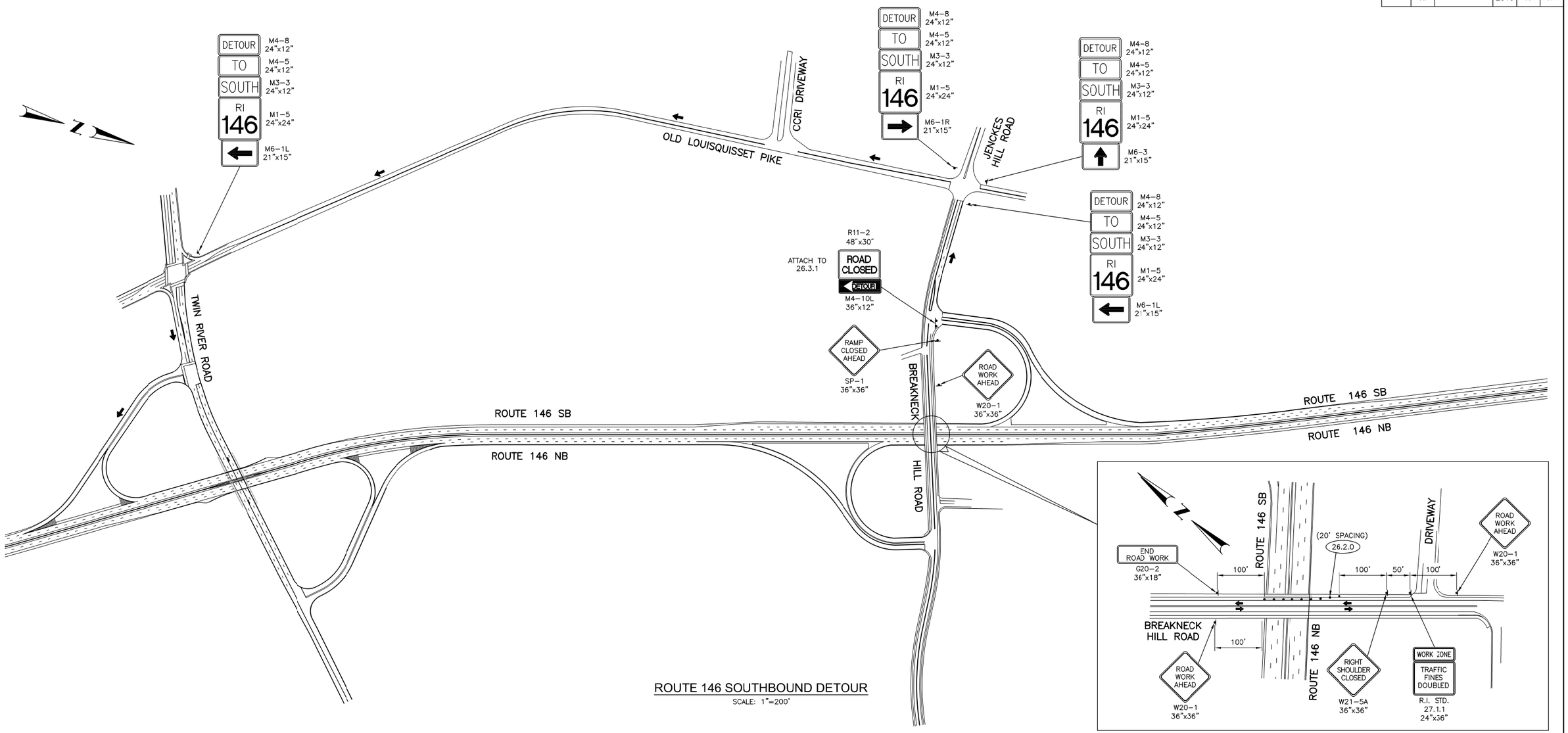

ROUTE 146 SOUTHBOUND DETOUR

SCALE: 1"=200'

BREAKNECK HILL ROAD DETAIL

SCALE: 1"=100'

LEGEND:

WORK SPACE IN THIS PHASE

REVISIONS		
NO.	DATE	BY

RHODE ISLAND
DEPARTMENT OF TRANSPORTATION

EMERGENCY REPAIRS TO BRIDGES
185, 243, 382, 416, 423 & 729
BREAKNECK HILL ROAD BRIDGE NO. 416
LINCOLN, RHODE ISLAND

MAINTENANCE & PROTECTION
OF TRAFFIC PLAN NO. 3

CHECKED BY _____ DATE _____ SCALE AS SHOWN

COMMONWEALTH ENGINEERS & CONSULTANTS, INC.
400 SMITH STREET
PROVIDENCE, RI 02908

0144L_V1_017_TCONTROL003