May 18, 2015

STATE OF RHODE ISLAND AND PROVIDENCE PLANTATION
DEPARTMENT OF ADMINISTRATION

DIVISION OF PURCHASES BID NO. 7549519

RHODE ISLAND DEPARTMENT OF TRANSPORTATION

RHODE ISLAND CONTRACT NO.2015-CB-033

FEDERAL-AID PROJECT NO. FAP Nos: BRO-0777(001)

Pleasant Valley Parkway Bridge No. 777

Dean Street to Pleasant Valley Parkway, Acorn Street to Bath Street.

CITY/TOWN OF Providence

COUNTY OF PROVIDENCE

NOTICE TO PROSPECTIVE BIDDERS

ADDENDUM NO. 2 Prospective bidders and all concerned are hereby notified of the following changes in the Plans, Specifications, Proposal and Distribution of Quantities for this contract. These changes shall be incorporated in the Plans, Specifications, Proposal and Distribution of Quantities, and shall become an integral part of the Contract Documents.

A. **Clarification**

1. Pre-Bid Conference

   Attached to this Addendum No. 2 is the sign in sheet from the Pre-Bid Conference held on May 12, 2015 at RIDOT.

B. **Contract Dates**

1. Bid-Opening Date

   Bid-Opening Date Updated To "05/29/2015".

C. **Contract Documents**

1. General Provisions - Contract Specific

   a. CS-i

      Delete page CS-i in its entirety and replace it with page CS-i(R-1) attached to this Addendum No. 2. The In-Water Work section has been added.

   b. CS-1(R-1)

      Delete page CS-1(R-1) in its entirety and replace it with page CS-1(R-2) attached to this Addendum No. 2. The Scope of Work has been revised.

c. CS-4

Delete page CS-4 in its entirety and replace it with page CS-4(R-1) attached to this Addendum No. 2. The anticipated utility work has been revised.

d. CS-7

Delete page CS-7 in its entirety and replace it with page CS-7(R-1) attached to this Addendum No. 2. Section K has been intentionally left blank.

e. CS-8

Delete page CS-8 in its entirety and replace it with page CS-8(R-1) attached to this Addendum No. 2. The Field Office section has been added to the Notice to Contractors.

f. CS-11 and CS-12

Delete pages CS-11 and CS-12 in their entirety and replace them with pages CS-11(R-1) and CS-12(R-1) attached to this Addendum No. 2. The Environmental Permits section has been revised. The In-Water Work section has been added.

g. CS-17

Delete page CS-17 in its entirety and replace it with page CS-17(R-1) attached to this Addendum No. 2. The Preliminary Contract Submittal List has been revised.

h. CS-39 and CS-40

Delete pages CS-39 and CS-40 in their entirety and replace them with pages CS-39(R-1) and CS-40(R-1) attached to this Addendum No. 2. The Environmental Permits section has been revised. The RIDOT Inter-Office Memorandum has been removed.

i. CS-138a and CS-138b

Insert pages CS-138a and CS-138b attached to this Addendum No. 2. A letter from RIDEM has been added.

j. CS-152a

Insert page CS-152a attached to this Addendum No. 2. A letter from RIDOT has been added.

k. CS-153

Delete page CS-153 in its entirety and replace it with page CS-153(R-1) attached to this Addendum No. 2. Figure 3 has been revised.

l. CS-153a

Insert page CS-153a attached to this Addendum No. 2. A detail has been added.

2. Specifications - Job Specific

a. JS-ii

Delete page JS-ii in its entirety and replace it with page JS-ii(R-1) attached to this Addendum No. 2. Specifications 929 and 929.9901 have been removed.

b. JS-iii(R-1)

Delete page JS-iii(R-1) in its entirety and replace it with page JS-iii(R-2) attached to this Addendum No. 2. Specification 607 has been added.

c. JS-41 through JS-69

Delete pages JS-41 through JS-69 in their entirety and replace them with pages JS-41(R-1) through JS-69(R-1) attached to this Addendum No. 2. The specification has been revised.

d. JS-70 through JS-96

Delete pages JS-70 through JS-96 in their entirety and replace them with pages JS-70(R-1) through JS-96(R-1) attached to this Addendum No. 2. The specification has been revised.

e. JS-111

Delete page JS-111 in its entirety and replace it with page JS-111(R-1) attached to this Addendum No. 2. The specification has been revised.

f. JS-178 and JS-179

Delete pages JS-178 and JS-179 in their entirety and replace them with pages JS-178(R-1) and JS-179(R-1) attached to this Addendum No. 2. Specifications 929 and 929.9901 have been removed. See CS-8, Notice to Contractor, Section S - Field Office.

g. JS-215 and JS-216

Delete pages JS-215 and JS-216 in their entirety and replace them with pages JS-215(R-1) and JS-216(R-1) attached to this Addendum No. 2. The specification has been revised.

h. JS-239

Insert page JS-239 attached to this Addendum No. 2. Specification 607 has been added.

D. Drawings/Plans - Change/Addition

1. Volume 1 - Sheet 5(R-1) of 59

Delete plan sheet 5(R-1) in its entirety and replace it with plan sheet 5(R-2) attached to this Addendum No. 2. A note has been added.

2. Volume 1 - Sheet 19(R-1) of 59

Delete plan sheet 19(R-1) in its entirety and replace it with plan sheet 19(R-2) attached to this Addendum No. 2. A note has been revised.

3. Volume 1 - Sheet 34(R-1) of 59

Delete plan sheet 34(R-1) in its entirety and replace it with plan sheet 34(R-2) attached to this Addendum No. 2. A note has been revised.

4. Volume 2 - Sheet 4 of 39

Delete plan sheet 4 in its entirety and replace it with plan sheet 4(R-1) attached to this Addendum No. 2. A material has been revised.

5. Volume 2 - Sheet 9 of 39

Delete plan sheet 9 in its entirety and replace it with plan sheet 9(R-1) attached to this Addendum No. 2. A note has been added.

6. Volume 2 - Sheet 15 of 39

Delete plan sheet 15 in its entirety and replace it with plan sheet 15(R-1) attached to this Addendum No. 2. A callout has been revised.

7. Volume 2 - Sheet 16 of 39

Delete plan sheet 16 in its entirety and replace it with plan sheet 16(R-1) attached to this Addendum No. 2. A note has been revised.

RI Department of Transportation
Chief Engineer

Addendum - 2

State of Rhode Island
Division of Purchases
One Capitol Hill
Providence, RI 02908

"NON-MANDATORY" PRE BID CONFERENCE SIGN IN SHEET

BID NUMBER:	2015-CB-033 -- 7549519
BID TITLE:	Pleasant Valley Parkway Bridge #777
PRE BID DATE & TIME:	May 12, 2015 @ 9AM

Purchasing Representative: —

Pre Bid START TIME: 9:03

Pre Bid END TIME: 9:15

PLEASE PRINT

	COMPANY NAME	COMPANY REPRESENTATIVE	ADDRESS	CONTACT E-MAIL	CONTACT PHONE NUMBER
1	RIDOT	NATHAN SHAPIRO	2 Capitol Hill Prov	NATHAN.SHAPIRO@DOT.RI.GOV	401-222-3260
2	CARDI Corp	Anthony Mesiti	400 Lincoln Ave Warwick	AMESITI@CARDI.com	401-739-8300
3	J. H. Lynch	Ed Loffredo	50 Lynch Place Cum	ELOFFREDO@JHLYNCH.com	401-333-4300
4	Manafort Brothers	Jason LaForge	20 Martin St Cumberland	JLaforge@manafort.com	401-333-2550
5	RIDOT	Andrew Reeder	2 Capitol Hill, Providence	andrew.reeder@dot.ri.gov	X 4279
6	RIDOT - Bridge	Jessica Rodas	2 Capitol Hill, Prov.	Jessica.rodas@dot.ri.gov	X 4076
7	RIDOT	Rahmat Noorparvar	//	Rahmat.Noorparvar@dot.ri.gov	X 4076
8	VHB	Bhamt Patel	1 Cedar St, Prov.	bpatel@vhb.com	272-8100
9	VHB	Bob Clinton	1 Cedar St. Prov	rclinton@vhb.com	272-8100
10	RIDOT	Theodore Coleman	2 Capitol Hill	Ted.Coleman@dot.ri.gov	222 2694 X 4203
11					
12					
13					
14					
15					

GENERAL PROVISIONS-CONTRACT SPECIFIC

INDEX

PARAGRAPH	TITLE	PAGE
1	Brief Scope of Work	CS-1
2	List of Contract Drawings	CS-1
3	Utility & Municipal Notification & Coordination	CS-3
4	Coordination with Other Contracts	CS-4
5	Specialty Items	CS-5
6	Notice to Contractors	CS-5
7	Sequence of Construction and Schedule	CS-8
8	Transportation Management Plan	CS-11
9	Environmental Permits	CS-11
10	Stormwater Pollution Prevention Plan	CS-12
11	In-Water Work	CS-12
	Appendix A – Preliminary Contract Submittal List	CS-13
	Appendix B – Coastal Resources Council Management – Assent	CS-18
	Appendix C – Army Corp of Engineers Programmatic General Permit	CS-24
	Appendix D – Rhode Island Department of Environmental Management – Water Quality Certification	CS-38
	Appendix E – National Grid Guidelines and Specifications	CS-44
	Appendix F – Traffic Management Plan	CS-50
	Appendix G – Stormwater Pollution Prevention Plan	CS-68
	Appendix H – City of Providence Technical Specifications	CS-110
	Appendix I – Verizon Schedule	CS-136
	Appendix J – DRAFT Remedial General Permit – Conceptual Approval	CS-138
	Appendix K – DRAFT Remedial General Permit - Application	CS-141
	Appendix L – Geotechnical Reports for Informational Purposes	CS-252

1. BRIEF SCOPE OF WORK:

RI Contract No. 2015-CB-033, RI Federal Aid Project No. BRO-0777(001), for the Pleasant Valley Bridge No. 777 Replacement project in the City of Providence, County of Providence.

Bridge work shall include the replacement of the superstructure; as a 2-span structure over Woonasquatucket River. The bridge work shall include, but not be limited to: bridge concrete deck and sidewalk, Precast Prestressed NEXT (New England Extreme Tee) Beams, elastomeric bearings, four-bar steel bridge railing, granite curb, concrete pier cap, concrete abutment stem, wingwalls, end posts, four-bar pedestrian railing and supports, utility conduits relocation, lighting, temporary earth retaining system, temporary utility support bridge (by Verizon), concrete filled pipe piles and deck joint installation. In-water works include rip-rap and sand bag installation, pre and post waterway condition survey, temporary construction platform (by General Contractor) and pier pile installation. The work also includes demolition of the entire existing bridge superstructure, pier cap and partial demolition and sawcutting of the existing abutment stem to the limits shown on the contract drawings. All bridge work will be performed under a complete bridge closure.

The highway work shall include but is not limited to clearing and grubbing, full depth reconstruction of pavement, leveling course, temporary island pavement, excavation and embankment, erosion control, trimming and fine grading, sawcutting pavement, modifications to the existing storm drainage system, construct bio-retention pond, roadway lighting, temporary and permanent traffic signal systems, curbing, dust control, uniform traffic persons, flagpersons, temporary construction signs, field office, mobilization, maintenance and protection of traffic, signs, traffic detour, pavement markings, loam & seed, landscape mulching, plantings, handling, hauling, stockpiling, and management of contaminated soil, and other incidentals completed and accepted as necessary to complete the work of this contract as required by the Engineer.

2. LIST OF CONTRACT DRAWINGS:

There is one CD with the Contract Documents loaded on it. The contents are as follows:

- Standard Specifications for Road and Bridge Construction
- Compilations of Approved Specifications
- Required Contract Provisions for Federal-Aid Construction Contracts
- RIDOA Division of Purchases Procurement Regulations
- Rhode Island Standard Details Bridge Standard Details
- General Provisions
- General Provisions – Contract Specific
- Specifications – Job Specific
- Distribution of Quantities
- Federal Wage Rates

Quest Software Information & Files

- Quest Lite User Manual, Quest Lite Installation, Quest Lite Upgrade File
- Quest Lite Launch (Bid File)

Sheet No.	Description
	Volume 1-Highway Plans
1	Cover Sheet
2	Standard Plan Symbols & Standard Legend
3-4	Standard Notes Nos. 1-2

NATIONAL GRID GAS
40 Sylvan Road
W3.244
Waltham, MA 02451
All correspondence to: Melissa Owens,
Lead Engineer Liaison
781-907-2845

PROVIDENCE DEPT. OF COMMUNICATIONS
1 Communications Place
Providence, RI 02903
All correspondence to: Joseph McGarry,
Deputy Director
401-274-1150

PROVIDENCE DEPT. OF PUBLIC WORKS
700 Allens Avenue
Providence, RI 02905
All correspondence to: William Bombard
Acting DPW Director
401-467-7950

PROVIDENCE WATER SUPPLY BOARD
552 Academy Avenue
Providence, RI 02808
All correspondence to: Peter LePage
Senior Manager of Engineering
401-521-6300 Ext. 7242
Contact: Ron Campbell
401-521-6300 Ext. 7218

The Contractor shall contact DIG SAFE (1-888-344-7233) prior to commencing with construction. The locations of existing utilities have been shown on the Plans using the best available information and are approximate only. The Contractor shall verify the exact locations of all existing utilities and service connections both underground and overhead in accordance with DIG SAFE and the city of Providence prior to commencing any work that may impact the utilities in the area. Any damage to the utilities, which are detailed by DIG SAFE or shown on the Plans, shall be the Contractor's responsibility. The cost to repair such damage shall be borne by the Contractor.

Narragansett Bay Commission (NBC) Guidelines: NBC owns the 30" and 66" brick sewer along Kinsley Avenue/Providence Place and Promenade Street respectively. The Contractor shall adjust the sanitary sewer manhole covers associated with these lines within the project limits as shown on the plans. Before performing the adjustments the Contractor shall obtain a sewer alteration permit from the NBC. After obtaining the permit, the Contractor shall notify NBC 72 hours before starting on their facilities. The Contractor shall be responsible for fines or penalties assessed by the NBC if the Contractor fails to obtain the permit or notify NBC as required. The Cost to obtain this permit and notify NBC shall be incidental to the cost to adjust the sanitary sewer manholes.

National Grid Gas Guidelines and Specifications: Refer to **Appendix "E"** for Guidelines for Working around Gas Utilities; Guidelines for Support of Gas Pipes, Temporary Support of Gas Pipes; and Typical Utility Crossing and Trench Specifications. The Contractor shall note if a gas line becomes exposed during construction, Code requires that National Grid Gas Company (NGGC) be notified to inspect the line before backfilling. Also, any damage to the pipe or pipe coating will need to be repaired before backfilling.

The following utility work is anticipated:

- Verizon will relocate the telephone conduits across Pleasant Valley Bridge No. 777. See Appendix I for the Verizon relocation schedule. The Verizon contractor will need six weeks advance notice to mobilize to the site.

1. COORDINATION WITH OTHER CONTRACTS

It shall be the Contractor's responsibility to coordinate, cooperate and schedule his work and all segments thereof with the Engineer, other contractors, utility owners, and applicable local authorities, so as to minimize impacts to the construction schedule.

beam/arch is minimized, 2) removal of the asphalt pavement and/or sidewalk overhang and railing to lower the dead load, 3) accounting for the effect of multi-axle equipped vehicles, 4) accounting for the effect of various vehicle geometries (i.e. wheelbases, wheel-spacing, etc) or 5) spreading out the load with mats, plates, or other load distribution devices.

The Contractor must demonstrate that his equipment falls within the restrictions stated herein, or within his own vehicle-specific restrictions. Computations, sketches, vehicle load diagrams, and other information for this purpose shall be prepared by a Professional Engineer registered in the State of Rhode Island, and submitted for approval. No additional payment for engineering services relating to load restrictions, the use of load-distribution devices, or any hardships resulting from the capacity of the structure will be granted.

I. Coordination with the RIDOT TMC

If any construction activities are going to impact the CCTV system, the Contractor shall be responsible to coordinate their activities with the following entities:

1. RIDOT Transportation Management Center (TMC)
2. ITS System Manager - A representative appointed by the TMC

The ITS System Manager will be the primary point of contact and interface for this coordination. The Contractor shall be responsible for notifying and providing concurrent copies of all correspondence and project submittals to the System Manager. The Contractor shall notify the ITS System Manager 3 days prior to any construction activities that impact the CCTV system.

J. Precast Concrete Components

For concrete components shown as cast-in-place construction, the contractor may propose an alternative precast construction method and details as part of Value Engineering proposal, in accordance with the applicable requirements of the Special Provisions.

K. Intentionally Left Blank

L. Woonsaquatucket River

The Contractor is not allowed to use water from the Woonsaquatucket River. The Contractor is not allowed to discharge water used in construction activities to the Woonsaquatucket River whether directly or indirectly through a closed drainage system.

M. Use of Explosives

The Contractor is NOT allowed to use explosives on this project.

N. Unit Bid Item and Lump sum Bid Item Payments

For requirements and work described in the Contract Documents but not expressly identified to be measured separately for payment, the costs thereof shall be included in the contract bid prices of the items of work to which they pertain as listed in the Proposal.

O. Mobilization and Demobilization

To clarify Section 936 Mobilization and Demobilization, the RIDOT will not withhold retainage in accordance with Section 109.06 Partial Payments.

P. Additional Project Information.

Prior RIDOT project plans at the Pleasant Valley Bridge are included on the contract disk. The prior project plans are included for information only.

Q. Substantial Completion.

Substantial Completion is based on a six-day work week. It is anticipated that the Contractor may need to work six (6) days a week, ten (10) hours a day, and use multiple crews during the bridge closure period to achieve the Contractual Completion Dates.

R. Longitudinal Deck Joint.

No longitudinal deck shall be allowed on bridge structure.

S. Field Office.

Field office shall be a standard item based on the RIDOT standard specification including the latest interims.

7. SEQUENCE OF CONSTRUCTION AND SCHEDULE

General Stipulations: The Contractor shall adhere to the following requirements:

a) The Contractor shall coordinate, cooperate and schedule his work and all segments thereof with the Engineer, other contractors, utility owners, and applicable local authorities, so as to minimize impacts to the construction schedule.

b) The Contractor shall notify the Department in writing at least fourteen (14) days in advance of the road and bridge closure so that adequate public notice can be given. Upon the Engineer's approval, the Contractor shall coordinate the required traffic control.

c) The Contractor is advised that the signs and other traffic control devices shown on the Traffic Control Plans and Details are minimum requirements. The Contractor shall be responsible to supplement these as required to ensure the public's safety. All traffic control set-ups shall conform to the latest edition of the Manual on Uniform Traffic Control Devices, with latest revisions.

d) Before starting construction activities that require traffic control, the Contractor shall furnish and install all traffic control. All temporary construction signs shall be removed, covered or otherwise concealed when they are not needed to properly warn drivers and/or pedestrians. The Contractor shall be compensated for this under Item Code 937.0200, "Maintenance and Movement Traffic Protection".

e) The Contractor shall coordinate requirements for Uniformed Traffic Control Persons with the Engineer who will coordinate with the local police department.

f) In cases of emergency and/or as directed by the Engineer, the Contractor shall move equipment to allow for the passage of emergency vehicles and/or open closed lanes to maintain traffic flow.

- All final traffic signal equipment shall be fully operational with the exception of the P1/P6 and P4 pedestrian signal poles (precast foundations shall be used for these poles in order to expedite the installation after the final traffic pattern has been implemented).
- All temporary traffic signal equipment that is not removed the first night shall be protected using methods approved by the engineer. The cost associated with protecting existing and temporary signal equipment to the satisfaction of the engineer shall be considered incidental to item code 937.0200 Maintenance and Movement Traffic Protection.
- Install final pavement markings including lane lines and stop lines to accommodate all travel lanes shown on the final Signing & Striping Plans and Traffic Signal Plans.
- Uncover all proposed final signs and bag/remove conflicting signs (all proposed signs

The remaining work required to fully implement the final Signing & Striping Plans and Traffic Signal Plans and removal of temporary traffic signal equipment shall be completed within 5 calendar days of opening the bridge

8. TRANSPORTATION MANAGEMENT PLAN

The Transportation Management Plan (TMP) for this project is included as an appendix **(See Appendix "F")**. The TMP lays out the set of coordinated transportation management strategies that will be used to manage the work zone safety and mobility impacts of this project. In the event of a discrepancy between information in the TMP and information elsewhere in the Contract Documents, the former shall govern.

The Department's latest Training Guidelines for Personnel Responsible for Work Zone Safety & Mobility are available under the "Training" section at http://www.dot.ri.gov/humanresources/index.asp.

9. ENVIRONMENTAL PERMITS

The following environmental permits have been issued for this project:

- Coastal Resources Council Management (CRMC) Assent - **(See Appendix "B").**
- Army Corps of Engineers (ACOE) Programmatic General Permit (PGP) - **(See Appendix "C").**
- Rhode Island Department of Environmental Management (RIDEM) Water Quality Certification - **(See Appendix "D").**
- Rhode Island Department of Environmental Management (RIDEM) DRAFT Remedial General Permit Conceptual Approval - **(See Appendix "J")**.

The Contractor shall adhere to the requirements of these permits.

The Contractor should submit his Final Notice of Intent (NOI) for the RIDEM RIPDES Remedial General Permit to the RIDOT. This includes the preparation of the required permit application forms and supporting documentation for the permit. The RIDOT will sign the application and submit it to the DEM for review and approval. The RIDOT review time is subject to the standard shop drawing review duration of 45 days.

10. STORMWATER POLLUTION PREVENTION PLAN

Erosion and Sediment Control. The Storm Water Pollution Prevention Plan (SWPPP) details the anticipated erosion & sediment controls required for this project. The Contractor must designate a SWPPP contact person, experienced in storm water management on large construction sites, who is available on site throughout the life of the project, and who has the authority to direct contractor's personnel and/or subcontractor's personnel in carrying out corrective actions requested by RIDOT's SWPPP Inspector and/or Resident Engineer. The Contractor's designated SWPPP contact person must be available to oversee all SWPPP related activities and to accompany the RIDOT's SWPPP Inspector, as requested, when inspections are performed. The Contractor shall identify the SWPPP contact person at the Pre-Construction Meeting. The SWPPP contact person should be at the Pre-Construction Meeting if possible.

The Stormwater Pollution Prevention Plan (SWPPP) for this project is included as an appendix **(See Appendix "G")**. The SWPPP provides guidance for complying with the terms and conditions required under the General Permit, however, this document does not negate or eliminate the need to understand and adhere to all applicable RIPDES regulations. In the event of a discrepancy between information in the SWPPP and the CRMC Assent, the latter shall govern.

11. IN-WATER WORK

The in-water work (limited to pile, SOE installation & removal, rip rap and sandbag installation) should only be performed during the low flow season of July 1 to Jan 31. The removal of other items can be outside the date restriction.

Submittal No.	Description	Spec No.	Date Submitted to RIDOT	Date Returned to Contractor	Date Returned to RIDOT	Comments
CSL-051	2 Way Pedestal Mounted LED Pedestrian Signal Head 12 Inch with Countdown Timer 12 Inch					
CSL-052	Accessible Pedestrian Detector – Pushbutton with Sign					
CSL-053	Narrow Condition Impact Attenuator					
CSL-054	Bench - 6′					
CSL-055	Environmental Permit - RIPDES					

THIS PAGE INTENTIONALLY LEFT BLANK

THIS PAGE INTENTIONALLY LEFT BLANK

RHODE ISLAND
DEPARTMENT OF ENVIRONMENTAL MANAGEMENT
235 Promenade Street, Providence, RI 02908-5767 TDD 401-222-4462

May 11, 2015

Mr. Peter A. Healey, P.E.
Chief Civil Engineer
Rhode Island Department of Transportation
Two Capitol Hill
Providence, RI 02903-1124

RE: Pleasant Valley Parkway Bridge No. 777 Project, Providence, RI
Revised Treatment System Design (Revised Settling Tank Size)
RIPDES Permit No. RIG85G021

Dear Mr. Healey:

This correspondence is being written in response to the Rhode Island Department of Transportation's (DOT's) May 7, 2015 letter that was submitted to the Rhode Island Department of Environmental Management (DEM) requesting modification to the March 20, 2015 conceptual approval to discharge treated groundwater associated with contaminated construction dewatering under the Rhode Island Pollutant Discharge Elimination System (RIPDES) Program. Specifically, the May 7th letter requested approval to modify the approved treatment system to include a 7,500 gallon settling tank in place of the previously approved 21,000 gallon fractionation tank. The change to the smaller tank was necessary to address a weight limit issue for the pedestrian bridge where the treatment system will be located. Based upon review of the data included with the DOT's May 7th letter, the DEM is conceptually approving the modified treatment system to consist of a 7,500 gallon settling tank, 5-micron bag filters, a 1,000 lb granular activated carbon unit, 0.5-micron cartridge filters, two 12.5 ft^3 cation resin vessels in series, and two 12.5 ft^3 arsenic resin vessels in series. The treated groundwater will discharge through a flow totalizer to the Woonasquatucket River as identified in the application.

As previously indicated, prior to the DEM's final authorization to discharge a revised Notice of Intent (NOI) that includes the following items must be submitted to the DEM:

1. Section II. (Operator) and Section VIII. (Owner/Operator Certification) must be updated to include the appropriate operator information and operator signature, respectively.

2. Section IV.f. (Discharge Information) must be revised to include the expected start and end dates of the proposed discharge(s).

The March 16th application noted that expedited monitoring and system sampling (i.e., samples taken on the 1st, 3rd, and 6th day during the first week of discharge analyzed using 72-hour turnaround time and weekly sampling for the remainder of the first month) will be performed during startup in accordance with RGP requirements. However, since the treatment system is being designed to treat groundwater at four dewatering locations at various times, DOT is advised that each dewatering location will need to follow this sampling procedure (i.e., each time the treatment system is used to treat a new dewatering location, the week one sampling schedule will resume). This must be reflected in the final application that is submitted to the DEM by DOT or its contractor.

If you have any questions regarding the RGP or the conditions of this conceptual approval, feel free to contact me at 401-222-4700, Extension 7715.

Sincerely,

Joseph B. Haberek, P.E.
Principal Sanitary Engineer

cc: Michael Dahlquist, DOT (electronic)
Peter Grivers, VHB (electronic)
Eric Beck, DEM (electronic)

Department of Transportation
Two Capitol Hill
Providence, RI 02903

Office 401-222-2450
Fax 401-222-3905

May 7, 2015

Mr. Joseph B. Haberek, P.E.
Rhode Island Department of Environmental Management
Office of Water Resources
235 Promenade Street
Providence, Rhode Island 02908

Re: Revised - RIPDES Remediation General Permit System Component Size Request
RIPDES Application No. RIG85G021
Pleasant Valley Parkway Bridge No. 777 Project
Providence, Rhode Island

Dear Mr. Haberek:

On March 16, 2015, the Rhode Island Department of Transportation (RIDOT), submitted a Preliminary Rhode Island Department of Environmental Management (RIDEM) Rhode Island Pollution Discharge Elimination System (RIPDES) Remediation General Permit (RGP) Notice of Intent (NOI) application for dewatering during construction associated with the referenced project. Your Department issued a Conceptual Approval Letter on March 20, 2015. At this time, due to a recently identified weight limitation for the pedestrian bridge where the conceptually approved treatment system is scheduled to be located, RIDOT is submitting this request for the Department to approve a change to the size of the settling/equalization tank from 21,000 gallons to 7,500 gallons. Reducing the size of the tank will not adversely affect the remedial system performance and will reduce the load placed on the pedestrian bridge. No changes for any of the other treatment system components are proposed and no modifications to the previously provided carbon breakthrough and resin exhaustion rates are necessary.

A revised treatment system schematic and a manufacturer's specification sheet (for illustration purposes) are attached.

If you have any questions or need any additional information, please do not hesitate to contact the undersigned at 401-222-2053.

Very truly yours,

Peter Healey,
RIDOT Chief Civil Engineer

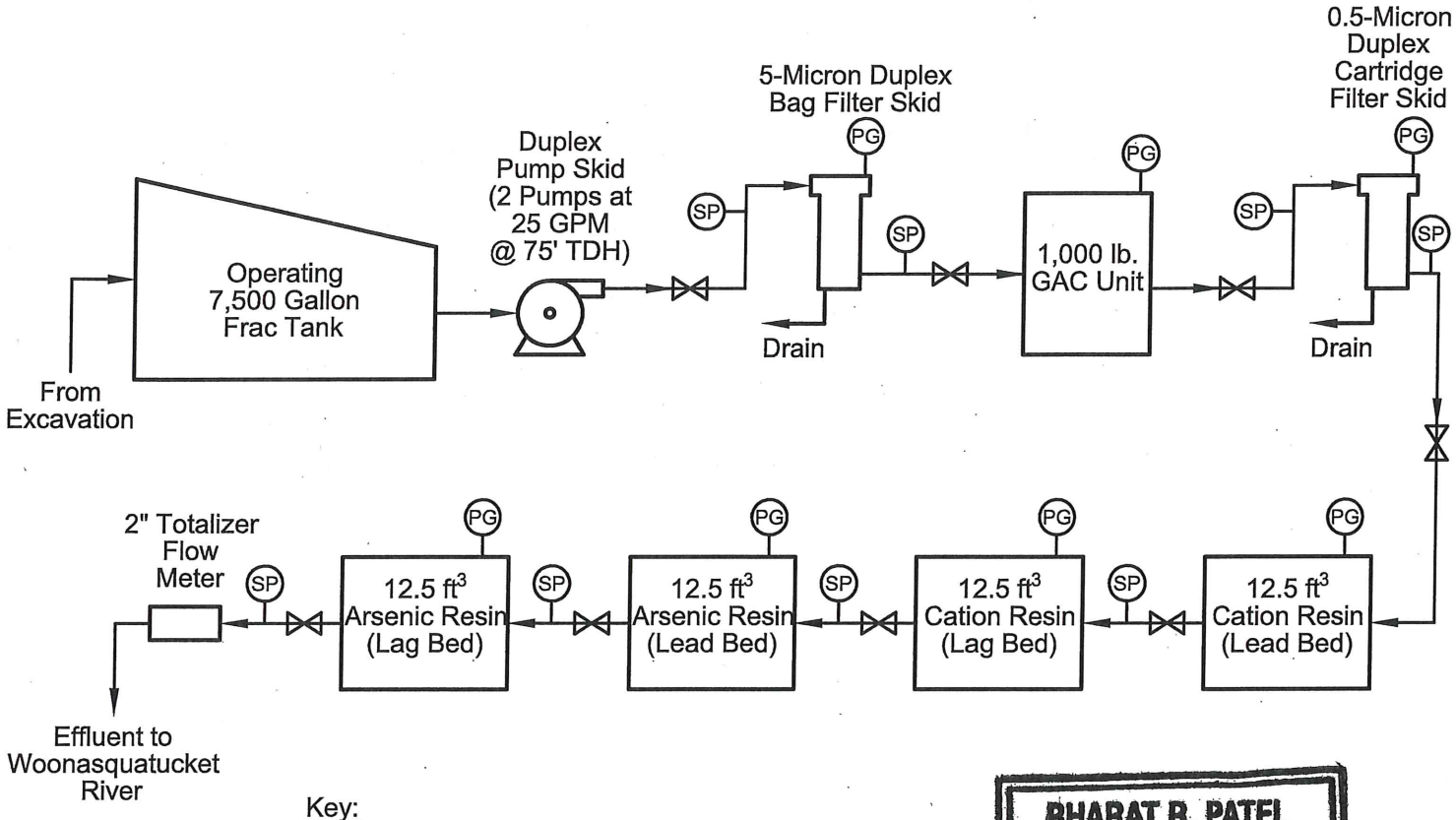

Key:

- SP Sample Port
- PG Pressure Gauge
- Check Valve

BHARAT R. PATEL
No. 6406
REGISTERED PROFESSIONAL ENGINEER
5/7/2015

Temporary Treatment System

(25 GPM Max Flow Rate)

25 GPM Temporary Treatment System — Figure 3
Reconstruction of Pleasant Valley Parkway
Bridge No. 777
Providence, Rhode Island

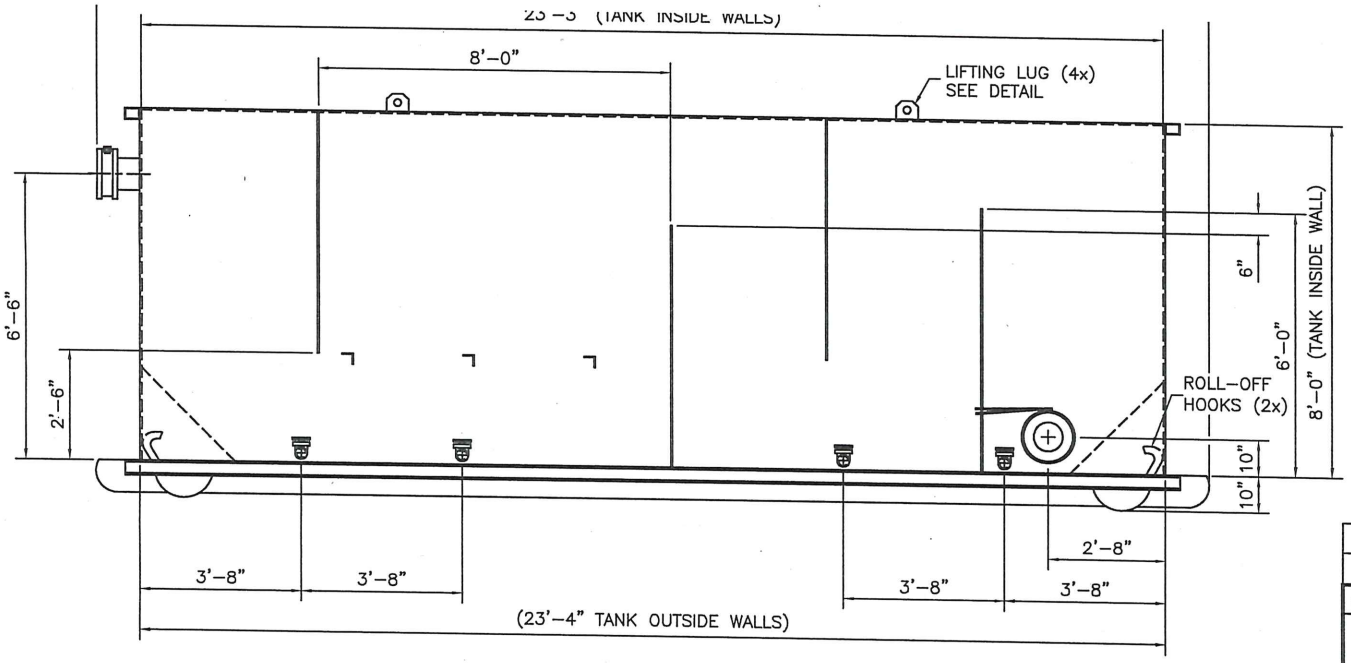

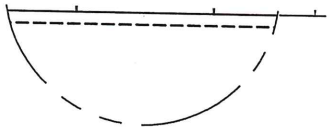

LIFTING LUG
DETAIL (TYP.)

50 YARD ROLL-OFF SETTLING TANK

- TANK CONSTRUCTION: A-36 CARBON STEEL
- INLET CONNECTION: 8" FLANGE
- OUTLET CONNECTION: 8" FLANGE
- DRAINS (4x): 2" NPT FEMALE COUPLING
- APPX. TANK WEIGHT (EMPTY): 10,000 Lbs.
- APPX. TANK WEIGHT (OPERATING): 75,000 Lbs.

	CAPACITY	
	VOLUME (GAL.)	DESIGN FLOW (GPM) @ 15 MIN. RETENTION
NOMINAL	10,000	666.7
OPERATING	7,500	500

NO.	REVISIONS	DATE
C	CHANGED VOLUMES AND ADDED RETENTION TIME	04/20/09

50 YARD ROLL-OFF SETTLING TANK
STANDARD
EQUIPMENT SPECIFICATION

SCALE: NTS | APPROVED BY: JB | DRAWN BY: AAV
DATE: 10/06/08

GROUND/WATER TREATMENT & TECHNOLOGY
P.O. BOX 1174
DENVILLE, NJ 07834

THIS DRAWING IS THE PROPERTY OF
GROUND/WATER TREATMENT & TECHNOLOGY, INC

DWG SIZE: A | SHEET: 1 OF 1 | DRAWING NUMBER: ST-0034-SPC | C

T:\Cad Files\Rentals - STANDARD DRAWINGS\EQUIPMENT SPECIFICATION\TANKS\ST-0034-SPC

Item	SPECIAL PROVISION INDEX Description	Page
809	Precast/Prestressed Structure Concrete Masonry	JS-140
809.9901	Prestressed Concrete NEXT Beam Type 24F-Furnish, Fabricate & Erect Class HP ¾”8,500 psi	JS-152
810.9901	Galvanized Bar Reinforcement for Structures	JS-154
814	14-Day Wet Cure for Portland Cement Concrete Bridge Deck	JS-158
824.9900	Temporary Working Platform System	JS-159
827.9901	Hot-Dip Galvanizing and Factory-Applied Color Finish	JS-163
905.1000	Sidewalks	JS-170
905.9901	Cobblestone Island	JS-171
906.9903 thru 906.9908 and 906.9910	Furnish and Install Slope Faced Granite Curb Straight – 7” Width, Providence Std. Furnish and Install Slope Faced Granite Curb Circular – 7” Width, Providence Std. Furnish and Install 6’ Granite Transition Curb – 7” Width, Providence Std. Furnish and Install Granite Wheelchair Ramp Curb Standards – 7” Width, Providence Std. Furnish and Install Granite Ramp Stone Straight – 7” Width, Providence Std. Furnish and Install Granite Ramp Stone Circular – 7” Width, Providence Std. Furnish and Install Granite Inlet Stone 5 Foot – 7” Width, Providence Std.	JS-173
907.1000	Dust Control	JS-175
916.9901	Narrow Condition Impact Attenuator	JS-176
920.9902	Impermeable Liner	JS-177
937.1000	Maintenance and Movement of Traffic Protective Devices	JS-180
938.1000	Price Adjustments	JS-181
943.0200	Trainee Man-Hours	JS-182
L02.1000	Seeding Failure to Comply	JS-186
L06.1000	Planting	JS-187
L15.9901	Bench – 6’	JS-188
T04.9901, T13.9902 T13.9903 and T13.9904	Optical Detector Cable Optical Detector – Single Channel, One Way Optical Detector Phase Selector And Chassis Optical Confirmation Beacon	JS-190
T04.9902, T12.9901, T12.9907 and T13.9905	Video Detection System Cable Video Detection System Hardware Advanced Lens Adjustment Module Video Detection System Camera	JS-193
T04.9903, T12.9902 and T13.9906	Advanced Video Detection System Cable Advanced Video Detection System Hardware Advanced Video Detection System Camera	JS-198

Item	Description	Page
T04.9904	Fused and Unfused Premolded Y-Connectors	JS-202
T06.9902	PVC Conduit Within Structure	JS-203
T08.9901	Decorative Lighting Standard & Luminaire – Type “A” City of Providence	JS-204
T08.9902	Decorative Pole Foundation with Bolts	JS-207
T08.9904	Reinstall Stockpiled Poles and Luminaires	JS-208
T11.9901 thru T11.9905	25-foot Galvanized Steel Mast Arm Traffic Signal post and Foundation, Std. 19.2.0 30-foot Galvanized Steel Mast Arm Traffic Signal Post and Foundation, Std. 19.2.0 45-foot Galvanized Steel Mast Arm Traffic Signal Post and Foundation, Std. 19.2.0 Dual Mast Arm (24x45) Galvanized Steel Mast Arm Signal Post and Foundation, Std. 19.2.0 Traffic Signal Standard Galvanized Steel, Std. 19.3.0 (Modified)	JS-209
T11.9906	Traffic Signal Wood Span Pole, 40 Foot, Class I	JS-218
T12.9903	GPS Time Synchronization System	JS-220
T12.9904	Actuated Controller, TS-2, Type 2 in Existing Cabinet	JS-222
T12.9905	Modify Existing Traffic Signal Controller Cabinet	JS-224
T12.9906	Mesh Network Receiver	JS-226
T12.9908	Maintenance of Traffic Signal Systems	JS-227
T13.1000	Traffic Detectors and Relays	JS-229
T13.8210	Accessible Pedestrian Detector - Pushbutton with Sign	JS-230
T13.9907	Mesh Network Vandal Resistant Antenna With Cable	JS-234
T14.9902 thru T14.9904	1 Way Pedestal Mounted LED Pedestrian Signal Head With Countdown Timer 12 Inch 1 Way Bracket Mounted LED Pedestrian Signal Head With Countdown Timer 12 Inch 2 Way Pedestal Mounted LED Pedestrian Signal Head With Countdown Timer 12 Inch	JS-235
201.9904	Remove and Dispose Bench	JS-238
607	Mass Concrete	JS-239

SECTION 401

DENSE GRADED HOT MIX ASPHALT (HMA) PAVEMENTS

401.01 DESCRIPTION. This work consists of constructing HMA pavements on prepared foundations in conformity with the dimensions and details indicated on the Plans, and in accordance with these Specifications. These Specifications are applicable to all types of Dense Graded HMA pavements irrespective of aggregate gradation, grade of performance graded asphalt binder (PGAB), or pavement use.

The HMA shall be composed of a mixture of aggregate, PGAB, and filler if required. The aggregate shall be sized, graded and combined in such proportions that the resulting mixture meets the gradation requirements of the job mix formula (JMF).

401.02 MATERIALS.

401.02.1 Aggregates. Aggregates shall meet the applicable requirements of **Subsection M.03.02.2** of these Specifications and AASHTO M 323.

401.02.2 Performance Graded Asphalt Binder (PGAB). All grades shall conform to AASHTO M 320 and R 29. The PGAB shall meet the requirements of PG 64S-28 with the exception of both Class 19.0 and mixes designated as “Base Course” which shall incorporate PG 64S-22 for mixes with less than 15% RAP. Both Class 19.0 and “Base Course” mixes with 15 to 25 percent RAP shall incorporate PG 58S-28.

Should a class of HMA be designated as “Modified”, the binder shall meet the requirements of PG 64E-28 and shall incorporate at least 2.0% SBS polymer. The nonrecoverable creep compliance versus percent recovery of the binder shall be plotted and must fall above the curve in Figure X1.1 in Appendix X1 of AASHTO M 332.

Should a class of HMA be designated as “with WMA” the Contractor shall use a WMA (Warm Mix Additive). WMA shall conform to Section 414 of these specifications.

Re-refined engine oil bottoms (REOB) shall not be used in any PGAB.

401.02.3 Mix Design. HMA mixes shall conform to AASHTO M 323, "Standard Specification for Superpave Volumetric Mix Design". The design procedure shall follow AASHTO R 35 "Standard Practice for Superpave Volumetric Design for Hot-Mix Asphalt (HMA)". The optimum binder content (OBC) shall be determined as follows:

a) The OBC for Class 4.75, Class 9.5, and Class 12.5 when not designated as “Base Course” shall

be determined using PG 64S-28.

b) The OBC for Class 4.75, Class 9.5, and Class 12.5 when designated as "Base Course" with less than 15 percent RAP shall be determined using PG 64S-22.

c) The OBC for Class 4.75, Class 9.5, and Class 12.5 when designated as "Base Course" with 15 to 25 percent RAP shall be determined using PG 58S-28.

d) The OBC for Class 19.0 with less than 15 percent RAP shall be determined using PG 64S-22.

e) The OBC for Class 19.0 with 15 to 25 percent RAP shall be determined using PG 58S-28.

The effective voids in the mineral aggregate ($VMA_{effective}$) and a volumetric phase diagram shall be submitted for each asphalt content during the mix design process. Mix designs shall be developed and signed by an individual certified in "Superpave HMA Mix Design" by the Asphalt Institute. Mix Designs shall be submitted no later than two weeks prior to the date when production of the mixture is scheduled to begin and shall be accompanied by a copy of that individual's certification. No mixture may be produced for State projects until the mix design is approved by the Engineer. Mix designs shall be submitted on forms provided by the Engineer.

The following specific requirements and exceptions to AASHTO M 323 shall apply.

a. The specific gravity, absorption and consensus properties of the aggregates shall be obtained from RIDOT's most recent sampling and testing or from a laboratory accredited to perform AASHTO T 84 and T 85.

b. The implementation of the recommendations of Section 4.2 of AASHTO R 35 is required.

c. The mix shall be coarse graded as defined in Section 6.1.3 of AASHTO M 323.

d. The dust to binder ratio ($P_{0.075}/P_{be}$) shall be 0.5 – 1.0. The effective binder content shall be used to calculate this ratio.

e. In addition to the sieves listed in Table 3 of AASHTO M 323, the 0.600 mm, 0.300 mm and 0.150 mm sieves are required. The 50.0 mm and 37.5 mm sieves are not required.

f. Class 19.0 and mixes designated as "Base Course" shall be designed with a 0%, 10%, 15%, 20% or 25% RAP content. RAP shall not be used in any other mix.

g. $N_{initial}$ shall be 6, N_{design} shall be 50 and N_{max} shall be 75 gyrations.

h. A moisture susceptibility test is not required.

i. The design VMA, VFA, air voids and minimum optimum binder content (OBC) shall meet the following criteria:

Table 1 – HMA Properties

Class of Mix	VMA (minimum)	VFA	Air Voids	Minimum OBC
4.75	17.5%	70% - 80%	4%	7.0
9.5	16.5%	70% - 80%	4%	6.0
12.5	15.5%	70% - 80%	4%	5.5
19.0	14.5%	70% - 80%	4%	5.0

The following procedures shall be adhered to for each mix design:

- Three aggregate trial blends shall be submitted for acceptance before beginning the mix design procedure.

The procedures for mix design submittals shall include:

- All trial mixture data and calculations determined per Section 9 of AASHTO R 35 shall be submitted on forms provided by the Engineer. The Engineer will determine which trial mixture shall be used for the mix design procedure.
- After the mix design is completed it shall be submitted to the Engineer for review and approval.
- The correction factors for each mix for each ignition furnace in the plant lab shall be provided.

The two gyratory cores (AASHTO T 308) and the theoretical maximum specific gravity sample (AASHTO T 209) at the optimum binder content shall be submitted to the Engineer.

Before beginning production of a new HMA mix, a successful plant trial batch shall be performed for that mix and the results forwarded on forms provided by the Engineer.

Should a change in sources of materials be made, a new mix design shall be established before the new material is used. When unsatisfactory results or other conditions make it necessary, the Contractor shall establish a new mix design and submit it to the Engineer for approval.

401.02.4 Quality Assurance.

a. Process Control. The Contractor shall exercise process control over all production

operations. This shall require the constant monitoring of equipment, materials, and production activity such as testing and analysis to ensure that the HMA meets all applicable requirements and is produced within the allowable tolerances.

b. Acceptance Testing. Acceptance testing will be conducted by the Engineer.

1. Gradation, Binder Content and Air Void Content

The gradation requirements in Table 2 apply to mixes with and without pay adjustments:

Table 2 – Gradation Requirements

	Class 19.0	**Class 12.5**	**Class 9.5**	**Class 4.75**
25.0mm (1″)	100%	100%	100%	100%
19.0mm (3/4″)	90% - 100%	100%	100%	100%
12.5mm (1/2″)	90% max	90% - 100%	100%	100%
9.5mm (3/8″)	-	90% max	90% - 100%	95% - 100%
4.75mm (#4)	-	-	90% max	85% - 100%
2.36mm (#8)	± 5% from design	± 5% from design	± 5% from design	-
1.18mm (#16)	-	-	-	±5% from design
0.075mm (#200)	≥2%	≥2%	≥2%	≥2%
Control Sieve	2.36mm (#8)	2.36mm (#8)	2.36mm (#8)	1.18mm (#16)

During production of a specific mix, if two consecutive tests do not meet the gradation requirements of Table 2 or one test exceeds double the tolerance on the control sieve, the plant shall cease production of that HMA mix. Production will be allowed to resume after the Contractor completes a successful trial batch for that class of mix, as approved by the Engineer.

The plant shutdown criteria in Table 3 shall apply for binder content and air voids that exceed the following tolerances:

Table 3 – Plant Shutdown Criteria

Pay Adjustments	**Shutdown Criteria**	**One Test**	**Two Consecutive Tests**
With Pay Adjustments	Optimum Binder Content	±0.6%	-
	Design Air Voids	±2.0%	-
Without Pay	Optimum Binder Content	±0.6%	±0.4%

Adjustments	Design Air Voids	±2.0%	±1.0%

Production will be allowed to resume after the Contractor completes a successful trial batch for that class of mix, as approved by the Engineer.

2. Mix Production – Lots and Sublots

A standard sublot is 600 tons for HMA sampled at the plant for each production run. A standard lot for each mix is ten sublots. A sample will be randomly selected and tested for each sublot. At least five sublots will be used when calculating pay adjustments.

If the quantity of HMA needed to finish a production run is projected by the Contractor to be less than the standard sublot size of 600 tons, the projected tonnage may be used to select a random sample. If the projected tonnage is not produced or a random sample is unable to be taken, the Engineer may select a sample at the end of the run or at the paver. If no sample is taken, the tonnage will be added to the previous sublot.

Additional samples may be taken at the discretion of the Engineer.

Gyratory cores and theoretical maximum density samples will be retained by the Engineer for two weeks after the results are reported to the Contractor.

3. Adjustments to Lots

If less than five sublots are tested after the end of the final standard lot, they will be added to that lot. Five or more sublots tested after the end of the final standard lot will constitute a separate lot.

4. Plant Pay Adjustments

(a) If a class of HMA is designated with "Pay Adjustments", the pay adjustments for deviation from the optimum binder content (established by the mix design) in Table 4 and the design air void content in Table 5 will apply:

Table 4 – OBC Pay Adjustments

Deviation from Optimum Binder Content	**Pay Adjustment**
Less than or equal to 0.1 %	+2%
0.2%	+1%
0.3%	0%
0.4%	-5%
0.5%	-15%
0.6%	-30%

0.7%	-40%
Greater than 0.7 %	-50% or Remove and Replace*

Table 5 – Air Void Pay Adjustments

Deviation from Design Air Void Content	**Pay Adjustment**
Less than or equal to 0.5%	+1%
0.6% to 1.0%	0%
1.1% to 1.5%	-5%
1.6% to 2.0%	-10%
2.1% to 2.5%	-30%
2.6% to 3.0%	-40%
Greater than 3.0%	-50% or Remove and Replace*

* The decision to make 50% payment or Remove and Replace will be made by the Engineer

Note: All deviation values will be rounded to the nearest 0.1% before applying pay adjustments.

(b) Calculation of Pay Adjustments for Production Binder and Air Void Content

For each test, absolute deviations will be used when determining binder and air void content pay adjustments. Absolute deviations are the values of deviation regardless of sign (±).

The average of the absolute deviations from the optimum binder content of all of the sublots in each lot will be used to determine the appropriate pay adjustments for the lots. The same will apply for air void content. No payment will be made for any pavement that is removed.

All other tolerances shall conform to the RI Standard Specifications.

c. Independent Assurance Testing. This testing will be performed by the Department in accordance with the Rhode Island Department of Transportation publication entitled "Schedule for Sampling, Testing and Certification of Materials."

401.03 CONSTRUCTION METHODS.

401.03.1 HMA Mixing Plant. Mixing plants shall be of sufficient capacity and coordinated to adequately handle the proposed production of HMA. The storage yard shall be maintained neat

and orderly and the separate stockpiles shall be readily accessible for sampling.

a. Requirements for All Plants.

1. Equipment for Preparation of PGAB. Tanks provided for the storage of PGAB shall be equipped to heat and hold the material at the required temperatures. The heating shall be accomplished by steam coils, electricity, or other approved means such that no flame shall be in contact with the tank. The circulating system for the PGAB shall be designed to assure proper and continuous circulation during the operating period. Provision shall be made for measuring storage tanks. An adequate sampling valve shall be provided to ensure the safe and proper sampling of the PGAB.

2. Cold Feed Bins. The plant shall include no fewer than three (3) storage bins of sufficient capacity to supply the mixer when it is operating at full capacity. Bins shall be arranged to assure separate and adequate storage of appropriate fractions of the mineral aggregates without contaminations. They shall also be so constructed that samples can be readily obtained. Separate dry storage shall be provided for filler or hydrated lime when used and the plant shall be equipped to feed such material into the mixer.

3. Cold Aggregate Feeder. The plant shall be provided with accurate mechanical means for uniformly feeding the aggregate into the drier so that uniform production and temperature will be obtained.

4. Drier. The plant shall include a drier or driers which continuously agitate the aggregate during the heating and drying process.

5. PGAB Control Unit. Satisfactory means, either by weighing or metering, shall be provided to obtain the proper amount of PGAB in the mix within the tolerance specified. Means shall be provided for checking the quantity or rate of flow of PGAB into the mixer.

6. Thermometric Equipment. An armored thermometer of adequate range in temperature reading shall be fixed in the PGAB feed line at a suitable location near the charging valve at the mixer unit.

The plant shall also be equipped with either an approved dial-scale, mercury-actuated thermometer, an electric pyrometer, or other approved thermometric instrument so placed at the discharge chute of the drier as to register automatically the temperature of the exiting material.

The Engineer may require replacement of any malfunctioning or inconsistent thermometer by an approved temperature sensing and recording apparatus for better regulation of the temperature of the material.

7. Dust Collector. The plant shall be equipped with a dust collector constructed to waste or return uniformly all or any part of the material collected as directed.

8. Truck Scales. When required, the HMA shall be weighed on approved scales furnished by the Contractor or on public scales at the Contractor's expense. Such scales shall be tested at least every 60 days or whenever the Engineer deems necessary to assure their accuracy.

9. Scales. Scales shall be so located as to be easily readable from the operator's normal work station; otherwise a remote readout shall be supplied.

All plant scales, including truck scales, shall be certified at the expense of the Contractor by a competent and experienced scales technician as follows:

(a) Annually prior to use in State work.

(b) At intervals of not more than 60 calendar days.

(c) At any time ordered by the Engineer.

10. Safety Requirements. Adequate and safe access to sampling points shall be provided. Guarded ladders to other plant units shall be placed at all points where accessibility to plant operations is required. Accessibility to the top of truck bodies shall be provided by a platform or other suitable device, placed in an acceptable location near the testing laboratory, to enable the Engineer to obtain samples and mixture temperature data. All gears, pulleys, chains, sprockets, and other dangerous moving parts shall be thoroughly guarded and protected. A clear, clean and unobstructed passage shall be maintained at all times in and around the truck loading area.

11. HMA Holding Bin. HMA may be stored in surge and storage systems designed for that purpose. Each surge and storage system must meet the requirements of AASHTO M156, unless otherwise permitted by the Engineer, and may be inspected by the Department to determine acceptance at specific holding times.

Acceptance shall be based upon the ability of the holding bin to hold and discharge mixtures within the quality criteria specified by the mix design and these Specifications.

b. Requirements for Batching Plants.

1. Automatic Proportioning. The plant shall be equipped with automatic proportioning devices. Such devices shall include equipment for accurately proportioning the various components of the mixture by weight in the proper sequence. PGAB and aggregates shall be proportioned by weight. Additives, if required, may be proportioned by volume or weight. The plant shall be equipped to automatically control the sequence and timing of mixing operations. There shall be auxiliary interlock cutoff circuits to interrupt and stop the automatic cycling of the

batching operations at any time an error in weighing occurs, when an aggregate bin becomes empty, or when there is a malfunction of any portion of the control system.

2. Recording Equipment. The plant shall be equipped with a digital recorder which will automatically print the following data on delivery tickets:

(a) Batch weights of each size aggregate. Weights printed may be individual or cumulative.

(b) Total weight of aggregates in batch. The weight printed for the last aggregate batched shall be the total weight of aggregates in the batch when cumulative weights are used.

(c) Weight of PGAB in batch.

(d) Weight of total batch.

(e) Total weight of batches in truck.

(f) Total weight of PGAB in all batches in truck.

(g) Date mixed.

(h) The time each batch or load began or the time each was completed.

When silos are utilized, the requirements for delivery tickets shall conform to **Para. c; Requirements for Drum Dryer Mixing Plants**, of this Subsection. In addition, automated batch plant printout tickets generated in accordance with **Para. b** of this Subsection shall be given to the plant inspector and maintained on file.

There shall be sufficient copies of delivery tickets to provide a copy for the plant inspector and a copy for the Resident Engineer for permanent project record. The following information shall also be included on delivery slips:

(i) Name of customer.

(j) Name of project and contract number.

(k) Name of driver and truck number.

(l) Class of HMA.

(m) Additives.

3. Equipment Failure. If at any time the automatic proportioning or recording devices become inoperable, the plant may be allowed to batch and mix HMA for a period of not more than 48 hours from the time of the breakdown, if approved by the Engineer. Written permission of the Engineer will be required for periods of operation without automatic proportioning facilities longer than 48 hours.

4. Screens. Plant screens, capable of screening all aggregates to the specified sizes and proportions and having normal capacities in excess of the full capacity of the mixer, shall be provided.

5. Hot Aggregate Bins. Hot bin storage of sufficient capacity to ensure uniform and continuous operation shall be provided. The bins shall be arranged to ensure separate and adequate storage of appropriate fractions of the aggregate. Each bin shall be provided with overflow pipes, of such size and at such locations as to prevent backing up of material into other compartments or bins. Each bin shall be provided with its individual outlet gate, constructed so that when closed there shall be no leakage. The gates shall cut off quickly and completely. Bins shall be equipped with adequate tell-tale devices to indicate the position of the aggregates in the bins at the lower quarter points. Adequate and convenient facilities shall be provided for obtaining aggregate samples from each hot bin.

6. Aggregate Scales. Scales for any weigh box or hopper shall be of the springless dial type, having a full complement of index pointers and shall be of a standard make and design. They shall be accurate to 0.50 percent, have minimum graduations not greater than 0.50 percent and shall be readable and sensitive to 0.25 percent or less. The preceding percentages are based on total batch weight.

7. Batching Controls. Batching controls shall be electrically interlocked with the scales to prevent cycling or recycling of batching until scales tare zero.

The batching controls shall meet the following tolerances with respect to the various components weighed in each batch:

Combined Aggregate Components:	±1.5 percent of total batch weight
PGAB:	±0.1 percent of total batch weight

The total weight of the batch shall not vary more than plus or minus 2 percent from the theoretical design weight.

8. Time Locking Device. The mixer shall have an accurate time locking device to control the operation of a complete mixing cycle by locking the weigh box gate, after charging the mixer,

until the closing of the mixer discharge gate at the completion of the cycle. It shall lock the PGAB feed throughout the dry mixing period and shall lock the mixer discharge gate throughout the dry and wet mixing periods. The dry mixing period is defined as the interval of time between the opening of the weigh box gate and the commencement of application of the PGAB. The wet mixing period is the interval of time between the commencement of application of the PGAB and the opening of the mixer discharge gate.

The control of the timing shall be flexible and capable of being set at intervals of not more than five seconds throughout the cycles up to three minutes. Changes in mixing time shall be made only when ordered by the Engineer.

9. Weigh Box or Hopper. The equipment shall include a means for accurately weighing each size of aggregate in a weigh box or hopper suspended on scales and of ample size to hold a full batch without hand raking or running over. The gate shall close tightly so that no material is allowed to leak into the mixer while a batch is being weighed.

10. PGAB Control. The equipment used to measure the PGAB shall be accurate to plus or minus 0.5 percent. The PGAB bucket shall be a non-tilting type with a loose sheet metal cover. The length of the discharge opening trough, bucket or spray bar shall be not less than three-fourths the length of the mixer and it shall discharge directly into the mixer. The PGAB bucket, its discharge valve or valves and spray bar shall be adequately heated. Steam jackets, if used, shall be efficiently drained and all connections shall be so constructed that they will not interfere with the efficient operation of the PGAB scales. The capacity of the PGAB bucket shall be at least 15 percent in excess of the weight of PGAB required in any batch. The plant shall have an adequately heated quick-acting, non-drip, charging valve located directly over the PGAB bucket.

The indicator dial shall have a capacity of at least 15 percent in excess of the quantity of PGAB used in a batch. The controls shall be constructed so that they may be locked at any dial setting and will automatically reset to that reading after the addition of PGAB to each batch. The dial shall be in full view of the mixer operator. The flow of PGAB shall be automatically controlled so that it will begin when the dry mixing period is over. All of the PGAB required for one batch shall be discharged in not more than 15 seconds after the flow has started. The size and spacing of the spray bar openings, trough or PGAB bucket shall provide a uniform application of PGAB the full length of the mixer. The section of the PGAB line between the charging valve and the spray bar shall be provided with a valve and outlet for checking the meter when a metering device is substituted for a PGAB bucket.

11. Mixer. The batch mixer shall be capable of producing a uniform mixture within the job mix tolerances. If not enclosed, the mixer box shall be equipped with a dust hood to prevent loss of dust.

The clearance of blades from all fixed and moving parts shall not exceed one inch unless the

maximum diameter of the aggregate in the mix exceeds 1¼-inches, in which case the clearance shall not exceed 1½-inches.

12. Access to the mixer platform shall be by adequate and safe stairways. A hoist or pulley system shall be provided to raise scale calibration equipment, sampling equipment, and other similar equipment from the ground to the mixer platform and return. There shall be adequate and unobstructed space on the mixer platform.

c. Requirements for Drum Dryer Mixing Plants.

1. Proportioning. Aggregates and PGAB shall be proportioned by dry weight of the aggregate. Additives, if required, may be proportioned by volume or weight. The cold aggregate feeder shall be synchronized with the PGAB delivery system. Satisfactory means shall be provided to ensure positive interlocking control between each cold bin, the cold aggregate feeder, and the PGAB delivery system. This interlocking control shall be such that production is interrupted if one or more cold bins becomes empty, or the flow of either aggregate or PGAB is obstructed.

2. Recording Equipment. The plant shall be equipped with a digital recording device approved by the Engineer by which the proportion of aggregate supplied by each cold bin, the flow rates by weight of dry aggregate and of PGAB, and the cumulative weights of dry aggregate and of PGAB incorporated in the mix are automatically printed. These printed records, showing the date and time of printing, shall be provided to the Engineer at the start and at the end of each production period and at any other times or intervals of time as requested.

The plant shall also have a computerized scale system consisting of a weight batcher and/or a truck scale. Delivery tickets shall be printed on an automatic digital recorder which will print the following information on delivery tickets:

(a) Date loaded.

(b) Net weight of mixture in truck. When a truck scale is used the net weight of the mixture shall be automatically calculated by weighing the truck both empty and full.

(c) Time of each load.

There shall be sufficient copies of delivery tickets to provide a copy for the plant inspector and a copy for the Resident Engineer for permanent project record. The following information shall also be included on delivery slips:

(a) Name of customer.

(b) Name of project and contract number.

(c) Truck identification and name of driver.

(d) Class of HMA.

(e) Additives.

3. Equipment Failure. If at any time the automatic recording device or the computerized scale system become inoperable, the plant may be allowed to produce HMA for a period of not more than 48 hours from the time of the breakdown, if approved by the Engineer. Approval will not be granted unless a satisfactory arrangement is made by the Contractor to weigh the mix. Written permission of the Engineer will be required for periods of operation longer than 48 hours during which any required automatic system is not functioning properly.

4. Aggregate Storage. Sufficient storage space shall be provided for each stockpile of various sized aggregates which shall be kept separated until they have been introduced into the cold bins that feed the drier. A minimum of four cold feed bins shall be required.

5. Cold Feed System. The plant shall have a device at each cold bin to feed the aggregate accurately and uniformly. No gravity type feeders will be permitted. Each adjustment opening shall be provided with indicators graduated to allow proportioning. Each cold bin gate shall be interlocked in such a manner that production is interrupted if one or more cold bins becomes empty or the flow is obstructed.

A mineral filler bin, when required, shall be added to the standard plant cold feed bins, and shall feed the mineral filler at adjustable rates accurately and uniformly. The feeder shall be interlocked so that production is interrupted if the bin becomes empty or the flow is obstructed.

The weighing equipment for all aggregates including mineral filler shall consist of a continuous weighing device either as it is proportioned by the individual feeders or after all materials have been deposited on a common belt. Belt scales shall meet the requirements of N.B.S. Handbook 44 and shall be installed according to the scale manufacturer's recommendations.

The plant shall have an adjustable feed rate control for each aggregate cold bin feeder and mineral filler feeder. The plant shall proportion the total aggregate quantity to the drum mixer with such accuracy and uniformity that the variation of material per interval of time shall not exceed an amount equal to 1.5 percent of the total weight of HMA per interval of time.

An automatic aggregate sampling device shall be provided which will divert a representative combined aggregate sample, including mineral filler, into a hopper or container for the purpose of gradation testing. The container shall cut the full width and depth of the aggregate flow. The sampling point shall be after the aggregate is proportioned and prior to its mixing with PGAB.

6. PGAB Control Unit. The PGAB shall be proportioned by a meter accurate to 0.1 percent. A flow switch designed to interrupt production if the PGAB flow is discontinued shall be installed in the delivery line between the meter and the mixer.

The PGAB delivery system shall be coupled with the aggregate delivery system to automatically maintain the required proportions as the aggregate flow varies. The delivery tolerance for PGAB shall be ±0.2 percent of the total mixture weight.

7. Plant Calibration. The cold feed and PGAB delivery systems shall be calibrated to insure that the plant is operating within the allowable tolerances. A procedure acceptable to the Engineer and in accordance with the manufacturer's recommendations shall be followed. These calibrations shall be performed prior to the start of each paving season, and at any other time as directed by the Engineer.

8. Mixer Unit. The plant shall include a continuous mixer unit having an automatic burner control and capable of producing a uniform mixture within the job mix tolerances. The mixture shall be discharged into a HMA holding bin meeting the requirements of **Para. a.11** of this Subsection.

The moisture content of the mixture upon discharge from the mixer shall not exceed 1.5 percent by weight.

401.03.2 Hauling Equipment. Trucks or other equipment used for hauling HMA shall have tight, clean, smooth metal beds which have been thinly coated with an approved release agent. No diesel fuel or other material is to be applied to any portion of the vehicle that comes into contact with the HMA. Any hauling equipment not complying with these Specifications will be immediately rejected along with its load of HMA. Each truck shall have a cover of canvas or other suitable material of such size as to protect the mixture from the weather. Truck beds shall be securely covered and, if necessary, insulated to ensure delivery of the mixture at the specified temperature. Cleaning of equipment, vehicles, and truck beds in areas to be paved is prohibited. Any HMA placed in areas where cleaning takes place is subject to rejection by the Engineer.

a. Material Transfer Vehicle (MTV). A material transfer vehicle (MTV) is required for the construction of all HMA friction, surface, intermediate and base courses on all limited access highways. When friction course is used, both the friction course and the underlying layer must be placed using an MTV.

The MTV shall independently deliver HMA from the hauling equipment to the paving equipment. A paving hopper insert with a minimum capacity of 14 tons shall be installed in the hopper of conventional paving equipment when a MTV is used.

As a minimum, the MTV shall have a high capacity truck unloading system which will receive HMA from the hauling equipment; a storage system in the MTV with a minimum capacity of 15 tons of HMA, and a discharge conveyor with the ability to swivel to either side to deliver the mixture to the paver while allowing the MTV to operate from an adjacent lane. In addition, the paving operation must contain a remixing system to blend the mixture prior to placement. The speed of the paver and MTV shall be adjusted to coordinate with the availability of HMA. Failure to keep the MTV supplied with HMA may be cause to cease paving operations for that operation. However, more than 2 stoppages shall result in paving being ceased for that operation.

When an MTV is to be used on a project, the Contractor shall further investigate the possible movement of the fully or partially loaded MTV on the project. If there are any structures on the project that the fully or partially loaded MTV will traverse, the Contractor shall request an Overweight Permit Check from the Department. Such a request shall be made in writing, and shall include the axle configuration, weights, and the project limits. Operations shall not begin until this permission is received from the Department and one copy forwarded to the Engineer.

The following is a statewide list of limited access highways (included are travel lanes, auxiliary lanes, climbing lanes, acceleration and deceleration lanes, ramps, collector/distributor roads, service roads, and shoulders greater than 8 feet):

I-95	Connecticut State Line to Massachusetts State Line
I-195	I-95 to Massachusetts State Line
I-295	I-95 to Massachusetts State Line
US Route 1	Prosser Trail to Wakefield Cut-Off
RI Route 4	Route 1 to I-95
US Route 6	Route 102 to Route 101; Route 10 to I-295
RI Route 10	Park Avenue to Route 6
US Route 6/RI Route 10	Magnolia Street Bridge to I-95
RI Route 24	Route 114 to Massachusetts State Line
RI Route 37	Natick Avenue to Post Road
RI Route 78	Route 1 to Connecticut State Line

RI Route 99	Route 146 to Mendon Road
East Shore Expressway	I-195 to Wampanoag Trail
RI Route 114	East Shore Expressway to Forbes Street
RI Route 138	Route 1 to Admiral Kalbfus Road
RI Route 146	I-95 to Reservoir Road
RI Route 146	Route 146A to Massachusetts State Line
RI Route 403	Route 4 to Quonset Point
Airport Connector	I-95 to Post Road
Henderson Bridge Access Roadway	Waterman Street/So. Angell Street to Broadway

401.03.3 Pavers. Unless otherwise shown on the Plans, mixtures shall be spread by means of a mechanical self-powered paver capable of spreading the mixture true to line, grade and crown as approved by the Engineer.

HMA pavers shall be self-contained, power-propelled units, provided with activated vibratory screed and solid vibratory screed extenders and capable of spreading and finishing courses of plant mixed HMA in lane widths applicable to the specified typical section and thickness shown on the Plans. Pavers used for shoulders and similar construction shall be capable of spreading and finishing courses of HMA in the widths, depths and cross slopes indicated on the Plans.

When laying mixtures, the paver shall be capable of being operated at forward speeds consistent with satisfactory laying of the mixture.

The paver shall be equipped with a receiving hopper having sufficient capacity for a uniform spreading operation. The hopper shall be equipped with a distribution system to place the mixture uniformly in front of the screed.

a. Screeding. The screed and screed extenders shall continually vibrate while placing the mixture and shall effectively produce a finished surface of the required evenness and texture without tearing, shoving or gouging the mixture. The screed shall be heated to maintain the HMA at the required placement temperature. Unless otherwise permitted by the Engineer, the screed extenders shall not extend more than two feet from the edge of the augers or auger extensions.

The paver shall be equipped with automatic screed controls with sensors for either or both sides of the paver, capable of sensing grade from an outside reference line, sensing the transverse slope of the screed and providing the automatic signals which operate the screed to maintain the desired grade and transverse slope. The sensor shall be capable of operating from a ski-type device or reference beam of not less than 25 feet in length. The sensor shall also have the capability of operating from a reference line unless the ski-type device or reference beam can ride on an adjacent, newly placed lift of HMA. A reference line shall also be used for the first course placed over in-place, recycled material.

Reference lines for the control of horizontal alignment shall be provided by the Contractor subject to the approval of the Engineer.

When a reference line is used for automatic grade control, the Contractor shall furnish and install all pins, brackets, tensioning devices, wire and accessories necessary for satisfactory operation of the automatic control equipment using a taut stringline set to grade for reference.

The transverse slope controller shall be capable of maintaining the screed at the desired slope within plus or minus 0.1 percent. The paver shall be equipped with automatic feeder controls, properly adjusted to maintain a uniform depth of materials ahead of the screed.

b. Manual Operation. Manual operation will be permitted in the construction of irregularly shaped and minor areas, on plant mixed seal courses, or where otherwise directed.

401.03.4 Conditioning of Existing Surfaces. Surfaces of curbs, gutters, vertical faces of existing pavements, and all structures to be in contact with the HMA shall be given a thin, even coating of tack coat. Care shall be taken to avoid the splattering of surfaces which will not be in contact with the HMA.

When a tack coat is required, the type and grade and the application methods shall conform to the applicable provisions of both **SECTION M.03; MATERIALS** and **SECTION 403; ASPHALT EMULSION TACK COAT**, of these Specifications.

401.03.5 Spreading and Finishing. The mixture shall be laid upon an approved cleaned surface, spread and struck off to the grade and elevation established. HMA pavers shall be used to distribute the mixture either over the entire width or over such partial width as may be practicable.

The practices and guidelines for placing HMA as outlined in Asphalt Institute Publication MS-22, "Construction of Hot Mix Asphalt Pavements" shall be adhered to unless otherwise permitted by the Engineer.

Unnecessary walking on the uncompacted HMA mat shall not be allowed.

Before beginning a new lane, the screed shall be heated to the proper operating temperature and any clumps of cold material in the paver hopper shall be removed.

No trucks or other equipment shall be allowed on freshly placed HMA unless specifically permitted by the Engineer.

On areas where irregularities or unavoidable obstacles make the use of mechanical spreading and finishing equipment impracticable, the mixture shall be placed as close to its final position as possible. It shall then be spread, raked, and luted by hand tools in a manner which will minimize segregation and result in the required compacted thickness.

Unless otherwise directed by the Engineer, any layer of HMA called for on side streets or driveways must be placed to a distance of at least three feet beyond the gutter line at the same time that layer is being placed on the adjacent project roadway.

a. HMA Designated for "Bridge Decks". When HMA is being placed on a surface which is covered with a waterproofing membrane, the following precautions shall be observed:

1. No traffic other than paving equipment shall be allowed on the membrane.

2. The paver must be moved carefully on and off the membrane. Initial proper adjustment of the paver to the correct depth is very important to prevent tearing the membrane. The Contractor shall be responsible for making any repairs to the membrane or to the HMA overlay necessary to correct damage caused by the paving operation, all at its expense.

3. Any and all tears of the membrane by the paver or trucks shall be repaired immediately to the satisfaction of the Engineer. Vehicle tires shall be clean of any rocks or materials that would puncture the membrane.

4. Truck drivers shall not make quick stops and starts, nor turn the wheels while parked, nor cross the deck at an angle.

401.03.6 Compaction. Immediately after the HMA has been spread, struck off, and surface irregularities adjusted, it shall be thoroughly and uniformly compacted by rolling.

The surface shall be rolled when the mixture is in the proper condition and when rolling does not cause undue displacement, cracking, and shoving.

Two rollers are required for all paving operations that exceed a daily total of 500 tons, except in the case of driveway, sidewalk and bridge deck paving operations. The number, weight and type of roller(s) shall be sufficient to compact the mixture to the required density before it reaches the minimum compaction temperature. Vibratory rollers used for compaction shall be operated in the vibratory mode. All rollers used for compaction shall have a minimum operating weight of ten tons or greater. The use of equipment which results in excessive crushing of the

aggregate will not be permitted.

The speed of a roller shall not exceed five miles per hour.

Rollers shall not be parked on HMA. When reversing direction, the action shall be smooth, not abrupt. The drive wheel shall approach the new mix, not the tiller wheel.

When a vibratory roller is used for finish rolling, it shall be used in the static mode. Finish rolling shall continue until all roller marks are eliminated.

The motion of the rollers shall be slow enough at all times to avoid displacement of the hot mixture, and any displacement resulting from reversing the direction of the rollers, or from any other cause, shall be satisfactorily corrected. The wheels of steel-wheel rollers shall be kept moist and clean to prevent adhesion of the fresh material, but an excess of water will not be permitted.

If satisfactory density cannot be obtained in any lift, and if the Engineer determines it to be structurally inadequate and/or incapable of maintaining material integrity, the Contractor shall remove and replace any such area at its own expense.

Any mixture that becomes loose and broken, mixed with dirt, or is in any way defective shall be removed and replaced with fresh hot mixture, which shall then be compacted to conform to the surrounding area. Any area showing an excess or deficiency of PGAB shall be removed and replaced. Said removal and replacement shall be at the Contractor's expense.

For HMA not designated as with "Pay Adjustments" in-place density shall be a minimum of 92% of the theoretical maximum density obtained at the plant and will be determined using a nuclear density gauge or in-place cores.

If a class of HMA is designated as for "Bridge Decks", an oscillatory roller with a minimum operational weight of 8 tons shall be used. For HMA designated as for "Bridge Decks" and with "Pay Adjustments" the pay adjustments will only apply to binder content and air voids.

If a class of HMA is designated as for "Leveling" it shall be placed with a paver. A pneumatic roller with a minimum operational weight of 8 tons shall be used. For HMA designated as for "Leveling" and with "Pay Adjustments" the pay adjustments will only apply to binder content and air voids.

If a class of HMA is designated as for "Patching", "Miscellaneous Work" or "Paved Waterways" it shall be placed by hand. A vibratory plate compactor or roller shall be used. A hand tamper may be used only if requested, and such request is approved by the Engineer.

a) In-Place Density for classes of HMA designated as with "Pay Adjustments"

Compaction density will be measured using cores of in-place pavement. Cores not taken under the direction of and witnessed by the Engineer will not be used for acceptance. The location of all cores will be determined by the Engineer. Each lot and sublot for in-place density cores will be matched as near as practical to each production lot and sublot used at the plant.

All cores shall be extracted after completion of rolling operations and before the paved section is open to traffic. The Engineer will take immediate possession of the cores upon extraction. If the Contractor does not obtain cores before a sublot is open to traffic, no bonus (pay adjustment resulting in more than 0%) will be paid for the sublot but disincentives will still apply. The cores will be retained by the Engineer for 4 weeks after the results are reported to the Contractor.

The Contractor may extract its own cores for QC purposes to monitor in-place density and production quality; such cores will not be used for acceptance.

1. Mat Density

Under the direction and witness by the Engineer, two stratified, randomly selected cores (4″ +0″/-0.25″ diameter) shall be extracted from the mat by the Contractor for each sublot greater than or equal to 450 tons. One core shall be taken for sublots less than 450 tons. The center of each core used to determine mat density will be at least one foot away from the edge of pavement and any transverse or longitudinal joints or drainage structures.

2. Joint Density

One joint density core shall be extracted for every 3000′ or less when a joint is formed. Joint cores shall be extracted so that the center is within two inches of the middle of the sloped portion of a notched-wedge joint or within one inch of the middle of a butt joint.

3. In-Place Density Pay Adjustments

In-place density will be measured and reported as a percent of theoretical maximum density.

The pay adjustments from Table 6 will be made for in-place mat density:

Table 6 – Mat Density Pay Adjustments

In-Place Mat Density	Pay Adjustment
95.0% and greater	+2%
94.0% to 94.9%	+1%
93.0% to 93.9%	0%
92.0% to 92.9%	-5%
91.0% to 91.9%	-15%
90.0% to 90.9%	-25%

89.0% to 89.9%	-35%
Below 89.0%	Remove and Replace

The pay adjustments from Table 7 will be made for in-place joint density:

Table 7– Joint Density Pay Adjustments

In-Place Joint Density	Pay Adjustment
93.0% and greater	+2%
92.0% to 92.9%	+1%
91.0% to 91.9%	0%
90.0% to 90.9%	-5%
89.0% to 89.9%	-15%
88.0% to 88.9%	-25%
87.0% to 87.9%	-35%
Below 87.0%	-100%

Note: All density values will be rounded to the nearest 0.1% before applying pay adjustments.

In the event material is required to be removed and replaced, the Engineer will determine the limits of the removal. The required in-place density will be 1% less for the first lift placed on gravel subbase.

4. Calculation of Pay Adjustments for In-Place Density

(i.) For Mat Density:

For each sublot, the bulk specific gravity (G_{mb}) of the mat density core(s) will be averaged and then compared to the corresponding plant theoretical maximum specific gravity (G_{mm}) to calculate the in-place density for each sublot. The average of the sublot densities in a lot will be used to determine the appropriate pay adjustment for that lot. Lot pay adjustments will be applied to the respective quantity of HMA in each lot.

(ii.) For Joint Density:

For joint density pay adjustment purposes, a joint lot will be defined as 10 joint density results. However, if less than five joint density results are remaining after the final full joint lot is formed, they will be added to the previous joint lot. Five or more joint density results remaining after the final full joint lot will constitute a separate joint lot.

Calculation of in-place joint density will be determined using the G_{mb} of joint density cores and the project average plant G_{mm} of the respective mix. The average of the individual joint density results in a joint lot will be used to determine the appropriate pay adjustment for that joint lot. The calculation of material quantity used to construct the joints will be based on the joint core density, the specified thickness, a width of one foot and the length of the joint that

each core represents. This quantity will be deducted from the total tonnage.

401.03.7 Joints. Placement of the HMA shall be as continuous as possible. Rollers shall not pass over the unprotected end of a freshly laid mixture unless authorized by the Engineer.

Both longitudinal and transverse joints in successive courses shall be staggered so as not to be one above the other. Longitudinal joints shall be staggered a minimum of 6 inches and shall be arranged so that the longitudinal joint in the top course being constructed shall be at the location of the line dividing the traffic lanes. Any HMA that falls on the cold side of the mat during paving operations shall be raked onto the hot joint. Care shall be taken to ensure that the material pushed onto the hot side of the joint remains in the joint area and is not broadcast over the pavement.

Unless otherwise permitted by the Engineer, a notched wedge joint shall be used. Longitudinal drop-offs will not be allowed on both sides of a lane. Joints shall be constructed so that the height of the notch is the same as the nominal maximum aggregate size. The width of the sloped portion of the joint shall be at least 6″ for each inch of lift thickness if the joint will be exposed to traffic, but in all cases it shall be 12″ minimum. Tack coat shall be applied to and shall completely cover the longitudinal notched wedge joint, using either a brush or the tack coat distribution truck. Transverse joints and joints at intersections shall be manually brushed with tack coat, leaving a completely covered face.

401.03.8 Pavement Samples. As directed, the Contractor shall cut samples from the compacted pavement for testing by the Engineer. Samples of the mixture shall be taken for the full depth of the course at the locations directed by the Engineer.

Where samples have been taken, new material shall be placed and compacted to conform to the surrounding area.

401.03.9 Surface Tolerances. At the Engineer's discretion the surface may be tested at selected locations, using an approved 10-foot straightedge furnished by the Contractor. The variation of the surface from the testing edge of the straightedge between any two contacts with the surface shall at no point exceed 1/4-inch. All humps or depressions exceeding the specified tolerance shall be corrected by removing defective work and replacing it with new material as directed.

401.03.10 Thickness Requirements. The thickness of a pavement shall be that as shown on the Plans and shall not vary from the specified thickness by more than that specified in **Subsection 401.04**, below, except as otherwise provided for in resurfacing existing pavements.

401.03.11 Weather Limitations. HMA shall not be placed on any wet surface, or when weather conditions otherwise prevent the proper handling or finishing of the HMA.

For lifts with a target compacted lift thickness less than or equal to 1.5″ both the air and surface temperature in the shade shall be 45° F or greater. For lifts with a target compacted lift thickness greater than 1.5″ both the air and surface temperature in the shade shall be 40° F or

greater. If an approved WMA (warm mix additive) is used both the air and surface temperature in the shade shall be 35° F or greater regardless of lift thickness. No HMA shall be placed on frozen ground.

For projects that do not specify pay adjustments all rolling shall be completed before the temperature of the mat falls below 165° F. The HMA mat (not including WMA modified pavement) shall be at least 265° F when placed.

401.03.12 Cold Weather Paving. If the existing pavement is removed before the winter shutdown, the Contractor shall not close the project for the season until a new HMA layer has been placed and striped with temporary epoxy pavement markings.

401.03.13 Drop-Offs.

a. Longitudinal Drop-Offs. A longitudinal drop-off occurs along the outside edges of pavement and is the difference in elevation between the top of recently placed HMA pavement and the top of existing ground (or pavement).

1. For Posted Speeds of 35 mph or Less. Drop-offs greater than 3 inches but less than 5 inches shall be tapered to a maximum 1-to-1 slope to existing ground or pavement. Drop-offs 5 inches, or greater, shall be tapered to a maximum 4-to-1 horizontal to vertical slope to existing ground or pavement.

2. For Posted Speeds Greater than 35 mph. Longitudinal drop-offs will not be permitted within 2 feet of a travel lane. The first 2 feet adjacent to a travel lane must be at grade with the travel lane. However, should either the sequence of operation required by the Contract or the Contractor's approved sequence of operation result in overnight drop-offs greater than 3 inches occurring between 2 and 6 feet from the edge of a travel lane, then such drop-offs shall be tapered to a 4-to-1 horizontal to vertical slope to existing ground or pavement.

All tapers shall be constructed with HMA conforming to the requirements of this **SECTION 401** of these Specifications.

Longitudinal drop-offs within the roadway cross section will not be allowed except as otherwise detailed on the Plans or as described in a Special Provision.

Longitudinal drop-offs will not be paid for separately, but will be included in the contract unit price for HMA pavements as listed in the Proposal.

b. Transverse Drop-Offs. Transverse drop-offs occur as follows:

Pavement removal. A transverse drop-off occurs when pavement removal operations cease at the end of a working day. The drop-off is the difference in elevation between the bottom of the excavated pavement and the top of the existing pavement.

Pavement overlay. A transverse drop-off occurs when pavement overlay operations cease at the end of a working day. The drop-off is the difference in elevation between the top of the overlay pavement and the top of the existing pavement.

If traffic is allowed across either of these drop-offs during the period prior to the resumption of pavement removal or pavement overlay operations, tapers must be provided as follows:

1. For Posted Speeds of 35 mph or Less. Transverse drop-offs in place at the end of a working day shall be graded at a slope of 2 feet horizontal to 1 inch vertical.

2. For Posted Speeds Greater than 35 mph. Transverse drop-offs in place at the end of a working day shall be graded at a slope of 5 feet horizontal to 1 inch vertical.

All slopes shall be constructed with HMA conforming to the requirements of **SECTION 401** of these Specifications.

The Contractor shall place "BUMP" signs in accordance with the MUTCD (Manual on Uniform Traffic Control Devices) at each drop-off for each direction of traffic.

Prior to the resumption of pavement overlay operations the transition slope shall be removed as follows: The pavement overlay shall be saw cut back approximately 6 inches to expose a fresh, full thickness vertical face. This face shall be brush-painted or pressure sprayed with tack coat, after which the HMA paving may resume.

Transverse drop-offs will not be paid for separately, but will be included in the contract unit prices for HMA pavements as listed in the Proposal.

401.04 METHOD OF MEASUREMENT.

401.04.1 Measurement of HMA Pavement. HMA Pavements will be measured by the number of tons actually placed in accordance with the Plans and/or as directed by the Engineer.

a. Determination of Thickness. The design thickness of each course as well as of the total HMA pavement structure shall be that indicated on the Plans, or as ordered by the Engineer.

Prior to the determination of placed thickness, the roadway shall exhibit acceptable workmanship and all defects shall have been corrected. The placed thickness of HMA pavement will be determined by cutting or coring holes to full depth. For courses with In-Place Density Cores specified, the average thickness of the Density Cores will be used to determine placed thickness.

For courses where In-Place Density Cores are not specified the following requirements apply: For projects with less than 1 paved lane mile, two cores will be taken. For projects with 1 to 2 paved lane miles, four cores will be taken. For projects with greater than 2 paved lane miles, two cores will be taken from each lane mile, except that there will be a minimum of ten cores for the project, all at the discretion of the Engineer.

Cores will be measured in accordance with ASTM D3549; Standard Test Method for Thickness or Height of Compacted HMA Paving Mixture Specimens. The depth measurement will be considered as applying for the full width of the lane. Measurements will be made at random locations determined by the Engineer and all information relative thereto will be recorded in the project records.

For the determination of thickness, a shoulder width of eight feet or greater will be considered to be a separate lane of the roadway. A shoulder width of less than eight feet will be considered part of the adjacent lane. The Contractor shall fill all holes cut or cored in the pavement with a compacted, dense HMA which is acceptable to the Engineer. If required by the Engineer, the Contractor shall maintain and control traffic while the pavement samples are being taken and while the holes are being filled and compacted. Payment will be made for the applicable traffic control item(s).

b. Adjustment of Tonnage Quantity.

The pavement thickness will be considered acceptable if both of the following requirements are met:

(a) The total HMA tonnage delivered and placed does not exceed the tonnage calculated from the approved area measured from the final surface course width by the project length and the pavement thickness specified in the Contract Documents by more than 5 percent.

and,

(b) When Specification Conformity Analysis (Federal Highway Administration Technical Advisory T5080.12; dated June 23, 1989) is applied to the entire roadway or sections thereof as determined by the Engineer, at least 80 percent of the total HMA pavement will have a thickness that meets the minimum pavement thickness. The minimum pavement thickness is that contained in the contract documents minus ½-inch, (e.g., a total pavement thickness of 7 inches will have a minimum pavement thickness requirement of 6.5 inches).

If the first requirement is not met, no payment will be made for all tonnage exceeding 5 percent, unless unusual field conditions are present and documented (e.g., pavement rutting).

If the second requirement indicates that the pavement thickness is deficient, the Contractor with permission of the Engineer shall place a correction course not less than one inch in depth after compaction, provided an acceptable grade and cross section can be achieved. Where an acceptable grade and cross section cannot be achieved through the above means, the Contractor shall reconstruct by cutting back and into the pavement a sufficient distance to permit the placement of an acceptable depth and place new material to achieve the proper depth, cross section and profile. These areas where a corrective course is placed or reconstruction of the pavement is performed, will be measured again as though originally constructed; no compensation will be made to the Contractor for the material removed or removal of materials and disposal thereof or for restoration

of affected supporting base or adjacent construction, or for traffic control, adjusting all utility appurtenances in the roadway or for correcting pavement striping. Compensation will be made for the additional pavement correction course accepted in place.

Determination of the quantity to be used for adjusted payment or exclusion for payment will be based on tons per square yard per inch thickness as determined using in-place density cores or 96% of the plant core (AASHTO T245) densities if in-place densities are not available.

Sweeping and cleaning, as included in the items covered by this section, refers to the normal removal of dust, debris, etc. only. Any sweeping and cleaning necessary due to construction being held over for the winter season, in accordance with the approved construction schedule, will be paid for separately.

Work described in **Subsection 401.03.4; Conditioning of Existing Surface**, will be paid for at the contract unit prices for the material used.

Tolerance Limitation. Pavement will be considered acceptable when meeting the specifications. Pavement that is not accepted will be excluded from the tolerance allowance. When delivery tickets are directly collected by the Engineer from each truck prior to placing in the hopper, the delivery tickets may be used in the determination of total tonnage delivered and placed. Delivery tickets not collected directly by the Engineer prior to placing in the hopper will not be used to determine tonnage.

When delivery tickets are not used to determine tonnage, the accepted total tonnage delivered and placed will be calculated according to the following formula: [final surface course width] x [project length] x [specified pavement thickness] x [the average unit weight of all acceptance density cores] = contract tonnage. If density cores are not required then 96% of the average unit weight of the plant produced acceptance gyratory cores shall be used.

Payment will be made at full contract unit bid prices with pay adjustments for all accepted HMA up to 105% of the contract quantity tonnage. Accepted HMA quantities above 105% and up to 110% of the contract quantity tonnage will be paid at 50% of the contract unit bid price with the resultant adjusted price further modified by additional pay adjustments as applicable according to the following formula: Pay adjustments will apply to 50% of the contract unit bid price for quantities above 105% and up to 110%.

401.05 BASIS OF PAYMENT. The accepted quantity of the HMA will be paid for at its respective contract unit price per ton as listed in the Proposal. The price so-stated constitutes full and complete compensation for all labor, materials and equipment, and for all incidentals required to finish the work, complete and accepted by the Engineer.

Pay adjustments for binder content, air voids and in-place density will be added together to determine a final pay adjustment for both the mat and the joint. If more than one pay adjustment is negative then only the most negative adjustment will be added to the

remaining non-negative adjustments to determine the final pay adjustment. Pay adjustments will be applied to the unit bid price for the applicable item code.

THIS PAGE INTENTIONALLY LEFT BLANK

THIS PAGE INTENTIONALLY LEFT BLANK

SECTION 601
PORTLAND CEMENT CONCRETE

Unless otherwise modified elsewhere in the Contract Documents, Section 601 of the Rhode Island Standard Specifications for Road and Bridge Construction is revised as follows:

Replace **Table 2** and associated footnotes in **Subsection 601.03.1(a); Proportioning,** with the following:

Table 2

Class[1]	**B**	**A**	**XX**	**HP**	**MC[2]**	**Z**
Minimum Cementitious Content, lb/yd^3	400	400	500	500	500	500
Maximum Cementitious Content, lb/yd^3	700	700	700	700[5]	600	700
Maximum w/cm	0.55	0.45	0.42	0.40	0.40	0.42
Acceptance Criteria						
Consistency Range[3], AASHTO T119 Slump, in.	2-4	2-4	2-4	2-4	2-4	<1
AASHTO T23 Minimum Compressive Strength, psi						
28 days	3000	3000	4000	5000	3500	5000
56 days	----	----	----	----	5000	----
Air Content Range, AASHTO T152, %	5-9	5-9	5-9	5-9	5-9	6-9
Prequalification Criteria						
Chloride permeability, AASHTO T277, coulomb						
28-day standard cure				≤2000	≤3000	
28-day accelerated cure				≤1000	≤1500	
56-day standard cure			≤3000 [6]			
56-day accelerated cure			≤1500 [6]			
Maximum 28-day drying shrinkage, ASTM C157, %				-0.040	-0.045	
Maximum Adiabatic temperature rise, degree F[4]					75	

Table 2 Footnotes:

1. A single concrete mixture may be used for multiple classifications if performance and prequalification criteria are satisfied.

2. Class MC concrete may have a total supplementary cementitious content of 75 percent by weight of total cementitious material when using either ground-granulated blast-furnace slag meeting the requirements of AASHTO M 302, or combinations of slag and other supplementary cementitious materials. Maximum cement replacement by fly ash or other pozzolan meeting requirements of AASHTO M 295 is 30 percent by weight. Maximum cement replacement by silica fume meeting the requirements of AASHTO M 307 is 7 percent by weight.

3. Slump range measured at the point of discharge. The Contractor shall submit for approval by the Engineer, the target slump range for each element. Slump shall not exceed 4 inches for surfaces sloped greater than 4 percent. If additional workability is desired the Engineer may allow an increase of the maximum specified slump to 6 inches if an AASHTO M 194 Type A - Water Reducing Admixture is used, or an increase of up to 9 inches if an AASHTO M 194 Type F or G - High Range Water Reducing admixture is used.

   AASHTO M 194 Type F or G - High Range Water Reducing Admixture is required when concrete is to be placed by pumping equipment. Admixtures must be used in accordance with manufacturers' recommended dosages.

4. Maximum concrete temperature rise measured in Section 607 mockup trial with cube insulated with curing blankets, or prequalification calorimetry tests.

5. The maximum cementitious content for Class HP may be exceeded for the fabrication of precast/prestressed concrete structures as approved by the Engineer. Class HP concrete shall replace all references to Class X in RIDOT's standard specifications.

6. The maximum chloride permeability for Class XX concrete is only required for bridge sidewalks. Not required for all other applications.

Delete subsection **601.03.7 Testing of Concrete** in its entirety and replace it with the following:

601.03.7 Testing of Concrete. As a general requirement, acceptance testing is conducted during construction of the project by the Engineer, and process control testing is conducted during construction of the project by the Contractor. All sampling and testing for acceptance by the Engineer will be in accordance with the Rhode Island Department of Transportation Project Schedule for the Sampling, Testing and Certification of Materials and as modified in these

Specifications. Sampling and testing by the Contractor and Engineer shall be in accordance with the applicable requirements as follows:

1. Sampling for temperature, air content, and slump; AASHTO T141.
2. Air Content; AASHTO T152.
3. Slump; AASHTO T119.
4. 28-Day (56-day for Class MC) Compressive Strength; AASHTO T23 and AASHTO T22.
5. Unit Weight, AASHTO T121and
6. Temperature; AASHTO T309.

A. Contractor Quality/Process Control of Concrete (QC).

The Contractor is responsible for providing a constructed project to the State meeting the safety requirements, product quality requirements, and material performance requirements contained in these plans and specifications. In the production of all Portland cement concrete, the Contractor shall be responsible for producing concrete that meets or exceeds the specified performance criteria of all materials during the handling, blending, mixing and placement operations to insure the performance criteria are consistently obtained.

1. Purpose. The purpose of this Section is to establish minimum requirements for the Contractor's quality control system. It is intended that these requirements be used as a procedural process in detailing the inspection, sampling and testing deemed necessary to maintain compliance with the Specification requirements.

2. Scope. This procedure is applicable to Portland cement concrete production, placement and construction.

3. Requirements

3.1 General. The Contractor shall provide and maintain a quality control system that will provide reasonable assurance that all materials and products will conform to the Contract requirements, whether manufactured or processed, by the Contractor, or procured from suppliers or subcontractors or vendors.

The Contractor shall perform, or have performed, the inspections and tests required to substantiate product conformance to Contract document requirements and shall also perform, or have performed, all inspections and tests otherwise required by the Contract. The testing frequencies shall exceed those shown in **Subsection 601.03.7.C. Engineers Acceptance Plan.**

The Contractor's quality control inspections and tests shall be documented and shall be available for review by the Engineer throughout the life of the Contract.

The Contractor shall maintain standard equipment and qualified personnel as required by the Specifications to assure conformance to contract requirements. Procedures will be subject

to the approval of the Engineer before the work is started. The Contractor's QC and test documentation shall follow ASTM/AASHTO requirements as applicable.

Failure to comply with the provisions of this section may result in the Contractor's operations being shut down until they are in compliance with these requirements. There shall be no claims for additional payment by the Contractor nor will there be an extension of the project Completion Dates for delays resulting from the shut down of operations and the Contractor's obligation for compliance with these requirements.

3.2 Contractor's Quality Control Plan (QCP). At least sixty days prior to the first concrete placement, the Contractor shall submit a detailed written Quality Control Plan to the Engineer for approval. The Quality Control Plan shall describe the Contractors plan to measure and control material properties and construction activities governed by these Specifications.

At a minimum, the Quality Control Plan shall describe in detail:

a. personnel responsibilities and qualifications for implementing the quality control plan,
b. location(s) and certification(s) of testing facilities
c. the type and frequency of inspection activities,
d. process control sampling locations, test methods, test frequency and
e. Documentation processes including handling of non-conforming materials

Concrete shall not be placed without an approved quality control plan.

The QCP shall be maintained to reflect the current status of the operations and any process control changes to the QC Plan must be submitted to the Engineer in writing. Changes must be approved by the Engineer before implementation.

3.2 a Personnel.

The Contractor shall employ a Quality Control Plan Administrator with five years minimum of materials experience and must meet one or more of the following criteria: a professional engineer licensed in the State of RI, an individual certified by the National Institute for Certification of Engineering Technologies (NICET) at Level III or above for concrete, or a North East Transportation Training and Certification Program (NETTCP) QA Administrator.

Prestress Concrete Facilities QC Personnel - The Contractor shall employ a Quality Control Plan Administrator with five years minimum of prestress concrete production QC experience and must meet one or more of the following criteria: PCI Level III, an individual certified by the National Institute for Certification of Engineering Technologies (NICET) at Level III or above for concrete, or a North East Transportation Training and Certification Program (NETTCP) QA Administrator.

All individuals who sample and test concrete at the point of placement shall possess current certification for American Concrete Institute (ACI) Concrete Field Testing Technician Grade 1 in accordance with ACI CP-1 or NETTCP Concrete Technician.

All individuals who test concrete specimens and concrete materials in the batch plant or independent testing laboratory shall possess current certification for American Concrete Institute (ACI) Concrete Laboratory Testing Technician Grade 1 in accordance with ACI CP-17 or NETTCP Concrete Technician.

The names and credentials of the quality control staff shall be included on the Quality Control Plan including, but not limited to assigned duties, certifications with expiration date, telephone contact number(s), and e-mail address.

The Certified Technician(s) shall be responsible to:

(a) Perform and utilize quality control tests and other quality control practices to assure that delivered materials and proportioning meet the requirements of the mix design(s), including temperature, slump, air content, and strength.

(b) Periodically inspect all equipment utilized in transporting, proportioning, mixing, placing, consolidating, finishing, and curing to ensure it is operating properly and that placement, consolidation, finishing, and curing conform to the mix design and other Contract requirements.

3.2 b Testing Facilities.

Specimen storage facilities, sampling, testing, and measuring devices shall be in accordance with industry standards and shall be properly calibrated in accordance with the requirements of each method. The quality control plan shall list the calibration frequency.

Upon commencement of construction, a list of measurement devices and date of last calibration for each device used on the project shall be provided to the Engineer. Spare parts and calibrated back-up equipment shall be available on site to minimize impact of equipment malfunctions during production. Back-up equipment shall be used if a device is suspected to be defective. Any defective testing device shall be clearly tagged and/or removed from the site until repaired and calibration is verified. If non-standard or alternative sampling methods, testing procedures, or equipment are proposed to be used, they shall be detailed in the Quality Control Plan and approved by the Engineer prior to use.

3.2 c. Process Control Activities.

Quality/Process control sampling, testing, and inspection shall be an integral part of the Contractor's quality control system. In addition to the above requirements,

The Process Control plan shall address all elements that affect the quality of the concrete. The plan shall define test methods, testing frequencies, and reporting procedures for all materials and processes including, but not limited to the following minimum requirements:

The QC Plan shall detail:

(a) The frequency of sampling and testing, coordination of activities, corrective actions to be taken, and documentation.

(b) How the duties and responsibilities are to be accomplished and documented, and staffing levels.

(c) The criteria utilized by the Technician to correct or reject unsatisfactory materials, and the process of notification to be followed if this occurs.

(d) The Contractor's Quality Control and documentation procedures shall be described for the following aspects:

1. Initial mixture properties,
    a. sampling procedure, and location
    b. test methods and frequency at least as listed in TABLE 4, 5 or 6
        Temperature, Air content, Slump, Unit weight
    c. example concrete sampling test report shall be provided.

2. Compressive strength
    a. sampling location and procedure
    b. test method
    c. test frequency at least as listed in TABLE 4, 5 or 6
    d. example concrete strength test report shall be provided

TABLE 4

MINIMUM PROCESS CONTROL FREQUENCY Ready Mix Portland Cement Concrete	
Control Requirement	Minimum Frequency
A. PLASTIC CONCRETE 1. Entrained Air Content (meter) 2. Slump 3. Temperature 4. Yield (Unit Weight) 5. Compressive Strength	 First two loads then 1 per 50 CY (NOTE A) First two loads then 1 per 50 CY (NOTE A) Per Specifications Per Specifications For each class concrete delivered and placed on a calendar day from a single supplier. One set for 0-100 CY inclusive and one set of each additional 100 CY or fraction thereof and as necessary for formwork removal (include air content and slump test results).

TABLE 5

MINIMUM PROCESS CONTROL FREQUENCY Prestress Concrete Production	
Control Requirement	Minimum Frequency
A. AGGREGATES PRODUCTION 1. Fine and Coarse Aggregates a. Gradation b. Moisture	 a. Randomly every 100 cubic yards. Min. 1 set per month b. Daily/prior to start of production, randomly once every 100 cubic yards
B. PLASTIC CONCRETE 1. Entrained Air Content (meter) 2. Slump 3. Concrete Temperature 4. Yield (Unit Weight) 5. Compressive Strength	Plastic concrete tests performed on the first two loads then 1 randomly per 20 CY for each concrete class delivered and placed on a calendar day from a single supplier. (NOTE A) One set of compressive strength specimens for 0-20 CY inclusive and one set of each additional 20 CY or fraction thereof and as necessary for formwork removal, stress transfer, and shipping (include concrete temperature, air content and slump test results).

TABLE 6

MINIMUM PROCESS CONTROL FREQUENCY Structural Precast Concrete Production	
Control Requirement	Minimum Frequency
A. AGGREGATES PRODUCTION 1. Fine and Coarse Aggregates a. Gradation b. Moisture	 a. Randomly every 50 Cubic Yards. Min. 1 set per month b. Daily/prior to start of production, randomly once every 50 yd^3
B. PLASTIC CONCRETE 1. Entrained Air Content 2. Slump 3. Temperature 4. Unit Weight 5. Compressive Strength	Plastic concrete tests performed on the first two loads then 1 randomly per 20 CY for each concrete class delivered and placed on a calendar day from a single supplier. (NOTE A) One set of compressive strength specimens for 0-20 CY inclusive and one set of each additional 20 CY or fraction thereof and as necessary for formwork removal, and shipping (include air content and slump test results).

NOTE A Frequency for quality control will vary with the size and type of aggregate or mixture and the batch-to-batch variability of the item.

NOTE B The Contractor shall test the first two loads. If adjustments are needed the Contractor shall test subsequent loads until conformance to the specification is achieved on two or more subsequent tests.

3.2. d Documentation. The Contractor shall maintain complete records of all inspections and tests. The records shall indicate:

i. the names of the person(s) sampling and testing the material,
ii. the nature and number of observations made,
iii. the number and type of deficiencies found,
iv. the quantities conforming and non-conforming, and
v. the nature of corrective action taken as appropriate.

The Contractor's documentation procedures shall be described in the Quality Control Plan and will be subject to approval by the Engineer prior to the start of the work and thereafter to compliance checks by the Engineer during the progress of the work. The Contractor is referred to the CS pages regarding the "REPORTING OF QUALITY/PROCESS CONTROL TESTING AND SAMPLING RESULTS".

3.2.d.1 Charts and Forms. All conforming and non-conforming inspections and tests results shall be documented on charts or forms, shall be kept complete, and shall be available to the Engineer at all times during the performance of the work. The contractor shall retain the complete quality control records for the period of one year after final acceptance of the project by the State. Forms shall be on a computer-acceptable medium. Copies shall be submitted to the Engineer as the work progresses (or weekly at minimum).

Test data for Portland cement concrete, including but not limited to air content, unit weight, 7-day and 28-day compressive strength, shall be on control charts that indicate lots and sub-lots, target values, control limits, running average of the last three test results, all in chronological order with legend.

The Contractor may use other types of control charts as deemed appropriate and as approved by the Engineer. It is normally expected that testing and charting will be completed within 24 hours after sampling.

3.2.d.2 Certification. At the conclusion of the project the contractor shall certify in writing to the Engineer that the project has been constructed and inspected, and all materials have been tested in accordance with the QCP and Contract.

3.2.e Corrective Action. The Contractor shall take prompt action to correct conditions that have resulted, or could result, in the incorporation into the work materials and products that do not conform to the requirements of the Contract Documents. The Quality Control Plan shall describe the persons responsible for directing corrective action, procedures for handling corrective actions, documentation and reporting requirements.

3.2.f Non-Conforming Materials. The Contractor shall establish and maintain an effective and positive system for controlling nonconforming material, including procedures for its identification, isolation and disposition. Reclaiming or reworking of non-conforming materials shall be in accordance with procedures acceptable to the Engineer. The Quality Control Plan shall describe the persons responsible for directing disposal or rework of non-conforming materials, requirements for reporting to the Engineer, and documentation procedures for the identification and disposition of non-conforming materials. Standard forms shall identify if material does not conform to specifications and provide space to describe disposition.

All non-conforming materials and products shall be positively identified to prevent use, shipment, and intermingling with conforming materials and products. Segregated holding areas shall be provided by the Contractor, subject to approval by the Engineer.

3.2.g For Controlling Construction Operations. For determining adequacy of cure and protection, and for determining when loads or stresses can be applied to concrete structures, test cylinders shall be cured with the structure under the same conditions that are not more

favorable than the most unfavorable conditions for the portions of the structure which they represent as described in AASHTO T 23 (ASTM C 31/C 31M), Article 9.4. Sufficient test cylinders shall be made and tested at the appropriate ages to determine when operations such as release of falsework, application of prestressing forces, or placing the structure in service can occur.

THIS PAGE INTENTIONALLY LEFT BLANK

THIS PAGE INTENTIONALLY LEFT BLANK

THIS PAGE INTENTIONALLY LEFT BLANK

THIS PAGE INTENTIONALLY LEFT BLANK

THIS PAGE INTENTIONALLY LEFT BLANK

THIS PAGE INTENTIONALLY LEFT BLANK

THIS PAGE INTENTIONALLY LEFT BLANK

THIS PAGE INTENTIONALLY LEFT BLANK

THIS PAGE INTENTIONALLY LEFT BLANK

THIS PAGE INTENTIONALLY LEFT BLANK

THIS PAGE INTENTIONALLY LEFT BLANK

THIS PAGE INTENTIONALLY LEFT BLANK

THIS PAGE INTENTIONALLY LEFT BLANK

THIS PAGE INTENTIONALLY LEFT BLANK

THIS PAGE INTENTIONALLY LEFT BLANK

THIS PAGE INTENTIONALLY LEFT BLANK

THIS PAGE INTENTIONALLY LEFT BLANK

CODE 800.9902
MODIFICATIONS TO SUBSTRUCTURE-NORTH AND SOUTH ABUTMENTS

DESCRIPTION: The work shall consist of modifying existing abutment as shown on plans. The proposed work shall include, but not limited to: concrete abutment, bridge seat pedestal, stem and backwalls, concrete approach slab, wingwalls, signal pole pedestals including anchor bolts (South Abutment), end posts, approach railing, approach railing support, galvanized bar reinforcement, drill and grout reinforcing bars, temporary support of excavation, dewatering (if needed), structural excavation, pervious fill, rip rap, sand bag dam, crushed stones, signal conduits, waterproofing membrane any and all embedded or attached items, and other items necessary to install the complete substructure as shown on the contract drawings and as directed by the Engineer. The Contractor shall also coordinate construction activities with Verizon. All labor, equipment, access, tools, materials, shim plates, and any incidentals necessary to complete this item of work to the satisfaction of the Engineer are included.

Excluded Items of Work: The work pertaining to the following items of work is excluded from this lump sum item and instead will be paid for separately under their own appropriate unit bid or lump sum items as listed in the Proposal: Demolition, Utilities, Span Pole Anchor Bolts and Foundation Piles.

All work shall be in accordance with the applicable provisions of the Standard Specifications, except as modified herein.

Any in-water work shall conform to the requirements of the Water Quality Certification. No excavation work along the river bank shall commence until the Contractor has received RIDEM approval for soil management.

METHOD OF MEASUREMENT: This item will not be measured for payment.

BASIS OF PAYMENT: "MODIFICATIONS TO SUBSTRUCTURE-NORTH AND SOUTH ABUTMENTS" will be paid for at the contract "Lump Sum" price as listed in the Proposal. The price so stated shall constitute full compensation for all labor, materials, equipment, access and all other incidentals required to finish the work, as described above and elsewhere in the Contract Documents, complete in place and accepted by the Engineer.

Within ten (10) days after the award of the Contract, the Contractor shall submit, in duplicate, for the approval of the Engineer, a schedule of quantities and unit prices for the major components of the bridge structure as listed below. The cost of labor and materials for any item not listed shall be considered incidental to this item and no further compensation will be allowed.

THIS PAGE INTENTIONALLY LEFT BLANK

THIS PAGE INTENTIONALLY LEFT BLANK

B. This work may require rock excavation, drilling rock or using slurry filled shafts through whatever materials are encountered to reach the depths indicated on the plans and specifications. The Contractor shall submit a sequence plan outlining drilling, casing, slurry, reinforcement and concrete placement procedures for the Engineer to review.

C. Construction of drilled shaft shall be in accordance with AASHTO Standard Specifications for Highway Bridges 2002 Division II, Section 5 and with U.S.D.O.T. Publication FHWA-IF- 99-025, "Drilled Shafts: Construction Procedures and Design Methods."

D. The maximum allowable horizontal variation of the center of the top of the drilled shaft from the required location shall be 0.5% of the shaft diameter.

E. The concrete shaft shall not be out of plumb by more than 1% of the total length.

F. Should the depth of drilled shaft extend below the depth shown on the shop drawings, a minimum of one half of the longitudinal bars required in the upper portion of the shaft shall be extended the additional length by adding longitudinal reinforcing bars at the bottom of the cage. Tie or spiral bars shall be continued for the extra depth and the stiffener bars shall be extended to the final depth. All longitudinal and transverse bars shall be lap spliced or spliced with mechanical splices. Welding to the reinforcing steel will not be permitted.

G. Approved cylindrical concrete feet (bottom supports) shall be provided to insure that the bottom of the reinforcing cage is maintained the proper distance above the base.

H. The drilled shaft concrete shall be placed as soon as possible after the placement of reinforcing steel. Concrete shall be placed to the level of the construction joint shown on the shop drawings. Longitudinal reinforcing shall extend above the construction joint to within 3" of the top of foundation.

I. Casings, if used in drilling operations, shall be removed from the hole. The casing may be removed as concrete is placed provided a 5 foot head of concrete is maintained, or the casing may be removed after the concrete has been poured, provided that the concrete has not been set. Separation of the concrete by hammering or otherwise vibrating the casing during withdrawal operations shall be avoided.

J. Concrete and placement methods shall conform to the latest RI standard Specifications Sections 601, 808 and the contract Special Provisions.

Constructing the Top of the Foundation

A. The top 12" portion of the concrete foundation shall be formed and reinforced as shown on the shop drawings. The top surface shall be level within ± 1/8". The top of foundation shall be set to finished grade and finished level. After curing, the forms shall be removed and backfilled with suitable material and compacted in 12-inch layers.

B. The number of conduits in the foundation shall be as shown on the plans. Electrical conduits

of the size specified on the plans shall extend 2 feet out from the side of the formed portion of the foundation. All conduit ends terminating below grade shall be capped with a malleable iron cap. All above grade conduit ends shall be terminated with an insulated bonding bushing with tinned insert. Conduit caps shall be installed before the concrete is placed and shall remain in place until the cable is installed.

C. Rigid metal conduit, drain pipe, anchor rods and the anchor plate shall be placed and secured in proper position in the formed portion of the top of foundation. A template shall be used to hold the required anchor rod assembly, ground rod sleeve and conduits in their correct positions. The orientation of the anchor rods on the bolt circle are important to the positioning of the handhole on the pole. The anchor rod locations shall be in accordance with approved shop drawings. Each anchor rod shall be fitted with two leveling nuts and double nuts above the base plate. Conduits shall extend up from the top of foundation to the height shown on the plans.

D. Concrete shall be placed in the forms in accordance with the applicable provisions of Section 808.

E. Curing of the concrete shall be performed in accordance with Section 601.

F. Forms shall not be removed until after the concrete has hardened properly and not less than 24 hours after the concrete has been placed.

G. The portions of the foundations that will remain exposed to view shall be finished to the satisfaction of the Engineer and in conformance with the pertinent requirements of Sub-article 6.01.03-21.

CODE 607
MASS CONCRETE

Unless otherwise modified elsewhere in the Contract Documents, Section 607 of the Rhode Island Standard Specifications for Road and Bridge Construction is revised as follows:

Replace the first paragraph of Subsection 607.01.1, page AC14-4 of the August 2013 Compilation of Approved Specifications with the following:

Mass Concrete is defined as any elements so specified on the Plans and any other concrete pour where the ratio of the total volume to the surface area of the element equals or exceeds 0.6 and has a minimum dimension of 3 feet in any of the three planes. Calculation of the ratio shall be performed based on all dimensions measured in feet.

FED. ROAD DIV. NO.	STATE	FEDERAL AID PROJECT NO.	FISCAL YEAR	SHEET NO.	TOTAL SHEETS
	RI	BRO–0777(001)	2015	5	59

GENERAL NOTES - TRAFFIC SIGNALS:

1. LOCATIONS OF ALL PROPOSED TRAFFIC SIGNAL MAST ARMS HAVE BEEN PROBED FOR UTILITY CONFLICTS. THE LOCATIONS OF THE PROPOSED EQUIPMENT SHOWN ON THE PLANS REFLECT THE RESULTS OF THE UTILITY INVESTIGATIONS AND ARE FREE OF CONFLICTS. THE LOCATIONS WHERE THE UTILITY PROBES WERE CONDUCTED HAVE BEEN MARKED IN THE FIELD AND HAVE BEEN PATCHED WITH BITUMINOUS CONCRETE. THE DIMENSIONS TO THE PROPOSED EQUIPMENT SHOWN ON THE PLANS ARE APPROXIMATE. IT SHALL BE THE CONTRACTOR'S RESPONSIBILITY TO MARK THE LOCATIONS WHERE THE UTILITY PROBES WERE TAKEN WITH NAILS IN THE ROAD. THERE SHALL BE A MINIMUM OF TWO (2) OFFSET POINTS FOR EACH PROPOSED FOUNDATION LOCATION.
2. ALL SALVAGED TRAFFIC SIGNAL EQUIPMENT FROM THE INTERSECTION OF PLEASANT VALLEY PARKWAY AND VALLEY STREET/WEST PARK STREET/RAYMOND STREET SHALL BE DELIVERED TO THE CITY OF PROVIDENCE DIVISION OF TRAFFIC ENGINEERING LOCATED AT 60 ERNEST STREET, PROVIDENCE, RHODE ISLAND (CONTACT TONY D'ODDIO, SIGNAL DIVISION FOREMAN, 401–781–4045. ALL REMAINING SALVAGED TRAFFIC SIGNAL EQUIPMENT WITHIN THE PROJECT LIMITS SHALL BE DELIVERED TO THE RIDOT MAINTENANCE FACILITY LOCATED AT 360 LINCOLN AVENUE, WARWICK, RHODE ISLAND (CONTACT GLENN CABRAL, SUPERVISING ELECTRICAL INSPECTOR, 401–734–4827).
3. BACKPLATES ARE REQUIRED ON ALL TRAFFIC SIGNAL HEADS ON NEW STRUCTURES AND SHALL BE INCLUDED IN THE PRICE OF THE SIGNAL HEADS.
4. THE CONTRACTOR SHALL SUPPLY AND INSTALL ON THE UPPER LEFT HAND CORNER OF THE BACK OF CONTROLLER CABINET DOOR A LAMINATED INTERSECTION GRAPHIC AND TABLE DEPICTING THE TRAFFIC DETECTOR RELAY CHANNEL ASSIGNMENTS. THE DIAGRAM SHALL BE A GRAPHIC OF THE INDIVIDUAL INTERSECTION ORIENTED SIMILAR TO THE PLANS SHOWING THE LOCATIONS OF EACH LOOP DETECTOR. THE DIAGRAM SHALL, AT A MINIMUM, INCLUDE DETECTOR NUMBERS, STREET NAME LABELS, NORTH ARROW, AND CONTROLLER CABINET LOCATION. THE ASSIGNMENT INFORMATION SHALL BE INCLUDED IN A TABLE WHICH SHALL INCLUDE, AT A MINIMUM, THE APPROACH NAME, DETECTOR NUMBER, TERMINAL NUMBER, DETECTOR RACK SLOT NUMBER, RELAY NUMBER, RELAY CHANNEL NUMBER, AND PHASE ASSOCIATED WITH EACH DETECTOR.
5. TRAFFIC SIGNAL CONTROLLER CABINET SHALL BE ORIENTED SO THAT THE CABINET DOOR IS FACING AWAY FROM THE SIDEWALK IF STATE PROPERTY ALLOWS, UNLESS OTHERWISE STATED ON THE PLANS OR DIRECTED BY THE ENGINEER.
6. PROPOSED TRAFFIC SIGNAL CONTROLLER CABINETS, UNLESS OTHERWISE NOTED SHALL BE NEMA TS2 TYPE 1 CABINET SIZE 6 ("P" TYPE) WITH NOMINAL DIMENSIONS OF 52"Hx44"Wx24"D.
7. ALL DELAY AND EXTENSION TIMES, AS CALLED FOR ON THE PLANS, FOR LOOP DETECTORS SHALL BE PROGRAMMED IN THE TRAFFIC SIGNAL CONTROLLER AND NOT IN THE DETECTOR RELAY.
8. 6 AWG SINGLE CONDUCTOR CABLE 600V WIRE SHALL BE PLACED IN ALL PVC CONDUITS AND SHALL BE BONDED TO GROUND RODS IN ACCORDANCE WITH SECTION T.03 OF THE RHODE ISLAND DEPARTMENT OF TRANSPORTATION STANDARD SPECIFICATIONS FOR ROAD AND BRIDGE CONSTRUCTION.
9. FINAL PLACEMENT OF SIGNAL HEADS, DETECTORS, STOP BARS, AND CROSSWALKS TO BE DETERMINED IN THE FIELD DURING CONSTRUCTION ACCORDING TO INTERSECTION CHARACTERISTICS OBSERVED BY THE ENGINEER.
10. UNLESS OTHERWISE DIMENSIONED ON THE PLANS, A 2–FOOT MINIMUM BUFFER SHALL BE PROVIDED BETWEEN THE CURB AND ALL LATERAL OBSTRUCTIONS (INCLUDING ALL SIGNAL POLES AND TRAFFIC/PEDESTRIAN SIGNAL HEADS) TO PROVIDE ADEQUATE CLEARANCE FOR TURNING VEHICLES.
11. ALL FOUNDATIONS MUST HAVE CONES OR BARRELS BOLTED TO FOUNDATION BASES UNTIL ACTUAL POLE IS INSTALLED.
12. WHEN PLACING TRAFFIC SIGNAL HANDHOLES OR CONDUIT IN EXISTING PORTLAND CEMENT CONCRETE SIDEWALKS, THE ENTIRE SQUARE OF SIDEWALK SHALL BE REPLACED IN ACCORDANCE WITH R.I. STANDARD 43.1.0. NO PATCHES WILL BE ALLOWED.
13. ACCESS TO PEDESTRIAN PUSHBUTTONS SHALL MEET ADA REQUIREMENTS. ALL PEDESTRIAN PUSHBUTTONS SHALL BE ADA COMPLIANT WITH A MINIMUM 2" DIAMETER. SIGNS INSTALLED AT PROPOSED PEDESTRIAN PUSHBUTTONS SHALL BE MUTCD 2009 CODE R10–3E (LEFT OR RIGHT) AND SHALL BE INSTALLED SO THAT IT IS CLEARLY INDICATED WHICH CROSSING IS ASSIGNED TO EACH BUTTON.
14. ALL LOOP DETECTORS SHALL BE CENTERED WITHIN EACH LANE AS DELINEATED, UNLESS OTHERWISE DIMENSIONED ON PLANS.
15. ALL LOOP DETECTORS SHALL BE CUT INTO THE FINAL PAVEMENT SURFACE COURSE.
16. TRAFFIC SIGNAL CONTROLLERS SHALL BE WIRED SO THAT ANY FIRE PRE–EMPT SHALL OVERRIDE MANUAL (PUSH BUTTON) OPERATION.
17. THE CONTRACTOR SHALL WORK CONTINUOUSLY TO RESTORE TRAFFIC SIGNAL OPERATION TO ITS INTENDED PURPOSE WHEN REPLACING THE TRAFFIC SIGNAL EQUIPMENT. A POLICE DETAIL IS REQUIRED TO DIRECT TRAFFIC AT THE INTERSECTION AT ALL TIMES WHEN THE TRAFFIC SIGNAL IS INOPERATIVE. AT NO TIME SHALL THE CONTRACTOR LEAVE THE SITE BEFORE RESTORING FULL TRAFFIC OPERATIONS.
18. IF THE ASSIGNED RIGHT OF WAY FOR ANY TRAFFIC MOVEMENT IS TO REMAIN IN EFFECT DURING THE NEXT CALLED PHASE, THE SIGNAL INDICATIONS FOR THAT TRAFFIC MOVEMENT WILL NOT CHANGE DURING THE CLEARANCE INTERVAL.
19. THE RIGHT OF WAY MAY BE ASSIGNED TO ANY PHASE, OR COMBINATION OF NON–CONFLICTING PHASES.
20. CONTRACTOR SHALL HAND DIG AT ALL GAS PIPELINE CROSSINGS.
21. A ROTARY WHEEL OR OTHER MECHANICAL TRENCHING METHOD IN THE VICINITY OF GAS PIPELINES WILL NOT BE ALLOWED.
22. A 1 FOOT VERTICAL CLEARANCE IS REQUIRED BETWEEN NEW CONDUIT AND NEGC FACILITIES.
23. ALL NEW MANHOLES, HANDHOLES, PULL BOXES, AND FOUNDATIONS SHALL MEET A MINIMUM 2 FOOT LATERAL CLEARANCE AND NOT BE PLACED OVER NEGC FACILITIES.
24. CONTRACTOR SHALL TAKE APPROPRIATE MEASURES TO ENSURE THAT NO EQUIPMENT (EXISTING, TEMPORARY OR FINAL) IS UNDERMINED DURING THE INSTALLATION OF SIGNAL EQUIPMENT.

SITE SPECIFIC NOTES - RIPDES STORMWATER POLLUTION PREVENTION PLAN:

1. FOR THE PURPOSES OF SECTION 1.7 OF THE SWPPP, NO MATERIAL OR EQUIPMENT STORAGE AREAS, CONCRETE WASHOUTS, DUMPSTERS, STOCKPILING OR FUELING LOCATIONS WILL BE SITUATED WATERWARD OF THE CRMC COASTAL FEATURE SHOWN ON THE GENERAL PLANS.
2. CONTRACTOR MUST MANAGE DEWATERING EFFLUENT IN ACCORDANCE WITH RIPDES REGULATION OR REMEDIATION GENERAL PERMIT IF APPLICABLE.
3. EXCAVATED SOILS THAT ARE TO BE REMOVED FROM WORK SITE MUST BE FIRST STOCKPILED, SAMPLED AND TESTED TO CHARACTERIZE SOILS FOR DISPOSAL.

LEGEND

7.3.5M	GRANITE INLET STONE – 7" WIDTH, PROVIDENCE STD.
7.3.9M	GRANITE RAMP STONE – 7" WIDTH, PROVIDENCE STD.
7.3.0CM	GRANITE CURB (CIRCULAR) – 7" WIDTH, PROVIDENCE STD.
7.3.0SM	GRANITE CURB (STRAIGHT) – 7" WIDTH, PROVIDENCE STD.
7.3.2M	6' GRANITE TRANSITION CURB – 7" WIDTH, PROVIDENCE STD.
7.4.0CM	GRANITE SLOPED FACE CURB (CIRCULAR) – 7" WIDTH, PROVIDENCE STD.
7.4.0SM	GRANITE SLOPED FACE CURB (STRAIGHT) – 7" WIDTH, PROVIDENCE STD.
43.2.0M	BITUMINOUS CONCRETE SIDEWALK 3" DENSE GRADED HMA PAVEMENT CLASS 12.5 8" GRAVEL BORROW
43.3.0M	WHEELCHAIR RAMP – 7" WIDTH CURB, PROVIDENCE STD.
43.3.1M	WHEELCHAIR RAMP FOR LIMITED RIGHT–OF–WAY – 7" WIDTH CURB, PROVIDENCE STD.
BEN	BENCH – 6 FEET
CFS	COMPOST FILTER SOCK 8–INCH
CSI	COBBLESTONE ISLAND
DBEN	REMOVE AND DISPOSE BENCH
DT	REMOVE AND DISPOSE TREE
FBS	FILTER BOX SYSTEM
NIA	NARROW CONDITION IMPACT ATTENUATOR
OV	OVERLAY 2" DENSE GRADED HMA PAVEMENT CLASS 12.5 MODIFIED
X	WHEELCHAIR RAMP NUMBER (SEE DATA CHART)
SCE	SLOPED CONCRETE CURB
SGE	SLOPED GRANITE EDGING
	EDGE OF COASTAL FEATURE

UTILITY NOTES - VERIZON:

1. ANY/ALL ADJUSTMENTS TO VERIZON OWNED UNDERGROUND EQUIPMENT (MANHOLES, FRAMES & COVERS, CONDUITS, ETC) MUST BE PERFORMED BY AN APPROVED VERIZON CONTRACTOR. ADDITIONALLY, ALL ADJUSTMENTS MUST BE INSPECTED BY VERIZON'S CONTRACT WORK INSPECTOR (CWI). PLEASE CONTACT JOE PATTERSON (CWI) AT (401) 486–0337 48 HOURS IN ADVANCE BEFORE COMMENCING WORK.
2. IF VERIZON'S UNDERGROUND (UG) STRUCTURES (CONDUITS, CABLES, MANHOLES, ETC) ARE EXPOSED DURING CONSTRUCTION, THE GENERAL CONTRACTOR (GC) MUST PROVIDE PROTECTION FOR THE EXPOSED PLANT IN ACCORDANCE WITH VERIZON'S METHODS AND PROCEDURES AND WITH THE APPROVAL OF VERIZON'S CWI.
3. THE UNDERMINING OF VERIZON DUCTS (INCLUDING THOSE CONCRETE ENCASED) IS NOT PERMITTED WITHOUT INSPECTION/PERMISSION OF VERIZON'S CWI.
4. A RADIAL CLEARANCE OF THREE FEET (3') MUST BE MAINTAINED BETWEEN VERIZON'S AERIAL EQUIPMENT (CABLES, TERMINALS, POLES, ETC) IN ACCORDANCE WITH THE NATIONAL ELECTRICAL CODE (NEC) AND THE OCCUPATIONAL SAFETY AND HEALTH ADMINISTRATION (OSHA) REQUIREMENTS. THIS INCLUDES TRAFFIC SIGNAL AND CONSTRUCTION EQUIPMENT...EITHER TEMPORARY OR PERMANENT. PLEASE REFER TO R.I.D.O.T. DOCUMENT TAC–0049 FOR ADDITIONAL INFORMATION.

UTILITY GENERAL NOTE:

1. THE CONTRACTOR IS RESPONSIBLE FOR COORDINATING UTILITY ADJUSTMENTS AND RELOCATIONS WITH THE APPROPRIATE UTILITY OWNERS.

GENERAL NOTES:

1. THE COORDINATE SYSTEM IS THE R.I. STANDARD GRID SYSTEM, NAD 83 (1986).
2. THE CONTRACTOR SHALL SUBMIT ALL SURVEY FIELD BOOKS AND ELECTRONIC DATA TO THE RIDOT SURVEY SECTION. THE INFORMATION SHALL INCLUDE A LISTING OF ALL R.I. HIGHWAY BOUND DATA WITH STATIONS, OFFSETS, AND COORDINATES.
3. THE CONTRACTOR SHALL STOCKPILE THE GRANITE CURB AT THE CITY OF PROVIDENCE HIGHWAY DEPARTMENT YARD ON ERNEST STREET. THE CONTRACTOR SHALL CLEAN CONCRETE AND DEBRIS FROM THE GRANITE CURB BEFORE DELIVERING THE GRANITE CURB TO THE CITY OF PROVIDENCE. THE CONTRACTOR SHALL CONTACT THE CITY OF PROVIDENCE HIGHWAY SUPERINTENDENT TO ARRANGE A TIME AT THE SALVAGE AREA BEFORE DELIVERING THE GRANITE CURB. THE CONTRACTOR SHALL PLACE THE GRANITE CURB IN THE HIGHWAY DEPARTMENT YARD'S STOCKPILE AREA SO AS NOT TO BREAK THE GRANITE CURB. THE COST TO HAUL, HANDLE, CLEAN, COORDINATE, DELIVER, AND PLACE THE GRANITE CURB INCLUDING ALL INCIDENTALS SHALL BE INCLUDED IN THE UNIT BID PRICE FOR ITEM CODE 201.0450 REMOVE AND STOCKPILE ON SITE GRANITE CURB.

WHEELCHAIR RAMP DATA

RAMP NO.	LOCATION	RADIUS (ft.)	LEFT SIDE TRANS (ft.)	RIGHT SIDE TRANS (ft.)
1	22+61 LT	90	7	6
2	22+73 LT	160	6	7
3	22+85 LT	10	6	6
4	22+97 LT	–	7	6
5	23+30 LT	12	6	7
6	23+30 RT	10	7.5	6
7	24+59 LT	10	10	8
8	24+60 RT	10	6	8
9	24+90 RT	8	9.5	6
10	25+05 RT	–	–	6
11	25+03 RT	–	6	6
12	25+15 RT	125	8.5	6
13	PROVIDENCE PLACE	120	6	7
14	PROVIDENCE PLACE	50	8	6
15	8+11 LT	–	7	6
16	8+10 RT	–	6	6
17	8+39 LT	11	6	8
18	8+75 LT	20	8.5	6
19	9+59 RT	10	8	7
20	10+00 RT	20	6	6.5
21	PROVIDENCE PLACE @ BATH ST. (NW)	10	8	10
22	PROVIDENCE PLACE @ BATH ST. (SW)	–	6	6.5
23	PROVIDENCE PLACE @ BATH ST. (NE)	35	6.5	6
24	25+09 LT	40	6	10.5
25	PROMENADE ST. @ ACORN ST. (NW)	–	6	6.5

WHEELCHAIR RAMP DATA (CONT.)

RAMP NO.	LOCATION	RADIUS (ft.)	LEFT SIDE TRANS (ft.)	RIGHT SIDE TRANS (ft.)
26	PROMENADE ST. @ ACORN ST. (SW)	23	9.5	6
27	KINSLEY AVE. @ ACORN ST. (NW)	35	6	11
28	KINSLEY AVE. @ ACORN ST. (SW)	10	3	6.5
29	KINSLEY AVE. @ ACORN ST. (SW)	10	6	3
30	KINSLEY AVE. @ ACORN ST. (NE)	30	8.5	6
31	KINSLEY AVE. @ ACORN ST. (SE)	10	8	6
32	PROMENADE ST. @ RATHBONE ST. (NW)	7	8.5	8

ADDENDUM NO. 2

vhb PROVIDENCE, RHODE ISLAND

REVISIONS		
NO.	DATE	BY
1	4/30/15	VHB
2	5/15/15	VHB

RHODE ISLAND
DEPARTMENT OF TRANSPORTATION

REPLACEMENT OF
PLEASANT VALLEY PARKWAY
BRIDGE NO. 777
PROVIDENCE, RHODE ISLAND

JOB SPECIFIC
PLAN SYMBOLS,
LEGEND & NOTES

CHECKED BY _____ DATE _____ SCALE _____

R-2

FED. ROAD DIV. NO.	STATE	FEDERAL AID PROJECT NO.	FISCAL YEAR	SHEET NO.	TOTAL SHEETS
	RI	BRO-0777(001)	2015	19	59

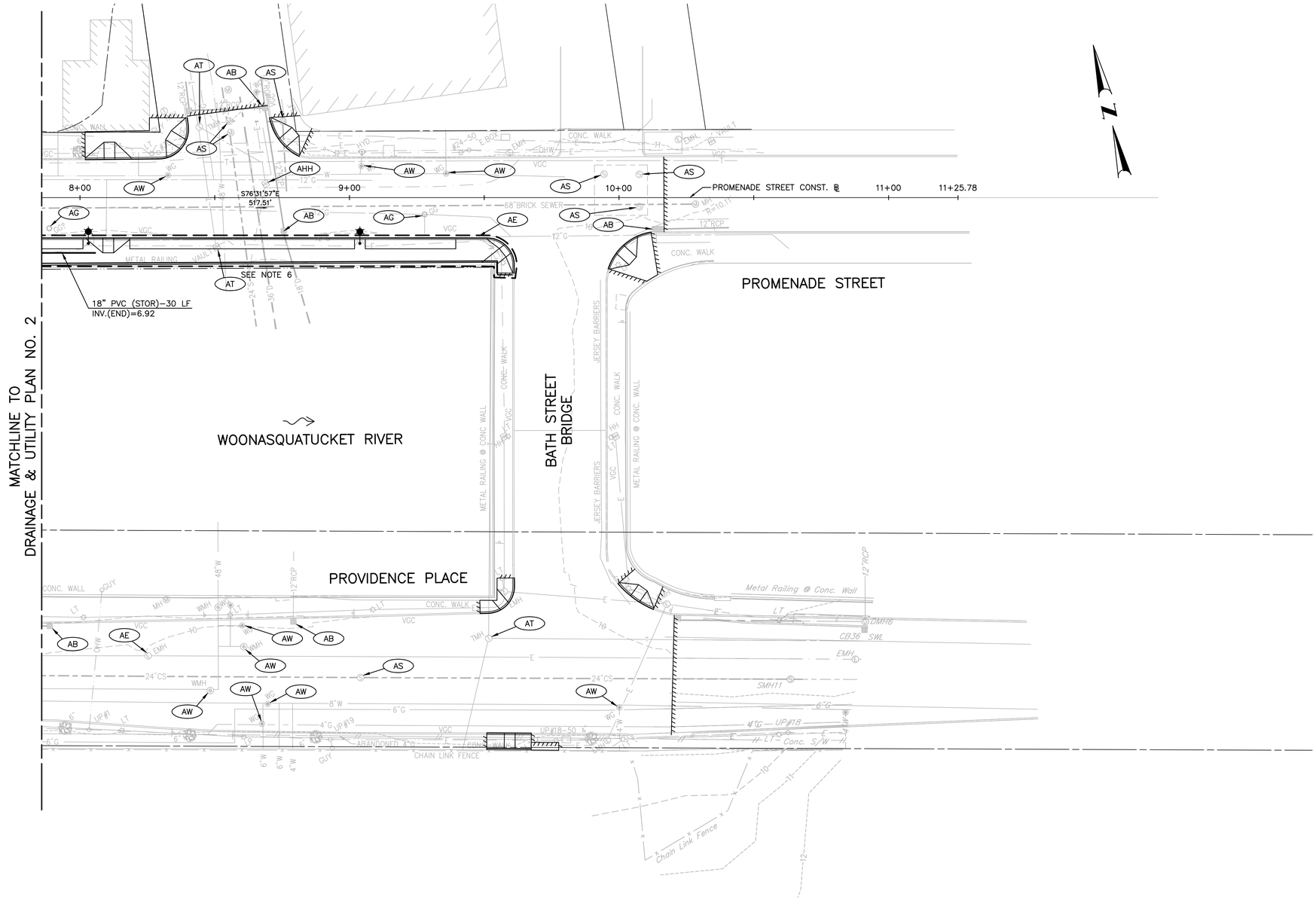

NOTES:

1. ENTIRE AREA SHOWN ON THIS SHEET IS WITHIN THE CRMC 200' CONTIGUOUS AREA.
2. FOR MORE DETAILS, SEE LIGHTING PLANS.
3. FOR FILTER BOX DETAIL, SEE BIORETENTION AREA SHEET.
4. CONTRACTOR SHALL PLUG END OF STORAGE WITH CONCRETE.
5. THE CONTRACTOR SHALL ADJUST TO GRADE ALL MANHOLE COVERS, INLET GRATES, AND UTILITY GATES WITHIN THE LIMITS OF THE COLD PLANE AND OVERLAY LIMITS PER CONTRACT SPECIFICATIONS.
6. AS OF MAY, 2015, VERIZON BUSINESS HAS REPLACED THE EXISTING FIBER OPTIC HANDHOLE WITH A BRICK MANHOLE AND HAS COVERED SAID MANHOLE WITH A 1" STEEL PLATE. CONTRACTOR SHALL CONTACT VERIZON BUSINESS (ERIC JOHNSON 85 HIGH STREET, 3RD FLOOR ROOM 2, PAWTUCKET, RI 02860 (401) 435-2742) TO ACQUIRE THE APPROPRIATE MANHOLE COVER TO BE INSTALLED DURING THE FINAL MANHOLE ADJUSTMENT. THE EXISTING STEEL PLATE SHALL BE RETURNED TO VERIZON BUSINESS. COST FOR THIS WORK SHALL BE CONSIDERED INCIDENTAL TO THE COST OF ADJUSTING THE TELEPHONE MANHOLE.

20 0 20 40
SCALE IN FEET

ADDENDUM NO. 2

vhb PROVIDENCE, RHODE ISLAND

REVISIONS		
NO.	DATE	BY
1	4/30/15	VHB
2	5/15/15	VHB

RHODE ISLAND
DEPARTMENT OF TRANSPORTATION

REPLACEMENT OF
PLEASANT VALLEY PARKWAY
BRIDGE NO. 777
PROVIDENCE, RHODE ISLAND

DRAINAGE & UTILITY
PLAN NO. 3

CHECKED BY _____ DATE _____ SCALE _____

R-2

FED. ROAD DIV. NO.	STATE	FEDERAL AID PROJECT NO.	FISCAL YEAR	SHEET NO.	TOTAL SHEETS
	RI	BRO-0777(001)	2015	34	59

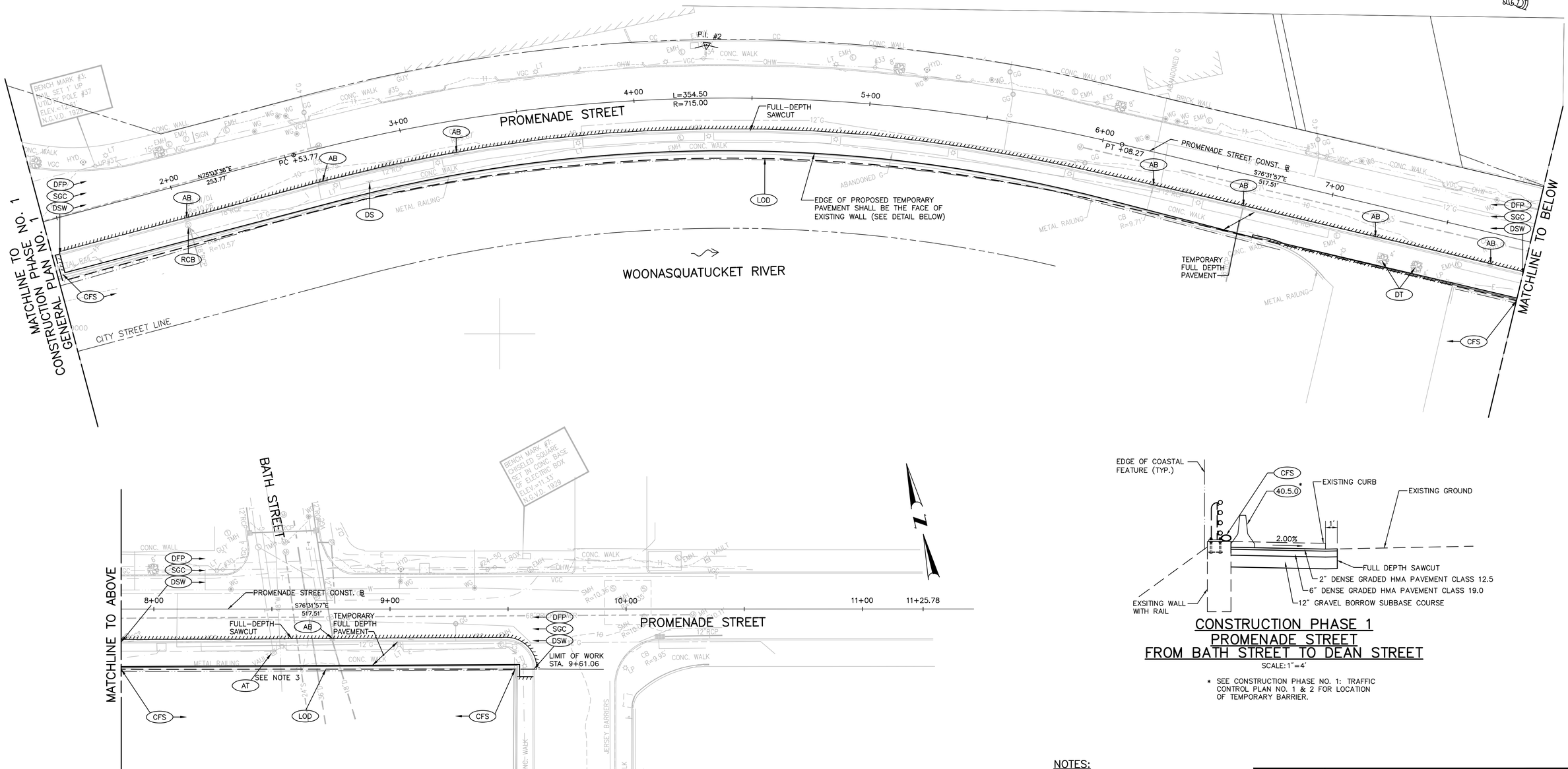

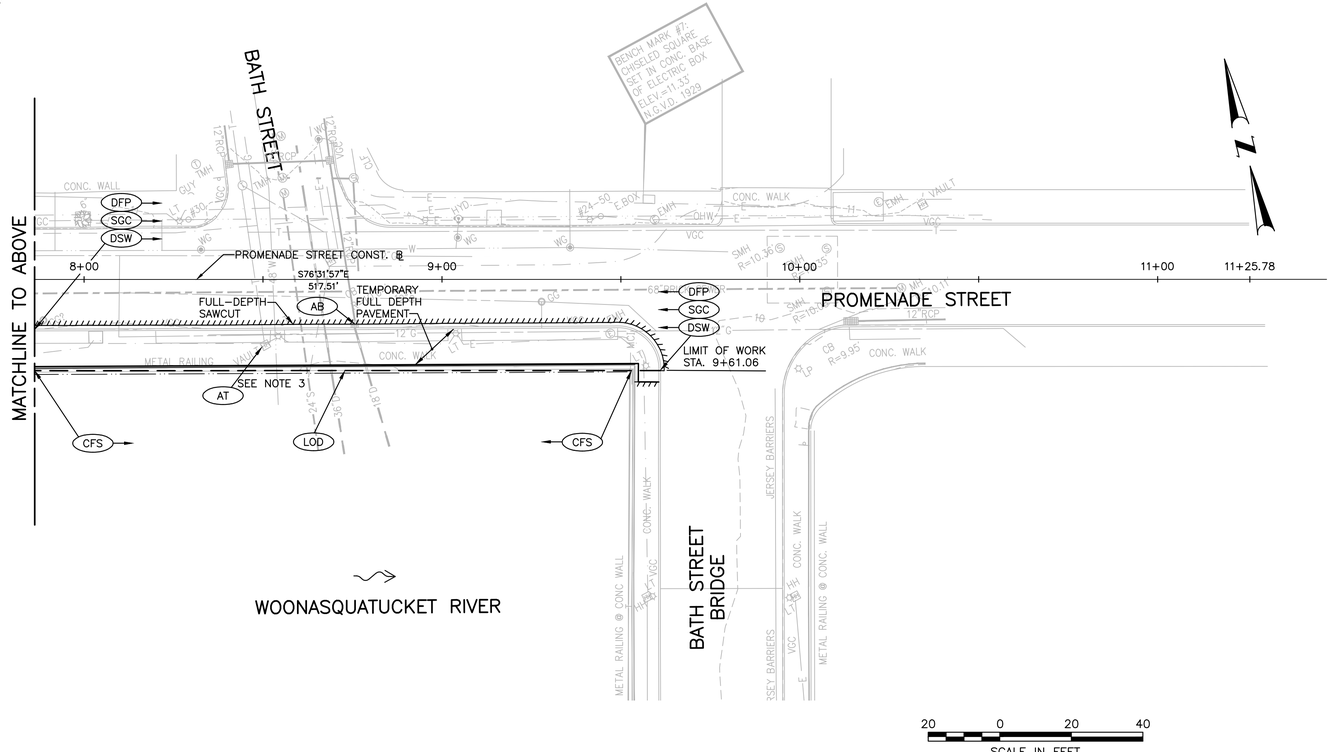

CONSTRUCTION PHASE 1
PROMENADE STREET
FROM BATH STREET TO DEAN STREET

SCALE: 1"=4'

* SEE CONSTRUCTION PHASE NO. 1: TRAFFIC CONTROL PLAN NO. 1 & 2 FOR LOCATION OF TEMPORARY BARRIER.

NOTES:

1. ENTIRE AREA SHOWN ON THIS SHEET IS WITHIN THE CRMC 200' CONTIGUOUS AREA.
2. SEE CONSTRUCTION PHASE NO. 1: ROADWAY LIGHTING PLAN NO. 2 FOR LIGHTING DEMO.
3. AS OF MAY, 2015, VERIZON BUSINESS HAS REPLACED THE EXISTING FIBER OPTIC HANDHOLE WITH A BRICK MANHOLE AND HAS COVERED SAID MANHOLE WITH A 1" STEEL PLATE. THE CONTRACTOR IS TO ADJUST THE BRICK MANHOLE AND STEEL PLATE TO ROADWAY GRADE. THE STEEL PLATE SHALL REMAIN IN PLACE FOR THE DURATION OF PHASE 1 AND PHASE 2 OF THE PROJECT.

(2)

ADDENDUM NO. 2

vhb PROVIDENCE, RHODE ISLAND

REVISIONS		
NO.	DATE	BY
1	4/30/15	VHB
2	5/15/15	VHB

RHODE ISLAND
DEPARTMENT OF TRANSPORTATION

REPLACEMENT OF
PLEASANT VALLEY PARKWAY
BRIDGE NO. 777

PROVIDENCE, RHODE ISLAND

CONSTRUCTION PHASE NO. 1
GENERAL PLAN NO. 2

CHECKED BY _____ DATE _____ SCALE _____

FED. ROAD DIV. NO.	STATE	FEDERAL AID PROJECT NO.	FISCAL YEAR	SHEET NO.	TOTAL SHEETS
	RI			4	39

MATERIALS

STRUCTURAL STEEL:

* AASHTO DESIGNATION M 270 (ASTM DESIGNATION A 709) GRADE 50.

REINFORCING STEEL:

* AASHTO DESIGNATION M 31 (ASTM DESIGNATION A 615) GRADE 60.
* ASTM DESIGNATION A706 GRADE 60

CONCRETE:

* CLASS HP ($\frac{3}{4}$") f'c = 8,500 PSI PRECAST PRESTRESSED NEXT BEAM.
* CLASS HP ($\frac{3}{4}$") f'c = 5,000 PSI BRIDGE DECKS, SIDEWALKS, ABUTMENT STEM EXTENSION (ON THE EXIST. ABUTMENT), ABUTMENT BACKWALLS, SEPARATELY POURED BRIDGE SEAT PEDESTALS (AS APPLICABLE), WINGWALL STEM AND FOOTING, ENDPOST.
* CLASS MC ($\frac{3}{4}$") f'c = 3,500 PSI @ 28 DAYS, f'c = 5,000 PSI @ 56 DAYS, PIER CAPS, WIDENED ABUTMENT STEMS.
* CLASS XX ($\frac{3}{4}$") f'c = 4,000 PSI FOOTINGS, CONCRETE FILLED PIPE PILES, APPROACH SLABS.

GALVANIZING:

* FASTENERS – AASHTO DESIGNATION M 232 (ASTM DESIGNATION A 153)
* BOLTS – TYPE 1 SHALL BE AASHTO DESIGNATION M 164 (ASTM DESIGNATION A 325)
  TYPE 2 SHALL ONLY BE MECHANICALLY GALVANIZED

CONCRETE NOTES

1. CLASSES OF CONCRETE SHALL BE X, XX, HP, AND MC, AS DESCRIBED IN THE LATEST REVISION OF TABLES (1) AND (2) UNDER SECTION 601 "PORTLAND CEMENT CONCRETE" OF THE RHODE ISLAND STANDARD SPECIFICATIONS FOR ROAD AND BRIDGE CONSTRUCTION AND THE SPECIAL PROVISIONS OF THE SPECIFICATIONS.
2. THE CONTRACTOR MAY, AT THE APPROVAL OF THE ENGINEER, PROPOSE THE USE OF SELF–CONSOLIDATING CONCRETE FOR ANY CLASS OF CONCRETE ON THIS PROJECT. SECTION 606 "SELF CONSOLIDATING CONCRETE (SCC)", CONTAINS THE REQUIREMENTS FOR MODIFYING ALL CLASSES OF CONCRETE MIX DESIGN FOR SELF–CONSOLIDATING APPLICATIONS.
3. ALL PORTLAND CEMENT CONCRETE SHALL BE AIR–ENTRAINED PORTLAND CEMENT CONCRETE.
4. UNLESS OTHERWISE NOTED, ALL REINFORCING STEEL AND WELDED WIRE FABRIC SHALL BE GALVANIZED. ALL WIRE TIES AND MISCELLANEOUS HARDWARE USED FOR PLACEMENT OF GALVANIZED REINFORCING SHALL BE NON–METALIC. REINFORCING STEEL SHALL BE GALVANIZED PER ASTM A767 CLASS I (GALVANIZED STEEL).
5. THE TOP BARS IN THE DECK SLABS SHALL BE SPLICED IN THE CENTER OF SPANS BETWEEN GIRDERS. THE BOTTOM BARS SHALL BE SPLICED OVER THE GIRDERS.
6. ALL LAP SPLICES NOT SHOWN ON THE PLANS SHALL BE LAPPED IN ACCORDANCE WITH AASHTO LRFD BRIDGE DESIGN SPECIFICATIONS FOR CLASS C LAP SPLICES.
7. UNLESS OTHERWISE SPECIFIED ALL REINFORCING BARS SHALL HAVE THE FOLLOWING MINIMUM COVER:

		MINIMUM COVER
CONCRETE CAST AGAINST AND PERMANENTLY EXPOSED TO EARTH (FOOTINGS, ABUTMENT AND WALL FACES, BACKWALLS)		3"
DECK OVERLAYS FOR PRESSTRESSED NEXT BEAMS	TOP	$2\frac{1}{2}$" ($+\frac{1}{4}$", –0")
DECK SLABS (EXPOSED DECKS)	TOP	3" ($+\frac{1}{4}$", –0")
	BOTTOM	$1\frac{1}{2}$" ($+\frac{1}{8}$", –0")
ALL OTHER BARS		2"

   COVER TO TIES AND STIRRUPS MAY BE 0.5 INCH LESS THAN ABOVE VALUES SPECIFIED FOR MAIN REINFORCING, BUT IN NO CASE LESS THAN 2 INCHES.
8. UNLESS OTHERWISE NOTED ON THE PLANS, ALL ANCHOR BOLTS SHALL BE ASTM DESIGNATION A 307 AND SHALL BE GALVANIZED IN ACCORDANCE WITH AASHTO DESIGNATION M 232 OR METALIZED IN ACCORDANCE WITH SECTION M.05. SWEDGED RODS SHALL BE AASHTO DESIGNATION M 270 GRADE 36 AND SHALL BE GALVANIZED IN ACCORDANCE WITH AASHTO DESIGNATION M 232.
9. ALL ANCHOR BOLTS SHALL BE SET BY TEMPLATES PRIOR TO PLACEMENT OF CONCRETE UNLESS OTHERWISE INDICATED ON THE PLANS OR AS AUTHORIZED BY THE ENGINEER.

CONCRETE NOTES (CONTINUED)

10. HORIZONTAL CONSTRUCTION JOINTS OTHER THAN THOSE SHOWN ON PLANS WILL NOT BE PERMITTED WITHOUT A WRITTEN REQUEST BY THE CONTRACTOR AND PRIOR AUTHORIZATION BY THE ENGINEER.
11. UNLESS OTHERWISE NOTED ON THE PLANS, ALL EXPOSED CONCRETE SURFACES VISIBLE IN ELEVATION TO ONE FOOT BELOW FINAL GROUND LINE (AND THE UNDERSIDE OF ALL CONCRETE DECK SLABS OUTSIDE OF THE FASCIA BEAMS), SHALL RECEIVE A CONCRETE SURFACE RUBBED FINISH IN ACCORDANCE WITH THE R.I. STANDARD SPECIFICATIONS.
12. THE ENTIRE TOPSIDE SURFACES OF ABUTMENT AND PIER CAP BEAM SEATS, AS WELL AS VERTICAL FACES OF BACKWALLS, SHALL BE PROVIDED WITH A FILM–FORMING SEALER (M12.03.1) CONCRETE SURFACE TREATMENT–PROTECTIVE COATING IN ACCORDANCE WITH SECTION 820 OF THE RI STANDARD SPECIFICATIONS.
13. ALL EXPOSED EDGES AND REENTRANT CORNERS NOT OTHERWISE DETAILED ON THE PLANS SHALL HAVE A MINIMUM $\frac{3}{4}$" CHAMFER.
14. THE CONTRACTOR SHALL BE RESPONSIBLE FOR PREVENTING CONCRETE STAINS OR DISCOLORATIONS DURING CONSTRUCTION UNTIL SUCH TIME AS THE SURFACES ARE APPROVED AND ACCEPTED BY THE ENGINEER. ANY CONCRETE STAINS OR DISCOLORATIONS OCCURRING PRIOR TO ACCEPTANCE OF THE SURFACES SHALL BE REMOVED BY THE CONTRACTOR AT NO ADDITIONAL COST TO THE STATE.
15. ALL JOINT SEALANT SHALL CONFORM TO RIDOT STANDARD SPECIFICATIONS SECTION M.02.11 AND SHALL BE POLYURETHANE, POLYURETHANE ELASTOMERIC, OR SILICONE SEALANT AS DESIGNATED ON THE PLANS. THE COLOR OF THE JOINT SEALANT, WHERE EXPOSED, SHALL BE NEUTRAL (LIGHT GRAY OR TAN). COLOR OF THE SEALANT WHERE NOT EXPOSED, WILL BE AT THE DISCRETION OF THE CONTRACTOR.
16. UNLESS OTHERWISE NOTED ON THE PLANS, JOINT FILLER IS TO BE PREFORMED NON–EXPANSIVE, NON–EXTRUDING TYPE IN ACCORDANCE WITH SECTION M.02.11.1 OF THE RI STANDARD SPECIFICATIONS.
17. EMBEDMENT LENGTHS FOR DRILLED AND GROUTED DOWELS SHALL BE IN ACCORDANCE WITH SECTION 819 OF THE RI STANDARD SPECIFICATION, UNLESS OTHERWISE INDICATED ON THE PLANS.
18. PLACEMENT AND CURING OF BRIDGE DECK CONCRETE SHALL BE IN ACCORDANCE WITH SECTION 814 OF THE RI STANDARD SPECIFICATIONS AND IN ACCORDANCE WITH THE SEQUENCE AND DIRECTION OF POURS AS SHOWN ON THE PLANS.
19. IN ACCORDANCE WITH THE RI STANDARD SPECIFICATIONS, ALL METAL TIES OR ANCHORAGES WHICH ARE REQUIRED FOR CONCRETE FORMWORK SHALL BE SO CONSTRUCTED THAT THEY CAN BE REMOVED TO AT LEAST TWO INCHES BELOW THE EXPOSED SURFACE OF THE CONCRETE WITHOUT CAUSING DAMAGE TO THE CONCRETE SURFACE. SNAP TIES MAY BE USED ONLY IF APPROVED BY THE ENGINEER. IF THE CONTRACTOR PROPOSES TO USE THEM, A CATALOG CUT AND OTHER NECESSARY INFORMATION MUST BE SUBMITTED TO THE ENGINEER TO DEMONSTRATE THAT THE TIES WILL SNAP–OFF FAR ENOUGH INTO THE CONCRETE TO ALLOW FOR PROPER PATCHING. SNAP TIES MUST PROVIDE ADEQUATE STRENGTH TO SUPPORT THE FORMS. ALL CAVITIES SHALL BE FILLED WITH AN APPROVED CEMENT MORTAR MEETING THE REQUIREMENTS OF ASTM C 928.
20. HAND–HELD VIBRATORS SHALL BE EQUIPPED WITH RUBBER TIPPED HEADS WHEN USED TO CONSOLIDATE CONCRETE AROUND REINFORCEMENT AND EMBEDMENT.
21. SUPPORT RAILS FOR THE FINISHING MACHINE(S) SHALL BE LOCATED BEYOND THE CURB LINE SUCH THAT THE ENTIRE BRIDGE DECK SHALL RECEIVE A MACHINE FINISH. THE CONTRACTOR SHALL INCLUDE THE LOADING OF THE FINISHING MACHINE(S) AND THE SUPPORT RAIL SYSTEM IN THE DESIGN OF THE CANTILEVER DECK SUPPORT SYSTEM. THE CONTRACTOR SHALL BE RESPONSIBLE FOR THE COST AND DESIGN OF THIS SUPPORT SYSTEM WHICH MAY REQUIRE THE ADDITION OF TEMPORARY DIAPHRAGMS OR BRACES TO PREVENT FASCIA STRINGER ROTATION. ALLEN SCREED WILL NOT BE ALLOWED.
22. WATER STOPS ARE REQUIRED FOR HORIZONTAL AND VERTICAL CONSTRUCTION JOINTS IN ABUTMENTS AND WALLS WHEN EXPOSED TO BACKFILL EARTH MATERIAL. WATER STOPS SHALL BE INSTALLED AT THE LOCATIONS DETAILED ON THE PLANS, AT THE LOCATIONS AS SPECIFIED ABOVE AND AT ALL LOCATIONS AS DIRECTED BY THE ENGINEER, ALL IN ACCORDANCE WITH SECTION 812 OF THE RI STANDARD SPECIFICATIONS.
23. UNLESS OTHERWISE INDICATED ON THE PLANS, ALL DECK FORMS SHALL BE OF REMOVABLE TYPE THAT WILL PRODUCE THE DIMENSIONS SHOWN ON THE PLANS.
24. UNLESS OTHERWISE DIMENSIONED ON THE PLANS, ALL REINFORCEMENT BENDS SHOWN ARE STANDARD HOOKS.
25. ANY METALLIC ELEMENTS THAT ARE TO BE LEFT IN PLACE AND NOT STATED HERE SHALL BE GALVANIZED. THIS INCLUDES BUT IS NOT LIMITED TO REINFORCING STEEL, WIRE MESH, SNAP TIES, METAL TIES, ANCHORAGES FOR FORM WORK, SUPPORTS FOR MASS CONCRETE COOLING PIPES.

REINFORCEMENT NOTE

THE CONTRACTOR'S BAR FABRICATOR SHALL VERIFY THE CORRECTNESS IN PREPARING HIS ORDER LISTS AND BENDING DIAGRAMS. ANY EXPENSE INCIDENT TO REVISION OF MATERIAL AS SHOWN ON THE ORDER LISTS AND BENDING DIAGRAMS IN ORDER TO MAKE IT COMPLY WITH THE DESIGN DRAWINGS SHALL BE BORNE BY THE CONTRACTOR. SHOP DRAWINGS FOR ALL REINFORCEMENT DETAILS AND SCHEDULE SHALL BE SUBMITTED TO THE ENGINEER IN SUFFICIENT TIME TO PERMIT CAREFUL CHECKING.

PRESTRESSED CONCRETE NOTES

1. THE FABRICATION OF ALL PRESTRESSED ELEMENTS SHALL BE IN ACCORDANCE WITH THE LATEST REVISION OF SECTION 809 "PRECAST/PRESTRESSED STRUCTURE CONCRETE MASONRY" OF THE RHODE ISLAND STANDARD SPECIFICATIONS.
2. ANY PRECAST MANUFACTURING PLANT FURNISHING PRECAST PRESTRESSED BRIDGE MEMBERS SHALL BE CERTIFIED BY THE PRECAST PRESTRESSED CONCRETE INSTITUTE PLANT CERTIFICATION PROGRAM. THE CERTIFICATION SHALL BE AS A MINIMUM IN THE B3 CATEGORY, EXCEPT FOR DRAPED STRAND BRIDGE MEMBERS IN WHICH CASE A CATEGORY B4 CERTIFICATION WILL BE REQUIRED. THE MANUFACTURER SHALL SUBMIT PROOF OF CERTIFICATION PRIOR TO THE START OF PRODUCTION.
3. NEXT BEAMS ARE DETAILED WITH NOMINAL DIMENSIONS (SUCH AS 9'–$0\frac{1}{2}$") AND NOMINAL $\frac{1}{2}$" JOINTS BETWEEN UNITS TO ACCOUNT FOR CONSTRUCTION TOLERANCES AND TO PROVIDE FOR AN EXACT OVERALL STRUCTURE WIDTH.
4. LIFTING DEVICES ARE THE RESPONSIBILITY OF THE PRECASTER.
5. THE CONCRETE SHALL BE CLASS HS CONCRETE AND SHALL HAVE A MINIMUM 28–DAY COMPRESSIVE STRENGTH OF 8,500 PSI. THE MINIMUM REQUIRED COMPRESSIVE STRENGTH AT STRESS TRANSFER SHALL NOT BE LESS THAN 6,500 PSI.
6. PRESTRESSING STRANDS SHALL CONSIST OF UNCOATED HIGH STRENGTH SEVEN WIRE LOW–RELAXATION STRANDS HAVING A NOMINAL DIAMETER OF 0.6" CONFORMING TO THE REQUIREMENTS OF AASHTO STANDARD SPECIFICATION M 203 (ASTM DESIGNATION A 416) GRADE 270.
7. NON–PRESTRESSED REINFORCEMENT SHALL CONFORM TO AASHTO DESIGNATION DESIGNATION M 31 (ASTM DESIGNATION A 615) GRADE 60.
8. EXPOSED CORNERS SHALL BE CHAMFERED $\frac{3}{4}$", OR AS SHOWN ON PLANS.
9. ANY STRUCTURAL MEMBERS DAMAGED DURING FABRICATION, SHIPPING OR ERECTION, SUCH THAT THEIR STRUCTURAL INTEGRITY IS COMPROMISED, SHALL BE REJECTED AND REPLACED AT THE CONTRACTOR'S OWN EXPENSE. THE ENGINEER SHALL BE THE SOLE JUDGE IN DETERMINING THE STRUCTURAL INTEGRITY OF DAMAGED PRESTRESSED MEMBERS.
10. DURING HANDLING, THE BEAMS MUST BE MAINTAINED IN AN UPRIGHT POSITION AT ALL TIMES AND MUST BE PICKED UP ONLY BY MEANS OF APPROVED LIFTING DEVICES AT THEIR APPROVED SUPPORT POINTS.
11. DIMENSIONAL TOLERANCES SHALL NOT EXCEED THOSE RECOMMENDED IN THE LATEST EDITION OF THE PCI MANUAL FOR QUALITY CONTROL FOR PLANTS AND OF PRECAST PRESTRESSED CONCRETE PRODUCTS.
12. THE EXTERIOR FACE OF FASCIA BEAMS SHALL RECEIVE A RUBBED FINISH (IN FIELD OR IN THE PLANT) IN ACCORDANCE WITH SECTION 808.03.11 OF THE RHODE ISLAND STANDARD SPECIFICATIONS.
13. ALL SHOP DRAWINGS SHALL BE SUBMITTED TO THE ENGINEER IN SUFFICIENT TIME TO PERMIT CAREFUL CHECKING AS NOT TO DELAY THE PROJECT.
14. ALL PRESTRESSING STEEL AND GALVANIZED REINFORCING BARS SHALL BE SECURELY TIED TO PREVENT DISLOCATION. TIES USED FOR THE GALVANIZED REINFORCING STEEL SHALL BE NON–METALLIC.
15. THE DETAILS OF ALL INSERTS, ANCHORS, AND ANY OTHER ITEMS REQUIRED TO BE CAST INTO THE PRECAST PRESTRESSED UNITS (WHETHER DETAILED ON THE CONTRACT DRAWINGS OR PROVIDED FOR THE CONTRACTOR'S CONVENIENCE) SHALL BE SHOWN ON THE SHOP DRAWINGS. PRECAST UNITS SHALL NOT BE FIRED OR DRILLED INTO FOR ATTACHMENT PURPOSES. ALL HARDWARE SHALL BE GALVANIZED.
16. THE BACKWALLS AND KEEPER BLOCKS SHALL BE POURED AFTER THE BEAMS ARE IN PLACE.
17. ENDS OF BEAMS SHALL BE VERTICAL AFTER ALL DEAD LOADS HAVE BEEN PLACED.
18. ALLOWANCES FOR FABRICATION TOLERANCES SHALL BE PERMITTED IN ACCORDANCE WITH THE LATEST AASHTO AND PCI MANUAL.

ADDENDUM NO. 2

REVISIONS		
NO.	DATE	BY
1	5/13/15	VHB

vhb PROVIDENCE, RHODE ISLAND

RHODE ISLAND
DEPARTMENT OF TRANSPORTATION

REPLACEMENT OF
PLEASANT VALLEY PARKWAY
BRIDGE NO. 777
PROVIDENCE, RHODE ISLAND

JOB SPECIFIC
GENERAL NOTES 2

CHECKED BY _____ DATE _____ SCALE _____

0163F_004_GEN
NOTES 2_ADD02

FED. ROAD DIV. NO.	STATE	FEDERAL AID PROJECT NO.	FISCAL YEAR	SHEET NO.	TOTAL SHEETS
	RI			9	39

R–1

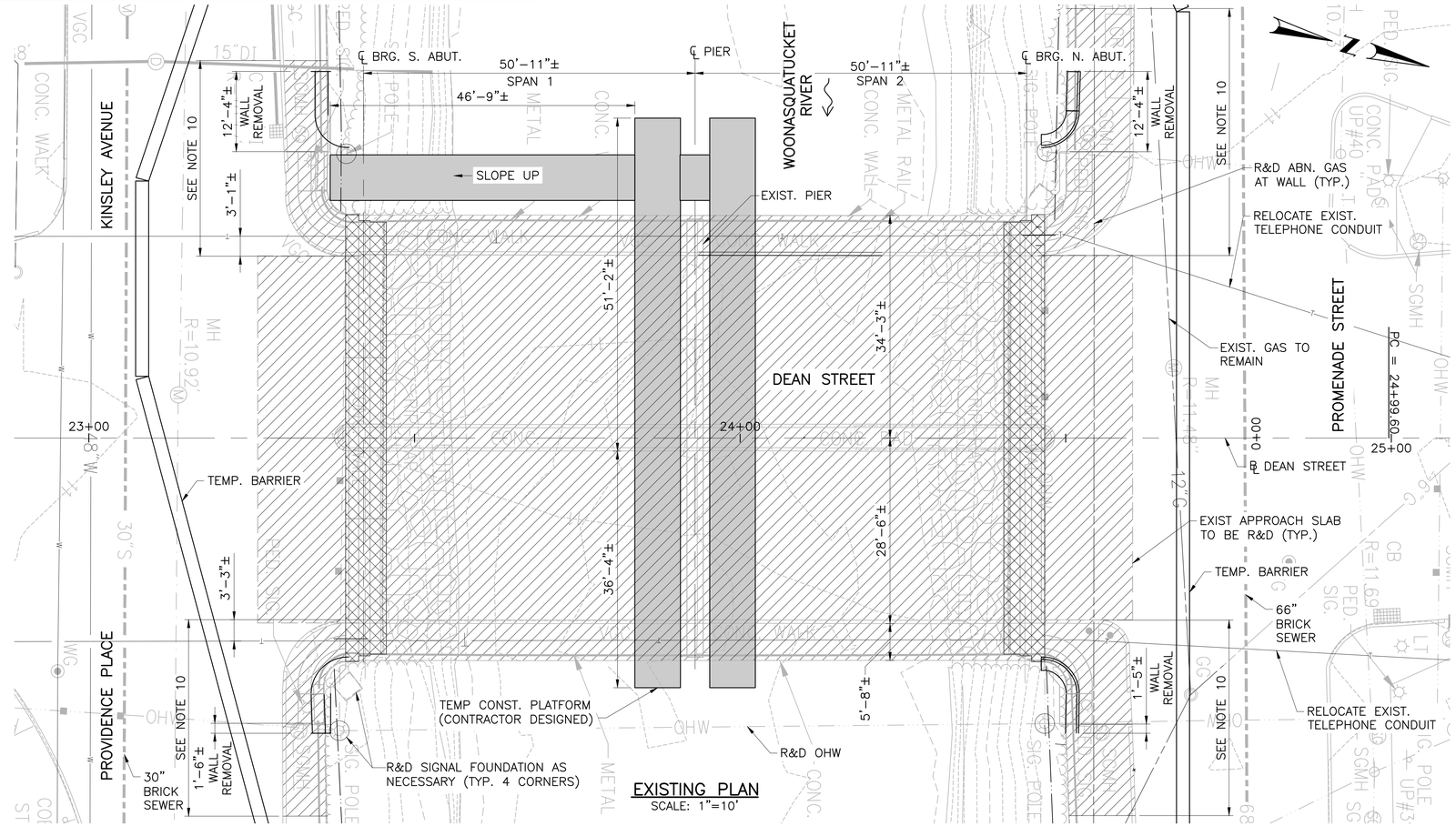

EXISTING PLAN
SCALE: 1"=10'

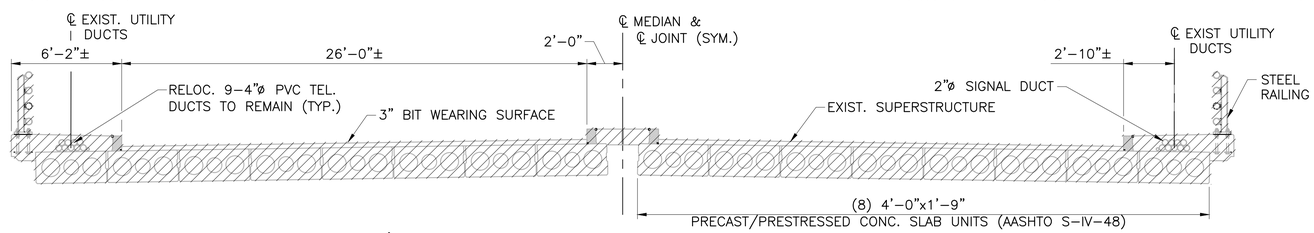

EXISTING TRANSVERSE SECTION
SCALE: 1/4"=1'–0"

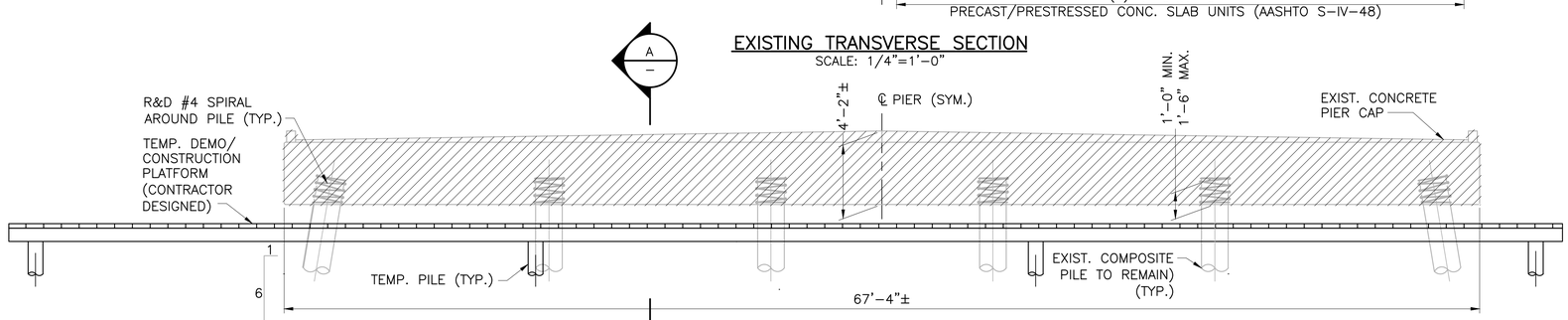

PIER ELEVATION
SCALE: 1/4"=1'–0"

DEMOLITION NOTES

1. THE CONTRACTOR SHALL TAKE NECESSARY PRECAUTIONS TO ENSURE THE EXISTING REINFORCING STEEL IS NOT CUT, WHERE INDICATED ON PLANS. AREAS WHERE EXISTING REINFORCING IS TO REMAIN, USE 15 POUND HAMMER. IF ANY REINFORCEMENT IS DAMAGED BY THE CONTRACTOR AS A RESULT OF HIS OPERATIONS, THE BARS SHALL BE REPLACED TO THE SATISFACTION OF THE ENGINEER AT NO ADDITIONAL COST TO THE STATE.
2. CARE MUST BE TAKEN DURING THE REMOVAL OF THE DESIGNATED PORTIONS OF THE STRUCTURE TO AVOID DAMAGING THE PORTIONS THAT ARE TO REMAIN IN PLACE. ANY DAMAGE CAUSED BY THE CONTRACTOR TO THE EXISTING STRUCTURE THAT IS DESIGNATED TO REMAIN IN PLACE SHALL BE REPAIRED BY THE CONTRACTOR AT HIS OWN EXPENSE TO THE SATISFACTION OF THE ENGINEER.
3. DURING REMOVAL OF PIER CAP AND ABUTMENTS, IF THE CONTRACTOR'S OPERATIONS CAUSE ANY DAMAGE TO THE EXISTING STRUCTURE TO REMAIN IN PLACE AND NEW STRUCTURE, HE SHALL BE REQUIRED TO REPAIR THE AREA TO THE SATISFACTION OF THE ENGINEER AT NO ADDITIONAL COST TO THE STATE.
4. ALL DEMOLITION OF PIER CONCRETE AS INDICATED SHALL BE PERFORMED USING LIGHTWEIGHT CHIPPING EQUIPMENT (30 POUND HAMMER). DETAILS AND DIMENSIONS WERE DEVELOPED FROM ORIGINAL DESIGN DRAWINGS AND ARE SHOWN FOR INFORMATIONAL PURPOSES ONLY. THE CONTRACTOR SHALL VERIFY ALL EXISTING DIMENSION AND DETAILS.
5. REFER TO ORIGINAL DESIGN DRAWINGS FOR EXISTING DETAILS AND DIMENSIONS.
6. EXISTING SUPERSTRUCTURE DEMOLITION SHALL BE PAID UNDER ITEM 803.9901 "REMOVE AND DISPOSE EXISTING SUPERSTRUCTURE" AND SHALL INCLUDE ALL LABOR, MATERIAL, EQUIPMENT, DESIGN, SHOP DRAWING AND ALL OTHER INCIDENTALS REQUIRED TO FINISH THE WORK, COMPLETE AND ACCEPTED BY THE ENGINEER.
7.
8. ALL EXISTING SIGNALS ALONG THE BRIDGE APPROACH SIDEWALKS SHALL BE MAINTAINED AND BE RELOCATED.
9. TEMPORARY PILES SHALL BE REMOVED OR CUT 2 FEET BELOW THE EXISTING MUDLINE.
10. FOR HIGHWAY APPROACH ITEMS, SEE VOLUME 1–HIGHWAY PLANS.
11. CONTRACTOR SHALL NOT BE PERMITTED TO ATTACH TEMPORARY CONSTRUCTION PLATFORM TO EXISTING PILES.
12. EXISTING SUPERSTRUCTURE MAY BE PARTIALLY DEMOLISHED TO ALLOW THE INSTALLATION OF PILES FOR TEMPORARY CONSTRUCTION PLATFORM.

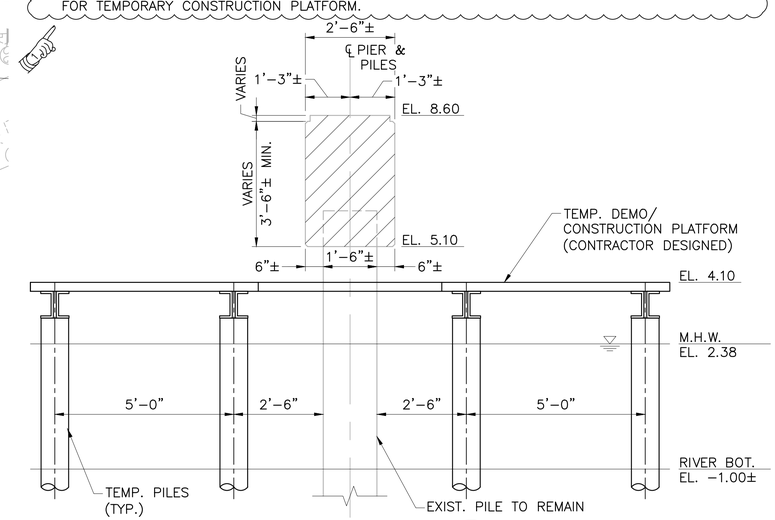

SECTION
SCALE: 1/2"=1'–0"

LEGEND

- REMOVE AND DISPOSE
- TEMPORARY WORKING PLATFORM
- PARTIAL REMOVAL AND DISPOSAL ABUTMENT

vhb PROVIDENCE, RHODE ISLAND

REVISIONS		
NO.	DATE	BY
1	5/13/15	VHB

RHODE ISLAND
DEPARTMENT OF TRANSPORTATION

REPLACEMENT OF
PLEASANT VALLEY PARKWAY
BRIDGE NO. 777
PROVIDENCE, RHODE ISLAND

DEMOLITION PLAN

CHECKED BY _____ DATE _____ SCALE _____

ADDENDUM NO. 2

0163F_009_DEMO_ADD02

FED. ROAD DIV. NO.	STATE	FEDERAL AID PROJECT NO.	FISCAL YEAR	SHEET NO.	TOTAL SHEETS
	RI			15	39

R-1

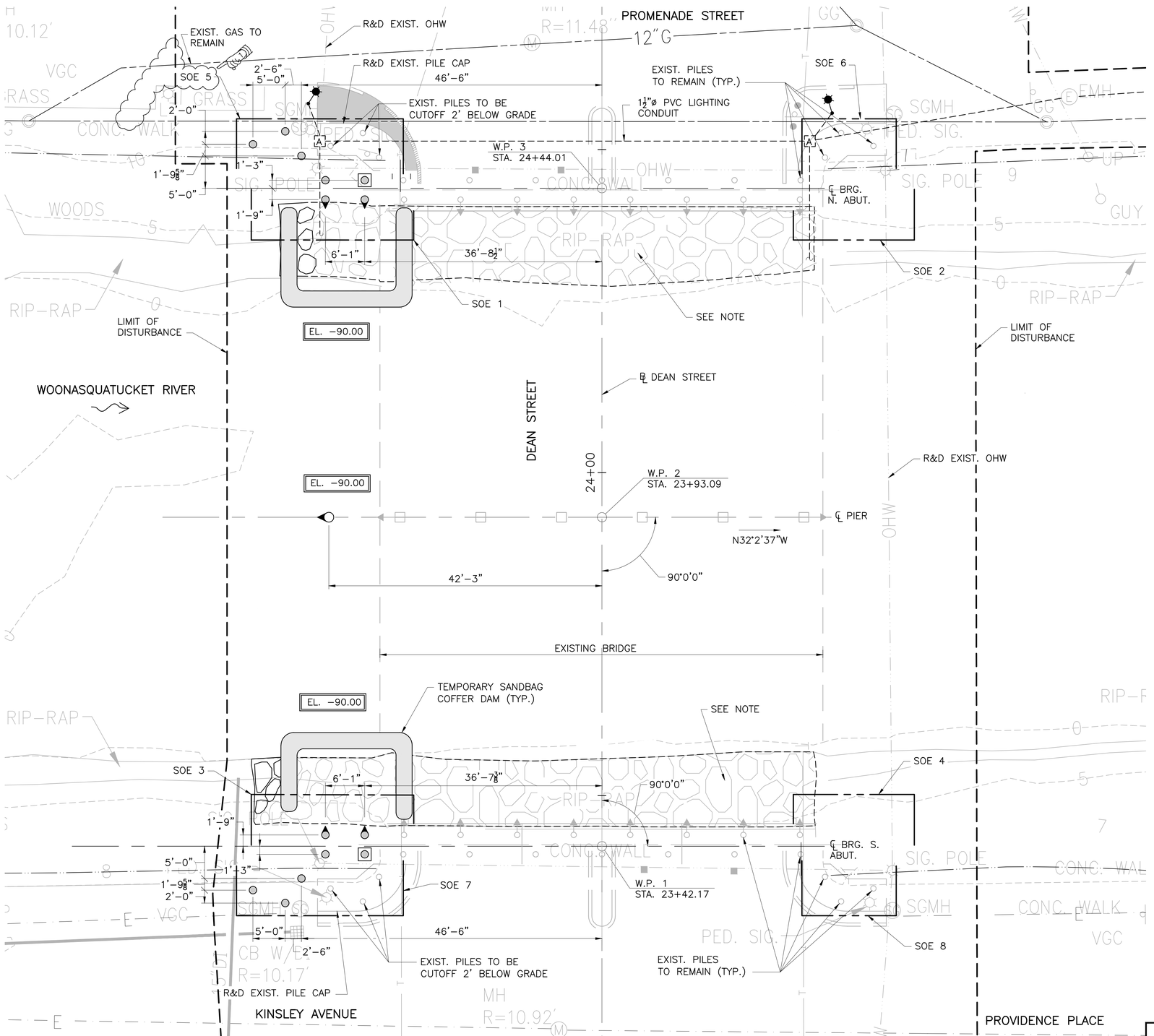

ADDENDUM NO. 2

FOUNDATION PLAN
SCALE: 1/8"=1'-0"

NOTE

PLACE ADDITIONAL RIP RAP (2' RIDOT M10.03.2 R4) ALONG EXISTING EMBANKMENT WITH MAXIMUM QUANTITY AS FOLLOWS:

NORTH ABUTMENT– 39 SQUARE YARD

SOUTH ABUTMENT– 25 SQUARE YARD

COST FOR THE ADDITIONAL RIP RAP SHALL BE PAID UNDER THE ABUTMENT LUMP SUM ITEM.

LEGEND

- PROPOSED 18"ø PIPE PILE TEST PILE BATTERED 1:6
- PROPOSED 14"ø PIPE PILE TEST
- PROPOSED 14"ø PIPE PILE
- PROPOSED 14"ø PIPE PILE BATTERED 1:3
- EXISTING VERTICAL PIPE PILE
- EXISTING BATTERED PIPE PILE 1:3
- EXISTING VERTICAL PRESTRESSED PILE
- EXISTING BATTERED PRESTRESSED PILE 1:6
- EL. -90.00 – ESTIMATED PILE TIP ELEVATION (FOR ESTIMATING PURPOSES ONLY)
- TEMPORARY EXCAVATION SUPPORT
- A – PROPOSED HANDHOLE
- PROPOSED LIGHTING

REVISIONS		
NO.	DATE	BY
1	5/13/15	VHB

RHODE ISLAND
DEPARTMENT OF TRANSPORTATION

REPLACEMENT OF
PLEASANT VALLEY PARKWAY
BRIDGE NO. 777
PROVIDENCE, RHODE ISLAND

FOUNDATION PLAN

vhb PROVIDENCE, RHODE ISLAND

CHECKED BY _____ DATE _____ SCALE _____

0163F_015_FOUNDATION_ADD02

FED. ROAD DIV. NO.	STATE	FEDERAL AID PROJECT NO.	FISCAL YEAR	SHEET NO.	TOTAL SHEETS
	RI			16	39

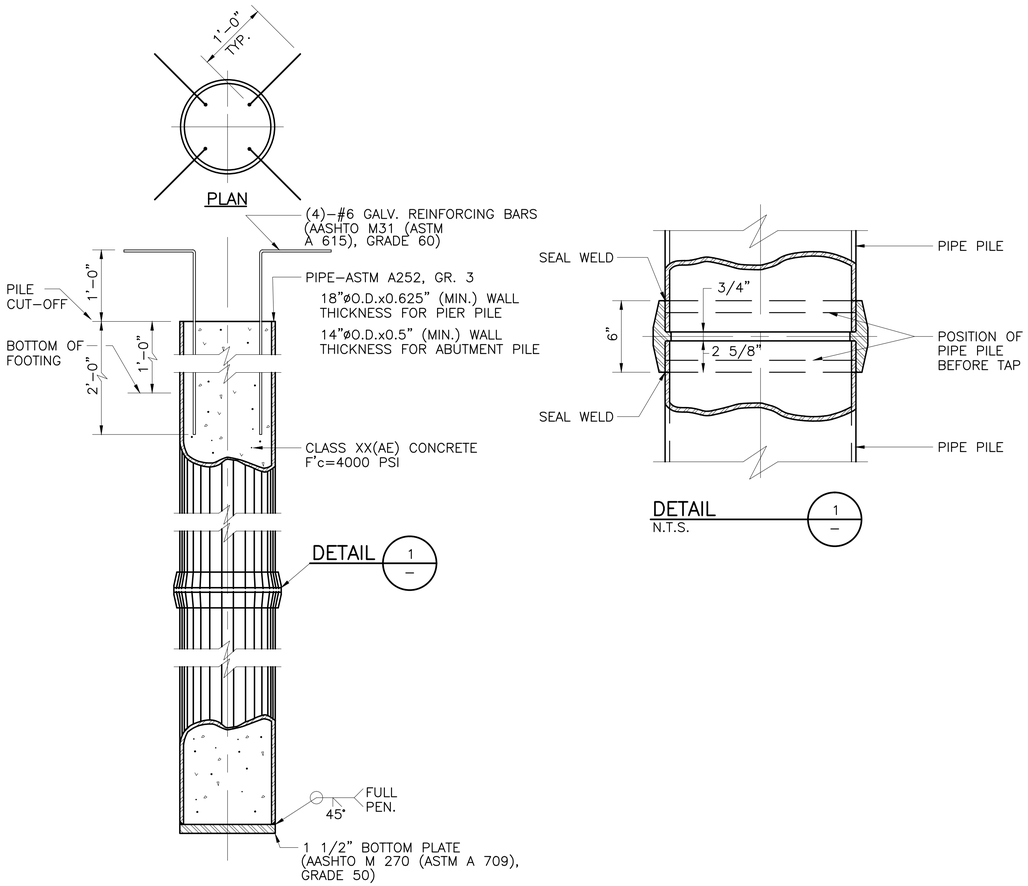

CONCRETE FILLED STEEL PIPE PILE
N.T.S.

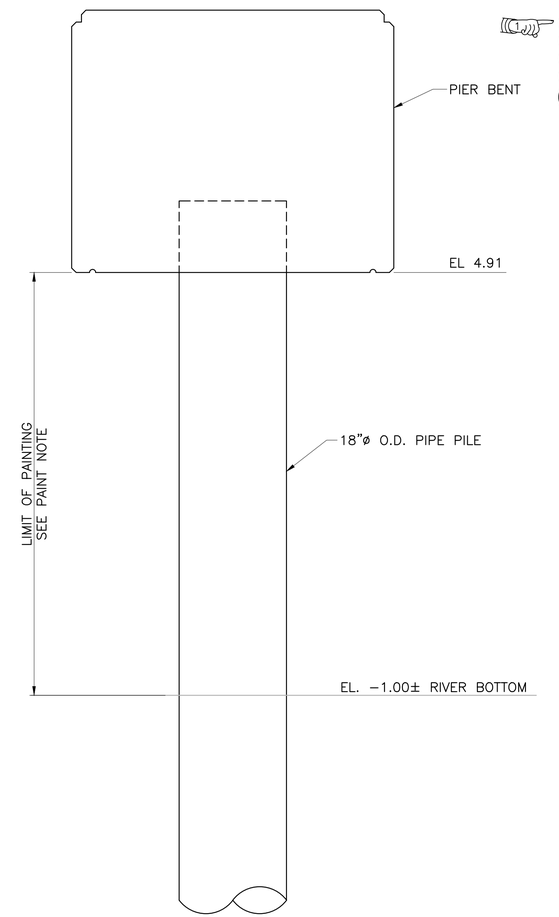

PAINTING LIMIT
N.T.S.

PILE NOTES

1. FOR THE REQUIREMENTS PERTAINING TO THE FURNISHING AND DRIVING OF THE PILE LOAD TEST AND THE FOUNDATION PILES, REFER TO THE RHODE ISLAND STANDARD SPECIFICATIONS.
2. FOUNDATION PILES SHALL BE DRIVEN TO A SUFFICIENT DEPTH AND RESISTANCE TO ADEQUATELY DEVELOP THEIR SPECIFIED LOAD SUPPORTING CAPACITY. THE ENGINEER SHALL BE THE SOLE JUDGE, BASED ON SOIL DATA AND THE RESULTS OF THE PILE DYNAMIC LOAD TEST.
3. THE CONTRACTOR SHALL PERFORM AND SUBMIT TO THE ENGINEER, A WAVE EQUATION ANALYSIS BASED ON THE TYPE OF EQUIPMENT PROPOSED TO BE USED, PROPOSED METHODS OF OPERATION, PROPOSED SEQUENCE OF DRIVING, AND DETAILS OF ALL PILE DRIVING EQUIPMENT AND ACCESSORIES FOR EACH PILE TYPE SPECIFIED, ALL IN ACCORDANCE WITH SECTION 804. OF THE R.I. STANDARD SPECIFICATIONS TO OBTAIN THE REQUIRED ULTIMATE PILE CAPACITY.
8. PILES SHALL BE INSTALLED TO THE FINAL DRIVING RESISTANCE CRITERION BASED ON THE WAVE EQUATION ANALYSIS THAT MODELS THE PILE DRIVING SYSTEM AND SHALL BE MODIFIED AS NECESSARY BASED ON THE RESULTS OF DYNAMIC LOAD TESTING
9. SEE PLAN FOR INDICATOR/TEST PILE LOCATIONS. DYNAMIC TESTING SHALL BE PERFORMED IN ACCORDANCE WITH ASTM D4945 USING PILE DRIVING ANALYZER TESTING WITH CAPWAP ANALYSIS.
10. DYNAMIC TESTING SHALL INCLUDE MEASUREMENTS AT THE END OF DRIVING AND BEGINNING OF RE-STRIKE.
11. ALL WELDING SHALL BE IN ACCORDANCE WITH THE LATEST STRUCTURAL WELDING CODE AASHTO/AWS D1.5.
12. COST FOR PILE BOTTOM PLATE SHALL BE INCIDENTAL TO THE PILE ITEMS.

PAINT NOTE

STEEL PIPE PILE AT THE PIER SHALL BE PAINTED IN ACCORDANCE WITH SECTION 824 OF THE RHODE ISLAND STANDARD SPECIFICATIONS FOR ROAD AND BRIDGE CONSTRUCTION AND PAID FOR UNDER ITEM CODE 804.1202 "PAINT STEEL PIPE" THE COLOR OF THE SURFACES SHALL BE GRAY (LUSTERLESS) TO MATCH FEDERAL STANDARD 595 COLOR 36586 . ALL DAMAGES DUE TO HANDLING, SHIPPING, AND ERECTION SHALL BE FIELD TOUGH-UP AND REPAIRED TO BLEND WITH FINISH COATS EQUIVALENT TO THE ORIGINAL SYSTEMS, IN ACCORDANCE WITH THE MANUFACTURER RECOMMENDATIONS AND THE SATISFACTION OF THE ENGINEER AT NO ADDITIONAL COST TO THE STATE.

REVISIONS		
NO.	DATE	BY
1	5/13/15	VHB

vhb PROVIDENCE, RHODE ISLAND

RHODE ISLAND
DEPARTMENT OF TRANSPORTATION

REPLACEMENT OF
PLEASANT VALLEY PARKWAY
BRIDGE NO. 777
PROVIDENCE, RHODE ISLAND

PILE DETAILS

CHECKED BY _____ DATE _____ SCALE _____

ADDENDUM NO. 2