State of Rhode Island
Department of Administration / Division of Purchases
One Capitol Hill, Providence, Rhode Island 02908-5855
Tel: (401) 574-8100 Fax: (401) 574-8387

ADDENDUM #1

Date: 4/9/15

RFQ # 7549445

TITLE: BRICK AND AWNING REPAIR-WOONSOCKET DEPOT
SUBMISSION DEADLINE: 4/21/15 – 10:30 A.M.

- DRAWING A-31 ATTACHED FOR AWNING SECTIONS.
- ATTENDANCE SHEET FROM NON-MANDATORY PRE-BID CONFERENCE HELD ON 4/8/15 IS ATTACHED.

Lisa Hill
Chief Buyer

State of Rhode Island

Division of Purchases
One Capitol Hill
Providence, RI 02908

"NON-MANDATORY" PRE-BID CONFERENCE SIGN IN SHEET

BID NUMBER:	7549445
BID TITLE:	BRICK AND AWNING REPAIR-WOONSOCKET DEPOT
PRE-BID DATE AND TIME:	4/8/15 - 9:30 A.M.

Purchasing Representative:	LISA HILL
Pre-bid START TIME:	
Pre-bid END TIME:	

	COMPANY NAME	COMPANY REPRESENTATIVE	ADDRESS	CONTACT E-MAIL	CONTACT PHONE NUMBER	CONTACT FAX NUMBER	PROPOSAL SUBMITTED (For Purchasing Use Only)
17	[illegible] Masonry	[illegible] SR	[illegible] RI	[illegible] EAOL	401 263 0329	Same	
18	TRANS GLOBAL CONSTRUCTION	A.D. PAGLIA	1006 CHARLES ST, SUITE 6, N. PROV RI 02904	ADPTGLOBAL@AOL.COM	401-725-9025	401-725-9020	
19	Bay State Restoration	Shari Silvia	338 Metacom Warren RI	BSRestore@AOL.COM	401 245-0755	401 245 4480	
20							
21							
22							
23							
24							
25							
26							
27							
28							
29							
30							
31							
32							

** VENDOR: PLEASE SUBMIT A BUSINESS CARD IF AVAILABLE**

FED ROAD DIV. NO.	STATE	FEDERAL AID PROJECT NO.	FISCAL YEAR	SHEET NO.	TOTAL SHEETS
	RI	STP-TEAC (210) PLH-F005 (012)	02	34	77

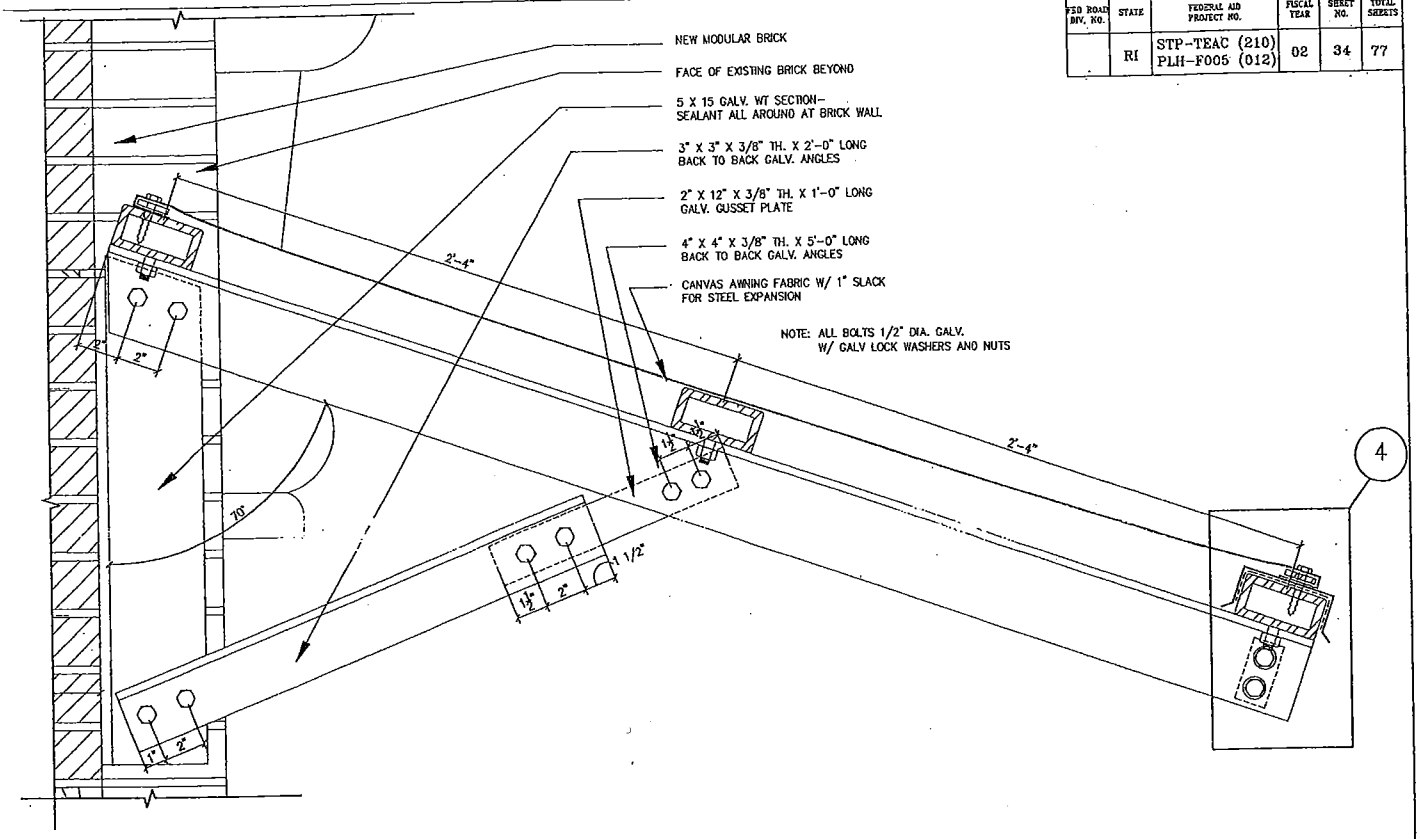

3 SECTION @ AWNING

SCALE: 3" = 1'-0"

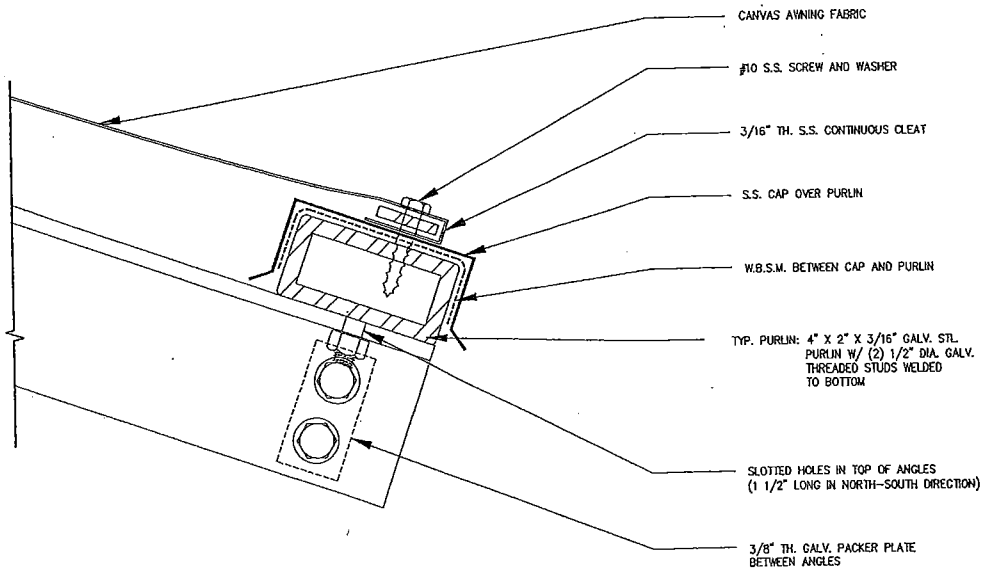

4 SECTION @ AWNING EDGE

SCALE: 6" = 1'-0" (TOP AND BOT. SIM.)

REVISIONS		
NO.	DATE	BY

STATE OF RHODE ISLAND

DEPARTMENT OF TRANSPORTATION

WOONSOCKET DEPOT

INTERMODAL TRANSPORTATION FACILITY

WOONSOCKET RHODE ISLAND

TAMS ARCHITECTS, ENGINEERS, PLANNERS
38 CHAUNCY STREET, BOSTON, MA
TELE (617)482-4832 FAX (617)482-0642

CHRIS I. WERKS No. 2773 REGISTERED ARCHITECT

DETAILS - SHEET 3

A-31

CHECKED BY: DATE: MAR 11 '02 SCALE: AS NOTED