October 6, 2014

STATE OF RHODE ISLAND AND PROVIDENCE PLANTATION
DEPARTMENT OF ADMINISTRATION

DIVISION OF PURCHASES BID NO. 7548970

RHODE ISLAND DEPARTMENT OF TRANSPORTATION

RHODE ISLAND CONTRACT NO.2014-CI-075

FEDERAL-AID PROJECT NO. FAP Nos: RI-04-0007, RI-05-0103, RI-55-0001

Providence Station Enhancements

GASPEE STREET, RAILROAD STREET, PARK ROW WEST - PROVIDENCE, RI

CITY/TOWN OF Providence

COUNTY OF PROVIDENCE

NOTICE TO PROSPECTIVE BIDDERS

ADDENDUM NO. 5 Prospective bidders and all concerned are hereby notified of the following changes in the Plans, Specifications, Proposal and Distribution of Quantities for this contract. These changes shall be incorporated in the Plans, Specifications, Proposal and Distribution of Quantities, and shall become an integral part of the Contract Documents.

A. Contract Documents

1. Page CS-i

   Delete page CS-i in its entirety and insert the revised page CS-i (R-1) attached to this ADDENDUM NO. 5. Appendices D-1, D-2, H have been added to the CS pages.

2. Page CS-4

   Delete page CS-4 in its entirety and insert the revised page CS-4 (R-1) and insert new page CS-4a attached to this ADDENDUM NO. 5. National Grid Electric requriements under Section 4. Utility and Municipal Notification and Coordination have been revised.

3. Page CS-5

   Delete page CS-5 in its entirety and insert the revised page CS-5 (R-1) attached to this ADDENDUM NO. 5. Section 6. Amtrak Coordination and Requirements has been revised.

4. Page CS-6

   Delete page CS-6 in its entirety and insert the revised page CS-6 (R-1) attached to this ADDENDUM NO. 5. Section 8. Specialty Items has been revised.

5. Page CS-10

   Delete page CS-10 in its entirety and insert the revised page CS-10 (R-1) and new page CS-10a attached to this ADDENDUM NO. 5. Section 10. Sequence of Construction and Schedule has been revised.

6. Page CS-11

   Delete page CS-11 in its entirety and insert the revised page CS-11 (R-1) attached to this ADDENDUM NO. 5. Section 12. Environmental Permits has been revised.

7. Page CS-12

   Delete page CS-12 in its entierty and insert the revised page CS-12 (R-1) attached to this ADDENDUM NO. 5. Sections 15. City of Providence Technical Specifications and Requirements and 17. Record Drawings have been revised.

8. CS Appendix D

   Delete Appendix D in its entirety and insert the new Appendix D-1 and the new Appendix D-2 attached to this ADDENDUM NO. 5. Appendix D-1 AMTRAK Temporary Permit to Enter & Insurance Requirements and Appendix D-2 AMTRAK Safety and Protection of Railroad and Traffic Property have been added.

9. CS Appendix F

   Delete Appendix F in its entirety and insert the revised Appendix F (R-1) attached to this ADDENDUM NO. 5. The TMP has been revised.

10. CS Appendix H

    Insert the new Appendix H attached to this ADDENDUM NO. 5. The CRMC Assent File No. 2004-03-041 for AP4/Lot 263 has been included.

B. Specification Change/Addition

1. Pages JS-i , JS-ii, JS-iii, and JS-iv

   Delete pages JS-i(R-1), JS-ii(R-1), JS-iii(R-1), and JS-iv(R-1) in their entirety and insert the revised pages JS-i(R-2), JS-ii(R-2), JS-iii(R-2), and JS-iv(R-2) and insert new page JS-v attached to this ADDENDUM NO. 5.

2. Page JS-1a

   Insert the new page JS-1a attached to this ADDENDUM NO. 5. Specification for 107.13(2) Responsibility for Damage Claims has been added.

3. Page JS-23a

   Insert the new page JS-23a attached to this ADDENDUM NO. 5. Specification for Item Code 201.9925 Remove and Dispose Temporary Electrical Equipment and Housing has been added.

4. Pages JS-30a, JS-30b, JS-30c, JS-30d, JS-30e, and JS-30f

   Insert the new pages JS-30a, JS-30b, JS-30c, JS-30d, JS-30e, and JS-30f attached to this ADDENDUM NO. 5. Job specific provisions for 601.0307 Engineer's Acceptance Sampling, Testing, and Inspection and 601.05 Basis of Payment have been added.

5. Pages JS-31 through JS-34

   Delete pages JS-31, JS-32, JS-33, and JS-34 in their entirety and insert the revised pages JS-31 (R-1), JS-32 (R-1), JS-33 (R-1), and JS-34 (R-1) attached to this ADDENDUM NO. 5. The lightweight concrete specification has been revised.

6. Page JS-56

   Delete page JS-56 in its entirety and insert the revised page JS-56 (R-1) attached to this ADDENDUM NO. 5. The specification has been revised.

7. Page JS-58

   Delete page JS-58 in its entirety and insert the revised page JS-58 (R-1) attached to this ADDENDUM NO. 5. The reference to section 604 has been removed.

8. Page JS-59

   Delete page JS-59 and insert the revised pages JS-59 (R-1) attached to this ADDENDUM NO. 5. The specification has been revised to include hydroblasting as an option for cleaning.

9. Pages JS-64, JS-65, JS-66, JS-67 and JS-68

   Delete pages JS-64, JS-65, JS-66, JS-67, and JS-68 in their entirety and insert the revised pages JS-64 (R-1), JS-65 (R-1), JS-66 (R-1), JS-67 (R-1), and JS-68 (R-1) attached to this ADDENDUM NO. 5. Reference to the Rhode Island Department of Transportation Standard Specifications for Road and Bridge Construction have been added.

10. Pages JS-77, JS- 78, JS-79, and JS-80

    Delete pages JS-77 (R-1), JS-78 (R-1), JS-79 (R-1), and JS-80 (R-1) in their entirety and insert the revised pages JS-77 (R-2), JS-78 (R-2), JS-79 (R-2), and JS-80(R-2) attached to this ADDENDUM NO. 5. Lightweight concrete has been removed from the specification. Item 905.9907 Integrally Colored and Radially Scored Portland Cement Concrete Sidewalk has been added. Materials and Submittals requirements have been revised.

11. Page JS-81

    Delete page JS-81 in its entirety and insert the revised page JS-81 (R-1) attached to this ADDENDUM NO. 5. The lightweight concrete reference has been removed from the specification.

12. Page JS-82

    Delete page JS-82 in its entirety and insert the revised page JS-82 (R-1) attached to this ADDENDUM NO. 5. The lightweight concrete reference has been removed from the specification.

13. Page JS-87

    Delete page JS-87 in its entirety and insert the revised page JS-87 (R-1) attached to this ADDENDUM NO. 5. Submittals requirements have been revised.

14. Pages JS-114, JS-115, JS-116

    Delete pages JS-114, JS-115, and JS-116 in their entirety and insert the revised JS-114(R-1), JS-115 (R-1), and JS-116(R-1) attached to this ADDENDUM NO. 5. The Materials Section has been revised.

15. Pages JS-116a, JS-116b, JS-116c, JS-116d, and JS-116e

    Insert new pages JS-116a, JS-116b, JS-116c, JS-116d, and JS-116e attached to this ADDENDUM NO. 5. Job specific provisions for Item Code 999.9904 Parking Access and Revenue Control System have been added.

16. Pages JS-134 and JS-135

    Delete pages JS-134 and JS-135 in their entirety and insert the revised pages JS-134 (R-1) and JS-135 (R-1) attached to this ADDENDUM NO. 5. Amtrak coordination information has been added.

17. Page JS-136

    Delete page JS-136 in its entirety and insert the revised page JS-136 (R-1) attached to this ADDENDUM NO. 5. Amtrak coordination information has been added.

C. Drawings/Plans - Change/Addition

1. Sheet 7 - Typical Sections

   Delete Sheet 7 - Typical Sections in its entirety and insert the revised Sheet 7 - Typical Sections (R-1) attached to this ADDENDUM NO. 5. In the Typical Sections for Railroad Street and Park Row West, the concrete class and depth for sidewalks has been revised.

2. Sheet 8 - Site Preparation Plan No. 1

   Delete Sheet 8 - Site Preparation Plan No. 1 (R-1) in its entirety and insert the revised Sheet 8 - Site Preparation Plan No. 1 (R-2) attached to this ADDENDUM NO. 5. Note 4 has been added. The staging area in Station Park has been deleted.

3. Sheet 9 - Site Preparation Plan No. 2

   Delete Sheet 9 - Site Preparation Plan No. 2 in its entirety and insert the revised Sheet 9 - Site Preparation Plan No. 2 (R-1) attached to this ADDENDUM NO. 5. Dimensions to the limit of work and areas of buried concrete slab to be removed and disposed have been added to the plans.

4. Sheet 11 - General Plan No. 2

   Delete Sheet 11 - General Plan No. 2 in its entirety and insert the revised Sheet 11 - General Plan No. 2 (R-1) attached to this ADDENDUM NO. 5. Sidewalk treatments have been revised.

5. Sheet 20 - Site Details No. 1

   Delete Sheet 20 - Site Details No. 1 in its entirety and insert the revised Sheet 20 - Site Details No. 1 (R-1) attached to this ADDENDUM NO. 5. Sidewalk and driveway concrete class and depths have been revised.

6. Sheet 22 - Site Details No. 3

   Delete Sheet 22 - Site Details No. 3 (R-1) in its entirety and insert the revised Sheet 22 - Site Details No. 3 (R-2) attached to this ADDENDUM NO. 5. Compass Rose Section and Detail have been revised.

7. Sheet 23 - Site Details No. 4

   Delete Sheet 23 - Site Details No. 4 (R-1) in its entirety and insert the revised Sheet 23 - Site Details No. 4 (R-2) attached to this ADDENDUM NO. 5. Notes on the plans have been revised.

8. Sheet 37 - Traffic Control Details No. 1

   Delete Sheet 37 - Traffic Control Details No. 1 it its entirety and insert the revised Sheet 37 - Traffic Control Details No. 1 (R-1) attached to this ADDENDUM NO. 5. Notes have been added to the plans.

9. Sheet 39 - Traffic Control Plan No. 1

   Delete Sheet 39 - Traffic Control Plan No. 1 in its entirety and insert the revised Sheet 39 - Traffic Control Plan No. 1 (R-1) attached to this ADDENDUM NO. 5. Traffic control notes have been revised.

10. Sheet 40 - Traffic Control Plan No. 2

    Delete Sheet 40 - Traffic Control Plan No. 2 in its entirety and insert the revised Sheet 40 - Traffic Control Plan No. 2 (R-1) attached to this ADDENDUM NO. 5. The plan has been revised.

11. Sheet 41 - Traffic Control Plan No. 3

    Delete Sheet 41 - Traffic Control Plan No. 3 in its entirety and insert the revised Sheet 41 - Traffic Control Plan No. 3 (R-1) attached to this ADDENDUM NO. 5. The plan has been revised.

12. Sheet 42 - Traffic Control Plan No. 4

    Delete Sheet 42 - Traffic Control Plan No. 4 in its entirety and insert the revised Sheet 42 - Traffic Control Plan No. 4 (R-1) attached to this ADDENDUM NO. 5. The plan has been revised.

13. Sheet 43 - Traffic Control Plan No. 5

    Delete Sheet 43 - Traffic Control Plan No. 5 in its entirety and insert the revised Sheet 43 - Traffic Control Plan No. 5 (R-1) attached to this ADDENDUM NO. 5. The plan has been revised.

14. Sheets 44-Restoration Plan, 47-Concrete Repair Details and Sections, 48-Cement Concrete Sidewalk with Foam Base, Waterproofing Details & Sections Sheets 50, 51, 52, 53, 54, 55, and 57

    Delete Sheets 44-Restoration Plan, 47-Concrete Repair Details and Sections, 48-Cement Concrete Sidewalk with Foam Base, Waterproofing Details & Sections Sheets 50, 51, 52, 53, 54, 55, and 57 in their entirety and insert the revised Sheets 44 (R-1), 47 (R-1), 48 (R-1), 50 (R-1), 51 (R-1), 52 (R-1), 53 (R-1), 54 (R-1), 55 (R-1), and 57 (R-1) attached to this ADDENDUM NO. 5. References to Class HP Concrete have been eliminated. Concrete for sidewalks has been revised to Class XX. Depth of concrete sidewalks has been revised.

15. Sheet 70 -Temporary Access Drive General Plan

    Delete Sheet 70 -Temporary Access Drive General Plan in its entirety and insert the revised Sheet 70 -Temporary Access Drive General Plan (R-1) attached to this ADDENDUM NO. 5. Additional work items have been added to the plans.

16. Sheet 74 -Temporary Access Drive Site Restoration Plan

    Delete Sheet 74 -Temporary Access Drive Site Restoration Plan No.1 in its entirety and insert the revised Sheet 74 -Temporary Access Drive Site Restoration Plan No.1 (R-1) attached to this ADDENDUM NO. 5. Additional work items have been added to the plans.

D. Distribution of Quantities

1. Index Pages 1, 2, 3, 4, and 5

   Delete index pages 1 (R-1), 2 (R-1), 3 (R-1), 4 (R-1), and 5 (R-1) in their entirety and insert revised index pages 1 (R-2), 2 (R-2), 3 (R-2), 4 (R-2), and 5 (R-2) attached to this ADDENDUM NO. 5.

2. Page 17

   Delete page 17 in its entirety and insert the revised page 17 (R-1) and new page 17a attached to this ADDENDUM NO. 5. Quantities for item 401.9901 have been revised.

3. Pages 24 and 25

   Delete Pages 24 and 25 in their entirety and insert the revised pages 24 (R-1), 25 (R-1), and new page 25a attached to this ADDENDUM NO. 5. Locations have been revised for item 810.9901. Quantities have been revised for item 813.9902.

4. Pages 29, 30, 31, 32

   Delete pages 29, 30, 31, 32 in their entirety and insert the revised pages 29 (R-1), 30 (R-1), 31 (R-1), 32 (R-1) and insert the new page 32a attached to this ADDENDUM NO. 5. Quantities for items 903.9905, 905.0110, 905.9901, 905.9902, 905.9903, 905.9904, 905.9905,and 905.9906 have been revised. Stations for item 905.9903 have been revised.

5. Pages 43 and 44

   Delete page 43 (R-1) and page 44 in their entirety and insert the revised page 43 (R-2), new page 43a, and revised page 44(R-1) attached to this ADDENDUM NO. 5. Quantities for items L01.0102 and L02.0102 have been revised.

6. Pages 58 and 59

   Delete page 58 in its entirety and insert the revised page 58 (R-1) and new page 59 attached to this ADDENDUM NO. 5. Items 201.0420, 201.9925, 905.9907, and 999.9904 have been added.

E. Other Item Changes

1. 914.5010

   Minimum acceptable bid price has been revised.

2. 914.5020

   Minimum acceptable bid price has been revised.

F. Other

1. Record Drawings

   Insert Record Plans for RIDOT Capital Center Project Contract No.3 Bridges A, B, and C attached to this ADDENDUM NO. 5. There are 11 sheets attached.

2. TAC 0257 - Standard Detail Index

   Delete Rhode Island Standard Details Index pages i, ii, iii, iv, v, vi, vii, viii, ix, x, xi, xii, xiii in their entirety and replace with pages i, ii, iii, iv, v, vi, vii, viii, ix, x, xi, xii, xiii dated august 28, 2014 attached to this ADDENDUM NO. 5.

3. TAC 0257 - Detail 7.7.0

   Delete Rhode Island Standard Detail 7.7.0 in its entirety and replace with detail 7.7.0 dated March 25, 2014 attached to this ADDENDUM NO. 5.

4. TAC 0257 - Detail 18.2.0

   Delete Rhode Island Standard Detail 18.2.0 in its entirety and replace with detail 18.2.0 revised November 6, 2013 attached to this ADDENDUM NO. 5.

5. TAC 0257 - Detail 40.5.0

   Delete Rhode Island Standard Detail 40.5.0 in its entirety and replace with detail 40.5.0 revised November 6, 2013 attached to this ADDENDUM NO. 5.

RI Department of Transportation
Chief Engineer

INDEX

SECTION NUMBER	SECTION TITLE	PAGE
1	Brief Scope of Work	CS-1
2	Specifications to Govern	CS-1
3	List of Contract Drawings	CS-2
4	Utility & Municipal Notification & Coordination	CS-2
5	Other Coordination Contacts	CS-4
6	Amtrak Coordination and Requirements	CS-5
7	Coordination with Other Construction Contracts	CS-6
8	Specialty Items	CS-6
9	Notice to Contractors	CS-7
10	Sequence of Construction and Schedule	CS-10
11	Transportation Management Plan	CS-11
12	Environmental Permits	CS-11
13	Stormwater Pollution Prevention Plan	CS-12
14	Concrete Core Profiles	CS-12
15	City of Providence Technical Specifications and Requirements	CS-12
16	Salvaged Materials	CS-12
17	Record Drawings	CS-12

LIST OF APPENDICES

Appendix A	Contract Submittal List	
Appendix B	Concrete Core Profile Report	
Appendix C	Stormwater Pollution Prevention Plan	
Appendix D-1	AMTRAK Temporary Permit to Enter & Insurance Requirements	
Appendix D-2	AMTRAK Safety & Protection of Railroad Traffic& Property	
Appendix E	Guidelines for Backfill and Compaction around Gas Pipes – Permanent Backfill and Compaction	
Appendix F	Traffic Management Plan	
Appendix G	City of Providence Technical Specifications	
Appendix H	CRMC Assent	

The Contractor shall note if a gas line becomes exposed during construction, Code requires that National Grid Gas Company (NGGC) be notified to inspect the line before backfilling. Also, any damage to the pipe or pipe coating will need to be repaired before backfilling. Contact Providence Dispatch office at (401) 525-5513. NGGC requires that its pipelines be backfilled and compacted as outlined in the **Appendix "F", "Guidelines for Backfill and Compaction around Gas Pipes – Permanent Backfill and Compaction**".

The Contractor shall note that the City of Providence Fire Department Connection (FDC), which is essential to the fire protection system for the PVD AMTRAK Station, is located on the northeast corner of the building as shown on the Plans. The FDC cannot be obstructed during and following construction. Should it become necessary for partial obstruction of the FDC at any time, the Contractor must contact the Providence Fire Prevention Division, Office of Deputy State Fire Marshall for mitigation. Contact Inspector Michael Krasnowiecki, Captain at 401-243-6050 at least 48 hours in advance of any partial obstruction of the FDC.

The following utility work is anticipated:

Utility Company	Lead Time (Calendar Days)	Duration (Calendar Days)
National Grid for new electrical service connection between existing National Grid Manhole 2668 and isolated handhole (point of service)	60	7

National Grid will provide a new service connection to the proposed handhole on the southwest corner of Park Row West/Railroad Street intersection. The Contractor will be required to initiate a single work request with National Grid Customer Service by phone. Short circuit duty and cost to provide service will be provided for each individual location. Any backcharges due from the Contractor must be paid and a municipal electrical inspection must be received before any National Grid construction can be scheduled. The conduit connection from National Grid manholes to the islolated handhole (point of service) must be installed to National Grid requirements by a National Grid approved contractor who has been previously qualified to perform duct/manhole construction for National Grid. The Contractor will be required to contact National Grid's Construction Supervisor for civil construction (Ike Dayacap, 401-748-7208) 48 hours in advance of the start of construction for any conduit and handhole which National Grid cables will be installed.

5. OTHER COORDINATION CONTACTS

Contractor will be required to attend bi-weekly and additional meetings as necessary with RIDOT, and other affected facilities' owners and operators to discuss and coordinate the Contractor's Bi-Weekly Status Schedule as required under Subsection 108.03 of the Rhode Island Department of Transportation Standard Specifications for Road and Bridge Construction, Amended 2013.

The following entities own or operate facilities within the project limits:

Capitol Properties, Inc.
100 Dexter Road
East Providence, RI 02914
Contact: Todd Turcotte, P.E., Vice President
Phone: 401-435-7171; Fax: 401-435-71719
(Owner of Parcels AP 19/Lot 115, AP 4/Lot 261, AP 4/Lot 262, AP 4/Lot 263)

MetroPark LTD
49 Weybosset Street
Providence, RI 02903
Contact: Charles Meyers, President
Phone: 401-274-9290; Fax: 401-274-9293
(Lessee/Operator of Station Garage on AP 19/Lot 115)

Zipcar
65 Eddy Street
Providence, RI 02903
Contact: Katelyn Lopresti, Market Manager
Phone: 401-234-1380
(Zipcar location Exchange St. at Park Row)

Project includes temporary closure of the Station Garage upper parking level, entrance ramp, and exit ramp. Contractor shall coordinate with the Engineer for all work affecting any portion of the parking garage, access ramps or roadways. Contractor is required to provide a minimum of thirty (30) calendar days advanced notice to the Engineer prior to full or partial closure of the parking garage access ramps and the upper parking level. Contractor is required to provide a minimum of forty-eight (48) hours advanced notice to the Engineer prior to closure of parking spaces within the garage and five (5) calendar days' notice prior to any work within the Station Garage or its entrance and exit ramps.

6. AMTRAK COORDINATION AND REQUIREMENTS

Due to the proximity of the Work to AMTRAK facilities and right of way, Contractor will be required to coordinate his activities closely with AMTRAK and provide AMTRAK approved access to the Station for AMTRAK employees as well as for the public continuously for the construction duration. Upon award, the Contractor shall notify AMTRAK contacts below relative to their anticipated construction start date.

Mr. Earl Watson
Director I&C Projects
AMTRAK
National Railroad Passenger Corporation
Engineering Department
30th Street Station, 4th Floor South Tower, Box 64
Philadelphia, PA 19104

National Railroad Passenger Corporation/AMTRAK – RI Area Construction Engineering
165 Royal Little Drive
Providence, RI 02904
Contact: Anthony J. Scorpio, Engineer
Phone: 401-727-7322

Inclusions to these Contract Documents, and made a part hereof, are the following AMTRAK Documents and requirements. All work, schedules and operations must reflect these requirements:

- National Railroad Passenger Corporation (AMTRAK) Temporary Permit to Enter Upon Property Requirements and Insurance Requirements (**Appendix "D-1"**)

- Safety and Protection of Railroad Traffic and Property (**Appendix "D-2"**)

Temporary Permit to Enter Upon Property. Contractors who require access to railroad property must submit a letter to Amtrak requesting a "Temporary Permit to Enter Upon Property". Permit and insurance requirements are contained in **Appendix "D-1"** of these contract documents. Prior to any work on or access to AMTRAK right of way, the Contractor must first execute AMTRAK's then current Temporary Permit to Enter Upon Property. The Temporary Permit will include a force account estimate based on the Contractor's scope of work and projected duration of work. Any AMTRAK engineering, flag protection, and/or other protection services will be provided at the sole cost and expense of the Department. The Temporary Permit to Enter must be executed with AMTRAK before the commencement of any work in AMTRAK's right-of-way or within 25 feet of the centerline of AMTRAK's outermost tracks and/or energized wire. Reference Temporary Permit page 1, paragraph 5, "Starting of Use of Property". The Contractor must allow ninety (90) business days for the processing of the Permit by AMTRAK. AMTRAK's Entry Permit fee shall be paid for by the Department.

"Permitee" as referenced in the National Railroad Passenger Corporation "Temporary Permit to Enter Upon Property" means the RIDOT Contractor awarded the project's construction. However, "Permitee" in Article 14 of the Temporary Permit document with reference to "charges" and "payments" is to be RIDOT, all other "Permitee" requirements are that of the Contractor. Similarly under Attachment A, Article (4) with reference to "the cost of same shall be paid directly to Railroad by Permitee", "Permitee" means RIDOT.

Insurance Requirements. Contractor shall furnish, with respect to the operations of Contractor or any of its Subcontractors performing Work on or within fifty (50) feet of the railroad right-of-way, broad form Railroad Protective Liability Insurance covering all work performed under this Contract in accordance with the Insurance Requirements. Insurance requirements are contained in **Appendix "D-1"** Attachment B. Such insurance shall be written on an occurrence basis and shall name RIDOT, the Rhode Island Public Rail Corporation and AMTRAK as insureds. Contractor shall furnish to RIDOT, the Rhode Island Public Rail Corporation and AMTRAK signed originals of the Railroad Protective Liability Policy prior to entry upon or within fifty (50) feet of the railroad right of way. Any such policies shall provide thirty (30) days notice to each named insured by the insurance company before any change or cancellation of the policies may take place. Such Railroad Protective Liability Policies may be provided in forms commonly referred to as AAR/AASHTO or ISO/RIMA, but not Oregon.

The cost of coordination with AMTRAK and fulfilling AMTRAK requirements are considered incidental to the work unless otherwise specified.

7. COORDINATION WITH OTHER CONSTRUCTION CONTRACTS

It shall be the Contractor's responsibility to coordinate, cooperate and schedule his work and all segments thereof with the Engineer, other contractors, utility owners, and applicable local authorities, so as to minimize impacts to the construction schedule. The Contractor shall be responsible for coordinating construction activities (at a minimum) with the following RIDOT, City of Providence, and AMTRAK Contracts:

- City of Providence Downtown Circulation Phase 3 Project
- City of Providence Exchange Street Bus Livability Project
- AMTRAK Providence Station Façade Renovations Project
- RIDOT 2014 Highway Safety Improvement Program Contract 1 – Short Term Improvements to Memorial Boulevard at Francis Street

8. SPECIALTY ITEMS

The following are designated as "specialty items":
Lighting & Electrical Systems.
Irrigation Systems.
Landscape Plants.
Seeding.
Signing.
Pavement Markings.
Hot Mix Asphalt.
Imprint Crosswalk.
Ornamental Steel Fence.
Steel Handrailing.
Expansion Joint Gland Replacement.
Membrane Waterproofing.
Parking Access and Revenue Control System.

a) To request approval of submittals.
b) To request approval of substitutions.
c) To request different methods of performing work than those drawn and specified.
d) To request changes which entail additional cost or credit.
e) Routine written communications between the Department and the Contractor.
f) Replies to Nonconformance Notices issued by the Department.
g) To clarify subcontract bid questions.

RFI's do not automatically justify a cost increase in the work or a change in the project schedule. Answered RFI's shall not be construed as approval to perform extra work.

Responses from the Department will not change any requirement of the Contract Documents. If the Contractor believes that a response to a Request for Information will cause a change to the requirements of the Contract Documents, the Contractor shall immediately give written notice to the Engineer stating that the Contractor considers the response requires a Change Order. Failure to give such written notice immediately shall waive the Contractor's right to seek additional time or compensation. The Contractor shall not proceed with the work until a Change Order has been issued.

Contractor shall allow up to 30 days review and response time for RFI's, however, the Department will endeavor to respond in a timely fashion to RFIs. If the Engineer determines that an RFI is inappropriate or should be submitted in another format, the RFI will be returned unanswered to the Contractor for re-submittal on the proper form and in the proper manner.

Department's Response to RFI's

A Request for Information Log will be maintained by the PMP system, and that system will assign a number for each RFI. If the Engineer determines that an RFI is improper or frivolous, the RFI will be returned to the Contractor unanswered; however, all RFI's will be numbered and entered into the Log.

10. SEQUENCE OF CONSTRUCTION AND SCHEDULE

General Stipulations: The Contractor shall adhere to the following requirements:

a) The Contractor must submit for Department acceptance a Project Schedule as required by **Subsection 108.03** Prosecution and Progress; State of Rhode Island Procurement Regulations, with all amendments and Job Specific Code 108.03. The proposed construction and time schedule must consider and address safe vehicle passage through the project for any temporary shoulder or lane closures. Approval of the work sequence and time schedule is required before the start of any work associated with this contract.

b) The Department has arranged for temporary closure of the parking garage upper parking level and both entrance and exit ramps to allow the Contractor access to the under side of the garage roof/plaza surface. The temporary access road is intended to provide public access to the lower parking level of the garage during the proposed work. Construction activities shall not commence on the plaza, Park Row West, Railroad Street, and/or the interior of the garage upper level until the temporary access road construction is completed and parking access controls are operational to provide full access to the lower level of the parking garage and the proposed work on Gaspee Street is substantially complete to allow relocation of the existing taxi queue staging area on Railroad Street. All work shall be completed in accordance with the Traffic Related Work Restrictions indicated in the Transportation Management Plan (TMP).

c) The Contractor shall coordinate, cooperate and schedule his work and all segments thereof with the Engineer, other contractors, utility owners, and applicable local authorities, so as to minimize impacts to the construction schedule.

d) The Contractor shall notify the Department in writing at least fourteen (14) days in advance of lane closures, sidewalk closures and/or detours so that adequate public notice can be given. Upon the Engineer's approval, the Contractor shall coordinate the required traffic control.

e) The Contractor is advised that the signs and other traffic control devices shown on the Traffic Control Plans and Details are minimum requirements. The Contractor shall be responsible to supplement these as required to ensure the public's safety. All traffic control set-ups shall conform to the latest edition of the Manual on Uniform Traffic Control Devices, with latest revisions.

f) Before starting construction activities that require traffic control, the Contractor shall furnish and install all traffic control. All temporary construction signs shall be removed, covered or otherwise concealed when they are not needed to properly warn drivers and/or pedestrians. The Contractor shall be compensated for this under Item Code 937.0200, "Maintenance and Movement Traffic Protection".

g) The Contractor shall coordinate requirements for Uniformed Traffic Control Persons with the Engineer who will coordinate with the local police department.

h) In cases of emergency and/or as directed by the Engineer, the Contractor shall move equipment to allow for the passage of emergency vehicles and/or open closed lanes to maintain traffic flow.

i) The Contractor shall not commence work that impacts vehicular and pedestrian traffic until fabrication of all materials required to complete such work is finished and on site.

j) The Contractor shall backfill or place steel plates, as approved by the Engineer, capable of supporting HS-25 wheel loading over all trenches and excavations that are not protected by barrier at the end of work each day except when otherwise directed by the Engineer. There shall be no additional compensation for backfilling, re-excavating and/or plating these trenches and excavations.

k) The Contractor shall furnish, apply, and maintain temporary waterborne pavement markings within the limits shown on the plans for each construction phase.

l) The Contractor shall provide physical warning to the public for protruding light foundation anchor bolts, within sidewalk areas, for the duration a light pole is not attached to the foundation. The cost of the warning device shall be incidental to the contract.

11. TRANSPORTATION MANAGEMENT PLAN

The Included Transportation Management Plan (TMP) for this project is included as an appendix **(See Appendix "F")**. The TMP lays out the set of coordinated transportation management strategies that will be used to manage the work zone safety and mobility impacts of this project. In the event of a discrepancy between information in the TMP and information elsewhere in the Contract Documents, the former shall govern.

The Department's latest Training Guidelines for Personnel Responsible for Work Zone Safety & Mobility are available under the "Training" section at http://www.dot.ri.gov/humanresources/index.asp.

12. ENVIRONMENTAL PERMITS

Contractor shall comply with the requirements of CRMC Assent No. A2004-03-041 contained in **Appendix "H"** for the construction temporary access road portion called out on the Temporary Access Drive General Plan of the Contract Documents. All Contractor costs for complying with Assent requirements shall be incidental to the work and no separate payment shall be made.

13. STORMWATER POLLUTION PREVENTION PLAN

The Stormwater Pollution Prevention Plan (SWPPP) for this project is included as an appendix **(See Appendix "C")**. The SWPPP provides guidance for complying with the terms and conditions required under the General Permit, however, this document does not negate or eliminate the need to understand and adhere to all applicable RIPDES regulations.

The Storm Water Pollution Prevention Plan (SWPPP) details the anticipated erosion & sediment controls required for this project. The Contractor must designate a SWPPP contact person, experienced in storm water management on large construction sites, who is available on site throughout the life of the project, and who has the authority to direct contractor's personnel and/or subcontractor's personnel in carrying out corrective actions requested by RIDOT's SWPPP Inspector and/or Resident Engineer. The Contractor's designated SWPPP contact person must be available to oversee all SWPPP related activities and to accompany the RIDOT's SWPPP Inspector, as requested, when inspections are performed. The Contractor shall identify the SWPPP contact person at the Pre-Construction Meeting. The SWPPP contact person should be at the Pre-Construction Meeting if possible.

14. CONCRETE CORE PROFILES

Attached to these specifications as **Appendix "B"** are concrete core profiles for the South Plaza.

15. CITY OF PROVIDENCE TECHNICAL SPECIFICATIONS & REQUIREMENTS

In addition to the standard and job specific specifications included in these contract documents, the construction in this contract shall be in accordance with the City of Providence "Technical Specifications". A copy of the latest version of the specifications dated April 3, 2008 is attached as an appendix to the Contract Specific General Provisions (**See Appendix "G**").

The Contractor will not be required to compensate the City of Providence for loss of parking spaces due to construction of the work.

The Work abuts multi-story residential dwellings where noise from construction could be a significant concern to the residents. For any night work, Contractor shall request in writing, at least seven (7) days in advance of performing such night work, approval from the Engineer and the Providence Director of Public Works. No night work shall be undertaken between 8 p.m. and 7 a.m. without prior approval from the Engineer and the Providence Director of Public Works.

16. SALVAGED MATERIALS

City-owned items including, but not limited to, lightpoles and signs that are called to be removed and salvaged and will not be reused under this Contract shall be delivered to a location approved by and within the City of Providence.

17. RECORD DRAWINGS

Included on the Contract Disk for Contractor's information are record drawings from the following Projects:

- Northeast Corridor Improvement Project, Providence Station and Rail Relocation Project, City of Providence (Volume Nos. 1 through 3)
- RIDOT Capital Center Project Contract No.1 Gaspee Street Francis Street , City of Providence (Volume No.4 Highway Plans)
- RIDOT Capital Center Project Contract No.3 Construction of Francis Street, Park Row East, Park Row West, and Park Row Modifications , City of Providence
- RIDOT Capital Center Project Contract No.3 Bridges A, B, and C

Appendix "D-1"
AMTRAK Temporary Permit to Enter & Insurance Requirements

NATIONAL RAILROAD PASSENGER CORPORATION
TEMPORARY PERMIT TO ENTER UPON PROPERTY
C.E.-17 (REVISED 12/1/06)

Date:
File: E-47-
W.E.:

ATTN:

1. TEMPORARY PERMISSION. Temporary permission is hereby granted to _____ (hereinafter called "Permittee"), to enter property owned and/or controlled by the National Railroad Passenger Corporation (hereinafter called "Railroad"), for the purpose of _____ at _____, State of _____, under the terms and conditions set forth below.

2. LOCATION AND ACCESS. (Give map reference, description or both)

_____

(hereinafter called "Property").

3. INDEMNIFICATION. Permittee shall defend, indemnify and hold harmless Railroad, its officers, directors, employees, agents, servants, successors, assigns and subsidiaries, irrespective of their negligence or fault, from and against any and all losses and liabilities, penalties, fines, forfeitures, demands, claims, causes of action, suits, costs and expenses (including cost of defense and attorneys' fees), which any or all of them may hereafter incur, be responsible for, or pay as a result of injury, death, disease, or occupational disease to any person, and for damage (including environmental contamination and loss of use) to or loss of any property, including property of Railroad, arising out of or in any degree directly or indirectly caused by or resulting from activities of or work performed by Permittee, its officers, employees, agents, servants, contractors, subcontractors, or any other person acting for or by permission of Permittee. The foregoing obligation shall not be limited by the existence of any insurance policy or by any limitation on the amount or type of damages, compensation, or benefits payable by or for Permittee or any contractor or subcontractor, and shall survive the termination of this Temporary Permit for any reason. As used in this paragraph, the term "Railroad" also includes all commuter agencies and other railroads with rights to operate over Railroad property, and their respective officers, directors, employees, agents, servants, successors, assigns and subsidiaries.

4. CONSIDERATION FOR PREPARATION OF TEMPORARY PERMIT. Permittee will pay to Railroad the sum of Five Hundred Dollars ($500.00) as compensation for the preparation of this Temporary Permit. This fee is to be delivered to Railroad at the address set forth in paragraph 17 hereof.

5. STARTING OF USE OF PROPERTY. Permittee shall notify Railroad's Deputy Chief Engineer-Construction, or his designee, at least ten (10) days in advance before entering upon, or starting any work on, the Property. No entry upon or use of the Property will be permitted until a fully executed copy of this Temporary Permit is returned to Railroad, and specific permission to enter upon the Property is received by Permittee from Railroad's Director Project Initiation & Development. (See paragraph 17 for contact information.)

6. RAILROAD OPERATIONS. All activities performed by or on behalf of Permittee shall be performed so as not to interfere with Railroad's operations or with any of Railroad's facilities. In no event shall personnel, equipment or material cross a track or tracks without special advance permission from Railroad's Deputy Chief Engineer-Construction or his designee. If, in the opinion of Railroad's Deputy Chief Engineer-Construction or his designee, conditions warrant at any time, Railroad will provide flag service and/or other protection at the sole cost and expense of Permittee, and Permittee agrees to pay to Railroad the full cost and expense therefor.

7. CLEARANCES. All equipment and material of Permittee shall be kept at all times not less than fifteen (15) feet from the centerline of the outside track, unless specifically otherwise authorized in

writing by Railroad's Deputy Chief Engineer-Construction or his designee. Permittee shall conduct all operations so that no part of any equipment shall foul an operated track; transmission, communication or signal line; or any other structure or facility of Railroad.

8. RESTORATION OF PREMISES. Upon completion of its work, Permittee shall, at the option of Railroad, (a) leave the Property in a condition satisfactory to Railroad, or (b) restore the Property to its original condition. This may include, without limitation, the restoration of any fences removed or damaged by Permittee.

9. TERM OF TEMPORARY PERMIT. This Temporary Permit shall commence on the date Railroad receives a fully executed copy of this Temporary Permit pursuant to paragraph 17 hereof and shall extend until the end of the period Railroad determines is necessary for Permittee to accomplish the purpose set forth in paragraph 1 hereof; provided, however, Railroad reserves the right to revoke this Temporary Permit at any time, and in no event shall this Temporary Permit extend beyond _____, 200_. Under no circumstances shall this Temporary Permit be construed as granting to Permittee any right, title or interest of any kind in any property of Railroad.

10. PROTECTION. All work on, over, under, within or adjacent to the Property shall be performed in accordance with the document entitled "SPECIFICATIONS REGARDING SAFETY AND PROTECTION OF RAILROAD TRAFFIC AND PROPERTY," a copy of which is attached hereto as Attachment A and incorporated herein by reference.

11. INSURANCE. Before Permittee commences any work on, over, under, within or adjacent to the Property, Permittee and its contractors (unless Permittee opts to provide the required coverage for them), shall furnish to Railroad's Director Project Initiation & Development, evidence of the insurance coverages specified in the document entitled "INSURANCE REQUIREMENTS - NATIONAL RAILROAD PASSENGER CORPORATION," a copy of which is attached hereto as Attachment B and incorporated herein by reference.

Section 12 Safety Orientation Class - Not Applicable

13. COMPLIANCE BY CONTRACTORS. Permittee shall take all steps necessary to ensure that its contractors and subcontractors comply with the terms and conditions of this Temporary Permit.

14. SUPPORT SERVICES; COSTS; PAYMENTS. Railroad shall not be responsible for any costs incurred by Permittee in relation to any matter whatsoever. Permittee is required to reimburse Railroad for all costs incurred by Railroad in relation to this Temporary Permit. Without limiting the foregoing, Permittee is required to reimburse Railroad for all costs incurred by Railroad in connection with the review of any plans, drawings or other submissions made by Permittee.

Railroad's costs, expenses and labor charges will be billed to Permittee at Railroad's standard force account rates. Except as specified in paragraph 4 hereof, all payments due from Permittee to Railroad under this Temporary Permit shall be due and payable within thirty (30) days from the date of invoice. Permittee shall have no right to set off against any payment due under this Temporary Permit any sums which Permittee may believe are due to it from Railroad for any reason whatsoever. In the event that Permittee shall fail to pay, when due, any amount payable by it under this Temporary Permit, Permittee shall also pay to Railroad, together with such overdue payment, interest on the overdue amount at an annual rate of six (6) percentage points over and above the rate published from time to time by *The Wall Street Journal* as the prime commercial lending rate (or the highest rate allowed by law, if less than the foregoing), calculated from the date the payment was due until paid. All payments due from Permittee to Railroad hereunder shall be: (a) made by check drawn from currently available funds; (b) deemed made only upon receipt by Railroad of collected funds; (c) made payable to National Railroad Passenger

Corporation; and (d) delivered to the National Railroad Passenger Corporation, 23615 Network Place – GROUP, Chicago, IL 60673-1236. (However, the permit fee referenced in paragraph 4 hereof and the Railroad Protective Liability premium referenced in Attachment B, if applicable, shall be delivered to Railroad at the address set forth in paragraph 17 hereof.) All payment obligations of Permittee under this Temporary Permit shall survive the termination or expiration of this Temporary Permit.

15. ENVIRONMENTAL AND GEOTECHNICAL TESTS AND STUDIES. Permittee shall not perform any environmental or geotechnical tests or studies (e.g., air, soil or water sampling) unless specifically identified and authorized in paragraph 1 of this Temporary Permit. If any such tests or studies are performed, Permittee shall promptly furnish to Railroad, at no cost, a copy of the results including any reports or analyses obtained or compiled. Except as may be required by applicable law or as authorized by Railroad in writing, Permittee shall not disclose the results of any such tests or studies to anyone other than Railroad or Permittee's client. Failure to comply with the provisions of this clause shall result in immediate termination of this Temporary Permit and forfeiture of all compensation paid Railroad therefor.

16. SEVERABILITY. If any provision of this Temporary Permit is found to be unlawful, invalid or unenforceable, that provision shall be deemed deleted without prejudice to the lawfulness, validity and enforceability of the remainder of the Temporary Permit.

17. ACCEPTANCE. To confirm acceptance of this Temporary Permit, one fully executed copy must be returned to: Director Project Initiation & Development, National Railroad Passenger Corporation, 30th Street Station, Mail Box 64, Philadelphia, PA 19104 (215/349-1127). The second copy may be retained for your file.

NATIONAL RAILROAD PASSENGER CORPORATION

By: _____
STEVEN J. ALLEMAN
DEPUTY CHIEF ENGINEER - CONSTRUCTION

Date: _____

AGREED TO AND ACCEPTED:

By: _____
(signature)

Title: _____
Must be an Owner/Partner or
duly authorized representative

Date: _____

SJA/MAW/EWIII

ATTACHMENT A
Temporary Permit to Enter Upon Property

SPECIFICATIONS REGARDING SAFETY AND PROTECTION OF RAILROAD TRAFFIC AND PROPERTY (Revised 2/3/06)

National Railroad Passenger Corporation (Railroad)

In the following Specifications, "Railroad" shall mean the National Railroad Passenger Corporation; "Chief Engineer" shall mean Railroad's Chief Engineer and/or his duly authorized representative; "Permittee" shall mean the party so identified in the Temporary Permit to Enter Upon Property; and "Contractor" shall mean the entity retained by the Permittee or the entity with whom Railroad has contracted in a Preliminary Engineering Agreement or Force Account Agreement, as applicable.

(1) Pre-Entry Meeting: Before entry of Permittee and/or Contractors onto Railroad's property, a pre-entry meeting shall be held at which time Permittee and/or Contractors shall submit for written approval of the Chief Engineer, plans, computations and a detailed description of proposed methods for accomplishing the work, including methods for protecting Railroad's traffic. Any such written approval shall not relieve Permittee and/or Contractor of their complete responsibility for the adequacy and safety of their operations.

(2) Rules, Regulations and Requirements: Railroad traffic shall be maintained at all times with safety and continuity, and Permittee and/or Contractors shall conduct their operations in compliance with all rules, regulations, and requirements of Railroad (including these Specifications) with respect to any work performed on, over, under, within or adjacent to Railroad's property. Permittee and/or Contractors shall be responsible for acquainting themselves with such rules, regulations and requirements. Any violation of Railroad's safety rules, regulations, or requirements shall be grounds for the immediate suspension of Permittee and/or Contractor work, and the re-training of all personnel, at Permittee's expense.

(3) Maintenance of Safe Conditions: If tracks or other property of Railroad are endangered during the work, Permittee and/or Contractor shall immediately take such steps as may be directed by Railroad to restore safe conditions, and upon failure of Permittee and/or Contractor to immediately carry out such direction, Railroad may take whatever steps are reasonably necessary to restore safe conditions. All costs and expenses of restoring safe conditions, and of repairing any damage to Railroad's trains, tracks, right-of-way or other property caused by the operations of Permittee and/or Contractors, shall be paid by Permittee.

(4) Protection in General: Permittee and/or Contractors shall consult with the Chief Engineer to determine the type and extent of protection required to ensure safety and continuity of railroad traffic. Any Inspectors, Track Foremen, Track Watchmen, Flagmen, Signalmen, Electric Traction Linemen, or other employees deemed necessary by Railroad, at its sole discretion, for protective services shall be obtained from Railroad by Permittee and/or Contractors. The cost of same shall be paid directly to Railroad by Permittee. The provision of such employees by Railroad, and any other precautionary measures taken by Railroad, shall not relieve Permittee and/or Contractors from their complete responsibility for the adequacy and safety of their operations.

(5) Protection for Work Near Electrified Track or Wire: Whenever work is performed in the vicinity of electrified tracks and/or high voltage wires, particular care must be exercised, and Railroad's requirements regarding clearance to be maintained between equipment and tracks and/or energized wires, and otherwise regarding work in the vicinity of electrified tracks, must be strictly observed. No employees or equipment will be permitted to work near overhead wires, except when protected by a Class A employee of Railroad. Permittee and/or Contractors must supply an adequate length of grounding cable (4/0 copper with approved clamps) for each piece of equipment working near or adjacent to any

overhead wire.

(6) Fouling of Track or Wire: No work will be permitted within twenty-five (25) feet of the centerline of track or the energized wire or have potential of getting within twenty-five (25) feet of track wire without the approval of the Chief Engineer's representative. Permittee and/or Contractors shall conduct their work so that no part of any equipment or material shall foul an active track or overhead wire without the written permission of the Chief Engineer's representative. When Permittee and/or Contractors desire to foul an active track, they must provide the Chief Engineer's representative with their site-specific work plan a minimum of twenty-one (21) working days in advance, so that, if approved, arrangements may be made for proper protection of Railroad. Any equipment shall be considered to be fouling a track or overhead wire when located (a) within fifteen (15) feet from the centerline of the track or within fifteen (15) feet from the wire, or (b) in such a position that failure of same, with or without a load, would bring it within fifteen (15) feet from the centerline of the track or within fifteen (15) feet from the wire and requires the presence of the proper Railroad protection personnel.

If acceptable to the Chief Engineer's representative, a safety barrier (approved temporary fence or barricade) may be installed at fifteen (15) feet from centerline of track or overhead wire to afford the Permittee and/or Contractor with a work area that is not considered fouling. Nevertheless, protection personnel may be required at the discretion of the Chief Engineer's representative.

(7) Track Outages: Permittee and/or Contractors shall verify the time and schedule of track outages from Railroad before scheduling any of their work on, over, under, within, or adjacent to Railroad's right-of-way. Railroad does not guarantee the availability of any track outage at any particular time. Permittee and/or Contractors shall schedule all work to be performed in such a manner as not to interfere with Railroad operations. Permittee and/or Contractors shall use all necessary care and precaution to avoid accidents, delay or interference with Railroad's trains or other property.

(8) Demolition: During any demolition, Contractor must provide horizontal and vertical shields, designed by a Professional Engineer registered in the state in which the work takes place. These shields shall be designed in accordance with the Railroad's specifications and approved by the Railroad, so as to prevent any debris from falling onto the Railroad's right-of-way or other property. A grounded temporary vertical protective barrier must be provided if an existing vertical protective barrier is removed during demolition. In addition, if any openings are left in an existing bridge deck, a protective fence must be erected at both ends of the bridge to prohibit unauthorized persons from entering onto the bridge.

Ballasted track structure shall be kept free of all construction and demolition debris.

(9) Equipment Condition: All equipment to be used in the vicinity of operating tracks shall be in "certified" first-class condition so as to prevent failures that might cause delay to trains or damage to Railroad's property. No equipment shall be placed or put into operation near or adjacent to operating tracks without first obtaining permission from the Chief Engineer's representative. Under no circumstances shall any equipment or materials be placed or stored within twenty-five (25) feet from the centerline of an outside track, except as approved by the Site Specific Safety Work Plan. To ensure compliance with this requirement, Permittee and/or Contractors must establish a twenty-five (25) foot foul line prior to the start of work by either driving stakes, taping off or erecting a temporary fence, or providing an alternate method as approved by the Chief Engineer's representative. Permittee and/or Contractors will be issued warning stickers which must be placed in the operating cabs of all equipment as a constant reminder of the twenty-five (25) foot clearance envelope.

(10) Storage of Materials and Equipment: No material or equipment shall be stored on Railroad's property without first having obtained permission from the Chief Engineer. Any such storage will be on the condition that Railroad will not be liable for loss of or damage to such materials or equipment from any cause.

If permission is granted for the storage of compressed gas cylinders on Railroad property, they shall be stored a minimum of 25 feet from the nearest track in an approved lockable enclosure. The enclosure shall be locked when the Permittee and/or Contractor is not on the project site.

(11) Condition of Railroad's Property: Permittee and/or Contractors shall keep Railroad's property clear of all refuse and debris from its operations. Upon completion of the work, Permittee and/or Contractors shall remove from Railroad's property all machinery, equipment, surplus materials, falsework, rubbish, temporary structures, and other property of Permittee and/or Contractors and shall leave Railroad's property in a condition satisfactory to the Chief Engineer.

Section 12 Safety Training - Not Applicable

(13) No Charges to Railroad: It is expressly understood that neither these Specifications, nor any document to which they are attached, include any work for which Railroad is to be billed by Permittee and/or Contractors, unless Railroad gives a written request that such work be performed at Railroad's expense.

ATTACHMENT B
Temporary Permit to Enter Upon Property

INSURANCE REQUIREMENTS
NATIONAL RAILROAD PASSENGER CORPORATION (AMTRAK)
Revised as of February 17, 2011
Rhode Island Highway, Street, and Bridge Projects
Contractor's Insurance

DEFINITIONS

In these Insurance Requirements "Railroad" or "Amtrak" shall mean National Railroad Passenger Corporation. "Contractor" shall mean the party identified as "Permittee" in the Temporary Permit to Enter Upon Property Agreement or the party with whom Amtrak has contracted in the Preliminary Engineering Agreement or Force Account Agreement, as well as its officers, employees, agents, servants, contractors, subcontractors, or any other person acting for or by permission of Permittee or Contractor. "Operations" shall mean activities of or work performed by Contractor. "Agreement" shall mean the Temporary Permit to Enter Upon Property Agreement, Easement Agreement, Preliminary Engineering Agreement, or Force Account Agreement, as applicable.

INSURANCE

Contractor shall procure and maintain, at its sole cost and expense, the types of insurance specified below. Contractor shall evidence such coverage by submitting to Amtrak the original Railroad Protective Liability Policy and certificates of insurance evidencing the other required insurance, prior to commencement of Operations. At Amtrak's written request, Contractor shall provide Amtrak with copies of other insurance policies evidencing the required insurance. All insurance shall be procured from insurers authorized to do business in the jurisdiction(s) where the Operations are to be performed. Contractor shall require all subcontractors to carry the insurance required herein, or Contractor may, at its option, provide the coverage for any or all subcontractors, provided the evidence of insurance submitted by Contractor to Amtrak so stipulates. The insurance shall provide for thirty (30) days prior written notice to Amtrak in the event coverage is substantially changed, canceled or non-renewed. All insurance shall remain in force until all Operations are satisfactorily completed (unless otherwise noted below), all Contractor personnel and equipment have been removed from Railroad property, and any work has been formally accepted. Contractor's failure to comply with the insurance requirements set forth herein shall constitute a violation of the Agreement.

Workers' Compensation Insurance complying with the requirements of the statutes of the jurisdiction(s) in which the Operations will be performed, covering all employees of Contractor. Employer's Liability coverage with limits of not less than $1 million each accident or illness shall be included.

In the event the Operations are to be performed on or over navigable waterways, a Longshoremen and Harbor Workers' Compensation Act Endorsement and a Maritime Coverage Endorsement are to be added, including coverage for wages, transportation, maintenance and cure.

Commercial General Liability (CGL) Insurance covering liability of Contractor with respect to all operations to be performed and all obligations assumed by Contractor under the terms of the Agreement. Products-completed operations, independent contractors and contractual liability coverages are to be included, with the contractual liability exclusion related to construction/demolition activity within fifty (50) feet of the railroad and any Explosion/Collapse/Underground (X-C-U) exclusions deleted. The policy shall name National Railroad Passenger Corporation and all commuter agencies and railroads that operate over the property or tracks at issue as additional insureds with respect to the operations to be

performed on an ISO endorsement form CG 20 10 07 04 or its equivalent, and for completed operations on an ISO endorsement form CG 20 37 07 04 or equivalent. In addition the policy shall include an ISO endorsement form CG 24 17 10 01 or its equivalent providing contractual liability coverage for the railroads listed as additional insureds. Coverage under this policy shall have limits of liability of not less than $20 million each occurrence, combined single limit, for bodily injury (including disease or death), personal injury and property damage (including loss of use) liability. This requirement may be satisfied by a combination of a primary CGL policy and following-form Excess or Umbrella liability insurance policy(ies) which equal the total limits required.

Automobile Liability Insurance covering the liability of Contractor arising out of the use of any vehicles which bear, or are required to bear, license plates according to the laws of the jurisdiction in which they are to be operated, and which are not covered under Contractor's Commercial General Liability insurance. The policy shall name National Railroad Passenger Corporation, as appropriate CUSCO or WTC, and all commuter agencies and railroads that operate over the property or tracks at issue as additional insureds with respect to the operations to be performed. Coverage under this policy shall have limits of liability of not less than $5 million each occurrence, combined single limit, for bodily injury and property damage (including loss of use) liability. This requirement may be satisfied by a combination of a primary Automobile Liability policy and following-form Excess or Umbrella liability insurance policy(ies) which equal the total limits required.

In the event Contractor or any subcontractor will be transporting and/or disposing of any hazardous material or waste off of the jobsite, a MCS-90 Endorsement is to be added to this policy and the limits of liability are to be increased to $5 million each occurrence.

Railroad Protective Liability (RRP) Insurance covering the Operations performed by Contractor or any subcontractor within fifty (50) feet vertically or horizontally of railroad tracks. The current ISO Occurrence Form (claims-made forms are unacceptable) in the name of the National Railroad Passenger Corporation (and as appropriate CUSCO or WTC, and all commuter agencies and railroads that operate over the property or tracks at issue) shall have limits of liability of not less than $20 million each occurrence, combined single limit, for Coverages A and B, for losses arising out of injury to or death of all persons, and for physical loss or damage to or destruction of property, including the loss of use thereof. A $20 million annual aggregate shall apply. Additionally, Policy Endorsement CG 28 31 - Pollution Exclusion Amendment, is required to be endorsed onto the policy. Further, "Physical Damage to Property" as defined in the policy is to be deleted and replaced by the following endorsement:

> "It is agreed that 'Physical Damage to Property' means direct and accidental loss of or damage to all property owned by any named insured and all property in any named insured's care, custody and control."

The original RRP Liability Insurance Policy must be submitted to Amtrak prior to commencement of Operations.

In the alternative if the contract is less than $500,000, and upon Amtrak's approval, Contractor may elect to have Amtrak insure the Operations under its Blanket RRP Liability Insurance Program. The premium, which shall be determined by the rate schedule promulgated by the insurer in effect as of the effective date of the Agreement, shall be prepaid by Contractor. In the event Contractor and Amtrak agree to insure the Operations under Amtrak's RRP Program, Contractor shall include the RRP premium in addition to the Permit Fee, and send its check made payable to National Railroad Passenger Corporation to the individual set forth below prior to commencement of Operations.

Builder's Risk Insurance: in amounts sufficient to cover the full replacement cost of work in progress, and including labor, materials in place on site, property-in-transit coverage and off-site coverage. The policy will insure the interests of the Contractor, the Additional Insureds and other parties designated by

Contractor providing, but not limited to, coverage against fire, lightning, wind damage, hail, explosion, riot or civil commotion, aircraft and other vehicles and collapse. The policy shall include a waiver of subrogation and any other rights of recovery in favor of Amtrak.

All Risk Property Insurance will be maintained to cover all remaining personal property of the Contractor and its sub-Contractors used during Operations including, but not limited to, tools, equipment, construction trailers and their contents and temporary scaffolding at the Project site, whether owned, leased, rented or borrowed. Contractor's and Sub-Contractors' insurance policies covering tools, equipment and other personal property will include a waiver of subrogation and any other rights of recovery in favor of Amtrak.

Contractor's Pollution Liability Insurance covering the liability of Contractor arising out of any sudden and/or non-sudden pollution or impairment of the environment, including clean-up costs and defense, that arise from the Operations of Contractor with National Railroad Passenger Corporation, as appropriate CUSCO or WTC, and all commuter agencies and railroads that operate over the property or tracks at issue named as additional insureds. Coverage under this policy shall have limits of liability of not less than $2 million each occurrence.

Pollution Legal Liability Insurance is required if any hazardous material or waste is to be transported or disposed of off of the jobsite. Contractor, its subcontractor or transporter, as well as the disposal site operator, shall maintain this insurance. Contractor shall designate the disposal site, and must provide a certificate of insurance from the disposal facility to Amtrak. The policy shall name National Railroad Passenger Corporation, as appropriate CUSCO or WTC, and all commuter agencies and railroads that operate over the property or tracks at issue as additional insureds, with limits of liability of not less than $2 million per claim.

Further, any additional insurance coverages, permits, licenses and other forms of documentation required by the United States Department of Transportation, the Environmental Protection Agency and/or related state and local laws, rules and regulations shall be obtained by Contractor.

Professional Liability Insurance covering the liability of Contractor for any and all errors or omissions committed by Contractor in the performance of the Operations, regardless of the type of damages. The coverage shall be maintained during the term of the Operations, and for at least three (3) years following completion thereof. The policy shall have limits of liability of not less than $2 million per claim and in the annual aggregate. The policy may contain a deductible of a maximum of two hundred fifty thousand dollars ($250,000), but in such case the deductible is the sole responsibility of Contractor, and no portion of such deductible is the responsibility of Amtrak.

Contractor may elect to satisfy this requirement through the addition of endorsement CG2279 "Incidental Professional Liability" to its CGL policy.

Claims-Made Insurance - If any liability insurance specified above shall be provided on a claims-made basis, then in addition to coverage requirements above, such policy shall provide that:

1. The retroactive date shall coincide with or precede Contractor's start of Operations (including subsequent policies purchased as renewals or replacements);

2. The policy shall allow for the reporting of circumstances or incidents that might give rise to future claims;

3. If the Contractor elects to satisfy the requirement to purchase and maintain any of the insurance policies above (e.g., Commercial General Liability, Professional Liability, Contractors Pollution,

Pollution Legal Liability) with its corporate insurance polices, it must maintain these policies for at least three (3) years following completion of the Operations; or in the alternative

4. If the Contractor elects to satisfy the requirements to purchase and maintain any of the insurance polices above (e.g. Commerical General Liability, Professional Liability, Contractors Pollution, Pollution Legal Liability) with a project specific policy or if any claims-made policy is terminated for any reason prior to three years following completion of Operations, Contractor will purchase an extended reporting provision of at least six (6) years to report claims arising from Premises/Operations and Products/Completed Operations.

Contractor shall furnish evidence of insurance as specified above at least fifteen (15) days prior to commencing Operations. THESE DOCUMENTS SHALL INCLUDE A DESCRIPTION OF THE PROJECT AND THE LOCATION ALONG THE RAILROAD RIGHT-OF-WAY (typically given by milepost designation) IN ORDER TO FACILITATE PROCESSING. The fifteen (15) day advance notice of coverage may be waived by Amtrak in situations where such waiver will benefit Amtrak, but under no circumstances will Contractor begin Operations without providing satisfactory evidence of insurance as approved by Amtrak. Such evidence of insurance coverage shall be sent to:

Director Project Initiation & Development
National Railroad Passenger Corporation
30th Street Station, Mail Box 64
Philadelphia, PA 19104-2817

Appendix "D-2"
AMTRAK Safety and Protection of Railroad and Traffic Property

ADDENDUM NO. 5

SECTION 01141A – SAFETY AND PROTECTION OF RAILROAD TRAFFIC AND PROPERTY

PART 1 - GENERAL

1.1 SCOPE

A. This specification describes the safety procedures and protection provisions for Contractors and Permittees entering and working upon railroad property.

B. Use of this specification is as required by Amtrak, as described in Amtrak Engineering Practice EP3014.

1.2 RELATED DOCUMENTS

A. Drawings and general provisions of the Contract, including General and Supplementary Conditions and other Division 1 Specification Sections, apply to this Section.

1.3 DEFINITIONS

A. CHIEF ENGINEER: Amtrak Chief Engineer

B. RAILROAD: National Railroad Passenger Corporation (Amtrak), and/or the duly authorized representative

C. ENGINEERING PRACTICE: Amtrak Engineering Practices establish a system of uniform practices, notices and instructions for the Amtrak Engineering Department, providing current, permanent and temporary, departmental procedures and policies.

PART 2 - PRODUCTS (Not Used)

PART 3 - EXECUTION

3.1 PRE-ENTRY MEETING

A. Before entry of Permittee and/or Contractors onto Railroad's property, a pre-entry meeting shall be held at which time Permittee and/or Contractors shall submit for written approval of the Chief Engineer, plans, computations and a detailed description of proposed methods for accomplishing the work, including methods for protecting Railroad's traffic. Any such written approval shall not relieve Permittee and/or Contractor of their complete responsibility for the adequacy and safety of their operations.

3.2 RULES, REGULATIONS AND REQUIREMENTS

A. Railroad traffic shall be maintained at all times with safety and continuity, and Permittee and/or Contractors shall conduct their operations in compliance with all rules, regulations, and requirements of Railroad (including these Specifications) with respect to any work performed on, over, under, within or adjacent to Railroad's property. Permittee and/or Contractors shall be responsible for acquainting themselves with such rules, regulations and requirements. Any violation of Railroads safety rules, regulations, or requirements shall be grounds for the immediate suspension of the Permittee and/or Contractor work, and the re-training of all personnel, at the Permittee's expense.

3.3 MAINTENANCE OF SAFE CONDITIONS

A. If tracks or other property of Railroad are endangered during the work, Permittee and/or Contractor shall immediately take such steps as may be directed by Railroad to restore safe conditions, and upon failure of Permittee and/or Contractor to immediately carry out such direction, Railroad may take whatever steps are reasonably necessary to restore safe conditions. All costs and expenses of restoring safe conditions, and of repairing any damage to Railroad's trains, tracks, right-of-way or other property caused by the operations of Permittee and/or Contractors, shall be paid by Permittee.

3.4 PROTECTION IN GENERAL

A. Permittee and/or Contractors shall consult with the Chief Engineer to determine the type and extent of protection required to insure safety and continuity of railroad traffic. Any Inspectors, Track Foremen, Track Watchmen, Flagman, Signalmen, Electric Traction Linemen, or other employees deemed necessary by Railroad, at its sole discretion, for protective services shall be obtained from Railroad by Permittee and/or Contractors. The cost of same shall be paid directly to Railroad by Permittee. The provision of such employees by Railroad, and any other precautionary measures taken by Railroad, shall not relieve Permittee and/or Contractors from their complete responsibility for the adequacy and safety of their operations.

3.5 PROTECTION FOR WORK NEAR ELECTRIFIED TRACK OR WIRE

A. Whenever work is performed in the vicinity of electrified tracks and/or high voltage wires, particular care must be exercised, and Railroad's requirements regarding clearance to be maintained between equipment and tracks and/or energized wires, and otherwise regarding work in the vicinity of electrified tracks, must be strictly observed. No employees or equipment will be permitted to work near overhead wires, except when protected by a Class A employee of Railroad. **Permittee and/or Contractors must supply an adequate length of grounding cable (4/0 copper with approved clamps) for each piece of equipment working near or adjacent to any overhead wire**.

3.6 FOULING OF TRACK OR WIRE

A. No work will be permitted within twenty-five (25) feet of the centerline of track or the energized wire or have potential of getting within twenty-five (25) feet of track wire without the approval of the Chief Engineer's representative. Permittee and/or Contractors shall conduct their work so that no part of any equipment or material shall foul an active track or overhead

wire without the written permission of the Chief Engineer's representative. When Permittee and/or Contractors desire to foul an active track, they must provide the Chief Engineer's representative with their site-specific work plan a minimum of twenty-one (21) working days in advance, so that, if approved, arrangements may be made for proper protection of Railroad. Any equipment shall be considered to be fouling a track or overhead wire when located (a) within fifteen (15) feet from the centerline of the track or within fifteen (15) feet from the wire, or (b) in such a position that failure of same, with or without a load, would bring it within fifteen (15) feet from the centerline of the track or within fifteen (15) feet from the wire and requires the presence of the proper Railroad protection personnel.

B. If acceptable to the Chief Engineer's representative, a safety barrier (approved temporary fence or barricade) may be installed at fifteen (15) feet from centerline of track or overhead wire to afford the Permittee and/or Contractor with a work area that is not considered fouling. Nevertheless, protection personnel may be required at the discretion of the Chief Engineer's representative.

3.7 TRACK OUTAGES

A. Permittee and/or Contractors shall verify the time and schedule of track outages from Railroad before scheduling any of their work on, over, under, within, or adjacent to Railroad's right-of-way. Railroad does not guarantee the availability of any track outage at any particular time. Permittee and/or Contractors shall schedule all work to be performed in such a manner as not to interfere with Railroad operations. Permittee and/or Contractors shall use all necessary care and precaution to avoid accidents, delay or interference with Railroad's trains or other property.

3.8 DEMOLITION

A. During any demolition, the Contractor must provide horizontal and vertical shields, designed by a Professional Engineer registered in the state in which the work takes place. These shields shall be designed in accordance with the Railroad's specifications and approved by the Railroad, so as to prevent any debris from falling onto the Railroad's right-of-way or other property. A grounded temporary vertical protective barrier must be provided if an existing vertical protective barrier is removed during demolition. In addition, if any openings are left in an existing bridge deck, a protective fence must be erected at both ends of the bridge to prohibit unauthorized persons from entering onto the bridge.

B. Ballasted track structure shall be kept free of all construction and demolition debris. Geo-textiles or canvas shall be placed over the track ties and ballast to keep the ballast clean.

3.9 EQUIPMENT CONDITION

A. All equipment to be used in the vicinity of operating tracks shall be in "certified" first-class condition so as to prevent failures that might cause delay to trains or damage to Railroad's property. No equipment shall be placed or put into operation near or adjacent to operating tracks without first obtaining permission from the Chief Engineer's representative. **Under no circumstances shall any equipment or materials be placed or stored within twenty-five (25) feet from the centerline of an outside track, except as approved by the Site Specific**

Safety Work Plan. To insure compliance with this requirement, Permittee and/or Contractors **must establish a twenty-five (25) foot foul line prior to the start of work** by either driving stakes, taping off or erecting a temporary fence, or providing an alternate method as approved by the Chief Engineer's representative. Permittee and/or Contractors will be issued warning stickers which must be placed in the operating cabs of all equipment as a constant reminder of the twenty-five (25) foot clearance envelope.

3.10 STORAGE OF MATERIALS AND EQUIPMENT

A. No material or equipment shall be stored on Railroad's property without first having obtained permission from the Chief Engineer. Any such storage will be on the condition that Railroad will not be liable for loss of or damage to such materials or equipment from any cause.

B. If permission is granted for the storage of compressed gas cylinders on Railroad property, they shall be stored a minimum of 25 feet from the nearest track in an approved lockable enclosure. The enclosure shall be locked when the Permittee and/or Contractor is not on the project site.

3.11 CONDITION OF RAILROAD'S PROPERTY

A. Permittee and/or Contractors shall keep Railroad's property clear of all refuse and debris from its operations. Upon completion of the work, Permittee and/or Contractors shall remove from Railroad's property all machinery, equipment, surplus materials, falsework, rubbish, temporary structures, and other property of the Permittee and/or Contractors and shall leave Railroad's property in a condition satisfactory to the Chief Engineer.

3.12 SAFETY TRAINING

Not Applicable

3.13 NO CHARGES TO RAILROAD

A. It is expressly understood that neither these Specifications, nor any document to which they are attached, include any work for which Railroad is to be billed by Permittee and/or Contractors, unless Railroad gives a written request that such work be performed at Railroad's expense.

END OF SECTION 01141A

Appendix "F"
Traffic Management Plan

LEVEL 3 TRANSPORTATION MANAGEMENT PLAN

Project Name: **Providence Station Surface Improvements**

RI Design Contract No(s): **2011-EE-015**

RI Construction Contract No(s): **2014-CI-075**

Submission: **FINAL** Date: **10/3/2014**

PROJECT INFORMATION

Brief Project Description:

Providence Station Surface Improvements Project Contract 1 is in the City of Providence, County of Providence, State of Rhode Island. The project will reconstruct the Station South Plaza and its surrounding roadways, Park Row West and Railroad Street, which are directly on top of the Metropark LTD Train Station Parking Garage structure. The project will construct temporary access to the Parking Garage lower level on the adjacent parcel A.P. 4 Lot 263 and remove said access at the conclusion of work impacting access into the garage. The project will also widen a portion of Gaspee Street between Francis Street and the Providence Amtrak Station to provide a taxi bay. All work under this contract is to be as shown on the Plans entitled "Providence Station Surface Improvements Project Contract 1" and per the project specifications.

General Work Limits:

Gaspee Street from Francis Street to Providence Station; Providence Station Plaza from Railroad Street to Park Row West.

WORK ZONE LOCATIONS

ROADWAY NAME or INTERSECTION	FROM	TO	APPROX. LENGTH
Gaspee Street	Francis Street	Providence Station	500 feet
Exchange Street	150' South of Stillman Street	Park Row West	400 feet
Park Row West	Exchange Street	100' North of Stillman Street	500 feet
Railroad Street	Finance Way	Park Row West	500 feet
Finance Way	Exchange Street	150' South of Exchange Street	150 feet

General Project Schedule*:

Work is expected to commence in Spring 2015 and be completed by Spring 2016.

*The information in this section is not intended to and shall not supersede the approved schedule and milestone/completion dates for the project.

TRAFFIC-RELATED WORK RESTRICTIONS

General Restrictions:

See Attachment "A" General Restrictions Chart for work outside of Traffic Control Zones A through E.
See Attachment "B" General Restrictions Chart for Traffic Control Zones A & B.
See Attachment "C" General Restrictions Chart for Traffic Control Zone C.
See Attachment "D" General Restrictions Chart for Traffic Control Zone D.
See Attachment "E" General Restrictions Chart for Traffic Control Zone E.

Holiday Restrictions:

NOTE: IN CASE OF DISCREPANCY BETWEEN THESE HOLIDAY RESTRICTIONS AND THE GENERAL RESTRICTIONS, THESE HOLIDAY RESTRICTIONS SHALL GOVERN UNLESS SHOWN ON THE TRAFFIC CONTROL PLANS FOR ZONES A THROUGH E.

No lane and/or shoulder closures allowed after 13:00 on the Friday preceding a holiday weekend.

EASTER SUNDAY
No lane and/or shoulder closures allowed on Saturday.
No lane and/or shoulder closures allowed on Sunday until 21:00 (after 21:00, General Restrictions shall apply).

NEW YEAR'S DAY, INDEPENDENCE DAY, & CHRISTMAS DAY
No lane and/or shoulder closures allowed after 13:00 on the day before the holiday.
No lane and/or shoulder closures allowed on the holiday.

VETERAN'S DAY
No lane and/or shoulder closures allowed after 13:00 on the day before the holiday.
No lane and/or shoulder closures allowed on Veteran's Day until 21:00 (after 21:00, General Restrictions shall apply).

DR. MARTIN LUTER KING JR. DAY, VICTORY DAY, & COLUMBUS DAY
No lane and/or shoulder closures allowed on Saturday and/or Sunday.
No lane and/or shoulder closures allowed on Monday until 21:00 (after 21:00, General Restrictions shall apply).

MEMORIAL DAY & LABOR DAY
No lane and/or shoulder closures allowed on Saturday, Sunday, and/or Monday.

THANKSGIVING DAY
No lane and/or shoulder closures allowed after 13:00 on the Wednesday preceding Thanksgiving Day.
No lane and/or shoulder closures allowed on Thanksgiving Day, Friday, Saturday, and/or Sunday.

TEMPORARY TRAFFIC CONTROL PLANS

These RIDOT- and/or Designer-Developed TTC Plans will be used during the work on this project

RIDOT TYPICAL TTC PLANS	Included in: TMP	Included in: Plan Set
Mobile Operation		
Work Beyond the Shoulder		
Shoulder Closure - Two Lane Road		
Shoulder Closure - Limited Access		
1-Side Lane Shift - Two Lane Road		
2-Side Lane Shift - Two Lane Road		
Lane Shift - Limited Access		
Lane Closure - Two Lane Road		
Lane Closure - Four Lane Road		
Lane Closure - Limited Access		
Double Lane Closure - Limited Access		

DESIGNER-DEVELOPED TTC PLANS	Included in: TMP	Included in: Plan Set
Traffic Control Typical Details Nos. 1-2		X
Traffic Control Plan Nos. 1-5		X

PUBLIC INFORMATION PLAN

These strategies will be used to provide information concerning the project to road users and the community

SELECTED STRATEGIES	RESPONSIBILITIES / REQUIREMENTS / SPECIAL CONSIDERATIONS
RIDOT travel advisories news releases	Contractor's TMP Imp. Mngr. to send RIDOT notification form to Communications min. 48 hrs. in advance of restrictio
RIDOT travel advisories web site	Contractor's TMP Imp. Mngr. to send RIDOT notification form to Communications min. 48 hrs. in advance of restrictio
RIDOT 511 traveler information system	Contractor's TMP Imp. Mngr. to send RIDOT notification form to RIDOT TMC min. 48 hrs. in advance of restrictions.
Changeable message signs (CMS)	Portable Variable Message Boards shall be placed in accordance with the Traffic Control Details.

TRANSPORTATION OPERATIONS PLAN

These strategies will be used to provide improved transportation operations/safety within project work zones

SELECTED STRATEGIES	RESPONSIBILITIES / REQUIREMENTS / SPECIAL CONSIDERATIONS

PERFORMANCE MONITORING, CHANGES TO TMP, & CONTINGENCIES

The **Contractor's TMP Implementation Manager (if identified below)** is responsible for keeping the portion of the project being used by public traffic in a condition that (1) safely and adequately accommodates such traffic and (2) is in accordance with the Traffic-Related Work Restrictions, the Temporary Traffic Control Plans, and where appropriate, the other transportation management strategies identified above. The **RIDOT TMP Implementation Manager** or his/her responsible designee should (1) inspect the project work zones at initial setup, at the start of each subsequent work day, and just prior to extended breaks in the work (e.g., weekends) for conformance with the Temporary Traffic Control Plans, the *ATSSA Quality Guidelines for Temporary Traffic Control Devices and Features*, and where applicable, the other transportation management strategies identified above and (2) document all work zone-related feedback and complaints that are received from the public.

If at any time (1) a significant deviation from any of the strategies included in the TMP (e.g., the use of an alternate construction sequence) is desired by one or more members of the project implementation team, (2) field observations and/or data suggest that impacts to road users are or will be unacceptable, or (3) one or more performance requirements established in the TMP are not being met in the field, the RIDOT TMP Implementation Manager shall report the situation to his/her supervisor or Division/Section/Unit manager. The supervisor / manager will coordinate with the State Traffic Engineer, the Deputy Chief Engineer, the TMP Implementation Manager(s), the Chief Engineer, and/or other interested parties as appropriate and/or necessary to consider and determine whether revised and/or alternate strategies should be implemented in an effort to lessen the adverse safety and/or mobility impacts of the project. If the supervisor / manager deems that strategy changes should be implemented, the changes shall be documented in a revised version of the TMP and the Deputy Chief Engineer, the State Traffic Engineer, and the Chief Engineer must approve of the revised TMP prior to their implementation.

If a significant deviation from any of the strategies included in the TMP is requested by the Contractor, unless directed otherwise by the RIDOT the Contractor is responsible for preparing and submitting to the RIDOT TMP Implementation Manager appropriate documentation (e.g., design calculations, analysis reports, Temporary Traffic Control Plans, etc.) showing that the requested change(s) are (1) feasible and (2) expected to result in safety and mobility impacts that are no more adverse than the impacts resulting from the strategies already included in the latest approved TMP. The RIDOT will review and consider the submittal(s) as described in the preceding paragraph and will determine whether the changes should be implemented. If the requested changes are approved by the RIDOT, unless otherwise directed by the RIDOT the Contractor shall prepare and submit to the RIDOT TMP Implementation Manager a revised version of the latest approved TMP in both printed and electronic (Microsoft® Excel) format that documents all of the approved changes. Work to implement the changes shall not begin until the Deputy Chief Engineer, the State Traffic Engineer, and the Chief Engineer have approved of the revised TMP.

When unexpected events (e.g., crashes, inclement weather, unforeseen traffic demands, etc.) occur in a project work zone where one or more lanes are closed, the RIDOT TMP Implementation Manager or his/her responsible designee should (1) determine whether or not the lane closure(s) can/should be removed in order to improve traffic operations and/or minimize delays and (2) if deemed appropriate, take action to remove the lane closure(s).

Other Requirements:

TMP APPROVALS

All approvals must be obtained prior to start of work

DEPUTY CHIEF ENGINEER	STATE TRAFFIC ENGINEER	CHIEF ENGINEER
Signature:	Signature	Signature:
Frank Corrao III, P.E.	Robert Rocchio, P.E.	Kazem Farhoumand, P.E.
Date:	Date	Date:

Revision #	Initials	Date	Revision #	Initials	Date	Revision #	Initials	Date

TMP IMPLEMENTATION MANAGERS

Project managers with the primary responsibility & authority for implementation of this TMP

RIDOT		CONTRACTOR (if contract work)	
Name:		Name:	
Title:		Title:	
Unit:		Company/Unit:	
Office Phone:		Office Phone:	
Mobile Phone:		Mobile Phone:	
E-Mail:		E-Mail:	

TMP Attachment "A" General Restrictions - For work outside of Traffic Control Zones A through E

	MINIMUM NUMBER OF LANES & SHOULDERS TO REMAIN OPEN TO TRAFFIC[1,2,3,4,5]								
	Time of Day		Day of Week						
Location	From	To	Sunday	Monday	Tuesday	Wednesday	Thursday	Friday	Saturday
Finance Way (Gateway Center Garage Entrance to Park Row West), Park Row West (Exchange Street to Stillman Street)	0:00	9:00	ALL	ALL	ALL	ALL	ALL	ALL	ALL
	9:00	15:00	ALL	1L/ALT	1L/ALT	1L/ALT	1L/ALT	1L/ALT	ALL
	15:00	24:00	ALL	ALL	ALL	ALL	ALL	ALL	ALL
Gaspee Street, Exchange Street (Park Row West to Stillman Street)	0:00	9:00	ALL	ALL	ALL	ALL	ALL	ALL	ALL
	9:00	15:00	ALL	2L	2L	2L	2L	2L	ALL
	15:00	24:00	ALL	ALL	ALL	ALL	ALL	ALL	ALL
Railroad Street	0:00	9:00	ALL	ALL	ALL	ALL	ALL	ALL	ALL
	9:00	15:00	ALL	1L	1L	1L	1L	1L	ALL
	15:00	24:00	ALL	ALL	ALL	ALL	ALL	ALL	ALL
Finance Way (Francis Street to Gateway Center Garage Entrance), Park Row West (Stillman Street to Memorial Blvd.), Exchange Street (Stillman Street to Memorial Blvd.), Stillman Street	0:00	24:00	ALL	ALL	ALL	ALL	ALL	ALL	ALL

LEGEND

ALL	All travel lanes and shoulders shall remain open to traffic.
1L/ALT	A minimum of one 11-foot wide travel lane (alternating traffic) shall remain open to traffic with a police detail.
1L	A minimum of one 11-foot wide travel lane shall remain open to traffic.
2L	A minimum of two 11-foot wide travel lanes (one in each direction) shall remain open to traffic.

NOTES

1 The set-up and break-down of temporary traffic control devices within a traveled way shall be construed as a closure of that traveled way.

2 The provisions noted herein shall not free the Contractor from his responsibility to conduct all work in such a manner that assures the least possible obstruction to traffic.

3 At locations with a sidewalk(s), a minimum of one sidewalk on one side of the roadway shall remain open to pedestrians at all times.

4 Access to and egress from all side streets, driveways, buildings, and other pedestrian pathways intersecting the Project work zones shall be maintained at all times unless otherwise noted or shown on Plans.

5 The Contractor shall be required to coordinate with the City of Providence to install required signage for any parking restrictions on local streets.

TMP Attachment "B" General Restrictions - Traffic Control Zones A & B

	MINIMUM NUMBER OF LANES & SHOULDERS TO REMAIN OPEN TO TRAFFIC[1,2,3,4,5]								
	Time of Day		Day of Week						
Location	From	To	Sunday	Monday	Tuesday	Wednesday	Thursday	Friday	Saturday
Gaspee Street (Work Zone A)	0:00	9:00	ALL	ALL	ALL	ALL	ALL	ALL	ALL
	9:00	19:00	ALL	2L	2L	2L	2L	2L	ALL
	19:00	24:00	ALL	ALL	ALL	ALL	ALL	ALL	ALL
Finance Way, Railroad Street, Park Row West, Exchange Street, Stillman Street (Work Zone B)	0:00	24:00	ALL	ALL	ALL	ALL	ALL	ALL	ALL

LEGEND

ALL	All travel lanes and shoulders shall remain open to traffic.
2L	A minimum of two 11-foot wide travel lanes (one in each direction) shall remain open to traffic as shown on the Traffic Control Plans.

NOTES

1 The set-up and break-down of temporary traffic control devices within a traveled way shall be construed as a closure of that traveled way.

2 The provisions noted herein shall not free the Contractor from his responsibility to conduct all work in such a manner that assures the least possible obstruction to traffic.

3 At locations with a sidewalk(s), a minimum of one sidewalk on one side of the roadway shall remain open to pedestrians at all times.

4 Access to and egress from all side streets, driveways, buildings, and other pedestrian pathways intersecting the Project work zones shall be maintained at all times unless otherwise noted or shown on Plans.

5 The Contractor shall be required to coordinate with the City of Providence to install required signage for any parking restrictions on local streets.

TMP Attachment "C" General Restrictions - Traffic Control Zone C

	MINIMUM NUMBER OF LANES & SHOULDERS TO REMAIN OPEN TO TRAFFIC[1,2,3,4,5]								
	Time of Day		Day of Week						
Location	From	To	Sunday	Monday	Tuesday	Wednesday	Thursday	Friday	Saturday
Railroad Street	0:00	24:00	CLOSED	CLOSED	CLOSED	CLOSED	CLOSED	CLOSED	CLOSED
Park Row West (Exchange Street to Stillman Street)	0:00	24:00	1L	1L	1L	1L	1L	1L	1L
Exchange Street (Stillman Street to Park Row West)	0:00	24:00	3L	3L	3L	3L	3L	3L	3L
Finance Way (Gateway Center Garage Entrance to Park Row West)	0:00	24:00	1L	1L	1L	1L	1L	1L	1L
Exchange Street (Stillman Street to Memorial Blvd.), Stillman Street, Park Row West (Stillman Street to Memorial Blvd.), Finance Way (Francis Street to Gateway Center Garage Entrance)	0:00	24:00	ALL	ALL	ALL	ALL	ALL	ALL	ALL

LEGEND

ALL	All travel lanes and shoulders shall remain open to traffic.
CLOSED	Full road closure allowed. Signed detour shall be in place to temporary garage entrance.
1L	A minimum of one 11-foot wide travel lane (one way traffic) shall remain open to traffic as shown on the Traffic Control Plans.
3L	A minimum of three 11-foot wide travel lanes (2 lanes Southbound and 1 lane Northbound) shall remain open to traffic as shown on the Traffic Control Plans.

NOTES

1 The set-up and break-down of temporary traffic control devices within a traveled way shall be construed as a closure of that traveled way.
2 The provisions noted herein shall not free the Contractor from his responsibility to conduct all work in such a manner that assures the least possible obstruction to traffic.
3 At locations with a sidewalk(s), a minimum of one sidewalk on one side of the roadway shall remain open to pedestrians at all times.
4 Access to and egress from all side streets, driveways, buildings, and other pedestrian pathways intersecting the Project work zones shall be maintained at all times unless otherwise noted or shown on Plans.
5 The Contractor shall be required to coordinate with the City of Providence to install required signage for any parking restrictions on local streets.

TMP Attachment "D" General Restrictions - Traffic Control Zone D

	MINIMUM NUMBER OF LANES & SHOULDERS TO REMAIN OPEN TO TRAFFIC[1,2,3,4,5]								
	Time of Day		Day of Week						
Location	From	To	Sunday	Monday	Tuesday	Wednesday	Thursday	Friday	Saturday
Park Row West (Exchange Street to Railroad Street)	0:00	24:00	CLOSED	CLOSED	CLOSED	CLOSED	CLOSED	CLOSED	CLOSED
Park Row West (Railroad Street to Stillman Street)	0:00	24:00	1L	1L	1L	1L	1L	1L	1L
Exchange Street (Stillman Street to Park Row West)	0:00	24:00	1L	1L	1L	1L	1L	1L	1L
Exchange Street (Stillman Street to Memorial Blvd.)	0:00	24:00	3L	3L	3L	3L	3L	3L	3L
Finance Way, Railroad Street, Stillman Street, Park Row West (Stillman Street to Memorial Blvd.)	0:00	24:00	ALL	ALL	ALL	ALL	ALL	ALL	ALL

LEGEND

ALL	All travel lanes and shoulders shall remain open to traffic.
CLOSED	Full road closure allowed. Signed detour shall be in place to temporary garage entrance.
1L	A minimum of one 11-foot wide travel lane (one way traffic) shall remain open to traffic as shown on the Traffic Control Plans.
3L	A minimum of three 11-foot wide travel lanes (2 lanes Southbound and 1 lane Northbound) shall remain open to traffic as shown on the Traffic Control Plans.

NOTES

1 The set-up and break-down of temporary traffic control devices within a traveled way shall be construed as a closure of that traveled way.
2 The provisions noted herein shall not free the Contractor from his responsibility to conduct all work in such a manner that assures the least possible obstruction to traffic.
3 At locations with a sidewalk(s), a minimum of one sidewalk on one side of the roadway shall remain open to pedestrians at all times.
4 Access to and egress from all side streets, driveways, buildings, and other pedestrian pathways intersecting the Project work zones shall be maintained at all times unless otherwise noted or shown on Plans.
5 The Contractor shall be required to coordinate with the City of Providence to install required signage for any parking restrictions on local streets.

TMP Attachment "E" General Restrictions - Traffic Control Zone E

	MINIMUM NUMBER OF LANES & SHOULDERS TO REMAIN OPEN TO TRAFFIC[1,2,3,4,5]								
	Time of Day		Day of Week						
Location	From	To	Sunday	Monday	Tuesday	Wednesday	Thursday	Friday	Saturday
Exchange Street (Stillman Street to Park Row West)	0:00	24:00	2L	2L	2L	2L	2L	2L	2L
Finance Way (Gateway Center Garage Entrance to Park Row West)	0:00	24:00	1L	1L	1L	1L	1L	1L	1L
Railroad Street	0:00	24:00	1L	1L	1L	1L	1L	1L	1L
Stillman Street, Park Row West (Stillman Street to Exchange Street), Exchange Street (Stillman Street to Memorial Blvd.), Finance Way (Francis Street to Gateway Center Garage Entrance)	0:00	24:00	ALL	ALL	ALL	ALL	ALL	ALL	ALL

LEGEND

ALL	All travel lanes and shoulders shall remain open to traffic.
1L	A minimum of one 11-foot wide travel lane (one way traffic) shall remain open to traffic as shown on the Traffic Control Plans.
2L	A minimum of two 11-foot wide travel lanes (one in each direction) shall remain open to traffic as shown on the Traffic Control Plans.

NOTES

1 The set-up and break-down of temporary traffic control devices within a traveled way shall be construed as a closure of that traveled way.

2 The provisions noted herein shall not free the Contractor from his responsibility to conduct all work in such a manner that assures the least possible obstruction to traffic.

3 At locations with a sidewalk(s), a minimum of one sidewalk on one side of the roadway shall remain open to pedestrians at all times.

4 Access to and egress from all side streets, driveways, buildings, and other pedestrian pathways intersecting the Project work zones shall be maintained at all times unless otherwise noted or shown on Plans.

5 The Contractor shall be required to coordinate with the City of Providence to install required signage for any parking restrictions on local streets.

Appendix "H"
CRMC Assent

State of Rhode Island and Providence Plantations
Coastal Resources Management Council
Oliver H. Stedman Government Center
4808 Tower Hill Road, Suite 116
Wakefield, RI 02879-1900

(401) 783-3370
Fax (401) 783-3767

July 12, 2013

Capitol Properties
100 Dexter Road
East Providence, RI 02914

RE: CRMC File No. 2004-03-041
Site Location: 80 Smith Street, Providence
Plat(s): 4 Lot(s): 261,262,263

Dear Sirs:

In accordance with revisions to R.I.G.L. 46-23-6.3 - Tolling of expiration periods, signed into law November 9, 2009, and as amended effective June 26, 2013, all work being permitted under this Assent must now be completed on or before August 24, 2015 after which date this assent is null and void, (unless written application requesting an extension is received by CRMC sixty (60) days prior to expiration date).

Your application fee is therefore being returned to you and is contained herein.

All aspects, conditions and stipulations of CRMC Assent #A2004-03-041 remain in full force and effect.

If you have any questions regarding this letter, please contact the CRMC at 401-783-3370.

Thank you.

Sincerely,

Jeffrey M. Willis, Deputy Director
Coastal Resources Management Council

/lam
Enclosure

State of Rhode Island and Providence Plantations
Coastal Resources Management Council
Oliver H. Stedman Government Center
4808 Tower Hill Road, Suite 116
Wakefield, RI 02879-1900

(401) 783-3370
Fax (401) 783-3767

January 3, 2013

Capitol Properties
100 Dexter Road
East Providence, RI 02914

RE: CRMC File No. 2004-03-041
Site Location: 80 Smith Street, Providence
Plat(s): 4 Lot(s): 261,262,263

Dear Sir/Madam:

In accordance with revisions to R.I.G.L. 46-23-6.3 - Tolling of expiration periods, signed into law November 9, 2009, and as amended effective June 8, 2011, all work being permitted under this Assent must now be completed on or before **August 22, 2013** after which date this assent is null and void, (unless written application requesting an extension is received by CRMC sixty (60) days prior to expiration date).

All aspects, conditions and stipulations of CRMC Assent #A2004-03-041 remain in full force and effect.

If you have any questions regarding this letter, please contact the CRMC at 401-783-3370.

Thank you.

Sincerely,

Jeffrey M. Willis, Deputy Director
Coastal Resources Management Council

/lam

ADDENDUM NO. 5

STATE OF RHODE ISLAND AND PROVIDENCE PLANTATIONS

COASTAL RESOURCES MANAGEMENT COUNCIL
Oliver H. Stedman Government Center
4808 Tower Hill Road, Suite 3
Wakefield, R.I. 02879-1900

(401) 783-3370
FAX: (401) 783-3767

October 21, 2009

Capitol Properties
100 Dexter Road
East Providence, RI 02914

RE: Extension of CRMC Assent No. 2004-03-041
Site Location: 80 Smith Street, Providence
Plat(s): 4 Lot(s): 261,262,263

Dear Sir/Madam:

Coastal Resources Management Council Assent File No. A2004-03-041, is granted a one year extension from January 1, 2009 and will expire on January 1, 2010.

All future Assent Extensions will be subject to the provisions of Rhode Island Coastal Resources Management Council Management Procedures Section 5.12.

Sincerely,

Jeffrey M. Willis, Deputy Director
Coastal Resources Management Council

/lam

STATE OF RHODE ISLAND AND PROVIDENCE PLANTATIONS

COASTAL RESOURCES MANAGEMENT COUNCIL
Oliver H. Stedman Government Center
4808 Tower Hill Road, Suite 3
Wakefield, R.I. 02879-1900

(401) 783-3370
FAX: (401) 783-3767

Assent Addendum

November 25, 2008

Capitol Properties
100 Dexter Road
East Providence, RI 02914

RE: CRMC Assent A2004-03-041 – Riverwalk Improvement details
Site Location: 80 Smith Street, Providence
Plat(s): 4 Lot(s): 261,262,263

Dear Sir/Madam:

Pursuant to "General Stipulation D" of Assent A2004-03-041, the following additional plans are herein approved:

> "Capitol Cove…," (sheets L1 through L5, and D1 through D3), dated 8/27/2008, by Hawk Design Inc.

Unless modified by the document, all work authorized by this CRMC Approval must be completed within the 3 year approval period established in the original CRMC Assent (as noted by page 1, paragraph 2 of the original assent). In cases where the approved work will not be completed within this time frame, an Assent Extension Request Form must be submitted 60 days prior to the expiration of the established time frame for work completion. **In addition, all stipulations of the original CRMC assent remain in full force and effect except as modified by the stipulations contained herein and/or by the plans approved by this assent modification approval.**

Sincerely,

Grover J. Fugate, Executive Director
Coastal Resources Management Council

/lam
Cc: K. Anderson, CRMC
D. Reis, CRMC
S. Moberg, VHB

STATE OF RHODE ISLAND AND PROVIDENCE PLANTATIONS

COASTAL RESOURCES MANAGEMENT COUNCIL
Oliver H. Stedman Government Center
4808 Tower Hill Road, Suite 3
Wakefield, R.I. 02879-1900

(401) 783-3370
FAX: (401) 783-3767

addendum

ASSENT M~~ODIFICATION~~

Capital Properties
100 Dexter Rd
EP RI 02914
Re: CRMC Assent - Riverwalk improvement details, Assent A2004 3-41 Prov RI

Pursuant to "General Stipulation D" of Assent A2004-03-41, the following additional plans are herein approved

Dear Sir/Madam:

The Rhode Island Co[redacted]st for mod[redacted]ng

[redacted]

[redacted]: "Capitol Cove ...", (sheets L1 through L5, and D1 through D3), dated 8/27/08, by Hawk Design Inc.

Unless modified by this document all work authorized by this CRMC [redacted] Approval must be completed within the 3 year approval period established in the original CRMC Assent (as noted by page 1, paragraph 2 of the original assent). In cases where the approved work will not be completed within this time frame, an Assent Extension Request Form must be submitted 60 days prior to the expiration of the established time frame for work completion. **In addition, all stipulations of the original CRMC assent remain in full force and effect except as modified by the stipulations contained herein and/or by the plans approved by this assent modification approval.**

Sincerely,

GJF

cc KA, DR
Simon Mikerg, VHB 10 Dorrance St Suite 400 Prov 02903

2004-03-041

RHODE ISLAND
DEPARTMENT OF ENVIRONMENTAL MANAGEMENT
235 Promenade Street, Providence, RI 02908-5767 TDD 401-222-4462

September 22, 2008

Capitol Properties Inc.
c/o Todd D. Turcotte
100 Dexter Road
East Providence, RI 02914

RE: WQC File No. 08-031; Capitol Center Parcel 6; Canal Street, Providence

Dear Mr. Turcotte,

The RIDEM-Office of Water Resources (OWR) has reviewed your application for a Water Quality Certificate (WQC) for the above referenced project. The project involves developing the site to accommodate two (2), five-level residential apartment buildings with ground level retail space and a pedestrian river walk.

We have reviewed the subject application and site plans entitled "Capitol Cove, Parcel 6-Phase I, Canal Street, Providence, RI," sheets C-1 through C-6, and Ev-1 and Ev-2, dated August 20, 2004, as well as plans entitled "Capitol Cove-Parcel 6 Phase I, Providence, RI", sheets GT.1 through GT.4, dated December 2004. The State water associated with this project is Moshassuck River (Class B1{a}).

It is the opinion of the WQC Program that said project is in compliance with the requirements of the State Water Quality regulations provided that the applicant complies with the above plans and the following conditions.

1. Material used for construction is clean and free of matter that could cause pollution of the waters of the State.

2. No sewage, refuse, or waste of any kind shall be discharged into waters of the State from this project.

3. No in-water work shall be performed in association with the project. All work associated with the reconstruction of the river walls and/or over-river structures that were part of the originally submitted project and which were included within the Public Notice shall require resubmittal to the Department for future review as per CRMC requirements.

4. No dewatering activities are approved for this project. Should dewatering at the site become necessary at any stage during construction, the applicant is required to provide appropriate plans and specifications for sizing and location of the dewatering basin, as well as all erosion control measures, to both the WQC Program and the RIPDES Program for review.

RECEIVED
SEP 29 2008
COASTAL RESOURCES MANAGEMENT COUNCIL

5. Maintenance of the stormwater system shall be performed in accordance with the "Long-term Stormwater Maintenance Plan" letter, and "Attachment A: Storm Water Maintenance Plan Capitol Cove Parcel 6 Phase 1", dated March 12, 2004 (reference 71572), signed by Robert S. Roth, Capitol Cove, LLC (attached).

6. This Water Quality Certification does not remove your obligation to obtain any necessary permits from other local, state, or federal agencies.

7. In addition to any necessary enforcement actions stemming from the violation of any of the terms or conditions of this Water Quality Certificate, issuance of this Water Quality Certificate does not bar the Department, or any of its various Divisions, from instituting any investigation and/or enforcement actions that it may deem necessary for violations of any and all applicable statutes, regulations and /or permits, including but not limited to violations of the terms or conditions of any previous Water Quality Certificate(s) issued to you as an applicant or for this site.

8. This Water Quality Certificate shall expire three (3) years from the date of issuance if project construction is not completed in that time.

This is the State's Water Quality Certification. Violations of the terms and conditions of this WQC may result in withdrawal of this Certification. Such withdrawal may result in violation of the State's Water Quality regulations and appropriate enforcement action.

Sincerely,

for

Russell J. Chateauneuf, P.E., Chief
Groundwater/Wetlands Protection

RJC/nbp
F/W/U/Neal/State WQC/2004/04-034 Capital Properties (Parcel 6)-Providence.doc

Cc: David Chopy, RIDEM
Susan Forcier, Esq., RIDEM
Grover Fugate - CRMC
Robert Roth, Capitol Cove, LLC
Sue Moberg, VHB

STATE OF RHODE ISLAND AND PROVIDENCE PLANTATIONS

COASTAL RESOURCES MANAGEMENT COUNCIL
Oliver H. Stedman Government Center
4808 Tower Hill Road, Suite 3
Wakefield, R.I. 02879-1900

(401) 783-3370
FAX: (401) 783-3767

April 11, 2008

Capitol Properties
100 Dexter Road
East Providence, RI 02914

RE: Extension of CRMC Assent No. 2004-03-041
Site Location: 80 Smith Street, Providence
Plat(s): 4 Lot(s): 261,262,263

Dear Sir/Madam:

Coastal Resources Management Council Assent File No. A2004-03-041, is granted a one year extension from January 21, 2008 and will expire on January 1, 2009.

All future Assent Extensions will be subject to the new provisions of Rhode Island Coastal Resources Management Council Management Procedures Section 5.12.

Sincerely,

Grover J. Fugate, Executive Director
Coastal Resources Management Council

GJF/lam

&ZSR Doc No: 00167443
Book: 8477 Page: 198

STATE OF RHODE ISLAND AND PROVIDENCE PLANTATIONS

COASTAL RESOURCES MANAGEMENT COUNCIL
Oliver H. Stedman Government Center
4808 Tower Hill Road, Suite 3
Wakefield, R.I. 02879-1900

(401) 783-3370
FAX: (401) 783-3767

ASSENT *MODIFICATION

December 12, 2006

Capitol Properties
100 Dexter Road
East Providence, RI 02914

RE: Modification of **CRMC Assent A 2004-03-041**
Site Address: 80 Smith Street Plat: 4 *Lot: 261,262,263 (modification references newly subdivided lots); Town: Providence

Dear Sirs:

The Rhode Island Coastal Resources Management Council has reviewed your request for modification of assent no. A2004-03-041 and approves the modification with the following alterations to stipulations:

Stipulations of Approval:

1. The applicant shall record this assent in its entirety in the land evidence records of the City of Providence within thirty (30) days of the date of assent issuance. Certification by the Town Clerk's office that this stipulation has been complied with shall be furnished to Coastal Resources Management Council by the applicant within fifteen (15) days thereafter. Failure to comply with provision will render this assent null and void.

Unless modified by this document all work authorized by this CRMC Assent Modification Approval must be completed within the 3 year approval period established in the original CRMC Assent (as noted by page 1, paragraph 2 of the original assent). In cases where the approved work will not be completed within this time frame, an Assent Extension Request Form must be submitted 60 days prior to the expiration of the established time frame for work completion. **In addition, all stipulations of the original CRMC assent remain in full force and effect except as modified by the stipulations contained herein and/or by the plans approved by this assent modification approval.**

Sincerely,

Grover J. Fugate, Executive Director
Coastal Resources Management Council

/lam JAN 0 5 2007

Doc No: 00167443
Book: 8477 Page: 199

STATE OF RHODE ISLAND AND PROVIDENCE PLANTATIONS

JAN 0 5 2007

COASTAL RESOURCES MANAGEMENT COUNCIL
Oliver H. Stedman Government Center
4808 Tower Hill Road, Suite 3
Wakefield, R.I. 02879-1900

(401) 783-3370
FAX: (401) 783-3767

ASSENT

(*Modified 12-12-2006)

CRMC File No.: 2004-03-041 CRMC Assent No.: A2004-03-041

Whereas,
of

Capitol Properties
100 Dexter Road
East Providence, RI 02914

has applied to the Coastal Resources Management Council for assent to: Construct and maintain two (2) 4.5 story residential/apartment buildings (263 units total) with ground level retail space and underground parking areas (374 spaces total), associated infrastructure, stormwater management and landscaping, per approved plans; and represents that they are the owners of the riparian rights attached to the property involved and submitted plans of the work to be done.

Now, said Council, having fully considered said application in accordance with all the regulations as set forth in the Administrative Procedures Act does hereby authorize said applicant, subject to the provisions of Title 46, Chapter 23 of the General Laws of Rhode Island, 1956, as amended, and all laws which are or may be in force applicable thereto: **Construct and maintain two (2) 4.5 story residential/apartment buildings (263 units total) with ground level retail space and underground parking areas (374 spaces total), associated infrastructure, stormwater management and landscaping, per approved plans; plat 4; *lots 261, 262, 263 (Parcel 6a Capitol Center District); 80 Smith Street, Providence, RI,** in accordance with said plans submitted to this Council and approved by this Council. All work being permitted must be completed on or before **January 21, 2008** after which date this assent is null and void, (unless written application requesting an extension is received by CRMC sixty (60) days prior to expiration date).

Applicant agrees that as a condition to the granting of this assent, members of the Coastal Resources Management Council or its staff shall have access to applicant's property to make on-site inspections to insure compliance with the assent.

Licensee shall be fully and completely liable to State, and shall waive any claims against State for contribution or otherwise, and shall indemnify, defend, and save harmless State and its agencies, employees, officers, directors, and agents with respect to any and all liability, damages (including damages to land, aquatic life, and other natural resources), expenses, causes of action, suits, claims, costs (including testing, auditing, surveying, and investigating costs), fees (including attorneys' fees and costs), penalties (civil and criminal), and response, cleanup, or remediation costs assessed against or imposed upon Licensee, State, or the Property, as a result of Licensee's control of the Property, or Licensee's use, disposal, transportation, generation and/or sale of Hazardous Substances or that of Licensee's employees, agents, assigns, sublicensees, contractors, subcontractors, permittees, or invitees.

Nothing in this assent shall be construed to impair the legal rights of this granting authority or of any person. By this assent the granting authority by no manner, shape, or form assumes any liability or responsibility implied, or in fact, for the stability or permanence of said project; nor by this assent is there any liability implied or in fact assumed or imposed on the granting authority. Further, the granting authority by its representatives or duly authorized agents shall have the right to inspect said project at all times including, but not limited to, the construction, completion, and all times thereafter.

This Assent is granted with the specific proviso that the construction authorized therein will be maintained in good condition by the owner thereof, his heirs, successors, or assigns for a period of fifty (50) years from the date thereof, after which time this permission shall terminate necessitating either complete removal or a new application.

Permits issued by the CRMC are issued for a finite period of time, confer no property rights, and are valid only with the conditions and stipulations under which they are granted. Permits imply no guarantee of renewal, and may be subject to denial, revocation, or modification.

If this matter appeared before the full Council, a copy of the legal decision from this proceeding may be acquired by contacting the CRMC office in writing.

A copy of this Assent shall be kept on site during construction.

Application for future alteration of the shoreline or other construction or alteration within the CRMC jurisdiction shall be submitted to the CRMC for review prior to commencing such activity.

All applicable policies, prohibitions, and standards of the RICRMP shall be upheld.

All local, state or federal ordinances and regulations must be complied with.

Please be advised that as a further conditions of this Assent, it is hereby stipulated that you and/or your agents shall comply at all times with Federal and State Water Quality Standards and other State standards and regulations regarding water quality, and shall exercise such supervision over and control of these facilities to prevent the dumping or discarding or refuse, sanitary wastes and other pollutants in the tidal waters, either from vessels docked at said facilities or from land adjacent thereto.

No work that involves alteration to wetlands or waters of the United States shall be done under this Assent until the required Federal Permit has been obtained.

Non-compliance with this assent shall result in legal action and/or revocation of this permit.

CAUTION:

The limits of authorized work shall be only for that which was approved by the CRMC. Any activities or alterations in which deviate from the approved plans will require a separate application and review. If the information provided to the CRMC for this review is inaccurate or did not reveal all necessary information or data, then this permit may be found to be null and

Doc No: 00167443
Book: 8477 Page: 201 JAN 0 5 2007

void. Plans for any future alteration of the shoreline or construction or alteration within the 200' zone of CRMC jurisdiction or in coastal waters must be submitted for review to the CRMC prior to commencing such activity.

Permits, licenses or easements issued by the Council are valid only with the conditions and stipulation under which they are granted and imply no guarantee of renewal. The initial application or an application for renewal may be subject to denial or modification. If an application is granted, said permit, license and easement may be subject to revocation and/or modification for failure to comply with the conditions and stipulations under which the same was issued or for other good cause.

ATTENTION: ALL STRUCTURES AND FILLED AREAS IN THE TIDAL, COASTAL, OR NAVIGABLE WATERS OF THE STATE OF RHODE ISLAND AND PROVIDENCE PLANTATIONS ARE SUBJECT TO:

1. The Superior Property Rights of the State of Rhode Island and Providence Plantations in the Submerged and Submersible Lands of the Coastal, Tidal, and Navigable Waters;

2. The Superior Navigation Servitude of the United States;

3. The Police Powers of the State of Rhode Island and the United States to regulate Structures in the Tidal, Coastal, or Navigable Waters.

THE SUBMERGED AND SUBMERSIBLE LANDS OF THE TIDAL, COASTAL, AND NAVIGABLE WATERS OF THE STATE ARE OWNED BY THE STATE AND HELD IN TRUST FOR THE PUBLIC. CONVEYANCE OF THESE LANDS IS ILLEGAL; TITLES PURPORTING TO TRANSFER SUCH LANDS ARE VOID. ASSENTS THAT INVOLVE THE FILLING OR USE OF THE STATES SUBMERGED LANDS ARE GRANTED WITH THE PROVISO THAT IT IS SUBJECT TO THE IMPOSITION OF A USAGE FEE TO BE ESTABLISHED BY THE COASTAL RESOURCES MANAGEMENT COUNCIL.

SPECIFIC STIPULATIONS OF APPROVAL

General Stipulations

A. **The applicant shall record this assent in its entirety in the land evidence records of the City of Providence within thirty (30) days of the date of assent issuance. Certification by the Town Clerk's office that this stipulation has been complied with shall be furnished to Coastal Resources Management Council by the applicant within fifteen (15) days thereafter. Failure to comply with provision will render this assent null and void.**

B. For the purpose of this permit, the coastal feature shall be the river walls; and the inland edge of the coastal feature shall be the face of the river walls.

Doc No: 00167443
Book: 8477 Page: 202
JAN 0 5 2007

C. The approved plans shall be those entitled "Capitol Cove Parcel 6 – Phase 1, Canal Street, Providence, Rhode Island…," in 7 sheets, latest issue 8/20/2004 stamped by R. O. Raposo, PE, and, "Capitol Cove Parcel 6 – Phase I Providence, Rhode Island…," in 4 sheets last revised 12/04, by GZA, Inc. Except as modified herein all details and specifications thereon shall be strictly adhered to. Any and all changes require written approval from this office.

D. Prior to initiation of construction, a detailed plan addressing all proposed work within the fifteen foot river setback area shall be submitted to CRMC for written approval.

E. The applicant shall notify CRMC staff at least 48 hours in advance of the approximate date of the start of construction.

F. No work shall occur within the Moshassuck River.

G. No discharges shall occur to the Moshassuck River (other than approved Vortech Unit).

H. No work/alteration shall occur to the River walls.

I. The setback line (Ref. CRMP Section 140) shall be as shown on the approved plan.

J. This assent requires a setback (Ref. CRMP Section 140) of 15 feet in width as measured landward from the inland edge of the coastal feature.

Earthwork Stipulations

A. The standards and specifications set forth in the most recent RI Soil Erosion and Sediment Control Handbook (RISESCH) shall be strictly adhered to.

B. Prior to initiation of any grading, construction, or earthwork activity, a line of staked haybales and/or silt fence in accordance with RISESCH Standard "ST" shall be placed along the downslope perimeter of the proposed area of construction. This line shall not be located on a coastal feature nor within a stipulated buffer zone. Bales and/or silt fence shall be "toed in" 4 inches to prevent the underwash of sediments. This line shall be maintained by the replacement of bales as needed and by the proper upland disposal of accumulated sediments until permanent site revegetation is established. No soils nor any other materials shall be allowed to enter beyond this line, neither temporarily nor permanently.

C. All catch basins and drains in the area, into which sediment laden waters may flow shall be ringed with haybales staked and toed in 4 inches or protected per Standard "SD" of the RISESCH. These controls shall be properly maintained by timely removal of accumulated sediment and replacement of bales as needed.

D. A dewatering plan shall be submitted to CRMC for written approval prior to initiation of any construction dewatering. (Note the potential requirement for RIDEM RIPDES permit for any proposed discharge).

Doc No: 00167443
Book: 8477 Page: 203

E. All excess excavated materials, excess soils, excess construction materials, and debris shall be removed from the site and disposed of at an inland landfill or a suitable and legal upland location outside of CRMC jurisdiction. No materials shall be deposited on the coastal feature, within 15 feet of the inland edge of the coastal feature, in coastal waters, or in any areas designated as a CRMC setback or coastal buffer zone.

F. All excavated material shall be cast on the upslope side of the excavation so as to minimize sedimentation.

G. All fill materials shall be clean, free of debris and rubble, and free of materials which may cause pollution of surface waters or groundwater.

H. All areas of exposed soil which are disturbed by construction and related activities shall be revegetated as immediately as is physically possible so as to minimize erosion and sedimentation. If the season is not conducive to immediate revegetation, all exposed soils shall be temporarily stabilized with hay mulch, jute mat netting or similar erosion control materials. Soil stabilization methods shall be employed during, as well as after, the construction phase to the maximum extent possible.

I. As approved, roof top runoff (first one-quarter inch) shall be treated through a "Stormwater Management Inc., "Storm Filter" System" prior to discharge to the Moshassuck River. Any changes to approved plans/specifications require CRMC approval.

J. Filter cartridges for the "Storm Filter" system shall be managed in strict accordance with the manufacturer's specifications for frequency/disposal, etc…

K. Any disturbance to the river walls or river due to "VPC" or "DDC" construction shall be reported to CRMC immediately for permit resolution.

L. Excavation and grading shall be limited to the area approved. Excess earthwork beyond that authorized by this assent is not permitted.

M. There shall be no discharge or disposal of hazardous wastes or hazardous materials which may be associated with construction machinery, etc. on the site or in the waterway. All used oil, lubricants, construction chemicals, etc. shall be disposed of in full compliance with applicable State and Federal regulations.

In Witness Whereof, said Coastal Resources Management Council have hereto set their hands and seal to this Assent, modified on this 12th day of December in the year two-thousand-six.

Providence
Received for Record
Jan 03,2007 at 12:12:52P
Document Num: 00167443
Barbara Tancy
Recorder of Deeds

RECEIVED:

Grover J. Fugate, Executive Director
Coastal Resources Management Council

/lam

JAN 0 5 2007

STATE OF RHODE ISLAND AND PROVIDENCE PLANTATIONS

COASTAL RESOURCES MANAGEMENT COUNCIL
Oliver H. Stedman Government Center
4808 Tower Hill Road, Suite 3
Wakefield, R.I. 02879-1900

(401) 783-3370
FAX: (401) 783-3767

ASSENT *MODIFICATION

December 12, 2006

Capitol Properties
100 Dexter Road
East Providence, RI 02914

RE: Modification of **CRMC Assent A 2004-03-041**
Site Address: 80 Smith Street Plat: 4 *Lot: 261,262,263 (modification references newly subdivided lots); Town: Providence

Dear Sirs:

The Rhode Island Coastal Resources Management Council has reviewed your request for modification of assent no. A2004-03-041 and approves the modification with the following alterations to stipulations:

Stipulations of Approval:

1. The applicant shall record this assent in its entirety in the land evidence records of the City of Providence within thirty (30) days of the date of assent issuance. Certification by the Town Clerk's office that this stipulation has been complied with shall be furnished to Coastal Resources Management Council by the applicant within fifteen (15) days thereafter. Failure to comply with provision will render this assent null and void.

Unless modified by this document all work authorized by this CRMC Assent Modification Approval must be completed within the 3 year approval period established in the original CRMC Assent (as noted by page 1, paragraph 2 of the original assent). In cases where the approved work will not be completed within this time frame, an Assent Extension Request Form must be submitted 60 days prior to the expiration of the established time frame for work completion. **In addition, all stipulations of the original CRMC assent remain in full force and effect except as modified by the stipulations contained herein and/or by the plans approved by this assent modification approval.**

Sincerely,

Grover J. Fugate, Executive Director
Coastal Resources Management Council

/lam

STATE OF RHODE ISLAND AND PROVIDENCE PLANTATIONS

COASTAL RESOURCES MANAGEMENT COUNCIL
Oliver H. Stedman Government Center
4808 Tower Hill Road, Suite 3
Wakefield, R.I. 02879-1900

(401) 783-3370
FAX: (401) 783-3767

ASSENT

(*Modified 12-12-2006)

CRMC File No.: 2004-03-041 CRMC Assent No.: A2004-03-041

Whereas,
of

Capitol Properties
100 Dexter Road
East Providence, RI 02914

has applied to the Coastal Resources Management Council for assent to: Construct and maintain two (2) 4.5 story residential/apartment buildings (263 units total) with ground level retail space and underground parking areas (374 spaces total), associated infrastructure, stormwater management and landscaping, per approved plans; and represents that they are the owners of the riparian rights attached to the property involved and submitted plans of the work to be done.

Now, said Council, having fully considered said application in accordance with all the regulations as set forth in the Administrative Procedures Act does hereby authorize said applicant, subject to the provisions of Title 46, Chapter 23 of the General Laws of Rhode Island, 1956, as amended, and all laws which are or may be in force applicable thereto: **Construct and maintain two (2) 4.5 story residential/apartment buildings (263 units total) with ground level retail space and underground parking areas (374 spaces total), associated infrastructure, stormwater management and landscaping, per approved plans; plat 4; *lots 261, 262, 263 (Parcel 6a Capitol Center District); 80 Smith Street, Providence, RI,** in accordance with said plans submitted to this Council and approved by this Council. All work being permitted must be completed on or before **January 21, 2008** after which date this assent is null and void, (unless written application requesting an extension is received by CRMC sixty (60) days prior to expiration date).

Applicant agrees that as a condition to the granting of this assent, members of the Coastal Resources Management Council or its staff shall have access to applicant's property to make on-site inspections to insure compliance with the assent.

Licensee shall be fully and completely liable to State, and shall waive any claims against State for contribution or otherwise, and shall indemnify, defend, and save harmless State and its agencies, employees, officers, directors, and agents with respect to any and all liability, damages (including damages to land, aquatic life, and other natural resources), expenses, causes of action, suits, claims, costs (including testing, auditing, surveying, and investigating costs), fees (including attorneys' fees and costs), penalties (civil and criminal), and response, cleanup, or remediation costs assessed against or imposed upon Licensee, State, or the Property, as a result of Licensee's control of the Property, or Licensee's use, disposal, transportation, generation and/or sale of Hazardous Substances or that of Licensee's employees, agents, assigns, sublicensees, contractors, subcontractors, permittees, or invitees.

Nothing in this assent shall be construed to impair the legal rights of this granting authority or of any person. By this assent the granting authority by no manner, shape, or form assumes any liability or responsibility implied, or in fact, for the stability or permanence of said project; nor by this assent is there any liability implied or in fact assumed or imposed on the granting authority. Further, the granting authority by its representatives or duly authorized agents shall have the right to inspect said project at all times including, but not limited to, the construction, completion, and all times thereafter.

This Assent is granted with the specific proviso that the construction authorized therein will be maintained in good condition by the owner thereof, his heirs, successors, or assigns for a period of fifty (50) years from the date thereof, after which time this permission shall terminate necessitating either complete removal or a new application.

Permits issued by the CRMC are issued for a finite period of time, confer no property rights, and are valid only with the conditions and stipulations under which they are granted. Permits imply no guarantee of renewal, and may be subject to denial, revocation, or modification.

If this matter appeared before the full Council, a copy of the legal decision from this proceeding may be acquired by contacting the CRMC office in writing.

A copy of this Assent shall be kept on site during construction.

Application for future alteration of the shoreline or other construction or alteration within the CRMC jurisdiction shall be submitted to the CRMC for review prior to commencing such activity.

All applicable policies, prohibitions, and standards of the RICRMP shall be upheld.

All local, state or federal ordinances and regulations must be complied with.

Please be advised that as a further conditions of this Assent, it is hereby stipulated that you and/or your agents shall comply at all times with Federal and State Water Quality Standards and other State standards and regulations regarding water quality, and shall exercise such supervision over and control of these facilities to prevent the dumping or discarding or refuse, sanitary wastes and other pollutants in the tidal waters, either from vessels docked at said facilities or from land adjacent thereto.

No work that involves alteration to wetlands or waters of the United States shall be done under this Assent until the required Federal Permit has been obtained.

Non-compliance with this assent shall result in legal action and/or revocation of this permit.

CAUTION:

The limits of authorized work shall be only for that which was approved by the CRMC. Any activities or alterations in which deviate from the approved plans will require a separate application and review. If the information provided to the CRMC for this review is inaccurate or did not reveal all necessary information or data, then this permit may be found to be null and

void. Plans for any future alteration of the shoreline or construction or alteration within the 200' zone of CRMC jurisdiction or in coastal waters must be submitted for review to the CRMC prior to commencing such activity.

Permits, licenses or easements issued by the Council are valid only with the conditions and stipulation under which they are granted and imply no guarantee of renewal. The initial application or an application for renewal may be subject to denial or modification. If an application is granted, said permit, license and easement may be subject to revocation and/or modification for failure to comply with the conditions and stipulations under which the same was issued or for other good cause.

ATTENTION: ALL STRUCTURES AND FILLED AREAS IN THE TIDAL, COASTAL, OR NAVIGABLE WATERS OF THE STATE OF RHODE ISLAND AND PROVIDENCE PLANTATIONS ARE SUBJECT TO:

1. The Superior Property Rights of the State of Rhode Island and Providence Plantations in the Submerged and Submersible Lands of the Coastal, Tidal, and Navigable Waters;

2. The Superior Navigation Servitude of the United States;

3. The Police Powers of the State of Rhode Island and the United States to regulate Structures in the Tidal, Coastal, or Navigable Waters.

THE SUBMERGED AND SUBMERSIBLE LANDS OF THE TIDAL, COASTAL, AND NAVIGABLE WATERS OF THE STATE ARE OWNED BY THE STATE AND HELD IN TRUST FOR THE PUBLIC. CONVEYANCE OF THESE LANDS IS ILLEGAL; TITLES PURPORTING TO TRANSFER SUCH LANDS ARE VOID. ASSENTS THAT INVOLVE THE FILLING OR USE OF THE STATES SUBMERGED LANDS ARE GRANTED WITH THE PROVISO THAT IT IS SUBJECT TO THE IMPOSITION OF A USAGE FEE TO BE ESTABLISHED BY THE COASTAL RESOURCES MANAGEMENT COUNCIL.

SPECIFIC STIPULATIONS OF APPROVAL

General Stipulations

A. **The applicant shall record this assent in its entirety in the land evidence records of the City of Providence within thirty (30) days of the date of assent issuance. Certification by the Town Clerk's office that this stipulation has been complied with shall be furnished to Coastal Resources Management Council by the applicant within fifteen (15) days thereafter. Failure to comply with provision will render this assent null and void.**

B. For the purpose of this permit, the coastal feature shall be the river walls; and the inland edge of the coastal feature shall be the face of the river walls.

C. The approved plans shall be those entitled "Capitol Cove Parcel 6 – Phase 1, Canal Street, Providence, Rhode Island…," in 7 sheets, latest issue 8/20/2004 stamped by R. O. Raposo, PE, and, "Capitol Cove Parcel 6 – Phase I Providence, Rhode Island…," in 4 sheets last revised 12/04, by GZA, Inc. Except as modified herein all details and specifications thereon shall be strictly adhered to. Any and all changes require written approval from this office.

D. Prior to initiation of construction, a detailed plan addressing all proposed work within the fifteen foot river setback area shall be submitted to CRMC for written approval.

E. The applicant shall notify CRMC staff at least 48 hours in advance of the approximate date of the start of construction.

F. No work shall occur within the Moshassuck River.

G. No discharges shall occur to the Moshassuck River (other than approved Vortech Unit).

H. No work/alteration shall occur to the River walls.

I. The setback line (Ref. CRMP Section 140) shall be as shown on the approved plan.

J. This assent requires a setback (Ref. CRMP Section 140) of 15 feet in width as measured landward from the inland edge of the coastal feature.

Earthwork Stipulations

A. The standards and specifications set forth in the most recent RI Soil Erosion and Sediment Control Handbook (RISESCH) shall be strictly adhered to.

B. Prior to initiation of any grading, construction, or earthwork activity, a line of staked haybales and/or silt fence in accordance with RISESCH Standard "ST" shall be placed along the downslope perimeter of the proposed area of construction. This line shall not be located on a coastal feature nor within a stipulated buffer zone. Bales and/or silt fence shall be "toed in" 4 inches to prevent the underwash of sediments. This line shall be maintained by the replacement of bales as needed and by the proper upland disposal of accumulated sediments until permanent site revegetation is established. No soils nor any other materials shall be allowed to enter beyond this line, neither temporarily nor permanently.

C. All catch basins and drains in the area, into which sediment laden waters may flow shall be ringed with haybales staked and toed in 4 inches or protected per Standard "SD" of the RISESCH. These controls shall be properly maintained by timely removal of accumulated sediment and replacement of bales as needed.

D. A dewatering plan shall be submitted to CRMC for written approval prior to initiation of any construction dewatering. (Note the potential requirement for RIDEM RIPDES permit for any proposed discharge).

E. All excess excavated materials, excess soils, excess construction materials, and debris shall be removed from the site and disposed of at an inland landfill or a suitable and legal upland location outside of CRMC jurisdiction. No materials shall be deposited on the coastal feature, within 15 feet of the inland edge of the coastal feature, in coastal waters, or in any areas designated as a CRMC setback or coastal buffer zone.

F. All excavated material shall be cast on the upslope side of the excavation so as to minimize sedimentation.

G. All fill materials shall be clean, free of debris and rubble, and free of materials which may cause pollution of surface waters or groundwater.

H. All areas of exposed soil which are disturbed by construction and related activities shall be revegetated as immediately as is physically possible so as to minimize erosion and sedimentation. If the season is not conducive to immediate revegetation, all exposed soils shall be temporarily stabilized with hay mulch, jute mat netting or similar erosion control materials. Soil stabilization methods shall be employed during, as well as after, the construction phase to the maximum extent possible.

I. As approved, roof top runoff (first one-quarter inch) shall be treated through a "Stormwater Management Inc., "Storm Filter" System" prior to discharge to the Moshassuck River. Any changes to approved plans/specifications require CRMC approval.

J. Filter cartridges for the "Storm Filter" system shall be managed in strict accordance with the manufacturer's specifications for frequency/disposal, etc…

K. Any disturbance to the river walls or river due to "VPC" or "DDC" construction shall be reported to CRMC immediately for permit resolution.

L. Excavation and grading shall be limited to the area approved. Excess earthwork beyond that authorized by this assent is not permitted.

M. There shall be no discharge or disposal of hazardous wastes or hazardous materials which may be associated with construction machinery, etc. on the site or in the waterway. All used oil, lubricants, construction chemicals, etc. shall be disposed of in full compliance with applicable State and Federal regulations.

In Witness Whereof, said Coastal Resources Management Council have hereto set their hands and seal to this Assent, modified on this 12th day of December in the year two-thousand-six.

Grover J. Fugate, Executive Director
Coastal Resources Management Council

/lam

STATE OF RHODE ISLAND AND PROVIDENCE PLANTATIONS

COASTAL RESOURCES MANAGEMENT COUNCIL
Oliver H. Stedman Government Center
4808 Tower Hill Road, Suite 3
Wakefield, R.I. 02879-1900

(401) 783-3370
FAX: (401) 783-3767

ASSENT

CRMC File No.: 2004-03-041 CRMC Assent No.: A2004-03-041

Whereas, of

Capitol Properties
100 Dexter Road
East Providence, RI 02914

has applied to the Coastal Resources Management Council for assent to: Construct and maintain two (2) 4.5 story residential/apartment buildings (263 units total) with ground level retail space and underground parking areas (374 spaces total), associated infrastructure, stormwater management and landscaping, per approved plans; and represents that they are the owners of the riparian rights attached to the property involved and submitted plans of the work to be done.

Now, said Council, having fully considered said application in accordance with all the regulations as set forth in the Administrative Procedures Act does hereby authorize said applicant, subject to the provisions of Title 46, Chapter 23 of the General Laws of Rhode Island, 1956, as amended, and all laws which are or may be in force applicable thereto: **Construct and maintain two (2) 4.5 story residential/apartment buildings (263 units total) with ground level retail space and underground parking areas (374 spaces total), associated infrastructure, stormwater management and landscaping, per approved plans; plat 4; lot 247 (Parcel 6a Capitol Center District); 80 Smith Street, Providence, RI,** in accordance with said plans submitted to this Council and approved by this Council. All work being permitted must be completed on or before **January 21, 2008** after which date this assent is null and void, (unless written application requesting an extension is received by CRMC sixty (60) days prior to expiration date).

Applicant agrees that as a condition to the granting of this assent, members of the Coastal Resources Management Council or its staff shall have access to applicant's property to make on-site inspections to insure compliance with the assent.

Licensee shall be fully and completely liable to State, and shall waive any claims against State for contribution or otherwise, and shall indemnify, defend, and save harmless State and its agencies, employees, officers, directors, and agents with respect to any and all liability, damages (including damages to land, aquatic life, and other natural resources), expenses, causes of action, suits, claims, costs (including testing, auditing, surveying, and investigating costs), fees (including attorneys' fees and costs), penalties (civil and criminal), and response, cleanup, or remediation costs assessed against or imposed upon Licensee, State, or the Property, as a result of Licensee's control of the Property, or Licensee's use, disposal, transportation, generation and/or sale of Hazardous Substances or that of Licensee's employees, agents, assigns, sublicensees, contractors, subcontractors, permittees, or invitees.

Nothing in this assent shall be construed to impair the legal rights of this granting authority or of any person. By this assent the granting authority by no manner, shape, or form assumes any liability or responsibility implied, or in fact, for the stability or permanence of said project; nor by this assent is there any liability implied or in fact assumed or imposed on the granting authority. Further, the granting authority by its representatives or duly authorized agents shall have the right to inspect said project at all times including, but not limited to, the construction, completion, and all times thereafter.

This Assent is granted with the specific proviso that the construction authorized therein will be maintained in good condition by the owner thereof, his heirs, successors, or assigns for a period of fifty (50) years from the date thereof, after which time this permission shall terminate necessitating either complete removal or a new application.

Permits issued by the CRMC are issued for a finite period of time, confer no property rights, and are valid only with the conditions and stipulations under which they are granted. Permits imply no guarantee of renewal, and may be subject to denial, revocation, or modification.

If this matter appeared before the full Council, a copy of the legal decision from this proceeding may be acquired by contacting the CRMC office in writing.

A copy of this Assent shall be kept on site during construction.

Application for future alteration of the shoreline or other construction or alteration within the CRMC jurisdiction shall be submitted to the CRMC for review prior to commencing such activity.

All applicable policies, prohibitions, and standards of the RICRMP shall be upheld.

All local, state or federal ordinances and regulations must be complied with.

Please be advised that as a further conditions of this Assent, it is hereby stipulated that you and/or your agents shall comply at all times with Federal and State Water Quality Standards and other State standards and regulations regarding water quality, and shall exercise such supervision over and control of these facilities to prevent the dumping or discarding or refuse, sanitary wastes and other pollutants in the tidal waters, either from vessels docked at said facilities or from land adjacent thereto.

No work that involves alteration to wetlands or waters of the United States shall be done under this Assent until the required Federal Permit has been obtained.

Non-compliance with this assent shall result in legal action and/or revocation of this permit.

CAUTION:

The limits of authorized work shall be only for that which was approved by the CRMC. Any activities or alterations in which deviate from the approved plans will require a separate application and review. If the information provided to the CRMC for this review is inaccurate or did not reveal all necessary information or data, then this permit may be found to be null and

void. Plans for any future alteration of the shoreline or construction or alteration within the 200' zone of CRMC jurisdiction or in coastal waters must be submitted for review to the CRMC prior to commencing such activity.

Permits, licenses or easements issued by the Council are valid only with the conditions and stipulation under which they are granted and imply no guarantee of renewal. The initial application or an application for renewal may be subject to denial or modification. If an application is granted, said permit, license and easement may be subject to revocation and/or modification for failure to comply with the conditions and stipulations under which the same was issued or for other good cause.

ATTENTION: ALL STRUCTURES AND FILLED AREAS IN THE TIDAL, COASTAL, OR NAVIGABLE WATERS OF THE STATE OF RHODE ISLAND AND PROVIDENCE PLANTATIONS ARE SUBJECT TO:

1. The Superior Property Rights of the State of Rhode Island and Providence Plantations in the Submerged and Submersible Lands of the Coastal, Tidal, and Navigable Waters;

2. The Superior Navigation Servitude of the United States;

3. The Police Powers of the State of Rhode Island and the United States to regulate Structures in the Tidal, Coastal, or Navigable Waters.

THE SUBMERGED AND SUBMERSIBLE LANDS OF THE TIDAL, COASTAL, AND NAVIGABLE WATERS OF THE STATE ARE OWNED BY THE STATE AND HELD IN TRUST FOR THE PUBLIC. CONVEYANCE OF THESE LANDS IS ILLEGAL; TITLES PURPORTING TO TRANSFER SUCH LANDS ARE VOID. ASSENTS THAT INVOLVE THE FILLING OR USE OF THE STATES SUBMERGED LANDS ARE GRANTED WITH THE PROVISO THAT IT IS SUBJECT TO THE IMPOSITION OF A USAGE FEE TO BE ESTABLISHED BY THE COASTAL RESOURCES MANAGEMENT COUNCIL.

SPECIFIC STIPULATIONS OF APPROVAL

General Stipulations

A. **The applicant shall record this assent in its entirety in the land evidence records of the City of Providence within thirty (30) days of the date of assent issuance. Certification by the Town Clerk's office that this stipulation has been complied with shall be furnished to Coastal Resources Management Council by the applicant within fifteen (15) days thereafter. Failure to comply with provision will render this assent null and void.**

B. For the purpose of this permit, the coastal feature shall be the river walls; and the inland edge of the coastal feature shall be the face of the river walls.

C. The approved plans shall be those entitled "Capitol Cove Parcel 6 – Phase 1, Canal Street, Providence, Rhode Island…," in 7 sheets, latest issue 8/20/2004 stamped by R. O. Raposo, PE, and, "Capitol Cove Parcel 6 – Phase I Providence, Rhode Island…," in 4 sheets last revised 12/04, by GZA, Inc. Except as modified herein all details and specifications thereon shall be strictly adhered to. Any and all changes require written approval from this office.

D. Prior to initiation of construction, a detailed plan addressing all proposed work within the fifteen foot river setback area shall be submitted to CRMC for written approval.

E. The applicant shall notify CRMC staff at least 48 hours in advance of the approximate date of the start of construction.

F. No work shall occur within the Moshassuck River.

G. No discharges shall occur to the Moshassuck River (other than approved Vortech Unit).

H. No work/alteration shall occur to the River walls.

I. The setback line (Ref. CRMP Section 140) shall be as shown on the approved plan.

J. This assent requires a setback (Ref. CRMP Section 140) of 15 feet in width as measured landward from the inland edge of the coastal feature.

Earthwork Stipulations

A. The standards and specifications set forth in the most recent RI Soil Erosion and Sediment Control Handbook (RISESCH) shall be strictly adhered to.

B. Prior to initiation of any grading, construction, or earthwork activity, a line of staked haybales and/or silt fence in accordance with RISESCH Standard "ST" shall be placed along the downslope perimeter of the proposed area of construction. This line shall not be located on a coastal feature nor within a stipulated buffer zone. Bales and/or silt fence shall be "toed in" 4 inches to prevent the underwash of sediments. This line shall be maintained by the replacement of bales as needed and by the proper upland disposal of accumulated sediments until permanent site revegetation is established. No soils nor any other materials shall be allowed to enter beyond this line, neither temporarily nor permanently.

C. All catch basins and drains in the area, into which sediment laden waters may flow shall be ringed with haybales staked and toed in 4 inches or protected per Standard "SD" of the RISESCH. These controls shall be properly maintained by timely removal of accumulated sediment and replacement of bales as needed.

D. A dewatering plan shall be submitted to CRMC for written approval prior to initiation of any construction dewatering. (Note the potential requirement for RIDEM RIPDES permit for any proposed discharge).

E. All excess excavated materials, excess soils, excess construction materials, and debris shall be removed from the site and disposed of at an inland landfill or a suitable and legal upland location outside of CRMC jurisdiction. No materials shall be deposited on the coastal feature, within 15 feet of the inland edge of the coastal feature, in coastal waters, or in any areas designated as a CRMC setback or coastal buffer zone.

F. All excavated material shall be cast on the upslope side of the excavation so as to minimize sedimentation.

G. All fill materials shall be clean, free of debris and rubble, and free of materials which may cause pollution of surface waters or groundwater.

H. All areas of exposed soil which are disturbed by construction and related activities shall be revegetated as immediately as is physically possible so as to minimize erosion and sedimentation. If the season is not conducive to immediate revegetation, all exposed soils shall be temporarily stabilized with hay mulch, jute mat netting or similar erosion control materials. Soil stabilization methods shall be employed during, as well as after, the construction phase to the maximum extent possible.

I. As approved, roof top runoff (first one-quarter inch) shall be treated through a "Stormwater Management Inc., "Storm Filter" System" prior to discharge to the Moshassuck River. Any changes to approved plans/specifications require CRMC approval.

J. Filter cartridges for the "Storm Filter" system shall be managed in strict accordance with the manufacturer's specifications for frequency/disposal, etc…

K. Any disturbance to the river walls or river due to "VPC" or "DDC" construction shall be reported to CRMC immediately for permit resolution.

L. Excavation and grading shall be limited to the area approved. Excess earthwork beyond that authorized by this assent is not permitted.

M. There shall be no discharge or disposal of hazardous wastes or hazardous materials which may be associated with construction machinery, etc. on the site or in the waterway. All used oil, lubricants, construction chemicals, etc. shall be disposed of in full compliance with applicable State and Federal regulations.

In Witness Whereof, said Coastal Resources Management Council have hereto set their hands and seal this 21st day of January in the year two-thousand-five.

Grover J. Fugate, Executive Director
Coastal Resources Management Council

/lam

PROVIDENCE STATION
SURFACE IMPROVEMENTS PROJECT
CONTRACT 1

INDEX

Item	Description	Page
105.02	Plans and Shop Drawings	JS-1
107.13(2)	Responsibility for Damage Claims	JS-1a
108.01	Prosecution and Progress	JS-2
108.03	Prosecution and Progress	JS-3
108.1000	Prosecution and Progress (Failure to Complete)	JS-4
109.04	Differing Site Conditions, Changes, Extra Work, and Force Account Work	JS-5
109.06	Partial Payments	JS-7
109.09	Acceptance and Final Payment	JS-8
201.9901	Remove and Dispose Bollard and Chain	JS-9
201.9902-	Remove and Dispose Limestone Wall Cap	JS-10
201.9903	Remove and Dispose Limestone Wall Facing	
201.9904	Remove and Dispose Stainless Steel Railing System	JS-11
201.9905	Remove and Dispose Handrails	JS-12
201.9906	Remove and Dispose Bench	JS-13
201.9907	Remove and Dispose Trash Receptacle	JS-14
201.9909	Remove and Dispose Pavers (All Types)	JS-15
201.9912-	Remove and Dispose South Plaza Planters Irrigation System	JS-16
201.9913	Remove and Dispose West Plaza Planters Irrigation System	
201.9914	Remove and Dispose Yard Drain and Cap Pipe	JS-17
201.9915	Remove and Dispose Extruded Polystyrene Foam	JS-18
201.9916	Remove and Salvage Light Poles and Luminaires	JS-19
201.9918-	Remove and Stockpile Bench	JS-20
201.9922	Reset Bench from Stockpile	
201.9919-	Remove and Stockpile Trash Receptacle	JS-21
201.9921	Reset Trash Receptacle from Stockpile	
201.9924	Remove and Relocate Boulder	JS-23
201.9925	Remove and Dispose Temporary Electrical Equipment and Housing	JS-23a
203.9901	Dewatering	JS-24
209.9901	GI Solids And Fines Capture Device	JS-26
212.2000	Cleaning and Maintenance of Erosion Controls (Failure to Comply)	JS-27
401.9901	Hot Mix Asphalt Class 9.5	JS-28
601.0307	Engineer's Acceptance Sampling and 601.05 Basis of Payment	JS-30a
601	Lightweight Concrete	JS-31

PROVIDENCE STATION
SURFACE IMPROVEMENTS PROJECT
CONTRACT 1

INDEX

Item	Description	Page
701.9901-	5 Inch Hubless Cast Iron Pipe	JS-35
701.9902	6 Inch Hubless Cast Iron Pipe	
701.9903	Floor Drain	
701.9904	Planter Drain	
702.9901	City of Providence Standard High Capacity Frame and Grate	JS-37
702.9902	City of Providence Standard Sidewalk Manhole Cover	JS-41
707.9901	Adjust Yard Drain To Grade	JS-43
707.9902	Sidewalk Grate Repairs	JS-44
807.9901	Concrete Masonry Unit Wall	JS-45
808.9901-	Lightweight Portland Cement Concrete Planter Wall Stems	JS-46
808.9902	Lightweight Portland Cement Concrete Planter Stairway	
810.9901	Galvanized Bar Reinforcement for Structures	JS-47
813.9901-	Waterproofing Membrane System	JS-48
813.9902	Extruded Polystyrene Foam	
817.9901-	Underside of Plaza Concrete Repair	JS-57
817.9902	Ramp Wall Concrete Vertical Surface Repair	
817.9903	Control/Cove Joint Repair	
817.9904	Concrete Stair Repair	
817.9905	Partial Depth Garage Deck Slab Repair	
817.9906	Expansion Joint Concrete Repair	
820.9901	Acrylic Waterproof Coating System	JS-61
820.9902	Clean Concrete Wall	JS-63
823.9901-	Expansion Joint Seal Type A	JS-64
823.9902	Expansion Joint Seal Type B	
823.9903	Expansion Joint Seal Type C	
823.9904	Expansion Joint Seal Type D	
823.9905	Expansion Joint Seal Type D	
825.9901	Surface Preparation to SSPC S-6 and Painting Existing 4-Bar Railing System	JS-69
903.9901-	Wall Mounted Ornamental Steel Fence – 42” High	JS-71
903.9902	Wall Mounted Ornamental Steel Fence – 24” High	
903.9903-	Steel Stair Handrailing – Wall Mounted	JS-74
903.9904	Steel Stair Handrailing – Mounted in Granite Wall	
903.9905	Temporary Chain Link Fence-6 Feet High	JS-75

PROVIDENCE STATION
SURFACE IMPROVEMENTS PROJECT
CONTRACT 1

INDEX

Item	Description	Page
905.1000	Sidewalks (Failure to Comply)	JS-76
905.9901-	Integrally Colored and Stamped Portland Cement Concrete Sidewalk	JS-77
905.9902	Integrally Colored and 12 Inch Grid Scored Portland Cement Concrete Sidewalk	
905.9903	Integrally Colored and 15 Inch Grid Scored Portland Cement Concrete Sidewalk	
905.9904	Integrally Colored and 24 Inch Grid Scored Portland Cement Concrete Sidewalk	
905.9907	Integrally Colored and Radially Scored Portland Cement Concrete Sidewalk	
905.9905	48 Inch Scored Portland Cement Concrete Sidewalk	JS-81
905.9906	Cement Concrete Driveway	JS-82
906.9901-	Granite Curb, Quarry Split Straight, Standard 7.3.0 -Modified 7” Width	JS-83
906.9902	Granite Curb, Quarry Split Curved, Standard 7.3.0 -Modified 7” Width	
906.9903	Granite Wheelchair Ramp Curb, Stds 7.3.3, 43.3.0 & 43.3.1 -Modified 7” Width	
906.9904	Granite Ramp Stone, Standard 7.3.9 -Modified 7” Width	
906.9905	Granite Curb, Quarry Split 2 Foot Corners, Standard 7.3.4 Modified 7” Width	
906.9910	Granite Apron Stone Modified – 7” Width	
906.9906-	Granite Curb, Quarry Split Straight, Standard 7.3.0 -Modified 7” Wide x 9” High, Doweled Into Concrete	JS-84
906.9907	Granite Curb, Quarry Split Curved, Standard 7.3.0 -Modified 7” Wide x 9” High, Doweled Into Concrete	
906.9908	Granite Curb, Quarry Split 2 Foot Corners, Standard 7.3.4 -Modified 7” Wide x 9” High, Doweled Into Concrete	
906.9909	Remove, Handle, Haul, Trim, Reset Curb, Edging, Straight, Curved, Circular, All Types Modified 7” Wide x Types, Doweled Into Concrete	
906.9911	Granite Curb, Quarry Split Straight, Standard 7.3.0 –Modified 12” Wide x 9” High, Doweled Into Concrete	
906.9912	Granite Curb, Quarry Split Straight, Standard 7.3.0 -Modified 12” Wide x 9” High, Doweled Into Concrete	
907.1000	Dust Control (Failure to Comply)	JS-85
911.9901-	Granite Planter Wall	JS-86
911.9903	Granite Wall Cap	
911.9904	Granite Wall Facing	
911.9905	Granite Compass Rose	
911.9906	Granite Transition Piers	
911.9907	Granite Steps	
935.9901	Imprint Crosswalk	JS-91
937.1000	Maintenance and Movement of Traffic Protection Devices (Failure to Comply)	JS-94

PROVIDENCE STATION
SURFACE IMPROVEMENTS PROJECT
CONTRACT 1

Item **INDEX** Page

Description

938.1000	Price Adjustments	JS-95
942.9901	Detectable Warning System - Cast In Concrete	JS-96
943.0200	Trainee Manhours	JS-97
999.9901	Bus Shelter	JS-101
999.9902	Install RIPTA R-Line Totem	JS-110
999.9903	Parking Attendants Booth	JS-114
999.9904	Parking Access and Revenue Control System	JS-116a
T05.9901	Break Into Existing Manhole	JS-117
T06.9901	Temporary Electric Conduit	JS-118
T08.9901	Decorative Pole Foundation With Bolts	JS-119
T08.9903- **T08.9904**	**"**Type "C" Ornamental Pole with Banner Arm and Luminaire – LED" **"**Type "D"Ornamental Pole with Banner Arm and Luminaire – LED	JS-120
T09.9901	Service Pedestal & Testing – RIDOT Standard Modified	JS-121
T09.9902	Secondary Service from National Grid Manhole	JS-122
T15.9901	Street Name Signs	JS-123
T15.9902	Remove and Relocate Parking Meter – Plate Mounted	JS-124
T15.9903	Remove and Salvage Parking Meter	JS-125
T15.9904- **T15.9905** **T15.9906**	Remove and Reset Sign, Standard 24.2.0 Modified Remove and Reset Sign, Standard 24.4.0 Modified Remove and Reset Sign, Standard 24.6.1 Modified	JS-126
T20.9902- **T20.9903**	Epoxy Resin Pavement Marking Raised Crosswalk Symbol - White 24" Epoxy Resin Pavement Marking-White	JS-128
L01.9901	Lightweight Planting Medium	JS-129
L02.1000	Seeding (Failure to Comply)	JS-130
L06.1000	Planting (Failure to Comply)	JS-131
L15.9901	Bench	JS-132
L15.9902	Steel Bike Rack	JS-133
L15.9903- **L15.9904**	Install Amtrak Supplied Stationary Bollard and Cover Install Amtrak Supplied Removable Bollard and Cover	JS-134
L15.9905	Install Amtrak Supplied Pinned Bollard and Cover	JS-136
L15.9906	Trash Receptacle	JS-137
L15.9907	Cigarette Ash Urn	JS-138
L15.9908	Bike Shelter	JS-139

PROVIDENCE STATION
SURFACE IMPROVEMENTS PROJECT
CONTRACT 1

Item **INDEX** Page

Description

L15.9909	Precast Concrete Removable Planter	JS-140
L15.9910	Bollard With Chain	JS-141
L15.9911	South Plaza Irrigation System	JS-142
L15.9912	Modifications to Station Park Irrigation System	JS-151

JOB SPECIFIC

CODE 107.13(2)

RESPONSIBILITY FOR DAMAGE CLAIMS

Replace **Subsection 107.13(2); Liability and Property Damage Insurance**, on page 1-56 of the Standard Specifications for Road and Bridge Construction, with all revisions, and the following:

2. Liability and Property Damage Insurance. Each policy shall name the Department, the City of Providence, Park Row Properties, Ltd, and Capital Properties, Inc. as additionally insured and shall include a provision requiring the insurer to investigate and defend the Department against any and all claims for death, bodily injury or property damages even if groundless. Coverages shall be in the following amounts:

(a) Bodily injury liability:
$500,000, each person.
$1,000,000, each occurrence.
(b) Property damage liability:
$500,000, each occurrence.
$1,000,000, aggregate.

JOB SPECIFIC

CODE 201.9925

REMOVE AND DISPOSE TEMPORARY ELECTRICAL EQUIPMENT AND HOUSING

DESCRIPTION: This work shall consist of removing and disposing all temporary electrical equipment and housing on AP4/LOT 263 as indicated on the Plans or as directed by the Engineer, all in accordance with these Specifications and Section 201 of the Rhode Island Department of Transportation Standard Specifications for Road and Bridge Construction, with all revisions.

MATERIALS: Not applicable.

CONSTRUCTION METHODS: Coordinate with the affected utility companies to ensure all services to the temporary facilities are de-energized and ready to be decommissioned. Cut and cap existing conduit and cables. Remove and dispose the wooden housing unit, electric box, riser panel, conduit, cables and all other electrical components within the foot print of the temporary access road and adjacent fill slopes.

Where appropriate, the Contractor shall install steel plates capable of supporting HS-25 vehicle loading over foundations prior to backfilling for the temporary access road, in accordance with the Rhode Island Standard Specifications by means approved by the Engineer.

METHOD OF MEASUREMENT: "Remove and Dispose Temporary Electrical Equipment and Housing" will be measured for payment by the "Lump Sum" in accordance with this specification, the Plans and/or as directed by the Engineer.

BASIS OF PAYMENT: The accepted quantity of "Remove and Dispose Temporary Electrical Equipment and Housing" will be paid for at the contract unit price per "Lump Sum" as listed in the Proposal. The price so-stated shall constitute full and complete compensation for all labor, materials and equipment, including removal, bagging, handling, hauling, disposal fees, capping of conduits, plating of concrete foundations, coordination with affected utility companies including any associated fees for decommissioning and all other incidentals required to finish the work.

END OF SECTION

Remove subsections **601.03.7 B-H and 601.05** in their entirety and replace with the following:

B. Engineer's Acceptance Sampling, Testing and Inspection.

The Engineer is responsible for sampling, testing, and inspection for acceptance, except for furnishing of necessary materials, which shall be the Contractor's responsibility as directed by the Engineer and at no additional cost to the State. Acceptance is based on the Engineer's inspection of the construction, monitoring of the Contractor's quality control program, and the acceptance test results.

The Contractor shall afford the Engineer all reasonable access without charge.

Samples of fresh concrete for testing will be taken after all concrete retempering is performed. When sampling from within the forms is impractical, samples will be taken at the nearest accessible point in the conveyance system prior to placement into the forms.

Acceptance sampling and testing will meet the requirements of the Contract and the "Master Schedule for the Preparation of a Project Schedule for Sampling, Testing, and Certification of Materials."

Whenever random samples do not meet specifications, subsequent continuous samples will be taken from each truck batched until field test results indicate that specifications are satisfied, after which time random sampling will resume.

Compressive strength test specimens will be standard 4"x 8" cylinders for all placements unless otherwise modified by the Engineer.

C. Engineer's Acceptance Plan.

The following is the acceptance plan necessary to obtain samples, perform tests and provide inspection of the work. The terms used in this acceptance plan are defined as follows:

1. **Placement.** For a given class of concrete, the portions of a concrete structure constructed during one continuous concrete operation.

2. **Acceptance Plan**. The method of taking and making measurements of samples for the purpose of determining the acceptability of a Placement of material or construction. Acceptance plans include random sampling plans.

3. **Random Sample**. A sample chosen in such a manner that each increment in the Lot has an equal probability of being selected. The

Engineer reserves the right to take more samples, in addition to those samples taken in accordance with the random sampling plan.

4. **Acceptance**. As defined in Table 5 - Placement Acceptance Schedule.

5. **Rejection**. When used in this context "rejection" shall mean remove, dispose and replace at the Contractor's expense, or at the discretion of the Engineer "rejection" will mean acceptance at a lower price determined by Pay Factors, as specified herein.

6. **Lot**. An isolated quantity of material from a single source or a measured amount of construction produced by the same process. For Placements less than 750 cubic yards the Lot shall be 150 cubic yards or less. For Placements of 750 cubic yards or greater the Lot shall be 250 cubic yards or less.

   Lots will be determined as follows:

   a) The total cubic yards for the Placement will be divided by 150 for Placements less than 750 cubic yards and 250 for Placements greater than or equal to 750 cubic yards.

   b) The result will then be rounded up to the next whole number. This number is the number of Lots in the Placement.

   c) The total cubic yards for the Placement in (a) will be divided by the number in (b) to determine Lot size.

   d) Each Lot size will be adjusted by rounding to the nearest 10 cubic yards (or other number representing one truck load), and this adjusted Lot size will be used to determine the number of trucks in the Lot.

   e) For purposes of the acceptance plan the total cubic yards of concrete placed or all the Lots will be the Placement volume.

7. **Sublots**. Equal divisions or portions of a Lot as defined herein.

The Sublot size for each Lot will be calculated by dividing each Lot into thirds rounded to the nearest truck.

a) Cylinders shall be cast for each Placement less than or equal to 150 cubic yards of concrete delivered for each class of concrete in accordance with the following:

1 truck = 4 cylinders from the 1 truck
(6 cylinders for Class MC)

2 trucks = 4 cylinders from 1 randomly selected truck
(6 cylinders from 1 randomly selected truck for Class MC)

3 trucks = 2 cylinders from 2 randomly selected trucks
(3 cylinders from 2 randomly selected trucks for Class MC)

4 thru 10 trucks = 2 cylinders from 1 randomly selected truck from the first half of the Placement and 2 cylinders from 1 randomly selected truck from the second half of the Placement.
(3 cylinders from 1 randomly selected truck from the first half of the Placement and 3 cylinders from 1 randomly selected truck from the second half of the Placement for Class MC).

11 thru 15 trucks = 2 cylinders from 1 randomly selected truck from the first third of the Placement, 2 cylinders from 1 randomly selected truck from the second third of the Placement and 2 cylinders from 1 randomly selected truck from the final third of the Placement.

b) Cylinders shall be cast for each Placement greater than 150 cubic yards and less than 750 cubic yards of concrete delivered for each class of concrete in accordance with the following

2 cylinders from 1 randomly selected truck from the first third of the Lot, 2 cylinders from 1 randomly selected truck from the second third of the Lot and 2 cylinders from 1 randomly selected truck from the final third of the Lot.

c) Cylinders shall be cast for each Placement greater than or equal to 750 cubic yards of concrete delivered for each class of concrete in accordance with the following:

2 cylinders from 1 randomly selected truck from the first third of the Lot, 2 cylinders from 1 randomly selected truck from the second third of the Lot and 2 cylinders from 1 randomly selected truck from the final third of the Lot.

Sidewalk placements will have a minimum of one set of four cylinders taken from one randomly selected truck per project per day.

D. Placement Acceptance Compressive Strength Evaluation.

Acceptance for compressive strength will be evaluated relative to compliance with the minimum 28 or 56 day compressive strength (f'c) specified herein for each class of concrete produced in accordance with TABLE 5 - Placement Acceptance Schedule. Acceptance for Class MC will be based on 56-day compressive strength test.

Three cylinders randomly selected from each set of 4 or 6 cylinders, as determined under "Sublots", will be tested for either 28-day or 56-day compressive strengths.

Case A: Single Lot Placement.

The average 28 or 56 day compressive strength of 3 cylinders selected from a set of 4 or 6 cylinders and the Range, the difference between the largest and the smallest test result, will be used to calculate the acceptance of the Placement. The following formulas will be used to calculate the Placement Acceptance Test Result (PATR). The Engineer reserves the right to use Formula – B for any Lot size when more than one set of 3 cylinders are tested.

Formula - A

$$PATR = \overline{X} = \frac{X1+X2+X3}{3}$$

$$RANGE\ (R) = X_{(largest)} - X_{(smallest)}$$

Symbols

X= individual test value which is the 28 or 56 day compressive strength of each cylinder tested.

$\overline{X}$= the mean (average) 28 or 56 day compressive strength of a set of 3 cylinders.

R= (Range), the difference between the largest and smallest 28 or 56 day compressive strength test result.

PATR= Placement acceptance test result.

Case B: Multiple Lot Placements.

For multiple Lot placements 3 cylinders from each set of 6 cylinders from each Lot shall be tested for 28 or 56 day compressive strength) The mean value of the sum of the average compressive strengths and the mean value of the sum of the Ranges will be

used to calculate the acceptance of the Placement. The following formula will be used to calculate the Placement Acceptance Test Result (PATR).

Formula – B

$$PATR = \bar{\bar{X}} = \frac{\bar{X}1 + \bar{X}2 + \ldots + \bar{X}_n}{n}$$

$$\bar{R} = \frac{R1 + R2 + \ldots + Rn}{n}$$

Symbols

$\bar{X}$ = the mean (average) 28 or 56 day compressive strength of a set of 3 cylinders for each Lot.

$\bar{\bar{X}}$ = the mean (average) of the sum of the average 28 or 56 day compressive strength test result of each Lot.

$\bar{R}$ = the average of the sum of the Ranges (R) for each Lot.

n = number of sets.

Concrete will be evaluated for acceptance in accordance with Table 5 - Placement Acceptance Schedule, on the basis of the calculated Placement Acceptance Test Results (PATR).

Table 5
Placement Acceptance Schedule

Placement Acceptance Test Result (PATR) ($\bar{X}$ or $\bar{\bar{X}}$)	**Pay Factor** (PPF)
Not less than f ' c + 0.21 $\bar{R}$ (or R)	1.00
Not less than f ' c + 0.04 $\bar{R}$ (or R)	0.95
Not less than f ' c - 0.10 $\bar{R}$ (or R)	0.70
For less than f ' c - 0.10 $\bar{R}$ (or R)	0.50

1. f 'c is the specified 28-or 56 day compressive strength.

2. Range R (or R) is the difference between the results of the largest and smallest Lot acceptance test results.

Acceptance of the Placement at the 0.95 Placement Pay Factor (PPF) in lieu of remove, dispose and replacement of the Placement will be at the request of the Contractor and approval by the Engineer.

Acceptance at the 0.70 or 0.50 Placement Pay Factor (PPF) in lieu of remove, dispose and replacement will be as determined by the Engineer on the basis of the effect of the defective Lot on the structural integrity of the concrete structure.

The Contractor may elect to remove and dispose any defective material and replace it with new material to avoid a pay factor of less than 1.00. Any such new material will be sampled, tested, and evaluated for acceptance in accordance with the applicable requirements of this **SECTION 601**.

The Engineer may reject any quantity of material which appears to be defective based on visual inspection or test results. Such rejected material shall not be used in the work and the results of the tests run on the rejected material will not be included in the calculation of the Placement Acceptance Test Results.

601.05 BASIS OF PAYMENT. "Portland Cement Concrete," complete in place and fully accepted, will be paid for as provided in the Specifications. These payments shall constitute full compensation for furnishing all labor, materials, equipment, tools, and incidentals to produce, place, and protect the concrete as herein specified, in addition to any requirements in the Specifications for the particular use, except that a reduction in payment will be made for each Placement of concrete not fully accepted. This reduction in payment for each Placement will be based on the following:

Case 1: For concrete for which a unit price is provided in the Proposal:

Unit price reduction = (1.00-PPF) x the unit bid price in the Proposal

Case 2: For concrete which is paid for as part of a lump sum item or lump sum items as listed in the Proposal:

1. (1.00-PPF) x the price of the various items of concrete per cubic yard as provided in the approved Contractor's Lump Sum Breakdown

PPF is the pay factor determined in **Subsection 601.03.7 D.**

JOB SPECIFIC

CODE 601

LIGHTWEIGHT CONCRETE

DESCRIPTION: Unless otherwise modified elsewhere in the Contract Documents, Section 601 of the Rhode Island Standard Specifications for Road and Bridge Construction, with all revisions, is modified as follows:

MATERIALS: is hereby modified by adding the following to the list of materials:

LIGHTWEIGHT COARSE AGGREGATE FOR STRUCTURAL CONCRETE.

Lightweight coarse aggregate for structural concrete shall be clean, hard, and appropriate for an environment with freeze/thaw cycles. It shall be reasonably free from dirt, deleterious material, and pieces that are structurally weak. It shall meet the following requirements:

(a) General Characteristics. Two general types of lightweight aggregates may be used:

(1) Aggregates prepared by expanding, calcining, or sintering products such as blast furnace slag, clay, shale, or slate. Other raw materials may be used if the resulting prepared aggregates meet the requirements of these specifications.

(2) Aggregates prepared by crushing, screening, and cleaning natural lightweight materials such as pumice, scoria, or tuff.

(3) The Contractor shall provide documentation to show that the aggregate selected has proven performance in an environment subjected to freeze/thaw cycling.

(b) Grading and blending. Grading and blending shall meet the requirements specified by the lightweight aggregate manufacturer. Any standard weight aggregate used for blending shall meet the requirements of Section 601.

CLASSIFICATION. The following class of concrete is included in these Specifications and shall be used as shown on the Plans or as indicated elsewhere in the contract specifications:

TABLE 1

Concrete Class	Minimum Cementitious Content lb/yd^3	Maximum Cementitious Content lb/yd^3	Maximum w/cm	AASHTO T119 Maximum Slump* (in.)	AASHTO T152 Air Content (%)	AASHTO T23 Minimum Compressive Strength, psi @ 28 Days**
LW	500	700	0.45	7	5-9	4000

* The maximum slump allowed after the addition of admixtures.
** The listed 28-day compressive strength will serve as the basis of designing or approving the concrete mix.

The maximum unit density for Concrete Class LW shall be:

(a) Plastic: 120 pounds per cubic foot
(b) Dry: 115 pounds per cubic foot

The Contractor must submit a mix design for Concrete Class LW meeting the requirements specified and which will be evaluated for approval in accordance with Section 601.

THIS PAGE LEFT INTENTIONALLY BLANK

THIS PAGE LEFT INTENTIONALLY BLANK

METHOD OF MEASUREMENT: "Waterproofing Membrane System" will be measured by the number of "Square Yards" based on horizontal projection of such membrane system actually installed in accordance with the Plans and/or as directed by the Engineer. Vertical components shall be incidental to the horizontal projections and shall not provide cause for additional measurement. Waterproofing membrane system shall include removal of the existing waterproofing membrane system and all other work of this section excluding the extruded polystyrene foam, which will be paid for separately under the respective bid item.

"Extruded Polystyrene Foam" will be measured by the number of "Cubic Yards" of such insulation system actually installed in accordance with the Plans and/or as directed by the Engineer.

BASIS OF PAYMENT: The accepted quantity of "Waterproofing Membrane System" will be paid for at the contract unit price per "Square Yard" as listed in the Proposal. The price so-stated constitutes full and complete compensation for all labor, materials and equipment, removal of the existing waterproofing membrane system, furnishing and installing rubberized asphalt membrane, protection board, drainage/water retention component system, filter fabric, testing, and all other incidentals required to finish the work, complete and accepted by the Engineer.

The accepted quantity of "Extruded Polystyrene Foam" will be paid for at their respective contract unit price per "Cubic Yard" as listed in the Proposal. The price so-stated constitutes full and complete compensation for all labor, materials and equipment, and all other incidentals required to finish the work, complete, in place, and accepted by the Engineer.

END OF SECTION

Concrete: All material components shall conform to section M.02 and concrete shall conform to Class XX of the RIDOT Standard Specifications, Section 601 and as modified below:

- Coarse Aggregate top size shall be 3/8", meeting the gradation requirements of section M03.02 of the RIDOT Standard Specifications.
- The concrete must meet the maximum 28 day drying shrinkage requirement (ASTM C 157) of -0.040%

The Contractor shall submit concrete mix designs to the Engineer for review and approval, no less than 30 days in advance of the schedule for placement.

Concrete Testing: The Contractor shall supply concrete test specimens in accordance with the Rhode Island Standard Specifications for Road and Bridge Construction, with all revisions.

Reinforcement: All new reinforcing steel shall meet AASHTO M31 Grade 60 galvanized bars.

Wire Mesh - Shall be galvanized and meet the requirements of RIDOT Standard Specifications, section M. 05

Concrete Anchor - Shall be galvanized hooked type expansion anchor bolt to be approved by the Engineer. The exposed end of each anchor shall have at a minimum a right angle bend for engaging reinforcement.

Patching Mortar: Mortar for patching shall conform to Subsection 817.02.02 of RIDOT Standard Specifications.

CONSTRUCTION METHODS: All construction shall conform to the following requirements:

1. Work platforms shall be supplied and positioned or erected (as necessary) to provide adequate and safe access to the work.
2. Protective shields as required or as directed by the Engineer shall be in place and accepted prior to the commencement of any work under this item.
3. All loose, deteriorated or unsound concrete shall be removed from those portions of the locations as designated on plans or as further directed by the Engineer.

LIMITATIONS: <u>No more than a 6-inch depth of concrete shall be removed.</u> If it is evident that more depth must be removed due to the conditions of concrete encountered, the work shall stop at that designated location and the Engineer will be notified immediately. There shall be no additional compensation for the period of time while work is suspended.

The deteriorated concrete shall be removed by means of power or hand tools. Power tools shall be limited to pneumatic chipping hammers of no more than 15 pound class. <u>In no case shall pneumatic tools be placed in direct contact with reinforcing steel so as to damage its bond to the surrounding concrete</u>. The deteriorated concrete shall be removed only to the depth necessary to expose a bonding surface of sound concrete but not less than not less than 1-inch beyond the reinforcing steel and not deeper than the limitations set forth elsewhere in this Special Provision. <u>The Contractor shall not be compensated for removing additional concrete beyond the repair limits specified.</u>

The boundaries of areas to be repaired shall be square cut, slightly undercut to a depth of not less than ½ inch. Re-entrant corners and shapes which include acute angles shall not be allowed. Thin or feathered edges will not be permitted.

All corroded reinforcing bars shall be thoroughly cleaned to remove all rust. Where existing longitudinal reinforcing bars are spaced approximately 3 inches center to center, longitudinal reinforcing bars shall only be supplemented if four (4) or more exposed adjacent longitudinal bars have lost 1/4 or more of their original diameter. For every four exposed adjacent longitudinal bars having lost 1/4 or more of their original diameter, the bar with the least diameter shall be supplemented by a new bar spliced in place.

Where existing longitudinal reinforcing bars are spaced approximately 6 inches center to center, longitudinal reinforcing bars shall only be supplemented if two (2) or more exposed adjacent longitudinal bars have lost 1/4 or more of their original diameter. For every two adjacent longitudinal bars having lost 1/4 or more of their original diameter, the bar with the least diameter shall be supplemented by a new bar spliced in place.

Supplemental bars shall be lapped sufficiently (30 diameters on both sides of the affected areas or the Contractor, if he so elects, may submit alternate splice details - which do not compromise concrete cover to the bars - for the Engineer's review and approval) to develop the full strength of the bar. Dual bars of equivalent or greater section may be used. If necessary, additional chipping will be required to provide this lap. The Contractor shall obtain approval to repair damaged reinforcing steel from the Engineer. Additional saw cuts and removal of concrete shall be in accordance with all applicable notes on these plans. If it is evident that more reinforcing must be spliced after the concrete is removed, the work shall cease at the designated location and the Engineer shall be notified immediately. The Contractor shall provide the RIDOT hands on access to the location. The RIDOT will evaluate the condition and provide direction within 48 hours of reviewing the location. There shall be no additional compensation for the period of time while work is suspended. Payment for additional reinforcing steel shall be made under Item Code 810.9901 "Galvanized Bar Reinforcement for Structures.

All chipped areas, corroded rebars and concrete surfaces for repair shall be thoroughly cleaned by means of sandblasting, hydroblasting, compressed air, steam, wire brushing or by other method approved by the Engineer. The Contractor must provide adequate protection to pedestrians, traffic, etc. when sandblasting is used. The Contractor may use one or various means of cleaning chipped areas as approved by the Engineer.

The exposed concrete and reinforcing steel surfaces shall be free of rust, oil, solvent, grease, dirt, dust, bitumen, loose particles, and other foreign matter that inhibits bond just prior to preparation of the surface. If in the opinion of the Engineer, the surfaces to be repaired are not sufficiently clean for concrete repair the Contractor will be required to continue cleaning by approved method. A sufficient sized vacuum cleaner and/or an air jet shall be used to remove dust and other particles.

No concrete shall be applied when the ambient temperature is below 45 Degrees F or against surfaces which are below 45 Degrees F or surfaces which show any signs of frost remaining. For conditions below 45 Degree F, the Contractor may prepare the areas by supplying sufficient heat as specified in the Rhode Island Standard Specifications for Road and Bridge Construction Section 601.03.05 or as directed by the Engineer.

Care shall be taken during the removal of the designated portions of the structure to avoid damaging the portions that are to remain in place. Any damage caused by the Contractor to the existing structure that is

JOB SPECIFIC

CODE 823.9901

EXPANSION JOINT SEAL TYPE A

CODE 823.9902

EXPANSION JOINT SEAL TYPE B

CODE 823.9903

EXPANSION JOINT SEAL TYPE C

CODE 823.9904

EXPANSION JOINT SEAL TYPE D

CODE 823.9905

EXPANSION JOINT SEAL TYPE E

DESCRIPTION. The work under this item shall consist of furnishing and installing expansion joints at the locations shown on plans.

Expansion Joint Seal Type A shall be Elastomeric Concrete System Joints.

Expansion Joint Seal Type B shall be Strip Seal Expansion Joints.

Expansion Joint Seal Type C shall be Neoprene Deck Joints.

Expansion Joint Seal Type D shall be Pre-Compressed Elastomeric Coated Expansion Joint System.

Expansion Joint Seal Type E shall be Asphaltic Expansion Joint System.

All work shall be performed in accordance with applicable provisions of the Rhode Island Standard Specifications for Road and Bridge Construction with all revisions except as modified herein and as required by the Engineer.

Elastomeric Concrete System Joints. This type of joint consists of a sealing system which combines elastomeric glands with hole patterns in the flange areas providing secure mechanical attachment between the concrete substrate and an elastomeric header.

Strip Seal Expansion Joints. See Section 823.01.2 of the Rhode Island Department of Transportation Standard Specifications for Road and Bridge Construction, with all revisions.

Neoprene Deck Joints. This type of joint consists of a patented structural sealing joint system comprised of a neoprene profile, which is air-pressurized and bonded in place with a specially formulated epoxy

adhesive. When properly installed, the joint system will not tear away, protrude out of, or slip from its original position when exposed to repeated mechanical or thermal movements.

Pre-Compressed Elastomeric Coated Expansion Joint System. This type of joint consists of a UV stable, micro-cell, polyurethane foam impregnated with a hydrophobic polymer and topped with a traffic grade elastomeric coating.

Asphaltic Expansion Joint System. See Section 823.01.3 of the Rhode Island Department of Transportation Standard Specifications for Road and Bridge Construction, with all revisions.

QUALIFICATIONS. Consult the Manufacturer's representative and establish the minimum provisions required to ensure satisfactory work. A applicator certified by the manufacturer with a minimum of five (5) years' experience on similar joints shall install the specified joint seal.

SUBMITTALS.

a. The Contractor shall submit shop drawings showing all the expansion joint details required for this particular project for approval by the Consultant in addition to Manufacturer's literature with any applicable portions deleted.

b. Where required by jurisdiction, the Contractor shall submit test data showing that the expansion joint system (including fire barrier material) meets or exceeds fire rating requirements. Testing procedures shall be in accordance with requirements set forth or adopted by the local jurisdiction.

c. The Contractor shall submit a record of his qualification for installing expansion joints.

PRODUCT DELIVERY, STORAGE AND HANDLING. All materials shall be delivered on the job and stored in a place protected from damage, moisture and exposure to the elements in exact accordance with manufacturer's instructions. Each shipment shall be identified with the Manufacturer's name, address, and trademark and shall be accompanied by four copies of the manufacturer's standard test results and an affidavit attesting to full compliance with these specifications.

JOB CONDITIONS. Weather Conditions: Do not proceed with installation of expansion joints and sealants under wet weather conditions, or when temperatures are below or above manufacturer's recommended limitations for installation. Proceed with the work only when forecasted weather conditions are favorable for proper cure and strength development of the nosing material.

MATERIALS.

The expansion joint seal system shall be a complete system of compatible materials designed by the manufacturer to produce a waterproof, traffic-bearing expansion joint seal. Due to compatibility requirements between the various joint types, a single manufacturer shall be sourced for all joint types specified.

The gland elements shall be a continuous, factory extruded unit for the entire straight run length of the joint. Changes in direction or elevation shall be accomplished by factory molded elbows, tees, crosses and the like. The seal shall be turned up a minimum of 6 inches (vertically) unless otherwise shown on plans. The seal element shall not be mitered/jointed unless approved by the Engineer in writing.

Expansion joint systems approved for use in one or more applications are provided in the list below. Due to variations in specific details of the locations, expected movement, expected traffic exposure, all systems are not suitable for one particular condition. The Contractor shall reference the specific expansion joint detail and approved products shown on the drawings, including gland size, etc. for the respective condition.

Elastomeric Concrete System Joints. Systems approved for use under this section shall be:

a. "Wabocrete/Membrane 201 system," model as applicable, manufactured by Watson Bowman Acme, A Division of Degussa (800) 677-4922.
b. "Emseal Thermaflex," model as applicable, manufactured by Emseal Joint Systems, Ltd. (508) 836-0280.
c. "Lokcrete Membrane System (LMS Series)", as applicable, manufactured by MM Systems Corporation (866) 506-6929.
d. "Polycrete CR-Series Membrane System, size as applicable, manufactured by Erie Metal Specialties, (716) 542-3991.
e. Or Engineer approved equal.

Strip Seal Expansion Joints. See Section 823.02.1 of the Rhode Island Department of Transportation Standard Specifications for Road and Bridge Construction, with all revisions.

Neoprene Deck Joints. The neoprene sealer shall be preformed extruded type. Systems approved for use under this section shall be:

a. "The Jeene Joint System," Type FW, size as applicable, manufactured by Watson Bowman Acme, A Division of Degussa (800) 677-4922.
b. JP-Series Joint System, size as applicable, manufactured by Erie Metal Specialties, (716) 542-3991.
c. "Epoxy Bonded Sealing System (EBS Series)", size as applicable (EBS 150 minimum), manufactured by MM Systems Corporation (866) 506-6929.
d. or Engineer approved equal.

Pre-Compressed Elastomeric Coated Expansion Joint System. Systems approved for use under this section shall be:

a. "Wabo H-Seal," model as applicable, manufactured by Watson Bowman Acme, Division of BASF, (716) 691-7566,
b. "DSM System," model as applicable, manufactured by Emseal Joint Systems, Ltd. (508) 836-0280,
c. "CSC-Series System, size as applicable, manufactured by Erie Metal Specialties, (716) 542-3991.
d. "EIS Expansion Joint," as applicable, manufactured by MM Systems Corporation (866) 506-6929.
e. or Engineer approved equal.

Asphaltic Expansion Joint System. See Section 823.02.3 of the Rhode Island Department of Transportation Standard Specifications for Road and Bridge Construction, with all revisions.

SPECIAL PROJECT WARRANTY. The manufacturer and approved installer shall provide a five (5) year guarantee that the joint seal will not leak or fail from normal traffic. Any type of failure of the new joint seal which occurs within the specified warranty period shall be repaired by the Contractor at no cost

to the Department.

CONSTRUCTION METHODS:

Elastomeric Concrete System Joints.

a. **Preparation.** The block-out shall be provided to the specified dimensions as indicated on the drawing and acceptable to the manufacturer. Any edge raveling at the joint opening or spalls shall be repaired with a suitable compound to provide a solid, square block-out.

   The block-out substrate shall be sandblasted clean of all contaminants and impurities immediately prior to the system installation to assure proper adhesion.

   The membrane gland element shall be unpackaged and laid in a relaxed position to relieve any temporary set from shipment packaging prior to placement. The pre-molded element shall be wiped clean with a solvent solution such as toluene.

   It is recommended that adjacent deck surfaces be taped off and protected to assure a clean, neat professional installation.

b. **Installation.** The entire installation shall be made in strict accordance with the manufacturer's written instruction. Follow standard manufacturer's recommendation for installation of the material, taking into account block-out dimensions, joint width and ambient temperature conditions.

Strip Seal Expansion Joint – See Section 823.03.2 of the Rhode Island Department of Transportation Standard Specifications for Road and Bridge Construction, with all revisions.

Neoprene Deck Joints.

a. **Installation.** The neoprene sealer shall be installed in the field by suitable hand or machine tools and thoroughly secured in place with the approved lubricant-adhesive. The adhesive shall cover both sides of the sealer over the full contact area with the sides of the metal joint. The adhesive may be applied to the metal or the sealer or both. The sealer shall be installed in a compressed condition in the position shown on the Plans within seconds after the application of the adhesive. The sealer shall be in one piece for the full width of transverse joints. No field splicing of the seal will be permitted in transverse joints. In longitudinal joints, the sealer shall be in practical lengths. Any joints in the sealer material shall be adequately sealed with additional adhesive.

b. **Compliance**. All sealer and adhesive to be employed in the work shall conform with the material that has been approved as the basis of test results. Each such shipment shall be identified with the manufacturer's name, address and trademark and shall be accompanied by four copies of the manufacturer's standard test results and an affidavit attesting to full compliance with these specifications.

Pre-Compressed Elastomeric Coated Expansion Joint System.

a. **Preparation.** The block-out shall be provided to the specified dimensions as indicated on the drawing and acceptable to the manufacturer. Any edge raveling at the joint opening or spalls shall be repaired with a suitable compound to provide a solid, square block-out.

   The block-out substrate shall be sandblasted clean of all contaminants and impurities immediately prior to the system installation to assure proper adhesion.

   The gland element shall be unpackaged and laid in a relaxed position to relieve any temporary set from shipment packaging prior to placement.

   It is recommended that adjacent deck surfaces be taped off and protected to assure a clean, neat professional installation.

b. **Installation.** The entire installation shall be made in strict accordance with the manufacturer's written instruction. Follow standard manufacturer's recommendation for installation of the material, taking into account block-out dimensions, joint width and ambient temperature conditions.

Asphaltic Expansion Joint System – See Section 823.03.3 of the Rhode Island Department of Transportation Standard Specifications for Road and Bridge Construction, with all revisions.

METHOD OF MEASUREMENT: Each type of "Expansion Joint Seal" will be measured by the number of "Linear Feet" of such joints actually installed in accordance with the Plans and/or as directed by the Engineer. The measured length of expansion joint seal will include the vertical rise at curbs as applicable.

BASIS OF PAYMENT: The accepted quantities of corresponding types of "Expansion Joint Seal" of various widths will be paid for at their respective contract unit prices per "Linear Foot" as listed in the Proposal. The prices so-stated constitute full and complete compensation for all labor, materials and equipment, and all other incidentals required to finish the work, complete and accepted by the Engineer.

END OF SECTION

JOB SPECIFIC

CODE 905.9901

INTEGRALLY COLORED AND STAMPED CONCRETE SIDEWALK

CODE 905.9902

INTEGRALLY COLORED & 12 INCH GRID SCORED PORTLAND CEMENT CONCRETE SIDEWALK

CODE 905.9903

INTEGRALLY COLORED & 15 INCH GRID SCORED PORTLAND CEMENT CONCRETE SIDEWALK

CODE 905.9904

INTEGRALLY COLORED & 24 INCH GRID SCORED PORTLAND CEMENT CONCRETE SIDEWALK

CODE 905.9907

INTEGRALLY COLORED & RADIALLY SCORED PORTLAND CEMENT CONCRETE SIDEWALK

DESCRIPTION: This work shall consist of the installation of integrally colored and stamped or scored, Portland cement concrete pavement for sidewalks in the Station South Plaza, Railroad Street, and Park Row West, which are within the limits of the Providence Station garage structure, at the locations indicated on the Plans, as specified herein, and/or as directed by the Engineer.

MATERIALS: Materials shall meet the requirements of Part 600; Concrete, Section M.02; Portland Cement Concrete and of the Rhode Island Department of Transportation Standard Specifications for Road and Bridge Construction, with all revisions, and the following:

Concrete: Shall be Class XX concrete meeting the requirements of Section 601 of the Standard Specifications of Road and Bridge Construction.

Color: The concrete shall be colored with an integral color dry mix added to concrete as it is mixed in the truck at the ratio specified by the manufacturer. Coloring agent shall meet the requirements of ASTM C 979.

Colored Admixture: Color Admixture for integrally colored concrete shall be a colored, water-reducing, admixture containing no calcium chloride with coloring agents that are lime proof and

UV resistant. Colored admixture shall conform to the requirements of ACI 303.1, ASTM C979, ASTM C494, and AASHTO M194.

a. Color shall be from L.M. Scofield Co., Scofield Road, Douglasville, GA 30134, or approved equal.

    a. Integrally Colored and Stamped Portland Cement Concrete Sidewalk shall be color C-24 (Charcoal), or approved equal.

    b. Integrally Colored and 24 Inch Grid Scored Portland Cement Concrete Sidewalk shall be color 1266 (Cool Gray), or approved equal.

    c. Integrally Colored and 15 Inch Grid Scored Portland Cement Concrete Sidewalk shall be color C-14 (French Gray), or approved equal.

    d. Integrally Colored and 12 Inch Grid Scored Portland Cement Concrete Sidewalk shall be color C-14 (French Gray), or approved equal.

    e. Integrally Colored and Radially Scored Portland Cement Concrete Sidewalk shall be color C-31 (Shadow Slate) or approved equal.

Curing Compound for Integrally Colored Concrete: Curing compound shall comply with ASTM C309, be suitable for exterior use and of same manufacturer as colored admixture, for use with integrally colored concrete.

Hardener: The dry-shake color hardener shall meet ASTM C 979 for color stability.

Release Agent: The release agent shall be a dry powdered, colored agent used to facilitate release of the imprinting tools from concrete surface, and to provide moderate color variations to the textured surface. The release agent shall meet ASTM C 979 for color stability.

Pattern: To be selected by the Engineer.

Erosion Control Sealer: The erosion control sealer shall prevent spalling and erosion due to de-icing salts, and freeze/thaw cycles. The erosion control sealer shall be:

a) Harrington Bomanite Corporation, 816 Webster Street, Marshfield, MA 02050 or
b) Butterfield Color, 625 West Illinois Avenue, Aurora, IL 60506 or
c) L.M. Scofield Co., Scofield Road, Douglasville, GA 30134 or
d) approved equal.

Powder Antiquing Release Agent: As selected by Engineer from manufacturer's standard colors.

Curing Compound: Curing & sealing compound shall be as per the manufacturer's recommendations.

CONSTRUCTION METHODS: Construction methods shall meet the requirements of Section 501.03 Construction Methods of the Rhode Island Department of Transportation Standard Specifications for Road and Bridge Construction, with all revisions, and the following:

Performance History and Quality Control

a) Pavement materials selected for this project shall not vary in color, texture or quality. The contractor shall be solely responsible for guaranteeing that suppliers shall produce the materials in a timely manner and maintain quality consistency to the acceptance of the Engineer. Failure to comply with this requirement shall mean that the Engineer reserves the right to reject materials and source of supply at any time at no additional cost to the State.

Submittals.

a) Firm(s): Submit list of a minimum of three (3) recent successfully completed stamped concrete projects in a pedestrian/plaza type area, similar to the scope of work defined above. List the completed projects in detail including addresses, scope of work performed, references and phone numbers. On-site visits will be coordinated at the State's discretion.

Superintendent(s): A minimum of three (3) years' experience managing the successful completion of a stamped concrete pedestrian/plaza area project similar to the scope of work defined above. Provide resume(s) of the superintendent(s) who will provide on-site supervision for this contract.

b) The Contractor shall submit the materials Certificate of Compliance, and the construction procedures outlining all the aspects necessary to complete the work, including the plastic concrete thickness verification method, the number of thickness measurements, and the corrective measure if the design thickness is not achieved.

The contractor shall fabricate in the field one sample of each of type and color of Portland cement concrete sidewalk, measuring 4' x 4' x 4" thick, for approval by the Engineer before ordering material(s). The sample shall demonstrate the final surface color, finish, texture, and pattern that will be provided uniformly throughout the project.

Concrete mix design. Minimum cement content shall be five (5) sacks per cubic yard of concrete. Slump of concrete shall be consistent throughout Project at 4-inches or less. At no time shall slump exceed 5-inches. If super plasticizers are allowed, slump shall not exceed 8-inches. Do not add calcium chloride to mix. Supplemental admixtures shall not be used unless approved by manufacturer.

Color. The color dry mix shall be added to Portland cement concrete as it is mixed in the truck at the ratio specified by the manufacturer. Add colored admixture to the mix according to manufacturer's written instructions in premeasured bags, not by weight of cement content.

Concrete Placement. The Contractor shall place the Portland cement concrete in one layer with the Vibratory Method. The Contractor shall verify the plastic concrete pavement thickness during the concrete strike-off operation. The Color Hardener and Release Agent shall be applied evenly to the troweled surface prior to imprinting.

Imprinting. While the concrete is still in its plastic 8istage of set, the imprinting tools shall be applied to the surface and then removed as per manufacturer's recommendations. Surfaces shall be uniformly

stamped/imprinted, applying the pattern according to the tool manufacturer's instructions. Touch-up pattern and finish edges with hand tools only as necessary.

Scoring. The Contractor shall score the uncured concrete to a depth of 1" in the 12" x 12", 15" x 15", 24" x 24" grid pattern or radially scored pattern as specified on the Plans using devices to assure straight edges and ¼" joints. Scoring shall not be done by sawcutting.

Curing and Sealing. Apply curing and sealing compound for integrally colored concrete according to manufacturer's instructions using manufacturer's recommended application techniques. Apply curing and sealing compound at consistent time for each pour to maintain close color consistency. Curing compound shall be same color as the colored concrete and supplied by same manufacturer of the colored admixture.

Minor variations in appearance of colored concrete, which are similar to natural variations in color and appearance of uncolored concrete, are acceptable.

Protection. The Con-Shield shall be applied to the surface of the slab in accordance with the manufacturer's recommendations.

METHOD OF MEASUREMENT. "Integrally Colored and Stamped Portland Cement Concrete", "Integrally Colored And 12 Inch Grid Scored Portland Cement Concrete", "Integrally Colored And 15 Inch Grid Scored Portland Cement Concrete", "Integrally Colored and 24 Inch Grid Scored Portland Cement Concrete", and "Integrally Colored and Radially Scored Portland Cement Concrete" will be measured for payment by the "Cubic Yard" actually provided in accordance with this specification, the Plans and/or as directed by the Engineer.

BASIS OF PAYMENT: The accepted quantity of "Integrally Colored and Stamped Portland Cement Concrete" "Integrally Colored And 12 Inch Grid Scored Portland Cement Concrete", "Integrally Colored And 15 Inch Grid Scored Portland Cement Concrete", "Integrally Colored and 24 Inch Grid Scored Portland Cement Concrete" and "Integrally Colored and Radially Scored Portland Cement Concrete" will be paid for at the contract unit price bid per "Cubic Yard" which price will include all labor, materials and equipment, including but not limited to concrete, colored admixture, color hardener, release agent, sealer, joint filler, joint sealant, reinforcement, dowels, forms, contraction joints, construction joints, expansion joints, scoring, all samples and field trials, stamping of the concrete, removal and disposal of non-compliant concrete, protection of concrete during curing, concrete sand, cleaning and washing concrete, steel plating, and all other incidentals required to finish the work, complete in place in accordance with this specification and the Plans, and accepted by the Engineer.

END OF SECTION

JOB SPECIFIC

SECTION 905.9905

48 INCH GRID SCORED PORTLAND CEMENT CONCRETE SIDEWALK

DESCRIPTION: This work consists of constructing sidewalks on the Station South Plaza, Railroad Street, and Park Row West, which are within the limits of the Providence Station garage structure. All of the provisions of Section 905; Sidewalks and Driveways of the Rhode Island Department of Transportation Standard Specifications for Road and Bridge Construction, , with all revisions shall apply with the following exceptions and modifications**.**

905.02.1 Portland Cement Concrete. Portland cement concrete shall be Class XX concrete meeting the requirements of Section 601 of the Standard Specifications of Road and Bridge Construction.

905.02.3 (a) Gravel Borrow. Extruded polystyrene foam shall be used in place of gravel borrow.

905.03.3 (f) Joints. Expansion joints shall be of the dimensions specified, and shall be filled with an approved type of premoulded expansion joint filler. Sidewalks and driveways shall be divided into sections by dummy joints formed by a jointing tool or other acceptable means as directed. These dummy joints shall extend into the concrete for at least 1/3 of the depth and shall be 1/8-inch wide. At no time shall the distance between transverse or longitudinal dummy joints exceed 48.

METHOD OF MEASUREMENT. "48 Inch Grid Scored Portland Cement Concrete Sidewalk" will be measured for payment by the "Cubic Yard" actually provided in accordance with this specification, the Plans and/or as directed by the Engineer.

BASIS OF PAYMENT: The accepted quantity of "48 Inch Grid Scored Portland Cement Concrete Sidewalk" will be paid for at the contract unit price bid per "Cubic Yard" which price will include all labor, materials and equipment, including but not limited to concrete, colored admixture, color hardener, release agent, sealer, joint filler, joint sealant, reinforcement, dowels, forms, contraction joints, construction joints, expansion joints, scoring, all samples and field trials, stamping of the concrete, removal and disposal of non-compliant concrete, protection of concrete during curing, concrete sand, cleaning and washing concrete, steel plating, and all other incidentals required to finish the work, complete in place in accordance with this specification and the Plans, and accepted by the Engineer.

END OF SECTION

JOB SPECIFIC

CODE 905.9906

CEMENT CONCRETE DRIVEWAY

DESCRIPTION: This work consists of constructing cement concrete driveways on Railroad Street which are within the limits of the Providence Station parking garage structure. All of the provisions of Section 905; Sidewalks and Driveways of the Rhode Island Department of Transportation Standard Specifications for Road and Bridge Construction with all revisions shall apply with the following exceptions and modifications**.**

905.02.1 Portland Cement Concrete. Portland cement concrete shall be Class XX concrete meeting the requirements of Section 601 of the Standard Specifications of Road and Bridge Construction.

905.02.3 (a) Gravel Borrow. EXTRUDED POLYSTYRENE FOAM shall be used in place of Gravel Borrow.

905.03.3 (f) Joints. Expansion joints shall be of the dimensions specified, and shall be filled with an approved type of premoulded expansion joint filler. Sidewalks and driveways shall be divided into sections by dummy joints formed by a jointing tool or other acceptable means as directed. These dummy joints shall extend into the concrete for at least 1/3 of the depth and shall be 1/8-inch wide. At no time shall the distance between transverse or longitudinal dummy joints exceed 48 inches.

METHOD OF MEASUREMENT. "Cement Concrete Driveway" will be measured for payment by the "Cubic Yard" actually provided in accordance with this specification, the Plans and/or as directed by the Engineer.

BASIS OF PAYMENT: The accepted quantity of "Cement Concrete Driveway" will be paid for at the contract unit price bid per "Cubic Yard" which price will include all labor, materials and equipment, including but not limited to concrete, colored admixture, color hardener, release agent, sealer, joint filler, joint sealant, reinforcement, dowels, forms, contraction joints, construction joints, expansion joints, scoring, all samples and field trials, stamping of the concrete, removal and disposal of non-compliant concrete, protection of concrete during curing, concrete sand, cleaning and washing concrete, steel plating, and all other incidentals required to finish the work, complete in place in accordance with this specification and the Plans, and accepted by the Engineer.

END OF SECTION

6. Split Face, Rock Faced, Pointed, Rough Cut: A rough and uneven surface resulting from splitting pointing and/or rough cutting the granite.

A thermal finish is to be used for all exposed faces of granite for the project.

Dimensional Tolerance: Face variation from rectangular: 1/4".

Flatness Tolerances: A 4' dimension in any direction on the surface shall determine variation from true plane, or flat surfaces. Such variations on polish, hone, and fine rubbed surfaces shall not exceed tolerances listed below or 1/3 of the specified joint width, whichever is greater. On surfaces having other finishes, the maximum variation from true plane shall not exceed the tolerance listed below or 1/2 of the specified joint width, whichever is greater.

1. Polished, honed or fine rubbed finishes…..... 1/16"
2. Sawn, 4-cut, 6-cut, and 8-cut finishes.……..……1/8"
3. Thermal and coarse stippled finishes……. 1/8"
4. Split face, Rock Face or other rough-cut finishes……..….. 1"

Submittals For New Granite: All new granite shall be consistent by type throughout the project accept as noted below. All granite shall be obtained from quarries having adequate capacity and facilities to meet the specified requirements. Cutting and finishing shall be done by a firm equipped to process the material promptly on order and in strict accordance with specifications. The supplier shall provide evidence to this effect if required by the Engineer.

The Contractor shall submit, to the Engineer for approval, full detailed shop drawings prior to the fabrication of the granite planter walls, granite caps, granite wall facing, granite transition piers, the granite compass rose and granite steps to the Engineer for review and approval. Shop drawings shall include detailed layout plans and elevations, bedding, bonding, jointing and anchoring and the dimensions and identifying number of each piece of granite. All dimensions, finishes, and techniques for installation shall be clearly noted on the shop drawings.

No final sizing or finishing shall be done until the shop drawings for that part of the work have been approved.

Samples for New Granite: The Contractor shall submit three (3) samples of granite each measuring one (1) foot by one (1) foot by a 3/4" minimum depth to the Engineer for approval before ordering. The samples shall demonstrate the final surface color, range of color, texture, and finish.

Granite color and type for the granite planter walls, granite wall caps, granite wall facing, granite transition piers and granite steps shall be "Hillburn Granite" and will be consistent through-out the project.

Granite color and type for the compass rose shall allow for two (2) different colors of granite. The Contractor shall submit two (2) samples of granite each measuring one (1) foot by one (1) foot by a 3/4" minimum depth to the Engineer for approval before ordering. The samples shall demonstrate the final surface color, range of color, texture, and finish.

Stainless Steel Anchors: Stainless steel anchors to anchor stone to new concrete shall be Grade 303 and meet the requirements of ASTM A-582.

JOB SPECIFIC

CODE 999.9903

PARKING ATTENDANTS BOOTH

DESCRIPTION: This work shall consist of supplying and installing a temporary attendant's booth on a concrete pad complete with temporary electrical service at the location shown on the Plans and/or as directed by the Engineer and removal of the booth, pad, access gates and card readers, and temporary electrical connection upon completion of work.

Qualifications
Structures shall be the product of a manufacturer with a minimum of 20 years-documented experience in the design and fabrication of portable steel buildings.

References
Prefabricated building manufacturer shall provide the locations and owners of 3 similar buildings that have been in service more than three years so that the architect can inspect on site and obtain a statement from the owners on the quality of workmanship (fit and finish).

Design loads
Live Loads: Floor 50 PSF, roof 50 PSF, wind 100 MPH.

MATERIALS:

Steel, aluminum, and hardware shall conform to the applicable requirements of Section M.05; Metals of the Rhode Island Department of Transportation, Standard Specifications for Road and Bridge Construction, with all revisions. Metal shall be factory finished to form a surface that resists rusting, chipping, peeling, and fading

A. Dimensions
Booth dimensions shall be five (5') feet wide by seven (7') feet long.

B. Structure
Prefabricated steel building shall be single unit welded steel construction with 14-gauge galvannealed steel panels and tubing on the exterior and 18-gauge galvannealed steel interior panels.

C. Concrete Pad
Concrete pad shall be class XX concrete conforming to Section 601 of the Rhode Island Standard Specifications for Road and Bridge Construction, with all revisions. Concrete pad dimensions shall be six (6') feet wide by eight (16') feet long and eight (8") inches deep. Pad shall be constructed on a 12" compacted gravel base. Concrete pad shall have a final reveal of 5" above final grade of temporary access road.

D. Base and Floor
Booth base height shall be 4 inches for outside use. Floor shall be 12-gauge galvanized steel, 4-way tread plate. Four 1/4" steel angle iron anchor clips with pre-drilled holes are provided to secure building. Anchors provided by installer shall be galvanized or stainless steel.

E. Doors
Prefabricated booth shall have a minimum of 1 door. The door shall be top-suspended heavy duty sliding steel, fully weather-stripped. The door shall be equipped with hook bolt type lock, view window and all roller assembly hardware. Trolleys shall be ball bearing, adjustable pendant type.

F. Windows
Shall be clear anodized aluminum construction and include glazing and all hardware as required. Two (2) sliding for ventilation and/or transaction purposes shall be provided. Ventilation windows shall be furnished with insect screens.

All windows and doors shall contain clear tempered safety glass, 1/8" minimum thickness

G. Finishing
All interior and exterior steel surfaces except rooftop and floor shall be painted with high performance, rust inhibitive paint.

H. Canopy
Canopy shall be 14-gauge minimum galvannealed steel and standard overhang shall extend 3" beyond the walls. Standard fascia height shall be 6".

I. Canopy
Provide lifting ring(s) welded in roof for onsite lifting of unit. Roof surface shall be 14-gauge galvannealed steel sheet. Roof seams shall be continuously welded, caulked and weatherproofed. Roof shall drain to downspout(s).

J. Insulation
Walls shall be insulated with 2" rigid fiberglass board, R=10. Roof structure fully insulated, R=17.4.

K. Work Counter
One 14-gauge painted steel counter across width of booth. Include a minimum of one 16"+ wide steel storage drawer. Counter shall be welded in place. Include one electrical cord access hole install in counter above receptacle.

L. Utilities
Unit shall be delivered complete with all wiring required for fluorescent light with lamp and switch, one 110V duplex outlet, heater, a 100A 12-circuit load center with branch circuit breakers and 100A main breaker. All wiring shall be copper #12 AWG minimum, enclosed in EMT. All fittings, wiring devices and fixtures UL listed. Ready for site connection.

Electrical wall heater shall be fan-forced type including integral thermostat. Minimum heater size shall be 120V/1500W. (Specify optional 208/240V units for larger buildings and cold climates.)

Provide one (1)-1" conduit sch 40 for the three required 240/120V single-phase service wires and one (1)-1" conduit for high speed DSL from the garage to the attendant's booth.

All electrical equipment will be listed by U.L. or equivalent recognized national testing laboratory. Factory installed wiring system shall comply with the current NFPA's National Electrical Code.

M. Portable Air Conditioner

Furnish a 15 pint minimum commercial indoor/outdoor portable evaporative air cooler.

Submittals

Submit to the Engineer for approval, shop drawings and details of elevations, section, floor plan, electric schedule, service entrance locations, anchor clip detail, and applicable certifications and catalog information.

Color charts illustrating available colors and patterns for specified finishes shall be submitted to Engineer for selection.

CONSTRUCTION METHODS: Install parking attendant's booth per the manufacturer's instructions for surface mounting following these procedures:

Install concrete pad in accordance with Section 601 Portland Cement Concrete of the Rhode Island Standard Specifications for Road and Bridge Construction, with all revisions.

Install temporary electrical connection in accordance with Section T.01 Electrical Work, T.04 Wire and Cable, and T.06 Conduit of the Rhode Island Standard Specifications for Road and Bridge Construction, with all revisions.

Building to be shipped completely assembled. All welded joints ground smooth.

Install prefabricated buildings on flat and level concrete pad in accordance with approved shop drawings and manufacturers recommendations. Position units over utility stub-ups, verify building is level and anchor.

METHOD OF MEASUREMENT: "PARKING ATTENDANTS BOOTH" will be measured for payment by the number of "Lump Sum" such units actually furnished and installed in accordance with this specification, the Plans and/or as directed by the Engineer.

BASIS OF PAYMENT: The accepted quantity of "PARKING ATTENDANTS BOOTH" will be paid for at the contract unit price bid per "Lump Sum" as listed in the Proposal. The price so-stated shall constitute full and complete compensation for the concrete pad, attendants booth, all utilities, removal of concrete pad, removal of attendant's booth, removal of temporary electrical connection, restoration and all labor, materials, submittals, tools, and equipment necessary to complete the work as specified.

END OF SECTION

JOB SPECIFIC

CODE 999.9904

PARKING ACCESS AND REVENUE CONTROL SYSTEM

DESCRIPTION: This work shall consist of design, furnishing, and installing a parking access and revenue control system for the temporary parking attendant's booth and access drive as shown on the Plans and/or as directed by the Engineer. Work shall also include complete removal of said system and temporary electrical connections upon completion of work.

Qualifications: Acceptable Manufacturers shall be:

a) Amano McGann, 7 Tide Street, Boston, MA 02210 Phone: 617-224-5700, or
b) SKIDATA USA, 1 Harvard Way, Suite 4, Hillsborough, NJ 08844 Phone: 908-243-000, or
c) Datapark, 1 Seaport Lane, Boston, MA 02210 Phone: 510-483-7275, or
d) Engineer approved equal.

MATERIALS: Parking access and revenue control systems shall include:

Entry Lane

Quantity	Description
1	**Autogate, Dual Detector**

Electrical

120 V AC, 60 Hz
220/240V, 50.60 Hz
Service amps: 20A (120V)
Connections: Four utility power outlets
DIN rail terminal blocks including logic
Main power breakers
Field Wiring: Removable terminal block assembly
Dry contact input, output
12V DC unregulated

Motor Characteristics

Horsepower: 1/3 single-phase instantly reversing motor
Speed: 1625 rpm
Starting amps: 10A (120V) maximum
Running amps: 4.5A (120V)
Heavy-duty V-Belt to drive speed reducer. Internal thermal overload protection

Quantity	Description

Environment Requirements

Temperature: -20 degrees F~120 degrees F
Automatic thermostat controlled heater to be included
Humidity: 10% ~ 90% (non-condensing)

Housing

Heavy-duty, 14-guage all-weather steel construction
Dimensions: Approximately 45" H x 13 ½" W x 18 ½" D
Access: Removable cover on drive mechanism for 360 degree access
Lockable door to electrical connections and control box

Gate Arm & Mounting

Height: 34" as shipped in down position
Length: 12'

Microprocessor-Based Controller

Plug-in installation. Gate up/normal/down switch (internal manual override)
Operation
Modes: One way pay
Bi-directional lane
Free direction
Input/output lane controller

Switch Selectable Features
Extra sensory timer
Backout timer
Closing loop safety "auto stop"

1 **12' Straight Aluminum Gate Arm**

2 **2'x6' Sawed-In Detector Loops Wire/Sealant Kits**

1 **Universal Lane Controller.** Mounting for Gates. Include power supply and mounting plate for gates.

1 **Reader configuration file for Universal Lane Controller**

1 **Entry Station Ticket Dispenser for Magnetic Strip Ticket**

General

Meets ADA (Americans with Disabilities Act) and ANSI (American National Standards Institute) requirements.

Electrical

120V AC, 60 HZ
220/240V AC, 50/60 Hz
10 amp max. (120V) 5 amp max. (240V)
Multiple I/O capability for ticket tracking, counts and monitoring

Quantity Description

Mechanical

Automatic dual ticket feed; dot matrix printer; cartridge ribbon; exclusive RWPV™ (read, write, print and vault) magstripe mechanism

Time Control

Real-time clock synchronization with host computer
Built-in crystal controlled perpetual calendar
Programmable Daylight Saving Time adjustment

Environment

Temperature: -20°F ~ 120°F (-29°C ~ 49°C)
Automatic thermostat-controlled heater included
Humidity: 10% ~ 90% (non-condensing)

Housing

Heavy-duty, 14 gauge steel construction, weather gasketing, lockable door.
Dimensions: 51.54"H x 12.27"W x 20.9"D (130.9 cm x 31.2 cm x 53.04 cm)
Ticket throat: 41" (104 cm)

Printer

Large (7 x 9 dot pattern) dot matrix printer
Prints date and time (12 & 24-hour format), ticket number, machine number and rate
Marks and voids retracted tickets
Self sharpening cutter blade

Tickets

Use fanfold tickets: 5,000 tickets/carton. Holds two cartons.

3 **4" Diameter x 36" High Concrete Filled Steel Bollard with Reflectorized Markings** – two (2) at Gate and one (1) at Entry Station

Exit Lane

1 **Gate, Dual Detector** – Same as Entry Lane

1 **12' Straight Aluminum Gate Arm** – Same as Entry Lane

2 **2'x6' Sawed-In Detector Loops Wire/Sealant Kits** – Same as Entry Lane

1 **Universal Lane Controller. Mounting for Gates.** Includes power supply and mounting plate for Gates. – Same as Entry Lane

1 **Fee Computer and Reader/ Validator**

General

Security Compliance: CISP (Cardholder Information Security Program) compliant.

Computer

Dimensions: approximately 17-1/4"H x 18-7/8"W x 19-3/4"D, one cash drawer
Finish (Standard): Black computer, Black with metallic silver cash drawer
Keyboard: 5 x 8 matrix, alphanumeric keypad 10 function keys

Quantity	Description
	Display: 10.4” active matrix LCD color monitor Clock: PC real-time clock, 7-year internal clock retention Electrical 100/120V AC, 50/60 Hz 220/240V AC, 50/60 Hz Environment Temperature: 41°F ~104°F (5°C ~ 40°C) Humidity: 35% ~ 85% (non-condensing)
1	**Reader/Validator** General Dimensions: 9-1/2”H x 9-3/4”W x 16”D (24 cm x 25 cm x 41 cm) Weight: 20 lbs. (9 kg) Access: Hinged, lockable top cover for access to top mechanism and communications connections. Removable base housing for access to bottom mechanism. Finish: Black housing, Grey polyethylene top cover Lock Box Dimensions: 8-1/4”H x 9-3/4”W x 16-1/4”D (21 cm x 25 cm x 41.275 cm) Weight: 12 lbs. (5.5 kg) Access: Secure keyed drawer Finish: Black housing
1	**Fee Indicator**, 120V, Wall mount/pedestal mount
3	**Steel Bollard with Reflectorized Markings** – two (2) at Gate and one (1) at Ticket Reader
1	**Parking Management Software** – Application database server package with peripherals, sever software and operating system.
1	**TC Converter** with power supply
1	**4-Port Serial to TCP/IP Ethernet Connector**
1	**Revenue Control Software** for processing credit cards at fee computer.

Submittals: Submit to the Engineer for approval, shop drawings and details of all equipment, and catalog information. Installer shall submit documentation of five (5) completed projects of similar size and type as required for this project.

CONSTRUCTION METHODS: Install parking access and revenue control system per the manufacturer’s instructions.

Complete all electrical connections in accordance with Section T.01 Electrical Work, T.04 Wire and Cable, and T.06 Conduit of the Rhode Island Standard Specifications for Road and Bridge Construction, with all revisions.

METHOD OF MEASUREMENT: "PARKING ACCESS AND REVENUE CONTROL SYSTEM" will be measured for payment by the number of "Lump Sum" such system actually furnished and installed in accordance with this specification, the Plans and/or as directed by the Engineer.

BASIS OF PAYMENT: The accepted quantity of "PARKING ACCESS AND REVENUE CONTROL SYSTEM" will be paid for at the contract unit price bid per "Lump Sum" as listed in the Proposal. The price so-stated shall constitute full and complete compensation for the design, furnishing, installing all system components, connection to power source and internet, maintaining system, and the complete removal of the system at completion of the project, and all labor, materials, submittals, tools, and equipment necessary to complete the work as specified.

END OF SECTION

JOB SPECIFIC

CODE L15.9903

INSTALL AMTRAK SUPPLIED STATIONARY BOLLARD AND COVER

CODE L15.9904

INSTALL AMTRAK SUPPLIED REMOVABLE BOLLARD AND COVER

DESCRIPTION: These items of work shall consist of installing stationary bollards, removable bollards, and concrete bollard covers at the locations and to the dimensions shown on the plans in accordance with these specifications and/or directed by the Engineer.

MATERIALS: Shallow mount stationary and removable bollards and bollard covers will be supplied and delivered to the site by AMTRAK. Contractor shall provide a minimum seven (7) calendar days advanced notice in writing to AMTRAK and the Engineer prior to the anticipated date of installation of the bollards and bollard covers to request delivery of said items to the project site. As part of the advanced notice to AMTRAK, Contractor shall also contact by phone and email the following AMTRAK representative:

Ernest Piper
Principal Officer, New England
National Railroad Passenger Corporation (AMTRAK)
Northeast Corridor Investment and Infrastructure Development
1 South Station, 2nd floor
Boston, Massachusetts
Phone 617-694-3477
Ernest.Piper@amtrak.com

Concrete shall be Class XX and shall conform to Section 601 Portland Cement Concrete and Subsection 905.02.1 for Sidewalks; Materials of the Rhode Island Department of Transportation, Standard Specifications for Road and Bridge Construction, with all revisions.

Reinforcing as shown on the drawings shall include wire-fabric that conforms to the requirements of Subsection M.05.02.1 Materials of the Rhode Island Department of Transportation, Standard Specifications for Road and Bridge Construction with all revisions and reinforcing steel as shown on the drawings shall be epoxy coated and conform to Subsection M.05.1, Bar Reinforcement of the Rhode Island Department of Transportation, Standard Specifications for Road and Bridge Construction with all revisions.

SUBMITTALS: Contractor shall submit shop drawings to the Engineer for approval showing installation details adhering to bollard and bollard cover manufacturer's recommendations.

CONSTRUCTION METHODS: Steel Bollard, bollard foundations, and covers will be installed at locations as shown on the Plans and in accordance with manufacturer's directions.

The concrete foundation and sidewalk surface surrounding the bollards shall conform to Subsection 905.03.3 Portland Cement Concrete Sidewalks and Driveways of the Rhode Island Department of Transportation, Standard Specifications for Road and Bridge Construction with all revisions.

Concrete surface treatment shall be 48 inch scored grid as shown on the plans or as directed by engineer.

METHOD OF MEASUREMENT: "Install AMTRAK Supplied Stationary Bollard and Cover" and "Install AMTRAK Supplied Removable Bollard and Cover" will be measured for payment by the unit "Each" for such units actually installed in accordance with the Plans, Specifications, and/or directions of the Engineer.

BASIS OF PAYMENT: The accepted quantity of "Install AMTRAK Supplied Stationary Bollard and Cover" and "Install AMTRAK Supplied Removable Bollard and Cover" will be paid for at the contract unit price per "Each" as listed in the Proposal. The price so-stated constitutes full and complete compensation for all labor, material and equipment required to furnish and install the bollards, including all cement concrete foundation below the level of 4" sidewalk, reinforcing steel and all incidental expenses necessary to complete the work in accordance with the plans and specifications, to the satisfaction of the Engineer.

Payment for the foundation concrete and welded wire mesh shall be considered incidental to this item.

END OF SECTION

JOB SPECIFIC

CODE L15.9905

INSTALL AMTRAK SUPPLIED PINNED BOLLARD AND COVER

DESCRIPTION: This item of work shall consist of installing stationary pinned bollards and concrete bollard covers at the locations and to the dimensions shown on the plans in accordance with these specifications and/or directed by the Engineer.

MATERIALS: Bollards and bollard covers will be supplied and delivered to the site by AMTRAK. Contractor shall provide a minimum seven (7) calendar days advanced notice in writing to AMTRAK and the Engineer prior to the anticipated date of installation of the bollards and bollard covers to request delivery of said items to the project site. As part of the advanced notice to AMTRAK, Contractor shall also contact by phone and email the following AMTRAK representative:

Ernest Piper
Principal Officer, New England
National Railroad Passenger Corporation (AMTRAK)
Northeast Corridor Investment and Infrastructure Development
1 South Station, 2nd floor
Boston, Massachusetts
Phone 617-694-3477
Ernest.Piper@amtrak.com

SUBMITTALS: Contractor shall submit to the Engineer for approval shop drawings showing installation details adhering to bollard and bollard cover manufacturers' recommendations.

CONSTRUCTION METHODS: Pinned steel bollards and bollard covers will be installed at locations as shown on the Plans and in accordance with manufacturer's directions.

METHOD OF MEASUREMENT: "Install AMTRAK Supplied Pinned Bollard and Cover" will be measured for payment by the unit "Each" for such units actually installed in accordance with the Plans, Specifications, and/or directions of the Engineer.

BASIS OF PAYMENT: The accepted quantity of "Install AMTRAK Supplied Pinned Bollard and Cover" will be paid for at the contract unit price per "Each" as listed in the Proposal. The price so-stated constitutes full and complete compensation for all labor, material and equipment required to furnish and install the bollards including drilling the concrete sidewalk surface and all incidental expenses necessary to complete the work in accordance with the plans and specifications, to the satisfaction of the Engineer.

END OF SECTION

R-1

FED. ROAD DIV. NO.	STATE	FEDERAL AID PROJECT NO.	FISCAL YEAR	SHEET NO.	TOTAL SHEETS
	RI			7	75

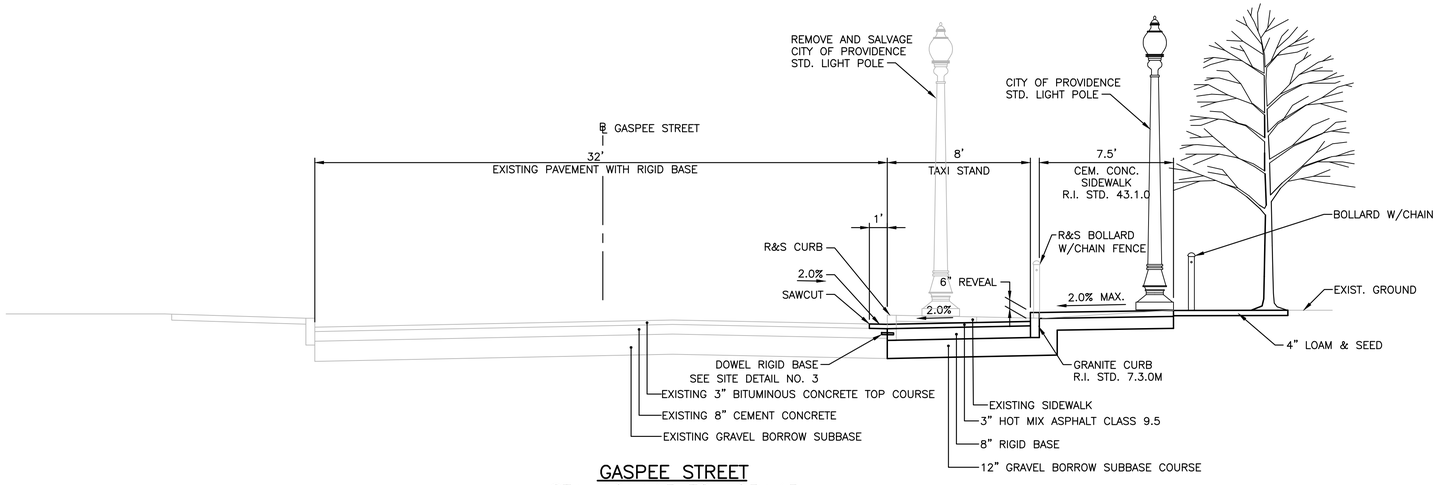

GASPEE STREET
STA. 101+13 TO 103+43
SCALE: 1"=4'

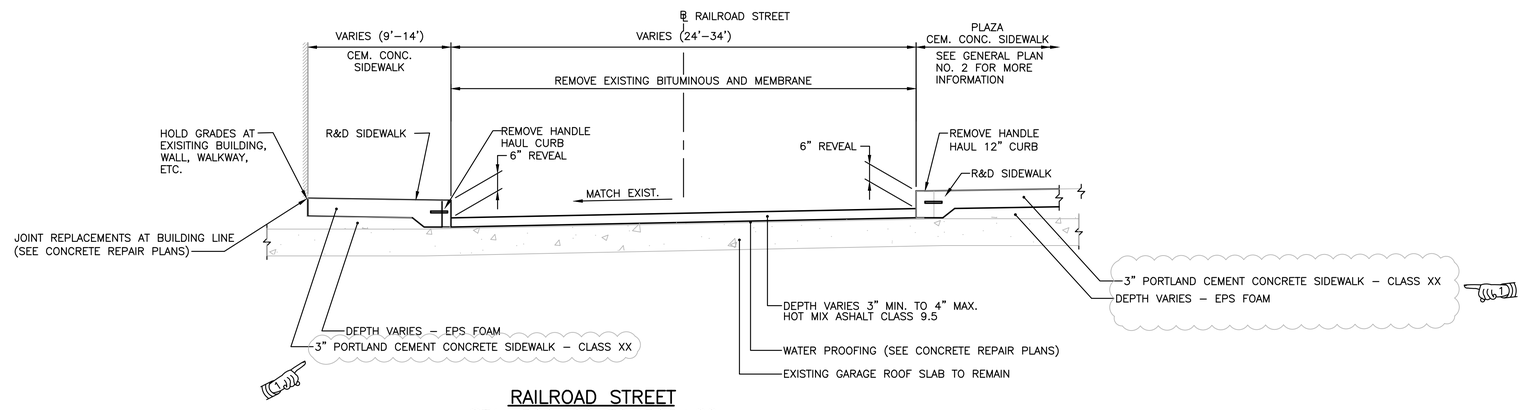

RAILROAD STREET
STA. 300+20 TO 305+60
SCALE: 1"=4'

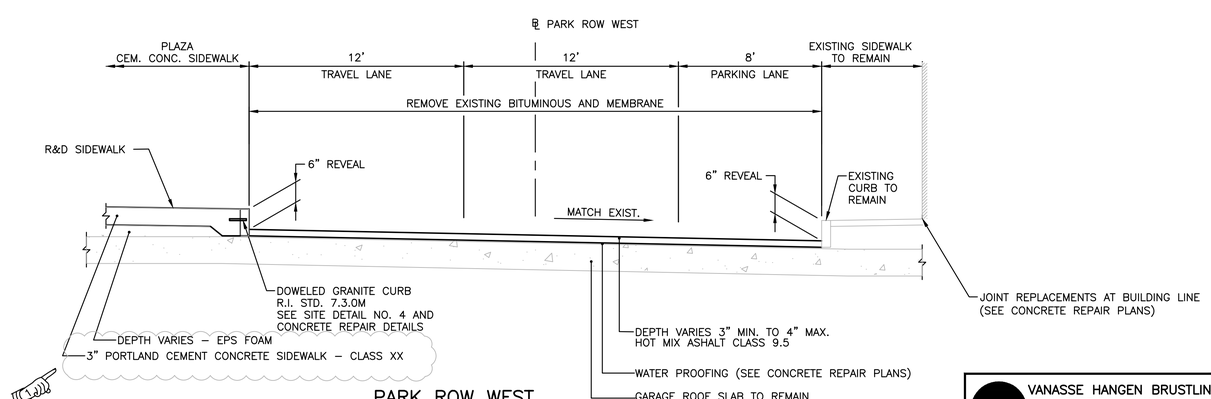

PARK ROW WEST
STA. 400+00 TO 404+05
SCALE: 1"=4'

ADDENDUM NO. 5

VANASSE HANGEN BRUSTLIN, INC.
TRANSPORTATION LAND DEVELOPMENT
ENVIRONMENTAL SERVICES
PROVIDENCE, RHODE ISLAND

REVISIONS		
NO.	DATE	BY
1	9/26/14	VHB

RHODE ISLAND
DEPARTMENT OF TRANSPORTATION

PROVIDENCE STATION
SURFACE IMPROVEMENTS PROJECT
CONTRACT 1
PROVIDENCE, RHODE ISLAND

TYPICAL SECTIONS

CHECKED BY _____ DATE _____ SCALE _____

9004D_V1_007_TYPICAL_ADD05

R-2	FED. ROAD DIV. NO.	STATE	FEDERAL AID PROJECT NO.	FISCAL YEAR	SHEET NO.	TOTAL SHEETS
		RI			8	75

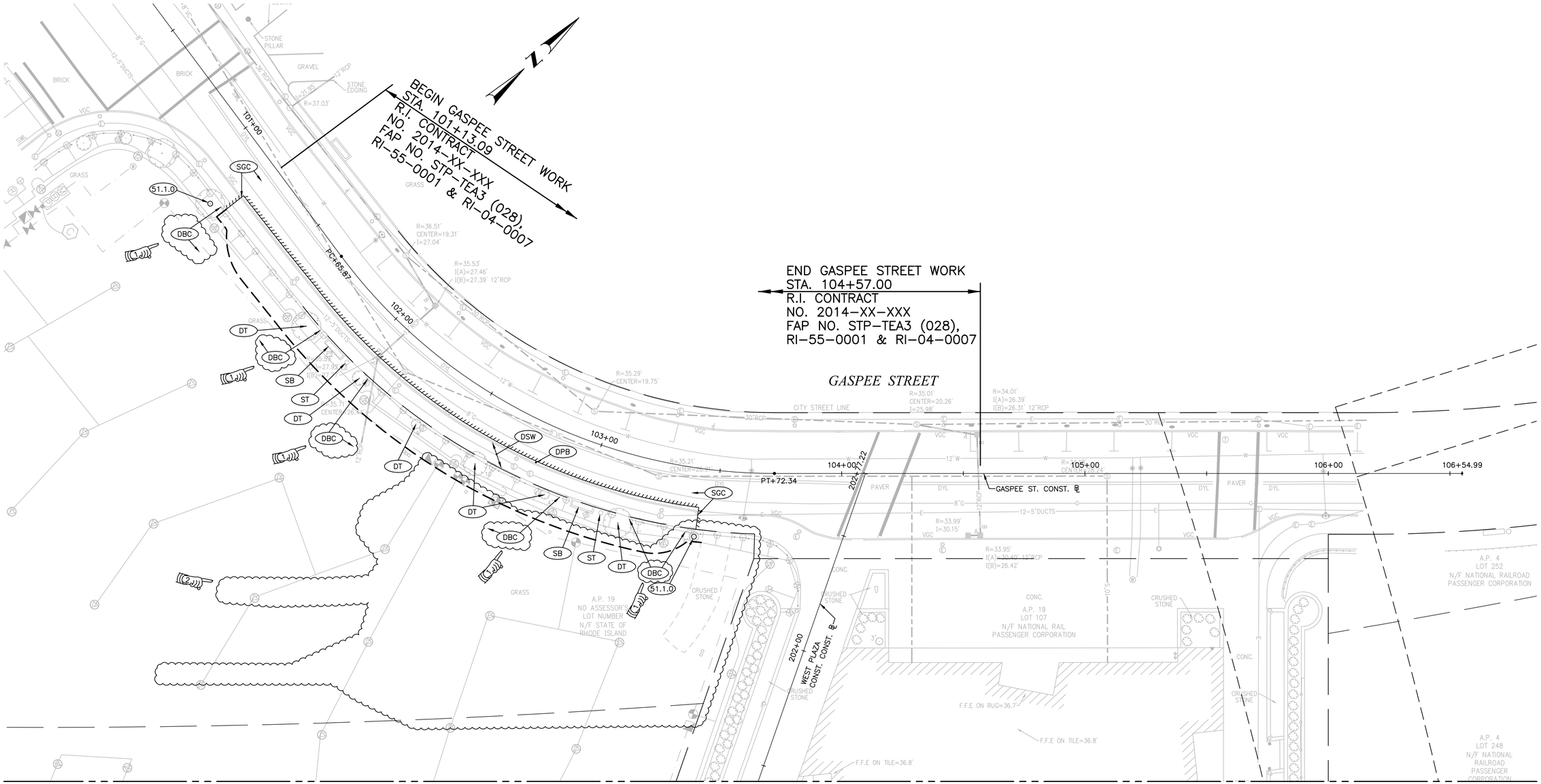

NOTES:

1. SEE ELECTRICAL SITE LIGHTING PLAN NO. 1 FOR MODIFICATIONS TO THE LIGHTING SYSTEM.
2. SEE IRRIGATION PLAN NO. 1 FOR MODIFICATIONS TO THE IRRIGATION SYSTEM.
3. CONTRACTOR SHALL REMOVE AND STOCKPILE ALL SPRINKLER HEADS FROM STAGING AREA, AND PROTECT IRRIGATION VALVE BOXES, PRIOR TO USE OF STAGING AREA.
4. REFER TO TRAFFIC CONTROL TYPICAL DETAILS AND TRAFFIC CONTROL PLANS FOR PEDESTRIAN DETOURS AND VEHICLE TRAFFIC MANAGEMENT.

ADDENDUM NO. 5

20 0 20 40
SCALE IN FEET

VANASSE HANGEN BRUSTLIN, INC.
TRANSPORTATION LAND DEVELOPMENT
ENVIRONMENTAL SERVICES
PROVIDENCE, RHODE ISLAND

REVISIONS		
NO.	DATE	BY
1	9/12/14	VHB
2	9/22/14	VHB

RHODE ISLAND
DEPARTMENT OF TRANSPORTATION

PROVIDENCE STATION
SURFACE IMPROVEMENTS PROJECT
CONTRACT 1

PROVIDENCE, RHODE ISLAND

SITE PREPARATION PLAN NO. 1

CHECKED BY _____ DATE _____ SCALE _____

9004D_V1_008_SITEPREP001_ADD05

FED. ROAD DIV. NO.	STATE	FEDERAL AID PROJECT NO.	FISCAL YEAR.	SHEET NO.	TOTAL SHEETS
	RI			9	75

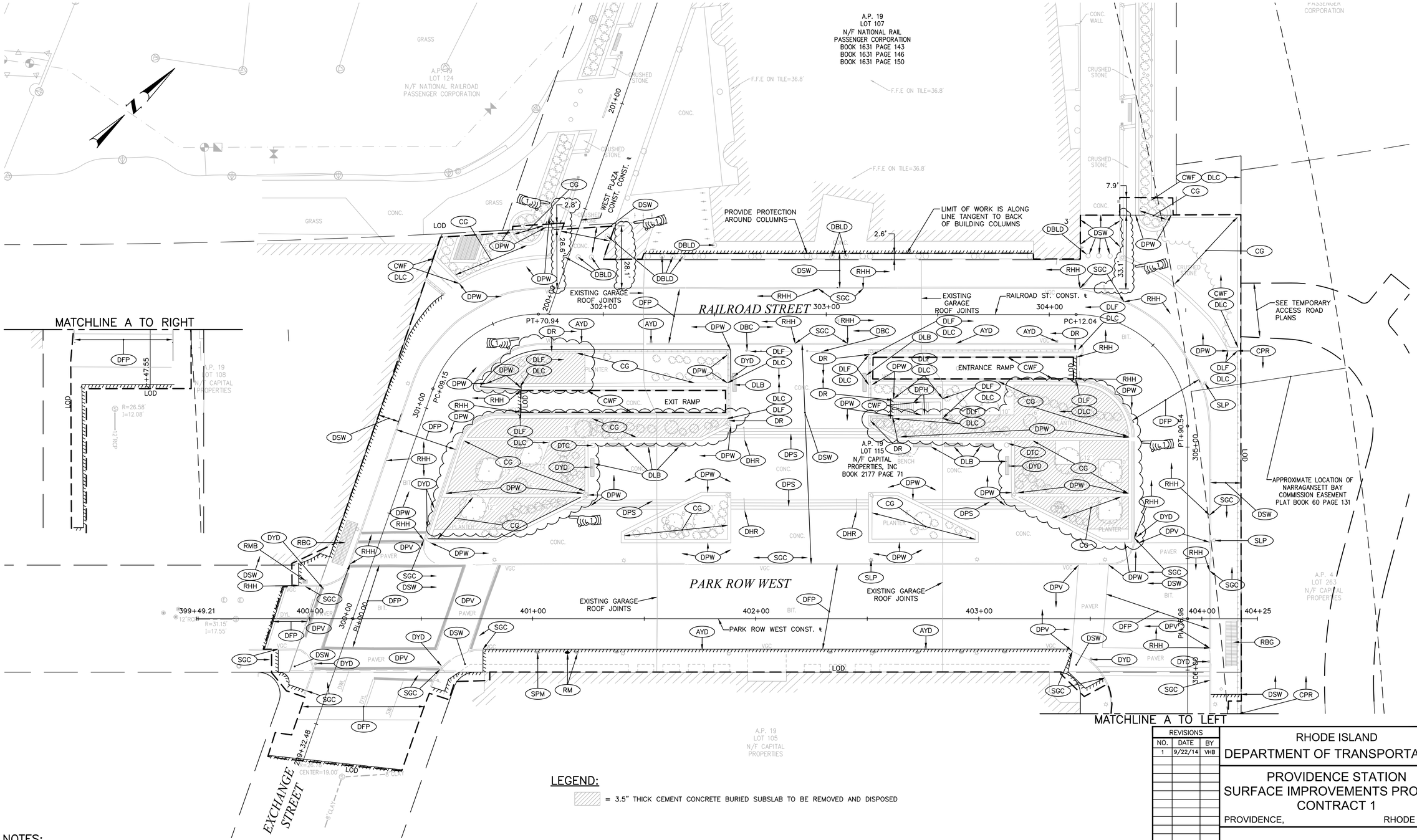

LEGEND:

= 3.5" THICK CEMENT CONCRETE BURIED SUBSLAB TO BE REMOVED AND DISPOSED

NOTES:

1. REFER TO ORIGINAL DESIGN PLANS FOR SIDEWALK, PLANTER, AND ROADWAY COMPOSITION DETAILS.
2. REFER TO TRAFFIC CONTROL TYPICAL DETAILS AND TRAFFIC CONTROL PLANS FOR PEDESTRIAN DETOURS AND VEHICLE TRAFFIC MANAGEMENT.

ADDENDUM NO. 5

20 0 20 40
SCALE IN FEET

VANASSE HANGEN BRUSTLIN, INC.
TRANSPORTATION LAND DEVELOPMENT
ENVIRONMENTAL SERVICES
PROVIDENCE, RHODE ISLAND

REVISIONS		
NO.	DATE	BY
1	9/22/14	VHB

RHODE ISLAND
DEPARTMENT OF TRANSPORTATION

PROVIDENCE STATION
SURFACE IMPROVEMENTS PROJECT
CONTRACT 1

PROVIDENCE, RHODE ISLAND

SITE PREPARATION PLAN NO. 2

CHECKED BY _____ DATE _____ SCALE _____

9004D_V1_009_SITEPREP002_ADD05

R-1

FED. ROAD DIV. NO.	STATE	FEDERAL AID PROJECT NO.	FISCAL YEAR	SHEET NO.	TOTAL SHEETS
	RI			11	75

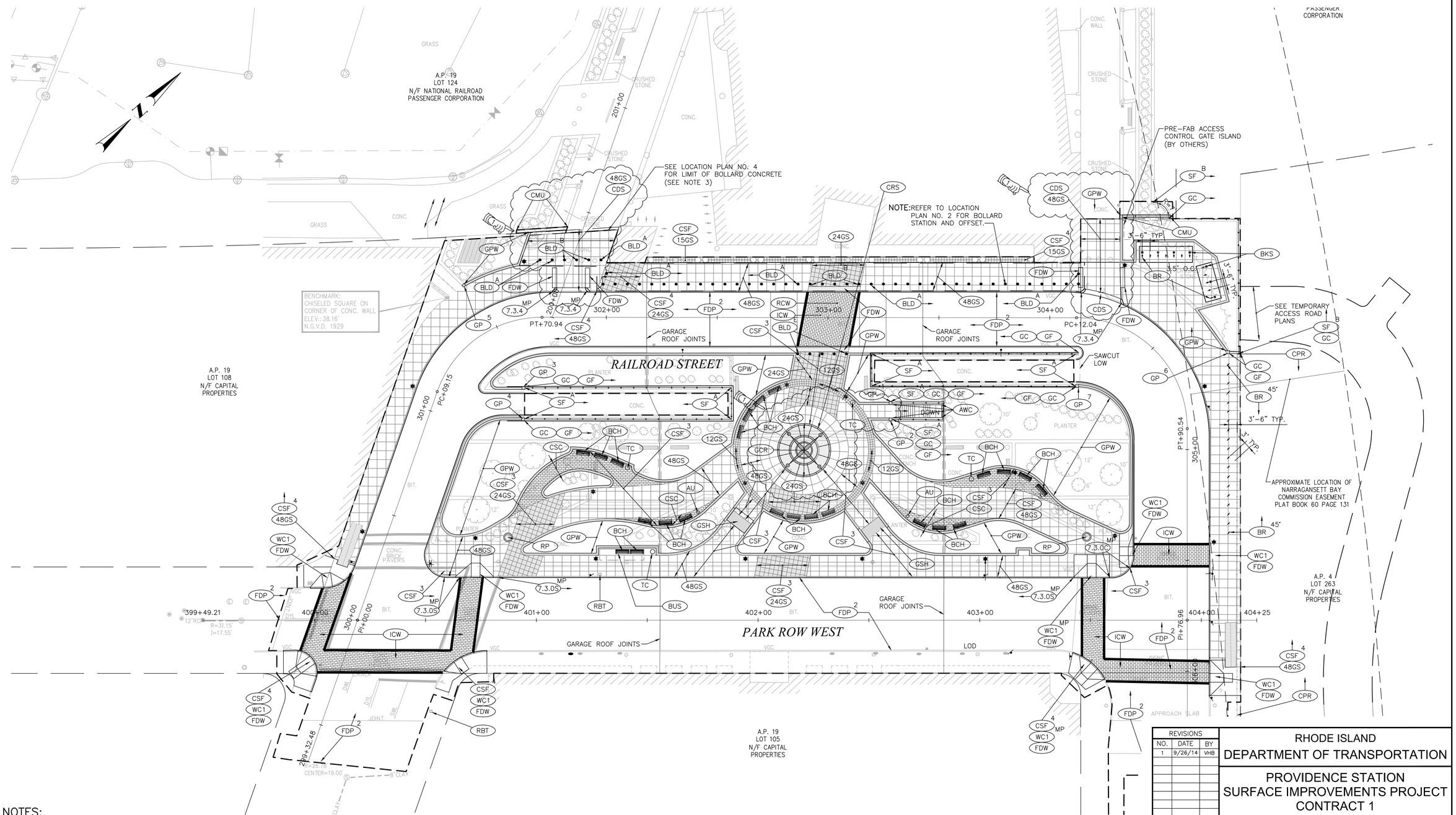

NOTES:

1. REFER TO STRUCTURAL DRAWINGS FOR WATERPROOFING, GRANITE INSTALLATION, AND JOINT REPAIR DETAILS.
2. REFER TO TRAFFIC CONTROL TYPICAL DETAILS AND TRAFFIC CONTROL PLANS FOR PEDESTRIAN DETOURS AND VEHICLE TRAFFIC MANAGEMENT.
3. CONCRETE SIDEWALK PLACED IN THE AREA DEFINED AS BOLLARD CONCRETE SHALL BE CLASS XX, SEE LOCATION PLAN NO. 4 FOR DETAILS.

ADDENDUM NO. 5

20 0 20 40
SCALE IN FEET

VANASSE HANGEN BRUSTLIN, INC.
TRANSPORTATION LAND DEVELOPMENT
ENVIRONMENTAL SERVICES
PROVIDENCE, RHODE ISLAND

REVISIONS		
NO.	DATE	BY
1	9/26/14	VHB

RHODE ISLAND
DEPARTMENT OF TRANSPORTATION

PROVIDENCE STATION
SURFACE IMPROVEMENTS PROJECT
CONTRACT 1

PROVIDENCE, RHODE ISLAND

GENERAL PLAN 2

CHECKED BY _____ DATE _____ SCALE _____

9004D_V1_011_GENERAL002_ADD05

R–1

FED. ROAD DIV. NO.	STATE	FEDERAL AID PROJECT NO.	FISCAL YEAR	SHEET NO.	TOTAL SHEETS
	RI			20	75

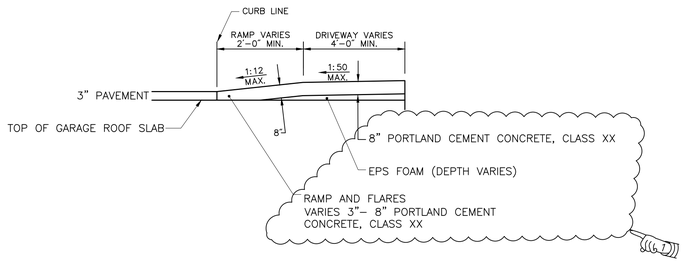

CONCRETE DRIVEWAY – SHALLOW DEPTH (CDS)

NOT TO SCALE

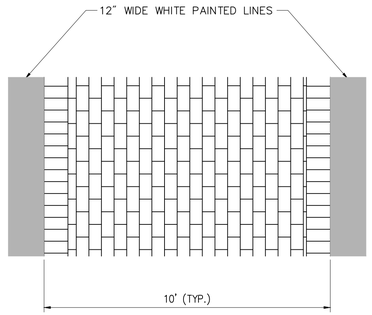

PLAN

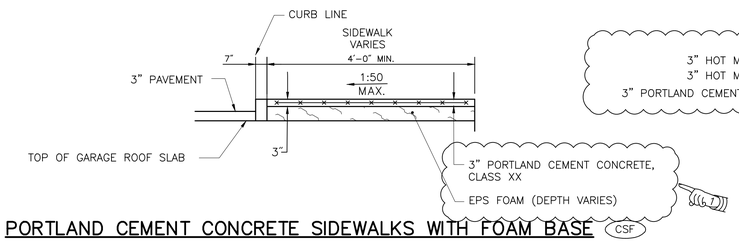

PORTLAND CEMENT CONCRETE SIDEWALKS WITH FOAM BASE (CSF)

NOT TO SCALE

NOTE:
1. SEE CEMENT CONCRETE SIDEWALK WITH FOAM BASE R–2.3 FOR LOCATION SPECIFIC DETAILS.

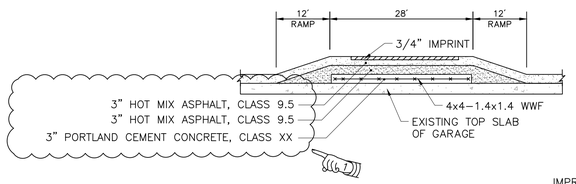

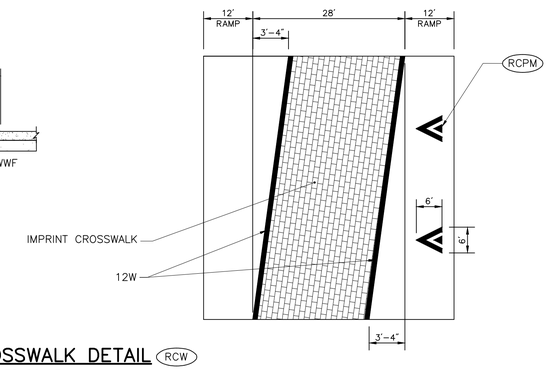

RAISED CROSSWALK DETAIL (RCW)

NOT TO SCALE

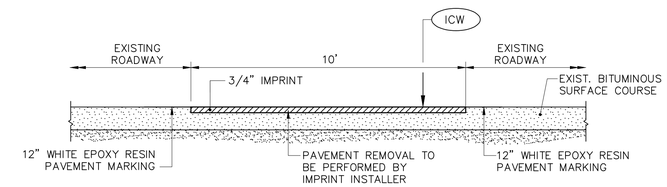

SECTION

IMPRINT CROSSWALK (ICW)

NOT TO SCALE

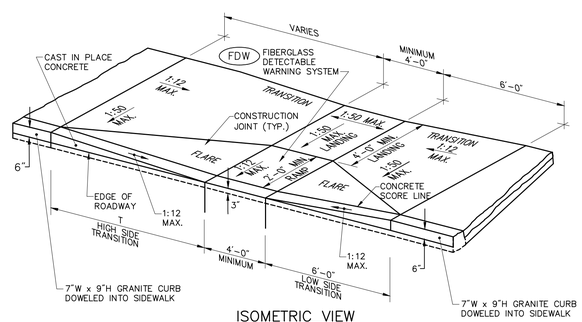

ISOMETRIC VIEW
NOT TO SCALE

ROADWAY PROFILE GRADE	T (FT.)
0.00	6.0
0.01	7.0
0.02	8.0
0.03	9.5
0.04	11.5
0.05	15.0

NOTES:

1. SIDEWALK AND RAMP CONSTRUCTION SHALL BE IN ACCORDANCE WITH SECTION 905 OF THE RI STANDARD SPECIFICATIONS, AND AS SHOWN.
2. WHEN ANY OBSTRUCTION LOCATED IN THE SIDEWALK FALLS WITH A CROSSWALK AREA, THE WHEELCHAIR RAMP SHALL BE PLACED SUCH THAT THE OBSTRUCTION FALLS OUTSIDE OF THE RAMP.
3. AT NO TIME IS ANY PART OF THE WHEELCHAIR RAMP TO BE LOCATED OUTSIDE OF THE CROSSWALK, AND IT IS TO BE CENTERED WHENEVER POSSIBLE.
4. DRAINAGE FACILITIES ARE TO BE LOCATED UP–GRADE OF ALL WHEELCHAIR RAMPS.
5. LOCATION OF WHEELCHAIR RAMPS IS AS SHOWN ON CONTRACT DRAWINGS.
6. IN NO INSTANCE SHALL THE SIDEWALK CROSS SLOPE EXCEED 1:50 EXCEPT WITHIN THE RAMP AREA.
7. AN UNOBSTRUCTED PATH OF TRAVEL WITH A MINIMUM WIDTH OF 4'–0" SHALL BE MAINTAINED.
8. THE WHEELCHAIR RAMP SLOPE AND SIDE SLOPES (TRANSITIONS), MUST NOT BE STEEPER THAN 1:12. HOWEVER, THESE SLOPES MAY BE FLATTER THAN 1:12 WHEN WARRANTED BY SURROUNDING CONDITIONS.
9. WHERE THE ROAD PROFILE EXCEEDS 5% THE HIGH SIDE TRANSITION LENGTH (T) SHALL BE EIGHTEEN FEET (18'–0").
10. IN NO CASE, WHERE A STOP LINE IS WARRANTED, SHALL A RAMP BE PLACED IN ADVANCE OF THE STOP LINE.
11. THE ENTRANCE OF THE WHEELCHAIR RAMP SHALL BE FLUSH WITH THE ROADWAY.
12. THE WHEELCHAIR RAMP SHALL BE CENTERED RADIALLY, OPPOSITE THE RADIUS POINT WHEN POSSIBLE.
13. DETECTABLE WARNING TO BE PAID FOR UNDER ITEM 942.9901

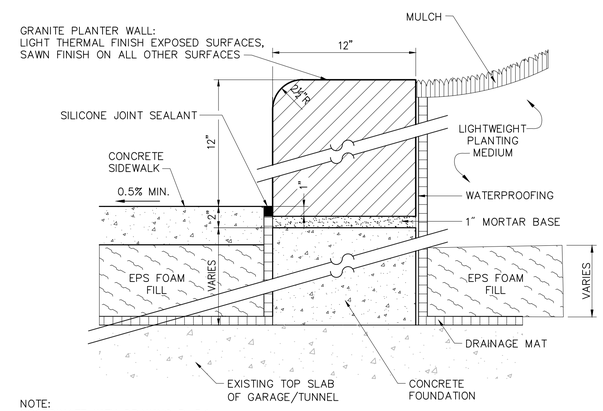

NOTE:
COORDINATE WITH DRAWING R–3.1.

12" GRANITE PLANTER WALL (GPW)

NOT TO SCALE

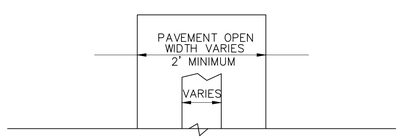

PLAN

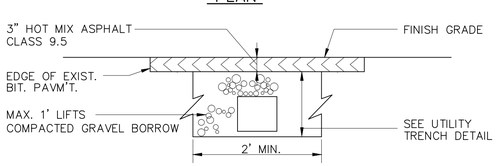

SECTION A–A

CITY OF PROVIDENCE TEMPORARY UTILITY PATCH

NOT TO SCALE

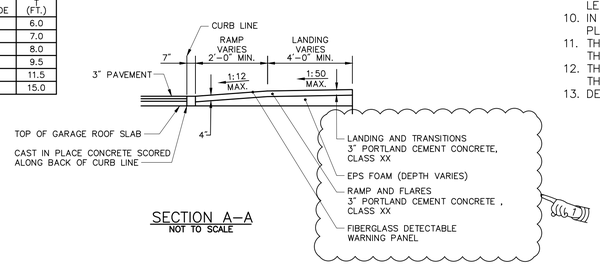

SECTION A–A
NOT TO SCALE

WHEELCHAIR RAMP INTEGRAL CAST IN PLACE CURBING AND SIDEWALK (WC–1)

NOT TO SCALE

ADDENDUM NO. 5

VANASSE HANGEN BRUSTLIN, INC.
TRANSPORTATION LAND DEVELOPMENT
ENVIRONMENTAL SERVICES
PROVIDENCE, RHODE ISLAND

REVISIONS		
NO.	DATE	BY
1	9/22/14	VHB

RHODE ISLAND
DEPARTMENT OF TRANSPORTATION

PROVIDENCE STATION
SURFACE IMPROVEMENTS PROJECT
CONTRACT 1

PROVIDENCE, RHODE ISLAND

SITE DETAILS NO. 1

CHECKED BY _____ DATE _____ SCALE _____

9004D_V1_020_DETAIL001_ADD05

FED. ROAD DIV. NO.	STATE	FEDERAL AID PROJECT NO.	FISCAL YEAR	SHEET NO.	TOTAL SHEETS
	RI			22	75

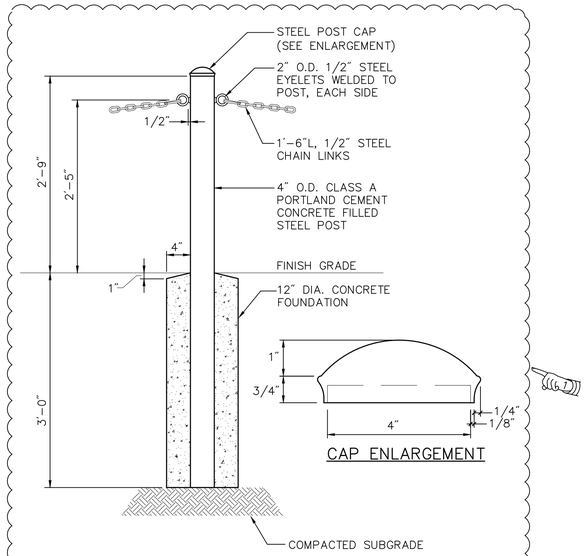

CAP ENLARGEMENT

NOTES:

1. PRIME AND PAINT BOLLARD POST AND CAP WITH APPROVED EXTERIOR METAL EPOXY BASED ACRYLIC PAINT.
2. COLOR TO BE GRAY TO MATCH EXISTING SURROUNDING POST BOLLARDS.

STEEL BOLLARD WITH CHAIN

NOT TO SCALE

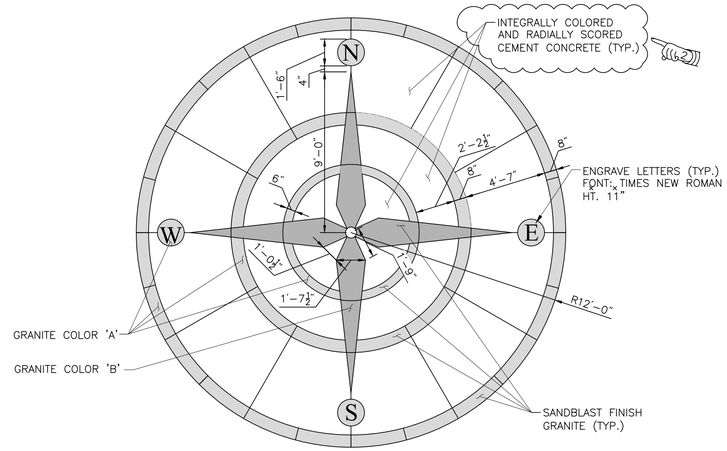

NOTES:
1. SET MEDALLION ORIENTED TO TRUE NORTH.

COMPASS ROSE DETAIL

NOT TO SCALE

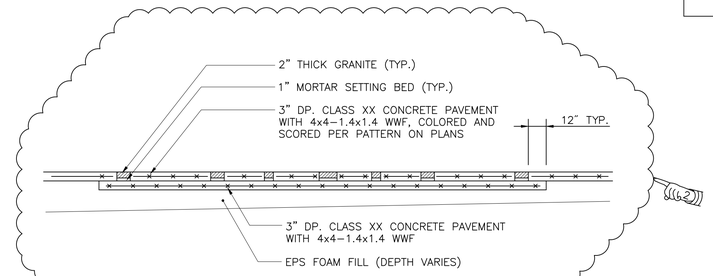

COMPASS ROSE SECTION

NOT TO SCALE

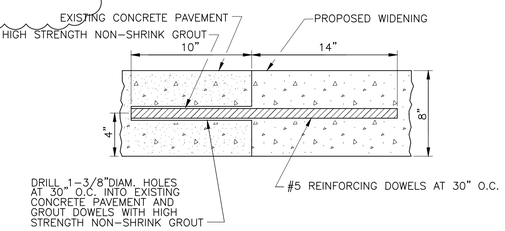

WIDENING CONCRETE PAVEMENT

NOT TO SCALE

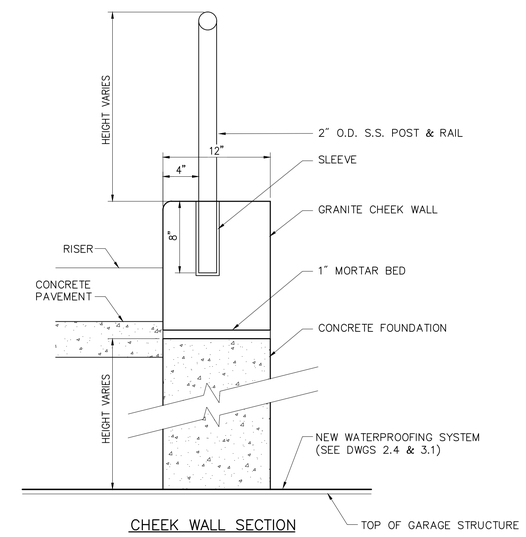

CHEEK WALL SECTION

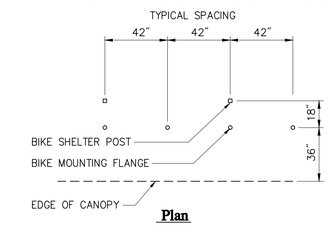

Plan

NOTES:

1. INSTALL IN ACCORDANCE WITH MANUFACTURER'S RECOMMENDATIONS.

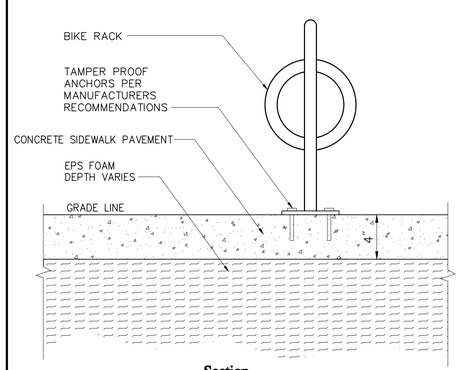

Section

BIKE RACK – SURFACE MOUNTED

NOT TO SCALE

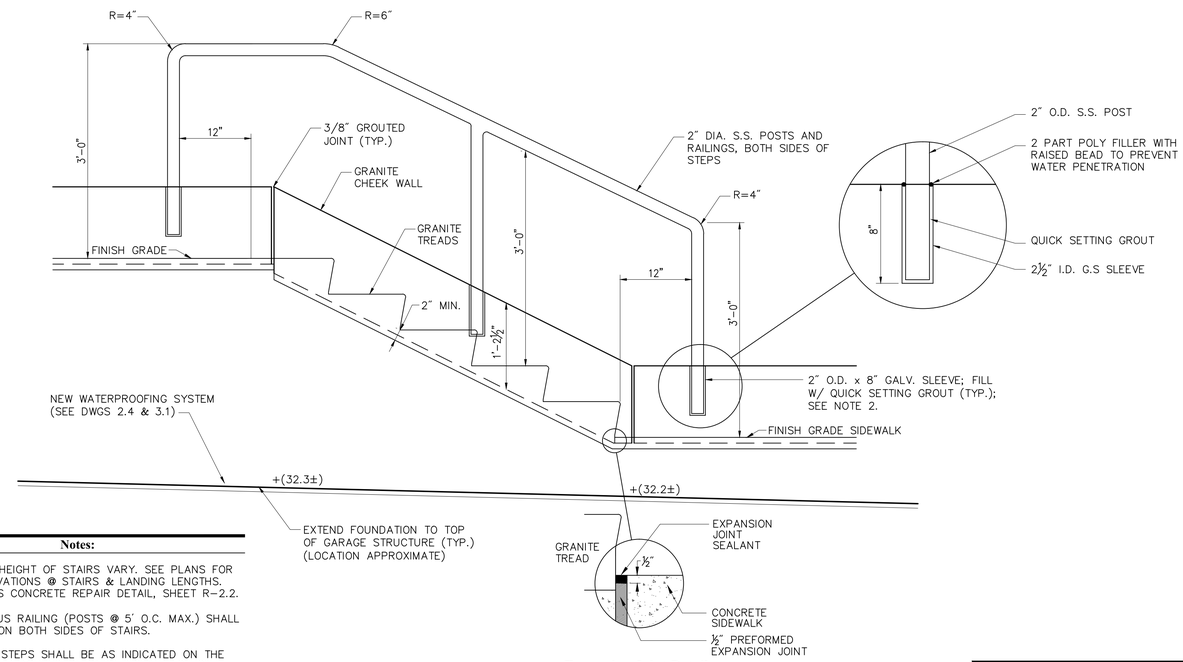

Notes:

1. SPACE & HEIGHT OF STAIRS VARY. SEE PLANS FOR SPOT ELEVATIONS @ STAIRS & LANDING LENGTHS. SEE PLANS CONCRETE REPAIR DETAIL, SHEET R-2.2.
2. CONTINUOUS RAILING (POSTS @ 5' O.C. MAX.) SHALL BE USED ON BOTH SIDES OF STAIRS.
3. WIDTH OF STEPS SHALL BE AS INDICATED ON THE PLANS AS MEASURED BETWEEN INSIDE FACE OF CHEEK WALLS.

Expansion Joint Detail

STAIR WITH HANDRAIL

NOT TO SCALE

REVISIONS		
NO.	DATE	BY
1	9/12/14	VHB
1	9/30/14	VHB

VANASSE HANGEN BRUSTLIN, INC.
TRANSPORTATION LAND DEVELOPMENT
ENVIRONMENTAL SERVICES
PROVIDENCE, RHODE ISLAND

RHODE ISLAND
DEPARTMENT OF TRANSPORTATION

PROVIDENCE STATION
SURFACE IMPROVEMENTS PROJECT
CONTRACT 1

PROVIDENCE, RHODE ISLAND

SITE DETAILS NO. 3

CHECKED BY _____ DATE _____ SCALE _____

ADDENDUM NO. 5

FED. ROAD DIV. NO.	STATE	FEDERAL AID PROJECT NO.	FISCAL YEAR	SHEET NO.	TOTAL SHEETS
	RI			23	75

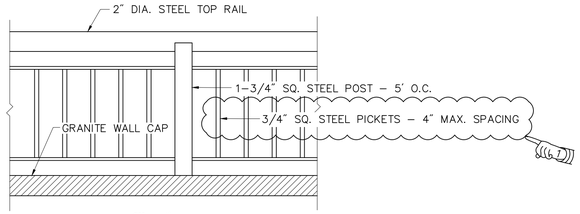

Elevation

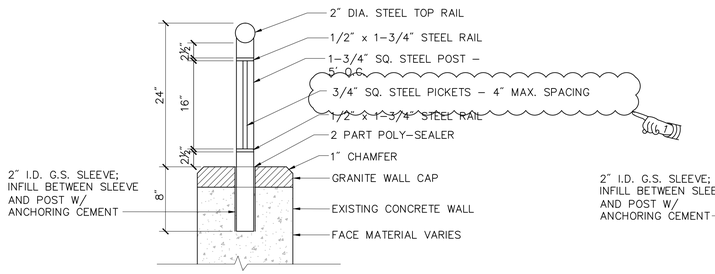

Section

TYPE A
WALL MOUNTED ORNAMENTAL STEEL FENCE–24" HIGH

NOT TO SCALE

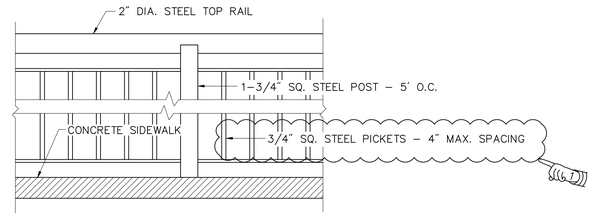

Elevation

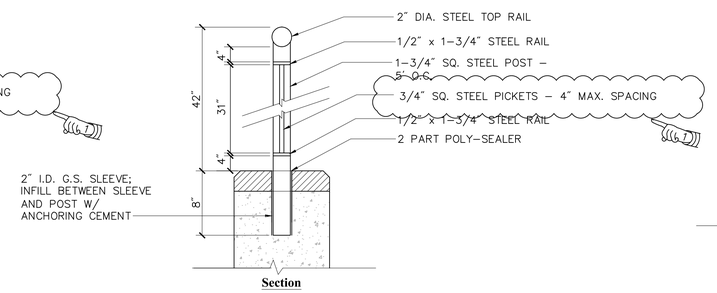

Section

TYPE B
WALL MOUNTED ORNAMENTAL STEEL FENCE – 42" HIGH

NOT TO SCALE

NOTE: TOP OF RAILING SHALL BE A MINIMUM OF 42" ABOVE GROUND PLANE.

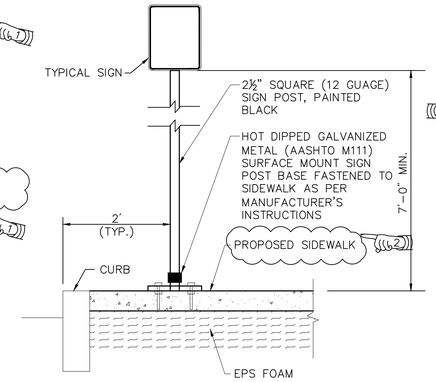

SURFACE MOUNTED SIGN POST
24.2.0 M, 24.4.0 M, 24.6.0 M, 24.6.1 M

NOT TO SCALE

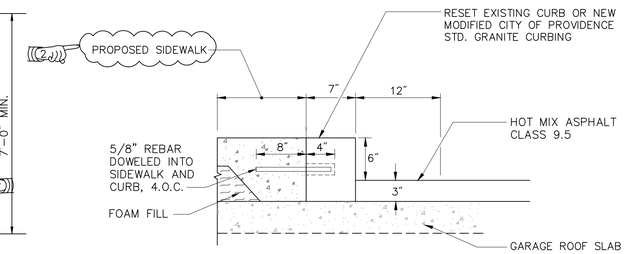

NOTE:

SEE CONCRETE REPAIR DETAILS AND SECTIONS FOR SIDEWALK REINFORCING AND MEMBRANE DETAILS.

INSTALLATION OF CURBING (7.3.0) MP
RAILROAD STREET & PARK ROW WEST

NOT TO SCALE

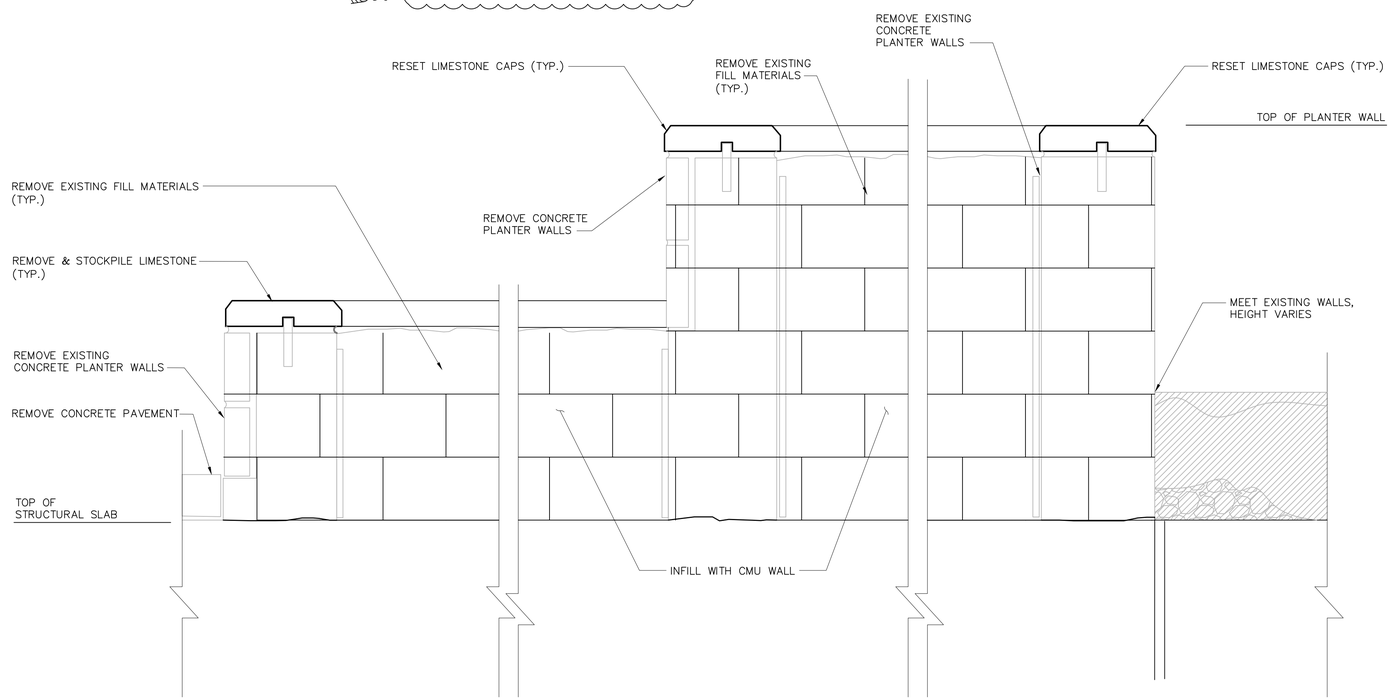

TEMPORARY CMU WALL (CMU)

NOT TO SCALE

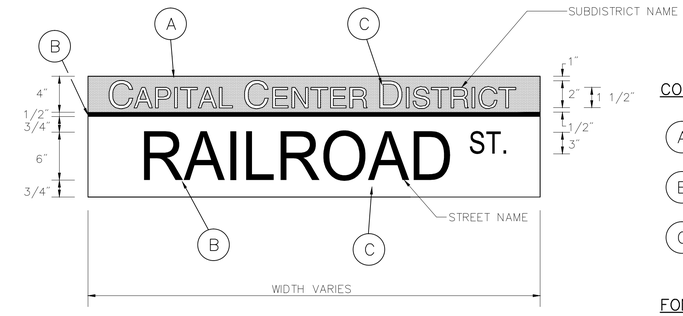

COLOR SCHEME

(A) = TO BE PROVIDED BY THE CITY

(B) = PMS BLACK

(C) = 3M SCOTCHLITE DIAMOND GRADE REFLECTIVE SHEETING, #980-10, WHITE

FONTS

SUBDISTRICT NAME = CG TRIUMVIRATE BOLD (75%)
STREET NAME = ARIAL NARROW

NOTES:

1. STREET NAME SIGNS TO BE INSTALLED AT LOCATIONS SHOWN ON THE PLANS.
2. SEE SIGNING & STRIPING PLANS FOR STREET NAME LEGENDS.
3. STREET NAME SIGNS SHALL BE SUPPORTED BY A BRACKET ON THE BOTTOM OF THE SIGN WITH A MINIMUM LENGTH OF 3/4 OF THE LENGTH OF THE SIGN PANEL.

STREET NAME SIGN DETAIL

NOT TO SCALE

REVISIONS		
NO.	DATE	BY
1	9/12/14	VHB
2	9/22/14	VHB

RHODE ISLAND
DEPARTMENT OF TRANSPORTATION

PROVIDENCE STATION
SURFACE IMPROVEMENTS PROJECT
CONTRACT 1

PROVIDENCE, RHODE ISLAND

SITE DETAILS NO. 4

VANASSE HANGEN BRUSTLIN, INC.
TRANSPORTATION LAND DEVELOPMENT
ENVIRONMENTAL SERVICES
PROVIDENCE, RHODE ISLAND

CHECKED BY _____ DATE _____ SCALE _____

ADDENDUM NO. 5

FED. ROAD DIV. NO.	STATE	FEDERAL AID PROJECT NO.	FISCAL YEAR	SHEET NO.	TOTAL SHEETS
	RI			37	75

TAPER LENGTH CALCULATION

L= W x S – FOR POSTED SPEEDS GREATER THAN OR EQUAL TO 45 MPH

L= (W x S^2)/60 – FOR POSTED SPEEDS LESS THAN 45 MPH

L= TAPER LENGTH (FT)
W= WIDTH OF TRAVEL/SHOULDER LANE TO BE CLOSED (FT)
S= POSTED SPEED LIMIT OR ANTICIPATED OPERATING SPEED (MPH)

EMERGENCY CONTACTS

RI STATE POLICE (401) 444–1000
RIDOT MAINTENANCE (401) 222–2378
RIDOT TMC (401) 222–5826

FOR MUNICIPALITY CONTACTS, SEE CONTRACT SPECIFIC DOCUMENTS

LEGEND

- TEMPORARY CONSTRUCTION SIGN. TYPE NOTED
- TRAFFIC LANE DURING CONSTRUCTION
- FLUORESCENT TRAFFIC CONE, RI STD 26.1.0 OR POLYETHYLENE DRUM WITH MARKINGS, RI STD 26.2.0
- POLICE DETAIL
- POLICE OFFICER WITH CRUISER & FLASHING LIGHTS
- PORTABLE FLASHING ARROW
- WORK AREA
- TYPE III BARRICADE, R.I. STD. 26.3.0

NOTES:

1. CONTRACTOR SHALL PLACE TWO (2) PORTABLE VARIABLE MESSAGE BOARDS (PVMS) TWO WEEKS PRIOR TO START OF CONSTRUCTION TO NOTIFY THE PUBLIC OF THE DATE WORK WILL BEGIN. PVMS SHALL ALSO BE PLACED ON GASPEE STREET TWO WEEKS PRIOR TO THE COMPLETION OF WORK TO NOTIFY THE PUBLIC TO USE GASPEE STREET FOR DROP–OFFS WHILE CONSTRUCTION IS ON–GOING ALONG RAILROAD STREET AND PARK ROW WEST. THE MESSAGES TO BE DISPLAYED ON THE PVMS SHALL BE COORDINATED WITH THE ENGINEER AND THE RIDOT TRANSPORTATION MANAGEMENT CENTER (TMC).
2. CONTRACTOR SHALL PLACE TEMPORARY FENCE ON UPPER LEVEL OF GARAGE TO SECURE WORK AREA AND PROVIDE PEDESTRIAN ACCESS TO THE STAIRS AND ELEVATOR.

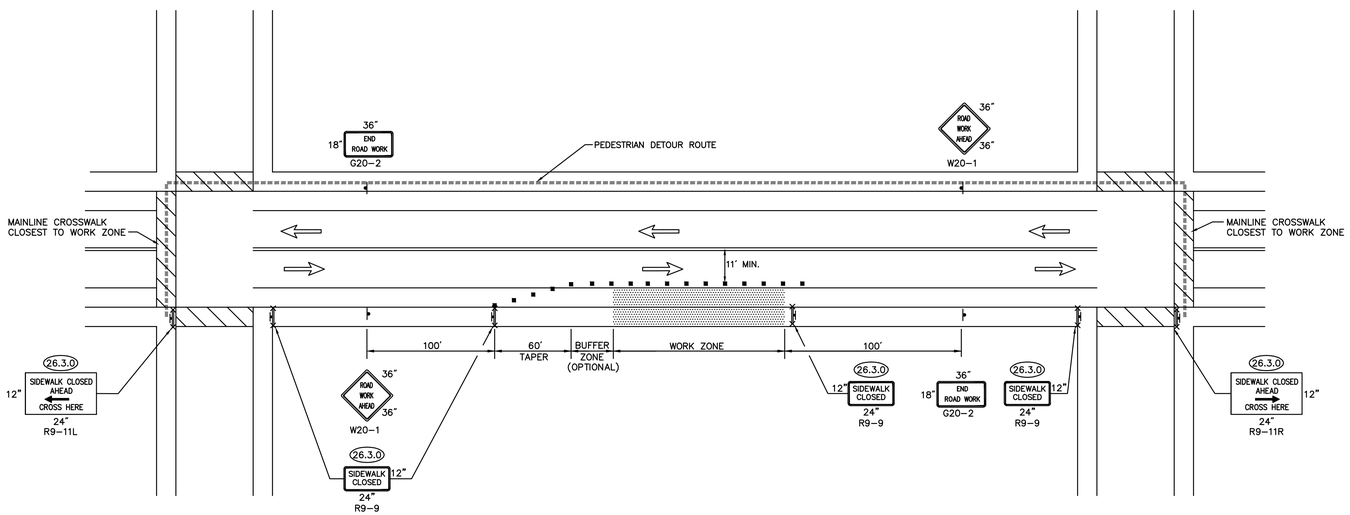

NOTE:

1. THE DETAIL SHOWN DEPICTS WORK IN THE RIGHT SHOULDER AND ADJACENT TRAVEL LANE BUT MAY BE UTILIZED FOR WORK ON THE LEFT SIDE OF THE ROADWAY WITH VEHICLE PLACEMENT SHIFTED TO THE LEFT SIDE OF THE ROADWAY AS SHOWN AND REPLACING THE W20–5cR SIGN WITH A W20–5cL (LEFT LANE CLOSED AHEAD).

TYPICAL SHOULDER WORK WITH MINOR ENCROACHMENT & SIDEWALK CLOSURE
NOT TO SCALE

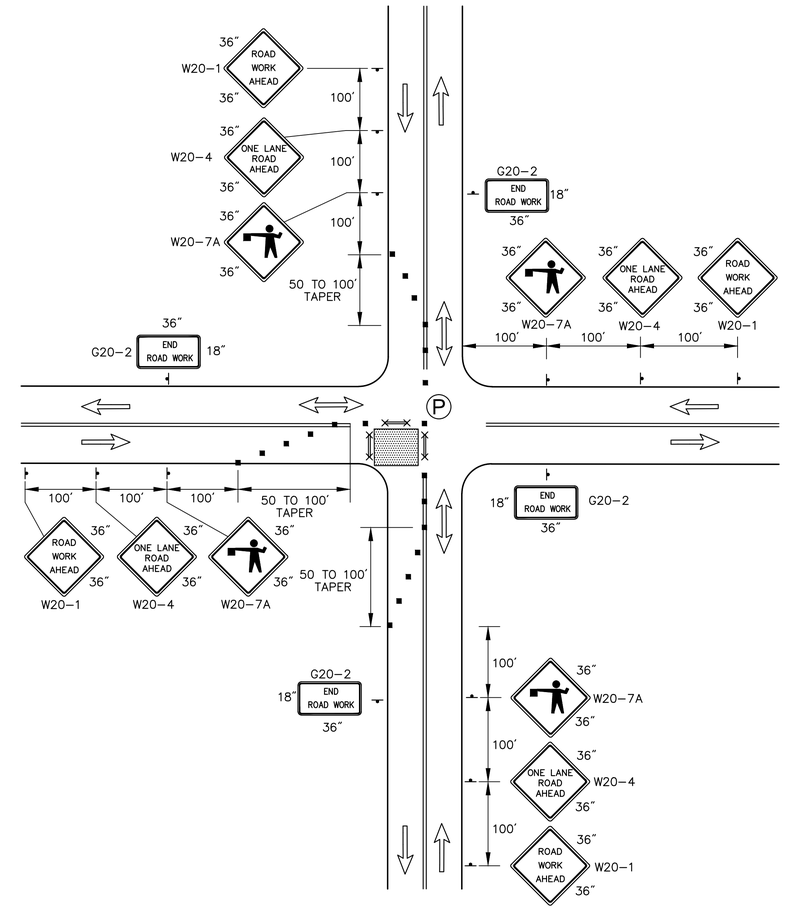

CLOSURE AT THE SIDE OF AN INTERSECTION
NOT TO SCALE

REVISIONS		
NO.	DATE	BY
1	9/17/14	VHB

RHODE ISLAND
DEPARTMENT OF TRANSPORTATION

PROVIDENCE STATION
SURFACE IMPROVEMENTS PROJECT
CONTRACT 1
PROVIDENCE, RHODE ISLAND

TRAFFIC CONTROL
TYPICAL DETAILS NO. 1

CHECKED BY _____ DATE _____ SCALE _____

VANASSE HANGEN BRUSTLIN, INC.
TRANSPORTATION LAND DEVELOPMENT ENVIRONMENTAL SERVICES
PROVIDENCE, RHODE ISLAND

ADDENDUM NO. 5

FED. ROAD DIV. NO.	STATE	FEDERAL AID PROJECT NO.	FISCAL YEAR	SHEET NO.	TOTAL SHEETS
	RI			39	75

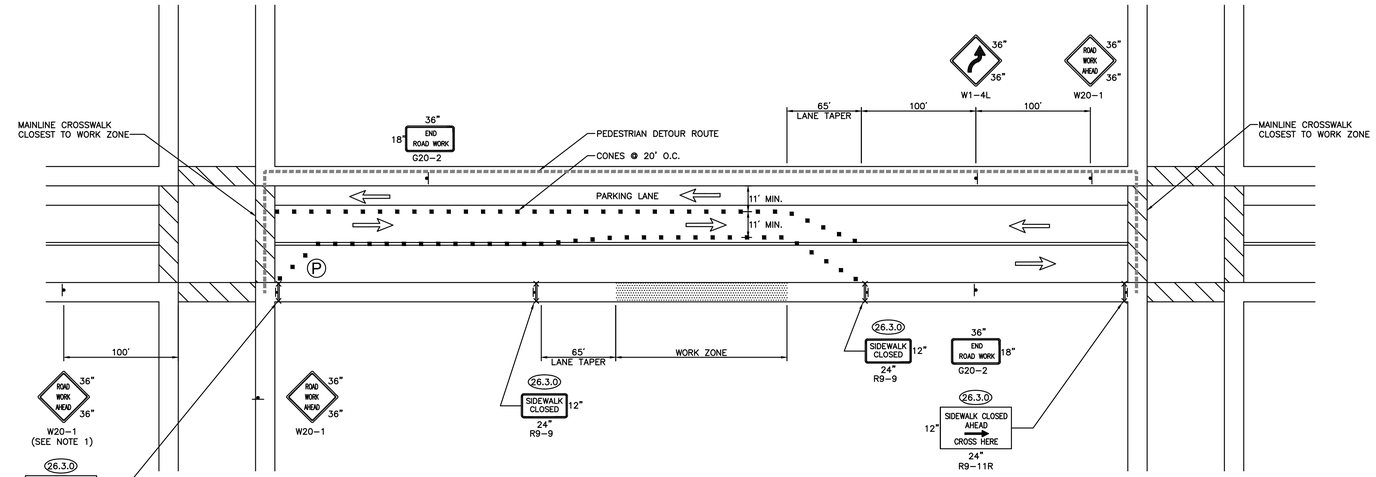

NOTES

1. SIGNS SHALL BE LOCATED ON HAYES STREET AND FRANCIS STREET.
2. TRAFFIC CONTROL SHALL BE REMOVED AT THE END OF EACH DAY. TEMPORARY MOUNTING OF SIGNS TO BE APPROVED BY THE ENGINEER.
3. **TRAFFIC CONTROL MAY BE IMPLEMENTED CONCURRENTLY IN ZONES A AND B.**

TYPICAL ELIMINATION OF PARKING AND LANE SHIFT
TRAFFIC CONTROL ZONE A (GASPEE STREET) AND MISCELLANEOUS LOCATIONS

NOT TO SCALE

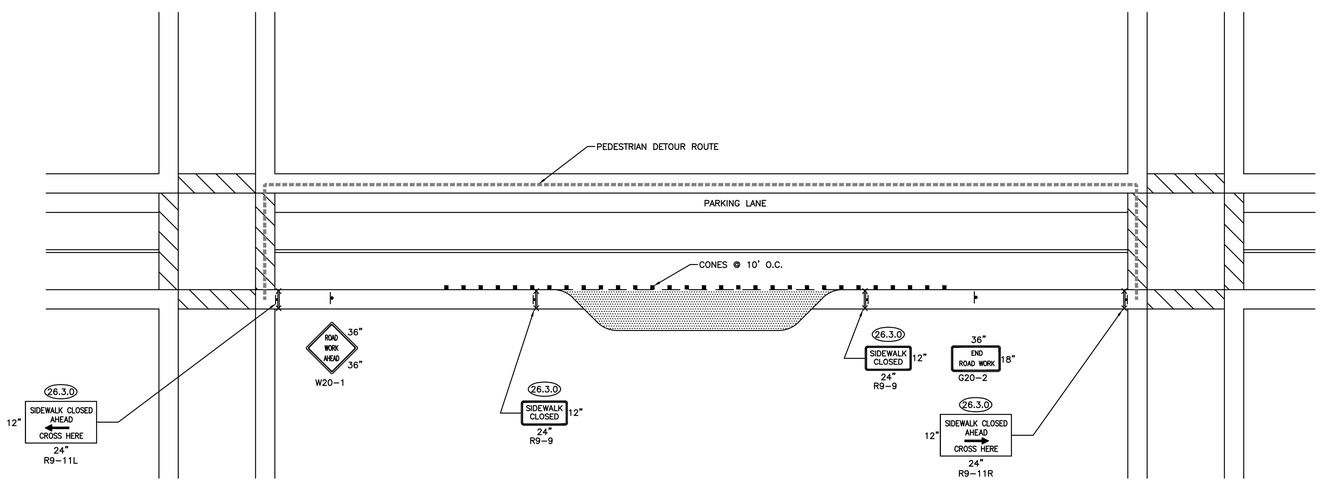

TYPICAL TRAFFIC CONTROL AT END OF WORK DAY
TRAFFIC CONTROL ZONE A (GASPEE STREET) AND MISCELLANEOUS LOCATIONS

NOT TO SCALE

TRAFFIC CONTROL ZONES:

1. ALL WORK ZONES SHALL BE COORDINATED WITH RIDOT, THE CITY, RIPTA, AND AMTRAK.
2. TRAFFIC CONTROL SHALL NOT BE IMPLEMENTED CONCURRENTLY IN ZONES C, D, AND E.
3. A PASSENGER DROP OFF/ PICK UP AREA SHALL BE PROVIDED AT ALL TIMES ON BOTH SIDES OF THE BUILDING.
4. A DROP OFF/ PICK UP ON THE SOUTH SIDE OF THE STATION SHALL BE PROVIDED ON RAILROAD STREET OR PARK ROW WEST AT ALL TIMES.
5. A TAXI CAB STAND ADEQUATE FOR 8 TAXI CABS SHALL BE PROVIDED AT ALL TIMES.
6. PEDESTRIAN DETOURS SHALL BE IMPLEMENTED IN ACCORDANCE WITH THE MUTCD WHEN ACCESS TO ANY ENTRANCE/EXIT OF THE TRAIN STATION IS RESTRICTED.
7. THE CONTRACTOR SHALL PROVIDE ADA COMPLIANT PEDESTRIAN ACCESS TO A MINIMUM OF TWO SIDES OF PROVIDENCE STATION AT ALL TIMES INCLUDING ACCESS TO/FROM GASPEE STREET AND RAIL ROAD STREET.
8. TEMPORARY BIKE PARKING SHALL BE PROVIDED DURING THE CONSTRUCTION OF THE WEST PLAZA.
9. THE CONTRACTOR SHALL COORDINATE WITH AMTRAK WHEN EITHER VEHICLE ACCESS POINT TO THE EAST PLAZA IS RESTRICTED.
10. TEMPORARY CONSTRUCTION SIGN MOUNTING SHALL BE APPROVED BY THE ENGINEER. SIGNS SHALL NOT BE EMBEDDED OVER THE GARAGE ROOF DECK, NOR PLACED IN A WAY THAT OBSTRUCTS THE PEDESTRIAN RIGHT OF WAY.

REVISIONS		
NO.	DATE	BY
1	10/1/14	VHB

RHODE ISLAND
DEPARTMENT OF TRANSPORTATION

PROVIDENCE STATION
SURFACE IMPROVEMENTS PROJECT
CONTRACT 1
PROVIDENCE, RHODE ISLAND

TRAFFIC CONTROL
PLAN NO. 1

CHECKED BY _____ DATE _____ SCALE _____

VANASSE HANGEN BRUSTLIN, INC.
TRANSPORTATION LAND DEVELOPMENT
ENVIRONMENTAL SERVICES
PROVIDENCE, RHODE ISLAND

ADDENDUM NO. 5

R-1

FED. ROAD DIV. NO.	STATE	FEDERAL AID PROJECT NO.	FISCAL YEAR	SHEET NO.	TOTAL SHEETS
	RI			40	75

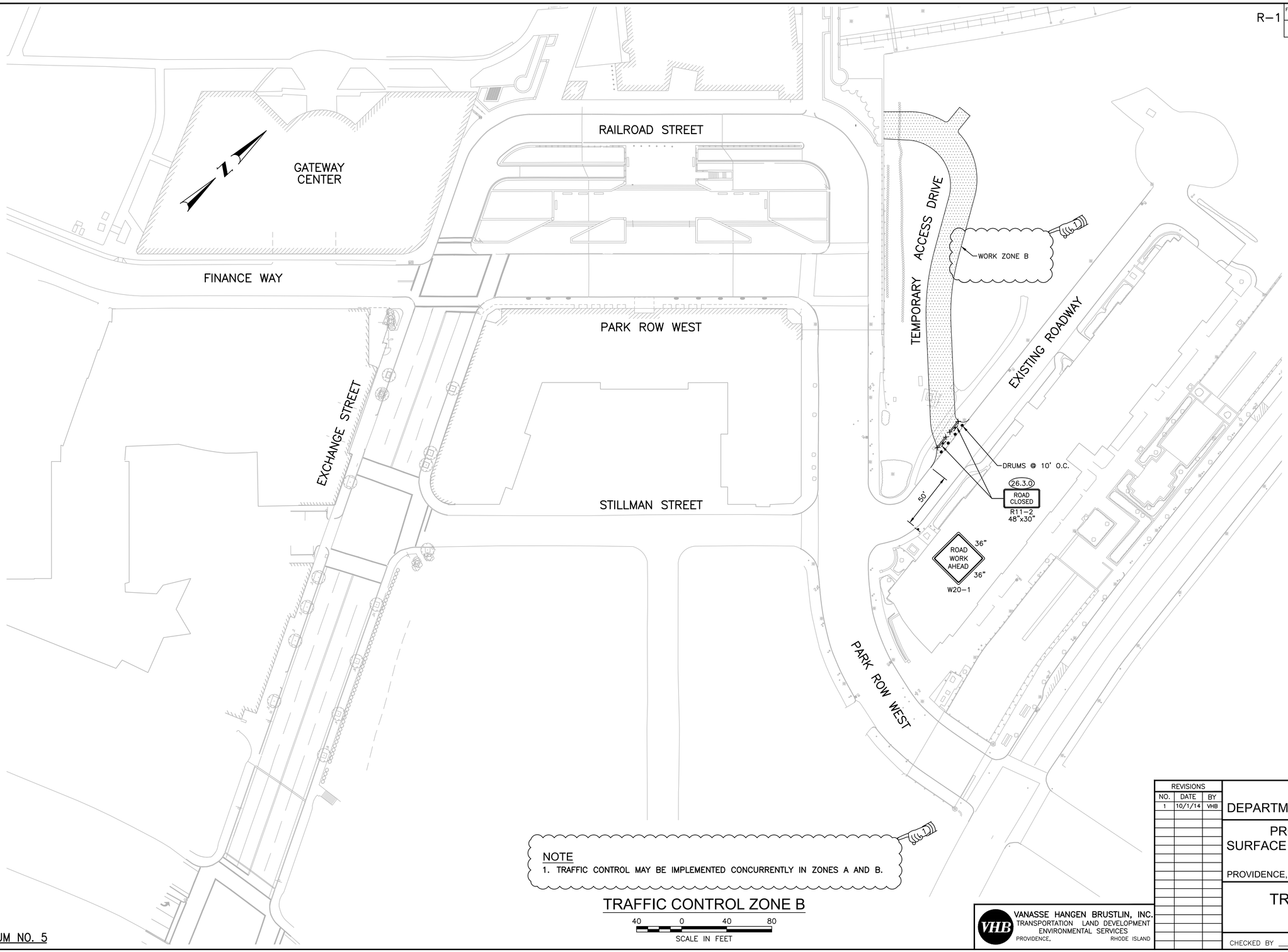

NOTE
1. TRAFFIC CONTROL MAY BE IMPLEMENTED CONCURRENTLY IN ZONES A AND B.

TRAFFIC CONTROL ZONE B

40 0 40 80
SCALE IN FEET

ADDENDUM NO. 5

VANASSE HANGEN BRUSTLIN, INC.
TRANSPORTATION LAND DEVELOPMENT
ENVIRONMENTAL SERVICES
PROVIDENCE, RHODE ISLAND

REVISIONS		
NO.	DATE	BY
1	10/1/14	VHB

RHODE ISLAND
DEPARTMENT OF TRANSPORTATION

PROVIDENCE STATION
SURFACE IMPROVEMENTS PROJECT
CONTRACT 1
PROVIDENCE, RHODE ISLAND

TRAFFIC CONTROL
PLAN NO. 2

CHECKED BY _____ DATE _____ SCALE _____

R-1

FED. ROAD DIV. NO.	STATE	FEDERAL AID PROJECT NO.	FISCAL YEAR	SHEET NO.	TOTAL SHEETS
	RI			41	75

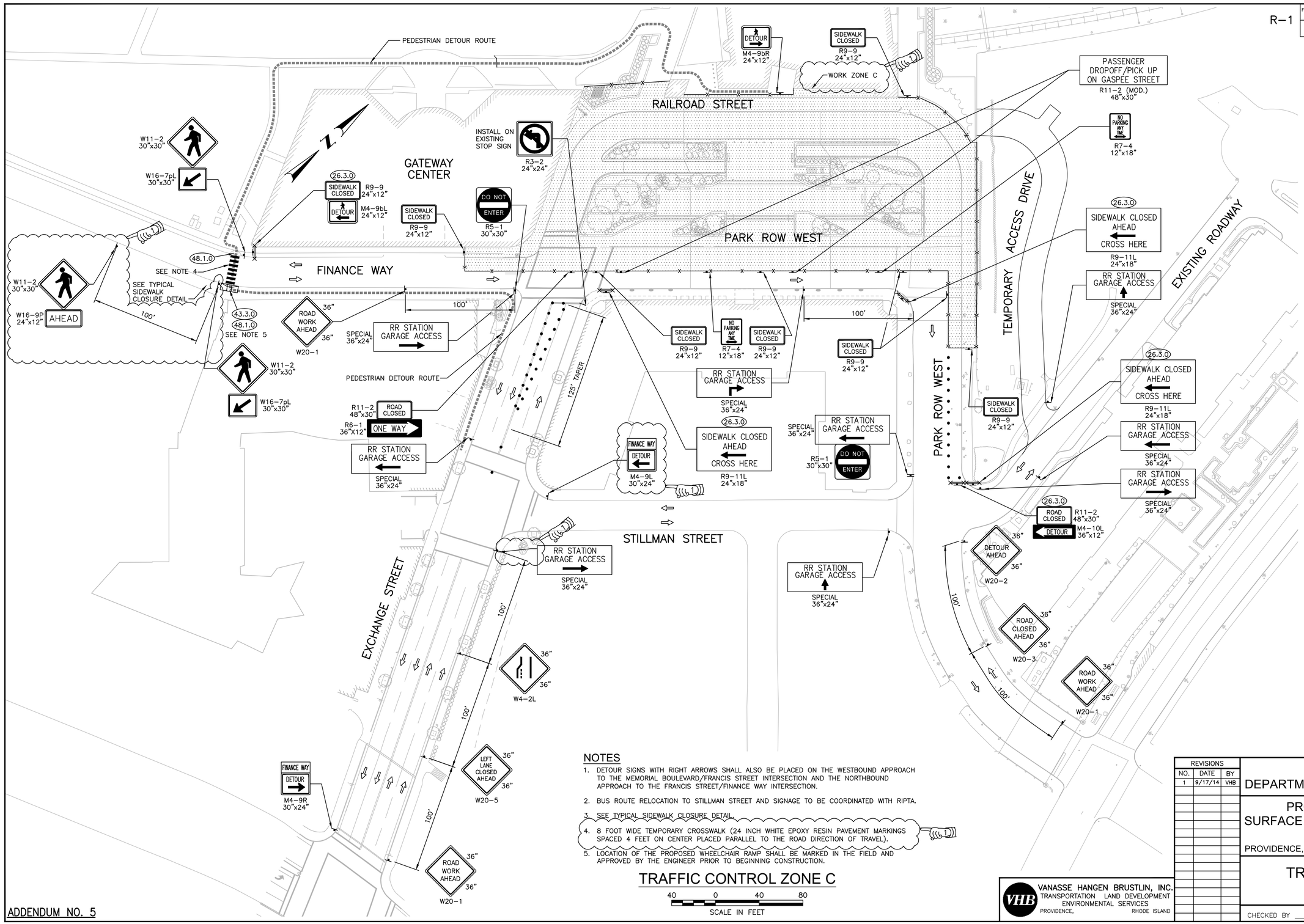

NOTES

1. DETOUR SIGNS WITH RIGHT ARROWS SHALL ALSO BE PLACED ON THE WESTBOUND APPROACH TO THE MEMORIAL BOULEVARD/FRANCIS STREET INTERSECTION AND THE NORTHBOUND APPROACH TO THE FRANCIS STREET/FINANCE WAY INTERSECTION.
2. BUS ROUTE RELOCATION TO STILLMAN STREET AND SIGNAGE TO BE COORDINATED WITH RIPTA.
3. SEE TYPICAL SIDEWALK CLOSURE DETAIL.
4. 8 FOOT WIDE TEMPORARY CROSSWALK (24 INCH WHITE EPOXY RESIN PAVEMENT MARKINGS SPACED 4 FEET ON CENTER PLACED PARALLEL TO THE ROAD DIRECTION OF TRAVEL). (6.1)
5. LOCATION OF THE PROPOSED WHEELCHAIR RAMP SHALL BE MARKED IN THE FIELD AND APPROVED BY THE ENGINEER PRIOR TO BEGINNING CONSTRUCTION.

TRAFFIC CONTROL ZONE C

40 0 40 80

SCALE IN FEET

VANASSE HANGEN BRUSTLIN, INC.
TRANSPORTATION LAND DEVELOPMENT ENVIRONMENTAL SERVICES
PROVIDENCE, RHODE ISLAND

REVISIONS		
NO.	DATE	BY
1	9/17/14	VHB

RHODE ISLAND
DEPARTMENT OF TRANSPORTATION

PROVIDENCE STATION
SURFACE IMPROVEMENTS PROJECT
CONTRACT 1

PROVIDENCE, RHODE ISLAND

TRAFFIC CONTROL
PLAN NO. 3

CHECKED BY _____ DATE _____ SCALE _____

ADDENDUM NO. 5

R-1

FED. ROAD DIV. NO.	STATE	FEDERAL AID PROJECT NO.	FISCAL YEAR	SHEET NO.	TOTAL SHEETS
	RI			42	75

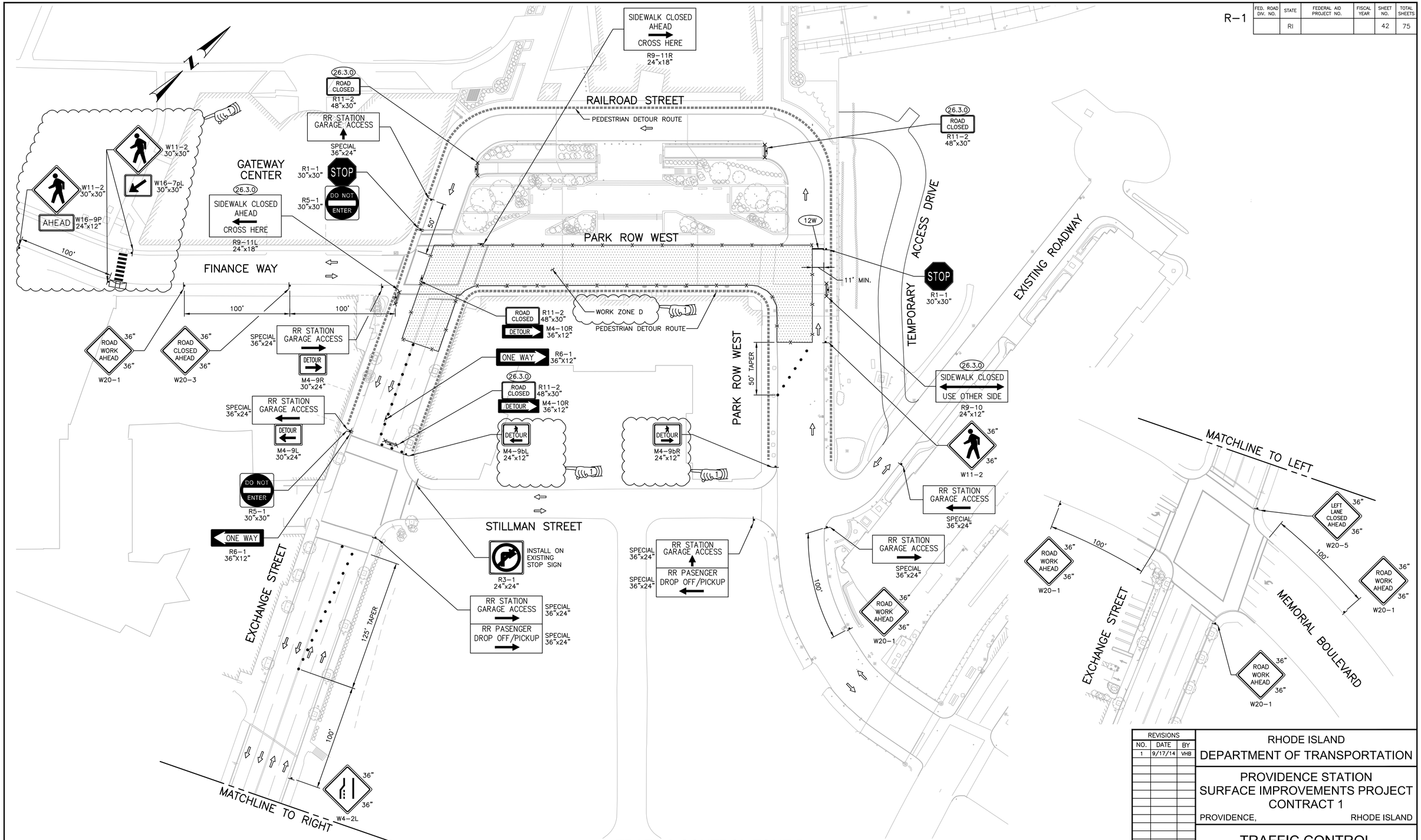

TRAFFIC CONTROL ZONE D

40 0 40 80

SCALE IN FEET

VANASSE HANGEN BRUSTLIN, INC.
TRANSPORTATION LAND DEVELOPMENT
ENVIRONMENTAL SERVICES
PROVIDENCE, RHODE ISLAND

REVISIONS		
NO.	DATE	BY
1	9/17/14	VHB

RHODE ISLAND
DEPARTMENT OF TRANSPORTATION

PROVIDENCE STATION
SURFACE IMPROVEMENTS PROJECT
CONTRACT 1

PROVIDENCE, RHODE ISLAND

TRAFFIC CONTROL
PLAN NO. 4

CHECKED BY _____ DATE _____ SCALE _____

ADDENDUM NO. 5

R-1

FED. ROAD DIV. NO.	STATE	FEDERAL AID PROJECT NO.	FISCAL YEAR	SHEET NO.	TOTAL SHEETS
	RI			43	75

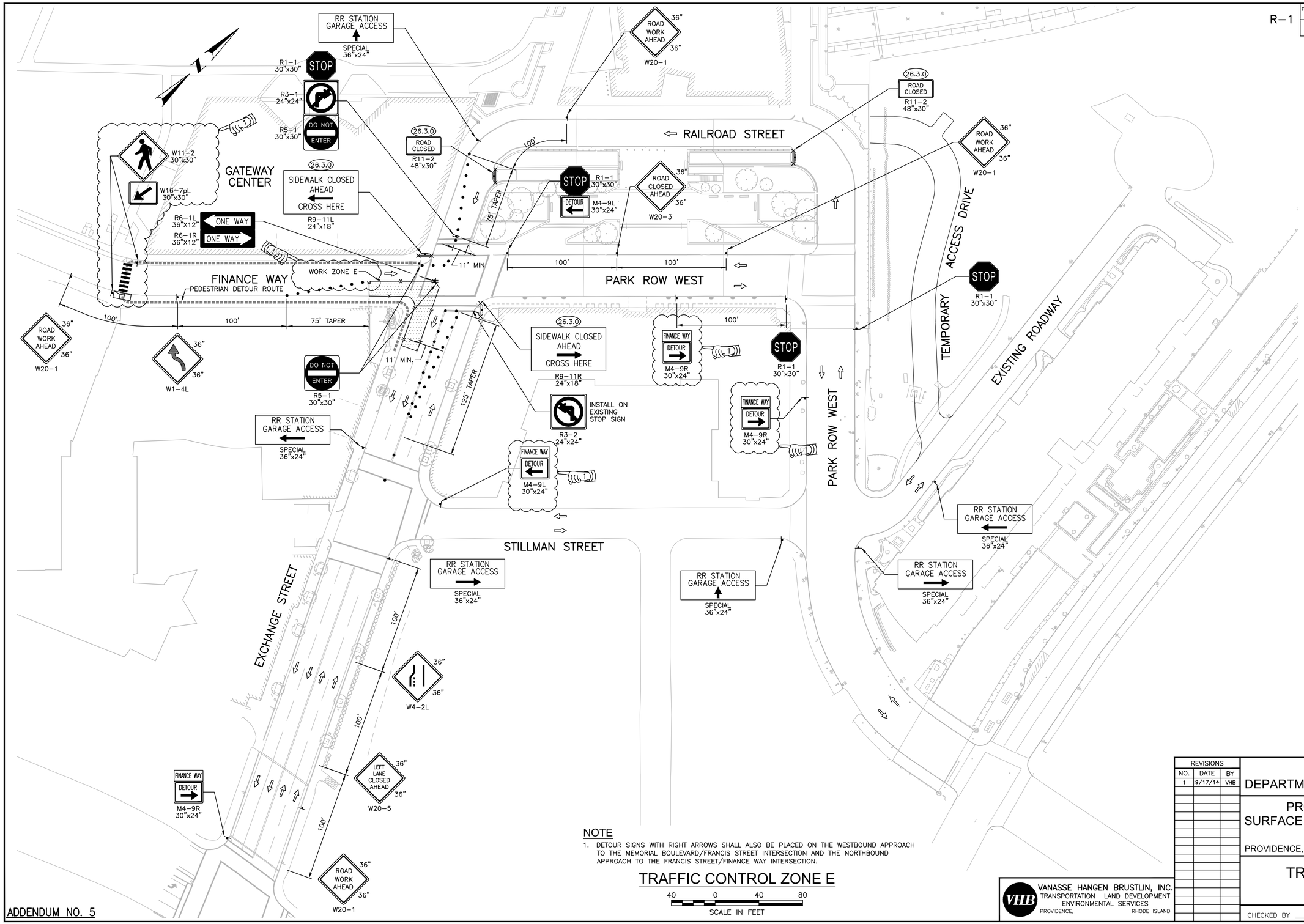

NOTE

1. DETOUR SIGNS WITH RIGHT ARROWS SHALL ALSO BE PLACED ON THE WESTBOUND APPROACH TO THE MEMORIAL BOULEVARD/FRANCIS STREET INTERSECTION AND THE NORTHBOUND APPROACH TO THE FRANCIS STREET/FINANCE WAY INTERSECTION.

TRAFFIC CONTROL ZONE E

40 0 40 80

SCALE IN FEET

ADDENDUM NO. 5

VANASSE HANGEN BRUSTLIN, INC.
TRANSPORTATION LAND DEVELOPMENT
ENVIRONMENTAL SERVICES
PROVIDENCE, RHODE ISLAND

REVISIONS		
NO.	DATE	BY
1	9/17/14	VHB

RHODE ISLAND
DEPARTMENT OF TRANSPORTATION

PROVIDENCE STATION
SURFACE IMPROVEMENTS PROJECT
CONTRACT 1

PROVIDENCE, RHODE ISLAND

TRAFFIC CONTROL
PLAN NO. 5

CHECKED BY _____ DATE _____ SCALE _____

R-1

FED. ROAD DIV. NO.	STATE	FEDERAL AID PROJECT NO.	FISCAL YEAR	SHEET NO.	TOTAL SHEETS
	RI			44	75

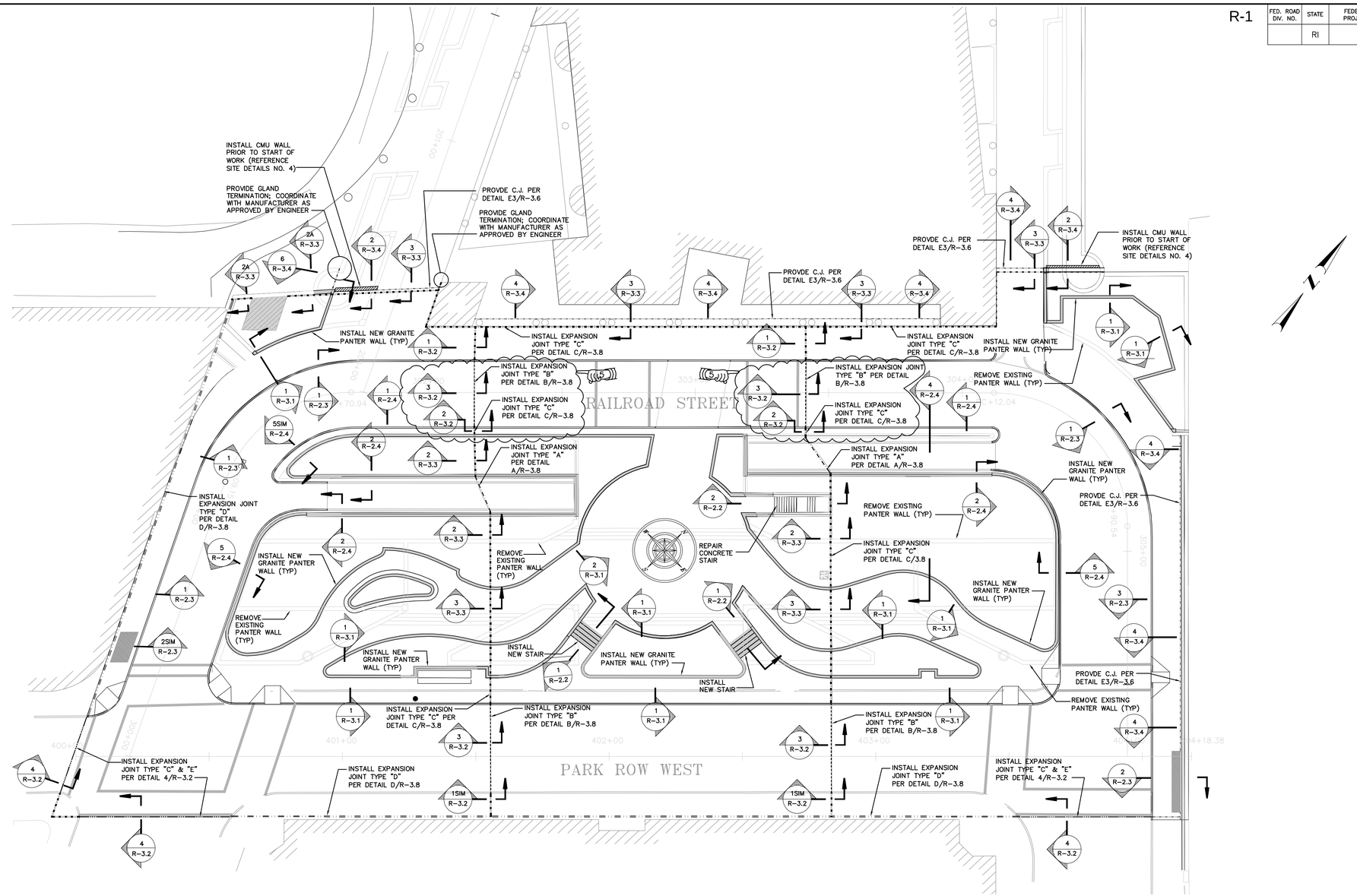

LEGEND – JOINT TYPES (V.I.F.)	
JOINT TYPE "A"	
JOINT TYPE "B"	
JOINT TYPE "C"	
JOINT TYPE "D"	
JOINT TYPE "E" (WITH TYPE "C" BELOW)	

20 0 20 40
SCALE IN FEET

REVISIONS		
NO.	DATE	BY
5	10/6/14	DESMAN

RHODE ISLAND
DEPARTMENT OF TRANSPORTATION

PROVIDENCE STATION
SURFACE IMPROVEMENTS PROJECT

PROVIDENCE, RHODE ISLAND

RESTORATION PLAN R-1.1

CHECKED BY K.D.S. DATE 8/27/2014 SCALE AS NOTED

DESMAN ASSOCIATES
A DIVISION OF DESMAN, INC.
NEW YORK CHICAGO WASHINGTON, D.C. BOSTON HARTFORD CLEVELAND

VANASSE HANGEN BRUSTLIN, INC.
TRANSPORTATION LAND DEVELOPMENT
ENVIRONMENTAL SERVICES
PROVIDENCE, RHODE ISLAND

ADDENDUM NO. 5

9004D_V1_044_RESTOR1.2

FED. ROAD DIV. NO.	STATE	FEDERAL AID PROJECT NO.	FISCAL YEAR	SHEET NO.	TOTAL SHEETS
	RI			47	75

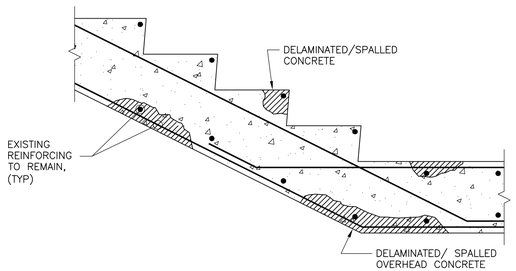

EXISTING CONDITION

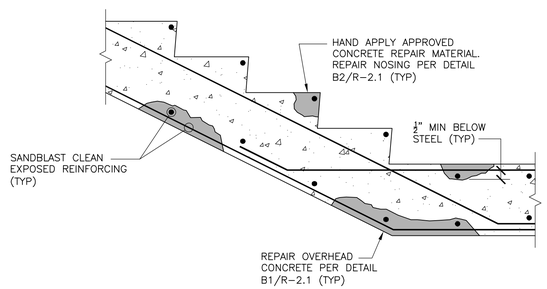

REPAIRED CONDITION

REPAIR PROCEDURE:

1. CONTRACTOR SHALL IDENTIFY AND DETERMINE EXTENT OF SPALLED/DELAMINATED/UNSOUND CONCRETE PRIOR TO START OF WORK, FOR VERIFICATION AND APPROVAL BY THE ENGINEER. CONTRACTOR SHALL REMOVE UNSOUND AND SOUND CONCRETE AS DIRECTED BY THE ENGINEER TO A DEPTH BEHIND EXISTING REINFORCING STEEL, IN ACCORDANCE WITH THE SPECIFICATIONS, USING CHIPPING HAMMERS AND SANDBLAST CLEAN EXPOSED STEEL.
2. SUPPLEMENT EXISTING REINFORCING BARS THAT HAVE LOST MORE THAN 20% OF THEIR ORIGINAL CROSS SECTION WITH NEW BARS. NEW REINFORCING SHALL BE PROPERLY LAP SPLICED OR MECHANICALLY CONNECTED, AS APPROVED BY THE ENGINEER, TO EXISTING.
3. CONTRACTOR SHALL PROPERLY PREPARE ALL STEEL, NEW AND EXISTING/EXPOSED, TO BE REVIEWED IN THE FIELD BY THE ENGINEER PRIOR TO CONCRETE PLACEMENT; CONCRETE PLACEMENT MAY BE DELAYED UNTIL PREPARATION IS DETERMINED TO BE ACCEPTABLE BY ENGINEER.
4. APPLY NON SAG REPAIR MORTAR IN LAYERS AS PER MANUFACTURER'S REPAIR PROCEDURE. LAYERS SHALL BE LIMITED IN THICKNESS. EXISTING CONCRETE SURFACE SHALL BE PREWET PRIOR TO APPLICATION.
5. CURE AND PROTECT FINISHED REPAIR.
6. RE-SECURE/REPAIR NOSING AND COLD-GALVANIZE NOSING.
7. NEW REPAIR MATERIALS SHALL MATCH EXISTING MATERIAL FINISHES IN FINISHED APPEARANCE INCLUDING, BUT NOT LIMITED TO COLOR, TEXTURE, AND ANY EXISTING ARCHITECTURAL COATINGS. COORDINATE APPLICATION OF NEW COATINGS AS REQUIRED.

2 / R-2.2 EXISTING CONCRETE STAIR REPAIR
SCALE: N.T.S.

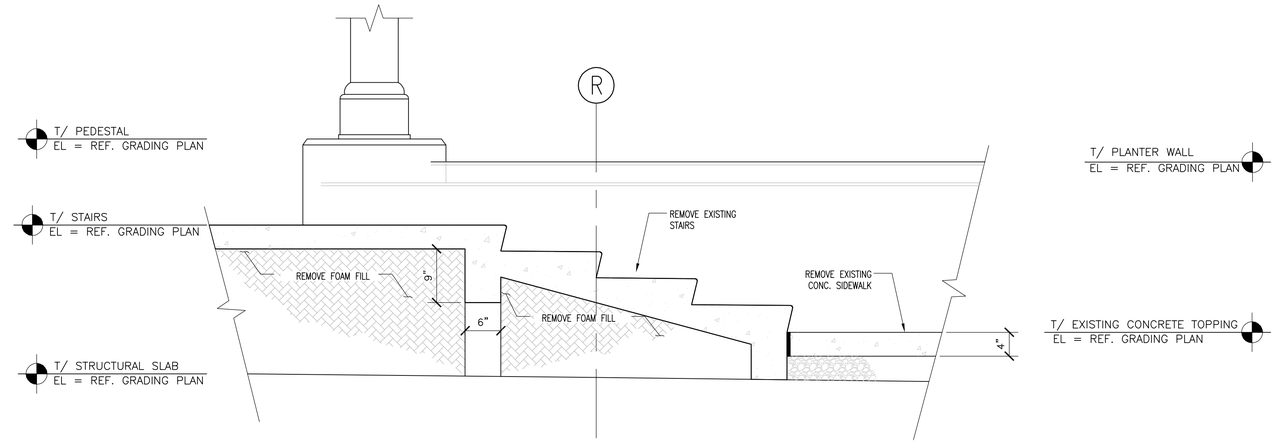

EXISTING CONDITION

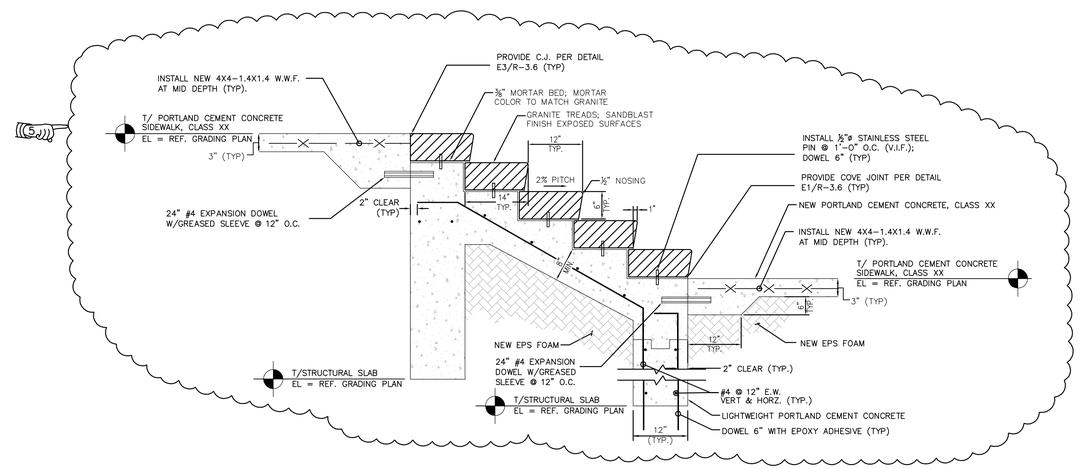

PROPOSED CONDITION

1 / R-2.2 SECTION
SCALE: N.T.S.

REVISIONS		
NO.	DATE	BY
5	10/06/14	DESMAN

RHODE ISLAND
DEPARTMENT OF TRANSPORTATION

PROVIDENCE STATION
SURFACE IMPROVEMENTS PROJECT

PROVIDENCE, RHODE ISLAND

CONCRETE REPAIR
DETAILS AND SECTIONS R-2.2

CHECKED BY K.D.S. DATE 8/27/2014 SCALE AS NOTED

DESMAN ASSOCIATES
A DIVISION OF DESMAN, INC.
NEW YORK CHICAGO WASHINGTON, D.C. BOSTON HARTFORD CLEVELAND

VHB VANASSE HANGEN BRUSTLIN, INC.
TRANSPORTATION LAND DEVELOPMENT
ENVIRONMENTAL SERVICES
PROVIDENCE, RHODE ISLAND

ADDENDUM NO. 5

FED. ROAD DIV. NO.	STATE	FEDERAL AID PROJECT NO.	FISCAL YEAR	SHEET NO.	TOTAL SHEETS
	RI			48	75

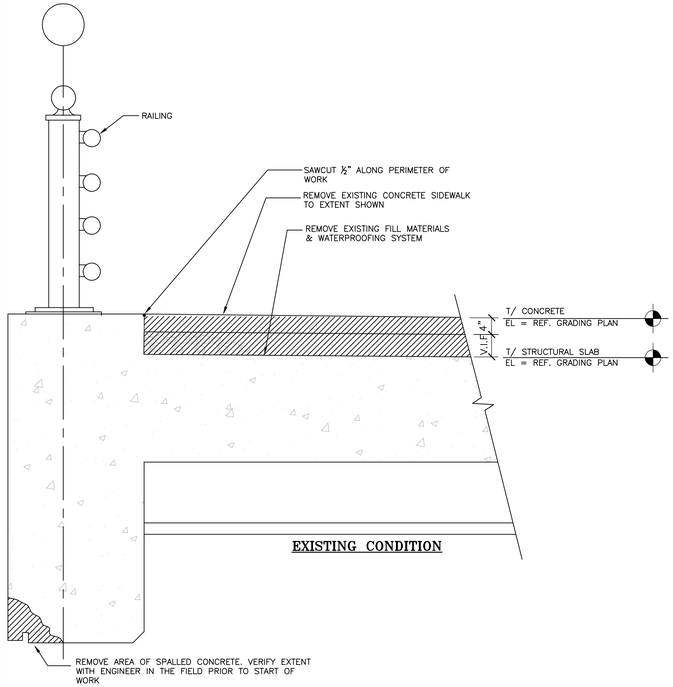

EXISTING CONDITION

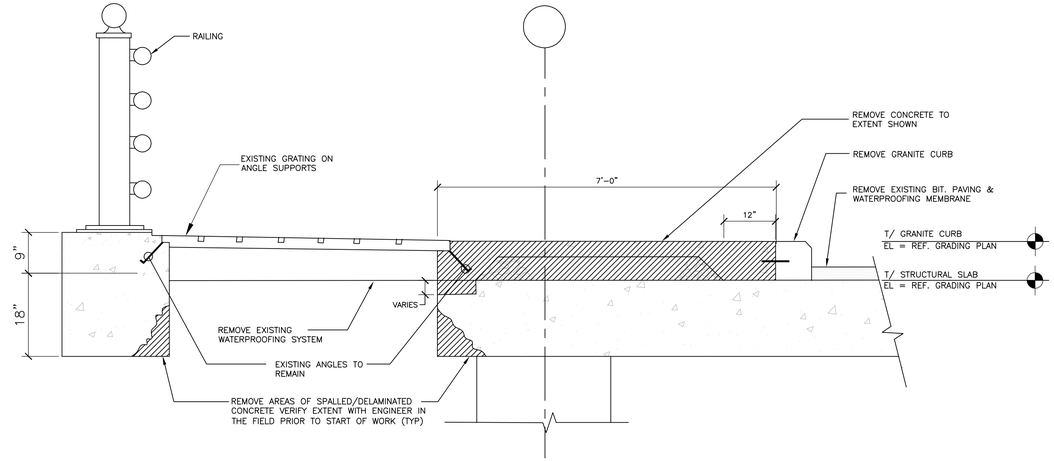

EXISTING CONDITION

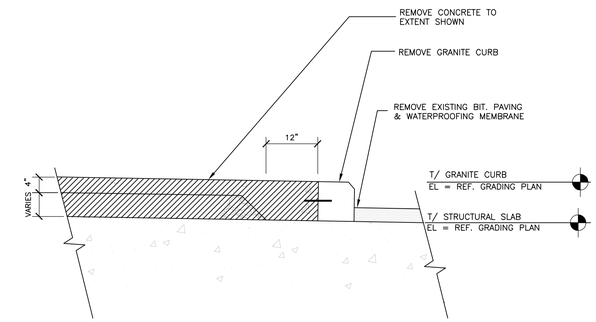

EXISTING CONDITION

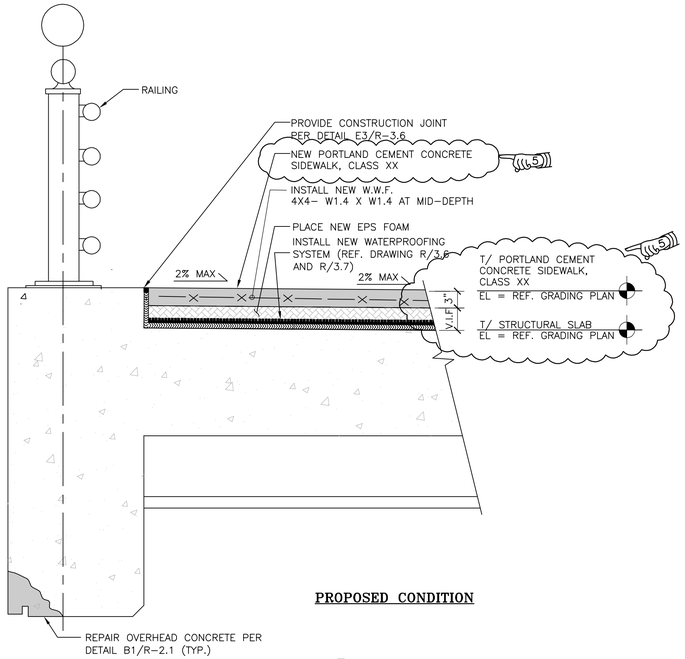

PROPOSED CONDITION

3 SECTION
R-2.3 SCALE: ¾"=1'-0"

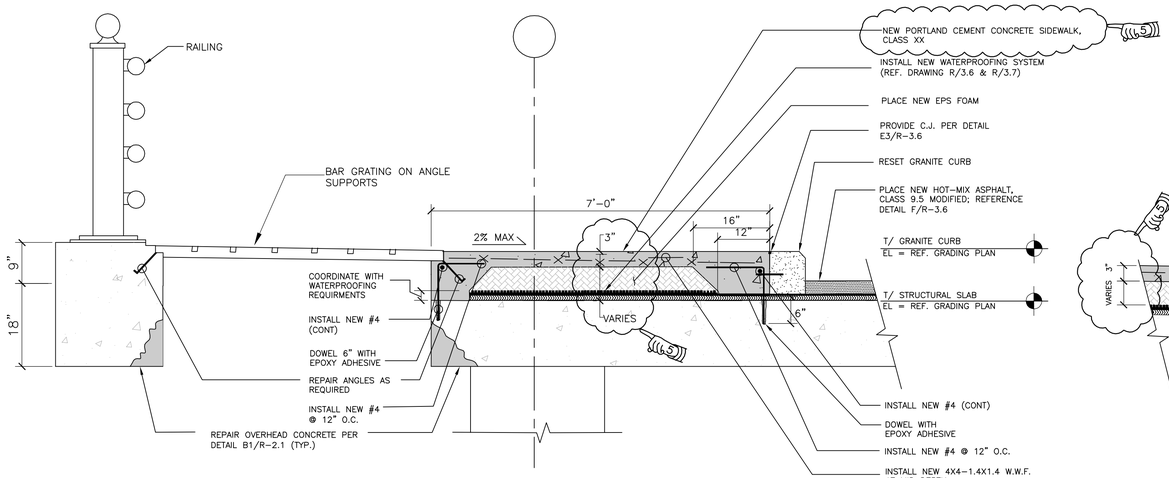

PROPOSED CONDITION

2 SECTION
R-2.3 SCALE: ¾"=1'-0"

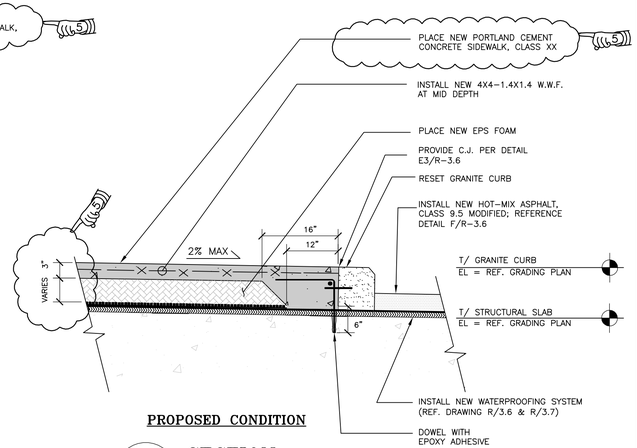

PROPOSED CONDITION

1 SECTION
R-2.3 SCALE: ¾"=1'-0"

REVISIONS		
NO.	DATE	BY
5	10/06/14	DESMAN

RHODE ISLAND
DEPARTMENT OF TRANSPORTATION

PROVIDENCE STATION
SURFACE IMPROVEMENTS PROJECT

PROVIDENCE, RHODE ISLAND

CEMENT CONCRETE
SIDEWALK WITH FOAM BASE R-2.3

CHECKED BY K.D.S. DATE 8/27/2014 SCALE AS NOTED

DESMAN ASSOCIATES
A DIVISION OF DESMAN, INC.
NEW YORK CHICAGO WASHINGTON, D.C. BOSTON HARTFORD CLEVELAND

VHB VANASSE HANGEN BRUSTLIN, INC.
TRANSPORTATION LAND DEVELOPMENT
ENVIRONMENTAL SERVICES
PROVIDENCE, RHODE ISLAND

ADDENDUM NO. 5

FED. ROAD DIV. NO.	STATE	FEDERAL AID PROJECT NO.	FISCAL YEAR	SHEET NO.	TOTAL SHEETS
	RI			50	75

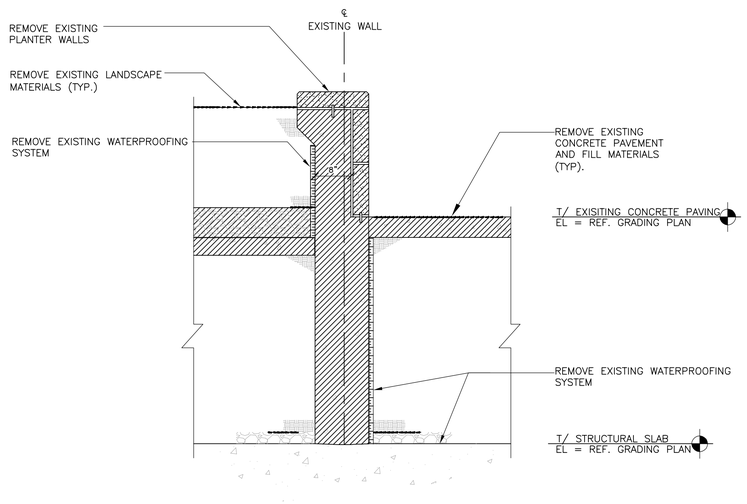

EXISTING CONDITION

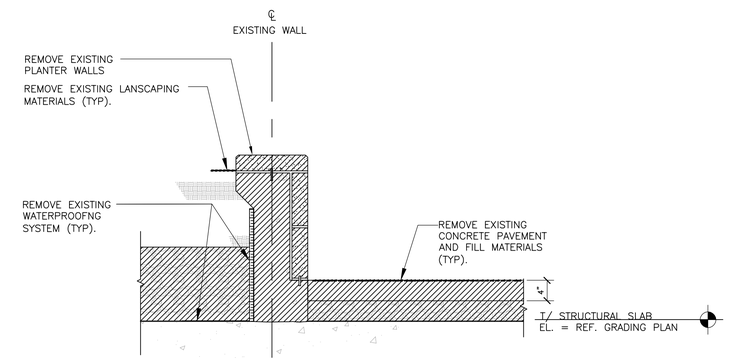

EXISTING CONDITION

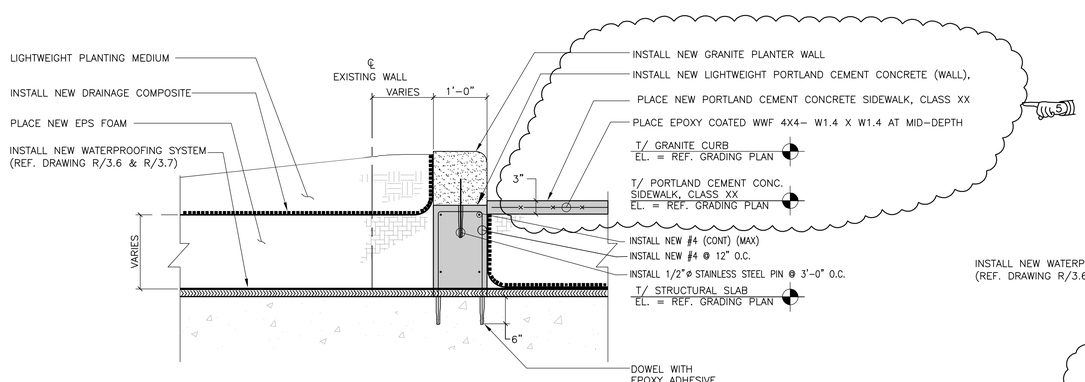

PROPOSED CONDITION

2 / R-3.1 SECTION
SCALE: ¾"=1'-0"

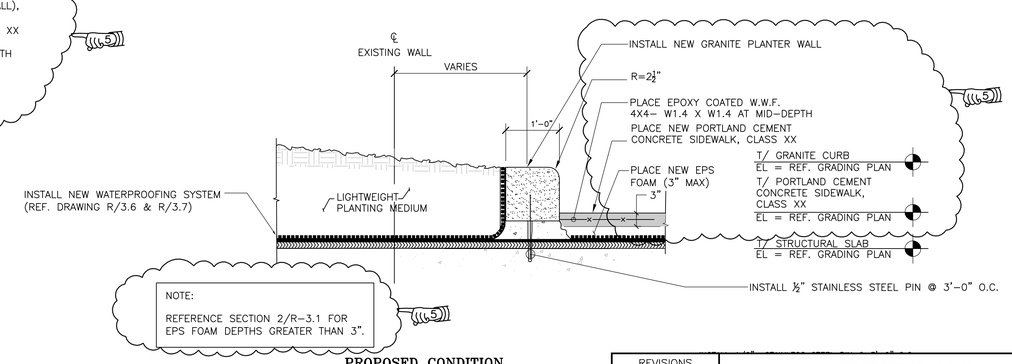

PROPOSED CONDITION

1 / R-3.1 SECTION
SCALE: ¾"=1'-0"

REVISIONS		
NO.	DATE	BY
5	10/06/14	DESMAN

RHODE ISLAND
DEPARTMENT OF TRANSPORTATION

PROVIDENCE STATION
SURFACE IMPROVEMENTS PROJECT

PROVIDENCE, RHODE ISLAND

WATERPROOFING DETAILS & SECTIONS R-3.1

CHECKED BY K.D.S. DATE 8/27/2014 SCALE AS NOTED

DESMAN ASSOCIATES
A DIVISION OF DESMAN, INC.
NEW YORK CHICAGO WASHINGTON, D.C. BOSTON HARTFORD CLEVELAND

VHB VANASSE HANGEN BRUSTLIN, INC.
TRANSPORTATION LAND DEVELOPMENT ENVIRONMENTAL SERVICES
PROVIDENCE, RHODE ISLAND

ADDENDUM NO. 5

FED. ROAD DIV. NO.	STATE	FEDERAL AID PROJECT NO.	FISCAL YEAR	SHEET NO.	TOTAL SHEETS
	RI			51	75

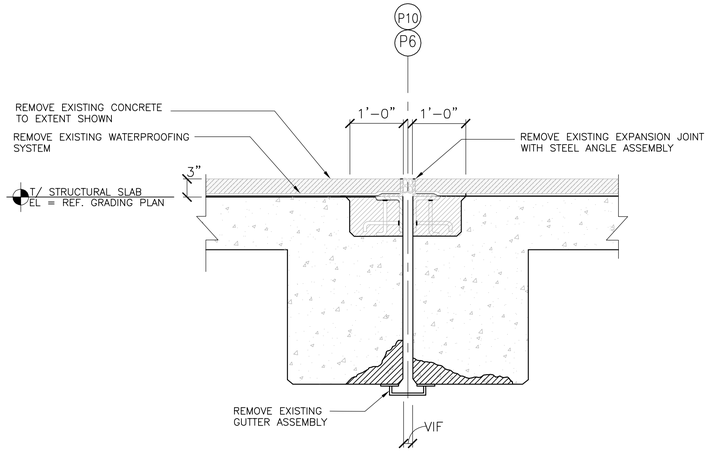

EXISTING CONDITION

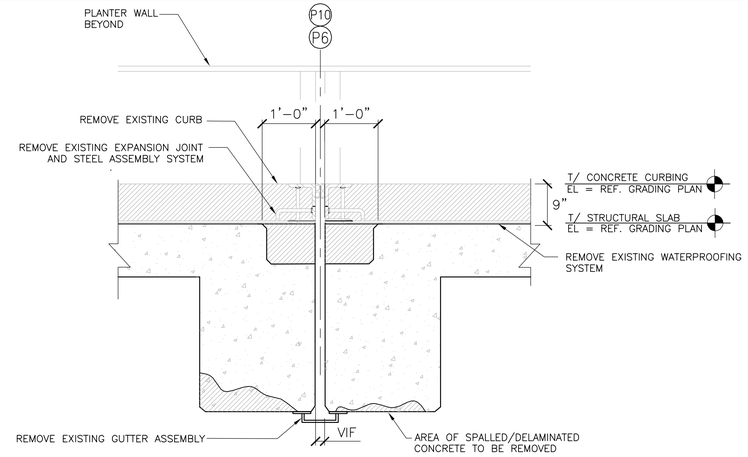

EXISTING CONDITION

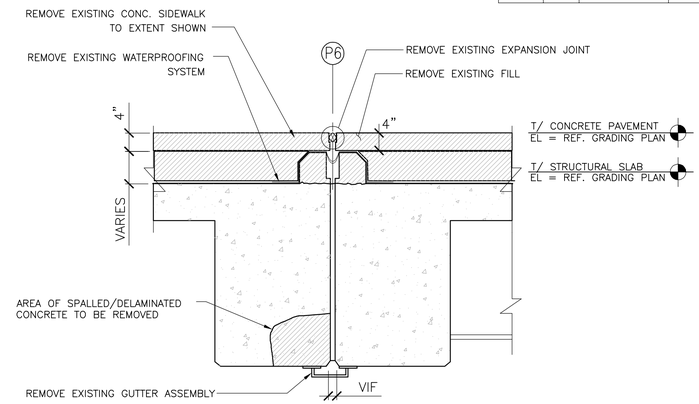

EXISTING CONDITION

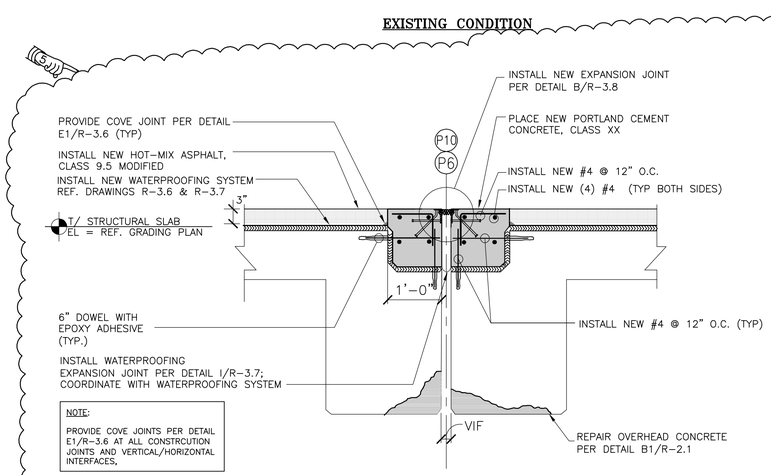

NOTE:
PROVIDE COVE JOINTS PER DETAIL E1/R-3.6 AT ALL CONSTRCUTION JOINTS AND VERTICAL/HORIZONTAL INTERFACES,

REPAIRED CONDITION

3 SECTION
R-3.2 SCALE: 3/4"=1'-0"

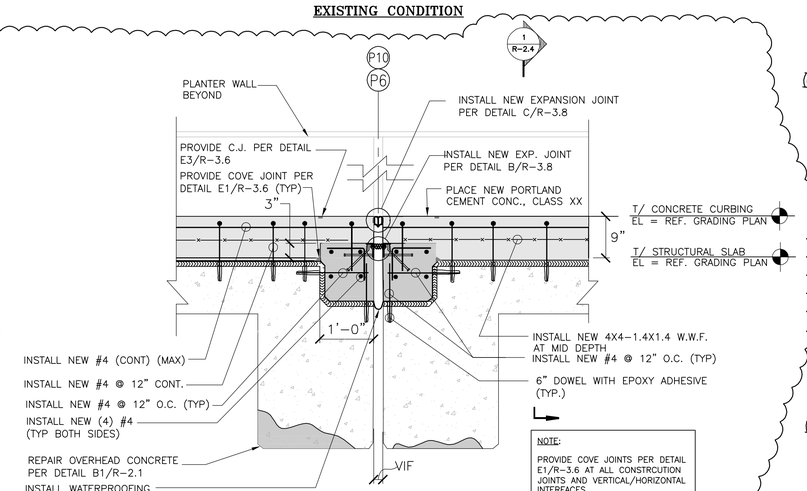

NOTE:
PROVIDE COVE JOINTS PER DETAIL E1/R-3.6 AT ALL CONSTRCUTION JOINTS AND VERTICAL/HORIZONTAL INTERFACES,

REPAIRED CONDITION

2 SECTION
R-3.2 SCALE: 3/4"=1'-0"

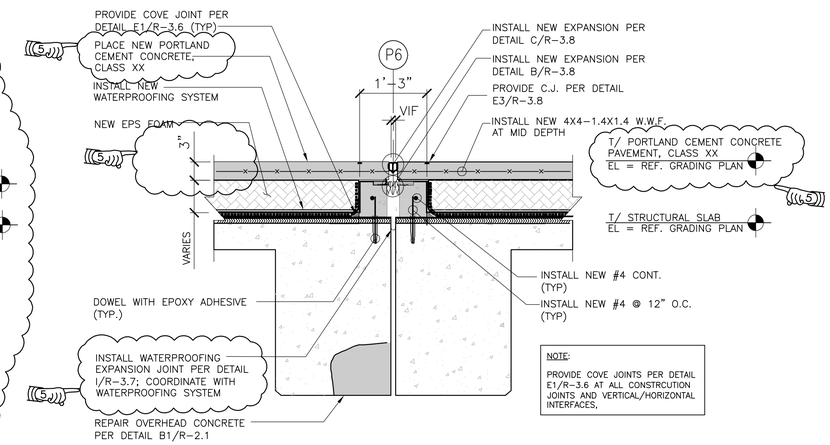

NOTE:
PROVIDE COVE JOINTS PER DETAIL E1/R-3.6 AT ALL CONSTRCUTION JOINTS AND VERTICAL/HORIZONTAL INTERFACES,

REPAIRED CONDITION

1 SECTION
R-3.2 SCALE: 3/4"=1'-0"

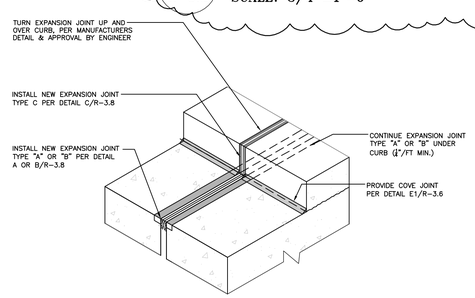

5 ISOMETRIC VIEW-NEW EXPANSION INTERFACE WITH CURBS
R-3.2 SCALE: N.T.S.

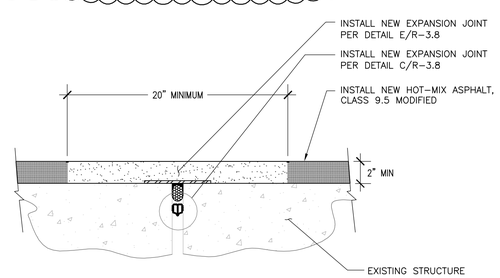

4 SECTION
R-3.2 SCALE: N.T.S.

ADDENDUM NO. 5

DESMAN ASSOCIATES
A DIVISION OF DESMAN, INC.
NEW YORK CHICAGO WASHINGTON, D.C. BOSTON HARTFORD CLEVELAND

VHB VANASSE HANGEN BRUSTLIN, INC.
TRANSPORTATION LAND DEVELOPMENT ENVIRONMENTAL SERVICES
PROVIDENCE, RHODE ISLAND

REVISIONS		
NO.	DATE	BY
5	10/06/14	DESMAN

RHODE ISLAND
DEPARTMENT OF TRANSPORTATION

PROVIDENCE STATION
SURFACE IMPROVEMENTS PROJECT

PROVIDENCE, RHODE ISLAND

WATERPROOFING
DETAILS AND SECTIONS R-3.2

CHECKED BY K.D.S. DATE 8/27/2014 SCALE AS NOTED

R-1	FED. ROAD DIV. NO.	STATE	FEDERAL AID PROJECT NO.	FISCAL YEAR	SHEET NO.	TOTAL SHEETS
		RI			52	75

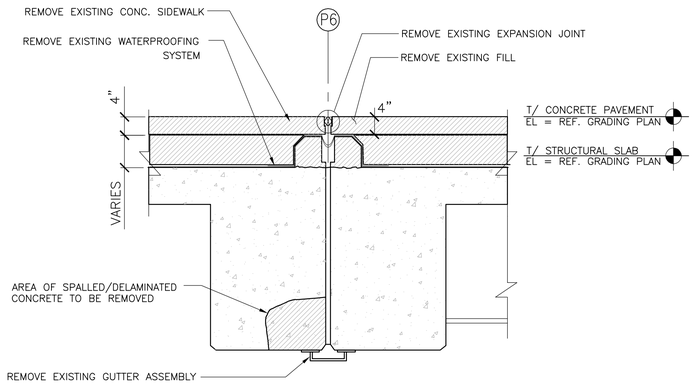

EXISTING CONDITION

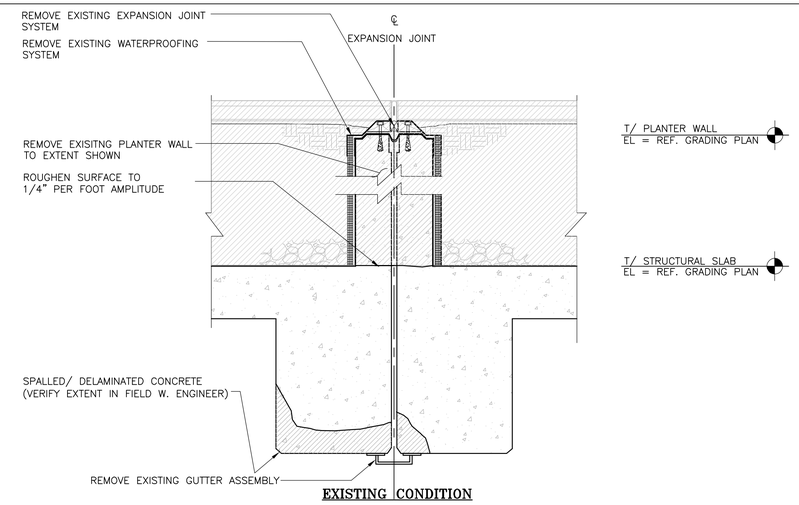

EXISTING CONDITION

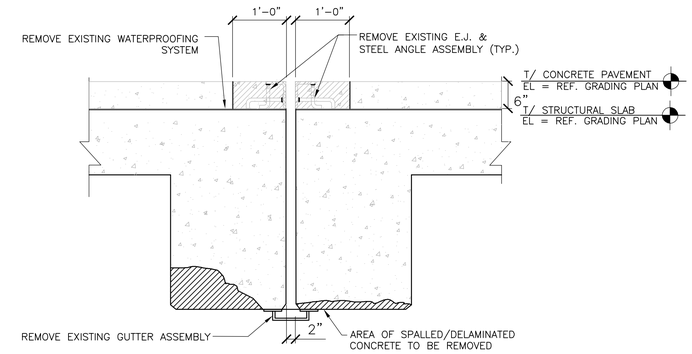

EXISTING CONDITION

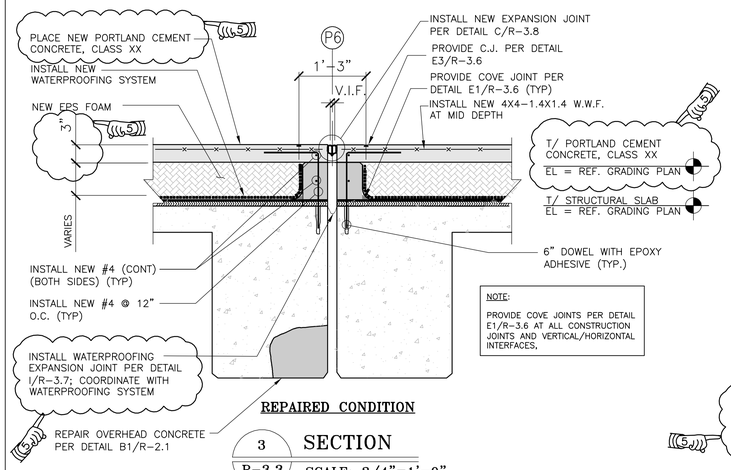

REPAIRED CONDITION

3 SECTION
R-3.3 SCALE: 3/4"=1'-0"

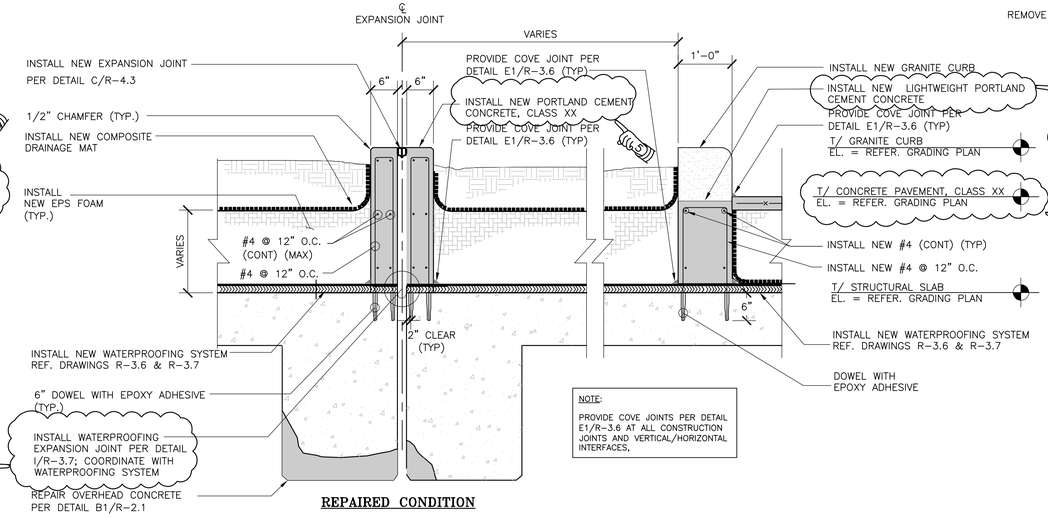

REPAIRED CONDITION

2 SECTION
R-3.3 SCALE: 3/4"=1'-0"

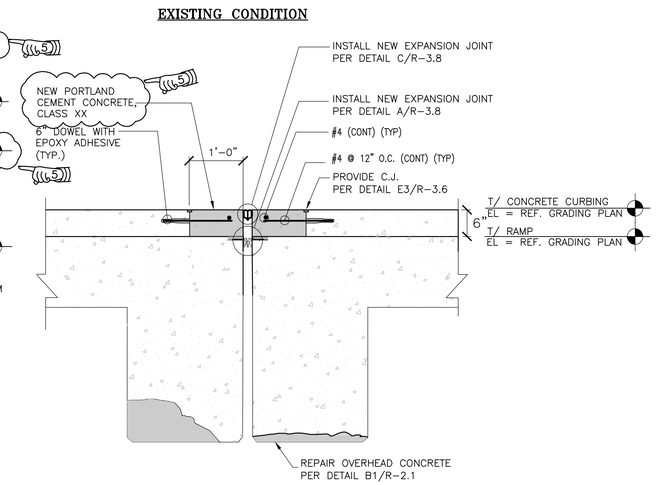

REPAIRED CONDITION

1 SECTION
R-3.3 SCALE: 3/4"=1'-0"

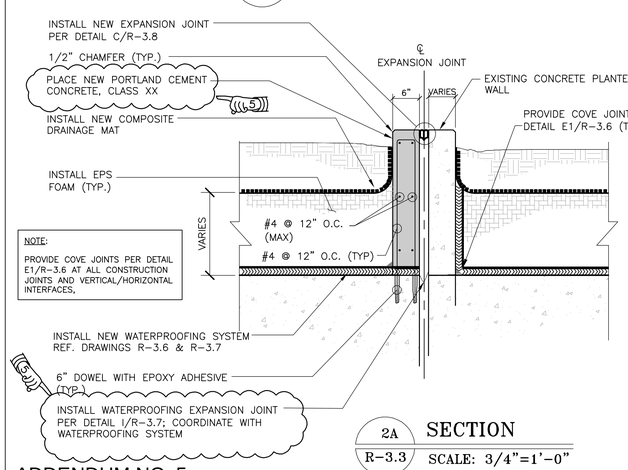

2A SECTION
R-3.3 SCALE: 3/4"=1'-0"

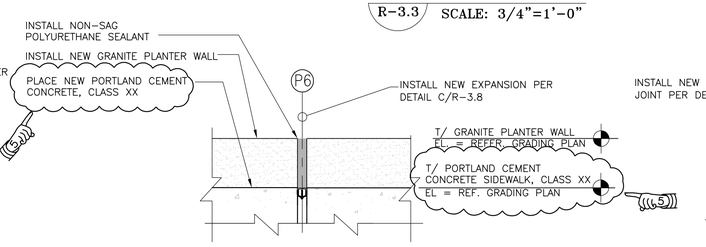

VERTICAL JOINT THROUGH GRANITE PLANTER WALL

B SECTION
R-3.3 SCALE: 3/4"=1'-0"

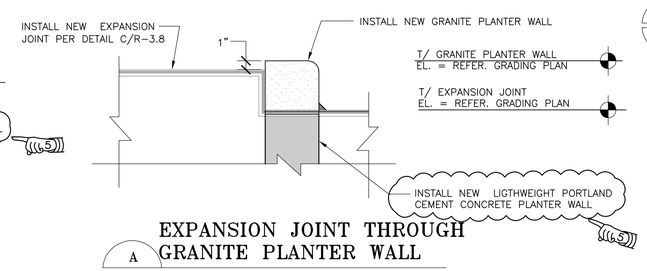

EXPANSION JOINT THROUGH GRANITE PLANTER WALL

A SECTION
R-3.3 SCALE: 3/4"=1'-0"

REVISIONS		
NO.	DATE	BY
5	10/06/14	DESMAN

RHODE ISLAND
DEPARTMENT OF TRANSPORTATION

PROVIDENCE STATION
SURFACE IMPROVEMENTS PROJECT

PROVIDENCE, RHODE ISLAND

WATERPROOFING
DETAILS AND SECTIONS R-3.3

CHECKED BY K.D.S. DATE 8/27/2014 SCALE AS NOTED

DESMAN ASSOCIATES
A DIVISION OF DESMAN, INC.
NEW YORK CHICAGO WASHINGTON, D.C. BOSTON HARTFORD CLEVELAND

VHB VANASSE HANGEN BRUSTLIN, INC.
TRANSPORTATION LAND DEVELOPMENT ENVIRONMENTAL SERVICES
PROVIDENCE, RHODE ISLAND

ADDENDUM NO. 5

R-1

FED. ROAD DIV. NO.	STATE	FEDERAL AID PROJECT NO.	FISCAL YEAR	SHEET NO.	TOTAL SHEETS
	RI			53	75

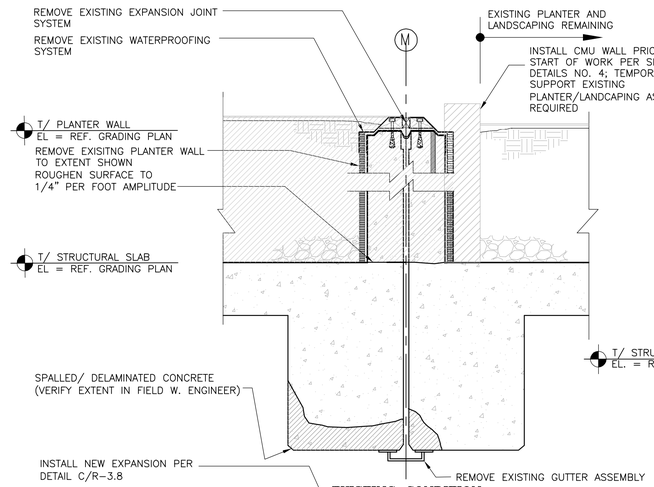

EXISTING CONDITION

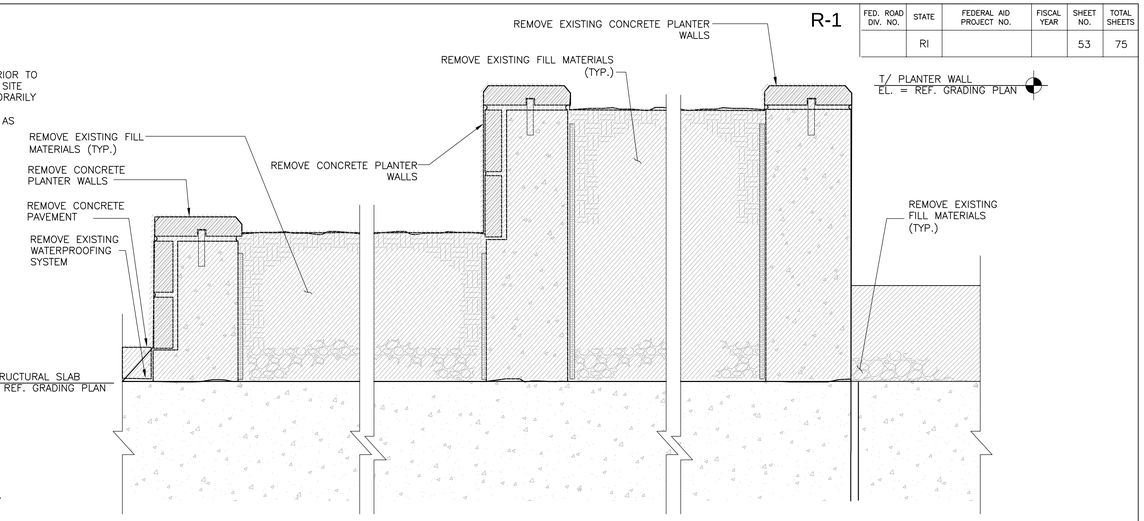

EXISTING CONDITION

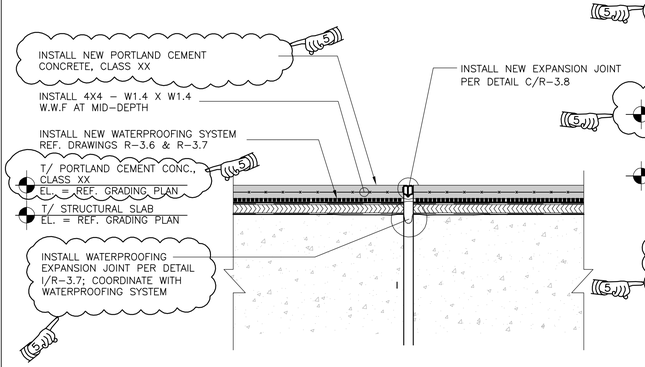

3 SECTION
R-3.4 SCALE: 3/4"=1'-0"

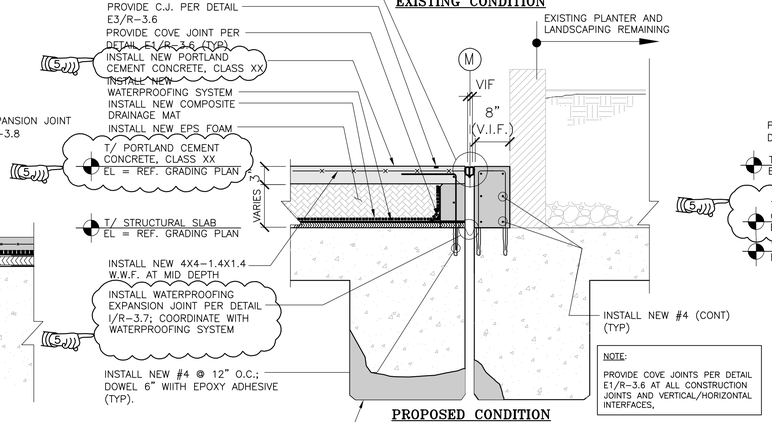

NOTE:
PROVIDE COVE JOINTS PER DETAIL E1/R–3.6 AT ALL CONSTRUCTION JOINTS AND VERTICAL/HORIZONTAL INTERFACES,

PROPOSED CONDITION

2 SECTION
R-3.4 SCALE: 3/4"=1'-0"

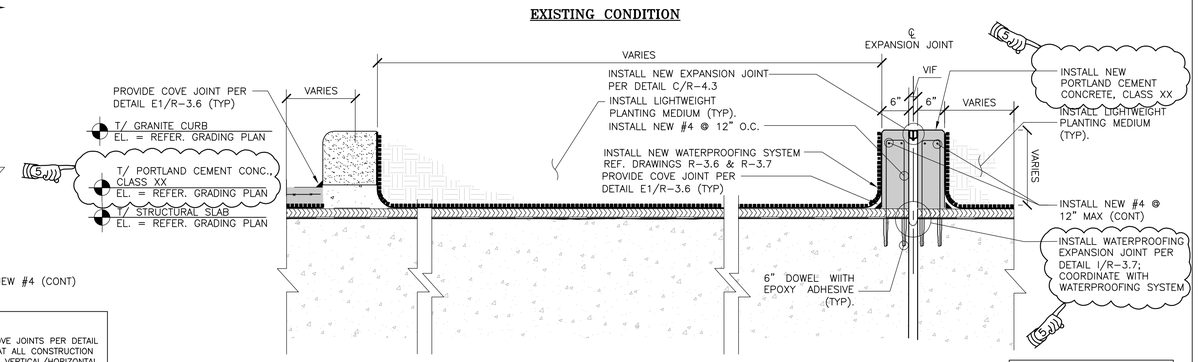

NOTE:
PROVIDE COVE JOINTS PER DETAIL E1/R–3.6 AT ALL CONSTRUCTION JOINTS AND VERTICAL/HORIZONTAL INTERFACES,

PROPOSED CONDITION

1 SECTION
R-3.4 SCALE: 3/4"=1'-0"

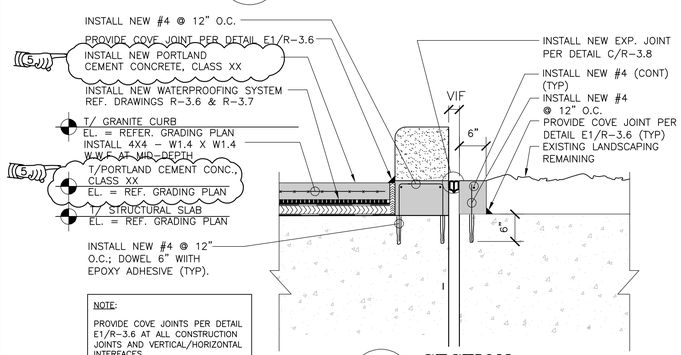

NOTE:
PROVIDE COVE JOINTS PER DETAIL E1/R–3.6 AT ALL CONSTRUCTION JOINTS AND VERTICAL/HORIZONTAL INTERFACES,

6 SECTION
R-3.4 SCALE: 3/4"=1'-0"

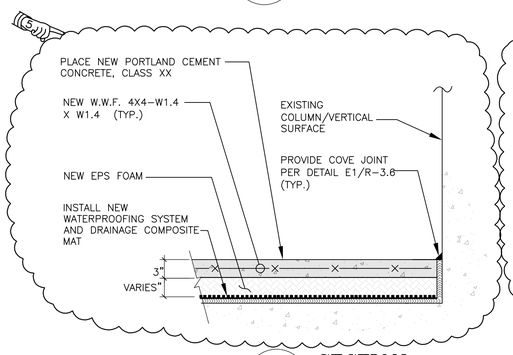

5 SECTION
R-3.4 SCALE: 3/4"=1'-0"

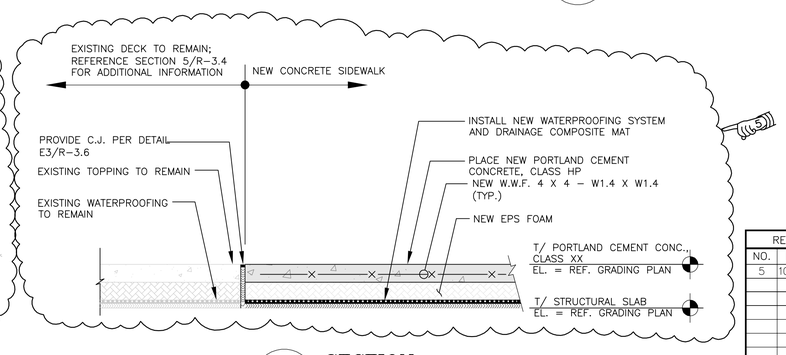

4 SECTION
R-3.4 SCALE: 3/4"=1'-0"

ADDENDUM NO. 5

DESMAN ASSOCIATES
A DIVISION OF DESMAN, INC.
NEW YORK CHICAGO WASHINGTON, D.C. BOSTON HARTFORD CLEVELAND

VANASSE HANGEN BRUSTLIN, INC.
TRANSPORTATION LAND DEVELOPMENT ENVIRONMENTAL SERVICES
PROVIDENCE, RHODE ISLAND

REVISIONS		
NO.	DATE	BY
5	10/06/14	DESMAN

RHODE ISLAND
DEPARTMENT OF TRANSPORTATION

PROVIDENCE STATION
SURFACE IMPROVEMENTS PROJECT

PROVIDENCE, RHODE ISLAND

WATERPROOFING
DETAILS AND SECTIONS R-3.4

CHECKED BY K.D.S. DATE 8/27/2014 SCALE AS NOTED

FED. ROAD DIV. NO.	STATE	FEDERAL AID PROJECT NO.	FISCAL YEAR	SHEET NO.	TOTAL SHEETS
	RI			54	75

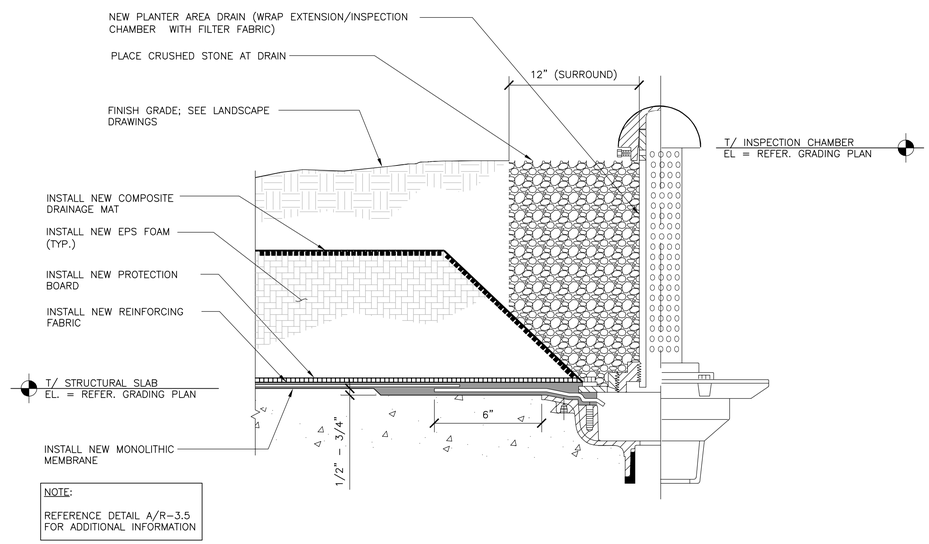

NOTE:

REFERENCE DETAIL A/R-3.5 FOR ADDITIONAL INFORMATION

B / R-3.5 NEW FLOOR DRAIN AT PLANTERS

SCALE: N.T.S.

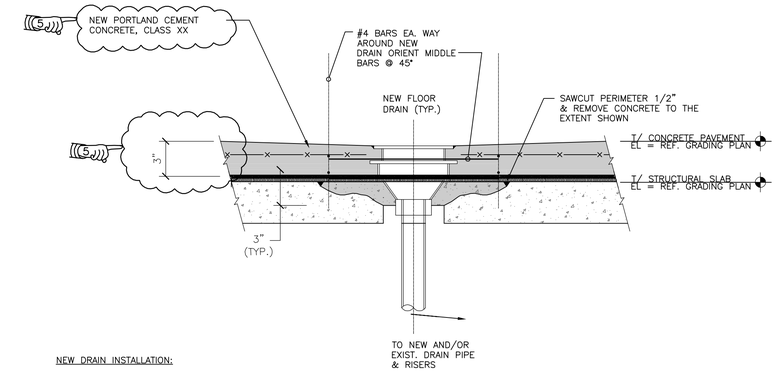

NEW DRAIN INSTALLATION:

1. GENERAL LOCATION OF NEW DRAINS ARE SHOWN ON DRAWINGS OR SHALL BE DETERMINED IN THE FIELD IN CONSULTATION WITH THE ENGINEER.
2. INSTALLATION OF NEW TWO STAGE DECK DRAINS SHALL BE COORDINATED WITH INSTALLATION OF NEW WATERPROOFING MEMBRANE, PROTECTION BOARD & DRAINAGE BOARD. REFERENCE DETAIL B/R-3.5 AND DRAWINGS R-3.6 AND R-3.7.
3. REFEENCE MECHANICAL SPECIFICATIONS FOR SIZING OF NEW PIPING NECESSARY TO CONNECT NEW DRAINS TO EXISTING DRAIN PIPES AND RISERS.

MANUFACTURERS/ MODEL NUMBERS:

JAY R. SMITH – MODEL NO. 2340 W/ SEDIMENT BUCKET & DUCTILE IRON GRATE
JOSAM – MODEL NO. 31720 W/ SEDIMENT BUCKET & DUCTILE IRON GRATE

A / R-3.5 NEW FLOOR DRAIN AT SPLIT SLAB

SCALE: N.T.S.

NOTE:

HORIZONTAL PIPE RUNS SHALL BE SLOPED IN ACCORDANCE WITH SPECIFICATIONS. CONTRACTOR IS TO VERIFY ALL NECESSARY CLEARANCES INVOLVED IN PIPE PLACEMENT.

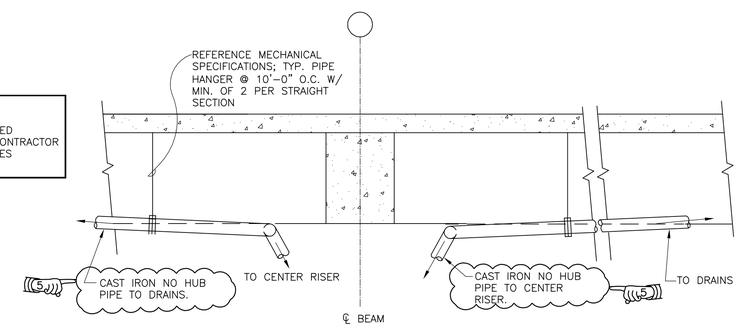

C / R-3.5 NEW DRAIN PIPING

SCALE: N.T.S.

REVISIONS		
NO.	DATE	BY
5	10/06/14	DESMAN

RHODE ISLAND
DEPARTMENT OF TRANSPORTATION

PROVIDENCE STATION
SURFACE IMPROVEMENTS PROJECT

PROVIDENCE, RHODE ISLAND

WATERPROOFING DETAILS AND SECTIONS — R-3.5

CHECKED BY K.D.S. DATE 8/27/2014 SCALE AS NOTED

DESMAN ASSOCIATES
A DIVISION OF DESMAN, INC.
NEW YORK CHICAGO WASHINGTON, D.C. BOSTON HARTFORD CLEVELAND

VANASSE HANGEN BRUSTLIN, INC.
TRANSPORTATION LAND DEVELOPMENT ENVIRONMENTAL SERVICES
PROVIDENCE, RHODE ISLAND

ADDENDUM NO. 5

FED. ROAD DIV. NO.	STATE	FEDERAL AID PROJECT NO.	FISCAL YEAR	SHEET NO.	TOTAL SHEETS
	RI			55	75

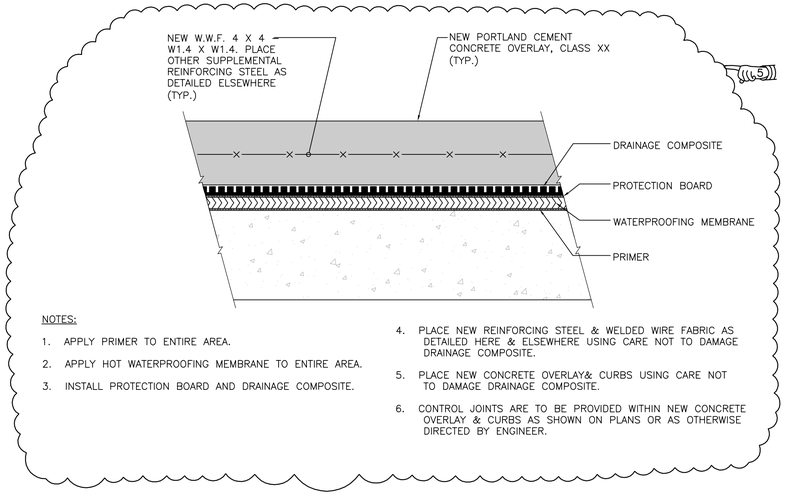

NOTES:

1. APPLY PRIMER TO ENTIRE AREA.
2. APPLY HOT WATERPROOFING MEMBRANE TO ENTIRE AREA.
3. INSTALL PROTECTION BOARD AND DRAINAGE COMPOSITE.
4. PLACE NEW REINFORCING STEEL & WELDED WIRE FABRIC AS DETAILED HERE & ELSEWHERE USING CARE NOT TO DAMAGE DRAINAGE COMPOSITE.
5. PLACE NEW CONCRETE OVERLAY& CURBS USING CARE NOT TO DAMAGE DRAINAGE COMPOSITE.
6. CONTROL JOINTS ARE TO BE PROVIDED WITHIN NEW CONCRETE OVERLAY & CURBS AS SHOWN ON PLANS OR AS OTHERWISE DIRECTED BY ENGINEER.

C / R-3.6 TYPICAL INTERMEDIATE WATERPROOFING MEMBRANE

SCALE: N.T.S.

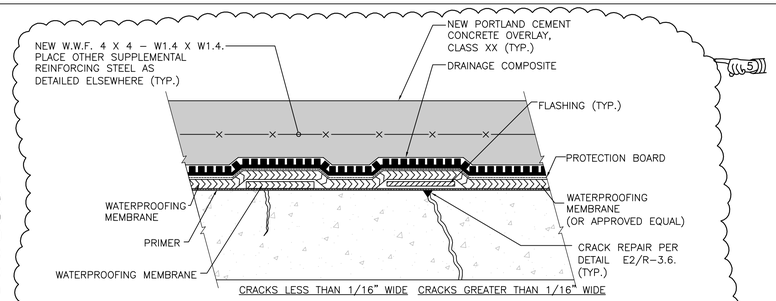

NOTES:

1. APPLY PRIMER TO ENTIRE AREA.
2. APPLY HOT APPLIED WATERPROOFING MEMBRANE 6" WIDE OVER CRACKS LESS THAN 1/16" WIDE.
3. APPLY 12" WIDE STRIP OF UNCURED NEOPRENE FLASHING OVER CRACKS GREATER THAN 1/16" WIDE.
4. APPLY HOT APPLIED WATERPROOFING MEMBRANE OVER ENTIRE AREA, INCLUDING OVER FLASHING.
5. INSTALL PROTECTION BOARD AND DRAINAGE COMPOSITE.
6. PLACE NEW REINFORCING STEEL & WELDED WIRE FABRIC AS DETAILED HERE & ELSEWHERE USING CARE NOT TO DAMAGE DRAINAGE COMPOSITE.
7. PLACE NEW CONCRETE OVERLAY AND CURBS USING CARE NOT TO DAMAGE DRAINAGE COMPOSITE.

B / R-3.6 TYPICAL INTERMEDIATE WATERPROOFING MEMBRANE CRACK TREATMENT

SCALE: N.T.S.

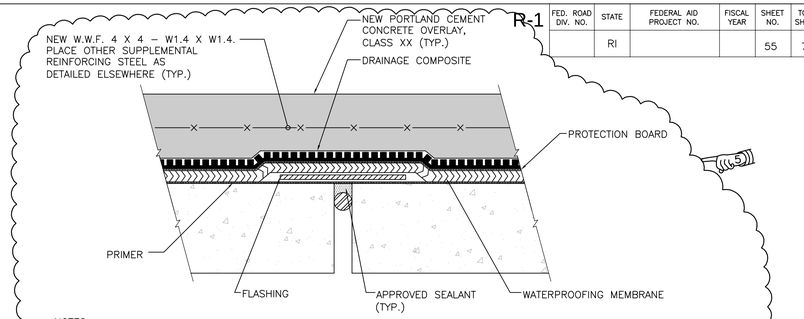

NOTES:

1. REMOVE PREEXISTENT SEALANT MATERIAL, CLEAN AND GRIND CONTROL/CONSTRUCTION JOINTS PER DETAIL –/R–, INSTALL BACKER ROD AS NECESSARY AND SEAL WITH APPROVED SEALANT AS PER THOSE LISTED.
2. APPLY PRIMER TO ENTIRE AREA.
3. APPLY 12" WIDE STRIP OF UNCURED NEOPRENE FLASHING.
4. APPLY HOT APPLIED WATERPROOFING MEMBRANE OVER ENTIRE AREA, INCLUDING OVER FLASHING.
5. INSTALL PROTECTION BOARD AND DRAINAGE COMPOSITE.
6. PLACE NEW REINFORCING STEEL & WELDED WIRE FABRIC AS DETAILED HERE & ELSEWHERE USING CARE NOT TO DAMAGE DRAINAGE COMPOSITE.
7. PLACE NEW CONCRETE OVERLAY AND CURBS USING CARE NOT TO DAMAGE DRAINAGE COMPOSITE.

A / R-3.6 TYPICAL INTERMEDIATE WATERPROOFING MEMBRANE CONTROL/CONSTRUCTION JOINT TREATMENT

SCALE: N.T.S.

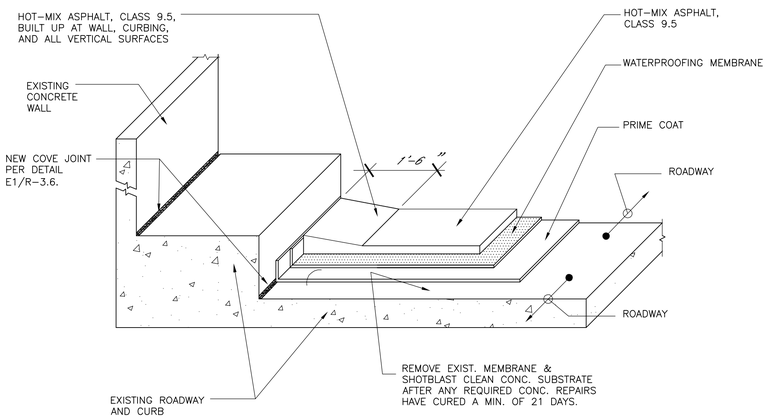

REPAIR PROCEDURE:

1. DETAIL SHOWN IS SCHEMATIC IN NATURE; ALL CONDITIONS ARE TO BE REVIEWED AND VERIFIED IN THE FIELD PRIOR TO START OF WORK.
2. WHERE EXISTING CONCRETE SUBSTRATE IS REPAIRED, CONCRETE SHALL BE FULLY CURED PRIOR TO START OF SURFACE PREPARATION.
3. ROUT AND SEAL CRACKS AND CONSTRUCTION JOINTS ALONG PERIMETER OF REPAIRED CONCRETE AREAS.
4. CLEAN AND REMOVE FOREIGN MATERIALS FROM THE ENTIRE AREA TO RECEIVE A PROTECTED WATERPROOFING MEMBRANE USING LIGHT SHOTBLASTING OR WATERBLASTING.
5. PROVIDE COVE JOINTS AT JUNCTION OF ALL HORIZONTAL AND VERTICAL SURFACES TO RECEIVE WEARING COURSE.
6. APPLY NEW HOT APPLIED ELASTOMERIC WATERPROOFING MEMBRANE. MINIMUM THICKNESS OF NEW MEMBRANE SHALL BE NO LESS THAN AS RECOMMENDED BY MANUFACTURER AND APPROVED BY ENGINEER.
7. APPLY NEW RUBBERIZED ASPHALT WEARING COURSE TO MINIMUM THICKNESS SHOWN
8. SANDBLAST CLEAN VERTICAL SURFACE OF RAISED CONCRETE CURB.

F / R-3.6 TYPICAL ASPHALT PAVEMENT WITH WATERPROOFING MEMBRANE

SCALE: N.T.S.

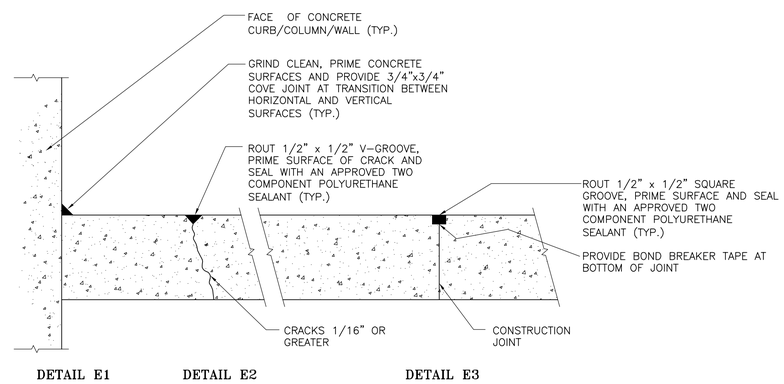

REPAIR PROCEDURE:

1. CONCRETE SURFACES SHALL BE FULLY DRY AND CURED PRIOR TO INSTALLATION OF APPROVED SEALANT MATERIAL.
2. ROUT/GRIND CRACKS AND JOINTS AS REQUIRED, CLEAN PROFILED SURFACES USING COMPRESSED AIR OR OTHER MEANS TO REMOVE DUST, DEBRIS AND OTHER MATERIAL, WHICH MIGHT IMPAIR THE SEALANT BOND TO THE SUBSTRATE.
3. PRIME SURFACES TO RECEIVE SEALANT, PROVIDE BOND BREAKER TAPE (AS REQUIRED) AND SEAL WITH AN APPROVED TWO COMPONENT POLYURETHANE SEALANT AS SHOWN.
4. WHERE SEALANT IS TO BE LEFT EXPOSED TOOL TO FORM A CONCAVE PROFILE. WHERE THE SEALANT WILL BE COVERED BY A WATERPROOFING MEMBRANE LEAVE FLUSH WITH FLOOR SURFACE.
5. PROHIBIT VEHICULAR AND PEDESTRIAN TRAFFIC ON SEALED JOINTS UNTIL SEALANT MATERIAL HAS CURED ACCORDING TO MANUFACTURER'S RECOMMENDATIONS.

E / R-3.6 COVE JOINT/CRACK/CONTROL JOINT REPAIR

SCALE: N.T.S.

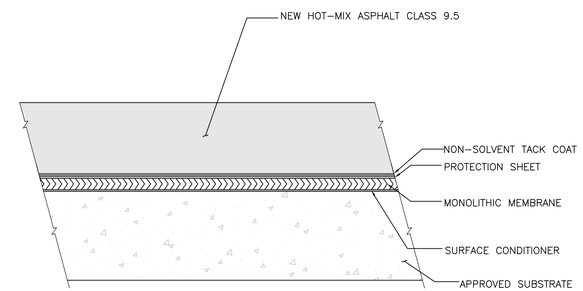

D / R-3.6 TYPICAL INTERMEDIATE WATERPROOFING MEMBRANE (ASPHALT)

SCALE: N.T.S.

REVISIONS		
NO.	DATE	BY
5	10/06/14	DESMAN

RHODE ISLAND
DEPARTMENT OF TRANSPORTATION

PROVIDENCE STATION
SURFACE IMPROVEMENTS PROJECT

PROVIDENCE, RHODE ISLAND

WATERPROOFING DETAILS AND SECTIONS — R-3.6

CHECKED BY K.D.S. DATE 8/27/2014 SCALE AS NOTED

DESMAN ASSOCIATES
A DIVISION OF DESMAN, INC.
NEW YORK CHICAGO WASHINGTON, D.C. BOSTON HARTFORD CLEVELAND

VHB VANASSE HANGEN BRUSTLIN, INC.
TRANSPORTATION LAND DEVELOPMENT ENVIRONMENTAL SERVICES
PROVIDENCE, RHODE ISLAND

ADDENDUM NO. 5

FED. ROAD DIV. NO.	STATE	FEDERAL AID PROJECT NO.	FISCAL YEAR	SHEET NO.	TOTAL SHEETS
	RI			57	75

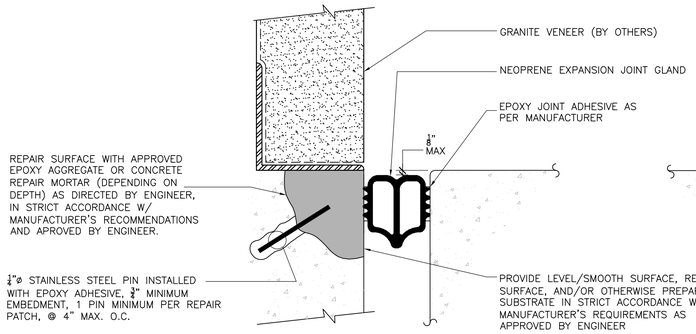

C1 R-3.8 TYPE C – BUILDING INTERFACE
SCALE: N.T.S.

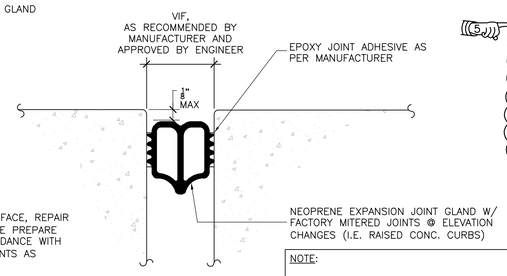

NOTE:

REFERENCE DETAIL C1/R-3.8 FOR ADDITIONAL INFORMATION REGARDING INTERFACE WITH THE BUILDING.

C R-3.8 NEW EXPANSION JOINT SEAL TYPE C
SCALE: N.T.S.

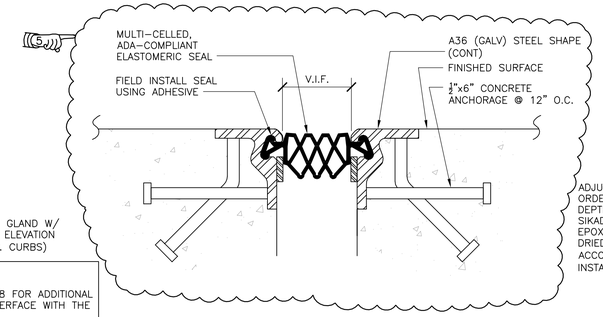

B R-3.8 NEW EXPANSION JOINT SEAL TYPE B
SCALE: N.T.S.

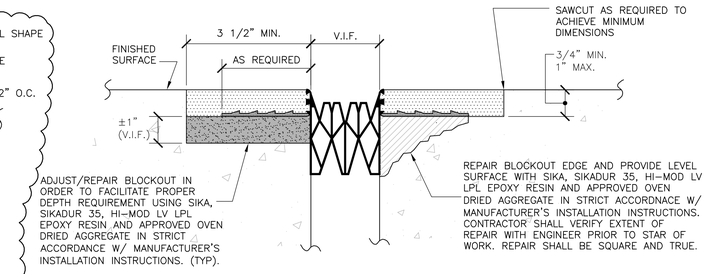

A R-3.8 NEW EXPANSION JOINT SEAL TYPE A
SCALE: N.T.S.

NOTES:

1. DETAILS SHOWN ARE SCHEMATIC–IN–NATURE, AND THUS MAY BE ADJUSTED BY THE MANUFACTURER AS APPROVED BY THE ENGINEER, AND AS SUCH, DETAILS SHOWN ARE PROPOSED.
2. ALL EXPANSION JOINT GLANDS SHALL COMPLY WITH ALL ADA REQUIREMENTS AND OTHER APPLICABLE CODES.
3. PREPARE CONCRETE BLOCKOUT TO THE DIMENSION SHOWN OR AS MIGHT OTHERWISE BE REQUIRED BY EXPANSION JOINT MANUFACTURER AND SUBSEQUENTLY APPROVED BY THE ENGINEER.
4. SAWCUT, GRIND, OR OTHERWISE PREPARE CONCRETE BLOCKOUT, PERFORMING ALL NECESSARY CONCRETE REPAIRS REQUIRED, TO MEET THE JOINT MANUFACTURER'S INSTALLATION REQUIREMENTS.
5. REMOVE ALL DEBRIS AND FOREIGN MATERIAL FROM THE CONCRETE BLOCKOUT WHICH MIGHT PREVENT PROPER INSTALLATION.
6. CONTRACTOR SHALL FIELD VERIFY ALL JOINT WIDTHS AND INSTALL THE APPROPRIATE SIZED EXPANSION JOINT GLAND AS PER MANUFACTURER'S RECOMMENDATIONS. ALL EXPANSION JOINT INSTALLATION DETAILS (I.E. BENDS, TURNS, TERMINATIONS, ETC.) SHALL BE PER MANUFACTURER'S STANDARD DETAILS AS APPROVED BY THE ENGINEER.
7. INSTALL SPECIFIED EXPANSION JOINT GLAND AS PER MANUFACTURER'S RECOMMENDATIONS. A CERTIFIED MANUFACTURER'S REPRESENTATIVE SHALL APPROVE OF CONCRETE BLOCKOUT PREPARATION, INSTALLATION PROCEDURES AND FINAL INSTALLATION IN WRITING.
8. NEW EXPANSION JOINT SHALL BE FACTORY–MITERED TO TRANSITION DOWN THE FACE OF THE CURB, PER MANUFACTURER'S STANDARD DETAIL AS APPROVED BY THE ENGINEER. CUTTING AND SPLICING OF THE JOINT SEAL IN THE FIELD SHALL NOT BE ALLOWED.

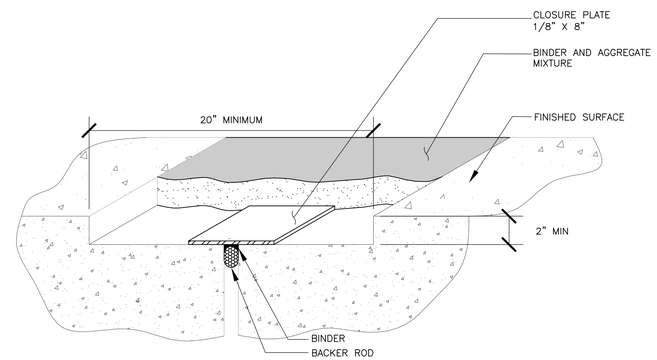

E R-3.8 NEW EXPANSION JOINT SEAL TYPE E
SCALE: N.T.S.

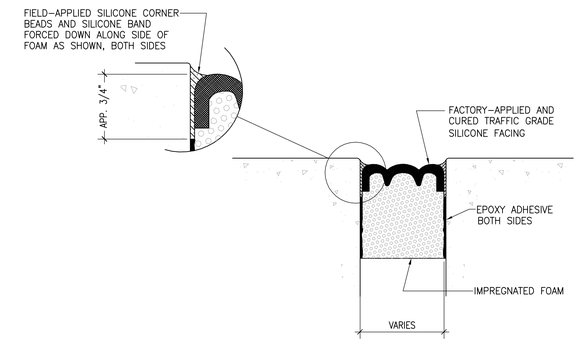

D R-3.8 NEW EXPANSION JOINT SEAL TYPE D
SCALE: N.T.S.

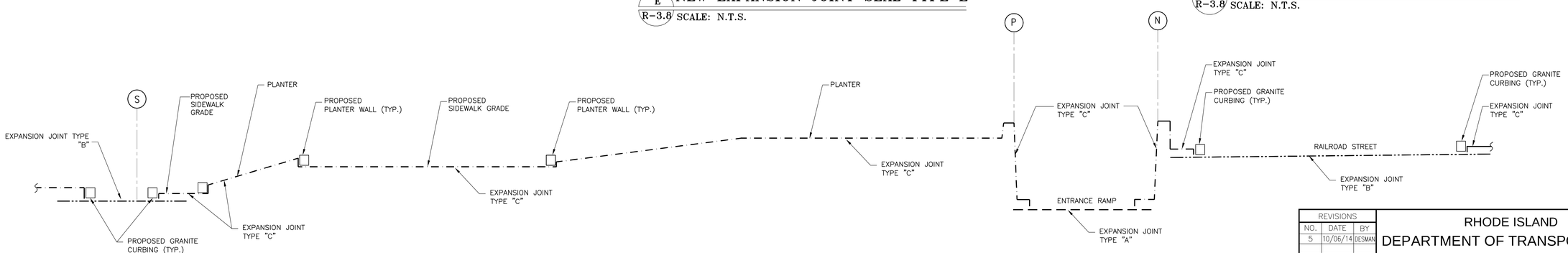

F R-3.8 SCHEMATIC CONFIGURATION ALONG COLUMN LINE P–10 (P–6 SIMILAR)
SCALE: N.T.S.

REVISIONS		
NO.	DATE	BY
5	10/06/14	DESMAN

RHODE ISLAND
DEPARTMENT OF TRANSPORTATION

PROVIDENCE STATION
SURFACE IMPROVEMENTS PROJECT

PROVIDENCE, RHODE ISLAND

WATERPROOFING DETAILS AND SECTIONS — R-3.8

CHECKED BY K.D.S. DATE 8/27/2014 SCALE AS NOTED

DESMAN ASSOCIATES
A DIVISION OF DESMAN, INC.
NEW YORK CHICAGO WASHINGTON, D.C. BOSTON HARTFORD CLEVELAND

VHB VANASSE HANGEN BRUSTLIN, INC.
TRANSPORTATION LAND DEVELOPMENT ENVIRONMENTAL SERVICES
PROVIDENCE, RHODE ISLAND

ADDENDUM NO. 5

FED. ROAD DIV. NO.	STATE	FEDERAL AID PROJECT NO.	FISCAL YEAR	SHEET NO.	TOTAL SHEETS
	RI			70	75

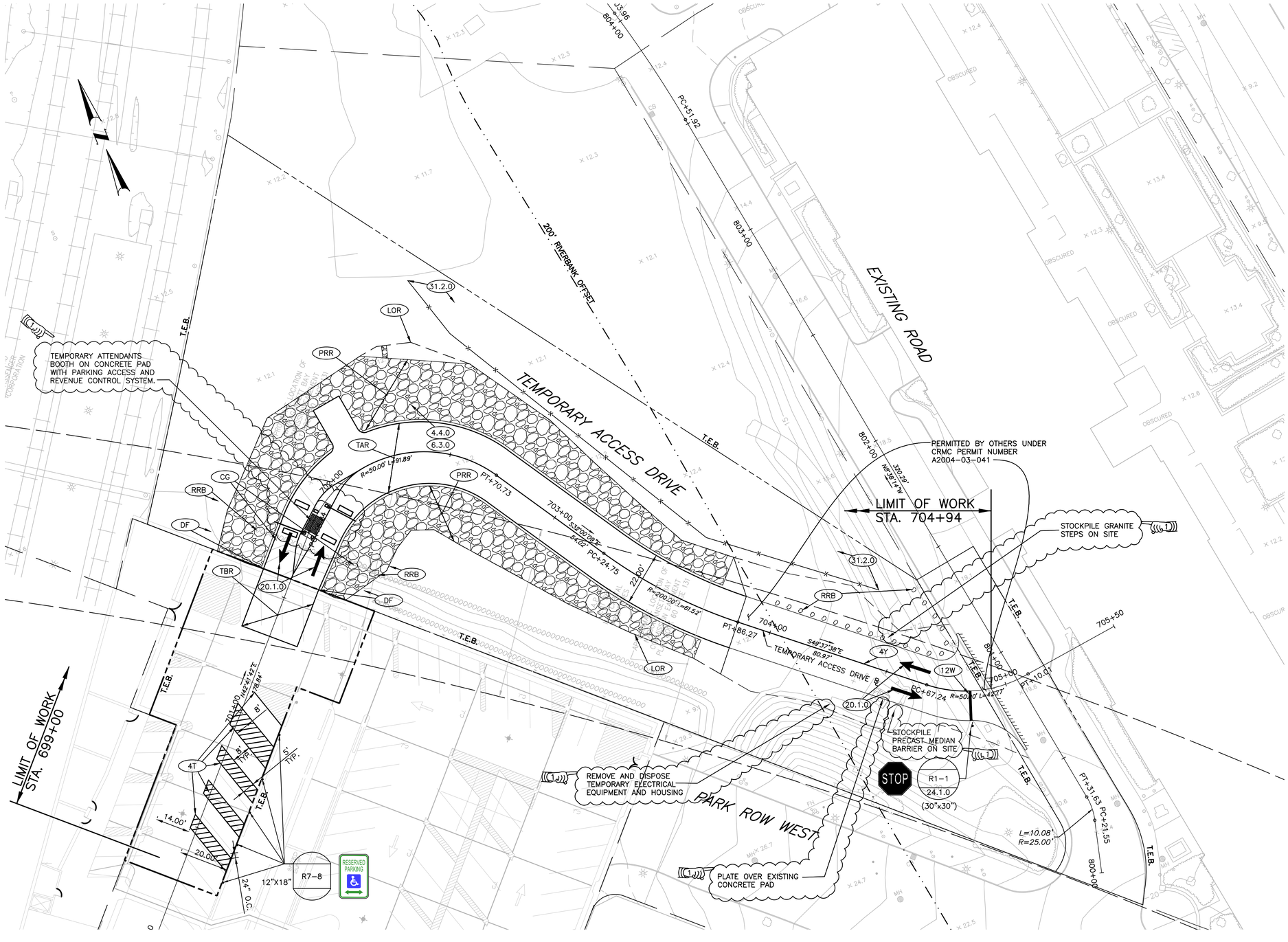

NOTES:

1. CONTRACTOR SHALL STOCKPILE ALL EXCAVATED MATERIAL ON SITE AS INDICATED ON THE PLANS. CONTRACTOR SHALL REPLACE STOCKPILED MATERIAL AS INDICATED ON SITE RESTORATION PLAN.
2. CONTRACTOR SHALL REMOVE AND RELOCATE BOULDERS AS SHOWN ON PLANS AT 5' O.C. ALONG ACCESS DRIVE. BOULDERS SHALL BE RELOCATED BACK TO ORIGINAL LOCATION DURING SITE RESTORATION.
3. ALL PAVEMENT MARKINGS ON THE TEMPORARY ACCESS DRIVE SHALL BE FAST DRYING WATERBORNE AND PAID FOR UNDER THEIR RESPECTIVE ITEMS. PAVEMENT MARKINGS WITHIN THE PARKING GARAGE SHALL BE AS NOTED.
4. STOCKPILE PRECAST MEDIAN BARRIER SHALL BE PAID FOR UNDER ITEM 201.0403.

20 0 20 40
SCALE IN FEET

VANASSE HANGEN BRUSTLIN, INC.
TRANSPORTATION LAND DEVELOPMENT
ENVIRONMENTAL SERVICES
PROVIDENCE, RHODE ISLAND

REVISIONS		
NO.	DATE	BY
1	9/26/14	VHB

RHODE ISLAND
DEPARTMENT OF TRANSPORTATION

PROVIDENCE STATION
SURFACE IMPROVEMENTS PROJECT
CONTRACT 1
PROVIDENCE, RHODE ISLAND

TEMPORARY ACCESS DRIVE GENERAL PLAN

CHECKED BY _____ DATE _____ SCALE _____

ADDENDUM NO. 5

9004D_V1_070_GEN ACCESS_ADD05

FED. ROAD DIV. NO.	STATE	FEDERAL AID PROJECT NO.	FISCAL YEAR	SHEET NO.	TOTAL SHEETS
	RI			74	75

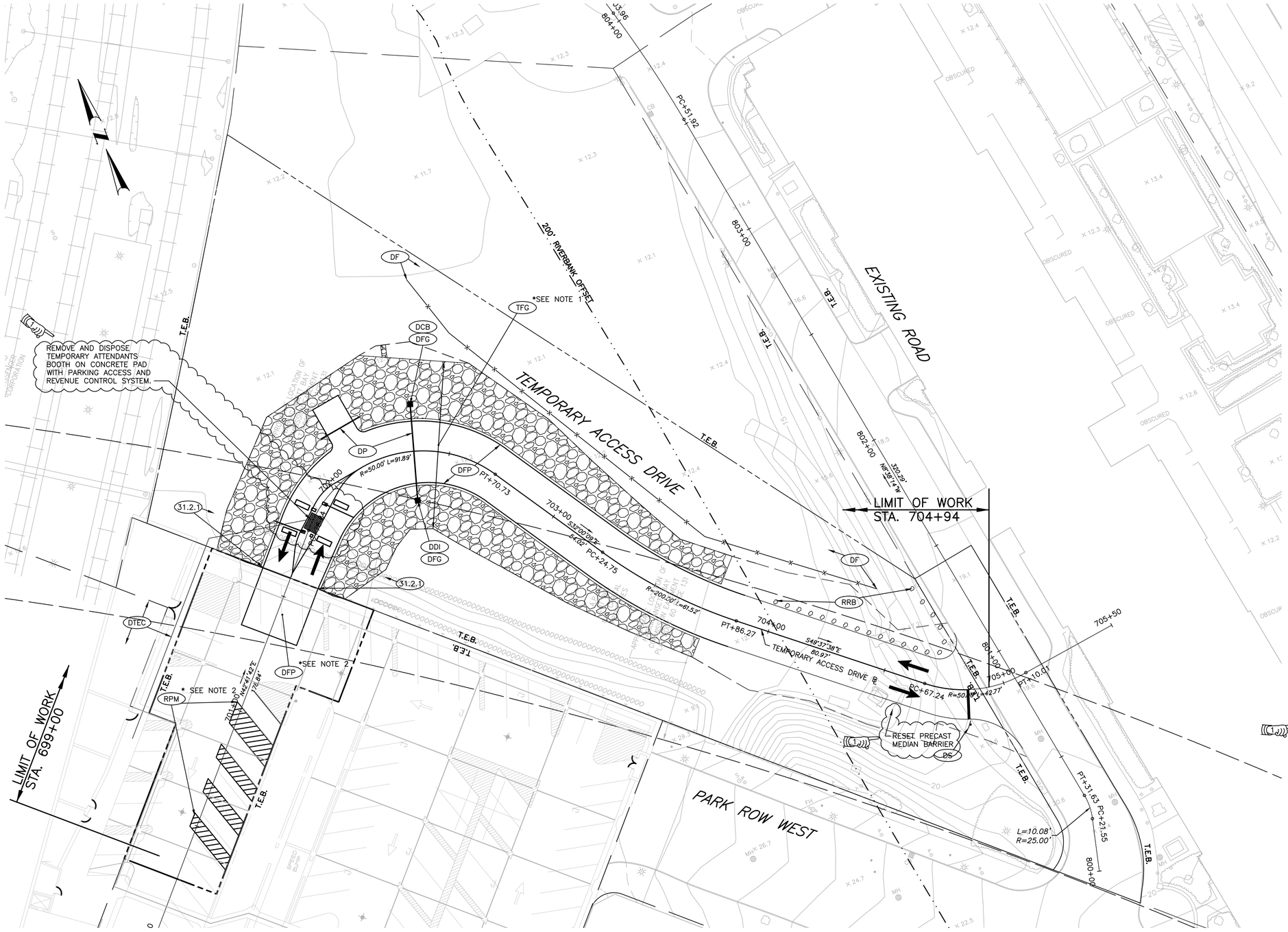

NOTES:

1. FOLLOWING TEMPORARY ACCESS RAMP USE CONTRACTOR SHALL RESTORE SITE TO PRE-CONSTRUCTION CONDITIONS INCLUDING RESTORATION OF SURFACE DRAINAGE FLOW PATTERNS TO PRE-CONSTRUCTION CONDITIONS.
2. FOLLOWING TEMPORARY ACCESS RAMP USE CONTRACTOR SHALL RESTORE SIGNING AND STRIPING WITHIN THE GARAGE TO PRE-CONSTRUCTION CONDITIONS INCLUDING RESTRIPING AND RESIGNING PARKING SPACES.
3. BOULDERS SHALL BE RELOCATED TO THEIR PRE-CONSTRUCTION POSITIONS.
4. RESET MEDIAN BARRIER SHALL BE PAID FOR UNDER ITEM 909.3020.

20 0 20 40
SCALE IN FEET

ADDENDUM NO. 5

VANASSE HANGEN BRUSTLIN, INC.
TRANSPORTATION LAND DEVELOPMENT
ENVIRONMENTAL SERVICES
PROVIDENCE, RHODE ISLAND

REVISIONS		
NO.	DATE	BY
1	9/26/14	VHB

RHODE ISLAND
DEPARTMENT OF TRANSPORTATION

PROVIDENCE STATION
SURFACE IMPROVEMENTS PROJECT
CONTRACT 1
PROVIDENCE, RHODE ISLAND

SITE RESTORATION PLAN NO. 1
TEMPORARY ACCESS DRIVE

CHECKED BY _____ DATE _____ SCALE _____

9004D_V1_074_SITE RESTORATION
ACCESS_ADD05

Table of Contents - Distribution of Quantities

Project Name - Providence Station Enhancements
Estimate Name - Addendum No. 5
R.I. Contract No. - 2014-CI-075
FAP Nos: RI-04-0007, RI-05-0103, RI-55-0001

ItemCode	Description	Page
201.0301	CUTTING AND DISPOSING ISOLATED TREES AND STUMPS (4"- 24")	1
201.0321	CLEARING AND GRUBBING	1
201.0401	REMOVE AND DISPOSE GRANITE CURB	1
201.0403	REMOVE AND DISPOSE SIDEWALKS	2
201.0405	REMOVE AND DISPOSE MASONRY	2
201.0407	REMOVE AND DISPOSE PAVEMENT AND RIGID BASE	2
201.0409	REMOVE AND DISPOSE FLEXIBLE PAVEMENT	3
201.0410	REMOVE AND DISPOSE CATCH BASINS	3
201.0414	REMOVE AND DISPOSE PIPE - ALL SIZES	3
201.0419	REMOVE AND DISPOSE FENCE	5
201.0422	REMOVE AND DISPOSE DROP INLET	5
201.0424	REMOVE AND DISPOSE RETAINING WALL	5
201.0428	REMOVE AND DISPOSE FRAME AND GRATE OR FRAME AND COVER	5
201.0433	REMOVE AND DISPOSE BOLLARD	6
201.0450	REMOVE AND STOCKPILE ON SITE GRANITE CURB	6
201.0601	REMOVE AND DISPOSE GROUND MOUNTED SIGNS	7
201.0609	REMOVE AND SALVAGE DIRECTIONAL REGULATORY AND WARNING SIGNS	7
201.0610	REMOVE AND DISPOSE DIRECTIONAL, WARNING, REGULATORY, SERVICE, AND STREET SIGNS	7
201.0617	REMOVE AND DISPOSE CONDUIT - ALL SIZES	8
201.9901	REMOVE AND DISPOSE BOLLARD AND CHAIN	8
201.9902	REMOVE AND DISPOSE LIMESTONE WALL CAP	8
201.9903	REMOVE AND DISPOSE LIMESTONE WALL FACING	9
201.9904	REMOVE AND DISPOSE STAINLESS STEEL RAILING SYSTEM	9
201.9905	REMOVE AND DISPOSE HANDRAILS	9
201.9906	REMOVE AND DISPOSE BENCH	9
201.9907	REMOVE AND DISPOSE TRASH RECEPTACLES	9
201.9909	REMOVE AND DISPOSE PAVERS (ALL TYPES)	10
201.9912	REMOVE AND DISPOSE PLAZA PLANTERS IRRIGATION SYSTEM	10
201.9913	REMOVE AND DISPOSE WEST PLAZA PLANTERS IRRIGATION SYSTEM	10
201.9914	REMOVE AND DISPOSE YARD DRAIN & CAP PIPE	10
201.9915	REMOVE AND DISPOSE EXTRUDED POLYSTRENE FOAM	12
201.9916	REMOVE AND SALVAGE LIGHT POLES AND LUMINAIRES	12
201.9918	REMOVE AND STOCKPILE BENCH	12
201.9919	REMOVE AND STOCKPILE TRASH RECEPTACLE	12
201.9920	**** ITEM DELETED ****	**12**
201.9921	RESET TRASH RECEPTACLE FROM STOCKPILE	13
201.9922	RESET BENCH FROM STOCKPILE	13
201.9923	**** ITEM DELETED ****	**13**
201.9924	REMOVE AND RELOCATE BOULDER	13
202.0100	EARTH EXCAVATION	13
202.0700	COMMON BORROW	14
203.9901	DEWATERING	15
204.0100	TRIMMING AND FINE GRADING	15
206.9901	COMPOST FILTER SOCK/SILT SOCK	15
208.0100	DEWATERING BASIN STANDARD 9.7.0	16
209.9901	GI SOLIDS AND FINES CAPTURE DEVICE	16
212.2000	CLEANING AND MAINTENANCE OF EROSION CONTROLS	16
301.0300	CRUSHED STONE OR CRUSHED GRAVEL BASE MODIFIED	17
302.0100	GRAVEL BORROW SUBBASE COURSE	17
401.9901	**HOT MIX ASPHALT CLASS 9.5**	**17**
403.0300	ASPHALT EMULSION TACK COAT	17
501.0103	PORTLAND CEMENT CONCRETE BASE	18
701.0412	REINFORCED CONCRETE PIPE M 170 CLASS III 12 INCH	18
701.4312	12 INCH SMOOTH INTERIOR CORRUGATED POLYETHYLENE PIPE	18

Table of Contents - Distribution of Quantities

Project Name - Providence Station Enhancements
Estimate Name - Addendum No. 5
R.I. Contract No. - 2014-CI-075
FAP Nos: RI-04-0007, RI-05-0103, RI-55-0001

ItemCode	Description	Page
701.9901	5 INCH HUBLESS CAST IRON PIPE	19
701.9902	6 IN HUBLESS CAST IRON PIPE	19
701.9903	FLOOR DRAIN	20
701.9904	PLANTER DRAIN	20
702.0204	4' MANHOLE BLOCK STANDARD 3.2.0	21
702.0512	FRAME AND GRATE STANDARD 6.3.0	21
702.0605	PRECAST CATCH BASIN 4' DIAMETER STANDARD 4.4.0	21
702.0705	CATCH BASIN W/GUTTER INLET STANDARD 3.4.1	21
702.0714	PRECAST CONCRETE DROP INLET WITH APRON STONE STANDARD 4.5.2	22
702.9901	CITY OF PROVIDENCE STD. HIGH CAPACITY FRAME GRATE	22
702.9902	CITY OF PROVIDENCE STD. SIDEWALK MANHOLE FRAME AND COVER	22
704.0100	RECONSTRUCT CATCH BASIN/CORBEL CONES	22
707.0955	ADJUST ELECTRICAL MANHOLE TO GRADE	22
707.1100	ADJUST CATCH BASINS	23
707.9901	ADJUST YARD DRAIN TO GRADE	23
707.9902	SIDEWALK GRATE REPAIRS	23
708.9041	CLEANING CATCH BASINS ALL TYPES AND SIZES	23
807.9901	CONCRETE MASONRY UNIT WALL	24
808.9901	LIGHTWEIGHT PORTLAND CEMENT CONCRETE- PLANTER WALL STEMS	24
808.9902	LIGHTWEIGHT PORTLAND CEMENT CONCRETE -STAIRWAY	24
810.9901	**GALVANIZED BAR REINFORCEMENT FOR STRUCTURES**	**24**
813.9901	WATERPROOFING MEMBRANE SYSTEM	25
813.9902	**EXTRUDED POLYSTYRENE FOAM**	**25**
817.9901	UNDERSIDE OF PLAZA CONCRETE REPAIR	25
817.9902	RAMP WALL CONCRETE VERTICAL SURFACE REPAIR	25
817.9903	CONTROL/COVE JOINT REPAIR	25
817.9904	CONCRETE STAIR REPAIR	25
817.9905	PARTIAL DEPTH GARAGE DECK SLAB REPAIR	26
817.9906	EXPANSION JOINT CONCRETE REPAIR	26
819.0800	DRILL AND GROUT REINFORCING DOWELS	26
820.9901	ACRYLIC WATERPROOF COATING SYSTEM	26
820.9902	CLEAN CONCRETE WALL	26
823.9901	EXPANSION JOINT SEAL-TYPE A	27
823.9902	EXPANSION JOINT SEAL-TYPE B	27
823.9903	EXPANSION JOINT SEAL-TYPE C	27
823.9904	EXPANSION JOINT SEAL-TYPE D	27
823.9905	EXPANSION JOINT SEAL-TYPE E	27
825.9901	SURFACE PREPARATION TO SSPC-SP6 AND PAINTING EXISTING 4-BAR RAILING SYSTEM	27
836.0100	STRUCTURAL CONCRETE CRACK REPAIR BY EPOXY-RESIN BASE ADHESIVE INJECTION	28
903.0206	CHAIN LINK FENCE 6' STD 31.2.0	28
903.0227	GATE, CHAIN LINK 6' STANDARD 31.2.0	28
903.9901	WALL MOUNTED STEEL FENCE - 42" HIGH	28
903.9902	WALL MOUNTED ORNAMENTAL STEEL FENCE - 24" HIGH	28
903.9903	STEEL STAIR HANDRAILING - WALL MOUNTED	29
903.9904	STEEL STAIR HANDRAILING - MOUNTED IN GRANITE WALL	29
903.9905	**TEMPORARY CHAIN LINK FENCE, 6 FT. HIGH**	**29**
905.0110	**PORTLAND CEMENT SIDEWALK MONOLITHIC STANDARD 43.1.0**	**29**
905.9901	**INTEGRALLY COLORED AND STAMPED PORTLAND CEMENT CONCRETE SIDEWALK**	**30**
905.9902	**INTEGRALLY COLORED AND 12 INCH GRID SCORED PORTLAND CEMENT CONCRETE SIDEWALK**	**30**
905.9903	**INTEGRALLY COLORED AND 15 INCH SCORED PORTLAND CEMENT CONCRETE SIDEWALK**	**30**

Table of Contents - Distribution of Quantities

Project Name - Providence Station Enhancements
Estimate Name - Addendum No. 5
R.I. Contract No. - 2014-CI-075
FAP Nos: RI-04-0007, RI-05-0103, RI-55-0001

ItemCode	Description	Page
905.9904	**INTEGRALLY COLORED AND 24 INCH GRID SCORED PORTLAND CEMENT CONCRETE SIDEWALK**	**31**
905.9905	**48 INCH SCORED PORTLAND CEMENT CONCRETE SIDEWALK**	**31**
905.9906	**CEMENT CONCRETE DRIVEWAY**	**32**
906.0700	REMOVE, HANDLE, HAUL TRIM RESET CURB EDGING, STRAIGHT, CIRCULAR ALL TYPES	32
906.9901	GRANITE CURB, QUARRY SPLIT STRAIGHT, STANDARD 7.3.0, 7" WIDTH	32
906.9902	GRANITE CURB, QUARRY SPLIT CIRCULAR, STANDARD 7.3.0, 7" WIDTH	33
906.9905	GRANITE CURB, QUARRY SPLIT 2 FOOT CORNERS, STANDARD 7.3.4	33
906.9906	GRANITE CURB, QUARRY SPLIT STRAIGHT, STANDARD 7.3.0 - MODIFIED 7" WIDE X 9" HIGH, DOWELED INTO CONCRETE	33
906.9907	GRANITE CURB, QUARRY SPLIT CIRCULAR, STANDARD 7.3.0 - MODIFIED 7" WIDE X 9" HIGH, DOWELED INTO CONCRETE	33
906.9908	GRANITE CURB, QUARRY SPLIT 2 FOOT CORNER, STANDARD 7.3.4 - MODIFIED 7" WIDE X 9" HIGH, DOWELED INTO CONCRETE	34
906.9909	REMOVE, HANDLE, HAUL, TRIM, RESET CURB EDGING, STRAIGHT, CIRCULAR, ALL TYPES - DOWELED INTO CONCRETE	34
906.9910	GRANITE APRON STONE-MODIFIED 7" WIDTH	34
906.9911	GRANITE CURB, QUARRY SPLIT STRAIGHT, STANDARD 7.3.0 - MODIFIED 12" WIDE X 9" HIGH, DOWELED INTO CONCRETE	35
906.9912	GRANITE CURB, QUARRY SPLIT CURVED, STANDARD 7.3.0 - MODIFIED 12" WIDE X 9" HIGH, DOWELED INTO CONCRETE	35
907.0100	WATER FOR DUST CONTROL	35
911.9901	12" X 13" GRANITE PLANTER WALLS, THERMAL FINISH	35
911.9903	GRANITE CAPS	36
911.9904	GRANITE FACING	36
911.9905	GRANITE COMPASS ROSE	36
911.9906	GRANITE TRANSITION PIERS	37
911.9907	GRANITE STEPS	37
914.5010	FLAGPERSONS	37
914.5020	FLAGPERSONS - OVERTIME	37
920.0050	PLACED STONE RIPRAP R-1, R-2 STANDARD 8.3.0	37
920.0135	BEDDING FOR RIPRAP FS-2 STANDARD 8.3.0	38
920.0200	FILTER FABRIC FOR RIP-RAP	38
922.0100	TEMPORARY CONSTRUCTION SIGNS STANDARD 29.1.0 AND 27.1.1	38
923.0105	DRUM BARRICADE STANDARD 26.2.0	38
923.0120	PLASTIC PIPE BARRICADE STANDARD 26.3.0	38
923.0200	FLUORESCENT TRAFFIC CONES STANDARD 26.1.0	39
929.0110	FIELD OFFICE	39
931.0110	CLEANING AND SWEEPING PAVEMENT	39
932.0100	CUTTING AND MATCHING ASPHALT	39
932.0200	FULL-DEPTH SAWCUT OF BITUMINOUS PAVEMENT	39
932.0210	FULL DEPTH SAWCUT OF BITUMINOUS PAVEMENT AND RIGID BASE	40
932.0220	FULL DEPTH SAWCUT OF BITUMINOUS SIDEWALK/DRIVEWAY	40
932.0230	FULL DEPTH SAWCUT OF PORTLAND CEMENT CONCRETE SIDEWALK/DRIVEWAY	40
935.9901	IMPRINT CROSSWALK	41
936.0110	MOBILIZATION	41
937.0200	MAINTENANCE AND MOVEMENT TRAFFIC PROTECTION	41
942.9901	DETECTABLE WARNING SYSTEM - CAST IN CONCRETE	41
943.0200	TRAINEE MAN-HOURS	42
999.9901	BUS SHELTER	42
999.9902	INSTALL RIPTA RLINE TOTEM	42
999.9903	PARKING ATTENDANTS BOOTH	42

Table of Contents - Distribution of Quantities

Project Name - Providence Station Enhancements
Estimate Name - Addendum No. 5
R.I. Contract No. - 2014-CI-075
FAP Nos: RI-04-0007, RI-05-0103, RI-55-0001

ItemCode	Description	Page
L01.0102	**LOAM BORROW 4 INCHES DEEP**	**43**
L01.9901	LIGHTWEIGHT PLANTING MEDIUM	43
L02.0102	**RESIDENTIAL SEEDING (TYPE 2)**	**43**
L06.9904	FESTUCA OVATO 'ELIJAH BLUE', #1 POT CONT.	44
L06.9905	HELICTOTRICHON SEMPERVIRENS, #2 POT CONT.	44
L06.9906	PENNISETUM ALOPECUROIDES 'HAMELIN', EACH #2 POT CONT.	44
L06.9908	PRUNUS INCISA 'OKAME', 3"-3.5" CAL., B&B	44
L06.9909	HEMEROCALLIX X 'ROSY RETURNS', #1 POT CONT.	44
L06.9910	HEMEROCALLIX X 'STELLA DE ORO', #1 POT CONT.	45
L06.9911	JUNIPERUS CHINENSIS SARGENTII, 15"-18" SPREAD CONT.	45
L06.9912	ACER RUBRUM 'ARMSTRONG', 4"-4.5" CAL., B&B	45
L11.0102	TREE PLANT PROTECTION DEVICE STANDARD 51.1.0	45
L15.9901	BENCH	45
L15.9902	STEEL BIKE RACK	46
L15.9903	INSTALL AMTRAK SUPPLIED STATIONARY BOLLARD AND COVER	46
L15.9904	INSTALL AMTRAK SUPPLIED REMOVABLE BOLLARD AND COVER	46
L15.9905	INSTALL AMTRAK SUPPLIED PINNED BOLLARD AND COVER	46
L15.9906	TRASH RECEPTACLE	47
L15.9907	CIGARETTE ASH URN	47
L15.9908	BIKE SHELTER	47
L15.9909	PRECAST CONCRETE REMOVABLE PLANTER	47
L15.9910	**BOLLARD WITH CHAIN**	**47**
L15.9911	SOUTH PLAZA IRRIGATION SYSTEM	48
L15.9912	MODIFICATIONS TO STATION PARK IRRIGATION SYSTEM	48
T04.6902	'2' STRANDED COPPER CONDUCTOR 600V INSULATION	48
T04.6906	'6' STRANDED COPPER CONDUCTOR 600V INSULATION	48
T04.7300	IN-LINE FUSED DISCONNECT DEVICE WITH FUSE WEATHERPROOF	49
T04.7400	IN-LINE UNFUSED DISCONNECT DEVICE	49
T05.0100	PRECAST TYPE A HANDHOLE STANDARD 18.2.0	49
T05.0310	PULL BOX ON STRUCTURE TYPE W STANDARD 18.6.3	50
T05.9901	BREAK INTO EXISTING MANHOLE	50
T06.2020	2 IN. RIGID STEEL CONDUIT-OVERHEAD	50
T06.5120	2 INCH SCHEDULE 40 POLYVINYL CHLORIDE PLASTIC CONDUIT - UNDERGROUND	50
T06.5240	4 INCH SCHEDULE 80 POLYVINYL CHLORIDE PLASTIC CONDUIT - UNDERGROUND	50
T08.9901	DECORATIVE POLE FOUNDATION WITH BOLTS	51
T08.9903	TYPE "C" ORNAMENTAL POLE/LUMINAIRE-LED	51
T08.9904	TYPE "D" ORNAMENTAL POLE/LUMINAIRE-LED	51
T09.9901	SERVICE PEDESTAL & TESTING - RIDOT STANDARD MODIFIED	52
T09.9902	SECONDARY SERVICE FROM NATIONAL GRID MANHOLE	52
T12.9150	METER SOCKET W/MANUAL BY-PASS	52
T15.0100	DIRECTIONAL REGULATORY AND WARNING SIGNS	52
T15.0200	REMOVE AND RELOCATE DIRECTIONAL REGULATORY AND WARNING SIGN	53
T15.1000	STREET SIGN ASSEMBLY STD. 24.6.1	53
T15.2000	PARKING SIGNS	54
T15.9901	STREET NAME SIGNS	54
T15.9902	REMOVE AND RELOCATE PARKING METER - PLATE MOUNTED	54
T15.9903	REMOVE AND SALVAGE PARKING METER	54
T15.9904	REMOVE AND RESET SIGN, STANDARD 24.2.0 MODIFIED	55
T15.9905	REMOVE AND RESET SIGN, STANDARD 24.4.0 MODIFIED	55
T15.9906	REMOVE AND RESET SIGN, STANDARD 24.6.1 MODIFIED	55
T20.0012	12 INCH WHITE FAST - DRYING WATERBORNE PAVEMENT MARKING PAINT	55

Table of Contents - Distribution of Quantities

Project Name – Providence Station Enhancements
Estimate Name – Addendum No. 5
R.I. Contract No. – 2014-CI-075
FAP Nos: RI-04-0007, RI-05-0103, RI-55-0001

ItemCode	Description	Page
T20.0104	4 INCH YELLOW FAST - DRYING WATERBORNE PAVEMENT MARKING PAINT	55
T20.0604	TEMPORARY PAVEMENT MARKING (TAPE) YELLOW AND/OR WHITE - 4 INCH	56
T20.0820	FAST DRYING WATERBONE PAVEMENT ARROW - STRAIGHT, LEFT, RIGHT, OR COMBINED STANDARD 20.1.0	56
T20.1000	REMOVE EXISTING PAVEMENT MARKINGS	56
T20.2004	4 INCH EPOXY RESIN PAVEMENT MARKINGS WHITE	56
T20.2012	12 INCH EPOXY RESIN PAVEMENT MARKINGS WHITE	57
T20.2014	4 INCH EPOXY RESIN PAVEMENT MARKINGS YELLOW	57
T20.9902	EPOXY RESIN PAVEMENT MARKING RAISED CROSSWALK SYMBOL – WHITE	58
T20.9903	24 INCH EPOXY RESIN PAVEMENT MARKINGS - WHITE	58
201.0420	**REMOVE AND DISPOSE CONCRETE SLAB**	**58**
201.9925	**REMOVE AND DISPOSE TEMPORARY ELECTRICAL EQUIPTMENT AND HOUSING**	**58**
905.9907	**INTEGRALLY COLORED AND RADIALLY SCORED PORTLAND CEMENT CONCRETE**	**58**
999.9904	**PARKING ACCESS AND REVENUE CONTROL SYSTEM**	**58**

Distribution of Quantities

Project Name - Providence Station Enhancements
Estimate Name - Addendum No. 5
R.I. Contract No. - 2014-CI-075
FAP Nos: RI-04-0007, RI-05-0103, RI-55-0001

Item No.	Item Code	Description	UM	Qty.	Pay Code	Seq. No.
048	**301.0300**	**CRUSHED STONE OR CRUSHED GRAVEL BASE MODIFIED**	**CY**			
		GASPEE STREET				
		STA. 102+43 TO STA. 103+63		207.00	0006	01
		RT STAGING AREA				
		Item 301.0300 Total:		**207.00**		
049	**302.0100**	**GRAVEL BORROW SUBBASE COURSE**	**CY**			
		GASPEE STREET				
		STA. 101+22 TO STA. 103+43		69.00	0006	01
		RT FDP				
		STA. 101+22 TO STA. 103+43		72.00	0006	01
		RT SW				
		TEMP ACCESS RAMP				
		STA. 701+58 TO STA. 704+94		320.00	0006	01
		TAR				
		Item 302.0100 Total:		**461.00**		
S050	**401.9901**	**HOT MIX ASPHALT CLASS 9.5**	**TON**			
		GASPEE STREET				
		STA. 101+22 TO STA. 103+43 RT		39.00	0006	01
		PARK ROW WEST				
		STA. 399+85 TO STA. 404+04		545.00	0023	02
		RAILROAD STREET				
		RAISED XWALK		25.00	0023	02
		STA. 300+32 TO STA. 302+89		381.00	0023	02
		TEMP ACCESS RAMP				
		STA. 701+33 TO STA. 701+58		2.00	0023	02
		TBR				
		STA. 701+58 TO STA. 704+94		179.00	0023	02
		TAR				
		Item 401.9901 Total:		**1,171.00**		

Distribution of Quantities

Project Name - Providence Station Enhancements
Estimate Name - Addendum No. 5
R.I. Contract No. - 2014-CI-075
FAP Nos: RI-04-0007, RI-05-0103, RI-55-0001

Item No.	Item Code	Description	UM	Qty.	Pay Code	Seq. No.
051	**403.0300**	**ASPHALT EMULSION TACK COAT**	**SY**			

Distribution of Quantities

Project Name - Providence Station Enhancements
Estimate Name - Addendum No. 5
R.I. Contract No. - 2014-CI-075
FAP Nos: RI-04-0007, RI-05-0103, RI-55-0001

Item No.	Item Code	Description	UM	Qty.	Pay Code	Seq. No.
071	**708.9041 Cont.**	RAILROAD STREET				
		STA 300+57 RT		1.00	0023	02
		STA 302+22 RT		1.00	0023	02
		STA 304+03 RT		1.00	0023	02
		Item 708.9041 Total:		**9.00**		
072	**807.9901**	**CONCRETE MASONRY UNIT WALL**	**SF**			
		RAILROAD STREET				
		STA. 301+60 TO STA. 301+70 LT		45.00	0006	01
		STA. 304+25 TO STA. 304+35 LT		45.00	0006	01
		Item 807.9901 Total:		**90.00**		
073	**808.9901**	**LIGHTWEIGHT PORTLAND CEMENT**	**CY**			
		CONCRETE- PLANTER WALL STEMS				
		UNDER 12" X 13" GRANITE				
		LANDSCAPE WALLS				
		1566 LF OF WALL		63.00	0006	01
		Item 808.9901 Total:		**63.00**		
074	**808.9902**	**LIGHTWEIGHT PORTLAND CEMENT**	**CY**			
		CONCRETE -STAIRWAY				
		UNDER 12" X 13" GRANITE				
		LANDSCAPE WALLS				
		PLAZA STAIRS		10.00	0006	01
		Item 808.9902 Total:		**10.00**		
075	**810.9901**	**GALVANIZED BAR REINFORCEMENT FOR**	**LBS**			
		STRUCTURES				
		SOUTH PLAZA				
		CURB DOWELS		751.00	0006	01
		PLANTER STEM WALLS		9,450.00	0006	01
		PLANTER WALL DOWELS		901.00	0006	01
		PLAZA STAIRS		750.00	0006	01

Distribution of Quantities

Project Name - Providence Station Enhancements
Estimate Name - Addendum No. 5
R.I. Contract No. - 2014-CI-075
FAP Nos: RI-04-0007, RI-05-0103, RI-55-0001

Item No.	Item Code	Description	UM	Qty.	Pay Code	Seq. No.
075	810.9901 Cont.	**Item 810.9901 Total:**		**11,852.00**		
S076	813.9901	**WATERPROOFING MEMBRANE SYSTEM**	**SY**			
		GARAGE ROOF DECK				
		PROJECT WIDE		8,080.00	0006	01
		Item 813.9901 Total:		**8,080.00**		
077	813.9902	**EXTRUDED POLYSTYRENE FOAM**	**CY**			
		PARK ROW WEST				
		SIDEWALKS			0006	01
		SOUTH PLAZA				
		PLANTERS		630.00	0006	01
		SIDEWALKS		600.00	0006	01
		Item 813.9902 Total:		**1,230.00**		
078	817.9901	**UNDERSIDE OF PLAZA CONCRETE REPAIR**	**SF**			
		GARAGE ROOF DECK				
		PROJECT WIDE		3,000.00	0006	01
		Item 817.9901 Total:		**3,000.00**		
079	817.9902	**RAMP WALL CONCRETE VERTICAL SURFACE REPAIR**	**SF**			
		GARAGE ROOF DECK				
		PROJECT WIDE		500.00	0006	01
		Item 817.9902 Total:		**500.00**		
S080	817.9903	**CONTROL/COVE JOINT REPAIR**	**LF**			
		GARAGE ROOF DECK				
		PROJECT WIDE		12,000.00	0006	01
		Item 817.9903 Total:		**12,000.00**		
081	817.9904	**CONCRETE STAIR REPAIR**	**SF**			
		SOUTH PLAZA				

Distribution of Quantities

Project Name - Providence Station Enhancements
Estimate Name - Addendum No. 5
R.I. Contract No. - 2014-CI-075
FAP Nos: RI-04-0007, RI-05-0103, RI-55-0001

Item No.	Item Code	Description	UM	Qty.	Pay Code	Seq. No.
081	**817.9904 Cont.**	PROJECT WIDE		750.00	0006	01

Distribution of Quantities

Project Name - Providence Station Enhancements
Estimate Name - Addendum No. 5
R.I. Contract No. - 2014-CI-075
FAP Nos: RI-04-0007, RI-05-0103, RI-55-0001

Item No.	Item Code	Description	UM	Qty.	Pay Code	Seq. No.
S097	**903.9902 Cont.**	STA. 301+35 TO STA. 302+56 RT		200.00	0023	02
		STA. 303+20 TO STA. 304+15 RT		200.00	0023	02
		STA. 303+29 TO STA. 303+51 RT		53.00	0023	02
		Item 903.9902 Total:		**453.00**		
S098	**903.9903**	**STEEL STAIR HANDRAILING - WALL MOUNTED**	**LF**			
		SOUTH PLAZA				
		STA. 303+40 RT		44.00	0023	02
		Item 903.9903 Total:		**44.00**		
S099	**903.9904**	**STEEL STAIR HANDRAILING - MOUNTED IN GRANITE WALL**	**LF**			
		SOUTH PLAZA				
		STA. 401+85 LT		8.00	0023	02
		STA. 401+94 LT		8.00	0023	02
		STA. 402+50 LT		8.00	0023	02
		STA. 402+56 LT		8.00	0023	02
		Item 903.9904 Total:		**32.00**		
100	**903.9905**	**TEMPORARY CHAIN LINK FENCE, 6 FT. HIGH**	**LF**			
		PROJECT WIDE				
		TRAFFIC CONTROL		1,500.00	0006	01
		Item 903.9905 Total:		**1,500.00**		
101	**905.0110**	**PORTLAND CEMENT SIDEWALK MONOLITHIC STANDARD 43.1.0**	**CY**			
		FINANCE WAY				
		FROM TRAFFIC CONTROL PLAN NO. 3 (LT)		1.00	0006	01
		FROM TRAFFIC CONTROL PLAN NO. 3 (RT)		2.00	0006	01

Distribution of Quantities

Project Name - Providence Station Enhancements
Estimate Name - Addendum No. 5
R.I. Contract No. - 2014-CI-075
FAP Nos: RI-04-0007, RI-05-0103, RI-55-0001

Item No.	Item Code	Description	UM	Qty.	Pay Code	Seq. No.
101	**905.0110 Cont.**	GASPEE STREET				
		STA. 101+22 TO STA. 103+43 RT		24.00	0006	01
		RAILROAD STREET				
		RAISED XWALK		12.00	0006	01
		STA. 301+65 TO STA. 302+05 LT		2.00	0006	01
		Item 905.0110 Total:		**41.00**		
102	**905.9901**	**INTEGRALLY COLORED AND STAMPED PORTLAND CEMENT CONCRETE SIDEWALK**	**CY**			
		PARK ROW WEST				
		STA 400+88 TO STA 400+62 LT		5.00	0023	02
		STA 401+33 TO STA 401+86 LT		2.00	0023	02
		STA 402+58 TO STA 403+08 LT		3.00	0023	02
		STA 402+77 TO STA 403+43 LT		2.00	0023	02
		Item 905.9901 Total:		**12.00**		
103	**905.9902**	**INTEGRALLY COLORED AND 12 INCH GRID SCORED PORTLAND CEMENT CONCRETE SIDEWALK**	**CY**			
		SOUTH PLAZA				
		STA. 302+57 TO STA. 303+27 LT		5.00	0023	02
		Item 905.9902 Total:		**5.00**		
104	**905.9903**	**INTEGRALLY COLORED AND 15 INCH SCORED PORTLAND CEMENT CONCRETE SIDEWALK**	**CY**			
		RAILROAD STREET				
		STA 301+62 TO STA 302+01 LT (BOLLARD AREA CONCRETE CLASS XX)			0023	02
		STA 302+17 TO 303+93 LT		4.00	0023	02
		STA 304+13 TO STA 304+25 LT			0023	02
		Item 905.9903 Total:		**4.00**		

Distribution of Quantities

Project Name - Providence Station Enhancements
Estimate Name - Addendum No. 5
R.I. Contract No. - 2014-CI-075
FAP Nos: RI-04-0007, RI-05-0103, RI-55-0001

Item No.	Item Code	Description	UM	Qty.	Pay Code	Seq. No.
105	**905.9904**	**INTEGRALLY COLORED AND 24 INCH**	**CY**			
		GRID SCORED PORTLAND CEMENT				
		CONCRETE SIDEWALK				
		RAILROAD STREET				
		STA. 301+96 TO STA. 302+17		2.00	0023	02
		LT (BOLLARD AREA CONCRETE				
		CLASS XX)				
		STA. 302+91 TO STA. 303+17		3.00	0023	02
		LT (BOLLARD AREA CONCRETE				
		CLASS XX)				
		SOUTH PLAZA				
		STA. 302+80 TO STA. 303+06 RT		2.00	0023	02
		STA. 302+84 TO STA. 303+09 RT		3.00	0023	02
		STA. 400+83 TO STA. 401+14 LT		5.00	0023	02
		STA. 401+99 TO STA. 402+24 LT		2.00	0023	02
		STA. 402+05 TO STA. 402+30 LT		2.00	0023	02
		Item 905.9904 Total:		**19.00**		
106	**905.9905**	**48 INCH SCORED PORTLAND CEMENT**	**CY**			
		CONCRETE SIDEWALK				
		PARK ROW WEST				
		STA. 400+00 RT		2.00	0006	01
		STA. 400+70 RT		2.00	0006	01
		STA. 403+50 RT		1.00	0006	01
		RAILROAD STREET				
		RAISED XWALK BASE		7.00	0006	01
		STA. 300+09 TO STA. 301+70 LT		20.00	0006	01
		STA. 301+65 TO STA. 302+00 LT		4.00	0006	01
		STA. 301+80 TO STA. 302+00 LT		1.00	0006	01
		STA. 302+13 TO STA. 302+91		10.00	0006	01
		LT (BOLLARD AREA CONCRETE				
		CLASS XX)				
		STA. 303+14 TO STA. 304+14		12.00	0006	01

Distribution of Quantities

Project Name - Providence Station Enhancements
Estimate Name - Addendum No. 5
R.I. Contract No. - 2014-CI-075
FAP Nos: RI-04-0007, RI-05-0103, RI-55-0001

Item No.	Item Code	Description	UM	Qty.	Pay Code	Seq. No.
106	**905.9905 Cont.**	LT (BOLLARD AREA CONCRETE				
		CLASS XX)				
		STA. 304+14 TO STA. 304+29 LT		4.00	0006	01
		STA. 304+15 TO STA. 304+35 LT		2.00	0006	01
		STA. 304+29 TO STA. 305+98 LT		33.00	0006	01
		SOUTH PLAZA				
		STA. 400+45 TO STA. 400+75 LT		7.00	0006	01
		STA. 400+95 TO STA. 401+80 LT		1.00	0006	01
		STA. 400+95 TO STA. 401+95 LT		1.00	0006	01
		STA. 401+75 TO STA. 402+00 LT		1.00	0006	01
		STA. 402+25 TO STA. 403+75 LT		31.00	0006	01
		STA. 402+90 TO STA. 402+55 LT		21.00	0006	01
		Item 905.9905 Total:		**160.00**		
107	**905.9906**	**CEMENT CONCRETE DRIVEWAY**	**CY**			
		RAILROAD STREET				
		STA. 301+60 TO 301+90 LT		20.00	0006	01
		STA. 304+10 TO STA. 304+35 LT		16.00	0006	01
		Item 905.9906 Total:		**36.00**		
108	**906.0700**	**REMOVE, HANDLE, HAUL TRIM RESET**	**LF**			
		CURB EDGING, STRAIGHT, CIRCULAR				
		ALL TYPES				
		FINANCE WAY				
		FROM TRAFFIC CONTROL PLAN		18.00	0006	01
		NO. 3 (RT)				
		Item 906.0700 Total:		**18.00**		
109	**906.9901**	**GRANITE CURB, QUARRY SPLIT**	**LF**			
		STRAIGHT, STANDARD 7.3.0, 7" WIDTH				
		GASPEE STREET				
		STA. 101+22 TO STA. 101+28 RT		6.00	0006	01
		STA. 101+49 TO STA. 103+16 RT		184.00	0006	01

Distribution of Quantities

Project Name - Providence Station Enhancements
Estimate Name - Addendum No. 5
R.I. Contract No. - 2014-CI-075
FAP Nos: RI-04-0007, RI-05-0103, RI-55-0001

Item No.	Item Code	Description	UM	Qty.	Pay Code	Seq. No.
109	**906.9901 Cont.**	STA. 103+34 TO STA. 103+41 RT		8.00	0006	01

Distribution of Quantities

Project Name - Providence Station Enhancements
Estimate Name - Addendum No. 5
R.I. Contract No. - 2014-CI-075
FAP Nos: RI-04-0007, RI-05-0103, RI-55-0001

Item No.	Item Code	Description	UM	Qty.	Pay Code	Seq. No.
S149	**999.9903 Cont.**	TEMP ACCESS DRIVE		1.00	0023	02
		Item 999.9903 Total:		**1.00**		
150	**L01.0102**	**LOAM BORROW 4 INCHES DEEP**	**SY**			
		GASPEE STREET				
		STA. 101+22 TO STA. 103+46		125.00	0006	01
		RT L&S				
		STA. 102+43 TO STA. 103+63		1,238.00	0006	01
		RT STAGING AREA				
		STA. 102+43 TO STA.103+63 RT			0006	01
		STAGING AREA				
		SOUTH PLAZA				
		PLAZA TOTAL		800.00	0006	01
		WEST PLAZA				
		CONTINGENCY (10%)		4.00	0006	01
		STA. 200+40 TO STA. 200+50 LT		36.00	0006	01
		Item L01.0102 Total:		**965.00**		
S151	**L01.9901**	**LIGHTWEIGHT PLANTING MEDIUM**	**CY**			
		SOUTH PLAZA				
		STA 300+50 TO STA 302+85 RT		532.00	0006	01
		STA 303+09 TO STA 305+38 RT		473.00	0006	01
		STA 400+94 TO STA 401+95 LT		114.00	0006	01
		STA 401+00 TO STA 401+36 RT		23.00	0006	01
		STA 401+90 TO STA 402+50 LT		76.00	0006	01
		STA 402+50 TO STA 403+40 LT		102.00	0006	01
		Item L01.9901 Total:		**1,320.00**		
S152	**L02.0102**	**RESIDENTIAL SEEDING (TYPE 2)**	**SY**			
		GASPEE STREET				
		STA. 101+22 TO STA. 103+46 RT		125.00	0006	01
		STA. 102+43 TO STA. 103+63		1,238.00	0006	01
		RT STAGING AREA				

Distribution of Quantities

Project Name - Providence Station Enhancements
Estimate Name - Addendum No. 5
R.I. Contract No. - 2014-CI-075
FAP Nos: RI-04-0007, RI-05-0103, RI-55-0001

Item No.	Item Code	Description	UM	Qty.	Pay Code	Seq. No.
S152	L02.0102 Cont.	STA. 102+43 TO STA.103+63 RT			0006	01
		STAGING AREA				
		WEST PLAZA				
		CONINGENCY (10%)		4.00	0006	01

Distribution of Quantities

Project Name - Providence Station Enhancements
Estimate Name - Addendum No. 5
R.I. Contract No. - 2014-CI-075
FAP Nos: RI-04-0007, RI-05-0103, RI-55-0001

Item No.	Item Code	Description	UM	Qty.	Pay Code	Seq. No.
S152	**L02.0102 Cont.**	STA. 200+40 TO STA. 200+50 LT		36.00	0006	01
		Item L02.0102 Total:		**165.00**		
S153	**L06.9904**	**FESTUCA OVATO 'ELIJAH BLUE', #1 POT CONT.**	**EACH**			
		PROJECT WIDE				
		PROJECT WIDE		237.00	0006	01
		Item L06.9904 Total:		**237.00**		
S154	**L06.9905**	**HELICTOTRICHON SEMPERVIRENS, #2 POT CONT.**	**EACH**			
		PROJECT WIDE				
		PROJECT WIDE		1,256.00	0006	01
		Item L06.9905 Total:		**1,256.00**		
S155	**L06.9906**	**PENNISETUM ALOPECUROIDES 'HAMELIN', EACH #2 POT CONT.**	**EACH**			
		PROJECT WIDE				
		PROJECT WIDE		1,735.00	0006	01
		Item L06.9906 Total:		**1,735.00**		
S156	**L06.9908**	**PRUNUS INCISA 'OKAME', 3"-3.5" CAL., B&B**	**EACH**			
		PROJECT WIDE				
		PROJECT WIDE		16.00	0006	01
		Item L06.9908 Total:		**16.00**		
S157	**L06.9909**	**HEMEROCALLIX X 'ROSY RETURNS', #1 POT CONT.**	**EACH**			
		PROJECT WIDE				
		PROJECT WIDE		631.00	0006	01
		Item L06.9909 Total:		**631.00**		

Distribution of Quantities

Project Name - Providence Station Enhancements
Estimate Name - Addendum No. 5
R.I. Contract No. - 2014-CI-075
FAP Nos: RI-04-0007, RI-05-0103, RI-55-0001

Item No.	Item Code	Description	UM	Qty.	Pay Code	Seq. No.
S208	**T20.9902**	**EPOXY RESIN PAVEMENT MARKING**	**EACH**			
		RAISED CROSSWALK SYMBOL – WHITE				
		RAILROAD STREET				
		STA. 303+20 LT		1.00	0023	02
		STA. 303+20 RT		1.00	0023	02
		Item T20.9902 Total:		**2.00**		
S209	**T20.9903**	**24 INCH EPOXY RESIN PAVEMENT**	**LF**			
		MARKINGS - WHITE				
		FINANCE WAY				
		MID-BLOCK CROSSING		64.00	0006	01
		Item T20.9903 Total:		**64.00**		
210	**201.0420**	**REMOVE AND DISPOSE CONCRETE SLAB**	**SY**			
		SOUTH PLAZA				
		INSIDE PLANTERS		695.00	0006	01
		Item 201.0420 Total:		**695.00**		
211	**201.9925**	**REMOVE AND DISPOSE TEMPORARY**	**LS**			
		ELECTRICAL EQUIPTMENT AND HOUSING				
		AP4/LOT 264				
		TEMPORARY ACCESS ROAD		1.00	0006	01
		Item 201.9925 Total:		**1.00**		
212	**905.9907**	**INTEGRALLY COLORED AND RADIALLY**	**CY**			
		SCORED PORTLAND CEMENT CONCRETE				
		SOUTH PLAZA				
		STA. 402+00 TO STA. 402+40 LT		8.00	0006	01
		Item 905.9907 Total:		**8.00**		
213	**999.9904**	**PARKING ACCESS AND REVENUE CONTROL**	**LS**			
		SYSTEM				
		TEMPORARY ACCESS ROAD				

Distribution of Quantities

Project Name - Providence Station Enhancements
Estimate Name - Addendum No. 5
R.I. Contract No. - 2014-CI-075
FAP Nos: RI-04-0007, RI-05-0103, RI-55-0001

Item No.	Item Code	Description	UM	Qty.	Pay Code	Seq. No.
213	**999.9904 Cont.**	PROJECT WIDE		1.00	0006	01
		Item 999.9904 Total:		**1.00**		

FED. ROAD DIV. NO.	STATE	FEDERAL AID PROJECT NO.	FISCAL YEAR	SHEET NO.	TOTAL SHEETS
	R. I.			B-3	43

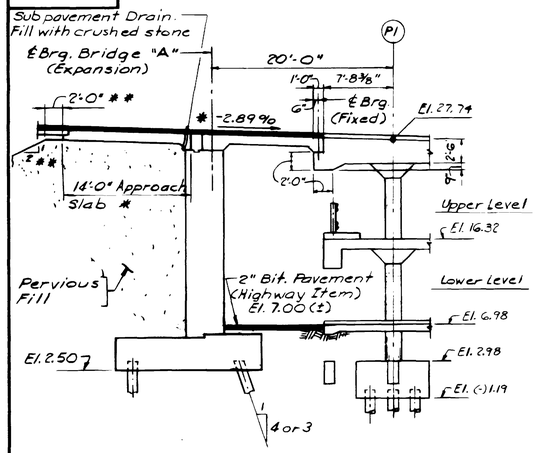

SECTION A
SCALE: 1/8" = 1'-0" B-2
THRU BRIDGE "A"

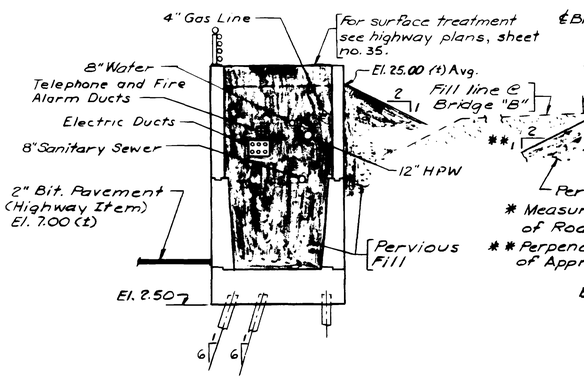

SECTION B
SCALE: 1/8" = 1'-0" B-2
THRU UTILITY CORRIDOR

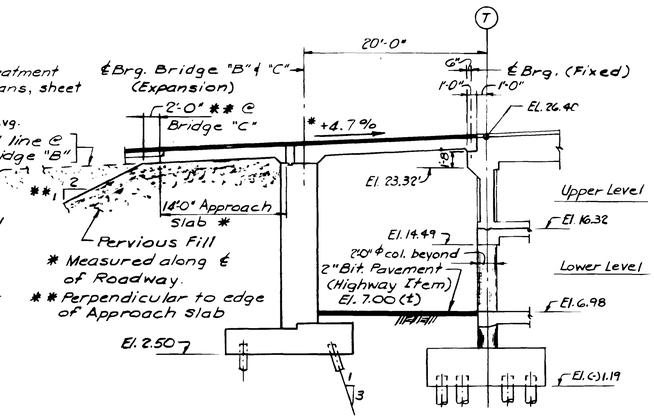

SECTION C
SCALE: 1/8" = 1'-0" B-2
THRU BRIDGES "B" & "C"

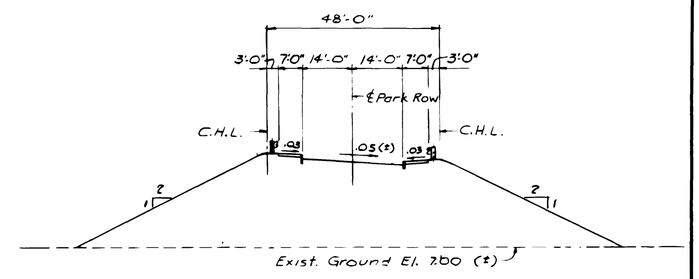

APPROACH SECTION AT STATION 6+00 PARK ROW WEST
SCALE: 1" = 20'-0"

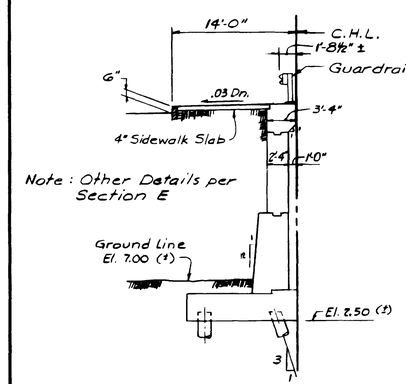

SECTION D
SCALE: 1/8" = 1'-0" B-2

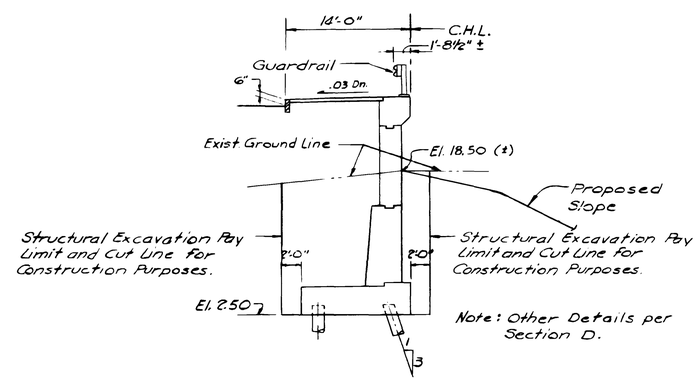

SECTION E
SCALE: 1/8" = 1'-0" B-2

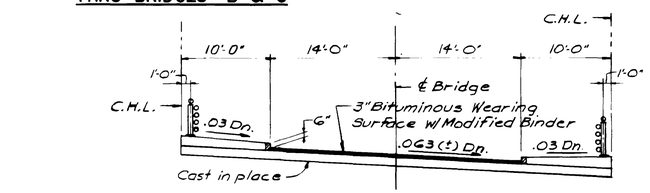

TRANSVERSE SECTION THRU BRIDGE "A"
SCALE: 1/8" = 1'-0"

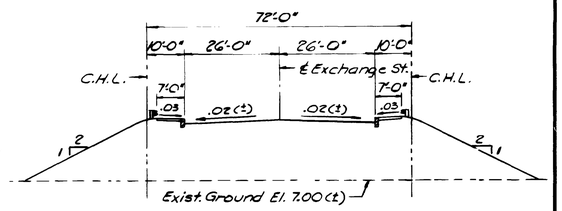

APPROACH SECTION AT STATION 8+00 EXCHANGE STREET
SCALE: 1" = 20'-0"

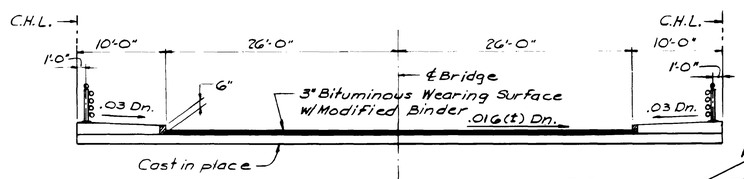

TRANSVERSE SECTION THRU BRIDGE "B"
SCALE: 1/8" = 1'-0"

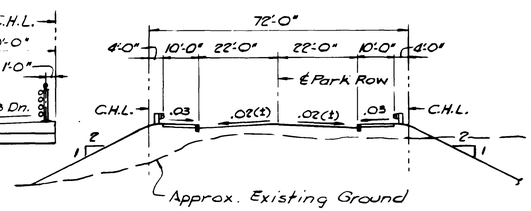

APPROACH SECTION AT STATION 9+00 PARK ROW EAST
SCALE: 1" = 20'-0"

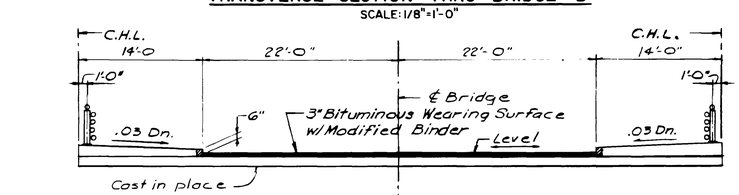

TRANSVERSE SECTION THRU BRIDGE "C"
SCALE: 1/8" = 1'-0"

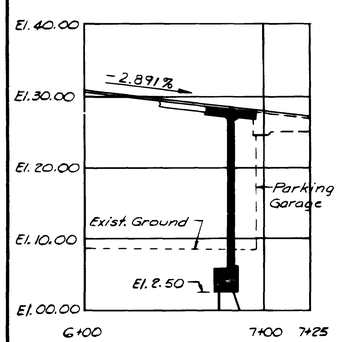

PROFILE BRIDGE "A"

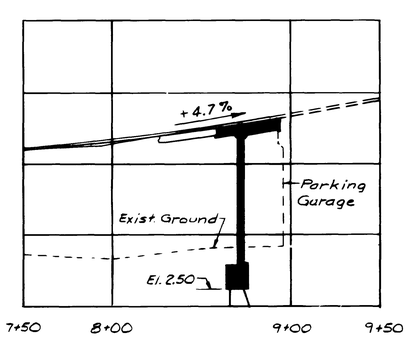

PROFILE BRIDGE "B"

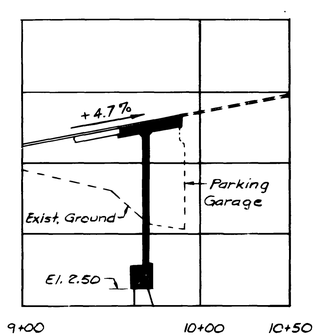

PROFILE BRIDGE "C"

NOTE
All dimensions are square dimensions.

REVISIONS		
NO.	DATE	BY

RHODE ISLAND
DEPARTMENT OF TRANSPORTATION
DIVISION OF PUBLIC WORKS

CAPITAL CENTER PROJECT
CONTRACT 3
PROVIDENCE RHODE ISLAND

BRIDGES "A", "B" & "C"
SECTIONS & PROFILES

CE MAGUIRE, INC.
ARCHITECTS - ENGINEERS - PLANNERS
PROVIDENCE - WALTHAM - NEW BRITAIN

DATE
SCALE AS NOTED
DESIGNED BY
SHEET B-3 OF 43

CHECKED BY _____ DATE _____ SCALE _____

BR. 989, 983, 982

8605

ADDENDUM NO. 5

FED. ROAD DIV. NO.	STATE	FEDERAL AID PROJECT NO.	FISCAL YEAR	SHEET NO.	TOTAL SHEETS
	R. I.			B-4	43

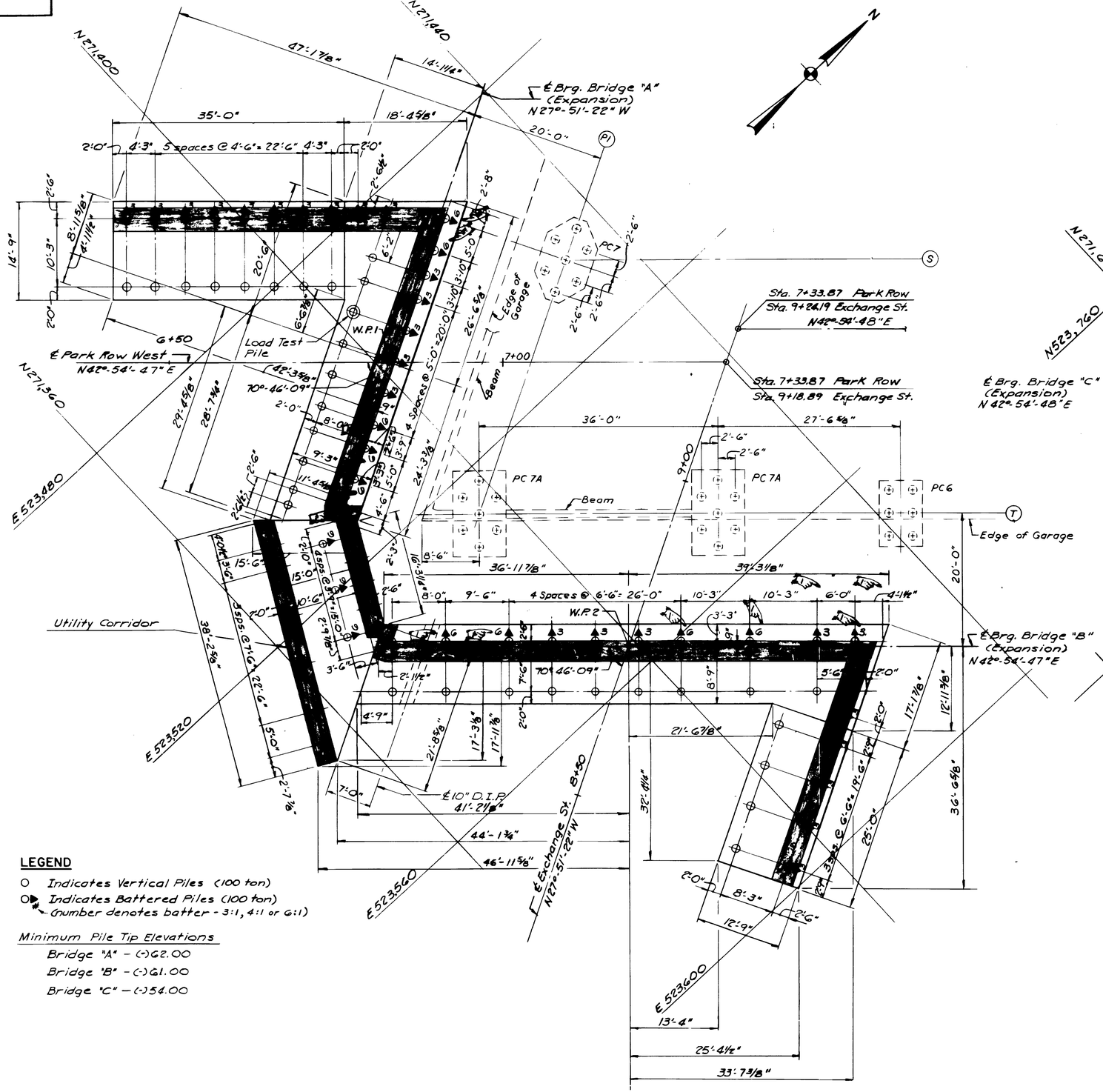

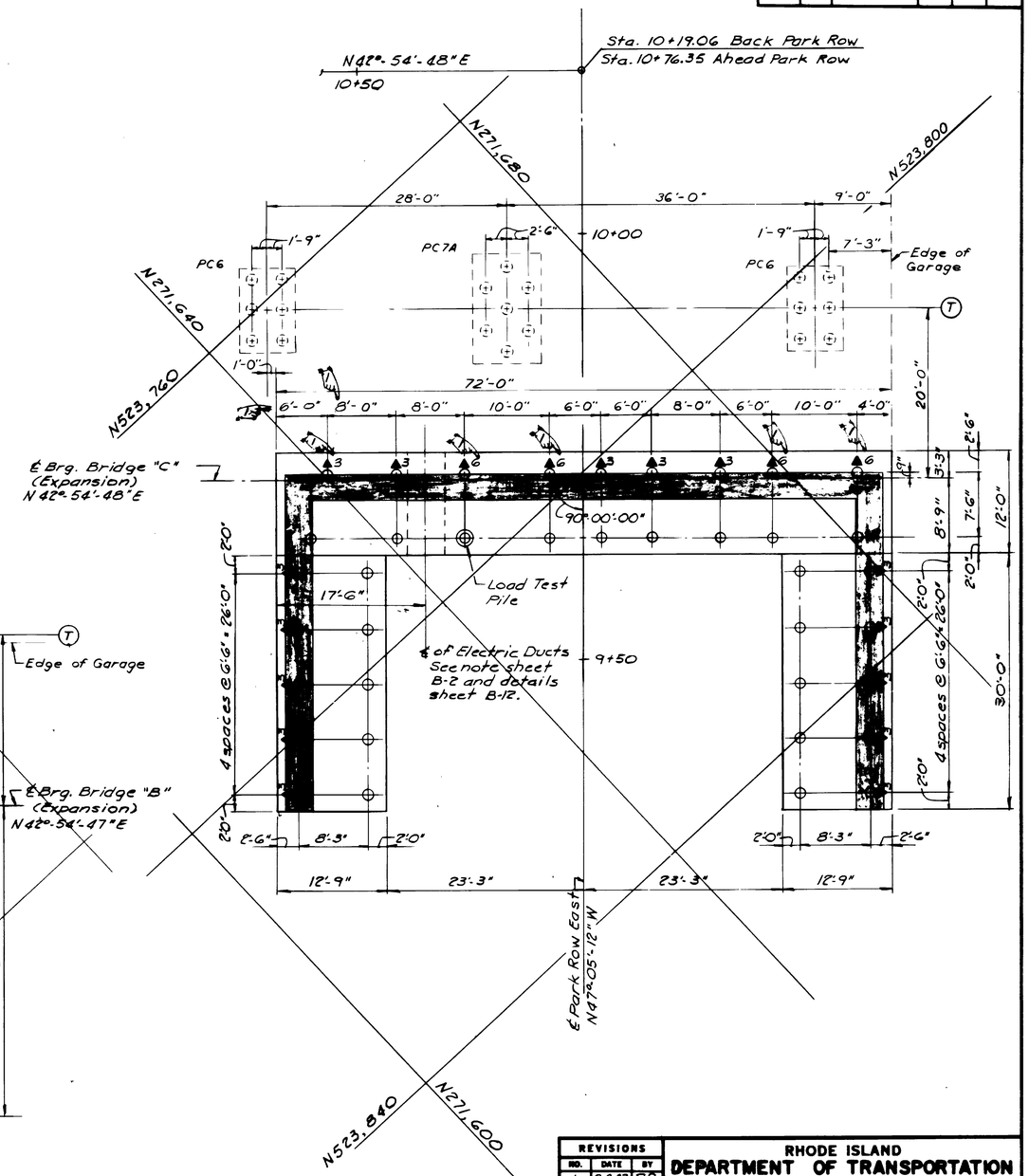

LEGEND

- ○ Indicates Vertical Piles (100 ton)
- ○▶ Indicates Battered Piles (100 ton)
  - Number denotes batter - 3:1, 4:1 or 6:1)

Minimum Pile Tip Elevations

Bridge "A" - (-)62.00

Bridge "B" - (-)61.00

Bridge "C" - (-)54.00

REVISIONS		
NO.	DATE	BY
1	2-9-87	RPD

RHODE ISLAND
DEPARTMENT OF TRANSPORTATION
DIVISION OF PUBLIC WORKS

CAPITAL CENTER PROJECT

CONTRACT 3

PROVIDENCE RHODE ISLAND

BRIDGES "A", "B" & "C"

FOUNDATION AND PILE PLAN

CE MAGUIRE, INC.
ARCHITECTS - ENGINEERS - PLANNERS
PROVIDENCE - WALTHAM - NEW BRITAIN

DATE
SCALE 1/8" = 1'-0"

DESIGNED BY
SHEET B-4 OF 43

CHECKED BY _____ DATE _____ SCALE _____

ADDENDUM NO. 5

BR. 989, 983, 982 8605

FED. ROAD DIV. NO.	STATE	FEDERAL AID PROJECT NO.	FISCAL YEAR	SHEET NO.	TOTAL SHEETS
	R. I.			B-15	43

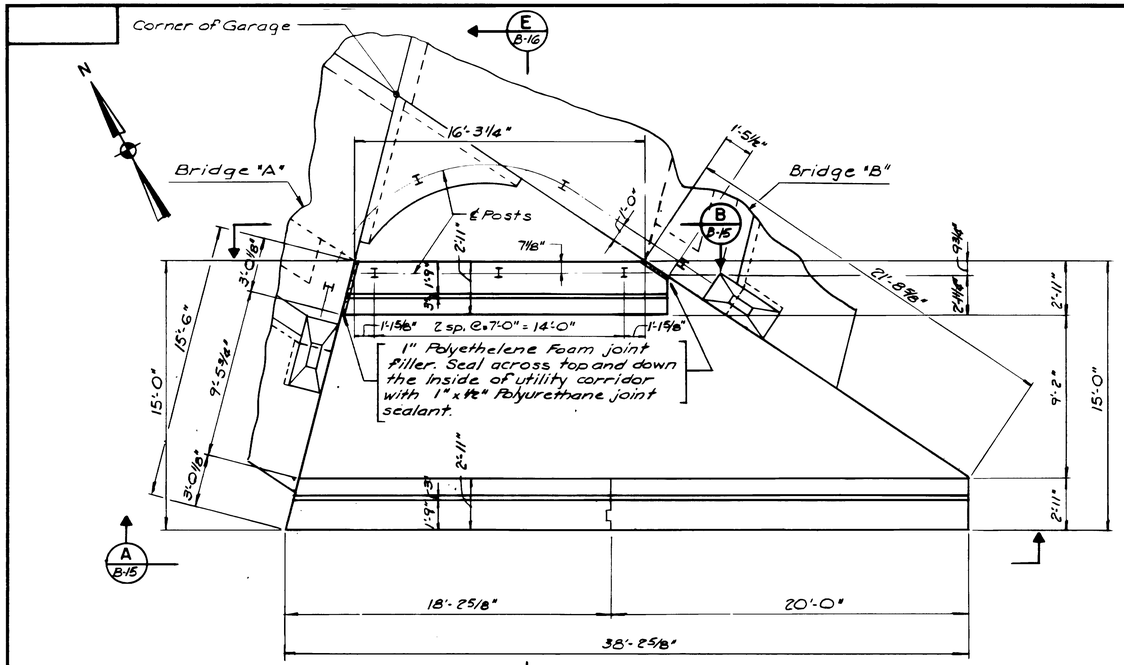

PLAN

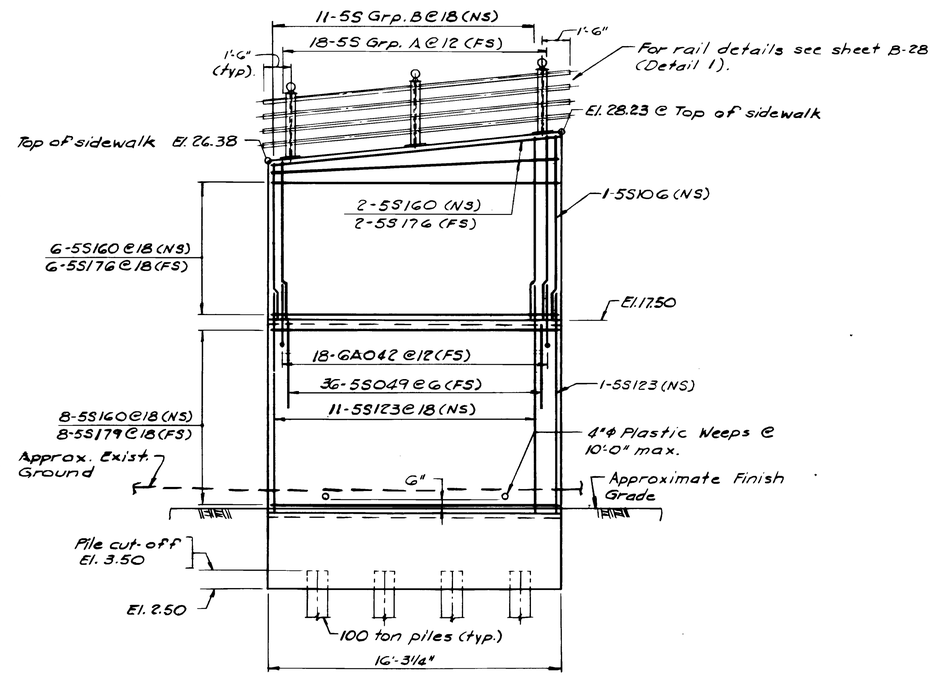

SECTION B B-15

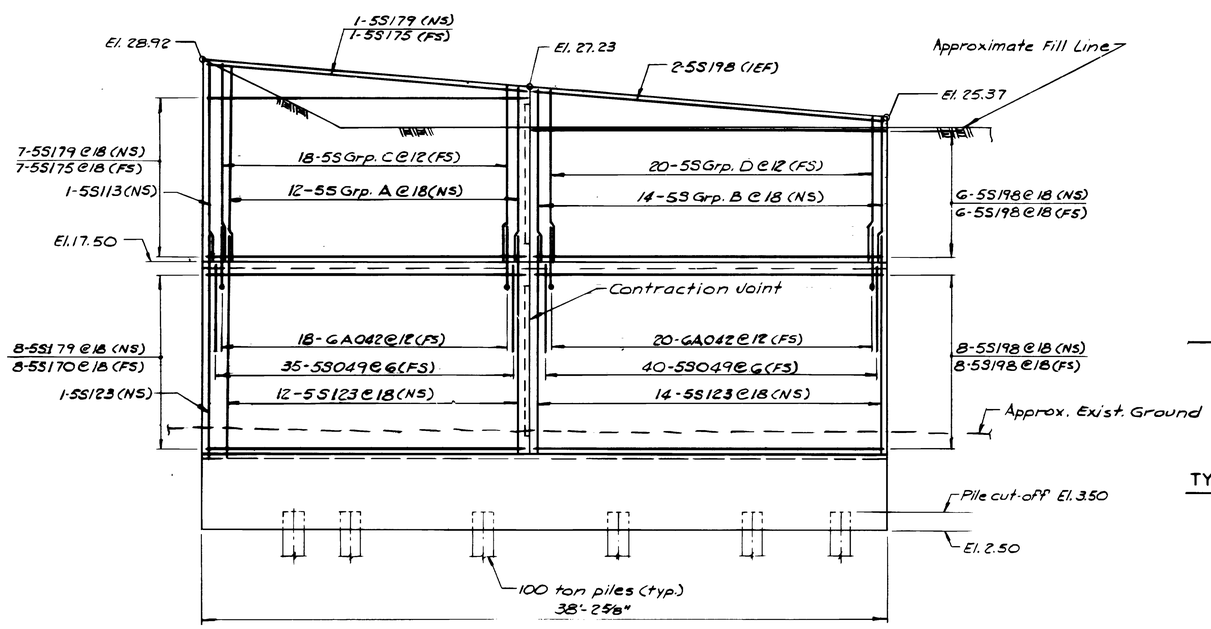

SECTION A B-15

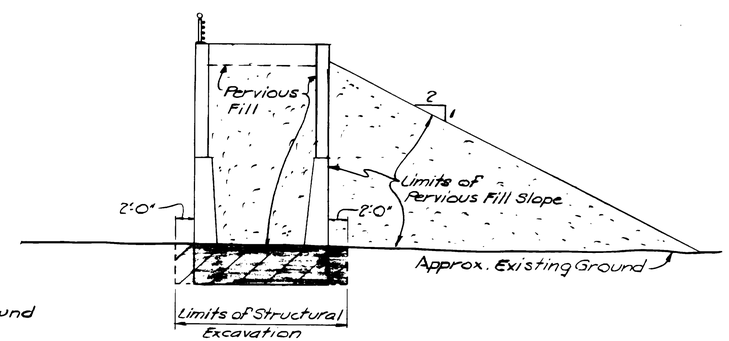

TYPICAL EARTHWORK SECTION AT UTILITY CORRIDOR

NOT TO SCALE

REVISIONS		
NO.	DATE	BY

RHODE ISLAND
DEPARTMENT OF TRANSPORTATION
DIVISION OF PUBLIC WORKS

CAPITAL CENTER PROJECT

CONTRACT 3

PROVIDENCE RHODE ISLAND

BRIDGES "A", "B" & "C"

UTILITY CORRIDOR SHEET 1

CE MAGUIRE, INC.
ARCHITECTS - ENGINEERS - PLANNERS
PROVIDENCE - WALTHAM - NEW BRITAIN

DATE DESIGNED BY
SCALE 1/4" = 1'-0" SHEET B-15 OF 43

CHECKED BY _____ DATE _____ SCALE 8605

ADDENDUM NO. 5

BR. 989, 983, 982

FED. ROAD DIV. NO.	STATE	FEDERAL AID PROJECT NO.	FISCAL YEAR	SHEET NO.	TOTAL SHEETS
	R. I.			B-16	43

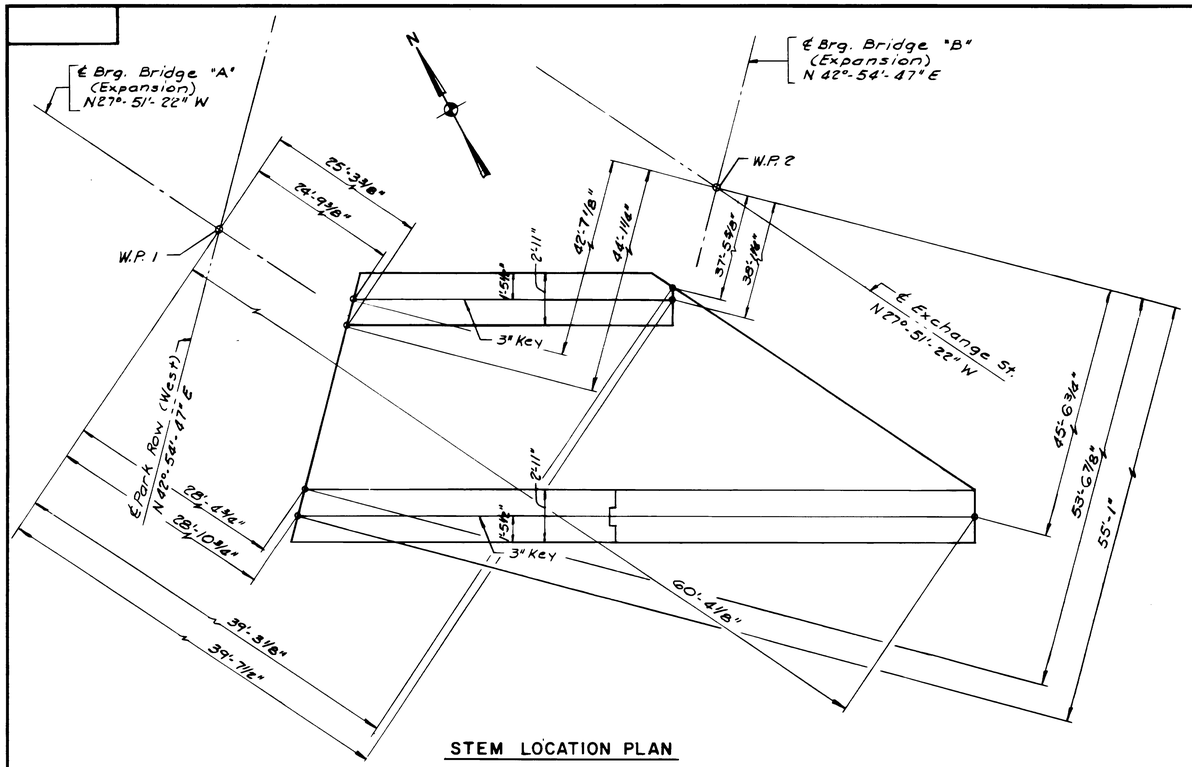

STEM LOCATION PLAN

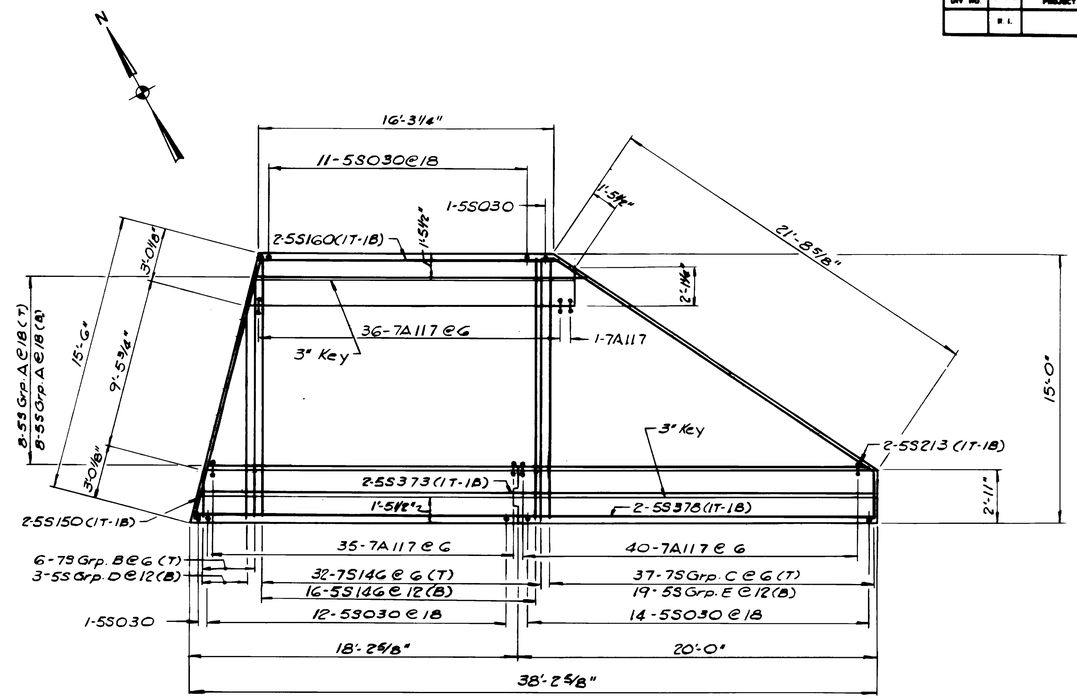

FOOTING REINFORCING PLAN

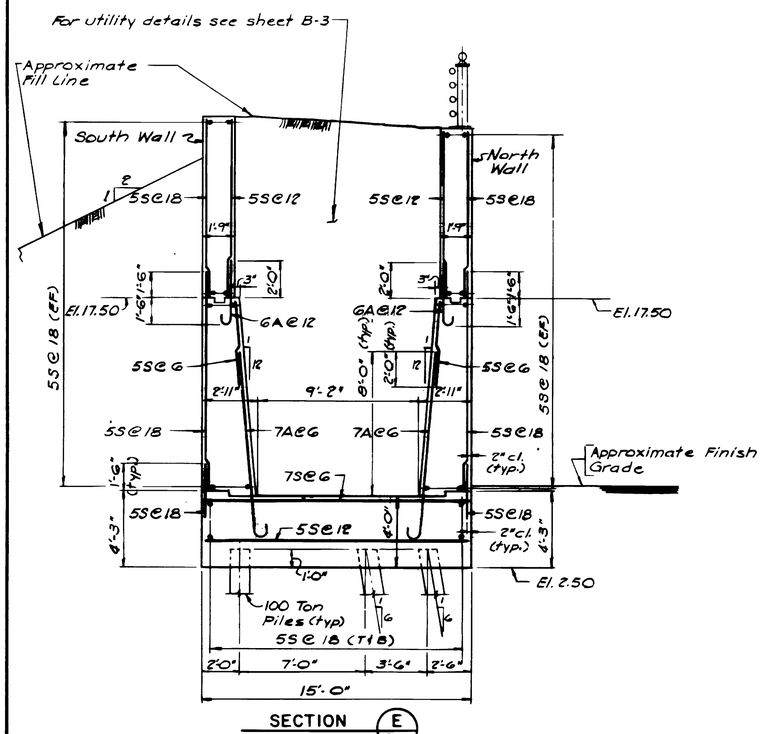

SECTION E B-16

NOTE

1. Fill should be placed inside corridor before outside fill elevation is built up to El. 25.00 (±) on south face.
2. Footing slab shall be formed on all four vertical sides.
3. No live load surcharge shall be allowed on the fill slope adjacent to the south wall of the utility corridor.

REVISIONS		
NO.	DATE	BY

RHODE ISLAND
DEPARTMENT OF TRANSPORTATION
DIVISION OF PUBLIC WORKS

CAPITAL CENTER PROJECT
CONTRACT 3
PROVIDENCE RHODE ISLAND

BRIDGES "A", "B" & "C"
UTILITY CORRIDOR SHEET 2

CHECKED BY _____ DATE _____ SCALE 8605

CE MAGUIRE, INC.
ARCHITECTS - ENGINEERS - PLANNERS
PROVIDENCE - WALTHAM - NEW BRITAIN

DATE
SCALE 1/4" = 1'-0"
DESIGNED BY
SHEET B-16 OF 43

ADDENDUM NO. 5

BR. 989, 983, 982

FED. ROAD DIV. NO.	STATE	FEDERAL AID PROJECT NO.	FISCAL YEAR	SHEET NO.	TOTAL SHEETS
	R. I.			8-20	43

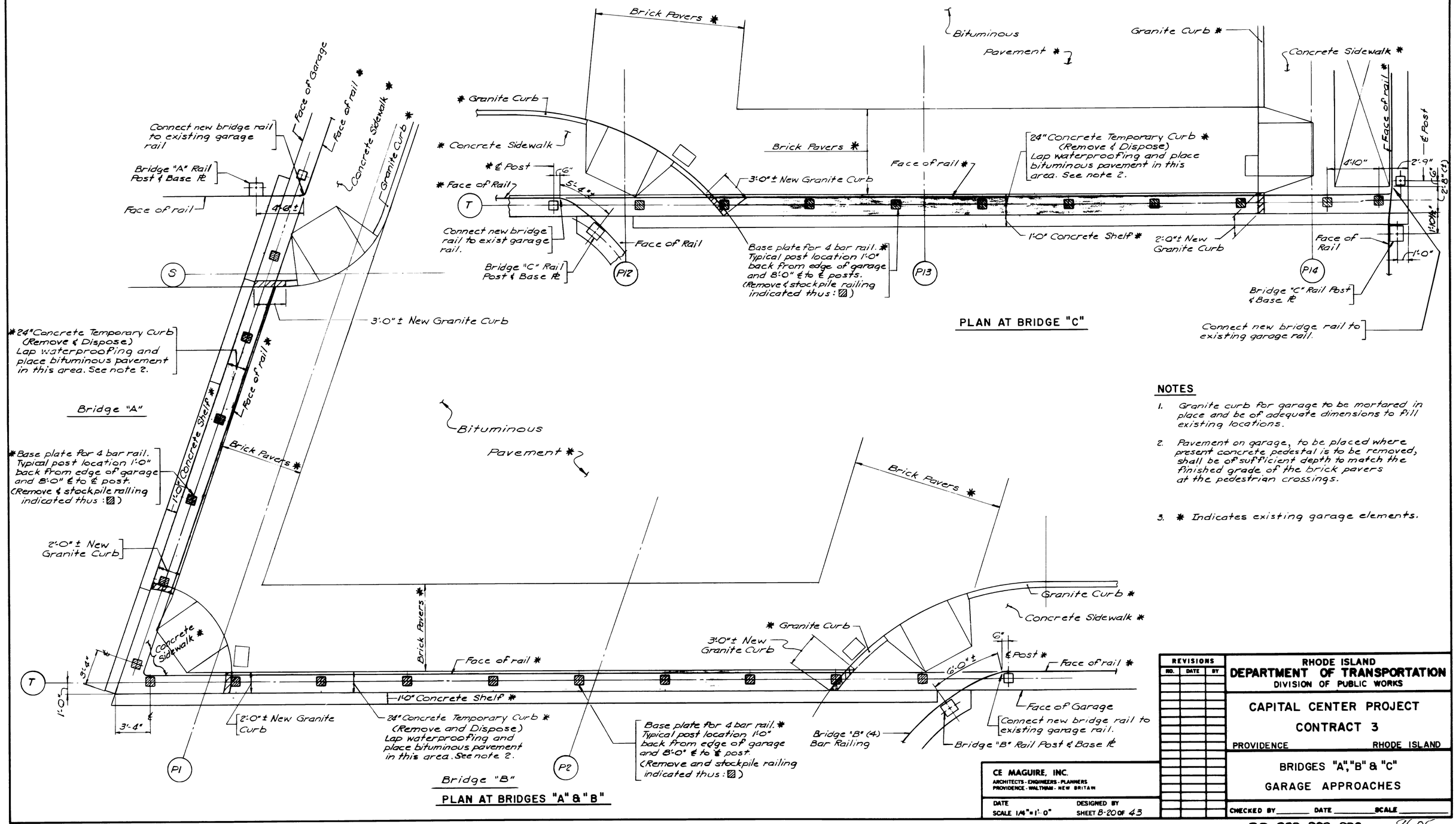

NOTES

1. Granite curb for garage to be mortared in place and be of adequate dimensions to fill existing locations.
2. Pavement on garage, to be placed where present concrete pedestal is to be removed, shall be of sufficient depth to match the finished grade of the brick pavers at the pedestrian crossings.
3. * Indicates existing garage elements.

REVISIONS		
NO.	DATE	BY

RHODE ISLAND
DEPARTMENT OF TRANSPORTATION
DIVISION OF PUBLIC WORKS

CAPITAL CENTER PROJECT
CONTRACT 3

PROVIDENCE — RHODE ISLAND

BRIDGES "A", "B" & "C"
GARAGE APPROACHES

CHECKED BY _____ DATE _____ SCALE _____

CE MAGUIRE, INC.
ARCHITECTS - ENGINEERS - PLANNERS
PROVIDENCE - WALTHAM - NEW BRITAIN

DATE
SCALE 1/4" = 1'-0"
DESIGNED BY
SHEET 8-20 OF 43

BR. 989, 983, 982 8605

ADDENDUM NO. 5

FED ROAD DIV NO	STATE	FEDERAL AID PROJECT NO.	FISCAL YEAR	SHEET NO.	TOTAL SHEETS
	R.I.			B-21	43

Granite Curb - Min. Length - 6'-0"
- Max. Length - 8'-0"

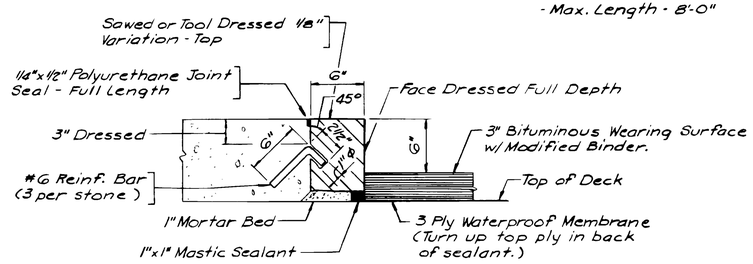

6"x8" VERTICAL FACE GRANITE CURB

SCALE: 1 1/2" = 1'-0"

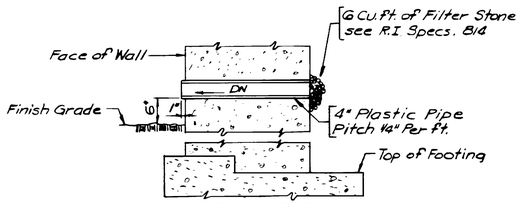

WEEP DRAIN DETAIL

NOT TO SCALE

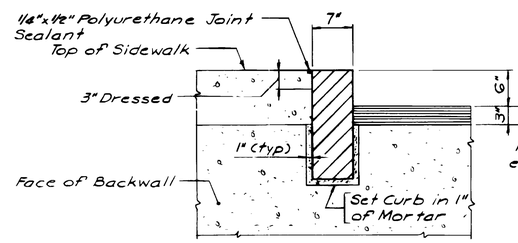

7"x 18" GRANITE CURB AT BACKWALL

SCALE: 1" = 1'-0"

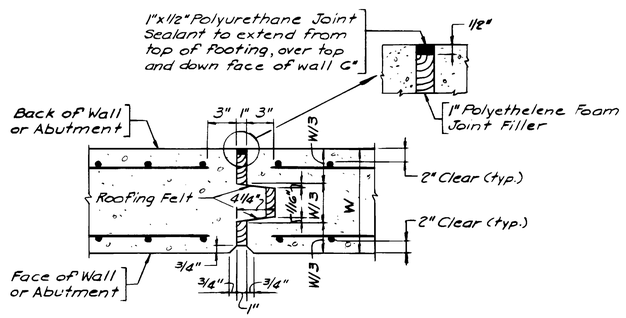

VERTICAL EXPANSION JOINT

NO SCALE

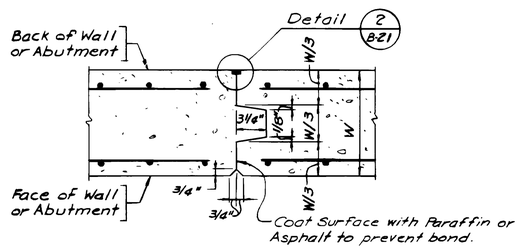

VERTICAL CONTRACTION JOINT

NO SCALE

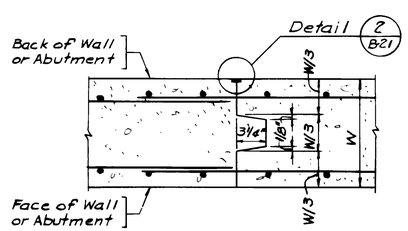

VERTICAL CONSTRUCTION JOINT

NO SCALE

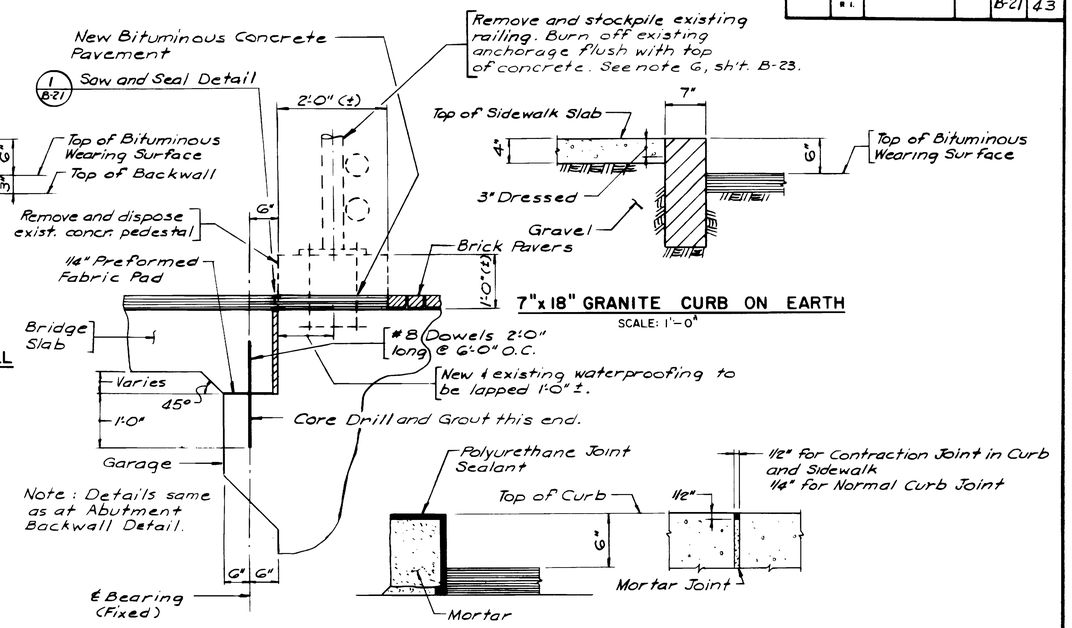

7"x 18" GRANITE CURB ON EARTH

SCALE: 1'-0"

DETAIL AT GARAGE

SCALE: 3/4" = 1'-0"

CURB SEALANT DETAILS

SCALE: 1 1/2" = 1'-0"

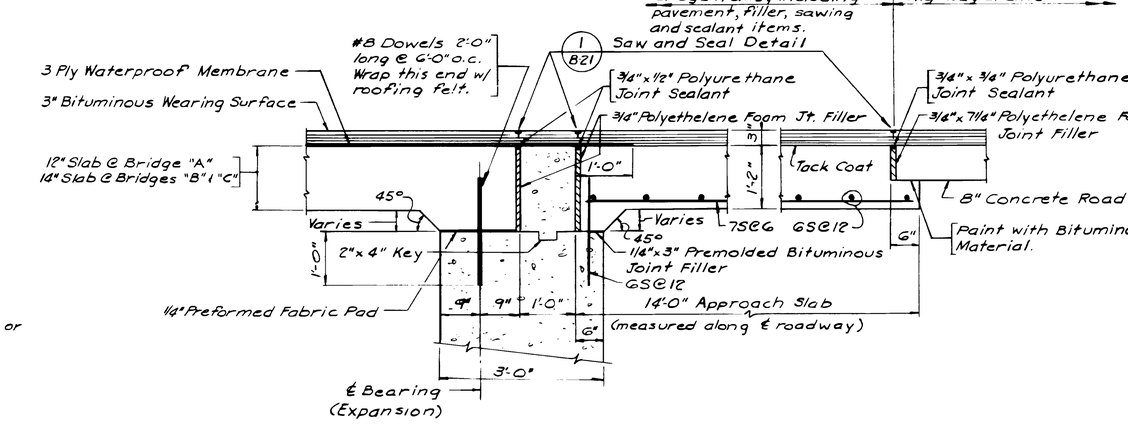

ABUTMENT BACKWALL DIMENSIONS

SCALE: 3/4" = 1'-0"

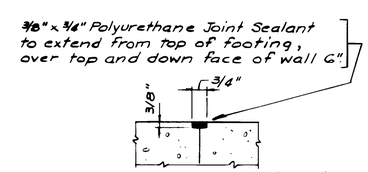

DETAIL 2 B-21

NO SCALE

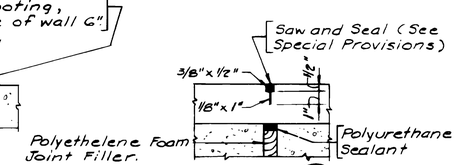

DETAIL 1 B-21

NO SCALE

CONCRETE NOTES

1. CLASSES OF CONCRETE SHALL BE XX(AE) AND B(AE), ALL AS DESCRIBED IN TABLE (1) & (2) UNDER SECTION 600 PORTLAND CEMENT CONCRETE OF THE SPECIFICATIONS FOR ROAD AND BRIDGE CONSTRUCTION, STATE OF RHODE ISLAND AND SPECIAL PROVISIONS. SEE INDIVIDUAL BRIDGE QUANTITIES FOR CLASSES OF CONCRETE USED.

2. AIR-ENTRAINING PORTLAND CEMENT CONCRETE SHALL BE PROVIDED AS REQUIRED AND SHALL BE DESIGNATED BY THE SYMBOL (AE) FOLLOWING CLASS OF CONCRETE.

3. THE ALLOWABLE WORKING STRESSES FOR PORTLAND CEMENT CONCRETE AND REINFORCING STEEL SHALL BE AS REQUIRED BY THE STANDARD SPECIFICATIONS FOR HIGHWAY BRIDGES, AASHTO DATED 1983 AND LATEST INTERIMS, AND RHODE ISLAND STANDARD SPECIFICATIONS.

   A. F'c FOR CLASS XX(AE) SHALL BE 4,000 PSI AND Fc SHALL BE 0.4 (F'c) = 1,600 PSI.
      F'c FOR CLASS B(AE) SHALL BE 3,000 PSI AND Fc SHALL BE 0.4 (F'c) = 1,200 PSI.

   B. REINFORCING STEEL SHALL BE GRADE 60, ASTM DESIGNATION A615 WITH ALLOWABLE TENSILE STRESS OF 24,000 PSI.

   C. ALL SUPERSTRUCTURE, END POST, AND ABUTMENT BACKWALL REINFORCING BARS SHALL BE EPOXY COATED. SEE REINFORCING SCHEDULE AND INDIVIDUAL STRUCTURAL SHEETS FOR SPECIFIC NOTING.

4. UNLESS OTHERWISE SHOWN ON THE PLANS ALL REINFORCING SHALL BE LAPPED ACCORDING TO THE FOLLOWING TABLE:

BAR SIZE	CLASS OF CONCRETE XX(AE)	CLASS OF CONCRETE B(AE)
4	16"	16"
5	16"	20"
6	18"	24"
7	24"	27"
8	31"	37"

   THE LAPS LISTED ABOVE ARE FOR NON-CRITICAL SPLICES. ALL CRITICAL OR IMPORTANT SPLICES ARE LABELED ON THE PLANS.

5. ALL REINFORCING BARS SHALL HAVE THE FOLLOWING MINIMUM COVER:

   A. FOOTING ALL BARS 3".
   B. SLABS. TOP BARS 2" (+1/4 - 0) AND BOTTOM BARS 1" (+1/8 - 0).

6. HORIZONTAL CONSTRUCTION JOINTS OTHER THAN THOSE SHOWN ON THE PLANS OR AS AUTHORIZED BY THE ENGINEER WILL NOT BE PERMITTED.

7. CONCRETE SURFACE FINISH - SPECIAL FLOAT FINISH SHALL BE APPLIED TO THE UNDERSIDE OF DECK SLAB FROM EDGE OF DECK TO THE DRIP NOTCH AND ALONG DECK AND SIDEWALK FASCIAS. CONCRETE SURFACE FINISH - SPECIAL FLOAT FINISH WILL ALSO BE APPLIED TO ALL REMAINING EXPOSED SURFACES OF ABUTMENTS AND WALLS TO TOP OF FOOTINGS, EXCEPT PARK ROW WALL.

8. ALL EXPOSED EDGES AND RE-ENTRANT CORNERS NOT OTHERWISE DETAILED SHALL HAVE A MINIMUM 3/4" CHAMFER. END POSTS SHALL BE DRESSED WITH SQUARE CORNERS.

9. ALL JOINT FILLER TO BE PREFORMED, NON-EXPANSIVE, NON-EXTRUDING TYPE.

10. ALL JOINT SEALANTS WILL BE ONE COMPONENT POLYURETHANE EXCEPT AS NOTED.

11. DECK CONCRETE SHALL BE PLACED UNIFORMLY ACROSS THE ENTIRE WIDTH OF DECK WHEN POURING.

12. IT SHALL BE THE RESPONSIBILITY OF THE CONTRACTOR TO FIELD VERIFY ALL EXISTING ROADWAY AND SIDEWALK GRADES AND DIMENSIONS AT THE GARAGE APPROACHES. ALL NEW CONSTRUCTION SHALL BE MATCHED TO EXISTING CONDITIONS AT THE PARKING GARAGE.

REVISIONS		
NO.	DATE	BY

RHODE ISLAND
DEPARTMENT OF TRANSPORTATION
DIVISION OF PUBLIC WORKS

CAPITAL CENTER PROJECT
CONTRACT 3
PROVIDENCE RHODE ISLAND

BRIDGES "A", "B" & "C"
CONCRETE NOTES AND CONSTRUCTION DETAILS

CHECKED BY _____ DATE _____ SCALE _____

CE MAGUIRE, INC.
ARCHITECTS - ENGINEERS - PLANNERS
PROVIDENCE - WALTHAM - NEW BRITAIN

DATE
SCALE AS NOTED
DESIGNED BY
SHEET B-21 OF 43

BR. 989, 983, 982

8605

ADDENDUM NO. 5

FED ROAD DIV NO	STATE	FEDERAL AID PROJECT NO.	FISCAL YEAR	SHEET NO.	TOTAL SHEETS
	R.I.			B-22	43

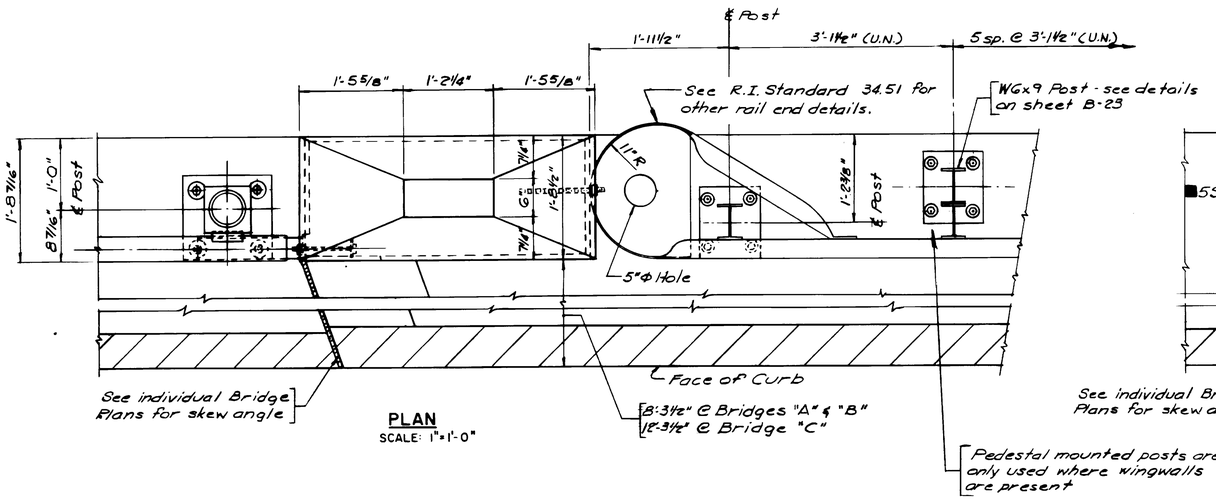

PLAN
SCALE: 1" = 1'-0"

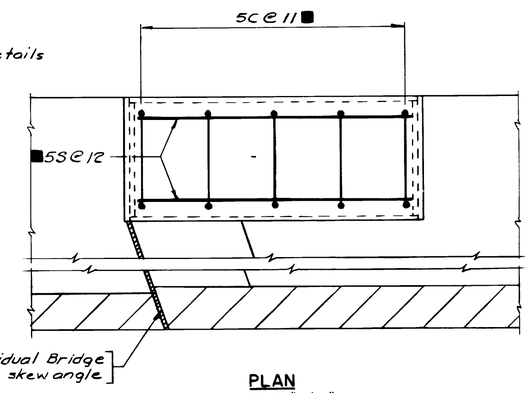

PLAN
SCALE: 1" = 1'-0"

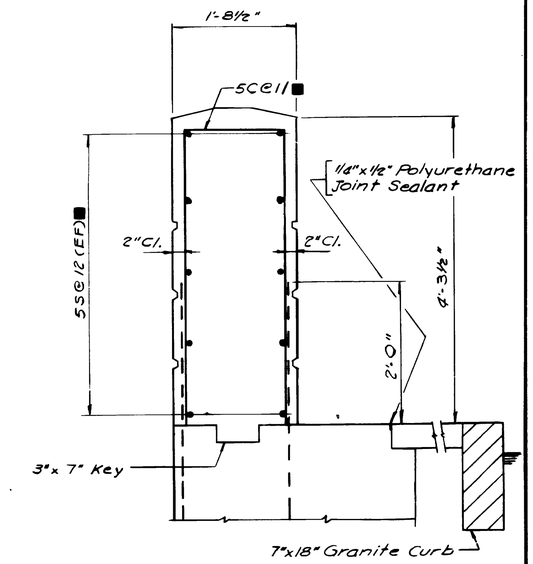

SECTION B/B-22
SCALE: 1" = 1'-0"

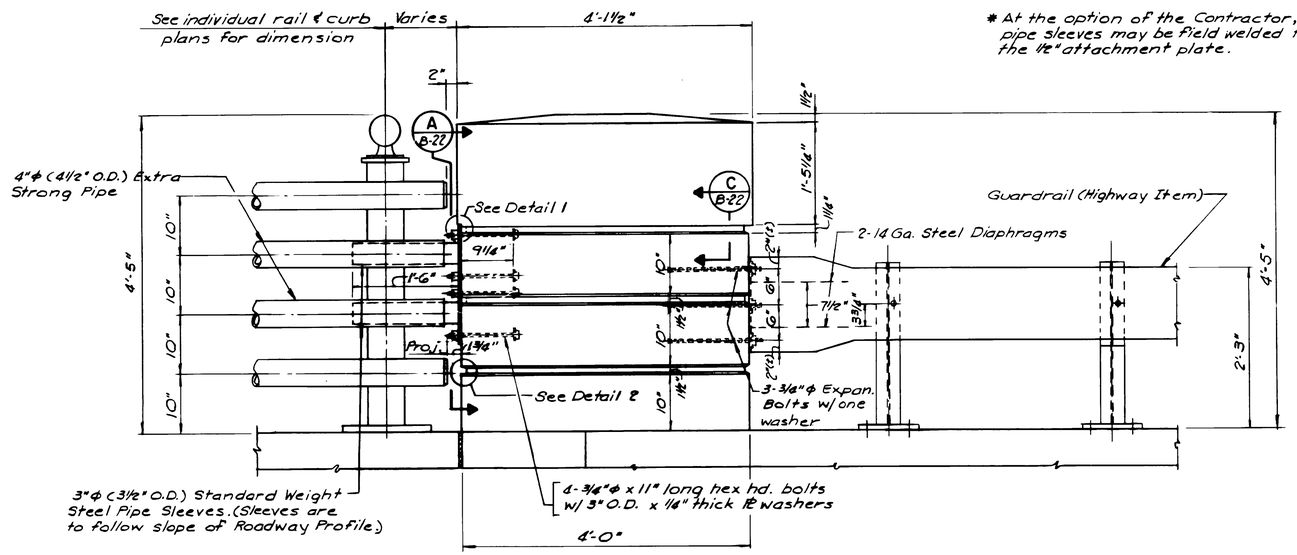

* At the option of the Contractor, the pipe sleeves may be field welded to the ½" attachment plate.

ELEVATION
END POST DIMENSIONS
SCALE: 1" = 1'-0"

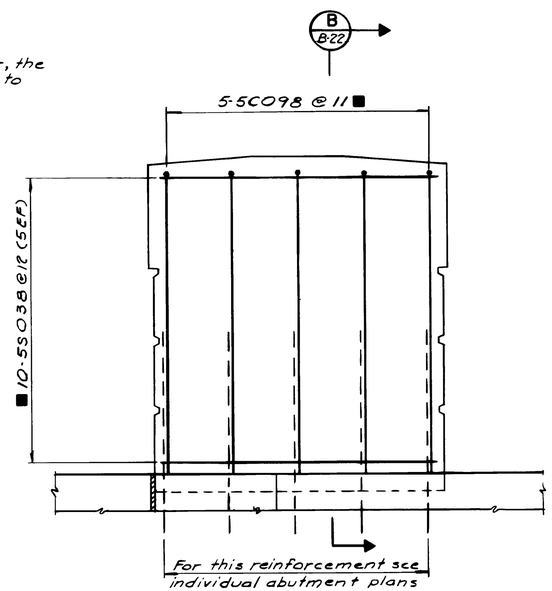

ELEVATION
END POST REINFORCEMENT
SCALE: 1" = 1'-0"

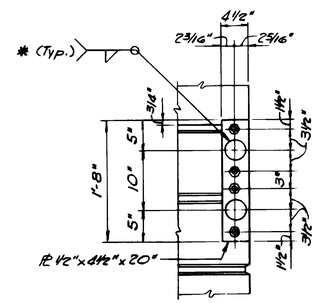

SECTION A/B-22
SCALE: 1" = 1'-0"

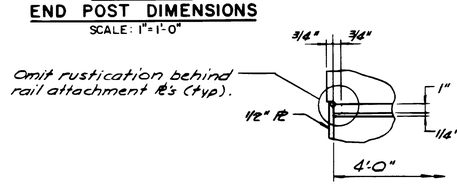

DETAIL 1
SCALE: 11/2" = 1'-0"

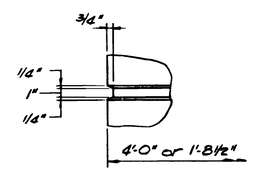

DETAIL 2
SCALE: 11/2" = 1'-0"

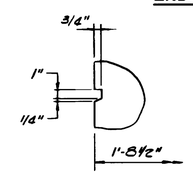

SECTION C/B-22
SCALE: 11/2" = 1'-0"

■ Denotes epoxy coated reinforcing bars

REVISIONS		
NO.	DATE	BY

RHODE ISLAND
DEPARTMENT OF TRANSPORTATION
DIVISION OF PUBLIC WORKS

CAPITAL CENTER PROJECT
CONTRACT 3
PROVIDENCE RHODE ISLAND

BRIDGES "A", "B" & "C"
END POST DETAILS

CHECKED BY _____ DATE _____ SCALE _____

CE MAGUIRE, INC.
ARCHITECTS - ENGINEERS - PLANNERS
PROVIDENCE - WALTHAM - NEW BRITAIN

DATE
SCALE: AS NOTED
DESIGNED BY
SHEET B-22 OF 43

BR. 989, 983, 982

8605

ADDENDUM NO. 5

FED. HIGHWAY DIV. NO.	STATE	FEDERAL AID PROJECT NO.	FISCAL YEAR	SHEET NO.	TOTAL SHEETS
	R. I.			B-23	43

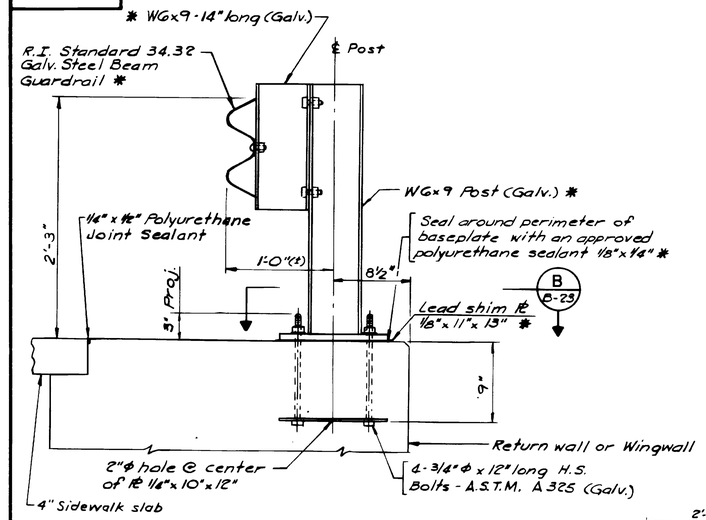

GUARDRAIL DETAIL FOR BRIDGES "A" & "C"
SCALE: 1 1/2" = 1'-0"

GUARDRAIL NOTE
Rail elements marked thus (*) are Highway Items. See appropriate Highway Standards and the Standard Specifications for other information and details.

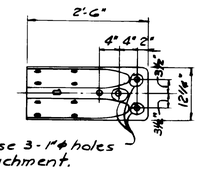

DETAIL OF END CONNECTION

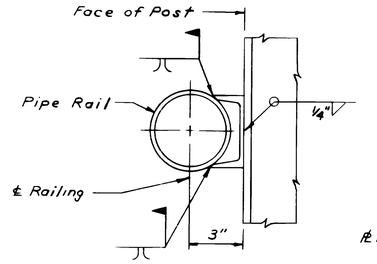

DETAIL I B-23
SCALE: 3" = 1'-0"

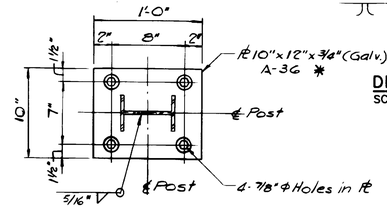

SECTION B B-23
SCALE: 1 1/2" = 1'-0"

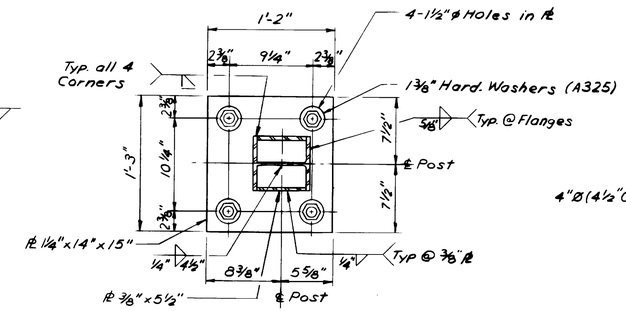

SECTION A B-23
SCALE: 1 1/2" = 1'-0"

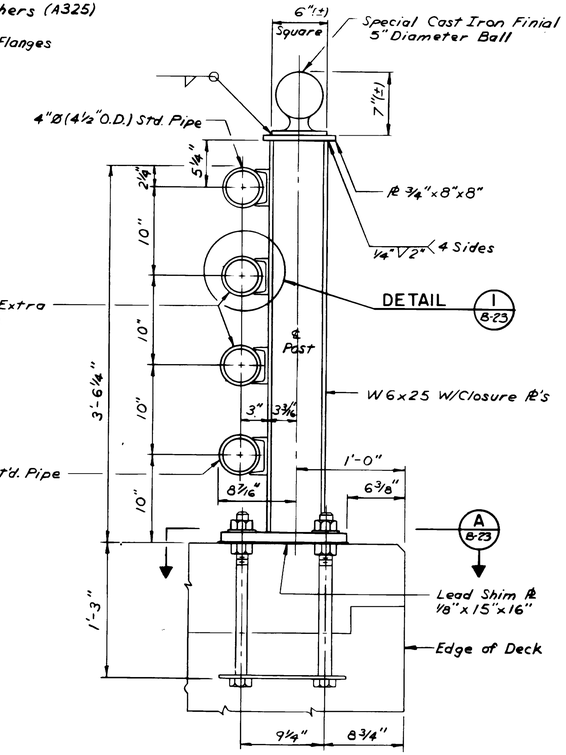

TYPICAL SECTION
SCALE: 1 1/2" = 1'-0"

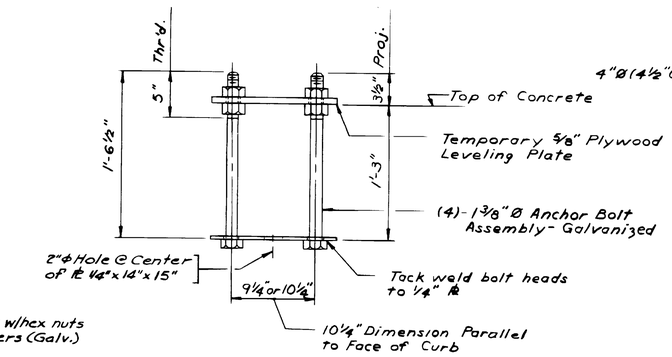

ANCHOR BOLT ASSEMBLY
SCALE: 1 1/2" = 1'-0"

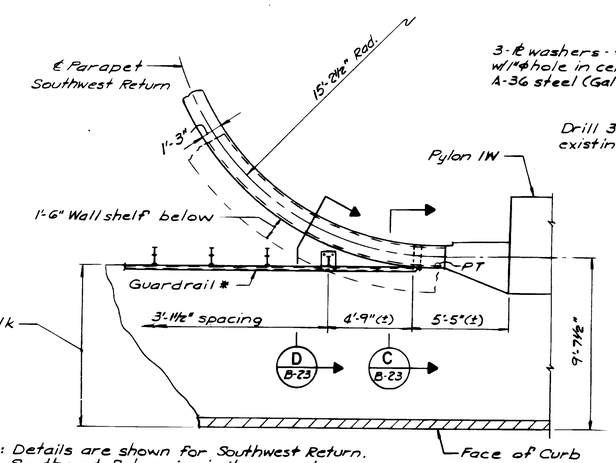

Note: Details are shown for Southwest Return. Southeast Return is similar except opposite hand.

PLAN OF GUARDRAIL CONNECTION AT FRANCIS ST. BRIDGE AT ABUTMENT "A"
SCALE: 1/4" = 1'-0"

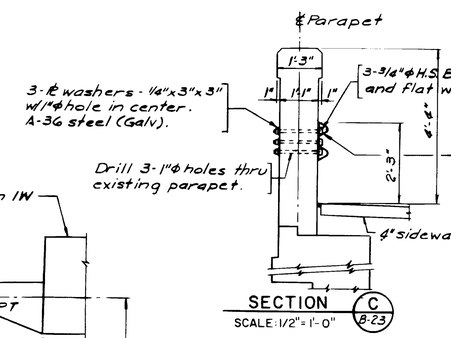

SECTION C B-23
SCALE: 1/2" = 1'-0"

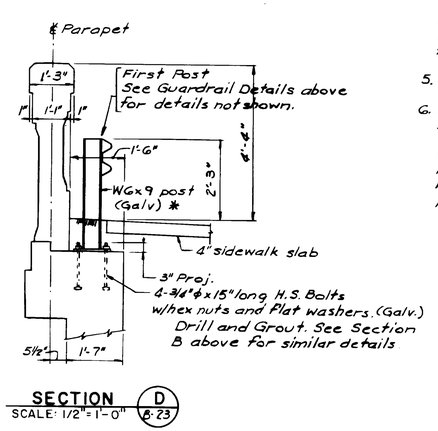

SECTION D B-23
SCALE: 1/2" = 1'-0"

RAILING NOTES (4 BAR)

1. Rails - A.S.T.M. A-53 Grade B (Galvanized). For rail sizes see individual rail details.
2. Structural shapes and plates A.S.T.M. A-36.
3. Anchor Bolts - A.S.T.M. A-307 except washers are A.S.T.M. A-325.
4. Steel railing, connection plates and all hardware shall be galvanized according to A.S.T.M. A-123 (AASHTO M 111) and painted according to the R.I. Standard Specifications under "Painting". Three coats required. The color to be used on the railing shall be grey to match existing railing on the Parking Garage.
5. Maximum Rail Post spacing 8'-0" o.c.
6. The contractor may reuse removed and stockpiled existing railing and posts, modified as necessary, for all new work except for the baseplate and the anchorage assemblies which must be new. All galvanized surfaces damaged during removal, modification or erection shall be regalvanized by repair methods approved by the Engineer. The finished product must comply with the details shown on these plans.

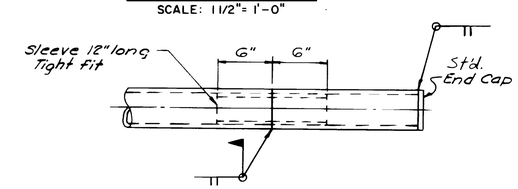

TYPICAL RAIL JOINT
SCALE: 1 1/2" = 1'-0"

REVISIONS		
NO.	DATE	BY

RHODE ISLAND
DEPARTMENT OF TRANSPORTATION
DIVISION OF PUBLIC WORKS

CAPITAL CENTER PROJECT
CONTRACT 3

PROVIDENCE RHODE ISLAND

BRIDGES "A", "B" & "C"
4 BAR RAILING W/ MODIFIED POST

CE MAGUIRE, INC.
ARCHITECTS - ENGINEERS - PLANNERS
PROVIDENCE - WALTHAM - NEW BRITAIN

DATE
SCALE AS SHOWN
DESIGNED BY
SHEET B-23 OF 43

CHECKED BY _____ DATE _____ SCALE _____

BR. 989, 983, 982

8605

ADDENDUM NO. 5

FED. ROAD DIV. NO.	STATE	FEDERAL AID PROJECT NO.	FISCAL YEAR	SHEET NO.	TOTAL SHEETS
	R.I.			B-39	43

Location	Bar Mark Number	Size	Type	Length Ft.	In.	A	B	C	D	E	G	H	K	O	Remarks
BRIDGE "A"															
SUBSTRUCTURE															
ABUTMENT FOOTING															
	1	8	S	12	9										
	32	↓	↓	12	0										
Grp. A	3			VARIES											3'-6" to 9'-2" @ 2'-10" incr.
Grp. B	13			VARIES											12'-7" to 16'-7" @ 4" incr.
	62	8	A	7	0	0-11								6.1	(1) TEST BAR
	11	6	H	12	9		3-2	1-7	8-0			0-8		9-0	R = 1'-0"
	36	5	S	26	3										
	2	↓	↓	17	9										
	2			14	6										
	1			12	9										
	32			12	0										
	2			10	9										
	2			6	0										
	15			3	0										
	34			3	0										
Grp. D	3			VARIES											3'-6" to 9'-2" @ 2'-10" incr.
Grp. E	13			↓											12'-7" to 16'-7" @ 4" incr.
Grp. C	5	↓	↓	↓											3'-9" to 14'-9" @ 2'-9" incr.
Grp. C	5	5	S	VARIES											3'-9" to 14'-9" @ 2'-9" incr.
ABUTMENT STEM															
	8	8	S	2	0										EPOXY COATED
	23	6	S	19	8										
	25	↓	↓	18	6										
	2	↓	↓	17	9										
	30	6	S	2	0										EPOXY COATED
	14	5	S	26	3										
	14	↓	↓	25	3										
	15			23	8										
	15			22	7										
	31	↓	↓	10	0										
	9	5	S	3	0										EPOXY COATED
	15	5	B	15	9		2-8							13-1	
	16	5	B	14	6		2-8							11-10	
	9	5	B	4	2		0-10							3-4	EPOXY COATED
	8	5	C	8	4	3-9					3-9			0-10	EPOXY COATED
	30	5	C	7	0	3-2					3-2			0-8	EPOXY COATED
BACKWALL	3	6	A	10	2	0-8	1-6	8-0				1-5	0-6	9-5	EPOXY COATED W/ (1) TEST BAR
	1	5	S	15	9										EPOXY COATED
	1	↓	↓	15	3										↓
	1			13	7										↓
	1			13	0										↓
	5	5	S	7	9										EPOXY COATED W/ (1) TEST BAR
	2	5	A	10	1	0-7	1-6	8-0				1-5	0-6	9-5	EPOXY COATED
S.E. RETURN	2	7	S	8	0										
	1	7	B	5	9		1-4							4-5	
	1	7	M	11	1		1-4	4-5	5-4			3-9¼	3-9¼	8-2¼	
	1	↓	↓	10	0		1-4	4-3	4-5			3-11½	3-11½	7-4½	
	1	↓	↓	8	8		1-4	3-10	3-6			2-5¾	2-5¾	6-3¾	
	2	7	M	7	6		1-4	3-5	2-9			1-11¼	1-11¼	5-4¼	(1) TEST BAR
	5	6	A	4	8	0-8								4-0	EPOXY COATED
	1	5	S	22	4										
	3	↓	↓	19	3										
	2			7	4										
	1			7	0										
	1			6	3										
	11			4	9										
	1			4	7										
	4	↓	↓	3	8										
	5	5	S	3	6										
	3	5	R	21	0		1-9							19-3	
	1	↓	↓	9	9		4-5					3-1½		5-4	
	1			8	8		4-3					3-0		4-5	
	1			7	4		3-10					2-8½		3-6	
	1	↓	↓	6	2		3-5					1-11¼		2-9	
	11	5	B	4	2		1-6						0-6	2-8	
END POST	10	5	S	3	8										EPOXY COATED
	5	5	C	9	8	4-2					4-2			1-4	EPOXY COATED
N.W. RETURN STEM	11	8	S	10	9										
	12	6	A	5	2	0-8								4-6	
	3	5	S	21	9										
	8	5	S	12	3										
	8	5	B	16	6		1-6						0-6	15-0	
	8	5	B	13	0		1-6						0-6	11-6	
THROAT	8	5	S	12	9										
	12	5	S	9	5										
	7	5	B	16	6		1-6						0-6	15-0	
	7	5	B	13	0		1-6						0-6	11-6	
	12	5	B	7	0		2-0							5-0	
CAP	5	6	A	4	8	0-8								4-0	EPOXY COATED
	3	5	S	13	1										
	3	5	S	11	0										
	5	5	B	5	9		1-3					0-10½		4-6	EPOXY COATED
	7	5	R	6	3		1-5	2-2	2-8			1-0	1-0		
END POST	10	5	S	3	8										EPOXY COATED
	5	5	C	9	8	4-2					4-2			1-4	EPOXY COATED
NORTH WINGWALL FOOTING	35	8	A	8	5	0-11								7-6	
	70	7	S	14	3										
	35	6	H	14	4		3-3	1-7	9-6				0-9½	10-6	R = 1'-0"
	20	5	S	34	6										
	36	5	S	14	3										
	24	5	S	3	0										
STEM	35	8	S	10	9										
	35	6	A	5	2	0-8								4-6	
	16	5	S	34	6										
	24	5	S	12	3										
THROAT	14	5	S	34	6										
	8	↓	↓	12	5										
	8			12	7										
	8			11	9										
	12			8	9										
	11	↓	↓	8	7										
	12	5	S	8	3										
	36	5	B	7	0		2-0							5-0	(1) TEST BAR
CAP	6	5	S	34	6										
	24	5	R	6	3		1-5	2-2	2-8			1-0	1-0		
APPROACH SLAB	56	7	S	13	6										
	14	6	S	29	2										
SUPERSTRUCTURE				ALL BARS TO BE EPOXY COATED											
DECK	93	7	S	13	4										
	3	7	S	12	9										
	27	5	S	26	3										
	1	5	S	25	3										
	9	5	S	1	8										
	4	5	B	3	0		1-6							1-6	
	14	5	F	5	1		1-6	2-1	1-6					3-0	
	28	5	F	4	5		1-6	1-5	1-6					3-0	
	14	5	F	4	2		1-6	1-2	1-6					3-0	
	11	5	L	5	3	0-7	3-0	1-8							
	11	5	B	2	2		0-8							1-6	
	27	4	S	26	3										
	1	4	S	25	3										
	48	4	S	13	4										
	2	4	S	12	9										
	5	4	S	8	0										(1) TEST BAR
	11	4	G	3	6		1-3	1-5	0-10				1-0	1-0	3-1
N. SIDEWALK	1	5	S	13	9										
	1	↓	↓	13	6										
	8	↓	↓	13	4										
	13	5	S	9	9										
	1	5	B	9	8		1-6						1-5		8-2
S. SIDEWALK	8	5	S	13	4										
	1	↓	↓	13	1										
	1			12	9										
	13			9	9										
	2			8	1										
	2			8	0										
Grp. A	4			VARIES											1'-11" to 7'-11" @ 2'-0" incr.
Grp. B	5	↓	↓	VARIES											1'-11" to 7'-11" @ 1'-6" incr.
	6	5	S	4	6										
	1	5	B	9	8		1-6						1-5		8-2
BRIDGE "B"															
SUBSTRUCTURE															
ABUTMENT FOOTING	76	7	A	5	0	0-10								4-2	
	1	6	S	12	2										
	59	↓	↓	11	6										
Grp. B	12	↓	↓	VARIES											11'-9" to 15'-5" @ 4" incr.
Grp. C	3	6	S	VARIES											3'-6" to 9'-2" @ 2'-10" incr.
	20	6	H	7	6		2-9	1-7	3-2				0-3½	4-2	
	72	5	S	26	7										
	2	↓	↓	16	7										
	2			12	9										
	3			12	2										
	59			11	6										
	2			10	2										
	2			7	0										
	2			3	9										
	67			3	0										
Grp. D	4			VARIES											4'-4" to 12'-10" @ 2'-10" incr.
Grp. D	4			VARIES											4'-4" to 12'-10" @ 2'-10" incr.
Grp. E	12	↓	↓	VARIES											11'-9" to 15'-5" @ 4" incr.
Grp. F	3	5	S	VARIES											3'-6" to 9'-2" @ 2'-10" incr.
	12	5	U	6	8	0-11	1-6						0-11		1-8
STEM	12	8	S	2	0										EPOXY COATED
	55	6	S	2	0										EPOXY COATED
	26	5	S	25	0										
	26	↓	↓	24	8										
	13			24	4										
	12	↓	↓	24	0										
	76	5	S	18	2										
	50	5	B	20	4		2-8							17-8	

REVISIONS		
NO.	DATE	BY

RHODE ISLAND
DEPARTMENT OF TRANSPORTATION
DIVISION OF PUBLIC WORKS

CAPITAL CENTER PROJECT

CONTRACT 3

PROVIDENCE RHODE ISLAND

BRIDGES "A", "B" & "C"

REINFORCING SCHEDULE SH. I

CHECKED BY_____ DATE_____ SCALE_____

CE MAGUIRE, INC.
ARCHITECTS - ENGINEERS - PLANNERS
PROVIDENCE - WALTHAM - WETHERSFIELD

DATE DESIGNED BY
SCALE SHEET 8-39 OF 43

BR-989, 983, 982 8605

ADDENDUM NO. 5

Location	Bar Mark Number	Size	Type	Length Ft.	In.	A	B	C	D	E	G	H	K	O	Remarks
BRIDGE "B" SUBSTRUCTURE (CONT'D)															
STEM	17	5	C	8	0	3-5					3-5			1-2	EPOXY COATED
	55	5	C	6	0	2-8					2-8			0-8	EPOXY COATED
BACKWALL	2	6	A	10	2	0-8	1-6	8-0				1-5	0-6	9-5	EPOXY COATED
	2	5	S	24	8										EPOXY COATED
	1			15	0										
	1			14	9										
	1			14	7										
	1			14	3										
	4	5	S	7	9										EPOXY COATED
	2	5	A	10	1	0-7	1-6	8-0				1-5	0-6	9-5	EPOXY COATED
EAST WING WALL															
FOOTING	25	7	S	12	3										
	25	6	S	12	3										
	50	6	H	7	9		2-9	1-7	3-5				0-3½	4-5	
	18	5	S	24	6										
	25	5	S	12	3										
	17	5	S	3	0										
STEM	50	6	S	6	9										
	25	6	A	4	2	0-8								3-6	
	10	5	S	24	6										
	17	5	S	8	3										
THROAT	14	5	S	24	6										
	6			12	1										
	5			11	9										
	16			11	5										
	8			8	7										
	9			8	2										
	8	5	S	7	9										
	25	5	B	7	0		2-0							5-0	
CAP	6	5	S	24	6										
	17	5	R	6	3		1-5	2-2	2-8			1-0	1-0		
EAST RETURN STEM	11	7	A	5	4	0-10								4-6	
	20	6	S	6	9										
	3	5	S	17	9										
	7	5	S	8	3										
	5	5	B	15	3		1-6						0-6	13-9	
	5	5	B	11	8		1-6						0-6	10-2	
THROAT	7	5	S	12	9										
	11	5	S	9	3										
	7	5	B	15	3		1-6						0-6	13-9	
	7	5	B	11	8		1-6						0-6	10-2	
	11	5	B	7	0		2-0							5-0	
CAP	5	6	A	4	8	0-8								4-0	EPOXY COATED
	3	5	S	11	9										
	3	5	S	9	9										
	5	5	B	5	9		1-3					0-10¾		4-6	EPOXY COATED
	6	5	R	6	3		1-5	2-2	2-8			1-0	1-0		
END POST	10	5	S	3	8										EPOXY COATED
	5	5	C	9	8	4-2					4-2			1-4	EPOXY COATED
WEST RETURN	2	7	S	8	0										
	1	7	B	5	2		1-4							3-10	
	1	7	M	11	1		1-4	4-5	5-4			3-9¼	3-9¼	8-2¼	
	1	7	M	10	0		1-4	4-2	4-6			3-2¼	3-2¼	7-4¼	
	1	7	M	8	9		1-4	3-10	3-7			2-6½	2-6½	6-11½	
	1	7	M	7	6		1-4	3-6	2-8			1-10¼	1-10¼	5-4¾	
	5	6	A	4	8	0-8								4-0	EPOXY COATED

Location	Bar Mark Number	Size	Type	Length Ft.	In.	A	B	C	D	E	G	H	K	O	Remarks
	1	5	S	20	0										
	3			17	9										
	1			7	5										
	2			7	4										
	1			6	9										
	1			6	1										
	1			5	6										
	9			4	9										
	1			4	1										
	4			3	8										
	5	5	S	3	6										EPOXY COATED
	3	5	B	19	7		1-9							17-10	
	1			9	9		4-5					3-11½		5-4	
	1			8	8		4-2					2-11½		4-6	
	1			7	5		3-10					2-8⅞		3-7	
	1			6	2		3-6					2-5¾		2-8	
	9	5	B	4	2		1-6						0-6	2-8	
END POST	10	5	S	3	8										EPOXY COATED
	5	5	C	9	8	4-2					4-2			1-4	EPOXY COATED
APPROACH SLAB	104	7	S	13	6										
	28	6	S	28	3										
SUPERSTRUCTURE															ALL BARS EPOXY COATED
	141	8	S	20	5										
	3			19	9										
	1			10	0										
	1			6	6										
	1			5	3										
	1			4	3										
	1			3	9										
	1			2	9										
	1	8	S	2	3										
	10	5	S	30	3										
	25			27	1										
	40			26	5										
	8	5	S	1	8										
	4	5	B	3	0		1-6							1-6	
	10	5	B	2	2		0-8							1-6	
	42	5	F	4	9		1-6	1-9	1-6					3-0	
	42	5	F	4	7		1-6	1-7	1-6					3-0	
	10	5	L	5	3	0-7	3-0	1-8							
	10	4	S	30	3										
	25			27	1										
	40			26	5										
	72			20	5										
	2			19	9										
	1			10	0										
	4			7	5										
	1			5	3										
	1			3	9										
	1	4	S	2	3										
	10	4	G	3	6		1-3	1-5	0-10			1-0	1-0	3-1	
E. SIDEWALK	1	5	S	20	9										
	1			20	7										
	7			20	5										
	1			13	6										
	1			10	0										
	13			9	9										
	6			9	8										
	6			6	2										
	12			6	0										
	1			5	0										
	1			3	6										
	1	5	S	2	3										
W. SIDEWALK	8	5	S	20	5										
	1			20	2										
	1			19	9										
	20			9	9										
	1	5	S	9	8										

Location	Bar Mark Number	Size	Type	Length Ft	In.	A	B	C	D	E	G	H	K	O	Remarks
UTILITY CORRIDOR															
FOOTING	32	7	S	14	6										
Grp. B	6	7	S	VARIES											2'-4" to 13'-2" @ 2'-2" INCR.
Grp. C	37	7	S	VARIES											2'-6" to 16'-6" @ 4" INCR.
	112	7	A	11	7	0-10								10-9	
	2	5	S	37	8										
	2			37	3										
	2			21	3										
	2			16	0										
	2			15	0										
	16			14	6										
	39			3	0										
Grp. A	8			VARIES											18'-6" to 36'-10½" @ 2'-7½" INCR.
Grp. A	8														18'-6" to 36'-10½" @ 2'-7½" INCR.
Grp. D	3														2'-6" to 12'-0" @ 4'-9" INCR.
Grp. E	19	5	S	VARIES											2'-6" to 16'-6" @ 8" INCR.
NORTH WALL															
STEM	18	6	A	4	2	0-8								3-6	
	8	5	S	17	9										
	8			16	0										
	12			12	3										
	36	5	S	4	9										
THROAT	8	5	S	17	6										
	8			16	0										
Grp. A	18			VARIES											8'-8" to 10'-5¾" @ 1¼" INCR.
Grp. B	11			VARIES											8'-6" to 10'-4¾" @ 2¼" INCR.
	1	5	S	10	6										
SOUTH WALL															
STEM	38	6	A	4	2	0-8								3-6	
	16	5	S	19	8										
	8			17	9										
	8			17	0										
	27			12	3										
	75	5	S	4	9										
THROAT	14	5	S	19	8										
	8			17	9										
	8			17	5										
Grp. A	12			VARIES											9'-6" to 11'-1¼" @ 1½" INCR.
Grp. B	14														7'-8" to 9'-3½" @ 1½" INCR.
Grp. C	18														9'-6" to 11'-3¼" @ 1¼" INCR.
Grp. D	20			VARIES											7'-2¼" to 9'-6" @ 1¼" INCR.
	1	5	S	11	3										

FED. ROAD DIV. NO.	STATE	FEDERAL AID PROJECT NO.	FISCAL YEAR	SHEET NO.	TOTAL SHEETS
	R. I.			B-40	43

CE MAGUIRE, INC.
ARCHITECTS - ENGINEERS - PLANNERS
PROVIDENCE - WALTHAM - WETHERSFIELD

DATE
SCALE
DESIGNED BY
SHEET B-40 OF 43

REVISIONS		
NO.	DATE	BY

RHODE ISLAND
DEPARTMENT OF TRANSPORTATION
DIVISION OF PUBLIC WORKS

CAPITAL CENTER PROJECT
CONTRACT 3

PROVIDENCE RHODE ISLAND

BRIDGES "A", "B" & "C"
REINFORCING SCHEDULE SH. 2

CHECKED BY _____ DATE _____ SCALE _____

BR. 989, 983, 982 8605

ADDENDUM NO. 5

FED. ROAD DIV. NO.	STATE	FEDERAL AID PROJECT NO.	FISCAL YEAR	SHEET NO.	TOTAL SHEETS
	R.I.			B-41	43

Location	Bar Mark Number	Size	Type	Length Ft.	Length In.	A	B	C	D	E	G	H	K	O	Remarks
BRIDGE "C"															
SUBSTRUCTURE															
ABUTMENT FOOTING															
	65	7	A	5	0	0-10								4-2	
	72	6	S	11	6										
	26	6	H	7	6		2-9	1-7	3-2				0-3¼	4-2	R=1'-0"
	48	5	S	30	9										
	77	5	S	11	6										
	63	5	S	3	0										
	12	5	U	9	4	1-0	4-0				1-0			1-8	
STEM	12	8	S	2	0										EPOXY COATED
	45	6	S	2	0										EPOXY COATED
	26	5	S	24	0										
	52	5	S	22	6										
	65	5	S	18	2										
	49	5	B	20	4		2-8							17-8	
	26	5	C	8	0	3-5					3-5			1-2	EPOXY COATED
	45	5	C	6	0	2-8					2-8			0-8	EPOXY COATED
BACKWALL	4	6	A	13	9	0-8								13-1	EPOXY COATED
	2	5	S	24	0										EPOXY COATED
	4	5	S	9	6										EPOXY COATED
	4	5	A	13	8	0-7								13-1	EPOXY COATED
N.E. RETURN STEM	7	7	A	5	4	0-10								4-6	
	13	6	S	6	9										
	2	5	S	18	0										
	5	5	S	8	3										
	5	5	B	10	7		1-6							9-1	
	5	5	B	8	0		1-6							6-6	
THROAT	5	5	S	13	2										
	7	5	S	9	9										
	7	5	B	10	7		1-6							9-1	
	7	5	B	8	0		1-6							6-6	
	7	5	B	7	0		2-0							5-0	
CAP	5	6	A	4	8	0-8								4-0	EPOXY COATED
	3	5	S	7	6										
	3	5	S	6	0										
	5	5	B	5	9		1-3					0-10⅜		4-6	EPOXY COATED
	3	5	R	6	3		1-5	2-2	2-8			1-0	1-0		
END POST	10	5	S	3	8										EPOXY COATED
	5	5	C	9	8	4-2					4-2			1-4	EPOXY COATED
N.W. RETURN STEM	7	7	A	5	4	0-10								4-6	
	13	6	S	6	9										
	2	5	S	18	0										
	5	5	S	8	3										
	5	5	B	10	7		1-6							9-1	
	5	5	B	8	0		1-6							6-6	
THROAT	5	5	S	13	2										
	7	5	S	9	9										
	7	5	B	10	7		1-6							9-1	
	7	5	B	8	0		1-6							6-6	
	7	5	B	7	0		2-0							5-0	
CAP	5	6	A	4	8	0-8								4-0	EPOXY COATED
	3	5	S	7	6										
	3	5	S	6	0										
	5	5	B	5	9		1-3					0-10⅜		4-6	EPOXY COATED

Location	Bar Mark Number	Size	Type	Length Ft.	Length In.	A	B	C	D	E	G	H	K	O	Remarks
	3	5	R	6	3		1-5	2-2	2-8			1-0	1-0		
END POST	10	5	S	3	8										EPOXY COATED
	5	5	C	9	8	4-2					4-2			1-4	EPOXY COATED
N.E. WINGWALL FOOTING	30	7	S	12	3										
	30	6	S	12	3										
	60	6	H	7	9		2-9	1-7	3-5				0-3½	4-5	
	18	5	S	29	6										
	31	5	S	12	3										
	21	5	S	3	0										
STEM	60	6	S	6	9										
	30	6	A	4	2	0-8								3-6	
	10	5	S	29	6										
	21	5	S	8	3										
THROAT	14	5	S	29	6										
	7			12	6										
	6			12	1										
	7			11	7										
	7			11	6										
	10			9	0										
	10			8	7										
	10	5	S	8	1										
	30	5	B	7	0		2-0							5-0	
CAP	6	5	S	29	6										
	21	5	R	6	3		1-5	2-2	2-8			1-0	1-0		
APPROACH SLAB	88	7	S	13	6										
	28	6	S	22	9										
SUPERSTRUCTURE				ALL BARS EPOXY COATED											
DECK	144	8	S	19	3										
				7	9										
				6	0										
				5	2										
				4	4										
				3	9										
				3	3										
				2	9										
				2	3										
				1	8										
		8	S	1	6										
		8	V	10	0			9-8				1-1¼			R=11'-2"
	2	5	S	30	3										
	2			29	9										
	9			28	0										
	24			25	8										
	35	5	S	25	0										
	40	5	F	5	0		1-6½	1-11	1-6½					3-1	
	40	5	F	4	7		1-6	1-7	1-6					3-0	
	2	4	S	30	3										
	2			29	9										
	9			28	0										
	24			25	8										
	35			25	0										
	74	4	S	19	3										

Location	Bar Mark Number	Size	Type	Length Ft.	Length In.	A	B	C	D	E	G	H	K	O	Remarks
	1	4	S	6	0										
	1			4	4										
	1			3	3										
	1			2	3										
	1	4	S	1	6										
	1	4	V	10	0			9-8				1-1¼			R=11'-2"
E. SIDEWALK	14	5	S	19	3										
	20	5	S	13	6										
W. SIDEWALK	8	5	S	19	3										
	1			19	0										
	1			18	0										
	1			16	0										
	1			14	0										
	7			13	3										
	1			11	0										
	14			8	0										
	13			7	6										
	1			6	3										
	1			4	6										
	1			3	3										
	1	5	S	2	3										
	1	5	V	16	0			15-8½				1-3⅜			R=24'-4"
	1	5	V	10	0			9-8				1-1¼			R=11'-2"

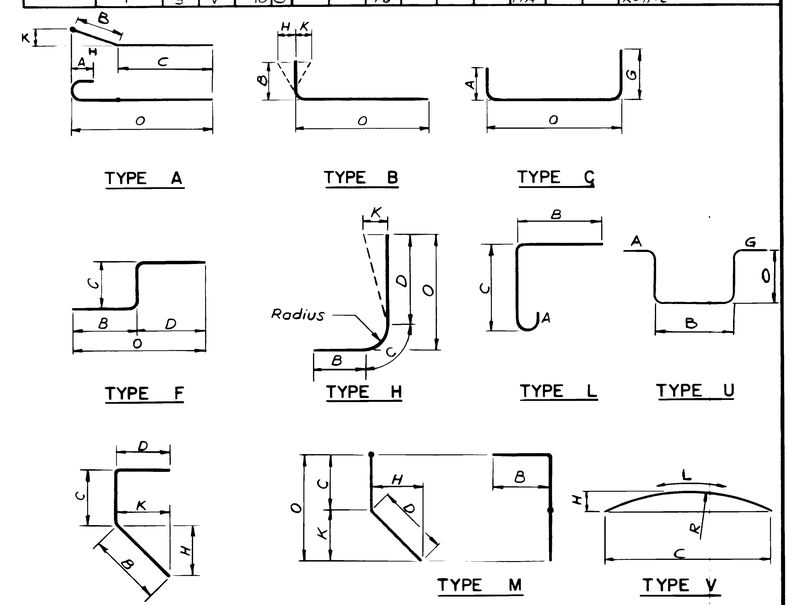

NOTES

1. REINFORCEMENT BARS SHALL BE IN ACCORDANCE WITH ASTM DESIGNATION A615, GRADE 60.
2. EPOXY COATED REINFORCEMENT BARS SHALL BE IN ACCORDANCE WITH THE SPECIAL PROVISIONS OF THE SPECIFICATIONS, CODE 809.0300.
3. THE BAR SCHEDULES AND BENDING DIAGRAMS SHOWN ON THE PLANS ARE FURNISHED FOR INFORMATIONAL PURPOSES ONLY, AND THE STATE DOES NOT ASSUME RESPONSIBILITY FOR THEIR ACCURACY. THE CONTRACTOR'S BAR FABRICATOR SHALL VERIFY THE CORRECTNESS IN PREPARING HIS ORDER LISTS AND BENDING DIAGRAMS. ANY EXPENSE INCIDENT TO REVISION OF MATERIAL AS SHOWN ON THE BAR SCHEDULES AND BENDING DIAGRAMS IN ORDER TO MAKE IT COMPLY WITH THE DESIGN DRAWINGS SHALL BE BORNE BY THE CONTRACTOR.

REVISIONS		
NO.	DATE	BY

RHODE ISLAND
DEPARTMENT OF TRANSPORTATION
DIVISION OF PUBLIC WORKS

CAPITAL CENTER PROJECT
CONTRACT 3

PROVIDENCE RHODE ISLAND

BRIDGES "A", "B" & "C"
REINFORCING SCHEDULE SH.3

CHECKED BY _____ DATE _____ SCALE _____

CE MAGUIRE, INC.
ARCHITECTS - ENGINEERS - PLANNERS
PROVIDENCE - WALTHAM - WETHERSFIELD

DATE
SCALE
DESIGNED BY
SHEET B-41 OF 43

BR. 989, 983, 982

8605

ADDENDUM NO. 5

RHODE ISLAND STANDARD DETAILS

INDEX

Detail No.	Date	Title
1.1.0	6/98	Underdrain
1.2.0	6/98	Combination Drain
1.3.0	6/98	Concrete Connecting Collar
2.1.0	6/98	Concrete Headwalls for Pipe Culverts
2.2.0A	6/98	Standard Headwalls for Multiple 3'-6" to 7'-0" Pipe Culverts (Sheet 1 of 2)
2.2.0B	6/98	Standard Headwalls for Multiple 3'-6" to 7'-0" Pipe Culverts (Sheet 2 of 2)
2.3.0	6/98	Precast Concrete Flared End Section
3.1.0		No Detail Assigned
3.2.0	6/98	Brick/Solid Block 4'-0" Round Manhole
3.2.1	6/98	Brick/Solid Block 5'-0" or 6'-0" Round Manhole
3.2.2	6/98	Solid Block Shallow 4'-0" or 5'-0" Round Manhole
3.3.0	6/98	Brick/Solid Block Type "D" Square Catch Basin
3.3.1	6/98	Brick/Solid Block Driveway Basin and Gutter Inlet
3.3.2	6/98	Brick/Solid Block Type "F" Square Catch Basin
3.3.3	6/98	Solid Block Flush Square Catch Basin
3.3.4	6/98	Brick/Solid Block Double Grate Catch Basin Grate Parallel to Edge of Pavement
3.3.5	6/98	Brick/Solid Block Double Grate Catch Basin Grate Perpendicular to Edge of Pavement
3.3.6A	6/98	High Capacity Inlet (Sheet 1 of 2)
3.3.6B	6/98	High Capacity Inlet (Sheet 2 of 2)
3.4.0	3/05 R1	Brick/Solid Block Type "D" Round Catch Basin
3.4.1	3/05 R1	Brick/Solid Block Round Catch Basin with Gutter Inlet
3.4.2	3/05 R1	Brick/Solid Block Type "F" Round Catch Basin

RHODE ISLAND STANDARD DETAILS

INDEX

Detail No.	Date	Title
3.4.3	3/05 R1	Brick/Solid Block Type "R" Catch Basin
3.4.4	3/05 R1	Solid Block Flush Round Catch Basin
3.4.5	3/05 R1	Brick/Solid Block 5'-0" or 6'-0" Round Catch Basin
3.5.0	6/98	Solid Block Shallow Type "F" Square Catch Basin (Pipe Cover 1'-6" to 3'-0")
3.5.1	6/98	Solid Block Shallow 5'-0" or 6'-0" Square Catch Basin (Pipe Cover 1'-6" to 3'-0")
3.5.2	6/98	Solid Block Shallow Double Grate Catch Basin Grate Parallel to Curb
3.5.3	6/98	Solid Block Shallow Double Grate Catch Basin Grate Parallel to Edge of Pavement
3.5.4	6/98	Solid Block Shallow Double Grate Catch Basin Grate Perpendicular to Curb
3.5.5	6/98	Solid Block Shallow Double Grate Catch Basin Grate Perpendicular to Edge of Pavement
3.6.0	6/98	Brick/Solid Block Drop Inlet
3.7.0	6/98	Brick/Solid Block Round Manhole or Catch Basin Depth Greater than 12'-0"
4.1.0		No Detail Assigned
4.2.0	6/98	Precast 4'-0" Round Manhole
4.2.1	6/98	Precast 5'-0" Round Manhole
4.2.2	6/98	Precast 6'-0" Round Manhole
4.3.0	6/98	Precast 4'-0" or 6'-0" Square Manhole or Catch Basin
4.4.0	6/98	Precast 4'-0", 5'-0" or 6'-0" Round Catch Basin
4.5.0	6/98	Precast Concrete Drop Inlet
4.5.1	6/98	Precast Concrete Drop Inlet Lateral Outlet
4.5.2	6/98	Precast Concrete Drop Inlet Longitudinal Outlet

RHODE ISLAND STANDARD DETAILS

INDEX

Detail No.	Date	Title
4.6.0	6/98	Concrete Cover for Shallow 4'-0" Round Manholes
4.6.1	6/98	Concrete Cover for Shallow 5'-0" Round Manholes
4.7.0	6/98	Top Cover for 4'-0" or 6'-0" Square Catch Basins and Manholes
4.7.1	6/98	Top Cover Monolithic with Riser Section for 4'-0" or 6'-0" Square Catch Basins and Manholes
4.7.2	6/98	Alternate Top Cover for Round Precast Manholes and Catch Basins
4.8.0	6/98	Concrete Cover for Shallow Type "F" Square Catch Basins
4.8.1	6/98	Concrete Cover for Shallow Double Grate Catch Basins with Curb
4.8.2	6/98	Concrete Cover for Shallow Double Grate Catch Basins without Curb
4.8.3	6/98	Concrete Cover for Shallow 5'-0" Square Catch Basins
4.8.4	6/98	Concrete Cover for Shallow 6'-0" Square Catch Basins
5.1.0	6/98	Precast Concrete Sump for Round Catch Basins (Wet Areas)
5.2.0	6/98	Round Manholes and Catch Basins Maximum Pipe Size Standard
5.3.0	6/98	Catch Basin and Manhole Step
5.4.0	6/98	Concrete Collars
6.1.0	6/98	Light-Duty Square Frame and Round Cover
6.1.1	6/98	Heavy-Duty Square Frame and Round Cover
6.2.0	6/98	Round Frame and Cover Light-Duty
6.2.1	6/98	Heavy-Duty Round Frame and Cover
6.3.0	6/98	Square Frame and Grate
6.3.1	7/06 R1	Square Frame and Grate
6.3.2	7/06 R1	Square Frame and Grate (Bicycle Safe)
6.3.3	6/98	High Capacity Frame and Grate
6.3.4	6/98	High Capacity Frame and Grate (Bicycle Safe)

RHODE ISLAND STANDARD DETAILS

INDEX

Detail No.	Date	Title
6.4.0	6/98	Round Frame and Grate
6.4.1	4/13	Round Area Frame and Grate
7.1.0	3/05 R1	Precast Concrete Curb
7.1.1	6/10 R2	3’-0” Precast Concrete Transition Curb
7.1.2	3/05 R1	6’-0” Precast Concrete Transition Curb
7.1.3	3/05 R1	Precast Concrete Wheelchair Ramp Transition Curb
7.1.3A	9/12	High Side Transition Curb Length
7.1.4	3/05 R1	Precast Concrete 2’-0” Radius Corner
7.1.5	3/05 R1	Precast Concrete Inlet Stone (for Square Catch Basin)
7.1.6	3/05 R1	Precast Concrete Inlet Stone (for Round Catch Basin)
7.1.7	3/05 R1	Precast Concrete Apron Stone (for Square Catch Basin)
7.1.8	3/05 R1	Precast Concrete Apron Stone (for Round Catch Basin)
7.1.9	9/12 R1	Precast Concrete Ramp Stone
7.2.0	3/05 R1	Precast Concrete Sloped Face Curb
7.2.1	3/05 R1	Precast Concrete Sloped Face Transition Curb
7.2.2	3/05 R1	Precast Concrete Transition Curb (Vertical Face to Sloped Face)
7.2.3	6/98	Precast Concrete Lot Curb
7.2.4	3/05 R1	Precast Concrete Car Stops
7.3.0	9/12 R2	Granite Curb
7.3.1	9/12 R3	3’-0” Granite Transition Curb
7.3.2	9/12 R2	6’-0” Granite Transition Curb
7.3.3	9/12 R2	Granite Wheelchair Ramp Transition Curb
7.3.4	9/12 R2	Granite 2’-0” Radius Corner
7.3.5	9/12 R2	Granite Inlet Stone (for Square Catch Basin)

RHODE ISLAND STANDARD DETAILS

INDEX

Detail No.	Date	Title
7.3.6	9/12 R2	Granite Inlet Stone (for Round Catch Basin)
7.3.7	9/12 R2	Granite Apron Stone (for Square Catch Basin)
7.3.8	9/12 R2	Granite Apron Stone (for Round Catch Basin)
7.3.9	9/12 R2	Granite Ramp Stone
7.4.0	3/05 R1	Granite Sloped Face Curb
7.4.1	3/05 R1	Granite Sloped Face Transition Curb
7.4.2	3/05 R1	Granite Transition Curb (Vertical Face to Sloped Face)
7.5.0	3/05 R1	Bituminous Concrete Lip Curb
7.5.1	3/05 R1	Bituminous Berm
7.6.0	3/05 R1	Curb Setting Detail
7.7.0	3/14	Granite Truck Apron Stone
8.1.0	6/98	Seeded Ditch
8.2.0	6/98	Bituminous Concrete Ditch
8.3.0	6/98	Rip-Rap Ditch
8.4.0	6/98	Paved Waterway
9.1.0	6/98	Baled Hay Erosion Check
9.2.0	6/98	Silt Fence Detail
9.3.0	6/98	Baled Hay Erosion Check and Silt Fence Combined
9.4.0	6/98	Baled Hay Ditch and Swale Erosion Check
9.5.0	6/98	Log and Hay Check Dam
9.6.0	6/98	Sand Bag Erosion Check
9.7.0	6/98	Dewatering Basin
9.8.0	6/98	Baled Hay Catch Basin Inlet Protection
9.9.0	6/98	Construction Access

RHODE ISLAND STANDARD DETAILS

INDEX

Detail No.	Date	Title
10.1.0	6/98	Wet Stone Masonry Retaining Wall
10.2.0	6/98	Rubble Masonry Wall
10.3.0	6/98	Concrete Retaining Wall
10.4.0	6/98	Stone Masonry Steps
11.1.0		No Standard Assigned
12.1.0		No Standard Assigned
13.1.0		No Standard Assigned
14.1.0	6/98	Concrete Highway Bound
14.2.0	6/98	Granite Highway Bound
14.3.0	6/98	Highway Bound Set in Concealed Ledge
14.4.0	6/98	Reinforced Concrete Precise Level Monument
14.4.1	6/98	Standard Bench Mark Heads
14.4.2	6/98	Standard Marker Triangulation Station
14.4.3	6/98	Geodetic Survey Disk
14.5.0	6/98	Survey Wedge
14.5.1	6/98	Survey Stake
15.1.0	6/10 R1	Post and Mounting for Rural Mailbox
15.1.1	6/10	Setting and Mounting Dimensions for Rural Mailbox
15.2.0	6/10 R1	Post and Multiple Mountings for Rural Mailboxes
16.1.0		No Standard Assigned
17.1.0	6/98	Traffic Monitoring Station Single Junction Box Wood Post Detail
17.1.1	6/98	Traffic Monitoring Station Double Junction Box Wood Post Detail
17.2.0	6/98	Traffic Monitoring Station Portable Computer Cable
17.3.0	6/98	Traffic Monitoring Station Pole Mounted Cabinet

RHODE ISLAND STANDARD DETAILS

INDEX

Detail No.	Date	Title
17.3.1	6/98	Traffic Monitoring Station Type "H" Cabinet Post Mounted Installation
17.3.2	6/98	Traffic Monitoring Station Type "H" Cabinet – Electrical Service
17.4.0	6/98	Traffic Monitoring Station Controller Cabinet Ground Mounted Installation
17.4.1	6/98	Traffic Monitoring Station Controller Cabinet Wiring Details – Interior
17.5.0	6/98	Traffic Monitoring Station Power Outlet Box
17.6.0	6/98	Traffic Monitoring Station Flexible Conduit Installation
17.7.0	6/98	Traffic Monitoring Station Loop Wire Layout for Directional Counting
17.7.1	6/98	Traffic Monitoring Station Loop Wire Layout for Multiple Lanes in the Same Direction
17.7.2	6/98	Traffic Monitoring Station Axle Sensor and Loop Layout
17.7.3	6/98	Traffic Monitoring Station Loop Dimensions
17.7.4	6/98	Traffic Monitoring Station Loop Wire Installation
17.7.5	6/98	Traffic Monitoring Station Sawcut Cross-Section with a Pavement Overlay
17.7.6	6/98	Traffic Monitoring Station Sawcut Cross-Section without a Pavement Overlay
18.1.0	6/08 R1	Concrete Light Standard Base
18.1.1	6/08	Breakaway Support Couplings for Light Standards
18.2.0	11/13 R3	Precast Type "A" Handhole
18.2.1	5/11 R3	Precast Type "H" Heavy-Duty Handhole
18.2.2	5/11 R3	Precast Type "B" Heavy-Duty Handhole
18.3.0	6/08 R1	Aluminum Lighting Standards
18.3.1	6/08 R1	Aluminum Pole – Grounding Detail
18.3.2	6/08 R1	Typical Luminaire – Wiring Diagram
18.3.3		No Standard Assigned
18.3.4	6/98	Breakaway Support Couplings for Light Standards
18.3.5	6/08 R1	Recessed Bolt Couplings for Light Standards

RHODE ISLAND STANDARD DETAILS

INDEX

Detail No.	Date	Title
18.3.6	6/08	Typical Wiring Diagrams
18.3.7	6/08	Underpass Lighting Detail
18.4.0	6/08 R1	Service Pedestal
18.4.1	6/08 R1	Service Pedestal – Grounding Detail
18.4.2	6/08 R1	Service Pedestal 240/480 Volts – 3W
18.4.3	6/08 R1	Service Pedestal 240/480 Volts – 3W
18.4.4	6/08 R1	Service Pedestal 120/240 or 120/208 Volts – 3W
18.4.5	6/08 R1	Service Pedestal 120/240 or 120/208 Volts – 3W
18.4.6	6/08	Service Pedestal Foundation
18.5.0	6/98	Phase-Neutral Connector Kit
18.6.0	6/08 R1	Trench Detail for Conduit in Existing Roadway
18.6.1	6/08	Light Conduit – Road/Ramp Crossing
18.6.2	6/08	Expansion Joints
18.6.3	6/08	Pullboxes – Type “V” and Type “W”
18.7.0	6/08 R1	Riser Pole Detail
19.1.0	6/98	Ground Mounted Controller Installation
19.1.1	6/98	Pole Mounted Controller Installation
19.2.0	6/98	Steel Mast Arm
19.3.0	6/98	Steel Span Pole
19.4.0	6/98	Aluminum Pedestal
19.5.0	6/98	Mast Arm and Span Pole Foundation
19.5.1	6/98	Ornamental Mast Arm Foundation
19.6.0A	6/98	Inductance Loop Vehicle Detector Installation Details (Sheet 1 of 2)
19.6.0B	6/98	Inductance Loop Vehicle Detector Installation Details (Sheet 2 of 2)

RHODE ISLAND STANDARD DETAILS

INDEX

Detail No.	Date	Title
20.1.0	6/98	Pavement Markings – Arrows and Only
20.2.0	6/98	Bi-Directional Control Device
21.1.0		No Standard Assigned
22.1.0		No Standard Assigned
23.1.0		No Standard Assigned
24.1.0	6/98	Sign Post Selection and Installation Details Square Post (Signs up to 8'-0" W x 4'-0" H)
24.2.0	6/98	Sign Post Selection and Installation Details U-Channel Post (Signs up to 8'-0"W x 4'-0"H)
24.3.0	6/98	Construction and Temporary Sign Mountings (Signs up to 60 Sq. Ft.)
24.4.0	6/98	Cantilever Breakaway Sign Support for 4'-0" to 5'-0" Sidewalks
24.5.0		No Detail Assigned
24.6.0	6/98	Parking Sign Mounting Detail
24.6.1	6/98	Street Sign Mounting Detail
24.6.2	6/98	Mile Marker Mounting Detail
24.6.3	6/98	Lightweight Steel Delineator Mounting Detail
24.6.4	6/98	Bridge Abutment Marker Mounting Detail
25.1.0	6/98	Temporary Construction Sign Cover Detail
25.2.0	5/11 R1	Box Form
26.1.0	3/05 R1	Fluorescent Traffic Cone
26.2.0	3/05 R1	Polyethylene Drum with Markings
26.3.0	3/05 R1	PVC Plastic Pipe Type III Barricade
26.3.1	3/05 R1	Plastic Pipe Type III Barricade
27.1.0	6/98	Regulatory Signs

RHODE ISLAND STANDARD DETAILS

INDEX

Detail No.	Date	Title
27.1.1	6/98	Traffic Fines In Work Zone Regulatory Sign
28.1.0	6/98	Warning Signs
29.1.0	6/98	Construction Signs
29.1.1	6/98	Field Office Identification Sign
29.2.0	6/98	Guide Signs
30.1.0	6/98	Sign Location Details (Signs 6'-0"W x 4'-0"H and Greater)
30.1.1	6/98	Post Selection Table for Breakaway Signs (Signs 6'-0"W x 4'-0"H and Greater)
30.2.0	6/98	Foundation Details (Signs 6'-0"W x 4'-0"H and Greater)
30.2.1	6/98	Foundation Modification for Retrofit (Signs 6'-0"W x 4'-0"H and Greater)
30.3.0	6/98	Sign Panel Details (Signs 6'-0"W x 4'-0"H and Greater)
30.3.1	6/98	Post Clip and Bolt Detail (for Extruded Aluminum)
30.4.0	6/98	Ground Mounted Primary Directional Sign Post on Breakaway Couplings
30.4.1	6/98	Bracket Selection Table, Bolt Circle and General Notes
30.4.2	6/98	Installation Notes
30.4.3	6/98	Bill of Materials
31.1.0	6/10 R2	Chain Link Fence 3'-0" to 4'-0"
31.2.0	6/10 R2	Chain Link Fence 5'-0" to 6'-0"
31.2.1	3/05 R1	Chain Link Fence 5'-0" to 6'-0" Intermediate Post
31.3.0	3/05 R1	Woven Wire Right-of-Way Fence (Steel Post)
32.1.0		No Detail Assigned
33.1.0		No Detail Assigned
34.1.0	9/12 R1	Roadside Guardrail Installation

RHODE ISLAND STANDARD DETAILS

INDEX

Detail No.	Date	Title
34.1.1	6/98	Typical Guardrail Installation at Structures
34.1.2	6/98	Typical Guardrail Post Installation in Ledge
34.2.0	6/98	Steel Beam Guardrail
34.2.1	6/98	Steel Beam Guardrail Details
34.2.2	6/98	Steel Beam Guardrail Double Face Assembly
34.2.3	6/98	Steel Beam Guardrail Fixtures
34.2.4	6/98	Steel Beam Guardrail Post and Offset Bracket “C” Section
34.2.5	6/98	Steel Beam Guardrail Reflectorized Triangular Delineator
34.3.0	6/98	Earth Berm for Roadside Barrier Terminal Sections
34.3.1	6/98	Guardrail End Section
34.3.2	6/98	Terminal End Section (Single Face)
34.3.3	6/98	Anchorage Details Approach End Section
34.3.4	6/98	Anchorage Details Trailing End Section
34.3.5	6/98	Guardrail Connection to Existing End Post Approach End Section
34.3.6	6/98	Guardrail Connection to Existing End Post Trailing End Section
34.3.7	6/98	Guardrail Connection to Barrier Approach End Section
34.3.8	6/98	Guardrail Connection to Barrier Trailing End Section
34.4.0	3/05 R1	Steel Backed Timber Guardrail
34.4.1	3/05 R1	Steel Backed Timber Guardrail Terminal Section – Type 1
34.4.2	3/05 R1	Steel Backed Timber Guardrail Terminal Section – Type 2
34.5.3	5/09	Steel Thrie Beam Guardrail Single Face
34.5.4	5/09	Steel Thrie Beam Guardrail Double Face
35.1.0		No Standard Assigned

RHODE ISLAND STANDARD DETAILS

INDEX

Detail No.	Date	Title
36.1.0		No Standard Assigned
37.1.0		No Standard Assigned
38.1.0		No Standard Assigned
39.1.0		No Standard Assigned
40.1.0	6/98	Double-Faced Precast Median Barrier
40.2.0	6/98	Single-Faced Precast Median Barrier
40.2.1	7/09 R1	Single-Faced Precast Median Barrier with Concrete Slab
40.3.0	6/98	Precast Median Barrier Transition Unit
40.4.0	6/98	Precast Median Barrier for Light Standard
40.5.0	11/13 R2	Unanchored Precast Concrete Barrier for Temporary Traffic Control
41.1.0		No Standard Assigned
42.1.0		No Standard Assigned
43.1.0	6/10 R2	Cement Concrete Sidewalk
43.2.0	6/10 R2	Bituminous Concrete Sidewalk
43.3.0	9/12 R3	Wheelchair Ramp
43.3.1	9/12 R2	Wheelchair Ramp for Limited Right-of-Way Areas
43.4.0	6/10 R3	Driveway Development for 3’-0” Transition Curb
43.4.1	6/08 R2	Driveway Development for 6’-0” Transition Curb
43.5.0	6/10 R3	Cement Concrete Driveways
44.1.0		No Standard Assigned
45.1.0		No Standard Assigned
46.1.0		No Standard Assigned
47.1.0	6/98	Pavement Removal Drop-Off Detail
47.1.1	6/98	Transverse Pavement Cut and Match

RHODE ISLAND STANDARD DETAILS

INDEX

Detail No.	Date	Title
48.1.0	9/12 R2	Detectable Warning Panel Placement
49.1.0		No Standard Assigned
50.1.0	6/98	Large Tree Staking and Planting Detail (2” Caliper and Greater)
50.1.1	6/98	Tree Planting on Slope
50.1.2	6/98	Paver Detail Around New Trees
50.2.0	6/98	Evergreen Tree Planting Detail (4’-0” High and Greater)
50.3.0	6/98	Ball and Burlap Shrub Planting Detail
50.3.1	6/98	Container Grown Shrub Planting Detail
50.3.2	6/98	Shrub Planting on Slope
50.4.0	6/98	Perennial Planting Detail
50.5.0	6/98	Ornamental Grass Planting Detail
50.6.0	6/98	Groundcover Planting Detail
50.7.0	6/98	Bulb Planting Detail
51.1.0	6/98	Tree Protection Device
51.1.1	6/98	Drip Line Tree Protection Device for Existing Trees
51.2.0	6/98	Shrub Protection Device
51.3.0	6/98	Tree Well
51.4.0	6/98	Tree Wall

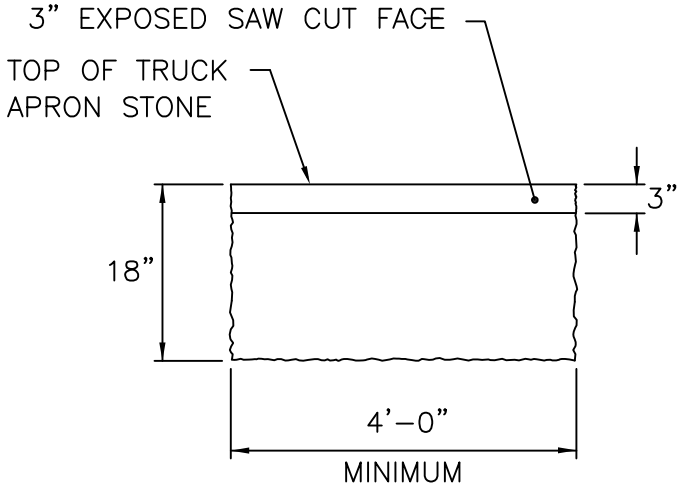

FRONT ELEVATION

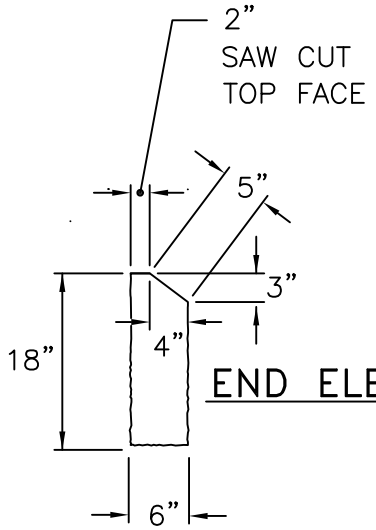

END ELEVATION

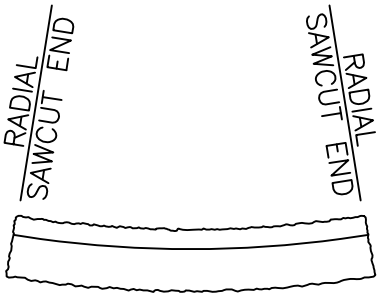

CIRCULAR TRUCK APRON STONE
PLAN VIEW

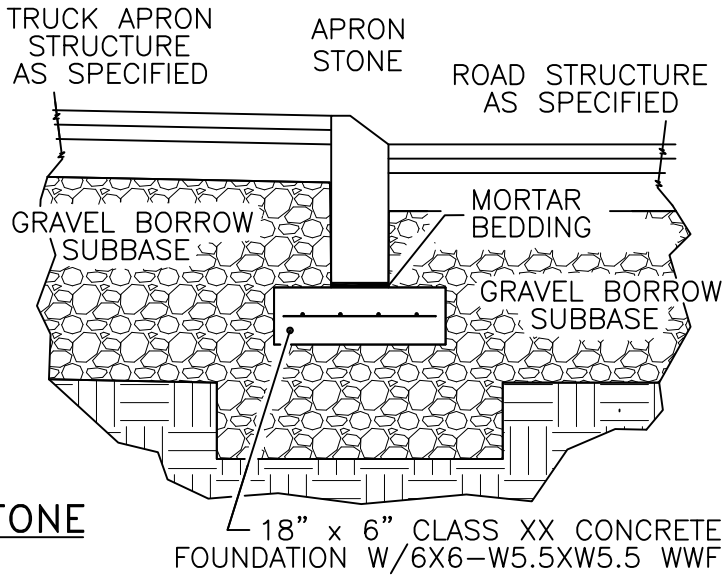

GRANITE TRUCK APRON STONE
ON CONCRETE FOUNDATION

NOTES:

1. SHALL BE IN ACCORDANCE WITH SECTION 906 OF THE R.I. STANDARD SPECIFICATIONS.
2. ALL EXPOSED SURFACES AND ALL SURFACES FIVE (5) INCHES FROM THE TOP OR BOTTOM TO BE DRESSED BY SAW; REMAINDER MAY BE QUARRY SPLIT.
3. MINIMUM LENGTH OF STRAIGHT OR CIRCULAR RAMP STONE TO BE 4'-0".
4. CIRCULAR APRON STONE IS REQUIRED ON CURVES WITH RADII OF 140'-0" OR LESS.
5. GRANITE TRUCK APRON STONES ARE TO BE USED ON ROUNDABOUTS TO TRANSITION FROM THE ROADWAY SURFACE TO THE TRUCK APRON SURFACE.

RHODE ISLAND DEPARTMENT OF TRANSPORTATION

REVISIONS		
NO.	BY	DATE
ADDENDUM NO. 5		

GRANITE TRUCK APRON STONE

CHIEF ENGINEER TRANSPORTATION

CHIEF DESIGN ENGINEER TRANSPORTATION

MARCH 25, 2014
ISSUE DATE

R.I. STANDARD 7.7.0

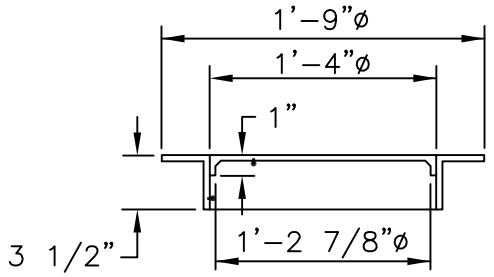

SECTION

HANDHOLE RING AND COVER

NOTES:

1. SHALL BE IN ACCORDANCE WITH SECTION T.05 OF THE RI STANDARD SPECIFICATIONS.
2. COVER TO HAVE NON–SLIP DIAMOND SURFACE AND THE WORD "ELECTRIC" ON ELECTRIC HANDHOLES, "SIGNAL" ON SIGNAL HANDHOLES, AND "COMM" ON TELEPHONE HANDHOLES.
3. 4" KNOCKOUTS ARE TO BE PROVIDED ON ALL FOUR SIDES OF THE HANDHOLE. FOLLOWING CONDUIT INSTALLATION THE CONTRACTOR SHALL SEAL AROUND CONDUIT ENTRANCES WITH CEMENT.
4. MINIMUM REQUIRED CONCRETE REINFORCEMENT = 0.058 SQ. IN./LIN. FT. (EACH WAY).
5. HANDHOLE RING TO BE SET IN MORTAR OVER HANDHOLE WALL.
6. FRAME AND COVER TO BE PROVIDED WITH GROUND CONNECTOR (FASTENED WITH 3/8–16 THREADS INTO BLIND HOLE) AND WELDED NUT. BOND BOTH ITEMS TO GROUND ROD USING #6cu. BARE CONDUCTOR.
7. MAX. ADJUSTMENT FOR COVER TO FINISHED GRADE SHALL BE 3".
7. NOT INTENDED FOR USE IN ROADWAY.

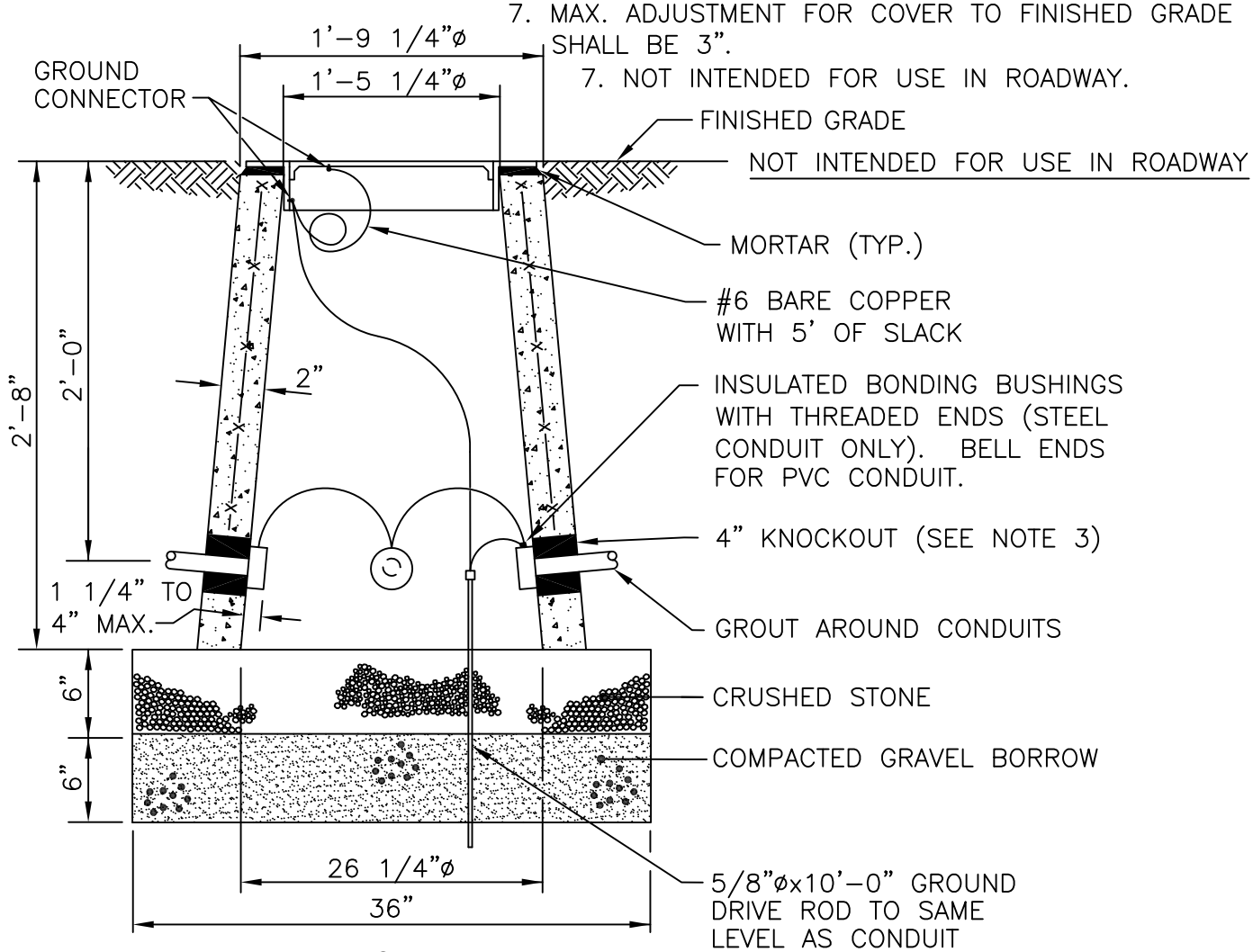

SECTION

RHODE ISLAND DEPARTMENT OF TRANSPORTATION

REVISIONS		
NO.	BY	DATE
1	MLP	6/27/08
2	RBH	5/31/11
3	MLP	11/06/13
ADDENDUM NO. 5		

PRECAST TYPE "A" HANDHOLE

CHIEF ENGINEER TRANSPORTATION

CHIEF DESIGN ENGINEER TRANSPORTATION

JUNE 15, 1998
ISSUE DATE

R.I. STANDARD 18.2.0

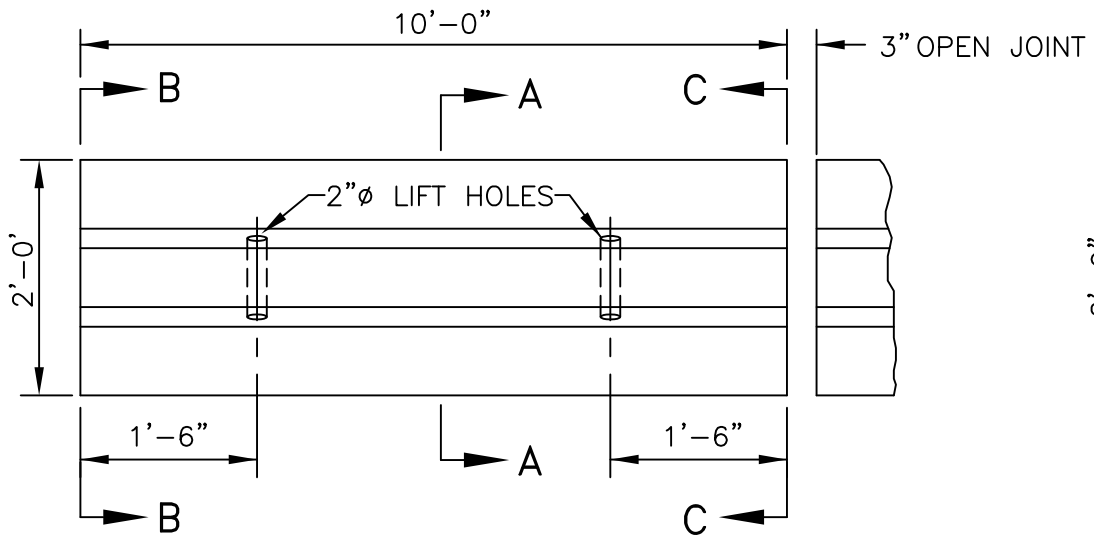

PLAN

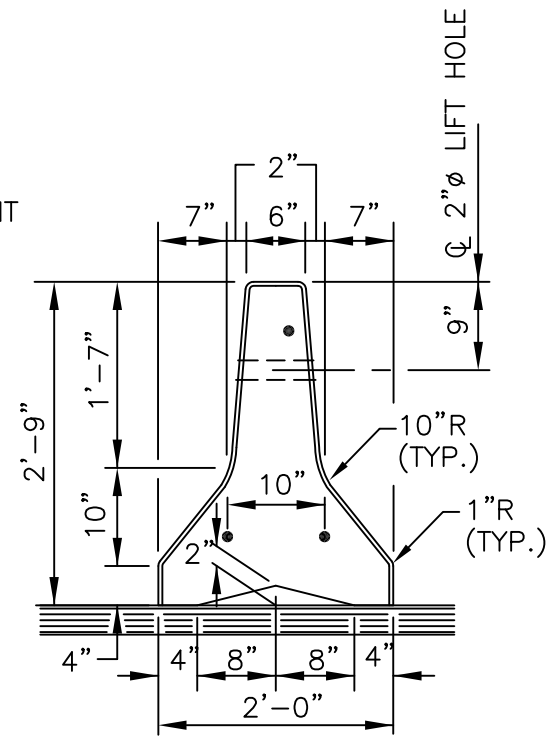

SECTION A-A

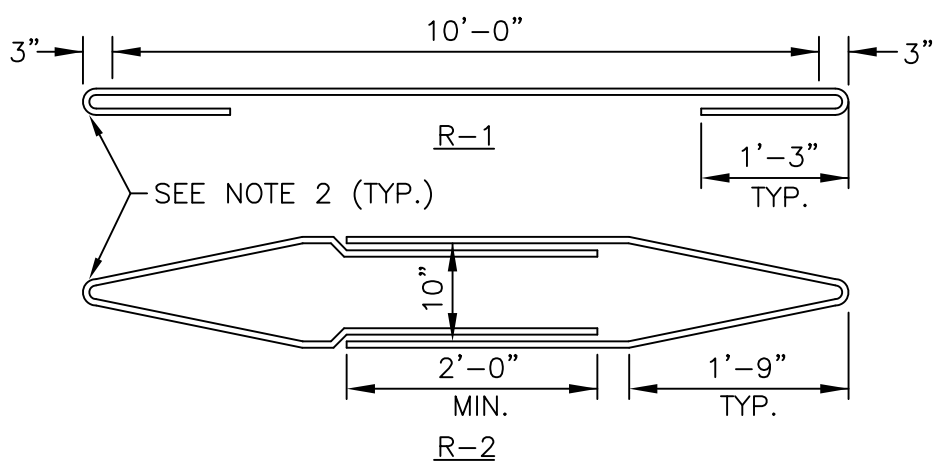

REINFORCING BAR DETAIL

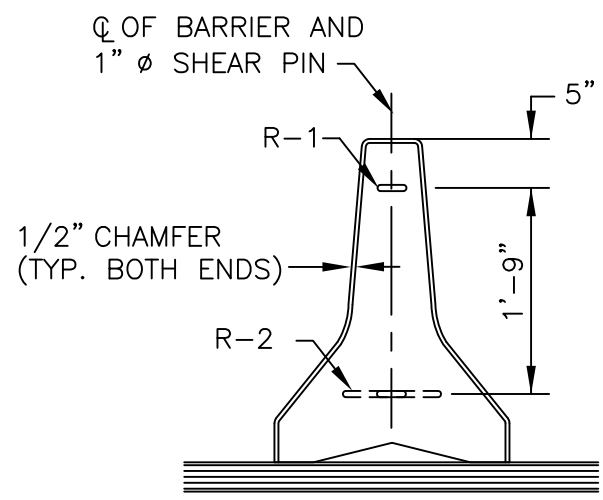

SECTION B-B

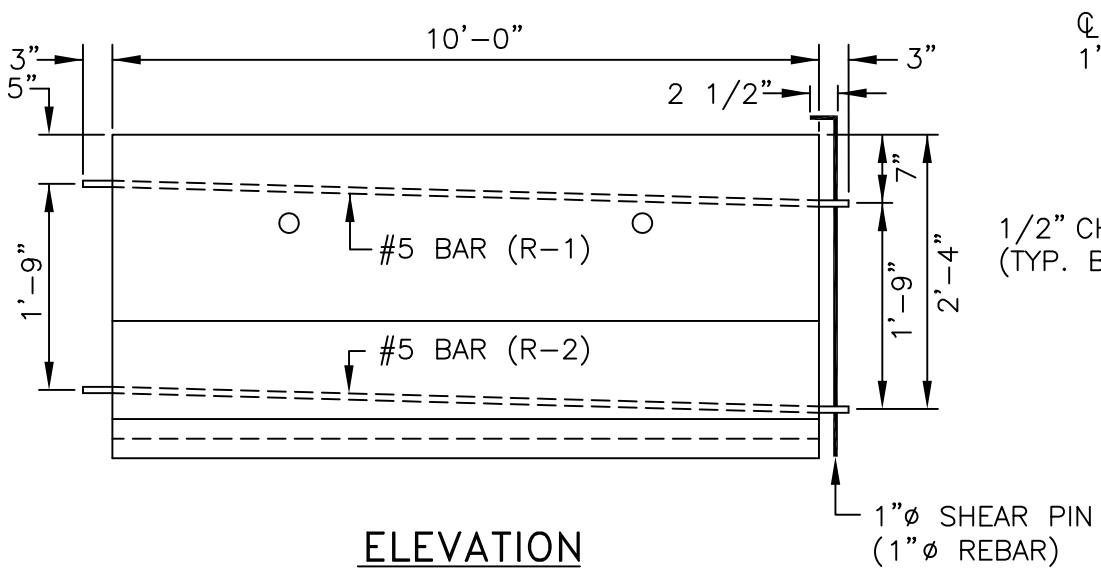

ELEVATION

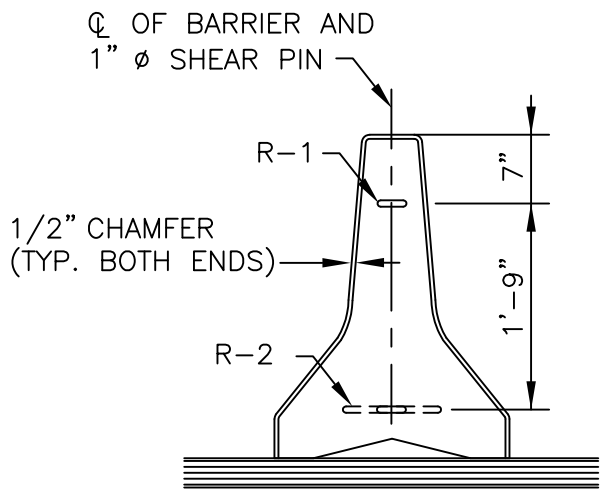

SECTION C-C

NOTES:
1. SHALL BE IN ACCORDANCE WITH SECTION 926 OF THE R.I. STANDARD SPECIFICATIONS.
2. BEND REBARS AROUND A 1 3/8" ø PIN.
3. BARS R-I SHALL BE FABRICATED CONTINUOUSLY. R-2 BARS SHALL BE FABRICATED WITH 2'-0" MINIMUM LAPS AS SHOWN ON THE DETAIL.

RHODE ISLAND DEPARTMENT OF TRANSPORTATION

REVISIONS		
NO.	BY	DATE
1	MLP	Oct 05
2	MLP	11/06/13
ADDENDUM NO.		

UNANCHORED PRECAST CONCRETE BARRIER
FOR TEMPORARY TRAFFIC CONTROL

CHIEF ENGINEER
TRANSPORTATION

CHIEF DESIGN ENGINEER
TRANSPORTATION

JUNE 15, 1998
ISSUE DATE

R.I. STANDARD
40.5.0