Request for Quote

STATE OF RHODE ISLAND AND PROVIDENCE PLANTATIONS
ONE CAPITOL HILL
PROVIDENCE RI 02908

CREATION DATE : 23-JUL-14
BID NUMBER: 7548901
TITLE: INSTALLATION OF STAIRCASE AT EAST PROVIDENCE MAINTENANCE FACILITY-DOT

BID CLOSING DATE AND TIME:20-AUG-2014 10:30:00

BUYER: Hill, Lisa
PHONE #: 401-574-8118

BILL TO
DOT ACCOUNTS PAYABLE
TWO CAPITOL HILL, RM 230
SMITH ST
PROVIDENCE, RI 02903
US

SHIP TO
DOT MAINTENANCE BUSINESS OFFICE
360 LINCOLN AVE
WARWICK, RI 02888
US

Requistion Number: 1375528

Line	Description	Quantity	Unit	Unit Price	Total
1	Questions concerning this solicitation must be received by the Division of Purchases at: lisa.hill@purchasing.ri.gov no later than 8/13/14 at 5:00 PM (ET). Questions should be submitted in a Microsoft Word attachment. Please reference the RFQ #7548901 on all correspondence. Questions received, if any, will be posted on the Internet as an addendum to this solicitation. It is the responsibility of all interested parties to download this information. A PRE-BID CONFERENCE WILL BE HELD ON 8/7/14 AT 9:00 AM AT: DOT EAST PROVIDENCE MAINTENANCE FACILITY, 691 WARREN AVENUE, EAST PROVIDENCE, RI. DOT:TOTAL PRICE INCLUDING ALL LABOR AND MATERIALS FOR THE INSTALLATION OF A STAIRCASE @ DOT EAST PROVIDENCE FACILITY IN ACCORDANCE WITH THE ATTACHED PLANS AND SPECIFICATIONS INSTALLATION OF STAIRCASE AT DOT EAST PROVIDENCE FACILITY TO GAIN ACCESS TO THE SECOND LEVEL CONTACT: SONGHAP TAING 401-734-4855 PREBID VIEWING IS ADVISED.	1.00	Each		

Delivery: _____

Terms of Payment: _____

It is the Vendor's responsibility to check and download any and all addenda from the RIVIP. This offer may not be considered unless a signed RIVIP generated Bidder Certification Cover Form is attached and the Unit Price column is completed. The signed Certification Cover Form must be attached to the front of the offer

Contract Terms and Conditions

Table of Contents

Terms and Conditions....II
BID STANDARD TERMS AND CONDITIONS....II
TERMS AND CONDITIONS FOR THIS BID....II
START DATE....II
WAGE REQUIREMENTS....II
INSURANCE REQUIREMENTS....II
RIVIP INFO - BID SUBMISSION REQUIREMENTS....III

Terms and Conditions

BID STANDARD TERMS AND CONDITIONS

TERMS AND CONDITIONS FOR THIS BID

START DATE

STARTING DATE _____ NO. OF WORKING DAYS REQUIRED FOR COMPLETION _____

WAGE REQUIREMENTS

BIDDERS ARE ADVISED THAT ALL PROVISIONS OF TITLE 37 CHAPTER 13 OF THE GENERAL LAWS OF RHODE ISLAND APPLY TO THE WORK COVERED BY THIS REQUEST, AND THAT PAYMENT OF THE GENERAL PREVAILING RATE OF PER DIEM WAGES AND THE GENERAL PREVAILING RATE FOR REGULAR, OVERTIME, AND OTHER WORKING CONDITIONS EXISTING IN THE LOCALITY FOR EACH CRAFT, MECHANIC, TEAMSTER, OR TYPE OF WORKMAN NEEDED TO EXECUTE THIS WORK IS A REQUIREMENT FOR BOTH CONTRACTORS AND SUBCONTRACTORS. THE PREVAILING WAGE TABLE MAY BE OBTAINED AT THE RI DIVISION OF PURCHASES HOME PAGE BY INTERNET at www.purchasing.ri.gov. SELECT "BIDDING INFORMATION", THEN "GENERAL INFORMATION", AND THEN SELECT "PREVAILING WAGE TABLES". PRINTING THE ENTIRE DOCUMENT AVERAGES APPROXIMATELY ONE MINUTE PER PAGE - YOU MAY WANT TO PRINT ONLY THE PAGES APPLICABLE TO YOUR BID. BIDDERS NOTE: IN THE EVENT THIS BID SPECIFIES PRICE OFFERS ON A TIME-AND-MATERIALS BASIS, i.e., AN HOURLY RATE, ANY OR ALL BIDS SUBMITTED IN AN AMOUNT LESS THAN THE PREVAILING RATE IN EFFECT FOR THE WORK COVERED BY THIS REQUEST AS OF THE DATE OF BID ISSUANCE SHALL BE REJECTED BY THE DIVISION OF PURCHASES.

INSURANCE REQUIREMENTS

AN INSURANCE CERTIFICATE IN COMPLIANCE WITH PROVISIONS OF ITEM 31 (INSURANCE) OF THE GENERAL CONDITIONS OF PURCHASE IS REQUIRED FOR COMPREHENSIVE GENERAL LIABILITY, AUTOMOBILE LIABILITY, AND WORKERS' COMPENSATION AND MUST BE SUBMITTED BY THE SUCCESSFUL BIDDER(S) TO THE DIVISION OF PURCHASES PRIOR TO AWARD. THE INSURANCE CERTIFICATE MUST NAME THE STATE OF RHODE ISLAND AS CERTIFICATE HOLDER AND AS AN ADDITIONAL INSURED. FAILURE TO COMPLY WITH THESE PROVISIONS MAY RESULT IN REJECTION OF THE OFFEROR'S BID. ANNUAL RENEWAL CERTIFICATES MUST BE SUBMITTED TO THE AGENCY IDENTIFIED ON THE PURCHASE ORDER. FAILURE TO DO SO MAY BE GROUNDS FOR CANCELLATION OF CONTRACT.

NOTE: IF THIS BID COVERS CONSTRUCTION, SCHOOL BUSING, HAZARDOUS WASTE, OR VESSEL OPERATION, APPLICABLE COVERAGES FROM THE FOLLOWING LIST MUST ALSO BE SUBMITTED TO THE DIVISION OF PURCHASES PRIOR TO AWARD: * PROFESSIONAL LIABILITY INSURANCE (AKA ERRORS & OMISSIONS) - $1 MILLION OR 5% OF ESTIMATED PROJECT COST, WHICHEVER IS GREATER. * BUILDER'S RISK INSURANCE - COVERAGE EQUAL TO FACE AMOUNT OF CONTRACT FOR CONSTRUCTION. * SCHOOL BUSING - AUTO LIABILITY COVERAGE IN THE AMOUNT OF $5 MILLION. * ENVIRONMENTAL IMPAIRMENT (AKA POLLUTION CONTROL) - $1 MILLION OR 5% OF FACE AMOUNT OF CONTRACT, WHICHEVER IS GREATER. * VESSEL OPERATION - (MARINE OR AIRCRAFT) - PROTECTION & INDEMNITY COVERAGE REQUIRED IN THE AMOUNT OF $1 MILLION.

RIVIP INFO - BID SUBMISSION REQUIREMENTS

It is the Vendor's responsibility to check and download any and all addenda from the RIVIP. This offer may not be considered unless a signed RIVIP generated Bidder Certification Cover Form is attached and the Unit Price column is completed. The signed Certification Cover Form must be attached to the front of the offer. When delivering offers in person to One Capitol Hill, vendors are advised to allow at least one hour additional time for clearance through security checkpoints.

MAILING ADDRESS FOR BID PROPOSALS ISSUED BY THE STATE OF RHODE ISLAND, DIVISION OF PURCHASES

All Bid Proposals must be submitted by mail or hand delivered to:

- State of Rhode Island
- Department of Administrtion
- Division of Purchases, Second floor
- One Capitol Hill
- Providence, RI 02908-5855

DIVESTITURE OF INVESTMENTS IN IRAN REQUIREMENT:

No vendor engaged in investment activities in Iran as described in R.I. Gen. Laws §37-2.5-2(b) may submit a bid proposal to, or renew a contract with, the Division of Purchases. Each vendor submitting a bid proposal or entering into a renewal of a contract is required to certify that the vendor does not appear on the list maintained by the General Treasurer pursuant to R.I. Gen. Laws §37-2.5-3.

STATE OF RHODE ISLAND AND PROVIDENCE PLANTATIONS

Department of Administration
DIVISION OF PURCHASES
One Capitol Hill
Providence, RI 02908-5855

Tel: (401) 574-8100
Fax: (401) 574-8387
Website: www.purchasing.ri.gov

DIVISION OF PURCHASES
INSTRUCTIONS TO BIDDERS
PUBLIC WORKS SERVICES (PWS)

Offer to Contract

All bid proposals are subject to and constitute an offer to contract with the State of Rhode Island through the Division of Purchases on the terms and conditions contained in this solicitation, any addenda, applicable federal and municipal law, and the laws of the State of Rhode Island, including all procurement statutes and regulations (available at www.purchasing.ri.gov), all of which are incorporated by this reference into any contract awarded pursuant to this solicitation.

The terms and conditions in these Division of Purchases Public Works Bid Clauses *supersede* any and all inconsistent or conflicting terms and conditions in any other provision of any other document in this solicitation and shall govern this solicitation and the award of any contract pursuant to this solicitation.

Noncompliance

Bidders must comply with all requirements. Any failure to comply may result, at the discretion of the State Purchasing Agent, in the disqualification of the bid proposal.

Failure of the successful bidder to comply with the terms and conditions of the contract awarded pursuant to this solicitation may result in nonpayment, termination of the contract, suspension or debarment of the bidder, or any other necessary or appropriate remedy in the sole discretion of the State Purchasing Agent.

Addenda

Bidders are responsible for checking for addenda, all of which become incorporated into this solicitation upon posting on the Division of Purchases website at www.purchasing.ri.gov. No addenda will be posted within the 5-day period preceding the submission date for bid proposals.

Apprenticeship

The successful bidder must employ apprentices on this project (if the value of the project is at least $1 Million) in accordance with the apprentice to journeyperson ratio for each trade approved by the State Apprenticeship Council. Specific information is available at www.dlt.ri.gov/apprenticeship.

Award

The State Purchasing Agent, in his or her sole discretion, will award the contract pursuant to this solicitation to the responsive and responsible bidder who submits the lowest responsive and responsible bid. A binding contract between the State of Rhode Island and the successful bidder will be formed only by the issuance of a Purchase Order by the Division of Purchases.

Bid Proposal Submission

Each bid proposal (a complete package, with the signed Bidder Certification Cover Form) must be submitted in a *separate sealed envelope* with the specific "Bid Number" and the "Submission Date and Time" marked in the upper left-hand corner of the envelope.

The bid proposal must be delivered to the Division of Purchases (via mail or messenger service) by the date and time specified for the submission of bid proposals. Bidders should allow at least one hour additional time for parking and clearance through security checkpoints when delivering a bid proposal in person or by messenger. Bids must be addressed to:

Rhode Island Department of Administration
Division of Purchases
One Capitol Hill, Second Floor
Providence, RI 02908-5855

Bid proposals that are not present in the Division of Purchases at the date and time specified for the submission of bid proposals for whatever reason will be deemed late and will not be considered. The submission time will be determined by the time clock in the Division of Purchases. Postmarks will not be considered proof of timely submission.

Contractors Registration

The bidder must have and maintain a valid certificate of registration issued by the Contractors' Registration Board throughout the term of the contract awarded pursuant to this solicitation and ensure that its subcontractors, unless exempt from registration, also obtain and maintain valid certificates of registration.

Divestiture of Investments in Iran Requirement

No bidder engaged in investment activities in Iran as described in R.I. Gen. Laws §37-2.5-2(b) may submit a bid proposal to, or renew a contract with, the Division of Purchases. Each bidder submitting a bid proposal or entering into a renewal of a contract is required to certify that the bidder does not appear on the list maintained by the General Treasurer pursuant to R.I. Gen. Laws § 37-2.5-3.

Domestic Steel

Any steel products required by the plans and specifications in this solicitation must be fabricated or processed from steel made in the United States.

Equal Opportunity

The successful bidder must demonstrate a commitment to equal opportunity and submit an affirmative action plan for review by the State Equal Opportunity Office.

Foreign Corporations

No foreign corporation may transact business in the State of Rhode Island until it shall have obtained a Certificate of Authority from the Rhode Island Secretary of State. The successful bidder will be required to provide a Good Standing Certificate issued by the Rhode Island Secretary of State within the 10-day period following the tentative letter of award.

Inspection

The bidder is responsible for carefully reviewing all of the requirements of this solicitation, inspecting the project site, including (without limitation) checking and/or verifying measurements, site conditions, any limitations, and other details, prior to preparing and submitting its bid proposal.

Insurance

The successful bidder must submit a certificate of insurance that references the solicitation number and names the State of Rhode Island as "certificate holder" and as "additional insured" upon the issuance of the tentative letter of award, on an annual basis during the term of the contract awarded pursuant to this solicitation, and from time to time upon request. The certificate of insurance must state that 20 days' advance notice of cancellation will be sent to: Rhode Island Department of Administration, Division of Purchases, One Capitol Hill, Providence, Rhode Island 02908-5855, fax # 401-574-8387, and provide evidence of the following specific types and amounts of insurance:

Type of Insurance	Amount of Coverage
Comprehensive General Liability	
Bodily injury	$1 Million each occurrence $1 Million annual aggregate
Property damage	$500,000 each occurrence $500,000 annual aggregate
Independent contractors Contractual (including construction "hold harmless" and other types of Contracts or agreements in effect for insured operations) Completed operations Personal injury (with employee exclusion deleted)	
Automobile Liability	
Combined Single Limit	$1 Million each occurrence
Bodily injury, property damage, including non owned and/or hired vehicles and equipment	
Workers Compensation	
Coverage B	$100,000

The State Purchasing Agent reserves the right to accept alternate forms and plans of insurance and/or to required additional or more extensive coverage.

Licenses

The successful bidder and anyone performing any work on the contract awarded pursuant to this solicitation must possess all of the licenses required by any governmental authority to perform such work.

Minority Business Enterprises

Respondents should be aware of all applicable MBE requirements, as set forth in R. I. Gen. Law § 37-14.1-1, et seq. The State's goal is for a minimum ten per cent (10%) participation by MBE's in all State procurements. For further information, contact the State MBE Administrator at (401) 574-8253 or charles.newton@doa.ri.gov, Visit the website http://www.mbe.ri.gov/

Occupational Safety

The successful bidder must ensure (if the total project cost is at least $100,000) that all employees at the project site possess a card issued by the United States Department of Labor certifying successful completion of an OSHA ten (10) hour construction safety program.

Payment and Performance Bonds

The successful bidder must furnish a 100% payment and performance bond from a surety licensed to conduct business in the State of Rhode Island upon the tentative award of the contract.

Prebid Conference

Bidders must attend a mandatory prebid conference and are encouraged to attend a nonmandatory prebid conference. The bidder's representative must register with the Division of Purchases at the mandatory prebid conference and identify the bidder he or she represents.

Public Copy

Each bid proposal must include a "public copy" to be available for public inspection upon the opening of bids. For further information on how to comply with this statutory requirement, see R. I. Gen. Laws § 37-2-18(b), Procurement Regulation 5.11, and in addition, for highway and bridge projects, also see Procurement Regulation 5.13, accessible at www.purchasing.ri.gov.

Reservation of Rights

The Division of Purchases reserves the right to revoke, suspend, or terminate this solicitation at any time in its sole discretion.

Subcontractors

The bidder must demonstrate that it is able to perform a substantial portion of the work using its own workforce. Any bidder that does not maintain a permanent workforce and/or proposes to perform a disproportionate amount of the work through one or more subcontractors will be considered unqualified. The Division of Purchases reserves the right to reject any such bid proposal.

Substitutions

Products specified in this solicitation establish a standard of quality, performance, dimension, function, and appearance. Proposed substitutions must meet the standard and will not be considered without the prior written approval of the Division of Purchases. A request for substitution must include the detailed information necessary for a comprehensive evaluation.

Taxes

The State of Rhode Island is exempt from federal excise taxes and state sales and use taxes. The bidder shall not include such taxes in any prices in the bid proposal.

Termination

The Division of Purchases reserves the right to terminate any contract awarded pursuant to this solicitation at any time, for any reason, with or without cause.

Wages

For contracts that total less than $1 Million

The successful bidder and its subcontractors must pay their workers at the applicable prevailing wage rates (for the various trades) on a weekly basis, pay one and one-half times the applicable prevailing wage rates to any worker who works more than 40 hours in any one week or more than 8 hours in any one day, and submit certified weekly payroll forms on a monthly basis to the agency. Prevailing wage posters and rate schedules, available at the Rhode Island Department of Labor and Training website at www.dlt.ri.gov, must be posted at the project site.

For contracts that may total $1 Million or Greater

The successful bidder and its subcontractors must pay their workers at the applicable prevailing wage rates for the various trades on a weekly basis, pay one and one-half times the applicable prevailing wage rates to any worker who works more than 40 hours in any one week or more than 8 hours in any one day, submit certified weekly payroll forms on a monthly basis to the agency, and maintain (for contracts totaling $1 Million or more) a certified prevailing wage daily log at the project site. Prevailing wage posters and rate schedules, available at the Rhode Island Department of Labor and Training website at www.dlt.ri.gov, must be posted at the project site.

Withdrawal

Bid proposals are irrevocable for a period of 60 days following the due date for their submission.

STATE OF RHODE ISLAND AND PROVIDENCE PLANTATIONS

Department of Labor and Training
Center General Complex
1511 Pontiac Avenue
Cranston, RI 02920-4407

TTY: Via RI Relay 711

Lincoln D. Chafee
Governor
Charles J. Fogarty
Director

STATE CONTRACT ADDENDUM

RHODE ISLAND DEPARTMENT OF LABOR AND TRAINING

PREVAILING WAGE REQUIREMENTS (37-13-1 ET SEQ.)

The prevailing wage requirements are generally set forth in RIGL 37-13-1 et seq. These requirements refer to the prevailing rate of pay for regular, holiday, and overtime wages to be paid to each craftsmen, mechanic, teamster, laborer, or other type of worker performing work on public works projects when state or municipal funds exceed one thousand dollars ($1,000).

All Prevailing Wage Contractors and Subcontractors are reguired to:

1. Submit to the Awarding Authority a list of the contractor's subcontractors for any part or all of the prevailing wage work in accordance with RIGL § 37-13-4;

2. Pay all prevailing wage employees at least once per week and in accordance with RIGL §37-13-7 (see Appendix B attached);

3. Post the prevailing wage rate scale and the Department of Labor and Training's prevailing wage poster in a prominent and easily accessible place on the work site in accordance with RIGL §37-13-11; posters may be downloaded at www.dlt.ri.gov/pw/Posters.htm .poster/htm or obtained from the Department of Labor and Training, Center General Complex, 1511 Pontiac Avenue, Cranston, Rhode Island;

4. Access the Department of Labor and Training website, at www.dlt.ri.gov on or before July 1st of each year, until such time as the contract is completed, to ascertain the current prevailing wage rates and the amount of payment or contributions for each covered prevailing wage employee and make any necessary adjustments to the covered employee's prevailing wage rates effective July Ist of each year in compliance with RIGL §37-13-8;

5. Attach a copy of this CONTRACT ADDENDUM and its attachments as a binding obligation to any and all contracts between the contractor and any

STATE OF RHODE ISLAND AND PROVIDENCE PLANTATIONS

Department of Labor and Training
Center General Complex
1511 Pontiac Avenue
Cranston, RI 02920-4407

Telephone; (401) 462-8000
TTY; Via RI Relay 711

Lincoln D. Chafee
Governor
Charles J. Fogarty
Director

subcontractors and their assignees for prevailing wage work performed pursuant to this contract;

6. Provide for the payment of overtime for prevailing wage employees who work in excess of eight (8) hours in any one day or forty (40) hours in any one week as provided by RIGL §37-13-10;

7. Maintain accurate prevailing wage employee payroll records on a Rhode Island Certified Weekly Payroll form available for download at www.dlt.ri.gov/pw.forms/htm, as required by RIGL §37-13-13, and make those records available to the Department of Labor and Training upon request;

8. Furnish the fully executed RI Certified Weekly Payroll Form to the awarding authority on a monthly basis for all work completed in the preceding month.

9. For general or primary contracts one million dollars ($1,000,000) or more, shall maintain on the work site a fully executed RI Certified Prevailing Wage Daily Log listing the contractor's employees employed each day on the public works site; the RI Certified Prevailing Wage Daily Log shall be available for inspection on the public works site at all times; this rule shall not apply to road, highway, or bridge public works projects. Where applicable, furnish both the Rhode Island Certified Prevailing Wage Daily Log together with the Rhode Island Weekly Certified Payroll to the awarding authority.

10. Assure that all covered prevailing wage employees on construction projects with a total project cost of one hundred thousand dollars ($100,000) or more has a OSHA ten (10) hour construction safety certification in compliance with RIGL § 37-23-1;

11. Employ apprentices for the performance of the awarded contract when the contract is valued at one million dollars ($1,000,000) or more, and comply with the apprentice to journeyperson ratio for each trade approved by the apprenticeship council of the Department of Labor and Training in compliance with RIGL §37-13-3.1;

12. Assure that all prevailing wage employees who perform work which requires a Rhode Island trade license possess the appropriate Rhode Island trade license in compliance with Rhode Island law; and

STATE OF RHODE ISLAND AND PROVIDENCE PLANTATIONS

Department of Labor and Training

Center General Complex
1511 Pontiac Avenue
Cranston, RI 02920-4407

Telephone: (401) 462-8000
TTY: Via RI Relay 711

Lincoln D. Chafee
Governor

Charles J. Fogarty
Director

13. Comply with all applicable provisions of RIGL §37-13-1, et. seq;

Any questions or concerns regarding this CONTRACT ADDENDUM should be addressed to the contractor or subcontractor's attorney. Additional Prevailing Wage information may be obtained from the Department of Labor and Training at www.dlt.ri.gov/pw.

CERTIFICATION

I hereby certify that I have reviewed this CONTRACT ADDENDUM and understand my obligations as stated above.

By: _____

Title: _____

Subscribed and sworn before me this___day of_____, 20_.

_____
Notary Public
My commission expires:_____

An Equal Opportunity Employer/Program, /Auxiliary aids and services are available upon request to individuals with disabilities.
TTY via RI Relay 711

STATE OF RHODE ISLAND AND PROVIDENCE PLANTATIONS

Department of Labor and Training
Center General Complex
1511 Pontiac Avenue
Cranston, RI 02920-4407

Telephone: (401) 462-8000

APPENDIX A

TITLE 37
Public Property and Works

CHAPTER 37-13
Labor and Payment of Debts by Contractors

SECTION 37-13-5

§37-13-5 Payment for trucking or materials furnished - Withholding of sums due. -A contractor or subcontractor on public works authorized by a proper authority shall pay any obligation or charge for trucking and material which have been furnished for the use of the contractor or subcontractor, in connection with the public works being performed by him or her, within ninety (90) days after the obligation or charge is incurred or the trucking service has been performed or the material has been delivered to the site of the work, whichever is later. When it is brought to the notice of the proper authority in a city or town, or the proper authority in the state having supervision of the contract, that the obligation or charge has not been paid by the contractor or subcontractor, the proper authority may deduct and hold for a period not exceeding sixty (60) days, from sums of money due to the contractor or subcontractor, the equivalent amount of such sums certified by a trucker or materialman creditor as due him or her, as provided in this section, and which the proper authority determines is reasonable for trucking performed or materials furnished for the public works.

APPRENDIX B

TITLE 37
Public Property and Works

CHAPTER 37-13
Labor and Payment of Debts by Contractors

SECTION 37-13-7

§ 37-13-7 Specification in contract of amount and frequency of payment of wages. -(a) Every call for bids for every contract in excess of one thousand dollars ($1,000), to which the state of Rhode Island or any political subdivision thereof or any public agency or quasi-public agency is a party, for construction, alteration, and/or repair, including painting and decorating, of public buildings or public works of the state of Rhode Island or any political subdivision thereof, or any public agency or quasi-public agency and which requires or involves the employment of employees, shall contain a provision stating the minimum wages to be paid various types of employees which shall be based upon the wages that will be determined by the director of labor and training to be prevailing for the corresponding types of employees employed on projects of a character similar to the contract work in the city, town, village, or other appropriate political subdivision of the state of Rhode Island in which the work is to be performed. Every contract shall contain a stipulation that the contractor or his or her subcontractor shall pay all the employees employed directly upon the site of the work, unconditionally and not less often than once a week, and without subsequent deduction or rebate on any account, the full amounts accrued at time of payment computed at wage rates not less than those stated in the call for bids, regardless of any contractual relationships which may be alleged to exist between the contractor or subcontractor and the employees, and that the scale of wages to be paid shall be posted by the contractor in a prominent and easily accessible place at the site of the work; and the further stipulation that there may be withheld from the contractor so much of the accrued payments as may be considered necessary to pay to the employees employed by the contractor, or any subcontractor on the work, the difference between the rates of wages required by the contract to be paid the employees on the work and the rates of wages received by the employees and not refunded to the contractor, subcontractors, or their agents.

(b) The terms "wages", "scale of wages", "wage rates", "minimum wages", and "prevailing wages" shall include:

(1) The basic hourly rate of pay; and

(2)) The amount of:

(A) The rate of contribution made by a contractor or subcontractor to a trustee or to a third person pursuant to a fund, plan, or program; and

(B) The rate of costs to the contractor or subcontractor which may be reasonably anticipated in providing benefits to employees pursuant to an enforceable commitment to carry out a financially responsible plan or program which was communicated in writing to the employees affected, for medical or hospital care, pensions on retirement or death, compensation for injuries or illness resulting from occupational activity, or insurance to provide any of the foregoing, for unemployment benefits, life insurance, disability and sickness insurance, or accident insurance, for vacation and holiday pay, for defraying costs of apprenticeship or other similar programs, or for other bona fide fringe benefits, but only where the contractor or subcontractor is not required by other federal, state, or local law to provide any of the benefits; provided, that the obligation of a contractor or subcontractor to make payment in accordance with the prevailing wage determinations of the director of labor and training insofar as this chapter of this title and other acts incorporating this chapter of this title by reference are concerned may be discharged by the making of payments in cash, by the making of contributions of a type referred to in subsection (b)(2), or by the assumption of an enforceable commitment to bear the costs of a plan or program of a type referred to in this subdivision, or any combination thereof, where the aggregate of any payments, contributions, and costs is not less than the rate of pay described in subsection (b)(1) plus the amount referred to in subsection (b)(2).

(c) The term "employees", as used in this section, shall include employees of contractors or subcontractors performing jobs on various types of public works including mechanics, apprentices, teamsters, chauffeurs, and laborers engaged in the transportation of gravel or fill to the site of public works, the removal and/or delivery of gravel or fill or ready-mix concrete, sand, bituminous stone, or asphalt flowable fill from the site of public works, or the transportation or removal of gravel or fill from one location to another on the site of public works, and the employment of the employees shall be subject to the provisions of subsections (a) and (b).

(d) The terms "public agency" and "quasi-public agency" shall include, but not be limited to, the Rhode Island industrial recreational building authority, the Rhode Island economic development corporation, the Rhode Island airport corporation, the Rhode Island industrial facilities corporation, the Rhode Island refunding bond authority, the Rhode Island housing and mortgage finance corporation, the Rhode Island resource recovery corporation, the Rhode Island public transit authority, the Rhode Island student loan authority, the water resources board corporate, the Rhode Island health and education building corporation, the Rhode Island higher education assistance authority, the Rhode Island turnpike and bridge authority, the Narragansett Bay water quality management district commission, Rhode Island telecommunications authority, the convention center authority, the board of governors for higher education, the board of regents for elementary and secondary education, the capital center commission, the housing resources commission, the Quonset Point-Davisville management corporation, the Rhode Island children's crusade for higher education, the Rhode Island depositors economic protection corporation, the Rhode Island lottery commission, the Rhode Island

partnership for science and technology, the Rhode Island public building authority, and the Rhode Island underground storage tank board.

INDUSTRIAL STAIRCASE
EAST PROVIDENCE MAINTENANCE FACILITY
EAST PROVIDENCE, RHODE ISLAND

Description of Work: The RIDOT Division of Highway and Bridge Maintenance desires to acquire an industrial grade staircase and install it inside the East Providence Maintenance Facility located on 691 Warren Avenue in the City of East Providence. The staircase shall provide access from the floor of the maintenance garage to a second floor storage space above the office area. Generally the work consists of removal of a concrete filled steel bollard, relocation of electrical conduit and an employee time clock station, fabrication, delivery and installation of the new staircase complete in place.

The major components of the upgrade include the following:

1. Removal of one concrete filled steel bollard. Bollard shall be cut off flush to the floor.
2. Removal, relocation and remounting of an employee time clock.
3. Removal, relocation and remounting of two employee time card holders.
4. Removal, relocation and remounting of an alarm panel and alarm horn.
5. Removal, relocation and remounting of a heart station cabinet.
6. Relocation of electrical receptacle and associated electrical conduit.
7. Design and fabrication of open stairway conforming to the dimensions and details shown on the enclosed drawings. Stairs shall be constructed with open risers, steel grating treads and steel grating landing platforms. The entire stairway structure, including stair treads, landing platforms, railing system, column supports and fastenings shall be galvanized. Shop drawings shall be submitted to RIDOT for review and approval prior to fabrication of the stairs.
8. Provide a sign with the message stating "MAXIMUM FLOOR LOADING SHALL NOT EXCEED 125 LBS. PER S.F." The sign shall be 18" x 30" fabricated of durable plastic, 1/8" thick with yellow background and black lettering. Lettering shall be minimum 2" high with text centered on the sign. Sign shall be mounted on the exterior of the entrance door to the storage area.

The contractor is advised to review the plans and details accompanying this document and to visit the site before submitting his bid. The Contractor is responsible for acquiring all applicable permits and contacting Dig Safe prior to construction. The contractor shall schedule his work and coordinate all activities with the East Providence Maintenance Facility Superintendent, Mr. Dennis Doyle, so as not to interfere with the RIDOT maintenance operations. Mr. Doyle can be reached at (401) 431-5401.

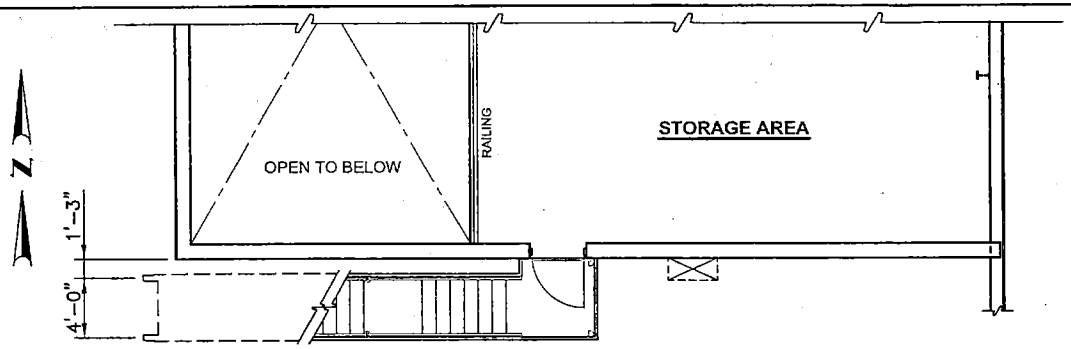

SECOND FLOOR PLAN

SCALE: 1/8" = 1'-0"

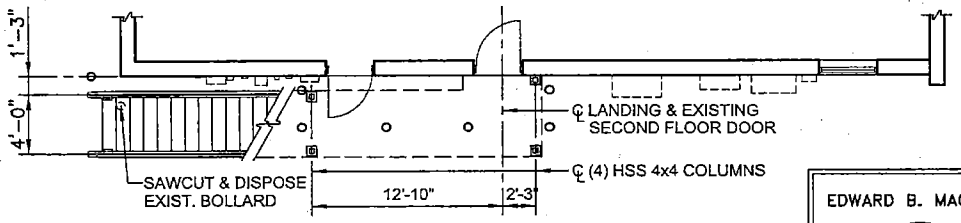

FIRST FLOOR PLAN

SCALE: 1/8" = 1'-0"

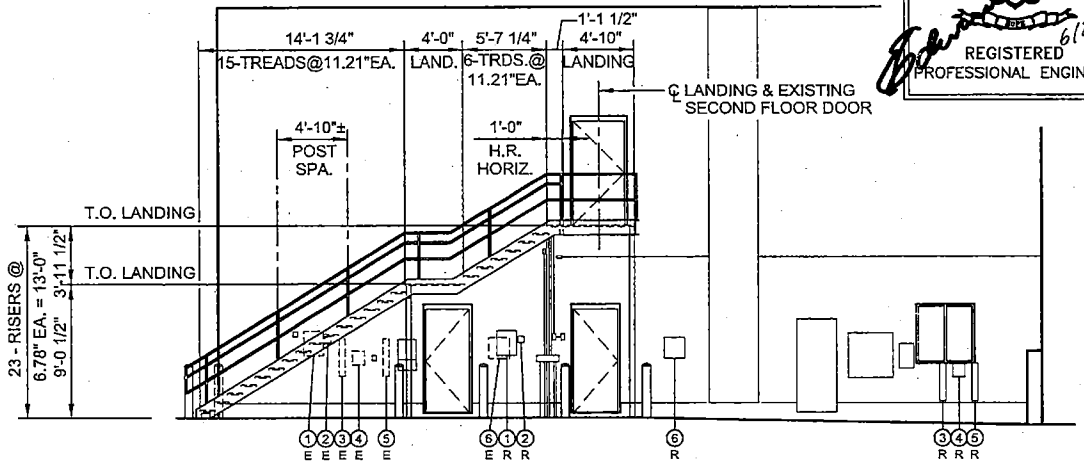

ELEVATION

SCALE: 1/8" = 1'-0"

EDWARD B. MAC RAE
No. 3934
6/25/14
REGISTERED PROFESSIONAL ENGINEER

SPECIFICATIONS FOR STAIRS AND LANDINGS

ENGINEERING SPECIFICATION STANDARDS:

- STRUCTURAL STEEL CONFORMS TO AISC SPECIFICATIONS.
- CONSTRUCTION SPECIFICATION CODES AND CONNECTIONS IN THE STEEL CONSTRUCTION MANUAL INCLUDING ASTM CODES.
- UNIFORM BUILDING CODE AND 2012 IBC CODE.
- STATE OF RHODE ISLAND BUILDING CODE AND LOCAL BUILDING CODES.
- METAL BUILDING MANUFACTURERS ASSOCIATION.

MINIMUM DESIGN CRITERIA:

- CONFORMS TO INTERNATIONAL BUILDING CODE 2012 IBC.
- CONFORMS TO RHODE ISLAND STATE BUILDING CODE SBC-1-2010.
- STRUCTURAL DESIGN, FABRICATION AND ASSEMBLY IN ACCORDANCE WITH REQUIREMENTS OF NAAMM METAL STAIRS MANUAL.
- DESIGN GRATING TREADS IN ACCORDANCE WITH NAAMM METAL BAR GRATING TREADS.
- DESIGN PIPE RAILINGS IN ACCORDANCE WITH NAAMM PIPE RAILING MANUAL FOR 200 LB. LOAD IN ANY DIRECTION.
- LIVE LOAD:
  FLOOR: 100 PSF.
- DEAD LOADS:
  FRAMING: 8 PSF.
- SOIL BEARING CAPACITY:
  ASSUMED SOIL BEARING CAPACITY = 1500 PSF.
- CONCRETE REQUIREMENT (CURED): 4,000 PSI (MINIMUM).

MATERIAL SPECIFICATIONS:

- POSTS SHALL CONFORM TO (A 500 GRADE B) STRUCTURAL STEEL TUBING.
- STEEL PIPE: ASTM A53, STANDARD WEIGHT.
- STEEL GRATING: METAL BAR TYPE NAAMM BG.
- SHEET STEEL: ASTM A1008.
- STEEL FLOOR PLATE: ASTM 786.
- STEEL PLATE: ASTM A1011.
- TOP PLATES, BASE PLATES, WING PLATES AND CONNECTION PLATES ALL CONFORM TO ASTM A36 STEEL PLATE.
- IRON CASTINGS: ASTM A48, CLASS 30.
- MALLEABLE IRON CASTINGS: ASTM A47.
- ANCHORS ARE 1-UNC ZINC COATED ALL-THREAD TO PROVIDE DRILLING AND EPOXY PER LAYOUT.

FINISH SPECIFICATIONS:

- STEEL FRAMING SHALL BE GALVANIZED IN ACCORDANCE WITH THE SPECIFICATIONS FOR ZINC (HOT-DIP-GALVANIZED) COATINGS ON IRON AND STEEL PRODUCTS, AASHTO M111 (ASTM A123).
- FASTENERS AND HARDWARE ITEMS SHALL BE GALVANIZED IN ACCORDANCE WITH THE SPECIFICATIONS FOR ZINC COATING (HOT-DIP) ON IRON AND STEEL HARDWARE, AASHTO M232 (ASTM A153).

MANUFACTURING SPECIFICATIONS STANDARDS:

- ALL WELDING IS PERFORMED USING ELECTRIC ARC METHOD BY CERTIFIED WELDERS.
- ALL OF THE WELDING CONFORMS TO AWS - D1.1 AND SHEET STEEL AWS - D1.3.

LEGEND - RELOCATED ITEMS

1. ALARM PANEL
2. ALARM HORN
3. TIME CARD RACK - IN
4. TIME CLOCK
5. TIME CARD RACK - OUT
6. HEART STATION CABINET

E INDICATES EXISTING LOCATION
R INDICATES RELOCATE POSITION

NOTE:
THE LOCATION OF EXISTING CONDUIT TO BE RELOCATED SHALL BE DETERMINED IN THE FIELD AND COORDINATED WITH RIDOT PRIOR TO DOING THE WORK.

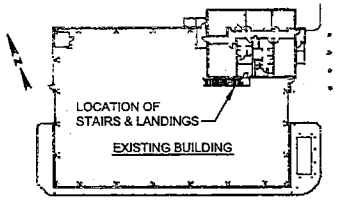

KEY PLAN

N.T.S.

RIDOT MAINTENANCE FACILITY
691 WARREN AVENUE
EAST PROVIDENCE, RI

Gordon R. Archibald, Inc.
Civil and Environmental Engineers

STORAGE AREA STAIRS & LANDINGS
PLANS, ELEVATIONS & NOTES

SCALE: AS NOTED
DATE: 01-31-14

EAST PROVIDENCE
JOB NUMBER: 1449

1

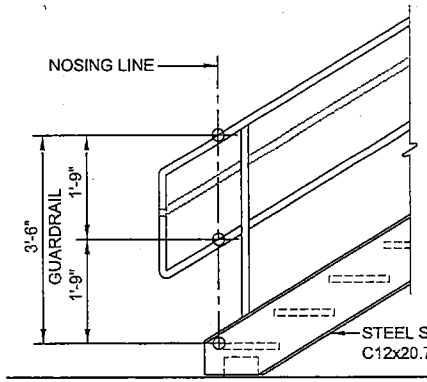

GUARDRAIL DETAIL
SCALE: 1/2" = 1'-0"

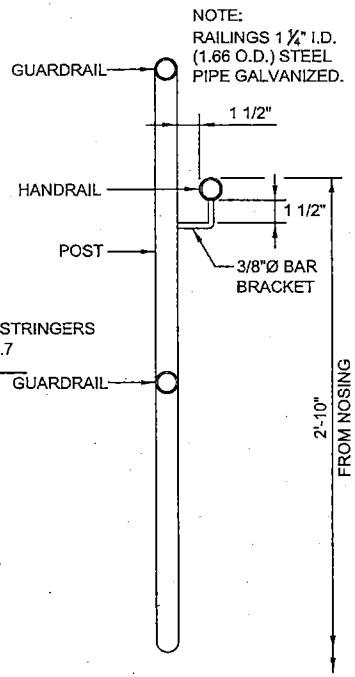

HANDRAIL DETAIL
SCALE: 1 1/2" = 1'-0"

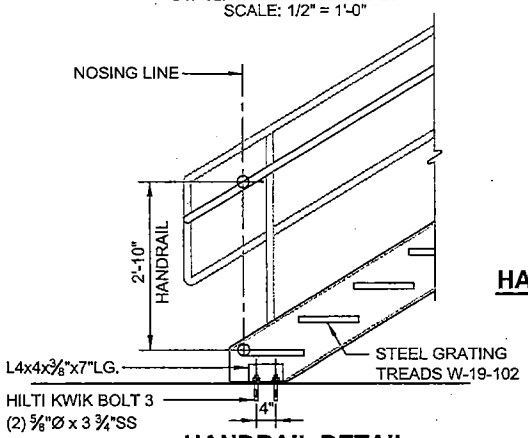

HANDRAIL DETAIL
SCALE: 1/2" = 1'-0"

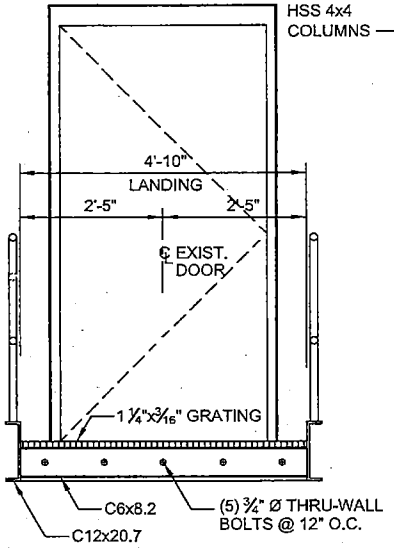

LANDING SECTION - A
SCALE: 1/2" = 1'-0"

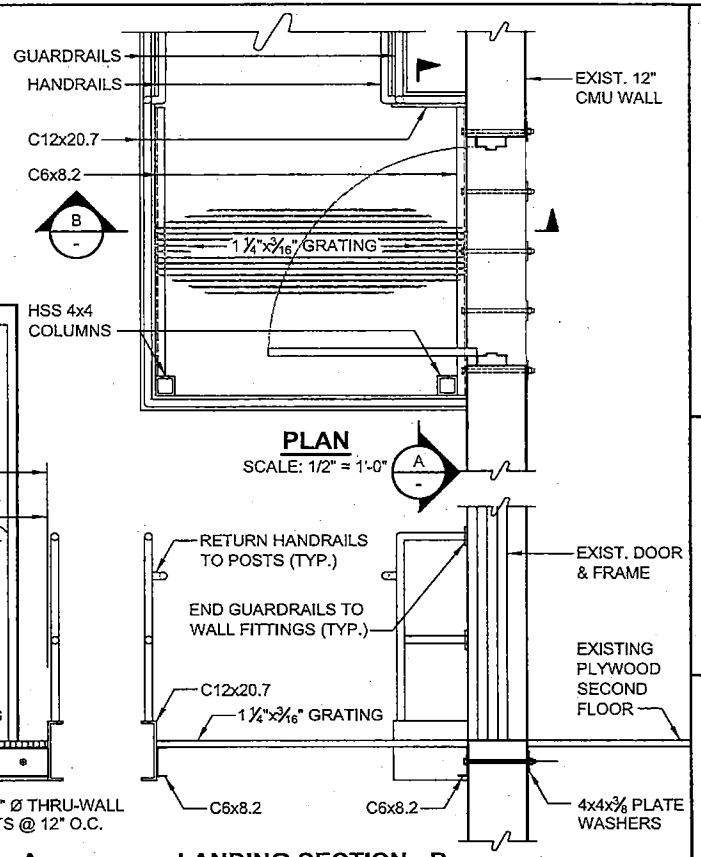

PLAN
SCALE: 1/2" = 1'-0"

LANDING SECTION - B
SCALE: 1/2" = 1'-0"

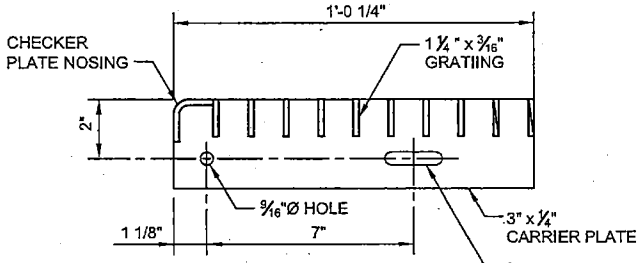

TREAD DETAIL
SCALE: 3" = 1'-0"

EDWARD B. MAC RAE
No. 3934
6/25/14
REGISTERED
PROFESSIONAL ENGINEER

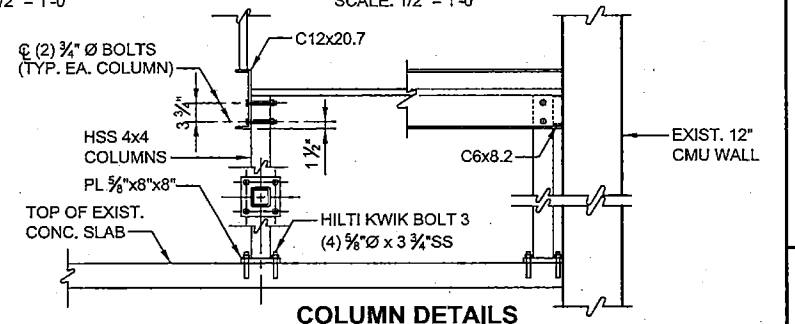

COLUMN DETAILS
SCALE: 1/2" = 1'-0"

RIDOT MAINTENANCE FACILITY
691 WARREN AVENUE
EAST PROVIDENCE, RI

Gordon R. Archibald, Inc.
Civil and Environmental Engineers

STORAGE AREA STAIRS & LANDINGS
SECTIONS & DETAILS

SCALE: AS NOTED
DATE: 01-31-14

EAST PROVIDENCE
JOB NUMBER: 1449

2