May 13, 2014

STATE OF RHODE ISLAND AND PROVIDENCE PLANTATION
DEPARTMENT OF ADMINISTRATION

DIVISION OF PURCHASES BID NO. 7548696

RHODE ISLAND DEPARTMENT OF TRANSPORTATION

RHODE ISLAND CONTRACT NO.2014-CT-013

FEDERAL-AID PROJECT NO. FAP Nos: STP-HSIP(010)

2014 HSIP - Systemic Improvements (Wrong-Way Driving Mitigation) (HSIP Funds)

Locations include all ramp termini with adjacent roadways along Interstate 95, Interstate 295, Interstate 195, Route 146, Route 10, Route 37, Route 24, Route 4, US Route 6, Route 138, Route 99, Route 78, Route 114, US Route 1, Route 403, Airport Connector, and Henderson Bridge. The town/cities include Charlestown, Cranston, Cumberland, East Greenwich, East Providence, Hopkinton, Jamestown, Johnston, Lincoln, North Kingstown, North Providence, North Smithfield Pawtucket, Portsmouth, Providence, Richmond, South Kingstown, Smithfield Tiverton, West Greenwich, West Warwick, Warwick, and Westerly.

CITY/TOWN OF Statewide

COUNTY OF STATEWIDE

NOTICE TO PROSPECTIVE BIDDERS

ADDENDUM NO. 2 Prospective bidders and all concerned are hereby notified of the following changes in the Plans, Specifications, Proposal and Distribution of Quantities for this contract. These changes shall be incorporated in the Plans, Specifications, Proposal and Distribution of Quantities, and shall become an integral part of the Contract Documents.

A. Contract Documents

1. JS Pages

   a. Job Specific Codes T15.9901 and T15.9902

   Delete Pages JS-20 to JS-28 in their entirety and replace them with Pages JS-20(R-1) through JS-27(R-1) attached to this Addendum No. 2. Specifications for Codes T15.9901 and T15.9902 have been revised and details have been added.

B. Distribution of Quantities

1. Index Page 1

   Delete Index Page 1 in its entirety and replace it with Index Page 1(R-1) attached to this Addendum No. 2. Item Code T15.9907 has been revised.

2. Page 21

   Delete Page 21 in its entirety and replace it with Page 21(R-1) attached to this Addendum No. 2. Quantities have been revised.

3. Page 40

   Delete Page 40 in its entirety and replace it with Page 40(R-1) attached to this Addendum No. 2. Quantities have been revised.

4. Page 41

   Delete Page 41 in its entirety and replace it with Page 41(R-1) attached to this Addendum No. 2. Quantities have been revised.

5. Page 44

   Delete Page 44 in its entirety and replace it with Page 44(R-1) attached to this Addendum No. 2. Quantities have been revised.

6. Page 46

   Delete Page 46 in its entirety and replace it with Page 46(R-1) attached to this Addendum No. 2. Quantities have been revised.

7. Page 47

   Delete Page 47 in its entirety and replace it with Page 47(R-1) attached to this Addendum No. 2. Quantities have been revised.

8. Page 48

   Delete Page 48 in its entirety and replace it with Page 48(R-1) attached to this Addendum No. 2. Quantities have been revised.

9. Page 50

   Delete Page 50 in its entirety and replace it with Page 50(R-1) attached to this Addendum No. 2. Quantities have been revised.

10. Page 55

    Delete Page 55 in its entirety and replace it with Page 55(R-1) attached to this Addendum No. 2. Quantities have been revised.

11. Page 57

    Delete Page 57 in its entirety and replace it with Page 57(R-1) attached to this Addendum No. 2. The total for Item T15.9907 has been revised.

C. Drawings/Plans - Change/Addition

1. Sheet 1 - Cover Sheet

   Delete Plan Sheet 1 in its entirety and replace it with Plan Sheet 1(R-1) attached to this Addendum No. 2. The Cover Sheet has been signed.

2. Sheet 11a - Miscellaneous Details-6

   Delete Plan Sheet 11a in its entirety and replace it with Plan Sheet 11a(R-1) attached to this Addendum No. 2. Detail has been removed.

3. Sheet 14 - Sign Coordinate Table-2

   Delete Plan Sheet 14 in its entirety and replace it with Plan Sheet 14(R-1) attached to this Addendum No. 2. Sign locations have been added.

RI Department of Transportation
Chief Engineer

JOB SPECIFIC

CODE T15.9901
WRONG-WAY DRIVING DETECTION SYSTEM – ACTIVE
CODE T15.9902
WRONG-WAY DRIVING DETECTION SYSTEM – PASSIVE

DESCRIPTION: This item of work shall conform to the applicable sections of the Rhode Island Department of Transportation Standard Specifications for Road and Bridge Construction, 2010 Edition, as amended with the following additions:

> This item shall consist of furnishing, installing, configuring, testing, and making fully operational the Wrong-Way Driving Detection System (WWDS) that is solar powered with and without a radar and camera vehicle detection device at the locations indicated on the plans or as directed by the Engineer. All Wrong-Way Driving Detection System (WWDS) (both active and passive) equipment locations shall be marked in the field by the Contractor and the Wrong-Way Driving Detection System Manufacturer, and approved by the Engineer prior to installation. The locations of the Wrong-Way Driving Detection System Equipment as shown on the plans are approximate only. Wrong-Way Driving Detection System Equipment details are shown for informational purposes only on JS-25 to JS-27.

General Requirements: Each WWDS system shall be a complete assembly, consisting of two (2) each of following: poles, pedestal bases, foundations, breakaway anchor device, R5-1A static signs meeting the requirements of the MUTCD and equipped with light emitting diodes (LEDs) around their perimeter, mounting brackets, solar panel, electrical components (wiring, battery, solid-state circuit boards), wireless radio, as well as any ancillary devices needed for a full and complete installation. Additionally, the Active WWDS system shall include a dual radar detection device, a camera with sensor for activation, cellular modem, vehicle counter, and web monitoring service.

MATERIALS:

The **WWDS – Active** shall consist of the BlinkerSign Wrong Way System and the Wrong Way System with Dual Radar with Camera Detection with BlinkLink, both manufactured by Traffic & Parking Control Co., Inc., integrated into one system.

The **WWDS – Passive** shall consist of the BlinkerSign Wrong Way System Running 24/7, manufactured by Traffic & Parking Control Co., Inc.

Pole, Pedestal Base, Foundation, and Brackets

1. All poles, pedestal bases, and brackets shall be in accordance with the manufacture's requirements.

2. Locations of the detection system foundations must be approved by the Engineer prior to construction.

3. All foundations shall be designed in accordance with the applicable provisions of Subsection T.11.02.1 of the Standard Specifications. The Contractor shall be required to provide, at his own expense, a sign foundation design by a Rhode Island Registered Professional Engineer in

accordance with the latest edition of the AASHTO Standard Specifications and detailed similarly to the Plans. The Contractor shall also design the sign anchorages. The anchorages shall be in accordance with the manufacture's requirements. The Contractor shall submit all calculations, designs, and details (including all pole mounted equipment arrangement and orientation, foundation soil parameters) to the Rhode Island Department of Transportation in the form of a shop drawing in accordance with Subsection 12.105.02. No work shall be performed until approved shop drawings have been returned to the Contractor. The integrity of adjacent structures, utilities and streets shall be maintained. The Contractor shall be responsible for the design of temporary earth retaining and dewatering systems where required and shop drawings shall be submitted to the Engineer for review and sealed by an Engineer registered in the State of Rhode Island. A geotechnical investigation has not been performed. The Contractor shall confirm well graded granular soil conditions exist at the pole locations. Foundations shall be founded on undisturbed inorganic soil. Bearing soil shall be inspected before constructing any foundations. No foundation shall be placed in water or on frozen subgrade material.

Median barrier mounted poles including base plates, anchorages shall be designed by the contractor. The design shall be in accordance with the applicable provisions of Subsection T.11.02.1 of the Standard Specifications. The Contractor shall be required to provide, at his own expense, a sign pole and barrier connection design by a Rhode Island Registered Professional Engineer in accordance with the latest edition of the AASHTO Standard Specifications and detailed similarly to the Plans. The contractor may use steel material for the pole design. Refer to Barrier Mounted sign Notes on Miscellaneous Details 7 in the contract plans for applicable notes for the pole design. The Contractor shall design the appropriate drilled-in anchorage. As part of the design, the calculations shall confirm the stability of the existing barrier with the detection system mounted on top of the barrier. The Contractor shall submit all calculations, designs, and details (including pole mounted equipment arrangement and orientation) to the Rhode Island Department of Transportation in the form of a shop drawing in accordance with Subsection 12.105.02. No work shall be performed until approved shop drawings have been returned to the Contractor.

CONSTRUCTION METHODS: All Wrong-Way Driving Detection System (WWDS) (both active and passive) equipment locations shall be marked in the field by the Contractor and the Wrong-Way Driving Detection System Manufacturer, and approved by the Engineer prior to installation. The locations of the Wrong-Way Driving Detection System Equipment as shown on the plans are approximate only. After delivery and installation of the equipment, the Contractor shall fully test the Wrong-Way Driving Detection System using a test plan approved by the Engineer, and shall provide system training.

Testing

The Contractor shall prepare test plans for all testing segments as described herein. The test plans shall be submitted to the Engineer for review and approval at least 30 days prior to testing. No testing shall be done on any system, equipment or component without prior approval of the testing submittals for such item. The Contractor shall give the Engineer at least 14 days notice of testing activities. The Engineer or his representative shall witness all testing. The Contractor and WWDS manufacturer shall be present at all testing.

Testing shall provide verification that all requirements as defined in these specifications and the contract drawings are met. The Contractor shall be responsible for providing all labor, materials, test equipment, and forms to conduct each test. Failure of any system, equipment, or component to pass any required test shall deem such system, equipment, or component unacceptable. Any system, equipment, or component

deemed unacceptable shall be repaired and re-tested prior to completion. Following successful execution of each test plan as described above, the Contractor shall submit written test results to the Engineer for approval.

At a minimum, the Contractor's test plan shall include the following:

1. Each test step of each test plan shall, as a minimum, a) describe the test to be performed, b) identify all equipment needed for the test step, c) describe each step and the expected results, d) describe the actual results, e) state "pass" or "fail", f) include signature of the tester, Department witness, and test date.

2. Written certification from the WWDS manufacturer that the WWDS has been constructed in accordance with the requirements of all contract documents.

3. Test steps designed to verify that all elements of the WWDS as described herein and in the Plans have been properly constructed and are fully operational, including but not limited to the following:

    a. Physical inspection of all installed components to verify that they have been constructed in accordance with the Plans and specifications

    b. Physical inspection of all installed components to verify that they have been constructed in a neat and workmanlike manner

    c. Physical inspection of the flashing signs to ensure proper flash rate, intensity programmability, and simultaneous operation of both signs at each site

    d. Electrical testing of the grounding system at each site to ensure that it meets contract requirements

    e. Vehicle detection by both radar devices

    f. Activation and proper functioning of both signs

    g. Email and SMS text notifications of sign activation, including distribution lists

    h. Vehicle detection by the CCTV vehicle sensor

    i. CCTV image capture and logging, including all available CCTV resolution settings

    j. Email and SMS text notifications of CCTV sensor activation, including distribution lists

    k. Web monitoring service – all functions as described herein

    l. Deactivation or disconnection of solar panel and demonstration of required battery run time

    m. Time-of-day clock on passive WWDS sites

    n. Vehicle counter on active WWDS sites

Test results shall be compiled and submitted to the Engineer for approval within one week following the completion of testing. Upon approval by the Engineer of the submitted test results, the 30 day Operational Acceptance Test period shall begin. The Operational Acceptance Test period shall run for thirty (30) days. The Operational Acceptance Test shall demonstrate that all of the WWDS systems and components are properly installed, are free from problems, exhibit stable and reliable performance, and comply with the Contract Documents. The RIDOT TMC will operate the WWDS during the Operational Acceptance Test period and report any failures to the Engineer.

The TMC operators shall exercise the variable nature of the WWDS during the Operational Acceptance Test period. In the event of a failure, the problem shall be reported to the Contractor. The failure shall be corrected and the test shall then be restarted for another thirty (30) days.

The testing portion of the project shall be deemed to have been completed upon written approval by the Engineer of all submitted test results, including the Operational Acceptance Test period.

Training

The Contractor shall provide training on the system to the Department at a location approved by the Engineer. The training shall be an approved program of six (6) hours duration, minimum.

The Contractor shall provide a training program consisting of the furnishing of educational training in the installation, operation, and maintenance of the WWDS system. The Contractor shall provide qualified instructors approved in writing by the Engineer and all training materials necessary for training maintaining agency personnel in the operation and maintenance of the system components.

Training shall consist of classroom lectures as well as "hands-on" demonstrations. The Contractor shall develop and submit training course outlines and samples of all training aids and manuals to the Engineer for approval at least twenty-eight (28) days prior to the proposed start of the training sessions. At the same time, the Contractor shall submit a list of individuals who will conduct the training and resumes of each for review and approval. Written approval of this material and training instructors will be required prior to the final scheduling of the training sessions or the final production of training materials.

The Contractor shall develop and supply all necessary manuals, displays, class notes, visual aids, and other instructional materials as required to provide the training programs described herein. The required manuals shall be individually bound in loose-leaf binders. The Contractor shall supply an adequate number of manuals and class notes to provide one copy of each to all session participants. An additional five copies shall be turned over to the Engineer at the completion of the training program. All manuals must be submitted to the Engineer for approval. Training shall begin no sooner than three weeks after Engineer approval and no later than 30 days after the first field unit is brought on-line.

Training will be conducted at a classroom facility supplied by the Contractor. This facility shall be within 15 miles of the City of Providence, at the discretion of the Engineer.

The Contractor shall supply to all training participants copies of users manuals for all installed components of the WWDS. User manuals may be delivered electronically.

The Contractor shall, as a minimum, establish a training session lasting six (6) hours. The training session shall be limited to no more than 6 hours in any single day. The training session shall accommodate twenty (20) people. At a minimum, the training session shall completely cover the following topics:

1. Operational Overview Element - The emphasis in this portion of the training program shall be placed on familiarizing those individuals not accustomed to WWDS systems technology with the operation and abilities of the system.

2. WWDS hardware - This training element shall consist of familiarizing the Department's operations and maintenance staff with the techniques needed to successfully operate and maintain the WWDS hardware, including all user configurable system parameters. One element of this hardware training shall specifically focus on techniques that should be followed to ensure reliable operation of the solar power system at each site, including but not limited to aiming of the solar panel, cleaning and snow removal from the solar panel, and battery testing and maintenance.

3. Web monitoring service – This training element shall consist of familiarizing the Department's operations and maintenance staff with the techniques needed to successfully operate all aspects of the web monitoring service.

The training portion of the project shall be deemed to have been completed upon written approval by the Engineer of all training.

Warranty

In addition to the standard warranty terms defined in the contract documents, all components of the WWDS, including batteries, shall carry a three year warranty, minimum, by the WWDS manufacturer.

METHOD OF MEASUREMENT: "WRONG-WAY DRIVING DETECTION SYSTEM – ACTIVE" and "WRONG-WAY DRIVING DETECTION SYSTEM – PASSIVE" shall be measured by the unit "EACH" for each unit actually furnished and installed in accordance with the plans and this specification and/or as directed by the Engineer.

BASIS OF PAYMENT: "WRONG-WAY DRIVING DETECTION SYSTEM – ACTIVE" and "WRONG-WAY DRIVING DETECTION SYSTEM – PASSIVE" shall be paid for at the contract unit price per "EACH" as listed in the Proposal. Said price and payment shall constitute full compensation for the furnishing and installation of the new sign and post, breakaway pedestal base, foundation, median barrier mounted posts, detection system, mounting supports (regardless of type required), identification and layout according to the plans and/or as directed by the Engineer, brackets, hardware and appurtenances, as well as all labor, equipment, tools, and all work incidental thereto complete in place and accepted by the Engineer. Also included in this contract unit price are the all labor, equipment, tools, and all work incidentals required for the WWDS manufacturer and/or vendor to locate the WWDS prior to the contractor installing the foundation, perform testing of the WWDS, and training for the WWDS.

R-1

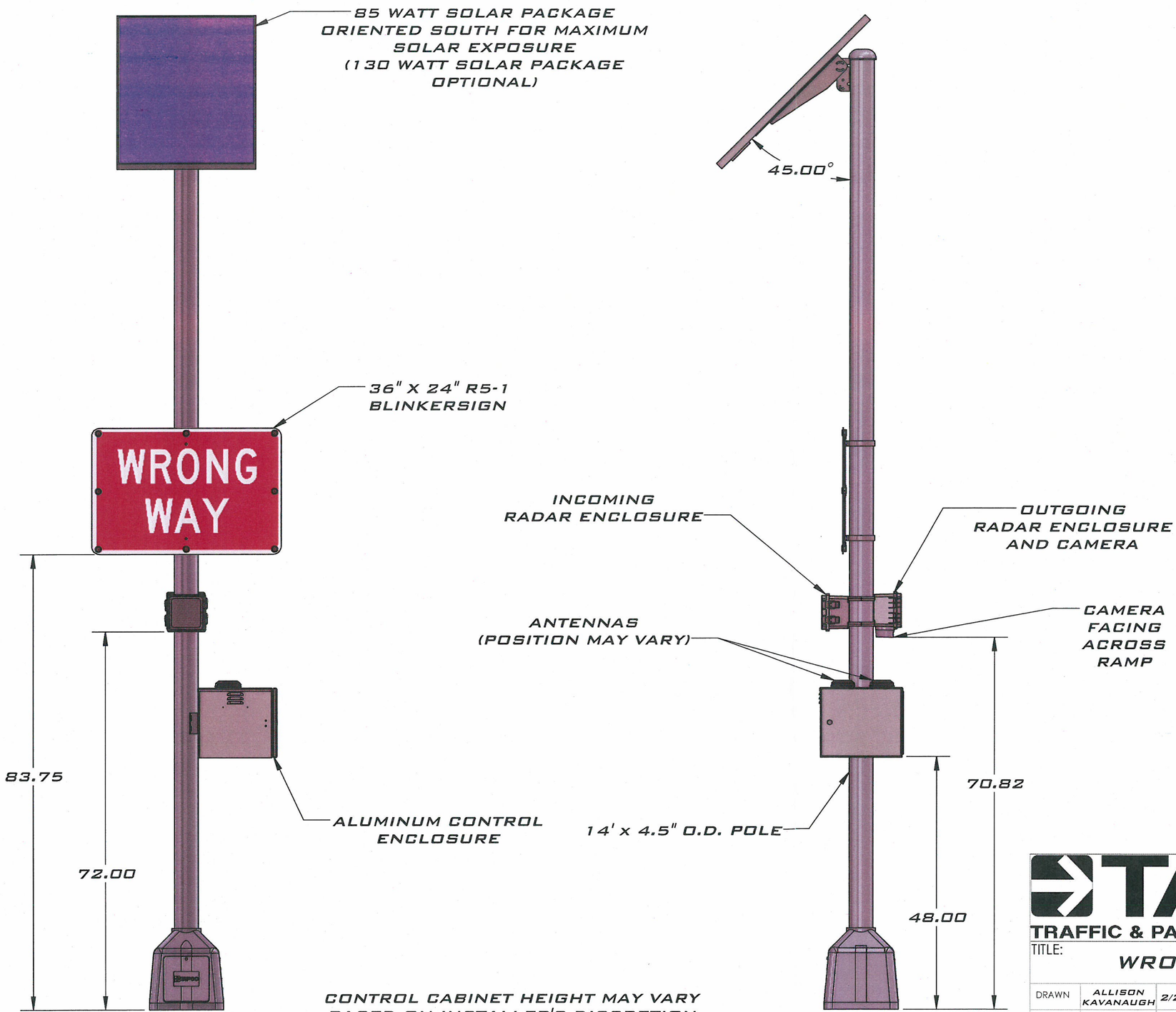

CONTROL CABINET HEIGHT MAY VARY
BASED ON INSTALLER'S DISCRETION

TAPCO®
TRAFFIC & PARKING CONTROL CO., INC.

UNLESS OTHERWISE SPECIFIED:

TOLERANCE UNLESS OTHERWISE SPECIFIED

DECIMAL	MM	INCH
X	±2.5	±0.1
XX	±0.76	±0.03
XXX	±0.381	±0.015
ANGULAR	±0.5°	

TITLE: WRONG WAY SYSTEM

INTERPRET GEOMETRIC TOLERANCING PER:

DRAWN	ALLISON KAVANAUGH	2/28/2014	SIZE B	DWG. NO. 2TE-194	REV A	FINISH
CHECKED	MAX SMITH	5/7/2014				MATERIAL

SCALE: 1:20

PROPRIETARY AND CONFIDENTIAL THE INFORMATION CONTAINED IN THIS DRAWING IS THE SOLE PROPERTY OF TAPCO. ANY REPRODUCTION IN PART OR AS A WHOLE WITHOUT THE WRITTEN PERMISSION OF TAPCO IS PROHIBITED.

SHEET 1 OF 3

R-1

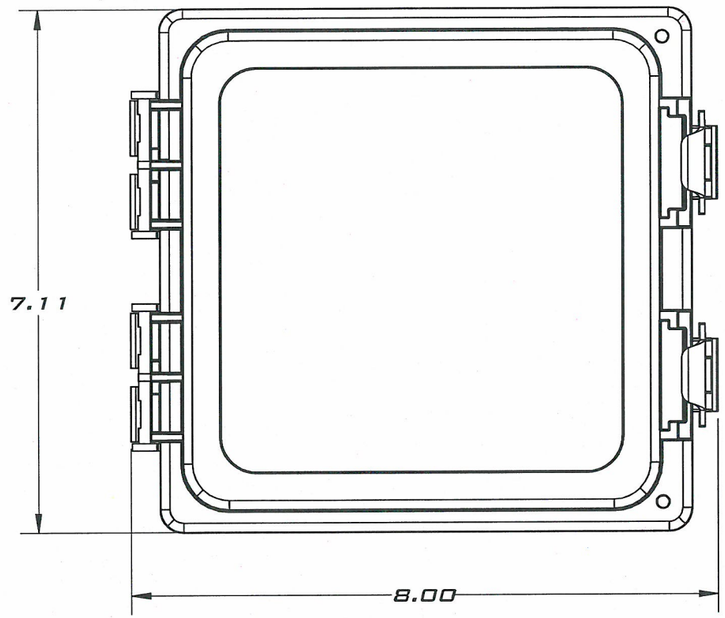

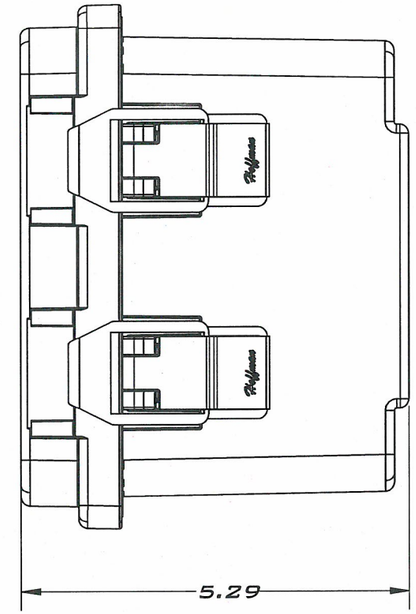

RADAR ENCLOSURE
SCALE = 1:2

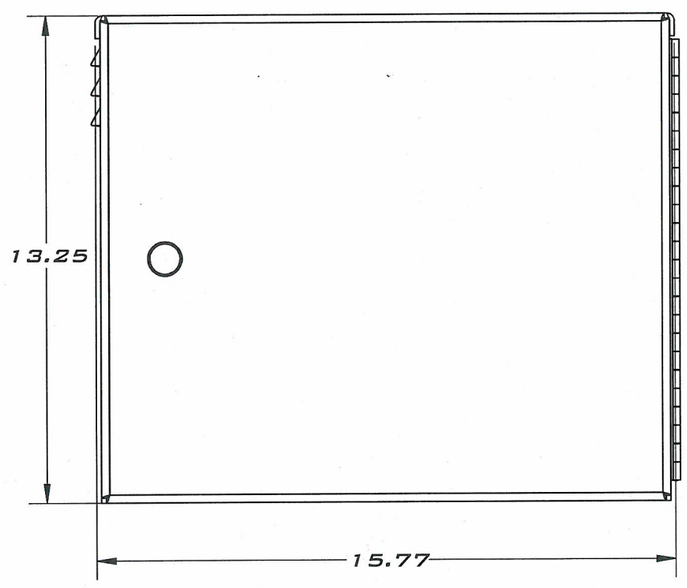

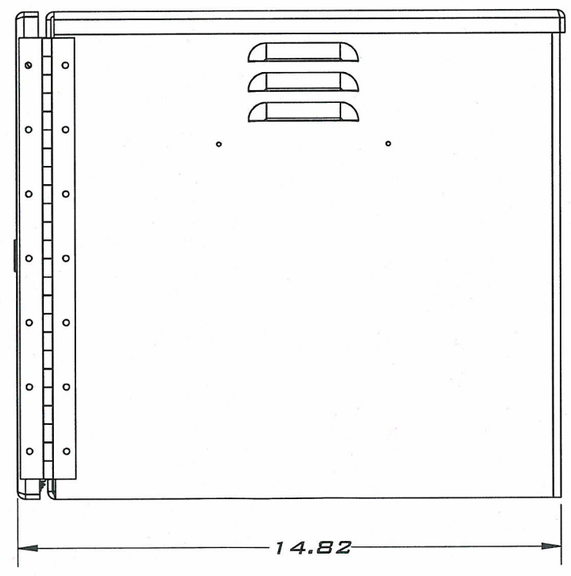

ALUMINUM CONTROL ENCLOSURE
SCALE = 1:4

TAPCO®
TRAFFIC & PARKING CONTROL CO., INC.

UNLESS OTHERWISE SPECIFIED:
TOLERANCE UNLESS OTHERWISE SPECIFIED

DECIMAL	MM	INCH
X	±2.5	±0.1
XX	±0.76	±0.03
XXX	±0.381	±0.015
ANGULAR	±0.5°	

TITLE: WRONG WAY SYSTEM CABINETS

INTERPRET GEOMETRIC TOLERANCING PER:

DRAWN	ALLISON KAVANAUGH 2/28/2014	SIZE	DWG. NO.	REV
CHECKED		B	2TE-194	A

FINISH
MATERIAL
SCALE: VARIES

PROPRIETARY AND CONFIDENTIAL THE INFORMATION CONTAINED IN THIS DRAWING IS THE SOLE PROPERTY OF TAPCO. ANY REPRODUCTION IN PART OR AS A WHOLE WITHOUT THE WRITTEN PERMISSION OF TAPCO IS PROHIBITED.

SHEET 2 OF 3

R-1

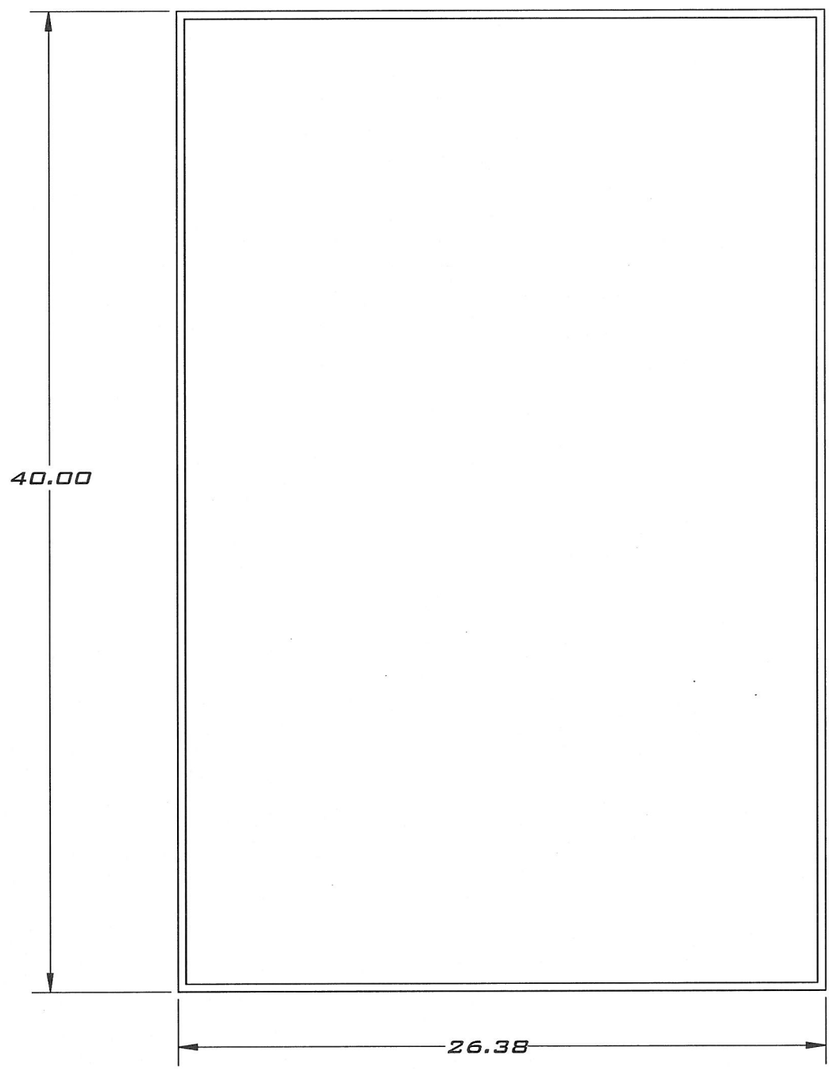

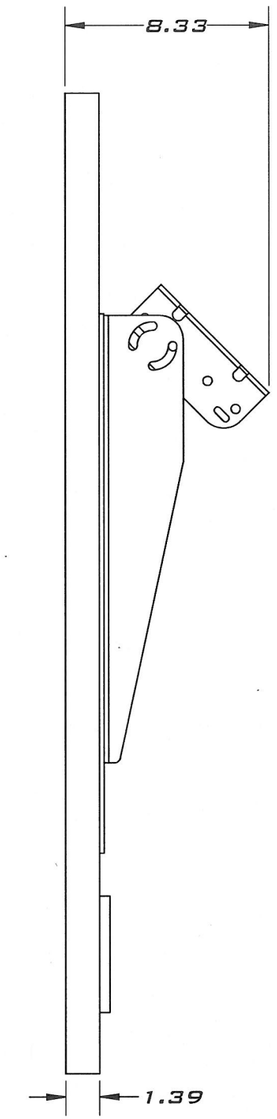

TAPCO®
TRAFFIC & PARKING CONTROL CO., INC.

UNLESS OTHERWISE SPECIFIED:
TOLERANCE UNLESS OTHERWISE SPECIFIED

DECIMAL	MM	INCH
X	±2.5	±0.1
XX	±0.76	±0.03
XXX	±0.381	±0.015
ANGULAR	±0.5°	

TITLE: WRONG WAY SYSTEM
85 WATT SOLAR PACKAGE

INTERPRET GEOMETRIC TOLERANCING PER:

DRAWN	ALLISON KAVANAUGH	2/28/2014	SIZE B	DWG. NO. 2TE-194	REV A	FINISH
CHECKED						MATERIAL
						SCALE: 1:6

PROPRIETARY AND CONFIDENTIAL THE INFORMATION CONTAINED IN THIS DRAWING IS THE SOLE PROPERTY OF TAPCO. ANY REPRODUCTION IN PART OR AS A WHOLE WITHOUT THE WRITTEN PERMISSION OF TAPCO IS PROHIBITED.

SHEET 3 OF 3

Table of Contents - Distribution of Quantities

Project Name - 2014 HSIP - Systemic Improvements (Wrong-Way Driving Mitigation) (HSIP Funds)
Estimate Name - Addendum No. 2
R.I. Contract No. - 2014-CT-013
FAP Nos: STP-HSIP(010)

ItemCode	Description	Page
201.9901	REMOVE, SALVAGE, AND DELIVER DIRECTIONAL, WARNING, AND REGULATORY SIGN ASSEMBLY TO RIDOT MAINTENANCE FACILITIES	1
914.5010	FLAGPERSONS	6
914.5020	FLAGPERSONS - OVERTIME	7
922.0100	TEMPORARY CONSTRUCTION SIGNS STANDARD 29.1.0 AND 27.1.1	7
923.0120	PLASTIC PIPE BARRICADE STANDARD 26.3.0	8
923.0200	FLUORESCENT TRAFFIC CONES STANDARD 26.1.0	9
925.0112	PORTABLE CHANGEABLE MESSAGE SIGN	9
928.0800	TRUCK MOUNTED ATTENUATOR WITH TRUCK MOUNTED FLASHING ARROW BOARD	9
929.0110	FIELD OFFICE	10
936.0110	MOBILIZATION	10
937.0200	MAINTENANCE AND MOVEMENT TRAFFIC PROTECTION	10
943.0200	TRAINEE MAN-HOURS	10
T14.9901	RELAMP TRAFFIC SIGNAL HEAD MODULES	10
T15.9901	WRONG-WAY DRIVING DETECTION SYSTEM - ACTIVE	12
T15.9902	WRONG-WAY DRIVING DETECTION SYSTEM - PASSIVE	13
T15.9903	REFLECTIVE SIGN POST PANEL - RED	13
T15.9904	DIRECTIONAL REGULATORY AND WARNING SIGNS - MOUNTED ON BARRIER	19
T15.9905	DIRECTIONAL REGULATORY AND WARNING SIGNS - SIDE MOUNTED ON BARRIER	20
T15.9906	REMOVE AND RELOCATE EXISTING SIGN PANEL ONTO SIGN POST	20
T15.9907	**DIRECTIONAL REGULATORY AND WARNING SIGNS - HIGH REFLECTIVITY**	**21**
T20.0900	BI-DIRECTIONAL CONTROL DEVICE STANDARD 20.2.0	57
T20.2006	6 INCH EPOXY RESIN PAVEMENT MARKINGS WHITE	62
T20.2014	4 INCH EPOXY RESIN PAVEMENT MARKINGS YELLOW	63
T20.2016	6 INCH EPOXY RESIN PAVEMENT MARKINGS YELLOW	63
T20.2020	EPOXY RESIN PAVEMENT ARROW - STRAIGHT, LEFT, RIGHT, OR COMBINED STANDARD 20.1.0	64
T20.2022	EPOXY RESIN PAVEMENT MARKING WORD "ONLY" STANDARD 20.1.0	67
T20.9901	REMOVE PAVEMENT ARROW MARKING - STRAIGHT, LEFT, RIGHT, OR COMBINED STANDARD	67
T20.9902	12 INCH EPOXY RESIN PAVEMENT MARKINGS YELLOW	68
T20.9903	REPLACEMENT REFLECTORS FOR BI-DIRECTIONAL CONTROL DEVICES	68

Distribution of Quantities

Project Name - 2014 HSIP - Systemic Improvements (Wrong-Way Driving Mitigation) (HSIP Funds)
Estimate Name - Addendum No. 2
R.I. Contract No. - 2014-CT-013
FAP Nos: STP-HSIP(010)

Item No.	Item Code	Description	UM	Qty.	Pay Code	Seq. No.
019	T15.9906 Cont.	MISCELLANEOUS		20.00	0021	01
		SHEET 103		1.00	0021	01
		SHEET 119		1.00	0021	01
		SHEET 138		1.00	0021	01
		SHEET 140		1.00	0021	01
		SHEET 141		1.00	0021	01
		SHEET 158		1.00	0021	01
		SHEET 46		1.00	0021	01
		SHEET 52B		2.00	0021	01
		SHEET 65B		1.00	0021	01
		SHEET 66A		1.00	0021	01
		SHEET 66B		1.00	0021	01
		SHEET 67		6.00	0021	01
		SHEET 69A		2.00	0021	01
		SHEET 82A		1.00	0021	01
		SHEET 84A		1.00	0021	01
		Item T15.9906 Total:		**42.00**		
020	T15.9907	**DIRECTIONAL REGULATORY AND WARNING SIGNS - HIGH REFLECTIVITY**	SF			
		MISCELLANEOUS				
		MISCELLANEOUS		28.25	0021	01
		SHEET 100A				
		R1-2		14.00	0021	01
		R3-1		4.00	0021	01
		R3-2		8.00	0021	01
		R5-1		54.00	0021	01
		R5-1A		24.00	0021	01
		R6-1		27.00	0021	01
		SHEET 100B				
		R1-2		14.00	0021	01
		R3-1		4.00	0021	01
		R3-2		8.00	0021	01

Distribution of Quantities

Project Name - 2014 HSIP - Systemic Improvements (Wrong-Way Driving Mitigation) (HSIP Funds)
Estimate Name - Addendum No. 2
R.I. Contract No. - 2014-CT-013
FAP Nos: STP-HSIP(010)

Item No.	Item Code	Description	UM	Qty.	Pay Code	Seq. No.
020	T15.9907 Cont.	R5-1		36.00	0021	01
		R5-1A		24.00	0021	01
		SHEET 37C				
		R1-2		14.00	0021	01
		R5-1		36.00	0021	01
		R5-1A		24.00	0021	01
		SHEET 38A				
		R3-1		4.00	0021	01
		R3-2		4.00	0021	01
		R5-1		18.00	0021	01
		R5-1A		12.00	0021	01
		R6-1		27.00	0021	01
		SHEET 38B				
		R4-7		5.00	0021	01
		R5-1		9.00	0021	01
		R5-1A		12.00	0021	01
		R6-1		13.50	0021	01
		SHEET 39				
		R1-2		14.00	0021	01
		R3-1		4.00	0021	01
		R3-2		4.00	0021	01
		R5-1		54.00	0021	01
		R5-1A		24.00	0021	01
		R6-1		27.00	0021	01
		SHEET 40A				
		R1-2		14.00	0021	01
		R5-1		18.00	0021	01
		R5-1A		12.00	0021	01
		SHEET 40B				
		R1-2		28.00	0021	01
		R3-2		4.00	0021	01
		R5-1		90.00	0021	01
		R5-1A		24.00	0021	01

Distribution of Quantities

Project Name - 2014 HSIP - Systemic Improvements (Wrong-Way Driving Mitigation) (HSIP Funds)
Estimate Name - Addendum No. 2
R.I. Contract No. - 2014-CT-013
FAP Nos: STP-HSIP(010)

Item No.	Item Code	Description	UM	Qty.	Pay Code	Seq. No.
020	T15.9907 Cont.	R6-1		54.00	0021	01
		SHEET 41A				
		R3-1		4.00	0021	01
		R3-2		8.00	0021	01
		R5-1		18.00	0021	01
		R5-1A		12.00	0021	01
		SHEET 41B				
		R5-1A		6.00	0021	01
		SHEET 42				
		R1-1		18.00	0021	01
		R3-5A		7.50	0021	01
		R3-5R		7.50	0021	01
		R4-7		5.00	0021	01
		R5-1		45.00	0021	01
		R5-1A		12.00	0021	01
		R6-1		47.25	0021	01
		SHEET 43				
		R1-2		14.00	0021	01
		R3-1		4.00	0021	01
		R3-2		4.00	0021	01
		R5-1		54.00	0021	01
		R5-1A		24.00	0021	01
		R6-1		27.00	0021	01
		SHEET 44				
		R5-1		27.00	0021	01
		R5-1A		18.00	0021	01
		SHEET 45				
		R3-1		4.00	0021	01
		R3-2		4.00	0021	01
		R5-1		36.00	0021	01
		R5-1A		24.00	0021	01
		R6-1		27.00	0021	01
		SHEET 46				

Distribution of Quantities

Project Name - 2014 HSIP - Systemic Improvements (Wrong-Way Driving Mitigation) (HSIP Funds)
Estimate Name - Addendum No. 2
R.I. Contract No. - 2014-CT-013
FAP Nos: STP-HSIP(010)

Item No.	Item Code	Description	UM	Qty.	Pay Code	Seq. No.
020	T15.9907 Cont.	R1-1		18.00	0021	01
		R3-1		4.00	0021	01
		R3-2		4.00	0021	01
		R5-1		36.00	0021	01
		R5-1A		18.00	0021	01
		R6-1		27.00	0021	01
		SHEET 53A				
		R1-1		18.00	0021	01
		R3-2		8.00	0021	01
		R5-1		18.00	0021	01
		R5-1A			0021	01
		SHEET 53B				
		R1-2		14.00	0021	01
		R5-1		36.00	0021	01
		R5-1A		24.00	0021	01
		SHEET 57				
		R5-1		18.00	0021	01
		R5-1A		12.00	0021	01
		SHEET 58				
		R5-1		18.00	0021	01
		R5-1A		12.00	0021	01
		SHEET 59				
		R3-1		4.00	0021	01
		R3-2		4.00	0021	01
		R5-1		36.00	0021	01
		R5-1A		24.00	0021	01
		R6-1		27.00	0021	01
		SHEET 60A				
		R3-2		4.00	0021	01
		R4-7		5.00	0021	01
		R5-1		27.00	0021	01
		R5-1A		24.00	0021	01
		SHEET 60B				

Distribution of Quantities

Project Name - 2014 HSIP - Systemic Improvements (Wrong-Way Driving Mitigation) (HSIP Funds)
Estimate Name - Addendum No. 2
R.I. Contract No. - 2014-CT-013
FAP Nos: STP-HSIP(010)

Item No.	Item Code	Description	UM	Qty.	Pay Code	Seq. No.
020	T15.9907 Cont.	R5-1A		24.00	0021	01
		R6-1		27.00	0021	01
		SHEET 65A				
		R1-2		14.00	0021	01
		R3-1		4.00	0021	01
		R3-2		4.00	0021	01
		R5-1		54.00	0021	01
		R5-1A		24.00	0021	01
		R6-1		27.00	0021	01
		SHEET 65B				
		R3-1		4.00	0021	01
		R3-2		4.00	0021	01
		R5-1		36.00	0021	01
		R5-1A		24.00	0021	01
		R6-1		27.00	0021	01
		SHEET 66A				
		R3-1		4.00	0021	01
		R3-2		4.00	0021	01
		R5-1		36.00	0021	01
		R5-1A		12.00	0021	01
		R6-1		27.00	0021	01
		SHEET 66B				
		R1-2		7.00	0021	01
		R3-1		4.00	0021	01
		R3-2		4.00	0021	01
		R5-1		36.00	0021	01
		R5-1A		12.00	0021	01
		R6-1		27.00	0021	01
		SHEET 67				
		R3-1		4.00	0021	01
		R3-2		4.00	0021	01
		R5-1		36.00	0021	01
		R5-1A		12.00	0021	01

Distribution of Quantities

Project Name - 2014 HSIP - Systemic Improvements (Wrong-Way Driving Mitigation) (HSIP Funds)
Estimate Name - Addendum No. 2
R.I. Contract No. - 2014-CT-013
FAP Nos: STP-HSIP(010)

Item No.	Item Code	Description	UM	Qty.	Pay Code	Seq. No.
020	T15.9907 Cont.	R6-1		27.00	0021	01
		SHEET 68A				
		R1-1		18.00	0021	01
		R4-7		5.00	0021	01
		R5-1		27.00	0021	01
		R5-1A		12.00	0021	01
		R6-1		13.50	0021	01
		SHEET 68B				
		R4-7		5.00	0021	01
		R5-1		27.00	0021	01
		R5-1A		12.00	0021	01
		R6-1		13.50	0021	01
		SHEET 69A				
		R1-1		18.00	0021	01
		R4-7		5.00	0021	01
		R5-1		27.00	0021	01
		R5-1A		12.00	0021	01
		R6-1		13.50	0021	01
		SHEET 69B				
		R1-1		18.00	0021	01
		R4-7		5.00	0021	01
		R5-1		27.00	0021	01
		R5-1A		12.00	0021	01
		R6-1		13.50	0021	01
		SHEET 70				
		R3-2		12.00	0021	01
		R4-7		5.00	0021	01
		R5-1		9.00	0021	01
		R5-1A		6.00	0021	01
		R6-1		13.50	0021	01
		SHEET 71				
		R1-1		9.00	0021	01
		R3-2		4.00	0021	01

Distribution of Quantities

Project Name - 2014 HSIP - Systemic Improvements (Wrong-Way Driving Mitigation) (HSIP Funds)
Estimate Name - Addendum No. 2
R.I. Contract No. - 2014-CT-013
FAP Nos: STP-HSIP(010)

Item No.	Item Code	Description	UM	Qty.	Pay Code	Seq. No.
020	T15.9907 Cont.	R4-7		5.00	0021	01
		R5-1		18.00	0021	01
		R5-1A		6.00	0021	01
		SHEET 72A				
		R4-7		5.00	0021	01
		R5-1		9.00	0021	01
		R5-1A		12.00	0021	01
		R6-1		13.50	0021	01
		SHEET 72B				
		R1-2		14.00	0021	01
		R5-1		36.00	0021	01
		R5-1A		24.00	0021	01
		SHEET 72C				
		R1-1		18.00	0021	01
		R1-2		14.00	0021	01
		R3-1		4.00	0021	01
		R3-2		8.00	0021	01
		R5-1		54.00	0021	01
		R5-1A		12.00	0021	01
		R6-1		27.00	0021	01
		SHEET 73A				
		R1-1		18.00	0021	01
		R4-7		5.00	0021	01
		R5-1		27.00	0021	01
		R5-1A		24.00	0021	01
		R6-1		13.50	0021	01
		SHEET 73B				
		R1-1		18.00	0021	01
		R1-2		14.00	0021	01
		R3-1		4.00	0021	01
		R3-2		8.00	0021	01
		R5-1		54.00	0021	01
		R5-1A		24.00	0021	01

Distribution of Quantities

Project Name - 2014 HSIP - Systemic Improvements (Wrong-Way Driving Mitigation) (HSIP Funds)
Estimate Name - Addendum No. 2
R.I. Contract No. - 2014-CT-013
FAP Nos: STP-HSIP(010)

Item No.	Item Code	Description	UM	Qty.	Pay Code	Seq. No.
020	T15.9907 Cont.	R3-2		4.00	0021	01
		R5-1		54.00	0021	01
		R5-1A		24.00	0021	01
		R6-1		27.00	0021	01
		SHEET 78A				
		R1-2		14.00	0021	01
		R5-1		36.00	0021	01
		R5-1A		24.00	0021	01
		SHEET 78B				
		R1-2		14.00	0021	01
		R3-1		8.00	0021	01
		R3-2		4.00	0021	01
		R5-1		54.00	0021	01
		R5-1A		24.00	0021	01
		R6-1		27.00	0021	01
		SHEET 79				
		R4-7		5.00	0021	01
		R5-1		27.00	0021	01
		R5-1A		12.00	0021	01
		R6-1		13.50	0021	01
		SHEET 80				
		R3-1		4.00	0021	01
		R3-2		4.00	0021	01
		R5-1		36.00	0021	01
		R5-1A		24.00	0021	01
		R6-1		27.00	0021	01
		SHEET 81				
		R1-1		18.00	0021	01
		R4-7		5.00	0021	01
		R5-1		36.00	0021	01
		R5-1A		6.00	0021	01
		R6-1		13.50	0021	01
		SHEET 82A				

Distribution of Quantities

Project Name - 2014 HSIP - Systemic Improvements (Wrong-Way Driving Mitigation) (HSIP Funds)
Estimate Name - Addendum No. 2
R.I. Contract No. - 2014-CT-013
FAP Nos: STP-HSIP(010)

Item No.	Item Code	Description	UM	Qty.	Pay Code	Seq. No.
020	T15.9907 Cont.	R3-1		4.00	0021	01
		R3-2		4.00	0021	01
		R5-1		36.00	0021	01
		R5-1A		24.00	0021	01
		R6-1		13.50	0021	01
		SHEET 94B				
		R1-1		18.00	0021	01
		R1-2		14.00	0021	01
		R4-7		5.00	0021	01
		R5-1		45.00	0021	01
		R5-1A		24.00	0021	01
		R6-1		13.50	0021	01
		SHEET 95				
		R1-1		18.00	0021	01
		R1-2		14.00	0021	01
		R3-1		4.00	0021	01
		R3-2		4.00	0021	01
		R5-1		54.00	0021	01
		R5-1A		24.00	0021	01
		R6-1		27.00	0021	01
		SHEET 96A				
		R1-2		14.00	0021	01
		R5-1		36.00	0021	01
		R5-1A		24.00	0021	01
		SHEET 96B				
		R1-2		14.00	0021	01
		R5-1		36.00	0021	01
		R5-1A		24.00	0021	01
		SHEET 96C				
		R4-7		5.00	0021	01
		R5-1		9.00	0021	01
		R5-1A		12.00	0021	01
		R6-1		13.50	0021	01

Distribution of Quantities

Project Name - 2014 HSIP - Systemic Improvements (Wrong-Way Driving Mitigation) (HSIP Funds)
Estimate Name - Addendum No. 2
R.I. Contract No. - 2014-CT-013
FAP Nos: STP-HSIP(010)

Item No.	Item Code	Description	UM	Qty.	Pay Code	Seq. No.
020	T15.9907 Cont.	R5-1A		24.00	0021	01
		R6-1		27.00	0021	01
		Item T15.9907 Total:		**17,838.00**		
021	T20.0900	**BI-DIRECTIONAL CONTROL DEVICE**	**EACH**			
		STANDARD 20.2.0				
		PROJECT WIDE				
		SHEET 100A		3.00	0021	01
		SHEET 100B		3.00	0021	01
		SHEET 101		2.00	0021	01
		SHEET 102		4.00	0021	01
		SHEET 103		3.00	0021	01
		SHEET 104A		3.00	0021	01
		SHEET 104B		7.00	0021	01
		SHEET 105		2.00	0021	01
		SHEET 106A		3.00	0021	01
		SHEET 106B		3.00	0021	01
		SHEET 106C		3.00	0021	01
		SHEET 107A		2.00	0021	01
		SHEET 107B		2.00	0021	01
		SHEET 108		2.00	0021	01
		SHEET 109		2.00	0021	01
		SHEET 110		3.00	0021	01
		SHEET 111		2.00	0021	01
		SHEET 112		6.00	0021	01
		SHEET 113A		2.00	0021	01
		SHEET 113B		3.00	0021	01
		SHEET 115A		3.00	0021	01
		SHEET 115B		3.00	0021	01
		SHEET 116		3.00	0021	01
		SHEET 117		2.00	0021	01
		SHEET 118		3.00	0021	01
		SHEET 119		2.00	0021	01

FED. ROAD DIV. NO.	STATE	FEDERAL AID PROJECT NO.	FISCAL YEAR	SHEET NO.	TOTAL SHEETS
1	RI	STP-HSIP(010)	2014	1	166

R-1

STATE OF RHODE ISLAND

DEPARTMENT OF TRANSPORTATION

INDEX

SHEET NO.	DESCRIPTION
1	COVER SHEET
2	STANDARD PLAN SYMBOLS & STANDARD LEGEND
3	STANDARD NOTES-1
4	STANDARD NOTES-2
5	JOB SPECIFIC PLAN SYMBOLS, LEGEND & NOTES
6-11	MISCELLANEOUS DETAILS 1 - 7
12	LOCATION LIST
13-18	SIGN COORDINATE TABLE 1 - 6
19-28	RELAMP TRAFFIC SIGNAL HEAD MODULES DETAIL 1 - 10
29-161	SIGNING & STRIPING PLANS
162-166	TRAFFIC CONTROL PLANS 1 - 5

2014 HIGHWAY SAFETY IMPROVEMENT PROJECT WRONG-WAY DRIVING MITIGATION (HSIP FUNDS)

STATEWIDE

R.I. CONTRACT NO. 2014-CT-013 F.A. PROJECT NO. STP-HSIP(010)

HURRICANE EVACUATION ROUTE

See Sheet No. 12 for Hurricane Evacuation Routes

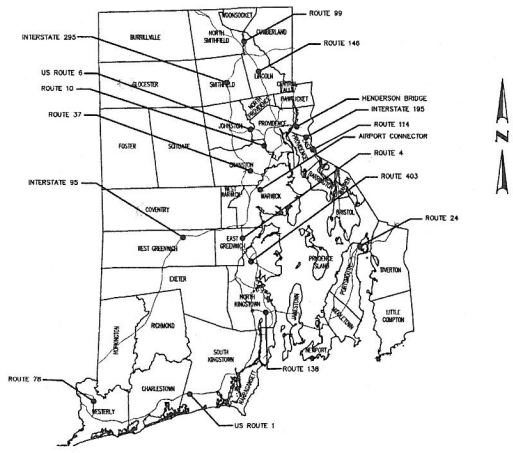

HURRICANE EVACUATION ROUTE

R.I. STANDARD SPECIFICATIONS AND STANDARD DETAILS

SPECIFICATIONS TO GOVERN THIS PROJECT ARE THE R.I. STANDARD SPECIFICATIONS FOR ROAD AND BRIDGE CONSTRUCTION, AMENDED AUGUST 2013, WITH ALL REVISIONS AND THE STATE AND FEDERAL SPECIAL PROVISIONS INCLUDED IN THE CONTRACT DOCUMENTS. STANDARD DETAILS FOR THIS PROJECT ARE R.I. STANDARD DETAILS, 1998 EDITION, WITH ALL REVISIONS.

SCALES OF DRAWINGS

VARIES

BASE OF LEVELS

NAD83 (2011)

PETER J. PAVAO, JR. No. 9565 REGISTERED PROFESSIONAL ENGINEER (CIVIL) 4/29/14

VANASSE HANGEN BRUSTLIN, INC. TRANSPORTATION LAND DEVELOPMENT ENVIRONMENTAL SERVICES PROVIDENCE, RHODE ISLAND

Contract Number 2014-CT-013

Number of Sheet 1

Total Sheets 166

R.I. DEPARTMENT OF TRANSPORTATION

APPROVED — DEPUTY CHIEF ENGINEER — DATE 4/29/14

APPROVED — CHIEF ENGINEER — DATE 4/28/14

APPROVED — DIRECTOR — DATE 4/29/14

DEPARTMENT OF TRANSPORTATION FEDERAL HIGHWAY ADMINISTRATION

APPROVED — DIVISION ADMINISTRATOR — DATE

ADDENDUM NO. 2

0153M_V1_001_COVER

FED. ROAD DIV. NO.	STATE	FEDERAL AID PROJECT NO.	FISCAL YEAR	SHEET NO.	TOTAL SHEETS
1	RI	STP-HSIP(010)	2014	11a	166

R-1

SEE SPECIFICATIONS – JOB SPECIFIC SHEETS
JS-25 to JS-27 FOR WRONG-WAY DRIVING
DETECTION SYSTEM DETAILS

NOTES:

1. ALL WRONG-WAY DRIVING DETECTION SYSTEM (WWDS) (BOTH ACTIVE AND PASSIVE) EQUIPMENT LOCATIONS SHALL BE MARKED IN THE FIELD BY THE CONTRACTOR AND THE WRONG-WAY DRIVING DETECTION SYSTEM MANUFACTURER, AND APPROVED BY THE ENGINEER PRIOR TO INSTALLATION. THE LOCATIONS OF THE WRONG-WAY DRIVING DETECTION SYSTEM EQUIPMENT AS SHOWN ON THE PLANS ARE APPROXIMATE ONLY.

REVISIONS		
NO.	DATE	BY
1	5/13/14	VHB

RHODE ISLAND
DEPARTMENT OF TRANSPORTATION

2014 HIGHWAY SAFETY
IMPROVEMENT PROJECT -
WRONG-WAY DRIVING MITIGATION
VARIOUS LOCATIONS RHODE ISLAND

MISCELLANEOUS DETAILS-6

CHECKED BY _____ DATE _____ SCALE _____

VANASSE HANGEN BRUSTLIN, INC.
TRANSPORTATION LAND DEVELOPMENT
ENVIRONMENTAL SERVICES
PROVIDENCE, RHODE ISLAND

ADDENDUM NO. 2

0153M_V1_011a_DETAIL006_ADD02

FED. ROAD DIV. NO.	STATE	FEDERAL AID PROJECT NO.	FISCAL YEAR	SHEET NO.	TOTAL SHEETS
1	RI	STP-HSIP(010)	2014	14	166

R-1

Description	Northing	Easting
21a-13	277296	352777
21b-1	278067	352090
21b-2	278045	352210
21b-3	278076	352206
21b-4	278079	352170
21b-5	278089	352158
21b-6	278085	352171
21b-7	278121	352148
21b-8	278253	352173
21b-9	278252	352207
21b-10	278427	352176
21b-11	278427	352208
21b-12	278084	352206
21b-13	278042	352173
22a-1	281254	353957
22a-2	281280	353956
22a-3	281356	354111
22a-4	281370	354089
22a-5	281542	354149
22a-6	281540	354123
22b-1	281528	353305
22b-2	281550	353302
22b-3	281564	353265
22b-4	281483	353202
22b-5	281710	353368
22b-6	281728	353345
22b-7	281810	353541
22b-8	281841	353534
23-1	285798	355143
23-2	285825	355143
23-3	285750	354970
23-4	285771	354956
23-5	285614	354859
23-6	285628	354840
23-7	285798	355138
23-8	285781	355181
23-9	285826	355135
23-10	285831	355154
24a-1	287640	357864
24a-2	287597	357862
24a-3	287632	357687
24a-4	287606	357687
24a-5	287615	357513
24a-6	287588	357512

Description	Northing	Easting
24a-7	287602	357913
24a-8	287643	357876
24b-1	287935	358766
24b-2	287965	358766
24b-3	287917	358749
24b-4	287979	358764
24b-5	287981	358687
24b-6	287996	358781
24b-7	287930	358941
24b-8	287967	358941
24b-9	287921	359117
24b-10	287952	359117
25-1	288116	360467
25-2	288095	360481
25-3	288081	360498
25-4	288055	360473
25-5	288015	360528
25-6	288052	360346
25-7	288025	360355
25-8	287964	360144
25-9	287941	360151
25-10	288097	360539
25-11	288133	360472
26a-1	290889	362013
26a-2	290864	361991
26a-3	290937	361836
26a-4	290966	361834
26a-5	290861	361683
26a-6	290842	361702
26b-1	291254	361523
26b-2	291254	361518
26b-3	291093	361576
26b-4	291094	361608
26b-5	290921	361592
26b-6	290922	361622
26b-7	291265	361527
26b-8	291268	361564
26b-9	291302	361571
26b-10	291282	361477
26b-11	291420	361526
26c-1	291396	361227
26c-2	291432	361241
26c-3	291575	361140
26c-4	291590	361159

Description	Northing	Easting
26c-5	291750	361109
26c-6	291739	361090
26c-7	291436	361253
26c-8	291308	361253
26c-9	291406	361224
26c-10	291435	361238
27a-1	293231	361173
27a-2	293231	361152
27a-3	293099	361173
27a-4	293098	361149
27a-5	293256	361234
27a-6	293220	361229
27b-1	294503	360897
27b-2	294510	360873
27b-3	294634	360968
27b-4	294648	360949
27b-5	294729	361079
27b-6	294746	361062
37-1	264743	353675
37-2	264726	353698
38-1	267927	357437
38-2	267896	357427
39-1	268834	358175
39-2	268846	358183
39-3	268884	358180
39-4	268821	358353
39-5	268802	358332
39-6	268639	358401
39-7	268635	358370
39-8	268881	358128
40a-1	268184	360667
40a-2	268206	360762
40a-3	268158	360681
40a-4	268171	360721
40a-5	268076	360534
40a-6	268048	360555
40a-7	268229	360750
40b-1	267110	359795
40b-2	267182	359796
40b-3	267326	359907
40b-4	267345	359879
40b-5	267434	360042
40b-6	267459	360024
40b-7	267144	359809

Description	Northing	Easting
41-1	267598	360233
41-2	267616	360196
41-3	267743	360288
41-4	267749	360257
41-5	267572	360278
41-6	267581	360116
41-7	267877	360226
41-8	267886	360255
41-9	267603	360237
41-10	267621	360203
42a-1	266596	363564
42a-2	266584	363556
42a-3	266620	363562
42a-4	266635	363562
42a-5	266661	363579
42a-6	266562	363748
42a-7	266536	363736
42a-8	266513	363878
42a-9	266485	363868
42a-10	266695	363515
42b-1	265935	364497
42b-2	265924	364540
42b-3	266090	364479
42b-4	266108	364502
42b-5	266184	364350
42b-6	266157	364338
42b-7	265871	364475
42b-8	265910	364550
43-1	264733	368189
43-2	264700	368277
43-3	264879	368242
43-4	264886	368299
43-5	265027	368189
43-6	265057	368236
43-7	264666	368176
43-8	264684	368292
44-1	276010	350199
44-2	276015	350168
44-3	276188	350161
44-4	276191	350190
44-5	276359	350138
44-6	276363	350163
44-7	276007	350216
44-8	275941	350102

Description	Northing	Easting
45a-1	280320	348334
45a-2	280314	348364
45a-3	280302	348365
45a-4	280278	348386
45a-5	280295	348424
45a-6	280128	348326
45a-7	280129	348357
45a-8	279956	348372
45a-9	279964	348402
45a-10	280368	348351
45b-1	280553	347863
45b-2	280623	347767
45b-3	280626	347826
45b-4	280640	347786
45b-5	280805	347849
45b-6	280800	347822
45b-7	280977	347812
45b-8	280972	347791
46a-1	286011	347132
46a-2	285999	347149
46a-3	285995	347193
46a-4	285786	347119
46a-5	285783	347149
46a-6	285611	347098
46a-7	285608	347125
46a-8	286066	347178
46b-1	286132	346648
46b-2	286135	346588
46b-3	286148	346602
46b-4	286120	346668
46b-5	286339	346691
46b-6	286327	346717
46b-7	286487	346785
46b-8	286498	346755
46b-9	286068	346578
47-1	292823	344389
47-2	292868	344368
47-3	292944	344522
47-4	292963	344499
47-5	293092	344606
47-6	293099	344582
47-7	292808	344385
47-8	292870	344306
48a-1	296142	343828

Description	Northing	Easting
48a-2	296166	343859
48a-3	296172	343853
48a-4	296272	343721
48a-5	296247	343711
48a-6	296301	343547
48a-7	296278	343544
48b-1	295376	343127
48b-2	295393	343159
48b-3	295250	343261
48b-4	295272	343271
48b-5	295197	343436
48b-6	295219	343443
49a-1	298615	342926
49a-2	298604	342893
49a-3	298355	342955
49a-4	298366	342925
49a-5	298184	342839
49a-6	298202	342813
49a-7	298609	342926
49a-8	298596	342895
49b-1	298404	341959
49b-2	298401	341926
49b-3	298575	341929
49b-4	298571	341903
49b-5	298740	341953
49b-6	298750	341931
49b-7	298407	341927
49b-8	298413	341958
50-1	305514	339871
50-2	305449	340082
50-3	305421	340098
51-1	305591	339775
51-2	305574	339815
51-3	305551	339815
52a-1	310284	337709
52a-2	310275	337657
52a-3	310445	337717
52a-4	310447	337674
52a-5	310605	337719
52a-6	310599	337691
52b-1	310337	336104
52b-2	310365	336093
52b-3	310432	336253
52b-4	310455	336241

Description	Northing	Easting
52b-5	310529	336402
52b-6	310555	336384
52c-1	309792	337290
52c-2	309792	337321
52c-3	309802	337212
52c-4	309826	337199
52c-5	310001	337328
52c-6	309995	337358
52c-7	309798	337289
52c-8	309778	337347
52c-9	309754	337283
52c-10	309798	337320
52c-11	309791	337112
52c-12	309917	337342
52c-13	309926	337314
53a-1	325080	320375
53a-2	325098	320402
53a-3	325083	320371
53a-4	325229	320280
53a-5	325243	320303
53a-6	325371	320179
53a-7	325387	320201
53a-8	325106	320397
53b-1	324180	319524
53b-2	324157	319502
53b-3	324188	319539
53b-4	324071	319423
53b-5	324078	319393
53b-6	324297	319392
53b-7	324312	319418
53b-8	324443	319298
53b-9	324454	319321
53b-10	324161	319498
53b-11	324114	319558
53b-12	323944	319384
53b-13	324184	319517
54a-1	330040	314109
54a-2	330043	314083
54a-3	330059	314128
54a-4	330096	314242

DATUM FOR POINT REFERENCE: NAVD 88

ADDENDUM NO. 2

REVISIONS		
NO.	DATE	BY
1	6/13/14	VHB

VANASSE HANGEN BRUSTLIN, INC.
TRANSPORTATION LAND DEVELOPMENT
ENVIRONMENTAL SERVICES
PROVIDENCE, RHODE ISLAND

RHODE ISLAND
DEPARTMENT OF TRANSPORTATION

2014 HIGHWAY SAFETY IMPROVEMENT PROJECT - WRONG-WAY DRIVING MITIGATION

VARIOUS LOCATIONS RHODE ISLAND

SIGN COORDINATE TABLE-2

CHECKED BY _____ DATE _____ SCALE _____

0153M_V1_014_LOCDATA002_ADD02

FED. ROAD DIV. NO.	STATE	FEDERAL AID PROJECT NO.	FISCAL YEAR	SHEET NO.	TOTAL SHEETS
1	RI	STP-HSIP(010)	2014	1	166

R-1

STATE OF RHODE ISLAND

DEPARTMENT OF TRANSPORTATION

INDEX

SHEET NO.	DESCRIPTION
1	COVER SHEET
2	STANDARD PLAN SYMBOLS & STANDARD LEGEND
3	STANDARD NOTES-1
4	STANDARD NOTES-2
5	JOB SPECIFIC PLAN SYMBOLS, LEGEND & NOTES
6-11	MISCELLANEOUS DETAILS 1 - 7
12	LOCATION LIST
13-18	SIGN COORDINATE TABLE 1 - 6
19-28	RELAMP TRAFFIC SIGNAL HEAD MODULES DETAIL 1 - 10
29-161	SIGNING & STRIPING PLANS
162-166	TRAFFIC CONTROL PLANS 1 - 5

2014 HIGHWAY SAFETY IMPROVEMENT PROJECT WRONG-WAY DRIVING MITIGATION (HSIP FUNDS)

STATEWIDE

R.I. CONTRACT NO. 2014-CT-013 F.A. PROJECT NO. STP-HSIP(010)

HURRICANE EVACUATION ROUTE

See Sheet No. 12 for Hurricane Evacuation Routes

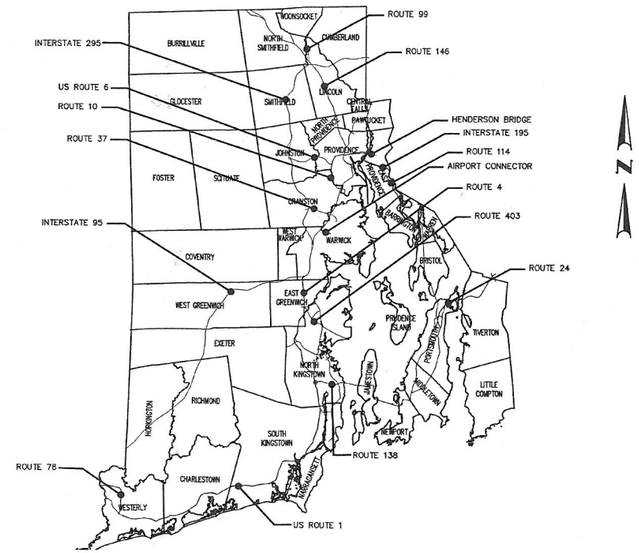

SCALES OF DRAWINGS

VARIES

BASE OF LEVELS

NAD83 (2011)

R.I. STANDARD SPECIFICATIONS AND STANDARD DETAILS

SPECIFICATIONS TO GOVERN THIS PROJECT ARE THE R.I. STANDARD SPECIFICATIONS FOR ROAD AND BRIDGE CONSTRUCTION, AMENDED AUGUST 2013, WITH ALL REVISIONS AND THE STATE AND FEDERAL SPECIAL PROVISIONS INCLUDED IN THE CONTRACT DOCUMENTS. STANDARD DETAILS FOR THIS PROJECT ARE R.I. STANDARD DETAILS, 1998 EDITION, WITH ALL REVISIONS.

PETER J. PAVAO, JR.
No. 9565
REGISTERED PROFESSIONAL ENGINEER (CIVIL)
4/30/14

VANASSE HANGEN BRUSTLIN, INC.
TRANSPORTATION LAND DEVELOPMENT ENVIRONMENTAL SERVICES
PROVIDENCE, RHODE ISLAND

Contract Number 2014-CT-013

Number of Sheet 1

Total Sheets 166

R.I. DEPARTMENT OF TRANSPORTATION

APPROVED — DEPUTY CHIEF ENGINEER — DATE 4/28/14

APPROVED — CHIEF ENGINEER — DATE 4/28/14

APPROVED — DIRECTOR — DATE 4/29/14

DEPARTMENT OF TRANSPORTATION
FEDERAL HIGHWAY ADMINISTRATION

APPROVED — DIVISION ADMINISTRATOR — DATE

ADDENDUM NO. 2

0153M_V1_001_COVER

FED. ROAD DIV. NO.	STATE	FEDERAL AID PROJECT NO.	FISCAL YEAR	SHEET NO.	TOTAL SHEETS
1	RI	STP-HSIP(010)	2014	11a	166

SEE SPECIFICATIONS – JOB SPECIFIC SHEETS
JS-25 to JS-27 FOR WRONG-WAY DRIVING
DETECTION SYSTEM DETAILS

NOTES:

1. ALL WRONG-WAY DRIVING DETECTION SYSTEM (WWDS) (BOTH ACTIVE AND PASSIVE) EQUIPMENT LOCATIONS SHALL BE MARKED IN THE FIELD BY THE CONTRACTOR AND THE WRONG-WAY DRIVING DETECTION SYSTEM MANUFACTURER, AND APPROVED BY THE ENGINEER PRIOR TO INSTALLATION. THE LOCATIONS OF THE WRONG-WAY DRIVING DETECTION SYSTEM EQUIPMENT AS SHOWN ON THE PLANS ARE APPROXIMATE ONLY.

REVISIONS		
NO.	DATE	BY
1	5/13/14	VHB

RHODE ISLAND
DEPARTMENT OF TRANSPORTATION

2014 HIGHWAY SAFETY
IMPROVEMENT PROJECT -
WRONG-WAY DRIVING MITIGATION
VARIOUS LOCATIONS RHODE ISLAND

MISCELLANEOUS DETAILS-6

CHECKED BY _____ DATE _____ SCALE _____

VANASSE HANGEN BRUSTLIN, INC.
TRANSPORTATION LAND DEVELOPMENT
ENVIRONMENTAL SERVICES
PROVIDENCE, RHODE ISLAND

ADDENDUM NO. 2

FED. ROAD DIV. NO.	STATE	FEDERAL AID PROJECT NO.	FISCAL YEAR	SHEET NO.	TOTAL SHEETS
1	RI	STP-HSIP(010)	2014	14	166

Description	Northing	Easting
21a-13	277296	352777
21b-1	278067	352090
21b-2	278045	352210
21b-3	278076	352206
21b-4	278079	352170
21b-5	278089	352158
21b-6	278085	352171
21b-7	278121	352148
21b-8	278253	352173
21b-9	278252	352207
21b-10	278427	352176
21b-11	278427	352208
21b-12	278084	352206
21b-13	278042	352173
22a-1	281254	353957
22a-2	281280	353956
22a-3	281356	354111
22a-4	281370	354089
22a-5	281542	354149
22a-6	281540	354123
22b-1	281528	353305
22b-2	281550	353302
22b-3	281564	353265
22b-4	281483	353202
22b-5	281710	353368
22b-6	281728	353345
22b-7	281810	353541
22b-8	281841	353534
23-1	285798	355143
23-2	285825	355143
23-3	285750	354970
23-4	285771	354956
23-5	285614	354859
23-6	285628	354840
23-7	285798	355138
23-8	285781	355181
23-9	285826	355135
23-10	285831	355154
24a-1	287640	357864
24a-2	287597	357862
24a-3	287632	357687
24a-4	287606	357687
24a-5	287615	357513
24a-6	287588	357512

Description	Northing	Easting
24a-7	287602	357913
24a-8	287643	357876
24b-1	287935	358766
24b-2	287965	358766
24b-3	287917	358749
24b-4	287979	358764
24b-5	287981	358687
24b-6	287996	358781
24b-7	287930	358941
24b-8	287967	358941
24b-9	287921	359117
24b-10	287952	359117
25-1	288116	360467
25-2	288095	360481
25-3	288081	360498
25-4	288055	360473
25-5	288015	360528
25-6	288052	360346
25-7	288025	360355
25-8	287964	360144
25-9	287941	360151
25-10	288097	360539
25-11	288133	360472
26a-1	290889	362013
26a-2	290864	361991
26a-3	290937	361836
26a-4	290966	361834
26a-5	290861	361683
26a-6	290842	361702
26b-1	291254	361523
26b-2	291254	361518
26b-3	291093	361576
26b-4	291094	361608
26b-5	290921	361592
26b-6	290922	361622
26b-7	291265	361527
26b-8	291268	361564
26b-9	291302	361571
26b-10	291282	361477
26b-11	291420	361526
26c-1	291396	361227
26c-2	291432	361241
26c-3	291575	361140
26c-4	291590	361159

Description	Northing	Easting
26c-5	291750	361109
26c-6	291739	361090
26c-7	291436	361253
26c-8	291308	361253
26c-9	291406	361224
26c-10	291435	361238
27a-1	293231	361173
27a-2	293231	361152
27a-3	293099	361173
27a-4	293098	361149
27a-5	293256	361234
27a-6	293220	361229
27b-1	294503	360897
27b-2	294510	360873
27b-3	294634	360968
27b-4	294648	360949
27b-5	294729	361079
27b-6	294746	361062
37-1	264743	353675
37-2	264726	353698
38-1	267927	357437
38-2	267896	357427
39-1	268834	358175
39-2	268846	358183
39-3	268884	358180
39-4	268821	358353
39-5	268802	358332
39-6	268639	358401
39-7	268635	358370
39-8	268881	358128
40a-1	268184	360667
40a-2	268206	360762
40a-3	268158	360681
40a-4	268171	360721
40a-5	268076	360534
40a-6	268048	360555
40a-7	268229	360750
40b-1	267110	359795
40b-2	267182	359796
40b-3	267326	359907
40b-4	267345	359879
40b-5	267434	360042
40b-6	267459	360024
40b-7	267144	359809

Description	Northing	Easting
41-1	267598	360233
41-2	267616	360196
41-3	267743	360288
41-4	267749	360257
41-5	267572	360278
41-6	267581	360116
41-7	267877	360226
41-8	267886	360255
41-9	267603	360237
41-10	267621	360203
42a-1	266596	363564
42a-2	266584	363556
42a-3	266620	363562
42a-4	266635	363562
42a-5	266661	363579
42a-6	266562	363748
42a-7	266536	363736
42a-8	266513	363878
42a-9	266485	363868
42a-10	266695	363515
42b-1	265935	364497
42b-2	265924	364540
42b-3	266090	364479
42b-4	266108	364502
42b-5	266184	364350
42b-6	266157	364338
42b-7	265871	364475
42b-8	265910	364550
43-1	264733	368189
43-2	264700	368277
43-3	264879	368242
43-4	264886	368299
43-5	265027	368189
43-6	265057	368236
43-7	264666	368176
43-8	264684	368292
44-1	276010	350199
44-2	276015	350168
44-3	276188	350161
44-4	276191	350190
44-5	276359	350138
44-6	276363	350163
44-7	276007	350216
44-8	275941	350102

Description	Northing	Easting
45a-1	280320	348334
45a-2	280314	348364
45a-3	280302	348365
45a-4	280278	348386
45a-5	280295	348424
45a-6	280128	348326
45a-7	280129	348357
45a-8	279956	348372
45a-9	279964	348402
45a-10	280368	348351
45b-1	280553	347863
45b-2	280623	347767
45b-3	280626	347826
45b-4	280640	347786
45b-5	280805	347849
45b-6	280800	347822
45b-7	280977	347812
45b-8	280972	347791
46a-1	286011	347132
46a-2	285999	347149
46a-3	285995	347193
46a-4	285786	347119
46a-5	285783	347149
46a-6	285611	347098
46a-7	285608	347125
46a-8	286066	347178
46b-1	286132	346648
46b-2	286135	346588
46b-3	286148	346602
46b-4	286120	346668
46b-5	286339	346691
46b-6	286327	346717
46b-7	286487	346785
46b-8	286498	346755
46b-9	286068	346578
47-1	292823	344389
47-2	292868	344368
47-3	292944	344522
47-4	292963	344499
47-5	293092	344606
47-6	293099	344582
47-7	292808	344385
47-8	292870	344306
48a-1	296142	343828

Description	Northing	Easting
48a-2	296166	343859
48a-3	296172	343853
48a-4	296272	343721
48a-5	296247	343711
48a-6	296301	343547
48a-7	296278	343544
48b-1	295376	343127
48b-2	295393	343159
48b-3	295250	343261
48b-4	295272	343271
48b-5	295197	343436
48b-6	295219	343443
49a-1	298615	342926
49a-2	298604	342893
49a-3	298355	342955
49a-4	298366	342925
49a-5	298184	342839
49a-6	298202	342813
49a-7	298609	342926
49a-8	298596	342895
49b-1	298404	341959
49b-2	298401	341926
49b-3	298575	341929
49b-4	298571	341903
49b-5	298740	341953
49b-6	298750	341931
49b-7	298407	341927
49b-8	298413	341958
50-1	305514	339971
50-2	305449	340082
50-3	305421	340098
51-1	305591	339775
51-2	305574	339815
51-3	305551	339815
52a-1	310284	337709
52a-2	310275	337657
52a-3	310445	337717
52a-4	310447	337674
52a-5	310605	337719
52a-6	310599	337691
52b-1	310337	336104
52b-2	310365	336093
52b-3	310432	336253
52b-4	310455	336241

Description	Northing	Easting
52b-5	310529	336402
52b-6	310555	336384
52c-1	309792	337290
52c-2	309792	337321
52c-3	309802	337212
52c-4	309826	337199
52c-5	310001	337328
52c-6	309995	337358
52c-7	309798	337289
52c-8	309778	337347
52c-9	309754	337283
52c-10	309798	337320
52c-11	309791	337112
52c-12	309917	337342
52c-13	309926	337314
53a-1	325080	320375
53a-2	325098	320402
53a-3	325083	320371
53a-4	325229	320280
53a-5	325243	320303
53a-6	325371	320179
53a-7	325387	320201
53a-8	325106	320397
53b-1	324180	319524
53b-2	324157	319502
53b-3	324188	319539
53b-4	324071	319423
53b-5	324078	319393
53b-6	324297	319392
53b-7	324312	319418
53b-8	324443	319298
53b-9	324454	319321
53b-10	324161	319498
53b-11	324114	319558
53b-12	323944	319384
53b-13	324184	319517
54a-1	330040	314109
54a-2	330043	314083
54a-3	330059	314128
54a-4	330096	314242

DATUM FOR POINT REFERENCE: NAVD 88

ADDENDUM NO. 2

REVISIONS		
NO.	DATE	BY
1	5/13/14	VHB

VANASSE HANGEN BRUSTLIN, INC.
TRANSPORTATION LAND DEVELOPMENT
ENVIRONMENTAL SERVICES
PROVIDENCE, RHODE ISLAND

RHODE ISLAND
DEPARTMENT OF TRANSPORTATION

2014 HIGHWAY SAFETY IMPROVEMENT PROJECT - WRONG-WAY DRIVING MITIGATION
VARIOUS LOCATIONS RHODE ISLAND

SIGN COORDINATE TABLE-2

CHECKED BY _____ DATE _____ SCALE _____

0153M_V1_014_LOCDATA002_ADD02