April 23, 2014

STATE OF RHODE ISLAND AND PROVIDENCE PLANTATION
DEPARTMENT OF ADMINISTRATION

DIVISION OF PURCHASES BID NO. 7548656

RHODE ISLAND DEPARTMENT OF TRANSPORTATION

RHODE ISLAND CONTRACT NO.2013-DF-109

FEDERAL-AID PROJECT NO. FAP Nos: FLD-EMRG(056)

Atwells Ave Bridge No. 975 Replacement

Atwells Avenue in Providence, RI from 50' west of Tuxedo Avenue to 306' east.

CITY/TOWN OF Providence

COUNTY OF PROVIDENCE

NOTICE TO PROSPECTIVE BIDDERS

ADDENDUM NO. 1 Prospective bidders and all concerned are hereby notified of the following changes in the Plans, Specifications, Proposal and Distribution of Quantities for this contract. These changes shall be incorporated in the Plans, Specifications, Proposal and Distribution of Quantities, and shall become an integral part of the Contract Documents.

A. Clarification

1. Pre-Bid Conference

   Attached to this Addendum No. 1 is the sign in sheet from the Pre-Bid Conference held on April 17, 2014 at RIDOT.

2. Verizon Telephone - Temporary Support Bridge

   Verizon or a Verizon designated subcontractor shall install the temporary support bridge, expose the cables and attach the cables to the temporary support bridge system refer to page CS-6(R-1) and CS-7(R-1).

B. Contract Documents

1. Proposal Pages

   a. Pages P-26 and P-27

      Delete pages P-26 and P-27 in their entirety and replace them with pages P-26(R-1) and P-27(R-1) attached to this Addendum No. 1. The Addendum Posting Date has been posted.

2. General Provision - Contract Specific

   a. Page CS-5 through CS-11

      Delete pages CS-5 through CS-11 in their entirety and replace them with pages CS-5(R-1) through CS-11(R-1) attached to this Addendum No. 1. Changes have been made to Sections 4 and 6 and the pagination has been revised.

3. Specifications - Job Specific

   a. Specifications/Job Specific Index, Page JS-i and JS-iii

      Delete pages JS-i and JSiii in their entirety and replace them with pages JS-i(R-1) and JS-iii (R-1) attached to this Addendum No. 1. The Addendum index has been revised.

   b. Page JS-47

      Delete page JS-47 in its entirety and it with page JS-47(R-1) attached to this Addendum No. 1. The Specification has been deleted.

   c. Pages JS-52 and JS-53

      Delete pages JS-52 and JS-53 in their entirety and replace them with pages JS-52(R-1) and JS-53(R-1) and also add page JS-53A attached to this Addendum No. 1. The specification has been revised.

   d. Pages JS-82 and JS-83

      Delete pages JS-82 and JS-83 in their entirety and replace them with pages JS-82(R-1) and JS-83(R-1) attached to this Addendum No. 1. The specification has been revised.

   e. Page JS-90

      Delete pages JS-90 in its entirety and it with page JS-90(R-1) attached to this Addendum No. 1. The Specification has been revised.

   f. Pages JS-119 through JS-124

      Delete pages JS-119 through JS-124 in their entirety and replace them with pages JS-119(R-1) through JS-124(R-1) attached to this Addendum No. 1. The specification has been revised.

   g. Page JS-153

      Delete page JS-153 in its entirety and it with page JS-153(R-1) attached to this Addendum No. 1. Item Code 906.9907 has been deleted.

C. Distribution of Quantities

1. Index Pages 1,2 and 4

   Delete Index pages 1, 2 and 4 in their entirety and replace them with Index page 1(R-1), 2(R-1) and 4 (R-1) attached to this Addendum No. 1. The descriptions for Item Codes 701.9900, 701.9901, 701.9903 and 701.9906 have been revised, Item Code 906.0720 has been added and Item Code 906.9907 has been deleted.

2. Page 8

   Delete Page 8 in its entirety and replace it with Page 8(R-1) attached to this Addendum No. 1. The Title's to Item Code's 701.9900, 701.9901, and 701.9903 have been revised.

3. Page 8a

   Add Page 8a attached to this Addendum No. 1. The changes to Page 8 required an additional page.

4. Page 9

   Delete Page 9 in its entirety and replace it with page 9(R-1) attached to this Addendum No. 1. The Title to Item Code 701.9906 has been revised and location within Item Code 702.0517 has been revised.

5. Page 9a

   Add Page 9a attached to this Addendum No. 1. The changes to Page 9 required an additional page.

6. Page 17

   Delete Page 17 in its entirety and replace it with page 17(R-1) attached to this Addendum No. 1. Item Code 906.9907 has been deleted.

7. Page 38

   Delete Page 38 in its entirety and replace it with page 38(R-1) attached to this Addendum No. 1. Item Code 906.0720 has been added.

D. Drawings/Plans - Change/Addition

01. Sheet 3 - Job Specific General Notes 1

    Delete Plan Sheet 3 in its entirety and replace it with Plan Sheet 3(R-1) attached to this Addendum No. 1. Notes have been deleted.

02. Sheet 5 - Job Specific General Notes 3

    Delete Plan Sheet 5 in its entirety and replace it with Plan Sheet 5(R-1) attached to this Addendum No. 1. Notes have been deleted.

03. Sheet 6 - Job Specific General Notes 4

    Modify this plan as shown in Sketch No. 7 attached to this Addendum No. 1. The Shop Drawing Submittal list has been revised.

04. Sheet 7 - General Plan and Elevation

    Modify this plan as shown in Sketch No. 1 attached to this Addendum No. 1. The guardrail has been revised.

05. Sheet 9 - Typical Sections

    Modify this plan as shown in Sketch No.'s 2 and 3 attached to this Addendum No. 1. The construction phase has been revised.

06. Sheet 10 - Staged Construction

    Modify this plan as shown in Sketch No. 8 attached to this Addendum No. 1. The Suggested Sequence of Staged Construction, Phase 2 notes have been revised.

07. Sheet 16 - Abutment Details

    Modify this plan as shown in Sketch No. 4 attached to this Addendum No. 1. A callout has been revised.

08. Sheet 20 - Existing Truss Repair Details 2

    Delete Plan Sheet 20 in its entirety and replace it with Plan Sheet 20(R-1) attached to this Addendum No. 1. Notes have been revised.

09. Sheet 21 - Existing Truss Repair Details 3

    Delete Plan Sheet 21 in its entirety and replace it with Plan Sheet 21(R-1) attached to this Addendum No. 1. A line has been added to the Suggested Truss Installation Sequence.

10. Sheet 25 - Deck Details 1

    Delete Plan Sheet 25 in its entirety and replace it with Plan Sheet 25(R-1) attached to this Addendum No. 1. Notes have been revised.

11. Sheet 29 - Two Bar Rail 1

    Modify this plan as shown on Sketch No. 5 attached to this Addendum No. 1. A callout has been revised.

12. Sheet 35 - Utility Support Details 1

    Modify this plan as shown on Sketch No. 6 attached to this Addendum No. 1. A note has been added.

13. Sheet 38 - Miscellaneous Details

    Delete Plan Sheet 38 in its entirety and replace it with Plan Sheet 38(R-1) attached to this Addendum No. 1. End Barrier Plan at Southwest Approach Detail has been revised.

E. Reports

1. HAER Report

   Delete The Draft HAER Report in its entirety and replace it with the HAER Report (R-1) attched to this Addendum No.1. The report has been updated.

RI Department of Transportation
Chief Engineer

ADDENDUM NO. 1

State of Rhode Island
Division of Purchases
One Capitol Hill
Providence, RI 02908

"NON-MANDATORY" PRE-BID CONFERENCE SIGN IN SHEET

BID NUMBER:	7548656
BID TITLE:	Atwells Ave Bridge #975 Replacement - RIDOT RIC #2013-DF-109
PRE-BID DATE AND TIME:	April 17, 2014 @ 9:00 am

Purchasing Representative: NONE

Pre-bid START TIME: 9:04

Pre-bid END TIME: 9:10

	COMPANY NAME	COMPANY REPRESENTATIVE	ADDRESS	CONTACT E-MAIL	CONTACT PHONE NUMBER	CONTACT FAX NUMBER	PROPOSAL SUBMITTED (For Purchasing Use Only)
1	RIDOT	NATHAN SHAPIRO	2 CAPITOL HILL	NATHAN.SHAPIRO @dot.RI.GOV	222-3260 X4410		
2	RIDOT	Philip Kaczorowski	2 Capitol Hill	Philip.Kaczorowski @dot.ri.gov	4047		
3	—	—	—				
4	John Rocchio	Robert Rion	20 Lark Industrial Parkway Smithfield RI	Mike Scarpaci @JohnRocchioCorp.com	401-949-5565	401-949-5310	
5	RIDOT	Jessica Rodas	2 Capitol Hill	Jessica.rodas@dot.ri	x 4076		
6	RIDOT	Dave Fish	2 Capitol Hill	david.fish@dot.ri.gov	X4022		
7	VHB, INC	SCOTT D'AMELIO	10 DORRANCE ST	SDAMELIO@VHB	272-8100		
8	National Grid	Thomas Capobianco	280 Melrose St Providence RI	thomas.capobianco@nationalgrid.com	784-7248		
9	CARDI CORP.	GEORGE HOLMES	400 LINCOLN AVE. WARWICK R.I. 02888	GHOLMES@CARDI.COM	(401) 739-8300	(401)732-0006	
10	AETNA BRIDGE	JEFF BOSTOCK	100 JEFFERSON BLVD SUITE 100 WARWICK, RI 02888	JBOSTOCK@AETNABRIDGE.COM	401-728-0400	401-728-0189	
11	VHB, INC	PETER CHIU	10 DORRANCE ST.	PCHIU@VHB.COM	272-8100		
12	NATIONAL GRID	Michael Tupper	40 SYLVAN RD WALTHAM, MA	michael.tupper@nationalgrid.com	781-907-2838		
13	National Grid Gas	Jim Paulette.	40 Sylvan Rd Waltham, MA.	jim.paulette@nationalgrid.com	401-465-8580		
14	Rahmat Noorparvar	RIDOT		Rahmat.Noorparvar	X4077		
15							

Rev 4/30/13

** VENDOR: PLEASE SUBMIT A BUSINESS CARD IF AVAILABLE**

Revised: 2/19/2002

Total or gross sum of bid for Rhode Island Contract Number: 2013-DF-109

Federal-Aid Project Number(s): FLD-EMRG(056)

WRITTEN IN WORDS:

The undersigned bidder declares that this Proposal is made without connection with any other person or persons making proposals for the same work, and is in all respects fair and without collusion or fraud. The undersigned bidder submits herewith, a proposal guarantee in the form of a bid bond in favor of the State of Rhode Island in the amount of 5% of the total or gross sum of the bid and agrees and consents that the proposal guarantee shall be forfeited to the State as liquidated damages if the required contract agreement and contract bond are not executed within ten(10) days of the notice of award. All surety companies must be listed with The Department of the Treasury, Fiscal Services, Circular 570, (Latest Revision published by The Federal Register). The State reserves the right to retain the surety of all bidders until the successful bidder enters into the Contract or until such time as the award or cancellation of the Contract is announced at which point Sureties will be returned to all bidders by the State of Rhode Island, Office of Purchases. The undersigned bidder further agrees, if awarded the contract on this proposal, to begin work within ten (10) calendar days after the date of execution of the contract unless otherwise specified under special provisions or permitted by the Engineer, and further agrees to complete the work on or before the dates outlined in the Contract Documents.

COMPLETION DATE(S)

DESCRIPTION	DATE
Substantial Completion Date	December 11, 2015
Bid-Opening Date	May 7, 2014
Pre-Bid Date	April 17, 2014
Advertise Date	April 11, 2014

THE BIDDER ACKNOWLEDGES RECEIPT OF THE FOLLOWING:

ADDENDA	DATE POSTED
NO.1	April 24, 2014

	DOCUMENT(S)	PAGE
1.	Status Certification for: Debarment, Eligibility, Indictments, Convictions or Civil Judgements	1
2.	Anti-Collusion Certificate	2
4.	DBE Affirmative Action Certification	3 - 9
3.	Disclosure of Lobbying Activities	

Total or gross sum of bid for Rhode Island Contract Number: 2013-DF-109

Federal-Aid Project Number(s): FLD-EMRG(056)

Whoever, being an officer, agent, or employee of the United States, or of any State, or Territory, or whoever, whether a person, association, firm, or corporation, knowingly makes any false statement, false representation, or false report as to the character, quality, quantity, or cost of the material used or to be used, or the quantity or quality of the work performed or to be performed, or the costs thereof in connection with the submission of plans, maps, specifications, contracts, or costs of construction of any highway or related project submitted for approval to the Secretary of Transportation; or Whoever, knowingly makes any false statement, false representation, false report, or false claim with respect to the character, quality, quantity, or cost of any work performed or to be performed, or materials furnished or to be furnished, in connection with the construction of any highway or related project approved by the Secretary of Transportation; or Whoever, knowingly makes any false statement or false representation as to a material fact in any statement, certificate, or report submitted pursuant to the provisions of the Federal-aid Road Act approved July 11, 1916 (39 Stat. 355), as amended and supplemented, Shall be fined not more than $10,000 or imprisoned not more than five years, or both. By signing here the signee agrees that the disk submitted is the same as the paper submitted and that any discrepancies may result in disqualification of the bid.

BEING EITHER A (INDIVIDUAL, PARTNERSHIP,)
(OR CORPORATION INCORPORATED)
(UNDER THE LAWS OF ANY STATE)
(IN THE UNITED STATES OF AMERICA)

_____

Contractor

COMPOSED OF OFFICERS, PARTNERS
OR OWNER, AS FOLLOWS.

_____

President

_____

Vice-President

_____

Secretary

_____

Treasurer

Address _____

_____

CERTIFICATION SUMMARY: I hereby certify that I have read all of the above requirements and understand that it affects the acceptablility of my bid(s).

_____

Name of Signatore - Title Date

Providence, RI 02905
Thomas Brueckner
Chief of Operations/Engineering
401-461-8848

FIBERTECH COMMUNICATIONS
30 Indianola Rd.
Niantic, Ct 06357
Ken Lane
585-743-1743
860-874-4494 Cell

LEVEL 3 COMMUNICATIONS
New England Division
300 Bent Street
Cambridge, MA 02141
Michael Wiemer
617-551-1310
617-480- 4861 Cell

A. National Grid – Gas

The proposed gas pipe installation shall be completed by a National Grid Gas approved contractor. The approved contractor shall coordinate with National Grid Gas for obtaining materials, which will be supplied by National Grid Gas, to be installed on the project and inspected. A twelve week lead time is required for NGrid Gas to obtain the materials. Connection of the new gas pipe to the operating gas system will be completed by National Grid Gas. National Grid Gas will be given two weeks notice before making the connection and will have one week of work to complete the connection. The gas connection across the bridge must be operating during temperatures below 32 degrees Fahrenheit.

Pre-approved National Grid Gas piping contractors are the following:

AGI Construction
34 Appian Way
Smithfield, RI 02917
Mark Albert
401-233-0021

GPL Construction
2612 Victory Highway
Glendale, RI 02826
Michael Gaudette
401-568-2810

The Contractor shall note if a gas line becomes exposed during construction, Code requires that National Grid Gas Company (NGGC) be notified to inspect the line before backfilling. Also, any damage to the pipe or pipe coating will need to be repaired before backfilling. Contact Providence Dispatch office at (401) 525-5513. NGGC requires that its pipelines be backfilled and compacted as outlined in the Appendix E, "Guidelines for Backfill and Compaction around Gas Pipes – Permanent Backfill and Compaction".

B. National Grid – Electric

For each new service connection to proposed traffic signal controller cabinets, the Contractor will be required to initiate a separate work request with National Grid by either submitting an online request or by contacting National Grid Customer Service by phone. Short circuit duty and cost to provide service will be provided for each individual location. Any backcharges due from the Contractor must be paid and a municipal electrical inspection must be received before any National Grid construction can be scheduled. The Contractor will be required to initiate separate work requests with National Grid to cut/remove service and close accounts for both unmetered and metered service to the existing traffic signal controller cabinets being removed.

The proposed electric system conduit installation shall be completed by a National Grid Electric approved contractor. The approved contractor shall coordinate with National Grid Electric for approval of materials to be installed on the project and inspection. Existing cable removal and new electric cable placement will be completed by National Grid Electric. National Grid Electric anticipates 2 weeks duration to install the new cable.

Pre-approved National Grid Electric contractors are the following:

J.H. Lynch & Sons Inc.
50 Lynch Place
Cumberland, RI 02864
Attn.: James Dervay

Universal Construction
19 Starr Street
Johnston, RI 02919
Attn.: Joseph Piti

Contact 48 hours in advance for National Grid Electric inspection of conduit installation. Contact Enrique (Ike) Dayacap. Office: 401-784-7208, Cell: 401-255-0011.

C. Providence Water Supply Board

The proposed water pipe installation shall be completed by a Providence Water approved contractor. The approved contractor shall coordinate with Providence Water for inspection of work on the water system, system shutdowns and approval to connect new work into the existing water system. All work shall conform to Providence Water requirements as outlined in the Appendix D, "Requirements for Water Mains, Services and Appurtenances".

D. Verizon

The proposed telephone cable relocation shall be completed by a Verizon appointed contractor which will temporarily suspend the cables across the river on a temporary

utility bridge. Once the new bridge is constructed, new split conduit will be installed and cables will be inserted.

The Verizon contractor will need three weeks advance notice to mobilize to the site. Verizon anticipates 6 weeks to excavate, demolish, expose and temporarily support the Verizon cables. Upon installation of the new bridge substructure and cable supports, the Verizon contractor will lower the supported cables into split ducts. Verizon anticipates four weeks to lower cables into permanent bridge duct.

E. Communications

The proposed communications cable relocation shall be completed by the National Grid Electric approved contractor. Upon installation of the new bridge substructure and cable supports for the relocated electric and communications rigid steel conduit and split conduit, the contractor shall excavate and expose the existing communications conduits, carefully open the existing communications ducts to free the enclosed cable, lift the cable from the old ducts and lower them into the new split conduit. Securely close and fasten split ducts and place concrete encasement were applicable.

The communications companies will need two week advance notice of the proposed cable relocation start in order to develop necessary cable slack for the relocation. The communications companies will need one week advance notice for inspection of the new conduit installation and cable relocation.

5. SPECIALTY ITEMS

Exodermic deck
Historic truss rehabilitation
Seeding

6. NOTICE TO CONTRACTORS

A. General

All overhead wires shall be maintained and active during construction. No overhead utility relocation will be allowed.
Underground electric system shall remain active until relocated duct and system is active.
Temporary support of utility poles due to adjacent excavation, if necessary, shall be considered incidental to the excavation causing the utility pole instability.

The Contractor shall not be permitted to work from or in the waters of the Wooonasquatucket River.

The contractor is responsible for the field survey requirements for this project.

B. Plans and Shop Drawings

The Contractor shall note specification "12.105.02 Plans and Shop Drawings". The Contractor shall submit duplicate Shop Drawings (two copies per submittal) directly to the attention of the Consulting Engineer (Vanasse Hangen Brustlin, Inc., 10 Dorrance St., Suite 400, Providence RI 02903, Attn: Scott D'Amelio, P.E.) simultaneously with each of his official submittals to the State.

Shop Drawings for proposed mast arms and traffic signal controllers shall have an expedited review period of 30 days.

C. Storage of Construction Material and/or Equipment

The Contractor shall place all equipment and material in his/her field yard or on site in a location approved by the Engineer.

Storage of materials on State or City property will require the approval of the Engineer. Storage of construction material and/or equipment shall be a minimum distance of 30 feet from the roadway.

Stockpiles shall be covered and must be located outside any areas of RIDEM/CRMC jurisdiction including but not limited to wetlands and their associated buffers. Any storage or stockpile of construction material and/or equipment on private property will be the Contractor's responsibility. CRMC Assent requires temporary erosion and sedimentation controls.

No stockpile and storage of construction material will be allowed along Atwells Ave. and the area under the Atwells Ave. Bridge No. 975.

The contractor must coordinate with City of Providence – Division of Traffic Engineering at 60 Earnest Street, Providence, 72 hours in advance of stockpiling salvaged materials at their yard.

7. SEQUENCE OF CONSTRUCTION AND SCHEDULE

a. General

The contractor must submit, for the department review and acceptance, a detailed construction schedule that complies with the specification 108.03. The required schedule

level for this project is "B." Per the specifications, the contractor is required to generate the schedules in PRIMAVERA P6, Version 7 or 8.

The proposed construction sequence and time schedule must consider and address safe vehicle and pedestrian passage through the project areas. Pedestrian traffic must be maintained at all times throughout the project. Approval of the work sequence and time schedule is required before the start of any construction or other work associated with this contract. Any deviations from the requirements stated here or detailed in the plans, as well as any deviations from the approved construction work sequence and time schedule, must be submitted to the Engineer in writing for approval.

The Contractor shall coordinate with the ongoing Narragansett Bay Commission's (NBC) Interceptor Improvement project. Complete closure of the bridge cannot be completed until NBC impacts in the area are complete. The anticipated NBC completion date is October, 2014. All Bridge related preliminary traffic work and temporary sidewalk/masonry wall improvements may be completed prior to this date. Any delay to the start of the project due to NBC work not being complete shall be considered a third party non-compensable delay at no cost to the State.

The contractor shall coordinate and schedule the work accomplished by the utilities. Any delay to the project completion due to utility delays shall be considered a third party non-compensable delay at no cost to the State.

To ensure pedestrian safety, prior to the beginning of any other work on the project, the contractor shall repair the northwest sidewalk by repairing the adjacent masonry wall, installing a temporary bituminous concrete sidewalk and install fence.

The Contractor shall coordinate his work to ensure that all utility relocations may proceed without delay. The Contractor shall, immediately upon commencing work at the site, perform all work necessary for the preparation of utility company involvement. Such work will include, but not be limited to, selective clearing, earthwork, removals and relocations or disposals.

The sequence of construction of the proposed water pipe installation shall be as follows: Begin with the installation of an insertion valves on each side of the bridge. Install new pipe to the connection at the west side of the bridge including one isolation gate valve and two tees for service connections. Test and sanitize new pipe and install air release corporation. Set up temporary service to Eagle Square Plaza. Discontinue main service and connect new pipe to the existing east side. Connect tees to existing service and finalize connection to Eagle Square Plaza. The temporary service connection shall be considered incidental to the water utility work.

The Contractor shall maintain access/egress to Eagle Square Drive at all times except as listed in the Traffic Management Plan (TMP). Utility work within the Eagle Square

Drive intersection shall be completed at night in accordance with the TMP . Utility excavations shall be backfilled or covered with steel plates where necessary to allow vehicle traffic during the day, as approved by the Engineer. Steel plates shall be capable of supporting HS-25 wheel loading over all trenches and excavations except when otherwise directed by the Engineer. There shall be no additional compensation for backfilling, re-excavating and/or plating these trenches and excavations but it shall be considered incidental to the utility item.

No additional payment will be made for material, equipment, labor or incidentals necessary to perform operations during cold or inclement weather. Any additional costs associated with cold or inclement weather work will be considered incidental to the respective items for which the costs incurred.

8. TRAFFIC MANAGEMENT PLAN

Included as an appendix (Appendix B) to these Contract Specific General Provisions is the Transportation Management Plan (TMP) for this project. The TMP lays out the set of coordinated transportation management strategies that will be used to manage the work zone safety and mobility impacts of this project. In the event of a discrepancy between information in the TMP and information elsewhere in the Contract Documents, the former shall govern.

The Department's latest Training Guidelines for Personnel Responsible for Work Zone Safety & Mobility are available under the "Training" section at http://www.dot.ri.gov/humanresources/index.asp.

Prior to beginning construction activities that affect traffic, the Contractor shall furnish and install all construction signing and traffic control devices as shown on the Traffic Control Plans referenced in the TMP (See Appendix B).

9. WORK ADJACENT TO UNDERGROUND BASEMENTS OR UTILITY VAULTS

The Contractor shall be aware that some of the basements and/or utility vaults for the existing buildings along all roadways within the project limit may extend under the sidewalks. The Contractor shall use extreme care when working within or adjacent to sidewalks in front of buildings. Any basements or utility vaults damaged by the Contractor while carrying out this Contract shall be repaired by the Contractor to the satisfaction of the Engineer at no additional charge to the State.

10. BUILDING UTILITY SERVICES

The Contractor is to assume building services connections (electric, gas, telephone, water, and sanitary) are present to all buildings. Locations are to be checked with appropriate utility companies. The Contractor shall follow the Dig Safe process in accordance with the State of Rhode Island Standard Specifications for Road and Bridge Construction, 2010 with amendments.

11. DAMAGE TO EXISTING UTILITIES

The Contractor shall check and verify the exact location of all existing utilities and service connections with Dig Safe. Any damage to the utilities, which are detailed by Dig Safe, shall be the Contractor's responsibility. Cost to repair such damage shall be borne by the Contractor.

12. WHEELCHAIR RAMPS

There will be no separate payment for the reconstruction of wheelchair ramps that are impacted by construction activities (including but not limited to conduit or traffic signal pole installations). All associated items of work required to reconstruct the wheelchair ramp to ADA requirements (including curbing, sidewalks, and detectable warning systems) shall also be considered incidental to the item of work which disturbs existing wheelchair ramps. The final location of all wheelchair ramps shall be coordinated in the field with proposed and/or existing locations of drainage structures, utility poles, light poles, and other appurtenances to ensure a clear pedestrian path. All proposed wheelchair ramps shall be constructed in accordance with RI Standard 43.3.0 and per the details on the Plans.

The installation of wheelchair ramp curb will include the granite transition stones as well as the flush granite curb at the base of the ramp. In addition, a sawcut of the end sections abutting the 2-foot curb returns to be removed will be necessary (where applicable), to install the wheelchair ramp transition curbs.

13. BLASTING RESTRICTIONS

Blasting will not be allowed on this Contract.

14. WINTER SHUTDOWN

The Winter Shutdown period shall be determined to be the period from December 15th through the following April 15th. The Contractor shall ensure that prior to winter shutdown all areas where existing pavement has been removed receives new hot mix asphalt. All utility castings shall be set flush with new pavement and temporary striping installed prior to closing the project for the season.

SPECIFICATIONS/JOB SPECIFIC

INDEX

Item Code	Title	Page
108.03	Prosecution and Progress	JS-1
108.1000	Prosecution and Progress	JS-2
201.9901	Remove and Dispose Riprap	JS-3
201.9902	Remove and Salvage Traffic Signal System	JS-4
201.9903	Remove and Stockpile Temporary Median Barrier	JS-6
401.9901	Class 19 HMA	JS-7
401.9902	Modified Class 9.5 HMA	JS-10
401.9903	Class 9.5 HMA	JS-13
601	Portland Cement Concrete	JS-16
	Deleted	
606	Self-Consolidating Concrete (SCC)	JS-48
701.9900	Insulated 12 Inch Ductile Iron Water Pipe Installed on Bridge	JS-49
701.9901	Uninsulated Water System Improvements Off Bridge	JS-52
701.9902	Install 12 Inch Gas Main Across Bridge and Below Ground	JS-54
701.9903	Furnish and Install Insulated 12" Water Fittings	JS-72
701.9904	Insulated 12 Inch Ductile Iron Water Pipe Restrained Joint, Off Bridge	JS-72
701.9905	Air Release Corporation	JS-77
701.9906	12 Inch Insertion Valve and Box	JS-78

904.9901	Remove and Reset Private Utility Pole	JS-152
906.9901	Granite Ramp Stone – Modified 7″ Width	JS-153
906.9902	3′ Granite Transition Curb Standard 7.3.1 – Modified 7″ Width	JS-153
906.9903	6′ Granite Curb, Quarry Split Special Transition Standard 7.3.2 – Modified 7″ Width	JS-153
906.9904	Granite Wheelchair Ramp 6′ Curb Standards 7.3.3, 43.3.0 and 43.3.1 – Modified 7″ Width	JS-153
906.9905	Granite Curb, Quarry Split 2 Foot Corners, Standard 7.3.4 – Modified 7″ Width	JS-153
906.9906	Granite Wheelchair Ramp 3′ Curb Standards 7.3.3, 43.3.0 and 43.3.1 – Modified 7″ Width	JS-153
	Deleted	
937.1000	Maintenance and Movement of Traffic Protective Devices	JS-155
938.1000	Price Adjustments	JS-156
L02.1000	Seeding	JS-157
T04. 9901 T12.9903 T13.9901	Video Detection System Cable; Video Detection System Hardware; Video Detection System Camera	JS-158
T05.9901	Break Into Existing Handhole	JS-161
T06	Conduit	JS-162
T08.9901	Remove and Relocate Light Pole, Foundation and Misc. Items	JS-163
T11.9901	20 Foot Galvanized Steel Mast Arm Traffic Signal Post and Foundation Std. 19.2.0 (Modified)	JS-165
T11.9902	Traffic Signal Wood Span Pole, 25 Foot, Class I	JS-174
T12.9901	Modify Existing Traffic Signal Controller Cabinet	JS-176

DELETED

CODE 701.9901

UNINSULATED WATER SYSTEM IMPROVEMENTS OFF BRIDGE

DESCRIPTION: This item of work shall consist of furnishing and installing water system improvements in reasonably close conformity with the details as indicated on the Plans or as directed by the Engineer, all in accordance with these Specifications. Improvements include sections of ductile iron pipe with differing diameters and fittings required to connect these pipes to the system.

All water work described in these Specifications and/or indicated on the Plans shall be in strict accordance with the standards of the American Waterworks Association (AWWA), Providence Water Requirements for Water Mains, Services and Appurtenances, dated June 2004, revised January 2013 (PW) and the National Fire Protection Association (NFPA).

Water work shall also include providing temporary water service, if necessary, to buildings without service during the water system improvement construction. The work will also include performing leakage tests, water line disinfection, and providing an adequate supply of water and pressure to perform the leakage tests and water line disinfection.

MATERIALS:

All materials shall conform to Section 300 of the Providence Water, "Requirements for Water Mains, Services and Appurtenances", January 2013 Edition, provided in the appendix.

Ductile Iron Pipe. Pipe shall conform to Subsection M.04.02.1; Ductile Iron Pipe of the Rhode Island Standard Specifications for Road and Bridge Construction, 2004 Edition, and subsequent addenda.

Fittings. Fittings shall conform to Subsection M.04.02.1; Ductile Iron Pipe of the Rhode Island Standard Specifications for Road and Bridge Construction, 2004 Edition, and subsequent addenda.

Pipe Bedding. Material for pipe bedding shall be as specified in Section 701 of the Standard Specifications for Class B bedding.

CONSTRUCTION METHODS:

All Construction shall conform to Section 400 of the Providence Water, "Requirements for Water Mains, Services and Appurtenances", dated June 2004, revised January 2013, included as Appendix D of the General Provisions – Contract Specific.

Laying New Pipe and Appurtenances. All ductile iron pipes, jackets, fittings and appurtenances shall be carefully examined for cracks or other defects and shall be cleared of all dirt and debris before laying. Pipe shall be laid to the lines and depths shown on the plans and/or directed by the Engineer. Each length shall be placed into trench and joined to the adjacent pipe in accordance with the manufacturers written instructions. Pipe dropped into trenches will be rejected and removed from the project at no additional cost to the state.

All pipe shall be firmly supported and held in position by carefully and thoroughly tamping Class B bedding material around the barrel of the pipe.

All bends to be restrained with MEGA LUG or approved equal.

The open ends of all pipelines, when pipe laying is not in progress, shall be closed to keep out all foreign material. The work shall be conducted in such manner so that no loose excavation or other foreign material can enter the pipes.

Whenever it is necessary to cut pipe and provide transition couplings to fit into the pipeline, new or existing, this work shall be done as part of the installation of the pipeline. This work will be done at no additional cost to the state.

Except as otherwise required or permitted by the Engineer, water pipe fittings and plugs shall be backed with concrete thrust blocks to hold them in place. All thrust blocks shall bear against the undisturbed trench walls.

The end transition of Ductile Iron Pipe shall be restrained joint pipe.

Cutting of water pipe shall be cut perpendicular to the centerline of the pipe and edge beveled per the cap manufacturers' recommendation. The interior of the pipe shall be cleaned and swabbed prior to plug installation.

Backfilling. After the joints and the entire pipeline have been visually inspected and found to be satisfactory, the bedding envelopes shall be placed and thoroughly tamped to the lines and limits as indicated on the typical water trench detail. All backfilling to a height of 12 inches over the top of the pipe shall be done by hand. Backfill materials shall then be placed in accordance with the Standard Specification. Backfill around the structures appurtenant to the pipe lines and around other structures, pipe lines or utilities encountered in the work shall be placed and compacted as specified above for backfill around pipes.

Replacement of Unsuitable Material. When the Engineer determines that the material at the bottom of trenches is unsuitable for the support of water pipes, additional excavation shall be authorized.

Unsuitable material shall be removed to a depth not to exceed 3-feet, or as determined by the Engineer. When the unsuitable material has been removed, the bottom of the excavation shall be leveled and refilled with the appropriate class of bedding.

Class B bedding shall be placed in 8-inch lifts and compacted to 90-percent of its maximum dry density in accordance with Subsection 205.03.5; Backfill and Compaction, of the Standard Specifications. The final compacted lift in the replacement operation shall be graded to the original design elevation of the bottom of trenches.

Unauthorized Excavation. If the bottom of any trench has been excavated below the grade indicated on the Plans or as directed by the Engineer, it shall be brought back to grade by refilling with a well-compacted bedding material of a type selected by the Engineer.

No payment will be made for unauthorized excavation. The Contractor shall furnish, place, and compact the bedding material used to refill the trench to grade at no additional cost to the State.

Leakage Tests. Leakage Tests shall be conducted on the completed water installation in accordance with Providence Water and as specified herein. The testing shall be conducted with other pipe to be installed across the bridge.

All air shall be expelled at the high points and the pipeline slowly filled with potable water.

All visible leaks in the joints shall be sealed, and any cracked or defective pipe, fitting or valve shall be removed and replaced.

The pipeline shall be retested as may be required and necessary until the leakage falls within the allowable determined for the pipe network, at which time the pipeline may be considered ready for disinfection.

This work shall include supplying an adequate supply of water and pressure to perform the test.

Upon completion of the leakage tests, the Contractor shall discharge the pipe of any water.

METHOD OF MEASUREMENT: This item will not be measured for payment.
BASIS OF PAYMENT: "UNINSULATED WATER SYSTEM IMPROVEMENTS OFF BRIDGE" will be paid for at the contract "Lump Sum" price as listed in the Proposal. The price shall constitute full and complete compensation for furnishing and installing all materials, labor, tools and equipment, including all excavation, ductile iron pipe, temporary support, laying, setting and joining pipe, installation of temporary caps or plugs, temporary services, installation of valves, valve boxes, fittings, backfill, compaction, provisions of joint restraint, and other incidentals necessary to finish the work including leakage tests and pipe disinfection, complete and accepted by the Engineer.

CODE 701.9908

COMMUNICATIONS SYSTEM IMPROVEMENTS

DESCRIPTION: This item of work shall consist of furnishing and installing communications distribution system improvements in reasonably close conformity with the details as indicated on the Plans or as directed by the Engineer, all in accordance with these Specifications.

All communications work described in these Specifications and/or indicated on the Plans shall be in strict accordance with Level 3 and Fibertech standards. Communications cable shall remain active at all times. Existing communications duct will be uncovered and carefully opened to removes the active cable. The cable will be lifted from the existing duct and placed into split duct installed at the new location. Duct will then be closed, secured and encased

Communications work shall also include split communications conduit, manholes, electrical conduit trench excavation, conduit assembly, concrete encasement, inspection, testing, backfill and compaction.

MATERIALS:

All materials shall conform to RI Standard Specifications for Road and Bridge Construction, as amended

Conduit. Underground conduit shall be split 5" PVC Schedule 40 , under structure conduit shall be split 5" galvanized rigid steel conduit conforming to RI standard Specifications for Roads and Bridges, Section M15.04.

Backfill. Sand or screened gravel with no stones greater than 1".

Manholes. Precast concrete manhole designed to meet or exceed HS -25 loading. Interior dimensions to be 4'x4'x4'.

Manhole covers. Cast Iron, heavy duty cover. Cover shall be round and lettered "Communications", frame shall be a minimum of 6 inches high

CONSTRUCTION METHODS:

All Construction shall conform to RI Standard Specifications for Road and Bridge Construction.

Trench excavation shall be sufficient to allow 30″ minimum cover over the proposed communication conduit encasement. Conduit horizontal curves and bends shall be gradual with radius of curvature of forty feet minimum. Conduit shall be graded to drain to one end or both. Conduit shall maintain minimum clearance distances from other utilities.

New conduit shall be inspected by Level 3 and Fibertech . Inspection shall be requested after

conduit is placed and ready to accept the active cable. Inspection will also be completed prior to concrete encasement.

METHOD OF MEASUREMENT: This item will not be measured for payment.

BASIS OF PAYMENT: "COMMUNICATIONS SYSTEM IMPROVEMENTS" will be paid for at the contract "Lump Sum" price as listed in the Proposal. The price shall constitute full and complete compensation for furnishing and installing all excavation, materials, labor, tools and equipment, including all conduit, manholes, cast iron manhole covers, temporary support, laying, setting and joining conduit, concrete encasement, warning tape, pulling tape, grounding systems, backfill, compaction and other incidentals necessary to finish the work including testing , complete and accepted by the Engineer.

CODE 803.9901

REMOVE AND DISPOSE EXISTING SUPERSTRUCTURE

DESCRIPTION: These items shall consist of the removal and disposal (including sawcuts), in phases (if applicable), of the existing structural steel stringer, floorbeam and diaphragms, bituminous pavement, timber curb, laminated timber decking, timber stringers, reinforcing steel, embedded steel hardware, bearings, steel railing, deck joint systems, protection of persons and environment, as shown on plans and described in this Special Provision. All work shall be performed in accordance with applicable provisions of the Rhode Island Standard Specifications for Road & Bridge Construction, Amended 2010, except as modified herein and as required by the Engineer.

CONSTRUCTION METHODS: Limits and sequence of demolition shall be in accordance with the suggested phase construction scheme provided on the contract plans. All work to be performed in the removal of the existing curb, deck, stringers and diaphragms shall be done in such a manner that no debris falls beyond the temporary protective shield. In the event that any materials do fall beyond the protective shield, the contractor shall remove said materials immediately to the satisfaction of the Engineer.

The temporary protective shield, Item 803.0500, shall be in place and accepted prior to the commencement of any work under this item. Contractor shall prepare and submit to the Engineer for review, plans for falsework required for protection of traffic, utilities, adjacent property and areas below the structure.

The use of explosives in any manner whatsoever will not be permitted.

The contractor shall submit to the Engineer, in writing, his proposed method of demolition. Demolition operations shall not begin until his method has been approved by the Engineer. This submission shall include the following:

1. The equipment and method he proposes to use, in detail.

2. The location where he intends to dispose of the demolition debris.

The furnishing of demolition submittal and plans shall not serve to relieve the Contractor of any part of his/her responsibility for the safety of the work or for the successful completion of the work.

CODE 824.9901

HISTORIC TRUSS REHABILITATION

DESCRIPTION:

The work under this item shall consist of field survey and measurement, removal, transportation, storage, rehabilitation; straightening, cleaning, surface preparation and painting; and reinstalling four existing historic wrought iron trusses as noted on the plans. All work shall be performed in accordance with the latest Rhode Island Standard Specifications for Road and Bridge Construction, Amended December 2010 and all applicable compilations of approved specifications, except as amended in this Special Provision and as required by the Engineer.

This work shall also include fabricating new bracing components required for reinstalling the historic trusses as indicated in the plans including: temporary and permanent lateral braces, bearing plates, miscellaneous connection and filler plates and anchor bolts as noted on the plans.

All work for the historic elements shall be carried out in accordance with the Secretary of the Interiors Standards for Rehabilitation.

Wrought iron rehabilitation work under this section shall be performed in accordance with the latest "Design Guide 15: AISC Rehabilitation and Retrofit Guide: A Reference for Historic Shape and Specifications", as otherwise shown on drawings.

Truss rehabilitation work shall include, but not limited, to the following:

Cleaning and shop painting

Straightening southeast end of the south exterior truss and other bent members identified during removal of the trusses.

Pack rust removal and flattening of resulting buckled areas.

Replication and installation of four (4) ornamental end post covers and four (4) end post cover caps.

Incidentals to this item shall include the installation of all shop and field connection assemblies, the design, fabrication, erection and removal of trusses, inspection and testing of damaged areas as necessary and other items as stated herein.

RIDOT Inspection Report, Section 106 Documentation Report by Public Archaeology Laboratory (PAL), Finishes Investigation by Architectural Conservation Services and a Written

Historical and Description Data Report for the Historic American Engineering Record (HAER No. RI-61) on the Atwells Ave. Bridge (Bridge No. 975) are available for viewing from RIDOT.

The new structural steel under this section includes fabrication and erection of structural steel, as shown on drawings including schedules, notes, and details showing size and location of members, typical connections, and types of steel required shall be performed in accordance with the latest American Institute of Steel Construction (AISC) "Code of Standard Practice for Steel Buildings and Bridges", as otherwise shown on drawings.

MATERIALS:

New Structural Steel Shapes, Plates, and Bars: AASHTO M270, Grade 36.

High-Strength Threaded Fasteners: Heavy round head structural bolts, heavy nuts, and hardened washers, complying with ASTM A325.

Shop Painting: All paint materials shall be in accordance with the Special Provisions, and latest Rhode Island Standard Specifications for Road and Bridge Construction, Section 825, except as specifically modified herein. The top coat color shall be “Grayish Reddish Brown”, Munsell Notation 2.5 YR 3/2. A color chip shall be submitted to RIDOT for review.

SUBMITTALS:

The Contractor shall submit complete shop drawings of the proposed truss rehabilitation, including written narrative and drawings describing the proposed methods to accomplish the work, to the Engineer for review and approval. The Contractor shall also submit the shop drawings and design calculations for the system to be employed including analysis for the means and methods of removal, transportation and erection of the trusses, storing, bracing, hoisting diagrams, product data, MSDS, qualifications, welder certifications, methods for straightening, pack rust removal and stress analysis. The analysis shall be performed and stamped by a licensed Professional Engineer registered in the State of Rhode Island and an accredited metallurgist as applicable. The analysis shall demonstrate and ensure that the system will not compromise the stability of the trusses or imposed load on the bridge that will create an overstress condition, compromise the structural integrity of the bridge or its components or subject truss members to force for which they were not designed during removal, transport and resetting. At a minimum, the following items shall be submitted for approval as applicable:

<u>Product Data</u> Submit product data or manufacturer's specifications and installation instructions for the following products. Include laboratory test reports and other data to show compliance with specifications (including specified standards).

1. New structural steel, including certified copies of mill reports covering chemical and physical properties.

2. Anchor bolts.

3. Unfinished threaded fasteners.

4. High-strength bolts, including nuts and washers.

5. Paint system including pack rust removal.

6. Ornamental end post covers and caps, including attachment details.

Sample Color Prototype Prior to shop painting, the Contractor shall submit to the RIDOT one sample color prototype for the truss structure. The prototype shall be submitted sufficiently in advance to allow for review and approval of color and texture of the painted material. The Contractor shall also provide in writing to the Engineer, surface preparation and cleaning methods and application methods. The prototype must be approved in writing by the Engineer and in consultation with the RIDOT Preservation Specialist.

Material Safety Data Sheets (MSDS) Submit MSDS for the paint system.

Qualifications The steel fabricator/repair specialist must be pre-qualified by RIDOT or its representative for the historic truss rehabilitation after providing the following necessary information:

1. A minimum of 5 years of documented experience in restoring historic steel or iron bridge structures with a minimum of 3 successfully completed projects of comparable nature and scale. Documentation shall include: date of project, location, bridge owner, and duration of project

2. A minimum of 10 years of documented experience in conducting heat straightening and pack rust removal on comparable bridge structures. Experience documentation shall include: date of project, location, bridge owner, number and type of members straightened, and duration of project.

CONSTRUCTION METHODS:

Historic Trusses

Due to the historical significance of the trusses, special care shall be taken during their removal, repair, storage, transportation, erection and reinstallation to protect them from damage.

Field Survey and Measurements: Check actual locations of bridge seats, walls and other construction to which truss framing must fit, by accurate field measurements before fabrication; show recorded measurements on final shop drawings.

Damage Assessment: Suspected areas of damage shall be called to the attention of the Engineer and shall be inspected by visual inspection method as applicable. Photo documentation shall be taken and submitted to Engineer along with a description and details (as necessary) of the methods proposed to make repairs. The Contractor shall identify and document all damaged areas and provide this information to the Engineer prior to initiation of repair and /or straightening.

In order to prevent warping, fracturing or other damage, trusses shall be maintained approximately level and in an upright position (vertical) at all times. Trusses shall be set on dunnage centered under each end bearing, and braced laterally to hold them plumb. Any damage resulting from the Contractor's operations or negligence shall be repaired to the satisfaction of the Engineer at the sole expense of the Contractor.

The Contractor's attention is directed to the fact that plans for the existing trusses and other original metal components of the bridges indicated that they were fabricated during 1875. Physical properties of the metals cannot be expected to be consistent with those of modern day steels. The Contractor shall conduct a sufficient number of non-destructive tests to determine the metal properties as needed to design his straightening methods.

Inspection by non-destructive testing shall be approved by the Engineer. Copies of the documentation shall be submitted to the Engineer for approval before beginning repairs.

Straightening of bent bridge member shall be completed by heat straightening, with or without jacking, as approved by the Engineer.

Jacks, come-alongs or other force application devices shall be gauged and calibrated so that the force exerted by the device may be controlled and measured. No external force shall be applied to the structure by the Contractor unless it is measured.

Magnitude of Jacking Forces: Jacking shall be limited so that the maximum bending moment shall be less than the plastic moment capacity of the member or major bending element. For local damage, the jacking force shall be limited to 50 percent of initial yield of the element. The jacking force shall be adjusted so that the sum of jacking-induced moments and estimated residual moments shall be less than 50 percent of the plastic moment capacity of the member.

Control of jacking forces: The contractor shall determine and document the maximum jacking force for the damaged location, and the proposed sequence of jacking. Copies of the documentation shall be submitted to the Engineer for approval before beginning repairs. Modifications due to changing condition shall be submitted to the Engineer. The maximum jacking force may be controlled by measuring the deflection resulting from the jacking force.

The calibration of jacks shall be performed and documented.

Jacking force shall be monitored to insure that limits are not exceeded.

Heat straightening or pack rust removal methods shall be designed by, and the work shall be conducted under the direct supervision of a qualified person(s) in heat straightening historic iron members. Temperature measuring devices shall be calibrated. Heat application shall be checked with temperature crayons or other approved means.

Prior to painting, surface rust and pack rust shall be removed by Abrasive Blast Cleaning in accordance with Section 825.03.2 of the RI Standard Specifications and by other means including procedure designed specifically to remove pack rust, all as approved by the Engineer.

The Contractor shall contact the RIDOT Historic Preservation Specialist (HPS) at least three days prior to commencing work in order to properly coordinate schedules. The HPS will be given the opportunity to be present during straightening and pack rust removal work.

Provide only those holes required for the permanent truss bolted connections as shown on final approved shop drawings. All required holes within the historic iron bridge members shall be made by drilling only. The Contractor shall not make new holes for temporary connections. For all visible connections on the trusses, round bolt heads shall be exposed to view (nuts and washers shall be concealed)..

The Contractor shall replicate broken and missing cast iron ornamental end post covers and caps, matching their original design. Attachment of the end post covers and caps shall match the original as closely as possible. No visible connections shall be exposed to view.

Keep trusses supported off the ground. Do not store materials on structure in a manner that might cause distortion or damage to trusses or supporting structures. Any damage to the material or structures caused by the Contractor's operation shall be repaired or replaced to the satisfaction of the Engineer, at no additional cost to the State.

Deliver materials to the site at such intervals to ensure uninterrupted progress of work. Deliver anchor bolts and anchorage devices, which are to be embedded in cast-in-place concrete or masonry, in ample time so that work will not be delayed.

New Structural Steel

Shop Fabrication and Assembly: Fabricate and assemble structural assemblies in shop to greatest extent possible. Fabricate items of structural steel in accordance with AISC Specifications and as indicated on final approved shop drawings.

Shop Painting: This work shall be performed in conformance with the Special Provisions, and latest Rhode Island Standard Specifications for Road and Bridge Construction, Section 825, except as specifically modified herein.

Connections: Weld or bolt shop connections, as indicated.

Bolt field connections. No field welded connections will be permitted unless approved by the Engineer.

High-Strength Bolted Connections: Install high-strength threaded fasteners in accordance with AISC "Specifications for Structural Joints using ASTM A325 or A490 Bolts".

Welded Construction: Comply with latest AWS 1.5 Code for procedures, appearance and quality of welds, and methods used in correcting welding work.

Cut, drill, or punch holes perpendicular to metal surfaces. Do not flame-cut holes or enlarge holes by burning and reaming. Drill holes in bearing plates.

METHOD OF MEASUREMENT: This item will not be measured for payment.

BASIS OF PAYMENT: "TRUSS REHABILITATION" will be paid for at the contract "Lump Sum" price as listed in the Proposal. The price so stated shall constitute full compensation for all labor, materials, equipment, access, measurement, survey, removal, erection, transportation, storage, installation, repairs, straightening of members, pack rust removal, castings, temporary and permanent bracing, anchor bolts, testing, surface preparation and painting and all other incidentals required to finish the work, as described above and elsewhere in the Contract Documents and as directed by the Engineer, complete in place and accepted by the Engineer.

CODE 906.9901
GRANITE RAMP STONE – MODIFIED 7" WIDTH

CODE 906.9902
3' GRANITE TRANSITION CURB STANDARD 7.3.1 –MODIFIED 7" WIDTH

CODE 906.9903
6' GRANITE CURB, QUARRY SPLIT SPECIAL TRANSITION STANDARD 7.3.2 – MODIFIED 7" WIDTH

CODE 906.9904
GRANITE WHEELCHAIR RAMP 6' CURB STANDARDS 7.3.3, 43.3.0 AND 43.3.1- MODIFIED 7" WIDTH

CODE 906.9905
GRANITE CURB, QUARRY SPLIT 2 FOOT CORNERS, STANDARD 7.3.4 – MODIFIED 7" WIDTH

CODE 906.9906
GRANITE WHEELCHAIR RAMP 3' CURB STANDARDS 7.3.3, 43.3.0 AND 43.3.1- MODIFIED 7" WIDTH

DESCRIPTION: The granite curbing shall conform to City of Providence standards, which requires a curb width of seven inches.

The Description shall conform to Subsection 906.01; Description of the Rhode Island Department of Transportation, Standard Specifications for Road and Bridge Construction, amended 2010, with all revisions.

MATERIALS: Materials shall conform to Subsection 906.02; Materials of the Rhode Island Department of Transportation, Standard Specifications for Road and Bridge Construction, amended 2010, with all revisions. Curb width shall be seven inches.

CONSTRUCTION METHODS: Construction Methods shall conform to Subsection 906.03; Construction Methods of the Rhode Island Department of Transportation, Standard Specifications for Road and Bridge Construction, amended 2010, with all

Table of Contents - Distribution of Quantities

Project Name - Atwells Ave Bridge No. 975 Replacement
Estimate Name - Addendum to PS&E submission
R.I. Contract No. - 2013-DF-109
FAP Nos: FLD-EMRG(056)

ItemCode	Description	Page
201.0401	REMOVE AND DISPOSE GRANITE CURB	1
201.0402	REMOVE AND DISPOSE CONCRETE CURB	1
201.0403	REMOVE AND DISPOSE SIDEWALKS	1
201.0409	REMOVE AND DISPOSE FLEXIBLE PAVEMENT	1
201.0415	REMOVE AND DISPOSE GUARDRAIL AND POST ALL TYPES	2
201.0419	REMOVE AND DISPOSE FENCE	2
201.0428	REMOVE AND DISPOSE FRAME AND GRATE OR FRAME AND COVER	2
201.0450	REMOVE AND STOCKPILE ON SITE GRANITE CURB	2
201.0453	REMOVE AND STOCKPILE ON SITE FRAME GRATES AND COVERS	2
201.0608	REMOVE AND STOCKPILE DIRECTIONAL REGULATORY AND WARNING SIGNS	3
201.0616	REMOVE AND DISPOSE LIGHT STANDARD FOUNDATIONS	3
201.9901	REMOVE AND DISPOSE RIPRAP	3
201.9902	REMOVE AND SALVAGE TRAFFIC SIGNAL SYSTEM	3
201.9903	REMOVE AND STOCKPILE TEMPORARY MEDIAN BARRIER	4
202.0100	EARTH EXCAVATION	4
202.0201	ROCK EXCAVATION MECHANICAL	4
202.0700	COMMON BORROW	4
202.0800	GRAVEL BORROW	5
203.0110	STRUCTURAL EXCAVATION EARTH DRY	5
203.0310	STRUCUTRAL EXCAVATION MASONRY	5
204.0100	TRIMMING AND FINE GRADING	5
206.0220	SILT FENCE STANDARD 9.2.0	6
212.2000	CLEANING AND MAINTENANCE OF EROSION CONTROLS	6
302.0100	GRAVEL BORROW SUBBASE COURSE	6
401.9901	CLASS 19 HMA	6
401.9902	MODIFIED CLASS 9.5 HMA	7
403.0300	ASPHALT EMULSION TACK COAT	7
410.1000	TEMPORARY PATCHING MATERIAL/TRENCHES	7
701.0412	REINFORCED CONCRETE PIPE M 170 CLASS III 12 INCH	7
701.9900	**INSULATED 12 INCH DUCTILE IRON WATER PIPE INSTALLED ON BRIDGE**	**8**
701.9901	**UNINSULATED WATER SYSTEM IMPROVEMENTS OFF BRIDGE**	**8**
701.9902	INSTALL 12 INCH GAS MAIN ACROSS BRIDGE AND BELOW GROUND	8
701.9903	**FURNISH AND INSTALL INSULATED 12" WATER FITTINGS**	**8**
701.9904	INSULATED 12 INCH DUCTILE IRON WATER PIPE RESTRAINED JOINT, OFF BRIDGE	8
701.9905	AIR RELEASE CORPORATION	9
701.9906	**12 INCH INSERTION VALVE AND BOX**	**9**
701.9907	ELECTRICAL SYSTEM IMPROVEMENTS	9
701.9908	COMMUNICATIONS SYSTEM IMPROVEMENTS	9
702.0517	**FRAME AND GRATE, STANDARD 6.3.2**	**9**
702.0521	FRAME AND COVER STANDARD 6.2.0	9
702.0605	PRECAST CATCH BASIN 4' DIAMETER STANDARD 4.4.0	10
702.0713	PRECAST CONCRETE DROP INLET WITH APRON STONE STANDARD 4.5.1	10
702.9901	GRANITE APRON STONE 38" STANDARD 7.3.7 - MODIFIED 7" WIDTH	10
707.0900	ADJUST MANHOLES TO GRADE	10
707.0950	ADJUST TELEPHONE MANHOLE TO GRADE	10
707.0955	ADJUST ELECTRICAL MANHOLE TO GRADE	11
707.1000	ADJUST SANITARY MANHOLE	11
708.9041	CLEANING CATCH BASINS ALL TYPES AND SIZES	11
711.9901	PAVED WATERWAY	11
712.0100	WATER GATE BOX	11
713.8269	ADJUST WATER GATE BOXES TO GRADE	12
713.8300	ADJUST GAS GATE BOXES TO GRADE	12

Table of Contents - Distribution of Quantities

Project Name - Atwells Ave Bridge No. 975 Replacement
Estimate Name - Addendum to PS&E submission
R.I. Contract No. - 2013-DF-109
FAP Nos: FLD-EMRG(056)

ItemCode	Description	Page
800.9900	ATWELLS AVE. BRIDGE NO. 975 - SUPERSTRUCTURE	12
800.9901	ATWELLS AVE. BRIDGE NO. 975 - SUBSTRUCTURE	12
803.0500	TEMPORARY DECK UNDERSIDE AND SIDE PROTECTIVE SHIELDING	12
803.9901	REMOVE AND DISPOSE EXISTING SUPERSTRUCTURE	12
803.9902	REMOVE AND DISPOSE EXISTING SUBSTRUCTURE	13
819.9901	ADHESIVE ANCHOR BOLT (3/8")	13
824.9901	REHABILITATION EXISTING HISTORIC BRIDGE TRUSS	13
901.9901	STEEL THRIE BEAM GUARDRAIL SINGLE FACE RI STD 34.5.3	13
901.9902	THRIE BEAM GUARDRAIL END TREATMENT- ENERGY ABSORBING	13
901.9903	THRIE BEAM GUARDRAIL END POST CONNECTION	13
903.9901	ALUMINUM PICKET FENCE	14
903.9902	TEMPORARY CHAIN LINK FENCE	14
904.9901	REMOVE AND RESET PRIVATE UTILITY POLE	14
905.0110	PORTLAND CEMENT SIDEWALK MONOLITHIC STANDARD 43.1.0	14
905.0115	PORTLAND CEMENT CONCRETE DRIVEWAY STANDARD 43.5.0	15
905.0122	BITUMINOUS SIDEWALK TYPE I-2 STANDARD 43.2.0	15
906.0116	GRANITE CURB, QUARRY SPLIT 2 FOOT CORNERS, STANDARD 7.3.4	15
906.0230	CEMENT CONCRETE SLOPE FACE CURB PRECAST STRAIGHT STANDARD 7.2.0	15
906.0700	REMOVE, HANDLE, HAUL TRIM RESET CURB EDGING, STRAIGHT, CIRCULAR ALL TYPES	15
906.9901	GRANITE RAMP STONE - MODIFIED 7" WIDTH	16
906.9902	3' GRANITE TRANSITION CURB STANDARD 7.3.1 - MODIFIED 7" WIDTH	16
906.9903	6' GRANITE CURB, QUARRY SPLIT SPECIAL TRANSITION STANDARD 7.3.2 - MODIFIED 7" WIDTH	16
906.9904	GRANITE WHEELCHAIR RAMP 6' CURB STANDARDS 7.3.3, 43.3.0 AND 43.3.1 - MODIFIED 7" WIDTH	16
906.9905	GRANITE CURB, QUARRY SPLIT 2 FOOT CORNERS, STANDARD 7.3.4 - MODIFIED 7" WIDTH	17
906.9906	GRANITE WHEELCHAIR RAMP 3' CURB STANDARDS 7.3.3, 43.3.0 AND 43.3.1 - MODIFIED 7" WIDTH	17
906.9907	**** ITEM DELETED ****	**17**
907.0100	WATER FOR DUST CONTROL	17
907.0200	CALCIUM CHLORIDE FOR DUST CONTROL (PROJECT WIDE)	18
911.3100	REMOVE AND RESET WET STONE MASONRY RETAINING WALLS STANDARD 10.1.0	18
914.5010	FLAGPERSONS	18
914.5020	FLAGPERSONS - OVERTIME	18
919.0101	TEST PITS	18
922.0100	TEMPORARY CONSTRUCTION SIGNS STANDARD 29.1.0 AND 27.1.1	19
923.0105	DRUM BARRICADE STANDARD 26.2.0	19
923.0125	PLASTIC PIPE TYPE III BARRICADE STANDARD 26.3.1	20
923.0200	FLUORESCENT TRAFFIC CONES STANDARD 26.1.0	20
926.0130	PRECAST MEDIAN BARRIER FOR TEMPORARY TRAFFIC CONTROL STANDARD 40.5.0	20
929.0110	FIELD OFFICE	20
931.0110	CLEANING AND SWEEPING PAVEMENT	21
932.0200	FULL-DEPTH SAWCUT OF BITUMINOUS PAVEMENT	21
932.0220	FULL DEPTH SAWCUT OF BITUMINOUS SIDEWALK/DRIVEWAY	21
932.0230	FULL DEPTH SAWCUT OF PORTLAND CEMENT CONCRETE SIDEWALK/DRIVEWAY	21
935.0400	REMOVING BITUMINOUS PAVEMENT BY MICRO MILLING	22
936.0110	MOBILIZATION	22
937.0200	MAINTENANCE AND MOVEMENT TRAFFIC PROTECTION	22
942.0100	DETECTABLE WARNING SYSTEMS STANDARD 48.1.0	22

Table of Contents - Distribution of Quantities

Project Name - Atwells Ave Bridge No. 975 Replacement
Estimate Name - Addendum to PS&E submission
R.I. Contract No. - 2013-DF-109
FAP Nos: FLD-EMRG(056)

ItemCode	Description	Page
T14.9902	1 WAY BRACKET MOUNTED LED PEDESTRIAN SIGNAL HEAD WITH COUNTDOWN TIMER 12 INCH	33
T15.0100	DIRECTIONAL REGULATORY AND WARNING SIGNS	33
T20.0006	6 INCH WHITE FAST - DRYING WATERBORNE PAVEMENT MARKING PAINT	33
T20.0106	6 INCH YELLOW FAST - DRYING WATERBORNE PAVEMENT MARKING PAINT	33
T20.0820	FAST DRYING WATERBONE PAVEMENT ARROW - STRAIGHT, LEFT, RIGHT, OR COMBINED STANDARD 20.1.0	34
T20.1000	REMOVE EXISTING PAVEMENT MARKINGS	34
T20.2004	4 INCH EPOXY RESIN PAVEMENT MARKINGS WHITE	34
T20.2012	12 INCH EPOXY RESIN PAVEMENT MARKINGS WHITE	35
T20.2014	4 INCH EPOXY RESIN PAVEMENT MARKINGS YELLOW	35
T20.2016	6 INCH EPOXY RESIN PAVEMENT MARKINGS YELLOW	35
T20.2020	EPOXY RESIN PAVEMENT ARROW - STRAIGHT, LEFT, RIGHT, OR COMBINED STANDARD 20.1.0	35
T20.2022	EPOXY RESIN PAVEMENT MARKING WORD "ONLY" STANDARD 20.1.0	36
T20.9901	24 INCH EPOXY RESIN PAVEMENT MARKINGS WHITE	36
T20.9902	12 INCH EPOXY RESIN PAVEMENT MARKINGS YELLOW	36
T20.9903	EPOXY RESIN PAVEMENT MARKING BICYCLE SYMBOL	37
T20.9904	EPOXY RESIN PAVEMENT MARKING WORD "XING"	37
T20.9905	12 INCH YELLOW FAST-DRYING WATERBORNE PAVEMENT MARKING PAINT	37
T20.9906	REMOVING EXISTING PAVEMENT MARKINGS - SYMBOLS	37
T20.9907	EPOXY RESIN PAVEMENT MARKING - YIELD LINE SYMBOL	38
906.0720	**RESET STOCKPILE CURB STRAIGHT CIRCULAR CORNER RETURNS**	**38**

Distribution of Quantities

Project Name - Atwells Ave Bridge No. 975 Replacement
Estimate Name - Addendum to PS&E submission
R.I. Contract No. - 2013-DF-109
FAP Nos: FLD-EMRG(056)

Item No.	Item Code	Description	UM	Qty.	Pay Code	Seq. No.
029	**701.0412 Cont.**	**CLASS III 12 INCH**				
		ATWELLS AVENUE				
		STATION 11+13 TO 11+23 RT		8.00	0011	01
		Item 701.0412 Total:		**8.00**		
030	**701.9900**	**INSULATED 12 INCH DUCTILE IRON WATER PIPE INSTALLED ON BRIDGE**	**LS**			
		ATWELLS BRIDGE				
		UNDERNEATH			0011	01
		ATWELLS BRIDGE				
		UNDERNEATH		1.00	0011	01
		Item 701.9900 Total:		**1.00**		
031	**701.9901**	**UNINSULATED WATER SYSTEM IMPROVEMENTS OFF BRIDGE**	**LS**			
		ATWELLS BRIDGE				
		EAST AND WEST APPROACHES			0011	01
		ATWELLS BRIDGE				
		EAST AND WEST APPROACHES		1.00	0011	01
		Item 701.9901 Total:		**1.00**		
032	**701.9902**	**INSTALL 12 INCH GAS MAIN ACROSS BRIDGE AND BELOW GROUND**	**LS**			
		ATWELLS BRIDGE				
		UNDERNEATH AND APPROACHES		1.00	0011	01
		Item 701.9902 Total:		**1.00**		
033	**701.9903**	**FURNISH AND INSTALL INSULATED 12" WATER FITTINGS**	**LBS**			
		ATWELLS AVE				
		WATER SYSTEM IMPROVEMENTS			0011	01
		ATWELLS AVENUE				
		WATER SYSTEM IMPROVEMENTS		1,280.00	0011	01

Distribution of Quantities

Project Name - Atwells Ave Bridge No. 975 Replacement
Estimate Name - Addendum to PS&E submission
R.I. Contract No. - 2013-DF-109
FAP Nos: FLD-EMRG(056)

Item No.	Item Code	Description	UM	Qty.	Pay Code	Seq. No.
033	**701.9903 Cont.**	**Item 701.9903 Total:**		**1,280.00**		
034	**701.9904**	**INSULATED 12 INCH DUCTILE IRON WATER PIPE RESTRAINED JOINT, OFF BRIDGE**	**LF**			
		ATWELLS AVE				
		EAST AND WEST BRIDGE		22.00	0011	01

Distribution of Quantities

Project Name - Atwells Ave Bridge No. 975 Replacement
Estimate Name - Addendum to PS&E submission
R.I. Contract No. - 2013-DF-109
FAP Nos: FLD-EMRG(056)

Item No.	Item Code	Description	UM	Qty.	Pay Code	Seq. No.
034	701.9904 Cont.	ABUTMENT APPROACH				
		Item 701.9904 Total:		**22.00**		
035	701.9905	**AIR RELEASE CORPORATION**	**EACH**			
		ATWELLS AVENUE				
		STA 12+24 LT		1.00	0011	01
		Item 701.9905 Total:		**1.00**		
036	701.9906	**12 INCH INSERTION VALVE AND BOX**	**EACH**			
		ATWELLS AVENUE				
		STA 11+64 LT			0011	01
		STA 13+58 LT			0011	01
		ATWELLS AVENUE				
		STA 11+64 LT		1.00	0011	01
		STA 13+58 LT		1.00	0011	01
		Item 701.9906 Total:		**2.00**		
037	701.9907	**ELECTRICAL SYSTEM IMPROVEMENTS**	**LS**			
		ATWELLS AVENUE				
		STA 11+80 TO 13+20 LT		1.00	0011	01
		Item 701.9907 Total:		**1.00**		
038	701.9908	**COMMUNICATIONS SYSTEM IMPROVEMENTS**	**LS**			
		ATWELLS AVENUE				
		STA 11+80 TO 13+20 LT.		1.00	0011	01
		Item 701.9908 Total:		**1.00**		
039	702.0517	**FRAME AND GRATE, STANDARD 6.3.2**	**EACH**			
		ATWELLS AVENUE				
		STATION 11+59 LT		1.00	0011	01
		HARRIS AVE AT ROUTE 6 ON-RAMP				
		TRAFFIC CONTROL PLAN 2 (FROM STOCKPILE)		1.00	0011	01

Distribution of Quantities

Project Name - Atwells Ave Bridge No. 975 Replacement
Estimate Name - Addendum to PS&E submission
R.I. Contract No. - 2013-DF-109
FAP Nos: FLD-EMRG(056)

Item No.	Item Code	Description	UM	Qty.	Pay Code	Seq. No.
039	**702.0517 Cont.**	**Item 702.0517 Total:**		**2.00**		
040	**702.0521**	**FRAME AND COVER STANDARD 6.2.0**	**EACH**			
		ATWELLS AVENUE				

Distribution of Quantities

Project Name - Atwells Ave Bridge No. 975 Replacement
Estimate Name - Addendum to PS&E submission
R.I. Contract No. - 2013-DF-109
FAP Nos: FLD-EMRG(056)

Item No.	Item Code	Description	UM	Qty.	Pay Code	Seq. No.
075	906.9904 Cont.	STATION 13+14 LT		1.00	0011	01
		STATION 13+21 LT		1.00	0011	01
		Item 906.9904 Total:		**5.00**		
076	906.9905	**GRANITE CURB, QUARRY SPLIT 2 FOOT CORNERS, STANDARD 7.3.4 - MODIFIED 7" WIDTH**	**EACH**			
		ATWELLS AVENUE				
		STATION 13+15 RT		1.00	0011	01
		STATION 13+28 RT		1.00	0011	01
		Item 906.9905 Total:		**2.00**		
077	906.9906	**GRANITE WHEELCHAIR RAMP 3' CURB STANDARDS 7.3.3, 43.3.0 AND 43.3.1 - MODIFIED 7" WIDTH**	**EACH**			
		ATWELLS AVENUE				
		STATION 11+30 RT		1.00	0011	01
		STATION 11+33 RT		1.00	0011	01
		STATION 13+18 RT		1.00	0011	01
		STATION 13+25 RT		1.00	0011	01
		Item 906.9906 Total:		**4.00**		
078	906.9907	**GRANITE CURB, QUARRY SPLIT STRAIGHT, STANDARD 7.3.0 - MODIFIED 7" WIDTH**	**LF**			
		HARRIS AVE AT ROUTE 6 ON-RAMP				
		HIGHWAY GENERAL PLAN 2			0011	01
		Item 906.9907 Total:	****DELETED****			
079	907.0100	**WATER FOR DUST CONTROL**	**MGAL**			
		ATWELLS AVENUE				
		STATION 10+99 TO 12+12		3.00	0011	01
		STATION 12+88 TO 14+05		3.00	0011	01

Distribution of Quantities

Project Name - Atwells Ave Bridge No. 975 Replacement
Estimate Name - Addendum to PS&E submission
R.I. Contract No. - 2013-DF-109
FAP Nos: FLD-EMRG(056)

Item No.	Item Code	Description	UM	Qty.	Pay Code	Seq. No.
163	**T20.9906 Cont.**	**Item T20.9906 Total:**		**8.00**		
164	**T20.9907**	**EPOXY RESIN PAVEMENT MARKING - YIELD LINE SYMBOL**	**EACH**			
		HARRIS AVE AT ROUTE 6 ON-RAMP				
		TRAFFIC CONTROL PLAN 2		9.00	0011	01
		Item T20.9907 Total:		**9.00**		
165	**906.0720**	**RESET STOCKPILE CURB STRAIGHT CIRCULAR CORNER RETURNS**	**LF**			
		HARRIS AVE AT ROUTE 6 ON-RAMP				
		HIGHWAY GENERAL PLAN 2		43.00	0011	01
		Item 906.0720 Total:		**43.00**		

FED. ROAD DIV. NO.	STATE	FEDERAL AID PROJECT NO.	FISCAL YEAR	SHEET NO.	TOTAL SHEETS
	RI	FLD-EMRG(056)	2014	3	62

GENERAL NOTES

1. ALL CONSTRUCTION INDICATED ON THESE PLANS SHALL BE IN ACCORDANCE WITH:
   - THE AMENDED DECEMBER 2010 EDITION OF AND SUPPLEMENTS TO THE RHODE ISLAND DEPARTMENT OF TRANSPORTATION STANDARD SPECIFICATIONS FOR ROAD AND BRIDGE CONSTRUCTION (RI STANDARD SPECIFICATIONS).
   - THE AMERICAN ASSOCIATION OF STATE HIGHWAY AND TRANSPORTATION OFFICIALS (AASHTO) LRFD BRIDGE CONSTRUCTION SPECIFICATIONS, 3RD EDITION, INCLUDING THE LATEST INTERIMS.
   - THE SPECIFICATIONS ACCOMPANYING THESE PLANS.
2. DIMENSIONS, STATIONS, AND ELEVATIONS ARE SHOWN TO THE NEAREST ONE-HUNDREDTH OF A FOOT OR ONE-EIGHTH OF AN INCH, EXCEPT STRUCTURAL STEEL DIMENSIONS WHICH ARE TO THE NEAREST ONE-SIXTEENTH OF AN INCH.
3. ANGLES ARE SHOWN TO THE NEAREST SECOND.
4. ALL WORKING POINTS ARE SHOWN AT THE CENTERLINES OF BEARINGS OF ABUTMENTS AND AT THE CENTERLINES OF PIERS, UNLESS OTHERWISE NOTED.
5. ALL ABUTMENTS AND WALLS ARE DRAWN LOOKING AT THE EXPOSED FACES.
6. THE EXISTING UTILITIES SHOWN ON THE PLANS ARE APPROXIMATE AND WERE LOCATED USING THE BEST AVAILABLE INFORMATION. NO BUILDING SERVICE CONNECTIONS (ELECTRIC, TELEPHONE, GAS, WATER, SANITARY AND OTHERS) ARE SHOWN. THE CONTRACTOR IS TO ASSUME THAT SERVICES TO ALL BUILDINGS ARE PRESENT. IT SHALL BE THE CONTRACTOR'S RESPONSIBILITY TO COORDINATE WITH THE UTILITY COMPANIES PRIOR TO COMMENCING THE WORK.
7. BOTH FEDERAL AND STATE LAW (RI. GENERAL LAW 39-1.2) REQUIRE NOTIFICATION OF APPROPRIATE UTILITY COMPANIES BEFORE DIGGING, TRENCHING, BLASTING, DEMOLISHING, BORING, BACK FILLING, GRADING, LANDSCAPING, OR OTHER EARTH MOVING OPERATIONS. IT IS THE CONTRACTOR'S RESPONSIBILITY TO NOTIFY ALL UTILITY COMPANIES (INCLUDING THROUGH THE "DIG SAFE" PROGRAM) TO ENSURE THAT ALL UTILITIES, BOTH UNDERGROUND AND OVERHEAD, HAVE BEEN MARKED BEFORE COMMENCEMENT OF SUCH WORK. THE CONTRACTOR SHOULD UNDERSTAND THAT NOT ALL UTILITIES SUBSCRIBE TO THE "DIG SAFE" PROGRAM. ANY DAMAGE TO EXISTING UTILITIES MARKED IN THE FIELD, OR AS A RESULT OF FAILING TO CONTACT THE APPROPRIATE UTILITY COMPANIES, SHALL BE REPAIRED OR REPLACED (AS DEEMED APPROPRIATE BY THE STATE AND/OR THE IMPACTED UTILITY COMPANY) AT NO ADDITIONAL COST TO THE STATE.
8. ALL ITEMS NOT REFERENCED FOR MODIFICATION WILL BE "EXISTING TO REMAIN" UNLESS OTHERWISE DIRECTED BY THE ENGINEER.
9. ANY STRUCTURAL MEMBERS DAMAGED DURING REMOVAL OF DETERIORATED CONCRETE, SHALL BE REPAIRED AT THE CONTRACTOR'S EXPENSE, TO THE ENGINEER'S SATISFACTION.
10. ANY DAMAGE TO EXISTING STATE OR PRIVATE PROPERTY CAUSED BY THE CONTRACTOR'S OPERATIONS SHALL BE REPAIRED BY THE CONTRACTOR AT NO ADDITIONAL COST THE STATE.
11. THE CONTRACTOR SHALL PLACE ALL EQUIPMENT AND MATERIAL IN HIS FIELD YARD OR AT A SITE APPROVED BY THE ENGINEER. THE EQUIPMENT AND MATERIAL SHALL BE PLACED IN A STORAGE AREA SO AS NOT TO CAUSE A SAFETY HAZARD.
12. IT SHALL BE THE CONTRACTOR'S RESPONSIBILITY TO FIELD VERIFY ALL ELEVATIONS, DIMENSIONS, DETAILS, ANGLES, STRUCTURAL MEMBER SIZES, AND LAYOUTS AS SHOWN ON THESE PLANS. THIS PRIOR FIELD VERIFICATION IS ESPECIALLY PERTINENT FOR PRE-FABRICATED STRUCTURAL ITEMS AND WORK IN THE VICINITY OF UTILITIES.
13. TEMPORARY PROTECTIVE SHIELD
    DEBRIS SHIELDS SHALL BE PROVIDED AND INSTALLED TO PROTECT RIVER, MOTORISTS, PEDESTRIANS, ETC. FROM ANY DEMOLITION OR CONSTRUCTION DEBRIS.
14. EXISTING DETAILS, DIMENSIONS AND ELEVATIONS PROVIDED IN THIS PLAN SET HAVE BEEN OBTAINED FROM THE ORIGINAL DRAWINGS AND LIMITED SURVEY. FIELD CONDITIONS MAY EXIST WHICH DEVIATE FROM THE TYPICAL AND THEORETICAL DIMENSIONS SHOWN ON THE PLANS. THE CONTRACTOR SHALL TAKE ALL FIELD MEASUREMENTS AND SURVEY NECESSARY TO ASSURE PROPER FIT OF THE FINISHED WORK AND SHALL ASSUME FULL RESPONSIBILITY FOR THEIR ACCURACY.
15. THE CONTRACTOR SHALL TAKE THE PROPER PRECAUTION TO ENSURE THE STABILITY OF ALL STRUCTURAL ELEMENTS DURING CONSTRUCTION UNTIL THE TOTAL STRUCTURE IS IN PLACE.
16. CONTRACTOR SHALL CALL DIG SAFE AT LEAST 72 HOURS PRIOR TO STARTING THE WORK TO VERIFY LOCATIONS OF EXISTING UTILITIES.
17. CONTRACTOR SHALL BE RESPONSIBLE FOR ALL COORDINATION WITH UTILITY COMPANIES.
18. COORDINATES USED ON THESE PLANS ARE BASED ON THE STATEWIDE COORDINATE SYSTEM, THE NORTH AMERICAN DATUM OF 1983 (NAD 83).
19. TOPOGRAPHIC CONDITIONS WERE OBTAINED FROM AERIAL PHOTOGRAMMETRY. ACCURACY OF VERTICAL TOPOGRAPHY IS WITHIN 10% OF ONE-HALF THE CONTOUR INTERVAL.
20. FOR BENCH MARKS AND TIES SEE HIGHWAY LOCATION PLANS.

ADDENDUM NO. 1

DESIGN DATA

1. DESIGN SPECIFICATIONS
   - THE AASHTO LRFD BRIDGE DESIGN SPECIFICATIONS, FIFTH EDITION, 2010, INCLUDING ALL INTERIM REVISIONS TO DATE.
   - THE RHODE ISLAND LRFD BRIDGE DESIGN MANUAL 2007 EDITION INCLUDING ALL REVISIONS TO DATE.
   - ALL OTHER APPLICABLE DESIGN SPECIFICATIONS ARE REFERENCED IN SECTION 1 OF THE RHODE ISLAND LRFD BRIDGE DESIGN MANUAL DATED 2004.
   - THE AMENDED DECEMBER 2010 EDITION OF AND SUPPLEMENTS TO THE RHODE ISLAND DEPARTMENT OF TRANSPORTATION STANDARD SPECIFICATIONS FOR ROAD AND BRIDGE CONSTRUCTION (RI STANDARD SPECIFICATIONS).
   - IN CASE OF CONFLICT, THE RHODE ISLAND LRFD BRIDGE DESIGN MANUAL SHALL GOVERN.
2. LOAD MODIFIERS

   THE LOAD MODIFIERS FOR THIS PROJECT ARE AS FOLLOWS:
   - THE LOAD MODIFIER FOR DUCTILITY SHALL BE TAKEN AS 1.0 FOR ALL LIMIT STATES.
   - THE LOAD MODIFIER FOR REDUNDANCY SHALL BE TAKEN AS 1.0.
   - THE LOAD MODIFIER FOR OPERATIONAL IMPORTANCE SHALL BE TAKEN AS 1.0.
3. LOAD FACTORS

   ALL LOAD FACTORS SHALL BE IN ACCORDANCE WITH THE AASHTO LRFD BRIDGE DESIGN SPECIFICATIONS, EXCEPT AS MODIFIED IN THE RHODE ISLAND LRFD BRIDGE DESIGN MANUAL (SPECIFIED BELOW).
   - THE LOAD FACTOR FOR LIVE LOAD FOR THE EXTREME EVENT I SHALL BE TAKEN AS ZERO.
   - THE LOAD FACTOR FOR DEAD LOAD FOR THE EXTREME EVENT I AND EXTREME EVENT II SHALL BE TAKEN AS 1.0
   - THE LOAD FACTOR FOR SETTLEMENT FOR ALL LIMIT STATES SHALL BE TAKEN AS 1.0
4. LIVE LOADS
   - THE DESIGN VEHICULAR LIVE LOAD SHALL BE THE HL-93 DESIGNATION ADJUSTED FOR DYNAMIC LOAD ALLOWANCE AND MULTIPLE PRESENCE FACTOR.
   - RHODE ISLAND LEGAL LOADS
   - THE DESIGN PEDESTRIAN LIVE LOAD SHALL BE 75 PSF.
5. WIND LOADING DESIGN DATA

   THE WIND LOADING DESIGN SHALL BE IN ACCORDANCE WITH THE AASHTO LRFD BRIDGE DESIGN SPECIFICATIONS, THE RHODE ISLAND LRFD BRIDGE DESIGN MANUAL, AND AS MODIFIED HEREIN.
   - EXCEPT DURING CONSTRUCTION, THE DESIGN WIND PRESSURE IS BASED ON A DESIGN WIND SPEED OF 120 MPH.
   - THE DESIGN WIND PRESSURES DURING CONSTRUCTION SHALL BE AS SPECIFIED UNDER THE NOTES TITLED "GENERAL NOTES REGARDING TEMPORARY CONSTRUCTION CONDITIONS".
6. THERMAL DESIGN FORCE DATA

   UNIFORM TEMPERATURE EFFECTS HAVE BEEN TAKEN INTO CONSIDERATION IN ACCORDANCE WITH THE PROCEDURE B OF THE AASHTO LRFD BRIDGE DESIGN SPECIFICATIONS. THE MINIMUM DESIGN TEMPERATURE SHALL BE -10 DEGREES F, AND THE MAXIMUM TEMPERATURE SHALL BE 105 DEGREES F.

MATERIALS

STRUCTURAL STEEL:

- AASHTO DESIGNATION M 270, GRADE 50, COLOR GALVANIZED STRINGERS, END DIAPHRAGMS, STIFFENER, PLATES.

REINFORCING STEEL:

- AASHTO DESIGNATION M 31 (ASTM DESIGNATION A 615) GRADE 60.

CONCRETE STRENGTHS:

- CLASS HP 3/8" F'C=5,000 PSI

  EXODERMIC DECK
- CLASS HP 3/4" F'C=5,000 PSI

  ABUTMENT BACKWALL, INFILL WALL, BRIDGE SEAT PEDESTAL
- CLASS XX 3/4" F'C=4,000 PSI

  APPROACH SLAB

HYDRAULIC DATA

WOONASQUATUCKET RIVER
DRAINAGE AREA - 47.8 SQ. MI.

BASIC FLOOD DATA

WOONASQUATUCKET RIVER
DISCHARGE Q (100 YEAR) - 3,090 CFS
HIGH WATER ELEVATION - 15.0 (NAVD 88) FT
MEAN VELOCITY - 4.9 FT/S

REVISIONS		
NO.	DATE	BY
1	4/15/14	VHB

RHODE ISLAND
DEPARTMENT OF TRANSPORTATION

REPLACEMENT OF
ATWELLS AVE. BRIDGE NO. 975

PROVIDENCE, RHODE ISLAND

JOB SPECIFIC
GENERAL NOTES 1

VANASSE HANGEN BRUSTLIN, INC.
TRANSPORTATION LAND DEVELOPMENT
ENVIRONMENTAL SERVICES
PROVIDENCE, RHODE ISLAND

CHECKED BY _____ DATE _____ SCALE _____

\\vhb\proj\Providence\71964.00\cad\st\Atwells\planset\0163J_V1_003_GNOTES-1_ADD01.dwg

FED. ROAD DIV. NO.	STATE	FEDERAL AID PROJECT NO.	FISCAL YEAR	SHEET NO.	TOTAL SHEETS
	RI	FLD-EMRG(056)	2014	5	62

2. ERECTION OF BRIDGE COMPONENTS:

FOR THE ERECTION OF STRUCTURES, THE FOLLOWING SHALL APPLY:

- THE CONTRACTOR SHALL SUBMIT AN ERECTION PLAN THAT PROVIDES COMPLETE DETAILS OF THE PROCESS INCLUDING, BUT NOT LIMITED TO, TEMPORARY SUPPORTS, SCHEDULING AND OPERATION SEQUENCING, CRANE PLACEMENT, AND ASSUMED LOADS AND CALCULATED STRESSES DURING VARYING STAGES OF LIFTING. THIS APPLIES TO STRUCTURES OF ANY KIND. THE CAPACITY OF THE CRANE AND ALL LIFTING AND CONNECTING DEVICES SHALL BE ADEQUATE FOR 125 PERCENT OF THE TOTAL PICK LOAD INCLUDING SPREADERS AND OTHER MATERIALS. THIS FACTOR OF SAFETY SHALL BE IN ADDITION TO ALL MANUFACTURERS' PUBLISHED FACTORS OF SAFETY.
- A REGISTERED PROFESSIONAL ENGINEER, LICENSED IN THE STATE OF RHODE ISLAND, WILL BE REQUIRED TO STAMP THE CONTRACTOR'S ERECTION PLAN.
- THE CONTRACTOR'S PROFESSIONAL ENGINEER WILL BE REQUIRED TO INSPECT AND PROVIDE WRITTEN APPROVAL OF EACH PHASE OF A GIRDER OR TRUSS INSTALLATION, PRIOR TO ALLOWING VEHICLES OR PEDESTRIANS ON OR BELOW THE STRUCTURE. THE PROFESSIONAL ENGINEER MUST ALSO STAMP ALL CHANGES TO THE CONTRACTOR'S ERECTION PLAN. ADDITIONALLY, ALL PROPOSED CHANGES MUST BE SUBMITTED TO RIDOT FOR REVIEW AND APPROVAL PRIOR TO IMPLEMENTATION.
- A MANDATORY PRE-ERECTION CONFERENCE WILL BE HELD AT LEAST TWO WEEKS PRIOR TO THE START OF THE GIRDER INSTALLATION TO DISCUSS THE PLAN AND PROCEDURES, WORK SCHEDULES, CONTINGENCY PLANS, SAFETY REQUIREMENTS AND TRAFFIC CONTROL. THE CONTRACTOR'S PROFESSIONAL ENGINEER AND ERECTION SUBCONTRACTOR WILL BE REQUIRED TO ATTEND THIS MEETING, AS WILL THE RIDOT RESIDENT ENGINEER, THE DESIGN PROJECT ENGINEER AND THE DESIGN CONSULTANT. BASED UPON DISCUSSIONS AT THIS MEETING AND A REVIEW OF THE CONTRACTOR'S ERECTION PLAN, RIDOT MAY ORDER THE CONTRACTOR TO MODIFY AND RESUBMIT THE ERECTION PLAN TO THE ENGINEER FOR REVIEW AND APPROVAL.
- THE CONTRACTOR WILL BE REQUIRED TO PERFORM DAILY INSPECTIONS OF THE ERECTED GIRDERS AND TRUSSES UNTIL THE BRIDGE DECK IS COMPLETELY POURED.
- THE COST OF PREPARING AND STAMPING THE ERECTION PLAN, COMPUTATIONS, AND REPORTS, RESPONDING TO RIDOT'S COMMENTS AND MAKING THE NECESSARY REVISIONS, AND ATTENDANCE AT MEETINGS SHALL BE CONSIDERED INCIDENTAL TO THE COST OF THE SUPERSTRUCTURE PAY ITEM, BE IT CONCRETE, STEEL OR TIMBER.

CONSTRUCTION NOTES

1. THE CONTRACTOR IS RESPONSIBLE FOR THE IMPLEMENTATION, CONSTRUCTION, OPERATION AND SAFETY OF ALL EQUIPMENT AND PROCEDURES.
2. THE CONTRACTOR SHALL SUBMIT WORKING DOCUMENTS SHOWING PROPOSED METHODS OF LIFTING/SLIDING, SEQUENCING OF LIFTING/SLIDING, LOCATION OF CRANES, CRANE CAPACITIES, LOCATION OF THE LIFTING POINTS ON THE BRIDGE COMPONENTS, WEIGHTS OF THE COMPONENTS, LIFTING/SLIDING DEVICES AND LOAD DISTRIBUTION DEVICE DETAIL. THE METHOD AND ALL SUBMISSIONS SHALL BE PREPARED AND STAMPED BY A RHODE ISLAND REGISTERED PROFESSIONAL ENGINEER.
3. COORDINATE ALL CONSTRUCTION ACTIVITIES WITHIN THE WORKING AREA WITH RIDOT REGARDING UTILITIES, PROTECTION OF TRAFFIC AND SCHEDULE.
4. THE CONTRACTOR SHALL EXERCISE EXTREME CARE TO AVOID DAMAGE TO EXISTING STRUCTURE. STRUCTURE DAMAGED AS A RESULT OF THE CONTRACTOR'S OPERATION SHALL BE REPAIRED TO THE SATISFACTION OF THE ENGINEER AT NO ADDITIONAL COST TO THE STATE.
5. ALL SHOP DRAWINGS SHALL BE SUBMITTED TO THE ENGINEER IN SUFFICIENT TIME TO PERMIT CAREFUL CHECKING AS NOT TO DELAY THE PROJECT.
6. ALL RIGGING IS TO BE IN EXCELLENT WORKING CONDITION.
7. CRANE DELIVERY LOCATIONS MAY VARY AS LONG AS MAXIMUM CRANE RADIUS IS NOT EXCEEDED.
8. THE CONTRACTOR SHALL NOT BE PERMITTED TO ANCHOR HEAVY EQUIPMENT TO THE EXISTING BRIDGE DURING CONSTRUCTION.

GENERAL NOTES REGARDING TEMPORARY CONSTRUCTION CONDITIONS:

1. DESIGN WIND PRESSURES FOR CONSTRUCTION:

MINIMUM WIND PRESSURES TO BE USED BY THE CONTRACTOR FOR DESIGN DURING THE CONSTRUCTION CONTRACT (WITH THE EXCEPTION OF SIGNS) SHALL BE FROM THE FOLLOWING TABLE:

HEIGHT ABOVE GROUND	WIND PRESSURE (PSF)
UP TO 17'	23
OVER 17' AND UP TO 33'	27
OVER 33' AND UP TO 50'	30
OVER 50' AND UP TO 75'	34
OVER 75' AND UP TO 100'	37

TABLE NOTES:

A. APPLICATION OF THE TABULAR PRESSURE:

- BRIDGE COMPONENTS DURING CONSTRUCTION, PRIOR TO THE INSTALLATION OF THE PERMANENT BRACING SYSTEMS, NOT INCLUDING CRANE LIFTING.
- FALSE WORK, SHORING, AND SCAFFOLDING AS DEFINED IN FHWA "GUIDE DESIGN SPECIFICATION FOR BRIDGE TEMPORARY WORKS", EXCLUDING 3-DIMENSIONAL LATTICED OR TRUSSED FRAMES OR TOWERS;
- TEMPORARY SHIELDING.

WIND PRESSURES FOR ALL OTHER STRUCTURES SHALL BE CALCULATED BASED ON ASCE "DESIGN LOADS ON STRUCTURES DURING CONSTRUCTION", SEI/ASCE 37-02 (ALL REFERENCES TO THE ASCE 7 IN THE SEI/ASCE 37-02 PUBLICATION, SHALL BE THE LATEST REVISION OF ASCE 7). THE EXPOSURE CATEGORY SHALL BE B.

ADDENDUM NO. 1

REVISIONS		
NO.	DATE	BY
1	4/15/14	VHB

VANASSE HANGEN BRUSTLIN, INC.
TRANSPORTATION LAND DEVELOPMENT
ENVIRONMENTAL SERVICES
PROVIDENCE, RHODE ISLAND

RHODE ISLAND
DEPARTMENT OF TRANSPORTATION

REPLACEMENT OF
ATWELLS AVE. BRIDGE NO. 975

PROVIDENCE, RHODE ISLAND

JOB SPECIFIC
GENERAL NOTES 3

CHECKED BY _____ DATE _____ SCALE _____

(R-1)

BMITTAL

14. EXODERIMIC DECK INCLUDING CALCULATIONS

15. DECK JOINT ASSEMBLIES

16. CONCRETE SUBCONTRACTOR'S QUALIFICATIONS AND EXPERIENCE

17. STRUCTURAL STEEL (ALL TYPES)

18. TEMPORARY UTILITY SUPPORT INCLUDING CALCULATIONS

19. UTILITY COMPONENTS AND SUPPORTS (BY VERIZON. FOR INFORMATION ONLY) (b1)

20. HISTORIC TRUSS REHABILITATION: MEANS AND METHODS INCLUDING CALCULATIONS, REPAIR METHOD, ERECTION, SHOP PAINT INCLUDING PROTOTYPE, FABRICATOR'S QUALIFICATIONS AND EXPERIENCE

21. COLOR GALVANIZING

22. BRIDGE NAME/SEAL TABLET

AND
N AND
ICES
ORCING
YPES)
BLY
DGES
CTION

VHB VANASSE HANGEN BRUSTLIN, INC. TRANSPORTATION LAND DEVELOPMENT ENVIRONMENTAL SERVICES PROVIDENCE, RHODE ISLAND	REVISION TO JOB SPECIFIC GENERAL NOTES 4	R.I. CONTACT NO. 2013-DF-109	SKETCH NO. 7
APRIL 15, 2014	ADDENDUM NUMBER 1	REVISION TO SHEET NO. 6	

(R-1)

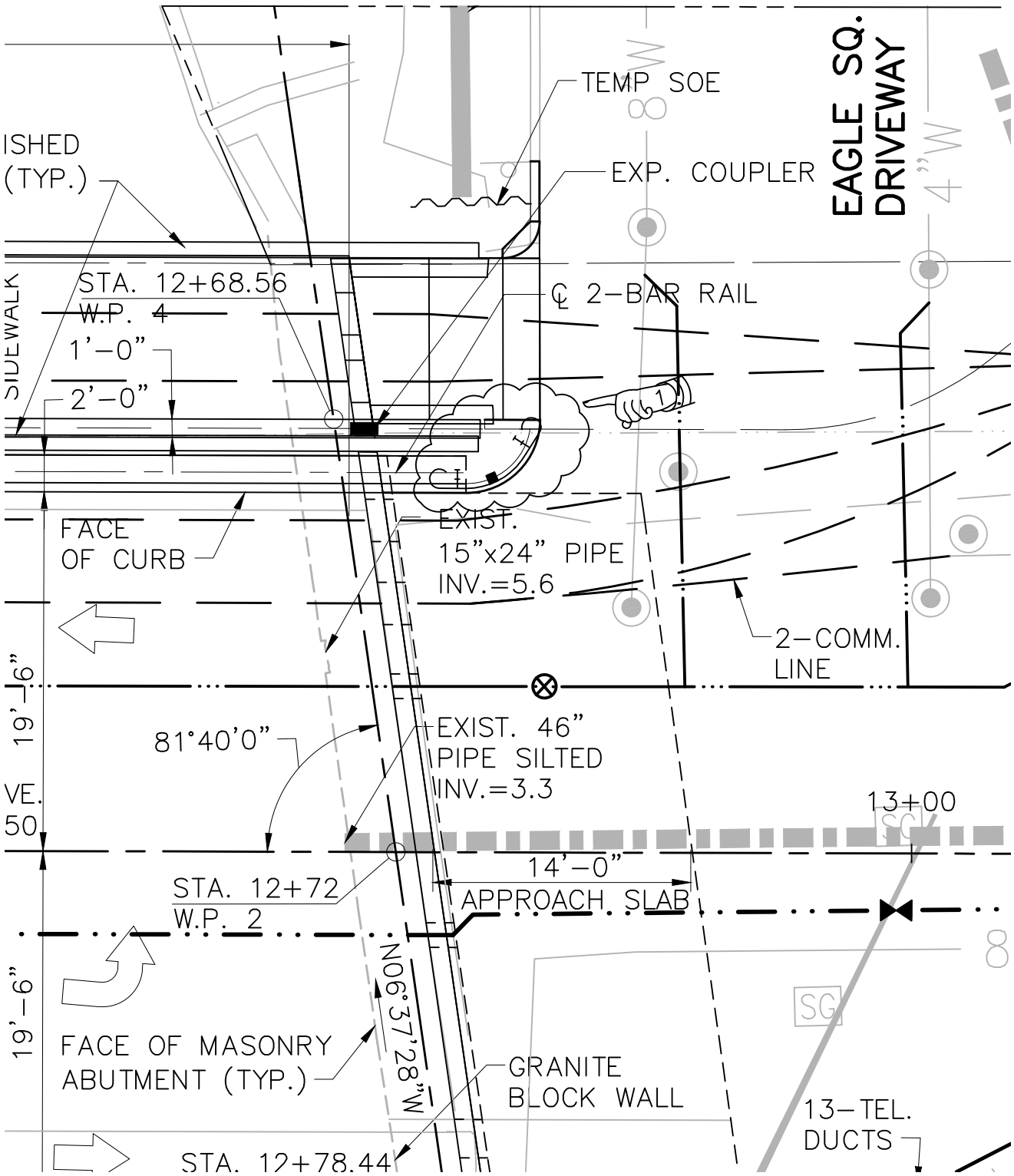

VANASSE HANGEN BRUSTLIN, INC. TRANSPORTATION LAND DEVELOPMENT ENVIRONMENTAL SERVICES PROVIDENCE, RHODE ISLAND	REVISION TO GENERAL PLAN AND ELEVATION	R.I. CONTACT NO. 2013-DF-109	SKETCH NO. 1
APRIL 15, 2014	ADDENDUM NUMBER 1	REVISION TO SHEET NO. 7	

(R-1)

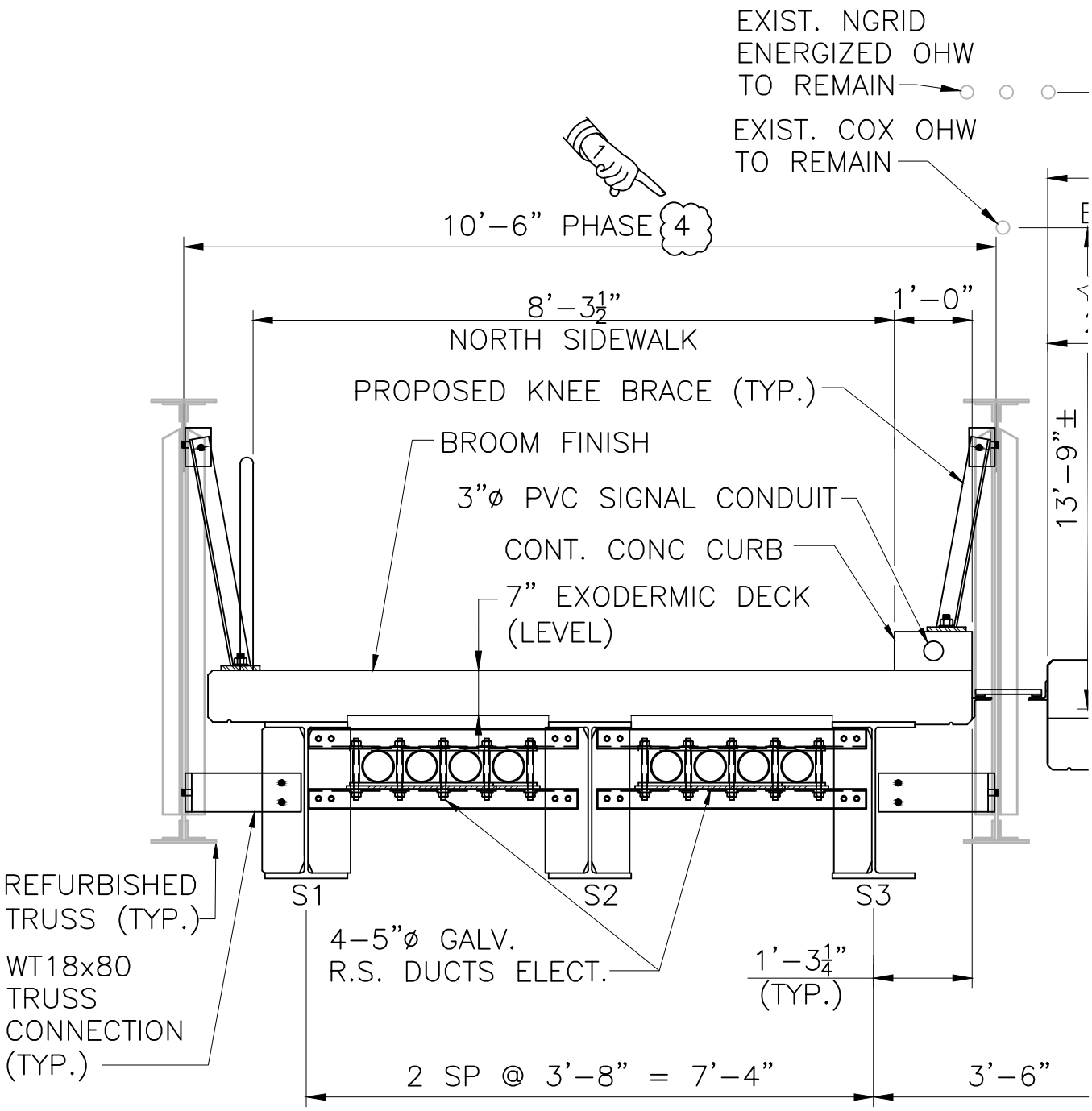

VANASSE HANGEN BRUSTLIN, INC. TRANSPORTATION LAND DEVELOPMENT ENVIRONMENTAL SERVICES PROVIDENCE, RHODE ISLAND	REVISION TO TYPICAL SECTIONS	R.I. CONTACT NO. 2013-DF-109	SKETCH NO. 2
APRIL 15, 2014	ADDENDUM NUMBER 1	REVISION TO SHEET NO. 9	

SUGGESTED SEQUENCE OF STAGED CONSTRUCTION

1. MAINTAIN PEDESTRAIN TRAFFIC ALONG SOUTH SIDEWALK.

2. REPAIR NORTHEAST APPROACH SIDEWALK (SEE HIGHWAY PLANS).

3. REMOVE AND DISPOSE VEHICULAR BRIDGE SUPERSTRUCTURE.

PHASE 2

1. MAINTAIN PEDESTRIAN TRAFFIC ALONG NORTH SIDEWALK.

1

2. CONSTRUCT PROPOSED STRINGERS AND UTILITIES AS SHOWN. INSTALL TEMPORARY UTILITY SUPPORT (BY OTHERS), AND RELOCATE UTILITIES TO ALLOW BEAM INSTALLATION. TIE IN NEW UTILITIES TO EXISTING AS APPLICABLE.

3. REMOVE AND DISPOSE EXISTING SOUTH SIDEWALK STRUCTURE AND UTILITIES AS SHOWN.

   NOTE: THE EXISTING SOUTH TRUSSES ARE TO BE CAREFULLY REMOVED FOR REFURBISHMENT UNDER ITEM CODE 824.9901.

(R-1)

VANASSE HANGEN BRUSTLIN, INC.
TRANSPORTATION, LAND DEVELOPMENT
ENVIRONMENTAL SERVICES
PROVIDENCE, RHODE ISLAND

REVISION TO
STAGED CONSTRUCTION

R.I. CONTACT NO. 2013-DF-109

SKETCH NO. 8

APRIL 15, 2014

ADDENDUM NUMBER 1

REVISION TO SHEET NO. 10

(R-1)

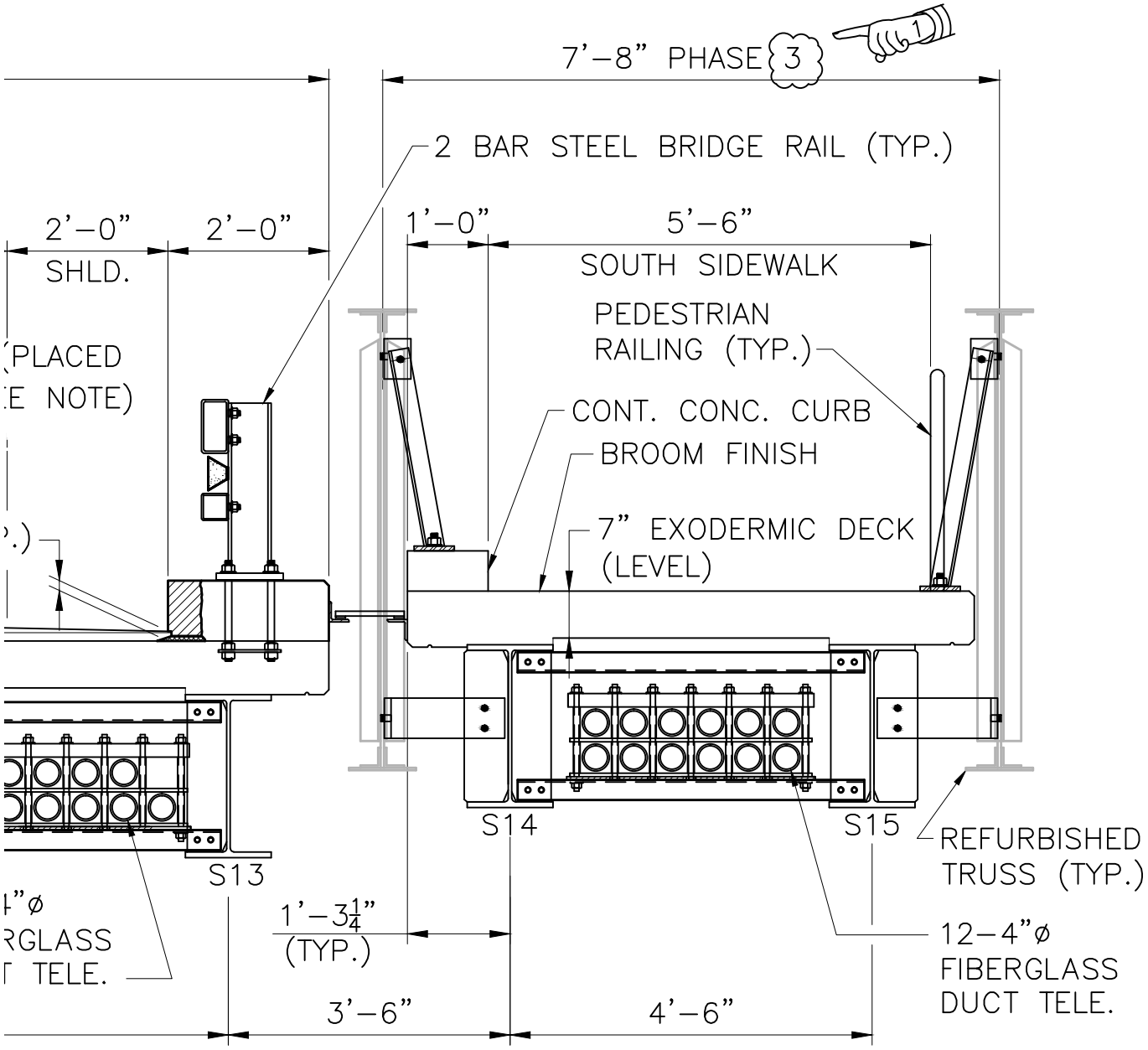

VANASSE HANGEN BRUSTLIN, INC. TRANSPORTATION LAND DEVELOPMENT ENVIRONMENTAL SERVICES PROVIDENCE, RHODE ISLAND	REVISION TO TYPICAL SECTIONS	R.I. CONTACT NO. 2013-DF-109	SKETCH NO. 3
APRIL 15, 2014	ADDENDUM NUMBER 1	REVISION TO SHEET NO. 9	

(R-1)

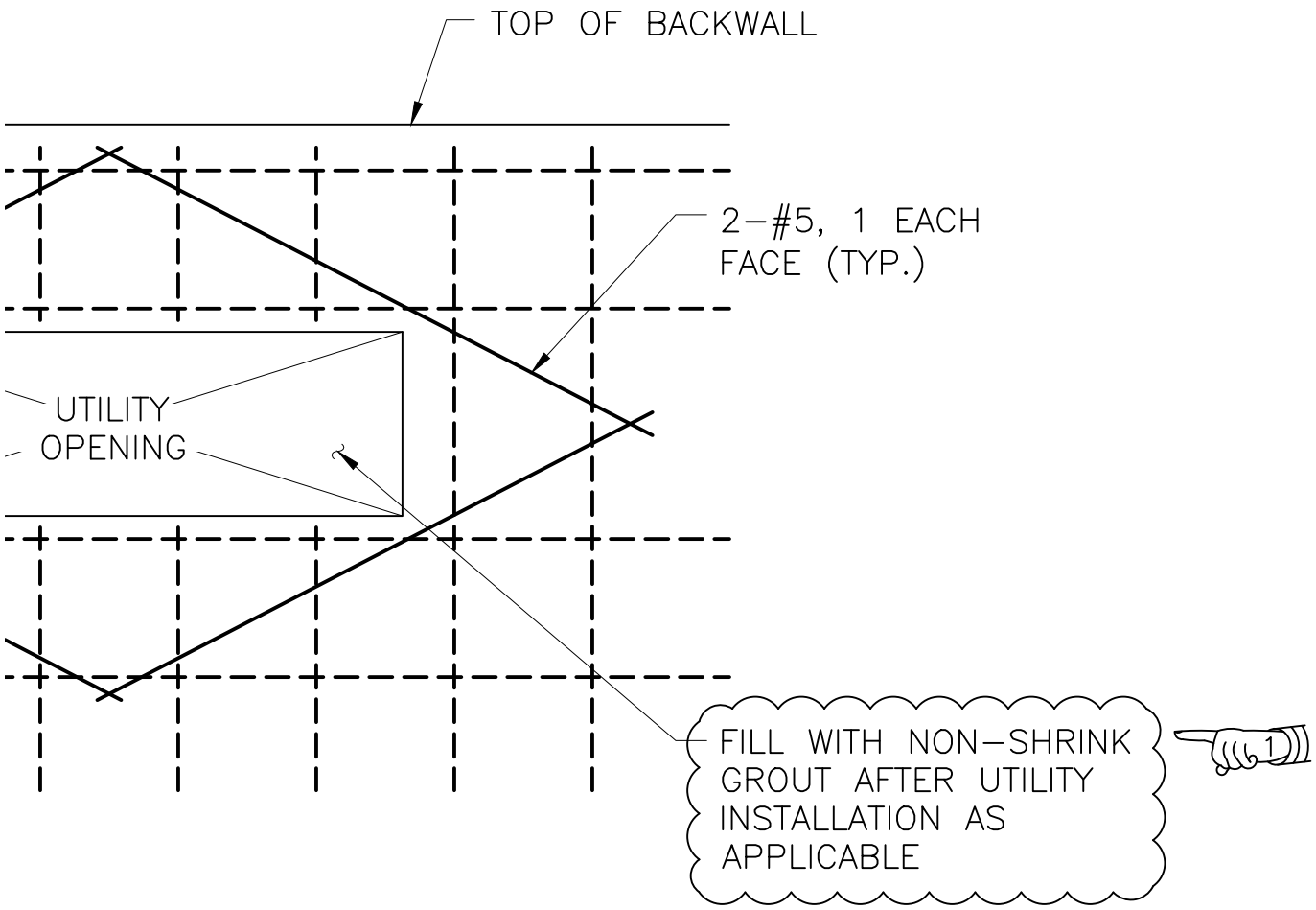

VANASSE HANGEN BRUSTLIN, INC. TRANSPORTATION LAND DEVELOPMENT ENVIRONMENTAL SERVICES PROVIDENCE, RHODE ISLAND	REVISION TO ABUTMENT DETAILS 2	R.I. CONTACT NO. 2013-DF-109	SKETCH NO. 4
APRIL 15, 2014	ADDENDUM NUMBER 1	REVISION TO SHEET NO. 16	

FED. ROAD DIV. NO.	STATE	FEDERAL AID PROJECT NO.	FISCAL YEAR	SHEET NO.	TOTAL SHEETS
	RI	FLD-EMRG(056)	2014	20	62

R-1

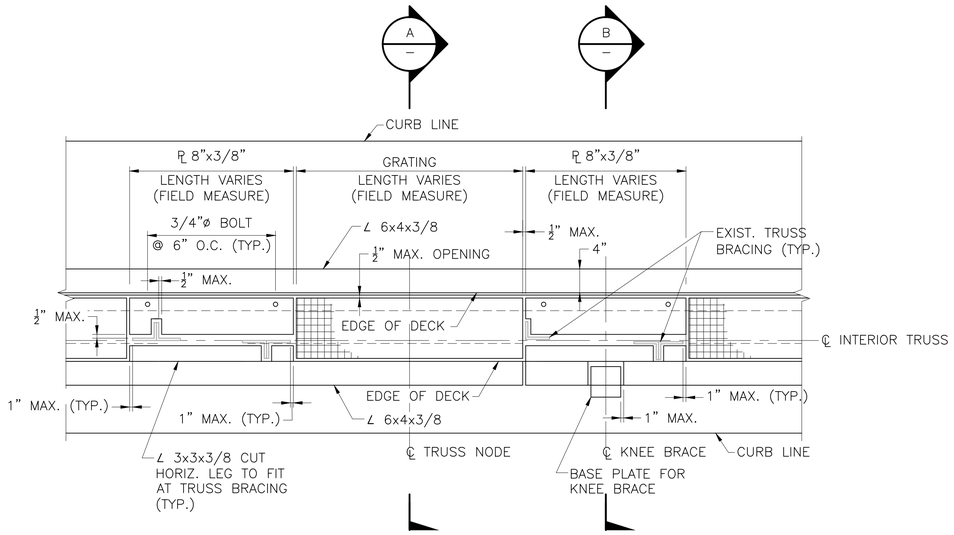

PARTIAL PLAN–GRATING AND COVER PLATE
SCALE: 1"=1'–0"

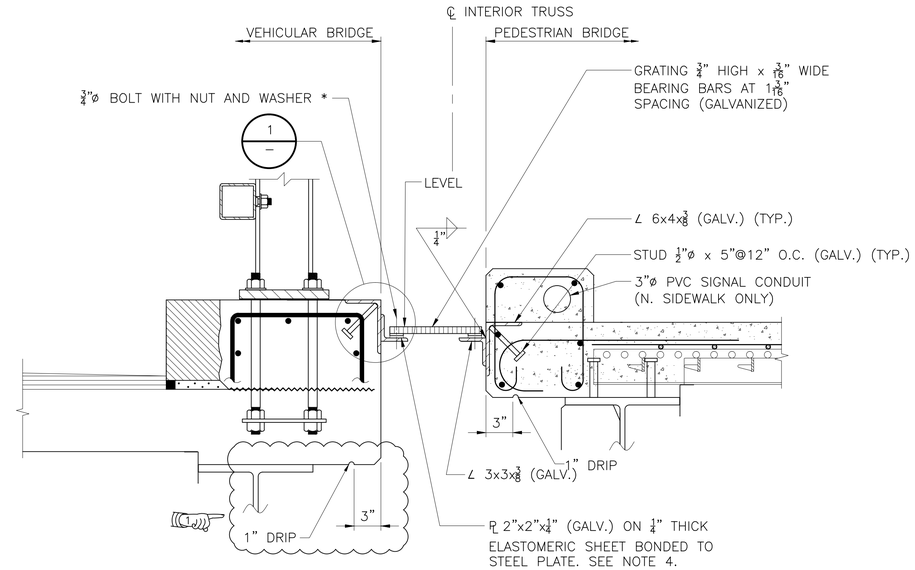

SECTION A
SCALE: 1 1/2"= 1'–0"

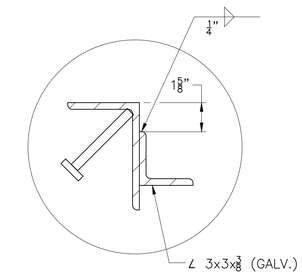

DETAIL 1
SCALE: 3"= 1'–0"

NOTE: * GRATING HOLD DOWN PER GRATING MANUFACTURER'S RECOMMENDATION, SHALL BE SECURITY TYPE FASTENERS AND BE GALVANIZED STEEL.

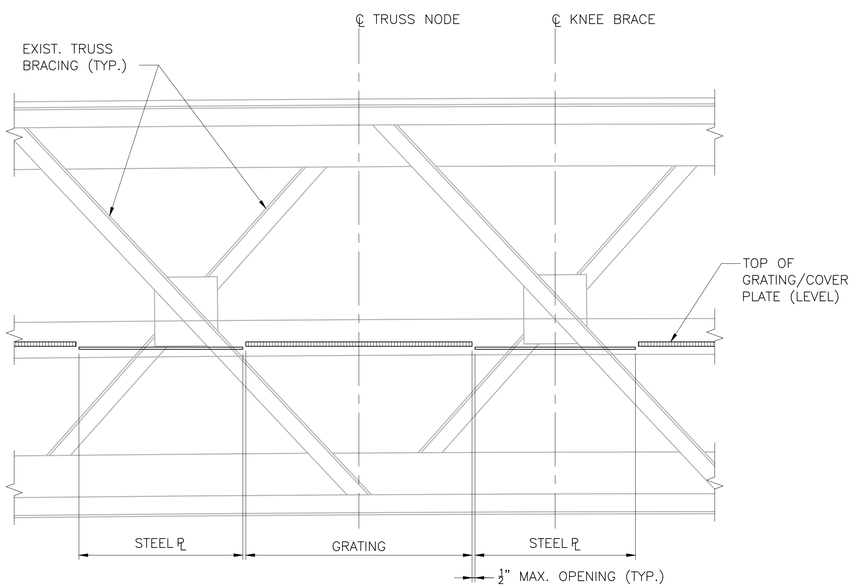

PARTIAL ELEVATION–GRATING AND COVER PLATE
SCALE: 1"=1'–0"

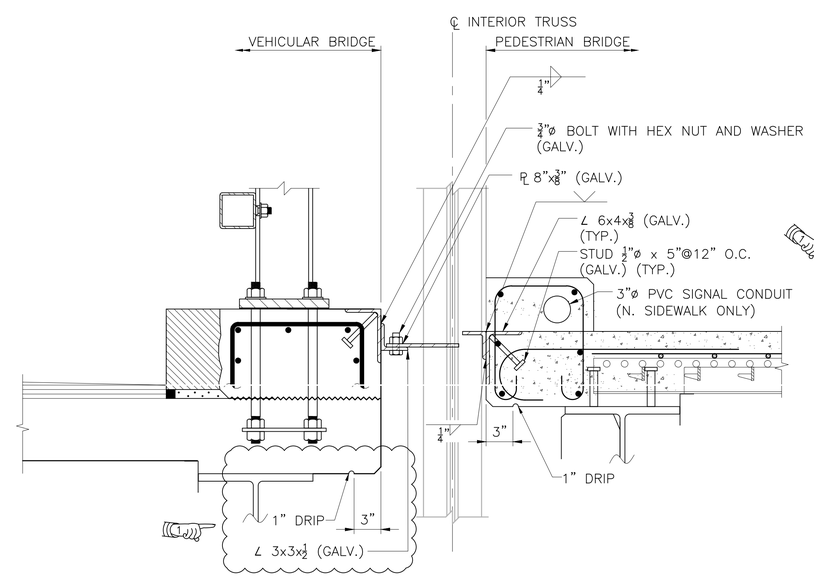

SECTION B
SCALE: 1 1/2"= 1'–0"

GRATING NOTES

1. THE CONTRACTOR SHALL DETERMINE ACTUAL LENGTHS OF GRATING SEGMENTS AND PLATE/ANGLE SEGMENTS BASED ON LENGTH OF TRUSS OPENINGS AND TRUSS NODE LENGTHS.
2. ANGLE SUPPORTS AND STUDS SHALL BE GALVANIZED AFTER WELDING.
3. GRATING HARDWARE SHALL BE SNUG TIGHT TO ALLOW ROTATION DUE TO DIFFERENTIAL DISPLACEMENT OF BRIDGE.
4. WELD PLATE TO EACH GRATING BEARING BAR WITH 1/4" X 1 1/2" LONG WELDS EACH SIDE. FABRICATE PRIOR TO GALVANIZING. PLATES WITH ELASTOMERIC SHEET SHALL BE SPACED AT 12" O. C.

ADDENDUM NO. 1

REVISIONS		
NO.	DATE	BY
1	4/15/14	VHB

VANASSE HANGEN BRUSTLIN, INC.
TRANSPORTATION LAND DEVELOPMENT ENVIRONMENTAL SERVICES
PROVIDENCE, RHODE ISLAND

RHODE ISLAND
DEPARTMENT OF TRANSPORTATION

REPLACEMENT OF
ATWELLS AVE. BRIDGE NO. 975

PROVIDENCE, RHODE ISLAND

EXISTING TRUSS
REPAIR DETAILS 2

CHECKED BY _____ DATE _____ SCALE _____

0163J_V1_020_TRUSS-2_ADD01

\\vhb\proj\Providence\71964.00\cadd\Atwells\planset\0163J_V1_020_TRUSS-2_ADD01.dwg

R-1

FED. ROAD DIV. NO.	STATE	FEDERAL AID PROJECT NO.	FISCAL YEAR	SHEET NO.	TOTAL SHEETS
	RI	FLD-EMRG(056)	2014	21	62

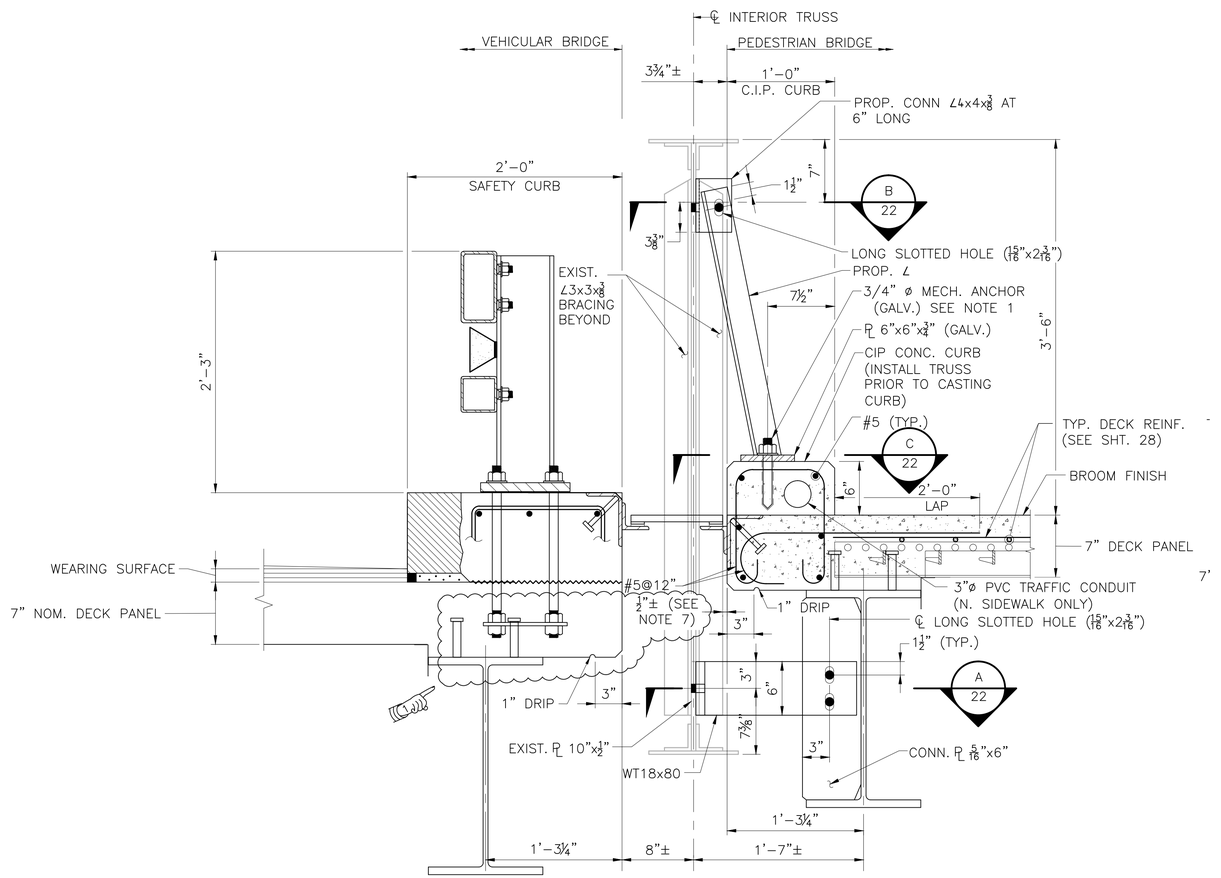

SECTION THRU INTERIOR TRUSS

SCALE: 1 1/2"=1'-0"

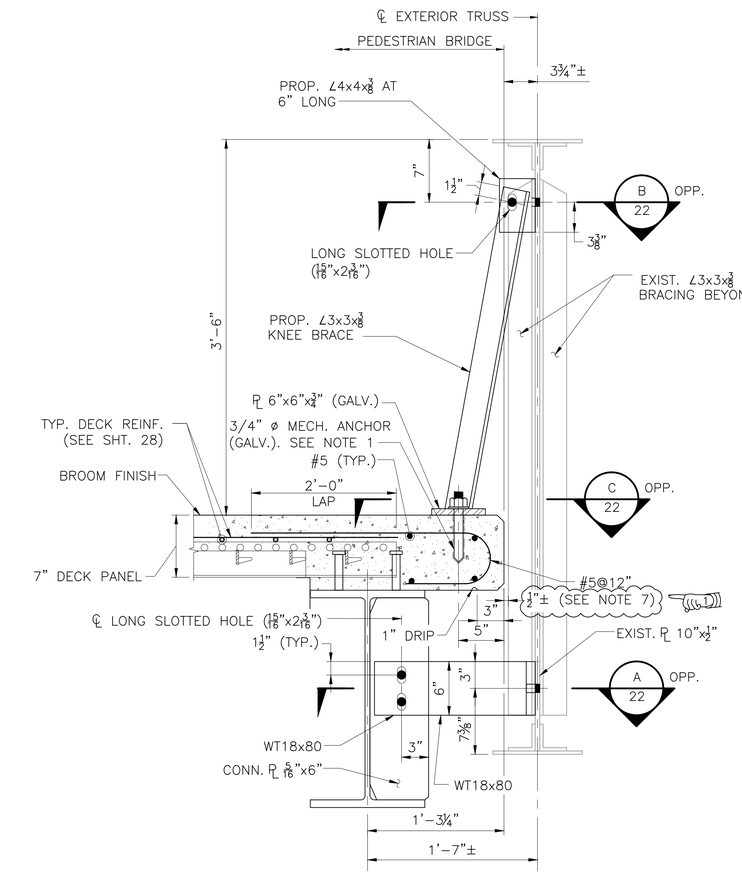

SECTION THRU EXTERIOR TRUSS

SCALE: 1 1/2"=1'-0"

NOTES

1. MINIMUM EMBEDMENT FOR ¾"ø MECH. (MECHANICAL) ANCHOR SHALL BE IN ACCORDANCE WITH MANUFACTURER'S RECOMMENDATIONS TO DEVELOP MINIMUM 5000 LB. TENSION AND 7000 LB. SHEAR.

SUGGESTED TRUSS INSTALLATION SEQUENCE

1. INSTALL ALL STRINGERS FOR BOTH VEHICULAR AND PEDESTRIAN BRIDGES.
2. INSTALL TRUSS AND BRACE BOTTOM OF TRUSS TO PEDESTRIAN BRIDGE STRINGER.
3. PROVIDE TEMPORARY TRUSS BRACE AND SUPPORT AS NEEDED FOR STABILITY. (CONTRACTOR DESIGNED).
4. CONSTRUCT PEDESTRIAN BRIDGE DECK AND CURB.
5. INSTALL PERMANENT KNEE BRACE TO TRUSS.
6. CONSTRUCT REMAINING VEHICULAR BRIDGE DECKING.
7. TRUSS MAY BE SHIFTED SLIGHTLY AS REQUIRED TO ACCOMMODATE DECK FORMWORK.

ADDENDUM NO. 1

VANASSE HANGEN BRUSTLIN, INC.
TRANSPORTATION LAND DEVELOPMENT ENVIRONMENTAL SERVICES
PROVIDENCE, RHODE ISLAND

REVISIONS		
NO.	DATE	BY
1	4/15/14	VHB

RHODE ISLAND
DEPARTMENT OF TRANSPORTATION

REPLACEMENT OF
ATWELLS AVE. BRIDGE NO. 975

PROVIDENCE, RHODE ISLAND

EXISTING TRUSS
REPAIR DETAILS 3

CHECKED BY _____ DATE _____ SCALE _____

0163J_V1_021_TRUSS-3_ADD01

\\vhb\proj\Providence\71964.00\cad\st\Atwells\planset\0163J_V1_021_TRUSS-3_ADD01.dwg

FED. ROAD DIV. NO.	STATE	FEDERAL AID PROJECT NO.	FISCAL YEAR	SHEET NO.	TOTAL SHEETS
	RI	FLD-EMRG(056)	2014	25	62

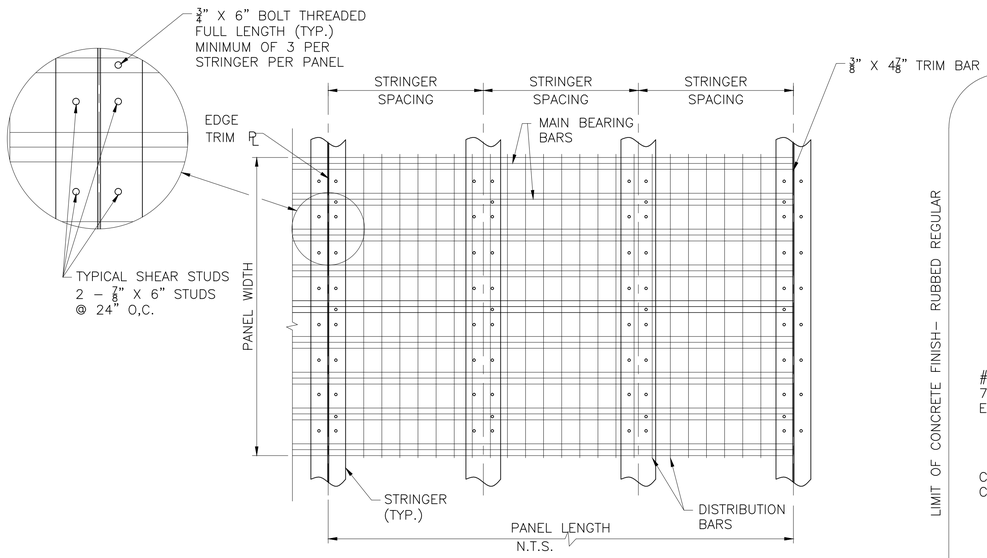

TYPICAL DECKING PANEL DETAIL

N.T.S.

NOTE: THE CONTRACTOR SHALL VERIFY ALL DIMENSIONS PRIOR TO SHOP DRAWING PREPARATION. ALL SHOP DRAWINGS SHALL BE SUBMITTED TO THE ENGINEER FOR APPROVAL PRIOR TO FABRICATION.

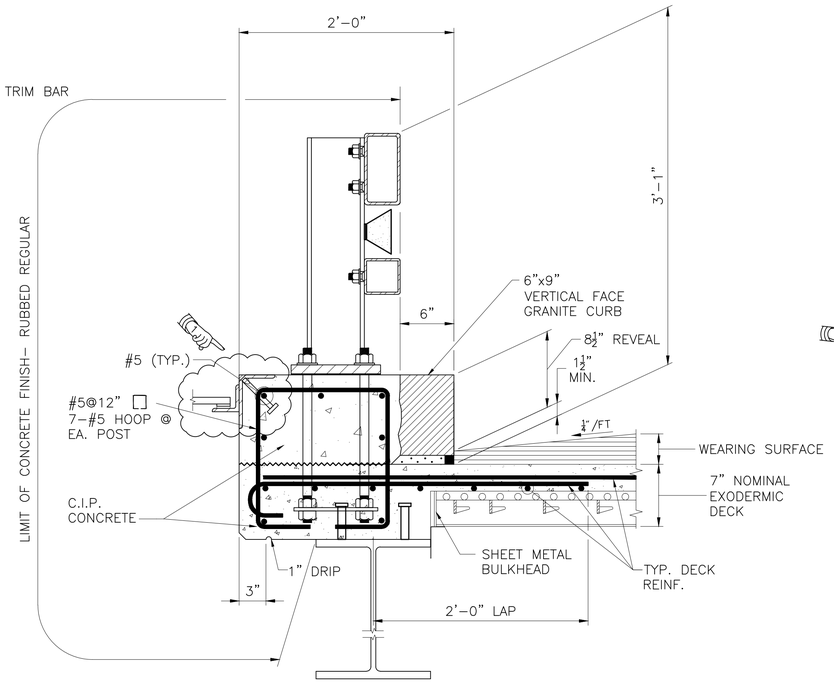

SECTION THRU SAFETY CURB

SCALE: 1 1/2"=1'-0"

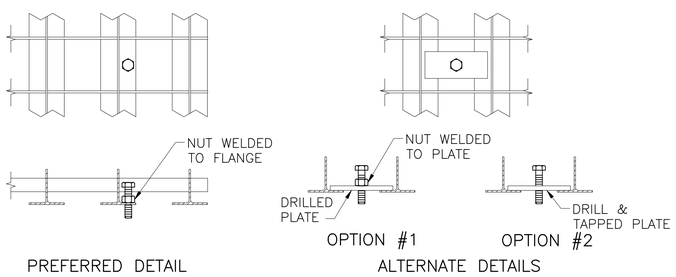

HEIGHT ADJUSTMENT DETAILS

SCALE: 1 1/2"=1'-0"

NOTES

1. BOLTS AND NUTS SHALL BE 3/4"ø ASTM A307 AND A563, RESPECTIVELY.
2. USE TWO PER SUPPORTING BEAM PER PANEL FOR TYPICAL PRECAST PANELS UP TO 9' WIDE. DEVICES TO BE LOCATED ON FIRST INTERIOR MAIN BARS FROM EACH PANEL EDGE.
3. FOR CAST-IN-PLACE APPLICATIONS, USE THREE PER SUPPORTING BEAM PER PANEL FOR TYPICAL PANELS UP TO 9' WIDE. DEVICES TO BE LOCATED ON FIRST INTERIOR MAIN BAR AND ON A BAR AT OR CLOSE TO THE PANEL CENTERLINE.
4. BOLTS CAN BE LOCATED ON EITHER SIDE OF THE WEB OF A MAIN BAR. WHEN POSITIONING THE GRID PANEL HORIZONTALLY, USE A CRANE TO KEEP THE FULL DEAD LOAD OFF OF THE LEVELING BOLTS.

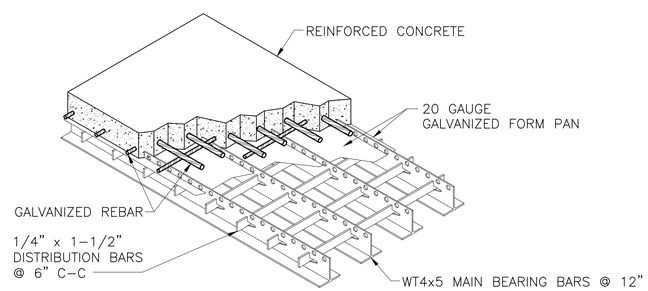

EXODERMIC BRIDGE DECK

SCALE: 1"=1'-0"

DECK PANEL NOTES

1. DESIGN SPECIFICATIONS

THE AASHTO LRFD BRIDGE DESIGN SPECIFICATIONS, FIFTH EDITION, 2010, INCLUDING ALL INTERIM REVISIONS TO DATE.

THE RHODE ISLAND LRFD BRIDGE DESIGN MANUAL 2007 EDITION INCLUDING ALL REVISIONS TO DATE.

ALL OTHER APPLICABLE DESIGN SPECIFICATIONS ARE REFERENCED IN SECTION 1 OF THE RHODE ISLAND LRFD BRIDGE DESIGN MANUAL DATED 2004.

THE 2004 REVISION OF AND SUPPLEMENTS TO THE RHODE ISLAND DEPARTMENT OF TRANSPORTATION STANDARD SPECIFICATIONS FOR ROAD AND BRIDGE CONSTRUCTION (RI STANDARD SPECIFICATIONS).

IN CASE OF CONFLICT, THE RHODE ISLAND LRFD BRIDGE DESIGN MANUAL SHALL GOVERN.

(1) THE BRIDGE DECK SHALL BE CONCRETE UNFILLED STEEL, GRID DECK PANELS COMPOSITE WITH THE STRINGERS. THE STEEL GRID DECK SYSTEM SHALL BE GRID: WT4 x 5 @ 12" C-C.

2. DESIGN LIVE LOAD

AASHTO HL-93

DEFLECTION DUE TO SERVICE LIVE LOAD PLUS IMPACT NOT TO EXCEED 1100 OF EFECTIVE SPAN LENGTH.

3. DECK PANEL MATERIALS

TEES AND BARS
ASTM A992 GR. 50 (GALVANIZED) Fs = 27,000 PSI
20 GA. FORM PANS
ASTM A366 (GALVANIZED)

4. CONCRETE DESIGN STRESSES

SPECIFIED DESIGN COMPRESSIVE STRENGTH
HP – DECK SLAB F'c = 5,000 PSI

MAXIMUM COARSE AGGREGATE FOR CONCRETE FOR DECK SLABS SHALL NOT EXCEED 3/8" IN SIZE.

5. REINFORCEMENT STEEL

DEFORMED BARS
ASTM A615 (GRADE 60 kSI)
DECK SLAB Fs = 24,000 PSI
GALVANIZED

6. WELDING

WELDING SHALL BE IN CONFORMANCE WITH ESTABLISHED GRID INDUSTRY PRACTICE, INCLUDING THE USE OF THE GAS METAL ARC WELDING (MIG) ER70S-3 FILLER METAL PER AWS D1.5 OF THE BRIDGE WELDING CODE.

AFTER FABRICATION ALL MATERIAL SHALL BE NOT DIPPED GALVANIZED PER ABTM A123, DUE TO THE GALVANIZED PROCESS, PANEL MAY HAVE SOME DISTORTION AND SIDE SWEEP WHICH WILL REQUIRE ADJUSTMENT BY THE CONTRACTOR BEFORE POURING CONCRETE.

7. SHOP DRAWINGS

THE CONTRACTOR SHALL PROVIDE AND SUBMIT DESIGN CALCULATIONS AND SHOP DRAWINGS FOR REVIEW AND APPROVAL BY THE ENGINEER. CALCULATIONS SHALL BE SIGNED AND SEALED BY A PROFESSIONAL ENGINEER LICENSED IN RHODE ISLAND. SHOP DRAWINGS SHALL INCLUDE PLANS, DETAILS, AND SECTIONS, SHOWING THE GEOMETRY, AND MEMBER SIZES FOR VARIOUS SECTIONS REQUIRED. THE CONTRACTOR SHALL BE RESPONSIBLE TO VERIFY AND OBTAIN ALL DIMENSIONS AND ELEVATIONS NECESSARY FOR INSTALLATION UNDER FIELD CONDITIONS.

ADDENDUM NO. 1

REVISIONS		
NO.	DATE	BY
1	4/15/14	VHB

VANASSE HANGEN BRUSTLIN, INC.
TRANSPORTATION LAND DEVELOPMENT ENVIRONMENTAL SERVICES
PROVIDENCE, RHODE ISLAND

RHODE ISLAND
DEPARTMENT OF TRANSPORTATION

REPLACEMENT OF
ATWELLS AVE. BRIDGE NO. 975

PROVIDENCE, RHODE ISLAND

DECK DETAILS 1

CHECKED BY _____ DATE _____ SCALE _____

\\vhb\proj\Providence\71964.00\cad\st\Atwells\planset\0163J_V1_025_DeckDetail-1_ADD01.dwg

(R-1)

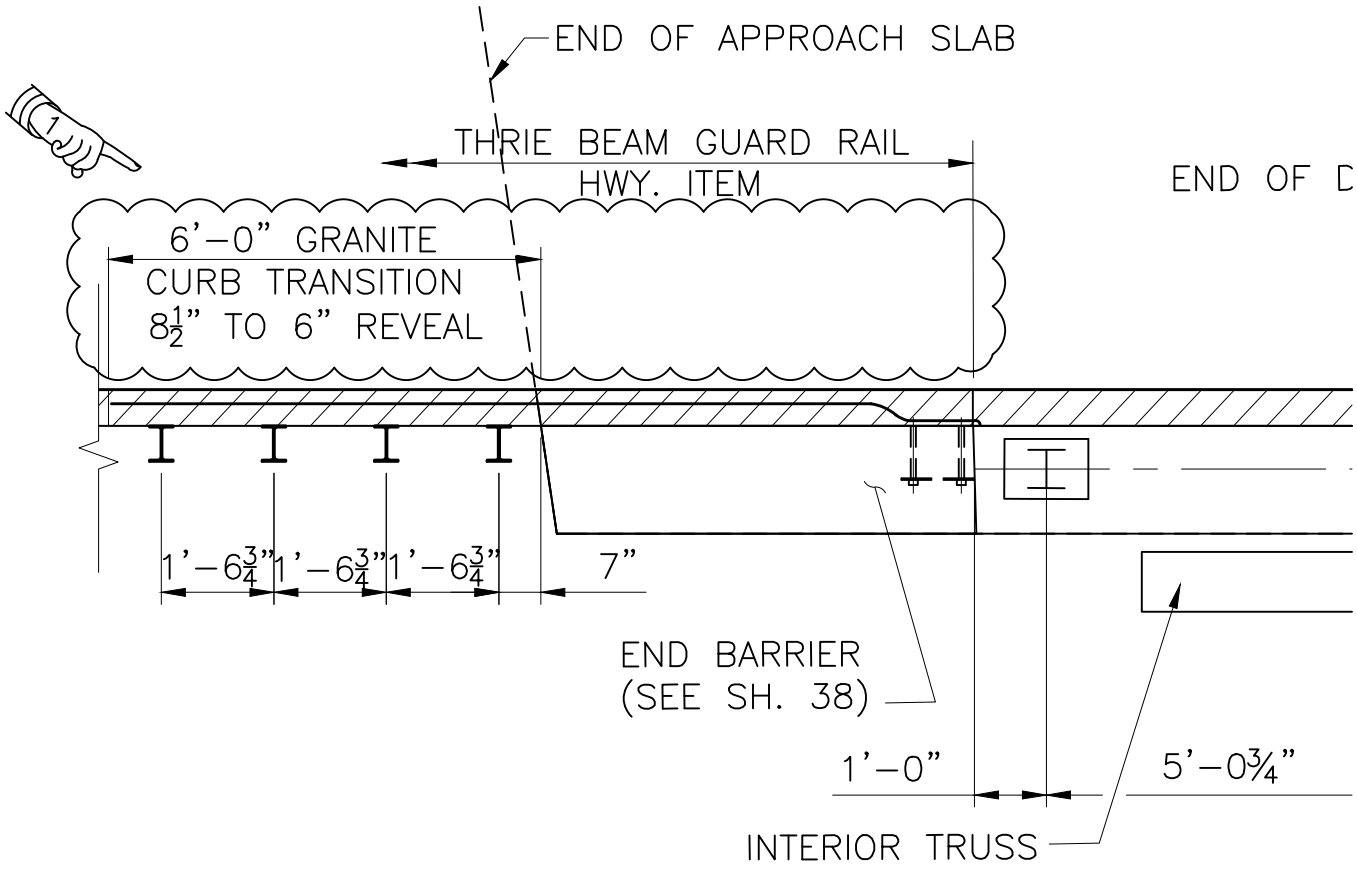

VANASSE HANGEN BRUSTLIN, INC. TRANSPORTATION LAND DEVELOPMENT ENVIRONMENTAL SERVICES PROVIDENCE, RHODE ISLAND	REVISION TO TWO BAR RAIL 1	R.I. CONTACT NO. 2013-DF-109	SKETCH NO. 5
APRIL 15, 2014	ADDENDUM NUMBER 1	REVISION TO SHEET NO. 29	

7. THE ENTIRE UTILITY SUPPORT AND HARDWARE SHALL BE GALVANIZED AS PER CURRENT STATE SPECIFICATIONS AND/OR AASHTO SPECIFICATION M 232.

8. THE CONTRACTOR SHALL BE RESPONSIBLE FOR COORDINATION WITH THE UTILITY COMPANY PRIOR TO COMMENCING WORK.

9. PIPE AND CONDUIT SUPPORTS SHALL CONSTITUTE ALL MATERIALS INCLUDING THREADED RODS, NUTS, BOLTS, WASHERS, COMPRESSIBLE FILLER, CLAMPS AND/OR HANGERS, INSTALLATION, ALL LABOR, EQUIPMENT AND ALL OTHER INCIDENTALS REQUIRED TO FINISH THE WORK, COMPLETE AND ACCEPTED BY THE ENGINEER.

10. INSTALLATION OF UTILITY SUPPORT SYSTEM SHALL CONFORM TO MANUFACTURER'S WRITTEN PUBLISHED RECOMMENDATION.

11. THE CONTRACTOR SHALL SUBMIT SHOP DRAWINGS AND MANUFACTURER'S DATA SHEETS FOR UTILITY SUPPORT SYSTEM FOR REVIEW BY THE ENGINEER

12. WATER SHALL BE DISCHARGED FROM PIPE UPON COMPLETION OF LEAKAGE TEST.

13. MATERIALS FOR GAS WILL BE SUPPLIED BY NATIONAL GRID. CONTRACTOR SHALL INSTALLS GAS MAIN AND RELATED SUPPORTS. NATIONAL GRID UNION CREWS SHALL PERFORM LIVE GAS WORK.

1

14. ALL STEEL SUPPORT ANGLES, INCLUDING STRINGER CONNECTION HARDWARE AND PAINTING, SHALL BE PAID UNDER SUPERSTRUCTURE LUMP SUM ITEM.

(R-1)

VANASSE HANGEN BRUSTLIN, INC.
TRANSPORTATION LAND DEVELOPMENT
ENVIRONMENTAL SERVICES
PROVIDENCE, RHODE ISLAND

REVISION TO
UTILITY SUPPORT DETAILS 1

R.I. CONTACT NO. 2013-DF-109

SKETCH NO. 6

APRIL 15, 2014

ADDENDUM NUMBER 1

REVISION TO SHEET NO. 35

FED. ROAD DIV. NO.	STATE	FEDERAL AID PROJECT NO.	FISCAL YEAR	SHEET NO.	TOTAL SHEETS
	RI	FLD-EMRG(056)	2014	38	62

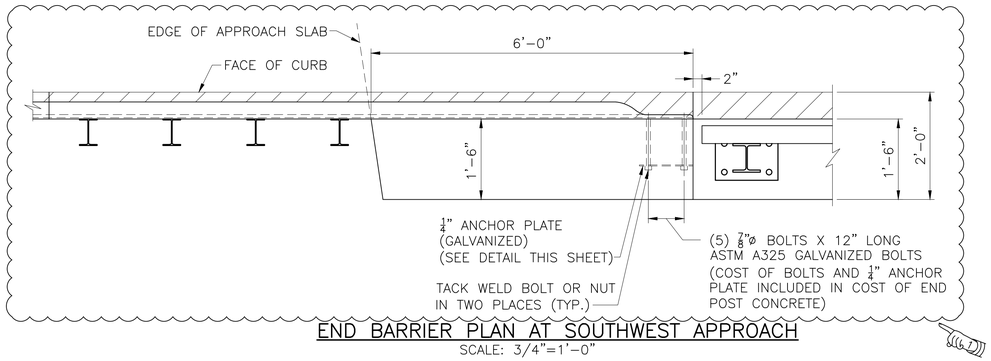

END BARRIER PLAN AT SOUTHWEST APPROACH

SCALE: 3/4"=1'-0"

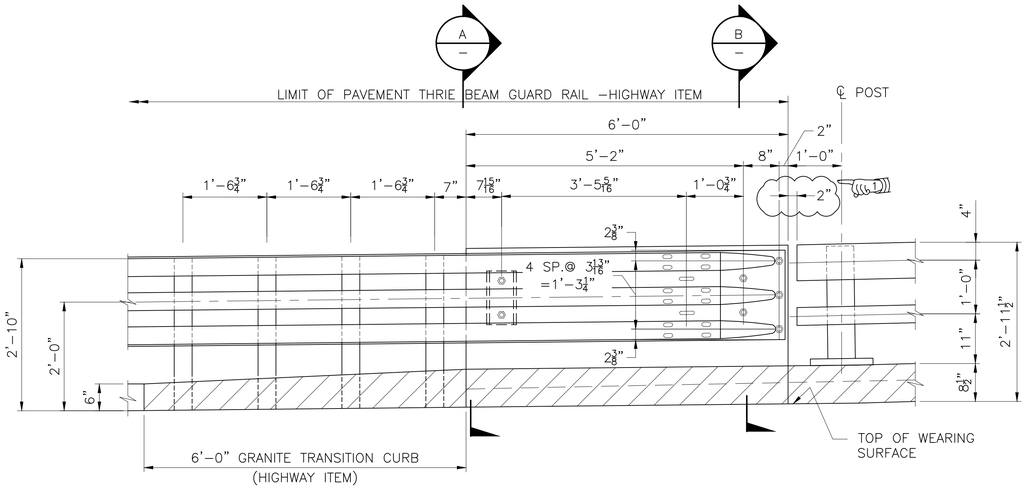

END BARRIER ELEVATION AT SOUTHEWEST APPROACH

SCALE: 3/4"=1'-0"

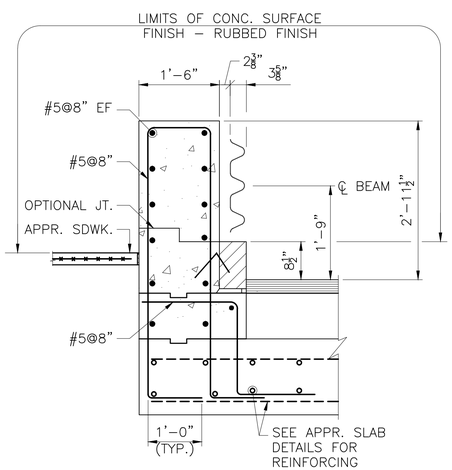

SECTION A

SCALE:3/4"=1'-0"

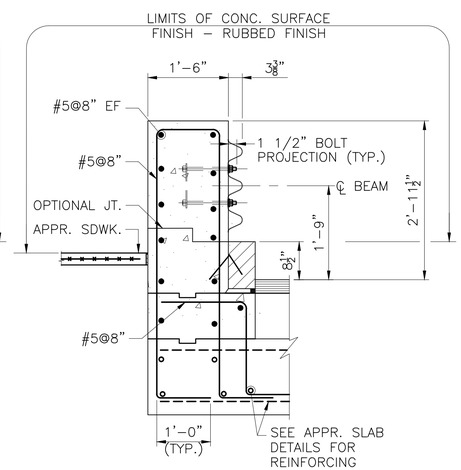

SECTION B

SCALE:3/4"=1'-0"

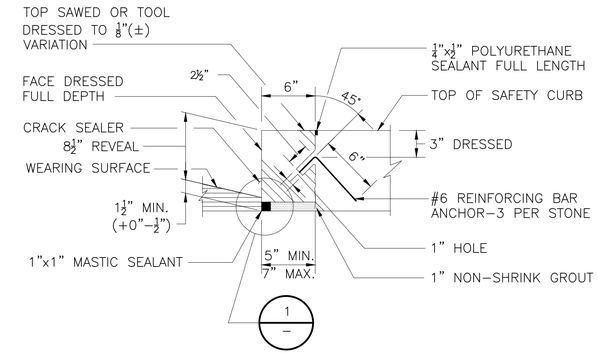

6"x9" VERTICAL FACE GRANITE CURB

(BITUMINOUS WEARING SURFACE)

SCALE: 1 1/2"=1'-0"

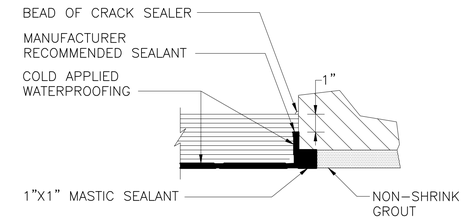

DETAIL 1

SCALE: 3"=1'-0"

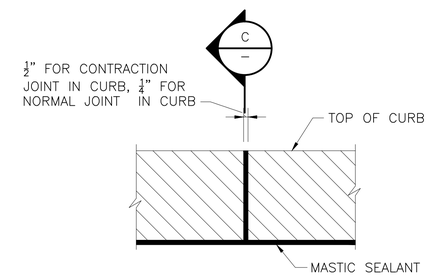

ELEVATION AT FACE OF CURB

NOT TO SCALE

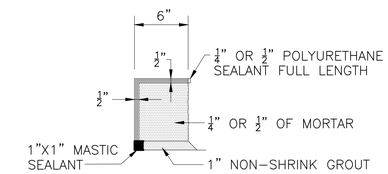

SECTION C

SCALE:1 1/2"=1'-0"

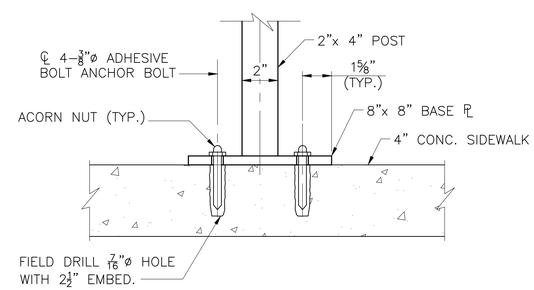

INTERPRETIVE SIGN SUPPORT DETAIL (LOOKING NORTH)

SCALE: 3"=1'-0"

NOTE: ADHESIVE ANCHOR SHALL CONFORM TO ITEM CODE 819.9901 "ADHESIVE ANCHOR BOLT (3/8")".

CURB NOTES

1. FOR CUTTING TOLERANCES ON GRANITE CURB SEE R.I. STANDARD SPECIFICATION M–09.05.
2. STRAIGHT CURB SHALL BE FURNISHED IN LENGTHS OF NOT LESS THAN 6 FEET OR GREATER THAN 10 FEET. (5 FOOT LENGTHS MAY BE ALLOWED UNDER UNUSUAL CIRCUMSTANCES, BUT ONLY WITH THE APPROVAL OF THE BRIDGE ENGINEER).
3. CURB WHICH IS SET ON A RADIUS BETWEEN 160 FEET AND 300 FEET MAY BE FURNISHED STRAIGHT IN LENGTHS NOT TO EXCEED 6 FEET.
4. CURB TO BE SET ON A RADIUS OF 160 FEET OR LESS SHALL BE CUT TO THE CURVE REQUIRED.

ADDENDUM NO. 1

REVISIONS		
NO.	DATE	BY
1	4/15/14	VHB

RHODE ISLAND
DEPARTMENT OF TRANSPORTATION

REPLACEMENT OF
ATWELLS AVE. BRIDGE NO. 975

PROVIDENCE, RHODE ISLAND

MISCELLANEOUS DETAILS

VANASSE HANGEN BRUSTLIN, INC.
TRANSPORTATION LAND DEVELOPMENT
ENVIRONMENTAL SERVICES
PROVIDENCE, RHODE ISLAND

CHECKED BY _____ DATE _____ SCALE _____

0163J_V1_038_MiscDetail_ADD01

\\vhb\proj\Providence\71964.00\cad\st\Atwells\planset\0163J_V1_038_MiscDetail_ADD01.dwg

ATWELLS AVENUE BRIDGE
(Bridge No. 975)
Atwells Avenue crossing the Woonasquatucket River
Providence
Providence County
Rhode Island

HAER No. RI-61

PHOTOGRAPHS

WRITTEN HISTORICAL AND DESCRIPTIVE DATA

HISTORIC AMERICAN ENGINEERING RECORD
National Park Service
Northeast Region
Philadelphia Support Office
U.S. Custom House
200 Chestnut Street
Philadelphia, PA 19106

ADDENDUM NO. 1

HISTORIC AMERICAN ENGINEERING RECORD

ATWELLS AVENUE BRIDGE
(Bridge No. 975)

HAER No. RI-61

Location: Atwells Avenue crossing the Woonasquatucket River, Providence, Providence County, Rhode Island.

The Atwells Avenue Bridge is located at latitude: 41.8244538, longitude: 71.4385039. The coordinate was obtained by plotting the center point of the bridge in Terrain Navigator Pro software on the Providence, RI 1:25,000 1987 Quadrangle. There is no restriction on the release of this location to the public.

Present Owner: City of Providence

Present Use: Local highway bridge

Significance: The Atwells Avenue Bridge (Bridge No. 975) is historically significant as a rare surviving example of an early wrought iron, double intersection Warren truss type, highway bridge. Constructed in 1875, the bridge was one of the first works of the Delaware Bridge Company, which was headed by nationally prominent bridge engineer Charles A. Macdonald. It is the oldest surviving wrought iron truss bridge in Rhode Island and one of a relative few that remain in the United States.

Historians: John J. Daly and Matthew A. Kierstead, PAL, Pawtucket, RI, April, 2012.

Project Information: The Rhode Island Department of Transportation (RIDOT), in cooperation with the Federal Highway Administration (FHWA), is developing design plans for the replacement of the superstructure of the Atwells Avenue Bridge (Bridge No. 975) over the Woonasquatucket River, Providence, Rhode Island. The historic trusses will be removed, cleaned, painted the original paint color (based on historic paint analysis) and re-installed on a new steel superstructure as non-load bearing members. The bridge is seriously deteriorated and was damaged by flooding in March 2010. PAL completed this HAER documentation to the specifications of the National Park Service on behalf of the FHWA and the RIDOT to mitigate the adverse effects of the bridge superstructure replacement. Robert Brewster of Warren Jagger Photography, Inc., Providence completed the archival photography of the structure on November 3, 2010.

Part I. Historical Information

A. Physical History:

1. Dates of construction: 1875-1876

2. Engineer: The Delaware Bridge Company under Charles A. Macdonald designed, fabricated, and erected the bridge superstructure. Additional biographical information is provided in the Historical Context below.

3. Builder/Contractor/Supplier: Bridge abutments were constructed by municipal workers under the direction of Nelson Ingram Tallman, City of Providence-Overseer of Bridges.

4. Original plans and construction: Original plans for the bridge do not exist. Subsequent engineering plans prepared in advance of modifications to the bridge and period accounts of the bridge's construction cited in the narrative below document the original condition of the bridge. As built, the structure consisted of five parallel, double intersection Warren trusses, with the fifth, now-missing truss running down the longitudinal center line of the bridge and roadway. The trusses supported transverse rolled iron floor beams which in turn supported a wooden bridge deck topped with granite pavers. The bridge superstructure had diagonal sway bracing consisting of 4″ x 2″ x ¼″ rolled T-shape struts connecting the vertical plates in the top chords with the floor beams. These braces were located on the inboard side of the sidewalk trusses and both sides of the roadway trusses. The bridge trusses rested on cast-iron bearing blocks set on granite abutments.

5. Alterations and additions: Engineering plans on file at the Department of Public Works-City of Providence and City of Providence-Engineer reports document alterations to the bridge.

By 1891, the granite pavers had been removed from portions of the bridge deck and replaced with yellow pine planks surfaced with asphalt. Streetcar tracks had been added to the deck and the gauge between the tracks and 18″ to either side were paved with granite blocks.[1]

In 1900, the central longitudinal truss was removed to increase the available roadway space. The truss was replaced with a riveted, plate girder stringer beam running between the original 9″ high transverse rolled iron floor beams, which were reinforced and raised to rest on clips on the new stringer beam. The flanking roadway trusses were strengthened by doubling the L-sections in the diagonal members in the three outer panels.[2]

In 1924, the top chords of all four trusses were strengthened with three sections of additional fish plates. The iron floor beams were strengthened with the addition of 5″ x 14″ timber helpers to support

[1] Robert E. Smith, "Annual Report of the Commissioner of Public Works upon Bridges for the Year 1891." City Document No. 8. (Providence: The Providence Press, 1892), 7-8.
[2] Clap, Otis F. *Annual Report of the City Engineer of the City of Providence for the Year 1900*. City Document No. 10. (Providence: The Providence Press, 1901), 86.

new concrete and asphalt pavement, which still included streetcar tracks with a layer of granite paving blocks between them.

In 1992, the entire roadway deck superstructure between the inboard roadway trusses, including the original floor beams, sway bracing, and 1900 girder beam were removed and replaced with eight longitudinal 16″ tall, rolled galvanized steel I-beam stringers braced by bolted transverse steel I-beam diaphragms. The granite block bridge abutments were altered to accommodate the new beams and seats. A new laminated timber deck with an asphalt layer and galvanized guardrails was added.

Record flooding in March 2010 inundated the bridge, damaging the deck and railings and washing soil from the roadway approach sidewalks, causing them to collapse. The sidewalks are currently blocked by Jersey barriers.

B. Historical Context:

Atwells Avenue and the Woonasquatucket River

The Atwells Avenue Bridge carries Atwells Avenue over the Woonasquatucket River, a tributary of the Providence River. The bridge is located just east of Valley Street in an area known as Eagle Square, which includes a cluster of recently redeveloped former industrial buildings in a triangle bounded by Atwells Avenue, Valley Street and Eagle Street north of the bridge. The early road that later became Atwells Avenue was laid out from Aborn Street in Providence to the Woonasquatucket River in 1809, and in 1810, was extended west as the Woonasquatucket Turnpike. During the nineteenth-century, Atwells Avenue served as a connector between Providence and villages that developed around mills powered by the Woonasquatucket River. Until 1874, the reach of the river at Atwells Avenue formed the political boundary between the City of Providence and the Town of North Providence. In May of that year, the City of Providence annexed lands north and west of the Woonasquatucket River from the Town of North Providence. With the westward expansion of Providence, the Atwells Avenue corridor evolved as the commercial spine for flanking streets that became densely populated by Irish immigrants. By 1900, the demographics of Atwells Avenue and the surrounding Federal Hill neighborhood changed as the area became the focus of immigrant Italian settlement.[3]

The river had supported paper, chocolate, grist and sawmills and a distillery during the eighteenth century, but beginning in the early nineteenth century textile operations became dominant. Major concerns included the Dyerville Manufacturing Company, Union Cotton Mill, Lyman Manufacturing Company, and Valley Bleachery. Woolen manufacturing began during the Civil War and mills such as Atlantic Delaine Company and Weybossett Mills grew along the Woonasquatucket River corridor. Additional woolen, and later, worsted mills were located along the river from the 1870s through the

[3] Rhode Island Historical Preservation Commission (RIHPC), *Providence Industrial Sites: Statewide Historical Preservation Report P-P-6.* (Providence: Rhode Island Historical Preservation Commission, 1981), 9, 14, 21, 23, 29, 30; RIHPC, *The West Side, Providence.* (Providence: Rhode Island Historical Preservation Commission, 1976.), 5, 11.

1890s, when Providence became the leading U.S. manufacturer of worsted goods and the Woonasquatucket was a major worsted textile district.[4]

Construction of Atwells Avenue Bridge

Prior to the construction of the current Atwells Avenue Bridge, street traffic traversed the river via a single-span wooden truss. This structure was described in period accounts as a "simple span" with a 39′ long, 26′ wide deck. It was probably supported with king- or queen-post type trusses. Half of this bridge was located in North Providence.[5]

In his annual report for the year 1872, the Providence City Engineer, Charles E. Paine stated that the Atwells Avenue Bridge was "not safe for indiscriminate use".[6] He noted that the trusses, "being unsound and distorted are practically useless" and that temporary bracing supported the bridge deck.[7] In January of 1873, the City of Providence's Overseer of Bridges, Obadiah Slade, echoed Paine's opinion, describing the structure as "weak and shaky".[8]

Acting on the opinion of the City Engineer and Overseer of Bridges, the Providence City Council passed a resolution on June 16, 1873 appropriating $3,000 from the general bridge fund "for the purpose of uniting with the town of North Providence in building a new iron bridge over the Woonasquatucket River at Atwells Avenue".[9] The Town of North Providence also took steps to appropriate funds for a replacement bridge, but no additional action had been taken by the end of the year, possibly because of ongoing annexation activities relating to North Providence territory on the west side of the river. The City of Providence completed its annexation of North Providence lands in May 1874 and assumed full ownership of the Atwells Avenue Bridge.

While the negotiations for annexation were ongoing, the condition of the Atwells Avenue Bridge had continued to deteriorate. At the end of 1873, Paine was repeating his earlier condition assessment and recommendations, noting that "the trusses have long since lost their supporting power…The main support is derived from two braces under the center of the roadway, resting near the base of the abutments….The wall plates, portions of the stringers, and many of the floor beams are more or less decayed, and the bridge is unsafe for indiscriminate use".[10] The following year, Paine recommended that "some measures

---

[4] RIHPC, *Providence Industrial Sites: Statewide Historical Preservation Report P-P-6*, 9, 14, 21, 23, 29, 30; RIHPC, *The West Side, Providence*, 5, 11.
[5] Charles E. Paine, "Annual Report of the City Engineer for 1872." City Document No. 54 from *Providence City Documents from June 1872 to June 1873*. (Providence: Hammond, Angell & Company, 1873), 38; Charles E. Paine, "Annual Report of the City Engineer for 1873." City Document No. 52. *Providence City Documents from June 1873 – December 31, 1874*. (Providence: Hammond, Angell & Co., 1875): 46, 56.
[6] Paine, "Annual Report of the City Engineer for 1872," 38-39.
[7] Paine, "Annual Report of the City Engineer for 1872," 38-39.
[8] Overseer of Bridges as quoted in Paine, "Annual Report of the City Engineer for 1873," 56
[9] Providence City Council. *Resolutions of the City Council of the City of Providence, With Reports. June 1873 to January 1875.* (Providence: Hammond, Angell & Company, 1876), 25.
[10] Paine, "Annual Report of the City Engineer for 1873," 56.

should be taken at an early day to *thoroughly* repair or renew the wooden bridge at the Atwell's Avenue crossing of the Woonasquatucket River".[11]

The Providence Board of Aldermen finally initiated steps towards replacement of the bridge at their meeting on January 28, 1875, directing Nelson I. Tallman, the city's new Overseer of Bridges "to examine the bridge across the river at Atwells Avenue, and report to this board as to the condition of the same".[12] Tallman's opinion is unknown, but presumably echoed that of the engineer, for on April 29, 1875, the Board of Aldermen passed a resolution designating $8,000 dollars from the general bridge appropriation for the bridge's replacement and delegating responsibility for the project to the Advising Committee on Bridges, who were "requested to cause a bridge to be constructed".[13] The City Council passed the resolution on May 6, and Mayor Thomas A. Doyle approved the measure the same day.[14]

On May 13, 1875, the Providence Board of Aldermen appointed a committee consisting of two aldermen and Tallman, "to obtain and report plans and estimates for an iron bridge, with iron floor, to be built over the Woonasquatucket River at Atwells Avenue".[15] The committee reported back to the Board on May 21 as follows:

> "the Committee which was raised to present a plan and estimates for an iron bridge with an iron floor to be built over the Woonasquatucket River at Atwells Avenue report that they adopted the plan of the Eagle St. Bridge and have obtained estimates for a bridge of that style with such changes only as are needed to suit the location and are of the opinion that the bridge for the place designated can be built with an iron floor, new abutments of rough granite, and granite block pavement for roadway complete, for the sum of eight thousand dollars, although the estimates obtained are slightly in excess of that amount. They therefore recommend the passage of the accompanying resolution, Respectfully submitted for the Committee, J. Lippitt Snow, Chairman."[16]

A review of earlier city engineer reports indicates that the Eagle Street Bridge was a "wrought-iron Warren girder" whose superstructure was furnished and erected in 1872 by Hawkins & Burrall of Springfield, Massachusetts.[17] Committee records do not include any solicitations or estimates that would indicate which bridge companies were in correspondence with the committee for the Atwells Avenue Bridge. The Board of Aldermen accepted the committee recommendation, and resolved "that the Overseer of Bridges, acting under the advice and direction of Alderman Snow, Angell, and Manchester, is

---

[11] Charles E. Paine, "Annual Report of the City Engineer for 1874." City Document No. 11. *Reports of the Municipal Department of the City of Providence for the Year Ending December 31, 1875*. (Providence: Providence Press Company, 1876):70.
[12] Providence Board of Aldermen. *Board of Aldermen, No. 8, 1873-1876.* Records of meeting minutes, 1873-1876. Collection of the Providence City Archives, Providence City Hall, Providence, RI: 314.
[13] Providence City Council. *Resolutions of the City Council of the City of Providence, With Reports. June 1873 to January 1875.*
[14] Providence City Council. *Resolutions of the City Council of the City of Providence, With Reports. June 1873 to January 1875.*
[15] Providence Board of Aldermen. *Board of Aldermen, No. 8, 1873-1876.* Records of meeting minutes, 1873-1876: 377.
[16] Providence Board of Aldermen. *Board of Aldermen, No. 8, 1873-1876.*
[17] Paine, "Annual Report of the City Engineer for 1872," 38.

hereby instructed to cause an iron bridge with an iron floor, and roadway, to be paved with granite blocks, to be built over the Woonasquatucket River, at Atwells Avenue in accordance with the report of the committee of the Board of Aldermen, this May 21, 1875".[18]

On or about August 12 of 1875, construction began and the bridge was closed to travel. Payments approved by the Board of Aldermen show that the Delaware Bridge Company was responsible for the bridge superstructure, but any documents that describe the bidding process or award of contract could not be located. An examination of local newspapers did not reveal any legal notices concerning solicitation of bids. It is possible that Macdonald, who had designed the Point Street Swing Bridge (since replaced, see discussion below) in Providence may have capitalized on contacts made during that project in obtaining the commission.[19]

Abutments for the bridge were completed by the end of October under the direction of Tallman, presumably with city labor.[20] Tallman (1846-1923) was a Providence native who served as Overseer of Bridges for the city from January 23, 1875 until April 2, 1878. At the end of his tenure with the city, he worked as a building contractor and carpenter.[21]

In early November, the Providence Evening Press reported that "workmen are now engaged in putting up the ironwork on the Atwell's Avenue bridge".[22] Construction of the superstructure proceeded quickly, and the newspaper reported on December 17, 1875 that "the new bridge being built on Atwells Avenue is nearly finished, and will be open for travel in two weeks".[23] Mayor Doyle's inaugural address on January 3, 1876 reported that the bridge construction was ongoing and the structure was nearly ready for travel.[24] Two days later, the bridge was opened to traffic.[25]

The total cost for the bridge was between $7,300 and $7,500, according to various primary sources. The City Auditor stated in his 1877 annual report that the total bridge expenditure was $7,395.96.[26] Tallman

---

[18] Providence Board of Aldermen. *Board of Aldermen, No. 8, 1873-1876*: 381-382.
[19] Thomas A. Doyle, "Notice, Mayor's Office, City of Providence." (*Providence Evening Press*, Wednesday, August 4, 1875), 37; Providence Board of Aldermen. *Board of Aldermen, No. 8, 1873-1876*: 500.
[20] Thomas A. Doyle, "Eleventh Inaugural Address of the Honorable Thomas A. Doyle, Mayor. Delivered January 3." *Providence City Documents for the Year 1876*. (Providence: Angell, Burlingame & Company, 1876.), 37.
[21] Samuel W. Brown, *Providence City Manual: Or Organization of the Municipal Government for the Year 1878.* City Document No. 1. (Providence: Angell, Hammett & Company, 1879), 147; City of Providence. *Tax Book, City of Providence, 1904.* (Providence: What Cheer Printing Company, 1904), 514; F.W. Dodge. *Building and Engineering Trades Reference Book of Massachusetts and Rhode Island, 1904*. (Boston: F.W. Dodge, 1904), 204; Henry V. A. Joslin, "Providence City Manual; Or Organization of the Municipal Government for the Year 1887." City Document No. 1. *Providence City Documents For the Year 1887, Volume I.* (Providence: Providence Press Company, 1888.), 173; A.J. MacDonald, "Return of a Death. City of Providence." Collection of the Providence City Archives, Providence City Hall, Providence, RI, Filed January 16, 1923.
[22] Providence Evening Press. "Local News" *Providence Evening Press:* (November 4, 1875):2.
[23] Providence Evening Press. "Local News." *Providence Evening Press* (December 17, 1875):2.
[24] Doyle, "Eleventh Inaugural Address of the Honorable Thomas A. Doyle, Mayor. Delivered January 3.": 37.
[25] Providence Evening Press. "Local News." *Providence Evening Press* (January 5, 1876):2.
[26] Providence City Auditor. "Thirtieth Annual Report of the City Auditor, Showing the Receipts and Expenditures of the City of Providence, For the Year Ending September 30, 1876." *Providence City Documents for the Year 1877*. (Providence: J.A. & R.A. Reid, 1878).

wrote in his report for the same year that the bridge cost $7,500 for the superstructure and abutments.[27] The Board of Aldermen meeting minutes for December 1875 and January 1876 show that the Delaware Bridge Company was paid a total of $5,113.75 for work on the bridge.[28]

Charles A. Macdonald and the Delaware Bridge Company

The Delaware Bridge Company was a nationally prominent engineering firm founded by noted civil engineer Charles A. Macdonald (1837-1928). During Macdonald's active career in the second half of the nineteenth century, he was part of a corps of professionally trained engineers who transformed American civil engineering and bridge construction from occupations based on vernacular structural traditions and personal experience to a profession based on structural theory. In his role as co-founder and president of the Delaware Bridge Company and subsequently, the Union Bridge Company, Macdonald achieved both national and international prominence for innovative, long-span bridge crossings. He was also an early adopter and proponent of the use of steel instead of iron for bridge construction.[29]

Macdonald was born in Gananoque, Ontario, Canada on January 26, 1837. He attended schools in Ontario then, from ages 15 to 17, he worked under Samuel Keefer, one of Canada's leading engineers, on construction survey efforts for the Grand Trunk Railroad in Ontario. In 1854 he entered Rensselaer Polytechnic Institute (RPI) in Troy, N.Y., which was at that time the only institution of its kind in the United States. After graduating with the degree of Civil Engineer in 1857, Macdonald returned to employment at the Grand Trunk Railroad and worked on that project for six years before obtaining the job of assistant engineer on the Philadelphia and Reading Railroad (Reading Railroad Company). At the Reading Railroad Company, Macdonald was probably exposed to bridge design at the leading edge of the profession. Iron bridge construction was still in its developmental stage in America, with railroad companies a chief consumer of such structures. As a center of both iron production and railroad construction, Eastern Pennsylvania was a locus of early iron bridge construction. The Reading Railroad Company is credited with constructing the first all-metal railroad bridge in America in 1845.[30]

Macdonald's supervisor was J. Dutton Steele, Chief Engineer of the Reading. In 1863, Steele began building iron bridges on what he called the "Isometrical plan", which he tested as models in the company shops at Pottstown, Pennsylvania and then built at various points on the Reading's route. Steele adapted the design to wood trusses and obtained patent number 63,666 in April of 1867 for this "Improvement in

---

[27] Nelson I. Tallman, "Annual Report of the Overseer of Bridges. Presented January 27, 1876." *Providence City Documents for the Year 1876*. (Providence: Angell, Burlingame & Company, 1877): 178.

[28] The first recorded payment was for $3,000, approved December 16, 1875 for the "bridge at Atwells Ave" (Providence Board of Alderman 1875:500). A second payment of $2,113.75 to the company was recorded February 24, 1876 under the Bridge Department heading, but without any specific reference to the Atwells Avenue Bridge (Providence Board of Alderman 1876:18). The timing of the payment and the fact that there were no other recorded Delaware Bridge Company projects in Providence at the time suggest that the funds were the second of two installments made for the bridge superstructure.

[29] Francis E. Griggs, "Charles Macdonald." *Journal of Bridge Engineering* (September/October, 2010): 571.

[30] Eric DeLony, "Surviving Cast- and Wrought-Iron Bridges in America." *IA: The Journal of the Society for Industrial Archaeology* 19, No. 2 (1993):17-47; Griggs, "Charles Macdonald." 555; W.G. Triest, "Charles Macdonald, Past-President, American Society of Civil Engineers." *Proceedings of the American Society of Civil Engineers* 55, Part 2, No.10 (1929): 2,733-2,734.

Bridges", which was in essence a double-intersection Warren truss, as discussed below.[31] On Steele's behalf, in 1867 Macdonald authored a promotional tract for the Isometrical truss entitled *A Discussion of the General Principles involved in the Construction and Action of the Isometrical Truss*. The booklet provided a comparative analysis of the Isometrical truss against the typical Howe, Pratt (a/k/a Whipple), and Warren truss types of the period and discussed the merits of the design for combination wood and metal bridges. He argued that the Isometrical truss saved material in the web system and that, when constructed in wood, it provided better capability for adjustment as the wood seasoned and deformed. The pamphlet also included Macdonald's 1867 bridge design for the Perkiomen Railroad Company near Phoenixville, Pennsylvania, then under construction.[32] [33]

Between 1868 and 1875, Macdonald entered a short-lived partnership with A.B. Burton as Macdonald & Burton, and then operated his own company in New York City. During this period, he constructed several truss bridges for the Delaware, Lackawanna and Western Railroad (the Lackawanna). One of these, Bell's Bridge over the Paulinskill River, was a multiple-span, wrought-iron, through truss bridge with a maximum span length of 143′. This structure, which was completed in 1872 and featured in the *Railroad Gazette*, utilized double intersection Warren trusses. In 1872, Macdonald also designed his first major swing bridge, the Point Street Bridge over the Providence River in Providence, Rhode Island (replaced in 1927). The bridge was recognized in contemporary publications for an innovative locking connection that Macdonald added to affix the swing span to the adjacent piers when in the closed position.[34]

In 1875, Macdonald and Edward Hemberle, the former Chief Engineer of the American Bridge Company in Chicago, formed the Delaware Bridge Company. The company served as the design arm of Cooper, Hewitt and Company, a prominent iron works in Trenton, New Jersey. Macdonald and Hemberle attracted a number of young and talented engineers to their firm, including Charles C. Schneider and Theodore Cooper, who later became nationally prominent bridge builders in their own right. Another employee, Nathaniel Haven, served as the company's secretary and followed Macdonald to the Union and American Bridge Companies before establishing his own firm, the Baltimore Bridge Company in the early twentieth century.

The contract for the Atwells Avenue Bridge was among the first commissions that the company received and is unusual from the standpoint of its diminutive size. It may be that the company initially accepted all types of work in order to build the business or it could have had something to do with Macdonald's previous work on the Point Street Bridge. He was also concurrently working in Boston; providing designs

---

[31] J. Dutton Steele, "Improvement in Bridges." Letters Patent No. 63,666 dated April 9, 1867. (On file, United States Patent and Trademark Office, Washington, D.C., 1867).

[32] No accounts of the completed bridge could be located. Steele and other unidentified engineers incorporated the Isometrical Truss Bridge Company in Pennsylvania to hold and license the Isometrical patent. The company filed its last annual report in 1871 and its charter was forfeited in 1883 for failure to pay taxes. It is not known whether Macdonald was a partner in the firm (Macdonald 1867:3; Pattison 1902:71-79).

[33] Griggs, "Charles Macdonald." 565-566; Charles Macdonald, *A Discussion of the General Principles Involved in the Construction and Actions of the Isometrical Truss Bridge*. (Philadelphia: T. Ellwood Zell, 1867).

[34] Engineering. "Swing Bridge at Providence, U.S." *Engineering* 15 (March 21, 1873):202-203; Griggs, "Charles Macdonald." 566-568; Railroad Gazette. "Bell's Bridge." *Railroad Gazette* (April 13, 1872):165. Triest, "Charles Macdonald, Past-President, American Society of Civil Engineers." 2733.

for the Congress Street Bridge over the Fort Point Channel. Whatever the reason, the company's reputation grew rapidly and contracts for major railroad bridges and other types of structures soon followed. The company built at least twelve bridges for different railroad companies in the northeast and mid-Atlantic regions of the country, including structures utilizing Pratt and double intersection Warren trusses. One of these works, the Rockville Bridge, was completed in 1877 for the Pennsylvania Railroad and utilized 23 wrought-iron, double intersection Warren spans of 151′ and 153′ to cross the Susquehanna River. In 1877, Macdonald served on the Board of Engineers appointed to devise post-construction modifications to Roebling's Niagara Suspension Bridge. In 1881-1883 he served as a trustee of the Brooklyn Bridge, and participated in a study committee devising solutions to increase the live load capacity of the bridge. Macdonald also submitted the winning design proposal for the Blackwell's Island Bridge over the East River in New York City, but this design was never constructed.[35]

Within a few years, the Delaware Bridge Company was in the top ranks of bridge engineering companies in the United States, being chosen as one of a few companies or individuals to represent the country in the American Society of Civil Engineers exhibit at the Paris Exposition of 1878.[36] Like other design and fabrication companies of the period, the Delaware Bridge Company also offered train and pier sheds and other roof structures. In 1879, Macdonald designed the long-span arched roof for the Seventh Regiment Armory (a/k/a Park Avenue Armory) in New York City, completed in 1881, a landmark structure better known for its luxurious interior décor. Macdonald's solution for the roof provided a vaulted structure supported by eleven wrought-iron trusses, each spanning 187′. The same year, Macdonald also designed the Coney Island Iron Pier (a/k/a the New Iron Pier) for passenger ferries and implemented an innovative water jetting system of pile insertion that was later described in the *Transactions* of the American Society of Civil Engineers (Griggs 2010:567-571).[37]

Macdonald reached the pinnacle of his career in the 1880s. In 1883, the Delaware Bridge Company took over with its own design a railroad bridge project across the Ohio River between Louisville, Kentucky and New Albany, Indiana that had been aborted in 1881 because of "various complications" (Engineering 1888:85). A significant challenge was the extreme variability and power of the Ohio River's current. Macdonald and Hemberle revised C. Shaler Smith's design for the 2,453′ long Louisville and New Albany Bridge as a steel structure with simplified cantilever and link spans. Its completion in 1886 brought acclaim to the company.[38]

Charles A. Macdonald's Later Career

While the Louisville and New Albany Bridge was under construction, Hemberle departed the company and Macdonald briefly served as both president and lead engineer. He subsequently dissolved the firm and established the Union Bridge Company through a merger with the Kellog and Maurice Company of Athens, Pennsylvania, and the Central Bridge Company (a/k/a the Works) of Buffalo, New York. These prominent fabrication shops were each led by well-regarded engineers: Charles Kellog and Charles S.

[35] Griggs, "Charles Macdonald." 567; George S. Morison, Edward P. North and John Bogart. "American Engineering, as Illustrated by This Society at the Paris Exposition of 1878." *Transactions of the American Society of Civil Engineers* 12 (November/December 1878): 355-357.
[36] Morison et al. "American Engineering, as Illustrated by This Society at the Paris Exposition of 1878.": 355-357
[37] Griggs, "Charles Macdonald." 567-571.
[38] Griggs, "Charles Macdonald." 572-573.

Maurice from Kellog and Maurice, and Thomas C. Clarke from the Central Bridge Company. Macdonald, then aged 46, was the "senior partner" and acknowledged leader of a company that would become nationally prominent for the design of long-span steel structures at challenging sites and for the erection of major bridges for other significant American engineers.[39]

The most significant project of the Union Bridge Company was the Poughkeepsie Bridge between Poughkeepsie and Highland, New York. Originally contracted to another firm, construction of the bridge had previously stalled at the piers. The Union Bridge Company overcame unprecedented pier depths and revised the bridge superstructure design as a steel cantilever and link structure to complete this landmark work of engineering in 1888. The engineering and popular press celebrated the structure, which broke several world records for length and made a significant contribution to the freight transportation network of the northeastern United States.[40] A second major and widely-publicized bridge was the Hawkesbury Bridge, completed in New South Wales, Australia in 1889. As with the Poughkeepsie span, a significant challenge to the project was the depth of the piers. The firm was selected from an international field of competitors on the basis of its high reputation and the low-cost and structurally-efficient proposal. In addition to these major bridges, the Union Bridge Company fabricated and erected hundreds of other structures in the United States. These included several long-span crossings over the Missouri, Ohio, Mississippi, and Allegheny rivers for prominent American bridge engineers such as George Morison, Octave Chanute, and Theodore Cooper.[41]

---

[39] Griggs, "Charles Macdonald."; James T. White & Company. *National Cyclopaedia of American Biography.* (New York: James T. White & Company, 1901): 475.

[40] Responsibility within the Union Bridge Company for the design of the Poughkeepsie Bridge is attributed differently by various secondary sources. Melewski et al. give credit to Macdonald and Clarke, while Carl Condit credits the design to structural engineers J.F. O'Rourke, P.P. Dickinson, and A.B. Paine, an attribution repeated in the National Register of Historic Places nomination form for the structure (Condit 1960:158; Melewski et al. 2007:269, 271-274; Sharp 1978).

[41] Arthur V. Abbott, "The Poughkeepsie Bridge." *Frank Leslie's Popular Monthly* 28, No. 2 (1889):154-158; Carl Condit, *American Building Art: The Nineteenth Century*. (New York: Oxford University Press, 1960):159; Engineering News and American Contract Journal. "Hawkesbury Bridge, New South Wales." *Engineering News and American Contract Journal* 15 (February 6, 1886):98-100; Engineering News and American Contract Journal "Hawkesbury Bridge, New South Wales." *Engineering News and American Contract Journal* 15 (May 8, 1886):298; George Fraser, "Alton Bridge." HAER No. IL-21. National Park Service, U.S. Department of the Interior, 1985; George Fraser, "Nebraska City Bridge" HAER No. NE-2. National Park Service, U.S. Department of the Interior, 1986; Francis E. Griggs, "Charles Macdonald." *Structure* (January, 2009). Electronic document, http://www.structuremag.org/article.aspx?articleID=840, retrieved 5 November, 2010; Griggs, "Charles Macdonald." 573-575; Monica E. Hawley, "Poughkeepsie Bridge." HAER No. NY-131. National Park Service, U.S. Department of the Interior, 1983; Peter Melewski, Malcolm McLaren, James Green, and David Thurnherr. "Walkway over the Hudson." From Khaled M. Mahmoud, ed., *Innovations in Bridge Technology*. (London: Taylor & Francis Group, 2007): 269, 271-274; John F. O'Rourke, "The Construction of the Poughkeepsie Bridge." *Transactions of the American Society of Civil Engineers* 18, No. 387 (1888):199-206; P.A.C. Spero & Company. "Coraopolis Bridge." HAER No. PA-217. National Park Service, U.S. Department of the Interior, 1990.

The 1890s were the final years of Macdonald's active career. During this period, Macdonald prepared plans for a number of long-span structures that, for various reasons, never came to fruition. The American Bridge Company, a consolidation of leading bridge companies led by J.P. Morgan, purchased the Union Bridge Company in 1901. Macdonald served briefly in the new company as head of the Railway Contracting Department, before retiring to Gananoque. In 1910-1911 he assisted with the design review for the Quebec cantilever bridge. At his death in 1928, Macdonald was hailed as "one of the greatest bridge builders of the North American continent" and was lauded in multiple publications for his contributions to the field.[42]

The Double Intersection Warren Truss

The Atwells Avenue Bridge is a rare example of the double intersection Warren truss, which is characterized by its distinctive pairs of overlapping diagonals that form a series of "X" shapes in the panels.[43] This truss type belongs to the larger structural category of parallel trusses, sometimes referred to as the "trapezoidal truss" or "parallel girders" in historical engineering literature. The documented history of these structures extends back to Vitruvius in the first century BC and to Palladio in the 16th century. Early American bridge builders such as Timothy Palmer drew on craft traditions of timber construction and circulated translations of Palladio to build these trusses in various configurations. Beginning around 1830, there was a rapid expansion in the number of truss types under consideration, as builders and engineers responded to new requirements imposed by railroads, the increasing availability and quality of iron as a building material, and the refinement of scientific engineering principles. Following the

---

[42] *Brockville Recorder and Times* as quoted in Griggs, "Charles Macdonald." 579; Engineering Record. "The Organization of the American Bridge Company." The Engineering Record, Building Record and Sanitary Engineer 42 (July 7, 1900):17; J. Castell Hopkins, ed. *Canada – An Encyclopedia of the Country, Volume VI.* (Toronto: The Linscott Publishing Company, 1902):295; James T. White & Company. *National Cyclopaedia of American Biography.* 475; Triest, "Charles Macdonald, Past-President, American Society of Civil Engineers." 2734.

[43] Previous surveys of the Atwells Avenue Bridge have (not unreasonably) classified the structure as a lattice truss on the basis of its riveted connections and reliance on simple rolled "T"- and "L"-shaped bar iron (as opposed to larger built-up members typically used in Warren trusses). These previous surveys did not have the benefit of knowledge concerning the connections between the Atwells Avenue Bridge, the Eagle Street Bridge, and Charles A. Macdonald. The precedent of the Eagle Street Bridge as adopted by the committee for the Atwells Avenue Bridge and Charles A. Macdonald's oeuvre suggest that the bridge is best categorized and interpreted as a double intersection Warren structure. Macdonald's writings on Steele's Isometrical patent (discussed below) express a preference for the double intersection Warren design. His Perkiomen Railroad Bridge of 1867, Bell's Bridge of 1872, and Rockville Bridge of 1877 (a Delaware Bridge Company project) all utilize this truss type. As noted earlier, the firm of Hawkins and Burrall from Springfield, Massachusetts was responsible for the design of the Eagle Street Bridge, completed in 1872 and described at the time as a "wrought-iron Warren girder" (Paine 1873:38). Research could not confirm whether that bridge was a single or double intersection Warren truss, but other Hawkins and Burrall structures, including three double intersection Warren highway bridges spanning the Boston & Albany Railroad in Massachusetts, demonstrate the firm's affinity for that truss type (Clouette and Roth 1987; Griggs 2010; Healey 1990; Morison et al. 1878:355-357; Railroad Gazette 1872:165).

Christopher Marston and Larry Lee of HAER provided valuable assistance in assessing the structural characteristics of the Atwells Avenue Bridge for this documentation.

publications of scientific means to analyze trusses by engineers such as Squire Whipple (1804-1882) and Hermann Haupt (1817–1905), there was a steady contraction in the number of actively used truss types during the period 1860 to 1890. Truss bridges evolved from an array of diverse and unusual designs to a handful of standardized types and derivatives, as poorly-designed bridges were identified and lapsed into disuse. In the early years of this period, bridge engineers championed proprietary patent designs or, in the case of the trusses at Atwells Avenue, designs that were fabricated and assembled from standard wrought-iron structural shapes available from rolling mills. As metallurgy improved and engineering progressed, standardized truss designs based on the Pratt and Warren types emerged in the form of ever-longer bridges made of steel, fabricated by increasingly larger fabrication companies.[44]

The double intersection Warren truss originated during this revolutionary period in bridge engineering and was subsequently utilized on an infrequent basis between ca. 1870 and 1915 for both railroad and highway crossings. Precedents for the standard Warren truss design appeared in France and Belgium during the 1830s and 1840s and a French patent was issued to the company Neville, Nash et Compagnie in 1838. In 1839, William Nash obtained a patent for the same design in Britain. The archetypal design that features repetitive, equilateral triangles in the truss web and lacks any vertical members was patented by British engineers James Warren and Willoughby Monzani in 1848. Noted American engineer Squire Whipple claimed to have actually built the first Warren truss in the United States – an achievement he may have accomplished without knowledge of the Warren-Monzani patent.[45]

These engineers sought to design the simplest rigid truss possible by making all of the primary members the same length and eliminating redundant members, particularly verticals. Warren trusses were recognized for their efficiency, since strains within the structure could be calculated and members sized accordingly. Diagonal members sloping outward from the center were understood to be under compression, and those sloping inward to be in tension, although stresses might be temporarily reverse under live load. For early bridge designers, however, longer Warren trusses were elusive because of obstacles to obtaining the larger components required. As techniques for fabrication and assembly improved, Warren trusses steadily increased in popularity after 1860 and carried over into long-span steel construction during the twentieth century. Twentieth-century bridge builders largely eschewed the more complicated patents of the nineteenth century and settled on Warren trusses, along with the Pratt type, almost universally for railroad and highway spans. These Warren trusses are more typically in the simple type, with vertical posts, and less typically found in the double-intersection configuration.[46]

---

[44] Eric DeLony, "Surviving Cast- and Wrought-Iron Bridges in America." *IA: The Journal of the Society for Industrial Archaeology* 19, No. 2 (1993): 34; Emory L. Kemp, ed. *American Bridge Patents: The First Century (1790-1890)*. (Morgantown: West Virginia University Press, 2005).

[45] Carl Condit, *American Building Art: The Nineteenth Century*, 117-118; David Guise, "The Evolution of the Warren, or Triangular, Truss." *IA: The Journal of the Society for Industrial Archeology* 32, No. 2 (2006):23; Emory L. Kemp, ed. *American Bridge Patents: The First Century (1790-1890)*: 41.

[46] Carl Condit, *American Building Art: The Nineteenth Century*, 117-118; Carl Condit, *American Building Art: The Twentieth Century*. (New York: Oxford University Press, 1961).: 82,87; D.A. Gasparini, and Caterina Provost. "Early Nineteenth Century Developments in Truss Design in Britain, France, and the United States." *Construction History* 5 (1989):25; John Healey, "Boston & Albany Railroad, Kingsbury Street Bridge." HAER No. MA-117. National Park Service, U.S. Department of the Interior, 1990: 3; Parsons Brinkerhoff and Engineering and Industrial Heritage. *A Context for Common Historic Bridge Types*. NCHRP Project 25-23, Task 15. Washington, D.C.: National Cooperative Highway Research Program, Transportation Research Council, National Research Council, 2005: 2-7.

The double intersection Warren truss superimposes a second system of diagonals symmetrically upon and at opposing angles to, the first. Historically such trusses have gone by a variety of names, including "double triangle," "double Warren truss," "double Warren girder," or "lattice truss".[47] This less common Warren subtype is poorly documented in secondary materials, although the outlines of its development echo those of the common Warren truss. In Great Britain, a double intersection Warren truss was first used about 1857 by engineer Thomas Bouch for decks of viaducts on the South Durham and Lancashire Union Railway in Great Britain.[48]

In the United States during the 1860s, there were multiple, competing claims for trusses that incorporated a doubled Warren system, and histories of bridge engineering do not identify a "first" use of the design. The competing claims illustrate the highly competitive and rapidly evolving nature of the bridge design and fabrication industries within the United States during the period. Macdonald had a personal role in the dissemination of the double intersection Warren truss type in the country, since the Isometrical truss patented by Steele and promoted by Macdonald was actually a double intersection Warren with a redundant system of paired diagonal members in the web.[49] Macdonald's promotional tract for the Isometrical, which described the truss as having "a second Warren system introduced", demonstrates that he understood this.[50] Steele was issued his patent in 1867 and claimed (via Macdonald's publication) that he had begun experimenting with such trusses in 1863, 6 years after the earliest identified example of the truss in Great Britain and the same year that Macdonald had started at the Reading.[51] Still another bridge designer credited with invention of the double-intersection Warren truss is Robert W. Smith of Ohio, who obtained a patent on July 16, 1867 for a "double truss bridge" that included two sets of intersecting

---

[47] David Guise, "The Evolution of the Warren, or Triangular, Truss.": 34; Sung H. Park, *Bridge Inspection and Structural Analysis*. Trenton: Published by the author, 1980: 51; Parsons Brinkerhoff and Engineering and Industrial Heritage. *A Context for Common Historic Bridge Types*: 2-7.

[48] T.M. Charlton, *A History of Theory of Structures in the Nineteenth Century*. (New York: Cambridge University Press, 1982): 6; Carl Condit, *American Building Art: The Nineteenth Century*, 117-118; Parsons Brinkerhoff and Engineering and Industrial Heritage. *A Context for Common Historic Bridge Types*: 2-7.

[49] Steele's patent included a total of four diagonal members in each truss panel, with both wood compression and iron tension members along each diagonal axis. He claimed these paired diagonal braces and counter braces as a unique innovation. This concept may have originated out of a concern regarding stress reversals in combination wood and iron structures under live load, or an attempt to file a defensible patent. The patent also claimed as a new design the elimination of any vertical posts in the truss panels.

[50] Charles Macdonald, *A Discussion of the General Principles Involved in the Construction and Actions of the Isometrical Truss Bridge*: 14-15. Macdonald's writing and bridge designs deviated from Steele's patent in two ways that further demonstrate his understanding of the structural principles at issue. He eliminated Steele's redundant diagonals, simplifying the structure to incorporate only two diagonals in each panel. His promotional booklet and later bridges utilize equilateral triangles as found in the Warren truss, rather than using steeper diagonals that form isosceles triangles, as found in Steele's patent. Unfortunately, there is no writing by Macdonald that explains his role in the development of the Isometrical truss or his rapid abandonment of its idiosyncratic patented form in favor of the standard double intersection Warren pattern (Macdonald 1867:12, 26; Morison et al. 1878:355-357; Railroad Gazette 1872:165).

[51] It is interesting to note that one year later, John Foreman, who was master carpenter of the Reading shops in Pottstown where the Isometrical trusses were perfected, obtained his own bridge patent. His truss was a multiple intersection structure using both wood and iron members, but he, like Steele, claimed as a unique aspect of his design the "absence of the usual vertical posts of vertical rods, which have heretofore been considered indispensable in bridges of this class" (DeLoney 1993:25; Foreman 1868).

diagonal compression and tension members (albeit with two verticals flanking the center of the span).[52] Finally, Squire Whipple, in 1872, questioned the originality of the Isometrical truss, noting that the design was a "not very favorable" modification of a truss first described his 1847 publication *A Work on Bridge Building* as a "Cancelled Truss" and built as early as 1852. Whipple also noted that the bridge embodied general "principles of action" of the Warren truss.[53]

During their period of use, double intersection Warren trusses offered both perceived and real advantages over other trusses and girders in certain applications. The panel geometry allowed for very little vertical deflection and thus provided a very rigid structure under load. The design was thought to offer a savings in material because it eliminated the need for vertical members. At longer span lengths, the second set of diagonals permitted the use of Warren trusses without a corresponding increase in the size of the diagonals and thereby overcame limitations on the fabrication and assembly of such larger members. The design resulted in a shorter distance between panel points and thus permitted more efficient framing of the bridge floor. Finally, the double intersection Warren was thought to offer an additional factor of safety in the event of a vehicle collision with the truss.[54]

Double intersection Warren trusses were most popular in the last quarter of the nineteenth century. Both single and double intersection Warren deck trusses were identified as appropriate for highway and railroad spans in the 100-125′ range, for which plate girders of an adequate depth could not be obtained. They were commonly used in steel pony and through truss forms at this length. By the early twentieth century, however, advances in bridge engineering and fabrication had made the disadvantages of the type more obvious. In 1916, respected bridge engineer John A.L. Waddell wrote that the type: "has managed to survive with apparently very little good reason for having done so".[55] The design was mistrusted because of the statically indeterminate character of multiple intersection trusses, which carry redundant members that cannot be analyzed according to the principles of statics. Such trusses also introduce

---

[52] Robert W. Smith, "Improvement in Bridges." Letters Patent No. 66,900 dated July 16. United States Patent and Trademark Office, Washington, 1867.

[53] John C.R. Sheldon, "West Wishkah Bridge". HAER No. WA-22. National Park Service, U.S. Department of the Interior, 1988: 4; Steele, "Improvement in Bridges."; Squire Whipple, *A Work on Bridge Building: Consisting of Two Essays, the One Elementary and General, the Other Giving Original Plans and Practical Details for Iron and Wooden Bridges.* (Utica: H.H. Curtis, 1847): 14-16, 78-80; Squire Whipple, "Extracts from a Paper Read by Squire Whipple, Civil Engineer, Member of the Society, On Truss Bridge Building." *Transactions: American Society of Civil Engineers* 1 (1872):239-243.

[54] Virginia H. Adams, and Matthew A. Kierstead. "Pawtuxet River Railroad Bridge." HAER No. RI-44. National Park Service, U.S. Department of the Interior, 1996; Lola Bennett, "Shelburne Falls Bridge." HAER No. MA-96. National Park Service, U.S. Department of the Interior, 1990; Jeffrey O. Borne, "Double-Intersection Warren Truss Bridge." HAER No. CT-7. National Park Service, U.S. Department of the Interior, 1983; Martha H. Bowers, "Holyoke Bridge." HAER No. MA-18. National Park Service, U.S. Department of the Interior, 1986: 5; John Lyle Harrington, ed. *The Principal Professional Papers of Dr. J.A.L. Waddell, Civil Engineer.* New York: Virgil H. Hewes, 1905: 448; Healey, "Boston & Albany Railroad, Kingsbury Street Bridge."; J.B. Johnson, C.W. Bryan and F.E. Turneaure. *The Theory and Practice of Modern Framed Structures*. *Part III – Design*. Rewritten by F.E. Turneaure and W.S. Kinne. (New York: John Wiley & Sons, Incorporated, 1910): 368; Mansfield Merriman and Henry S. Jacoby. *A Textbook on Roofs and Bridges. Part I, Stresses in Simple Trusses*. (New York: John Wiley & Sons, 1920): 199; John A. L. Waddell, *Bridge Engineering*. (London: John Wiley & Sons, Incorporated, 1916): 212.

[55] Waddell, *Bridge Engineering*, 471.

unnecessary structural complexity that adds to the cost of field assembly. Improvements in steel fabrication techniques increased the maximum length of plate girder spans and enabled the fabrication of larger truss members in more efficient standard Warren trusses, thus eliminating other rationales for use of the doubled Warren system.[56]

Today, surviving double-intersection Warren trusses are uncommon in the United States, whether in their highway or railway variations. The Atwells Avenue Bridge is one of few of its type in Rhode Island, and may be the oldest extant and only highway example. The only other known double intersection Warren trusses in the state are early twentieth century examples constructed by the New York, New Haven & Hartford Railroad. These are the Pawtuxet River Railroad Bridge in Cranston and the Omega Pond Railroad Bridge in East Providence, erected in 1906 and 1917, respectively. A third bridge of this class, the 1907 Lonsdale Avenue Bridge in Pawtucket, has now been replaced.[57]

Iron Truss Bridge Construction

The Atwells Avenue Bridge is a rare, but relatively late, surviving example of an iron bridge in the United States. Its trusses are made entirely of wrought-iron, unlike some early metal trusses that combined cast-iron compression members and wrought-iron tension members. The world's first iron bridge was erected in 1779 in England. In the United States, iron bridges were contemplated in the 1780s by pamphleteer Thomas Paine, but never completed. Both Ithiel Town and Stephen Harriman Long suggested that their patented wood bridges could be constructed in iron, but the first patentee for an iron bridge was August Canfield, a West Point graduate, who received a patent for a combination cast- and wrought-iron bridge in 1833. The oldest standing iron bridge, a metal arch, was constructed in 1839 on the National Road in Pennsylvania and the first iron railroad bridge was constructed in 1845 by the Reading Railroad Company. The weight, vibration, and threat of fire imposed by steam locomotives were an important impetus in the development of iron bridges. However, the inconsistent quality and higher cost of the material and a lack of availability of large iron structural members limited the viability of the material before the Civil War.[58]

The period 1860-1880 represented the peak of iron's popularity as a convergence of factors produced a significant increase in the number of iron bridges on highways and railroads. The introduction of pin-connections in bridges simplified bridge engineering, transportation, and erection. The iron industry developed means to roll ever larger and more consistent structural shapes and, with the help of the

---

[56] Bennett, "Shelburne Falls Bridge."; Bowers, "Holyoke Bridge."; Mark M. Brown, "South Fork of Hill Creek Bridge." HAER No. TEX-30. National Park Service, U.S. Department of the Interior, 1998; Healey, "Boston & Albany Railroad, Kingsbury Street Bridge."; Guise, "The Evolution of the Warren, or Triangular, Truss.": 34; George A. Hoole, and W.S. Kinne. *Steel and Timber Structures*. Second edition. New York: McGraw-Hill Book Company, Incorporated, 1942: 286-287; Johnson, *The Theory and Practice of Modern Framed Structures*. *Part III – Design*: 368; Sheldon, "West Wishkah Bridge": 4; Waddell, *Bridge Engineering*, 212, 471.

[57] Adams, "Pawtuxet River Railroad Bridge."; Bruce Clouette and Matthew Roth. *Rhode Island Historic Bridge Inventory: Part I: Inventory and Recommendations.* Hartford: Historic Resource Consultants, 1988: Appendices A and B; Healey, "Boston & Albany Railroad, Kingsbury Street Bridge."; Parsons Brinkerhoff and Engineering and Industrial Heritage. *A Context for Common Historic Bridge Types*: 3-43.

[58] DeLony, "Surviving Cast- and Wrought-Iron Bridges in America."; Parsons Brinkerhoff and Engineering and Industrial Heritage. *A Context for Common Historic Bridge Types*: 2-6 – 2-7.

railroad, these could be combined into trusses on the shop floor and then shipped to their destination. The Civil War drove up production of iron and the subsequent end of hostilities reduced demand for and cost of the material. Most iron bridges up until about 1870 utilized both cast and wrought iron. This approach was a compromise between the higher cost of wrought iron and the lower tensile strength of cast iron. However, in the post-bellum period, longer spans and heavier railroad equipment made the structural limitations of cast iron all too apparent through numerous widely-publicized bridge failures in the 1870s. By 1875, the material had been eliminated from bridges and only wrought iron was used. Continued failure of iron bridges eventually led to an abandonment of both cast and wrought iron, although insufficient understanding of bridge stresses or cost-cutting also contributed to some of the disasters.[59]

The perfection of high-output Bessemer converters and open hearth furnaces for the large-scale production of steel reduced the cost of the material by the 1880s to a point where it was competitive with iron, thus ending the "Iron Age". Because of their functional and structural obsolescence, iron bridges are now scarce in the United States. By the late twentieth century, there were thought to be fewer than 100 surviving iron bridges in the country, and only ten in the State of Rhode Island.[60]

Part II. Structural/Design Information

A. General Statement:

1. Character: The Atwells Avenue Bridge is a short-span nineteenth century wrought-iron pony truss. The structure's major visible character-defining and historically significant features are its unusual riveted, double intersection Warren trusses and decorative cast-iron end caps.

2. Condition of fabric: The last major inspection of Atwells Avenue Bridge was in 2009. At that time, the galvanized bridge girders exhibited minor to moderate corrosion on the top flanges and at the bottom of the webs, with accumulations of sand and debris from flooding. The timber stringers were showing signs of decay on their exposed bottom surfaces. The bottom chords of the original interior (roadway) trusses exhibited advanced corrosion. The exterior (sidewalk) trusses were in fair condition with moderate surface rust. Collision damage at the northeast and southwest corners had twisted the truss end posts and damaged their cast-iron ornamentation. The east end of the south exterior truss was leaning 12″ outward from traffic impact damage. The floor beams supporting the timber sidewalk stringers exhibited advanced corrosion at the interior ends, with holes through the beams supporting the east ends of both sidewalks. The asphalt roadway surface exhibited longitudinal and transverse cracks. The plank deck below was developing decay and deflecting at the location of a missing tie-down. Cracks were also observed in the sidewalk pavement. The abutments had some mortar deterioration and sand accumulation, with a scour under the drainage pipe in the west abutment. The bridge bearings were covered in sand, with one undermined. Masonry wing walls exhibited vegetation growth and mortar deterioration (Rhode Island Department of Transportation 2009). The bridge was inundated by

[59] Merriman, *A Textbook on Roofs and Bridges. Part I, Stresses in Simple Trusses*: 15; Parsons Brinkerhoff and Engineering and Industrial Heritage. *A Context for Common Historic Bridge Types*: 2-15.
[60] DeLony, "Surviving Cast- and Wrought-Iron Bridges in America.": 17; Clouette, *Rhode Island Historic Bridge Inventory: Part I: Inventory and Recommendations*: Appendices A and B; Parsons Brinkerhoff and Engineering and Industrial Heritage. *A Context for Common Historic Bridge Types*: 2-13.

record flooding in March 2010, further damaging the deck and railings and washing soil from the approach sidewalks, causing them to collapse. The sidewalks are currently blocked by Jersey barriers.

B. Description:

The Atwells Avenue Bridge is a single-span structure consisting of two parallel pairs of wrought-iron pony double intersection Warren trusses on granite block abutments. The vehicular roadway is flanked and carried by the two inner roadway trusses, and the north and south pedestrian sidewalks are carried by the inner trusses and the flanking outer sidewalk trusses. The overall footprint of the superstructure described by the corners of the outer trusses is 54′ long east-west and 63′-6″ wide at the outer edges.

The abutments, which are 39′ to 40′ apart at the faces, are vertical gravity masonry walls constructed of random ashlar, split-faced, mortared granite blocks. The abutments have stepped ends that blend into the upstream and downstream river bank retaining walls, which are built of irregular split stone. The east and west abutments both include single vertical rectangular drain openings near the center of their faces. Both openings have split granite block sills; the east opening has a granite lintel and the west a concrete lintel. The east abutment also includes a semi-circular drain with a coursed brick arch opening. The bridge seat areas at the center of the abutments were altered in 1992 for the installation of eight new steel I-beam roadway deck support stringers. The abutments and retaining walls are at a 9-degree skew to the bridge, however, the trusses, which extend well past the edge of the abutments at the southwest and northeast corners, are not staggered in plan.

The primary surviving historic components of the Atwells Avenue Bridge are its four (of five original) 54′ long, 5′-8¾″ high wrought-iron pony double-intersection Warren trusses. The trusses, which rest on cast-iron bearing plates, are built up using riveted structural shapes and have parallel upper and bottom chords and vertical end posts. The parallel roadway (inner) trusses are 34′-10″ apart on center. The north (outer) sidewalk truss is 14′-1″ away from the north roadway truss on center, and the south (outer) sidewalk truss is 15′-11″ away from the south roadway truss on center.

The upper and lower chords are T-shaped in section, each consisting of two, 54′ long x 10″ wide x 3/8″ thick perpendicular wrought-iron plates joined by riveted 3″ x 3″ x 3/8″ L-shapes. The trusses have a slight upward camber. The top chords were stiffened at the center and near the ends in 1924 by the addition of three sections of 10″ wide fish plate layers. The east end of the south sidewalk truss deflects approximately 1′ south from the original centerline. The vertical end posts consist of 5′ long, 8½″ high, T-shaped members built up from two, 3½″ x 3½″ x ½″ L-shapes. The truss web consists of a ten-panel lattice of single-intersection diagonal members forming the repeated “X” pattern of a double-intersection Warren truss. These diagonal members consist of 3″ x 3″ x 3/8″ L-shapes connecting the top and bottom chords, and are connected by a riveted square gusset plate at their intersections. The interior trusses were strengthened in 1900 when additional L-shapes were added to the outer three panels, converting the members in those panels to built-up T-shaped members. This was done to both diagonal members of the two outer panels, and only the inward-sloping members in the third inner panels. The sidewalk truss diagonal members incorporate riveted safety railings consisting of three continuous horizontal 2¼″ x ¼″ wrought-iron straps.

The bridge superstructure was originally built with diagonal sway bracing consisting of 4″ x 2″ x ¼″ rolled T-shape struts connecting the vertical plate in the top chord with the floor beams. These braces were located on the inboard side of the sidewalk trusses and both sides of the roadway trusses. Most of the sidewalk truss braces remain, although several are bent or missing. The roadway truss braces on the roadway side have been removed, and many of the braces on the sidewalk side of the roadway trusses have been bent, apparently to accommodate the utility pipe trunks.

The roadway deck is supported by longitudinal stringers consisting of eight, 16″ high galvanized steel I-beams resting on concrete seats on modified abutments. The steel stringers support a replacement laminated wood joist deck with an asphalt pavement layer. The stringers and deck were installed in 1992 when the historic roadway superstructure was replaced. The roadway is 33′-9″ wide between timber curbs at the base of the trusses. The curbs support new galvanized steel guardrails 32′ apart at the inner faces. The sidewalks are supported on what may be the original 9″ high transverse wrought-iron beams mounted between the inner and outer trusses.[61]

The beams support longitudinal timber stringers and a timber joist deck sheathed with asphalt. The sidewalks differ in width as the distance between the two trusses in the north and south pairs differs by about 1′-9″. The south sidewalk is approximately 11′ wide, and the north sidewalk is approximately 9′ wide. Both sidewalks include a raised, plank-sheathed utility pipe trunk against the base of the roadway trusses. The trunk on the north side is 3′-6″ wide and carries a 15″ water main, and the trunk on the south side is 2′-3″ wide and carries a 15″ gas main. Additional electrical and telephone lines are located in pipes between the sidewalk stringers.

The vertical end posts are covered by rectangular ornamental cast-iron plates. The decorative scheme consists of several vaguely Classical abstractions and incorporates, from top to bottom: a shallow pyramidal cap with concave faces, a panel containing a six-pointed star bound above and below by double raised bead moldings, a rectangular raised horizontal ridge with chamfered ends, a vertical pair of raised bead patterns in the shape of hourglasses with reel-shaped motifs flanked by raised irregular hexagons at their narrow waists, and another rectangular raised horizontal ridge with chamfered ends. The castings at the west ends of the north sidewalk truss and inner roadway truss and east end of the south sidewalk truss are damaged and missing large pieces.

(Dimensions and construction details for the as-built 1875 bridge and early twentieth-century alterations were taken from originals and copies of Providence Department of Public Works drawings on file at the DPW offices located at 700 Allens Avenue, Providence, RI. Information regarding the 1992 installation of eight steel deck support stringers was found in engineering plans at the Rhode Island Department of Transportation plan room, Providence, RI).

[61] The 1900, 1920s, and 1992 project drawings do not indicate replacement of the original 9″ high sidewalk stringer support I-beams.

C. Site Information:

The Atwells Avenue Bridge (Rhode Island Department of Transportation [RIDOT] Bridge No. 975), built in 1875, is located in the Eagle Square neighborhood of Providence, approximately 75′ east of the intersection of east-west-oriented Atwells Avenue and perpendicular to Valley Street. The bridge carries Atwells Avenue over the Woonasquatucket River, a tributary of the Providence River. The river runs between stone walls on either side of the bridge, with narrow, wooded banks upstream and narrow grassy banks downstream. The adjacent surroundings include a variety of commercial and industrial properties dating from the mid-nineteenth to mid-twentieth centuries.

Part III. Sources of Information

A. Primary Sources:

Abbott, Arthur V. "The Poughkeepsie Bridge." *Frank Leslie's Popular Monthly* 28, No. 2 (1889):151-157.

Brown, Samuel W. *Providence City Manual: Or Organization of the Municipal Government for the Year 1878.* City Document No. 1. Providence: Angell, Hammett & Company, 1879.

City of Providence. *Tax Book, City of Providence, 1904.* Providence: What Cheer Printing Company, 1904.

Clap, Otis F. *Annual Report of the City Engineer of the City of Providence for the Year 1900*. City Document No. 10. Providence: The Providence Press, 1901.

Delaware Bridge Company. "The Delaware Bridge Company." New York: Evening Post Steam Presses, ca. 1879. On file, Kroch Library, Cornell University, Ithaca, NY.

Doyle, Thomas A. "Notice, Mayor's Office, City of Providence." *Providence Evening Press*, Wednesday, August 4, 1875:37.

—. "Eleventh Inaugural Address of the Honorable Thomas A. Doyle, Mayor. Delivered January 3." *Providence City Documents for the Year 1876*. Providence: Angell, Burlingame & Company, 1876.

Engineering. "Swing Bridge at Providence, U.S." *Engineering* 15 (March 21, 1873):202-203.

—. "The Kentucky and Indiana Bridge." *Engineering* 45 (January 27, 1888):85, 90.

Engineering News and American Contract Journal. "Hawkesbury Bridge, New South Wales." *Engineering News and American Contract Journal* 15 (February 6, 1886):98-100.

—. "Hawkesbury Bridge, New South Wales." *Engineering News and American Contract Journal* 15 (May 8, 1886):298.

Engineering Record. "The Organization of the American Bridge Company." The Engineering Record, Building Record and Sanitary Engineer 42 (July 7, 1900):17.

F.W. Dodge. *Building and Engineering Trades Reference Book of Massachusetts and Rhode Island, 1904*. Boston: F.W. Dodge, 1904.

Foreman, John. "Improved Truss-Frame Bridge." Letters Patent No. 78,797, dated June 9. United States Patent and Trademark Office, Washington, D.C., 1868.

Harrington, John Lyle, ed. *The Principal Professional Papers of Dr. J.A.L. Waddell, Civil Engineer.* New York: Virgil H. Hewes, 1905.

Hoole, George A. and W.S. Kinne. *Steel and Timber Structures*. Second edition. New York: McGraw-Hill Book Company, Incorporated, 1942.

Hopkins, J. Castell, ed. *Canada – An Encyclopedia of the Country, Volume VI.* Toronto: The Linscott Publishing Company, 1902.

James T. White & Company. *National Cyclopaedia of American Biography.* New York: James T. White & Company, 1901.

Johnson, J.B., C.W. Bryan and F.E. Turneaure. *The Theory and Practice of Modern Framed Structures*. *Part III – Design*. Rewritten by F.E. Turneaure and W.S. Kinne. New York: John Wiley & Sons, Incorporated, 1910.

Joslin, Henry V. A. "Providence City Manual; Or Organization of the Municipal Government for the Year 1887." City Document No. 1. *Providence City Documents For the Year 1887, Volume I.* Providence: Providence Press Company, 1888.

MacDonald, A.J. "Return of a Death. City of Providence." Filed January 16, 1923. Collection of the Providence City Archives, Providence City Hall, Providence, RI.

Macdonald, Charles. *A Discussion of the General Principles Involved in the Construction and Actions of the Isometrical Truss Bridge*. Philadelphia: T. Ellwood Zell, 1867.

Merriman, Mansfield and Henry S. Jacoby. *A Textbook on Roofs and Bridges. Part I, Stresses in Simple Trusses*. New York: John Wiley & Sons, 1920.

Morison, George S., Edward P. North and John Bogart. "American Engineering, as Illustrated by This Society at the Paris Exposition of 1878." *Transactions of the American Society of Civil Engineers* 12 (November/December 1878):321-422.

O'Rourke, John F. "The Construction of the Poughkeepsie Bridge." *Transactions of the American Society of Civil Engineers* 18, No. 387 (1888):199-206.

Paine, Charles E. "Annual Report of the City Engineer for 1872." City Document No. 54 from *Providence City Documents from June 1872 to June 1873*. Providence: Hammond, Angell & Company, 1873. Collection of the Providence City Archives, Providence City Hall, Providence, RI.

—. "Annual Report of the City Engineer for 1873." City Document No. 52. *Providence City Documents from June 1873 – December 31, 1874*. Providence: Hammond, Angell & Co., 1875. Collection of the Providence City Archives, Providence City Hall, Providence, RI.

—. "Annual Report of the City Engineer for 1874." City Document No. 11. *Reports of the Municipal Department of the City of Providence for the Year Ending December 31, 1875*. Providence: Providence Press Company, 1876. Collection of the Providence City Archives, Providence City Hall, Providence, RI

Pattison, Robert E. "Proclamation Declaring the Charters of Certain Corporations Forfeited." *Pennsylvania Archives, Fourth Series, Volume X: Papers of the Governors, 1883-1891*, edited by George Edward Reed. Harrisburg: William Stanley Ray, State Printer, 1902

Providence Board of Aldermen. *Board of Aldermen, No. 8, 1873-1876.* Records of meeting minutes, 1873-1876. Collection of the Providence City Archives, Providence City Hall, Providence, RI.

—. *Board of Aldermen, No. 9, 1876-1878*. Records of meeting minutes, 1876-1878. Collection of the Providence City Archives, Providence City Hall, Providence, RI.

Providence City Auditor. "Thirtieth Annual Report of the City Auditor, Showing the Receipts and Expenditures of the City of Providence, For the Year Ending September 30, 1876." *Providence City Documents for the Year 1877*. Providence: J.A. & R.A. Reid, 1878. Collection of the Providence City Archives, Providence City Hall, Providence, RI.

Providence City Council. *Resolutions of the City Council of the City of Providence, With Reports. June 1873 to January 1875.* Providence: Hammond, Angell & Company, 1876. Collection of the Providence City Archives, Providence City Hall, Providence, RI.

—. *Resolutions of the City Council of the City of Providence, With Reports. January 1875 to January 1876*. Providence: Angell, Burlingame & Company, 1877. Collection of the Providence City Archives, Providence City Hall, Providence, RI.

Providence Evening Press. "Local News" *Providence Evening Press* (November 4, 1875):2.

—. "Local News." *Providence Evening Press* (December 17, 1875):2.

—. "Local News." *Providence Evening Press* (January 5, 1876):2.

Railroad Gazette. "Bell's Bridge." *Railroad Gazette* (April 13, 1872):165.

Rhode Island Department of Transportation. "Bridge Inspection Report, Bridge 097501." Rhode Island Department of Transportation, Providence, 2009.

Smith, Robert W. "Improvement in Bridges." Letters Patent No. 66,900 dated July 16. United States Patent and Trademark Office, Washington, 1867.

Smith, Robert E. "Annual Report of the Commissioner of Public Works upon Bridges for the Year 1891." City Document No. 8. Providence: The Providence Press, 1892.

Steele, J. Dutton. "Improvement in Bridges." Letters Patent No. 63,666 dated April 9, 1867. On file, United States Patent and Trademark Office, Washington, D.C., 1867.

Tallman, Nelson I. "Annual Report of the Overseer of Bridges. Presented January 27, 1876." *Providence City Documents for the Year 1876*. Providence: Angell, Burlingame & Company, 1877. Collection of the Providence City Archives, Providence City Hall, Providence, RI

Triest, W.G. "Charles Macdonald, Past-President, American Society of Civil Engineers." *Proceedings of the American Society of Civil Engineers* 55, Part 2, No.10 (1929):2,733-2,734.

Waddell, John A. L. *Bridge Engineering*. London: John Wiley & Sons, Incorporated, 1916.

Whipple, Squire. *A Work on Bridge Building: Consisting of Two Essays, the One Elementary and General, the Other Giving Original Plans and Practical Details for Iron and Wooden Bridges.* Utica: H.H. Curtis, 1847.

—. "Extracts from a Paper Read by Squire Whipple, Civil Engineer, Member of the Society, On Truss Bridge Building." *Transactions: American Society of Civil Engineers* 1 (1872):239-243.

Engineering Plans

The following engineering plans are on file at the Providence Department of Public Works offices located at 700 Allens Avenue, Providence and in the Rhode Island Department of Transportation plan room, Two Capitol Hill, Providence.

City of Providence Engineer's Office. "Plan of Atwells Avenue Bridge Over Woonasquatucket River As Built 1875." IPFS B121, Day Book # 06399, 812/12. January 21, 1881.

City of Providence. "Atwells Avenue Bridge: Changes Required to Replace the Present Central Truss With A Plate Girder." IPFS B127, 029631. September 13, 1900.

City of Providence Engineers Office, Bridge Department. "Atwells Avenue Bridge: Metal Work Required to Replace the Present Central Truss With A Steel Plate Girder." IPFS B126, O29652. September 16, 1900.

City of Providence. "Atwells Avenue Bridge Changes: Details of Girder." IPFS B125, J.2329SH.1. October 1, 1900.

City of Providence, RI, Engineering Department. "Showing Atwells Avenue Bridge: Concrete and Asphalt Pavement." IPFS B123, 046972. May 27, 1924.

City of Providence, RI, Bridge Department. "Showing Atwells Avenue Bridge, N'th'ly Sidewalk Repairs and S'thl'y Sidewalk Repairs." IPFS B128, 050309. July 2, 1928.

Rhode Island Department of Transportation. "Highway Plan, Atwells Avenue Bridge No. 975, Superstructure Replacement Approach and Repair." 2010.

—. "North Elevation And Cross Section, Atwells Avenue Bridge No. 975." Bridge Identification Number (Bin) File No. 097501. July 23, 2007.

B. Secondary Sources:

Adams, Virginia H. and Matthew A. Kierstead. "Pawtuxet River Railroad Bridge." HAER No. RI-44. National Park Service, U.S. Department of the Interior, 1996.

Bennett, Lola. "Shelburne Falls Bridge." HAER No. MA-96. National Park Service, U.S. Department of the Interior, 1990.

Borne, Jeffrey O. "Double-Intersection Warren Truss Bridge." HAER No. CT-7. National Park Service, U.S. Department of the Interior, 1983.

Bowers, Martha H. "Holyoke Bridge." HAER No. MA-18. National Park Service, U.S. Department of the Interior, 1986.

Brown, Mark M. "South Fork of Hill Creek Bridge." HAER No. TEX-30. National Park Service, U.S. Department of the Interior, 1998.

Charlton, T.M. *A History of Theory of Structures in the Nineteenth Century*. New York: Cambridge University Press, 1982.

Clouette, Bruce and Matthew Roth. "Rhode Island Department of Transportation Historic Bridge Inventory Form, Atwells Avenue Bridge No. 975." *Rhode Island Historic Bridge Inventory: Part II: National Register Form*. Hartford: Historic Resource Consultants, 1988. Prepared for the Rhode Island Department of Transportation. On file at Rhode Island Historical Preservation and Heritage Commission, Providence, RI.

—. *Rhode Island Historic Bridge Inventory: Part I: Inventory and Recommendations.* Hartford: Historic Resource Consultants, 1988. Prepared for the Rhode Island Department of Transportation. On file at Rhode Island Historical Preservation and Heritage Commission, Providence, RI.

Condit, Carl. *American Building Art: The Nineteenth Century*. New York: Oxford University Press, 1960.

—. *American Building Art: The Twentieth Century*. New York: Oxford University Press, 1961.

DeLony, Eric. "Surviving Cast- and Wrought-Iron Bridges in America." *IA: The Journal of the Society for Industrial Archaeology* 19, No. 2 (1993):17-47.

Fraser, Donald J. "Introduction of American Bridge Technology into New South Wales, Australia." *IA: Journal of the Society for Industrial Archaeology* 21, no. 1(1995):33-46.

Fraser, George. "Alton Bridge." HAER No. IL-21. National Park Service, U.S. Department of the Interior, 1985.

—. "Nebraska City Bridge" HAER No. NE-2. National Park Service, U.S. Department of the Interior, 1986.

Gasparini, D.A. and Caterina Provost. "Early Nineteenth Century Developments in Truss Design in Britain, France, and the United States." *Construction History* 5 (1989):21-33.

Griggs, Francis E. "Charles Macdonald." *Structure* (January, 2009). Electronic document, http://www.structuremag.org/article.aspx?articleID=840, retrieved 5 November, 2010.

—. "Charles Macdonald." *Journal of Bridge Engineering* (September/October, 2010):565-580.

Guise, David. "The Evolution of the Warren, or Triangular, Truss." *IA: The Journal of the Society for Industrial Archeology* 32, No. 2 (2006):23-40.

Hawley, Monica E. "Poughkeepsie Bridge." HAER No. NY-131. National Park Service, U.S. Department of the Interior, 1983.

Healey, John. "Boston & Albany Railroad, Kingsbury Street Bridge." HAER No. MA-117. National Park Service, U.S. Department of the Interior, 1990.

Kemp, Emory L., ed. *American Bridge Patents: The First Century (1790-1890)*. Morgantown: West Virginia University Press, 2005.

Melewski, Peter, Malcolm McLaren, James Green, and David Thurnherr. "Walkway over the Hudson." From Khaled M. Mahmoud, ed., *Innovations in Bridge Technology*. London: Taylor & Francis Group, 2007.

P.A.C. Spero & Company. "Coraopolis Bridge." HAER No. PA-217. National Park Service, U.S. Department of the Interior, 1990.

Park, Sung H. *Bridge Inspection and Structural Analysis*. Trenton: Published by the author, 1980.

Parsons Brinkerhoff and Engineering and Industrial Heritage. *A Context for Common Historic Bridge Types*. NCHRP Project 25-23, Task 15. Washington, D.C.: National Cooperative Highway Research Program, Transportation Research Council, National Research Council, 2005.

Rhode Island Historical Preservation Commission (RIHPC). *Historic and Architectural Resources of North Providence, Rhode Island: A Preliminary Report*. Providence: Rhode Island Historical Preservation Commission, 1978.

—. *Providence Industrial Sites: Statewide Historical Preservation Report P-P-6.* Providence: Rhode Island Historical Preservation Commission, 1981.

—. *The West Side, Providence.* Providence: Rhode Island Historical Preservation Commission, 1976.

Sharp, Townley McElhiney. "The Great Poughkeepsie Railroad Bridge, National Register of Historic Places Inventory – Nomination Form." National Park Service, Washington, 1978. On file, New York State Historic Preservation Office, Waterford, NY.

Sheldon, John C.R. "West Wishkah Bridge". HAER No. WA-22. National Park Service, U.S. Department of the Interior, 1988.

Location of the Atwells Avenue Bridge (Bridge No. 975) shown on the USGS Providence, RI 1:25,000 1987 Quadrangle.

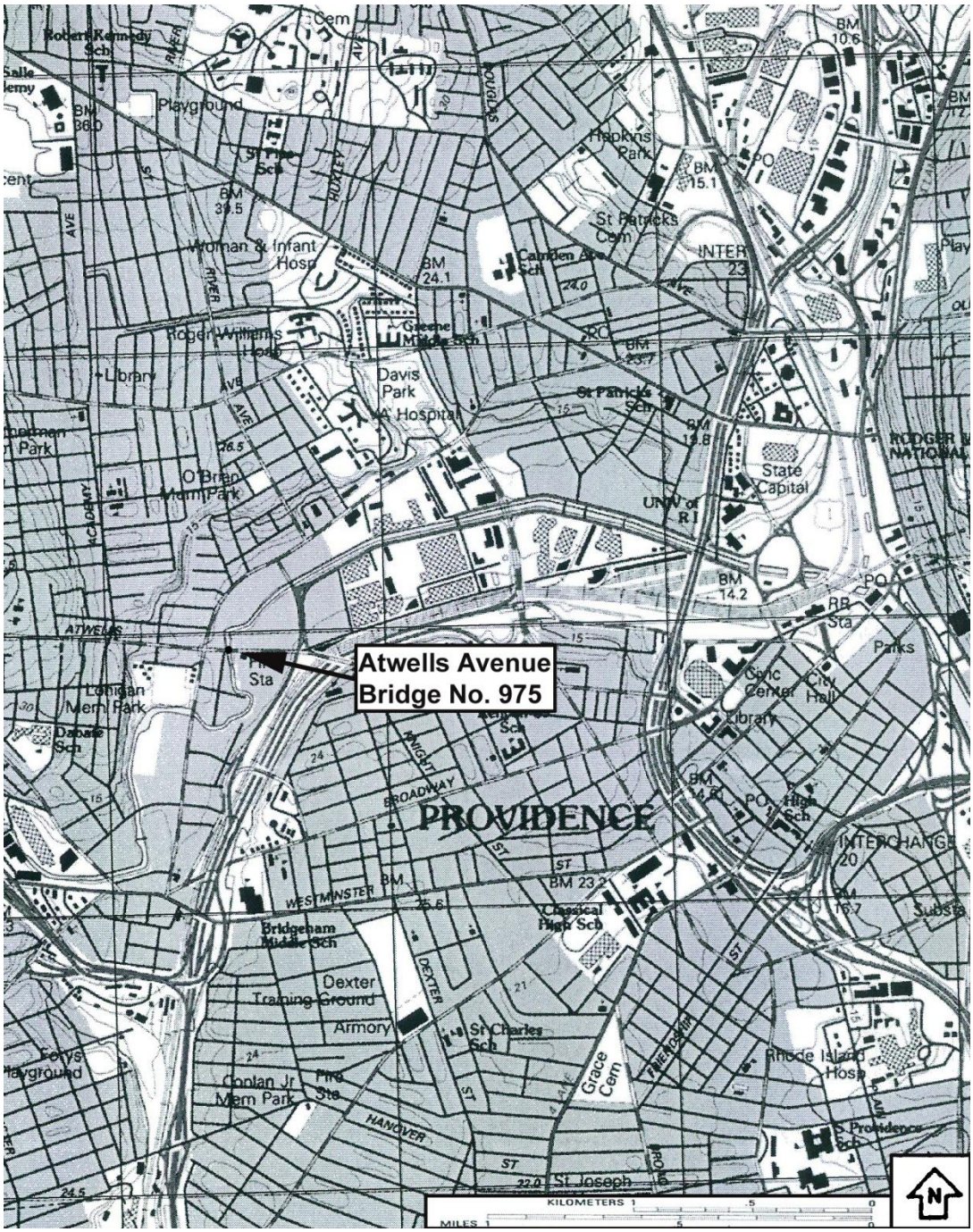

HIGHWAY PLAN, ATWELLS AVENUE BRIDGE NO. 975, SUPERSTRUCTURE REPLACEMENT APPROACH AND REPAIR. 2010. Rhode Island Department of Transportation.

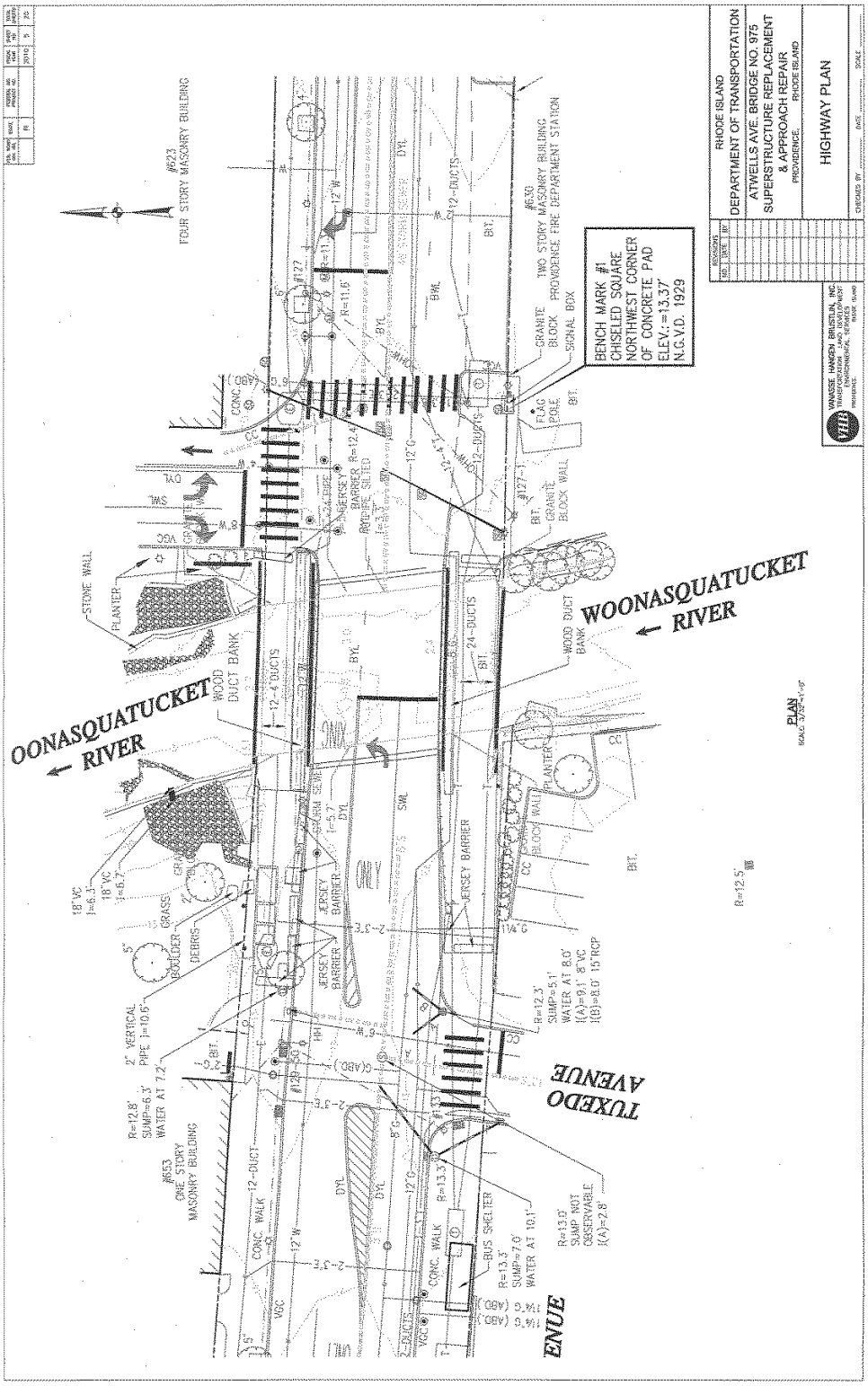

NORTH ELEVATION AND CROSS SECTION, ATWELLS AVENUE BRIDGE NO. 975. BRIDGE IDENTIFICATION NUMBER (BIN) FILE NO. 097501. JULY 2007. Rhode Island Department of Transportation.

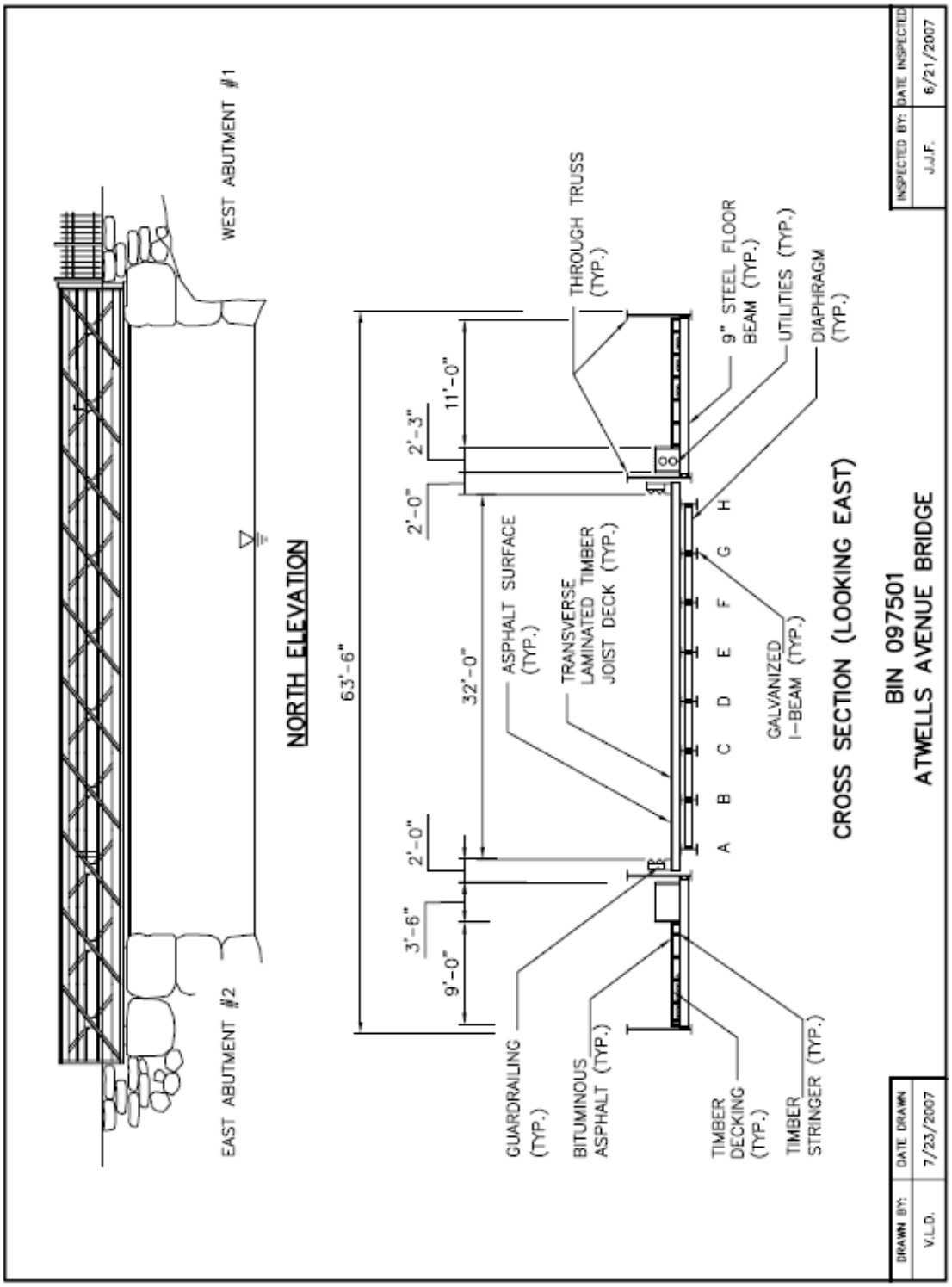

EXISTING TRUSS PLAN AND ELEVATION, ATWELLS AVENUE BRIDGE NO. 975. SUPERSTRUCTURE REPLACEMENT AND APPROACH REPAIR. 2010. Rhode Island Department of Transportation.

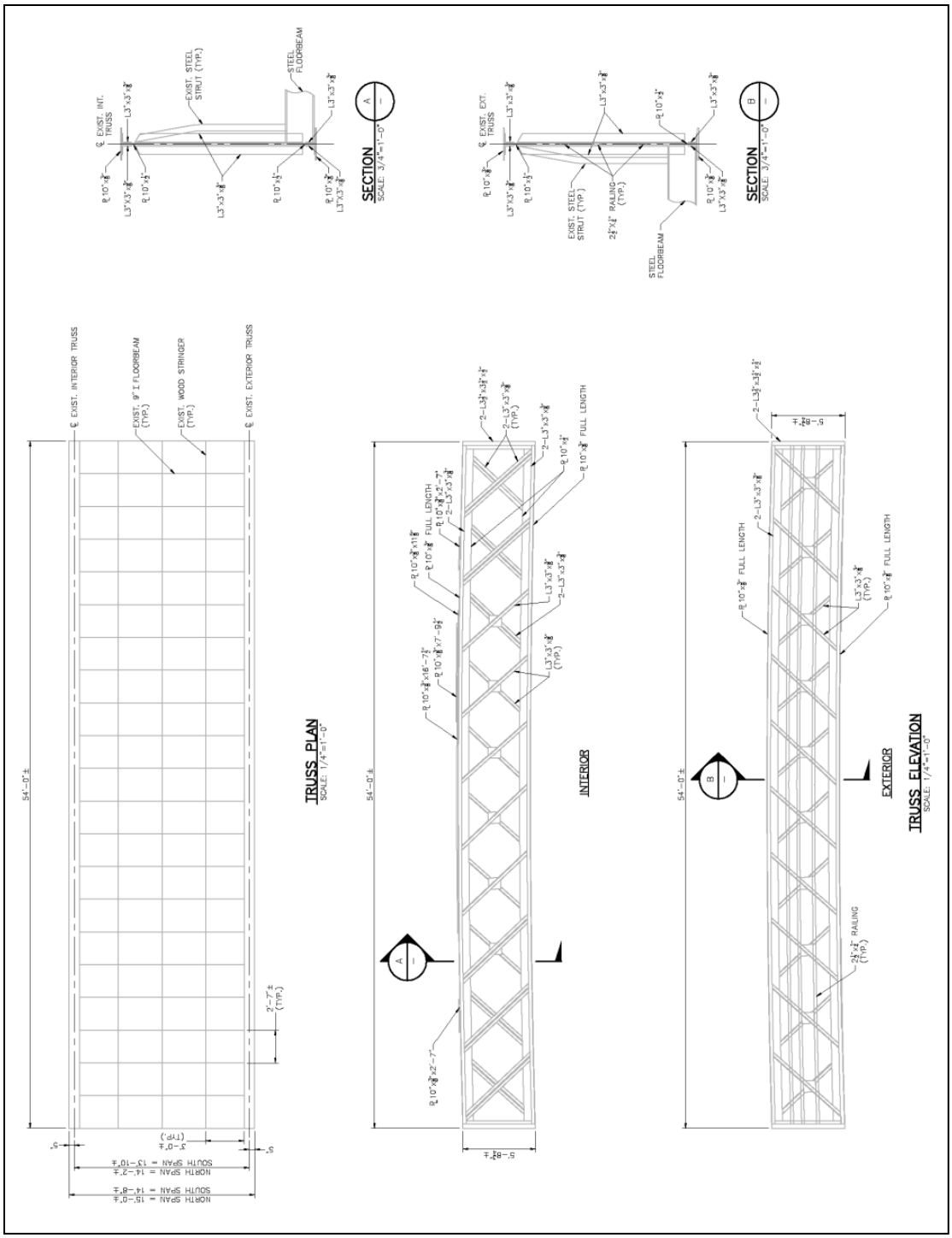

HISTORIC AMERICAN ENGINEERING RECORD

INDEX TO PHOTOGRAPHS

ATWELLS AVENUE BRIDGE HAER No. RI-61
(Bridge No. 975)
Atwells Avenue crossing the Woonasquatucket River
Providence
Providence County
Rhode Island

Photographer: Robert Brewster, Warren Jagger Photography, Inc., Providence, RI, November 3, 2010.

RI-61-1 General view of the Atwells Avenue Bridge, looking west from Atwells Avenue.

RI-61-2 General view of the bridge, looking east from Atwells Avenue.

RI-61-3 View of bridge deck, looking west on Atwells Avenue.

RI-61-4 View of bridge deck, looking east on Atwells Avenue.

RI-61-5 North (downstream) elevation looking southeast.

RI-61-6 South (upstream) elevation looking north.

RI-61-7 View across deck looking northeast.

RI-61-8 Detail view of south (upstream) sidewalk truss and floor structure, looking north.

RI-61-9 Detail view of northwest end post, looking northeast.

RI-61-10 Detail view of north (downstream) sidewalk truss, looking northeast.

RI-61-11 Photographic copy of engineering plan of Atwells Avenue Bridge. City of Providence Engineer's Office, January 21, 1881: PLAN OF ATWELLS AVENUE BRIDGE OVER WOONASQUATUCKET RIVER AS BUILT 1875. IPFS B121, DAY BOOK # 06399, 812/12.

RI-61-12 Photographic copy of engineering plan of Atwells Avenue Bridge. City of Providence, September 13, 1900: ATWELLS AVENUE BRIDGE: CHANGES REQUIRED TO REPLACE THE PRESENT CENTRAL TRUSS WITH A PLATE GIRDER. IPFS B127, 029631.

RI-61-13 Photographic copy of engineering plan of Atwells Avenue Bridge. City of Providence Engineers Office, Bridge Department, September 16, 1900: ATWELLS AVENUE BRIDGE: METAL WORK REQUIRED TO REPLACE THE PRESENT CENTRAL TRUSS WITH A STEEL PLATE GIRDER. IPFS B126, O29652.

RI-61-14 Photographic copy of engineering plan of Atwells Avenue Bridge. City of Providence, October 1, 1900: ATWELLS AVENUE BRIDGE CHANGES: DETAILS OF GIRDER. IPFS B125, J.2329SH.1

RI-61-15 Photographic copy of engineering plan of Atwells Avenue Bridge. City of Providence, RI Engineering Department, May 27, 1924: SHOWING ATWELLS AVENUE BRIDGE: CONCRETE AND ASPHALT PAVEMENT. IPFS B123, 046972.

RI-61-16 Photographic copy of engineering plan of Atwells Avenue Bridge. City of Providence, RI, Bridge Department, July 2, 1928: SHOWING ATWELLS AVENUE BRIDGE, N'TH'LY SIDEWALK REPAIRS AND S'THL'Y SIDEWALK REPARIS. IPFS B128, 050309.

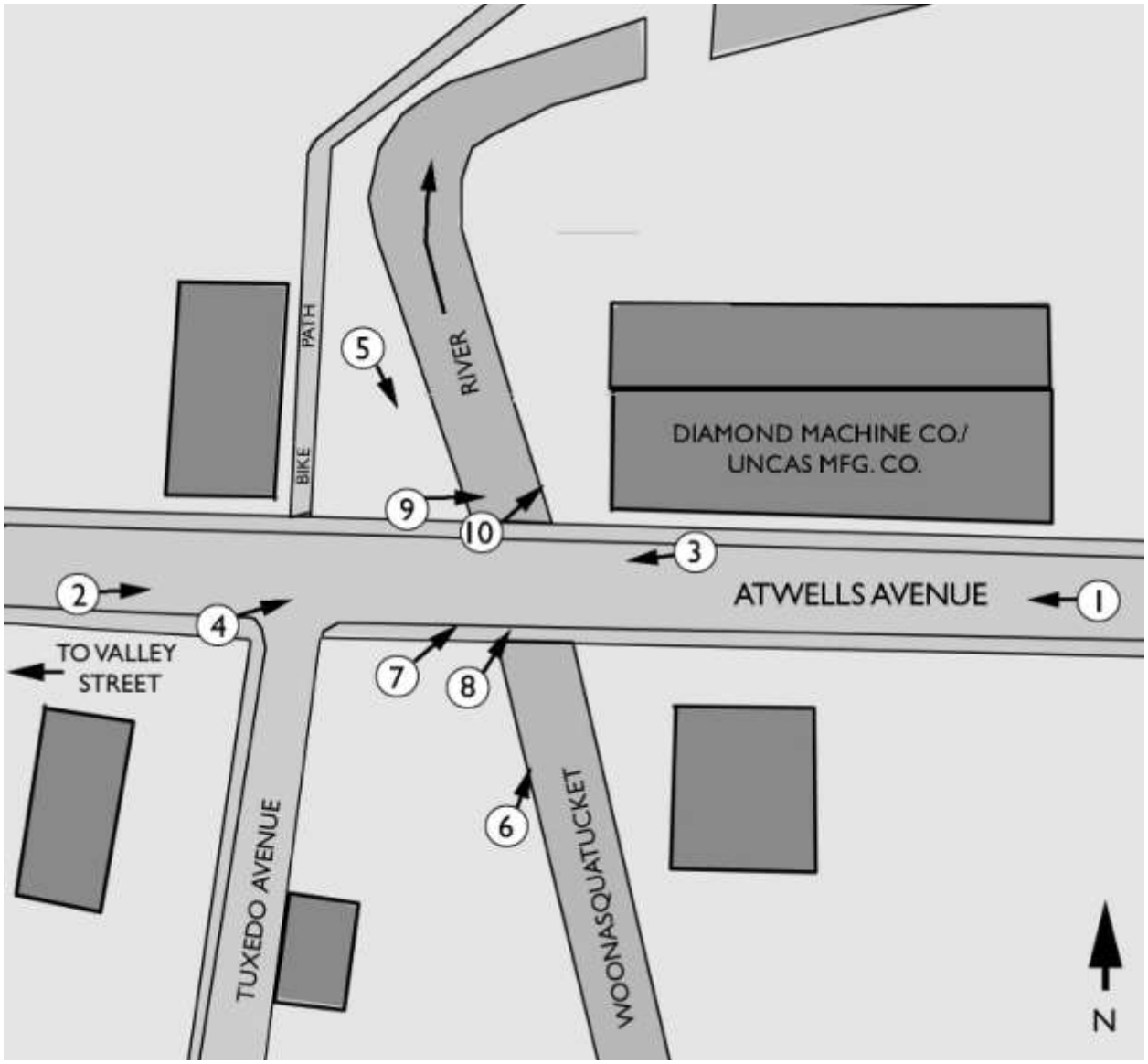
BIKE PATH
RIVER
DIAMOND MACHINE CO./
UNCAS MFG. CO.
ATWELLS AVENUE
TO VALLEY
STREET
TUXEDO AVENUE
WOONASQUATUCKET
N
1
2
3
4
5
6
7
8
9
10

RI-61-1

RI-61-2

RI-61-3

RI-61-4

RI-61-5

RI-61-6

RI-61-7

RI-61-8

RI-61-9

RI-61-10

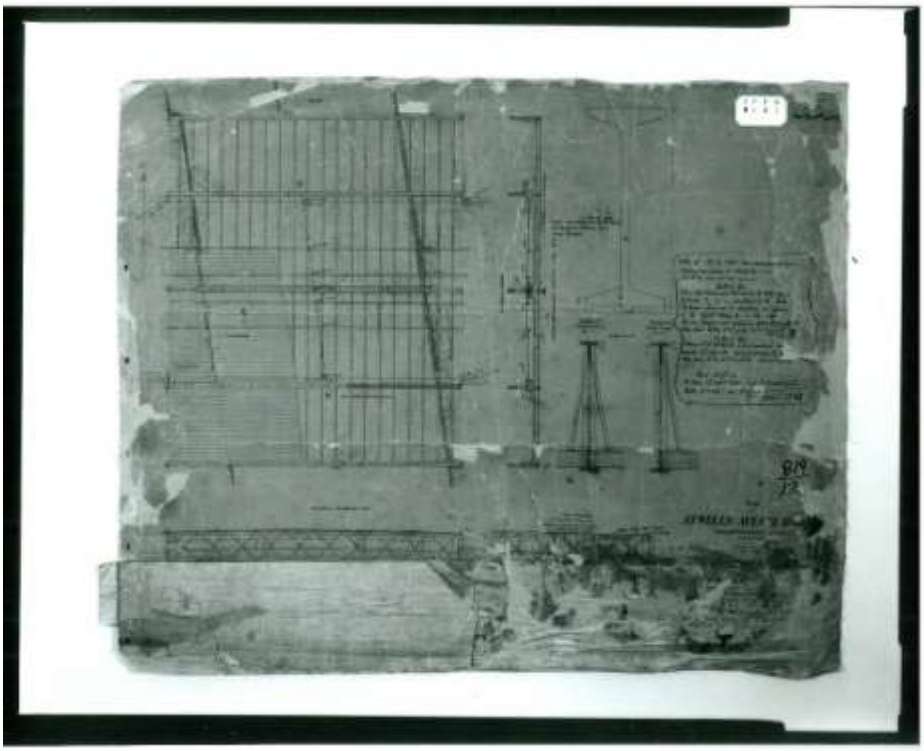

RI-61-11

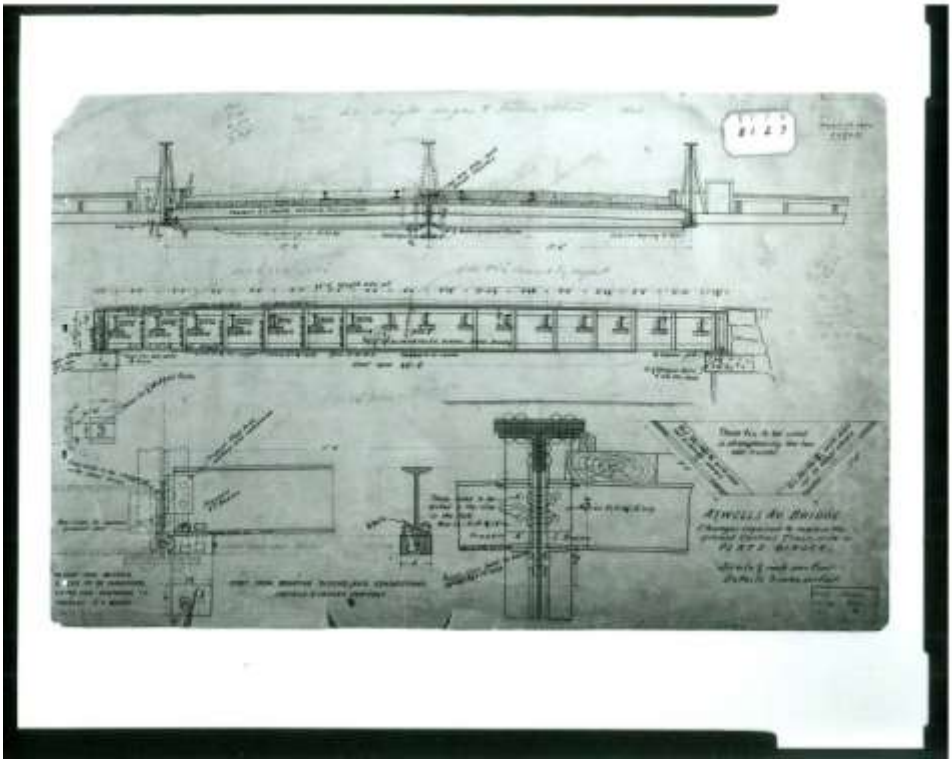

RI-61-12

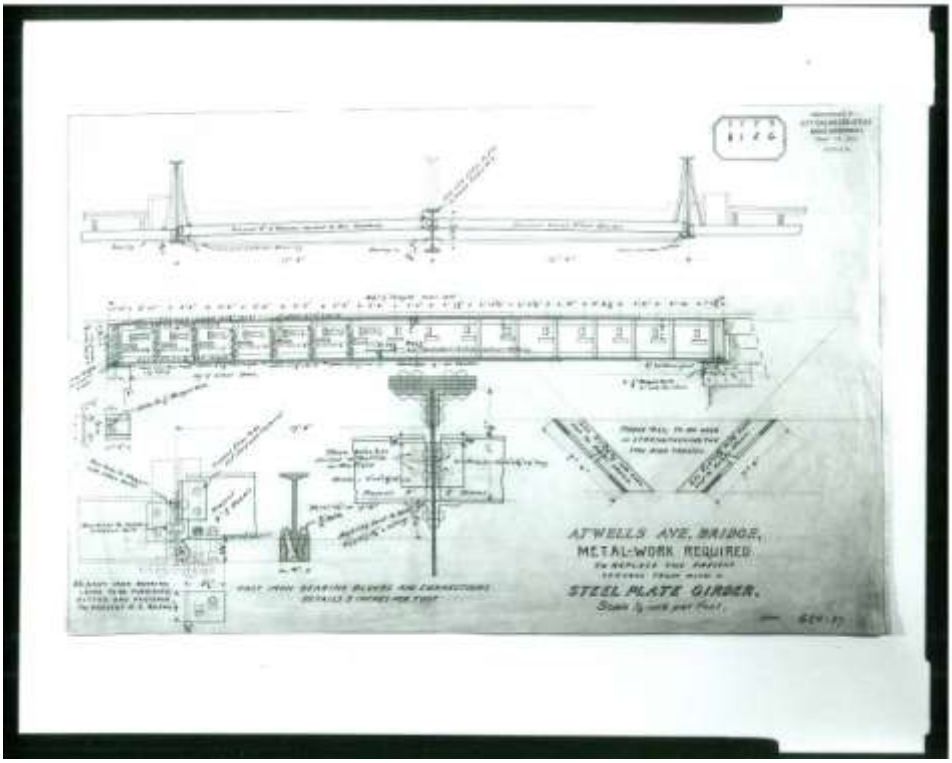

RI-61-13

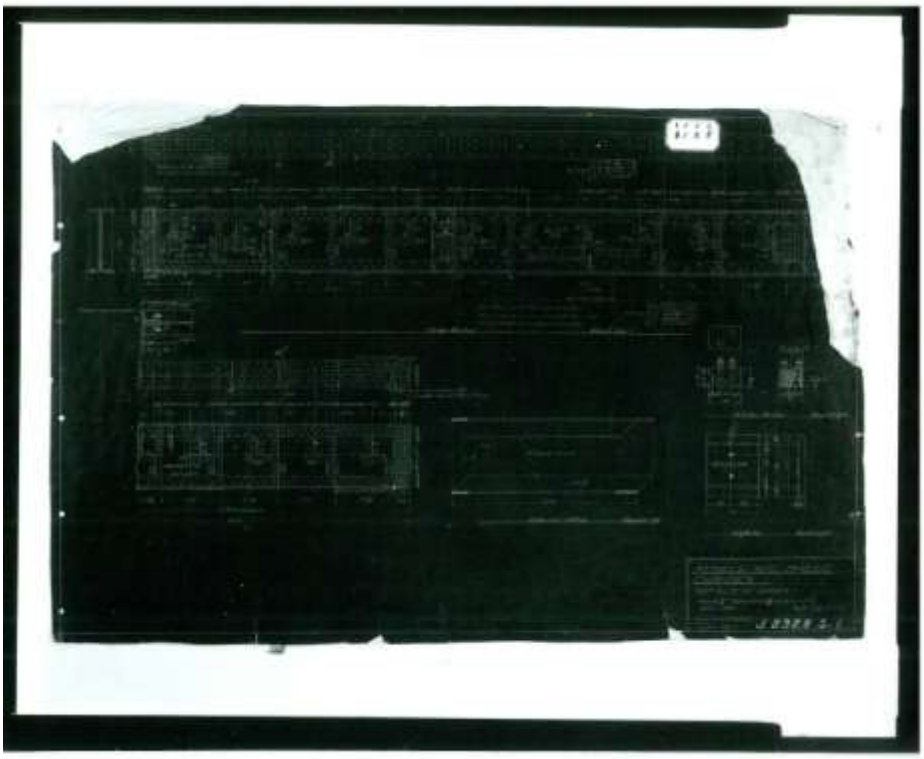

RI-61-14

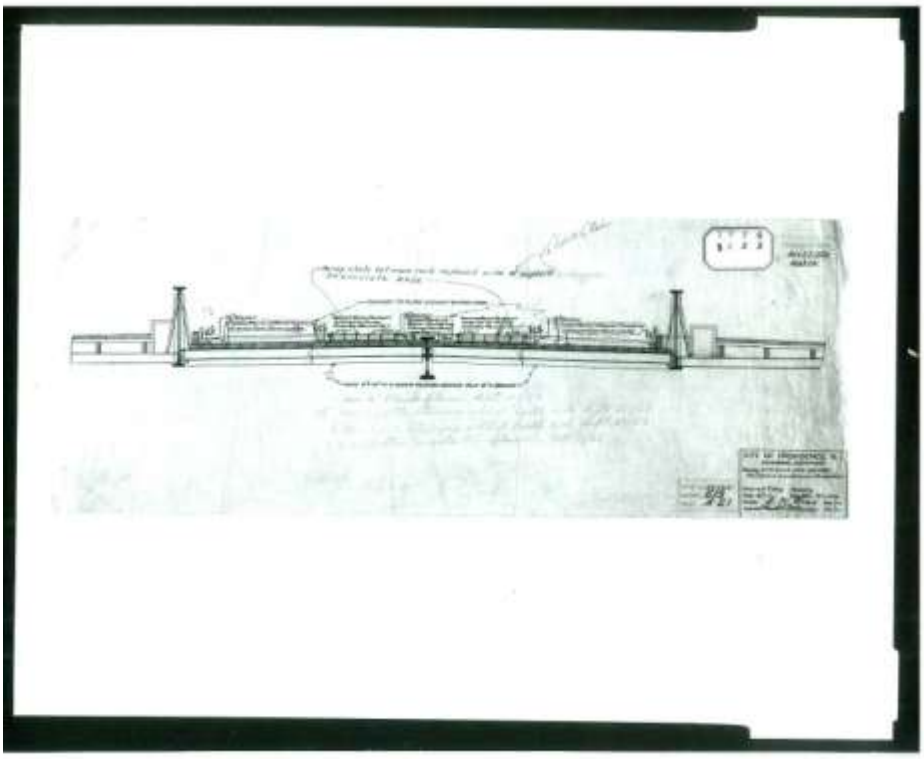

RI-61-15

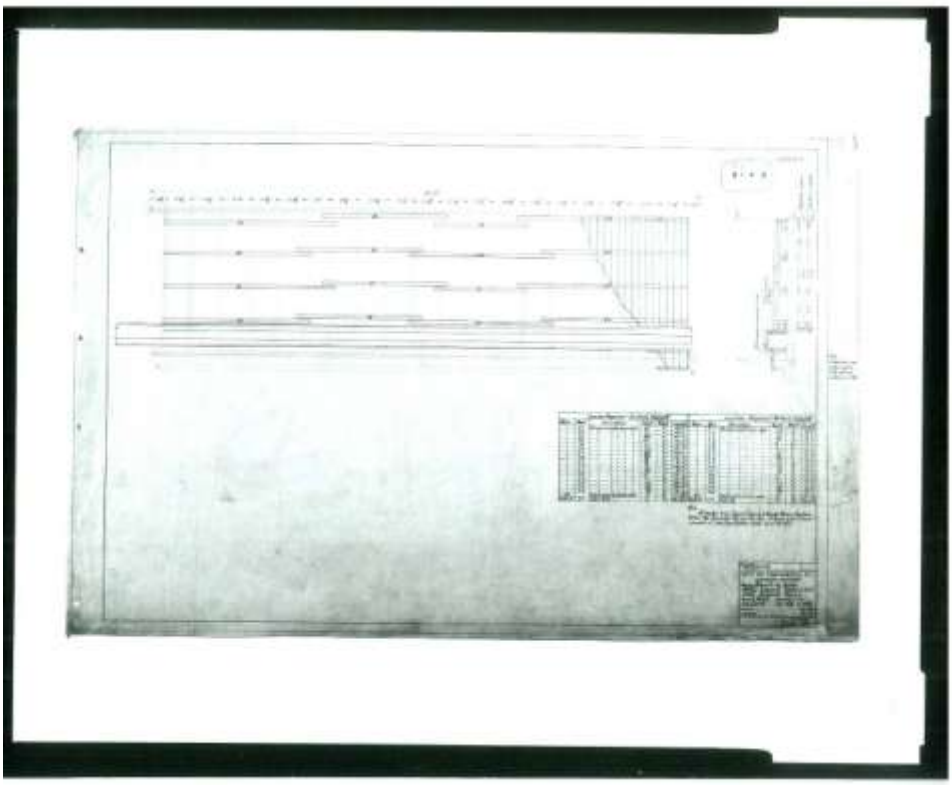

RI-61-16