Request for Quote

STATE OF RHODE ISLAND AND PROVIDENCE PLANTATIONS
ONE CAPITOL HILL
PROVIDENCE RI 02908

CREATION DATE : 18-FEB-14
BID NUMBER: 7548496
TITLE: MARKET FORGE COMPARTMENT STEAM COOKER - BHDDH

BID CLOSING DATE AND TIME:03-MAR-2014 11:30:00

BUYER: Cowell Jr, John A
PHONE #: 401-574-8114

BILL TO
DOA CONTROLLER
ONE CAPITOL HILL, 4TH FLOOR
SMITH ST
PROVIDENCE, RI 02908
US

SHIP TO
BHDDH-ESH CENTRAL RECEIVING
MATHIAS BUILDING
CRANSTON, RI 02920
US

Requistion Number: 1351146

Line	Description	Quantity	Unit	Unit Price	Total
1	MARKET FORGE COMPARTMENT STEAM COOKER MODEL #3AM36SC - "NO SUBSTITUTIONS" PRICING TO INCLUDE: 3@90-9769 ADDITIONAL REMOVABLE PULL OUT SHELF FOR COMPARMENT COOKER 1@91-6852 CLEAN STEAM FILTERS, INCLUDES 2 YEAR BOILER WARRANTY, 7CB5 CARTRIDGE, SS-10 SCALE INHIBITOR CARTRIDGE, (4) SCALEKLEEN 2.2 LB PACKETS & DIP TUBE DELIVERY, UNCRATE, INSTALLATION, AND ALL FINAL CONNECTIONS AND ANY AND ALL TRAINING ON THE OPERATIONS OF THE STEAMER.	1.00	Each		

Delivery: _____

Terms of Payment: _____

It is the Vendor's responsibility to check and download any and all addenda from the RIVIP. This offer may not be considered unless a signed RIVIP generated Bidder Certification Cover Form is attached and the Unit Price column is completed. The signed Certification Cover Form must be attached to the front of the offer

SC COMPARTMENT STEAM COOKER WITH STEAM COIL BOILER

JOB NAME: _____
ITEM NO.: _____
NO. REQUIRED: _____

MODELS:
- 2AM36SC
- 3AM36SC
- MF2AM36SC
- MF3AM36SC

"MF" prefix indicates Automatic Controls.

SIZE: 36" Wide x 33" Front-to-Back
(*914mm Wide x 838mm Front-to-Back*)

Interior Compartment Dimensions:
28-3/4" Wide x 12-3/4" High x 21-1/4" Front-to-Back
(*730mm Wide x 324mm High x 540mm Front-to-Back*)

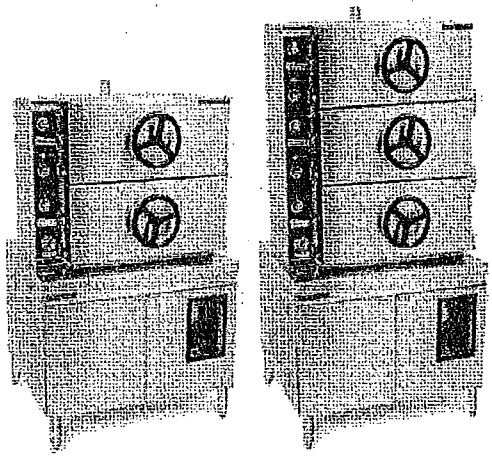

DESCRIPTION:
Market Forge direct connected steam cooker with stainless steel cooking compartments. Inner door of aluminum with stainless steel facing, removable for cleaning without tools. Door wheel screw Acme type with replaceable bushing, all threads concealed. Compartment doors self latching.

Unit shall include:
- 2 compartments
- 3 compartments

Exterior finish shall be:
- Polished stainless steel

Timing of cooking compartments shall be by:
- Automatic controls which show a visible signal during cooking cycle, shut off and exhaust steam, drain condensate from cooking compartment, and sound an audible signal at end of cooking cycle. Audible signal shall continue to sound until manually shut off (*optional at extra cost*).
- Manual mechanical timer for each compartment that sounds an audible signal at end of cooking cycle (*standard*).

Each cooking compartment shall have:
- Lift-out four track shelf uprights and one pull-out shelf which shall hold (2) 12" x 20" x 2 1/2" pans OR (2) 12" x 20" x 4" pans.
- Lift-out universal pan supports which shall hold (8) 12" x 20" x 2 1/2" pans OR (4) 12" x 20" x 4" pans.

Polished stainless steel cabinet base shall be of modular design to match other Market Forge cooking equipment. Shall be equipped with 6" (*152mm*) stainless steel legs and adjustable bullet feet, reinforced die-formed stainless steel counter top, and stainless steel lift-off front panel.

OPERATION SHALL BE BY:
Stainless steel steam coil operated, ASME constructed, UL approved 15 PSI (*1kg/cm²*) boiler, equipped for operation with incoming steam at 30-50 PSI (*2.1 - 3.5kg/cm²*), with a flow of 200 lbs. (*90 kg*) per hour. Steam boiler shall be automatically filled with cold water and brought to pressure when water and heat switches are turned on and automatically drained under pressure when switches are turned off. A cold water condenser shall automatically condense all exhausted steam into water before releasing it to drain. Unit also includes safety valves, low water cut-off, water strainer and descaler.

OPTIONAL AT EXTRA COST: (*indicate quantity in space provided*)
- _____12" x 20" x 2 1/2" perforated stainless steel pans.
- _____12" x 20" x 2 1/2" solid stainless steel pans.
- _____12" x 20" x 4" perforated stainless steel pans.
- _____12" x 20" x 4" solid stainless steel pans.
- _____Extra shelves (*quantity per compartment*).
- _____M12 - 12" Spacer Cabinet.
- _____M6 - 6" Spacer Cabinet.
- _____Ball float trap.
- _____Spray and Rinse Hose.
- _____Condensate Return.

The manufacturer reserves the right to modify materials and specifications without notice.

SPEC SHEET: S-1345L
03/12

FOOD SERVICE EQUIPMENT
Compartment Steam Cooker

MARKET FORGE INDUSTRIES INC.
An Employee Owned Company

SC COMPARTMENT STEAM COOKER WITH STEAM COIL BOILER

DETAILS & DIMENSION

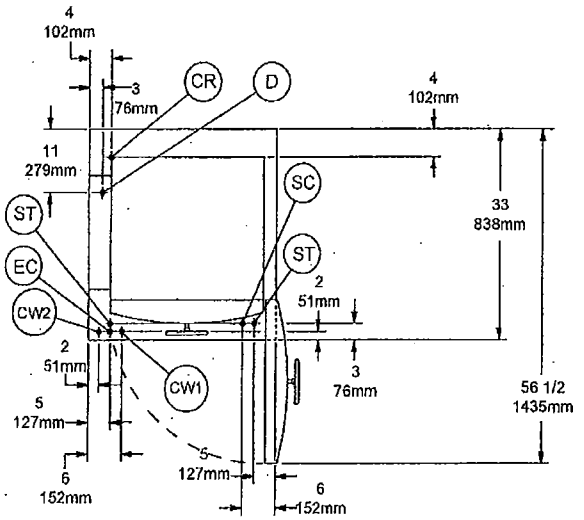

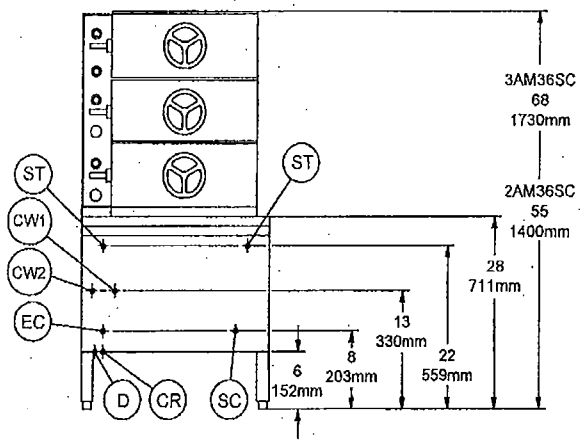

NOTE: *Allow 12" (305mm) spacing on left and 6" (152mm) spacing on right if height of adjoining wall or equipment exceeds 29" (737mm). Matching spacer cabinets 12" (305mm) or 6" (152mm) wide are available and may be specified.*

PVC and CPVC pipe are not acceptable materials for drains.

SERVICE CONNECTIONS

Steam Coil Operated

SC	Steam Supply - 1/2" (*13mm*) IPS Incoming steam pressure must not be less than 30 PSI (*2.1 kg/cm²*) nor exceed 50 PSI (*3.5 kg/cm²*).
CR	Condensate Return - 1/2" (*13mm*) IPS return from generator may be connected to condensate return line (*optional at extra cost*).
EC	Electrical connection - 120 VAC, 60 Hz, 1/2" (*13mm*) conduit or equivalent. Amp draw for 120 volt boiler and cooker controls is 4 amps. Use wire suitable for at least 90°C
CW1	Cold Water - 3/8 (*10mm*) N.P.T. for cold water to boiler. Hot water lines shall have a maximum of 50 PSI (*3.5 kg/cm²*) and a minimum of 25 PSI (*1.8 kg/cm²*) water pressure. **CAUTION: FILTER SYSTEM INSTALLATION INSTRUCTIONS MUST BE ADHERED TO WHEN CONNECTING A FILTER TO THIS LINE.**
CW2	Cold Water - 3/8 (*10mm*) N.P.T. for cold water to boiler. Cold water lines shall have a maximum of 50 PSI (*3.5 kg/cm²*) and a minimum of 25 PSI (*1.8 kg/cm²*) water pressure.
D	Drain - Pipe full 2" (*50mm*) I.P.S. to flush floor drain capable of receiving water flowing at a maximum rate of 5 gallons (*19 liters*) per minute. **DO NOT MAKE SOLID CONNECTION TO FLOOR DRAIN. INSTALL NO ELBOWS IN DRAIN LINE.**
ST	Steam take-off - Connection for adjacent steam powered equipment. Requires steam take-off kit (*optional at extra cost*).

CAUTION: Before connecting water to this unit, have water supply analyzed to make sure hardness os no greater than 2.0 grains and Ph level is within the range of 7.0 - 8.5. Water which fails to meet these standards should be treated by installation os water conditioner. **EQUIPMENT FAILURE CAUSED BY INADEQUATE WATER QUALITY IS NOT COVERED UNDER WARRANTY.**

It is our policy to build equipment which is design certified by U.L., A.S.M.E., N.S.F. and C.S.A. However, a continuing program of product improvement makes it necessary to submit new models to the agencies as they are developed and consequently not all models bear the appropriate agency labels at all times.

SPEC SHEET: S-1345L
03/12

FOOD SERVICE EQUIPMENT
Compartment Steam Cooker

MARKET FORGE INDUSTRIES INC.
WORLDWIDE
An Employee Owned Company

Contract Terms and Conditions

Table of Contents

Terms and Conditions....VI
BID STANDARD TERMS AND CONDITIONS....VI
TERMS AND CONDITIONS FOR THIS BID....VI
INSURANCE REQUIREMENTS (ADDITIONAL)....VI
RIVIP INFO - BID SUBMISSION REQUIREMENTS....VI

Terms and Conditions

BID STANDARD TERMS AND CONDITIONS

TERMS AND CONDITIONS FOR THIS BID

INSURANCE REQUIREMENTS (ADDITIONAL)

ANNUAL RENEWAL INSURANCE CERTIFICATES FOR WORKERS' COMPENSATION, PUBLIC LIABILITY, PROPERTY DAMAGE INSURANCE, AUTO INSURANCE, PROFESSIONAL LIABILITY INSURANCE (AKA ERRORS & OMISSIONS), BUILDER'S RISK INSURANCE, SCHOOL BUSING AUTO LIABILITY, ENVIRONMENTAL IMPAIRMENT (AKA POLLUTION CONTROL), VESSEL OPERATION (MARINE OR AIRCRAFT) PROTECTION & INDEMNITY, ETC., MUST BE SUBMITTED TO THE SPECIFIC AGENCY IDENTIFIED IN THE "BILL TO" SECTION OF THE PURCHASE ORDER. CERTIFICATES ARE ANNUALLY DUE PRIOR TO THE BEGINNING OF ANY CONTRACT PERIOD BEYOND THE INITIAL TWELVE-MONTH PERIOD OF A CONTRACT. FAILURE TO PROVIDE ANNUAL INSURANCE CERTIFICATION MAY BE GROUNDS FOR CANCELLATION.

RIVIP INFO - BID SUBMISSION REQUIREMENTS

It is the Vendor's responsibility to check and download any and all addenda from the RIVIP. This offer may not be considered unless a signed RIVIP generated Bidder Certification Cover Form is attached and the Unit Price column is completed. The signed Certification Cover Form must be attached to the front of the offer. When delivering offers in person to One Capitol Hill, vendors are advised to allow at least one hour additional time for clearance through security checkpoints.

MAILING ADDRESS FOR BID PROPOSALS ISSUED BY THE STATE OF RHODE ISLAND, DIVISION OF PURCHASES

All Bid Proposals must be submitted by mail or hand delivered to:

- State of Rhode Island
- Department of Administrtion
- Division of Purchases, Second floor
- One Capitol Hill
- Providence, RI 02908-5855

DIVESTITURE OF INVESTMENTS IN IRAN REQUIREMENT:

No vendor engaged in investment activities in Iran as described in R.I. Gen. Laws §37-2.5-2(b) may submit a bid proposal to, or renew a contract with, the Division of Purchases. Each vendor submitting a bid proposal or entering into a renewal of a contract is required to certify that the vendor does not appear on the list maintained by the General Treasurer pursuant to R.I. Gen. Laws §37-2.5-3.